~~CONFIDENTIAL~~ Part I

A Reproduced Copy

OF

(NASA-CR-111236) GEMINI DESIGN APPROVAL TEST PROGRAM, ENGINE SYSTEMS. VOLUME 1 - OAMS 14-DAY CONFIGURATION SE 7 ENGINE SYSTEM FINAL REPORT (Rocketdyne) 1315 p

N79-76540

Unclas

00/20 11138

FF No. [redacted]

AVAILABLE TO U.S. [redacted] AGENCIES

Reproduced for NASA

by the

NASA Scientific and Technical Information Facility

~~CONFIDENTIAL~~

FFNo 672 Aug 65

ROCKETDYNE
A DIVISION OF NORTH AMERICAN AVIATION, INC
6633 CANOGA AVENUE, CANOGA PARK, CALIFORNIA

~~670 1072~~

R-15075-1 8

(Unclassified Title)

GEMINI DESIGN APPROVAL TEST PROGRAM
FINAL REPORT,
ENGINE SYSTEMS,
VOLUME I
OAMS 14-DAY CONFIGURATION
SE 7 ENGINE SYSTEM

~~Group 4~~
~~Downgraded at 3-Year Intervals~~
~~Declassified After 12 Years~~

CLASSIFICATION CHANGE
To UNCLASSIFIED
By authority of [illegible] Date 2/3/72
Classified [illegible] Scientific and Technical Information Facility

P.O. Y20161R
G.O. 8645

GPO DISTRIBUTION COPY
Destroy when no longer needed.
Do not return to GPO files.

~~X70-70611~~

PREPARED BY

Spacecraft Engine Division
Canoga Park, California

APPROVED BY

R. W. Helsel
Gemini Program Manager

NO. OF PAGES 1307 & viii

REVISIONS

DATE 21 October 1965

DATE	REV. BY	PAGES AFFECTED	REMARKS

FORM RIB-G-1 REV. 4-64

~~CONFIDENTIAL~~

~~This document contains information affecting the national defense of the United States within the meaning of the Espionage Laws, Title 18, U.S.C., Sections 793 and 794. Its transmission or the revelation of its contents in any manner to an unauthorized person is prohibited by law.~~

NOTICE

This document may be handled as UNCLASSIFIED after pages 277, 290, 291, 293, 307, 308, 310, 326, 327, 329, 345, 346, 348, 364, 365, 367, 382 through 390, 410, 411, 412, 432, 433, 434, 438, 453, 454, 455, 457, 474 through 477, 479, 494, 495, 496, 498, 514, 515, 517, 533, 534, 536, 552, 553, 557, 572, 573, 576, 592, 593, 594, 596, 612, 613, 615, 630, 631, 632, 1109, and 1110 are removed.

FOREWORD

This report on the Design Approval Test (DAT) program of the Gemini Orbit Attitude and Maneuver System, 14-Day-Configuration, Rocketdyne SE 7 Engine System, P/N 99-106156, was prepared for the McDonnell Aircraft Corporation in accordance with the requirements of Purchase Order Y2016R.

ABSTRACT

The Design Approval Test (DAT) program conducted on the Gemini Orbit Attitude and Maneuver System, 14-Day-Configuration, Rocketdyne P/N 99-106156, is described. Test data, photographs of test equipment, and test summaries are included.

This page intentionally left blank.

CONTENTS

Foreword iii
Abstract iii
Introduction and Summary 1
Description of the Gemini OAMS 14-Day-Configuration SE 7 Engine System (Rocketdyne P/N 99-106156) 7
Test Program 17
Test Sequence 17
Test Unit Identification 18
Test Description and Results, Tank Module 18
Functional Test 18
Vibration Test 20
Functional Test, Post Vibration 23
Test Description and Results, Engine System 24
Acceptance Test 24
Engine System Hot-Fire Tests 26
Mission Duty Cycle Test (160 F Environment) 26
Hot-Fire Calibration Test 31
Drain and Clean Evaluation Test 32
Appendix A
Photographs of Tests and Test Equipment 43
Appendix B
Operation and Failure Reports and Failure Analysis Reports . . . 61
Appendix C
Module/Component Log Book and Acceptance Test Data 101
Appendix D
Design Approval Test Specification and Data 647

This page intentionally left blank.

ILLUSTRATIONS

1. Gemini OAMS 14-Day-Configuration SE 7 Engine System Installed in Rocketdyne Test Adapter Structure (Rocketdyne P/N 99-106656) 8
2. Gemini OAMS 14-Day-Configuration SE 7 Engine System Schematic 9
3. Gemini OAMS 14-Day-Configuration SE 7 Engine System Tank Module, View 1 11
4. Gemini OAMS 14-Day-Configuration SE 7 Engine System Tank Module, View 2 12
5. Gemini OAMS 14-Day-Configuration SE 7 Engine System Tank Module Schematic 13
6. Gemini OAMS 14-Day-Configuration Tank Module, R-Axis Vibration Test Installation, View 1 44
7. Gemini OAMS 14-Day-Configuration Tank Module, R-Axis Vibration Test Installation, View 2 45
8. Gemini OAMS 14-Day-Configuration Tank Module, R-Axis Vibration Test Installation, View 3 46
9. Gemini OAMS 14-Day-Configuration Tank Module, R-Axis Vibration Test Installation, View 4 47
10. Gemini OAMS 14-Day-Configuration Tank Module, R-Axis Vibration Test Installation, Typical Shaker-to-Tank Module Structure Attachment 48
11. Gemini OAMS 14-Day-Configuration Tank Module, Z-Axis Vibration Test Installation, View 1 49
12. Gemini OAMS 14-Day-Configuration Tank Module, Z-Axis Vibration Test Installation, View 2 50
13. Gemini OAMS 14-Day-Configuration Tank Module, Z-Axis Vibration Test Installation, Typical Shaker-to-Tank Module Structure Attachment 51

14. Gemini 14-Day-Configuration Tank Module Vibration Test, Control Equipment and Instrumentation 52
15. Gemini OAMS 14-Day-Configuration SE 7 Engine System, Hot-Fire Test Installation, View 1 53
16. Gemini OAMS 14-Day-Configuration SE 7 Engine System, Hot-Fire Test Installation, View 2 54
17. Gemini OAMS 14-Day-Configuration SE 7 Engine System, Hot-Fire Test Installation, View 3 55
18. Gemini OAMS 14-Day-Configuration SE 7 Engine System, Hot-Fire Test Installation, View 4 56
19. Gemini OAMS 14-Day-Configuration SE 7 Engine System, Hot-Fire Test Installation, View 5 57
20. Gemini OAMS 14-Day-Configuration SE 7 Engine System, Hot-Fire Test Installation, Post-MDC at High Temperature (160 F) 58
21. Gemini OAMS 14-Day-Configuration SE 7 Engine System, Post-MDC at High Temperature (160 F), 25-Pound-Thrust TCA No.'s 1 and 8, Typical 59
22. Gemini OAMS 14-Day-Configuration SE 7 Engine System, Post-MDC at High Temperature (160 F), 85-Pound-Thrust TCA No. 11 and 100-Pound-Thrust TCA No. 13, Typical . . . 60

INTRODUCTION AND SUMMARY

The Design Approval Test (DAT) program for Gemini Orbit Attitude and Maneuver System (OAMS) 14-Day Configuration SE 7 Engine System was conducted in compliance with McDonnell Aircraft Corporation Purchase Order Y20161R.

The objective of the DAT program was to demonstrate compliance of this Engine System with the requirements of McDonnell Aircraft Corporation Specification Control Drawing 52-52701 by conducting a planned series of environmental and operating tests on one Engine System.

This Engine System consisted of a pressurant system; a propellant feed system; 16 thrust chamber assemblies (TCA's); eight each 25-pound-thrust, two each 85-pound-thrust, and six each 100-pound-thrust; and associated interconnecting pressurant and propellant lines and manifolds. The Engine System pressurant and propellant feed systems and associated interconnecting lines were grouped and mounted on a MAC-supplied, Gemini Spacecraft tank module structure assembly. This structure, including the pressurant and propellant feed systems, is referred to as the Engine System tank module. The Engine System tank module was in turn installed in an SE 7 Engine System test adapter structure which included the 16 TCA's and the associated TCA propellant feed manifolds. The test adapter structure simulated the Gemini Spacecraft adapter section relative to the installation of all of the SE 7 Engine System (OAMS) components.

All interconnecting tubing used in assembling the Engine System was Gemini Spacecraft tubing supplied by MAC. The tubing was assembled into the Engine System using brazing equipment and procedures as per those used in the assembly of Gemini Spacecraft by MAC.

During the test program, tests were first conducted on the Engine System tank module and subsequently, after installation of the tank module into the Engine System test adapter structure and completion of Engine System assembly, on the complete Engine System. The tests conducted on the Engine System tank module included a functional test, a vibration test, and a postvibration functional test. The complete Engine System was subjected to an acceptance test, a mission duty cycle test at a temperature of 160 F, a hot-fire calibration test, and a drain and clean evaluation test. The operation of the Engine System tank module and the complete Engine System was satisfactory during all of the tests conducted, to the extent which could be determined from the test data obtained, with two exceptions. The reverse-flow leakage of the oxidizer side check valves in the Component Package B was slightly in excess of the specified allowable during the first functional test, and the fuel tank bladder failed during the final preparations for the mission duty cycle test. The analysis of the fuel tank bladder failure concluded that the bladder had sustained considerable damage as a result of excessive loads imposed on it during the vibration test conducted on the tank module, and that this damage probably propagated during subsequent test operations, resulting in the subsequent failure of the bladder to function as required.

The results of the test program are summarized briefly as follows.

The tests conducted on the tank module, a functional test, vibration test, and a postvibration test functional test, were completed successfully; however, during the initial functional test, the Component Package B oxidizer No. 1 and No. 2 check valves were found to be leaking in

excess of the specified reverse-flow allowable by 5.2 and 8 scc helium/hour, respectively, when leak tested at 2 psig. The maximum allowable leakage is 2.0 scc helium/hour. The failures were reported in operation and failure report (OFR) and failure analysis report (FAR) 13361R (Appendix B). In addition, during the functional test following the vibration test, the fuel tank bladder was found to be leaking in excess of the specified allowable by 0.65 scc nitrogen in 15 minutes. The maximum allowable leakage was 2.0 scc nitrogen in 15 minutes. The failure was reported in OFR (FAR) 07428R (Appendix B). In each case, testing was allowed to continue, with failure analysis being deferred until the completion of the test program. In the case of the Component Package B check valve leakage failures, it was determined that the magnitude of the leakages was not sufficient to affect the results of the remaining tests. It is significant to note that when tested during the postvibration test functional test, the reverse-flow leakage of these two check valves was within specification allowable. It was assumed that the leakages were caused by particulate contamination on the check valve seats which were displaced during the vibration test. In the case of the fuel tank bladder leakage failure, it was likewise determined that the magnitude of the leakage was not sufficient to affect the results of the remaining tests.

Following the aforementioned tests, the tank module was installed in the Engine System test adapter structure, and assembly of the Engine System was completed.

The SE 7 Engine System was first subjected to an acceptance test. The acceptance test was successfully completed; however, during the first attempt to conduct the gross external leakage test portion of the acceptance test, the leakage was in excess of the specification allowable. The source of the leakage was found to be in the vicinity of the fuel valve inlet tube stub of the No. 4 25-pound-thrust TCA. The failure was reported in OFR (FAR) 15762R (Appendix B). The TCA was replaced and testing resumed. All portions of the acceptance test were then successfully completed until the results of the last portion of the test, the liquid calibration test, were evaluated. The results of this test indicated that the oxidizer side of the No. 8 25-pound-thrust TCA was restricted to an extent to be considered a detriment to the remaining tests. The apparent failure was reported in OFR (FAR) 12941R (Appendix B). The TCA was replaced, and the remainder of the acceptance test was successfully completed.

The failure analysis conducted on the No. 4 25-pound-thrust TCA, which was removed following the first attempt to conduct the gross external leakage test, FAR 15762R (Appendix B), concluded that the source of the leakage was not in the TCA fuel valve inlet tube stub but at the Engine System fuel manifold feed line-to-TCA fuel valve inlet tube stub braze joint. This braze fitting was replaced when the replacement TCA was installed. The failure analysis conducted on the No. 8 25-pound-thrust TCA, which exhibited a restriction on the oxidizer side during the liquid calibration test, FAR 12941R (Appendix B), concluded that the malfunction was caused by an obstruction in the TCA oxidizer inlet feed line between the oxidizer valve inlet tube stub-to-Engine System oxidizer

manifold feed line braze joint and the TCA oxidizer inlet orifice. Since the tests conducted on the TCA during the failure analysis indicated that the oxidizer side of the TCA was not restricted and no foreign material was found in the TCA oxidizer inlet tube stub or the connecting Engine System oxidizer manifold feed line, it was concluded that the obstruction must have been lost when the TCA was removed from the Engine System.

Subsequent to the completion of the acceptance test, the Engine System was subjected to two hot-fire tests, a mission duty cycle test conducted at a temperature of 160 F and a hot-fire calibration test, and a drain and clean evaluation test. During the temperature-conditioning period prior to the mission duty cycle test, a fuel tank bladder failure was evidenced by the presence of fuel in the test facility fuel tank vent line connected to the Engine System Component Package B. Subsequent investigation revealed that the fuel tank bladder had failed. The failure was reported in OFR 32627R and FAR 07428R (Appendix B).

The fuel tank assembly was removed from the Engine System and replaced with a new assembly. Failure analysis of the bladder assembly revealed tears, pin holes, and torsional deformation. It was concluded that the bladder assembly incurred considerable damage as a result of excessive loads imposed on it during the vibration test conducted on the tank module, and that this damage probably propagated during subsequent test operations, which involved bladder assembly cycling, resulting in the final failure.

Upon replacement of the failed fuel tank assembly, testing was resumed. The mission duty cycle test, the hot-fire calibration test, and the drain and clean evaluation test were successfully completed.

Very few Engine System performance parameter measurements were made during the hot-fire tests because of the limited number of instrumentation access points on the Engine System, especially in the area of TCA performance measurement. As a result, only a qualitative analysis of TCA operation during the hot-fire tests could be made. Instrumentation coverage of the operation of the overall engine system during the mission duty cycle test was adequate, however, and analysis of the test data indicated Engine System operation to be normal. An attempt was made to determine the overall Engine System specific impulse during the mission duty cycle test using the measurements of TCA performance and Engine System propellant consumption that were obtained, but the resulting value was unrealistically high. It is expected that this unrealistic value was the result of a possible inadequacy in the procedures used in determining the engine system propellant consumption during the test and the qualitative nature of the measurement of TCA performance during the test.

The results of the drain-and-clean evaluation test indicated that the cleaning procedure could be improved in a number of areas. The conclusions reached as a result of this evaluation test are presented on page 41 of this report.

In view of the tests conducted on this Gemini OAMS 14-Day-Configuration DAT SE 7 Engine System and the analysis of the test results, it is concluded that compliance of this Engine System configuration with specification requirements was adequately demonstrated.

DESCRIPTION OF THE GEMINI OAMS 14-DAY-CONFIGURATION SE 7 ENGINE SYSTEM (ROCKETDYNE P/N 99-106156)

The Gemini Orbit Attitude and Maneuver System (OAMS) SE 7 Engine System provides the propulsion for attitude and maneuver control of the Gemini Spacecraft while in earth orbit. The 14-Day-Configuration of the SE 7 Engine System (Fig. 1 and 2) is comprised of a pressurant system, a bi-propellant [nitrogen tetroxide (oxidizer)/monomethylhydrazine (fuel)] feed system, and 16 thrust chamber assemblies (TCA's). These TCA's, when operated in various combinations, provide the capability to control the pitch, yaw, roll, lateral, forward, and aft motions of the spacecraft during orbital flight.

The pressurant system is comprised of a pressurant tank for storing high-pressure helium; a Component Package A which includes a normally closed cartridge-actuated valve for isolating the pressurant in the pressurant tank until it is required for Engine System operation, a pressure transducer for monitoring pressurant supply pressure, and two manually operated valves for pressurant charging and ground testing; a pneumatic pressure regulator to regulate the pressurant from storage pressure to operating pressure; a Component Package E which includes a pressure switch, a normally open cartridge-actuated valve, a normally closed cartridge-actuated valve, and a solenoid valve for manual control of pressurant regulation in the event of a regulator malfunction; and a Component Package B for distribution of pressurant to the propellant tanks and pressurant relief in case of overpressurization. The Component Package B includes check valves for isolation of propellant vapors emanating from the propellant tanks, burst diaphragms, and pressure relief valves for pressure relief in the case of overpressurization, a pressure transducer for monitoring regulated pressure, and two manually operated valves for ground testing.

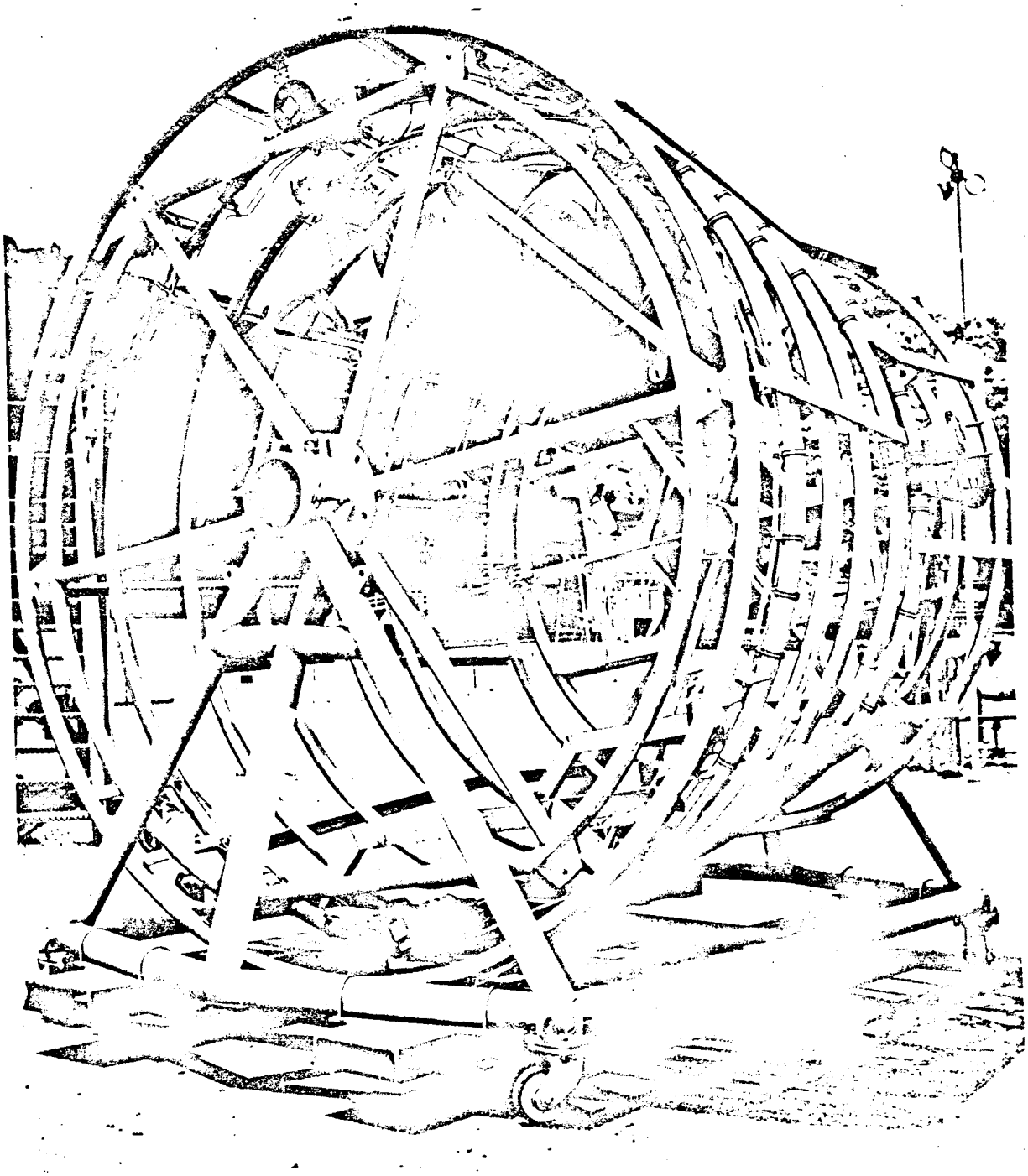

1HE21-6/17/65-S1*

Figure 1. Gemini OAMS 14-Day-Configuration SE 7 Engine System Installed in Rocketdyne Test Adapter Structure (Rocketdyne P/N 99-106656)

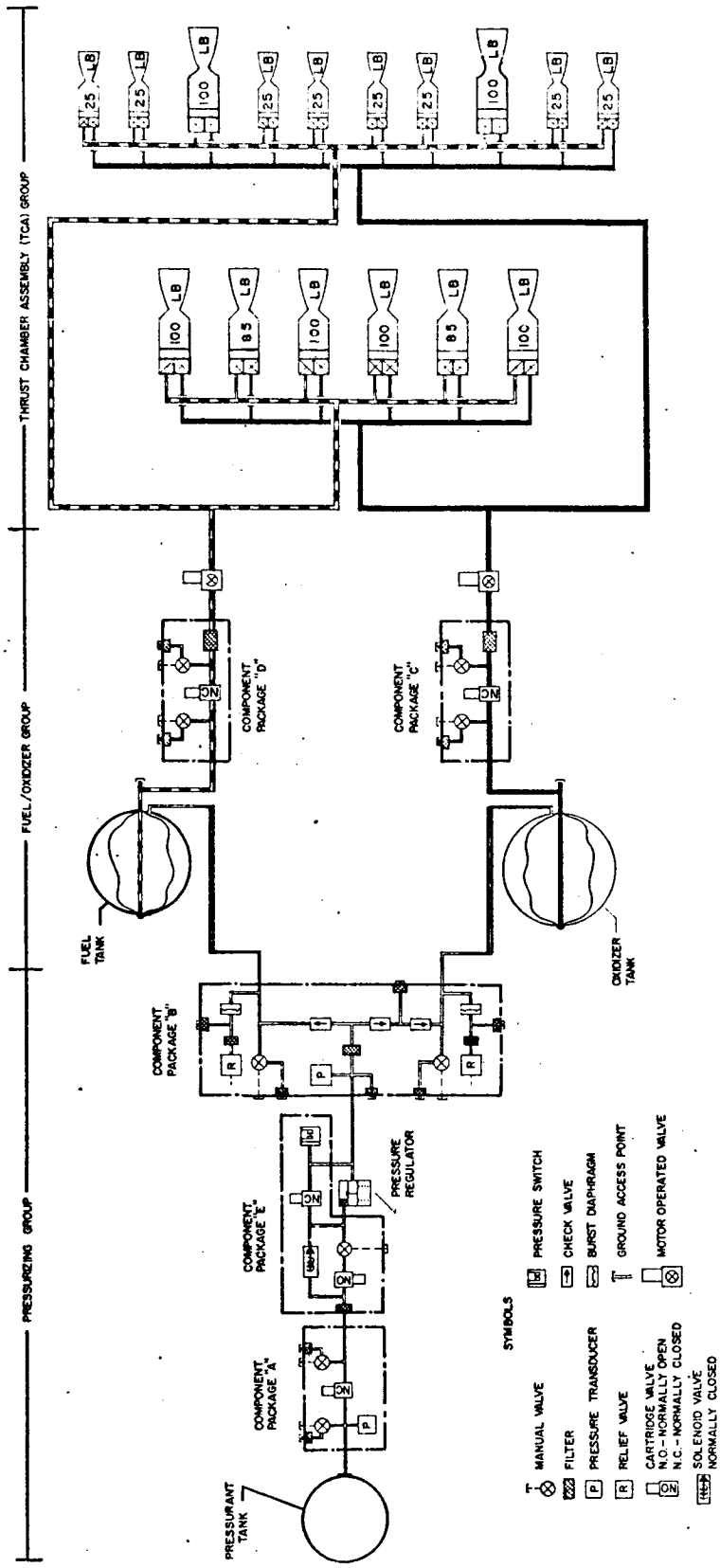

Figure 2. Gemini OAMS 14-Day-Configuration SE 7 Engine System Schematic

The propellant feed system is comprised of two positive-expulsion-type propellant tanks which provide a means of forcing the propellants to the 16 TCA's under conditions of zero or randomly oriented acceleration forces; a Component Package C which includes a normally closed cartridge-actuated valve for isolating the oxidizer in the oxidizer tank until it is required and two manually operated valves for propellant charging and ground testing; a Component Package D which includes a normally closed cartridge actuated valve for isolating the fuel in the fuel tank until it is required, and two manually operated valves for propellant charging and ground testing; and two propellant shutoff valves, one in each propellant service, to provide a means for positively inhibiting propellant leakage from the TCA propellant valves, if necessary, after the Component Package C and D cartridge-actuated valves have been opened. The Engine System pressurant and propellant feed systems are grouped and mounted on a special structure. This structure, including the pressurant and propellant feed systems, is referred to as the Engine System Tank Module (Fig. 3 through 5).

The 16 TCA's are identified as follows: eight 25-pound-thrust units which provide for pitch, yaw, and roll control when fired in combinations of two to five; two 85-pound-thrust units which provide for aft maneuver control; six 100-pound-thrust units, two of which provide for forward maneuver control, and the remaining four for lateral maneuver control of the Gemini spacecraft. The eight 25-pound-thrust units produce a nominal thrust of 23.0 pounds each in a vacuum environment, and consist of two fixed orifices sized for a mixture ratio (o/f) of 1.3, two fast-acting solenoid-type propellant valves, an injector, and an ablative-type thrust chamber body with a metal outer shell. The two 85-pound-thrust units produce a nominal thrust of 79.0 pounds each in a vacuum environment and consist of two fixed orifices sized for a mixture ratio (o/f) of 1.6, two fast-acting solenoid-type propellant

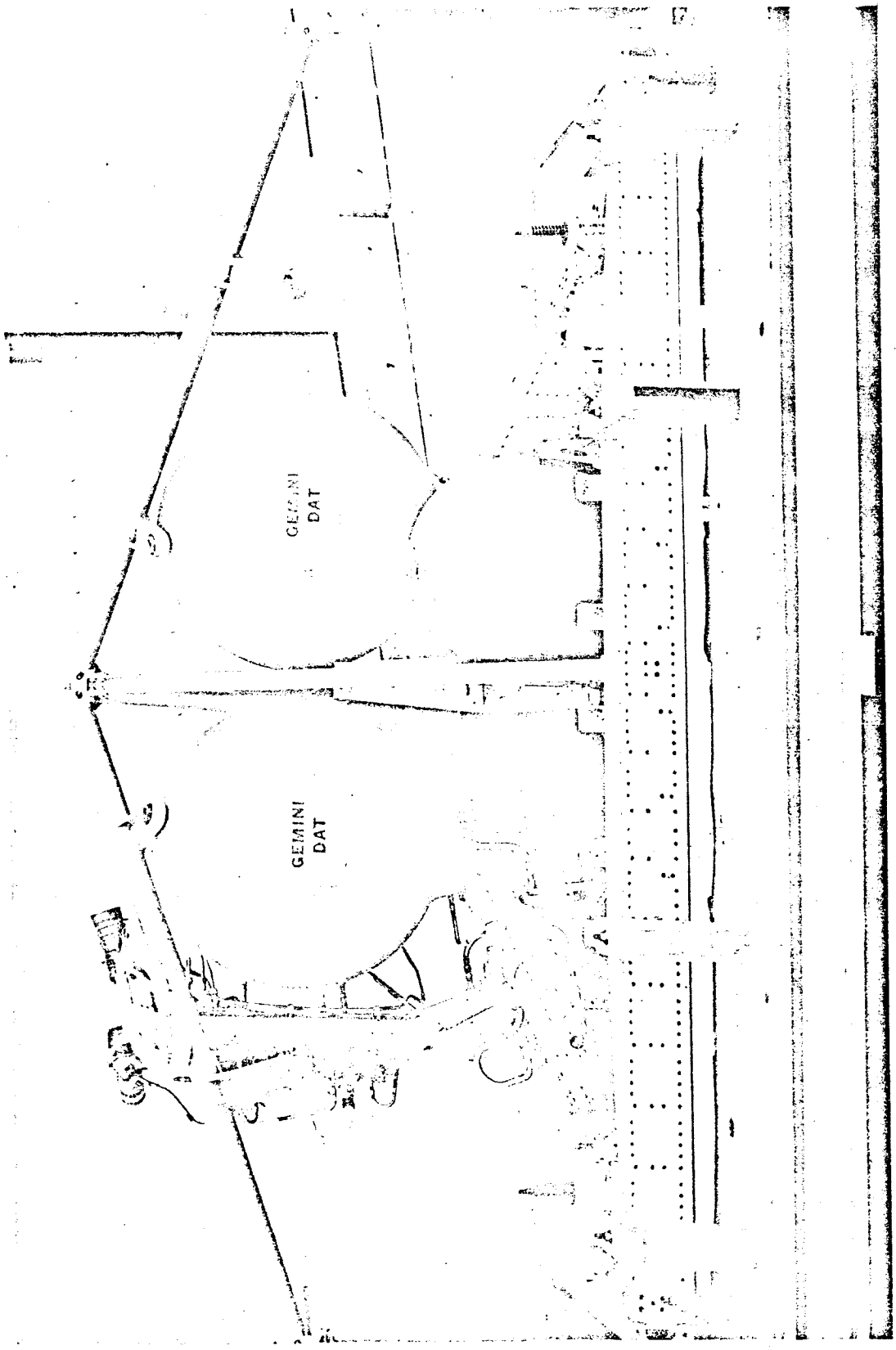

1HE62-8/19/64-C1F

Figure 3. Gemini OAMS 14-Day-Configuration SE 7 Engine System Tank Module, View 1

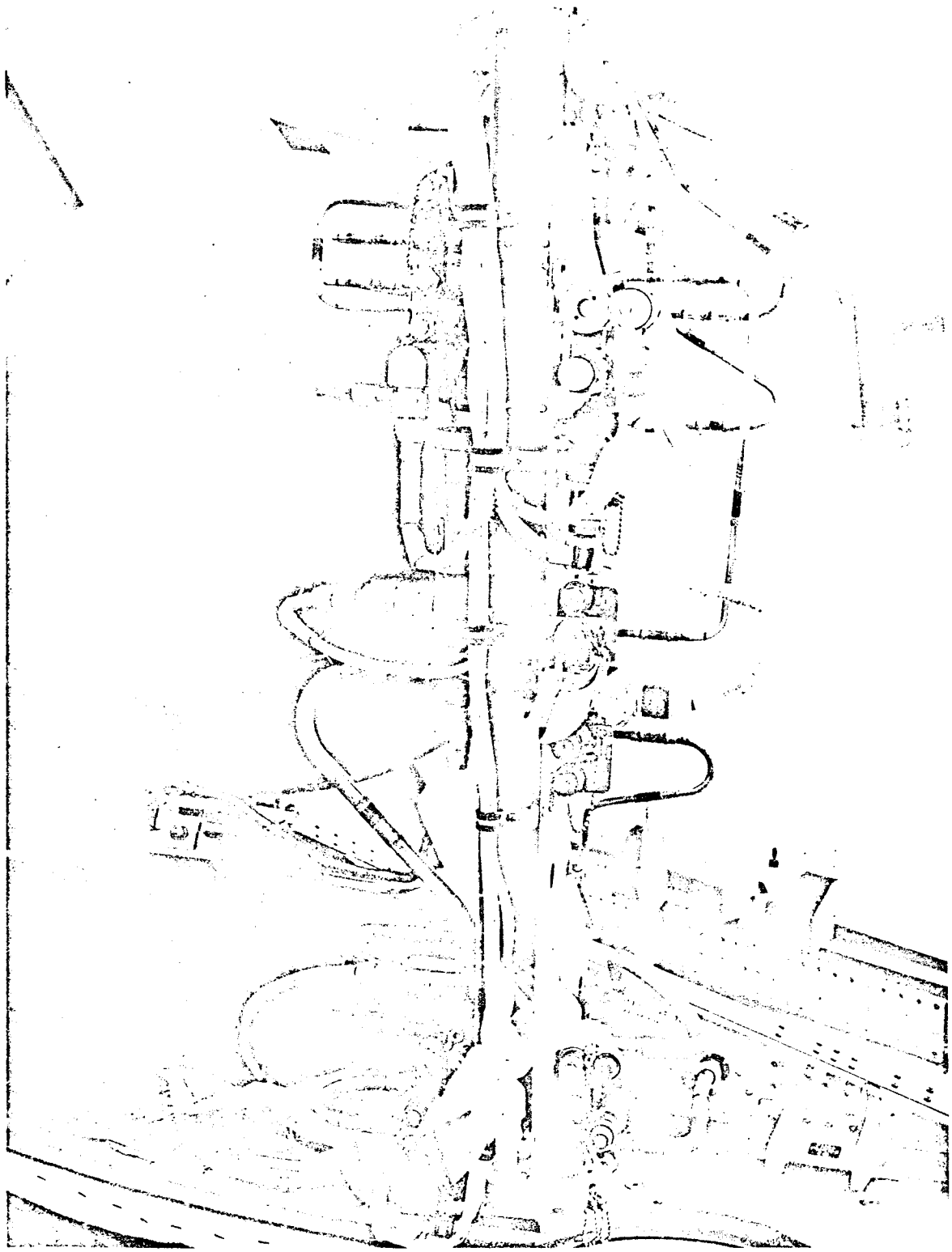

1HE62-8/19/64-C1E

Figure 4. Gemini OAMS 14-Day-Configuration SE-7 Engine System Tank Module, View 2

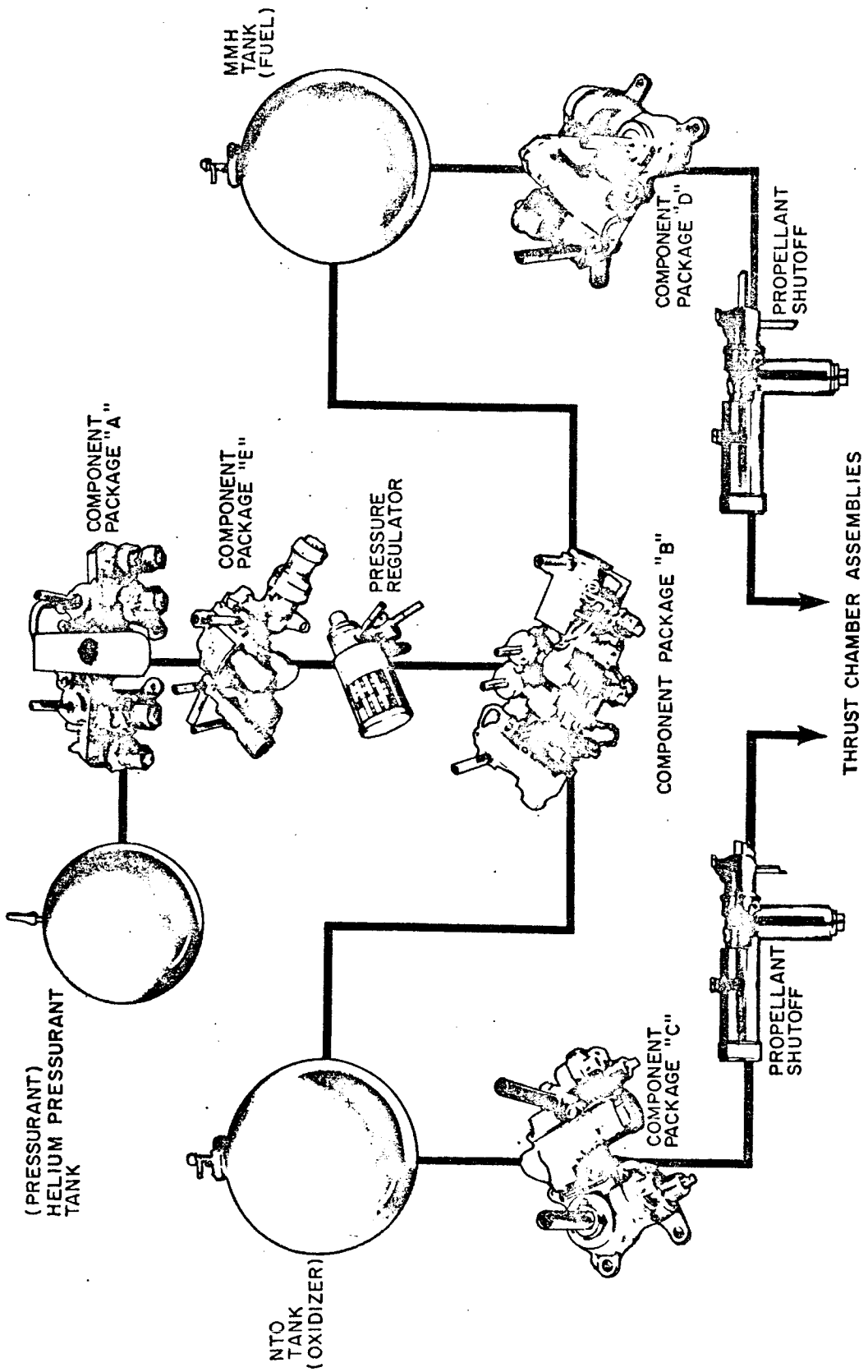

Figure 5. Gemini OAMS 14-Day-Configuration SE-7 Engine System Tank Module Schematic

valves, an injector, and an ablative-type thrust chamber body with a metal outer shell. The six 100-pound-thrust units produce a nominal thrust of 94.5 pounds each in a vacuum environment, and consist of two fixed orifices sized for a mixture ratio (o/f) of 1.6, two fast-acting solenoid-type propellant valves, an injector, and an ablative type thrust chamber body with a metal outer shell.

Engine System operation is effected in the following manner. The pyrotechnic cartridges in the normally closed cartridge-actuated valves of Component Packages A, C, and D are fired, forcing the respective cartridge valves to open. The helium in the pressurant tank flows through Component Package A and through the normally open cartridge valve of Component Package E to the regulator where it is regulated to Engine System operating pressure. The regulated helium pressure surrounds the positive-expulsion propellant tank bladders and forces the propellants to flow through Component Packages C and D into the propellant manifolds connected to the TCA's. When it is required that a TCA or combination of TCA's be fired, the propellant valves on the required TCA or TCA's are electrically energized thus allowing the hypergolic propellants to mix, burn, and generate thrust.

The physical and performance data for the SE 7 Engine System are presented in Table 1.

TABLE 1

GEMINI OAMS 14-DAY-CONFIGURATION SE 7 ENGINE SYSTEM
(ROCKETDYNE P/N 99-106156)
PHYSICAL AND PERFORMANCE DATA

Compliance of the Gemini OAMS 14-Day-Configuration SE 7 Engine System with the following physical and performance data has been verified by Design Approval Tests.

Propellant Compatibility	Monomethylhydrazine (fuel) and Nitrogen Tetroxide (oxidizer)
Design Propellant Load, Fuel, pounds at 160 F	155.3
Design Propellant Load, Oxidizer, pounds at 160 F	245.8
Design Pressurant Load, Helium, psia at 70 F	3000
Vibration Level Random (Tank Module only), g rms	7.0
Gross External Leakage, maximum scc/hr He	47.5
Environmental Temperature Range, F	70 to 160
Operating Pressure, psia	
Supply, maximum at 70 F	3000
Regulated, nominal	295
Proof Pressure, psig	
Supply System	4500
Regulated System	450

This page intentionally left blank.

TEST PROGRAM

TEST SEQUENCE

One SE 7 Engine System (OAMS) tank module, consisting of the SE 7 Engine System pressurant system and the propellant feed system mounted on a MAC-supplied spacecraft tank module structure assembly, was subjected to the tests indicated below in the order listed. Upon successful completion of these tests, the tank module was installed in an SE 7 Engine System test adapter structure, which included all the propellant feed system manifolding, exclusive of that contained on the tank module, and the 16 TCA's. The test adapter structure simulated the Gemini Spacecraft adapter section relative to the installation of all the SE 7 Engine System (OAMS) components. The complete SE 7 Engine System was subjected to the tests indicated below in the order listed.

Tank Module

1. Functional test
    a. Visual inspection
    b. Proof pressure
    c. Gross external leakage
    d. Functional and internal leakage
2. Vibration test
3. Functional Test, postvibration
    a. Proof pressure
    b. Gross external leakage
    c. Functional and internal leakage

Engine System

1. Acceptance test
   a. Visual inspection
   b. Proof pressure
   c. Gross external leakage
   d. TCA propellant valves functional and internal leakage
   e. Liquid calibration
2. Mission duty cycle test (160 F environment)
3. Hot-fire calibration test
4. Drain and clean evaluation test

TEST UNIT IDENTIFICATION

1. Tank Module, P/N 99-106161
2. Engine System, P/N 99-106156

TEST DESCRIPTION AND RESULTS, TANK MODULE

FUNCTIONAL TEST

Description

The functional test consisted of a visual inspection, a proof pressure test, a gross external leakage test, and a functional and internal

leakage test. The functional and internal leakage test consisted of the following tests:

1. Component Packages A, C, D, and E, cartridge bridge continuity test
2. Component Packages A and B, flight transducer calibration using a pressure-temperature indicator
3. Component Package B, oxidizer and fuel relief valve leakage tests, oxidizer and fuel check valve leakage tests, and oxidizer and fuel burst diaphragm leakage tests
4. Component Package E, solenoid valve response test and pressure switch actuation pressure test
5. Pneumatic pressure regulator, regulation test
6. Propellant tanks-bladder leakage tests
7. Oxidizer and fuel propellant shutoff valves, response tests

Results

The visual inspection and the proof pressure and gross external leakage tests were successfully completed; however, the Component Package B oxidizer No. 1 and 2 check valves failed the reverse-flow leakage requirement at 2 psig during the functional and internal leakage test. The oxidizer No. 1 check valve leakage was 7.2-scc helium in 15 minutes and the oxidizer No. 2 check valve leakage was 10-scc helium in 15 minutes. The maximum allowable leakage is 2.0-scc helium in 15 minutes for each check valve. The failure was reported in OFR (FAR) 13361R (Appendix B). Failure analysis was deferred and testing continued per Rocketdyne Internal Letter 4388-5168 (page 874, Appendix D).

VIBRATION TEST

Because of the unavailability of the necessary special vibration test equipment required for the tank module vibration test located in close proximity to Rocketdyne, the test was conducted at the NASA, MSC vibration facility in Houston, Texas. Upon completion of the functional test, the Tank Module was packaged and transported by air freight to Houston, Texas.

Description

The tank module was suspended between three vibration shakers, one at each of the three tank module structure attach points and subjected to sinusoidal and random excitation along two axes. The two axes were identified as the Z-axis, which corresponds to the longitudinal axis of the spacecraft and the R-axis, which was normal to the longitudinal axis, in the X-Y plane, with excitation forces directed through the center of the tank module toward a simulated spacecraft centerline. Vibration in each axis was to consist of a 5 ±0.5 minutes logarithmic sine sweep from 20 to 2000 cps at a peak level of 1 g and 8 ±0.6 minutes of random excitation at an overall g rms level of 7.0 $\pm^{15}_{0}$ percent. The random vibration power spectral density spectrum was:

1. 0.02 to 0.06 g^2/cps from 20 to 200 cps
2. 0.06 g^2/cps from 200 to 500 cps
3. 0.06 to 0.01 g^2/cps from 500 to 100 cps
4. 0.0. g^2/cps from 1000 to 2000 cps

Random vibration input to the tank module was controlled from the accelerometer feedback of the center shaker.

Preparatory to the conduct of the vibration test, the following operations were performed: (1) the tank module was leak tested using helium; (2) a bypass line was installed between the two Component Package A manual valve ports; (3) the propellant tanks were loaded with test fluids, 255 pounds of Freon in the oxidizer tank and 152 pounds of a mixture by volume of 76-percent ethyl alcohol and 24-percent water in the fuel tank (the density of the test fluids approximated the densities of the actual propellants); and (4) expended cartridges and cartridge valves were installed in Component Packages C and D.

The tank module was pressurized with helium to 125 psig during the sinusoidal vibration and to design operating pressures during the random vibration (3000 psig upstream of the pressure regulator and 295 ±15 psig downstream of the pressure regulator).

Results

The vibration test was successfully completed. During the conduct of the preparation for test and the actual vibration testing, several procedural deviations were instituted. These deviations consisted of the following:

1. To facilitate testing, the propellant tanks were loaded with test fluids prior to installing the expended cartridges and cartridge valves in Component Packages C and D. As a result of this, a loss of approximately 4 pounds of test fluid was incurred on the fuel side upon installation of the valve. This reduction

in the load resulted in a value of 148 pounds of fluid on the fuel side. This deviation was authorized per Rocketdyne Internal Letter 4388-5102 (page 910, Appendix D).

2. During the initial sine survey in the R-axis, conducted with the center shaker, equipment limitations resulted in the survey being conducted over a frequency range of 40 to 2000 cps; the specification requirement was 20 to 2000 cps. This deviation was approved per Rocketdyne Internal Letter 4388-5104 (page 903, Appendix D).

3. During the conduct of the sine survey in the R-axis, the tank module pressurant tank was noted to be loose. To remedy this condition, the clamp on the pressurant inlet line to the Component Package A was repositioned and shimmed, and the bolts and washers securing the pressurant tank to the bracket were replaced. Following the completion of the modifications an additional sine survey was conducted, using only the center shaker, to ensure the adequacy of the modifications. The sine survey was conducted over a frequency range of 20 to 60 cps. During this test, the pressure upstream and downstream of the regulator was increased from 125 to 1500 and 295 ±15 psig, respectively. The modifications and the additional test were authorized per Rocketdyne Internal Letter 4388-5104 (page 903, Appendix D). The remaining sine surveys in the R-axis, utilizing the two side shakers independently and all three shakers simultaneously, were conducted over a frequency range of 20 to 2000 cps with the tank module pressurized at 125 psig.

4. The sine survey conducted in the Z-axis was limited to only one run utilizing all three shakers simultaneously over a frequency range of 20 to 2000 cps. The required sine surveys using the three shakers independently were deleted per Rocketdyne Internal Letter 4388-5108 (page 904, Appendix D).

5. An additional leak test was conducted upon completion of the R-axis random run, prior to running the Z-axis. This test was conducted to ensure that no adverse effects had been sustained by the pressurant tank which had sustained a degree of oscillation during the R-axis test that was greater than expected. The leak test was limited to the tank module area upstream of the Component Package A cartridge valve. This additional test was authorized per Rocketdyne Internal Letter 4388-5108 (page 904, Appendix D).

FUNCTIONAL TEST, POST VIBRATION

Description

The functional test consisted of a proof pressure test, a gross external leakage test, and a functional and internal leakage test. The functional and internal leakage test consisted of the following tests:

1. Component Packages A, C, D, and E, cartridge bridge continuity test
2. Component Packages A and B, flight transducer calibration using a pressure-temperature indicator

3. Component Package B, oxidizer and fuel relief valve leakage tests, oxidizer and fuel check valve leakage tests, and oxidizer and fuel burst diaphragm leakage tests
4. Component Package E, solenoid valve response test and pressure switch actuation pressure test
5. Pneumatic pressure regulator, regulation test
6. Propellant tanks-bladder leakage tests
7. Oxidizer and fuel propellant shutoff valves, response tests

Results

The proof pressure and gross external leakage tests were successfully completed; however, the fuel tank failed the bladder leakage requirement during the functional and internal leakage test. The leakage was 2.0-scc nitrogen in 15 minutes. The maximum allowable leakage is 0.35-scc nitrogen in 15 minutes. The failure was reported in OFR (FAR) 07428R (Appendix B). Failure analysis was deferred and testing continued per Rocketdyne Internal Letter 4388-5237 (page 956, Appendix D).

TEST DESCRIPTION AND RESULTS, ENGINE SYSTEM

ACCEPTANCE TEST

Description

The acceptance test consisted of a visual inspection, proof pressure test, gross external leakage test, TCA propellant valve functional and internal leakage test, and a liquid calibration test.

Results

The acceptance test was successfully completed; however, during the first attempt to conduct the gross external leakage test, the external leakage was in excess of the specified allowance of 47.5-scc helium per hour. The source of the leakage was found to be in the vicinity of the fuel valve inlet line on the No. 4 25-pound-thrust TCA. The failure was reported in OFR (FAR) 15762R (Appendix B). The TCA was replaced and testing was resumed, beginning with the proof pressure test, per Rocketdyne Internal Letter 4388-5254 (page 986, Appendix D). The proof pressure test, the gross external leakage test, and the TCA propellant valve functional and internal leakage test were then successfully completed. The engine system was then subjected to a liquid calibration test. Since this test was conducted only to provide an indication of the condition of the engine system prior to hot-fire testing and to provide additional data to be used in determining nominal test parameters, no failure criteria were specified. However, the oxidizer side flowrate of the No. 8 25-pound-thrust TCA was sufficiently low during the test to be considered a detriment to the forthcoming hot-fire tests. A failure was reported in OFR (FAR) 12941R (Appendix B). The TCA was replaced and testing continued per Rocketdyne Internal Letter 4388-5287 (page 998, Appendix D). The liquid calibration test was then successfully completed.

The Component Package B used in this Engine System (P/N 557305) included burst diaphragms of a configuration which had previously been found to be subject to leakage (the burst diaphragm configuration was changed in a later configuration of the Component Package B). Since possible leakage of the burst diaphragms could effect the pressure relief capabilities of the Engine System during the subsequent tests to be conducted, the burst

diaphragms were purposely ruptured. Following the rupture of the burst diaphragms, the relief valves were leak checked to verify satisfactory operation. The burst diaphragm rupture and relief valve leak check operations were successfully completed.

ENGINE SYSTEM HOT-FIRE TESTS

Upon completion of the acceptance test, the Engine System was transported to the Rocketdyne Santa Susana Field Laboratory (SSFL), where it was installed in the hot-fire test facility, Component Test Laboratory (CTL-3), cell 39B. The Engine System was installed in a horizontal position (90 degrees from the spacecraft launch position). The hot-fire test preparation included the connecting of the test facility systems for venting and charging the pressurant tank, venting the propellant tanks, electrical control of Engine System operation, and monitoring Engine System operation.

MISSION DUTY CYCLE TEST (160 F ENVIRONMENT)

Description

The purpose of the mission duty cycle test was to demonstrate satisfactory Engine System operation during all phases of a simulated mission duty cycle under high-temperature conditions (160 ±5 F). The mission duty cycle, i.e., the sequencing and duration of TCA operation, was conducted in accordance with the requirements of MAC MDC OSA-306 and OSM-404. The

MDC test requirement to effect propellant depletion upon completion of the mission duty cycle firings was waived in the interest of obtaining data to determine propellant utilization per Rocketdyne Internal Letter 5388-6263.

Preparatory to initiating the test, the Engine System propellant tanks were charged to the design loads with the respective propellants (155.3 pounds of MMH for fuel and 245.8 pounds of NTO for oxidizer) and the pressurant tank was to be charged with helium to the design load (equivalent to 3000 psia at a temperature of 70 F). The entire Engine System was then preconditioned to a temperature of 160 ±5 F. Temperature conditioning was effected by covering the entire Engine System test adapter structure with an insulating skin, except for the TCA nozzle exits, and introducing hot gaseous nitrogen into the enclosed structure. Efficient deployment of the hot gas was accomplished by directing the nitrogen flow, by means of a diffuser assembly, to the various sections of the Engine System wherein the bulk of the hardware was located. During the conduct of the test proper (firing of the TCA's) the Engine System was constantly exposed to a supply of 160 ±5 F nitrogen. The individual Engine System components were allowed to seek their own thermal equilibrium.

Following the test, the quantities of propellants consumed during the test were determined.

Results

The Engine System propellant tanks were charged with the design loads of propellants and the temperature preconditioning period was initiated.

The pressurant tank was not charged prior to the temperature preconditioning period as required by the test specification because of test facility safety requirements which prohibit the presence of personnel in close proximity of the Engine System with the pressurant tank charged to the design load. It was necessary for personnel to be in close proximity of the Engine System during the temperature preconditioning period to monitor the temperature conditioning system. This deviation in the test specification requirement was approved per Rocketdyne Internal Letter 5388-6262 (page 1035, Appendix D).

During the temperature preconditioning period, a perceptible flow of fuel (MMH) was observed at the Component Package B fuel tank vent port. This failure is reported in OFR 32627R and FAR 07428R (Appendix B). A subsequent investigation revealed that the fuel tank bladder had failed. The fuel tank assembly was removed from the Engine System at the test site and a new tank assembly was installed as authorized per Rocketdyne Internal Letter 5388-6045 (page 1012, Appendix D). Resistoflex threaded fittings were used to reconnect the pressurant and propellant feed lines to the replacement tank.

After completion of the new fuel tank assembly installation and prior to resuming the temperature conditioning of the Engine System, the temperature conditioning requirement was changed to limit the propellant tank temperature to 90 ±10 F, as opposed to the 160 ±10 F for the other components of the Engine System, per Rocketdyne Internal Letter 5388-6052 (page 784, Appendix D). To accomplish this, the propellant tanks were heavily insulated.

The Engine System fuel tank was then charged to the design load, and the Engine System was successfully preconditioned for the mission duty cycle (MDC) test. Following stabilization of the temperatures, the Engine

System pressurant tank was charged to the design load with helium (equivalent to 3000 psia at a temperature of 70 F). Subsequent to the pressurant tank loading, the oxidizer and fuel propellant shutoff valves were opened and the Engine System was pressurized by firing the cartridges in the cartridge valves of Component Packages A, C, and D. Stabilized Engine System pressure levels were attained in approximately 8 seconds. An evacuation system, connected to the pressurant regulator reference cavity, was then activated and the reference cavity was exposed to a pressure of 1.5 psia maximum to permit the regulator to operate under approximate design altitude conditions throughout the MDC test.

The programmed MDC firing of the Engine System TCA's was satisfactorily completed in accordance with the specified requirements, and significant data obtained during the conduct of the test were reduced and transcribed both in tabular and graphical form as presented in Appendix D. Included in the data presentation are time histories of the Engine System pneumatic and propellant pressures, Engine System and flight transducer supply voltages, surface temperatures in various areas of the Engine System, the throat station shell temperature of each TCA, and representative pulse data for a pitch TCA (No. 1 position) and a yaw-roll TCA (No. 7 position). The TCA pulse data were reduced and analyzed on a sample basis because of the large number of pulses recorded (only a small percentage of the several thousand TCA pulse operations were recorded and analyzed), and were considered representative of the 25-pound-thrust TCA operation during the MDC. The reduced and/or derived TCA pulse data included the following:

1. Pulse identification
2. Steady-state TCA chamber pressure

3. Identification of TCA's firing during the pulse interval
4. Time during the MDC when the pulse occurred
5. Pulse total impulse
6. Cumulative TCA firing time up to the time of the pulse interval
7. Propellant valves response data; energize and de-energize time
8. Propellant valves "on" time

The graphical presentations of Engine System pressure and temperature data do not indicate any unexpected trends or conditions. Analysis of the test data obtained on the operation of the TCA's was limited in general to a qualitative analysis because of the limited number of instrumentation access points on the engine system and the relatively complex mode of Engine System TCA operation. Analysis of the operation of the 85- and 100-pound-thrust TCA's indicated normal operation and performance. Analysis of the operation of the 25-pound-thrust TCA's, however, was hampered by the lack of a sufficient number of performance parameter measurements and instrumentation (chamber pressure) inaccuracies resulting from the grossly adverse environment within which these pressure transducers were required to operate.

One of the more significant Engine System performance parameters, cumulative total impulse, was obtained by utilizing the qualitative TCA performance measurements. The accuracy of the value obtained is unknown. In addition, the overall Engine System specific impulse was obtained by utilizing the cumulative total impulse value and the quantity of propellants consumed by the Engine System during the MDC test as determined during posttest propellant tank refill procedures. The value of overall engine system specific impulse obtained was not realistic. The probable causes of this

unrealistic value are discussed in Appendix D; however, it was concluded that the most probable cause of major error was in the Engine System propellant consumption value used. Such an error could result from an inadequacy which was found in the propellant tank refill procedure that was used. The inadequacy in the propellant tank refill procedure could have caused the entrapment of gas between the propellant tank bladder and shell, preventing the complete refill of the tank. This condition was peculiar to the test operations conducted on this Engine System, as it is a function of the position of the Engine System and the resulting attitude of the propellant tank pressurization ports. During the hot-fire test operations performed on this Engine System, the Engine System was in the horizontal position, 90 degrees from the spacecraft launch position.

HOT-FIRE CALIBRATION TEST

Description

The Engine System hot-fire calibration test was conducted following the MDC test. Twenty-nine separate operations (Table 4, page 1296, Appendix D), each including a different TCA or combination of TCA's firing, were performed at local ambient pressure and temperature conditions, permitted an evaluation of component and Engine System performance which could be used as an index for gaging the operation of the Engine System during the MDC test.

Results

The hot-fire calibration test was successfully completed. Significant data recorded during the test were reduced and were included both in tabular and graphical form in Appendix D.

DRAIN AND CLEAN EVALUATION TEST

Description

In preparation for the drain and clean evaluation test, the Engine System was rotated into the launch position, and the test facility drain and clean equipment was connected to the applicable Engine System access ports. The Engine System propellant tanks remained approximately 75-percent full following the preceding hot-fire calibration test.

The drain and clean procedures for the two propellant systems were essentially the same except for the flush fluids used (Freon MF for the oxidizer side and isopropyl alcohol for the fuel side). The cleaning operations on the two propellant systems were conducted alternately to take advantage of waiting periods while samples from each system were being analyzed.

The results of the test were evaluated as the various operations were performed and appropriate deviations were made to the procedure where warranted in order to obtain the desired results. The drain and clean procedure was briefly as follows when the evaluation test was initiated:

1. The propellant tanks were drained by introducing 50-psig nitrogen through Component Packages C and D and expelling the propellant through the propellant tank purge ports. After the propellant had been expelled from the tanks, all 16 TCA propellant valves were actuated simultaneously to purge most of the propellant out of the TCA feed manifolds.
2. Flush fluids were supplied at 50 psig through the propellant tank purge ports and allowed to fill the tanks and propellant

manifolds. With the flush fluid supply valves open, the propellant valves on all of the TCA's in the forward manifold were cycled simultaneously, once each minute for 10 minutes. The propellant valves on all of the TCA's in the aft manifold were then cycled in a similar manner. Both manual valves in Component Packages C and D were then opened and flushed for 2 minutes, four times.

3. The propellant feed systems were allowed to soak for 30 minutes while filled with the flush fluids.

4. Nitrogen at 50 psig was introduced through Component Packages C and D to expel the flush fluids from the propellant tanks through the propellant tank purge ports. This flush fluid was analyzed for liquid propellant concentration.

5. The propellant tanks were filled again in the same manner with clean flush fluids.

6. The TCA's were flushed by cycling the propellant valves on selected pairs of TCA's 25 times over an elapsed time of 4-1/2 minutes, starting with the TCA's in the forward manifold. Flush fluid samples were taken at TCA No. 1, 5, 12, and 13 with the propellant valves open as these TCA's represent the center points and end points of both manifolds. Both manual valves of Component Packages C and D were opened and flushed for 3 minutes, and a flush fluid sample was taken from the manual valve. The flushing operation for the TCA and Component Packages C and D was repeated until propellant concentrations were reduced to 1 ppm.

7. Nitrogen at 50 psig was introduced through Component Packages C and D to expel the flush fluids from the propellant tanks through the propellant tank purge ports.

8. Nitrogen at 150 psig was introduced through the propellant tank purge ports to purge the two propellant systems. Purging of the TCA's and propellant manifolds was accomplished by cycling the propellant valves on selected pairs of TCA's 25 times over an elapsed time of 4-1/2 minutes, starting with the TCA's in the forward manifold. Then, the propellant valves on all 16 TCA's were cycled simultaneously 200 times over an elapsed time of 40 minutes. Purging of the manual valves of Component Packages C and D was accomplished by opening the valves for 5 minutes. Propellant and flush fluid vapor samples were then taken at the propellant tank purge ports, the Component Packages C and D manual valve ports, and at TCA No. 1, 5, 12, and 13 with the TCA propellant valves open.

9. A vacuum was applied to the propellant systems if the purging failed to reduce vapor concentrations to the allowable level.

10. A vacuum was applied to the upstream side of the propellant tanks if the vapor concentrations in that portion of the Engine System were above the allowable level.

11. Vapor sampling was repeated at 1 hour and 24 hours after completing the cleaning operation to determine if propellant and flush fluid vapor concentrations had risen above the allowable level due to liquid trapped in the system. Purging was repeated if the vapor samples increased above the allowable level.

Results

An analysis of the flush fluid samples taken after the first flushing operation on the oxidizer feed system indicated a concentration of 50-ppm NTO in the Freon at the oxidizer tank purge port and a concentration of 10-ppm NTO in the Freon at the TCA's and Component Package C. Six additional flushing operations, following the same procedure, failed to reduce the concentration to the maximum 1-ppm allowable level. Analysis of the problem indicated that the ability to lower the NTO concentration in the flush fluid would probably be improved if the flush fluid in the propellant tank was replaced with clean fluid after each flush operation. The cleaning procedure was changed to require that the propellant tank be drained and refilled with clean flush fluid after each flushing operation which did not achieve the required propellant concentration, per Rocketdyne Internal Letter 5388-6130. The oxidizer tank was then refilled with clean flush fluid and the flushing operation repeated. The flush fluid samples taken after the second flushing operation per this revised procedure indicated that the NTO concentration in the Freon throughout the system was below 1 ppm.

The first vapor samples taken after the subsequent purging operations indicated that both the NTO and Freon vapor concentrations were greater than the 20 ppm maximum allowable. The system was purged two more times, starting with the 40-minute TCA purge operation, without reducing either the NTO or Freon concentration below 20 ppm. The system was then evacuated, upstream of the oxidizer tank bladder through Component Package B and inside of the oxidizer tank and oxidizer feed manifolds through Component Package C, to a pressure of 1 psia for 4 hours. Following the evacuation, vapor samples from the Component Packages B and C

ports indicated that the NTO and Freon concentrations had increased. The system was evacuated again with similar results. When a third evacuation operation failed to reduce the concentrations significantly, it became apparent that there was still liquid NTO in the system. The oxidizer system was then subjected to another flushing operation as authorized by Rocketdyne Internal Letter 5388-6143. Flush fluid samples taken after the additional flushing operation indicated liquid NTO concentrations to be below 1 ppm. Four subsequent purging operations reduced the NTO and Freon concentrations in the oxidizer tank and oxidizer manifold to a level below 20 ppm.

The vapor upstream of the oxidizer tank bladder was sampled and found to contain an NTO concentration of 800 ppm and a Freon concentration greater than 20 ppm. A vacuum was applied to both the upstream and downstream sides of the oxidizer tank bladder for 2 hours. The downstream side was evacuated to prevent the bladder from sealing the oxidizer tank pressurizing ports while evacuating the upstream side. Vapor samples taken from the upstream of the bladder after the evacuation operation indicated that the NTO and Freon concentrations were still above 20 ppm. Two more 2-hour evacuation operations were required to reduce the NTO and Freon concentrations to a level below 20 ppm.

The vapor samples taken during the subsequent 1-hour postcleaning check revealed that the NTO concentration in the system had increased to over 100 ppm while the Freon concentrations remained below 20 ppm. The 40-minute purging operation through pairs of TCA's and through Component Package C manual valves was repeated. This operation reduced the NTO vapor concentration to a level below 20 ppm, but the Freon concentration on the oxidizer manifold increased to a level above 20 ppm. It was concluded that the purging operation had vaporized some trapped Freon,

thereby raising the vapor concentration. A second 40-minute purging operation reduced the Freon vapor concentration to a level below 20 ppm.

The NTO vapor concentration on the upstream side of the oxidizer tank bladder had also increased to over 100 ppm during the 1-hour wait period. As a result, this area was evacuated for 2 hours. Vapor samples taken after the evacuation operation indicated that the NTO and Freon vapor concentrations were less than 20 ppm. The oxidizer tank was then X-rayed to verify that there was no liquid remaining in the tank. Vapor samples were taken after a 1-hour wait period. The samples indicated that the NTO concentrations had again risen to levels greater than 20 ppm. A level of 650 ppm was measured at the oxidizer tank purge port. All Freon samples indicated concentrations below 20 ppm. The 40-minute purging operation through pairs of TCA's and through the Component Package C manual valves was repeated to reduce the vapor concentration downstream of the oxidizer tank, and an evacuation operation was performed to reduce the vapor concentration upstream of the oxidizer tank bladder. While all NTO and Freon concentrations were again below 20 ppm following these operations, it was evident from the results of the two previous sampling operations following the 1-hour wait periods that the vapor concentrations would most likely increase again to levels above 20 ppm. The system was therefore evacuated for 10 hours with samples being taken after each 2-hour period. During the first 6 hours of evacuation, the NTO vapor concentrations remained near or below 20 ppm. However, after the eighth hour, the NTO concentration had increased to as high as 800 ppm at two of the TCA's. Because of the possibility of obtaining vapor samples at the TCA's which could be biased by the presence of NTO or Freon in the thrust chamber ablative material, the vapor sampling procedure was changed whereby vapor samples subsequently taken at the TCA's would be taken for

information only and not used as criteria for further cleaning. This change was authorized by Rocketdyne Internal Letter 5388-6166. After the tenth hour of evacuation, the NTO concentration had been reduced to less than 10 ppm.

Vapor samples taken after a 1-hour wait period indicated that the NTO vapor concentration had increased to a level above 100 ppm in the oxidizer manifold. The system was evacuated for 10 more hours. Vapor samples taken subsequently after waiting periods of 1 and 24 hours indicated that the NTO vapor concentrations had remained below the 20 ppm level, thus completing the oxidizer system cleaning evaluation test.

Analysis of the flush fluid samples taken after the first flushing operation on the fuel feed system indicated a liquid concentration of 800-ppm MMH in the alcohol at the fuel tank purge port, 1 ppm at Component Package D, and 600 ppm at the TCA's. Five additional flushing operations following the same procedure failed to reduce the concentration to the 1 ppm maximum allowable level. As in the case of the oxidizer system cleaning evaluation, it was thought that the ability to lower the MMH concentration in the flush fluid would be improved if the flush fluid in the propellant tank was replaced with clean fluid after each flushing operation which did not achieve the required propellant concentration. The cleaning procedure was changed accordingly per Rocketdyne Internal Letter 5388-6130. The fuel tank was then refilled with clean flush fluid and the flushing operation was repeated. The flush fluid samples taken after the second flushing operation per this revised procedure indicated that the MMH concentration in alcohol throughout the system was below 0.5 ppm.

The first vapor samples taken after the subsequent purging operation indicated that the MMH vapor concentrations at Component Package D and the TCA's were 20 ppm; however, liquid alcohol was extracted from the fuel tank purge port during the sampling operation, indicating that the purge had not eliminated the bulk of the alcohol in the tank. A procedural deviation was made requiring purging at 150 psig into the tank purge port and out through Component Package D for 15 minutes or until the alcohol vapor concentration was below 100 ppm at Component Package D, per Rocketdyne Internal Letter 5388-6134. This 15-minute purge was conducted eight times with vapor samples remaining above 200 ppm after the eighth complete purging operation, indicating that the quantity of alcohol in the tank was greater than had been suspected. Nitrogen at 50 psig was admitted through Component Package D to expell the remaining alcohol out of the tank through the tank purge port. A quantity of alcohol approximately equal to one-half the volume of the fuel tank was expelled. The reason for the excessive amount of alcohol in the propellant tank was resolved to be due to a test operation error during the initial alcohol drain operation. For future draining operations, it was cautioned that gas should be noted emanating from the drain valve prior to assuming the tank was empty.

Vapor samples taken after repeating the purge operation indicated that MMH vapor concentrations were below the maximum allowable 20 ppm level at all ports except Component Package D, and all alcohol vapor concentrations were above the 20 ppm allowable level. The system was purged again starting with the 40-minute TCA purge without reducing the alcohol concentration below 20 ppm. All MMH concentrations were less than 10 ppm. The system was then flushed with Freon MF in an attempt to flush out the alcohol. After the Freon flush and subsequent purge, vapor samples indicated that both alcohol and Freon concentrations were above 20 ppm

while the MMH vapor concentration remained below 10 ppm. After six additional purging operations, the alcohol vapor concentrations remained above 20 ppm while all Freon concentrations dropped below 20 ppm. The fuel tank was X-rayed to determine if any significant amounts of liquid were trapped in the bottom of the tank near the end of the expulsion tube. No liquid could be seen in the X-rays although small droplets were observed at various points on the lower portion of the bladder.

The system was then evacuated, upstream of the fuel tank bladder through Component Package B and inside of the fuel tank and fuel feed manifolds through Component Package D, to a pressure of 1 psia for 4 hours.

Following the evacuation, vapor samples from the tank purge port indicated that the alcohol concentration had increased. Six additional evacuation operations following the same procedure resulted in alcohol vapor concentrations below 100 ppm. This alcohol vapor concentration was acceptable per Rocketdyne Internal Letter 5388-6166, which changed the allowable alcohol vapor concentration from 20 to 100 ppm maximum.

Vapor samples taken during the subsequent 1- and 24-hour postcleaning checks revealed that the alcohol concentrations in the system had increased to over 100 ppm while the MMH concentration remained below 20 ppm. The system was evacuated for 8 hours. The alcohol concentration after this operation was less than 30 ppm.

Vapor samples taken subsequently after wait periods of 1 and 24 hours indicated that MMH vapor concentrations had remained below the 20 ppm level and that alcohol vapor concentrations had remained below the 100 ppm level, thus completing the fuel system cleaning evaluation test.

The following conclusions were drawn based on the results of this evaluation test.

1. Freon MF is more effective in reducing the NTO concentration in the SE 7 Engine System if the contaminated Freon MF in the oxidizer tank is replaced with clean Freon MF after each flushing operation which does not achieve the required propellant concentration.

2. Isopropyl alcohol is more effective in reducing the MMH concentration in the SE 7 Engine System if the contaminated alcohol in the fuel tank is replaced with clean alcohol after each flushing operation which does not achieve the required propellant concentration.

3. Freon MF is not useful for removing isopropyl alcohol from the fuel system.

4. The use of a high-pressure purge for reducing the alcohol vapor concentration in the fuel system as used in this cleaning procedure is marginal. The boundary layer resulting from this high-flowrate purge probably suppressed outgasing of alcohol from the tubing and components.

5. The time required to clean the Engine System could be reduced if the propellant tanks were isolated from the remainder of the propellant feed system following the initial flushing operations and the remaining cleaning operations on the two portions of the Engine System conducted separately. An additional reduction in time could be realized if the allowable vapor concentrations in the propellant tanks were raised.

This page intentionally left blank.

APPENDIX A

APPENDIX A

Photographs of Tests and Test Equipment

NASA 34-31618

Figure 6. Gemini OAMS 14-Day-Configuration Tank Module, R-Axis Vibration Test Installation, View 1

NASA S-64-31616

Figure 7. Gemini OAMS 14-Day-Configuration Tank Module, R-Axis Vibration Test Installation, View 2

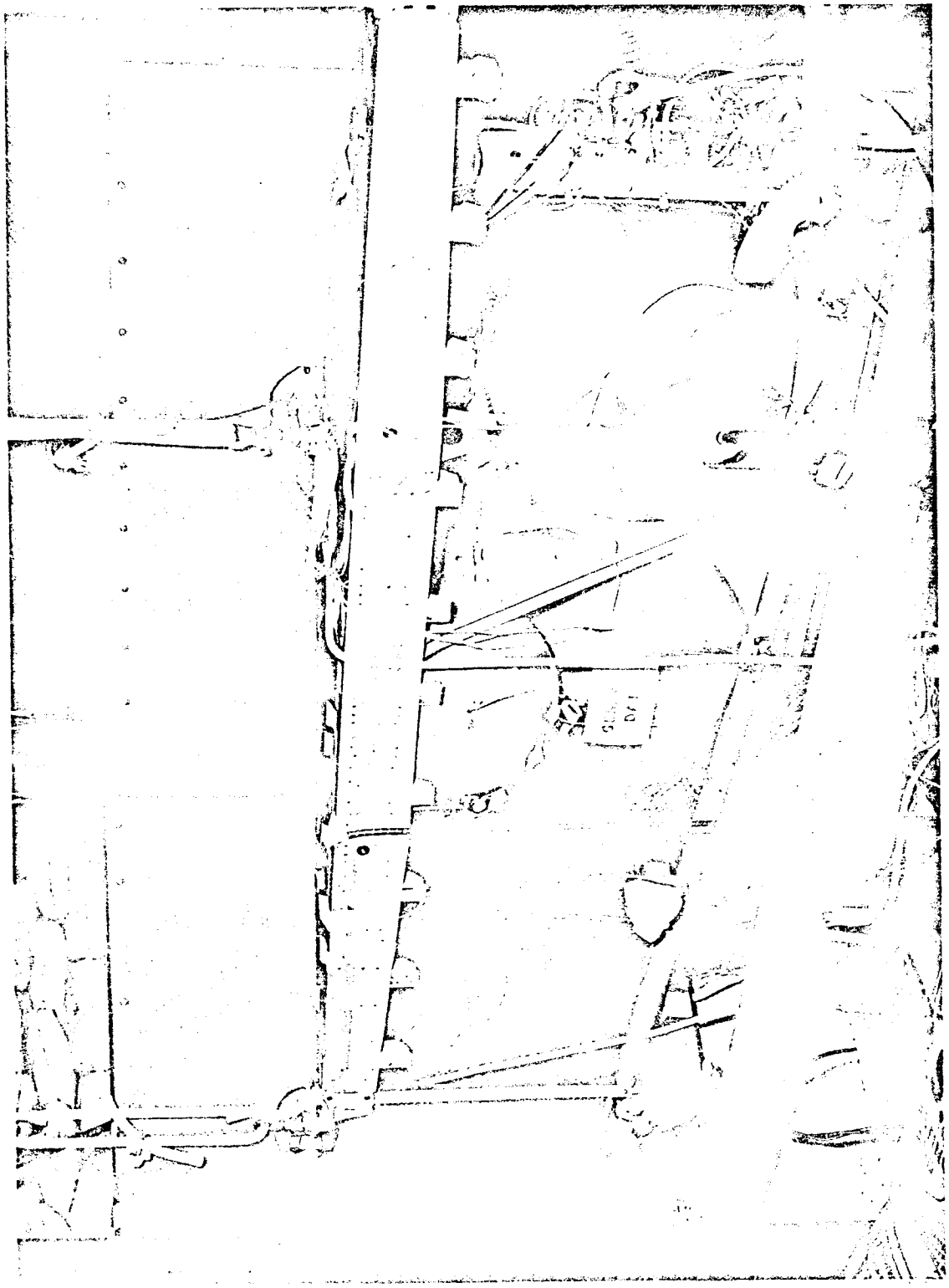

NASA S-64-31782

Figure 8. Gemini OAMS 14-Day-Configuration Tank Module, R-Axis Vibration Test Installation, View 3

NASA S-64-31785

Figure 9. Gemini OAMS 14-Day-Configuration Tank Module, R-Axis Vibration Test Installation, View 4

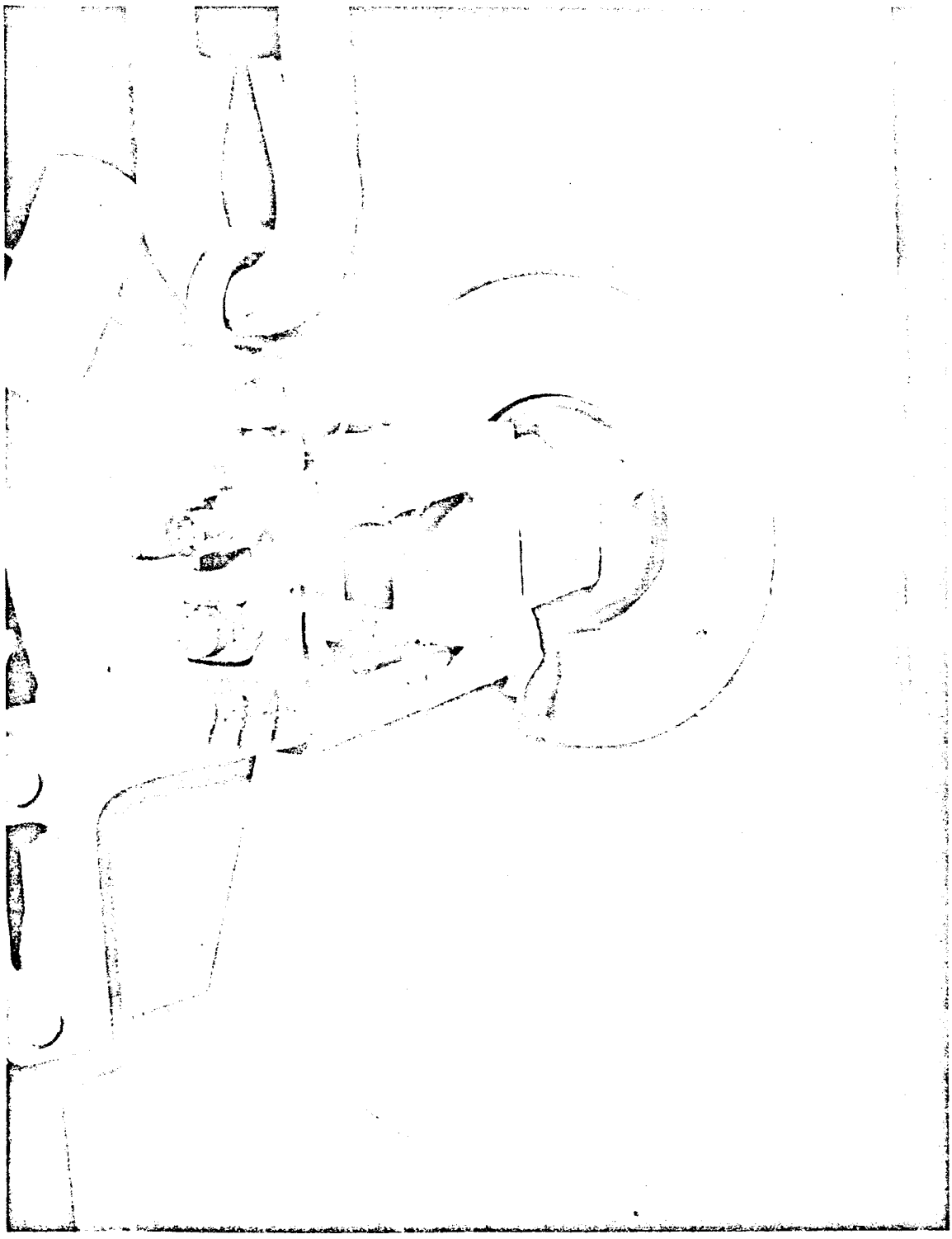

NASA S-64-29771

Figure 10. Gemini OAMS 14-Day-Configuration Tank Module, R-Axis Vibration Test Installation, Typical Shaker-to-Tank Module Structure Attachment

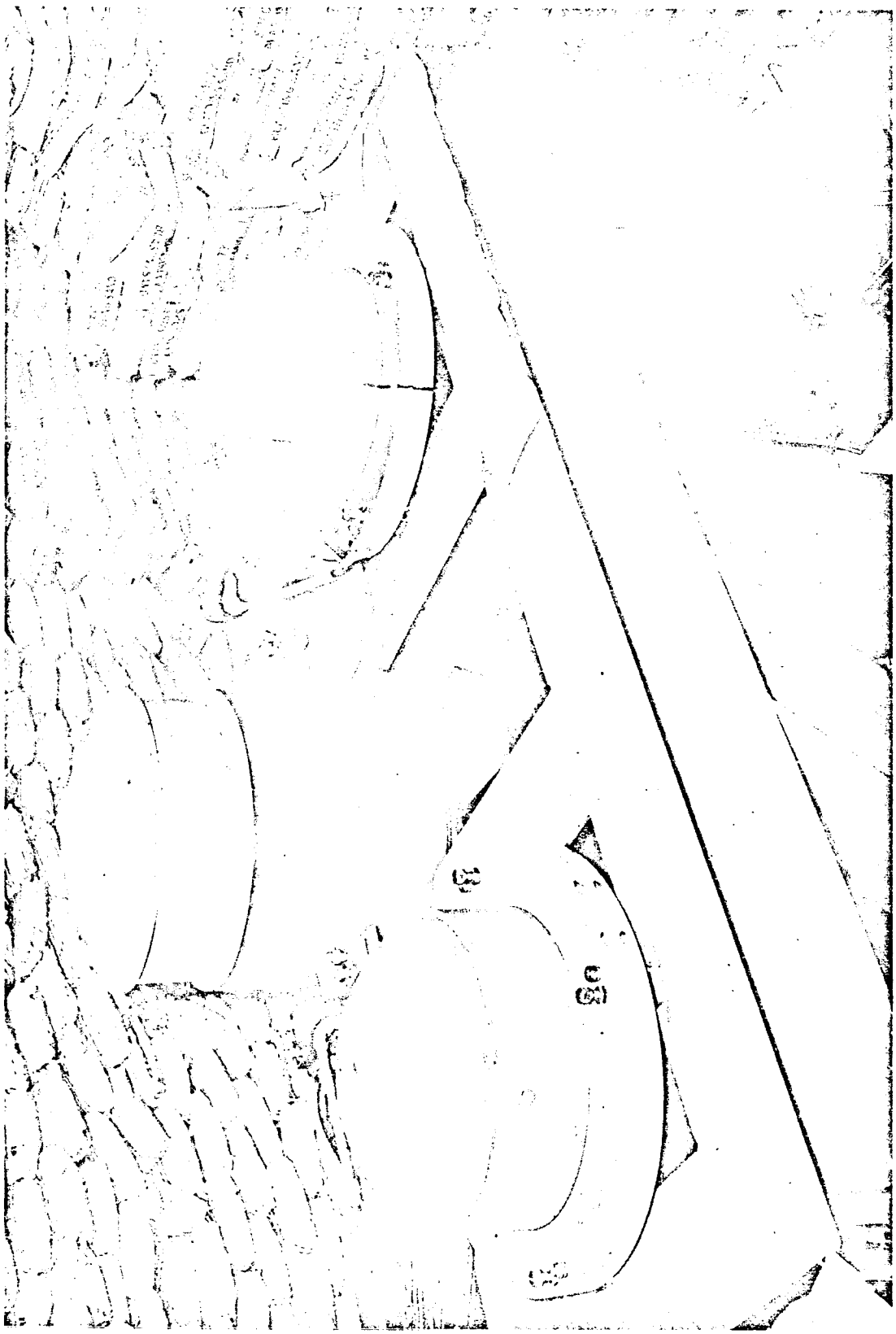

NASA S-64-32334

Figure 11. Gemini OAMS 14-Day-Configuration Tank Module, Z-Axis Vibration Test Installation, View 1

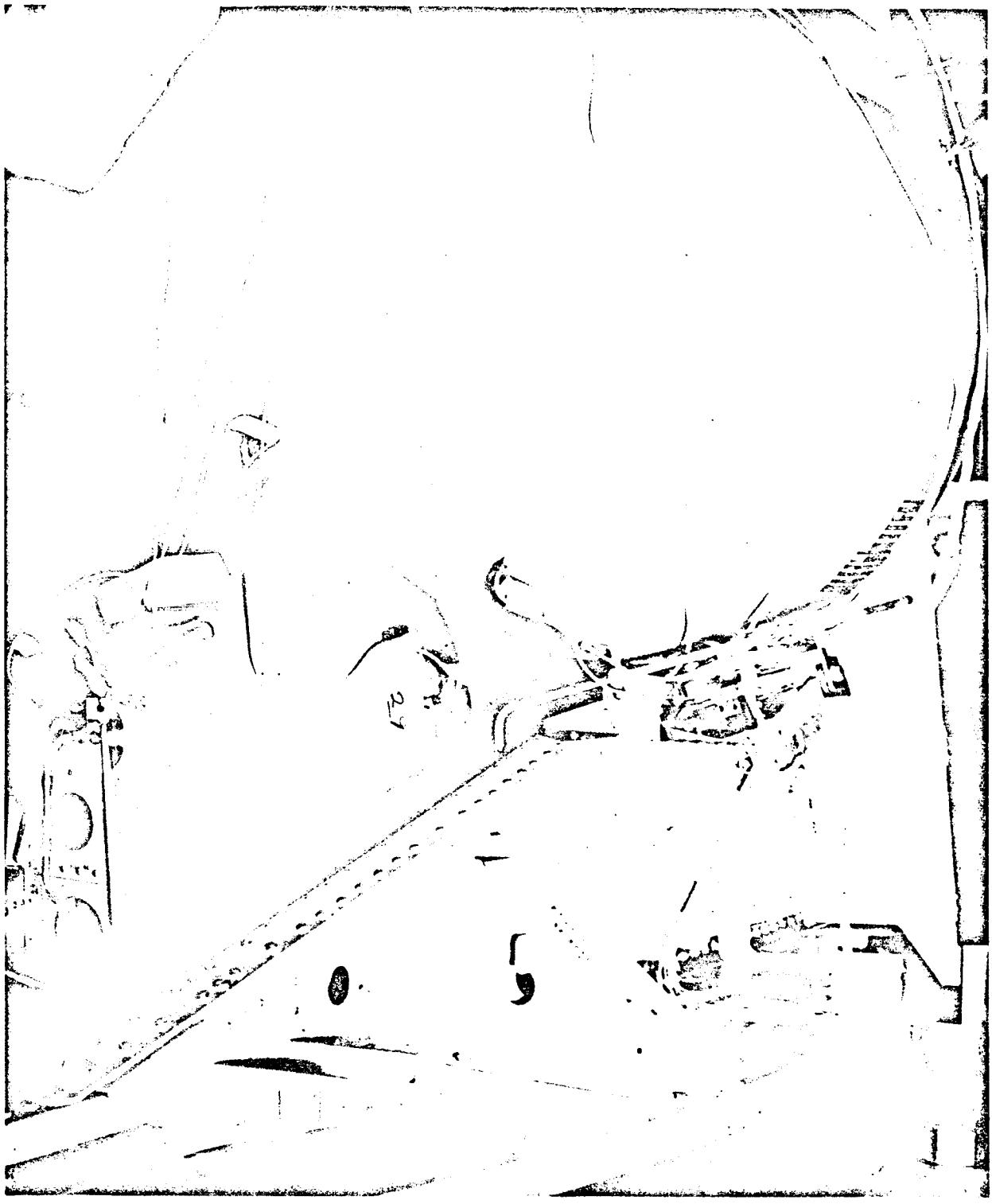

NASA S-64-32321

Figure 12. Gemini OAMS 14-Day-Configuration Tank Module, Z-Axis Vibration Test Installation, View 2

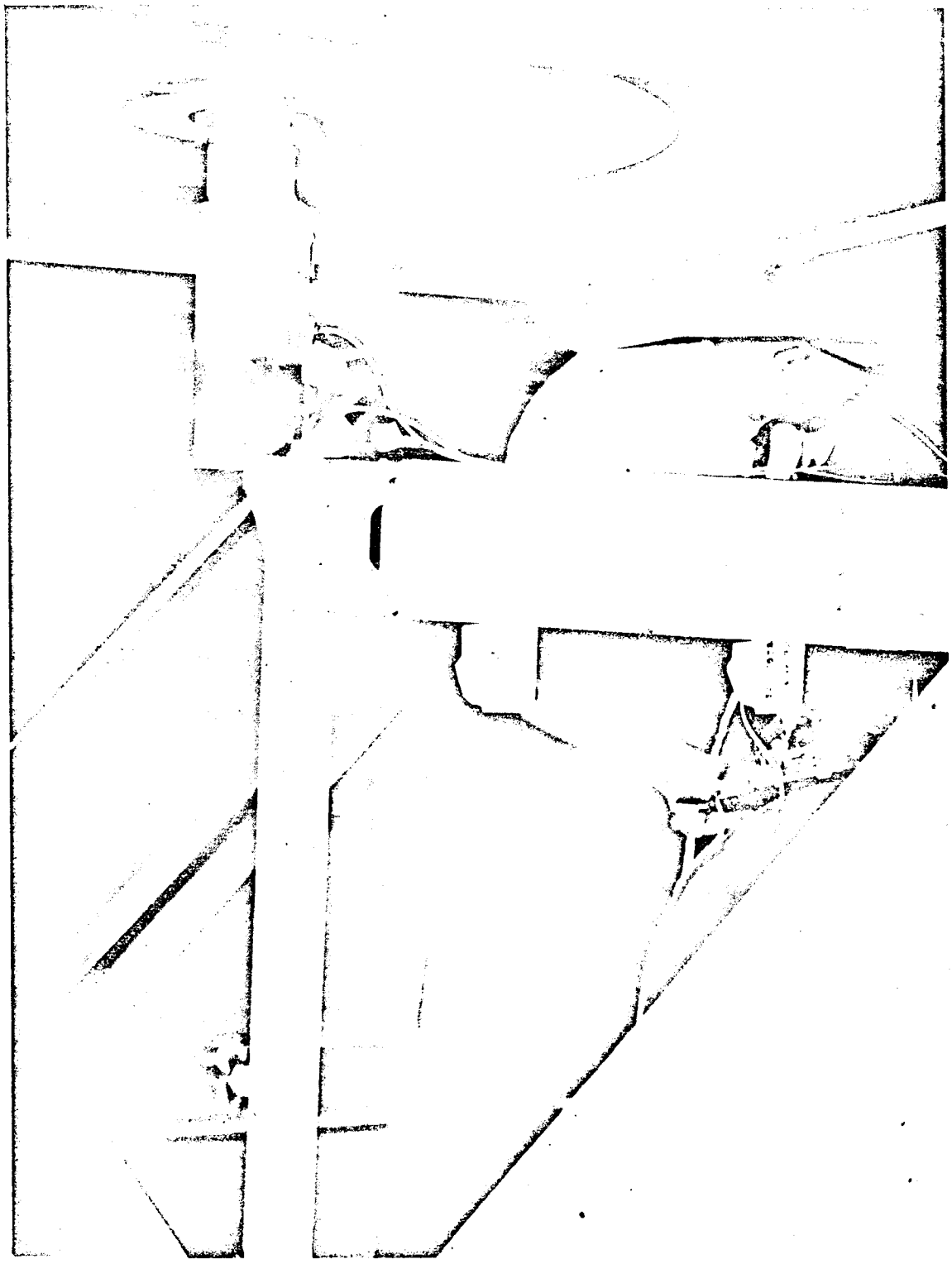

NASA S-64-32330

Figure 13. Gemini OAMS 14-Day-Configuration Tank Module, Z-Axis Vibration Test Installation, Typical Shaker-to-Tank Module Structure Attachment

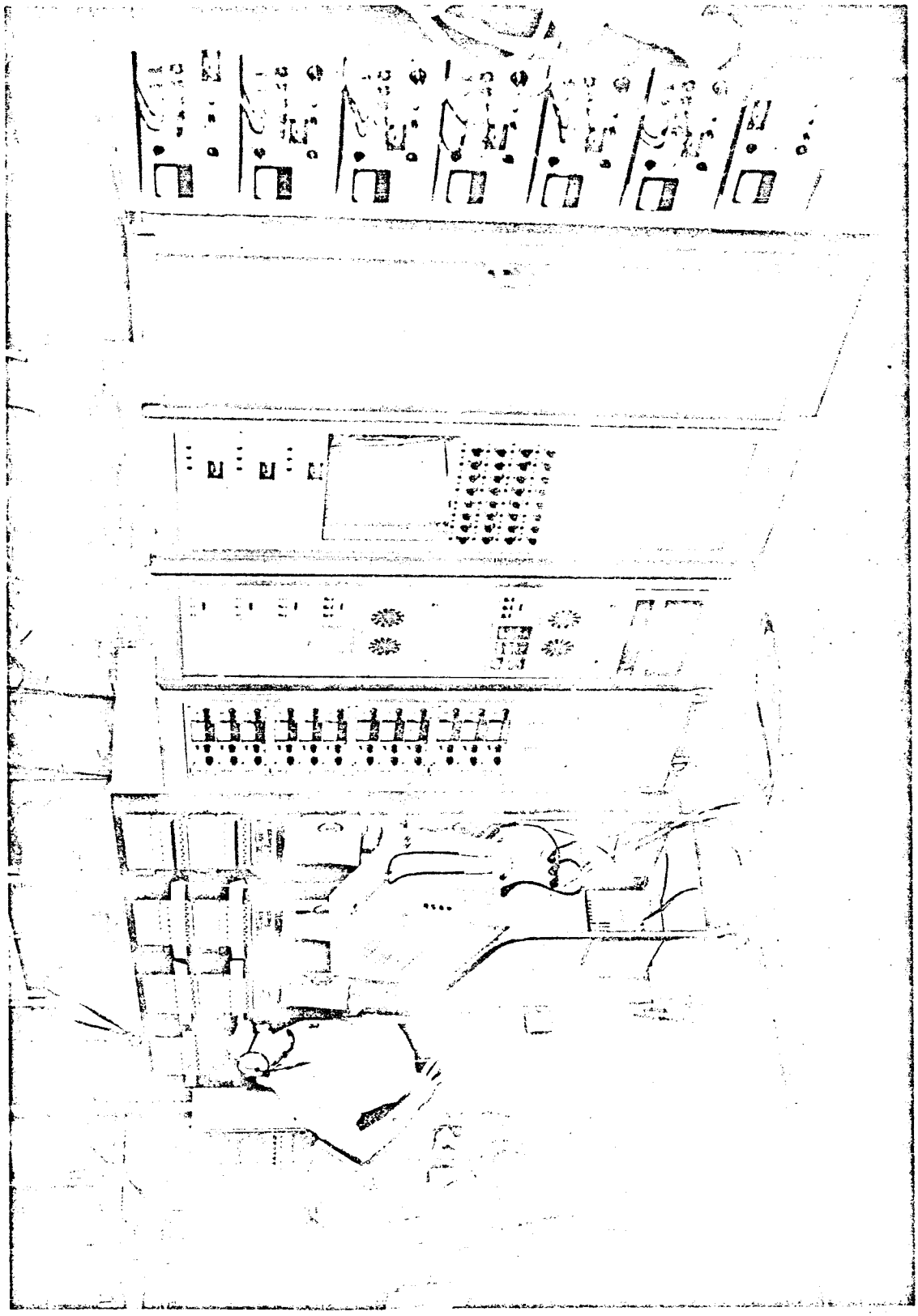

NASA S-64-32133

Figure 14. Gemini 14-Day-Configuration Tank Module Vibration Test, Control Equipment and Instrumentation

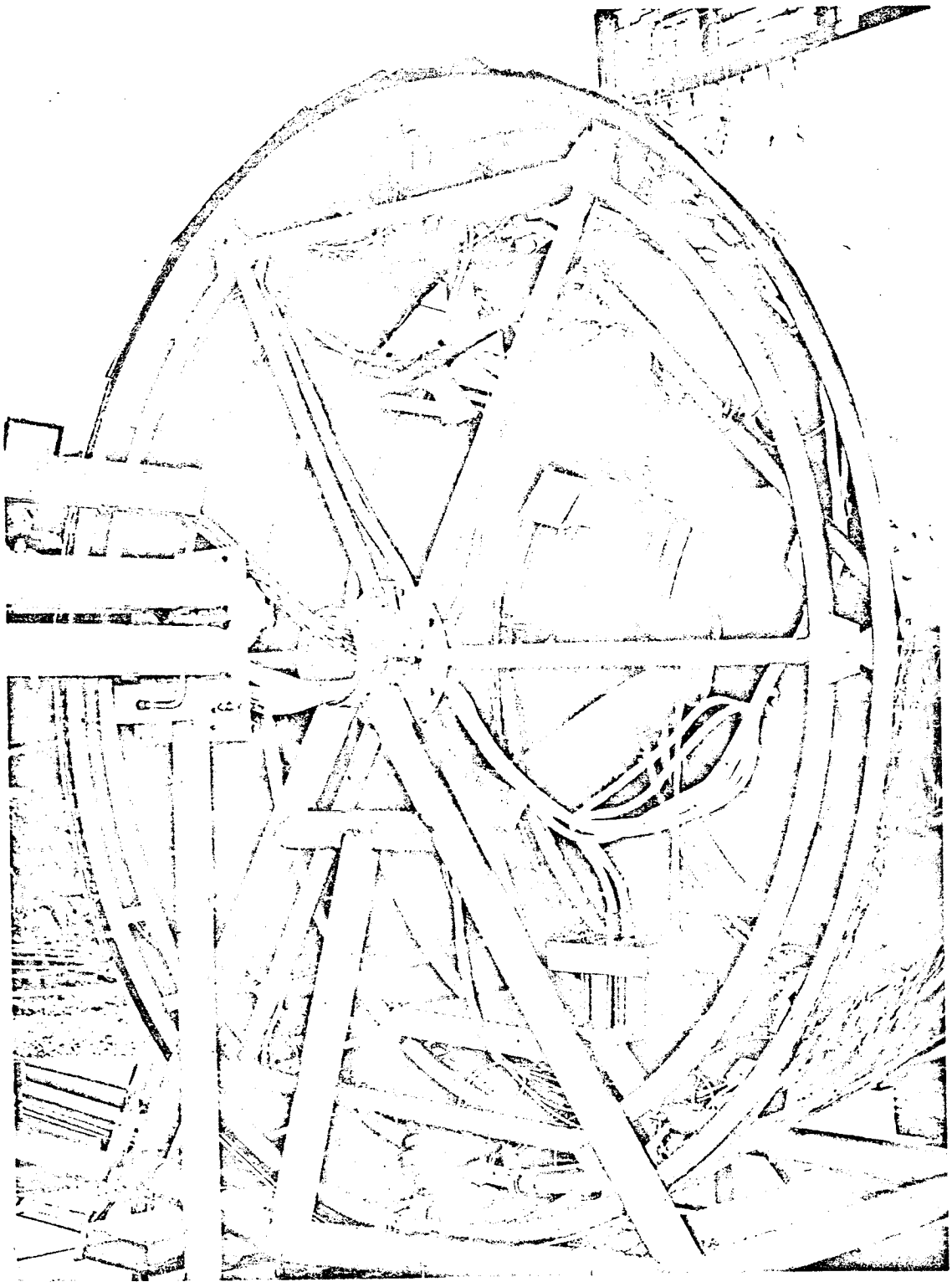

1HE23-1/27/65-S1A

Figure 15. Gemini OAMS 14-Day-Configuration SE 7 Engine System, Hot-Fire Test Installation, View 1

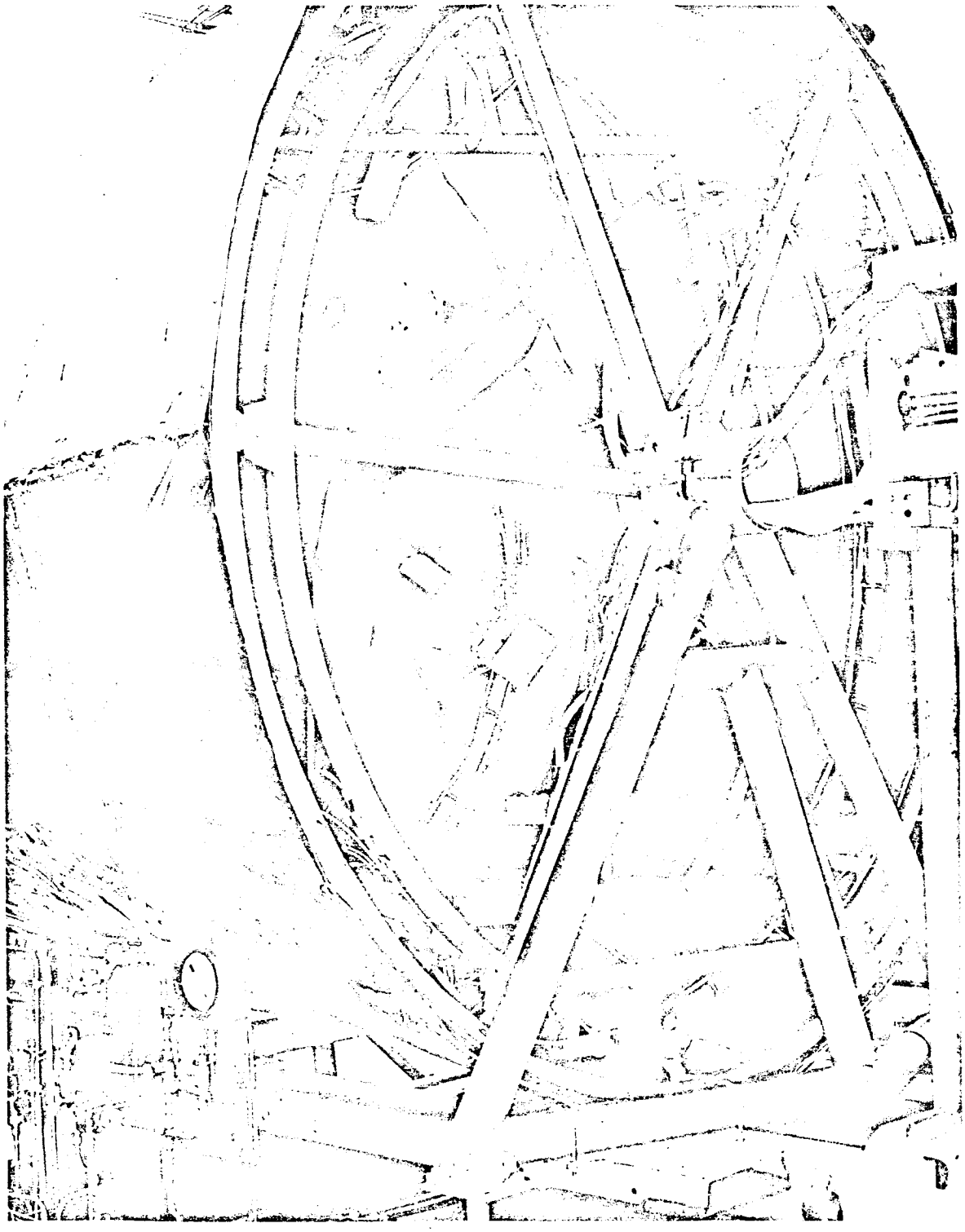

1HE23-1/27/65-S1C

Figure 16. Gemini OAMS 14-Day-Configuration SE 7 Engine System, Hot-Fire Test Installation, View 2

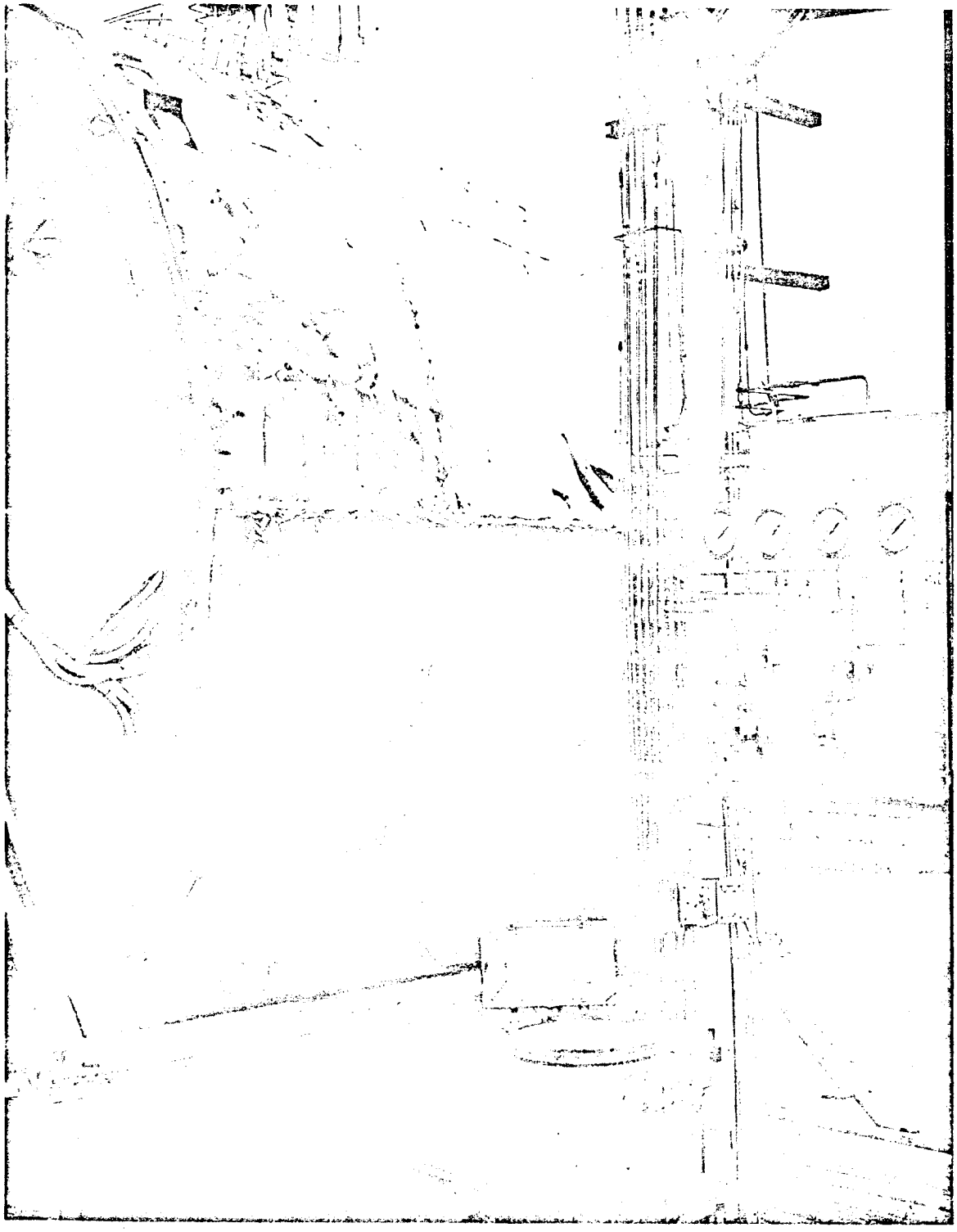

1HE23-1/27/65-S1D

Figure 17 . Gemini OAMS 14-Day-Configuration SE 7 Engine System, Hot-Fire Test Installation, View 3

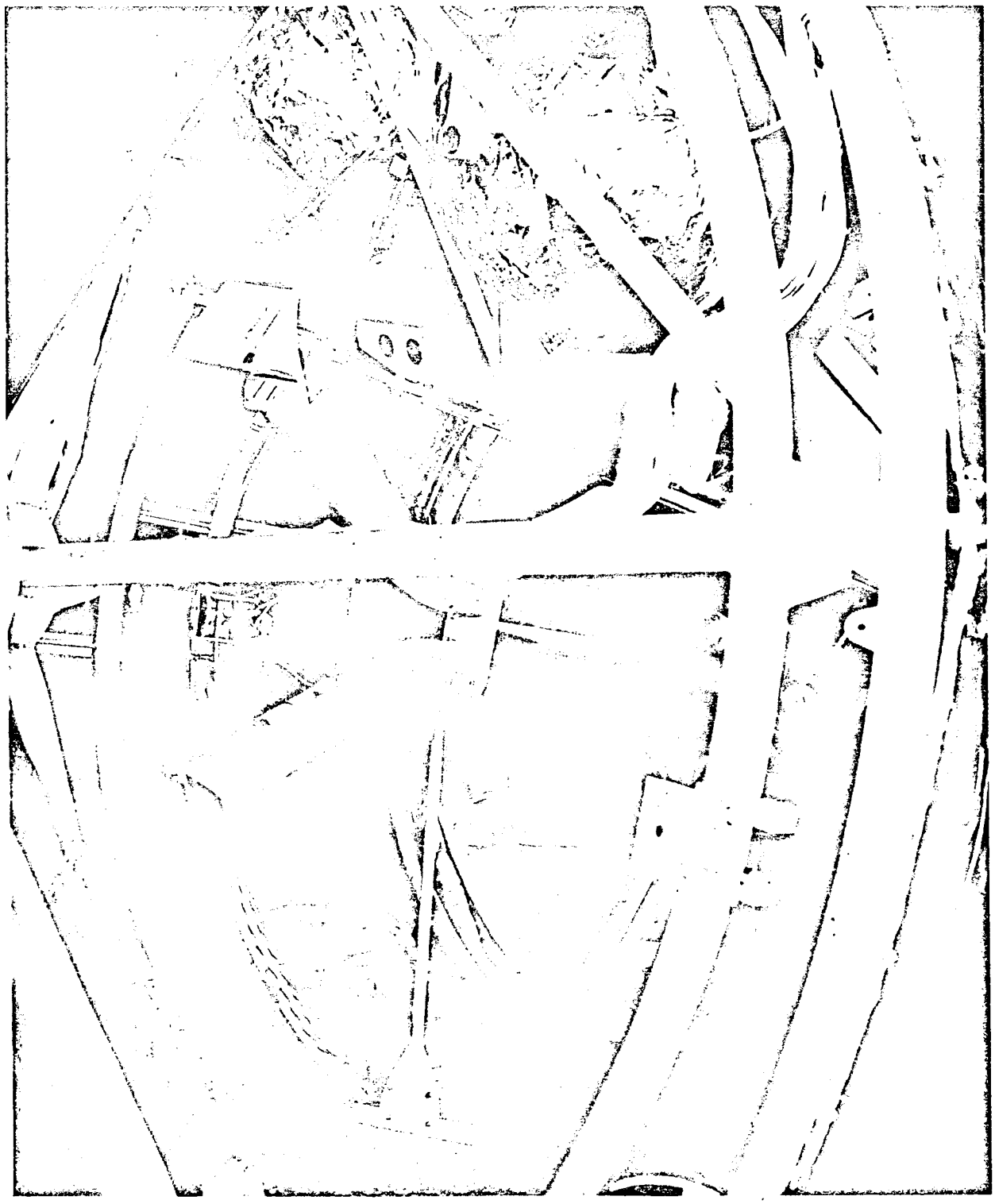

1HE25-2/8/65-S1J*

Figure 18. Gemini OAMS 14-Day-Configuration SE 7 Engine System, Hot-Fire Test Installation, View 4

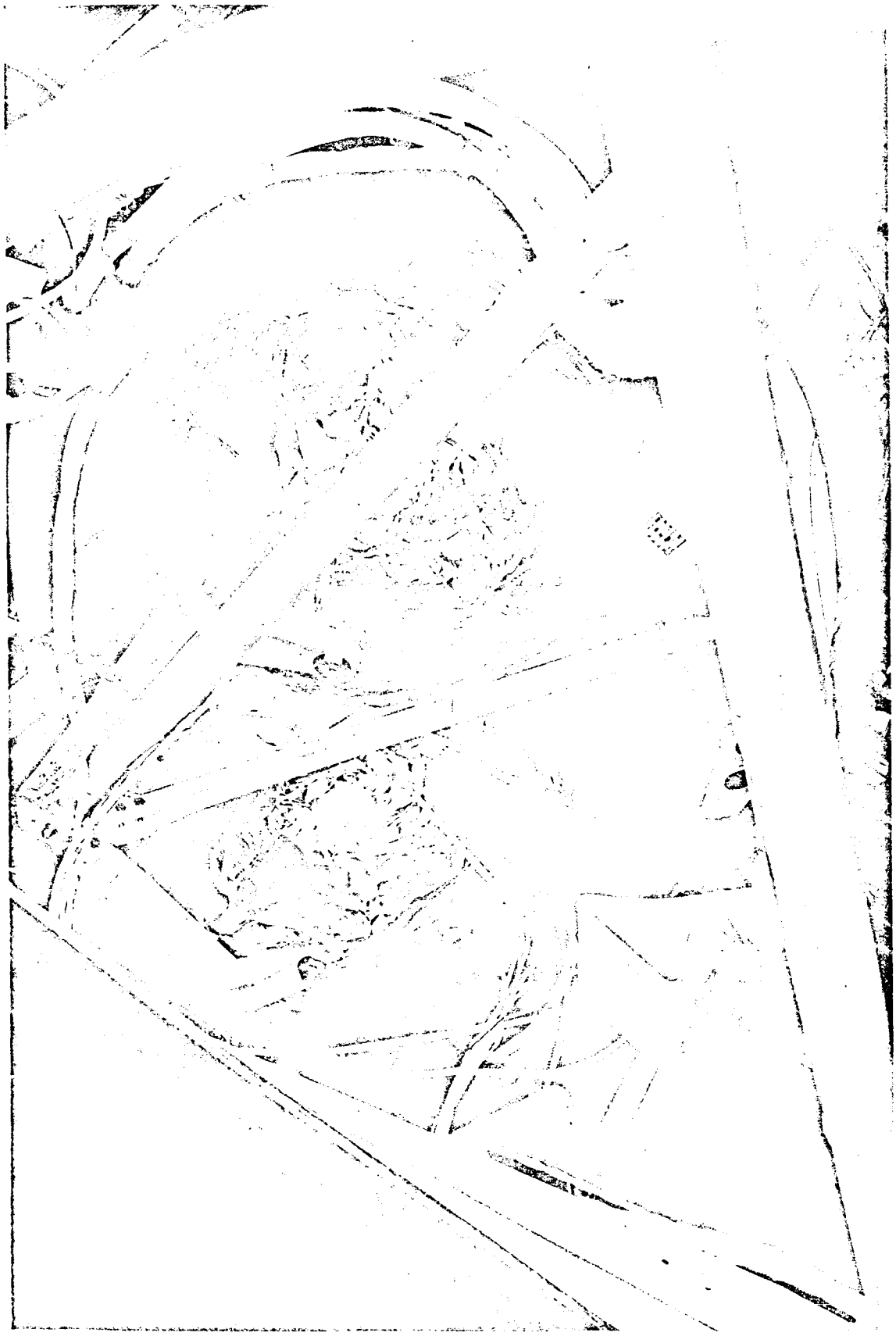

1HE25-2/8/65-S1

Figure 19. Gemini OAMS 14-Day-Configuration SE 7 Engine System, Hot-Fire Test Installation, View 5

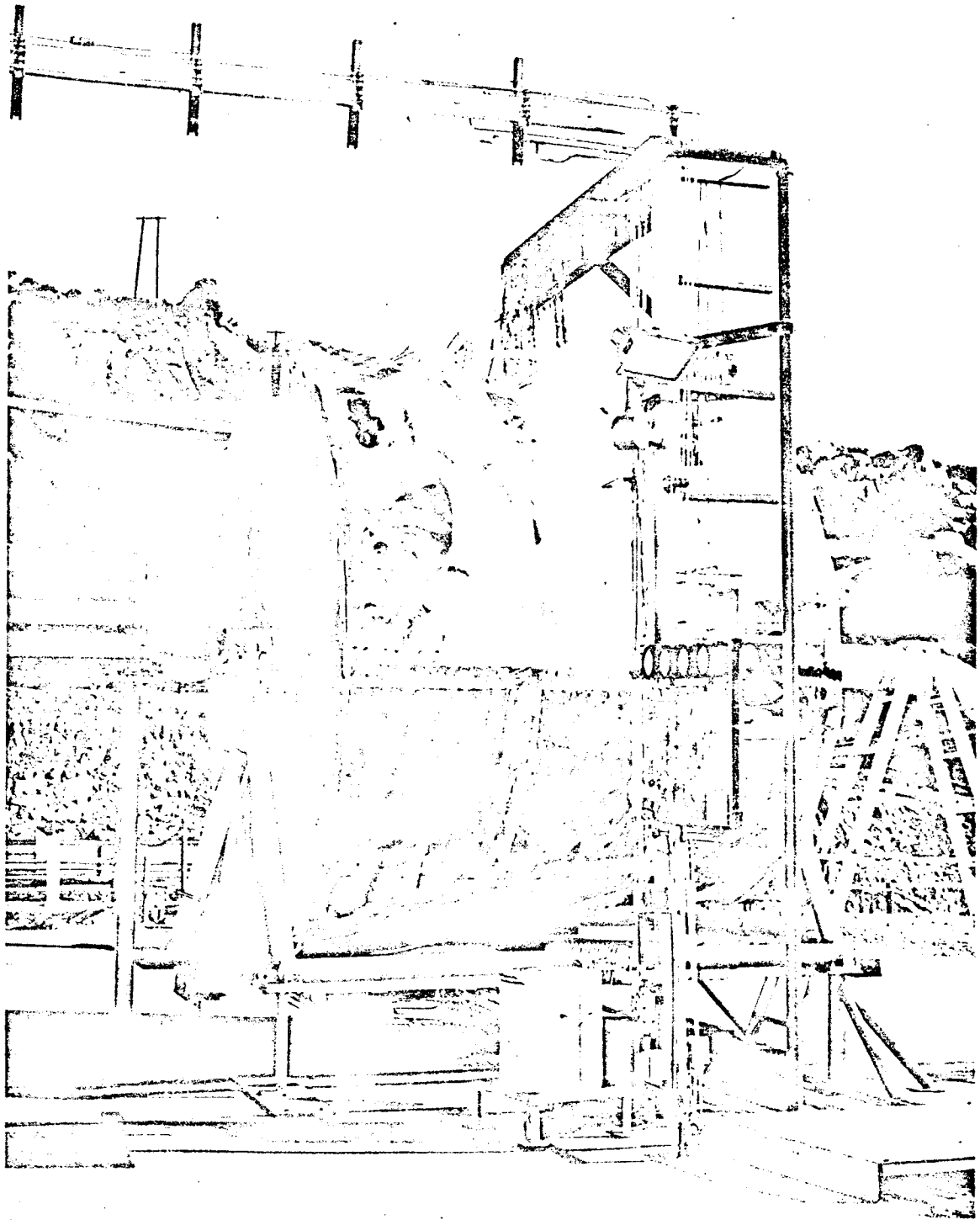

1HE25-2/8/65-S1G

Figure 20. Gemini OAMS 14-Day-Configuration SE 7 Engine System, Hot-Fire Test Installation, Post-MDC at High Temperature (160 F)

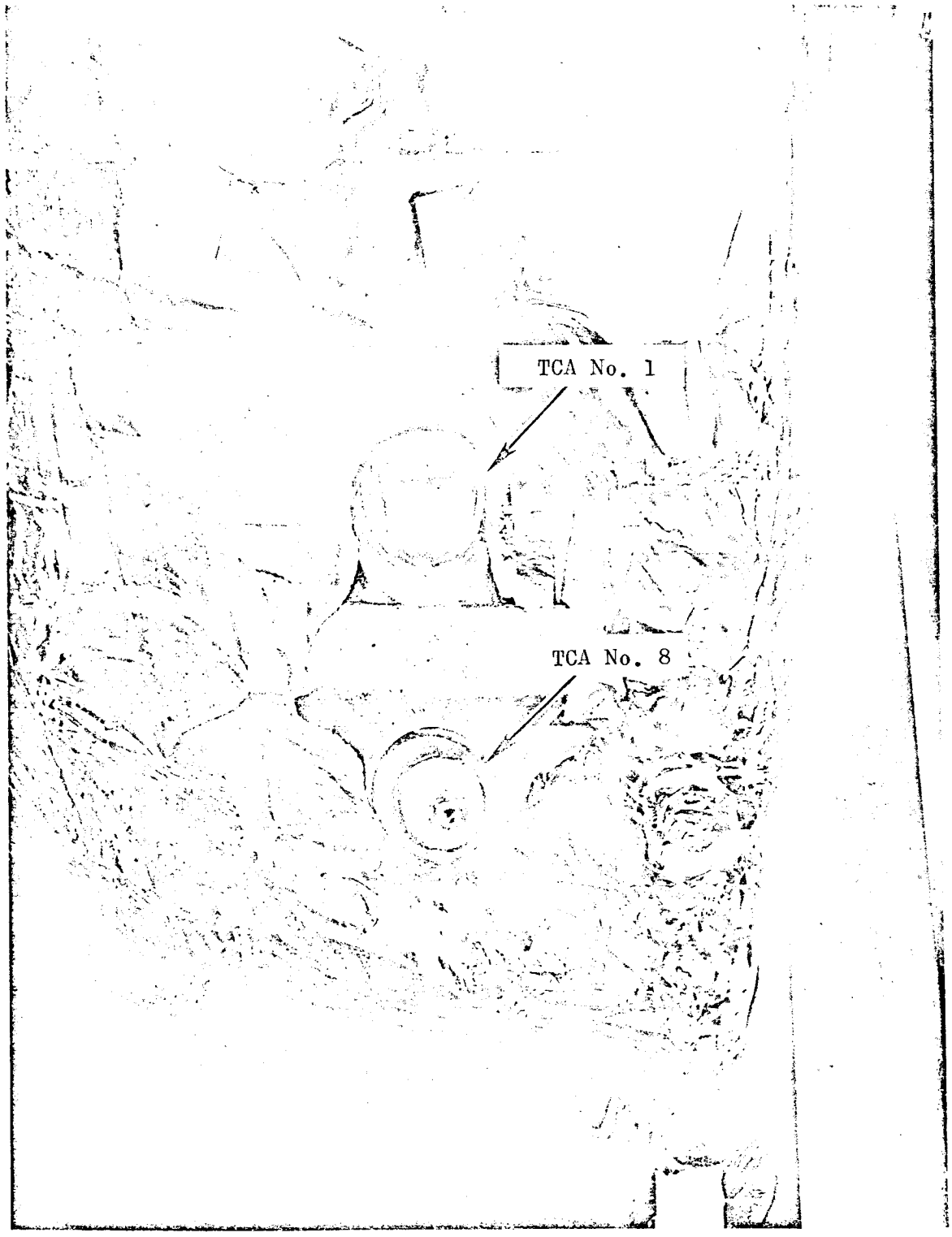

1HE25-2/8/65-S1A

Figure 21. Gemini OAMS 14-Day-Configuration SE 7 Engine System, Post-MDC at High Temperature (160 F), 25-Pound-Thrust TCA No.'s 1 and 8, Typical

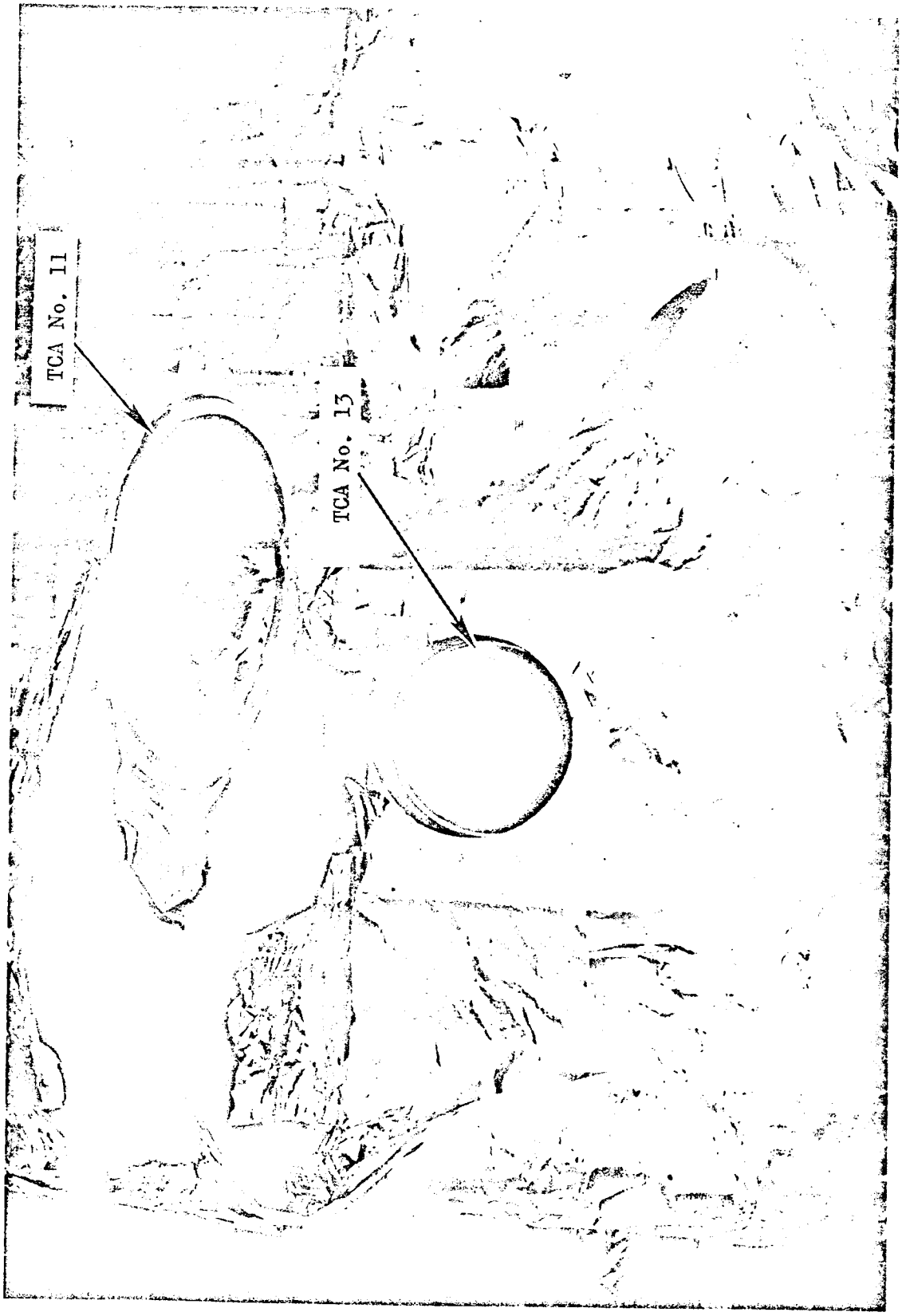

1HE25-2/8/65-S1E

Figure 22. Gemini OAMS 14-Day-Configuration SE 7 Engine System, Post-MDC at High Temperature (160 F), 85-Pound-Thrust TCA No. 11 and 100-Pound-Thrust TCA No. 13, Typical

APPENDIX B

APPENDIX B

OPERATION AND FAILURE REPORTS AND FAILURE ANALYSIS REPORTS

This page intentionally left blank.

Operation and Failure Report
ROCKETDYNE

☒ FAILURE ☐ OPERATION
PART CHANGE: ☒ FAILED ITEM ☐ TIME EXPIRED ☐ T.O. DIRECTED

PROGRAM: SE7 DAT | LOCATION: CANO. | № 07428 R

PART IDENTIFICATION

1 PART NO. 103660		2 PART NAME PROPTANK(FUEL)	
3 SERIAL NO. 4051935	4 MFG. NAME ROCKETDYNE	5 MFR. CODE 02602	6 REF. DESIG.
7 NEXT ASSY PART NO. 106161	8 NEXT ASSY SERIAL DAT OAMS	9 NEXT ASSY NAME OAMS TANK MODULE	
10 MISSILE SERIAL NO.	11 ENG/AGE MODEL NO. SE7	14 SYSTEM CODE	
		15 COMPONENT CODE	
12 REJ. TAG NO.	13 ENG/AGE SERIAL NO.	16 HARDWARE CODE	

PART DISPOSITION

35
- 1 ☐ REPAIRED IN PLACE
- 2 ☐ REPAIRED & RE-INSTALLED
- 3 ☐ ADJUSTED
- 4 ☐ ELIMINATED
- 5 ☐ CONDEMNED
- 6 ☐ HOLD FOR REPAIR
- 7 ☐ DEPOT REPAIR
- 8 ☒ FAILURE ANALYSIS
- 9 ☐ USED AS IS

PART REPLACEMENT

36
- 1 ☐ IDENTICAL ITEM
- 2 ☐ SUBSTITUTE PART
- 3 ☒ NONE
- 4 ☐ NONE AVAILABLE

37 REPLACEMENT PART NO.

38 REPLACEMENT SERIAL NO.

39 FAILED PART SENT TO: ETON WAREHOUSE

40 A-L | 41

FAILURE/OPERATION DATA

17 FAILURE DATE (YR. MO. DAY)	18 TEST/OPER. DATE (YR. MO. DAY)	19 TEST/OPER. NO.	20 ITEMS
—	64 10 26	106156-401	1

21 PROCEDURE—SPEC. & PARAGRAPH: 106156-401 Para 7.3.3.12

22 FB	25 FAIL. TYPE	26 FAIL. CODE	27 SECONDS	28 STARTS
23 SV	29 MONTHS	30 INITIAL REPORT NO.	31	
24 NC				

32 OPERATION REPORTED OR IN PROGRESS

- A ☐ COMP/ASSY TEST
- B ☐ FINAL ENG. ASSY.
- C ☐ ELEC.-MECH. CHECK
- D ☐ ACCEPT/R&D TEST
- E ☐ STORAGE
- F ☐ SHIPPING
- G ☐ RECEIVING INSP.
- H ☐ MAINTENANCE
- I ☒ LEAK & FUNCTION
- J ☐ SIM. LAUNCH
- K ☐ MISSILE ACCEPT.
- L ☐ STAT. MISS. TEST
- M ☐ PROPEL. LOADING
- N ☐ PERIODIC INSP.

33

34 TIME PERIOD (ACCEPT/R&D/STATIC TEST ONLY)
- 1 ☐ PRE-TEST
- 2 ☐ TEST
- 3 ☐ POST-TEST

REPORTED BY

42 NAME	43 GROUP	44 SUPPLEMENT SHEET
TROY KNIFFIN	388	1 ☐ YES 2 ☒ NO
45 APPROVED BY: R. Divines	46 ACTIVITY: A8	47 STAND/AREA

ANALYSIS ASSIGNED TO

48 NAME	49 GROUP	50 CODE	51 PART REQ.
T. KOJIMA	335	AR	☒ YES ☐ NO

DATE REPORT RECEIVED (52 YR. MO. DAY)	DATE REPORT DISTRIBUTED (53 YR. MO. DAY)

RELIABILITY USE ONLY	54 TEST/OPER. NO.	55 1 / 56 2	57 NTH CODE	58 TAPE CODE

DESCRIPTION OF FAILURE

WHEN? WHERE? HOW MUCH? CAUSE? EFFECT? COMMENTS?

FAR DUE 1/896-394 11-5-

⊙THE FUEL TANK BLADDER DEMØNSTRATED EXCESSIVE LEAKAGE DURING PØST VIBRATIØN FUNCTIØNAL ØF THE ØAMS TANK MØDULE. LEAKAGE REMAINED CØNSISTANT AT 2 CC'S PER 15 MINUTES. MAXIMUM ALLØWABLE LEAKAGE PER DAT 106156-401 IS .35 CC'S PER 15 MINUTES. LEAKAGE WAS MEASURED WITH BLADDER PRESSURIZED TØ 2 PSIG. FAILED PART IS TØ BE USED AS IS UNTIL CØMPLETIØN ØF TEST PRØGRAM.

36 REF. OFR	42 REF. OFR	48 REF. OFR	54 FAILED DETAIL PART NO.
			103183

71 TEST/OPER. NO.	78	79	80
07428R	A		
	B		
	C		
	D		
	E		
	F		
	G		

RELIABILITY ANALYSIS USE ONLY

1 IDENTIFICATION	TEST TYPE	10 GROUP RESP. CODE	16 PA. CODE	EF	AP	CF	FC	24 LEAK	CONTAM.	30 PROP. SYSTEM

36 NTH	COMP	40 ASSY	RS-E	CD	46	68 DELETE

1 REPLACEMENT PART NO.	15 REPLACEMENT S/N	22 NAME	25 TYPE	31 MFR.

ATION PART NO.	50 CONFIG. CODE	57 NAME	60 GN. RESP.	CH	CL	M	R

63

R-15075-1

FORM 810-C-60 REV. 7-61

W. NOFFKE 896-394

ROCKETDYNE

PART CHANGE — FAILED ITEM — TIME — TO — SET DAT — CTL IV — 32627R

PART IDENTIFICATION

1 PART NO: 103660	2 PART NAME: Prop Tank (Fuel)
3 SERIAL NO: 4051935	4 MFR NAME: ROCKETDYNE; 5 MFR CODE; 6 REF DESIG
7 NEXT ASSY PART NO: 106161	8 NEXT ASSY SERIAL: DATOAMS; 9 NEXT ASSY NAME: SE7 ENGINE SYSTEM
10 MISSILE SERIAL NO	11 ENG AGE MODEL NO: SE7; 14 SYSTEM CODE
12 REJ TAG NO	13 ENG AGE SERIAL NO; 15 COMPONENT CODE; 16 HARDWARE CODE

PART DISPOSITION — PART REPLACEMENT

35
- 1 ☐ REPAIRED IN PLACE
- 2 ☐ REPAIRED & RE-INSTALLED
- 3 ☐ ADJUSTED
- 4 ☐ ELIMINATED
- 5 ☐ CONDEMNED
- 6 ☐ HOLD FOR REPAIR
- 7 ☐ DEPOT REPAIR
- 8 ☒ FAILURE ANALYSIS
- 9 ☐ USED AS IS

36
- 1 ☐ IDENTICAL ITEM
- 2 ☐ SUBSTITUTE PART
- 3 ☐ NONE
- 4 ☐ NONE AVAILABLE

37 REPLACEMENT PART NO

38 REPLACEMENT SERIAL NO

39 FAILED PART SENT TO: CTL IV SSFL

40 | 41

17 FAILURE DATE: 65 1 30 (YR MO DAY)	18 TEST OPER DATE: 65 1 30 (YR MO DAY)	19 TEST OPER NO: 106156-401
20 ITEMS		
21 PROCEDURE SPEC & PARAGRAPH: 106156-401 PARG. 7.5		
22 FS	25 FAIL TYPE	26 FAIL CODE
27 SECONDS	28 STARTS	
23 SV	29 MONTHS	30 INITIAL REPORT NO
31		
24 NC		

32 OPERATION REPORTED OR IN PROGRESS
- A ☐ COMP ASSY TEST
- B ☐ FINAL ENG ASSY
- C ☐ ELEC-MECH CHECK
- D ☐ ACCEPT R&D TEST
- E ☐ STORAGE
- F ☐ SHIPPING
- G ☐ RECEIVING INSP
- H ☐ MAINTENANCE
- I ☐ LEAK & FUNCTION
- J ☐ S/M LAUNCH
- K ☐ MISSILE ACCEPT
- L ☐ STAT MISS TEST
- M ☐ PROPEL LOADING
- N ☐ PERIODIC INSP

33

34 TIME PERIOD (ACCEPT R&D STATIC TEST ONLY)
- 1 ☐ PRE-TEST
- 2 ☐ TEST
- 3 POST TEST

42 NAME: Troy Kniffin	43 GROUP: 388	44 SUPPLEMENT SHEET: 1 YES 2 X NO
45 APPROVED BY: R. Eide	46 ACTIVITY	47 STAND AREA
48 NAME: W. NOFFKE	49 GROUP: 394	50 AR X; 51 PART REQ YES NO
65 2 2		
52 1/2	53 TAPE CODE	

35 DURING HIGH TEMPERATURE CONDITIONING JUST PRIOR TO INITIATING MISSION DUTY CYCLE TEST LIQUID MMH WAS OBSERVED COMING FROM PACKAGE B PORT 4, INDICATING A LEAKING BLADDER.

36 | 70 | 71 TEST OPER NO: 32627R | 78 A

35 | 78 B

36 | 70 | 78 C

35 | 78 D

36 | 70 | 78 E

34

36 REF OFR: 074288 | 42 REF OFR | 48 REF OFR | 54 FAILED DETAIL PART NO: 103183 | 70 | 78 F

RELIABILITY ANALYSIS USE ONLY

IDENTIFICATION | TEST TYPE | 15 GROUP RESP CODE | 16 PA CODE | 17 APPROVED | 18 LEAK | CONTAM | 20 PROP SYSTEM

36 NTH | COMP | 40 ASSY | RS 2 | CD | 46 | 65 DELETE | 70 | 78 G

REPLACEMENT PART NO | 15 REPLACEMENT S/N | 22 NAME | 25 TYPE | 31 MFR

64 INSTALLATION PART NO | 30 CONFIG CODE | 37 NAME | 38 GR RESP

OFR No. 32627R

R-15075-1

ROCKETDYNE
A DIVISION OF NORTH AMERICAN AVIATION, INC.

FAILURE ANALYSIS REPORT

• ANALYST FILL OUT COVER SHEET ONLY

OFR IDENTIFICATION Amendment #2

OFR NO.	OFR BY (NAME)	DEPT. & GROUP	LOCATION	FAILURE DATE
07428R	T. Kniffin	596-388	Canoga	10/26/64

PART IDENTIFICATION

PART NO.	SERIAL NO.	PART NAME	MFR. NAME
103660	4051935	Prop. Tank, Fuel	Rocketdyne
ENG/AGE MODEL NO.	EN/AGE SERIAL NO.	TEST/OPERATION NO.	
SE7		DAT 106156-401, Para. 7.3.3.12	

ANALYSIS BY

NAME	DEPT. & GROUP	ANALYSIS DATE	APPROVAL	DSN DATE
W. Noffke 7/2/65	896-394	7/1/65	7/5	

RECEIVED 19 JUL 1965 RELIABILITY

FAILURE ANALYSIS

IF ANALYSIS APPLIES TO MORE THAN ONE OFR, INSERT ALL APPLICABLE OFR NUMBERS IN THIS SPACE:

OFR No. 32627R

1. HISTORY 2. ANALYSIS 3. CONCLUSIONS 4. CORRECTIVE ACTION
• STATE ITEM NUMBER AND DESCRIBE • USE EXTRA SHEETS IF NECESSARY
• BE SPECIFIC IN CORRECTIVE ACTION STATEMENT AND STATE EFFECTIVITY DATE AND/OR ENGINE SERIAL NUMBER WHERE APPLICABLE

1.0 History

1.1 OAMS Fuel Tank Assembly, P/N 103660, S/N 4051935, failed tank module post vibration functional testing per DAT specification 106156-401, Para. 7.3.3.12, Propellant Tank Bladder Leak Check. Fuel bladder, P/N 103183, failed to meet bladder leak test requirements per para. 7.3.3.12 (Ref. para. 7.1.5.6) by exhibiting a leakage rate of 2 scc/15 minutes at 2 ± .2 psig bladder pressure. The maximum allowable bladder leakage rate was 0.35 scc/15 minutes.

1.2 OFR 07428R, dated 10/26/64 reported the noted bladder leakage failure and states that the failed part (tank/bladder assembly) was to be used "as is" until completion of the program.

1.3 In view of the DAT Program requirements, this tank/bladder assembly continued on in the DAT program by direction and approval of MAC per IL 4388-5161, 2 November 1964, and IL 4388-5237, 20 November 1964, from T. Kniffin 896-388 to distribution.

1.4 Fuel tank assembly DAT exposures.

1.4.1 Prior to the reported bladder leak failure, the tank/bladder assembly had completed a round trip from Rocketdyne to Houston, Texas and had also seen exposures to random vibration testing in the R- and Z- axes for a period of 8 min each, or a total of 16 min. at Houston.

The latter vibration testing of the tank module was conducted with the propellant tanks filled to the specified capacity with test fluids, i.e., Freon MF in the oxidizer tank and a mixture of 76% ethyl alcohol and 24% distilled water by volume in the fuel tank, the latter oriented with its outlet ~~ice from vertical~~ (pointing up). Item 81 52-52701

FAILURE ANALYSIS ACCEPTED

J. M. Lester	7/23/65
[illegible]	7/22/65

OFR NO. 07428R

R-15075-1

FORM 601 P-2 REV. 2-62

1.0 History (cont'd)

1.4.1 (cont'd)

The R & Z axis random vibration inputs were provided by an electrodynamic exciter system consisting of three shakers, i.e., two A310 and one A275. The shape of the power spectral density curve was in accordance with Fig. 50 of DAT specification 106156-401 as amended per IL 4388-5104, September 8, 1964. An overall vibration level of 7G (+15%,-0%) RMS as specified was observed for the A275 shaker while the output of the two A310 shakers at an overall RMS level of 11G was about 37% above this upper limit specified.

1.4.2 The fuel tank assembly, furthermore, had been subjected to and had passed various functional, proof pressure, and gross leak check tests. A minimum of three full and two partial fuel bladder expulsion cycles had been completed at the time of final bladder leakage reported by OFR 32627R.

1.4.3 A liquid calibration of the engine system and tank module was performed [redacted] following vibration testing. The module was mounted in the spacecraft launch position and its propellant tanks were loaded with test fluids. (Freon TF was used in the oxidizer system and isopropyl alcohol in the fuel system). With tanks pressurized, the propellant valves were actuated to effect liquid flow and system calibration.

The propellant tank bladders were in a collapsed state prior to liquid loading and partially collapsed during calibration. The fuel tank bladder had been filled with isopropyl alcohol to its rated capacity and liquid expulsion was performed at 300 psig.

The module was subsequently drained of all test fluids, flushed, cleaned without propellant tank bladder collapse and shipped to Rocketdyne.

1.4.4 After the tank module was installed, the engine system was exposed to MDC requirements of 160F environmental temperature. The propellant tanks had been loaded with 246 lbs of oxidizer (NTO) and 155.3 lbs of fuel (MMH). Fuel samples had been collected prior to tanking operations.

The propellant tank bladders were collapsed and expanded once during the tanking. The engine system was mounted in the horizontal position with the propellant tank outlets 19° above the horizontal.

1.0 History (cont'd)

1.4.5 The pre 160 F MDC test temperature conditioning period was approximately nine hours in duration. About seven hours after the start of the temperature conditioning period, it was observed that fuel (MMH) was dripping from the test facility vent line connected to the Component Package "B" Fuel Tank Vent - 4 Port. It was also noted that the fuel tank pressure as measured with a pressure transducer at the Fuel Tank Vent - 4 Port, was abnormally high (approximately 180 psig). The engine system temperature had risen to approximately 140 F at that time. During the subsequent investigation of the high fuel tank pressure, the test facility fuel tank vent system was opened and fuel came flowing from the vent line. It should be noted that the engine system propellant tanks had not been pressurized prior to the temperature conditioning period.

1.4.6 Preparations for the MDC test were then stopped. The engine system was allowed to cool and the fuel was detanked by collapsing the bladder. After approximately 40 percent of the tank fluid had been expelled, gross gas bubbling was evidenced in the facility tank used to collect the expelled fuel, thus verifying a bladder failure. A final fuel sample was then taken from the test facility tank for analysis.

1.5 OFR 32627R (failure date 1/30/65) was issued which indicated a leaking fuel bladder and which verified the bladder leakage reported by OFR 07428R. As a result of noted fuel bladder leakages, the fuel tank assembly was removed from further engine system DAT operations and was disassembled for failure analysis.

2.0 Analysis

2.1 To verify bladder leakage, a bladder leak test was subsequently performed per DAT 106156-401. A bladder leak rate of 100 SCC/11 sec. was observed.

2.2 In addition, a water immersion tank/bladder flange leak check was also made and a very heavy flange leakage was noted with the tank under 350 psig GN_2 pressure.

2.3 Subsequently, tank and bladder components were disassembled, visually inspected, and a photoelastic stress analysis of failed bladder areas was performed.

2.4 Visual inspection was made and the following results were obtained.

2.4.1 Outer Bladder, P/N 103183, S/N D2900-3, Figure 1.

2.0 Analysis (cont'd)

2.4.1.1 Heat seal of neck was in good condition. No separation was noted.

2.4.1.2 Bladder neck section below and adjacent to the heat seal was severely torn for about 75% of the neck circumference and for about 8-10 inches in the perpendicular direction from the neck towards the bladder equator. See Figure 1 and Photo No.: 1HE65-2/9/65-CIK.

2.4.1.3 A narrow band section of about 1/4 inch in width extending around the neck adjacent and below the seal area exhibited heavy torsional stress patterns showing that significant deformations beyond the material yield point had taken place.

2.4.1.4 One V-tear, about 1/16 in. in dimension was noted near the equator. See Figure 1 and Photo No.: 1HE65-2/9/65-CIJ.

2.4.2 Middle Bladder, P/N 103183, S/N 2902-5, Figure 2.

2.4.2.1 Heat seal of neck was in good condition. No separation was observed.

2.4.2.2 Neck section was torn during disassembly of bladders while trying to effect breaking of heat seal.

2.4.2.3 A narrow band section coinciding with the band noted for the outer bladder in Item 2.3 also exhibited torsional deformation patterns. However, these stress indications were considerably lighter.

2.4.2.4 Five V-tears ranging from 1/16 to 1/4 inch in dimensions were located predominantly in the upper flange bladder half shown in Figure 2 and Photos Nos.: 1HE65-2/9/65-CID/E/F/G/H. Several pin holes were also found near one of the V-tears, see Fig. 2, extreme left hand.

2.4.2.5 Two blisters were noted; one, more oblong in shape about 1/2 in. in length, and the other, somewhat rounder, about 1/4 in. in dimensions. Blister surfaces were not broken and revealed otherwise no defects. Photo No.: 1HE65-2/9/65-CII.

2.4.3 Inner Bladder, P/N 103183, S/N 1991-7, Figure 3.

2.4.3.1 Heat seal of neck area was in good conditions and was not broken prior to disassembly.

2.0 Analysis (cont'd)

2.4.3.2 Neck and adjacent bladder section experienced heavy 90° tear (about 6 to 8 inches each leg) during heat seal and bladder disassembly. The tear originated adjacent to the heat seal area and extended perpendicularly towards the equator. See Figure 3 and Photo No. 1HE65-2/9/65-CIB. The heat-sealed part seemed unusually hard and stiff and the bladder neck tore with extreme ease. Normally the heat seal allows bladders to be separated readily without tearing or structural damage.

2.4.3.3 Inner bladder flange was completely severed in the serrated flange area cutting off an entirely separate ring section. This cut off flange portion had the appearance of an added separate teflon flange seal ring. See right corner, Photo No.: 1HE65-2/9/65-CIB.

2.4.3.4 Two V-tears the largest about 1/4 inch leg dimensions, were located in the equatorial region of the bladder about 180° apart. Otherwise, the bladder surface was in good condition. See Figure 3 and Photo Nos.: 1HE65-2/9/65-CIA and CIC.

2.5 In general, all three bladder nipples were in good condition. No significant surface defects were found. However, indications of minute surface cracking were noted in the nipple to bladder radius areas. Similar minute indications were also observed in all flange neck areas. The heat-sealed area around the bladder neck appeared harder and stiffer than usual and tore with ease on bladder disassembly.

2.6 Significant bladder damages and failures were predominately located in the flange and upper hemisphere of the bladder, while some failures and defects were found in the equatorial bladder region.

2.7 Torn areas of outer, middle, and inner bladders did not coincide except for a matching twist pattern band adjacent to the neck heat seal area revealing very heavy torsional outer bladder stress deformations to moderate middle bladder and minor inner bladder distortions.

2.8 All three bladders showed signs of considerable work exposure. Wear and tear indications were noticeable over much of their surfaces. The outer bladder was most severly worked and torque-stressed in the neck portion while the bladder hemisphere remained in a relatively fair condition. Of the three bladders, the middle one was the most severly worked in its hemisphere, based on the number of failure points observed.

2.9 In general, all conceivable types of stresses were in evidence resulting from repeated bladder exposures to twisting, folding, bending, overlaying, creasing, pulling, rubbing, and extruding as imposed during dynamic bladder expansion, collapse, and vibration cycling.

2.0 Analysis (cont'd)

2.10 The V-type of bladder failure was predominate. Separation of FEP layer from the TFE body was signified by blistering.

2.11 Material interactions, crystalline deformation, separation and stress shearing were observed. An apparent change in the microstructure was noted between the inner and the outer bladder. Refractory analysis showed that the inner and outer bladders were variable in color.

2.12 Fuel samples were taken on 1/28/65, just prior to SE-7 tanking (Ref. para. 1.4.5) and on 2/1/65 after SE-7 detanking (Ref. para. 1.4.6). Chemical Analysis Reports, Log. No. 1-411, MMH 39B, and Log No. 2-30/1-33 respectively, indicate the following findings by weight percentages:

Fuel Content	Fuel Sample Prior To SE-7 Tanking, 1/28/65	Fuel Sample After SE-7 Detanking 2/1/65
N_2H_4	----	9.3
MMH	99.1	87.9
NH_3	Trace	0.2
H_2O	0.6	1.15
Unknown (probably isopropanol)	----	1.45
Monomethylamine	0.1	Trace
Other soluble impurities	0.2	----

3.0 Conclusions

3.1 Bladder failed leak test per OFR 07428R after completion of functional vibration testing in the R- and Z- axis for a total of 16 minutes. Excessive bladder leakage was indicated. Tank/bladder assembly continued in DAT per MAC direction until final OFR 32627R was issued on 1/30/65 which verified a significantly increased fuel bladder leakage rate. As a result, subject fuel tank assembly had to be removed from further DAT operations for failure analysis.

3.2 Tank/bladder assembly had seen considerable shipping, storage and severe R-axis vibration exposures including a minimum of 3 total bladder expulsion cycles and 2 partial bladder collapses at ambient temperatures.

3.0 Conclusions

3.3 Vibration testing in the R-axis imposed G loads of up to 11 RMS which averaged 37% above the overall load of 7 G RMS specified. Ref. IL 5331-3011, 10 March 1965 from N. R. Bisciglia D/896-331 to J. R. Hahn D/896-380, Re: Fuel Bladder Failure, DAT 106156-401.

Observed excessive vibration inputs were imposed on the test stand and its structural members holding and supporting the propellant tank module. The latter may have actually been exposed to still significantly higher and unrecorded forces as a result of vibration buildup caused by interactions due to test equipment characteristics, liquid loads in the propellant tanks, and unbalanced inputs by the shaker system.

3.4 Fuel samples taken prior to MDC tanking and after detanking revealed, in their chemical analysis as shown under para. 2.12, that water and an unknown liquid (probably isopropanol) remained trapped in the fuel bladder assembly, i.e., between bladders, during vibration testing and during post vibration liquid calibration of the engine system and was expelled during final detanking operations.

3.5 Further evidence of liquid bladder entrapment is also indicated by the otherwise unexplainable fuel tank pressure increase to about 180 psig as noted during the environmental exposure of the engine system to 160F prior to hotfire. A specified fuel quantity was loaded into the supposedly empty tank/bladder assembly to fill the tank to its required 97% capacity level specified for a 160 ± 5 F temperature condition prior to firing. However, because of the bladder entrapped liquid, the fuel bladder actually was filled to over 99% of full capacity which then resulted in an abnormal tank pressure buildup to about 180 psig during environmental temperature increase from 70 to 160F, thus causing observed fuel leakage.

3.6 Original excessive bladder assembly leakage reported under OFR 07428R must be attributed to the effects of vibration exposures indicated under para. 1.4.1 and 3.3.

A propellant bladder leak check had been performed prior to vibration testing and no bladder leakage, permeation or otherwise, was observed when exposing bladder assembly to 2 ± 0.2 psig GN_2 for a minimum of 2½ hrs. After vibration testing a constant leakage rate of 2 scc/15 minutes was observed under the same leak test conditions, indicating that significant bladder damages must have been sustained during this phase.

3.7 Since the vibration test was conducted under considerable shaker overload conditions, which effected test module unbalance and resulted in apparently critical liquid loads and forces being imposed on the bladder assembly, no positive determination can be made as to whether the bladder assembly would have actually failed the test had it been performed under more controlled conditions.

3.0 Conclusions (cont'd)

3.8 Subsequent final failures of the fuel tank/bladder system, reported under OFR 32627R, was probably caused by propagation of the initial bladder failures as a result of tanking and bladder cycling operations.

3.9 Bladder assembly failure did not result from an apparent overload of liquid for the very fact that bladder extrusion holes, markings, or indications were not observed in any part of the outer bladder neck portion exposed to the 45 holes (1/16" dia) of the annular tank pressurant inlet port. Furthermore, a bladder pressure equal to the observed transducer pressure of only 180 psig was exerted which, according to reported test data under FAR 17509R (dated 9/29/64), will not result in a bladder assembly failure by extrusion through the pressurant inlet port holes. Therefore, initial bladder failure as a result of liquid overload must be ruled out.

3.10 Reported bladder damages could be ascribed to the following causes and conditions:

3.10.1 Bladder assembly revealed heavy twisting around the neck portion which most likely was caused by torque forces imposed during R-axis vibrations. Initial bladder twisting could have, in addition, occurred during bladder insertion and assembly into the tank shell.

3.10.2 Inner bladder apparently failed first by V-tear and/or pinhole defects caused by severe bladder creasing, possible extrusion effects due to standpipe holes or material flaws.

3.10.3 After partial collapse of inner bladder, both middle and outer, bladders were exposed to severe work loads as indicated by many body V-tears, excessive neck tearing, and heavy torsional neck material deformations and cracking.

3.10.4 Middle bladder blistering (layer separations) may be attributed to inadequate manufacturing methods at the supplier.

3.10.5 Outer bladder failed primarily by severe stress shearing around the neck portion near the heat seal band with many cracks originating in the TFE outer layer and extending into the FEP body layer causing complete failure of the neck portion as a result of heavy torsional load exposures.

4.0 Corrective Action

4.1 EO 169247 has been released as applicable to the following Tank Outlet Assemblies: 103174, 103199, 103631, 103632, 103633, 103634. Outlet hole dimension has been changed from: drill #53 ($.0595^{+.002}_{-.001}$ DIA) to: $.0550^{+.005}_{-.001}$ DIA hole. Two general notes also have been added:

a) Drilled holes must be free of any internal and external burrs.

b) 100% of drilled holes shall be inspected for burrs by 4X magnification.

4.0 Corrective Action (cont'd)

4.2 Bladder defects caused by blistering (layer separations) were encountered at the supplier several months ago. The cause was traced to oil contamination in the spray can air lines. Corrective action has been taken by the supplier by the addition of line filters during July 1964.

4.3 It is recommended that random vibration of the engine system tank module be conducted in the standard x, y and z axis. However, if random vibration must be conducted in the R axis, it should employ a system consisting of three identical shakers individually controlled to maintain the desired limits and spectrum.

4.4 It is recommended that at the end of each test which employs a liquid on the inside of the bladder assembly, the liquid be detanked, weighed and comparisons be made to the weight of liquid previously tanked. The tank assembly should also be x-rayed at the fueled and detanked conditions to determine bladder position, possible bladder condition, and liquid entrapment.

4.5 Following the occurrence of the initial bladder leak failure (OFR 07428R), testing continued per customer request, thereby destroying possible critical evidence which could have resulted in more conclusive analysis. Therefore, no further analysis or corrective action is planned.

NOTE: Photographs and pictures submitted in the original FAR are not included.

MAC CONCURRED WITH ROCKETDYNE REQUEST TO CONTINUE TESTING.

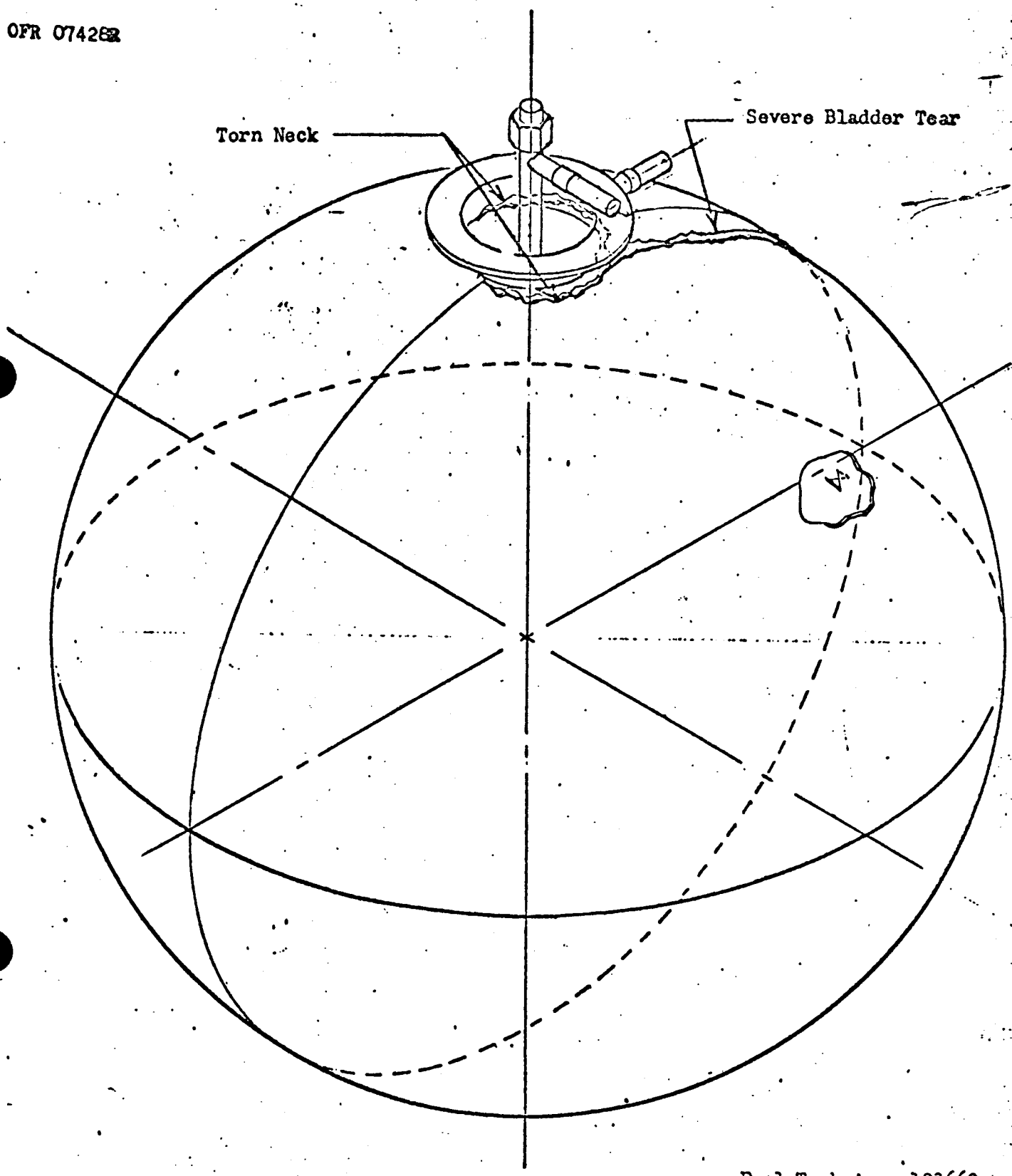

D-2900-3

103183 ASSY

FIG 1

Fuel Tank Assy 103660
Showing Outer Bladder
Failures.

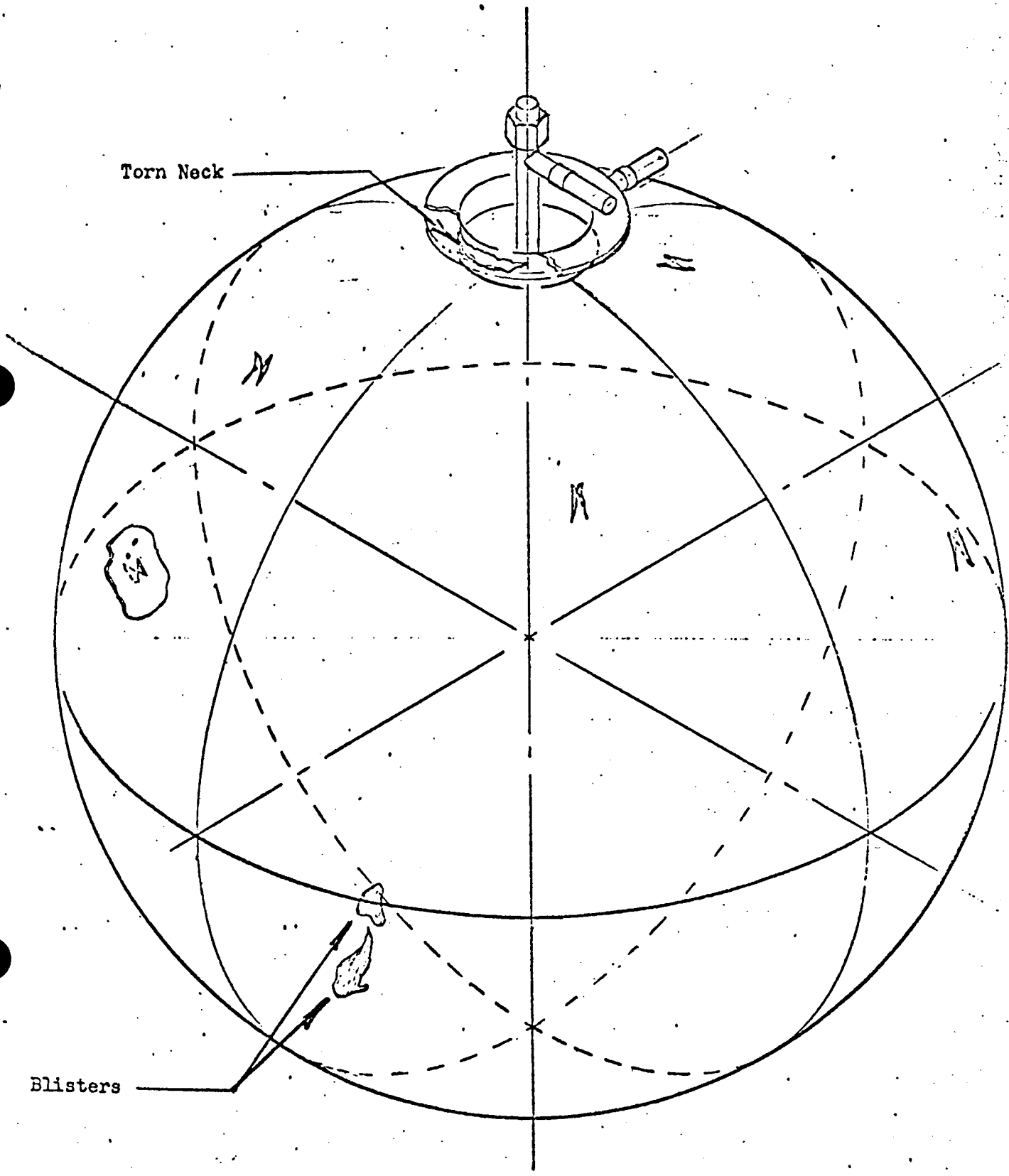

D-2902-5

103183 ASSY

Fuel Tank Assy. 103660
Showing Middle Bladder
Failures

FIG 2

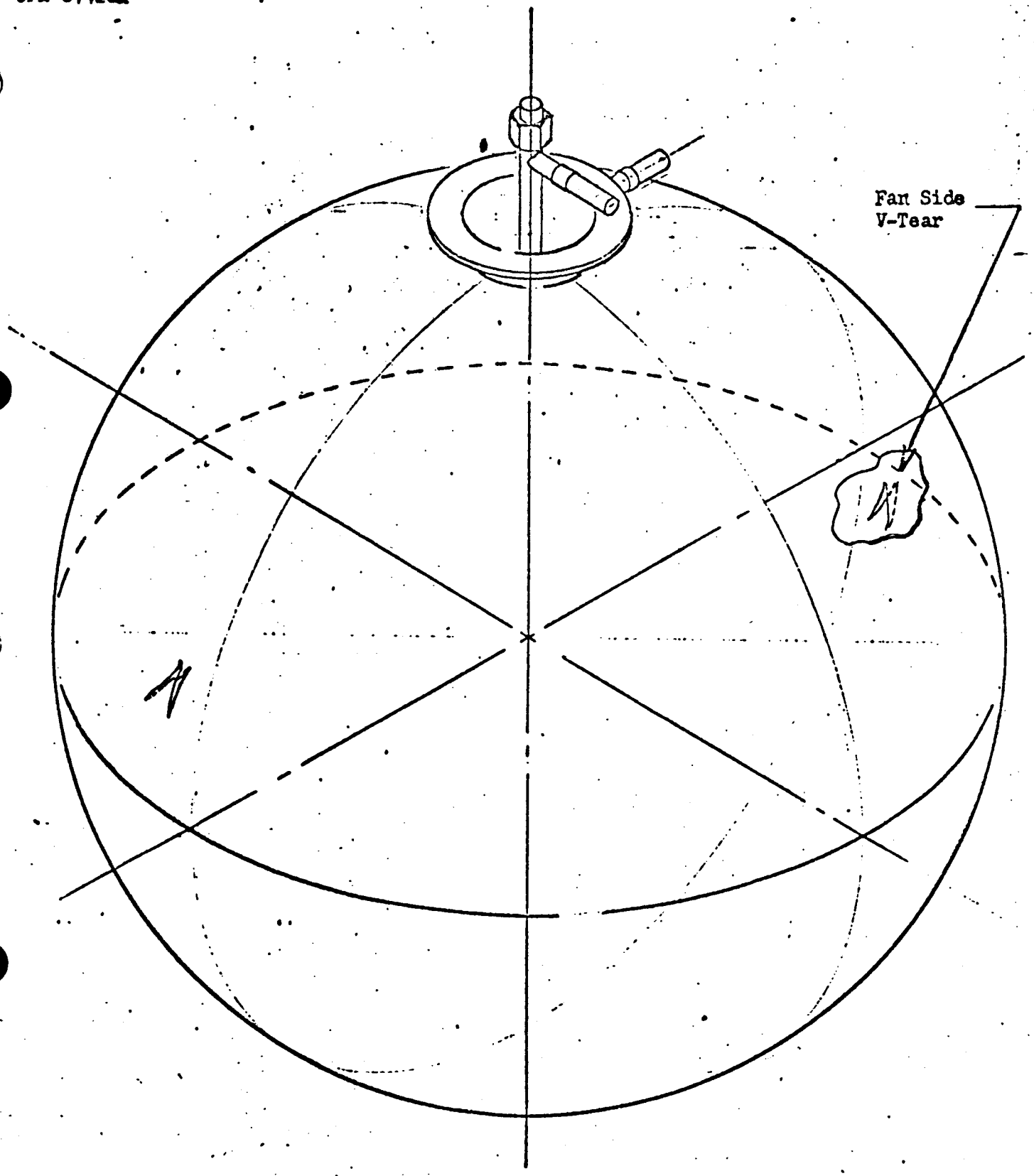

D-1991-7

103183 ASSY

Fuel Tank Assy. 103660
Showing Inner Bladder
Failures

FIG. 3

OFR 07428R

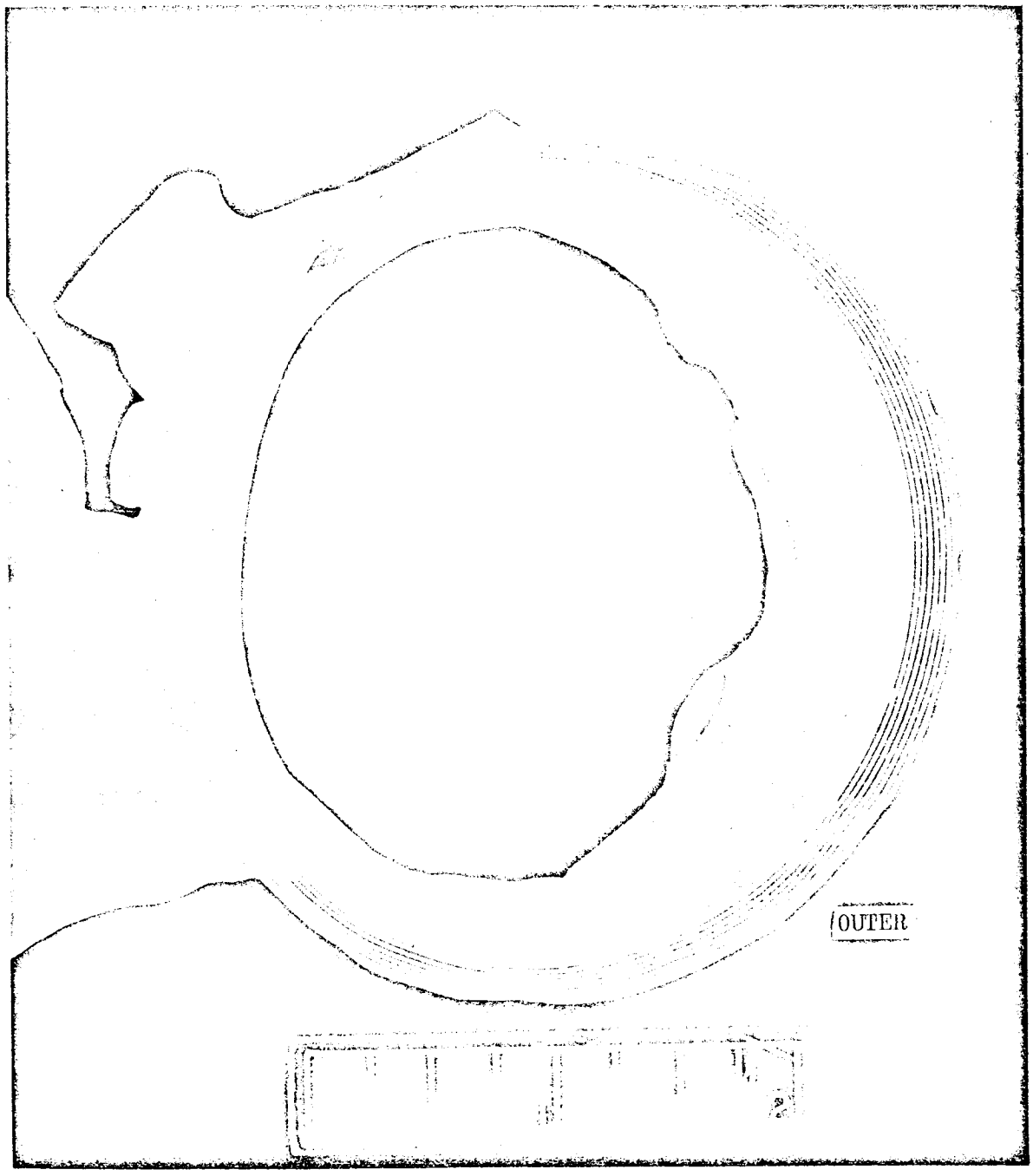

1HE65-2/9/65-C1K

OFR 07428R

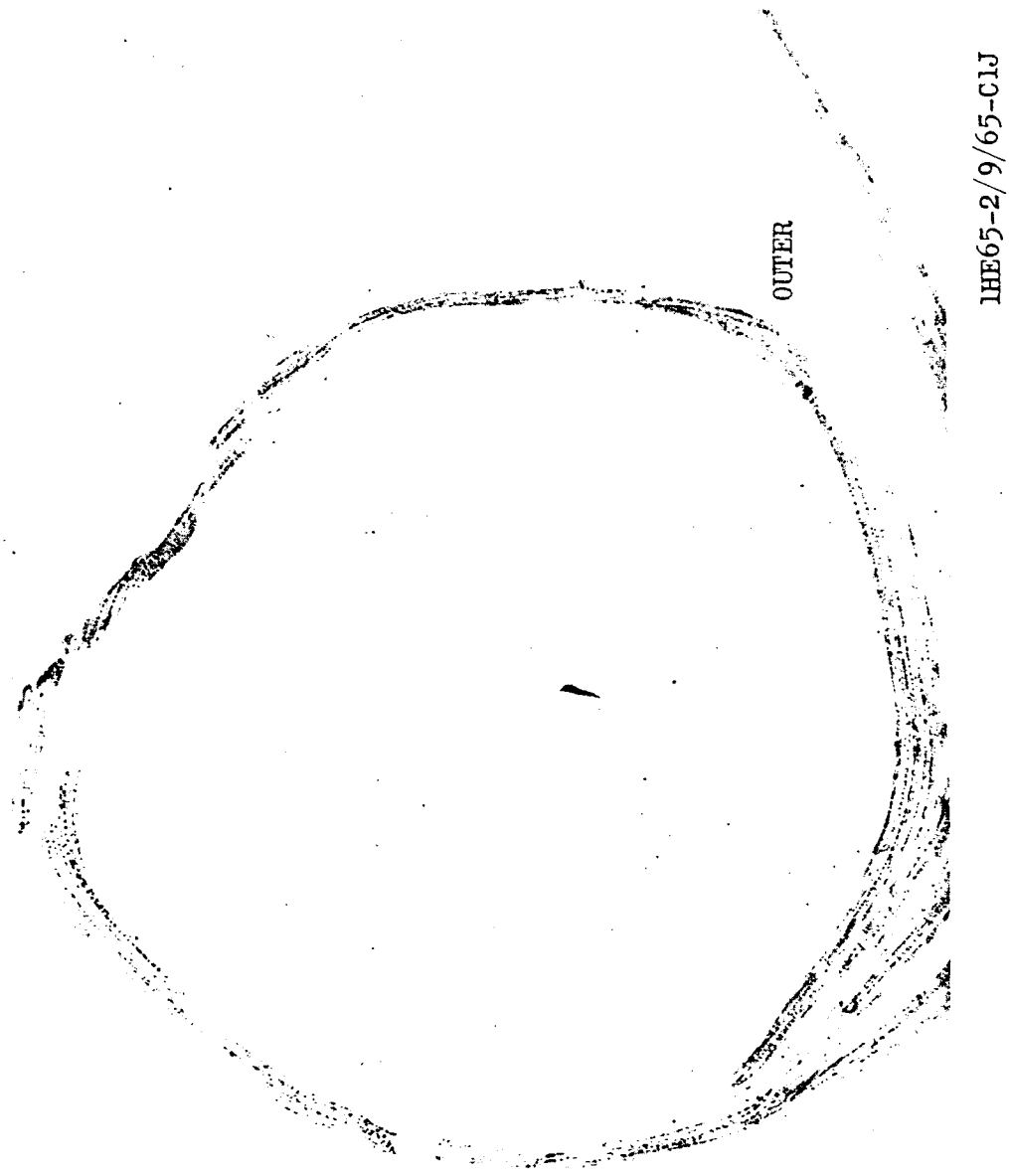

0FR 07428R

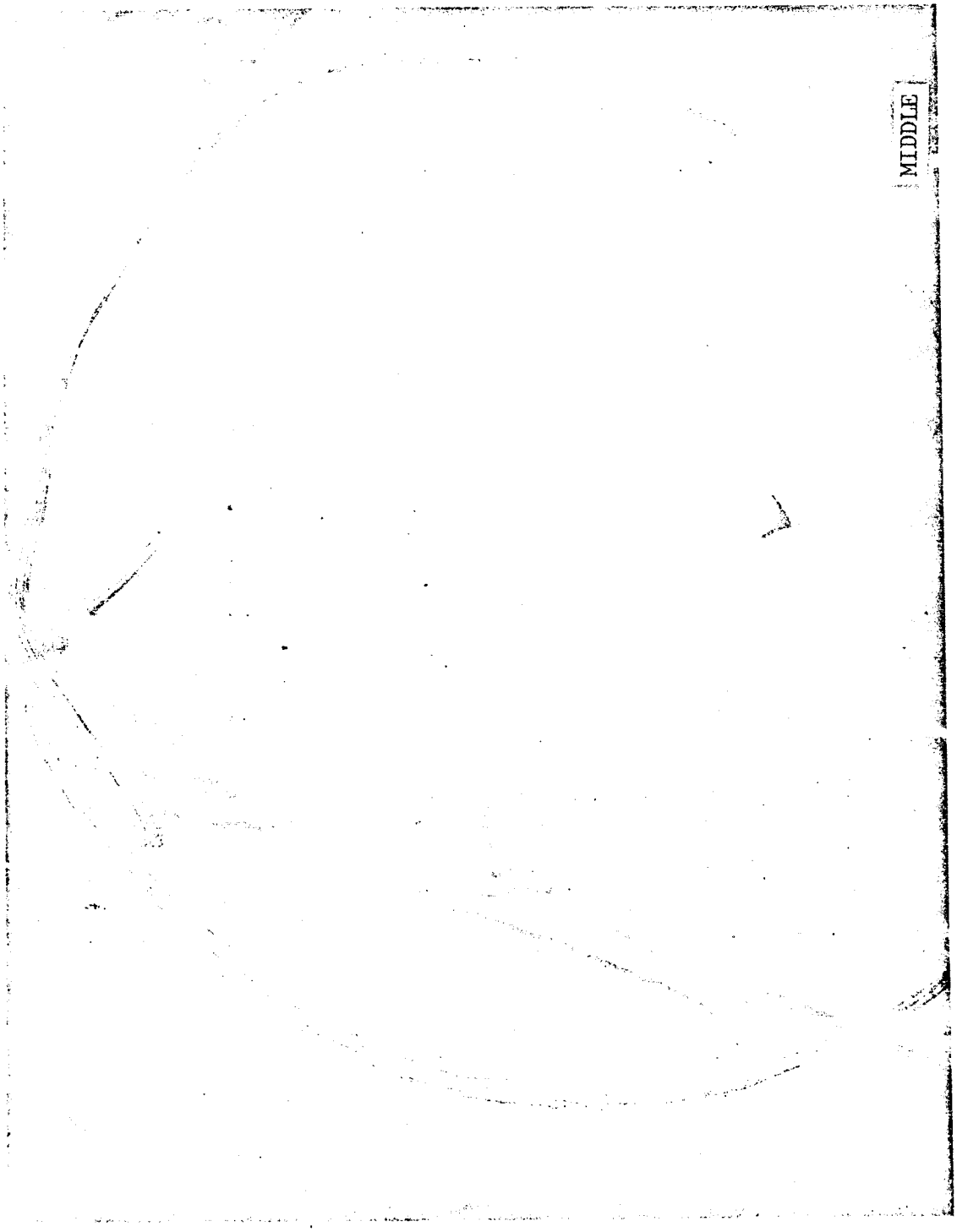

OFR 07428R

1HE65-2/9/65-C1E

OFR 07428R

MIDDLE

1HE65-2/9/65-C1F

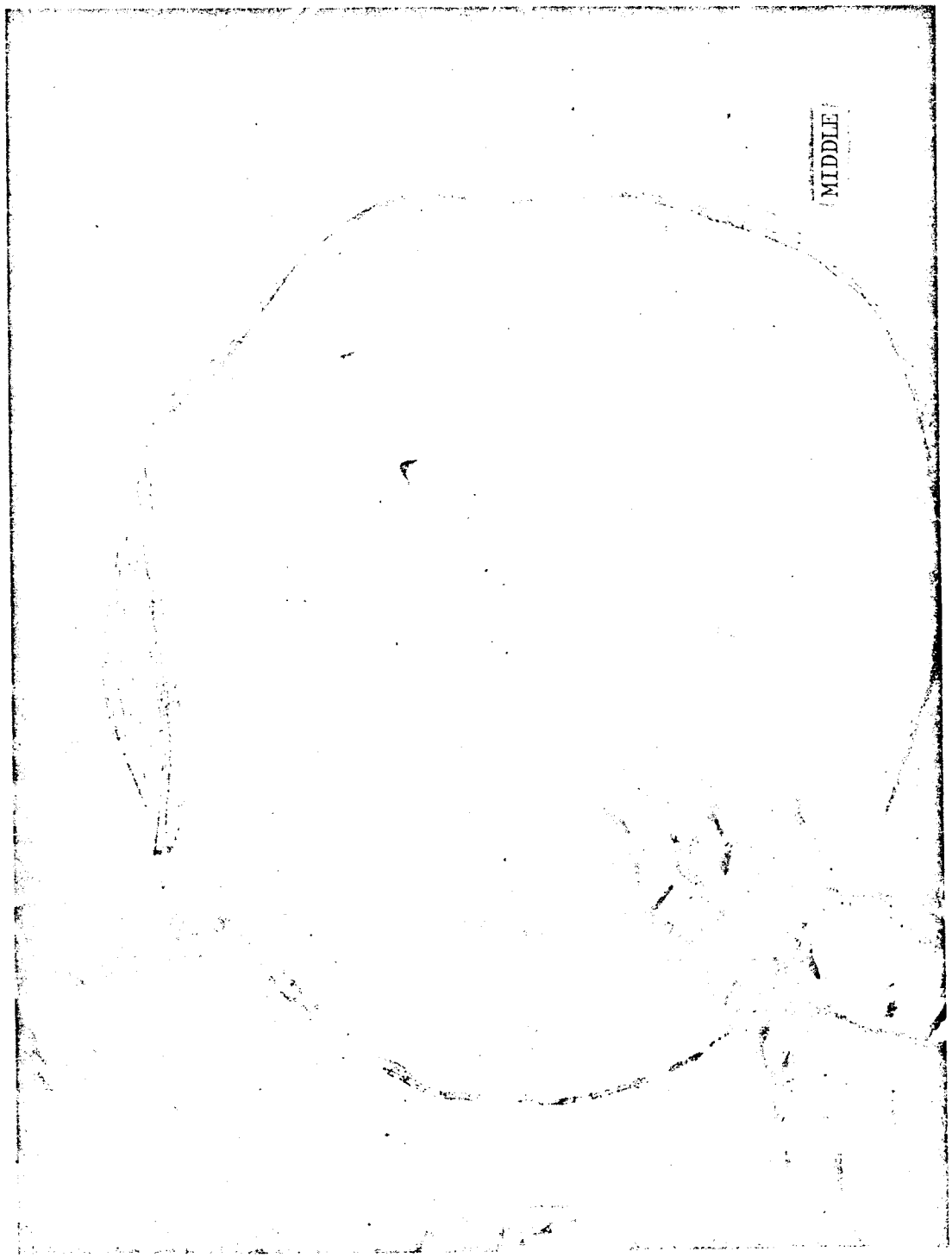

1HE65-2/9/65-C1G

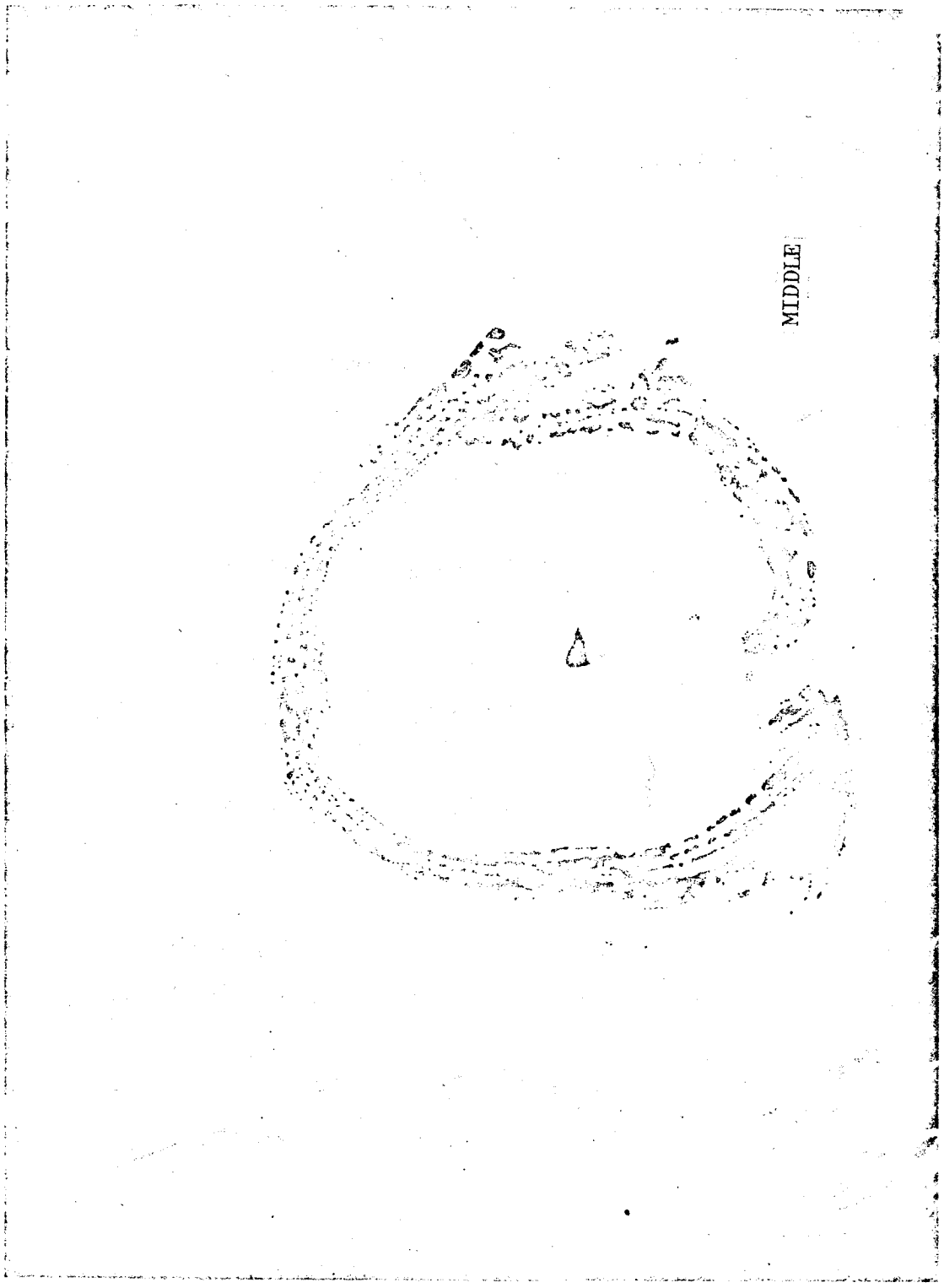

IHE65-2/9/65-C1H

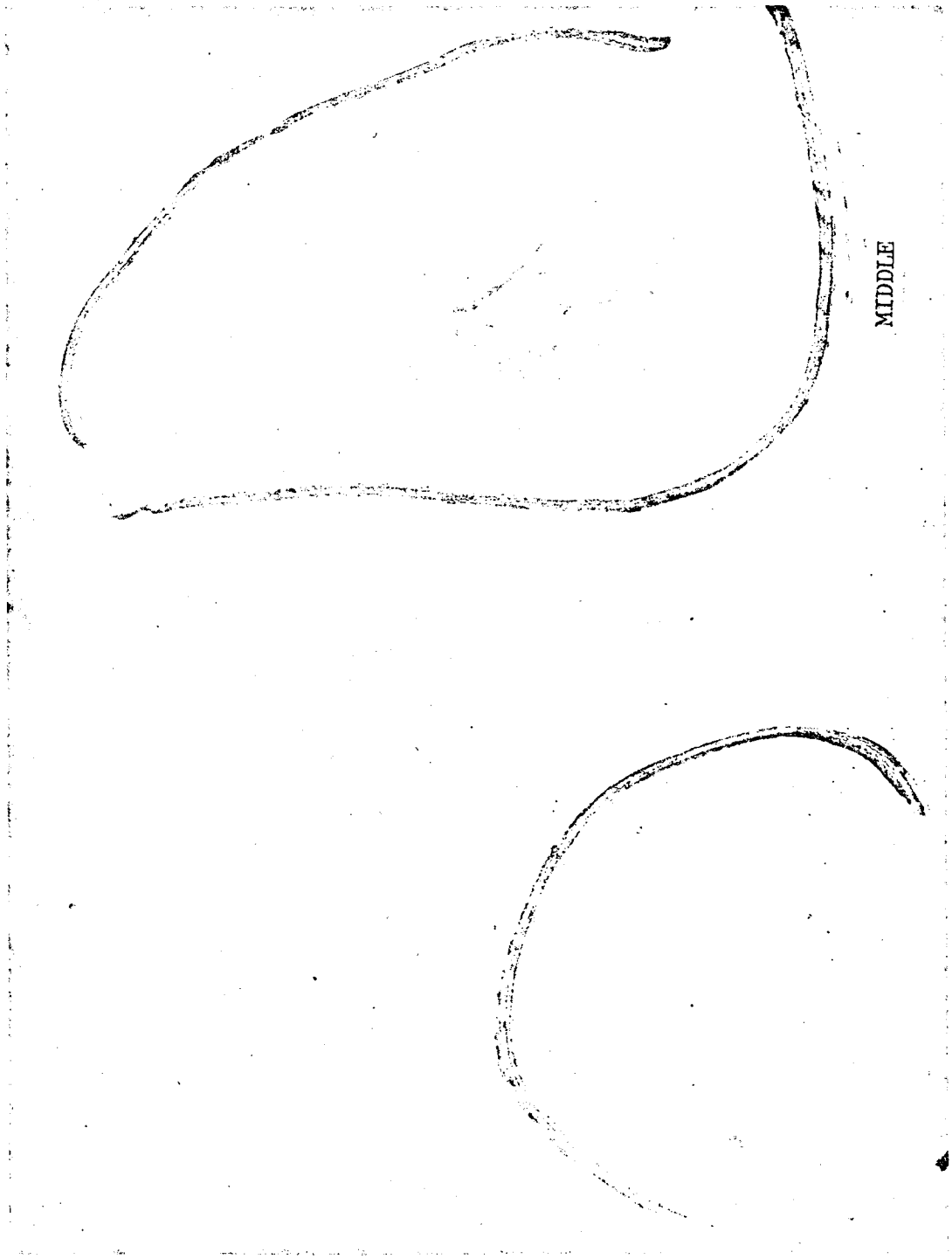

1HE65-2/9/65-C1I

OFR 07428R

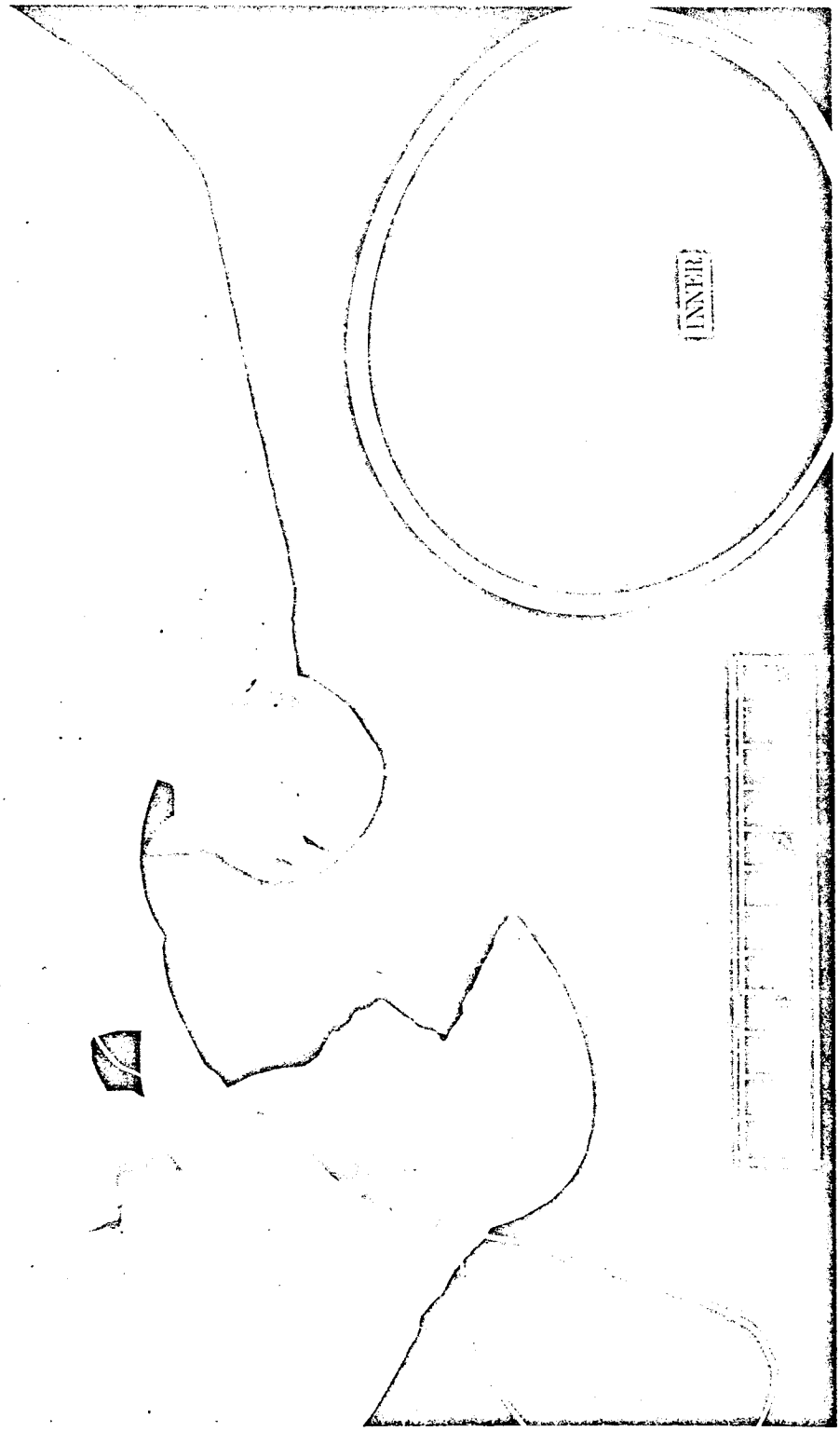

1HE65-2/9/65-C1B

OFR 07428R

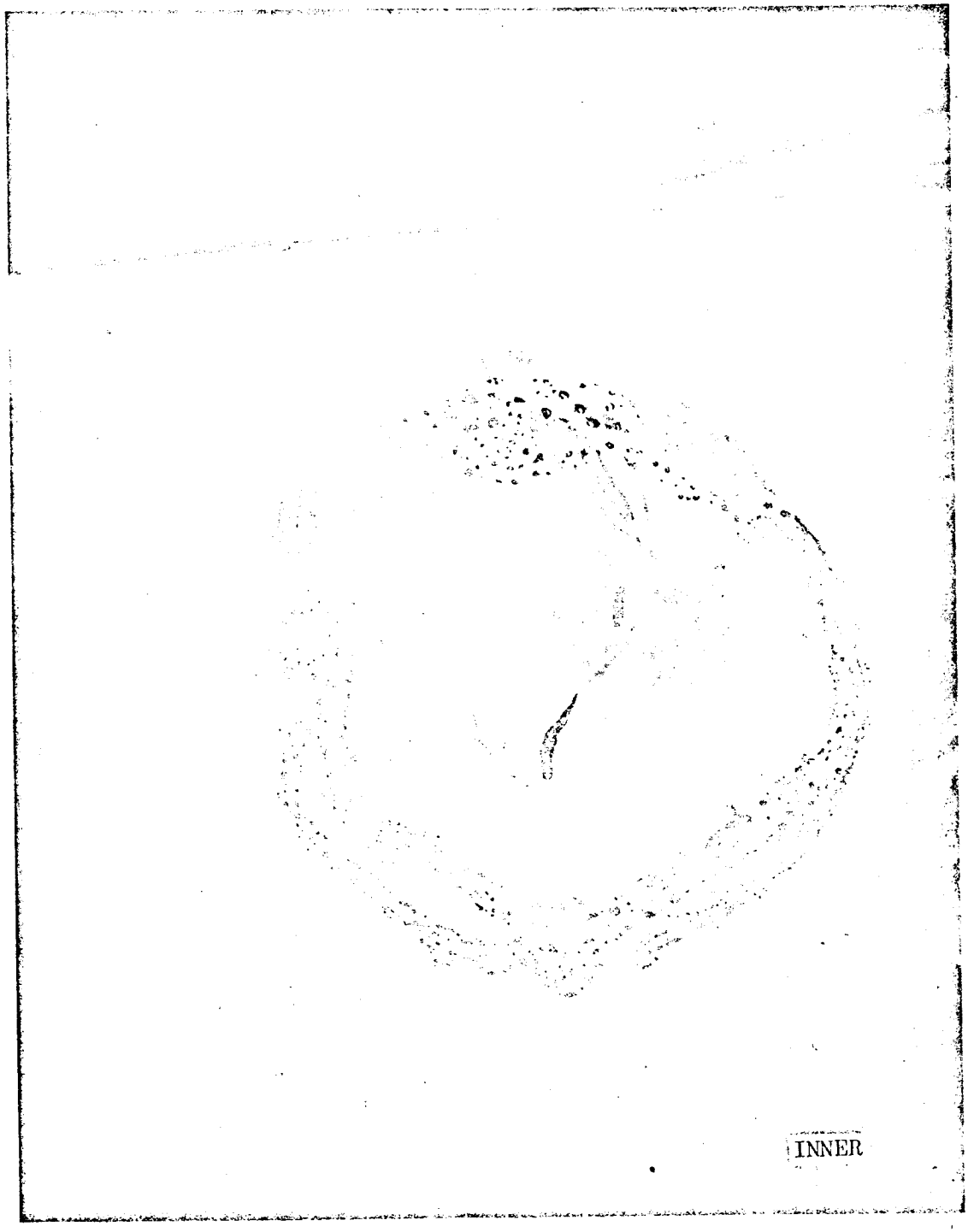

1HE65-2/9/65-C1A

OFR 07428R

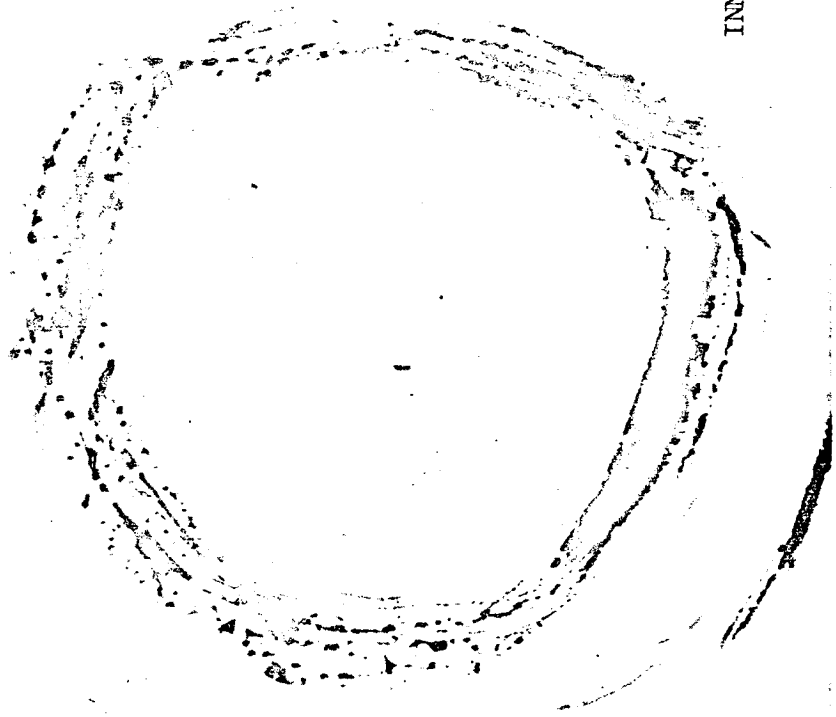

IHE65-2/9/65-C1C

ROCKETDYNE

PART CHANGE: X FAILED ITEM ☐ TIME EXPIRED ☐ TO DIRECTED

SE 7 DAT

№ 12941R

PART IDENTIFICATION

1 PART NO. 208160-21	2 PART NAME Thrust Chamber		
3 SERIAL NO. 4057178	4 MFG. NAME Rocketdyne	5 MFR. CODE	6 REF. DESIG.
7 NEXT ASSY PART NO. SE7 Engine	8 NEXT ASSY SERIAL System	9 NEXT ASSY NAME DAT (S/C 3)	
10 MISSILE SERIAL NO.	11 ENG/AGE MODEL NO.	14 SYSTEM CODE	
12 REJ. TAG NO.	13 ENG/AGE SERIAL NO.	15 COMPONENT CODE	
		16 HARDWARE CODE	

PART DISPOSITION

35
- 1 ☐ REPAIRED IN PLACE
- 2 ☐ REPAIRED & RE-INSTALLED
- 3 ☐ ADJUSTED
- 4 ☐ ELIMINATED
- 5 ☐ CONDEMNED
- 6 ☐ HOLD FOR REPAIR
- 7 ☐ DEPOT REPAIR
- 8 X FAILURE ANALYSIS
- 9 ☐ USED AS IS

PART REPLACEMENT

36
- 1 ☐ IDENTICAL ITEM
- 2 ☐ SUBSTITUTE PART
- 3 ☐ NONE
- 4 ☐ NONE AVAILABLE

37 REPLACEMENT PART NO.

38 REPLACEMENT SERIAL NO.

39 FAILED PART SENT TO: OFR Crib

40

41

FAILURE/OPERATION DATA

17 FAILURE DATE YR MO DAY 64 12 11	18 TEST OPER. DATE YR MO DAY 64 12 11	19 TEST. OPER. NO. 106156-401	20 ITEMS	
21 PROCEDURE—SPEC. & PARAGRAPH 106156-401, Para 7.4.6				
22	25 FAIL. TYPE	26 FAIL. CODE	27 SECONDS	28 STARTS
23 NV	29 MONTHS	30 INITIAL REPORT NO.	31	
24 NC				

32 OPERATION REPORTED OR IN PROGRESS
- A ☐ COMP/ASSY TEST
- B ☐ FINAL ENG. ASSY.
- C ☐ ELEC.-MECH. CHECK
- D ☐ ACCEPT. R&D TEST
- E ☐ STORAGE
- F ☐ SHIPPING
- G ☐ RECEIVING INSP.
- H ☐ MAINTENANCE
- I ☐ LEAK & FUNCTION
- J ☐ SIM. LAUNCH
- K ☐ MISSILE ACCEPT.
- L ☐ STAT. MISS. TEST
- M ☐ PROPEL. LOADING
- N ☐ PERIODIC INSP.

33

34 TIME PERIOD (ACCEPT/R&D/STATIC TEST ONLY)
- 1 ☐ PRE-TEST
- 2 ☐ TEST
- 3 ☐ POST-TEST

REPORTED BY

42 NAME T. Kniffin	43 GROUP 296 3 38	44 SUPPLEMENT SHEET 1 ☐ YES 2 X NO
45 APPROVED BY R. Dinius	46 ACTIVITY 591-146	47 STAND/AREA

ANALYSIS ASSIGNED TO

48 NAME LEONARD	49 GROUP 394	50 CODE AR	51 PART REQ. ☐ YES ☐ NO
DATE REPORT RECEIVED 52 YR MO DAY	DATE REPORT DISTRIBUTED 53 YR MO DAY		
IEN USE ONLY	54 TEST OPER. NO.	55 1/2 56	57 NTH CODE	58 TAPE CODE

DESCRIPTION OF FAILURE

WHEN? WHERE? HOW MUCH? CAUSE? EFFECT? COMMENTS?

DUE RELIABILITY D/663-884 18-Feb-65

⊙DURING LIQUID CALIBRATIØN PER TEST PRØCEDURE 106156-401 THE ØXIDIZER SIDE OF TCA NUMBER 8 EXHIBITED A FLØWRATE ABØUT ØNE-FØURTH ØF THAT WHICH WAS EXPECTED. THE ACTUAL FLØW WAS .096 GPM. THE EXPECTED FLØW WAS ABØUT .3 GPM.

71 TEST OPER. NO. 12941R

36 REF. OFR | 42 REF. OFR | 48 REF. OFR | 54 FAILED DETAIL PART NO.

RELIABILITY ANALYSIS USE ONLY

1 IDENTIFICATION	TEST TYPE	10 GROUP RESP. CODE	16 PA. CODE	EF	AP	CF	FC	24 LEAK	CONTAM.	30 PROP. SYSTEM	35
36 NTH	COMP	40 ASSY	RB-2	CD	46					65 DELETE	70
1 REPLACEMENT PART NO.			13 REPLACEMENT S/N		22 NAME		25 TYPE			31 MFR.	35
1 88 LLATION PART NO.			30 CONFIG. CODE		37 NAME		60 GR. RESP.		CH	CL	M	R

78 A B C D E F G

OFR № 12941R

R-15075-1

1

ROCKETDYNE
A DIVISION OF NORTH AMERICAN AVIATION, INC.

FAILURE ANALYSIS REPORT

• ANALYST FILL OUT COVER SHEET ONLY

OFR IDENTIFICATION

OFR NO.	OFR BY (NAME)	DEPT. & GROUP	LOCATION	FAILURE DATE
12941R	T. Kniffin	896-384	Van Nuys I	12/11/64

PART IDENTIFICATION

PART NO.	SERIAL NO.	PART NAME	MFR. NAME
208160-21	4057178	TCA	SCED
ENG/AGE MODEL NO.	ENG/AGE SERIAL NO.	TEST/OPERATION NO.	
SE-7			

ANALYSIS BY

NAME	DEPT. & GROUP	ANALYSIS DATE	APPROVAL	DSN DATE
J. Fong	896-394	3/8/65	3-29	

FAILURE ANALYSIS

IF ANALYSIS APPLIES TO MORE THAN ONE OFR, INSERT ALL APPLICABLE OFR NUMBERS IN THIS SPACE:

RECEIVED 8 APR 1965 RELIABILITY

1. HISTORY 2. ANALYSIS 3. CONCLUSIONS 4. CORRECTIVE ACTION
• STATE ITEM NUMBER AND DESCRIBE • USE EXTRA SHEETS IF NECESSARY
• BE SPECIFIC IN CORRECTIVE ACTION STATEMENT AND STATE EFFECTIVITY DATE AND/OR ENGINE SERIAL NUMBER WHERE APPLICABLE.

1. History

After hot fire acceptance test per RA0220-354 spec, the (DAT) TCA was assembled into the simulated engine system for liquid calibration per test procedure 106156-401, paragraph 7.4.6. During testing (run #0992) the oxidizer side of the TCA (no. 8) exhibited a volume flowrate of .096 GPM instead of .283 to .332 GPM as expected. This TCA was removed from the simulated engine system and replaced with another TCA. The replacement TCA functioned properly after being installed in place. From this fact, it was concluded that the removed TCA was not performing properly. (see attached test data Figure 1)

Examination of the AOR book indicated that the TCA had experienced no malfunctions other than as reported above. Further review of the test data revealed the TCA had a previous checkout, test run #0915, at which time the oxidizer side exhibited a volume flowrate of .302 GPM with proper response times. This indicated that the TCA was functioning properly during the checkout test.

2. Analysis

In order to pinpoint the cause of failure or to verify the malfunction of the TCA, a simulated engine system test per procedure 106156-401, paragraph 7.4.6, was performed. The prime objective of the test was to verify each side of the TCA feed system and propellant valves actuation signal on time (10 ± 4 sec) at an inlet pressure of 300 psig without disturbing the TCA. The test volume flowrate for the oxidizer side was .307 GPM with a response time of 2.8 milliseconds, and the fuel side was .407 GPM with a response time of 3.6 milliseconds which showed that both sides were within the specification requirements. The liquid used was isopropyl alcohol for the fuel and Freon for the oxidizer. (see attached test data Figure II)

OFR NO. 12941R

FORM 669 R2 REV. 2-63

06764LC ENCL

2. Analysis (cont'd)

A liquid calibration retest per RA0220-279, paragraphs 4.2.10 and 4.3.10, was performed to verify the operation of the TCA as a component. The TCA was not disturbed.

The test results exhibited a TCA pressure drop of 158 psig with an inlet pressure of 276 psig for both sides of oxidizer and fuel feed system. See attached test data figure III. The expected Δp was 157 ± 3 psig (with required back pressure of 118 ± 10 psig) for both feed systems at a 0.228 GPM oxidizer flowrate and a 0.225 GPM fuel flowrate. As can be seen, the flow characteristics were within specification requirements. At this point, there was no doubt that the TCA was functioning normally.

The above test results also verified that the first checkout test was good. This only meant that there must have been some obstruction in the feed system line between the oxidizer valve inlet orifice and the component package "C" outlet filter. Since the other engines were functioning properly, the only source of obstruction was limited to the feed line where the brazing tee joint connected the main feed oxidizer feed line and the valve inlet tube stub. But after the debrazing of the valve inlet tube stub from the system feed line (for TCA replacement) no contamination or obstruction was observed from the flushed out argon (gas) during the purging of the system feed line.

The oxidizer valve inlet tube stub was die cutted and visually inspected for obstruction, and it was found that the inlet orifice was clean and clear with no apparent obstruction. As a result of flow check operations, post failure, it was felt that the offending obstruction could have moved downstream, therefore, the oxidizer valve orifice and filter were then removed by grinding off the weld joints. Under microscopic inspection, both sides of the inlet orifice were clean and clear with no scratches except two tiny fuzzy fillet lines rounding off the orifice sharpness opposite sides to each other at the inlet side of the orifice. These fillets may have been caused by installation of the orifice itself or perhaps during the removal of the orifice because a little difficulty was encountered in removing the orifice and the filter from the valve. The oxidizer valve filter was clean and clear with no contaminants on it. This observation verified that the offending obstruction had been restricted to, was part of and had remained in the simulated engine system oxidizer feed line between the TCA valve inlet orifice and the brazed tee fitting connecting the main feed inlet line to the oxidizer valve. (See Figure 4)

Even though no gross evidence of obstruction was found through visual observation during the argon purging of the system feed line, the offending particle which caused the obstruction might not have been noted at that time and subsequently lost. Since the oxidizer orifice diameter was 0.039", the offending particle could have been only slightly larger to restrict flow. Such a small particle could have easily been not noted during the removal and debrazing operations.

3. Conclusions

As the results of the above calibration retests, the TCA has proven to be functioning properly within the required design specifications. It is concluded that the malfunction was definitely attributed to the simulated engine system feed line in that some sort of obstruction was in the oxidizer feed line located between the TCA valve inlet orifice and the brazed tee fitting connecting the main feeding inlet line to the oxidizer valve. In this, it has to be assumed that the obstruction or foreign particle was flushed out from the feed line without being noticed during the argon purging when the TCA was removed for rebrazing of the replacement TCA. No precaution was taken to filter the flushed out gas during the purging of the system feed line since the system was not suspect at the time.

Two Gemini engine systems, one SE6 (RCS) and one SE7 (OAMS), have been assembled at Rocketdyne for use in the DAT (Design Approval Test) program. These systems were assembled (per spec. 106156-401) in the same manner as those used in Gemini spacecraft by using deliverable propulsion system hardware and actual spacecraft plumbing and the same brazing process (RA0607-009) as used for the spacecraft. Assembly of the third engine system (SE7, OAMS) has been completed with the exception of the installation of one TCA and the tank module into the adapter test structure. All the engine system assembly effort has been accomplished under conditions of cleanliness control per RA0615-003, Class "B" (5-65 microns less than 200 particles per cubic foot, over 65 microns less than 10 particles per cubic foot).

4. Corrective Action

Since Gemini engine systems assembly effort at Rocketdyne has essentially been completed, no corrective action will be taken or is required. However, as noted in the above conclusions, there is a possibility that foreign particles can exist in the engine system plumbing after assembly. It is recommended thru this FAR that cleanliness control in Gemini spacecraft engine system assembly areas be re-evaluated and that liquid calibration tests of the type conducted on DAT engine systems, or possible gas flow tests, be conducted on all spacecraft engine systems to verify the absence of feed system obstructions. It is recommended that this verification be accomplished prior to delivery for flight use.

Item 31 52-52701

FAILURE ANALYSIS ACCEPTED

W. Parker	4/13/65
[illegible]	4/13/65

RELIABILITY DEPT. 261
McDONNELL AIRCRAFT CORP.

ROCKETDYNE

DEVELOPMENT LABORATORY DATA SHEET

FIG. 1

LAB. TEST NO. [illegible]

PREPARED BY	TEST RUN BY	FACILITY	DATE
T. Rich	R. [illegible]		12/[illegible]

DOING DEPT.	ACCT. NO.	CONTRACT	M.R.C. NO.	GR.	HDW. NO.	DOING GR.	E.W.R. NO.
143	3721	8645	7170	388		22	692 694

REQUESTOR | PHONE | PROCESS SPEC.

PART NO. | REMARKS: Oxid side only

SER. NO.

SIZE | OTHER IDENTITY

Record #	Run #		Poor Data ΔP	PSI ΔP	Flow pipl/sec	gpm	P		T °F
985	1		0	0	60	.293	297		66
986	2		-.2	0	68	.331	296		66
987	3		-.4	0	64	.312	295		68
988	4		-.2	0	66	.321	295		68
989	5		-.2	0	64	.312	295		68
990	6		-.2	0	62	.302	295		68
991	7		-.3	0	66	.321	295		68
992	8		-.3	0	19	.096	296		68
993	9		0	0.5	270	1.321	290		68
994	10		±.5	.5	278	1.359	291		68
996	11A		0	.3	210	1.032	293		66
997	12		0	.2	202	.993	292		66
998	13		0	.4	248	1.215	290		66
999	14		0	.4	246	1.205	291		65
1000	15		0	.3	236	1.157	291		64
1001	16		+.1-.0	.5	268	1.311	290		64
1003	17A		-.1	0	126	.628	294		64
1004	18		-.2	0	127	.632	295		64
* 1005	19		-.1	0	75	.364	296		64
1006	20		-.2	0	126	.628	295		64
1007	21		+1.0	1.0	490	2.380	285		64
1009	22A		+.8	.7	398	1.937	287		64
1010	23		0	.2	190	.936	294		64
1011	24		+3.0	2.0	850	4.113	265		63
1012	25		+1.4	1.0	520	2.524	283		63
1013	26		+3.2	1.7	776	3.757	271		63
1014	27		+.5	.6	338	1.671	289		63
1015	28		+1.2	1.0	520	2.524	284		63
1016	29		+1.8	1.2	588	2.860	279		

* INCLUDING TCA #7 & #8
Δ " TCA #7, #8, & #16

92

FORM 600-Y-30

R-15075-1

ROCKETDYNE

DEVELOPMENT LABORATORY DATA SHEET

FIG. 2

LAB. TEST NO.

PREPARED BY	TEST RUN BY	FACILITY	DATE
A. ZAVAR	ZAVAR	CANO.	3-2-65

DOING DEPT.	ACCT. NO.	CONTRACT	M.R.C. NO.	GR.	HDW. NO.	DOING GR.	E.W.R. NO.
146	3721	5252	9904	394		66	679724

REQUESTOR: J. FONG

PHONE: 78-6491

PROCESS SPEC.: REF. OFR. 12941R

PART NO.: 208160-21

REMARKS: SIMULATED ENGINE SYSTEM T.C.A. LIQUID CALIBRATION. (FAILURE ANALYSIS)

SER. NO.: 4057178

SIZE: 25 POUND

OTHER IDENTITY: T.C.A.

FLUID		FUEL SIDE INLET PRESS. P.S.I.G.	FUEL SIDE FLOW G.P.M	FLUID	OXIDIZER SIDE INLET PRESS. P.S.I.G.	OXIDIZER SIDE FLOW G.P.M.		RESPONSE TIME, C 300 P.S.I.G. PULL IN TIME	RESPONSE TIME, C 300 P.S.I.G. DROP OUT TIME
ISOPROPYL ALCOHOL		300	.407	FREON TF	300	.307		3.6 ms	2.8 ms

EQUIPMENT LIST:

GAUGE 600 P.S.I.G. - N3-1008

TURBINE FLOW METER - FISHER-PORTER, MODEL 03C1123 E4 (FUEL)

TURBINE FLOW METER - FISHER-PORTER, MODEL 03C1123 E2 (OXI.)

AMPLIFIER - FISHER-PORTER

DIGITAL COUNTER - BERKELY, MODEL 5550 GP

DIGITAL PRINTER - BERKELY, MODEL 1452A

POWER SUPPLY - PERKINS, MODEL TVRO-15

3-2-65

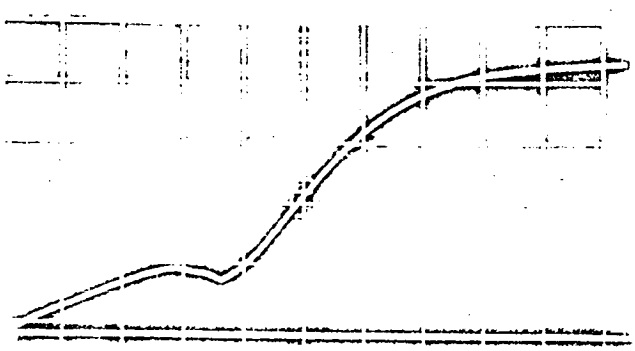

R-15075-1

SUPPLIER | REQ. NO. | P.O. NO.

PART NO. 208160-21 | NO. ENGINES 1 | TOTAL PIECES THIS ORDER L.H. | R.H. | N. 1 | 345 549 | S.O. OR SP. ITEM — | W 550 C 555

PART NAME T/C ASSY | PAGE | OF | SPLIT BY | ACCOUNT 3721 | CONTRACT 5252 | ITEM OR REL. 9904 | WORK DONE FOR 344

INDEX/HDW. — | CYCLE — — | INITIAL STORES 816-0 | FINAL STORES 976-7

TYPE ORDER 5-F5-7 | RECEIVING DATE 5-4-7 | ASSIGNED R

5 — R 2.25 | MODEL OR SYSTEM | No. 0248056

NEXT ASSEMBLY FINAL | THIS COPY USED ON ENGINE — | NTD. REL. | S.O. OR SP. ITEM | L.H. | R.H. | N.

MODEL OR SYSTEM | TCH S/N 405 7178

PLANNER H. MARTIN | QUANTITY PER ENG. L.H. | R.H. | N. 1 | THIS PART EFF. ON ENGINE —

LINE NO. | DEPT. OR ENG. QTY. | LAST MECH. INSPECTOR | MOCK-UP | NO CHG. | CHG. LTR. | NO. E.O. | E.O. NO. | DATE

	OPERATION OR MATERIAL	QTY. ACCEPTED	DATE	MECH. INSP.	TOOL NO.	COST DEPT.	SCN	SCHEDULE N	D
1	SPICE CONTACT CONTROLS								
2									
3	208160-21 TCH REF								
4	FURN BY D/596								
5									
6	I/S.					(—)(—)10		—	
7	807-6					(—)(.25)24			
8	ALKLINE CLEANTCH					.25			
9	FOR ENTRANCE INTO								
10	WHITE ROOM								
11	854-807 INSPECT	1	3/4/65	39				1	
12									
13	827-3 (REF. OFC 1294 R)					(—)(20)30			
14	RE-LIQUID CHLORIDE								
15	PER RAO 220-274 (DO NOT REMOVE ORIFICES)								
16	PARA. 4.7 IN ACCORDANCE								
17	WITH RAO 220-279.								
18	RECORD CHLORIDE FLOW DATA								
19	REF. RAO 220-275								
20	OXIDIZER SIDE								

	INDUCED PRESSURE	FLOWRATE GPM	INLET PRESSURE	OUTLET PRESSURE	TEMP.	ΔP
21						
22						
23	4.2.10	.228	276	118	73°	158
24						
25						
26						
27	FUEL SIDE					
28						
29	4.3.10	.225	276	118	73°	158
30						
31						
32						
33						
34						
35						
36	854-827 VERIFY					5
37						
38	F/S					999.5

NO. PCS. RECEIVED	L.H.	R.H.	N.	BY STOCKROOM NO.	CLERK'S CLOCK NO.	DATE

R73-F-1-GP REV. 8-59

GOVERNMENT

ROCKETDYNE

FIG. 3

Figure 4
FAR 12941R

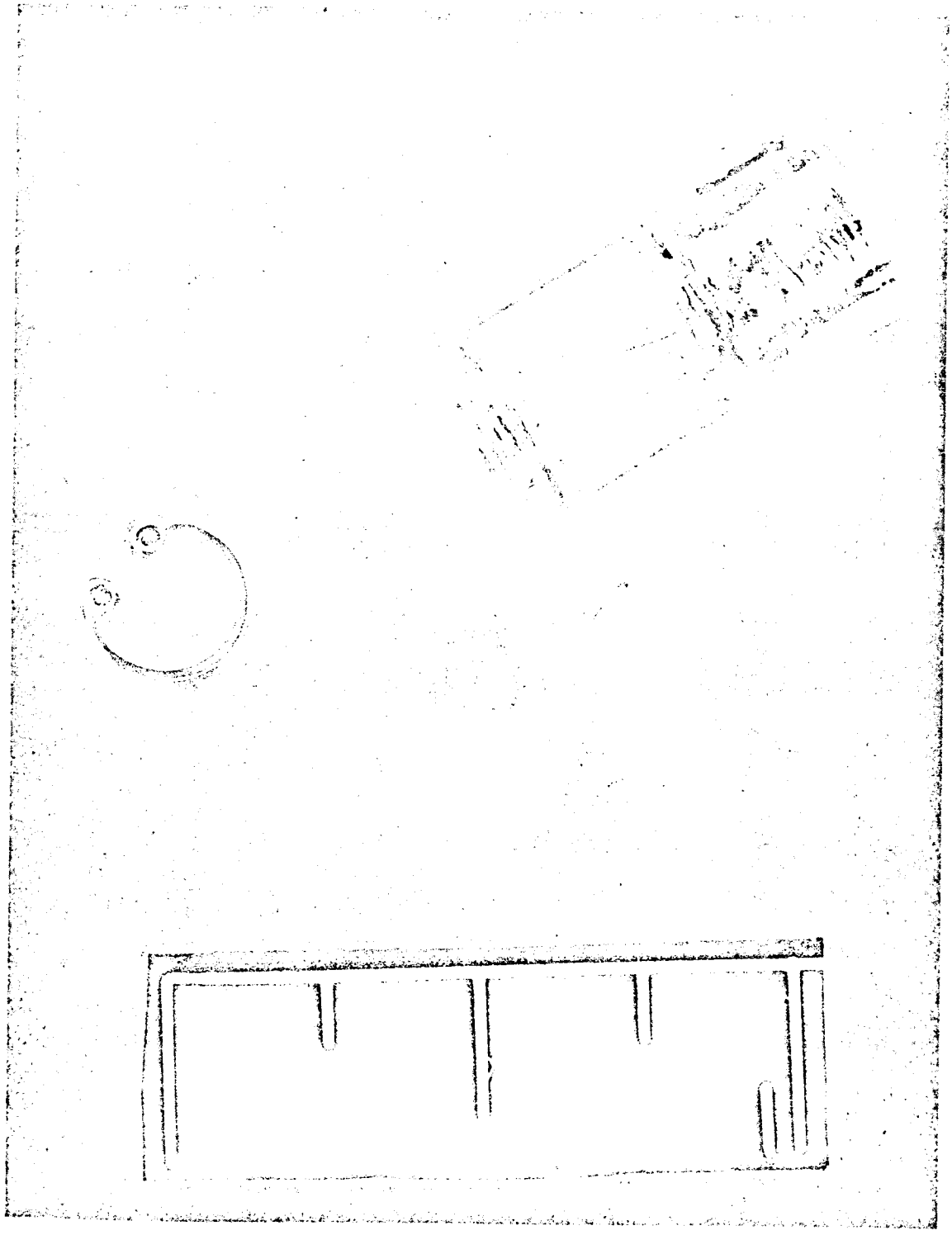

1HD65-3/24/65-C1

Oxidizer Inlet Orifice and Filter

Operation and Failure Report
ROCKETDYNE

X FAILURE ☐ OPERATION

PART CHANGE: X FAILED ITEM ☐ TIME EXPIRED ☐ T.O. DIRECTED

PROGRAM: SE7 DAT | LOCATION: CANO | № 13361R

PART IDENTIFICATION

1 PART NO. 557305	2 PART NAME PACKAGE "B"		
3 SERIAL NO. 4053265	4 MFG. NAME ROCKETDYNE	5 MFR. CODE 03002	6 REF. DESIG.
7 NEXT ASSY PART NO. NONE	8 NEXT ASSY SERIAL NONE	9 NEXT ASSY NAME NONE	
10 MISSILE SERIAL NO.	11 ENG/AGE MODEL NO. SE-7	14 SYSTEM CODE	
12 REJ. TAG NO.	13 ENG/AGE SERIAL NO.	15 COMPONENT CODE	
		16 HARDWARE CODE	

PART DISPOSITION

35
- 1 ☐ REPAIRED IN PLACE
- 2 ☐ REPAIRED & RE-INSTALLED
- 3 ☐ ADJUSTED
- 4 ☐ ELIMINATED
- 5 ☐ CONDEMNED
- 6 ☐ HOLD FOR REPAIR
- 7 ☐ DEPOT REPAIR
- 8 ☐ FAILURE ANALYSIS
- 9 X USED AS IS

PART REPLACEMENT

36
- 1 ☐ IDENTICAL ITEM
- 2 ☐ SUBSTITUTE PART
- 3 X NONE
- 4 ☐ NONE AVAILABLE

37 REPLACEMENT PART NO.

38 REPLACEMENT SERIAL NO.

39 FAILED PART SENT TO:

40 | 41

FAILURE/OPERATION DATA

17 FAILURE DATE YR 4 MO 8 DAY 16	18 TEST/OPER. DATE YR. MO. DAY	19 TEST/OPER. NO.	20 ITEMS 1
21 PROCEDURE—SPEC. & PARAGRAPH 106156-401 PARA 7.1.5.5.2			
22	25 FAIL. TYPE	26 FAIL. CODE	27 SECONDS	28 STARTS
23 SV	29 MONTHS	30 INITIAL REPORT NO.	31
24 NC			

32 OPERATION REPORTED OR IN PROGRESS
- A ☐ COMP/ASSY TEST
- B ☐ FINAL ENG. ASSY.
- C ☐ ELEC.-MECH. CHECK
- D ☐ ACCEPT/R&D TEST
- E ☐ STORAGE
- F ☐ SHIPPING
- G ☐ RECEIVING INSP.
- H ☐ MAINTENANCE
- I X LEAK & FUNCTION
- J ☐ SIM. LAUNCH
- K ☐ MISSILE ACCEPT.
- L ☐ STAT. MISS. TEST
- M ☐ PROPEL. LOADING
- N ☐ PERIODIC INSP.

33

34 TIME PERIOD (ACCEPT/R&D/STATIC TEST ONLY)
- 1 ☐ PRE-TEST
- 2 ☐ TEST
- 3 ☐ POST-TEST

REPORTED BY

42 NAME T. KNIFFIN	43 GROUP 388	44 SUPPLEMENT SHEET 1 ☐ YES 2 X NO
45 APPROVED BY R Eide	46 ACTIVITY A-9	47 STAND/AREA

ANALYSIS ASSIGNED TO

48 NAME R. EIDE	49 GROUP 388	50 CODE AR	51 PART REQ. X YES ☐ NO
DATE REPORT RECEIVED	52 YR. MO. DAY	DATE REPORT DISTRIBUTED	53 YR. MO. DAY
IBM USE ONLY	54 TEST/OPER. NO.	55 1 / 56 2	57 NTH CODE	58 TAPE CODE

DESCRIPTION OF FAILURE

WHEN? WHERE? HOW MUCH? CAUSE? EFFECT? COMMENTS?

FAR DUE RELIABILITY 27 AUG 64

⊙ EXCESSIVE LEAKAGE ØF BØTH ØXIDIZER CHECK VALVES DURING REVERSE SEAT LEAKAGE TEST. LEAKAGE WAS 1.0 SCC IN FIFTEEN MINUTES FØR THE DØWNSTREAM CHECK VALVE AND 7.2 SCC IN FIFTEEN MINUTES FØR THE UPSTREAM CHECK VALV. MAXIMUM ALLØWABLE IS 2.0 SCC IN FIFTEEN MINUTES.

71 TEST OPER. NO. 13361R

78 A | B | C | D | E | F

36 REF. OFR | 42 REF. OFR | 48 REF. OFR | 54 FAILED DETAIL PART NO. NA5-28071

RELIABILITY ANALYSIS USE ONLY

1 IDENTIFICATION	TEST TYPE	10 GROUP RESP. CODE	16 PA. CODE	EF	AP	CF	FC	24 LEAK	CONTAM.	30 PROP. SYSTEM	31
36 NTH	COMP	40 ASSY	RS-2	CD	46					65 DELETE	70
1 REPLACEMENT PART NO.			18 REPLACEMENT S/N		22 NAME		25 TYPE		31 MFR.		35
LATION PART NO.			50 CONFIG. CODE		57 NAME		60 GR. RESP.		CH	CL	M	R

78 G

96

R-15075-1

ROCKETDYNE
A DIVISION OF NORTH AMERICAN AVIATION, INC.

FAILURE ANALYSIS REPORT

• ANALYST FILL OUT COVER SHEET ONLY

OFR IDENTIFICATION

OFR NO.	OFR BY (NAME)	DEPT. & GROUP	LOCATION	FAILURE DATE
13361R	T. Kniffin	896-388	Canoga	64-8-16

PART IDENTIFICATION

PART NO.	SERIAL NO.	PART NAME	MFR. NAME
557305	4053265	Package B	Rocketdyne
ENG/AGE MODEL NO.	ENG/AGE SERIAL NO.	TEST/OPERATION NO.	
SE-7 DAT			

ANALYSIS BY

NAME	DEPT. & GROUP	ANALYSIS DATE	APPROVAL	DSN DATE
A. Donnelly Q.F.D.	896-335		2-26	

RECEIVED 1 MAR 1965 RELIABILITY

FAILURE ANALYSIS

IF ANALYSIS APPLIES TO MORE THAN ONE OFR, INSERT ALL APPLICABLE OFR NUMBERS IN THIS SPACE:

1. HISTORY 2. ANALYSIS 3. CONCLUSIONS 4. CORRECTIVE ACTION
• STATE ITEM NUMBER AND DESCRIBE • USE EXTRA SHEETS IF NECESSARY
• BE SPECIFIC IN CORRECTIVE ACTION STATEMENT AND STATE EFFECTIVITY DATE AND/OR ENGINE SERIAL NUMBER WHERE APPLICABLE

Following the occurrence of failure, testing continued at the request and concurrence of MAC, thereby destroying the evidence and cause of failure. No analysis of the failure is possible and, therefore, no further analytical effort will be forthcoming.

The following history and comments are included for your information:

History

-The subject package was built prior to burr control and was installed in an SE-7 system for DAT systems test. The failure occurred during the initial functional following the Acceptance Test and was reported as follows:

OFR 13361 - "Excessive leakage of both oxidizer check valves during reverse seat leakage test. Leakage was 10 SCC in fifteen minutes for the downstream check valve and 7.2 SCC in fifteen minutes for the upstream check valve. Maximum allowable is 2.0 SCC in fifteen minutes."

Following the failure the package was kept in test per MAC request. It is still in test as of the date of this FAR. Since the failure, the package has completed the following tests:

Systems Vibration Test - Performed in Texas
Functional Test - Santa Susana
Mission Duty Cycle @ 160° F - Santa Susana
Hot Fire at Ambient Temp. & Pressure - Santa Susana

FAILURE ANALYSIS ACCEPTED

W. Pasher	3/2/65
X Beck	3/2
[illegible]	3/2/65

RELIABILITY DEPT. 261
McDONNELL AIRCRAFT CORP.

OFR NO. 13361R

Operation and Failure Report
ROCKETDYNE

☒ FAILURE ☐ OPERATION

PART CHANGE: ☒ FAILED ITEM ☐ TIME EXPIRED ☐ T.O. DIRECTED

SE7

№ 15762R

PART IDENTIFICATION

1 PART NO. 206160-21	2 PART NAME Thrust Chamber
3 SERIAL NO. 4057179	4 MFG. NAME Rocketdyne; 5 MFR. CODE; 6 REF. DESIG.
7 NEXT ASSY PART NO. 99-106156	8 NEXT ASSY SERIAL SE7 DAT; 9 NEXT ASSY NAME SE7 Engine System
10 MISSILE SERIAL NO.	11 ENG/AGE MODEL NO.; 14 SYSTEM CODE
12 REJ. TAG NO.	13 ENG/AGE SERIAL NO.; 15 COMPONENT CODE; 16 HARDWARE CODE

PART DISPOSITION

35
- 1 ☐ REPAIRED IN PLACE
- 2 ☐ REPAIRED & RE-INSTALLED
- 3 ☐ ADJUSTED
- 4 ☐ ELIMINATED
- 5 ☐ CONDEMNED
- 6 ☐ HOLD FOR REPAIR
- 7 ☐ DEPOT REPAIR
- 8 ☒ FAILURE ANALYSIS
- 9 ☐ USED AS IS

PART REPLACEMENT

36
- 1 ☐ IDENTICAL ITEM
- 2 ☐ SUBSTITUTE PART
- 3 ☐ NONE
- 4 ☐ NONE AVAILABLE

37 REPLACEMENT PART NO.

38 REPLACEMENT SERIAL NO.

39 FAILED PART SENT TO:

40 D-IV

41

FAILURE/OPERATION DATA

17 FAILURE DATE (YR MO DAY)	18 TEST OPER. DATE (YR MO DAY)	19 TEST OPER. NO.	20 ITEMS
64 12 1	64 12 1	106156-401	1

21 PROCEDURE—SPEC. & PARAGRAPH: 106156-401 Para. 7.4.4

22 FS; 23 SV; 24 NC; 25 FAIL. TYPE; 26 FAIL. CODE; 27 SECONDS; 28 STARTS; 29 MONTHS; 30 INITIAL REPORT NO; 31

32 OPERATION REPORTED OR IN PROGRESS

- A ☐ COMP. ASSY TEST
- B ☐ FINAL ENG. ASSY.
- C ☐ ELEC.-MECH. CHECK
- D ☐ ACCEPT/R&D TEST
- E ☐ STORAGE
- F ☐ SHIPPING
- G ☐ RECEIVING INSP.
- H ☐ MAINTENANCE
- I ☒ LEAK & FUNCTION
- J ☐ SIM. LAUNCH
- K ☐ MISSILE ACCEPT.
- L ☐ STAT. MISS. TEST
- M ☐ PROPEL. LOADING
- N ☐ PERIODIC INSP.

33

34 TIME PERIOD (ACCEPT./R&D/STATIC TEST ONLY)
- 1 ☐ PRE-TEST
- 2 ☐ TEST
- 3 ☐ POST-TEST

REPORTED BY

42 NAME	43 GROUP	44 SUPPLEMENT SHEET
T. Kniffin	896-398	1 ☐ YES 2 ☒ NO
45 APPROVED BY: R. Dinius	46 ACTIVITY: VN #2	47 STAND/AREA: 591-146

ANALYSIS ASSIGNED TO

48 NAME	49 GROUP	50 CODE	51 PART REQ.
R. EIDE		AR	☐ YES ☐ NO

DATE REPORT RECEIVED (YR MO DAY)	DATE REPORT DISTRIBUTED (YR MO DAY)
52	53

USE ONLY: 54 TEST OPER. NO.; 55 1/56 2; 57 NTH CODE; 58 TAPE CODE

DESCRIPTION OF FAILURE

WHEN? WHERE? HOW MUCH? CAUSE? EFFECT? COMMENTS?

DUE RELIABILITY D/896-394 12-14-64

⊙ LEAKAGE WAS NOTED AT THE WELD JOINT BETWEEN FUEL PROPELLANT VALVE AND THE UPSTREAM TUBE STUB AND AT THE ORIFICE HOLDER.

71 TEST OPER. NO. 15762R

A / B / C / D / E / F / G

36 REF. OFR; 42 REF. OFR; 48 REF. OFR; 54 FAILED DETAIL PART NO. 407560

RELIABILITY ANALYSIS USE ONLY

1 IDENTIFICATION; TEST TYPE; 10 GROUP RESP. CODE; 16 PA. CODE; EF; AP; CF; FC; 24 LEAK; CONTAM.; 30 PROP. SYSTEM; 35; 36 NTH; COMP; 40 ASSY; RS-2; CD; 46; 65 DELETE; 70; 78 G

41 REPLACEMENT PART NO.; 18 REPLACEMENT S/N; 22 NAME; 25 TYPE; 31 MFR.; 35

INSTALLATION PART NO.; 50 CONFIG. CODE; 57 NAME; 60 GR. RESP.; CH; CL; M; R

OFR No. 15762R

R-15075-1

D. LEONIRD 896-394

4 Dec. 1964

ROCKETDYNE
A DIVISION OF NORTH AMERICAN AVIATION, INC.

FAILURE ANALYSIS REPORT

• ANALYST FILL OUT COVER SHEET ONLY

OFR IDENTIFICATION

OFR NO.	OFR BY (NAME)	DEPT. & GROUP	LOCATION	FAILURE DATE
15762R	T. Kniffin	896-388	Van Nuys I	12/1/64

PART IDENTIFICATION

PART NO.	SERIAL NO.	PART NAME	MFR. NAME
208160-21	4057179	TCA	SCBD
ENG/AGE MODEL NO.	ENG/AGE SERIAL NO.	TEST/OPERATION NO.	
SE-7			

ANALYSIS BY

NAME	DEPT. & GROUP	ANALYSIS DATE	APPROVAL	DSN DATE
J. Fong	896-394	2/25/65		

FAILURE ANALYSIS

IF ANALYSIS APPLIES TO MORE THAN ONE OFR, INSERT ALL APPLICABLE OFR NUMBERS IN THIS SPACE:

1. HISTORY 2. ANALYSIS 3. CONCLUSIONS 4. CORRECTIVE ACTION
• STATE ITEM NUMBER AND DESCRIBE • USE EXTRA SHEETS IF NECESSARY
• BE SPECIFIC IN CORRECTIVE ACTION STATEMENT AND STATE EFFECTIVITY DATE AND/OR ENGINE SERIAL NUMBER WHERE APPLICABLE.

1. History

During the gross external leakage test procedure per 106156-401, paragraph 7.4.4, the TCA propellant (fuel) valve showed leakage, as revealed by the mass spectrometer, at the inlet tube assembly weld joints. One of the weld joints is between the inlet tube stub (P/N 407571) and the orifice housing (P/N 407573) and the other weld joint is between the "U" shape valve inlet tube (P/N 407570-3) and the bobbin assembly (P/N 407668). After examining the AOR Book and the TCA, the (fuel) valve assembly P/N is 408580 instead of 407560 as indicated by the OFR.

2. Analysis

In order to locate the leakage and to pin point the weld cracks or porosities for the analysis, the following inspection and test methods were used:

1) Dye penetrant inspection of all weld joints between the inlet tube stud and the "U" shape tube at the valve (both fuel and oxid). The surface penetrant inspection was good with no surface weld cracks as indicated. However, under the microscope, it did show a tear-out (cavity, depth about .010 inch) next to a groove about half ($\frac{1}{2}$) inch from the end of the fuel inlet tube stub (P/N 407571).

2) Proof pressure and leakage test per RA0220-350, paragraph 4.5 (pressure tested at 392±10 psig and at 500±10 psig). There was no visual leakage under the test.

3) Mass spectrometer test per RA0220-350, paragraph 4.17.5 thru 4.17.9 (with He at 500 psig). The leakage rate indicated by the spectrometer at one point is less then 10^{-6} SCC per second, which is within the specification. This leakage is located between the "U" shape tube and the valve body weld joint, at a view looking down normal to the valve.

OFR NO. 15762R

R-15075-1

FORM 609 P-3 REV. 3-62

REF: OFR 15762R

2. Analysis (cont'd)

3) (continued)

But this leakage is questionable, because of a minute leakage that was revealed at the helium inlet tube adapter that connected the valve inlet tube stub. Surely, this leakage was definitely caused by the roughness of the (fuel) inlet tube stub due to the previous brazing.

4) X-ray results did not show any sub-surface weld cracks as expected.

3. Conclusions

As the results of the above inspection and tests, there were no indications of weld cracks or leakage that is not within the specification. Therefore, this TCA has met the design requirements. It is believed that this leakage discrepancy is caused by the poor connection at the (fuel) inlet tube stub, primarily due to the brazing. It must be assumed that leakage at this "external connection" was initially interpreted to be leakage in the REA weld connections.

4. Corrective Action

No corrective action is required.

Item 31 52-52701

FAILURE ANALYSIS ACCEPTED

W. Gaskard	3/1/65
F. Zeek	3/1
[illegible]	3/1/65

RELIABILITY DEPT. 261
McDONNELL AIRCRAFT CORP.

APPENDIX C

APPENDIX C

MODULE/COMPONENT LOG BOOK AND ACCEPTANCE TEST DATA

This page intentionally left blank.

MODULE/COMPONENT LOG BOOK IDENTIFICATION

MANUFACTURER	ROCKETDYNE, A DIVISION OF NORTH AMERICAN AVIATION, INC.
MC DONNELL SCD NUMBER	52-52700-151 ROCKETDYNE PART NUMBER 556870
NOMENCLATURE	COMPONENT ASSEMBLY, "A" PACKAGE (DAT UNIT #6)
CONTRACT NUMBER	Y20161R
WEIGHT	2.31 LBS.
DRAWING CHANGE LETTER	DNA
DATE	9 APRIL 1964

"Certification is hereby given that the Module/Component covered by this Log Book was manufactured, inspected and tested in accordance with subject drawings, specifications and Quality Assurance provisions except as recorded herein."

ROCKETDYNE QUALITY ASSURANCE	MC DONNELL QUALITY REPRESENTATIVE	U.S. AIR FORCE QUALITY REPRESENTATIVE
W. Lehrmann	John J. Sunder	Wm C. Moore

PART NO. 556870

SERIAL NO. 4035340

FOREWORD

MODULE/COMPONENT LOG BOOK

THIS BOOK CONTAINS INFORMATION PERTINENT TO THE MODULE/COMPONENT AS SPECIFIED HEREIN BY SERIAL NUMBER AND MODEL NUMBER. IT IS NECESSARY THAT ALL ENTRIES BE WRITTEN IN INK OR TYPED FOR PERMANENT RECORD. ENTRIES SUCH AS CUSTODY, PRESERVATION, SERIALIZATION, APPLICABLE ENGINEERING CHANGE PROPOSALS, ACCEPTANCE RUN DATA, CALIBRATION AND WEIGHT DATA WILL BE ENTERED AND/OR INCLUDED BY ROCKETDYNE AT TIME OF DELIVERY. ENTRIES SUCH AS REWORK, KIT INSTALLATION, REMOVALS, VEHICLE MATING, ADDITIONAL STATIC FIRING TIME AND CUSTODY WILL BE MADE BY THE CUSTOMER.

IF FOR ANY REASON THIS MODULE/COMPONENT IS RETURNED TO ROCKETDYNE FOR MODIFICATION AND/OR REPAIRS, THIS LOG BOOK MUST ACCOMPANY THE MODULE/COMPONENT. MODIFICATION ENTRIES WILL BE ENTERED BY ROCKETDYNE AND CUSTODY RECORDS WILL BE MAINTAINED.

THE PAGES IN THIS LOG BOOK SHALL NOT BE REVISED WITHOUT OBTAINING APPROVAL OF THE ROCKETDYNE PROGRAM OFFICE, ROCKETDYNE QUALITY CONTROL, AND THE CUSTOMER REPRESENTATIVE.

THIS LOG BOOK IS APPROVED FOR USE ON:

PART NUMBER 556870 PART NAME COMPONENT ASSEMBLY, PACKAGE "A"

DATE	PROGRAM OFFICE	QUALITY ASSURANCE	PURCHASER
13 NOV 1963	W. E. McCrivey	R. B. Smith	John S. Stride

GENERAL INFORMATION

THIS LOG BOOK IS PROVIDED FOR SERVICE USE IN RECORDING PERTINENT HISTORICAL DATA AND ALL CHANGES FROM THE ORIGINAL CONFIGURATION. IT SHALL ACCOMPANY THE MODULE/COMPONENT WHEN TRANSFERRED BETWEEN ROCKETDYNE AND USING AGENCIES. THIS LOG BOOK SHALL BE KEPT WITH THE VEHICLE RECORDS WHEN THE MODULE/COMPONENT IS INSTALLED IN A VEHICLE.

SECTION I - MODULE/COMPONENT ASSEMBLY LOG

RECORDS CONTAINED IN THIS SECTION ARE PERTINENT TO THE MODULE/COMPONENT ACCEPTANCE AND ALSO INCLUDES MODEL CONFIGURATION DATA, PERTINENT DETAILS OF SHORT SHIPMENTS, COMPONENT DEVIATIONS, AGE SENSITIVE PARTS RECORD AND WEIGHT RECORD.

SECTION II - ACCEPTANCE TEST LOG

RECORDS OF ASSEMBLY ACCEPTANCE TESTS ARE PRESENTED IN THIS SECTION WITH PERFORMANCE DATA AND SUMMARY DATA ON INSPECTIONS AND ACCEPTANCE.

SECTION I

MODULE/COMPONENT ASSEMBLY LOG

MODULE COMPONENT SERIALIZATION LOG

MODEL NO.	CONTRACT NUMBER	McDONNELL SCD NUMBER
SL-6	Y20161R	52-52700-151

PART NUMBER	COMPONENT	SERIAL NO.	PLAN NO.	LOT NO.	LTR CHG	DATE	INSP	REMARKS
556870	COMP FIG "A"	4055340	NONE	DNA	DNA	9 APR 64	ANR 721	
MA5-27289T2-1	TRANSDUCER	1099	A28433-3	"	DNA	"	ANR 721	
MA5-28069T4-1	ISOL. VALVE	016	A13024-10	"	DNA	"	ANR 721	
MA5-28074T3-1	FILTER	113	A21515-1	"	DNA	"	ANR 721	SE[illegible] PLACEMENT LOG
MA5-28074T3-1	FILTER	178	A38216-2	"	DNA	"	ANR 721	
555899	BODY	NONE	A26065-11	"	DNA	"	ANR 721	
555900	BODY	NONE	A26075-2	"	DNA	"	ANR 721	
556390	STEM, ASSY OF	NONE	A12449-39	"	DNA	"	ANR 721	
556390	STEM, ASSY OF	NONE	A12449-27	"	DNA	"	ANR 721	
556723	HOUSING	NONE	A25809-23	"	DNA	"	ANR 721	
556723	HOUSING	NONE	A25809-12	"	DNA	"	ANR 721	

MODULE COMPONENT REPLACEMENT LOG

MODEL NO.	CONTRACT NUMBER	McDONNELL SCD NUMBER
SE-6	Y20161R	52-52700-151

PART NUMBER	COMPONENT	SERIAL NO.	PLAN NO.	LOT NO.	LTR CHG	DATE	INSP	REMARKS
556870	COMP PKG "A"	4055340	NONE	DNA	DNA	9 APR 64	ANR 721	IDENT. ENTRY ONLY
NA5-28074T3-1	FILTER	177	A38216-1	"	DNA	"	ANR 721	FAILED EXTERNAL LEAKAGE TEST

FORM REVISION DATE NEW 15 APRIL 1963

MCR VERIFICATION

PART NUMBER	MODEL NO.	CONTRACT NUMBER	SERIAL NUMBER	Mc DONNELL SCD NUMBER
556870	SE-6	Y20161R	4055340	52-52700-151

MCR/MRP NO.	DATE	TITLE	DATE	INSP.
SE6-10	11JAN63	ACCURACY REQUIREMENTS FOR PRESSURE TRANSDUCERS; REVISION TO	9APR64	ANR 721
SE6-62	6JAN64	COMPONENT CLEANING; PROVISION FOR	9APR64	ANR 721
SE6-101	28DEC63	COMPONENT PACKAGE "A" ACCEPTANCE TEST PROCEDURE; REVISION TO	9APR64	ANR 721

(19103)

MODULE/COMPONENT VARIATION LOG

DATE 9APR64

MODEL NO.	CONTRACT NO.	McDONNELL SCD NUMBER
SE-6	Y20161R	52-52700-151

PART NUMBER	PART NAME	SERIAL NUMBER	TYPE OF DISPOSITION
556870	COMPONENT ASSEMBLY, "A" PACKAGE	4055340	23H #R 15375

VARIATION: A PACKAGE FAILED EXTERNAL LEAKAGE TEST PER RA0220-210 AMEND #3. LEAKAGE WAS 3.15×10^{-5}. MAX ALLOWABLE IS 10^{-6}. PACKAGE SUBMERGED IN WATER, PIN HOLE LOCATED ON NA5-28074T3 FILTER FITTING NECK APPROX. 3:00 O'CLOCK, REF. AS MARKED. REF. PORT #1

ACTION TAKEN: REWORKED PER 23H #R 15375.

INSP. AHR 143

PART NUMBER	PART NAME	SERIAL NUMBER	TYPE OF DISPOSITION

VARIATION:

ACTION TAKEN:

INSP

PART NUMBER	PART NAME	SERIAL NUMBER	TYPE OF DISPOSITION

VARIATION:

ACTION TAKEN:

INSP

FORM REVISION DATE NEW 8 MAY 1963

110

R-15075-1

SECTION II

ACCEPTANCE TEST LOG

COMPONENT ACCEPTANCE TEST LOG

MODEL NUMBER	CONTRACT NUMBER	McDONNELL SCD NUMBER
SE-6	Y20161R	52-52700-151

PART NUMBER	PART NAME	SERIAL NUMBER	SPECIFICATION NUMBER	REVISION
556870	PACKAGE "A"	4055340	RA0220-210 AMEND #3	A

FUNCTIONAL TEST

	PARA.	LIMITS	ACTUAL RESULTS
TORQUE TEST			
OPEN VALVE 1A	4.2.2.1	80 IN/LBS., MAX.	33
OPEN VALVE 2A	4.2.2.1	80 IN/LBS., MAX.	36
MANUAL VALVE TEST			
VALVE STEM SEAL LEAKAGE	4.2.2.2		
PORT 1A		15 SCC/10 MIN., MAX.	NONE DET.
PORT 2A		15 SCC/10 MIN., MAX.	NONE DET.
SEAT LEAKAGE	4.2.2.3		
PORT 1		7.5 SCC/30 MIN., MAX.	NONE DET.
PORT 2		7.5 SCC/30 MIN., MAX.	NONE DET.
PRESSURE TRANSDUCER TEST			
DIELECTRIC STRENGTH	4.2.3.1		
PIN "D" AND PIN "A"		1 MILLIAMPERES/MIN., MAX.	13
PIN "D" AND PIN "H"		1 MILLIAMPERES/MIN., MAX.	12
PIN "H" AND PIN "A"		1 MILLIAMPERES/MIN., MAX.	8
TRANSDUCER IMPEDANCE	4.2.3.2		
PIN "A" TO PIN "C"		3000 ± 300 OHMS	3150
PIN "H" TO PIN "F"		3000 ± 300 OHMS	3000

INSP _____

ANK 721

COMPONENT ACCEPTANCE TEST LOG

MODEL NUMBER	CONTRACT NUMBER	McDONNELL SCD NUMBER
SE-6	Y20161R	52-52700-151

PART NUMBER	PART NAME	SERIAL NUMBER	SPECIFICATION NUMBER	REVISION
556870	COMPONENT PACKAGE "A", ASSY OF	4055340	RA0220-210 AMEND. 3	A

VOLTAGE RATIO VS PRESSURE CALIBRATION
Paragraph 4.2.3.3.

Pressure PSIA	Voltage Ratio, Both Outputs			Output Voltage Ratio	
PSIA	MIN	NOM	MAX	ABC Pot	HGF Pot
50	.000	.0100	.0225	.0019	.0020
1000	.1750	.2000	.2125	.1900	.1915
2000	.3750	.4000	.4125	.3885	.3894
3000	.5750	.6000	.6125	.5872	.5894
4000	.7750	.8000	.8125	.7865	.7880
4500	.8750	.9000	.9125	.8906	.8903
4000	.7750	.8000	.8125	.7957	.7954
3000	.5750	.6000	.6125	.5999	.5980
2000	.3750	.4000	.4125	.4000	.4010
1000	.1750	.2000	.2125	.1990	.1989
50	.000	.0100	.0225	.0040	.0025
50	.000	.0100	.0225	.0019	.0020
4000	.7750	.8000	.8125	.7880	.7880
3500	.6875	.7000	.7125	.6940	.6959
3000	.5875	.6000	.6125	.5980	.5988
2500	.4875	.5000	.5125	.4962	.4970
2000	.3875	.4000	.4125	.4000	.4000
1500	.2875	.3000	.3125	.2983	.2990
1000	.1875	.2000	.2125	.1990	.1989
500	.0875	.1000	.1125	.0970	.0970
50	.000	.0100	.0225	.0065	.0070

INSP _____

COMPONENT ACCEPTANCE TEST LOG

MODEL NUMBER	CONTRACT NUMBER	McDONNELL SCD NUMBER
SE-6	Y20161R	52-52700-151

PART NUMBER	PART NAME	SERIAL NUMBER	SPECIFICATION NUMBER	REVISION
556870	PACKAGE "A"	4055340	RA0220-210 AMEND #3	A

FUNCTIONAL TEST

EXTERNAL LEAKAGE	PARA.	LIMITS	ACTUAL RESULTS
PACKAGE LEAKAGE	4.2.4.1	10^{-6} SCC/SEC., MAX.	4.24×10^{-8}
NC CARTRIDGE VALVE LEAKAGE	4.2.4.2	10^{-6} SCC/SEC., MAX.	1.07×10^{-8}
RESISTOFLEX CAP LEAKAGE	4.2.4.3		
PORT 1		7.5 SCC/30 MIN., MAX.	NONE DET.
PORT 1A		7.5 SCC/30 MIN., MAX.	NONE DET.
PORT 2		7.5 SCC/30 MIN., MAX.	NONE DET.
PORT 2A		7.5 SCC/30 MIN., MAX.	NONE DET.

INSP

COMPONENT ACCEPTANCE TEST LOG

MODEL NUMBER	CONTRACT NUMBER	McDONNELL SCD NUMBER
SE-6	Y20161R	52-52700-151

PART NUMBER	PART NAME	SERIAL NUMBER	SPECIFICATION NUMBER	REVISION
556870	PACKAGE "A"	4055340	RA0615-003	B

CLASS 4, SOLID PARTICLE CONTAMINATION LEVEL

MICRON RANGE	LIMITS	ACTUAL COUNT INLET	ACTUAL COUNT OUTLET
5 - 10	*	46	68
10 - 25	100	23	40
25 - 50	20	18	16
50 - 100	5	1	1
100 - 300	1	0	1
> - 300	0	0	0
FIBERS 300 - 3000	0	0	0
FIBERS > - 3000	0	0	0

*NOTE: To be counted but not restricted to number.

INSP _____

MODULE/COMPONENT LOG BOOK IDENTIFICATION

MANUFACTURER	ROCKETDYNE, A DIVISION OF NORTH AMERICAN AVIATION, INC.
MC DONNELL SCD NUMBER	52-52700-203 ROCKETDYNE PART NUMBER 557305
NOMENCLATURE	COMPONENT PACKAGE "B" ASSEMBLY OF (DAT UNIT #1)
CONTRACT NUMBER	X20161R
WEIGHT	5.56 LBS
DRAWING CHANGE LETTER	DNA
DATE	12 JUNE 1964

"Certification is hereby given that the Module/Component covered by this Log Book was manufactured, inspected and tested in accordance with subject drawings, specifications and Quality Assurance provisions except as recorded here-in."

ROCKETDYNE QUALITY ASSURANCE	MC DONNELL QUALITY REPRESENTATIVE	GOV'T INSPECTION AGENCY QUALITY REPRESENTATIVE
S. H. [illegible] 6/12/64	J. E. [illegible] 6/15/64	Nicholas J. Felice 15 JUN 64

PART NO. 557305

SERIAL NO. 4053265

FOREWORD

MODULE/COMPONENT LOG BOOK

THIS BOOK CONTAINS INFORMATION PERTINENT TO THE MODULE/COMPONENT AS SPECIFIED HEREIN BY SERIAL NUMBER AND MODEL NUMBER. IT IS NECESSARY THAT ALL ENTRIES BE WRITTEN IN INK OR TYPED FOR PERMANENT RECORD. ENTRIES SUCH AS CUSTODY, PRESERVATION, SERIALIZATION, APPLICABLE ENGINEERING CHANGE PROPOSALS, ACCEPTANCE RUN DATA, CALIBRATION AND WEIGHT DATA WILL BE ENTERED AND/OR INCLUDED BY ROCKETDYNE AT TIME OF DELIVERY. ENTRIES SUCH AS REWORK, KIT INSTALLATION, REMOVALS, VEHICLE MATING, ADDITIONAL STATIC FIRING TIME AND CUSTODY WILL BE MADE BY THE CUSTOMER.

IF FOR ANY REASON THIS MODULE/COMPONENT IS RETURNED TO ROCKETDYNE FOR MODIFICATION AND/OR REPAIRS, THIS LOG BOOK MUST ACCOMPANY THE MODULE/COMPONENT. MODIFICATION ENTRIES WILL BE ENTERED BY ROCKETDYNE AND CUSTODY RECORDS WILL BE MAINTAINED.

THE PAGES IN THIS LOG BOOK SHALL NOT BE REVISED WITHOUT OBTAINING APPROVAL OF THE ROCKETDYNE PROGRAM OFFICE, ROCKETDYNE QUALITY CONTROL, AND THE CUSTOMER REPRESENTATIVE.

THIS LOG BOOK IS APPROVED FOR USE ON:

PART NUMBER 557305 PART NAME COMPONENT ASSEMBLY, PACKAGE "B"

DATE	PROGRAM OFFICE	QUALITY ASSURANCE	PURCHASER
13 NOV 1963	W. E. McGrew	R. B. Smith	John S. Snider

GENERAL INFORMATION

THIS LOG BOOK IS PROVIDED FOR SERVICE USE IN RECORDING PERTINENT HISTORICAL DATA AND ALL CHANGES FROM THE ORIGINAL CONFIGURATION. IT SHALL ACCOMPANY THE MODULE/COMPONENT WHEN TRANSFERRED BETWEEN ROCKETDYNE AND USING AGENCIES. THIS LOG BOOK SHALL BE KEPT WITH THE VEHICLE RECORDS WHEN THE MODULE/COMPONENT IS INSTALLED IN A VEHICLE.

SECTION I - MODULE/COMPONENT ASSEMBLY LOG

RECORDS CONTAINED IN THIS SECTION ARE PERTINENT TO THE MODULE/COMPONENT ACCEPTANCE AND ALSO INCLUDES MODEL CONFIGURATION DATA, PERTINENT DETAILS OF SHORT SHIPMENTS, COMPONENT DEVIATIONS, AGE SENSITIVE PARTS RECORD AND WEIGHT RECORD.

SECTION II - ACCEPTANCE TEST LOG

RESULTS OF ASSEMBLY ACCEPTANCE TESTS ARE PRESENTED IN THIS SECTION WITH PERFORMANCE DATA AND SUMMARY DATA ON INSPECTIONS AND ACCEPTANCE.

FORM REVISION DATE NEW 15 APRIL 1965

SECTION I

MODULE/COMPONENT ASSEMBLY LOG

MODULE COMPONENT SERIALIZATION LOG

MODEL NO.	CONTRACT NUMBER	McDONNELL SCD NUMBER
SR-6	Y20161R	52-52700-203

PART NUMBER	COMPONENT	SERIAL NO.	PLAN NO.	LOT NO.	LTR CHG	DATE	INSP	REMARKS
557305	COMP PKG "B"	4053265	NONE	DNA	DNA	12JUN64	ANR 721	
NA5-27289T2	PRESS TRANS.	10250	A28389-1	"	"	"	ANR 721	
NA5-28071T1-1	CHECK VALVE	261	A32276-5	"	"	"	ANR 721	
NA5-28071T1-1	CHECK VALVE	168	A52182-1-R2	"	"	"	ANR 721	
NA5-28071T1-1	CHECK VALVE	172	A52182-5-R2	"	"	"	ANR 721	
NA5-28072T2-1	RELIEF VALVE	112	A25696-6	"	"	"	ANR 721	
NA5-28072T2-1	RELIEF VALVE	186	A28470	"	"	"	ANR 721	REF. REPLACEMENT PAGE
NA5-28073T1-1	FILTER	153	A50027-1	"	"	"	ANR 721	
NA5-28074T4-1	FILTER,	117	51167-12R-1	"	"	"	ANR 721	
NA5-28074T4-1	FILTER	230	A27424-57	"	"	"	ANR 721	
NA5-28074T4-1	FILTER	110	A51167-5R1	"	"	"	ANR 721	
NA5-28074T4-1	FILTER	98	A53719-44	"	"	"	ANR 721	
NA5-28074T4-1	FILTER	215	A27424-42	"	"	"	ANR 721	
NA5-28074T4-1	FILTER	255	A27424-82	"	"	"	ANR 721	
NA5-28076T1-1	BURST DIA.	152	A10327-2	"	"	"	ANR 721	
NA5-28076T1-1	BURST DIA.	170	A10327-20	"	"	"	ANR 721	
406413	SEAT	109	A15825	"	"	"	ANR 721	
406413	SEAT	13	A15072	"	"	"	ANR 721	
555929	FITTING, ASSY OF	13	A55478-9	"	"	"	ANR 721	
555929	FITTING, ASSY OF	NONE	A25810-2	"	"	"	ANR 721	
555967	BODY, PKG. "B" COMP.	NONE	A28281-6	"	"	"	ANR 721	

MODULE COMPONENT REPLACEMENT LOG

MODEL NO.	CONTRACT NUMBER	McDONNELL SCD NUMBER
SE-6	Y20161R	52-52700-203

PART NUMBER	COMPONENT	SERIAL NO.	PLAN NO.	LOT NO.	LTR CHG	DATE	INSP	REMARKS
555927	CAP	NONE	NONE	DNA	DNA	12 JUN 64	AKR 721	RELIEF VALVE FAILURE
NA5-28072T2-1	RELIEF VALVE	125	A32268-7	DNA	DNA	12 JUN 64	AKR 721	EXCESSIVE LEAKAGE

FORM REVISION DATE NEW 15 APRIL 1963

MODULE COMPONENT REPLACEMENT LOG

MODEL NO.	CONTRACT NUMBER	McDONNELL SCD NUMBER
SE-6	Y20161R	52-52700-203

PART NUMBER	COMPONENT	SERIAL NO.	PLAN NO.	LOT NO.	LTR CHG	DATE	INSP	REMARKS
555927	CAP	NONE	NONE	DNA	DNA	12 JUN 64	ANR 721	RELIEF VALVE FAILURE
NA5-28072T2-1	RELIEF VALVE	125	A32268-7	DNA	DNA	12 JUN 64	ANR 721	EXCESSIVE LEAKAGE

FORM REVISION DATE NEW 15 APRIL 1963

R-15075-1

MODULE/COMPONENT VARIATION LOG

DATE 12 JUNE 6

MODEL NO.	CONTRACT NO.	McDONNELL SCD NUMBER
SE-6	Y20161R	52-52700-203

PART NUMBER	PART NAME	SERIAL NUMBER	TYPE OF DISPOSITION
557305	COMPONENT PACKAGE "B", ASSEMBLY OF	4053265	23H NO. R16346

VARIATION: THE NA5-27289T1-1 TRANSDUCER, S/N 10250, HAS A GOUGE OPPOSITE FUEL VENT TUBE .06 LONG X .006 DEPTH.

ACTION TAKEN: HAND BLENDED TO REMOVE SHARP EDGES. DYE PENT INSPECTION PERFORMED. REVEALS NO CRACKS. OK TO "USE AS IS". PER 23H NO. R16346

INS

PART NUMBER	PART NAME	SERIAL NUMBER	TYPE OF DISPOSITION

VARIATION:

ACTION TAKEN:

INS

PART NUMBER	PART NAME	SERIAL NUMBER	TYPE OF DISPOSITION

VARIATION:

ACTION TAKEN:

INS

123

FORM REVISION DATE NEW 8 MAY 1963

MCR VERIFICATION

PART NUMBER	MODEL NO.	CONTRACT NUMBER	SERIAL NUMBER	Mc DONNELL SCD NUMBER
557305	SE-6	Y20161R	4053265	52-52700-203

MCR/ECP NO.	DATE	TITLE	DATE	INSP.
SE6-10	11JAN63	ACCURACY REQUIREMENTS FOR PRESSURE TRANSDUCERS; REVISION TO	12JUN64	
SE6-18	8JAN63	TEST POINTS; PROVISIONS FOR PERMANENT IDENTIFICATION.	12JUN64	
SE6-34	28MAY63	COMPONENT SERVICING POINTS, SEALING SURFACES; CHANGES TO	12JUN64	
SE6-43	31MAY63	LUBRICANTS; REPLACEMENT OF	12JUN64	
SE6-44	31MAY63	MOUNTING HOLE SIZES, RCS COMPONENT PACKAGES; CHANGES TO	12JUN64	
SE6-59	31MAY63	RESISTOFLEX DYNATUBE CAPS; REIDENTIFICATION OF	12JUN64	
SE6-062	6JAN64	COMPONENT CLEANING; PROVISION FOR	12JUN64	
SE6-068	14APR64	RESISTOFLEX DYNATUBE FITTING INTERFACE; LUBRICATION OF	12JUN64	
SE6-078	14APR64	PACKAGE "B", RELIEF VALVE; INCORPORATION OF BELLOWS LIMIT STOP	12JUN64	
SE6-081	4SEP63	COMPONENT VIBRATION, D.A.T.; REVISION OF	12JUN64	
SE6-091	4SEP63	COMPONENT PACKAGE "B", D.A.T.; REVISION OF	12JUN64	
SE6-123	4SEP63	PACKAGE "B" BURST DIAPHRAGM LEAK CHECK; ADDITION OF	12JUN64	
SE6-130	7FEB64	"O" RING REQUIREMENTS, ELECTRICAL CONNECTORS	12JUN64	
SE6-134	15APR64	O'RING SEAL; REPLACEMENT OF	12JUN64	
SE6-143	15APR64	STATIC "O" RING SEALS, PACKAGE "B"; REPLACEMENT OF	12JUN64	
SE6-166	30JAN64	REDUNDANT SEAL PRESSURE CAP; REDESIGN OF	12JUN64	

(19103)

SECTION II

ACCEPTANCE TEST LOG

COMPONENT ACCEPTANCE TEST LOG

MODEL NUMBER	CONTRACT NUMBER	McDONNELL SCD NUMBER
SE-6	Y20161R	52-52700-203

PART NUMBER	PART NAME	SERIAL NUMBER	SPECIFICATION NUMBER	REVISION
557305	COMPONENT PACKAGE "B", ASSEMBLY OF (DAT UNIT #1)	4053265	RA0615-003 AMEND. 1	B

CLASS 4, SOLID PARTICLE CONTAMINATION LEVEL

MICRON RANGE	LIMITS	ACTUAL COUNT OXID	ACTUAL COUNT FUEL
5 - 10	*	32	21
10 - 25	100	11	18
25 - 50	20	2	2
50 - 100	5	0	0
100 - 300	1	0	0
> - 300	0	0	0
FIBERS 300 - 3000	0	0	0
FIBERS > - 3000	0	0	0

"NOT TO BE COUNTED BUT NO SLURRY OF FINE PARTICLES WHICH COVERS MORE THAN AN ESTIMATED 5 PERCENT OF THE TOTAL EFFECTIVE FILTER AREA SHALL BE ALLOWED." AT THE DISCRETION OF QUALITY ASSURANCE, A WEIGHT DETERMINATION OF TOTAL CONTAMINATION MAY BE MADE AS A REFEREE TEST IN BORDERLINE CASES. THE MAXIMUM ALLOWABLE WEIGHT OF CONTAMINANTS SHALL BE 0.001 GRAM (1 mg).

INSP T21

COMPONENT ACCEPTANCE TEST LOG

MODEL NUMBER	CONTRACT NUMBER	McDONNELL SCD NUMBER
SE-6	Y20161R	52-52700-203

PART NUMBER	PART NAME	SERIAL NUMBER	SPECIFICATION NUMBER	REVISION
557305	COMPONENT PACKAGE "B"	4053265	RA0220-211 AMEND. #2	G

FUNCTIONAL TESTING: PARA. 4.2

	PARA.	LIMITS	ACTUAL RESULTS
PROOF PRESSURE @ 500 PSIG	4.2.2		NONE DET. DAMAGE OR DISTORTION
BURST DIAPHRAGM LEAKAGE TEST	4.2.3	10^{-6} SCC/SEC MAX.	PORT 7 6.43×10^{-8} PORT 8 2.57×10^{-8}
MANUAL VALVE TESTS: PARA. 4.2.4			
SEAL LEAKAGE (PORT 4A)	4.2.4.1	16.7 SCC/10 MIN., MAX.	LESS THAN .1
SEAL LEAKAGE (PORT 6A)	4.2.4.1	16.7 SCC/10 MIN., MAX.	LESS THAN .1
SEAT LEAKAGE (PORT 4)	4.2.4.2	4.175 SCC/30 MIN., MAX.	LESS THAN .1
SEAT LEAKAGE (PORT 6)	4.2.4.2	4.175 SCC/30 MIN., MAX.	LESS THAN .1

CHECK VALVE TESTS: PARA. 4.2.5

	PARA.	LIMITS	FUEL	OXID #1	OXID #2
CRACKING PRESSURE (FLOWRATE) PARA. 4.2.5.1.1 - 4.2.5.2.1	4.2.5.3.1	500 SCIM, MIN.	1200	900	1160
RESEAT PRESSURE (LEAKAGE) PARA. 4.2.5.1.2 - 4.2.5.2.2	4.2.5.3.2	16.4 SCC/ MIN., MAX.	<.1	<.1	NONE DET.
REVERSE FLOW LEAKAGE PARA. 4.2.5.1.3 - 4.2.5.2.3	4.2.5.3.3				
@ 2 PSIG		2.0 SCC/15 MIN., MAX.	<.1	<.1	.05
@ 500 PSIG		2.0 SCC/15 MIN., MAX.	<.1	<.1	.25

TORQUE TEST: PARA. 4.2.6

TORQUE REQUIRED TO OPEN VALVE 4A	60 IN. LBS., MAX.	20
TORQUE REQUIRED TO OPEN VALVE 6A	60 IN. LBS., MAX.	25

INSP

R-15075-1

127

(04123)

COMPONENT ACCEPTANCE TEST LOG

MODEL NUMBER	CONTRACT NUMBER	McDONNELL SCD NUMBER
SE-6	Y20161R	52-52700-203

PART NUMBER	PART NAME	SERIAL NUMBER	SPECIFICATION NUMBER	REVISION
557305	COMPONENT PACKAGE "B"	4053265	RA0220-211 AMEND. #2	C

FUNCTIONAL TEST

	LIMITS	ACTUAL RESULTS OXIDIZER	ACTUAL RESULTS FUEL
RELIEF VALVE TESTS: PARA. 4.2.7			
VENT PORT LEAKAGE @ 380 PSIG	5 SCC/20 MIN., MAX.	NONE DET.	NONE DET.
VENT PORT FLOW @ 430 PSIG	1200 SCIM, MIN.	124.416	124.416
VENT PORT FLOW @ 485 PSIG	96.5 SCFM He OR 35 SCFM GN_2 MIN.	122	122
VENT PORT LEAKAGE @ 380 PSIG	5 SCC/20 MIN., MAX.	.1	.1
FLOW TEST: PARA. 4.2.8			
PRESSURE DROP	8.0 PSI, MAX.	5.4	
	4.5 PSI, MAX.		3.0
DIELECTRIC STRENGTH: PARA. 4.2.9			
PIN A AND PIN D 4.2.9.1	1.0 MILLIAMPERE, MAX.	.020	
PIN H AND PIN D	1.0 MILLIAMPERE, MAX.	.021	
PIN A AND PIN H	1.0 MILLIAMPERE, MAX.	.019	
PRESSURE TRANSDUCER IMPEDANCE 4.2.9.2			
PIN A TO PIN C	3000 ± 300 OHMS	3150	
PIN H TO PIN F	3000 ± 300 OHMS	3050	
EXTERNAL LEAKAGE TEST: PARA. 4.2.10			
PACKAGE LEAKAGE 4.2.10.1	10^{-6} SCC/SEC, MAX.	6.03×10^{-7}	
RESISTOFLEX CAP LEAKAGE 4.2.10.2			
PORT 4 AND 4A	4.175 SCC/30 MIN., MAX.	<.1	
PORT 6 AND 6A	4.175 SCC/30 MIN., MAX.	<.1	
PORT 3	4.175 SCC/30 MIN., MAX.	<.1	
PORT 5	4.175 SCC/30 MIN., MAX.	<.1	

INSP

(04123)

COMPONENT ACCEPTANCE TEST LOG

MODEL NUMBER	CONTRACT NUMBER	McDONNELL SCD NUMBER
SE-6	Y20161R	52-52700-203

PART NUMBER	PART NAME	SERIAL NUMBER	SPECIFICATION NUMBER	REVISION
557305	COMPONENT PACKAGE "B"	4053265	RA0220-211 AMEND. #2	C

PRESSURE TRANSDUCER CALIBRATION
VOLTAGE RATIO VS PRESSURE
PARAGRAPH 4.2

PRESSURE PSIA	ABC OUTPUT LIMITS	OUTPUT ABC POTENTIOMETER	HFG OUTPUT LIMIT	OUTPUT HFG POTENTIOMETER
25	.050 ± .015	.0527	.050 ± .015	.0542
50	.100 ± .015	.1018	.100 ± .015	.1044
100	.200 ± .015	.2034	.200 ± .015	.2045
150	.300 ± .015	.3064	.300 ± .015	.3086
200	.400 ± .015	.4053	.400 ± .015	.4096
250	.500 ± .015	.5007	.500 ± .015	.5056
300	.600 ± .015	.6018	.600 ± .015	.6036
350	.700 ± .015	.7000	.700 ± .015	.7040
400	.800 ± .015	.7999	.800 ± .015	.8013
450	.900 ± .015	.8973	.900 ± .015	.8996
500	1.000 ± .015	.9968	1.000 ± .015	.9994
450	.900 ± .015	.9063	.900 ± .015	.9069
400	.800 ± .015	.8085	.800 ± .015	.8090
350	.700 ± .015	.7111	.700 ± .015	.7130
300	.600 ± .015	.6120	.600 ± .015	.6149
250	.500 ± .015	.5100	.500 ± .015	.5150
200	.400 ± .015	.4102	.400 ± .015	.4137
150	.300 ± .015	.3103	.300 ± .015	.3105
100	.200 ± .015	.2104	.200 ± .015	.2134
50	.100 ± .015	.1085	.100 ± .015	.1113
25	.050 ± .015	.0594	.050 ± .015	.0614

INSP _____

(27054)

MODULE/COMPONENT LOG BOOK IDENTIFICATION

MANUFACTURER	ROCKETDYNE, A DIVISION OF NORTH AMERICAN AVIATION, INC.
MC DONNELL SCD NUMBER	52-52701-235 ROCKETDYNE PART NUMBER 406886
NOMENCLATURE	COMPONENT PACKAGE "C" ASSEMBLY OF (DAT UNIT #2)
CONTRACT NUMBER	Y20161R
WEIGHT	2.164 LBS.
DRAWING CHANGE LETTER	DNA
DATE	21 MAY 1964

"Certification is hereby given that the Module/Component covered by this Log Book was manufactured, inspected and tested in accordance with subject drawings, specifications and Quality Assurance provisions except as recorded here-in."

ROCKETDYNE QUALITY ASSURANCE	MC DONNELL QUALITY REPRESENTATIVE	GOV'T INSPECTION AGENCY QUALITY REPRESENTATIVE
S.H. Cutrer 21 MAY 1964	22 May 64 Louis L. Spence	22 MAY 64 Nicholas J. Felice

PART NO. 406886

SERIAL NO. 4055325

FOREWORD

MODULE/COMPONENT LOG BOOK

THIS BOOK CONTAINS INFORMATION PERTINENT TO THE MODULE/COMPONENT AS SPECIFIED HEREIN BY SERIAL NUMBER AND MODEL NUMBER. IT IS NECESSARY THAT ALL ENTRIES BE WRITTEN IN INK OR TYPED FOR PERMANENT RECORD. ENTRIES SUCH AS CUSTODY, PRESERVATION, SERIALIZATION, APPLICABLE ENGINEERING CHANGE PROPOSALS, ACCEPTANCE RUN DATA, CALIBRATION AND WEIGHT DATA WILL BE ENTERED AND/OR INCLUDED BY ROCKETDYNE AT TIME OF DELIVERY. ENTRIES SUCH AS REWORK, KIT INSTALLATION, REMOVALS, VEHICLE MATING, ADDITIONAL STATIC FIRING TIME AND CUSTODY WILL BE MADE BY THE CUSTOMER.

IF FOR ANY REASON THIS MODULE/COMPONENT IS RETURNED TO ROCKETDYNE FOR MODIFICATION AND/OR REPAIRS, THIS LOG BOOK MUST ACCOMPANY THE MODULE/COMPONENT. MODIFICATION ENTRIES WILL BE ENTERED BY ROCKETDYNE AND CUSTODY RECORDS WILL BE MAINTAINED.

THE PAGES IN THIS LOG BOOK SHALL NOT BE REVISED WITHOUT OBTAINING APPROVAL OF THE ROCKETDYNE PROGRAM OFFICE, ROCKETDYNE QUALITY CONTROL, AND THE CUSTOMER REPRESENTATIVE.

THIS LOG BOOK IS APPROVED FOR USE ON:

PART NUMBER 406886 PART NAME COMPONENT ASSEMBLY, PACKAGE "C"

DATE	PROGRAM OFFICE	QUALITY ASSURANCE	PURCHASER
13 NOV 1963	W. E. McGrevey	R. B. Smith	John S. Fisher

GENERAL INFORMATION

THIS LOG BOOK IS PROVIDED FOR SERVICE USE IN RECORDING PERTINENT HISTORICAL DATA AND ALL CHANGES FROM THE ORIGINAL CONFIGURATION. IT SHALL ACCOMPANY THE MODULE/COMPONENT WHEN TRANSFERRED BETWEEN ROCKETDYNE AND USING AGENCIES. THIS LOG BOOK SHALL BE KEPT WITH THE VEHICLE RECORDS WHEN THE MODULE/COMPONENT IS INSTALLED IN A VEHICLE.

SECTION I - MODULE/COMPONENT ASSEMBLY LOG

RECORDS CONTAINED IN THIS SECTION ARE PERTINENT TO THE MODULE/COMPONENT ACCEPTANCE AND ALSO INCLUDES MODEL CONFIGURATION DATA, PERTINENT DETAILS OF SHORT SHIPMENTS, COMPONENT DEVIATIONS, AGE SENSITIVE PARTS RECORD AND WEIGHT RECORD.

SECTION II - ACCEPTANCE TEST LOG

RECORDS OF ASSEMBLY ACCEPTANCE TESTS ARE PRESENTED IN THIS SECTION WITH PERFORMANCE DATA AND SUMMARY DATA ON INSPECTIONS AND ACCEPTANCE.

SECTION I

MODULE/COMPONENT ASSEMBLY LOG

MODULE COMPONENT SERIALIZATION LOG

MODEL NO.	CONTRACT NUMBER	McDONNELL SCD NUMBER
SE-7	Y20161R	52-52701-235

PART NUMBER	COMPONENT	SERIAL NO.	PLAN NO.	LOT NO.	LTR CHG	DATE	INSP	REMARKS
406886	COMP PKG "C"	4055325	NONE	DNA	DNA	21 MAY 64	ANR 721	
NA5-28077T2	FILTER	14	A38819-5	"	"	"	ANR 721	
NA5-28081T3	ISOL. VALVE	031	A13143-3	"	"	"	ANR 721	
NA5-28085T3	FITTING FILTER	41	A35090-8	"	"	"	ANR 721	
NA5-28085T3	FITTING FILTER	34	A35090-1	"	"	"	ANR 721	
406413	SEAT	NONE	A13923-5	"	"	"	ANR 721	
406413	SEAT	NONE	A15802	"	"	"	ANR 721	
408926-3	BODY	8732173	NONE	"	"	"	ANR 721	

MCR VERIFICATION

PART NUMBER	MODEL NO.	CONTRACT NUMBER	SERIAL NUMBER	Mc DONNELL SCD NUMBER
406886	SE-7	Y20161R	4055325	52-52701-235

MCR/ECP NO.	DATE	TITLE	DATE	INSP.
SE7-14	11JAN63	TEST POINTS; PROVISIONS FOR PERMANENT IDENTIFICATION	21MAY64	ANR 208
SE7-15	21AUG63	RESISTOFLEX FITTINGS; REPLACEMENT OF	21MAY64	ANR 208
SE7-22	19AUG63	PRESSURE REGULATED COMPONENTS; CHANGES TO	21MAY64	ANR 208
SE7-23	31MAY63	COMPONENT SERVICING POINTS, SEALING SURFACES; CHANGES TO	21MAY64	ANR 208
SE7-30	31MAY63	LUBRICANTS; REPLACEMENT OF	21MAY64	ANR 208
SE7-32	31MAY63	MOUNT HOLE SIZES, OAMS COMPONENT PACKAGES; CHANGES TO	21MAY64	ANR 208
SE7-34	31MAY63	RESISTOFLEX DYNATUBE CAPS; REIDENTIFICATION OF	21MAY64	ANR 208
SE7-38	25SEP63	COMPONENT NAMEPLATE LOCATION; CHANGES TO	21MAY64	ANR 208
SE6-62	6JAN64	COMPONENT CLEANING; PROVISION FOR	21MAY64	ANR 208
SE6-68	14APR64	RESISTOFLEX DYNATUBE FITTING INTERFACE; LUBRICATION OF	21MAY64	ANR 208
SE7-74	23MAR64	TUBE STUBS; CHANGES TO	21MAY64	ANR 208
SE6-129	14APR64	MANUAL VALVES, PACKAGES A, B, C, D, AND E; CHANGES TO	21MAY64	ANR 208
SE6-148	27DEC63	CARTRIDGE INSPECTION REQUIREMENTS; INCORPORATION OF	21MAY64	ANR 208
SE6-154	25NOV63	COMPONENT PACKAGES AND PROPELLANT TANKS RESISTOFLEX CAP; CHANGES TO	21MAY64	ANR 208
SE6-202	24APR64	ELECTRICAL CONNECTORS; CHANGES TO	21MAY64	ANR 208

136

MODULE/COMPONENT VARIATION LOG

DATE 21 MAY 64

MODEL NO.	CONTRACT NO.	McDONNELL SCD NUMBER
SE-7	Y20161R	52-52701-235

PART NUMBER	PART NAME	SERIAL NUMBER	TYPE OF DISPOSITION
406886	COMPONENT PACKAGE "C" ASSY, OF	4055325	MAC MRR 59948

VARIATION: COMPONENT PKG. "C" IS OVERWEIGHT PER RA0220-290, PARA. 2.1 AMEND. #1. MAX. ALLOWABLE ADJUSTED WEIGHT IS 2.00 LBS. ACTUAL WEIGHT IS 2.164 LBS.

ACTION TAKEN: ACCEPTABLE TO USE PER MAC MRR 59948

INSP. ARM 721

PART NUMBER	PART NAME	SERIAL NUMBER	TYPE OF DISPOSITION

VARIATION:

ACTION TAKEN:

INSP

PART NUMBER	PART NAME	SERIAL NUMBER	TYPE OF DISPOSITION

VARIATION:

ACTION TAKEN:

INSP

R-15075-1

FORM REVISION DATE NEW 8 MAY 1963

SECTION II

ACCEPTANCE TEST LOG

COMPONENT ACCEPTANCE TEST LOG

MODEL NUMBER	CONTRACT NUMBER	McDONNELL SCD NUMBER
SE-7	Y20161R	52-52701-235

PART NUMBER	PART NAME	SERIAL NUMBER	SPECIFICATION NUMBER	REVISION
406886	COMPONENT PACKAGE "C" ASSEMBLY OF	4055325	RA0220-206 AMEND. #2	B

FUNCTIONAL TESTING PARA. 4.2

TEST	PARA.	SPEC. LIMITS	ACTUAL
PROOF PRESSURE: @ 500 PSIG	4.2.3		
WELDING & CASTING INTEGRITY TEST:	4.2.4	10^{-6} SCC/SEC., MAX.	• 3.57×10^{-5}
LEAKAGE RATE WHEN VALVE IS REMOVED	4.2.4.2	10^{-6} SCC/SEC., MAX.	1.20×10^{-7}
TANK ISOLATION VALVE MOUNTING SEAL TEST:	4.2.4.2		
@ 5 PSIG		2.08 SCC/15 MIN., MAX.	LESS THAN 0.1
@ 500 PSIG		2.08 SCC/15 MIN., MAX.	LESS THAN 0.1
MANUAL GROUND TEST CONNECTION VALVE TEST:	4.2.5		
PRESSURE / CONNECTION			
✓ 5 PSIG PORT 12A	4.2.5.1	25 SCC/15 MIN., MAX.	LESS THAN 0.1
✓ 500 PSIG PORT 12A	4.2.5.1	25 SCC/15 MIN., MAX.	.2
✓ 5 PSIG PORT 12	4.2.5.2	2.03 SCC/15 MIN., MAX.	LESS THAN 0.1
✓ 500 PSIG PORT 12	4.2.5.2	2.03 SCC/15 MIN., MAX.	LESS THAN 0.1
✓ 5 PSIG PORT 12	4.2.5.3	2.03 SCC/15 MIN., MAX.	LESS THAN 0.1
✓ 500 PSIG PORT 12	4.2.5.3	2.03 SCC/15 MIN., MAX.	LESS THAN 0.1
5 PSIG PORT 12A	4.2.5.4	2.03 SCC/15 MIN., MAX.	LESS THAN 0.1
500 PSIG PORT 12A	4.2.5.4	2.03 SCC/15 MIN., MAX.	LESS THAN 0.1

NOTE: IF LEAKAGE REQUIREMENT IS MET, PROCEED TO PARA. 4.2.5

INSP _____

COMPONENT ACCEPTANCE TEST LOG

MODEL NUMBER	CONTRACT NUMBER	McDONNELL SCD NUMBER
SE-7	Y20161R	52-52701-235

PART NUMBER	PART NAME	SERIAL NUMBER	SPECIFICATION NUMBER	REVISION
406886	COMPONENT PACKAGE "C"	4055325	RA0220-206 AMEND. #2	B

TEST		PARA.	SPEC. LIMITS	ACTUAL
MANUAL FILL & PURGE VALVE TEST:		4.2.6		
PRESSURE	CONNECTION			
5 PSIG	PORT 11A	4.2.6.1	25 SCC/15 MIN., MAX.	.7
500 PSIG	PORT 11A	4.2.6.1	25 SCC/15 MIN., MAX.	.2
5 PSIG	PORT 11	4.2.6.2	2.08 SCC/15 MIN., MAX.	LESS THAN 0.1
500 PSIG	PORT 11	4.2.6.2	2.08 SCC/15 MIN., MAX.	LESS THAN 0.1
5 PSIG	PORT 11	4.2.6.3	2.08 SCC/15 MIN., MAX.	LESS THAN 0.1
500 PSIG	PORT 11	4.2.6.3	2.08 SCC/15 MIN., MAX.	LESS THAN 0.1
5 PSIG	PORT 11A	4.2.6.4	2.08 SCC/15 MIN., MAX.	LESS THAN 0.1
500 PSIG	PORT 11A	4.2.6.4	2.08 SCC/15 MIN., MAX.	LESS THAN 0.1

INSP _____

COMPONENT ACCEPTANCE TEST LOG

MODEL NUMBER	CONTRACT NUMBER	McDONNELL SCD NUMBER
SE-7	Y20161R	52-52701-235

PART NUMBER	PART NAME	SERIAL NUMBER	SPECIFICATION NUMBER	REVISION
406886	COMPONENT PACKAGE "C"	4055325	RA0615-003 AMEND. 1	B

CLASS 4, SOLID PARTICLE CONTAMINATION LEVEL

MICRON RANGE	LIMITS	ACTUAL COUNT
< - 10	*	
10 - 25	100	20
25 - 50	20	8
50 - 100	5	0
100 - 300	1	0
> - 300	0	0
FIBERS 300 - 3000	0	0
FIBERS > - 3000	0	0

"NOT TO BE COUNTED BUT NO SLURRY OF FINE PARTICLES WHICH COVERS MORE THAN AN ESTIMATED 5 PERCENT OF THE TOTAL EFFECTIVE FILTER AREA SHALL BE ALLOWED." AT THE DISCRETION OF QUALITY ASSURANCE, A WEIGHT DETERMINATION OF TOTAL CONTAMINATION MAY BE MADE AS A REFEREE TEST IN BORDERLINE CASES. THE MAXIMUM ALLOWABLE WEIGHT OF CONTAMINANTS SHALL BE 0.001 GRAM (1 mg).

INSP ANR 721

(20044)

R-15075-1

MODULE/COMPONENT LOG BOOK IDENTIFICATION

MANUFACTURER ROCKETDYNE, A DIVISION OF NORTH AMERICAN AVIATION, INC.

MC DONNELL SCD NUMBER 52-52701-237-103 ROCKETDYNE PART NUMBER 406887

NOMENCLATURE COMPONENT PACKAGE "D" ASSEMBLY OF (DAT UNIT #2)

CONTRACT NUMBER Y20161R

WEIGHT 2.194 LBS.

DRAWING CHANGE LETTER DNA

DATE 23 MAY 1964

"Certification is hereby given that the Module/Component covered by this Log Book was manufactured, inspected and tested in accordance with subject drawings, specifications and Quality Assurance provisions except as recorded here-in."

ROCKETDYNE QUALITY ASSURANCE	MC DONNELL QUALITY REPRESENTATIVE	GOV'T INSPECTION AGENCY QUALITY REPRESENTATIVE
Wm E Reitz 5/25/64	May 64	25 MAY 1964

PART NO. 406887

SERIAL NO. 405533L

FOREWORD

MODULE/COMPONENT LOG BOOK

THIS BOOK CONTAINS INFORMATION PERTINENT TO THE MODULE/COMPONENT AS SPECIFIED HEREIN BY SERIAL NUMBER AND MODEL NUMBER. IT IS NECESSARY THAT ALL ENTRIES BE WRITTEN IN INK OR TYPED FOR PERMANENT RECORD. ENTRIES SUCH AS CUSTODY, PRESERVATION, SERIALIZATION, APPLICABLE ENGINEERING CHANGE PROPOSALS, ACCEPTANCE RUN DATA, CALIBRATION AND WEIGHT DATA WILL BE ENTERED AND/OR INCLUDED BY ROCKETDYNE AT TIME OF DELIVERY. ENTRIES SUCH AS REWORK, KIT INSTALLATION, REMOVALS, VEHICLE MATING, ADDITIONAL STATIC FIRING TIME AND CUSTODY WILL BE MADE BY THE CUSTOMER.

IF FOR ANY REASON THIS MODULE/COMPONENT IS RETURNED TO ROCKETDYNE FOR MODIFICATION AND/OR REPAIRS, THIS LOG BOOK MUST ACCOMPANY THE MODULE/COMPONENT. MODIFICATION ENTRIES WILL BE ENTERED BY ROCKETDYNE AND CUSTODY RECORDS WILL BE MAINTAINED.

THE PAGES IN THIS LOG BOOK SHALL NOT BE REVISED WITHOUT OBTAINING APPROVAL OF THE ROCKETDYNE PROGRAM OFFICE, ROCKETDYNE QUALITY CONTROL, AND THE CUSTOMER REPRESENTATIVE.

THIS LOG BOOK IS APPROVED FOR USE ON:

PART NUMBER 06887 PART NAME COMPONENT ASSEMBLY, PACKAGE "D"

DATE	PROGRAM OFFICE	QUALITY ASSURANCE	PURCHASER
23 [illegible] 1963	H. E. McCreary	R. B. Smith	John S. [illegible]

GENERAL INFORMATION

THIS LOG BOOK IS PROVIDED FOR SERVICE USE IN RECORDING PERTINENT HISTORICAL DATA AND ALL CHANGES FROM THE ORIGINAL CONFIGURATION. IT SHALL ACCOMPANY THE MODULE/COMPONENT WHEN TRANSFERRED BETWEEN ROCKETDYNE AND USING AGENCIES. THIS LOG BOOK SHALL BE KEPT WITH THE VEHICLE RECORDS WHEN THE MODULE/COMPONENT IS INSTALLED IN A VEHICLE.

SECTION I - MODULE/COMPONENT ASSEMBLY LOG

RECORDS CONTAINED IN THIS SECTION ARE PERTINENT TO THE MODULE/COMPONENT ACCEPTANCE AND ALSO INCLUDES MODEL CONFIGURATION DATA, PERTINENT DETAILS OF SHORT SHIPMENTS, COMPONENT DEVIATIONS, AGE SENSITIVE PARTS RECORD AND WEIGHT RECORD.

SECTION II - ACCEPTANCE TEST LOG

RECORDS OF [illegible] TESTS ARE PRESENTED IN THIS SECTION WITH PERFORMANCE DATA AND [illegible] AND ACCEPTANCE.

SECTION I

MODULE/COMPONENT ASSEMBLY LOG

MODULE COMPONENT SERIALIZATION LOG

MODEL NO.	CONTRACT NUMBER	McDONNELL SCO NUMBER
SE-7	Y20161R	52-52701-237-103

PART NUMBER	COMPONENT	SERIAL NO.	PLAN NO.	LOT NO.	LTR CHG	DATE	INSP	REMARKS
406887	COMP. BTG "D"	4055331	NONE	DNA	DNA	23 MAY 64	ANR 208	
NA5-28077T2	FILTER	1	A38804-1	"	"	"	ANR 208	
NA5-28085T4	FITTING FILTER	44	A35069-2	"	"	"	ANR 208	
NA5-28085T4	FITTING FILTER	95	A40672-15	"	"	"	ANR 208	
NA5-28081T3	ISOL. VALVE	167	B02851-54	"	"	"	ANR 208	

MCR VERIFICATION

PART NUMBER	MODEL NO.	CONTRACT NUMBER	SERIAL NUMBER	Mc DONNELL SCD NUMBER
406887	SE-7	Y20161R	4055331	52-52701-237-103

MCR/ECP NO.	DATE	TITLE	DATE	INSP.
SE7-14	11JAN63	TEST POINTS; PROVISIONS FOR PERMANENT IDENTIFICATION	23MAY64	ANR 208
SE7-15	21AUG63	RESISTOFLEX FITTINGS; REPLACEMENT OF	23MAY64	ANR 208
SE7-22	19AUG63	PRESSURE REGULATED COMPONENTS; CHANGES TO	23MAY64	ANR 208
SE7-23	31MAY63	COMPONENT SERVICING POINTS, SEALING SURFACES; CHANGES TO	23MAY64	ANR 208
SE7-30	31MAY63	LUBRICANTS; REPLACEMENT OF	23MAY64	ANR 208
SE7-32	31MAY63	MOUNT HOLE SIZES, OAMS COMPONENT PACKAGES; CHANGES TO	23MAY64	ANR 208
SE7-34	31MAY63	RESISTOFLEX DYNATUBE CAPS; REIDENTIFICATION OF	23MAY64	ANR 208
SE7-38	25SEP63	COMPONENT NAMEPLATE LOCATION; CHANGES TO	23MAY64	ANR 208
SE6-62	6JAN64	COMPONENT CLEANING; PROVISION FOR	23MAY64	ANR 208
SE6-63	[illegible]APR64	RESISTOFLEX DYNATUBE FITTING INTERFACE; LUBRICATION OF	23MAY64	ANR 208
SE7-74	[illegible]	TUBE STUBS; CHANGES TO	23MAY64	ANR 208
SE6-129	1[illegible]APR64	MANUAL VALVES, PACKAGES A, B, C, D, AND E; CHANGES TO	23MAY64	ANR 208
SE6-148	27DEC63	CARTRIDGE INSPECTION REQUIREMENTS; INCORPORATION OF	23MAY64	ANR 208
SE6-154	25NOV63	COMPONENT PACKAGES AND PROPELLANT TANKS RESISTOFLEX CAP; CHANGES TO	23MAY64	ANR 208
SE6-202	2[illegible]APR64	ELECTRICAL CONNECTORS; CHANGES TO	23MAY64	ANR 208

R-15075-1

MODULE/COMPONENT VARIATION LOG

DATE 23 MAY 64

MODEL NO.	CONTRACT NO.	McDONNELL SCD NUMBER
SE-7	Y20161R	52-52701-237-103

PART NUMBER	PART NAME	SERIAL NUMBER	TYPE OF DISPOSITION
406887	COMPONENT PACKAGE "D" ASSY OF	4055331	MAC MRR #58579

VARIATION: COMPONENT PACKAGE "D" IS OVERWEIGHT, PER RA0220-290, PARA 2.1, AMEND. #1. MAXIMUM ALLOWABLE ADJUSTED WEIGHT IS 2.00 LBS. ACTUAL WEIGHT IS 2.194 LBS.

ACTION TAKEN: DISCREPANCY DOES NOT MATERIALLY AFFECT THE PHYSICAL AND FUNCTIONAL DESIGN REQUIREMENTS, THEREFORE, ACCEPTABLE TO USE FOR DAT PER MAC MRR #58579.

INSP. ANR 208

PART NUMBER	PART NAME	SERIAL NUMBER	TYPE OF DISPOSITION

VARIATION:

ACTION TAKEN:

INSP

PART NUMBER	PART NAME	SERIAL NUMBER	TYPE OF DISPOSITION

VARIATION:

ACTION TAKEN:

INSP

147

FORM REVISION DATE NEW 8 MAY 1963

COMPONENT ACCEPTANCE TEST LOG

MODEL NUMBER	CONTRACT NUMBER	McDONNELL SCD NUMBER
SE-7	Y20161R	52-52701-237 -103

PART NUMBER	PART NAME	SERIAL NUMBER	SPECIFICATION NUMBER	REVISION
406887	COMPONENT PACKAGE "D"	4055331	RA0220-207 AMEND. #1	B

FUNCTIONAL TESTING PARA. 4.2

TEST	PARA.	SPEC. LIMITS	ACTUAL
PROOF PRESSURE: @ 500 PSIG	4.2.3		
WELDING & CASTING INTEGRITY TEST:	4.2.4	10^{-6} SCC/SEC., MAX.	* 4.07×10^{-5}
LEAKAGE RATE WHEN VALVE IS REMOVED	4.2.4.2	10^{-6} SCC/SEC., MAX.	8.86×10^{-7}
TANK ISOLATION VALVE MOUNTING SEAL TEST:	4.2.4.2		
@ 5 PSIG		2.03 SCC/15 MIN., MAX.	<.1
@ 500 PSIG		2.03 SCC/15 MIN., MAX.	<.1
MANUAL GROUND TEST CONNECTION VALVE TEST:	4.2.5		
PRESSURE / CONNECTION			
5 PSIG PORT 14A	4.2.5.1	25 SCC/15 MIN., MAX.	<.1
500 PSIG PORT 14A	4.2.5.1	25 SCC/15 MIN., MAX.	0.7
5 PSIG PORT 14	4.2.5.2	2.08 SCC/15 MIN., MAX.	<.1
500 PSIG PORT 14	4.2.5.2	2.08 SCC/15 MIN., MAX.	<.1
5 PSIG PORT 14	4.2.5.3	2.08 SCC/15 MIN., MAX.	<.1
500 PSIG PORT 14	4.2.5.3	2.08 SCC/15 MIN., MAX.	<.1
5 PSIG PORT 14A	4.2.5.4	2.03 SCC/15 MIN., MAX.	<.1
500 PSIG PORT 14A	4.2.5.4	2.03 SCC/15 MIN., MAX.	<.1

*NOTE: IF LEAKAGE REQUIREMENT IS MET, PROCEED TO PARA. 4.2.5

INSP.

COMPONENT ACCEPTANCE TEST LOG

MODEL NUMBER	CONTRACT NUMBER	McDONNELL SCD NUMBER
SE-7	Y20161R	52-52701-237-103

PART NUMBER	PART NAME	SERIAL NUMBER	SPECIFICATION NUMBER	REVISION
406887	COMPONENT PACKAGE "D"	4055331	RA0220-207 AMEND.#1	B

TEST		PARA.	SPEC. LIMITS	ACTUAL
MANUAL FILL & PURGE VALVE TEST:		4.2.6		
PRESSURE	CONNECTION			
5 PSIG	PORT 15A	4.2.6.1	25 SCC/15 MIN., MAX.	<.1
500 PSIG	PORT 15A	4.2.6.1	25 SCC/15 MIN., MAX.	0.5
5 PSIG	PORT 15	4.2.6.2	2.08 SCC/15 MIN., MAX.	<.1
500 PSIG	PORT 15	4.2.6.2	2.08 SCC/15 MIN., MAX.	<.1
5 PSIG	PORT 15	4.2.6.3	2.08 SCC/15 MIN., MAX.	<.1
500 PSIG	PORT 15	4.2.6.3	2.08 SCC/15 MIN., MAX.	<.1
5 PSIG	PORT 15A	4.2.6.4	2.08 SCC/15 MIN., MAX.	<.1
500 PSIG	PORT 15A	4.2.6.4	2.08 SCC/15 MIN., MAX.	<.1

INSP ANR 208

SECTION II

ACCEPTANCE TEST LOG

COMPONENT ACCEPTANCE TEST LOG

MODEL NUMBER	CONTRACT NUMBER	McDONNELL SCD NUMBER
SE-7	Y20161R	52-52701-237-103

PART NUMBER	PART NAME	SERIAL NUMBER	SPECIFICATION NUMBER	REVISION
406887	COMPONENT PACKAGE "D"	4055331	RA0615-003 AMEND. 1	B

CLASS 4, SOLID PARTICLE CONTAMINATION LEVEL

MICRON RANGE	LIMITS	ACTUAL COUNT
< - 10	*	
10 - 25	100	24
25 - 50	20	7
50 - 100	5	3
100 - 300	1	0
> - 300	0	0
FIBERS 300 - 3000	0	0
FIBERS > - 3000	0	0

"NOT TO BE COUNTED BUT NO SLURRY OF FINE PARTICLES WHICH COVERS MORE THAN AN ESTIMATED 5 PERCENT OF THE TOTAL EFFECTIVE FILTER AREA SHALL BE ALLOWED." AT THE DISCRETION OF QUALITY ASSURANCE, A WEIGHT DETERMINATION OF TOTAL CONTAMINATION MAY BE MADE AS A REFERENCE TEST IN BORDERLINE CASES. THE MAXIMUM ALLOWABLE WEIGHT CONTAMINANTS SHALL BE 0.001 GRAM (1 mg).

INSP_____

MODULE/COMPONENT LOG BOOK IDENTIFICATION

MANUFACTURER	ROCKETDYNE, A DIVISION OF NORTH AMERICAN AVIATION, INC.
MC DONNELL SCD NUMBER	52-52701-175-104 ROCKETDYNE PART NUMBER 557000
NOMENCLATURE	COMPONENT PACKAGE "E", ASSY OF (DAT UNIT #5)
CONTRACT NUMBER	Y20161R
WEIGHT	3.866 LBS.
DRAWING CHANGE LETTER	DNA
DATE	8 JUNE 1964

"Certification is hereby given that the Module/Component covered by this Log Book was manufactured, inspected and tested in accordance with subject drawings, specifications and Quality Assurance provisions except as recorded here-in."

ROCKETDYNE QUALITY ASSURANCE	MC DONNELL QUALITY REPRESENTATIVE	GOV'T INSPECTION AGENCY QUALITY REPRESENTATIVE
S.H. Cuthay 6/8/64		8 JUNE 1964

PART NO.	557000
SERIAL NO.	4055393

FOREWORD

MODULE/COMPONENT LOG BOOK

THIS BOOK CONTAINS INFORMATION PERTINENT TO THE MODULE/COMPONENT AS SPECIFIED HEREIN BY SERIAL NUMBER AND MODEL NUMBER. IT IS NECESSARY THAT ALL ENTRIES BE WRITTEN IN INK OR TYPED FOR PERMANENT RECORD. ENTRIES SUCH AS CUSTODY, PRESERVATION, SERIALIZATION, APPLICABLE ENGINEERING CHANGE PROPOSALS, ACCEPTANCE RUN DATA, CALIBRATION AND WEIGHT DATA WILL BE ENTERED AND/OR INCLUDED BY ROCKETDYNE AT TIME OF DELIVERY. ENTRIES SUCH AS REWORK, KIT INSTALLATION, REMOVALS, VEHICLE MATING, ADDITIONAL STATIC FIRING TIME AND CUSTODY WILL BE MADE BY THE CUSTOMER.

IF FOR ANY REASON THIS MODULE/COMPONENT IS RETURNED TO ROCKETDYNE FOR MODIFICATION AND/OR REPAIRS, THIS LOG BOOK MUST ACCOMPANY THE MODULE/COMPONENT. MODIFICATION ENTRIES WILL BE ENTERED BY ROCKETDYNE AND CUSTODY RECORDS WILL BE MAINTAINED.

THE PAGES IN THIS LOG BOOK SHALL NOT BE REVISED WITHOUT OBTAINING APPROVAL OF THE ROCKETDYNE PROGRAM OFFICE, ROCKETDYNE QUALITY CONTROL, AND THE CUSTOMER REPRESENTATIVE.

THIS LOG BOOK IS APPROVED FOR USE ON:

PART NUMBER 557000 PART NAME COMPONENT ASSEMBLY, PACKAGE "E"

DATE	PROGRAM OFFICE	QUALITY ASSURANCE	PURCHASER
13 NOV 1963	W. E. McCrivey	R. B. Smith	John S. Irvin

GENERAL INFORMATION

THIS LOG BOOK IS PROVIDED FOR SERVICE USE IN RECORDING PERTINENT HISTORICAL DATA AND ALL CHANGES FROM THE ORIGINAL CONFIGURATION. IT SHALL ACCOMPANY THE MODULE/COMPONENT WHEN TRANSFERRED BETWEEN ROCKETDYKE AND USING AGENCIES. THIS LOG BOOK SHALL BE KEPT WITH THE VEHICLE RECORDS WHEN THE MODULE/COMPONENT IS INSTALLED IN A VEHICLE.

SECTION I - MODULE/COMPONENT ASSEMBLY LOG

RECORDS CONTAINED IN THIS SECTION ARE PERTINENT TO THE MODULE/COMPONENT ACCEPTANCE AND ALSO INCLUDES MODEL CONFIGURATION DATA, PERTINENT DETAILS OF SHORT SHIPMENTS, COMPONENT DEVIATIONS, AGE SENSITIVE PARTS RECORD AND WEIGHT RECORD.

SECTION II - ACCEPTANCE TEST LOG

RECORDS OF ASSEMBLY ACCEPTANCE TESTS ARE PRESENTED IN THIS SECTION WITH PERFORMANCE DATA AND SUMMARY DATA ON INSPECTIONS AND ACCEPTANCE.

SECTION I

MODULE/COMPONENT ASSEMBLY LOG

MODULE COMPONENT SERIALIZATION LOG

MODEL NO.	CONTRACT NUMBER	McDONNELL SCD NUMBER
SE-7	Y20161R	52-52701-175-104

PART NUMBER	COMPONENT	SERIAL NO.	PLAN NO.	LOT NO.	LTR CHG	DATE	INSP	REMARKS
557000	COMP PKG "E"	4055393	NONE	DNA	DNA	8 JUN 64	ANR 721	
NA5-28069T5	CART. VALVE	010	A13027-7	"	"	"	ANR 721	
NA5-28079T1-1	SOLENOID VALVE	111	B00617-1	"	"	"	ANR 721	
NA5-28084T3	CART. VALVE	012	A29095-6	"	"	"	ANR 721	
NA5-28086-1	PRESSURE SWITCH	010	A35761-3	"	"	"	ANR 721	
556205	BODY	NONE	A28336-3	"	"	"	ANR 721	
556201	BODY	NONE	A28290-11	"	"	"	ANR 721	
557133	PINTLE	NONE	A30231-1	"	"	"	ANR 721	
NA5-28087T1-2	FILTER	46	A35153-2	"	"	"	ANR 721	

IER VERIFICATION

PART NUMBER	MODEL NO.	CONTRACT NUMBER	SERIAL NUMBER	MC DONNELL SOD NUMBER
557000	SE-7	Y20161R	4055393	52-52701-175-104

IER/IEP NO.	DATE	TITLE	DATE	INSP.
SE7-14	11JAN63	TEST POINTS; PROVISIONS FOR PERMANENT IDENTIFICATION	8JUN64	ANR 721
SE7-15	21AUG63	RESISTOFLEX FITTINGS; REPLACEMENT OF	8JUN64	ANR 721
SE7-22	19AUG63	PRESSURE REGULATED COMPONENTS; CHANGES TO	8JUN64	ANR 721
SE7-23	31MAY63	COMPONENT SERVICING POINTS, SEALING SURFACES; CHANGES TO	8JUN64	ANR 721
SE7-30	31MAY63	LUBRICANTS; REPLACEMENT OF	8JUN64	ANR 721
SE7-32	31MAY63	MOUNT HOLE SIZES, OAMS COMPONENT PACKAGES; CHANGES TO	8JUN64	ANR 721
SE7-34	31MAY63	RESISTOFLEX DYNATUBE CAPS; REIDENTIFICATION OF	8JUN64	ANR 721
SE7-042	21OCT63	PACKAGE "E" ACCEPTANCE TEST; REVISION OF	8JUN64	ANR 721
SE7-056	28DEC63	PACKAGE "E" SOLENOID VALVE, DESIGN REQUIREMENT; REVISION OF	8JUN64	ANR 721
SE6-062	6JAN64	COMPONENT CLEANING; PROVISION FOR	8JUN64	ANR 721
SE7-067	30SEP63	PRESSURE SWITCH RESPONSE TEST, DAT; ADDITION OF	8JUN64	ANR 721
SE6-068	14APR64	RESISTOFLEX DYNATUBE FITTING INTERFACE; LUBRICATION OF	8JUN64	ANR 721
SE6-075	4FEB64	MAC REPORT 8518, INCORPORATION OF	8JUN64	ANR 721
SE7-077	9DEC63	PACKAGE "E" SOLENOID VALVE, SPIKE SUPPRESSION; CANCELLATION OF	8JUN64	ANR 721
SE6-129	14APR64	MANUAL VALVES, PACKAGES A, B, C, D, AND E; CHANGES TO	8JUN64	ANR 721
SE6-148	27DEC63	CARTRIDGE INSPECTION REQUIREMENTS; INCORPORATION OF	8JUN64	ANR 721
SE6-154	25NOV63	COMPONENT PACKAGES AND PROPELLANT TANKS RESISTOFLEX CAP; CHANGES TO	8JUN64	ANR 721

MODULE/COMPONENT VARIATION LOG

DATE 8 JUNE 64

MODEL NO.	CONTRACT NO.	McDONNELL SCD NUMBER
SE-7	Y20161R	52-52701-175-104

PART NUMBER	PART NAME	SERIAL NUMBER	TYPE OF DISPOSITION
557000	COMPONENT PACKAGE "E" ASSEMBLY OF	4055393	NONE

VARIATION: DONE THIS DATE 8 JUNE 1964

ACTION TAKEN:

INSP. AMR 721

PART NUMBER	PART NAME	SERIAL NUMBER	TYPE OF DISPOSITION

VARIATION:

ACTION TAKEN:

INSP

PART NUMBER	PART NAME	SERIAL NUMBER	TYPE OF DISPOSITION

VARIATION:

ACTION TAKEN:

INSP

FORM REVISION DATE NEW 8 MAY 1963

158

R-15075-1

SECTION II

ACCEPTANCE TEST LOG

COMPONENT ACCEPTANCE TEST LOG

MODEL NUMBER	CONTRACT NUMBER	McDONNELL SCD NUMBER
SE-7	Y20161R	52-52701-175-104

PART NUMBER	PART NAME	SERIAL NUMBER	SPECIFICATION NUMBER	REVISION
557000	COMPONENT ASSY PACKAGE "E"	4055393	RA0220-212	"A"

PROOF PRESSURE: PARA. 4.2	PARA.	SPEC. LIMITS	ACTUAL
PROOF PRESSURE TEST NO. 1 @ 4500 PSIG	4.2.1	NO PERMANENT DISTORTION	NONE DET.
PROOF PRESSURE TEST NO. 2 @ 500 PSIG	4.2.2	NO PERMANENT DISTORTION	NONE DET.
EXTERNAL LEAKAGE: PARA. 4.3			
PACKAGE EXTERIOR LEAKAGE	4.3.1	1×10^{-6} SCC/SEC, MAX.	8.32×10^{-7}
MANUAL VALVE OPEN-PORT 19A LEAKAGE	4.3.2	15 SCC/15 MIN., MAX.	LESS THAN 0.1
MANUAL VALVE CLOSED-PORT 19A LEAKAGE	4.3.2	15 SCC/15 MIN., MAX.	LESS THAN 0.1
DIELECTRIC STRENGTH: PARA. 4.4			
PRESSURE SWITCH-LEAKAGE CURRENT	4.4.1		
PIN A TO C,G,J, GROUPED	4.4.1	500 MICROAMPERES, MAX.	9
PIN C TO A,G,J, GROUPED	4.4.1	500 MICROAMPERES, MAX.	9
PIN G TO A,C,J, GROUPED	4.4.1	500 MICROAMPERES, MAX.	9
PIN J TO A,C,G, GROUPED	4.4.1	500 MICROAMPERES, MAX.	9
SOLID VALVE-LEAKAGE CURRENT	4.4.2		
PIN A & B (GROUPED) TO VALVE BODY	4.4.2	500 MICROAMPERES, MAX.	380

DISP _____

160

R-15075-1

(03123)

COMPONENT ACCEPTANCE TEST LOG

MODEL NUMBER	CONTRACT NUMBER	McDONNELL SCD NUMBER
SE-7	Y20161R	52-52701-175-104

PART NUMBER	PART NAME	SERIAL NUMBER	SPECIFICATION NUMBER	REVISION
557000	COMPONENT ASSY PACKAGE "E"	4055393	RA0220-212	A

ELECTRICAL RESISTANCE: PARA. 4.6	PARA.	SPEC. LIMITS	ACTUAL
PRESSURE SWITCH	4.6.1		
PIN A TO PIN C (VOLTAGE DROP)	4.6.1.1.1	.050 VOLTS, MAX.	.003
PIN G TO PIN J (VOLTAGE DROP)	4.6.1.1.2	.050 VOLTS, MAX.	.003
PIN A TO PIN C (VOLTAGE DROP)	4.6.1.2.1		.020
PIN A TO PIN C (RESISTANCE)	4.6.1.2.1	.100 OHMS, MAX.	.034
PIN G TO PIN J (VOLTAGE DROP)	4.6.1.2.2		.046
PIN G TO PIN J (RESISTANCE)	4.6.1.2.2	.100 OHMS, MAX.	.086
SOLENOID VALVE	4.6.2		
PIN A TO PIN B (RESISTANCE)	4.6.2		23.65
SOLENOID VALVE BODY TEMPERATURE	4.6.2		70°
SOLENOID VALVE OPERATION: PARA. 4.7			
"PULL-IN" VOLTAGE	4.7.1		11.1
"PULL-IN" CURRENT	4.7.1		.4
VALVE BODY TEMPERATURE	4.7.1		75°
"DROP-OUT" VOLTAGE	4.7.2	1.15 VDC, MIN.	2.0
"DROP-OUT" CURRENT	4.7.2		.1
VALVE BODY TEMPERATURE	4.7.2		75°
RESPONSE TIME	4.7.3		
ENERGIZING TIME	4.7.3.1	22 MILLISEC., MAX.	6
DE-ENERGIZING TIME	4.7.3.2	15 MILLISEC., MAX.	4
PRESSURE DROP: PARA. 4.8			
MANUAL VALVE CLOSED	4.8.1	160 PSI, MAX.	70
SOLENOID VALVE CLOSED	4.8.2	10 PSI, MAX.	10

INSP

(03123)

COMPONENT ACCEPTANCE TEST LOG

MODEL NUMBER	CONTRACT NUMBER	McDONNELL SCD NUMBER
SE-7	Y20161R	52-52701-175-104

PART NUMBER	PART NAME	SERIAL NUMBER	SPECIFICATION NUMBER	REVISION
557000	COMPONENT ASSY PACKAGE "E"	4055393	RA0220-212	A

	PARA.	SPEC LIMITS	ACTUAL
INTERNAL LEAKAGE: PARA. 4.9			
MANUAL VALVE AND SOLENOID VALVE LEAKAGE @ 320 PSIG	4.9.1	5 SCC/30 MIN., MAX.	LESS THAN 0.1
MANUAL VALVE AND SOLENOID VALVE LEAKAGE @ 3000 PSIG	4.9.1	5 SCC/30 MIN., MAX.	LESS THAN 0.1
MC CARTRIDGE VALVE LEAKAGE	4.9.2	1×10^{-6} SCC/SEC, MAX.	5.42×10^{-9}
PRESSURE SWITCH ACTUATION: PARA. 4.10			
ACTUATION PRESSURE (PIN A TO PIN C)	4.10.1	380 ± 10 PSIA	390
ACTUATION PRESSURE (PIN G TO PIN J)	4.10.1	380 ± 10 PSIA	390
DE-ACTUATION PRESSURE (PIN A TO PIN C)	4.10.2	225 PSIA, MIN.	320
DE-ACTUATION PRESSURE (PIN G TO PIN J)	4.10.2	225 PSIA; MIN.	320
EXTERNAL LEAKAGE - MANUAL VALVE RESISTOFLEX FITTING: PARA. 4.11			
LEAKAGE (RESISTOFLEX CAP AT PORT 19A)	4.11.2	7.5 SCC/30 MIN., MAX.	LESS THAN 0.1
INTERNAL LEAKAGE: PARA. 4.13			
MANUAL VALVE AND SOLENOID VALVE LEAKAGE @ 320 PSIG	4.13	5 SCC/30 MIN., MAX.	LESS THAN 0.1
MANUAL VALVE AND SOLENOID VALVE LEAKAGE @ 3000 PSIG	4.13	5 SCC/30 MIN., MAX.	LESS THAN 0.1

INSP

COMPONENT ACCEPTANCE TEST LOG

MODEL NUMBER	CONTRACT NUMBER	McDONNELL SCD NUMBER
SE-7	Y20161R	52-52701-175-104

PART NUMBER	PART NAME	SERIAL NUMBER	SPECIFICATION NUMBER	REVISION
557000	COMPONENT PACKAGE "E", ASSEMBLY OF	4055393	RA0615-003 AMEND. 1	B

CLASS 4, SOLID PARTICLE CONTAMINATION LEVEL

MICRON RANGE	LIMITS	ACTUAL COUNT
< - 10	*	
10 - 25	100	6
25 - 50	20	1
50 - 100	5	0
100 - 300	1	0
> - 300	0	0
FIBERS 300 - 3000	0	0
FIBERS > - 3000	0	0

"NOT TO BE COUNTED BUT NO SLURRY OF FINE PARTICLES WHICH COVERS MORE THAN AN ESTIMATED 5 PERCENT OF THE TOTAL EFFECTIVE FILTER AREA SHALL BE ALLOWED." AT THE DISCRETION OF QUALITY ASSURANCE, A WEIGHT DETERMINATION OF TOTAL CONTAMINATION MAY BE MADE AS A REFEREE TEST IN BORDERLINE CASES. THE MAXIMUM ALLOWABLE WEIGHT OF CONTAMINANTS SHALL BE 0.001 GRAM (1 mg).

INSP ANR 721

FOREWARD

MODULE/COMPONENT LOG BOOK

THIS BOOK CONTAINS INFORMATION PERTINENT TO THE MODULE/COMPONENT AS SPECIFIED HEREIN BY SERIAL NO. AND MODEL NO. IT IS NECESSARY THAT ALL ENTRIES BE WRITTEN IN INK OR TYPED FOR PERMANENT RECORD. ENTRIES SUCH AS CUSTODY, PRESERVATION, SERIALIZATION, APPLICABLE E.C.P.'S, ACCEPTANCE RUN DATA, CALIBRATION, AND WEIGHT DATA WILL BE ENTERED AND/OR INCLUDED BY ROCKETDYNE AT TIME OF DELIVERY. ENTRIES SUCH AS REWORK, KIT INSTALLATION, REMOVALS, VEHICLE MATING, ADDITIONAL STATIC FIRING TIME AND CUSTODY WILL BE MADE BY THE CUSTOMER.

IF FOR ANY REASON THIS MODULE/COMPONENT IS RETURNED TO ROCKETDYNE FOR MODIFICATION AND/OR REPAIRS, THIS LOG BOOK MUST ACCOMPANY THE MODULE/COMPONENT. MODIFICATION ENTRIES WILL BE ENTERED BY ROCKETDYNE AND CUSTODY RECORDS WILL BE MAINTAINED.

THE PAGES IN THIS LOG BOOK SHALL NOT BE REVISED WITHOUT OBTAINING APPROVAL OF THE ROCKETDYNE PROGRAM OFFICE, ROCKETDYNE QUALITY CONTROL AND THE CUSTOMER REPRESENTATIVE.

THIS LOG BOOK IS APPROVED FOR USE ON

PART NUMBER NA5-28082T1 PART NAME Cartridge

APPROVAL SIGNATURES

DATE	PROGRAM OFFICE	QUALITY ASSURANCE	PURCHASER MAC
3 June 1963	W. E. McCrary	W. H. Sedgwick	Fred L. Harris

154

ROCKETDYNE
A DIVISION OF NORTH AMERICAN AVIATION, INC.

87 OF 167 PARTS MFRD. IN LOT 186

MODULE & COMPONENT LOG

SUPPLIER NAME: PYRONETICS, INC.

P.O. NO. X353WZ 654475

DATE OF MFG. 2.21.64 AND/OR CURE DATE 4863

EXPECTED LIFE: 1. ELAPSED OPER. TIME ____ 2. ELAPSED CYCLES ____ 3. CALENDAR LIFE ____

KEEP TIME IN MINUTES AND SECONDS AND/OR CYCLES

PART NAME: CARTRIDGE ROCKETDYNE PART NO. NAS 2808LT1-1F SUPPLIER PART NO. 3519-11 SERIAL NUMBER (OVER) SYSTEM NAME: RCS SE-6

YEAR 1964 MO-DAY	TIME, SECONDS START	STOP	SUB-TOTAL	TOTAL	CYCLES START	STOP	SUB-TOTAL	TOTAL	*HISTORY	STAMP OR INITIALS
1-15	0	5	5	5					BRIDGEWIRE RESISTANCE	
									PER 4.5.2.1	
1-16	0	10	10	10					NO FIRE TEST, 1 AMP	
1-16	0	5	5	10					BRIDGEWIRE RESISTANCE	
									PER 4.5.2.1	
2-14	0	5	5	5					DIELECTRIC PER 4.5.2.2	
									(3 POINTS)	
2-14	0	60	60	60					INSULATION RESISTANCE	
									PER 4.5.2.3 (3 POINTS)	
2-14	0	5	5	15					BRIDGEWIRE RESISTANCE	
									PER 4.5.2.1	
									I.R. NO. A29123	
									-1 TO -87	
									-8-16-18-26-33-41-57	
									-63-69-71-74-86 FIRED	
									IN TEST.	
									(NOTE -66 REC'D AS NO WORK	
									DONE ON BD. 03149B.)	

*ENTER INFORMATION SUCH AS, BUT NOT LIMITED TO: ENVIRONMENT WHEN OTHER THAN AMBIENT; TYPE OF TESTS PEFORMED; MALFUNCTION HISTORY OF A PART, COMPONENT, SUB-SYSTEM OR SYSTEM; SERIAL NUMBERS OF ANY PARTS OR COMPONENTS REMOVED AND THEIR REPLACEMENTS; REMOVALS AND REASONS FOR SAME; INCONSISTENCIES OF A SYSTEM; AND THE SPACECRAFT NUMBER TO WHICH THIS ITEM HAS BEEN OR IS NOW ASSIGNED TO.

FORM 620-S NEW 2-63

PAGE 1 OF 1

R-15075-1

165

YEAR 1964 MO.-DAY	TIME SECONDS START	STOP	SUB-TOTAL	TOTAL	CYCLES START	STOP	SUB-TOTAL	TOTAL	*HISTORY	STAMP OR INITIALS
									REWORK	
7-15	0	5	5	5					BRIDGEWIRE RESISTANCE	
									PER 4.5.2.1	
7-15	0	10	10	10					NO FIRE TEST, 1 AMP	
7-15	0	5	5	10					BRIDGEWIRE RESISTANCE	
									PER 4.5.2.1	
7-16	0	5	5	5					DIELECTRIC PER 4.5.2.2	
									(3 POINTS)	

166

R-15075-1

PAGE ___ OF ___

SCD52-52700-201

MODULE/COMPONENT LOG BOOK IDENTIFICATION

MANUFACTURER	ROCKETDYNE, A DIVISION OF NORTH AMERICAN AVIATION, INC.
MC DONNELL SCD NUMBER	52-52700-201 ROCKETDYNE PART NUMBER NA5-28082T1
NOMENCLATURE	CARTRIDGE (DAT UNIT)
CONTRACT NUMBER	Y20161R
WEIGHT	SEE COMPONENT ACCEPTANCE TEST LOGS
DRAWING CHANGE LETTER	DNA
DATE	16 JULY 1964

"Certification is hereby given that the Module/Component covered by this Log Book was manufactured, inspected and tested in accordance with subject drawings, specifications and Quality Assurance provisions except as recorded here-in."

ROCKETDYNE QUALITY ASSURANCE	MC DONNELL QUALITY REPRESENTATIVE	GOV'T INSPECTION AGENCY QUALITY REPRESENTATIVE
S.N. Autrey 7/16/64	J E [illegible] 7/24/64	21 July 64 Chester Michniski

PART NO.	NA5 28082T1
SERIAL-NO.	SEE SERIALIZATION LOG

GENERAL INFORMATION

THIS LOG BOOK IS PROVIDED FOR SERVICE USE IN RECORDING PERTINENT HISTORICAL DATA AND ALL CHANGES FROM THE ORIGINAL CONFIGURATION. IT SHALL ACCOMPANY THE MODULE/COMPONENT WHEN TRANSFERRED BETWEEN ROCKETDYNE AND USING AGENCIES. THIS LOG BOOK SHALL BE KEPT WITH THE VEHICLE RECORDS WHEN THE MODULE/COMPONENT IS INSTALLED IN A VEHICLE.

SECTION I - MODULE/COMPONENT ASSEMBLY LOG

RECORDS CONTAINED IN THIS SECTION ARE PERTINENT TO THE MODULE/COMPONENT ACCEPTANCE AND ALSO INCLUDES MODEL CONFIGURATION DATA, PERTINENT DETAILS OF SHORT SHIPMENTS, COMPONENT DEVIATIONS, AGE SENSITIVE PARTS RECORD AND WEIGHT RECORD.

SECTION II - ACCEPTANCE TEST LOG

RECORDS OF ASSEMBLY ACCEPTANCE TESTS ARE PRESENTED IN THIS SECTION WITH PERFORMANCE DATA AND SUMMARY DATA ON INSPECTIONS AND ACCEPTANCE.

SECTION I

MODULE/COMPONENT ASSEMBLY LOG

MODULE COMPONENT SERIALIZATION LOG

MODEL NO.	CONTRACT NUMBER	McDONNELL SCO NUMBER
SE-6	Y20161R	52-52700-201

PART NUMBER	COMPONENT	SERIAL NO.	PLAN NO.	LOT NO.	LTR CHG	DATE	INSP	REMARKS
NA5-28082T1	CARTRIDGE	198	B05461-R2-1	186	DNA	16JULY64	G 721	
"	"	201	B05461-R2-2	"	"	"	ANR 721	
"	"	206	B05461-R2-3	"	"	"	ANR 721	
"	"	210	B05461-R2-4	"	"	"	G 721	
"	"	218	B05461-R2-5	"	"	"	ANR 721	
"	"	220	B05461-R2-6	"	"	"	ANR 721	
"	"	229	B05461-R2-7	"	"	"	G 721	
"	"	230	B05461-R2-8	"	"	"	ANR 721	
"	"	233	B05461-R2-9	"	"	"	ANR 721	
"	"	236	B05461-R2-10	"	"	"	G 721	
"	"	238	B05461-R2-11	"	"	"	ANR 721	
"	"	239	B05461-R2-12	"	"	"	ANR 721	
"	"	240	B05461-R2-13	"	"	"	ANR 721	
"	"	241	B05461-R2-14	"	"	"	G 721	
"	"	244	B05461-R2-15	"	"	"	ANR 721	
"	"	245	B05461-R2-16	"	"	"	ANR 721	
"	"	248	B05461-R2-17	"	"	"	G 721	
"	"	249	B05461-R2-18	"	"	"	ANR 721	
"	"	256	B05461-R2-19	"	"	"	ANR 721	
"	"	258	B05461-R2-20	"	"	"	G 721	

MODULE COMPONENT SERIALIZATION LOG

MODEL NO.	CONTRACT NUMBER	McDONNELL SCO NUMBER
SE-6	Y20161R	52-52700-201

PART NUMBER	COMPONENT	SERIAL NO.	PLAN NO.	LOT NO.	LTR CHG	DATE	INSP.	REMARKS
NAS-28082T1-	CARTRIDGE	260	B05461-R2-21	186	DNA	16JUL64	(ANR 721)	
"	"	267	B05461-R2-22	"	"	"	(ANR 721)	
"	"	275	B05461-R2-23	"	"	"	(ANR 721)	

MCR VERIFICATION

PART NUMBER	MODEL NO.	CONTRACT NUMBER	SERIAL NUMBER	Mc DONNELL SCD NUMBER
NA5-28082T1-[illegible]	SE-6	Y20161R	SEE SER. PAGE	52-52700-201

MCR/ECP NO.	DATE	TITLE	DATE	INSP.
SE6-236	30APR64	CARTRIDGE SAMPLING AND ACCEPTANCE TEST; REVISION OF	16JUL64	[illegible]

(19103)

R-15075-1

MODULE COMPONENT REPLACEMENT LOG

MODEL NO.	CONTRACT NUMBER	McDONNELL SCO NUMBER
SE-6	Y20161R	52-52700-201

PART NUMBER	COMPONENT	SERIAL NO.	PLAN NO.	LOT NO.	LTR CHG	DATE	INSP	REMARKS
NA5-28082T1-	CARTRIDGE	SEE SERIAL.LOG	B05461	186	DNA	16JUL64	(121)	NONE THIS DATE.

FORM REVISION DATE NEW 15 APRIL 1963

SECTION II

ACCEPTANCE TEST LOG

COMPONENT ACCEPTANCE TEST LOG

MODEL NUMBER	CONTRACT NUMBER	McDONNELL SCD NUMBER
SE-6	Y20161R	52-52700-201

PART NUMBER	PART NAME	SERIAL NUMBER	SPECIFICATION NUMBER	REVISION
NA5-28082T1	Cartridge	214	NA5-28082	F

	Limits	
Bridgewire Resistance Test (Ref: Para. 4.5.2.1)		
(a) Pin "A" to Pin "B"	1.1 ± 0.2 OHMS	1.13
(b) Pin "D" to Pin "E"	1.1 ± 0.2 OHMS	1.07
Dielectric Test (Ref: Para. 4.5.2.2.)		
Pins "A" and "B" to Body	1 Milliampere Max.	NONE DET.
Pins "D" and "E" to Body		NONE DET.
Pins "A" and "B" to Pins "D" and "E"		NONE DET.
Insulation Resistance (Ref: Para. 4.5.2.3)		
Pins "A" and "B" to Body	50 Megohms Min.	INFINITY
Pins "D" and "E" to Body		INFINITY
Pins "A" and "B" to Pins "D" and "E"		INFINITY
Leakage Test (Ref: Para. 4.5.2.4)		
Radiflo Gross Leakage	30 counts/Sec. Max.	LESS THAN 30
Leakage	10^{-6} Scc/Sec. Max.	LESS THAN $1X10^{-6}$

Lot Number	186	B-895	X-Ray Film Number
Lot Sample Size	6	.07	Lb. Weight less Guard 0.15 lbs. Max.
Lot Size	33	4Q63	Date of Mfg.

ILSP

COMPONENT ACCEPTANCE TEST LOG

MODEL NUMBER	CONTRACT NUMBER	McDONNELL SCD NUMBER
SE-6	Y20161R	52-52700-201

PART NUMBER	PART NAME	SERIAL NUMBER	SPECIFICATION NUMBER	REVISION
NA5-28082T1	Cartridge	238	NA5-28082	F

	Limits	
Bridgewire Resistance Test (Ref: Para. 4.5.2.1)		
(a) Pin "A" to Pin "B"	1.1 ± 0.2 OHMS	1.11
(b) Pin "D" to Pin "E"	1.1 ± 0.2 OHMS	1.05
Dielectric Test (Ref: Para. 4.5.2.2.)		
Pins "A" and "B" to Body	1 Milliampere Max.	NONE DET.
Pins "D" and "E" to Body		NONE DET.
Pins "A" and "B" to Pins "D" and "E"		NONE DET.
Insulation Resistance (Ref: Para. 4.5.2.3)		
Pins "A" and "B" to Body	50 Megohms Min.	INFINITY
Pins "D" and "E" to Body		INFINITY
Pins "A" and "B" to Pins "D" and "E"		INFINITY
Leakage Test (Ref: Para. 4.5.2.4)		
Radiflo Gross Leakage	30 counts/Sec. Max.	LESS THAN 30
Leakage	10^{-6} Scc/Sec. Max.	LESS THAN 1×10^{-6}

Lot Number	186	B-895	X-Ray Film Number
Lot Sample Size	6	.07	Lb. Weight less Guard 0.15 lbs. Max.
Lot Size	33	4Q63	Date of Mfg.

INSP

R-15075-1

COMPONENT ACCEPTANCE TEST LOG

MODEL NUMBER	CONTRACT NUMBER	McDONNELL SCD NUMBER
SE-6	Y20161R	52-52700-201

PART NUMBER	PART NAME	SERIAL NUMBER	SPECIFICATION NUMBER	REVISION
NA5-28082T1	Cartridge	239	NA5-28082	F

	Limits	
Bridgewire Resistance Test (Ref: Para. 4.5.2.1)		
(a) Pin "A" to Pin "B"	1.1 ± 0.2 OHMS	1.06
(b) Pin "D" to Pin "E"	1.1 ± 0.2 OHMS	1.03
Dielectric Test (Ref: Para. 4.5.2.2.)		
Pins "A" and "B" to Body	1 Milliampere Max.	NONE DET.
Pins "D" and "E" to Body		NONE DET.
Pins "A" and "B" to Pins "D" and "E"		NONE DET.
Insulation Resistance (Ref: Para. 4.5.2.3)		
Pins "A" and "B" to Body	50 Megohms Min.	INFINITY
Pins "D" and "E" to Body		INFINITY
Pins "A" and "B" to Pins "D" and "E"		INFINITY
Leakage Test (Ref: Para. 4.5.2.4)		
Radiflo Gross Leakage	30 counts/Sec. Max.	LESS THAN 30
Leakage	10^{-6} Scc/Sec. Max.	LESS THAN $1X10^{-6}$

Lot Number	186	B-895	X-Ray Film Number
Lot Sample Size	6	.07	Lb. Weight less Guard 0.15 lbs. Max.
Lot Size	33	4Q63	Date of Mfg.

INSP

(24024)

COMPONENT ACCEPTANCE TEST LOG

MODEL NUMBER	CONTRACT NUMBER	McDONNELL SCD NUMBER
SE-6	Y20161R	52-52700-201

PART NUMBER	PART NAME	SERIAL NUMBER	SPECIFICATION NUMBER	REVISION
NA5-28082T1-	Cartridge	241	NA5-28082	F

	Limits	
Bridgewire Resistance Test (Ref: Para. 4.5.2.1)		
(a) Pin "A" to Pin "B"	1.1 ± 0.2 OHMS	1.13
(b) Pin "D" to Pin "E"	1.1 ± 0.2 OHMS	1.03
Dielectric Test (Ref: Para. 4.5.2.2.)		
Pins "A" and "B" to Body	1 Milliampere Max.	NONE DET.
Pins "D" and "E" to Body		NONE DET.
Pins "A" and "B" to Pins "D" and "E"		NONE DET.
Insulation Resistance (Ref: Para. 4.5.2.3)		
Pins "A" and "B" to Body	50 Megohms Min.	INFINITY
Pins "D" and "E" to Body		INFINITY
Pins "A" and "B" to Pins "D" and "E"		INFINITY
Leakage Test (Ref: Para. 4.5.2.4)		
Radiflo Gross Leakage	30 counts/Sec. Max.	LESS THAN 30
Leakage	10^{-6} Scc/Sec. Max.	LESS THAN $1X10^{-6}$

Lot Number	186	B-895	X-Ray Film Number
Lot Sample Size	6	.07	Lb. Weight less Guard 0.15 lbs. Max.
Lot Size	33	4Q63	Date of Mfg.

ILSP _____

COMPONENT ACCEPTANCE TEST LOG

MODEL NUMBER	CONTRACT NUMBER	McDONNELL SCD NUMBER
SE-6	Y20161R	52-52700-201

PART NUMBER	PART NAME	SERIAL NUMBER	SPECIFICATION NUMBER	REVISION
NA5-28082T1	Cartridge	256	NA5-28082	F

	Limits	
Bridgewire Resistance Test (Ref: Para. 4.5.2.1)		
(a) Pin "A" to Pin "B"	1.1 ± 0.2 OHMS	1.08
(b) Pin "D" to Pin "E"	1.1 ± 0.2 OHMS	1.09
Dielectric Test (Ref: Para. 4.5.2.2.)		
Pins "A" and "B" to Body	1 Milliampere Max.	NONE DET.
Pins "D" and "E" to Body		NONE DET.
Pins "A" and "B" to Pins "D" and "E"		NONE DET.
Insulation Resistance (Ref: Para. 4.5.2.3)		
Pins "A" and "B" to Body	50 Megohms Min.	INFINITY
Pins "D" and "E" to Body		INFINITY
Pins "A" and "B" to Pins "D" and "E"		INFINITY
Leakage Test (Ref: Para. 4.5.2.4)		
Radiflo Gross Leakage	30 counts/Sec. Max.	LESS THAN 30
Leakage	10^{-6} Scc/Sec. Max.	LESS THAN $1X10^{-6}$

Lot Number	186	B-895	X-Ray Film Number
Lot Sample Size	6	.07	Lb. Weight less Guard 0.15 lbs. Max.
Lot Size	33	4Q63	Date of Mfg.

INSP_____

"CERTIFICATION IS HEREBY GIVEN THAT THE DELIVERABLE END ITEM COVERED BY THIS LOG BOOK WAS MANUFACTURED, INSPECTED AND TEST IN ACCORDANCE WITH PRESCRIBED DRAWINGS, SPECIFICATION AND QUALITY ASSURANCE PROVISIONS. INSPECTION AND TEST RECORDS ARE ON FILE VERIFYING COMPLIANCE WITH APPLICABLE DRAWINGS AND SPECIFICATIONS, EXCEPT AS NOTED HEREIN."

LOG BOOK ACCEPTANCE

DAT UNIT

SPACECRAFT ENGINE DIV. QUALITY CONTROL	QUALITY REPRESENTATIVE	GOV'T INSPECTION AGENCY QUALITY REPRESENTATIVE
Virgil W. Craig	J. E. Griffith	Nicholas J. Kelice
DATE 4-27-65	DATE 4-27-65	DATE 27 APR 65

CONTENTS

SECTION I-DELIVERABLE END ITEM ASSEMBLY LOG

RECORDS CONTAINED IN THIS SECTION ARE PERTINENT TO THE DELIVERABLE END ITEM ACCEPTANCE AND ALSO INCLUDE MODEL CONFIGURATION DATA, PERTINENT DETAILS OF SHORT SHIPMENTS, COMPONENT VARIATIONS, AGE SENSITIVE PARTS RECORD, WEIGHT AND SERIALIZATION RECORDS.

SECTION II – ACCEPTANCE TEST LOG

RECORDS OF ASSEMBLY ACCEPTANCE TESTS ARE PRESENTED IN THIS SECTION WITH PERFORMANCE DATA AND SUMMARY DATA ON INSPECTIONS AND ACCEPTANCE.

GENERAL INFORMATION

THIS LOG BOOK IS PROVIDED FOR SERVICE USE IN RECORDING PERTINENT HISTORICAL DATA AND ALL CHANGES FROM THE ORIGINAL CONFIGURATION. IT IS REQUESTED THIS LOG BOOK ACCOMPANY THE DELIVERABLE END ITEM WHEN TRANSFERRED BETWEEN ROCKETDYNE AND USING AGENCIES.

ROCKETDYNE
A DIVISION OF NORTH AMERICAN AVIATION, INC.
SPACECRAFT ENGINE DIVISION

LOG BOOK SPECIFICS

	ITEM	ROCKETDYNE
	LOG BOOK DATE	26 APRIL 1965
	DWG CHG LTR	DNA
Y20161R	CONTRACT NO	
	GEN ORDER NO.	5252
SCD52-52701-233	SPEC NO.	
DNA	SERIAL NO.	041
52-52701-233	PART NO.	NA5-28088T1

SE- 7 DELIVERABLE END ITEM - LOG BOOK IDENTIFICATION

PART NAME CARTRIDGE

1.0

R-15075-1

DELIVERABLE END ITEM

THIS LOG BOOK CONTAINS INFORMATION PERTINENT TO THE DELIVERABLE END ITEM AS SPECIFIED HEREIN BY SERIAL NUMBER AND PART NUMBER. IT IS NECESSARY THAT ALL ENTRIES BE WRITTEN IN INK OR TYPED FOR PERMANENT RECORD. ENTRIES SUCH AS SERIALIZATION, WEIGHT, APPLICABLE MCR'S, ACCEPTANCE TEST DATA AND CALIBRATION DATA WILL BE ENTERED BY ROCKETDYNE AT THE TIME OF DELIVERY.

IT IS REQUESTED THAT THIS LOG BOOK ACCOMPANY THIS DELIVERABLE END ITEM IF THE ITEM IS RETURNED TO ROCKETDYNE FOR REPAIR, MODIFICATION OR RETEST. ROCKETDYNE WILL THEN ENTER REPAIR, MODIFICATION AND RETEST DATA IN THIS LOG BOOK.

THE FORMAT OF PAGES IN THIS LOG BOOK SHALL NOT BE REVISED WITHOUT OBTAINING APPROVAL OF ROCKETDYNE SPACE ENGINES PROGRAM OFFICE, QUALITY CONTROL, AND THE CUSTOMER REPRESENTATIVE.

DATE	PROGRAM OFFICE	QUALITY ASSURANCE	PURCHASER
25 JAN 1965	W. E. McCravey	Virgil W. Craig	[illegible]

52-52701-233 PART NO. IM5-28088T1

PART NAME CARTRIDGE

2.0

1.0 LOG BOOK IDENTIFICATION

2.0 FOREWORD

3.0 CONTENTS

4.0 MODULE/COMPONENT ASSEMBLY LOG - SECTION I

4.1 CONFIGURATION & SERIALIZATION LOG

4.2 REPLACEMENT LOG

* 4.3 MCR VERIFICATION

4.4 VARIATION

5.0 COMPONENT ACCEPTANCE TEST LOG - SECTION II

5.1 COMPONENT ACCEPTANCE TEST

5.1.1 COMPONENT ACCEPTANCE TEST

* NOT REQUIRED. CONFIGURATION CONTROLLED BY PART NUMBER CHANGE.

SECTION I

52-52701-233 PART NO. NA5-28088T1

SE-7 MODULE / COMPONENT ASSEMBLY LOG

PART NAME CARTRIDGE 4.0

184

PART NO.	PART NAME	SERIAL NO.	PLAN NO.	AGE CONT.	LOT NO.	INSP	REMARKS
NA5-28088T1	CARTRIDGE	041	B05658-4	4Q63	185	ANR 498	

R-15075-1

DNA SERIAL NO. 041

52-52701-233 PART NO. NA5-28088T1

SE-7 CONFIGURATION & SERIALIZATION LOG

PART NAME CARTRIDGE

4.1

R-15075-1

PART NO.	PART NAME	SERIAL NO.	REASON FOR REPLACEMENT	REPLACED BY		INSP.
				PART NO.	SERIAL NO.	
			NONE THIS DATE - 26 APRIL 1965			ANR 498

185

DNA	SERIAL NO.	041	
52-52701-233	PART NO.	NA5-28088T1	
SE-7 DELIVERABLE END ITEM--REPLACEMENT LOG	PART NAME	CARTRIDGE	4.2

MR NO.	PART OR COMP. INVOLVED	PART NUMBER	SERIAL NUMBER	BRIEF DESCRIPTION OF VARIATION AND MATERIAL REVIEW BOARD DISPOSITION	INSP.
		NA5-28088T1	041	(INFORMATION ONLY) THIS PART WAS INSTALLED INTO THE COMPONENT PACKAGE "E" OF OAMS SPACECRAFT 3 SYSTEM DAT AND WAS SUBJECTED TO TESTING AS REQUIRED PER SAID DAT PROCEDURE. AT THE CONCLUSION OF THIS TESTING IT WAS REMOVED AND RETURNED TO THE SUPPLIER FOR REWORK PER ROCKETDYNE PURCHASE ORDER S52BH0120477.	

DNA 52-52701-233 SERIAL NO. 041 PART NO. NA5-28088T1

SE-7 DELIVERABLE END ITEM — VARIATION LOG

PART NAME CARTRIDGE

4.4

SECTION II

52-52701-233 PART NO. NA5-28088T1

SE- 7 COMPONENT ACCEPTANCE TEST LOG

PART NAME CARTRIDGE

5.0

PERFORMANCE PARAMETERS	PARAGRAPH NUMBER	UNITS	SPECIFICATION LIMITS	ACCEPTANCE TEST DATA	INSP.
BRIDGEWIRE RESISTANCE	4.5.2.1				
CURRENT NOT TO EXCEED 0.02 AMPERE					
(A) PINS "B" AND "C"		OHMS	1.1 ± 0.2	1.05	ANR 498
(B) PINS "E" AND "F"		OHMS	1.1 ± 0.2	1.06	ANR 498
DIELECTRIC TEST	4.5.2.2				
FIVE HUNDRED (500) VAC (RMS) AT A FREQUENCY OF 60 CPS APPLIED BETWEEN THE FOLLOWING					
(A) PINS "B" AND "C" AND THE CARTRIDGE BODY		MILLIAMPERE	1 MAX.	NONE DETECTED	ANR 498
(B) PINS "E" AND "F" AND THE CARTRIDGE BODY		MILLIAMPERE	1 MAX.	NONE DETECTED	ANR 498
(C) PINS "B" AND "C" AND PINS "E" AND "F"		MILLIAMPERE	1 MAX.	NONE DETECTED	ANR 498
INSULATION RESISTANCE	4.5.2.3				
FIVE HUNDRED (500) VOLTS DC APPLIED ALTERNATELY FOR ONE MINUTE EACH					
(A) PINS "B" AND "C" AND THE CARTRIDGE BODY		MEGOHMS	50 MIN.	INFINITY	ANR 498
(B) PINS "E" AND "F" AND THE CARTRIDGE BODY		MEGOHMS	50 MIN.	DNA	ANR 498
(C) PINS "B" AND "C" AND PINS "E" AND "F"		MEGOHMS	50 MIN.	INFINITY	ANR 498
LEAKAGE TEST	4.5.2.4				
(A) RADIFLO GROSS LEAKAGE		COUNTS/SEC.	30 MAX.	< 30	ANR 498
(B) LEAKAGE		SCC/SEC.	10^{-6} MAX.	< 10^{-6}	ANR 498

DNA SERIAL NO. 041

52-52701-233 PART NO. NAS-28088T1

SE-7 COMPONENT ACCEPTANCE TEST

PART NAME CARTRIDGE

5.1

PERFORMANCE PARAMETERS	PARAGRAPH NUMBER	UNITS	SPECIFICATION LIMITS	ACCEPTANCE TEST DATA	INSP.
LOT AND SAMPLING IDENTIFICATION	4.5.3				
LOT NUMBER				185	ANR 498
LOT SIZE				16	ANR 498
LOT SAMPLE SIZE				4	ANR 498
X-RAY FILM NUMBER				F98	ANR 498
TOTAL WEIGHT LESS GUARD		LBS	0.15 MAX.	.10	ANR 498
DATE OF MFG.				4Q63	ANR 498

DNA SERIAL NO. 041

52-52701-233 PART NO. NA5-28088T1

SE-7 COMPONENT ACCEPTANCE TEST

PART NAME CARTRIDGE

5.1.3

190

MODULE/COMPONENT LOG BOOK IDENTIFICATION

MANUFACTURER	ROCKETDYNE, A DIVISION OF NORTH AMERICAN AVIATION, INC.
MC DONNELL SCD NUMBER	52-52700-177 ROCKETDYNE PART NUMBER NA5-28070T2
NOMENCLATURE	PRESSURE REGULATOR, PNEUMATIC (DAT)
CONTRACT NUMBER	Y20161R
WEIGHT	2.48 LBS.
DRAWING CHANGE LETTER	DNA
DATE	9 JULY 1964

"Certification is hereby given that the Module/Component covered by this Log Book was manufactured, inspected and tested in accordance with subject drawings, specifications and Quality Assurance provisions except as recorded here-in."

ROCKETDYNE QUALITY ASSURANCE	MC DONNELL QUALITY REPRESENTATIVE	GOV'T INSPECTION AGENCY QUALITY REPRESENTATIVE
7/9/64 S. N. Cutrey	9 July 64 Lonnie L. Jones	9 July 1964 Wm C Moore

PART NO. NA5-28070T2

SERIAL NO. 132

R-15075-1

FOREWORD

MODULE/COMPONENT LOG BOOK

THIS BOOK CONTAINS INFORMATION PERTINENT TO THE MODULE/COMPONENT AS SPECIFIED HEREIN BY SERIAL NUMBER AND MODEL NUMBER. IT IS NECESSARY THAT ALL ENTRIES BE WRITTEN IN INK OR TYPED FOR PERMANENT RECORD. ENTRIES SUCH AS CUSTODY, PRESERVATION, SERIALIZATION, APPLICABLE ENGINEERING CHANGE PROPOSALS, ACCEPTANCE RUN DATA, CALIBRATION AND WEIGHT DATA WILL BE ENTERED AND/OR INCLUDED BY ROCKETDYNE AT TIME OF DELIVERY. ENTRIES SUCH AS REWORK, KIT INSTALLATION, REMOVALS, VEHICLE MATING, ADDITIONAL STATIC FIRING TIME AND CUSTODY WILL BE MADE BY THE CUSTOMER.

IF FOR ANY REASON THIS MODULE/COMPONENT IS RETURNED TO ROCKETDYNE FOR MODIFICATION AND/OR REPAIRS, THIS LOG BOOK MUST ACCOMPANY THE MODULE/COMPONENT. MODIFICATION ENTRIES WILL BE ENTERED BY ROCKETDYNE AND CUSTODY RECORDS WILL BE MAINTAINED.

THE PAGES IN THIS LOG BOOK SHALL NOT BE REVISED WITHOUT OBTAINING APPROVAL OF THE ROCKETDYNE PROGRAM OFFICE, ROCKETDYNE QUALITY CONTROL, AND THE CUSTOMER REPRESENTATIVE.

THIS LOG BOOK IS APPROVED FOR USE ON:

PART NUMBER NA5-28070 T2 PART NAME PRESSURE REGULATOR, PNEUMATIC

DATE	PROGRAM OFFICE	QUALITY ASSURANCE	PURCHASER
13 NOV 1963	W. E. McCrivey	R. B. Smith	John S. Snider

GENERAL INFORMATION

THIS LOG BOOK IS PROVIDED FOR SERVICE USE IN RECORDING PERTINENT HISTORICAL DATA AND ALL CHANGES FROM THE ORIGINAL CONFIGURATION. IT SHALL ACCOMPANY THE MODULE/COMPONENT WHEN TRANSFERRED BETWEEN ROCKETDYNE AND USING AGENCIES. THIS LOG BOOK SHALL BE KEPT WITH THE VEHICLE RECORDS WHEN THE MODULE/COMPONENT IS INSTALLED IN A VEHICLE.

SECTION I - MODULE/COMPONENT ASSEMBLY LOG

RECORDS CONTAINED IN THIS SECTION ARE PERTINENT TO THE MODULE/COMPONENT ACCEPTANCE AND ALSO INCLUDES MODEL CONFIGURATION DATA, PERTINENT DETAILS OF SHORT SHIPMENTS, COMPONENT DEVIATIONS, AGE SENSITIVE PARTS RECORD AND WEIGHT RECORD.

SECTION II - ACCEPTANCE TEST LOG

RECORDS OF ASSEMBLY ACCEPTANCE TESTS ARE PRESENTED IN THIS SECTION WITH PERFORMANCE DATA AND SUMMARY DATA ON INSPECTIONS AND ACCEPTANCE.

FORM REVISION DATE REV 15 APRIL 1963

SECTION I

MODULE/COMPONENT ASSEMBLY LOG

MODULE COMPONENT SERIALIZATION LOG

MODEL NO.	CONTRACT NUMBER	McDONNELL SCO NUMBER
SE-6	X20161R	52-52700-177

PART NUMBER	COMPONENT	SERIAL NO.	PLAN NO.	LOT NO.	LTR CHG	DATE	INSP	REMARKS
NA5-28070T2	PRESSURE REG.	132	NONE	DNA	DNA	9JULY64	[illegible]	

R-15075-1

MODULE COMPONENT REPLACEMENT LOG

MODEL NO.	CONTRACT NUMBER	McDONNELL SCD NUMBER
SE-6	Y20161R	52-52700-177

PART NUMBER	COMPONENT	SERIAL NO.	PLAN NO.	LOT NO.	LTR CHG	DATE	INSP	REMARKS
MA5-280700T2	PRESSURE REG.	132	NONE	DNA	DNA	9JULY64	ACP 721	NONE THIS DATE

FORM REVISION DATE NEW 15 APRIL 1963

MCR VERIFICATION

PART NUMBER	MODEL NO.	CONTRACT NUMBER	SERIAL NUMBER	Mc DONNELL SCD NUMBER
KA5-28070T2	SE-6	Y20161R	132	52-52700-177

MCR/ECP NO.	DATE	TITLE	DATE	INSP.
SE6-8	20AUG63	PRESSURE REGULATED COMPONENTS; CHANGES TO	9JUL64	ANR 721
SE6-18	8JAN63	TEST POINTS; PROVISIONS FOR PERMANENT IDENTIFICATION	9JUL64	ANR 721
SE6-43	31MAY63	LUBRICANTS; REPLACEMENT OF	9JUL64	ANR 721
SE6-44	31MAY63	MOUNTING HOLE SIZES, RCS COMPONENT PACKAGES; CHANGES TO	9JUL64	ANR 721
SE6-062	6JAN64	COMPONENT CLEANING; PROVISION FOR	9JUL64	ANR 721
SE6-84	19AUG63	PRESSURE REGULATOR; REPLACEMENT OF	9JUL64	ANR 721
SE6-092	4FEB64	COMPONENT ALLOWABLE EXTERNAL LEAKAGE; REVISION OF	9JUL64	ANR 721
SE6-179	16JUN64	TUBE STUBS; MARKING OF	9JUL64	ANR 721

(19103)

R-15075-1

MODULE/COMPONENT VARIATION LOG

DATE 9JULY64

MODEL NO.	CONTRACT NO.	McDONNELL SCD NUMBER
SE-6	Y20161R	52-52700-177

PART NUMBER	PART NAME	SERIAL NUMBER	TYPE OF DISPOSITION
MA5-28070T2	PRESSURE REGULATOR, PNEUMATIC	132	NONE

VARIATION: NONE THIS DATE 9 JULY 1964

ACTION TAKEN:

INSP. (AN 721)

PART NUMBER	PART NAME	SERIAL NUMBER	TYPE OF DISPOSITION

VARIATION:

ACTION TAKEN:

INSP

PART NUMBER	PART NAME	SERIAL NUMBER	TYPE OF DISPOSITION

VARIATION:

ACTION TAKEN:

INSP

197

REVISION DATE NOV 8 MAY 1963

SECTION II

ACCEPTANCE TEST LOG

COMPONENT ACCEPTANCE TEST LOG

MODEL NUMBER	CONTRACT NUMBER	McDONNELL SCD NUMBER
SE-6	Y20161R	52-52700-177

PART NUMBER	PART NAME	SERIAL NUMBER	SPECIFICATION NUMBER	REVISION
NA5-28070T2	PRESSURE REGULATOR, PNEUMATIC	132	NA5-28070 T2	Q

PERFORMANCE TEST PARA. 4.2.2

PROOF PRESSURE TEST - PARA. 4.2.2.1

NO DEFORMATION AT 4500 PSIG, 500 PSIG, 320 PSIG

TEST	INLET PRESSURE GN_2			INLET PRESSURE HELIUM		
	405 ± 10	2000 ± 50	3800 ± 100	405 ± 10	2000 ± 50	3800 ± 100
STABILIZED LOCKUP PRESSURE	304.50	305.25	304.50	305	305	304.75
STABILIZED LOCKUP TEMPERATURE °F	70	70	70	70	70	70
FINAL LOCKUP PRESSURE	304.50	305.75	304.50	305.50	305.25	304.75
FINAL LOCKUP TEMPERATURE °F	70	70	70	70	70	70
CORRECTED LOCKUP PRESSURE	304.50	305.25	304.50	305	305	304.75
INTERNAL LEAKAGE SCC/HR	NONE DET.	3.0	NONE DET.	3.0	1.5	NONE DET.
EXTERNAL LEAKAGE SCC/SEC				$< 1x10^{-6}$	$< 1x10^{-6}$	$< 1x10^{-6}$

LEAKAGE PER PARA. 4.2.2.2

INTERNAL LEAKAGE 5 SCC/HR - GN_2 MAX, 12.5 SCC/HR - He MAX.

EXTERNAL LEAKAGE SHALL NOT EXCEED 10^{-6} SCC/SEC - He MAX.

PROOF PRESSURE - PARA. 4.2.2.2

$1.5x10^{-6}$ SCC/SEC - He MAX.

EXTERNAL LEAKAGE:

LESS THAN $1x10^{-6}$ SCC/SEC - He

INSP_____

COMPONENT ACCEPTANCE TEST LOG

MODEL NUMBER	CONTRACT NUMBER	McDONNELL SCD NUMBER
SE-6	Y20161R	52-52700-177

PART NUMBER	PART NAME	SERIAL NUMBER	SPECIFICATION NUMBER	REVISION
MA5-28070T2	PRESSURE REGULATOR, PNEUMATIC	132	MA5-28070T2	Q

PERFORMANCE TEST PARA. 4.2.2

FLOW AND REGULATION - PARA. 4.2.2.3 LIMITS - OUTLET PRESSURE 297 ± 10 PSIG

INLET PRESSURE PSIG	MEDIA - NITROGEN FLOW RATE (SCFM) AMBIENT TEMP 70 °F											
	0	1.7	3.3	5.0	6.6	8.4	8.4	6.6	5.0	3.3	1.7	0
405 ± 10	304.5	302	300.5	297.5	295.5	293	293	295.5	297.5	301	302	305
2000 ± 50	302.5	300.5	300	299.5	298	295.5	295.5	298	299.5	300.5	301	302.5
3000 ± 100	301	297.5	297	296	295	293.5	293.5	295.5	296.5	298	298.5	301.5

FLOW AND REGULATION - PARA. 4.2.2.3 LIMITS - OUTLET PRESSURE 297 ± 10 PSIG

INLET PRESSURE PSIG	MEDIA - HELIUM FLOW RATE (SCFM) AMBIENT TEMP ____ °F											
	0	4.6	8.7	13.3	17.4	20.9	20.9	17.4	13.3	8.7	4.6	0
405 ± 10												
2000 ± 50												
3000 ± 100												

INSP _____

COMPONENT ACCEPTANCE TEST LOG

MODEL NUMBER	CONTRACT NUMBER	McDONNELL SCD NUMBER
SE-6	Y20161R	52-52700-177

PART NUMBER	PART NAME	SERIAL NUMBER	SPECIFICATION NUMBER	REVISION
NA5-28070T2	PRESSURE REGULATOR, PNEUMATIC	132	NA5-28070 T2	Q

FLOW LIMITATION - ACCEPTANCE - PARA. 4.2.2.5
70 SCFM - GN_2 MAX., 190 SCFM - HE. MAX.

INLET PRESSURE	OUTLET TEMP °F	MEDIA	FLOW - SCFM MEASURED	FLOW - SCFM CORRECTED
3900	73	GN_2	26.0	25.94
3900	73	GN_2	26.2	25.96
3900	73	GN_2	26.4	25.98
3900	70	HE	79.0	79.0
3900	70	HE	79.0	79.0
3900	70	HE	80.0	80.0
50	68	GN_2	2.2	2.2
100	68		4.0	4.0
150	68		5.8	5.8
200	68		7.7	7.7
800	71		33.0	33.0
1000	71		40.0	40.0
1200	71		47.0	47.0
2000	71		49.0	49.0
3800	71		47.8	47.8
3800	71	GN_2	24.1	24.1
3800	70	GN_2	24.3	24.3
50	68	HE	5.3	5.3
100	68		10.6	10.6
150	68		15.4	15.4
200	68		20.6	20.6
800	68		88.0	88.16
1000	68		110.0	110.2
1200	68		127.0	127.24
2000	68		48.0	48.0
3800	68		80.3	80.3
3800	71	HE	81.0	81.0
3800	71	HE	80.6	80.6

CONTAMINANT LEVEL - PARA. 4.2.2.7.1

RANGE	LIMITS	TOTAL
5-10	*	.0001
11-25	100	20
26-50	20	6
51-100	5	1
101-300	1	0
>-300	0	0
FIBERS 300-3000	0	0
FIBERS > -3000	0	0

* TO BE COUNTED BUT NOT RESTRICTED TO NUMBER.

INSP _____

MODULE/COMPONENT LOG BOOK IDENTIFICATION

MANUFACTURER	ROCKETDYNE, A DIVISION OF NORTH AMERICAN AVIATION, INC.
MC DONNELL SCD NUMBER	52-52053-3 ROCKETDYNE PART NUMBER NA5-28078T3
NOMENCLATURE	VALVE, PROPELLANT SHUT-OFF, MOTOR OPERATED (DAT UNIT)
CONTRACT NUMBER	Y20161R
WEIGHT	2.25 LB.
DRAWING CHANGE LETTER	DNA
DATE	16 JUNE 1964

"Certification is hereby given that the Module/Component covered by this Log Book was manufactured, inspected and tested in accordance with subject drawings, specifications and Quality Assurance provisions except as recorded here-in."

ROCKETDYNE QUALITY ASSURANCE	MC DONNELL QUALITY REPRESENTATIVE	GOV'T INSPECTION AGENCY QUALITY REPRESENTATIVE
S.H. Cutter 6/16/64	6-16-64	16 JUNE 64

PART NO. NA5-28078T3

SERIAL NO. 114

FOREWARD

MODULE/COMPONENT LOG BOOK

THIS BOOK CONTAINS INFORMATION PERTINENT TO THE MODULE/COMPONENT AS SPECIFIED HEREIN BY SERIAL NO. AND MODEL NO. IT IS NECESSARY THAT ALL ENTRIES BE WRITTEN IN INK OR TYPED FOR PERMANENT RECORD. ENTRIES SUCH AS CUSTODY, PRESERVATION, SERIALIZATION, APPLICABLE E.C.P.'S, ACCEPTANCE RUN DATA, CALIBRATION, AND WEIGHT DATA WILL BE ENTERED AND/OR INCLUDED BY ROCKETDYNE AT TIME OF DELIVERY. ENTRIES SUCH AS REWORK, KIT INSTALLATION, REMOVALS, VEHICLE MATING, ADDITIONAL STATIC FIRING TIME AND CUSTODY WILL BE MADE BY THE CUSTOMER.

IF FOR ANY REASON THIS MODULE/COMPONENT IS RETURNED TO ROCKETDYNE FOR MODIFICATION AND/OR REPAIRS, THIS LOG BOOK MUST ACCOMPANY THE MODULE/COMPONENT. MODIFICATION ENTRIES WILL BE ENTERED BY ROCKETDYNE AND CUSTODY RECORDS WILL BE MAINTAINED.

THE PAGES IN THIS LOG BOOK SHALL NOT BE REVISED WITHOUT OBTAINING APPROVAL OF THE ROCKETDYNE PROGRAM OFFICE, ROCKETDYNE QUALITY CONTROL AND THE CUSTOMER REPRESENTATIVE.

THIS LOG BOOK IS APPROVED FOR USE ON:

PART NUMBER NA5-28078T3 PART NAME Valve, Propellant Shut-Off, Motor Operated

APPROVAL SIGNATURES

DATE	PROGRAM OFFICE	QUALITY ASSURANCE	PURCHASER
5/8/63	H. E. McCravey	J. D. Weir	John Snider

GENERAL INFORMATION

THIS LOG BOOK IS PROVIDED FOR SERVICE USE IN RECORDING PERTINENT HISTORICAL DATA AND ALL CHANGES FROM THE ORIGINAL CONFIGURATION. IT SHALL ACCOMPANY THE MODULE/COMPONENT WHEN TRANSFERRED BETWEEN ROCKETDYNE AND USING AGENCIES. THIS LOG BOOK SHALL BE KEPT WITH THE VEHICLE RECORDS WHEN THE MODULE/COMPONENT IS INSTALLED IN A VEHICLE.

SECTION I - MODULE/COMPONENT ASSEMBLY LOG

RECORDS CONTAINED IN THIS SECTION ARE PERTINENT TO THE MODULE/COMPONENT ACCEPTANCE AND ALSO INCLUDES MODEL CONFIGURATION DATA, PERTINENT DETAILS OF SHORT SHIPMENTS, COMPONENT DEVIATIONS, AGE SENSITIVE PARTS RECORD AND WEIGHT RECORD.

SECTION II - ACCEPTANCE TEST LOG

RECORDS OF ASSEMBLY ACCEPTANCE TESTS ARE PRESENTED IN THIS SECTION WITH PERFORMANCE DATA AND SUMMARY DATA ON INSPECTIONS AND ACCEPTANCE.

SECTION I

MODULE/COMPONENT ASSEMBLY LOG

MODULE COMPONENT SERIALIZATION LOG

MODEL NO.	CONTRACT NUMBER	McDONNELL SCD NUMBER
SE-7	Y20161R	52-52053-3

PART NUMBER	COMPONENT	SERIAL NO.	PLAN NO.	LOT NO.	LTR CHG	DATE	INSP	REMARKS
NA5-28078T3-1	S/O VALVE	114	B00855-1	DNA	DNA	16JUN64	AMR 721	2 Q 64

R-15075-1

MODULE COMPONENT REPLACEMENT LOG

MODEL NO.	CONTRACT NUMBER	McDONNELL SCO NUMBER
SE-7	Y20161R	52-52053-3

PART NUMBER	COMPONENT	SERIAL NO.	PLAN NO.	LOT NO.	LTR CHG	DATE	INSP	REMARKS
NA5-28078T3-1	S/O VALVE	114	B00855-1	DNA	DNA	16 JUN 64	121	NONE THIS DATE

FORM REVISION DATE NEW 15 APRIL 1963

MCR VERIFICATION

PART NUMBER	MODEL NO.	CONTRACT NUMBER	SERIAL NUMBER	Mc DONNELL SCD NUMBER
NA5-28078T3	SE-7	Y20161R	114	52-52053-3

MCR/ECP NO.	DATE	TITLE	DATE	INSP.
SE7-14	11JAN63	TEST POINTS; PROVISIONS FOR PERMANENT IDENTIFICATION	16JUN64	ANR 721
SE7-15	21AUG63	RESISTOFLEX FITTINGS; REPLACEMENT OF	16JUN64	ANR 721
SE7-22	19AUG63	PRESSURE REGULATED COMPONENTS; CHANGES TO	16JUN64	ANR 721
SE7-32	31MAY63	MOUNT HOLE SIZES, OAMS COMPONENT PACKAGES; CHANGES TO	16JUN64	ANR 721
SE7-37	31JUL63	DIMENSION, PROPELLANT SHUT-OFF VALVE; CHANGE TO	16JUN64	ANR 721
SE7-45	30JUL63	PROPELLANT SHUT-OFF VALVE, CONSTRUCTION MATERIALS; APPROVAL OF	16JUN64	ANR 721
SE7-46	13JUN63	PROPELLANT SHUT-OFF VALVE BELLOWS, CONSTRUCTION MATERIALS; APPROVAL OF	16JUN64	ANR 721
SE7-50	30JUL63	PROPELLANT SHUT-OFF VALVE DIMENSIONS; CHANGES TO	16JUN64	ANR 721
SE6-62	6JAN64	COMPONENT CLEANING; PROVISION FOR	16JUN64	ANR 721
SE7-74	23MAR64	TUBE STUBS; CHANGES TO	16JUN64	ANR 721
SE6-75	4FEB64	MAC REPORT 8518, INCORPORATION OF	16JUN64	ANR 721
SE6-130	7FEB64	"O" RING REQUIREMENTS, ELECTRICAL CONNECTORS	16JUN64	ANR 721
SE6-179	13MAR64	TUBE STUBS; MARKING OF	16JUN64	ANR 721

NASA 1/16

R-15075-1

MODULE/COMPONENT VARIATION LOG

DATE 16JUN64

MODEL NO.	CONTRACT NO.	McDONNELL SCO NUMBER
SE-7	Y20161R	52-52053-3

PART NUMBER	PART NAME	SERIAL NUMBER	TYPE OF DISPOSITION
NA5-28078T3-1	VALVE, PROP. SHUT-OFF, MTR. OPER.	114	23-H R16598

VARIATION: PINS ON ELECTRICAL RECEPTACLE ARE NOT IDENTIFIED PER SPEC NA5-27346 PARA. 3.5.2

ACTION TAKEN: OKAY TO USE AS IS. PER 23H #R16598

INSP. AKR 721

PART NUMBER	PART NAME	SERIAL NUMBER	TYPE OF DISPOSITION

VARIATION:

ACTION TAKEN:

INSP

PART NUMBER	PART NAME	SERIAL NUMBER	TYPE OF DISPOSITION

VARIATION:

ACTION TAKEN:

INSP

209

FORM REVISION DATE NEW 8 MAY 1963

SECTION II

ACCEPTANCE TEST LOG

R-15075-1

COMPONENT ACCEPTANCE TEST LOG

MODEL NUMBER	CONTRACT NUMBER	McDONNELL SCD NUMBER
SE-7	Y20161R	52-52053-3

PART NUMBER	PART NAME	SERIAL NUMBER	SPECIFICATION NUMBER	REVISION
NA5-28078T3	VALVE, PROPELLANT SHUT-OFF, MOTOR OPERATED	114	NA5-28078	P

PERFORMANCE TESTS PER PARA. 4.2.2

	LIMITS	ACTUAL RESULTS
LEAKAGE & CYCLE TESTS (PARA. 4.2.2.2)		
BELLOWS LEAKAGE: PARA. 4.2.2.2.1.1	$1x10^{-6}$ SCC/SEC MAX.	$1X10^{-6}$ SCC/SEC
BELLOWS LEAKAGE: PARA. 4.2.2.2.1.4	$1x10^{-6}$ SCC/SEC MAX.	$1X10^{-6}$ SCC/SEC
PROOF PRESSURE & EXTERNAL LEAKAGE: PARA. 4.2.2.2.2	$1x10^{-6}$ SCC/SEC MAX.	$1X10^{-6}$ SCC/SEC
INSULATION RESISTANCE (PARA. 4.2.2.3)		
ELECTRICAL CIRCUIT PARA. 4.2.2.3.1 RESISTANCE PINS A,B,C,D & E (GROUPED) TO CASE	10,000 MEGOHMS MIN.	75K MEGOHMS
LIMIT SWITCHES PARA. 4.2.2.3.2 RESISTANCE PIN A TO D (VALVE OPEN)	10,000 MEGOHMS MIN.	INFINITY MEGOHMS
RESISTANCE PIN B TO C (VALVE CLOSED)	10,000 MEGOHMS MIN.	INFINITY MEGOHMS
DIELECTRIC STRENGTH (PARA. 4.2.2.4)		
ELECTRICAL CIRCUIT PARA. 4.2.2.4.1 CURRENT LEAKAGE	1 MILLIAMPERE MAX.	<1 MILLIAMPERE
LIMIT SWITCHES PARA. 4.2.2.4.2 CURRENT LEAKAGE PIN A TO D (VALVE OPEN)	1 MILLIAMPERE MAX.	<1 MILLIAMPERE
CURRENT LEAKAGE PIN B TO C (VALVE CLOSED)	1 MILLIAMPERE MAX.	<1 MILLIAMPERE
MOTOR PARA. 4.2.2.4.3 CURRENT LEAKAGE PIN A TO E (VALVE MID-POSITION)	1 MILLIAMPERE MAX.	<1 MILLIAMPERE

211

INSP ANR 721

(0&O44)

212

COMPONENT ACCEPTANCE TEST LOG

MODEL NUMBER	CONTRACT NUMBER	McDONNELL SCD NUMBER
SE-7	Y20161R	52-52053-3

PART NUMBER	PART NAME	SERIAL NUMBER	SPECIFICATION NUMBER	REVISION
NA5-28078T3	VALVE, PROPELLANT SHUT-OFF, MOTOR OPERATED	114	NA5-28078	P

	LIMITS	ACTUAL RESULTS	
CONTACT RESISTANCE (PARA. 4.2.2.6)			
RESISTANCE BETWEEN PINS			
A AND D (VALVE MID-POSITION)	150 MILLIOHMS MAX.	39	MILLIOHMS
B AND C (VALVE MID-POSITION)	150 MILLIOHMS MAX.	48	MILLIOHMS
E AND D (VALVE FULL OPEN)	150 MILLIOHMS MAX.	41	MILLIOHMS
E AND C (VALVE FULL CLOSED)	150 MILLIOHMS MAX.	43	MILLIOHMS
VALVE HOUSING CONTINUITY (PARA. 4.2.2.7)			
RESISTANCE, PIN F TO HOUSING	50 MILLIOHMS MAX.	29	MILLIOHMS
POWER REQUIREMENTS (PARA. 4.2.2.8)			
POWER CONSUMPTION (STEADY STATE)			
A. @ 300 PSI PRESSURE, CLOSING	50 WATTS, MAX.	8.55	WATTS
B. @ 0 PSI PRESSURE, OPENING	50 WATTS, MAX.	4.05	WATTS
C. @ 300 PSI PRESSURE, CLOSING	50 WATTS, MAX.	5.88	WATTS
D. @ 0 PSI PRESSURE, OPENING	50 WATTS, MAX.	2.73	WATTS
OPERATING TIME (PARA. 4.2.2.9)			
A. TIME: OPEN TO CLOSE	12.0 SECONDS MAX.	2.85	SEC
B. TIME: CLOSE TO OPEN	12.0 SECONDS MAX.	2.0	SEC
C. TIME: OPEN TO CLOSE	12.0 SECONDS MAX.	4.3	SEC
D. TIME: CLOSE TO OPEN	12.0 SECONDS MAX.	3.05	SEC
FLOW TEST (PARA. 4.2.2.10)			
PRESSURE DIFFERENTIAL	3.0 PSI MAX.	2.20	PSI
SEAT LEAKAGE (PARA 4.2.2.13)			
HIGH PRESSURE POPPET SEAT LEAKAGE:	2.0 SCC/MIN He. MAX OR	NONE DET.	SCC/MIN He.
PARA. 4.2.2.13.1	* 5.0 SCC/HR H_2O MAX.	DNA	SCC/HR H_2O
LOW PRESSURE POPPET SEAT LEAKAGE:	2.0 SCC/MIN He. MAX. OR	NONE DET.	SCC/MIN He.
PARA. 4.2.2.13.2	* 5.0 SCC/HR H_2O MAX.	DNA	SCC/HR H_2O

*NOTE; IF HELIUM LEAKAGE RATE EXCEEDS 2.0 SCC/MIN REPEAT TEST USING WATER AS TEST FLUID.

INSP ANR 721

R-15075-1

(OLOLL)

R-15075-1

COMPONENT ACCEPTANCE TEST LOG

MODEL NUMBER	CONTRACT NUMBER	McDONNELL SCD NUMBER
SE-7	Y20161R	52-52053-3

PART NUMBER	PART NAME	SERIAL NUMBER	SPECIFICATION NUMBER	REVISION
NA5-28078T3	VALVE, PROPELLANT SHUT-OFF, MOTOR OPERATED	114	RA0615-003 AMEND. 1	B

CLASS 4, SOLID PARTICLE CONTAMINATION LEVEL

MICRON RANGE	LIMITS	ACTUAL COUNT
< - 10	*	
10 - 25	100	19
25 - 50	20	11
50 - 100	5	3
100 - 300	1	1
> - 300	0	0
FIBERS 300 - 3000	0	0
FIBERS > - 3000	0	0

*"NOT TO BE COUNTED BUT NO SLURRY OF FINE PARTICLES WHICH COVERS MORE THAN AN ESTIMATED 5 PERCENT OF THE TOTAL EFFECTIVE FILTER AREA SHALL BE ALLOWED." AT THE DISCRETION OF QUALITY ASSURANCE, A WEIGHT DETERMINATION OF TOTAL CONTAMINATION MAY BE MADE AS A REFEREE TEST IN BORDERLINE CASES. THE MAXIMUM ALLOWABLE WEIGHT OF CONTAMINANTS SHALL BE 0.001 GRAM (1 mg).

INSP ANR 721

213

(20044)

MODULE/COMPONENT LOG BOOK IDENTIFICATION

MANUFACTURER	ROCKETDYNE, A DIVISION OF NORTH AMERICAN AVIATION, INC.
MC DONNELL SCD NUMBER	52-52053-3 ROCKETDYNE PART NUMBER NA5-28078T3
NOMENCLATURE	VALVE, PROPELLANT SHUT-OFF, MOTOR OPERATED (DAT)
CONTRACT NUMBER	Y20161R
WEIGHT	2.25 LBS.
DRAWING CHANGE LETTER	DNA
DATE	16 JUNE 1964

"Certification is hereby given that the Module/Component covered by this Log Book was manufactured, inspected and tested in accordance with subject drawings, specifications and Quality Assurance provisions except as recorded here-in."

ROCKETDYNE QUALITY ASSURANCE	MC DONNELL QUALITY REPRESENTATIVE	GOV'T INSPECTION AGENCY QUALITY REPRESENTATIVE
S. N. Cutter 6/16/64	6/16/64	16 JUNE 64

PART NO.	NA5-28078T3
SERIAL NO.	115

FOREWARD

MODULE/COMPONENT LOG BOOK

THIS BOOK CONTAINS INFORMATION PERTINENT TO THE MODULE/COMPONENT AS SPECIFIED HEREIN BY SERIAL NO. AND MODEL NO. IT IS NECESSARY THAT ALL ENTRIES BE WRITTEN IN INK OR TYPED FOR PERMANENT RECORD. ENTRIES SUCH AS CUSTODY, PRESERVATION, SERIALIZATION, APPLICABLE E.C.P.'S, ACCEPTANCE RUN DATA, CALIBRATION, AND WEIGHT DATA WILL BE ENTERED AND/OR INCLUDED BY ROCKETDYNE AT TIME OF DELIVERY. ENTRIES SUCH AS REWORK, KIT INSTALLATION, REMOVALS, VEHICLE MATING, ADDITIONAL STATIC FIRING TIME AND CUSTODY WILL BE MADE BY THE CUSTOMER.

IF FOR ANY REASON THIS MODULE/COMPONENT IS RETURNED TO ROCKETDYNE FOR MODIFICATION AND/OR REPAIRS, THIS LOG BOOK MUST ACCOMPANY THE MODULE/COMPONENT. MODIFICATION ENTRIES WILL BE ENTERED BY ROCKETDYNE AND CUSTODY RECORDS WILL BE MAINTAINED.

THE PAGES IN THIS LOG BOOK SHALL NOT BE REVISED WITHOUT OBTAINING APPROVAL OF THE ROCKETDYNE PROGRAM OFFICE, ROCKETDYNE QUALITY CONTROL AND THE CUSTOMER REPRESENTATIVE.

THIS LOG BOOK IS APPROVED FOR USE ON:

PART NUMBER NA5-28078 T3 PART NAME Valve, Propellant Shut-Off, Motor Operated

APPROVAL SIGNATURES

DATE	PROGRAM OFFICE	QUALITY ASSURANCE	PURCHASER
5/8/63	W.E. McCravey	J.D. Weir	John Smiley

GENERAL INFORMATION

THIS LOG BOOK IS PROVIDED FOR SERVICE USE IN RECORDING PERTINENT HISTORICAL DATA AND ALL CHANGES FROM THE ORIGINAL CONFIGURATION. IT SHALL ACCOMPANY THE MODULE/COMPONENT WHEN TRANSFERRED BETWEEN ROCKETDYNE AND USING AGENCIES. THIS LOG BOOK SHALL BE KEPT WITH THE VEHICLE RECORDS WHEN THE MODULE/COMPONENT IS INSTALLED IN A VEHICLE.

SECTION I - MODULE/COMPONENT ASSEMBLY LOG

RECORDS CONTAINED IN THIS SECTION ARE PERTINENT TO THE MODULE/COMPONENT ACCEPTANCE AND ALSO INCLUDES MODEL CONFIGURATION DATA, PERTINENT DETAILS OF SHORT SHIPMENTS, COMPONENT DEVIATIONS, AGE SENSITIVE PARTS RECORD AND WEIGHT RECORD.

SECTION II - ACCEPTANCE TEST LOG

RECORDS OF ASSEMBLY ACCEPTANCE TESTS ARE PRESENTED IN THIS SECTION WITH PERFORMANCE DATA AND SUMMARY DATA ON INSPECTIONS AND ACCEPTANCE.

FORM REVISION DATE NEW 15 APRIL 1963

SECTION I

MODULE/COMPONENT ASSEMBLY LOG

MODULE COMPONENT SERIALIZATION LOG

MODEL NO.	CONTRACT NUMBER	McDONNELL SCD NUMBER
SE-7	Y20161R	52-52053-3

PART NUMBER	COMPONENT	SERIAL NO.	PLAN NO.	LOT NO.	LTR CHG	DATE	INSP	REMARKS
NA5-28078T3	S/O VALVE	115	B-00855-2	DNA	DNA	16JUNE64	(A-N 721)	2 0 64

R-15075-1

MODULE COMPONENT REPLACEMENT LOG

MODEL NO.	CONTRACT NUMBER	McDONNELL SCO NUMBER
SE-7	Y20161R	52-52053-3

PART NUMBER	COMPONENT	SERIAL NO.	PLAN NO.	LOT NO.	LTR CHG	DATE	INSP	REMARKS
NA5-28078T3	S/O VALVE	115	B-00855-2	DNA	DNA	16JUNE64	ANR 721	NONE THIS DATE

FORM REVISION DATE NEW 15 APRIL 1963

MCR VERIFICATION

PART NUMBER	MODEL NO.	CONTRACT NUMBER	SERIAL NUMBER	Mc DONNELL SCD NUMBER
NA5-28078T3	SE-7	Y20161R	115	52-52053-3

MCR/ECP NO.	DATE	TITLE	DATE	INSP.
SE7-14	11JAN63	TEST POINTS; PROVISIONS FOR PERMANENT IDENTIFICATION	16JUN64	ANR 721
SE7-15	21AUG63	RESISTOFLEX FITTINGS; REPLACEMENT OF	16JUN64	ANR 721
SE7-22	19AUG63	PRESSURE REGULATED COMPONENTS; CHANGES TO	16JUN64	ANR 721
SE7-32	31MAY63	MOUNT HOLE SIZES, OAMS COMPONENT PACKAGES; CHANGES TO	16JUN64	ANR 721
SE7-37	31JUL63	DIMENSION, PROPELLANT SHUT-OFF VALVE; CHANGE TO	16JUN64	ANR 721
SE7-45	30JUL63	PROPELLANT SHUT-OFF VALVE, CONSTRUCTION MATERIALS; APPROVAL OF	16JUN64	ANR 721
SE7-46	13JUN63	PROPELLANT SHUT-OFF VALVE BELLOWS, CONSTRUCTION MATERIALS; APPROVAL OF	16JUN64	ANR 721
SE7-50	30JUL63	PROPELLANT SHUT-OFF VALVE DIMENSIONS; CHANGES TO	16JUN64	ANR 721
SE6-62	6JAN64	COMPONENT CLEANING; PROVISION FOR	16JUN64	ANR 721
SE7-74	23MAR64	TUBE STUBS; CHANGES TO	16JUN64	ANR 721
SE6-75	4FEB64	MAC REPORT 8518, INCORPORATION OF	16JUN64	ANR 721
SE6-130	7FEB64	"O" RING REQUIREMENTS, ELECTRICAL CONNECTORS	16JUN64	ANR 721
SE6-179	13MAR64	TUBE STUBS; MARKING OF	16JUN64	ANR 721

R-15075-1

MODULE/COMPONENT VARIATION LOG

DATE 16 JUNE 64

MODEL NO.	CONTRACT NO.	McDONNELL SCO NUMBER
SE-7	Y20161R	52-52053-3

PART NUMBER	PART NAME	SERIAL NUMBER	TYPE OF DISPOSITION
NA5-28078T3	VALVE, PROPELLANT SHUT-OFF	115	23-H #R 16596

VARIATION: PINS ON ELECTRICAL RECEPTACLE ARE NOT IDENTIFIED PER SPEC. NA5-27346 PARA. 3.5.2

ACTION TAKEN: OK TO USE AS IS PER 23-H #R 16596

INSP. ANR 721

PART NUMBER	PART NAME	SERIAL NUMBER	TYPE OF DISPOSITION

VARIATION:

ACTION TAKEN:

INSP

PART NUMBER	PART NAME	SERIAL NUMBER	TYPE OF DISPOSITION

VARIATION:

ACTION TAKEN:

INSP

221

FORM REVISION DATE NOV 6 MAY 1963

SECTION II

ACCEPTANCE TEST LOG

R-15075-1

COMPONENT ACCEPTANCE TEST LOG

MODEL NUMBER	CONTRACT NUMBER	McDONNELL SCD NUMBER
SE-7	Y20161R	52-52053-3

PART NUMBER	PART NAME	SERIAL NUMBER	SPECIFICATION NUMBER	REVISION
NA5-28078T3	VALVE, PROPELLANT SHUT-OFF, MOTOR OPERATED	115	NA5-28078	P

PERFORMANCE TESTS PER PARA. 4.2.2

	LIMITS	ACTUAL RESULTS
LEAKAGE & CYCLE TESTS (PARA. 4.2.2.2)		
BELLOWS LEAKAGE: PARA. 4.2.2.2.1.1	$1x10^{-6}$ SCC/SEC MAX.	$<1x10^{-6}$ SCC/SEC
BELLOWS LEAKAGE: PARA. 4.2.2.2.1.4	$1x10^{-6}$ SCC/SEC MAX.	$<1x10^{-6}$ SCC/SEC
PROOF PRESSURE & EXTERNAL LEAKAGE: PARA. 4.2.2.2.2	$1x10^{-6}$ SCC/SEC MAX.	$<1x10^{-6}$ SCC/SEC
INSULATION RESISTANCE (PARA. 4.2.2.3)		
ELECTRICAL CIRCUIT PARA. 4.2.2.3.1 RESISTANCE PINS A,B,C,D & E (GROUPED) TO CASE	10,000 MEGOHMS MIN.	50K MEGOHMS
LIMIT SWITCHES PARA. 4.2.2.3.2 RESISTANCE PIN A TO D (VALVE OPEN)	10,000 MEGOHMS MIN.	INFINITY MEGOHMS
RESISTANCE PIN B TO C (VALVE CLOSED)	10,000 MEGOHMS MIN.	INFINITY MEGOHMS
DIELECTRIC STRENGTH (PARA. 4.2.2.4)		
ELECTRICAL CIRCUIT PARA. 4.2.2.4.1 CURRENT LEAKAGE	1 MILLIAMPERE MAX.	<1 MILLIAMPERE
LIMIT SWITCHES PARA. 4.2.2.4.2 CURRENT LEAKAGE PIN A TO D (VALVE OPEN)	1 MILLIAMPERE MAX.	<1 MILLIAMPERE
CURRENT LEAKAGE PIN B TO C (VALVE CLOSED)	1 MILLIAMPERE MAX.	<1 MILLIAMPERE
MOTOR PARA. 4.2.2.4.3 CURRENT LEAKAGE PIN A TO E (VALVE MID-POSITION)	1 MILLIAMPERE MAX.	- .03 MILLIAMPERE

INSP

223

(0504b)

COMPONENT ACCEPTANCE TEST LOG

224

MODEL NUMBER	CONTRACT NUMBER	McDONNELL SCD NUMBER
SE-7	Y20161R	52-52053-3

PART NUMBER	PART NAME	SERIAL NUMBER	SPECIFICATION NUMBER	REVISION
NA5-28078T3	VALVE, PROPELLANT SHUT-OFF, MOTOR OPERATED	115	NA5-28078	P

	LIMITS	ACTUAL RESULTS	
CONTACT RESISTANCE (PARA. 4.2.2.6)			
RESISTANCE BETWEEN PINS			
A AND D (VALVE MID-POSITION)	150 MILLIOHMS MAX.	39	MILLIOHMS
B AND C (VALVE MID-POSITION)	150 MILLIOHMS MAX.	41	MILLIOHMS
E AND D (VALVE FULL OPEN)	150 MILLIOHMS MAX.	41	MILLIOHMS
E AND C (VALVE FULL CLOSED)	150 MILLIOHMS MAX.	44	MILLIOHMS
VALVE HOUSING CONTINUITY (PARA. 4.2.2.7)			
RESISTANCE, PIN F TO HOUSING	50 MILLIOHMS MAX.	26	MILLIOHMS
POWER REQUIREMENTS (PARA. 4.2.2.8)			
POWER CONSUMPTION (STEADY STATE)			
A. @ 300 PSI PRESSURE, CLOSING	50 WATTS, MAX.	8.70	WATTS
B. @ 0 PSI PRESSURE, OPENING	50 WATTS, MAX.	4.05	WATTS
C. @ 300 PSI PRESSURE, CLOSING	50 WATTS, MAX.	5.57	WATTS
D. @ 0 PSI PRESSURE, OPENING	50 WATTS, MAX.	2.94	WATTS
OPERATING TIME (PARA. 4.2.2.9)			
A. TIME: OPEN TO CLOSE	12.0 SECONDS MAX.	2.85	SEC
B. TIME: CLOSE TO OPEN	12.0 SECONDS MAX.	2.1	SEC
C. TIME: OPEN TO CLOSE	12.0 SECONDS MAX.	4.8	SEC
D. TIME: CLOSE TO OPEN	12.0 SECONDS MAX.	3	SEC
FLOW TEST (PARA. 4.2.2.10)			
PRESSURE DIFFERENTIAL	3.0 PSI MAX.	2.10	PSI
SEAT LEAKAGE (PARA 4.2.2.13)			
HIGH PRESSURE POPPET SEAT LEAKAGE:	2.0 SCC/MIN He. MAX OR	NONE DET.	SCC/MIN He.
PARA. 4.2.2.13.1	* 5.0 SCC/HR H_2O MAX.	DNA	SCC/HR H_2O
LOW PRESSURE POPPET SEAT LEAKAGE:	2.0 SCC/MIN He. MAX. OR	NONE DET.	SCC/MIN He.
PARA. 4.2.2.13.2	* 5.0 SCC/HR H_2O MAX.	DNA	SCC/HR H_2O

*NOTE; IF HELIUM LEAKAGE RATE EXCEEDS 2.0 SCC/MIN REPEAT TEST USING WATER AS TEST FLUID.

INSP. ANR 721

R-15075-1

(0404)

R-15075-1

COMPONENT ACCEPTANCE TEST LOG

MODEL NUMBER	CONTRACT NUMBER	McDONNELL SCD NUMBER
SE-7	Y20161R	52-52053-3

PART NUMBER	PART NAME	SERIAL NUMBER	SPECIFICATION NUMBER	REVISION
NA5-28078T3	VALVE, PROPELLANT SHUT-OFF	115	RA0615-003 AMEND. 1	B

CLASS 4, SOLID PARTICLE CONTAMINATION LEVEL

MICRON RANGE	LIMITS	ACTUAL COUNT
< - 10	*	
10 - 25	100	33
25 - 50	20	11
50 - 100	5	4
100 - 300	1	0
> - 300	0	0
FIBERS 300 - 3000	0	0
FIBERS > - 3000	0	0

"NOT TO BE COUNTED BUT NO SLURRY OF FINE PARTICLES WHICH COVERS MORE THAN AN ESTIMATED 5 PERCENT OF THE TOTAL EFFECTIVE FILTER AREA SHALL BE ALLOWED." AT THE DISCRETION OF QUALITY ASSURANCE, A WEIGHT DETERMINATION OF TOTAL CONTAMINATION MAY BE MADE AS A REFEREE TEST IN BORDERLINE CASES. THE MAXIMUM ALLOWABLE WEIGHT OF CONTAMINANTS SHALL BE 0.001 GRAM (1 mg).

INSP

225

(20044)

MODULE/COMPONENT LOG BOOK IDENTIFICATION

MANUFACTURER	ROCKETDYNE, A DIVISION OF NORTH AMERICAN AVIATION, INC.
MC DONNELL SCD NUMBER	52-52701-169 ROCKETDYNE PART NUMBER 103654
NOMENCLATURE	PRESSURANT TANK ASSEMBLY (DAT UNIT #3)
CONTRACT NUMBER	Y20161R
WEIGHT	18.57
DRAWING CHANGE LETTER	D
DATE	16 MARCH 1964

"Certification is hereby given that the Module/Component covered by this Log Book was manufactured, inspected and tested in accordance with subject drawings, specifications and Quality Assurance provisions except as recorded here-in."

ROCKETDYNE QUALITY ASSURANCE	MC DONNELL QUALITY REPRESENTATIVE	U.S. AIR FORCE QUALITY REPRESENTATIVE
Wm E Kurtz 3/18/64	J. E. Cohen 3/19/64	3-19-64 Bernard A Duffy

PART NO. 103654

SERIAL NO. 4051910

FOREWORD

MODULE/COMPONENT LOG BOOK

THIS BOOK CONTAINS INFORMATION PERTINENT TO THE MODULE/COMPONENT AS SPECIFIED HEREIN BY SERIAL NUMBER AND MODEL NUMBER. IT IS NECESSARY THAT ALL ENTRIES BE WRITTEN IN INK OR TYPED FOR PERMANENT RECORD. ENTRIES SUCH AS CUSTODY, PRESERVATION, SERIALIZATION, APPLICABLE ENGINEERING CHANGE PROPOSALS, ACCEPTANCE RUN DATA, CALIBRATION AND WEIGHT DATA WILL BE ENTERED AND/OR INCLUDED BY ROCKETDYNE AT TIME OF DELIVERY. ENTRIES SUCH AS REWORK, KIT INSTALLATION, REMOVALS, VEHICLE MATING, ADDITIONAL STATIC FIRING TIME AND CUSTODY WILL BE MADE BY THE CUSTOMER.

IF FOR ANY REASON THIS MODULE/COMPONENT IS RETURNED TO ROCKETDYNE FOR MODIFICATION AND/OR REPAIRS, THIS LOG BOOK MUST ACCOMPANY THE MODULE/COMPONENT. MODIFICATION ENTRIES WILL BE ENTERED BY ROCKETDYNE AND CUSTODY RECORDS WILL BE MAINTAINED.

THE PAGES IN THIS LOG BOOK SHALL NOT BE REVISED WITHOUT OBTAINING APPROVAL OF THE ROCKETDYNE PROGRAM OFFICE, ROCKETDYNE QUALITY CONTROL, AND THE CUSTOMER REPRESENTATIVE.

THIS LOG BOOK IS APPROVED FOR USE ON:

PART NUMBER 103654 PART NAME PRESSURANT TANK

DATE	PROGRAM OFFICE	QUALITY ASSURANCE	PURCHASER
13 NOV 1963	W. E. McGrew	R. B. Smith	John S. Snider

GENERAL INFORMATION

THIS LOG BOOK IS PROVIDED FOR SERVICE USE IN RECORDING PERTINENT HISTORICAL DATA AND ALL CHANGES FROM THE ORIGINAL CONFIGURATION. IT SHALL ACCOMPANY THE MODULE/COMPONENT WHEN TRANSFERRED BETWEEN ROCKETDYNE AND USING AGENCIES. THIS LOG BOOK SHALL BE KEPT WITH THE VEHICLE RECORDS WHEN THE MODULE/COMPONENT IS INSTALLED IN A VEHICLE.

SECTION I - MODULE/COMPONENT ASSEMBLY LOG

RECORDS CONTAINED IN THIS SECTION ARE PERTINENT TO THE MODULE/COMPONENT ACCEPTANCE AND ALSO INCLUDES MODEL CONFIGURATION DATA, PERTINENT DETAILS OF SHORT SHIPMENTS, COMPONENT DEVIATIONS, AGE SENSITIVE PARTS RECORD AND WEIGHT RECORD.

SECTION II - ACCEPTANCE TEST LOG

RECORDS OF ASSEMBLY ACCEPTANCE TESTS ARE PRESENTED IN THIS SECTION WITH PERFORMANCE DATA AND SUMMARY DATA ON INSPECTIONS AND ACCEPTANCE.

SECTION I

MODULE/COMPONENT ASSEMBLY LOG

MODULE COMPONENT SERIALIZATION LOG

MODEL NO.	CONTRACT NUMBER	McDONNELL SCO NUMBER
SE-6	Y20161R	52-52701-169

PART NUMBER	COMPONENT	SERIAL NO.	PLAN NO.	LOT NO.	LTR CHG	DATE	INSP	REMARKS
103654	PRESS. TANK	8253648	A32758-6	DNA	C	16 MAR 64	208	

MCR VERIFICATION

PART NUMBER	MODEL NO.	CONTRACT NUMBER	SERIAL NUMBER	Mc DONNELL SCD NUMBER
103654	SE-7	Y20161R	4051910	52-52701-169

MCR/ECP NO.	DATE	TITLE	DATE	DISP.
SE7-36	31MAY63	DIMENSIONS AND VOLUME, PRESSURANT TANK; CHANGES TO	16MAR64	
SE6-62	6JAN64	COMPONENT CLEANING; PROVISION FOR	16MAR64	

MODULE/COMPONENT VARIATION LOG

DATE 16 MAR 64

MODEL NO.	CONTRACT NO.	McDONNELL SCD NUMBER
SE-7	Y20161R	52-52701-169

PART NUMBER	PART NAME	SERIAL NUMBER	TYPE OF DISPOSITION
103654	PRESSURANT TANK ASSEMBLY	4051910	INFORMATION ONLY

VARIATION: TANK VOLUME TO RA0220-200 DOES NOT MEET SPEC. REQUIREMENTS.

ACTION TAKEN: OK AS IS FOR DAT ON HARDWARE DELIVERED.

INSP. ANR 208

PART NUMBER	PART NAME	SERIAL NUMBER	TYPE OF DISPOSITION

VARIATION:

ACTION TAKEN:

INSP

PART NUMBER	PART NAME	SERIAL NUMBER	TYPE OF DISPOSITION

VARIATION:

ACTION TAKEN:

INSP

FORM REVISION DATE NEW 8 MAY 1963

R-15075-1

SECTION II

ACCEPTANCE TEST LOG

COMPONENT ACCEPTANCE TEST LOG

234

MODEL NUMBER	CONTRACT NUMBER	McDONNELL SCD NUMBER
SE-7	Y20161R	52-52701-169

PART NUMBER	PART NAME	SERIAL NUMBER	SPECIFICATION NUMBER	REVISION
103654	PRESSURANT TANK	4051910	RA0220-200 AMEND #2	NC

ACCEPTANCE TEST	PARA.	LIMITS	ACTUAL
HELIUM LEAK CHECK	4.4.1.2	1.67×10^{-6} SCC/SEC	1.21×10^{-6} SCC/SEC
TANK WEIGHT, DRY, & EMPTY	4.6.1	19.16 LBS. MAX.	18.75 LBS.
TANK WEIGHT EMPTY, INCLUDING STAND	4.6.3		26.37 LBS.
TEST FLUID TEMP. AT PRESS. TANK	4.6.6	70 ± 10 °F	70 °F
TANK WEIGHT, FILLED, INCLUDING STAND	4.6.7		85.74 LBS.
TANK WEIGHT CAPACITY	4.6.7.1		59.37 LBS.
TANK INTERNAL VOLUME	4.6.7.2	1695 MIN.	*1648.16 CU. IN.
PROOF TEST @ 5000 $^{+0}_{-}$ 100 PSIG	4.6.11.8	2% MAX. DISTORTION	
TANK DIMENSIONS	4.6.13		BEFORE PROOF / AFTER PROOF
			X 15.1540 IN. / X 15.1620 IN.
			Y 15.1500 IN. / Y 15.1560 IN.

*REFERENCE VARIATION LOG.

DESP

R-15075-1

(22113)

R-15075-1

PAGE OF

COMPONENT ACCEPTANCE TEST LOG

MODEL NUMBER	CONTRACT NUMBER	McDONNELL SCD NUMBER
SE-7	Y20161R	52-52701-169

PART NUMBER	PART NAME	SERIAL NUMBER	SPECIFICATION NUMBER	REVISION
103654	PRESSURANT TANK ASSEMBLY	4051910	RA0615-003	B

CLASS 4, SOLID PARTICLE CONTAMINATION LEVEL

MICRON RANGE	LIMITS	ACTUAL COUNT
5 - 10	*	69
10 - 25	100	44
25 - 50	20	4
50 - 100	5	1
100 - 300	1	0
> - 300	0	0
FIBERS 300 - 3000	0	0
FIBERS > - 3000	0	0

*NOTE: TO BE COUNTED BUT NOT RESTRICTED TO NUMBER.

235

INSP

(2.0113)

MODULE/COMPONENT LOG BOOK IDENTIFICATION

MANUFACTURER	ROCKETDYNE, A DIVISION OF NORTH AMERICAN AVIATION, INC.
MC DONNELL SCD NUMBER	52-52701-211 ROCKETDYNE PART NUMBER 103660
NOMENCLATURE	TANK ASSEMBLY, FUEL (DAT UNIT #1)
CONTRACT NUMBER	Y20161R
WEIGHT	10.76 LBS.
DRAWING CHANGE LETTER	DNA
DATE	2 JUNE 1964

"Certification is hereby given that the Module/Component covered by this Log Book was manufactured, inspected and tested in accordance with subject drawings, specifications and Quality Assurance provisions except as recorded here-in."

ROCKETDYNE QUALITY ASSURANCE	MC DONNELL QUALITY REPRESENTATIVE	GOV'T INSPECTION AGENCY QUALITY REPRESENTATIVE
S.N. Antar 6-2-64	John Spindler 6/3/64	Nicholas J. Rubio 3 JUN 64

PART NO. 103660

SERIAL NO. 4051935

FOREWORD

MODULE/COMPONENT LOG BOOK

THIS BOOK CONTAINS INFORMATION PERTINENT TO THE MODULE/COMPONENT AS SPECIFIED HEREIN BY SERIAL NUMBER AND MODEL NUMBER. IT IS NECESSARY THAT ALL ENTRIES BE WRITTEN IN INK OR TYPED FOR PERMANENT RECORD. ENTRIES SUCH AS CUSTODY, PRESERVATION, SERIALIZATION, APPLICABLE ENGINEERING CHANGE PROPOSALS, ACCEPTANCE RUN DATA, CALIBRATION AND WEIGHT DATA WILL BE ENTERED AND/OR INCLUDED BY ROCKETDYNE AT TIME OF DELIVERY. ENTRIES SUCH AS REWORK, KIT INSTALLATION, REMOVALS, VEHICLE MATING, ADDITIONAL STATIC FIRING TIME AND CUSTODY WILL BE MADE BY THE CUSTOMER.

IF FOR ANY REASON THIS MODULE/COMPONENT IS RETURNED TO ROCKETDYNE FOR MODIFICATION AND/OR REPAIRS, THIS LOG BOOK MUST ACCOMPANY THE MODULE/COMPONENT. MODIFICATION ENTRIES WILL BE ENTERED BY ROCKETDYNE AND CUSTODY RECORDS WILL BE MAINTAINED.

THE PAGES IN THIS LOG BOOK SHALL NOT BE REVISED WITHOUT OBTAINING APPROVAL OF THE ROCKETDYNE PROGRAM OFFICE, ROCKETDYNE QUALITY CONTROL, AND THE CUSTOMER REPRESENTATIVE.

THIS LOG BOOK IS APPROVED FOR USE ON:

PART NUMBER 103660 PART NAME TANK ASSEMBLY, FUEL

DATE	PROGRAM OFFICE	QUALITY ASSURANCE	PURCHASER
13 NOV 1963	W. E. McGrevey	R. B. Smith	John S. Snider

GENERAL INFORMATION

THIS LOG BOOK IS PROVIDED FOR SERVICE USE IN RECORDING PERTINENT HISTORICAL DATA AND ALL CHANGES FROM THE ORIGINAL CONFIGURATION. IT SHALL ACCOMPANY THE MODULE/COMPONENT WHEN TRANSFERRED BETWEEN ROCKETDYNE AND USING AGENCIES. THIS LOG BOOK SHALL BE KEPT WITH THE VEHICLE RECORDS WHEN THE MODULE/COMPONENT IS INSTALLED IN A VEHICLE.

SECTION I - MODULE/COMPONENT ASSEMBLY LOG

RECORDS CONTAINED IN THIS SECTION ARE PERTINENT TO THE MODULE/COMPONENT ACCEPTANCE AND ALSO INCLUDES MODEL CONFIGURATION DATA, PERTINENT DETAILS OF SHORT SHIPMENTS, COMPONENT DEVIATIONS, AGE SENSITIVE PARTS RECORD AND WEIGHT RECORD.

SECTION II - ACCEPTANCE TEST LOG

RECORDS OF ASSEMBLY ACCEPTANCE TESTS ARE PRESENTED IN THIS SECTION WITH PERFORMANCE DATA AND SUMMARY DATA ON INSPECTIONS AND ACCEPTANCE.

SECTION I

MODULE/COMPONENT ASSEMBLY LOG

MODULE COMPONENT SERIALIZATION LOG

MODEL NO.	CONTRACT NUMBER	McDONNELL SCO NUMBER
SE-7	Y20161R	52-52701-211

PART NUMBER	COMPONENT	SERIAL NO.	PLAN NO.	LOT NO.	LTR CHG	DATE	INSP	REMARKS
103660	TANK ASSY FUEL	4051935	NONE	DNA	DNA	2 JUN 64	721	
103183	BLADDER, ASSY	8502601	A37782-1	"	"	"	721	
103172	TANK, ASSY OF	8253679	A32790-2	DNA	"	"	721	
103634	OUTLET ASSY OF	8500808	A39229-3	"	"	"	721	

R-15075-1

MCR VERIFICATION

PART NUMBER	MODEL NO.	CONTRACT NUMBER	SERIAL NUMBER	Mc DONNELL SCD NUMBER
103660	SE-7	Y20161R	4051935	52-52701-211

MCR/DCR NO.	DATE	TITLE	DATE	INSP.
SE7-15	21AUG63	RESISTOFLEX FITTINGS; REPLACEMENT OF	2JUN64	ANR 721
SE7-23	31MAY63	COMPONENT SERVICING POINTS, SEALING SURFACES; CHANGES TO	2JUN64	ANR 721
SE7-30	31MAY63	LUBRICANTS; REPLACEMENT OF	2JUN64	ANR 721
SE7-34	31MAY63	RESISTOFLEX DYNATUBE CAPS; REIDENTIFICATION OF	2JUN64	ANR 721
SE7-055	28DEC63	FUEL TANKS, TRIPLE BLADDER; INCORPORATION OF	2JUN64	ANR 721
SE6-062	6JAN64	COMPONENT CLEANING; PROVISION FOR	2JUN64	ANR 721
SE6-068	14APR64	RESISTOFLEX DYNATUBE FITTING INTERFACE; LUBRICATION OF	2JUN64	ANR 721
SE6-103	4SEP63	PROPELLANT TANKS; CHANGES TO	2JUN64	ANR 721
SE6-109	28DEC63	PROPELLANT TANK SHIMS; ADDITION OF	2JUN64	ANR 721
SE6-127	14APR64	TUBE STUB O.D. MINIMUM CONSTANT DIM., TANKS; REVISION OF	2JUN64	ANR 721
SE6-147	22JAN64	BLADDER PERMEATION TESTING; DELETION OF	2JUN64	ANR 721
SE6-154	25NOV63	COMPONENT PACKAGES AND PROPELLANT TANKS RESISTOFLEX CAP; CHANGES TO	2JUN64	ANR 721
SE6-166	30JAN64	REDUNDANT SEAL PRESSURE CAP; REDESIGN OF	2JUN64	ANR 721
SE6-177	17APR64	PROPELLANT TANKS; CHANGES TO	2JUN64	ANR 721
SE6-180	15APR64	PROPELLANT TANK PURGE TUBES; CHANGES TO	2JUN64	ANR 721
SE6-232	27APR64	PROPELLANT TANKS, ATP; REVISION OF	2JUN64	ANR 721

(19103)

242

MODULE/COMPONENT VARIATION LOG

DATE 2 JUN 64

MODEL NO.	CONTRACT NO.	McDONNELL SCD NUMBER
SE-7	Y20161R	52-52701-211

PART NUMBER	PART NAME	SERIAL NUMBER	TYPE OF DISPOSITION
103660	TANK ASSEMBLY, FUEL	4051935	NONE

VARIATION: NONE THIS DATE 2 JUNE1964

ACTION TAKEN:

INSP. AHR 721

PART NUMBER	PART NAME	SERIAL NUMBER	TYPE OF DISPOSITION

VARIATION:

ACTION TAKEN:

INSP

PART NUMBER	PART NAME	SERIAL NUMBER	TYPE OF DISPOSITION

VARIATION:

ACTION TAKEN:

INSP

R-15075-1

FORM REVISION DATE NEW 0 MAY 1963

SECTION II

ACCEPTANCE TEST LOG

COMPONENT ACCEPTANCE TEST LOG

MODEL NUMBER	CONTRACT NUMBER	McDONNELL SCD NUMBER
SE-7	Y20161R	52-52701-211

PART NUMBER	PART NAME	SERIAL NUMBER	SPECIFICATION NUMBER	REVISION
103660	PROPELLANT TANK	4051935	RA0220-201 AMEND. 2	A

FUNCTIONAL TEST

BLADDER LEAK CHECK TEST: PARA. 4.1	PARA.	ACTUAL RESULTS
VOLUME OF WATER DISPLACED @ 15 ± 0.5 PSIG	4.1.6	NONE DET. SCC/5MIN
VOLUME OF WATER DISPLACED @ 15 ± 0.5 PSIG	4.1.7	NONE DET. SCC/5MIN
	4.1.7	NONE DET. SCC/5MIN
	4.1.7	NONE DET. SCC/5MIN
	4.1.7	NONE DET. SCC/5MIN

PROOF PRESSURE AND HELIUM LEAK CHECK @ 500 ± 10 PSIG: PARA. 4.2 THRU 4.2.11

		LIMITS	
* COMBINED PURGE PORT & TANK FLANGE LEAKAGE	4.2.11	MAX. 16.6 SCC/HR (4.64×10^{-3} SCC/SEC)	1.89×10^{-5}
PURGE PORT LEAKAGE	4.2.17	MAX. 8.33 SCC/HR (2.32×10^{-3} SCC/SEC)	DNA
TANK FLANGE LEAKAGE	4.2.19	MAX. 8.33 SCC/HR (2.32×10^{-3} SCC/SEC)	DNA

*NOTE: SHOULD THE COMBINED LEAKAGE RATE BE EQUAL TO OR LESS THAN 8.33 SCC/HR (2.32×10^{-3}), DISREGARD PARA. 4.2.15 THRU 4.2.22

INSP _____

R-15075-1

(16123)

MODULE/COMPONENT LOG BOOK IDENTIFICATION

MANUFACTURER	ROCKETDYNE, A DIVISION OF NORTH AMERICAN AVIATION, INC.		
MC DONNELL SCD NUMBER	52-52701-211	ROCKETDYNE PART NUMBER	103660
NOMENCLATURE	TANK ASSEMBLY, FUEL	DAT UNIT #021	
CONTRACT NUMBER	Y20161R		
WEIGHT	10.478		
DRAWING CHANGE LETTER	DNA		
DATE	30 DECEMBER 1964		

"Certification is hereby given that the Module/Component covered by this Log Book was manufactured, inspected and tested in accordance with subject drawings, specifications and Quality Assurance provisions except as recorded here-in."

ROCKETDYNE QUALITY ASSURANCE	MC DONNELL QUALITY REPRESENTATIVE	GOV'T INSPECTION AGENCY QUALITY REPRESENTATIVE
S.H. Arthur 12/30/64	John Snider 12/30/64	21 JAN 65

PART NO.	103660
SERIAL NO.	4066858

FOREWORD

MODULE/COMPONENT LOG BOOK

- THIS BOOK CONTAINS INFORMATION PERTINENT TO THE MODULE/COMPONENT AS SPECIFIED HEREIN BY SERIAL NUMBER AND MODEL NUMBER. IT IS NECESSARY THAT ALL ENTRIES BE WRITTEN IN INK OR TYPED FOR PERMANENT RECORD. ENTRIES SUCH AS CUSTODY, PRESERVATION, SERIALIZATION, APPLICABLE ENGINEERING CHANGE PROPOSALS, ACCEPTANCE RUN DATA, CALIBRATION AND WEIGHT DATA WILL BE ENTERED AND/OR INCLUDED BY ROCKETDYNE AT TIME OF DELIVERY. ENTRIES SUCH AS REWORK, KIT INSTALLATION, REMOVALS, VEHICLE MATING, ADDITIONAL STATIC FIRING TIME AND CUSTODY WILL BE MADE BY THE CUSTOMER.

- IF FOR ANY REASON THIS MODULE/COMPONENT IS RETURNED TO ROCKETDYNE FOR MODIFICATION AND/OR REPAIRS, THIS LOG BOOK MUST ACCOMPANY THE MODULE/COMPONENT. MODIFICATION ENTRIES WILL BE ENTERED BY ROCKETDYNE AND CUSTODY RECORDS WILL BE MAINTAINED.

- THE PAGES IN THIS LOG BOOK SHALL NOT BE REVISED WITHOUT OBTAINING APPROVAL OF THE ROCKETDYNE PROGRAM OFFICE, ROCKETDYNE QUALITY CONTROL, AND THE CUSTOMER REPRESENTATIVE.

- THIS LOG BOOK IS APPROVED FOR USE ON:

PART NUMBER 103660 PART NAME TANK ASSEMBLY, FUEL

DATE	PROGRAM OFFICE	QUALITY ASSURANCE	PURCHASER
13 NOV 1963	W. E. McCrivey	R. B. Smith	John S. Snider

GENERAL INFORMATION

THIS LOG BOOK IS PROVIDED FOR SERVICE USE IN RECORDING PERTINENT HISTORICAL DATA AND ALL CHANGES FROM THE ORIGINAL CONFIGURATION. IT SHALL ACCOMPANY THE MODULE/COMPONENT WHEN TRANSFERRED BETWEEN ROCKETDYNE AND USING AGENCIES. THIS LOG BOOK SHALL BE KEPT WITH THE VEHICLE RECORDS WHEN THE MODULE/COMPONENT IS INSTALLED IN A VEHICLE.

SECTION I - MODULE/COMPONENT ASSEMBLY LOG

RECORDS CONTAINED IN THIS SECTION ARE PERTINENT TO THE MODULE/COMPONENT ACCEPTANCE AND ALSO INCLUDES MODEL CONFIGURATION DATA, PERTINENT DETAILS OF SHORT SHIPMENTS, COMPONENT DEVIATIONS, AGE SENSITIVE PARTS RECORD AND WEIGHT RECORD.

SECTION II - ACCEPTANCE TEST LOG

RECORDS OF ASSEMBLY ACCEPTANCE TESTS ARE PRESENTED IN THIS SECTION WITH PERFORMANCE DATA AND SUMMARY DATA ON INSPECTIONS AND ACCEPTANCE.

MODULE/COMPONENT ASSEMBLY LOG

SECTION I NOTES

R-15075-1

MODULE COMPONENT SERIALIZATION LOG

MODEL NO.	CONTRACT NUMBER	McDONNELL SCO NUMBER
SE-7	Y20161R	52-52701-211

PART NUMBER	COMPONENT	SERIAL NO.	PLAN NO.	LOT NO.	LTR CHG	DATE	INSP	REMARKS
103660	TANK ASSY FUEL	4066858	NONE	DNA	DNA	30DEC64	(721)	* SEE BELOW
103183	BLADDER ASSY	8509925	A37929-1	26	"	"	(721)	
103172	TANK, ASSY OF	8502101	A42311-1	DNA	"	"	(721)	** SEE BELOW
103634	OUTLET ASSY OF	8509906	B07615-3	DNA	"	"	(721)	

** The tank shell, P/N 103172, S/N 8502101, used in DAT was not subjected to dynamic testing, only proof pressure tests. This certifies that this shell is satisfactory for the DAT program.

R. W. Helsel
Gemini Project Engineer

* TANK ASSY, FUEL P/N 103660 S/N 4064712 HAS BEEN REPLACED BY P/N 103660 S/N 4066858 SHOWN ABOVE (721)

250

MODULE COMPONENT REPLACEMENT LOG

MODEL NO.	CONTRACT NUMBER	McDONNELL SCO NUMBER
SE-7	Y20161R	52-52701-211

PART NUMBER	COMPONENT	SERIAL NO.	PLAN NO.	LOT NO.	LTR CHG	DATE	INSP	REMARKS
103660	TANK ASSY FUEL	4066858	NONE	DNA	DNA	30DEC64	ANR 721	IDENT. ENTRY ONLY
								NONE THIS DATE. . .

R-15075-1

FORM REVISION DATE NEW 13 APRIL 1963

MCR VERIFICATION

PART NUMBER	MODEL NO.	CONTRACT NUMBER	SERIAL NUMBER	Mc DONNELL SCD NUMBER
103660	SE-7	Y20161R	4066858	52-52701-211

MCR/ECP NO.	DATE	TITLE	DATE	INSP.
SE7-015	21AUG63	RESISTOFLEX FITTINGS; REPLACEMENT OF	30DEC64	ANR 721
SE7-023	31MAY63	COMPONENT SERVICING POINTS, SEALING SURFACES; CHANGES TO	30DEC64	ANR 721
SE7-030	31MAY63	LUBRICANTS; REPLACEMENT OF	30DEC64	ANR 721
SE7-034	31MAY63	RESISTOFLEX DYNATUBE CAPS; REIDENTIFICATION OF	30DEC64	ANR 721
SE7-055	28DEC63	FUEL TANKS, TRIPLE BLADDER; INCORPORATION OF	30DEC64	ANR 721
SE6-062	6JAN64	COMPONENT CLEANING; PROVISION FOR	30DEC64	ANR 721
SE6-068	14APR64	RESISTOFLEX DYNATUBE FITTING INTERFACE; LUBRICATION OF	30DEC64	ANR 721
SE6-085	8DEC64	CUSTOMER TEST SURVEILLANCE; REQUIREMENT FOR	30DEC64	ANR 721
SE6-103	4SEP63	PROPELLANT TANKS; CHANGES TO	30DEC64	ANR 721
SE6-109	28DEC63	PROPELLANT TANK SHIMS; ADDITION OF	30DEC64	ANR 721
SE6-127	14APR64	TUBE STUB O.D. MINIMUM CONSTANT DIM., TANKS; REVISION OF	30DEC64	ANR 721
SE6-134	15APR64	O-RING SEAL; REPLACEMENT OF	30DEC64	ANR 721
SE6-147	22JAN64	BLADDER PERMEATION TESTING; DELETION OF	30DEC64	ANR 721
SE6-179	16JUN64	TUBE STUBS; MARKING OF	30DEC64	ANR 721
SE6-180	7DEC64	PROPELLANT TANK PURGE TUBES; CHANGES TO	30DEC64	ANR 721
SE6-232	27APR64	PROPELLANT TANKS, ATP; REVISION OF	30DEC64	ANR 721
SE6-287	2DEC64	PROPELLANT TANK FLANGE BOLTS; CHANGES TO	30DEC64	ANR 721
SE6-154	25NOV63	COMPONENT PACKAGES AND PROPELLANT TANKS RESISTOFLEX CAP; CHANGES TO	30DEC64	ANR 721

252

MODULE/COMPONENT VARIATION LO

DATE 30 DEC 64

MODEL NO.	CONTRACT NO.	McDONNELL SCO NUMBER
SE-7	Y20161R	52-52701-211

PART NUMBER	PART NAME	SERIAL NUMBER	TYPE OF DISPOSITION
103660	TANK ASSEMBLY, FUEL	4066858	MAC MRR #71171

VARIATION: CONDITION A: TANK ASSY FAILED BLADDER LEAK TEST PER RA0220-201, PARA. 4.2.15. AFTER 36 HOURS WAITING PERIOD, READING WAS TAKEN AND SHOWED CONTINUAL DISPLACEMENT OF .25 SCC/5 MIN. THE UNIT WAS TESTED TO NCI RD #520 ON QCWA #R6304 PER OFR 19963R. THE ASSY WAS ACCEPTABLE TO REQUIREMENTS OF NCI RD #520. NO PREVIOUS MAC MRR.

ACTION TAKEN: ACCEPTABLE TO USE PER MAC MRR #71171 REF: 600N-5 #C20107

INSP. ANR 721

PART NUMBER	PART NAME	SERIAL NUMBER	TYPE OF DISPOSITION
103172	TANK PROP., SPHERICAL, ASSY OF	4066858	600-N-C30752

VARIATION: THIS TANK SHELL WAS USED PREVIOUSLY IN TANK ASSEMBLY 103660 S/N 4064712. ASSEMBLY 4064712 WAS TESTED IN THE DAT PROGRAM. THE FOLLOWING TESTS WERE CONDUCTED PER DAT SPECIFICATION 103660-401: (1) VISUAL INSPECTION; (2) TANK OUTLET MODIFICATION, (3) PROOF PRESSURE & EXTERNAL LEAKAGE, (4) BLADDER LEAK TEST, (5) PROPELLANT CYCLING. DURING PROPELLANT CYCLE TEST, THE BLADDER IN ASSEMBLY 4064712 FAILED. THIS TANK WAS DISASSEMBLED AND THE DETAIL PARTS INSPECTED. FOLLOWING INSTALLATION OF NEW DETAILS, THE TANK SHELL P/N 103172, S/N 8502101, OF THIS ASSEMBLY WAS DEEMED SATISFACTORY FOR RE-USE IN THE DAT PROGRAM.

INSP ANR 721

PART NUMBER	PART NAME	SERIAL NUMBER	TYPE OF DISPOSITION
	SAME AS ABOVE		

ACTION TAKEN USE AS IS PER 600-N-C30752

ACTION TAKEN:

INSP ANR 721

R-15075-1

FORM REVISION ONE NEW 9 MAY 1963

NASA 24E

SECTION II

ACCEPTANCE TEST LOG

COMPONENT ACCEPTANCE TEST LOG

MODEL NUMBER	CONTRACT NUMBER	McDONNELL SCD NUMBER
SE-7	Y20161R	52-52701-211

PART NUMBER	PART NAME	SERIAL NUMBER	SPECIFICATION NUMBER	REVISION
103660	TANK ASSEMBLY, FUEL	4066858	RA0220-201	B

HELIUM LEAKAGE TEST	PARA.			ACTUAL RESULTS
TORQUE DECAY				TORQUE DECAY
RE-TORQUE OF FLANGE BOLTS 24 HOURS AFTER ORIGINAL TORQUE TO DETERMINE TORQUE DECAY.	4.1			#1 10
				#2 0
				#3 0
				#4 0
				#5 0
				#6 0
				#7 0
				#8 0
				#9 0
				#10 0
				#11 0
				#12 0
PROOF TEST		LIMITS		
PRESSURIZE BETWEEN BLADDER AND TANK	4.1.6.3	3 ± 1	PSIG	3
PRESSURIZE BLADDER INTERIOR (LIQUID SIDE)	4.1.7.3	$500 {}^{+0}_{-10}$	PSIG	500
TOTAL DRY WEIGHT			LBS. MAX.	10.478

INSP ANH 721

COMPONENT ACCEPTANCE TEST LOG

MODEL NUMBER	CONTRACT NUMBER	McDONNELL SCD NUMBER
SE-7	Y20161R	52-52701-211

PART NUMBER	PART NAME	SERIAL NUMBER	SPECIFICATION NUMBER	REVISION
103660	TANK ASSEMBLY, FUEL	4066858	RA0220-201	B

LEAK TEST	PARA.	LIMITS	ACTUAL RESULTS
PRESSURIZE BETWEEN BLADDER AND TANK	4.1.8.3	3 ± 1 PSIG	3
PRESSURIZE BLADDER INTERIOR (LIQUID SIDE)	4.1.9.3	$500 {}^{+0}_{-10}$ PSIG	500
* COMBINED PURGE PORT & TANK FLANGE LEAKAGE	4.1.10	MAX. 16.6 SCC/HR (4.64×10^{-3} SCC/SEC)	2.23×10^{-4}
PURGE PORT LEAKAGE	4.1.18	MAX. 8.33 SCC/HR (2.32×10^{-3} SCC/SEC)	DNA
TANK FLANGE LEAKAGE	4.1.20	MAX. 8.33 SCC/HR (2.32×10^{-3} SCC/SEC)	DNA

*NOTE: SHOULD THE COMBINED LEAKAGE RATE BE EQUAL TO OR LESS THAN 8.33 SCC/HR (2.32×10^{-3} SCC/SEC), DISREGARD PARA. 4.1.16 THRU 4.1.23

BLADDER LEAK TEST	PARA.	LIMITS				
VOLUME OF WATER DISPLACED @ 2 ± 0.25 PSIG	4.2.14		#1	0.6		
VOLUME OF WATER DISPLACED @ 2 ± 0.25 PSIG	4.2.15	**	#2	0.7	#3	NONE
			#4	NONE	#5	NONE
			#6	NONE	#7	NONE
			#8	NONE	#9	NONE
			#10	NONE	#11	NONE
			#12	NONE	#13	NONE
			#14	NONE	#15	NONE
			#16	NONE	#17	NONE
			#18	NONE		

** NOTE: THIS PROCEDURE WILL BE REPEATED AT 15 ± 0.1 MIN. INTERVALS UNTIL A TOTAL OF 18 READINGS HAS BEEN OBTAINED OR UNTIL TWO (2) SUCCESSIVE READINGS INDICATE A LEAKAGE EQUAL TO OR LESS THAN 0.80 CC/15 MIN.

INSP

COMPONENT ACCEPTANCE TEST LOG

MODEL NUMBER	CONTRACT NUMBER	McDONNELL SCD NUMBER
SE-7	Y20161R	52-52701-211

PART NUMBER	PART NAME	SERIAL NUMBER	SPECIFICATION NUMBER	REVISION
103660	TANK ASSEMBLY, FUEL	4066858	RA0615-003 AMEND. #2	B

CLASS 4, SOLID PARTICLE CONTAMINATION LEVEL

MICRON RANGE	LIMITS	ACTUAL COUNT FLUSHING SYSTEM	ACTUAL COUNT TANK ASSY
< - 10	*	89	98
10 - 25	100	71	89
25 - 50	20	14	15
50 - 100	5	3	1
100 - 300	1	1	1
300 - 1000	0	0	0
> - 1000	0	0	0
FIBERS 300 - 3000	0	0	0
FIBERS > - 3000	0	0	0

"NOT TO BE COUNTED BUT NO SLURRY OF FINE PARTICLES WHICH COVERS MORE THAN AN ESTIMATED 5 PERCENT OF THE TOTAL EFFECTIVE FILTER AREA SHALL BE ALLOWED." AT THE DISCRETION OF QUALITY ASSURANCE, A WEIGHT DETERMINATION OF TOTAL CONTAMINATION MAY BE MADE AS A REFEREE TEST IN BORDERLINE CASES. THE MAXIMUM ALLOWABLE WEIGHT OF CONTAMINANTS SHALL BE 0.001 GRAM (1 mg).

INSP ANA 721

SCD 52-52701-211
S/N 4064712

R-15075-1

MODULE/COMPONENT LOG BOOK IDENTIFICATION

MANUFACTURER	ROCKETDYNE, A DIVISION OF NORTH AMERICAN AVIATION, INC.
MC DONNELL SCD NUMBER	52-52701-211 ROCKETDYNE PART NUMBER 103660
NOMENCLATURE	TANK ASSEMBLY, FUEL (DAT #4)
CONTRACT NUMBER	Y20161R
WEIGHT	10.70
DRAWING CHANGE LETTER	DNA
DATE	15 SEPT. 1964

"Certification is hereby given that the Module/Component covered by this Log Book was manufactured, inspected and tested in accordance with subject drawings, specifications and Quality Assurance provisions except as recorded here-in."

ROCKETDYNE QUALITY ASSURANCE	MC DONNELL QUALITY REPRESENTATIVE	GOV'T INSPECTION AGENCY QUALITY REPRESENTATIVE
Virgil W. Craig 9/15/64	John L. Sudd 9/15/64	Chester A. Mielnicki 15 Sept 64

PART NO.	103660
SERIAL NO.	4064712

FOREWORD

MODULE/COMPONENT LOG BOOK

THIS BOOK CONTAINS INFORMATION PERTINENT TO THE MODULE/COMPONENT AS SPECIFIED HEREIN BY SERIAL NUMBER AND MODEL NUMBER. IT IS NECESSARY THAT ALL ENTRIES BE WRITTEN IN INK OR TYPED FOR PERMANENT RECORD. ENTRIES SUCH AS CUSTODY, PRESERVATION, SERIALIZATION, APPLICABLE ENGINEERING CHANGE PROPOSALS, ACCEPTANCE RUN DATA, CALIBRATION AND WEIGHT DATA WILL BE ENTERED AND/OR INCLUDED BY ROCKETDYNE AT TIME OF DELIVERY. ENTRIES SUCH AS REWORK, KIT INSTALLATION, REMOVALS, VEHICLE MATING, ADDITIONAL STATIC FIRING TIME AND CUSTODY WILL BE MADE BY THE CUSTOMER.

IF FOR ANY REASON THIS MODULE/COMPONENT IS RETURNED TO ROCKETDYNE FOR MODIFICATION AND/OR REPAIRS, THIS LOG BOOK MUST ACCOMPANY THE MODULE/COMPONENT. MODIFICATION ENTRIES WILL BE ENTERED BY ROCKETDYNE AND CUSTODY RECORDS WILL BE MAINTAINED.

THE PAGES IN THIS LOG BOOK SHALL NOT BE REVISED WITHOUT OBTAINING APPROVAL OF THE ROCKETDYNE PROGRAM OFFICE, ROCKETDYNE QUALITY CONTROL, AND THE CUSTOMER REPRESENTATIVE.

THIS LOG BOOK IS APPROVED FOR USE ON:

PART NUMBER 103660 PART NAME TANK ASSEMBLY, FUEL

DATE	PROGRAM OFFICE	QUALITY ASSURANCE	PURCHASER
13 NOV 1963	W. E. McCrivey	R. B. Smith	John S. Snider

GENERAL INFORMATION

THIS LOG BOOK IS PROVIDED FOR SERVICE USE IN RECORDING PERTINENT HISTORICAL DATA AND ALL CHANGES FROM THE ORIGINAL CONFIGURATION. IT SHALL ACCOMPANY THE MODULE/COMPONENT WHEN TRANSFERRED BETWEEN ROCKETDYNE AND USING AGENCIES. THIS LOG BOOK SHALL BE KEPT WITH THE VEHICLE RECORDS WHEN THE MODULE/COMPONENT IS INSTALLED IN A VEHICLE.

SECTION I - MODULE/COMPONENT ASSEMBLY LOG

RECORDS CONTAINED IN THIS SECTION ARE PERTINENT TO THE MODULE/COMPONENT ACCEPTANCE AND ALSO INCLUDES MODEL CONFIGURATION DATA, PERTINENT DETAILS OF SHORT SHIPMENTS, COMPONENT DEVIATIONS, AGE SENSITIVE PARTS RECORD AND WEIGHT RECORD.

SECTION II - ACCEPTANCE TEST LOG

RECORDS OF ASSEMBLY ACCEPTANCE TESTS ARE PRESENTED IN THIS SECTION WITH PERFORMANCE DATA AND SUMMARY DATA ON INSPECTIONS AND ACCEPTANCE.

SECTION I

MODULE/COMPONENT ASSEMBLY LOG

R-15075-1

MODULE COMPONENT SERIALIZATION LOG

MODEL NO.	CONTRACT NUMBER	McDONNELL SCO NUMBER
SE-7	Y20161R	52-52701-211

PART NUMBER	COMPONENT	SERIAL NO.	PLAN NO.	LOT NO.	LTR CHG	DATE	INSP	REMARKS
103660	TANK ASSY FUEL	4064712	NONE	DNA	DNA	15 SEP 64		
103183	BLADDER, ASSY	8501007	A39709-1	DNA	DNA	"		
103172	TANK, ASSY OF	8502101	A42311-1	DNA	DNA	"		
103634	OUTLET ASSY OF	8500810	A40010-1	DNA	DNA	"		

262

MODULE COMPONENT REPLACEMENT LOG

MODEL NO.	CONTRACT NUMBER	McDONNELL SCD NUMBER
SE-7	Y20161R	52-52701-211

PART NUMBER	COMPONENT	SERIAL NO.	PLAN NO.	LOT NO.	LTR CHG	DATE	INSP	REMARKS
103660	TANK ASSY, FUEL	4064712	NONE	DNA	DNA	15 SEP 64		NONE THIS DATE

R-15075-1

FORM REVISION DATE NEW 15 APRIL 1963

MCR VERI ATION

PART NUMBER	MODEL NO.	CONTRACT NUMBER	SERIAL NUMBER	Mc DONNELL SCD NUMBER
103660	SE-7	Y20161R	4064712	52-52701-211

MCR/ECP NO.	DATE	TITLE	DATE	INSP.
SE7-15	21AUG63	RESISTOFLEX FITTINGS; REPLACEMENT OF	15SEP64	
SE7-23	31MAY63	COMPONENT SERVICING POINTS, SEALING SURFACES; CHANGES TO	15SEP64	
SE7-30	31MAY63	LUBRICANTS; REPLACEMENTS OF	15SEP64	
SE7-34	31MAY63	RESISTOFLEX DYNATUBE CAPS; REIDENTIFICATION OF	15SEP64	
SE7-055	28DEC63	FUEL TANKS, TRIPLE BLADDER; INCORPORATION OF	15SEP64	
SE6-062	6JAN64	COMPONENT CLEANING; PROVISION FOR	15SEP64	
SE6-068	14APR64	RESISTOFLEX DYNATUBE FITTING INTERFACE; LUBRICATION OF	15SEP64	
SE6-103	4SEP63	PROPELLANT TANKS; CHANGES TO	15SEP64	
SE6-109	28DEC63	PROPELLANT TANK SHIMS; ADDITION OF	15SEP64	
SE6-127	14APR64	TUBE STUB O.D. MINIMUM CONSTANT DIM., TANKS; REVISION OF	15SEP64	
SE6-147	22JAN64	BLADDER PERMEATION TESTING; DELETION OF	15SEP64	
SE6-166	30JAN64	REDUNDANT SEAL PRESSURE CAP; REDESIGN OF	15SEP64	
SE6-177	17APR64	PROPELLANT TANKS; CHANGES TO	15SEP64	
SE6-180	15APR64	PROPELLANT TANK PURGE TUBES; CHANGES TO	15SEP64	
SE6-232	27APR64	PROPELLANT TANKS, ATP; REVISION OF	15SEP64	
SE6-179	16JUN64	TUBE STUBS; MARKINGS OF	15SEP64	
SE6-134	15APR64	O-RING SEAL; REPLACEMENT OF	15SEP64	
SE6-085	30JUL63	CUSTOMER TEST SURVEILLANCE; REQUIREMENT FOR	15SEP64	

[redacted] Part II

A Reproduced Copy

OF

CLASSIFICATION CHANGE

To UNCLASSIFIED

By author[illegible] 12/31/72

Changed [illegible] ion, NASA

Classif[illegible]

Scientific and Technical Information Facility

[redacted]

Reproduced for NASA

by the

NASA Scientific and Technical Information Facility

[redacted]

FFNo 672 Aug 65

MODULE/COMPONENT VARIATION LO

DATE 15SEP64

MODEL NO.	CONTRACT NO.	McDONNELL SCD NUMBER
SE-7	Y20161R	52-52701-211

PART NUMBER	PART NAME	SERIAL NUMBER	TYPE OF DISPOSITION
103660	TANK ASSEMBLY, FUEL	4064712	NONE

VARIATION: NONE THIS DATE 15 SEPT 64

ACTION TAKEN:

INSP.

PART NUMBER	PART NAME	SERIAL NUMBER	TYPE OF DISPOSITION

VARIATION:

ACTION TAKEN:

INSP

PART NUMBER	PART NAME	SERIAL NUMBER	TYPE OF DISPOSITION

VARIATION:

ACTION TAKEN:

INSP

FORM REVISION DATE NOV 0 MAY 1963

COMPONENT ACCEPTANCE TEST LOG

MODEL NUMBER	CONTRACT NUMBER	McDONNELL SCD NUMBER
SE-7	Y20161R	52-52701-211

PART NUMBER	PART NAME	SERIAL NUMBER	SPECIFICATION NUMBER	REVISION
103660	PROPELLANT TANK	4064712	RA0220- 201 AMEND #2	B

FUNCTIONAL TEST

BLADDER LEAK CHECK TEST: PARA. 4.1	PARA.	ACTUAL RESULTS
VOLUME OF WATER DISPLACED @ 15 ± 0.5 PSIG	4.2.6	LESS THAN .1 SCC/5MIN
VOLUME OF WATER DISPLACED @ 15 ± 0.5 PSIG	4.2.7	LESS THAN .1 SCC/5MIN
	4.2.7	LESS THAN .1 SCC/5MIN
	4.2.7	LESS THAN .1 SCC/5MIN
	4.2.7	LESS THAN .1 SCC/5MIN

PROOF PRESSURE AND HELIUM LEAK CHECK @ 500 ± 10 PSIG: PARA. 4.1 THRU 4.1.10

		LIMITS	
* COMBINED PURGE PORT & TANK FLANGE LEAKAGE	4.1.10	MAX. 16.6 SCC/HR (4.64×10^{-3} SCC/SEC)	5.13×10^{-5}
PURGE PORT LEAKAGE	4.1.17	MAX. 8.33 SCC/HR (2.32×10^{-3} SCC/SEC)	DNA
TANK FLANGE LEAKAGE	4.1.19	MAX. 8.33 SCC/HR (2.32×10^{-3} SCC/SEC)	DNA

*NOTE: SHOULD THE COMBINED LEAKAGE RATE BE EQUAL TO OR LESS THAN 8.33 SCC/HR (2.32×10^{-3}), DISREGARD PARA. 4.1.15 THRU 4.1.22

INSP _____

266

COMPONENT ACCEPTANCE TEST LOG

MODEL NUMBER	CONTRACT NUMBER	McDONNELL SCD NUMBER
SE-7	Y20161R	52-52701-211

PART NUMBER	PART NAME	SERIAL NUMBER	SPECIFICATION NUMBER	REVISION
103660	PROPELLANT TANK, FUEL	4064712	RA0220-201 AMEND. #2	B

FUNCTIONAL TEST

BLADDER LEAK CHECK TEST: PARA. 4.2	PARA.	ACTUAL RESULTS
VOLUME OF WATER DISPLACED @ 2 ± 0.2 PSIG	4.2.15	LESS THAN .1 SCC/MIN
	4.2.15	LESS THAN .1 SCC/MIN
	4.2.15	LESS THAN .1 SCC/MIN

INSP

R-15075-1

R-15075-1

COMPONENT ACCEPTANCE TEST LOG

MODEL NUMBER	CONTRACT NUMBER	McDONNELL SCD NUMBER
SE-7	Y20161R	52-52701-211

PART NUMBER	PART NAME	SERIAL NUMBER	SPECIFICATION NUMBER	REVISION
103660	TANK ASSEMBLY, FUEL	4064712	RA0615-003 AMEND. #2	B

CLASS 4, SOLID PARTICLE CONTAMINATION LEVEL

MICRON RANGE	LIMITS	ACTUAL COUNT BLADDER	ACTUAL COUNT TANK
< - 10	*	84	61
10 - 25	100	46	38
25 - 50	20	2	7
50 - 100	5	0	1
100 - 300	1	0	0
300 - 1000	0	0	0
> - 1000	0	0	0
FIBERS 300 - 3000	0	0	0
FIBERS > - 3000	0	0	0

"NOT TO BE COUNTED BUT NO SLURRY OF FINE PARTICLES WHICH COVERS MORE THAN AN ESTIMATED 5 PERCENT OF THE TOTAL EFFECTIVE FILTER AREA SHALL BE ALLOWED." AT THE DISCRETION OF QUALITY ASSURANCE, A WEIGHT DETERMINATION OF TOTAL CONTAMINATION MAY BE MADE AS A REFEREE TEST IN BORDERLINE CASES. THE MAXIMUM ALLOWABLE WEIGHT OF CONTAMINANTS SHALL BE 0.001 GRAM (1 mg).

INSP

(20064)

MODULE/COMPONENT LOG BOOK IDENTIFICATION

MANUFACTURER	ROCKETDYNE, A DIVISION OF NORTH AMERICAN AVIATION, INC.
MC DONNELL SCD NUMBER	52-52701-177 ROCKETDYNE PART NUMBER 103655
NOMENCLATURE	TANK ASSEMBLY, OXIDIZER (DAT UNIT #3)
CONTRACT NUMBER	Y20161R
WEIGHT	11.04
DRAWING CHANGE LETTER	DNA
DATE	1 JUNE 1964

"Certification is hereby given that the Module/Component covered by this Log Book was manufactured, inspected and tested in accordance with subject drawings, specifications and Quality Assurance provisions except as recorded here-in."

ROCKETDYNE QUALITY ASSURANCE	MC DONNELL QUALITY REPRESENTATIVE	GOV'T INSPECTION AGENCY QUALITY REPRESENTATIVE
S. H. Cutrow 6/1/64	C. W. Michaelis	Nicholas J. Nikic 25 JUN 64

PART NO.	103655
SERIAL NO.	4051231

FOREWORD

MODULE/COMPONENT LOG BOOK

THIS BOOK CONTAINS INFORMATION PERTINENT TO THE MODULE/COMPONENT AS SPECIFIED HEREIN BY SERIAL NUMBER AND MODEL NUMBER. IT IS NECESSARY THAT ALL ENTRIES BE WRITTEN IN INK OR TYPED FOR PERMANENT RECORD. ENTRIES SUCH AS CUSTODY, PRESERVATION, SERIALIZATION, APPLICABLE ENGINEERING CHANGE PROPOSALS, ACCEPTANCE RUN DATA, CALIBRATION AND WEIGHT DATA WILL BE ENTERED AND/OR INCLUDED BY ROCKETDYNE AT TIME OF DELIVERY. ENTRIES SUCH AS REWORK, KIT INSTALLATION, REMOVALS, VEHICLE MATING, ADDITIONAL STATIC FIRING TIME AND CUSTODY WILL BE MADE BY THE CUSTOMER.

IF FOR ANY REASON THIS MODULE/COMPONENT IS RETURNED TO ROCKETDYNE FOR MODIFICATION AND/OR REPAIRS, THIS LOG BOOK MUST ACCOMPANY THE MODULE/COMPONENT. MODIFICATION ENTRIES WILL BE ENTERED BY ROCKETDYNE AND CUSTODY RECORDS WILL BE MAINTAINED.

THE PAGES IN THIS LOG BOOK SHALL NOT BE REVISED WITHOUT OBTAINING APPROVAL OF THE ROCKETDYNE PROGRAM OFFICE, ROCKETDYNE QUALITY CONTROL, AND THE CUSTOMER REPRESENTATIVE.

THIS LOG BOOK IS APPROVED FOR USE ON:

PART NUMBER 103655 PART NAME PROPELLANT TANK, OXID

DATE	PROGRAM OFFICE	QUALITY ASSURANCE	PURCHASER
13 NOV 1963	W. E. McGivey	R. B. Smith	John S. Leslie

GENERAL INFORMATION

THIS LOG BOOK IS PROVIDED FOR SERVICE USE IN RECORDING PERTINENT HISTORICAL DATA AND ALL CHANGES FROM THE ORIGINAL CONFIGURATION. IT SHALL ACCOMPANY THE MODULE/COMPONENT WHEN TRANSFERRED BETWEEN ROCKETDYNE AND USING AGENCIES. THIS LOG BOOK SHALL BE KEPT WITH THE VEHICLE RECORDS WHEN THE MODULE/COMPONENT IS INSTALLED IN A VEHICLE.

SECTION I - MODULE/COMPONENT ASSEMBLY LOG

RECORDS CONTAINED IN THIS SECTION ARE PERTINENT TO THE MODULE/COMPONENT ACCEPTANCE AND ALSO INCLUDED MODEL CONFIGURATION DATA, PERTINENT DETAILS OF SHORT SHIPMENTS, COMPONENT DEVIATIONS, AGE SENSITIVE PARTS RECORD AND WEIGHT RECORD.

SECTION II - ACCEPTANCE TEST LOG

RECORDS OF ASSEMBLY ACCEPTANCE TESTS ARE PRESENTED IN THIS SECTION WITH PERFORMANCE DATA AND SUMMARY DATA ON INSPECTIONS AND ACCEPTANCE.

SECTION I

MODULE/COMPONENT ASSEMBLY LOG

MODULE COMPONENT SERIALIZATION LOG

MODEL NO.	CONTRACT NUMBER	McDONNELL SCD NUMBER
SE-7	Y20161R	52-52701-177

PART NUMBER	COMPONENT	SERIAL NO.	PLAN NO.	LOT NO.	LTR CHG	DATE	INSP	REMARKS
103655	TANK ASSY OXID	4051231	NONE	DNA	DNA	1 JUN 64	721	
103172	TANK ASSY OF	8501414	A32787-2	"	"	"	721	
103160	BLADDER ASSY	8500817	A23596-1	15	"	"	721	
103174	OUTLET ASSY	8501784	A39967-3	DNA	"	"	721	

R-15075-1

MER VERIFICATION

PART NUMBER	MODEL NO.	CONTRACT NUMBER	SERIAL NUMBER	Mc DONNELL SCD NUMBER
103655	SE-7	Y20161R	4051231	52-52701-177

MER/SER NO.	DATE	TITLE	DATE	INSP.
SE7-15	21AUG63	RESISTOFLEX FITTINGS; REPLACEMENT OF	1JUN64	ANR 721
SE7-23	31MAY63	COMPONENT SERVICING POINTS, SEALING SURFACES; CHANGES TO	1JUN64	ANR 721
SE7-30	31MAY63	LUBRICANTS; REPLACEMENT OF	1JUN64	ANR 721
SE6-062	6JAN64	COMPONENT CLEANING; PROVISION FOR	1JUN64	ANR 721
SE6-103	4SEP63	PROPELLANT TANKS; CHANGES TO	1JUN64	ANR 721
SE6-109	23DEC63	PROPELLANT TANK SHIMS; ADDITION OF	1JUN64	ANR 721
SE6-127	14APR64	TUBE STUB O.D. MINIMUM CONSTANT DIM., TANKS; REVISION OF	1JUN64	ANR 721
SE6-134	15APR64	O-RING SEAL; REPLACEMENT OF	1JUN64	ANR 721
SE6-147	22JAN64	BLADDER PERMEATION TESTING; DELETION OF	1JUN64	ANR 721
SE6-154	25NOV63	COMPONENT PACKAGES AND PROPELLANT TANKS RESISTOFLEX CAP; CHANGES TO	1JUN64	ANR 721
SE6-166	30JAN64	REDUNDANT SEAL PRESSURE CAP; REDESIGN OF	1JUN64	ANR 721
SE6-177	17APR64	PROPELLANT TANKS; CHANGES TO	1JUN64	ANR 721
SE6-232	27APR64	PROPELLANT TANKS, ATP; REVISION OF	1JUN64	ANR 721
SE6-068	14APR64	RESISTOFLEX DYNATUBE FITTING INTERFACE; LUBRICATION OF	1JUN64	ANR 721

(19103)

MODULE/COMPONENT VARIATION LOG

DATE 1 JUN 64

MODEL NO.	CONTRACT NO.	McDONNELL SCO NUMBER
SF-7	Y20161R	52-52701-177

PART NUMBER	PART NAME	SERIAL NUMBER	TYPE OF DISPOSITION
103655	TANK ASSEMBLY, OXIDIZER	4051231	NONE THIS DATE

VARIATION: NONE THIS DATE

ACTION TAKEN:

INSP. AMR 721

PART NUMBER	PART NAME	SERIAL NUMBER	TYPE OF DISPOSITION

VARIATION:

ACTION TAKEN:

INSP

PART NUMBER	PART NAME	SERIAL NUMBER	TYPE OF DISPOSITION

VARIATION:

ACTION TAKEN:

INSP

R-15075-1

SECTION II

ACCEPTANCE TEST LOG

COMPONENT ACCEPTANCE TEST LOG

MODEL NUMBER	CONTRACT NUMBER	McDONNELL SCD NUMBER
SE-7	Y20161R	52-52701-177

PART NUMBER	PART NAME	SERIAL NUMBER	SPECIFICATION NUMBER	REVISION
103655	PROPELLANT TANK	4051231	RA0220- 202 AMEND.2	A

FUNCTIONAL TEST

PLANNER LEAK CHECK TEST: PARA. 4.1	PARA.	ACTUAL RESULTS
VOLUME OF WATER DISPLACED @ 15 ± 0.5 PSIG	4.1.6	LESS THAN .01 SCC/5MIN
VOLUME OF WATER DISPLACED @ 15 ± 0.5 PSIG	4.1.7	LESS THAN .01 SCC/5MIN
	4.1.7	LESS THAN .01 SCC/5MIN
	4.1.7	LESS THAN .01 SCC/5MIN
	4.1.7	LESS THAN .01 SCC/5MIN

INDOW PRESSURE AND HELIUM LEAK CHECK @ 500 ± 10 PSIG: PARA. 4.2 THRU 4.2.11

		LIMITS	
* COMBINED PURGE PORT & TANK FLANGE LEAKAGE	4.2.11	MAX. 16.6 SCC/HR (4.64×10^{-3} SCC/SEC)	2.26×10^{-4}
PURGE PORT LEAKAGE	4.2.17	MAX. 8.33 SCC/HR (2.32×10^{-3} SCC/SEC)	DNA
TANK FLANGE LEAKAGE	4.2.19	MAX. 8.33 SCC/HR (2.32×10^{-3} SCC/SEC)	DNA

*NOTE: SHOULD THE COMBINED LEAKAGE RATE BE EQUAL TO OR LESS THAN 8.33 SCC/HR (2.32×10^{-3}), DISREGARD PARA. 4.2.15 THRU 4.2.22

R-15075-1

INSP

(16123)

R-15075-1

SCD 52-52701-273
S/N 4057135

~~CONFIDENTIAL~~

"CERTIFICATION IS HEREBY GIVEN THAT THE DELIVERABLE END ITEM COVERED BY THIS LOG BOOK WAS MANUFACTURED, INSPECTED AND TESTED IN ACCORDANCE WITH PRESCRIBED DRAWINGS, SPECIFICATION AND QUALITY ASSURANCE PROVISIONS. INSPECTION AND TEST RECORDS ARE ON FILE VERIFYING COMPLIANCE WITH APPLICABLE DRAWINGS AND SPECIFICATIONS, EXCEPT AS NOTED HEREIN"

LOG BOOK ACCEPTANCE

DAT #3 (BRD #3)

SPACE ENGINES ENGINEERING	SPACE ENGINES QUALITY CONTROL	McDONNELL QUALITY REPRESENTATIVE	GOV'T INSPECTION AGENCY QUALITY REPRESENTATIVE
W R Marsden	C.H. Lubeback	C. N. Michaelis	[illegible]
DATE 4-Aug. 64	DATE 4-AUG. 64	DATE 4 Aug. 1964	DATE 4 Aug 1964

CONTENTS

SECTION I – DELIVERABLE END ITEM ASSEMBLY LOG

RECORDS CONTAINED IN THIS SECTION ARE PERTINENT TO THE DELIVERABLE END ITEM ACCEPTANCE AND ALSO INCLUDE MODEL CONFIGURATION DATA, PERTINENT DETAILS OF SHORT SHIPMENTS, COMPONENT VARIATIONS, AGE SENSITIVE PARTS RECORD, WEIGHT AND SERIALIZATION RECORDS.

SECTION II – ACCEPTANCE TEST LOG

RECORDS OF ASSEMBLY ACCEPTANCE TESTS ARE PRESENTED IN THIS SECTION WITH PERFORMANCE DATA AND SUMMARY DATA ON INSPECTIONS AND ACCEPTANCE.

GENERAL INFORMATION

THIS LOG BOOK IS PROVIDED FOR SERVICE USE IN RECORDING PERTINENT HISTORICAL DATA AND ALL CHANGES FROM THE ORIGINAL CONFIGURATION. IT IS REQUESTED THIS LOG BOOK ACCOMPANY THE DELIVERABLE END ITEM WHEN TRANSFERRED BETWEEN ROCKETDYNE AND USING AGENCIES.

GROUP-4
Downgraded at 3 year intervals;
declassified after 12 years

ROCKETDYNE – SPACE ENGINES
A DIVISION OF NORTH AMERICAN AVIATION, INC.

LOG BOOK SPECIFICS

McDONNELL	ITEM	ROCKETDYNE
	THIS MATERIAL CONTAINS INFORMATION AFFECTING THE NATIONAL DEFENSE OF THE UNITED STATES WITHIN THE MEANING OF THE ESPIONAGE LAWS, TITLE 18 U.S.C., SECTIONS 793 AND 794. ITS TRANSMISSION OR THE REVELATION OF ITS CONTENTS IN ANY MANNER TO AN UNAUTHORIZED PERSON IS PROHIBITED BY LAW.	
	LOG BOOK DATE	4 AUGUST 1964
	DWG CHG LTR	DNA
Y20161R	CONTRACT NO.	
	GEN ORDER NO.	5252
SCD52-52701-273	SPEC NO.	
DNA	SERIAL NO.	4057135
52-52701-273	PART NO.	208160-31

SE-7 DELIVERABLE END ITEM – LOG BOOK IDENTIFICATION

PART NAME THRUST CHAMBER, 25 LB., ASSY OF

1.0

~~CONFIDENTIAL~~

277

DELIVERABLE END ITEM (DEI)

THIS LOG BOOK CONTAINS INFORMATION PERTINENT TO THE DELIVERABLE END ITEM (DEI) AS SPECIFIED HEREIN BY SERIAL NO. AND PART NO. IT IS NECESSARY THAT ALL ENTRIES BE WRITTEN IN INK OR TYPED FOR PERMANENT RECORD. ENTRIES SUCH AS SERIALIZATION, WEIGHT, APPLICABLE MCR'S, ACCEPTANCE TEST DATA AND CALIBRATION DATA WILL BE ENTERED BY ROCKETDYNE AT THE TIME OF DELIVERY.

IT IS REQUESTED THAT THIS LOG BOOK ACCOMPANY THIS DELIVERABLE END ITEM IF THE ITEM IS RETURNED TO ROCKETDYNE FOR REPAIR, MODIFICATION OR RETEST. ROCKETDYNE WILL THEN ENTER REPAIR, MODIFICATION AND RETEST DATA IN THIS LOG BOOK.

THE FORMAT OF PAGES IN THIS LOG BOOK SHALL NOT BE REVISED WITHOUT OBTAINING APPROVAL OF ROCKETDYNE SPACE ENGINES QUALITY CONTROL.

R-15075-1

1.0	LOG BOOK IDENTIFICATION
2.0	FOREWORD
3.0	CONTENTS
4.0	MODULE/COMPONENT ASSEMBLY LOG - SECTION I
4.1	CONFIGURATION AND SERIALIZATION LOG
4.2	MCR VERIFICATION
4.3	VARIATION LOG
4.4	REPLACEMENT LOG
5.0	COMPONENT ACCEPTANCE TEST LOG - SECTION II
5.1	COMPONENT ACCEPTANCE TEST
5.1.1	COMPONENT ACCEPTANCE TEST
5.1.2	COMPONENT ACCEPTANCE TEST
5.1.3	COMPONENT ACCEPTANCE TEST
5.2	CALIBRATED PERFORMANCE DATA
5.2.1	CALIBRATED PERFORMANCE DATA
5.2.2	CALIBRATED PERFORMANCE DATA
5.3	INFORMATION - CONTAMINATION

IND. NO.	PART NUMBER	REV. LTR.	PART NAME	SERIAL NO.	AGE CONTROL DATE OF MFG.	INSP.
1	208160-31	DNA	THRUST CHAMBER, 25 LB., ASSY OF	4057135	4Q63	ANQ 142
2	208161-11	DNA	BODY, THRUST CHAMBER, ASSY OF	4057813	4Q63	ANQ 142
2	208166	DNA	SHELL, THRUST CHAMBER, ASSY OF	8506983		ANQ 142
3	208530-11	DNA	INJECTOR, THRUST CHAMBER, ASSY OF	7040463		ANQ 142
2	407559	DNA	VALVE, OXIDIZER, T/C, ASSY OF	4054461		ANQ 142
2	407560	DNA	VALVE, FUEL, T/C, ASSY OF	4055170		ANQ 142

DNA SERIAL NO. 4057135

52-52701-273 PART NO. 208160-31

SE- 7 CONFIGURATION & SERIALIZATION LOG

PART NAME THRUST CHAMBER, 25 LB., ASSY OF

4.1

R-15075-1

MCR / ECP NO.	DATE	TITLE	DATE	INSP.
SE6-062	6JAN64	COMPONENT CLEANING; PROVISION FOR	4 AUG 64	ANR 142
SE6-064	30JUL63	TCA, ACCEPTANCE TESTS; REVISION OF	4 AUG 64	ANR 142
SE6-133	22APR64	TCA PROPELLANT VALVES; ADDITIONAL REQUIREMENTS FOR	4 AUG 64	ANR 142
SE6-139	15APR64	PLACEMENT OF HAYNES STELLITE #3 SAND CAST ON APPROVED MATERIAL LIST	4 AUG 64	ANR 142
SE6-144	15APR64	TCA INJECTORS; REDESIGN OF	4 AUG 64	ANR 142
SE6-179	16JUN64	TUBE STUBS; MARKING OF	4 AUG 64	ANR 142
SE6-075	2JUL64	MAC REPORT 8518, INCORPORATION OF	4 AUG 64	ANR 142
SE6-080	28DEC63	THRUST CHAMBER ASSEMBLIES, FABRICATION MATERIAL; APPROVAL OF	4 AUG 64	ANR 142
SE7-25	9APR63	25 LB. TCA, MOUNTING HOLES; RELOCATION OF	4 AUG 64	ANR 142
SE7-29	31MAY63	THRUST CHAMBER ASSY., 25#; CHANGES TO	4 AUG 64	ANR 142
SE6-227	6MAY64	25 LB. TCA SCD'S, CHANGES TO	4 AUG 64	ANR 142
SE6-085	30JUL63	CUSTOMER TEST SURVEILLANCE; REQUIREMENT FOR	4 AUG 64	ANR 142
SE6-125	15MAY64	TCA DYNAMIC RESPONSE, SYSTEM D.A.T.; ADDITION OF	4 AUG 64	ANR 142

DNA 52-52701-273 SERIAL NO. 4057135 PART NO. 208160-31

SE-7 DELIVERABLE END ITEM-MCR VERIFICATION

PART NAME THRUST CHAMBER, 25 LB., ASSY OF

4.2

MR NO.	PART OR COMP. INVOLVED	PART NUMBER	SERIAL NUMBER	BRIEF DESCRIPTION OF VARIATION AND MATERIAL REVIEW BOARD DISPOSITION	INSP.
MAC MRR #58772	THRUST CHAMBER 25 LB., ASSY OF	208160-31	4057135	DISCREPANCY: CONDITION A: THROAT INSERT HAS A LONGITUDINAL CRACK. CRACK IS LOCATED AT APPROX. 5 O'CLOCK USING THE P/C TUBE AS 12:00 O'CLOCK. THE CRACK RUNS FROM THE DOWNSTREAM EDGE OF THE THROAT TO WITHIN 1/8" OF THE MINOR DIA. THE CRACK IS .0001 WIDE (SEE SKETCH ATTACHED) CONDITION B: THE 2ND LINER FROM THE THROAT INSERT IS CRACKED AT APPROX. 6 O'CLOCK USING THE P/C TUBE AS 12 O'CLOCK. LINER IS CRACKED FROM THE DOWNSTREAM EDGE OF THE #29 DRILLED HOLE AND FROM THE UPSTREAM EDGE OF HOLE TO THE UPSTREAM EDGE OF THE LINER. THE CRACK ON THE DOWNSTREAM SIDE OF THE HOLE IS .0042 IN WIDTH AND .0023 ON THE UPSTREAM SIDE. (SEE SKETCH ATTACHED) DISPOSITION: DISCREPANCY IS NOT CONSIDERED SUFFICIENT TO MATERIALLY AFFECT THE PHYSICAL AND FUNCTIONAL DESIGN REQUIREMENTS, THEREFORE, ACCEPTABLE TO USE FOR DAT.	ARB 142

DNA 52-52701-273 SERIAL NO. 4057135 PART NO. 208160-31

SE- 7 DELIVERABLE END ITEM — VARIATION LOG

PART NAME THRUST CHAMBER, 25 LB., ASSY OF

4.3

SECTION II

	52-52701-273	PART NO. 208160-31	
SE-7 COMPONENT ACCEPTANCE TEST LOG	PART NAME THRUST CHAMBER, 25 LB., ASSY OF		5.0

PART NO.	PART NAME	SERIAL NO.	REASON FOR REPLACEMENT	REPLACED BY		INSP.
				PART NO.	SERIAL NO.	
	NONE THIS DATE 4 AUG 64					

R-15075-1

DNA	SERIAL NO.	4057135	
52-52701-273	PART NO.	208160-31	
SE-7 DELIVERABLE END ITEM--REPLACEMENT LOG	PART NAME	THRUST CHAMBER, 25 LB., ASSY OF	4.4

R-15075-1

PERFORMANCE PARAMETERS	PARAGRAPH NUMBER	UNITS	SPECIFICATION LIMITS	ACCEPTANCE TEST DATA	INSP.
ELECTRICAL RESISTANCE TESTS	4.2				
VALVE BODY TEMPERATURE	4.2.4				
OXIDIZER		DEGREES F	70 ± 5	72	
FUEL		DEGREES F	70 ± 5	72	
VALVE COIL RESISTANCE	4.2.5				
OXIDIZER		OHMS	42 ± 2	41.050	
FUEL		OHMS	42 ± 2	40.860	
CONTINUITY RESISTANCE	4.2.9				
OXIDIZER		OHMS	1.0 MAX.	.038	
FUEL		OHMS	1.0 MAX.	.035	
DIELECTRIC STRENGTH TEST	4.3				
CURRENT LEAKAGE					
OXIDIZER	4.3.8	MICRO AMPS	500 MAX.	26	
FUEL	4.3.8	MICRO AMPS	500 MAX.	26	
PROOF PRESSURE TEST - TCA PROPELLANT VALVES	4.4				
VALVE PRESSURIZED FOR MINIMUM OF 3 MINUTES AT 500 ± 10 PSIG	4.4.3	DNA	VERIFY	VERIFIED	
VALVE DE-PRESSURIZED AND VALVE HOUSING INSPECTED FOR DAMAGE OR DEFORMATION	4.4.4	DNA	VERIFY	VERIFIED	
PARAGRAPHS 4.4.3 AND 4.4.4 REPEATED	4.4.5	DNA	VERIFY	VERIFIED	

REVISION	AMENDMENT	SPECIFICATION NUMBER		
B	#4	RA0220-268	DNA 52-52701-273	SERIAL NO. 4057135 PART NO. 208160-31

SE-7 COMPONENT ACCEPTANCE TEST

PART NAME THRUST CHAMBER, 25 LB., ASSY OF

5.1

PERFORMANCE PARAMETERS	PARAGRAPH NUMBER	UNITS	SPECIFICATION LIMITS	ACCEPTANCE TEST DATA	INSP.
PROOF PRESSURE TEST - TCA PROPELLANT VALVES (CONTINUED)					
CONFORMANCE TO PARAGRAPHS 4.4.3, 4.4.4, AND 4.4.5 VERIFIED					
OXIDIZER		DNA	VERIFY	VERIFIED	
FUEL		DNA	VERIFY	VERIFIED	
PROOF PRESSURE AND LEAKAGE TEST - THRUST CHAMBER	4.5				
CHAMBER PRESSURIZED FOR A MINIMUM OF 5 MINUTES AT 392 ± 10 PSIG. NO LEAKAGE DETECTED	4.5.8	DNA	VERIFY	VERIFIED	
CHAMBER DE-PRESSURIZED AND PARAGRAPH 4.5.8 REPEATED	4.5.8	DNA	VERIFY	VERIFIED	
TCA INSPECTED VISUALLY FOR DAMAGE OR DEFORMATION	4.5.14	DNA	VERIFY	VERIFIED	
FUNCTIONAL TEST - TCA PROPELLANT VALVES	4.6				
OPENING RESPONSE TIME	4.6.8				
OXIDIZER		SEC.	.0065 MAX.	.0034	
FUEL		SEC.	.0065 MAX.	.0038	
CLOSING RESPONSE TIME	4.6.10				
OXIDIZER		SEC.	.002 MAX.	.0015	
FUEL		SEC.	.002 MAX.	.012	
CLOSING DROP OUT VOLTAGE	4.6.13				
OXIDIZER		VOLT(DC)	1 MIN.	1.1	
FUEL		VOLT(DC)	1 MIN.	1.25	

REVISION	AMENDMENT	SPECIFICATION NUMBER		
"B"	#4	RA0220-268	DNA 52-52701-273	SERIAL NO. 1057135 PART NO. 208160-31

SE- 7 COMPONENT ACCEPTANCE TEST

PART NAME THRUST CHAMBER, 25., ASSY OF

5.1.1

R-15075-1

PERFORMANCE PARAMETERS	PARAGRAPH NUMBER	UNITS	SPECIFICATION LIMITS	ACCEPTANCE TEST DATA	INSP.
LEAKAGE TEST - TCA PROPELLANT VALVES	4.8				
SEAT LEAKAGE RATE	4.8.16				
OXIDIZER	4.8.17	SCC/MIN	2.21 MAX.	LESS THAN 0.1	ANE 495
FUEL	4.8.17	SCC/MIN	2.21 MAX.	LESS THAN 0.1	
PRE-TEST DATA					
DRY WEIGHT	4.1.3	LB.	DNA	3.19	
NOZZLE EXIT DIAMETER SECTION A-A		INCH	DNA	2.246	
THROAT DIAMETER SECTION A-A		INCH	DNA	.358	
B-B		INCH	DNA	.358	
C-C		INCH	DNA	.358	
D-D		INCH	DNA	.358	
POST HOT-FIRE DATA					
PROOF PRESSURE AND LEAKAGE TEST - THRUST CHAMBER	4.5				
CHAMBER PRESSURIZED FOR A MINIMUM OF 5 MINUTES AT 392 ± 10 PSIG. NO LEAKAGE DETECTED	4.5.8	DNA	VERIFY	VERIFIED	ANE 495
CHAMBER DE-PRESSURIZED AND PARAGRAPH 4.5.8 REPEATED	4.5.8	DNA	VERIFY	VERIFIED	
TCA INSPECTED VISUALLY FOR DAMAGE OR DEFORMATION	4.5.14	DNA	VERIFY	VERIFIED	

REVISION "B"	AMENDMENT #4	SPECIFICATION NUMBER RA0220-268	DNA 52-52701-273 SERIAL NO. 4057135 PART NO. 208160-31
SE-7 COMPONENT ACCEPTANCE TEST			PART NAME THRUST CHAMBER, 25 LB., ASSY OF — 5.1.2

PERFORMANCE PARAMETERS	PARAGRAPH NUMBER	UNITS	SPECIFICATION LIMITS	ACCEPTANCE TEST DATA	INSP.
LEAK TEST--WELDED JOINTS					
JOINT LEAKAGE RATE	4.17.5				
OXIDIZER	4.17.6	SCC/SEC	10^{-6} MAX.	LESS THAN 10^{-6}	ANR 142
FUEL	4.17.8	SCC/SEC	10^{-6} MAX.	LESS THAN 10^{-6}	ANR 142
LEAKAGE TEST-TCA PROPELLANT VALVES	4.17.9				
SEAT LEAKAGE RATE	4.8.16				
OXIDIZER	4.8.17	SCC/SEC	2.21 MAX.	LESS THAN 0.1	ANR 142
FUEL	4.8.17	SCC/SEC	2.21 MAX.	LESS THAN 0.1	ANR 142
DRY WEIGHT	4.17.1	LB.	DNA	3.21	ANR 142
NOZZLE EXIT DIAMETER					
SECTION A-A		INCH	DNA	2.251	ANR 142
THROAT DIAMETER	4.18.1				
SECTION A-A		INCH	DNA	.3575	ANR 142
B-B		INCH	DNA	.3580	ANR 142
C-C		INCH	DNA	.3575	ANR 142
D-D		INCH	DNA	.3580	ANR 142
DRY WEIGHT (DELIVERABLE)	4.18.2	LB.	DNA	3.07	ANR 142

SPECIFICATION NUMBER	REVISION	AMENDMENT			
RA0220-268	B	#4	DNA	SERIAL NO.	4057135
			52-52701-273	PART NO.	208160-31

SE- 7 COMPONENT ACCEPTANCE TEST

PART NAME THRUST CHAMBER, 25 LB., ASSY OF

5.1.3

F

R-15075-1

CHARACTERISTICS	UNITS	SPECIFICATION LIMITS	RUN 107 TEST DATA	RUN TEST DATA	RUN TEST DATA	RUN 110 FINAL TEST DATA	INSP.
HOT FIRE TEST DATA - TEST SITE	-	-	NFL	-	-	NFL	ANR 142
CELL LOCATION	-	-	1-D	-	-	1-D	ANR 142
CELL NUMBER	-	-	379	-	-	379	ANR 142
TEST DATE	-	-	9 JUL 64	-	-	16 JUL 64	ANR 142
TEST DURATION	SEC.	2 MIN.	3.0	-	-	3.0	ANR 142
ENVIRONMENTAL Pc	PSIA	.16 MAX.	.0548	-	-	.0492	ANR 142
AMBIENT PRESSURE	PSIA	DNA	12.08	-	-	12.10	ANR 142
AMBIENT TEMPERATURE	°F	DNA	68.0	-	-	85.0	ANR 142
TIME OF DATA SLICE-START	SEC.	DNA	2.8	-	-	2.8	ANR 142
TIME OF DATA SLICE-END	SEC,	DNA	2.8	-	-	2.8	ANR 142
OXIDIZER TEMPERATURE	°F	DNA	56.3	-	-	71.0	ANR 142
FUEL TEMPERATURE	°F	DNA	57.0	-	-	70.8	ANR 142
OXIDIZER DENSITY	LB/FT^3	DNA	91.68	-	-	91.30	ANR 142
FUEL DENSITY	LB/FT^3	DNA	55.04	-	-	54.80	ANR 142

289

REVISION	AMENDMENT	SPECIFICATION NUMBER		
B	#4	RA0220-268	DNA 52-52701-273	SERIAL NO. 4057135 PART NO. 208160-31

SE-7 (REA) CALIBRATED PERFORMANCE DATA

PART NAME THRUST CHAMBER, 25 LB., ASSY OF

5.2

290

CHARACTERISTICS	UNITS	SPECIFICATION LIMITS	RUN 107 TEST DATA	RUN TEST DATA	RUN TEST DATA	RUN 110 FINAL TEST DATA	INSP.
HOT FIRE TEST DATA - TEST SITE	-	-	NFL	-	-	NFL	ANR 142
OXIDIZER INLET PRESSURE	PSIA	292 ± 10	296.7	-	-	293.2	ANR 142
FUEL INLET PRESSURE	PSIA	292 ± 10	294.0	-	-	293.4	ANR 142
OXIDIZER FLOWRATE	LB/SEC.	DNA	.0477	-	-	.0458	ANR 142
FUEL FLOWRATE	LB/SEC.	DNA	.0349	-	-	.0345	ANR 142
THRUST	LB.	DNA	23.8	-	-	23.2	ANR 142
MIXTURE RATIO	O/F	DNA	1.37	-	-	1.33	ANR 142
SPECIFIC IMPULSE	SEC.	DNA	288.	-	-	289.	ANR 142
INJECTOR END Pc	PSIA	DNA	137.6	-	-	133.5	ANR 142
CHARACTERISTIC VELOCITY	FT/SEC.	DNA	5394.	-	-	5384.	ANR 142
THROAT DIAMETER	IN.	DNA	.358	-	-	.358	ANR 142
FUEL ORIFICE DIAMETER	IN.	DNA	.04550	-	-	.04375	ANR 142
OXIDIZER ORIFICE DIAMETER	IN.	DNA	.03880	-	-	.03710	ANR 142
TCA FIRING TIME (TOTAL)	SEC.	10 MAX.	3.0	-	-	6.0	ANR 142
OXIDIZER SAMPLE NUMBER	-	-	249.	-	-	254.	ANR 142
FUEL SAMPLE NUMBER	-	-	250.	-	-	253.	ANR 142

R-15075-1

REVISION	AMENDMENT	SPECIFICATION NUMBER		
"B"	#4	RA0220-268	DNA 52-52701-273	SERIAL NO. 4057135 PART NO. 208160-31

SE-7 (REA) CALIBRATED PERFORMANCE DATA

PART NAME THRUST CHAMBER, 25 LB., ASSY OF

5.2.1

CONFIDENTIAL

R-15075-1

CHARACTERISTICS	UNITS	SPECIFICATION LIMITS	RUN 107 TEST DATA	RUN TEST DATA	RUN TEST DATA	RUN 110 FINAL TEST DATA	INSP.
HOT FIRE TEST DATA - TEST SITE	-	-	NFL	-	-	NFL	ANR 142
ADJUST TO STANDARD CONDITIONS	-	-	-	-	-	-	
THRUST	LB.	23 ± 1.2	23.7	-	-	23.3	ANR 142
MIXTURE RATIO	O/F	1.30 ± .04	1.35	-	-	1.32	ANR 142
SPECIFIC IMPULSE	SEC.	DNA	291.	-	-	291.	ANR 142
INJECTOR END Pc	PSIA	DNA	135.8	-	-	132.6	ANR 142
CHARACTERISTIC VELOCITY	FT/SEC.	DNA	5389.	-	-	5382.	ANR 142
ADJUST TO RATED CONDITIONS	-	-	-	-	-	-	
THRUST	LB.	23	23.0	-	-	23.0	ANR 142
MIXTURE RATIO	O/F	1.3	1.30	-	-	1.30	ANR 142
SPECIFIC IMPULSE	SEC.	272 MIN.	290.	-	-	291.	ANR 142

291

* REVISION "B" AMENDMENT #4
** REVISION N/C AMENDMENT #2

SPECIFICATION NUMBER
*RA0220-268 and **RA0220-230

DNA
52-52701-273

SERIAL NO. 4057135
PART NO. 208160-31

SE- 7 (REA) CALIBRATED PERFORMANCE DATA

PART NAME THRUST CHAMBER, 25 LB., ASSY OF

5.2.2

~~CONFIDENTIAL~~

THE FOLLOWING IS INFORMATION RELATIVE TO THE CLEANLINESS LEVEL OF THE PROPELLANT UTILIZED IN THE HOT-FIRE ACCEPTANCE TEST OF THE THRUST CHAMBER ASSEMBLY.

THE INFLUENT PARTICULATE COUNT OF THE PROPELLANT WAS:

		LIMITS	ACTUAL COUNT MMH - FUEL	ACTUAL COUNT NTO - OXID
	< 10	*	*	*
	10 - 25	100	60	30
	25 - 50	20	8	2
	50 - 100	5	2	1
	100 - 300	1	1	0
	300 - 1000	0	0	0
	> 1000	0	0	0
FIBERS	300 - 3000	0	0	0
FIBERS	> 3000	0	0	0

* NOTE: " NOT TO BE COUNTED BUT NO SLURRY OF FINE PARTICLES WHICH COVERS MORE THAN AN ESTIMATED 5 PERCENT OF THE TOTAL EFFECTIVE FILTER AREA SHALL BE ALLOWED." AT THE DISCRETION OF QUALITY ASSURANCE, A WEIGHT DETERMINATION OF TOTAL CONTAMINATION MAY BE MADE AS A REFEREE TEST IN BORDERLINE CASES. THE MAXIMUM ALLOWABLE WEIGHT OF CONTAMINANTS SHALL BE 0.001 GRAM (1 MG).

CLASS 4

INSP. AHR 142

SPECIFICATION NUMBER	REVISION	AMENDMENT	DNA	SERIAL NO. 4057135
RA0615-003	"B"	#2	52-52701-273	PART NO. 208160-31
SE- 7 INFORMATION - CONTAMINATION			PART NAME THRUST CHAMBER, 25 LB., ASSY OF	5.3

R-15075-1

~~CONFIDENTIAL~~

SCD 52-52701-271

"CERTIFICATION IS HEREBY GIVEN THAT THE DELIVERABLE END ITEM COVERED BY THIS LOG BOOK WAS MANUFACTURED, INSPECTED AND TESTED IN ACCORDANCE WITH PRESCRIBED DRAWINGS, SPECIFICATION AND QUALITY ASSURANCE PROVISIONS. INSPECTION AND TEST RECORDS ARE ON FILE VERIFYING COMPLIANCE WITH APPLICABLE DRAWINGS AND SPECIFICATIONS, EXCEPT AS NOTED HEREIN"

LOG BOOK ACCEPTANCE DAT#4 (CRD #4)

SPACE ENGINES ENGINEERING	SPACE ENGINES QUALITY CONTROL	QUALITY REPRESENTATIVE	QUALITY REPRESENTATIVE
DATE 7-13-64	DATE 13 July 64	DATE 13 July 64	DATE 13 July 1964

CONTENTS

SECTION I – DELIVERABLE END ITEM ASSEMBLY LOG

RECORDS CONTAINED IN THIS SECTION ARE PERTINENT TO THE DELIVERABLE END ITEM ACCEPTANCE AND ALSO INCLUDE MODEL CONFIGURATION DATA, PERTINENT DETAILS OF SHORT SHIPMENTS, COMPONENT VARIATIONS, AGE SENSITIVE PARTS RECORD, WEIGHT AND SERIALIZATION RECORDS.

SECTION II – ACCEPTANCE TEST LOG

RECORDS OF ASSEMBLY ACCEPTANCE TESTS ARE PRESENTED IN THIS SECTION WITH PERFORMANCE DATA AND SUMMARY DATA ON INSPECTIONS AND ACCEPTANCE.

GENERAL INFORMATION

THIS LOG BOOK IS PROVIDED FOR SERVICE USE IN RECORDING PERTINENT HISTORICAL DATA AND ALL CHANGES FROM THE ORIGINAL CONFIGURATION. IT IS REQUESTED THIS LOG BOOK ACCOMPANY THE DELIVERABLE END ITEM WHEN TRANSFERRED BETWEEN ROCKETDYNE AND USING AGENCIES.

GROUP-4
Downgraded at 3 year intervals;
declassified after 12 years

ROCKETDYNE – SPACE ENGINES
A DIVISION OF NORTH AMERICAN AVIATION, INC.

LOG BOOK SPECIFICS

	ITEM	ROCKETDYNE
THIS MATERIAL CONTAINS INFORMATION AFFECTING THE NATIONAL DEFENSE OF THE UNITED STATES WITHIN THE MEANING OF THE ESPIONAGE LAWS, TITLE 18 U.S.C., SECTIONS 793 AND 794. ITS TRANSMISSION OR THE REVELATION OF ITS CONTENTS IN ANY MANNER TO AN UNAUTHORIZED PERSON IS PROHIBITED BY LAW.		
	LOG BOOK DATE	13 JULY 64
	DWG CHG LTR	DNA
Y20161R	CONTRACT NO.	
	GEN ORDER NO.	5252
SCD52-52701-271	SPEC NO.	
DNA	SERIAL NO	4058291
52-52701-271	PART NO.	208160-21

SE-7 DELIVERABLE END ITEM – LOG BOOK IDENTIFICATION

PART NAME THRUST CHAMBER, 25 LB., ASSY OF

1.0

293

~~CONFIDENTIAL~~

1.0 LOG BOOK IDENTIFICATION

2.0 FOREWORD

3.0 CONTENTS

4.0 MODULE/COMPONENT ASSEMBLY LOG - SECTION I

4.1 CONFIGURATION AND SERIALIZATION LOG

4.2 MCR VERIFICATION

4.3 VARIATION LOG

4.4 REPLACEMENT LOG

5.0 COMPONENT ACCEPTANCE TEST LOG - SECTION II

5.1 COMPONENT ACCEPTANCE TEST

5.1.1 COMPONENT ACCEPTANCE TEST

5.1.2 COMPONENT ACCEPTANCE TEST

5.1.3 COMPONENT ACCEPTANCE TEST

5.2 CALIBRATED PERFORMANCE DATA

5.2.1 CALIBRATED PERFORMANCE DATA

5.2.2 CALIBRATED PERFORMANCE DATA

5.3 INFORMATION - CONTAMINATION

IND. NO.	PART NUMBER	REV. LTR.	PART NAME	SERIAL NO.	AGE CONTROL DATE OF MFG.	INSP.
1	208160-21	DNA	THRUST CHAMBER, 25 LB., ASSY OF	4058291	4Q63	ANR 645
2	208161-11	DNA	BODY, THRUST CHAMBER, ASSY OF	4055009	4Q63	ANR 645
2	208166	DNA	SHELL, THRUST CHAMBER, ASSY OF	8500493		ANR 645
3	208530-11	DNA	INJECTOR, THRUST CHAMBER, ASSY OF	7037526		ANR 645
2	407559	DNA	VALVE, OXIDIZER, T/C, ASSY OF	4057581		ANR 645
2	407560	DNA	VALVE, FUEL, T/C, ASSY OF	4055167		ANR 645

DNA
52-52701-271

SERIAL NO. 4058291
PART NO. 208160-21

SE-7 CONFIGURATION & SERIALIZATION LOG

PART NAME THRUST CHAMBER, 25 LB., ASSY OF

4.1

SECTION I

52-52701-271 PART NO. 208160-21

SE-7 MODULE / COMPONENT ASSEMBLY LOG

PART NAME THRUST CHAMBER, 25 LB., ASSY OF

4.0

DELIVERABLE END ITEM (DEI)

THIS LOG BOOK CONTAINS INFORMATION PERTINENT TO THE DELIVERABLE END ITEM (DEI) AS SPECIFIED HEREIN BY SERIAL NO. AND PART NO. IT IS NECESSARY THAT ALL ENTRIES BE WRITTEN IN INK OR TYPED FOR PERMANENT RECORD. ENTRIES SUCH AS SERIALIZATION, WEIGHT, APPLICABLE MCR'S, ACCEPTANCE TEST DATA AND CALIBRATION DATA WILL BE ENTERED BY ROCKETDYNE AT THE TIME OF DELIVERY.

IT IS REQUESTED THAT THIS LOG BOOK ACCOMPANY THIS DELIVERABLE END ITEM IF THE ITEM IS RETURNED TO ROCKETDYNE FOR REPAIR, MODIFICATION OR RETEST. ROCKETDYNE WILL THEN ENTER REPAIR, MODIFICATION AND RETEST DATA IN THIS LOG BOOK.

THE FORMAT OF PAGES IN THIS LOG BOOK SHALL NOT BE REVISED WITHOUT OBTAINING APPROVAL OF ROCKETDYNE QUALITY CONTROL.

52-52701-271 PART NO. 208160-21

FOREWORD--SE-7 LOG BOOK

PART NAME THRUST CHAMBER, 25 LB., ASSY OF

2.0

MCR / ECP NO.	DATE	TITLE	DATE	INSP.
SE6-62	6 JAN 64	COMPONENT CLEANING; PROVISION FOR	9 JUL 64	ANR 645
SE6-64	30 JUL 63	TCA, ACCEPTANCE TESTS; REVISION OF	9 JUL 64	ANR 645
SE6-133	22 APR 64	TCA PROPELLANT VALVES; ADDITIONAL REQUIREMENTS FOR	9 JUL 64	ANR 645
SE6-139	15 APR 64	PLACEMENT OF HAYNES STELLITE #3 SAND CAST ON APPROVED MATERIAL LIST	9 JUL 64	ANR 645
SE6-144	15 APR 64	TCA INJECTORS; REDESIGN OF	9 JUL 64	ANR 645
SE6-179	16 JUN 64	TUBE STUBS; MARKINGS OF	9 JUL 64	ANR 645
SE6-81	4 SEPT 63	COMPONENT VIBRATION, D.A.T.; REVISION OF	9 JUL 64	ANR 645
SE7-51	20 AUG 63	25# TCA, IMPULSE SIGNAL WIDTH TEST; CHANGES TO	9 JUL 64	ANR 645
SE7-53	20 AUG 63	TCA TESTS; REVISION OF	9 JUL 64	ANR 645

NASA

R-15075-1

DNA SERIAL NO. 4058291

52-52701-271 PART NO. 208160-21

SE-7 DELIVERABLE END ITEM-MCR VERIFICATION

PART NAME THRUST CHAMBER, 25 LB., ASSY OF

4.2

MR NO.	PART OR COMP. INVOLVED	PART NUMBER	SERIAL NUMBER	BRIEF DESCRIPTION OF VARIATION AND MATERIAL REVIEW BOARD DISPOSITION	INSP.
				NONE THIS DATE (13 JULY 1964)	

DNA	SERIAL NO.	4058291	
52-52701-271	PART NO.	208160-21	
SE-7 DELIVERABLE END ITEM — VARIATION LOG	PART NAME	THRUST CHAMBER, 25 LB., ASSY OF	4.3

300

PART NO.	PART NAME	SERIAL NO.	REASON FOR REPLACEMENT	REPLACED BY PART NO.	REPLACED BY SERIAL NO.	INSP.
			NONE THIS DATE (13 JULY 1964)			

DNA	SERIAL NO.	4058291	
52-52701-271	PART NO.	208160-21	
SE-7 DELIVERABLE END ITEM--REPLACEMENT LOG	PART NAME	THRUST CHAMBER, 25 LB., ASSY OF	4.4

R-15075-1

SECTION II

52-52701-271 PART NO. 208160-21

SE-7 COMPONENT ACCEPTANCE TEST LOG

PART NAME THRUST CHAMBER, 25 LB., ASSY OF 5.0

PERFORMANCE PARAMETERS	PARAGRAPH NUMBER	UNITS	SPECIFICATION LIMITS	ACCEPTANCE TEST DATA	INSP.
ELECTRICAL RESISTANCE TESTS	4.2				
VALVE BODY TEMPERATURE	4.2.4				
OXIDIZER		DEGREES F	70 ± 5	70	
FUEL		DEGREES F	70 ± 5	70	
VALVE COIL RESISTANCE	4.2.5				
OXIDIZER		OHMS	42 ± 2	41.09	
FUEL		OHMS	42 ± 2	41.13	
CONTINUITY RESISTANCE	4.2.9				
OXIDIZER		OHMS	1.0 MAX.	.274	
FUEL		OHMS	1.0 MAX.	.295	
DIELECTRIC STRENGTH TEST	4.3				
CURRENT LEAKAGE					
OXIDIZER	4.3.8	MICRO AMPS	500 MAX.	36	
FUEL	4.3.8	MICRO AMPS	500 MAX.	30	
PROOF PRESSURE TEST – TCA PROPELLANT VALVES	4.4				
VALVE PRESSURIZED FOR MINIMUM OF 3 MINUTES AT 500 ± 10 PSIG	4.4.3	DNA	VERIFY	VERIFIED	
VALVE DE-PRESSURIZED AND VALVE HOUSING INSPECTED FOR DAMAGE OR DEFORMATION	4.4.4	DNA	VERIFY	VERIFIED	
PARAGRAPHS 4.4.3 AND 4.4.4 REPEATED	4.4.5	DNA	VERIFY	VERIFIED	

302

R-15075-1

REV. B AMEND. #4	SPECIFICATION NUMBER RA0220-268	DNA 52-52701-271	SERIAL NO. 4058291 PART NO. 208160-21
SE-7 COMPONENT ACCEPTANCE TEST		PART NAME THRUST CHAMBER, 25 LB., ASSY OF	5.1

PERFORMANCE PARAMETERS	PARAGRAPH NUMBER	UNITS	SPECIFICATION LIMITS	ACCEPTANCE TEST DATA	INSP.
PROOF PRESSURE TEST - TCA PROPELLANT VALVES (CONTINUED)					
CONFORMANCE TO PARAGRAPHS 4.4.3, 4.4.4, AND 4.4.5 VERIFIED					
OXIDIZER		DNA	VERIFY	VERIFIED	ANR 545
FUEL		DNA	VERIFY	VERIFIED	ANR 545
PROOF PRESSURE AND LEAKAGE TEST - THRUST CHAMBER	4.5				
CHAMBER PRESSURIZED FOR A MINIMUM OF 5 MINUTES AT 392 ± 10 PSIG. NO LEAKAGE DETECTED	4.5.8	DNA	VERIFYQ	VERIFIED	ANR 545
CHAMBER DE-PRESSURIZED AND PARAGRAPH 4.5.8 REPEATED	4.5.8	DNA	VERIFY	VERIFIED	ANR 545
TCA INSPECTED VISUALLY FOR DAMAGE OR DEFORMATION	4.5.14	DNA	VERIFY	VERIFIED	ANR 545
FUNCTIONAL TEST - TCA PROPELLANT VALVES	4.6				
OPENING RESPONSE TIME	4.6.8				
OXIDIZER		SEC.	.0065 MAX.	.0034	ANR 545
FUEL		SEC.	.0065 MAX.	.0036	ANR 545
CLOSING RESPONSE TIME	4.6.10				
OXIDIZER		SEC.	.002 MAX.	.0015	ANR 545
FUEL		SEC.	.002 MAX.	.0016	ANR 545
CLOSING DROP OUT VOLTAGE	4.6.13				
OXIDIZER		VOLT(DC)	1 MIN.	1.5	ANR 545
FUEL		VOLT(DC)	1 MIN.	1.2	ANR 545

REV. B AMEND. #4

SPECIFICATION NUMBER RA0220-268

DNA 52-52701-271

SERIAL NO. 4058291

PART NO. 208160-21

SE- 7 COMPONENT ACCEPTANCE TEST

PART NAME THRUST CHAMBER, 25., ASSY OF

5.1.1

PERFORMANCE PARAMETERS	PARAGRAPH NUMBER	UNITS	SPECIFICATION LIMITS	ACCEPTANCE* TEST DATA	INSP.
* LEAKAGE TEST - TCA PROPELLANT VALVES	4.8				
SEAT LEAKAGE RATE	4.8.16				
OXIDIZER	4.8.17	SCC/MIN	2.21 MAX.	LESS THAN 0.1	
FUEL	4.8.1	SCC/MIN	2.21 MAX.	LESS THAN 0.1	
* PRE-TEST DATA					
DRY WEIGHT	4.1.3	LB.	DNA	3.20	
NOZZLE EXIT DIAMETER SECTION A-A		INCH	DNA	2.212	
THROAT DIAMETER SECTION A-A		INCH	DNA	.358	
B-B		INCH	DNA	.358	
C-C		INCH	DNA	.358	
D-D		INCH	DNA	.358	
** POST HOT-FIRE DATA					
PROOF PRESSURE AND LEAKAGE TEST - THRUST CHAMBER	4.5				
CHAMBER PRESSURIZED FOR A MINIMUM OF 5 MINUTES AT 392 ± 10 PSIG. NO LEAKAGE DETECTED	4.5.8	DNA	VERIFY	VERIFIED	
CHAMBER DE-PRESSURIZED AND PARAGRAPH 4.5.8 REPEATED	4.5.8	DNA	VERIFY	VERIFIED	
TCA INSPECTED VISUALLY FOR DAMAGE OR DEFORMATION	4.5.14	DNA	VERIFY	VERIFIED	

* REV. B AMEND. #4
** REV. N/C AMEND. #3

SPECIFICATION NUMBER
* RA0220-268
** RA0220-354

DNA SERIAL NO. 4058291
52-52701-268 PART NO. 208160-21

SE-7 COMPONENT ACCEPTANCE TEST

PART NAME THRUST CHAMBER, 25 LB., ASSY OF

5.1.2

R-15075-1

PERFORMANCE PARAMETERS	PARAGRAPH NUMBER	UNITS	SPECIFICATION LIMITS	ACCEPTANCE TEST DATA	INSP.
LEAK TEST--WELDED JOINTS					
JOINT LEAKAGE RATE	4.17.5				
OXIDIZER	4.17.6	SCC/SEC	10^{-6} MAX.	1.9×10^{-7}	
FUEL	4.17.8	SCC/SEC	10^{-6} MAX.	3.4×10^{-8}	
LEAKAGE TEST-TCA PROPELLANT VALVES	4.17.9				
SEAT LEAKAGE RATE	4.8.16				
OXIDIZER	4.8.17	SCC/SEC	2.21 MAX.	LESS THAN 0.1	
FUEL	4.8.17	SCC/SEC	2.21 MAX.	LESS THAN 0.1	
DRY WEIGHT	4.17.1	LB.	DNA	3.21	
NOZZLE EXIT DIAMETER					
SECTION A-A		INCH	DNA	2.230	
THROAT DIAMETER	4.18.1				
SECTION A-A		INCH	DNA	.357	
B-B		INCH	DNA	.357	
C-C		INCH	DNA	.357	
D-D		INCH	DNA	.357	
DRY WEIGHT (DELIVERABLE)	4.18.2	LB.	DNA	3.07	

305

SPECIFICATION NUMBER	REVISION	AMENDMENT		SERIAL NO. 4058291
RA0220-349	N/C	#3	52-52701-271	PART NO. 208160-21

SE- 7 COMPONENT ACCEPTANCE TEST

PART NAME THRUST CHAMBER, 25 LB., ASSY OF

5.1.3

306

CHARACTERISTICS	UNITS	SPECIFICATION LIMITS	RUN 144 TEST DATA	RUN TEST DATA	RUN TEST DATA	RUN 152 FINAL TEST DATA	INSP.
HOT FIRE TEST DATA - TEST SITE	-	-	NFL	-	-	NFL	
CELL LOCATION	-	-	379	-	-	379	
CELL NUMBER	-	-	1-C	-	-	1-C	
TEST DATE	-	-	3 JUN 64	-	-	9 JUN 64	
TEST DURATION	SEC.	2 MIN.	3.0	-	-	3.0	
ENVIRONMENTAL Pc	PSIA	.16 MAX.	.0528	-	-	.0582	
AMBIENT PRESSURE	PSIA	DNA	12.09	-	-	11.95	
AMBIENT TEMPERATURE	°F	DNA	60.0	-	-	42.0	
TIME OF DATA SLICE-START	SEC.	DNA	2.8	-	-	2.8	
TIME OF DATA SLICE-END	SEC,	DNA	2.8	-	-	2.8	
OXIDIZER TEMPERATURE	°F	DNA	60.9	-	-	42.5	
FUEL TEMPERATURE	°F	DNA	65.3	-	-	42.8	
OXIDIZER DENSITY	LB/FT^3	DNA	89.91	-	-	92.67	
FUEL DENSITY	LB/FT^3	DNA	54.66	-	-	55.92	

R-15075-1

REV. B AMEND. #4	SPECIFICATION NUMBER RA0220-268	DNA 52-52701-271	SERIAL NO. 4058291 PART NO. 208160-21
SE-7 (REA) CALIBRATED PERFORMANCE DATA		PART NAME THRUST CHAMBER, 25 LB., ASSY OF	5.2

CONFIDENTIAL

R-15075-1

CHARACTERISTICS	UNITS	SPECIFICATION LIMITS	RUN 144 TEST DATA	RUN TEST DATA	RUN TEST DATA	RUN 152 FINAL TEST DATA	INSP.
HOT FIRE TEST DATA - TEST SITE	-	-	NFL	-	-	NFL	
OXIDIZER INLET PRESSURE	PSIA	292 ± 10	295.3	-	-	287.6	
FUEL INLET PRESSURE	PSIA	292 ± 10	294.2	-	-	286.8	
OXIDIZER FLOWRATE	LB/SEC.	DNA	.0467	-	-	.0474	
FUEL FLOWRATE	LB/SEC.	DNA	.0360	-	-	.0351	
THRUST	LB.	DNA	24.3	-	-	23.7	
MIXTURE RATIO	O/F	DNA	1.30	-	-	1.35	
SPECIFIC IMPULSE	SEC.	DNA	294.	-	-	287.	
INJECTOR END Pc	PSIA	DNA	139.6	-	-	138.3	
CHARACTERISTIC VELOCITY	FT/SEC.	DNA	5465.	-	-	5429.	
THROAT DIAMETER	IN.	DNA	.358	-	-	.358	
FUEL ORIFICE DIAMETER	IN.	DNA	.04890	-	-	.04890	
OXIDIZER ORIFICE DIAMETER	IN.	DNA	.04100	-	-	.04100	
TCA FIRING TIME (TOTAL)	SEC.	10 MAX.	3.0	-	-	6.0	
OXIDIZER SAMPLE NUMBER	-	-	233	-	-	235	
FUEL SAMPLE NUMBER	-	-	234	-	-	236	

307

REV. B AMEND. #4

SPECIFICATION NUMBER RA0220-268

DNA 52-52701-271

SERIAL NO. 405829

PART NO. 208160-21

SE-7 (REA) CALIBRATED PERFORMANCE DATA

PART NAME THRUST CHAMBER, 25 LB., ASSY OF

5.2.1

~~CONFIDENTIAL~~

CONFIDENTIAL

308

CHARACTERISTICS	UNITS	SPECIFICATION LIMITS	RUN 144 TEST DATA	RUN TEST DATA	RUN TEST DATA	RUN 152 FINAL TEST DATA	INSP.
HOT FIRE TEST DATA - TEST SITE	-	-	NFL	-	-	NFL	
ADJUST TO STANDARD CONDITIONS	-	-	-	-	-	-	-
THRUST	LB.	23 ± 1.2	24.4	-	-	23.9	
MIXTURE RATIO	O/F	1.30 ± .04	1.29	-	-	1.34	
SPECIFIC IMPULSE	SEC.	DNA	269.	-	-	290.	
INJECTOR END Pc	PSIA	DNA	138.7	-	-	138.5	
CHARACTERISTIC VELOCITY	FT/SEC.	DNA	5463.	-	-	5427.	
ADJUST TO RATED CONDITIONS	-	-	-	-	-	-	
THRUST	LB.	23	23.0	-	-	23.0	
MIXTURE RATIO	O/F	1.3	1.30	-	-	1.30	
SPECIFIC IMPULSE	SEC.	272 MIN.	297.	-	-	289.	

R-15075-1

* REV. B AMEND. #4
** REV. N/C AMEND. #1

*SPECIFICATION** NUMBER
RA0220-268 and RA0220-230

DNA
52-52701-271

SERIAL NO. 4058291
PART NO. 208160-21

SE- 7 (REA) CALIBRATED PERFORMANCE DATA

PART NAME THRUST CHAMBER, 25 LB., ASSY OF

5.2.2

~~CONFIDENTIAL~~

R-15075-1

THE FOLLOWING IS INFORMATION RELATIVE TO THE CLEANLINESS LEVEL OF THE PROPELLANT UTILIZED IN THE HOT-FIRE ACCEPTANCE TEST OF THE THRUST CHAMBER ASSEMBLY.

THE INFLUENT PARTICULATE COUNT OF THE PROPELLANT WAS:

		LIMITS	ACTUAL COUNT MMH - FUEL	ACTUAL COUNT NTO - OXID
	< 10	*	DNA	DNA
	10 - 25	100	105	52
	25 - 50	20	15	20
	50 - 100	5	5	0
	100 - 300	1	0	0
	300 - 1000	0	0	0
	> 1000	0	0	0
FIBERS	300 - 3000	0	0	0
FIBERS	> 3000	0	0	0

* NOTE: " NOT TO BE COUNTED BUT NO SLURRY OF FINE PARTICLES WHICH COVERS MORE THAN AN ESTIMATED 5 PERCENT OF THE TOTAL EFFECTIVE FILTER AREA SHALL BE ALLOWED." AT THE DISCRETION OF QUALITY ASSURANCE, A WEIGHT DETERMINATION OF TOTAL CONTAMINATION MAY BE MADE AS A REFEREE TEST IN BORDERLINE CASES. THE MAXIMUM ALLOWABLE WEIGHT OF CONTAMINANTS SHALL BE 0.001 GRAM (1 MG).

CLASS 4

INSP. ANR 142 M NASA

309

SPECIFICATION NUMBER	REVISION	AMENDMENT		
RA0615-003	B	#1	52-52701-271 PART NO. 208160-21	
SE- 6 INFORMATION - CONTAMINATION			PART NAME THRUST CHAMBER, 25 LB., ASSY OF	5.3

CONFIDENTIAL

SCD52-52701-273
S/N4057134

310

"CERTIFICATION IS HEREBY GIVEN THAT THE DELIVERABLE END ITEM COVERED BY THIS LOG BOOK WAS MANUFACTURED, INSPECTED AND TESTED IN ACCORDANCE WITH PRESCRIBED DRAWINGS, SPECIFICATION AND QUALITY ASSURANCE PROVISIONS. INSPECTION AND TEST RECORDS ARE ON FILE VERIFYING COMPLIANCE WITH APPLICABLE DRAWINGS AND SPECIFICATIONS, EXCEPT AS NOTED HEREIN"

LOG BOOK ACCEPTANCE DAT #2 (BRD #2)

SPACE ENGINES ENGINEERING	SPACE ENGINES QUALITY CONTROL	McDONNELL QUALITY REPRESENTATIVE	GOV'T INSPECTION AGENCY QUALITY REPRESENTATIVE
RW Helbel	Wm E Reich	[illegible]	R. L. Burrow
DATE 8-23-64	DATE 8-23-64	DATE 8/23/64	DATE 8/23/64

CONTENTS

SECTION I – DELIVERABLE END ITEM ASSEMBLY LOG

RECORDS CONTAINED IN THIS SECTION ARE PERTINENT TO THE DELIVERABLE END ITEM ACCEPTANCE AND ALSO INCLUDE MODEL CONFIGURATION DATA, PERTINENT DETAILS OF SHORT SHIPMENTS, COMPONENT VARIATIONS, AGE SENSITIVE PARTS RECORD, WEIGHT AND SERIALIZATION RECORDS.

SECTION II – ACCEPTANCE TEST LOG

RECORDS OF ASSEMBLY ACCEPTANCE TESTS ARE PRESENTED IN THIS SECTION WITH PERFORMANCE DATA AND SUMMARY DATA ON INSPECTIONS AND ACCEPTANCE.

GENERAL INFORMATION

THIS LOG BOOK IS PROVIDED FOR SERVICE USE IN RECORDING PERTINENT HISTORICAL DATA AND ALL CHANGES FROM THE ORIGINAL CONFIGURATION. IT IS REQUESTED THIS LOG BOOK ACCOMPANY THE DELIVERABLE END ITEM WHEN TRANSFERRED BETWEEN ROCKETDYNE AND USING AGENCIES.

GROUP-4
Downgraded at 3 year intervals;
Declassified after 12 years

ROCKETDYNE – SPACE ENGINES
A DIVISION OF NORTH AMERICAN AVIATION, INC.

R-15075-1

LOG BOOK SPECIFICS

McDONNELL	ITEM	ROCKETDYNE
THIS MATERIAL CONTAINS INFORMATION AFFECTING THE NATIONAL DEFENSE OF THE UNITED STATES WITHIN THE MEANING OF THE ESPIONAGE LAWS, TITLE 18 U.S.C., SECTIONS 793 AND 794. ITS TRANSMISSION OR THE REVELATION OF ITS CONTENTS IN ANY MANNER TO AN UNAUTHORIZED PERSON IS PROHIBITED BY LAW.		
	LOG BOOK DATE	23 AUG 64
	DWG CHG LTR	DNA
Y-20161R	CONTRACT NO.	
	GEN ORDER NO.	5252
SCD52-52701-273	SPEC NO.	
DNA	SERIAL NO	4057134
52-52701-273	PART NO.	208160-31

SE-7 DELIVERABLE END ITEM – LOG BOOK IDENTIFICATION

PART NAME THRUST CHAMBER, 25 LB., ASSY OF

1.0

~~CONFIDENTIAL~~

R-15075-1

DELIVERABLE END ITEM

THIS LOG BOOK CONTAINS INFORMATION PERTINENT TO THE DELIVERABLE END ITEM AS SPECIFIED HEREIN BY SERIAL NUMBER AND PART NUMBER. IT IS NECESSARY THAT ALL ENTRIES BE WRITTEN IN INK OR TYPED FOR PERMANENT RECORD. ENTRIES SUCH AS SERIALIZATION, WEIGHT, APPLICABLE MCR'S, ACCEPTANCE TEST DATA AND CALIBRATION DATA WILL BE ENTERED BY ROCKETDYNE AT THE TIME OF DELIVERY.

IT IS REQUESTED THAT THIS LOG BOOK ACCOMPANY THIS DELIVERABLE END ITEM IF THE ITEM IS RETURNED TO ROCKETDYNE FOR REPAIR, MODIFICATION OR RETEST. ROCKETDYNE WILL THEN ENTER REPAIR, MODIFICATION AND RETEST DATA IN THIS LOG BOOK.

THE FORMAT OF PAGES IN THIS LOG BOOK SHALL NOT BE REVISED WITHOUT OBTAINING APPROVAL OF ROCKETDYNE SPACE ENGINES QUALITY CONTROL.

52-52701-273 PART NO. 208160 -31

PART NAME THRUST CHAMBER, 25 LB., ASSY OF 2.0

1.0 LOG BOOK IDENTIFICATION

2.0 FOREWORD

3.0 CONTENTS

4.0 MODULE/COMPONENT ASSEMBLY LOG--SECTION I

4.1 CONFIGURATION & SERIALIZATION LOG

4.2 MCR VERIFICATION

4.3 VARIATION LOG

4.4 REPLACEMENT LOG

5.0 COMPONENT ACCEPTANCE TEST LOG--SECTION II

5.1 COMPONENT ACCEPTANCE TEST

5.1.1 COMPONENT ACCEPTANCE TEST

5.1.2 COMPONENT ACCEPTANCE TEST

5.1.3 COMPONENT ACCEPTANCE TEST

5.1.4 COMPONENT ACCEPTANCE TEST

5.1.5 COMPONENT ACCEPTANCE TEST

5.2 CALIBRATED PERFORMANCE DATA

5.2.1 CALIBRATED PERFORMANCE DATA

5.2.2 CALIBRATED PERFORMANCE DATA

5.3 INFORMATION--CONTAMINATION

52-52701-273 PART NO. 208160-31

CONTENTS--SE-7 LOG BOOK

PART NAME THRUST CHAMBER, 25 LB., ASSY OF

3.0

SECTION I

52-52701-273 PART NO. 208160-31

SE-7 MODULE / COMPONENT ASSEMBLY LOG

PART NAME THRUST CHAMBER, 25 LB., ASSY OF

4.0

IND. NO.	PART NUMBER	REV. LTR.	PART NAME	SERIAL NO.	AGE CONTROL DATE OF MFG.	INSP.
1	208160-31	DNA	THRUST CHAMBER, 25 LB., ASSY OF	4057134	2Q64	ANR 208
2	208161-11	DNA	BODY, THRUST CHAMBER, ASSY OF	4059988	2Q64	ANR 208
2	208166	DNA	SHELL, THRUST CHAMBER, ASSY OF	8899813-115		ANR 208
3	208530-11	DNA	INJECTOR, THRUST CHAMBER, ASSY OF	7048753		ANR 208
2	407559	DNA	VALVE, OXIDIZER, T/C, ASSY OF	4051186		ANR 208
2	407560	DNA	VALVE, FUEL, T/C, ASSY OF	4055171		ANR 208

DNA SERIAL NO. 4057134

52-52701-273 PART NO. 208160-31

SE-7 CONFIGURATION & SERIALIZATION LOG

PART NAME THRUST CHAMBER, 25 LB., ASSY OF

4.1

MCR / ECP NO.	DATE	TITLE	DATE	INSP.
SE6-062	6 JAN 64	COMPONENT CLEANING; PROVISION FOR	23 AUG 64	ANR 208
SE6-064	30 JUL 63	TCA, ACCEPTANCE TESTS; REVISION OF	23 AUG 64	ANR 208
SE6-139	15 APR 64	PLACEMENT OF HAYNES STELLITE #3 SAND CAST ON APPROVED MATERIAL LIST	23 AUG 64	ANR 208
SE6-144	15 APR 64	TCA INJECTORS; REDESIGN OF	23 AUG 64	ANR 208
SE6-179	13 MAR 64	TUBE STUBS; MARKINGS OF	23 AUG 64	ANR 208
SE6-080	28 DEC 63	THRUST CHAMBER ASSEMBLIES, FABRICATION MATERIAL; APPROVAL OF	23 AUG 64	ANR 208
SE7-29	31 MAY 63	THRUST CHAMBER ASSY., 25 #; CHANGES TO	23 AUG 64	ANR 208
SE7-25	9 APR 63	25 LB. TCA, MOUNTING HOLES; RELOCATION OF	23 AUG 64	ANR 208
SE6-227	6 MAY 64	25 LB. TCA SCD'S CHANGES TO	23 AUG 64	ANR 208
SE6-085	30 JUL 63	CUSTOMER TEST SURVEILLANCE; REQUIREMENTS FOR	23 AUG 64	ANR 208
SE6-233	7 AUG 64	ELECTRICAL CONNECTOR "O" RINGS; REPLACEMENTS OF	23 AUG 64	ANR 208
SE6-133	22 APR 64	TCA PROPELLANT VALVES; ADDITIONAL REQUIREMENTS FOR	23 AUG 64	ANR 208

DNA 52-52701-273 SERIAL NO. 405713H PART NO. 208160-31

SE-7 DELIVERABLE END ITEM-MCR VERIFICATION

PART NAME THRUST CHAMBER, 25 LB., ASSY OF

4.2

MR NO.	PART OR COMP. INVOLVED	PART NUMBER	SERIAL NUMBER	BRIEF DESCRIPTION OF VARIATION AND MATERIAL REVIEW BOARD DISPOSITION	INSP.
				NONE THIS DATE (23 AUG 1964)	

DNA	SERIAL NO.	4057134	
52-52701-273	PART NO.	208160-31	
SE- 7 DELIVERABLE END ITEM — VARIATION LOG	PART NAME	THRUST CHAMBER, 25 LB., ASSY OF	4.3

R-15075-1

PART NO.	PART NAME	SERIAL NO.	REASON FOR REPLACEMENT	REPLACED BY		INSP.
				PART NO.	SERIAL NO.	
	NONE THIS DATE (23 AUG 1964)					

317

DNA	SERIAL NO.	4057134	
52-52701-273	PART NO.	208160-31	
SE-7 DELIVERABLE END ITEM--REPLACEMENT LOG	PART NAME	THRUST CHAMBER, 25 LB., ASSY OF	4.4

SECTION II

52-52701-273 PART NO. 208160-31

SE-7 COMPONENT ACCEPTANCE TEST LOG

PART NAME THRUST CHAMBER, 25 LB., ASSY OF 5.0

R-15075-1

PERFORMANCE PARAMETERS	PARAGRAPH NUMBER	UNITS	SPECIFICATION LIMITS	ACCEPTANCE TEST DATA	INSP.
ELECTRICAL RESISTANCE TESTS--TCA PROPELLANT VALVES	4.2				
BODY TEMPERATURE					
OXIDIZER	4.2.4	DEGREES F	70 ± 5	71	ANR 208
FUEL	4.2.11	DEGREES F	70 ± 5	71	ANR 208
COIL RESISTANCE					
OXIDIZER	4.2.5	OHMS	42 ± 2	41.86	ANR 208
FUEL	4.2.11	OHMS	42 ± 2	41.34	ANR 208
CONTINUITY RESISTANCE					
OXIDIZER	4.2.9	OHMS	1.0 MAX.	.056	ANR 208
FUEL	4.2.11	OHMS	1.0 MAX.	.135	ANR 208
DIELECTRIC STRENGTH TEST--PROPELLANT VALVES	4.3				
CURRENT LEAKAGE					
OXIDIZER	4.3.8	MICROAMPS	500 MAX.	32	ANR 208
FUEL	4.3.11	MICROAMPS	500 MAX.	32	ANR 208
PROOF PRESSURE TEST--TCA PROPELLANT VALVES	4.4				
VALVES PRESSURIZED FOR NOT LESS THAN 3 MINUTES					
OXIDIZER					
STEP I	4.4.3	PSIG	500 ± 10	VERIFIED	ANR 208
STEP II	4.4.5	PSIG	500 ± 10	VERIFIED	ANR 208

SPECIFICATION NUMBER	REVISION	AMENDMENT	DNA	SERIAL NO.	4057134
RA0220-268	B	#4	52-52701-273	PART NO.	208160-31

SE-7 COMPONENT ACCEPTANCE TEST

PART NAME THRUST CHAMBER, 25 LB., ASSY OF

5.1

PERFORMANCE PARAMETERS	PARAGRAPH NUMBER	UNITS	SPECIFICATION LIMITS	ACCEPTANCE TEST DATA	INSP.
PROOF PRESSURE TEST--TCA PROPELLANT VALVES (CONTINUED)					
FUEL					
STEP I	4.4.7	PSIG	500 ± 10	VERIFIED	ANR 208
STEP II	4.4.7	PSIG	500 ± 10	VERIFIED	ANR 208
INSPECTED VISUALLY FOR DAMAGE OR DEFORMATION					
OXIDIZER					
STEP I	4.4.4	DNA	NONE ALLOWED	NONE DETECTED	ANR 208
STEP II	4.4.5	DNA	NONE ALLOWED	NONE DETECTED	ANR 208
FUEL					
STEP I	4.4.7	DNA	NONE ALLOWED	NONE DETECTED	ANR 208
STEP II	4.4.7	DNA	NONE ALLOWED	NONE DETECTED	ANR 208
PROOF PRESSURE AND LEAKAGE TEST--THRUST CHAMBER	4.5				
PROOF PRESSURE TEST					
THRUST CHAMBER PRESSURIZED FOR NOT LESS THAN 5 MINUTES AT					
STEP I	4.5.8	PSIG	392 ± 10	VERIFIED	ANR 208
STEP II	4.5.10	PSIG	392 ± 10	VERIFIED	ANR 208

SPECIFICATION NUMBER	REVISION	AMENDMENT			
RA0220-268	B	#4	DNA	SERIAL NO.	4057134
			52-52701-273	PART NO.	208160-31
SE- 7 COMPONENT ACCEPTANCE TEST			PART NAME THRUST CHAMBER, 25 LB., ASSY OF		5.1.1

PERFORMANCE PARAMETERS	PARAGRAPH NUMBER	UNITS	SPECIFICATION LIMITS	ACCEPTANCE TEST DATA	INSP.
PROOF PRESSURE AND LEAKAGE TEST--THRUST CHAMBER (CONTINUED)					
LEAKAGE TEST					
STEP I	4.5.8	DNA	NONE ALLOWED	NONE DETECTED	ANR 208
STEP II	4.5.10	DNA	NONE ALLOWED	NONE DETECTED	ANR 208
INSPECTED VISUALLY FOR DAMAGE OR DEFORMATION	4.5.14	DNA	NONE ALLOWED	NONE DETECTED	ANR 208
FUNCTIONAL TEST--TCA PROPELLANT VALVES	4.6				
OPENING RESPONSE TIME					
OXIDIZER	4.6.17	SEC.	0.0065 MAX.	.0049	ANR 208
FUEL	4.6.8	SEC.	0.0065 MAX.	.0039	ANR 208
CLOSING RESPONSE TIME					
OXIDIZER	4.6.17	SEC.	0.002 MAX.	.0012	ANR 208
FUEL	4.6.10	SEC.	0.002 MAX.	.0016	ANR 208
CLOSING DROP OUT VOLTAGE					
OXIDIZER	4.6.17	VOLT (DC)	1 MIN.	1.5	ANR 208
FUEL	4.6.13	VOLT (DC)	1 MIN.	1.0	ANR 208

SPECIFICATION NUMBER	REVISION	AMENDMENT			
RA0220-268	B	#4	DNA	SERIAL NO.	4057134
			52-52701-273	PART NO.	208160-31
SE-7 COMPONENT ACCEPTANCE TEST			PART NAME THRUST CHAMBER, 25 LB., ASSY OF		5.1.2

PERFORMANCE PARAMETERS	PARAGRAPH NUMBER	UNITS	SPECIFICATION LIMITS	ACCEPTANCE TEST DATA	INSP.
* LEAKAGE TEST--TCA PROPELLANT VALVES	4.8				
SEAT LEAKAGE RATE					
OXIDIZER	4.8.17	SCC/MIN	2.21 MAX.	LESS THAN 0.1	ANR 208
FUEL	4.8.22	SCC/MIN	2.21 MAX.	LESS THAN 0.1	ANR 208
** PRE-TEST DATA					
DRY WEIGHT (EXCLUDING PROTECTIVE CLOSURES)	4.1.3	LB.	DNA	3.26	ANR 208
NOZZLE EXIT DIAMETER					
SECTION A-A		INCH	DNA	2.200	ANR 208
THROAT DIAMETER					
SECTION A-A		INCH	DNA	.357	ANR 208
B-B		INCH	DNA	.357	ANR 208
C-C		INCH	DNA	.357	ANR 208
D-D		INCH	DNA	.357	ANR 208
POST HOT-FIRE DATA					
PROOF PRESSURE TEST					
DRY WEIGHT (EXCLUDING PROTECTIVE COVERS & CLOSURES)	4.17.1	LB.	DNA	3.30	ANR 208
THRUST CHAMBER PRESSURIZED FOR NOT LESS THAN 5 MINUTES					
STEP I	4.17.4	PSIG	392 ± 10	VERIFIED	ANR 208
STEP II	4.17.4	PSIG	392 ± 10	VERIFIED	ANR 208

SPECIFICATION NUMBER	REVISION	AMENDMENT
* RA0220-268	B	#4
** RA0220-354	NC	#3

DNA SERIAL NO. 4057134

52-52701-273 PART NO. 208160-31

SE-7 COMPONENT ACCEPTANCE TEST

PART NAME THRUST CHAMBER, 25 LB., ASSY OF

5.1.3

PERFORMANCE PARAMETERS	PARAGRAPH NUMBER	UNITS	SPECIFICATION LIMITS	ACCEPTANCE TEST DATA	INSP.
POST HOT-FIRE DATA (CONTINUED)					
LEAKAGE TEST					
STEP I	4.17.4	DNA	NONE ALLOWED	NONE DETECTED	ANR 208
STEP II	4.17.4	DNA	NONE ALLOWED	NONE DETECTED	ANR 208
INSPECTED VISUALLY FOR DAMAGE OR DEFORMATION	4.17.4	DNA	NONE ALLOWED	NONE DETECTED	ANR 208
LEAK TEST -- WELDED JOINTS					
LEAK TEST					
INLET TUBE PRESSURIZED WITH GASEOUS HELIUM					
OXIDIZER	4.17.5	PSIG	500 ± 10	VERIFIED	ANR 208
FUEL	4.17.8	PSIG	500 ± 10	VERIFIED	ANR 208
JOINT LEAKAGE RATE					
OXIDIZER	4.17.6	SCC/SEC	10^{-6} MAX.	1.1×10^{-7}	ANR 208
FUEL	4.17.8	SCC/SEC	10^{-6} MAX.	5.7×10^{-8}	ANR 208
LEAKAGE TEST -- TCA PROPELLANT VALVES					
SEAT LEAKAGE RATE					
OXIDIZER	4.17.9	SCC/SEC	2.21 MAX.	<0.1 SCC	ANR 208
FUEL	4.17.9	SCC/SEC	2.21 MAX.	<0.1 SCC	ANR 208

SPECIFICATION NUMBER	REVISION	AMENDMENT			
RA0220-354	NC	#3	DNA	SERIAL NO.	4057134
			52-52701-273	PART NO.	208160-31
SE-7 COMPONENT ACCEPTANCE TEST			PART NAME	THRUST CHAMBER, 25 LB., ASSY OF	5.1.4

PERFORMANCE PARAMETERS	PARAGRAPH NUMBER	UNITS	SPECIFICATION LIMITS	ACCEPTANCE TEST DATA	INSP.
NOZZLE EXIT DIAMETER					
SECTION A-A		INCH	DNA	2.302	ANR 208
THROAT DIAMETER (DELIVERED CONDITION)	4.18.1				
SECTION A-A		INCH	DNA	.3581	ANR 208
B-B		INCH	DNA	.3581	ANR 208
C-C		INCH	DNA	.358	ANR 208
D-D		INCH	DNA	.3581	ANR 208
DRY WEIGHT IN DELIVERED CONDITION (EXCLUDING PROTECTIVE COVERS AND CLOSURES)	4.18.2	LB.	DNA	3.08	ANR 208

SPECIFICATION NUMBER	REVISION	AMENDMENT			
RA0220-354	NC	#3	DNA	SERIAL NO.	4057134
			52-52701-273	PART NO.	208160-31
SE-7 COMPONENT ACCEPTANCE TEST			PART NAME THRUST CHAMBER, 25 LB., ASSY OF		5.1.5

R-15075-1

CHARACTERISTICS	UNITS	SPECIFICATION LIMITS	RUN **** TEST DATA	RUN **** TEST DATA	RUN **** TEST DATA	RUN 194 FINAL TEST DATA	INSP.
HOT FIRE TEST DATA--TEST SITE	-	-	-	-	-	NFL	
CELL LOCATION	-	-	-	-	-	1-C	
CELL NUMBER	-	-	-	-	-	379	
TEST DATE	-	-	-	-	-	11 AUG 64	
TEST DURATION	SEC.	2 MIN	-	-	-	3.0	
ENVIRONMENTAL Pc	PSIA	0.16 MAX	-	-	-	.0502	
AMBIENT PRESSURE	PSIA	DNA	-	-	-	12.01	
AMBIENT TEMPERATURE	°F	DNA	-	-	-	86.0	
TIME OF DATA SLICE-START	SEC.	DNA	-	-	-	2.8	
TIME OF DATA SLICE-END	SEC.	DNA	-	-	-	2.8	
OXIDIZER TEMPERATURE	°F	DNA	-	-	-	80.0	
FUEL TEMPERATURE	°F	DNA	-	-	-	81.5	
OXIDIZER DENSITY	LB/FT^3	DNA	-	-	-	90.77	
FUEL DENSITY	LB/FT^3	DNA	-	-	-	54.24	

325

SPECIFICATION NUMBER	REVISION	AMENDMENT		
RAO 220-354	NC	3	DNA 52-52701-273	SERIAL NO. 4057134 PART NO. 208160-31
SE- 7 (REA) CALIBRATED PERFORMANCE DATA			PART NAME THRUST CHAMBER, 25 LB., ASSY OF	5.2

THE NATIONAL DEFENSE OF THE UNITED STATES WITHIN THE MEANING OF THE ESPIONAGE LAWS, TITLE 18, USC, SECTIONS 793 AND 794. ITS TRANSMISSION OR THE REVELATION OF ITS CONTENTS IN ANY MANNER TO AN UNAUTHORIZED PERSON IS PROHIBITED BY LAW.

Downgraded at 3 year intervals:
declassified after 12 years

326

CHARACTERISTICS	UNITS	SPECIFICATION LIMITS	RUN **** TEST DATA	RUN **** TEST DATA	RUN **** TEST DATA	RUN 194 FINAL TEST DATA	INSP.
HOT FIRE TEST DATA--TEST SITE	-	-	-	-	-	NFL	
OXIDIZER INLET PRESSURE	PSIA	292 ± 10	-	-	-	291.6	
FUEL INLET PRESSURE	PSIA	292 ± 10	-	-	-	290.9	
OXIDIZER FLOWRATE	LB/SEC	DNA	-	-	-	.0463	
FUEL FLOWRATE	LB/SEC	DNA	-	-	-	.0355	
THRUST	LB.	DNA	-	-	-	23.4	
MIXTURE RATIO	O/F	DNA	-	-	-	1.30	
SPECIFIC IMPULSE	SEC	DNA	-	-	-	286.	
INJECTOR END Pc	PSIA	DNA	-	-	-	137.0	
CHARACTERISTIC VELOCITY	FT/SEC	DNA	-	-	-	5390.	
THROAT DIAMETER	INCH	DNA	-	-	-	.357	
FUEL ORIFICE DIAMETER	INCH	DNA	-	-	-	.04560	
OXIDIZER ORIFICE DIAMETER	INCH	DNA	-	-	-	.03880	
TCA FIRING TIME (TOTAL)	SEC	10 MAX.	-	-	-	3.0	
OXIDIZER SAMPLE NUMBER	-	-	-	-	-	278	
FUEL SAMPLE NUMBER	-	-	-	-	-	279	

R-15075-1

SPECIFICATION NUMBER	REVISION	AMENDMENT		
RAO 220-354	NC	3	DNA 52-52701-273	SERIAL NO. 4057134 PART NO. 208160-31

SE- 7 (REA) CALIBRATED PERFORMANCE DATA

PART NAME THRUST CHAMBER, 25 LB., ASSY OF

5.2.1

[redacted]

Downgraded at 3 year intervals:
declassified after 12 years

CONFIDENTIAL

THIS MATERIAL CONTAINS INFORMATION AFFECTING THE NATIONAL DEFENSE OF THE UNITED STATES WITHIN THE MEANING OF THE ESPIONAGE LAWS, TITLE 18 U.S.C., SECTIONS 793 AND 794. ITS TRANSMISSION OR THE REVELATION OF ITS CONTENTS IN ANY MANNER TO AN UNAUTHORIZED PERSON IS PROHIBITED BY LAW.

GROUP 4
Downgraded at 3 year intervals:
declassified after 12 years

R-15075-1

CHARACTERISTICS	UNITS	SPECIFICATION LIMITS	RUN **** TEST DATA	RUN **** TEST DATA	RUN **** TEST DATA	RUN 194 FINAL TEST DATA	INSP.
HOT FIRE TEST DATA--TEST SITE	-	-	-	-	-	NFL	
ADJUST TO STANDARD CONDITIONS							
THRUST	LB.	23.0 ± 1.2	-	-	-	23.6	
MIXTURE RATIO	O/F	1.30 ± .04	-	-	-	1.29	
SPECIFIC IMPULSE	SEC	DNA	-	-	-	289.	
INJECTOR END Pc	PSIA	DNA	-	-	-	137.0	
CHARACTERISTIC VELOCITY	FT/SEC	DNA	-	-	-	5386.	
ADJUST TO RATED CONDITIONS							
THRUST	LB.	23.0	-	-	-	23.0	
MIXTURE RATIO	O/F	1.30	-	-	-	1.30	
SPECIFIC IMPULSE	SEC	272 MIN.	-	-	-	289.	
							MAC 38

327

SPECIFICATION NUMBER	REVISION	AMENDMENT		
RAO 220-354	NC	3	DNA 52-52701-273	SERIAL NO. 4057134 PART NO. 208160-31
SE-7 (REA) CALIBRATED PERFORMANCE DATA			PART NAME THRUST CHAMBER, 25 LB., ASSY OF	5.2.2

GROUP 4
Downgraded at 3 year intervals:
declassified after 12 years

~~CONFIDENTIAL~~

THE FOLLOWING IS INFORMATION RELATIVE TO THE CLEANLINESS LEVEL OF THE PROPELLANT UTILIZED IN THE HOT-FIRE ACCEPTANCE TEST OF THE THRUST CHAMBER ASSEMBLY.

THE INFLUENT PARTICULATE COUNT OF THE PROPELLANT WAS:

		LIMITS	ACTUAL COUNT MMH - FUEL	ACTUAL COUNT NTO - OXID
	< 10	*	DNA	DNA
	10 - 25	100	60	4
	25 - 50	20	7	5
	50 - 100	5	1	0
	100 - 300	1	0	0
	300 - 1000	0	0	0
	> 1000	0	0	0
FIBERS	300 - 3000	0	0	0
FIBERS	> 3000	0	0	0

* NOTE: " NOT TO BE COUNTED BUT NO SLURRY OF FINE PARTICLES WHICH COVERS MORE THAN AN ESTIMATED 5 PERCENT OF THE TOTAL EFFECTIVE FILTER AREA SHALL BE ALLOWED." AT THE DISCRETION OF QUALITY ASSURANCE, A WEIGHT DETERMINATION OF TOTAL CONTAMINATION MAY BE MADE AS A REFEREE TEST IN BORDERLINE CASES. THE MAXIMUM ALLOWABLE WEIGHT OF CONTAMINANTS SHALL BE 0.001 GRAM (1 MG).

CLASS 4

INSP. ANR 208

SPECIFICATION NUMBER	REVISION	AMENDMENT		
RA0615-003	B	#1	52-52701-273 PART NO. 208160-31	
SE-7 INFORMATION - CONTAMINATION			PART NAME THRUST CHAMBER, 25 LB., ASSY OF	5.3

SCD52-52701-271
S/N 4057179

R-15075-1

"CERTIFICATION IS HEREBY GIVEN THAT THE DELIVERABLE END ITEM COVERED BY THIS LOG BOOK WAS MANUFACTURED, INSPECTED AND TESTED IN ACCORDANCE WITH PRESCRIBED DRAWINGS, SPECIFICATION AND QUALITY ASSURANCE PROVISIONS. INSPECTION AND TEST RECORDS ARE ON FILE VERIFYING COMPLIANCE WITH APPLICABLE DRAWINGS AND SPECIFICATIONS, EXCEPT AS NOTED HEREIN"

LOG BOOK ACCEPTANCE DAT #3 (CRD #3)

SPACE ENGINES ENGINEERING	SPACE ENGINES QUALITY CONTROL	McDONNELL QUALITY REPRESENTATIVE	GOV'T INSPECTION AGENCY QUALITY REPRESENTATIVE
M. H. Marsden A.L.	S. N. Clinton	C. W. Michaelis	[illegible]
DATE 24 AUG. 64	DATE 24/AUG./64	DATE 24 AUGUST 1964	DATE 24 AUG 64

CONTENTS

SECTION I – DELIVERABLE END ITEM ASSEMBLY LOG

RECORDS CONTAINED IN THIS SECTION ARE PERTINENT TO THE DELIVERABLE END ITEM ACCEPTANCE AND ALSO INCLUDE MODEL CONFIGURATION DATA, PERTINENT DETAILS OF SHORT SHIPMENTS, COMPONENT VARIATIONS, AGE SENSITIVE PARTS RECORD, WEIGHT AND SERIALIZATION RECORDS.

SECTION II – ACCEPTANCE TEST LOG

RECORDS OF ASSEMBLY ACCEPTANCE TESTS ARE PRESENTED IN THIS SECTION WITH PERFORMANCE DATA AND SUMMARY DATA ON INSPECTIONS AND ACCEPTANCE.

GENERAL INFORMATION

THIS LOG BOOK IS PROVIDED FOR SERVICE USE IN RECORDING PERTINENT HISTORICAL DATA AND ALL CHANGES FROM THE ORIGINAL CONFIGURATION. IT IS REQUESTED THIS LOG BOOK ACCOMPANY THE DELIVERABLE END ITEM WHEN TRANSFERRED BETWEEN ROCKETDYNE AND USING AGENCIES.

GROUP-4
Downgraded at 3 year intervals;
declassified after 12 years

ROCKETDYNE – SPACE ENGINES
A DIVISION OF NORTH AMERICAN AVIATION, INC.

LOG BOOK SPECIFICS

McDONNELL	ITEM	ROCKETDYNE
THIS MATERIAL CONTAINS INFORMATION AFFECTING THE NATIONAL DEFENSE OF THE UNITED STATES WITHIN THE MEANING OF THE ESPIONAGE LAWS, TITLE 18 U.S.C. SECTIONS 793 AND 794. ITS TRANSMISSION OR THE REVELATION OF ITS CONTENTS IN ANY MANNER TO AN UNAUTHORIZED PERSON IS PROHIBITED BY LAW.		
	LOG BOOK DATE	24 AUG 64
	DWG CHG LTR	DNA
Y-20161R	CONTRACT NO.	
	GEN ORDER NO.	5252
SCD52-52701-271	SPEC NO.	
DNA	SERIAL NO.	4057179
52-52701-271	PART NO.	208160-21

SE-7 DELIVERABLE END ITEM – LOG BOOK IDENTIFICATION

PART NAME THRUST CHAMBER, 25 LB., ASSY OF

1.0

329

DELIVERABLE END ITEM (DEI)

THIS LOG BOOK CONTAINS INFORMATION PERTINENT TO THE DELIVERABLE END ITEM (DEI) AS SPECIFIED HEREIN BY SERIAL NO. AND PART NO. IT IS NECESSARY THAT ALL ENTRIES BE WRITTEN IN INK OR TYPED FOR PERMANENT RECORD. ENTRIES SUCH AS SERIALIZATION, WEIGHT, APPLICABLE MCR'S, ACCEPTANCE TEST DATA AND CALIBRATION DATA WILL BE ENTERED BY ROCKETDYNE AT THE TIME OF DELIVERY.

IT IS REQUESTED THAT THIS LOG BOOK ACCOMPANY THIS DELIVERABLE END ITEM IF THE ITEM IS RETURNED TO ROCKETDYNE FOR REPAIR, MODIFICATION OR RETEST. ROCKETDYNE WILL THEN ENTER REPAIR, MODIFICATION AND RETEST DATA IN THIS LOG BOOK.

THE FORMAT OF PAGES IN THIS LOG BOOK SHALL NOT BE REVISED WITHOUT OBTAINING APPROVAL OF ROCKETDYNE SPACE ENGINES QUALITY CONTROL.

R-15075-1

1.0 LOG BOOK IDENTIFICATION

2.0 FOREWORD

3.0 CONTENTS

4.0 MODULE/COMPONENT ASSEMBLY LOG--SECTION I

4.1 CONFIGURATION & SERIALIZATION LOG

4.2 MCR VERIFICATION

4.3 VARIATION LOG

4.4 REPLACEMENT LOG

5.0 COMPONENT ACCEPTANCE TEST LOG--SECTION II

5.1 COMPONENT ACCEPTANCE TEST

5.1.1 COMPONENT ACCEPTANCE TEST

5.1.2 COMPONENT ACCEPTANCE TEST

5.1.3 COMPONENT ACCEPTANCE TEST

5.1.4 COMPONENT ACCEPTANCE TEST

5.1.5 COMPONENT ACCEPTANCE TEST

5.2 CALIBRATED PERFORMANCE DATA

5.2.1 CALIBRATED PERFORMANCE DATA

5.2.2 CALIBRATED PERFORMANCE DATA

5.3 INFORMATION--CONTAMINATION

331

52-52701-271 PART NO. 208160-21

CONTENTS--SE-7 LOG BOOK

PART NAME THRUST CHAMBER, 25 LB., ASSY OF

3.0

SECTION I

52-52701-271 PART NO. 208160-21

SE-7 MODULE / COMPONENT ASSEMBLY LOG

PART NAME THRUST CHAMBER, 25 LB., ASSY OF

4.0

IND. NO.	PART NUMBER	REV. LTR.	PART NAME	SERIAL NO.	AGE CONTROL DATE OF MFG.	INSP.
1	208160-21	DNA	THRUST CHAMBER, 25 LB., ASSY OF	4057179	4Q63	ANR 721
2	208161-11	DNA	BODY, THRUST CHAMBER, ASSY OF	4055011	4Q63	ANR 721
2	208166	DNA	SHELL, THRUST CHAMBER, ASSY OF	8503032		ANR 721
3	208530-11	DNA	INJECTOR, THRUST CHAMBER, ASSY OF	7029367		ANR 721
2	408579	DNA	VALVE, OXIDIZER, T/C, ASSY OF	4055235		ANR 721
2	408580	DNA	VALVE, FUEL, T/C, ASSY OF	4055212		ANR 721

DNA SERIAL NO. 4057179

52-52701-271 PART NO. 208160-21

SE-7 CONFIGURATION & SERIALIZATION LOG

PART NAME THRUST CHAMBER, 25 LB., ASSY OF

4.1

MCR / ECP NO.	DATE	TITLE	DATE	INSP.
SE6-062	6 JAN 64	COMPONENT CLEANING; PROVISION FOR	24 AUG 64	ANR 721
SE6-064	30 JUL 63	TCA, ACCEPTANCE TESTS; REVISION OF	24 AUG 64	ANR 721
SE6-080	28 DEC 63	THRUST CHAMBER ASSEMBLIES, FABRICATION MATERIAL; APPROVAL OF	24 AUG 64	ANR 721
SE6-085	30 JUL 63	CUSTOMER TEST SURVEILLANCE; REQUIREMENT FOR	24 AUG 64	ANR 721
SE6-133	22 APR 64	TCA PROPELLANT VALVES; ADDITIONAL REQUIREMENTS FOR	24 AUG 64	ANR 721
SE6-139	15 APR 64	PLACEMENT OF HAYES STELLITE #3 SAND CAST ON APPROVED MATERIAL LIST	24 AUG 64	ANR 721
SE6-144	15 APR 64	TCA INJECTORS; REDESIGN OF	24 AUG 64	ANR 721
SE6-179	16 JUN 64	TUBE STUBS; MARKING OF	24 AUG 64	ANR 721
SE6-233	7 AUG 64	ELECTRICAL CONNECTOR "O" RINGS; REPLACEMENT OF	24 AUG 64	ANR 721
SE7-25	9 APR 63	25 LB. TCA, MOUNTING HOLES; RELOCATION OF	24 AUG 64	ANR 721
SE7-29	31 MAY 63	THRUST CHAMBER ASSY., 25 LB.; CHANGES TO	24 AUG 64	ANR 721

DNA	SERIAL NO.	4057179	
52-52701-271	PART NO.	208160-21	
SE-7 DELIVERABLE END ITEM-MCR VERIFICATION	PART NAME	THRUST CHAMBER, 25 LB., ASSY OF	4.2

R-15075-1

MR NO.	PART OR COMP. INVOLVED	PART NUMBER	SERIAL NUMBER	BRIEF DESCRIPTION OF VARIATION AND MATERIAL REVIEW BOARD DISPOSITION	INSP.
MRR #58794	TCA	208160-21	4057179	DISCREPANCY: CONDITION A: THROAT INSERT HAS A CRACK STARTING AT THE DOWNSTREAM EDGE AND EXTENDING 3/4TH OF THE WAY TO THE MINOR DIA. MAX. WIDTH OF THE CRACK IS .0003, AND IS LOCATED AT 6 O'CLOCK. REF. 600N-5 C24001 DISPOSITION: ACCEPTABLE TO USE FOR SYSTEM DAT.	1 ANR 721

DNA	SERIAL NO.	4057179	
52-52701-271	PART NO.	208160-21	
SE-7 DELIVERABLE END ITEM — VARIATION LOG	PART NAME	THRUST CHAMBER, 25 LB., ASSY OF	4.3

336

PART NO.	PART NAME	SERIAL NO.	REASON FOR REPLACEMENT	REPLACED BY		INSP.
				PART NO.	SERIAL NO.	
	NONE THIS DATE, 24 AUGUST 64 (AHR 721)					

R-15075-1

DNA	SERIAL NO.	4057179	
52-52701-271	PART NO.	208160-21	
SE-7 DELIVERABLE END ITEM--REPLACEMENT LOG	PART NAME	THRUST CHAMBER, 25 LB., ASSY OF	4.4

R-15075-1

SECTION II

52-52701-271 PART NO. 208160-21

SE-7 COMPONENT ACCEPTANCE TEST LOG

PART NAME THRUST CHAMBER, 25 LB., ASSY OF

5.0

PERFORMANCE PARAMETERS	PARAGRAPH NUMBER	UNITS	SPECIFICATION LIMITS	ACCEPTANCE TEST DATA	INSP.
ELECTRICAL RESISTANCE TESTS	4.2				
VALVE BODY TEMPERATURE	4.2.4				
OXIDIZER		DEGREES F	70 ± 5	70	ANR 721
FUEL		DEGREES F	70 ± 5	70	ANR 721
VALVE COIL RESISTANCE	4.2.5				
OXIDIZER		OHMS	42 ± 2	41.21	ANR 721
FUEL		OHMS	42 ± 2	40.44	ANR 721
CONTINUITY RESISTANCE	4.2.9				
OXIDIZER		OHMS	1.0 MAX.	0.01	ANR 721
FUEL		OHMS	1.0 MAX.	0.01	ANR 721
DIELECTRIC STRENGTH TEST	4.3				
CURRENT LEAKAGE					
OXIDIZER	4.3.8	MICRO AMPS	500 MAX.	34	ANR 721
FUEL	4.3.8	MICRO AMPS	500 MAX.	38	ANR 721
PROOF PRESSURE TEST - TCA PROPELLANT VALVES	4.4				
VALVE PRESSURIZED FOR MINIMUM OF 3 MINUTES AT 500 ± 10 PSIG	4.4.3	DNA	VERIFY	VERIFIED	ANR 721
VALVE DE-PRESSURIZED AND VALVE HOUSING INSPECTED FOR DAMAGE OR DEFORMATION	4.4.4	DNA	VERIFY	VERIFIED	ANR 721
PARAGRAPHS 4.4.3 AND 4.4.4 REPEATED	4.4.5	DNA	VERIFY	VERIFIED	ANR 721

REVISION	AMENDMENT	SPECIFICATION NUMBER	DNA	SERIAL NO.	4057179
N/C	#3	RA0220-354	52-52701-271	PART NO.	208160-21

SE-7 COMPONENT ACCEPTANCE TEST

PART NAME THRUST CHAMBER, 25 LB., ASSY OF

5.1

PERFORMANCE PARAMETERS	PARAGRAPH NUMBER	UNITS	SPECIFICATION LIMITS	ACCEPTANCE TEST DATA	INSP.
PROOF PRESSURE TEST--TCA PROPELLANT VALVES (CONTINUED)					
FUEL					
STEP I	4.4.7	PSIG	500 ± 10	500	ANR 721
STEP II	4.4.7	PSIG	500 ± 10	500	ANR 721
INSPECTED VISUALLY FOR DAMAGE OR DEFORMATION					
OXIDIZER					
STEP I	4.4.4	DNA	NONE ALLOWED	NONE DETECTED	ANR 721
STEP II	4.4.5	DNA	NONE ALLOWED	NONE DETECTED	ANR 721
FUEL					
STEP I	4.4.7	DNA	NONE ALLOWED	NONE DETECTED	ANR 721
STEP II	4.4.7	DNA	NONE ALLOWED	NONE DETECTED	ANR 721
PROOF PRESSURE AND LEAKAGE TEST--THRUST CHAMBER	4.5				
PROOF PRESSURE TEST					
THRUST CHAMBER PRESSURIZED FOR NOT LESS THAN 5 MINUTES AT					
STEP I	4.5.8	PSIG	392 ± 10	392	ANR 721
STEP II	4.5.10	PSIG	392 ± 10	392	ANR 721

SPECIFICATION NUMBER	REVISION	AMENDMENT			
RA0220-354	N/C	#3	DNA 52-52701-271	SERIAL NO. 4057179	
				PART NO. 208160-21	
SE-7 COMPONENT ACCEPTANCE TEST			PART NAME THRUST CHAMBER, 25 LB., ASSY OF		5.1.1

PERFORMANCE PARAMETERS	PARAGRAPH NUMBER	UNITS	SPECIFICATION LIMITS	ACCEPTANCE TEST DATA	INSP.
PROOF PRESSURE AND LEAKAGE TEST--THRUST CHAMBER (CONTINUED)					
LEAKAGE TEST					
STEP I	4.5.8	DNA	NONE ALLOWED	NONE DETECTED	ANR
STEP II	4.5.10	DNA	NONE ALLOWED	NONE DETECTED	ANR 721
INSPECTED VISUALLY FOR DAMAGE OR DEFORMATION	4.5.14	DNA	NONE ALLOWED	NONE DETECTED	ANR 721
FUNCTIONAL TEST--TCA PROPELLANT VALVES	4.6				
OPENING RESPONSE TIME					
OXIDIZER	4.6.17	SEC.	0.0065 MAX.	.0040	ANR 721
FUEL	4.6.8	SEC.	0.0065 MAX.	.0041	ANR 721
CLOSING RESPONSE TIME					
OXIDIZER	4.6.17	SEC.	0.002 MAX.	.0014	ANR 721
FUEL	4.6.10	SEC.	0.002 MAX.	.0018	ANR 721
CLOSING DROP OUT VOLTAGE					
OXIDIZER	4.6.17	VOLT (DC)	1 MIN.	1.5	ANR 721
FUEL	4.6.13	VOLT (DC)	1 MIN.	1.25	ANR 721

SPECIFICATION NUMBER	REVISION	AMENDMENT			
RA0220-354	N/C	#3	DNA 52-52701-271	SERIAL NO. 4057179	PART NO. 208160-21
SE-7 COMPONENT ACCEPTANCE TEST			PART NAME THRUST CHAMBER, 25 LB., ASSY OF		5.1.2

PERFORMANCE PARAMETERS	PARAGRAPH NUMBER	UNITS	SPECIFICATION LIMITS	ACCEPTANCE TEST DATA	INSP.
LEAKAGE TEST--TCA PROPELLANT VALVES	4.8				
SEAT LEAKAGE RATE					
OXIDIZER	4.8.17	SCC/MIN	2.21 MAX.	LESS THAN 0.1	ANR 721
FUEL	4.8.22	SCC/MIN	2.21 MAX.	LESS THAN 0.1	ANR 721
PRE-TEST DATA					
DRY WEIGHT (EXCLUDING PROTECTIVE CLOSURES)	4.1.3	LB.	DNA	3.13	ANR 721
NOZZLE EXIT DIAMETER					
SECTION A-A		INCH	DNA	2.241	ANR 721
THROAT DIAMETER					
SECTION A-A		INCH	DNA	.358	ANR 721
B-B		INCH	DNA	.358	ANR 721
C-C		INCH	DNA	.358	ANR 721
D-D		INCH	DNA	.358	ANR 721
POST HOT-FIRE DATA					
PROOF PRESSURE TEST					
DRY WEIGHT (EXCLUDING PROTECTIVE COVERS & CLOSURES)	4.17.1	LB.	DNA	3.30	ANR 721
THRUST CHAMBER PRESSURIZED FOR NOT LESS THAN 5 MINUTES					
STEP I	4.17.4	PSIG	392 ± 10	393	ANR 721
STEP II	4.17.4	PSIG	392 ± 10	393	ANR 721

SPECIFICATION NUMBER	REVISION	AMENDMENT			
RA0220-354	N/C	#3	DNA	SERIAL NO.	4057179
			52-52701-271	PART NO.	208160-21
SE-7 COMPONENT ACCEPTANCE TEST			PART NAME	THRUST CHAMBER, 25 LB., ASSY OF	5.1.3

PERFORMANCE PARAMETERS	PARAGRAPH NUMBER	UNITS	SPECIFICATION LIMITS	ACCEPTANCE TEST DATA	INSP.
POST HOT-FIRE DATA (CONTINUED)					
LEAKAGE TEST					
STEP I	4.17.4	DNA	NONE ALLOWED	NONE DETECTED	ANR 721
STEP II	4.17.4	DNA	NONE ALLOWED	NONE DETECTED	ANR 721
INSPECTED VISUALLY FOR DAMAGE OR DEFORMATION	4.17.4	DNA	NONE ALLOWED	NONE DETECTED	ANR 721
LEAK TEST -- WELDED JOINTS					
LEAK TEST					
INLET TUBE PRESSURIZED WITH GASEOUS HELIUM					
OXIDIZER	4.17.5	PSIG	500 ± 10	500	ANR 721
FUEL	4.17.8	PSIG	500 ± 10	500	ANR 721
JOINT LEAKAGE RATE					
OXIDIZER	4.17.6	SCC/SEC	10^{-6} MAX.	1.5×10^{-8}	ANR 721
FUEL	4.17.8	SCC/SEC	10^{-6} MAX.	6.1×10^{-8}	ANR 721
LEAKAGE TEST -- TCA PROPELLANT VALVES					
SEAT LEAKAGE RATE					
OXIDIZER	4.17.9	SCC/SEC	2.21 MAX.	LESS THAN 0.1	ANR 721
FUEL	4.17.9	SCC/SEC	2.21 MAX.	LESS THAN 0.1	ANR 721

SPECIFICATION NUMBER	REVISION	AMENDMENT			
RA0220-354	N/C	#3	DNA 52-52701-271	SERIAL NO. 4057179 PART NO. 208160-21	
SE-7 COMPONENT ACCEPTANCE TEST			PART NAME THRUST CHAMBER, 25 LB., ASSY OF		5.1.1

R-15075-1

PERFORMANCE PARAMETERS	PARAGRAPH NUMBER	UNITS	SPECIFICATION LIMITS	ACCEPTANCE TEST DATA	INSP.
NOZZLE EXIT DIAMETER					
SECTION A-A		INCH	DNA	2.263	ANR 721
THROAT DIAMETER (DELIVERED CONDITION)	4.18.1				
SECTION A-A		INCH	DNA	.358	ANR 721
B-B		INCH	DNA	.358	ANR 721
C-C		INCH	DNA	.358	ANR 721
D-D		INCH	DNA	.358	ANR 721
DRY WEIGHT IN DELIVERED CONDITION (EXCLUDING PROTECTIVE COVERS AND CLOSURES)	4.18.2	LB.	DNA	3.03	ANR 721

343

SPECIFICATION NUMBER	REVISION	AMENDMENT			
RA0220-354	N/C	#3	DNA	SERIAL NO.	4057179
			52-52701-271	PART NO.	208160-21
SE-7 COMPONENT ACCEPTANCE TEST			PART NAME THRUST CHAMBER, 25 LB., ASSY OF		5.1.5

CHARACTERISTICS	UNITS	SPECIFICATION LIMITS	RUN ****** TEST DATA	RUN ****** TEST DATA	RUN ***** TEST DATA	RUN 189 FINAL TEST DATA	INSP.
HOT FIRE TEST DATA - TEST SITE	-	-	-	-	-	NFL	ANR 995
CELL LOCATION	-	-	-	-	-	1-C	ANR 995
CELL NUMBER	-	-	-	-	-	379	ANR 995
TEST DATE	-	-	-	-	-	10 Aug 1964	ANR 995
TEST DURATION	SEC.	2 MIN.	-	-	-	3.0	ANR 995
ENVIRONMENTAL Pc	PSIA	.16 MAX.	-	-	-	.05240	ANR 995
AMBIENT PRESSURE	PSIA	DNA	-	-	-	11.74	ANR 721
AMBIENT TEMPERATURE	^{o}F	DNA	-	-	-	84.0	ANR 721
TIME OF DATA SLICE-START	SEC.	DNA	-	-	-	2.8	ANR 995
TIME OF DATA SLICE-END	SEC.	DNA	-	-	-	2.8	ANR 995
OXIDIZER TEMPERATURE	^{o}F	DNA	-	-	-	78.3	ANR 995
FUEL TEMPERATURE	^{o}F	DNA	-	-	-	78.5	ANR 995
OXIDIZER DENSITY	LB/FT^3	DNA	-	-	-	90.65	ANR 995
FUEL DENSITY	LB/FT^3	DNA	-	-	-	54.46	ANR 995

R-15075-1

* N/C AMENDMENT #3

SPECIFICATION NUMBER
* RA0220-354

DNA
52-52701-271

SERIAL NO. 4057179
PART NO. 208160-21

SE-7 (REA) CALIBRATED PERFORMANCE DATA

PART NAME THRUST CHAMBER, 25 LB., ASSY OF

5.2

CONFIDENTIAL

THIS MATERIAL CONTAINS INFORMATION AFFECTING THE NATIONAL DEFENSE OF THE UNITED STATES WITHIN THE MEANING OF THE ESPIONAGE LAWS, TITLE 18 U.S.C., SECTIONS 793 AND 794. ITS TRANSMISSION OR THE REVELATION OF ITS CONTENTS IN ANY MANNER TO AN UNAUTHORIZED PERSON IS PROHIBITED BY LAW.

GROUP 4
Downgraded at 3 year intervals:
declassified after 12 years

R-15075-1

CHARACTERISTICS	UNITS	SPECIFICATION LIMITS	RUN ******* TEST DATA	RUN ******** TEST DATA	RUN ****** TEST DATA	RUN 189 FINAL TEST DATA	INSP.
HOT FIRE TEST DATA - TEST SITE	-	-	-	-	-	NFL	ANR 995
OXIDIZER INLET PRESSURE	PSIA	292 ± 10	-	-	-	295.8	ANR 995
FUEL INLET PRESSURE	PSIA	292 ± 10	-	-	-	288.3	ANR 995
OXIDIZER FLOWRATE	LB/SEC.	DNA	-	-	-	.04729	ANR 995
FUEL FLOWRATE	LB/SEC.	DNA	-	-	-	.03424	ANR 995
THRUST	LB.	DNA	-	-	-	23.7	ANR 995
MIXTURE RATIO	O/F	DNA	-	-	-	1.38	ANR 995
SPECIFIC IMPULSE	SEC.	DNA	-	-	-	291.	ANR 995
INJECTOR END Pc	PSIA	DNA	-	-	-	136.7	ANR 995
CHARACTERISTIC VELOCITY	FT/SEC.	DNA	-	-	-	5432.	ANR 995
THROAT DIAMETER	IN.	DNA	-	-	-	.358	ANR 995
FUEL ORIFICE DIAMETER	IN.	DNA	-	-	-	.04265	ANR 995
OXIDIZER ORIFICE DIAMETER	IN.	DNA	-	-	-	.03865	ANR 995
TCA FIRING TIME (TOTAL)	SEC.	10 MAX.	-	-	-	3.0	ANR 995
OXIDIZER SAMPLE NUMBER	-	-	-	-	-	278.	ANR 995
FUEL SAMPLE NUMBER	-	-	-	-	-	279.	ANR 995

345

* N/C AMENDMENT #3

SPECIFICATION NUMBER
* RA0220-354

DNA 52-52701-271

SERIAL NO. 4057179

PART NO. 208160-21

SE-7 (REA) CALIBRATED PERFORMANCE DATA

PART NAME THRUST CHAMBER, 25 LB., ASSY OF

5.2.1

GROUP 4
Downgraded at 3 year intervals:
declassified after 12 years

CONFIDENTIAL

CONFIDENTIAL

THIS MATERIAL CONTAINS INFORMATION AFFE[illegible] THE [illegible]TIONAL DEFENSE OF THE UNITED WIT[illegible] THE MEANING OF THE ESPIONAGE L[illegible] TITLE 18 U.S.C., SECTIONS 793 AND 794. ITS T[illegible] MISSION OR THE REVELATION OF ITS CONTENTS [illegible] ANY MANNER TO AN UNAUTHORIZED PER[illegible] PROHIBITED BY LAW.

GROUP 4
Downgraded at 3 year intervals:
declassified after 12 years

346

CHARACTERISTICS	UNITS	SPECIFICATION LIMITS	RUN ****** TEST DATA	RUN ******** TEST DATA	RUN ****** TEST DATA	RUN 189 FINAL TEST DATA	INSP.
HOT FIRE TEST DATA - TEST SITE	-	-	-	-	-	NFL	
ADJUST TO STANDARD CONDITIONS	-	-	-	-	-		
THRUST	LB.	23 ± 1.2	-	-	-	23.8	ANR 995
MIXTURE RATIO	O/F	1.30 ± .04	-	-	-	1.34	ANR 995
SPECIFIC IMPULSE	SEC.	DNA	-	-	-	293.	ANR 995
INJECTOR END Pc	PSIA	DNA	-	-	-	136.3	ANR 995
CHARACTERISTIC VELOCITY	FT/SEC.	DNA	-	-	-	5424.	ANR 995
ADJUST TO RATED CONDITIONS							
THRUST	LB.	23	-	-	-	23.0	ANR 995
MIXTURE RATIO	O/F	1.3	-	-	-	1.30	ANR 995
SPECIFIC IMPULSE	SEC.	272 MIN.	-	-	-	292.	ANR 995
							MAC

R-15075-1

* N/C AMENDMENT #3
** N/C AMENDMENT #2

SPECIFICATION NUMBER
RA0220-354* and RA0220-230**

DNA 52-52701-271 SERIAL NO. 4057179 PART NO. 208160-21

SE- 7 (REA) CALIBRATED PERFORMANCE DATA

PART NAME THRUST CHAMBER, 25 LB., ASSY OF

5.2.2

CONFIDENTIAL
Downgraded at 3 year intervals:
declassified after 12

R-15075-1

THE FOLLOWING IS INFORMATION RELATIVE TO THE CLEANLINESS LEVEL OF THE PROPELLANT UTILIZED IN THE HOT-FIRE ACCEPTANCE TEST OF THE THRUST CHAMBER ASSEMBLY.

THE INFLUENT PARTICULATE COUNT OF THE PROPELLANT WAS:

		LIMITS	ACTUAL COUNT MMH - FUEL	ACTUAL COUNT NTO - OXID
	< 10	*	*	*
	10 - 25	100	27	23
	25 - 50	20	12	9
	50 - 100	5	4	3
	100 - 300	1	1	0
	300 - 1000	0	0	0
	> 1000	0	0	0
FIBERS	300 - 3000	0	0	0
FIBERS	> 3000	0	0	0

* NOTE: " NOT TO BE COUNTED BUT NO SLURRY OF FINE PARTICLES WHICH COVERS MORE THAN AN ESTIMATED 5 PERCENT OF THE TOTAL EFFECTIVE FILTER AREA SHALL BE ALLOWED." AT THE DISCRETION OF QUALITY ASSURANCE, A WEIGHT DETERMINATION OF TOTAL CONTAMINATION MAY BE MADE AS A REFEREE TEST IN BORDERLINE CASES. THE MAXIMUM ALLOWABLE WEIGHT OF CONTAMINANTS SHALL BE 0.001 GRAM (1 MG).

CLASS 4

INSP. 1 (AHR 721)

347

SPECIFICATION NUMBER	REVISION	AMENDMENT		
RA0615-003	B	#2	52-52701-271 PART NO. 208160-21	
SE- 7 INFORMATION - CONTAMINATION			PART NAME THRUST CHAMBER, 25 LB., ASSY OF	5.3

SCD 52-52701-271
S/N 4057181

348

"CERTIFICATION IS HEREBY GIVEN THAT THE DELIVERABLE END ITEM COVERED BY THIS LOG BOOK WAS MANUFACTURED, INSPECTED AND TESTED IN ACCORDANCE WITH PRESCRIBED DRAWINGS, SPECIFICATION AND QUALITY ASSURANCE PROVISIONS. INSPECTION AND TEST RECORDS ARE ON FILE VERIFYING COMPLIANCE WITH APPLICABLE DRAWINGS AND SPECIFICATIONS, EXCEPT AS NOTED HEREIN"

LOG BOOK ACCEPTANCE

DAT #5 (CRD #5)

SPACE ENGINES ENGINEERING	SPACE ENGINES QUALITY CONTROL	QUALITY REPRESENTATIVE	QUALITY REPRESENTATIVE
W. H. Marsden	Wm E Reitz	A. Boorstein	Chester A Milewski
DATE 9/12/64	DATE 9-12-64	DATE 9.12.64	DATE 12 Sept 64

CONTENTS

SECTION I – DELIVERABLE END ITEM ASSEMBLY LOG

RECORDS CONTAINED IN THIS SECTION ARE PERTINENT TO THE DELIVERABLE END ITEM ACCEPTANCE AND ALSO INCLUDE MODEL CONFIGURATION DATA, PERTINENT DETAILS OF SHORT SHIPMENTS, COMPONENT VARIATIONS, AGE SENSITIVE PARTS RECORD, WEIGHT AND SERIALIZATION RECORDS.

SECTION II – ACCEPTANCE TEST LOG

RECORDS OF ASSEMBLY ACCEPTANCE TESTS ARE PRESENTED IN THIS SECTION WITH PERFORMANCE DATA AND SUMMARY DATA ON INSPECTIONS AND ACCEPTANCE.

GENERAL INFORMATION

THIS LOG BOOK IS PROVIDED FOR SERVICE USE IN RECORDING PERTINENT HISTORICAL DATA AND ALL CHANGES FROM THE ORIGINAL CONFIGURATION. IT IS REQUESTED THIS LOG BOOK ACCOMPANY THE DELIVERABLE END ITEM WHEN TRANSFERRED BETWEEN ROCKETDYNE AND USING AGENCIES.

GROUP-4
Downgraded at 3 year intervals;
declassified after 12 years

ROCKETDYNE – SPACE ENGINES
A DIVISION OF NORTH AMERICAN AVIATION, INC.

LOG BOOK SPECIFICS

	ITEM	ROCKETDYNE
THIS MATERIAL CONTAINS INFORMATION AFFECTING THE NATIONAL DEFENSE OF THE UNITED STATES WITHIN THE MEANING OF THE ESPIONAGE LAWS, TITLE 18 U.S.C., SECTIONS 793 AND 794. ITS TRANSMISSION OR THE REVELATION OF ITS CONTENTS IN ANY MANNER TO AN UNAUTHORIZED PERSON IS PROHIBITED BY LAW.		
	LOG BOOK DATE	12 SEPT. 64
	DWG CHG LTR	DNA
Y20161R	CONTRACT NO.	
	GEN ORDER NO.	5252
SCD 52-52701-271	SPEC NO.	
DNA	SERIAL NO.	4057181
52-52701-271	PART NO.	208160-21

SE-7 DELIVERABLE END ITEM – LOG BOOK IDENTIFICATION

PART NAME THRUST CHAMBER, 25 LB., ASSY OF 1.0

R-15075-1

DELIVERABLE END ITEM

THIS LOG BOOK CONTAINS INFORMATION PERTINENT TO THE DELIVERABLE END ITEM AS SPECIFIED HEREIN BY SERIAL NUMBER AND PART NUMBER. IT IS NECESSARY THAT ALL ENTRIES BE WRITTEN IN INK OR TYPED FOR PERMANENT RECORD. ENTRIES SUCH AS SERIALIZATION, WEIGHT, APPLICABLE MCR'S, ACCEPTANCE TEST DATA AND CALIBRATION DATA WILL BE ENTERED BY ROCKETDYNE AT THE TIME OF DELIVERY.

IT IS REQUESTED THAT THIS LOG BOOK ACCOMPANY THIS DELIVERABLE END ITEM IF THE ITEM IS RETURNED TO ROCKETDYNE FOR REPAIR, MODIFICATION OR RETEST. ROCKETDYNE WILL THEN ENTER REPAIR, MODIFICATION AND RETEST DATA IN THIS LOG BOOK.

THE FORMAT OF PAGES IN THIS LOG BOOK SHALL NOT BE REVISED WITHOUT OBTAINING APPROVAL OF ROCKETDYNE SPACE ENGINES QUALITY CONTROL.

52-52701-271	PART NO. 208160-21	
PART NAME THRUST CHAMBER, 25 LB., ASSY OF		2.0

1.0 LOG BOOK IDENTIFICATION

2.0 FOREWORD

3.0 CONTENTS

4.0 MODULE/COMPONENT ASSEMBLY LOG--SECTION I

4.1 CONFIGURATION & SERIALIZATION LOG

4.2 MCR VERIFICATION

4.3 VARIATION LOG

4.4 REPLACEMENT LOG

5.0 COMPONENT ACCEPTANCE TEST LOG--SECTION II

5.1 COMPONENT ACCEPTANCE TEST

5.1.1 COMPONENT ACCEPTANCE TEST

5.1.2 COMPONENT ACCEPTANCE TEST

5.1.3 COMPONENT ACCEPTANCE TEST

5.1.4 COMPONENT ACCEPTANCE TEST

5.1.5 COMPONENT ACCEPTANCE TEST

5.2 CALIBRATED PERFORMANCE DATA

5.2.1 CALIBRATED PERFORMANCE DATA

5.2.2 CALIBRATED PERFORMANCE DATA

5.3 INFORMATION--CONTAMINATION

52-52701-271 PART NO. 208160-21

CONTENTS--SE-7 LOG BOOK

PART NAME THRUST CHAMBER, 25 LB., ASSY OF

3.0

R-15075-1

SECTION I

351

52-52701-271 PART NO. 208160-21

SE-7 MODULE / COMPONENT ASSEMBLY LOG

PART NAME THRUST CHAMBER, 25 LB., ASSY OF

4.0

IND. NO.	PART NUMBER	REV. LTR.	PART NAME	SERIAL NO.	AGE CONTROL DATE OF MFG.	INSP.
1	208160-21	DNA	THRUST CHAMBER, 25 LB., ASSY OF	4057181	2Q64	ANR 208
2	208161-11	DNA	BODY, THRUST CHAMBER, ASSY OF	4060078	2Q64	ANR 208
2	208166	DNA	SHELL, THRUST CHAMBER, ASSY OF	8507318		ANR 208
3	208530-11	DNA	INJECTOR, THRUST CHAMBER, ASSY OF	7048978		ANR 208
2	408579	DNA	VALVE, OXIDIZER, T/C, ASSY OF	4055232		ANR 208
2	408580	DNA	VALVE, FUEL, T/C, ASSY OF	4055197		ANR 208

DNA SERIAL NO. 4057181

52-52701-271 PART NO. 208160-21

SE- 7 CONFIGURATION & SERIALIZATION LOG

PART NAME THRUST CHAMBER, 25 LB., ASSY OF

4.1

MCR / ECP NO.	DATE	TITLE	DATE	INSP.
SE6-62	6 JAN 64	COMPONENT CLEANING; PROVISION FOR	12 SEPT. 64	ANR 208
SE6-64	30 JUL 63	TCA, ACCEPTANCE TESTS; REVISION OF	12 SEPT. 64	ANR 208
SE6-133	22 APR 64	TCA PROPELLANT VALVES; ADDITIONAL REQUIREMENTS FOR	12 SEPT. 64	ANR 208
SE6-139	15 APR 64	PLACEMENT OF HAYNES STELLITE #3 SAND CAST ON APPROVED MATERIAL LIST	12 SEPT. 64	ANR 208
SE6-144	15 APR 64	TCA INJECTORS; REDESIGN OF	12 SEPT. 64	ANR 208
SE6-179	16 JUN 64	TUBE STUBS; MARKING OF	12 SEPT. 64	ANR 208
SE6-80	28 DEC 63	THRUST CHAMBER ASSEMBLIES, FABRICATION MATERIAL; APPROVAL OF	12 SEPT. 64	ANR 208
SE7-25	9 APR 63	25 LB. TCA, MOUNTING HOLES; RELOCATION OF	12 SEPT. 64	ANR 208
SE7-29	31 MAY 63	THRUST CHAMBER ASSY., 25; CHANGES TO	12 SEPT. 64	ANR 208
SE6-85	30 JUL 63	CUSTOMER TEST SURVEILLANCE; REQUIREMENT FOR	12 SEPT. 64	ANR 208

DNA SERIAL NO. 4057181

52-52701-271 PART NO. 208160-21

SE-7 DELIVERABLE END ITEM - MCR VERIFICATION

PART NAME THRUST CHAMBER, 25 LB., ASSY OF

4.2

MR NO.	PART OR COMP. INVOLVED	PART NUMBER	SERIAL NUMBER	BRIEF DESCRIPTION OF VARIATION AND MATERIAL REVIEW BOARD DISPOSITION	INSP.
600N5 #C24067	25 LB. THRUST CHAMBER ASSY.	208160-21	4057181	DISCREPANCY: (1) P/N 208530-17, P/C TUBE IS TOO SHORT PER DRAWING, 1.62 ± .03 DIM. IS .850. REF: DWG. 208530 Zone #4. (2) P/N 208530-23 P/C FITTING HAS NOT BEEN INSTALLED PER DWG. 2.25 ± .03 DIM. IS 1.650, REF. DWG. 208530 ZONE #4 DISPOSITION: USE AS IS.	A.H. 208

R-15075-1

DNA	SERIAL NO.	4057181	
52-52701-271	PART NO.	208160 -21	
SE-7 DELIVERABLE END ITEM — VARIATION LOG	PART NAME	THRUST CHAMBER, 25 LB., ASSY OF	4.3

PART NO.	PART NAME	SERIAL NO.	REASON FOR REPLACEMENT	REPLACED BY		INSP.
				PART NO.	SERIAL NO.	
			NONE THIS DATE 12 SEPT. 64			ANR 208

DNA	SERIAL NO.	4057181	
52-52701-271	PART NO.	208160-21	
SE-7 DELIVERABLE END ITEM--REPLACEMENT LOG	PART NAME	THRUST CHAMBER, 25 LB., ASSY OF	4.4

R-15075-1

SECTION II

	52-52701-271	PART NO. 208160-21	
SE-7 COMPONENT ACCEPTANCE TEST LOG	PART NAME THRUST CHAMBER, 25 LB., ASSY OF		5.0

PERFORMANCE PARAMETERS	PARAGRAPH NUMBER	UNITS	SPECIFICATION LIMITS	ACCEPTANCE TEST DATA	INSP.
ELECTRICAL RESISTANCE TESTS--TCA PROPELLANT VALVES	4.2				
BODY TEMPERATURE					
OXIDIZER	4.2.4	DEGREES F	70 ± 5	69	ANR 208
FUEL	4.2.11	DEGREES F	70 ± 5	69	ANR 208
COIL RESISTANCE					
OXIDIZER	4.2.5	OHMS	42 ± 2	40.425	ANR 208
FUEL	4.2.11	OHMS	42 ± 2	40.995	ANR 208
CONTINUITY RESISTANCE					
OXIDIZER	4.2.9	OHMS	1.0 MAX.	.059	ANR 208
FUEL	4.2.11	OHMS	1.0 MAX.	.071	ANR 208
DIELECTRIC STRENGTH TEST--PROPELLANT VALVES	4.3				
CURRENT LEAKAGE					
OXIDIZER	4.3.8	MICROAMPS	500 MAX.	40	ANR 208
FUEL	4.3.11	MICROAMPS	500 MAX.	31	ANR 208
PROOF PRESSURE TEST--TCA PROPELLANT VALVES	4.4				
VALVES PRESSURIZED FOR NOT LESS THAN 3 MINUTES					
OXIDIZER					
STEP I	4.4.3	PSIG	500 ± 10	VERIFIED	ANR 208
STEP II	4.4.5	PSIG	500 ± 10	VERIFIED	ANR 208

SPECIFICATION NUMBER	REVISION	AMENDMENT	DNA	SERIAL NO.	4057181
RA0220-354	NC	#3	52-52701-271	PART NO.	208160-21

SE-7 COMPONENT ACCEPTANCE TEST

PART NAME THRUST CHAMBER, 25 LB., ASSY OF

5.1

R-15075-1

357

PERFORMANCE PARAMETERS	PARAGRAPH NUMBER	UNITS	SPECIFICATION LIMITS	ACCEPTANCE TEST DATA	INSP.
PROOF PRESSURE TEST--TCA PROPELLANT VALVES (CONTINUED)					
FUEL					
STEP I	4.4.7	PSIG	500 ± 10	VERIFIED	ANR 208
STEP II	4.4.7	PSIG	500 ± 10	VERIFIED	ANR 208
INSPECTED VISUALLY FOR DAMAGE OR DEFORMATION					
OXIDIZER					
STEP I	4.4.4	DNA	NONE ALLOWED	NONE DETECTED	ANR 208
STEP II	4.4.5	DNA	NONE ALLOWED	NONE DETECTED	ANR 208
FUEL					
STEP I	4.4.7	DNA	NONE ALLOWED	NONE DETECTED	ANR 208
STEP II	4.4.7	DNA	NONE ALLOWED	NONE DETECTED	ANR 208
PROOF PRESSURE AND LEAKAGE TEST--THRUST CHAMBER	4.5				
PROOF PRESSURE TEST					
THRUST CHAMBER PRESSURIZED FOR NOT LESS THAN 5 MINUTES AT					
STEP I	4.5.8	PSIG	392 ± 10	VERIFIED	ANR 208
STEP II	4.5.10	PSIG	392 ± 10	VERIFIED	ANR 208

SPECIFICATION NUMBER	REVISION	AMENDMENT		
RAC220-354	NC	#3	DNA 52-52701-271	SERIAL NO. 4057181 PART NO. 208160-21
SE-7 COMPONENT ACCEPTANCE TEST			PART NAME THRUST CHAMBER, 25 LB., ASSY OF	5.1.1

PERFORMANCE PARAMETERS	PARAGRAPH NUMBER	UNITS	SPECIFICATION LIMITS	ACCEPTANCE TEST DATA	INSP.
PROOF PRESSURE AND LEAKAGE TEST--THRUST CHAMBER (CONTINUED)					
LEAKAGE TEST					
STEP I	4.5.8	DNA	NONE ALLOWED	NONE DETECTED	ANR 208
STEP II	4.5.10	DNA	NONE ALLOWED	NONE DETECTED	ANR 208
INSPECTED VISUALLY FOR DAMAGE OR DEFORMATION	4.5.14	DNA	NONE ALLOWED	NONE DETECTED	ANR 208
FUNCTIONAL TEST--TCA PROPELLANT VALVES	4.6				
OPENING RESPONSE TIME					
OXIDIZER	4.6.17	SEC.	0.0065 MAX.	.0039	ANR 208
FUEL	4.6.8	SEC.	0.0065 MAX.	.0037	ANR 208
CLOSING RESPONSE TIME					
OXIDIZER	4.6.17	SEC.	0.002 MAX.	.0014	ANR 208
FUEL	4.6.10	SEC.	0.002 MAX.	.0015	ANR 208
CLOSING DROP OUT VOLTAGE					
OXIDIZER	4.6.17	VOLT (DC)	1 MIN.	1.5	ANR 208
FUEL	4.6.13	VOLT (DC)	1 MIN.	1.5	ANR 208

SPECIFICATION NUMBER	REVISION	AMENDMENT			
RA0220-354	NC	#3	DNA	SERIAL NO.	4057181
			52-52701-271	PART NO.	208160-21
SE-7 COMPONENT ACCEPTANCE TEST			PART NAME	THRUST CHAMBER, 25 LB., ASSY OF	5.1.2

PERFORMANCE PARAMETERS	PARAGRAPH NUMBER	UNITS	SPECIFICATION LIMITS	ACCEPTANCE TEST DATA	INSP.
LEAKAGE TEST--TCA PROPELLANT VALVES	4.8				
SEAT LEAKAGE RATE					
OXIDIZER	4.8.17	SCC/MIN	2.21 MAX.	LESS THAN 0.1	ANR 208
FUEL	4.8.22	SCC/MIN	2.21 MAX.	LESS THAN 0.1	ANR 208
PRE-TEST DATA					
DRY WEIGHT (EXCLUDING PROTECTIVE CLOSURES)	4.1.3	LB.	DNA	3.19	ANR 208
NOZZLE EXIT DIAMETER					
SECTION A-A		INCH	DNA	2.240	ANR 208
THROAT DIAMETER					
SECTION A-A		INCH	DNA	.358	ANR 208
B-B		INCH	DNA	.358	ANR 208
C-C		INCH	DNA	.358	ANR 208
D-D		INCH	DNA	.358	ANR 208
POST HOT-FIRE DATA					
PROOF PRESSURE TEST					
DRY WEIGHT (EXCLUDING PROTECTIVE COVERS & CLOSURES)	4.17.1	LB.	DNA	3.40	ANR 208
THRUST CHAMBER PRESSURIZED FOR NOT LESS THAN 5 MINUTES					
STEP I	4.17.4	PSIG	392 ± 10	VERIFIED	ANR 208
STEP II	4.17.4	PSIG	392 ± 10	VERIFIED	ANR 208

R-15075-1

SPECIFICATION NUMBER	REVISION	AMENDMENT			
RA0220-354	NC	#3	DNA	SERIAL NO.	4057181
			52-52701-271	PART NO.	208160-21
SE-7 COMPONENT ACCEPTANCE TEST			PART NAME	THRUST CHAMBER, 25 LB., ASSY OF	5.1.3

PERFORMANCE PARAMETERS	PARAGRAPH NUMBER	UNITS	SPECIFICATION LIMITS	ACCEPTANCE TEST DATA	INSP.
POST HOT-FIRE DATA (CONTINUED)					
LEAKAGE TEST					
STEP I	4.17.4	DNA	NONE ALLOWED	NONE DETECTED	ANR 208
STEP II	4.17.4	DNA	NONE ALLOWED	NONE DETECTED	ANR 208
INSPECTED VISUALLY FOR DAMAGE OR DEFORMATION	4.17.4	DNA	NONE ALLOWED	NONE DETECTED	ANR 208
LEAK TEST -- WELDED JOINTS					
LEAK TEST					
INLET TUBE PRESSURIZED WITH GASEOUS HELIUM					
OXIDIZER	4.17.5	PSIG	500 ± 10	VERIFIED	ANR 208
FUEL	4.17.8	PSIG	500 ± 10	VERIFIED	ANR 208
JOINT LEAKAGE RATE					
OXIDIZER	4.17.6	SCC/SEC	10^{-6} MAX.	3.3×10^{-8}	ANR 208
FUEL	4.17.8	SCC/SEC	10^{-6} MAX.	8.2×10^{-8}	ANR 208
LEAKAGE TEST -- TCA PROPELLANT VALVES					
SEAT LEAKAGE RATE					
OXIDIZER	4.17.9	SCC/SEC	2.21 MAX.	LESS THAN 0.1	ANR 208
FUEL	4.17.9	SCC/SEC	2.21 MAX.	LESS THAN 0.1	ANR 208

SPECIFICATION NUMBER	REVISION	AMENDMENT			
RA0220-354	NC	#3	DNA	SERIAL NO.	4057181
			52-52701-271	PART NO.	208160-21
SE-7 COMPONENT ACCEPTANCE TEST			PART NAME	THRUST CHAMBER, 25 LB., ASSY OF	5.1.4

PERFORMANCE PARAMETERS	PARAGRAPH NUMBER	UNITS	SPECIFICATION LIMITS	ACCEPTANCE TEST DATA	INSP.
NOZZLE EXIT DIAMETER					
SECTION A-A		INCH	DNA	2.313	ANR 208
THROAT DIAMETER (DELIVERED CONDITION)	4.18.1				
SECTION A-A		INCH	DNA	.358	ANR 208
B-B		INCH	DNA	.358	ANR 208
C-C		INCH	DNA	.358	ANR 208
D-D		INCH	DNA	.358	ANR 208
DRY WEIGHT IN DELIVERED CONDITION (EXCLUDING PROTECTIVE COVERS AND CLOSURES)	4.18.2	LB.	DNA	3.04	ANR 208

SPECIFICATION NUMBER	REVISION	AMENDMENT			
RA0220-354	NC	#3	DNA	SERIAL NO.	4057181
			52-52701-271	PART NO.	208160-21
SE-7 COMPONENT ACCEPTANCE TEST			PART NAME THRUST CHAMBER, 25 LB., ASSY OF		5.1.5

R-15075-1

CHARACTERISTICS	UNITS	SPECIFICATION LIMITS	RUN ****** TEST DATA	RUN******* TEST DATA	RUN ***** TEST DATA	RUN 187 FINAL TEST DATA	INSP.
HOT FIRE TEST DATA--TEST SITE						NFL	
CELL LOCATION			—	—	—	1-C	
CELL NUMBER			—	—	—	379	
TEST DATE			—	—	—	6 Aug 1964	
TEST DURATION	SEC.		—	—	—	3.0	
ENVIRONMENTAL Pc	PSIA	0.16 MAX	—	—	—	.0602	
AMBIENT PRESSURE	PSIA	DNA	—	—	—	12.23	
AMBIENT TEMPERATURE	°F	DNA	—	—	—	76.0	
TIME OF DATA SLICE-START	SEC.	DNA	—	—	—	2.8	
TIME OF DATA SLICE-END	SEC.	DNA	—	—	—	2.8	
OXIDIZER TEMPERATURE	°F	DNA	—	—	—	70.4	
FUEL TEMPERATURE	°F	DNA	—	—	—	70.3	
OXIDIZER DENSITY	LB/FT^3	DNA	—	—	—	91.20	
FUEL DENSITY	LB/FT^3	DNA	—	—	—	54.50	
							OP MAC 38

363

SPECIFICATION NUMBER	REVISION	AMENDMENT		
RAO 220-354	N/C	3	DNA	SERIAL NO. 4057181
			52-52701-271	PART NO. 208160-21

SE- 7 (REA) CALIBRATED PERFORMANCE DATA

PART NAME THRUST CHAMBER 25 LB ASSY OF

5.2

CONFIDENTIAL

THIS MATERIAL CONTAINS INFORMATION AFFECTING THE NATIONAL DEFENSE OF THE UNITED STATES WITHIN THE MEANING OF THE ESPIONAGE LAWS, TITLE 18 U.S.C., SECTIONS 793 AND 794. ITS TRANSMISSION OR THE REVELATION OF ITS CONTENTS IN ANY MANNER TO AN UNAUTHORIZED PERSON IS PROHIBITED BY LAW.

GROUP 4
Downgraded at 3 year intervals:
declassified after 12 years

364

CHARACTERISTICS	UNITS	SPECIFICATION LIMITS	RUN ****** TEST DATA	RUN ****** TEST DATA	RUN ******* TEST DATA	RUN 187 FINAL TEST DATA	INSP.
HOT FIRE TEST DATA--TEST SITE						NFL	
OXIDIZER INLET PRESSURE	PSIA	292 ± 10	—	—	—	297.1	
FUEL INLET PRESSURE	PSIA	292 ± 10	—	—	—	293.5	
OXIDIZER FLOWRATE	LB/SEC	DNA	—	—	—	.0476	
FUEL FLOWRATE	LB/SEC	DNA	—	—	—	.0364	
THRUST	LB.	DNA	—	—	—	24.0	
MIXTURE RATIO	O/F	DNA	—	—	—	1.31	
SPECIFIC IMPULSE	SEC	DNA	—	—	—	286.	
INJECTOR END Pc	PSIA	DNA	—	—	—	139.7	
CHARACTERISTIC VELOCITY	FT/SEC	DNA	—	—	—	5389.	
THROAT DIAMETER	INCH	DNA	—	—	—	.358	
FUEL ORIFICE DIAMETER	INCH	DNA	—	—	—	.04895	
OXIDIZER ORIFICE DIAMETER	INCH	DNA	—	—	—	.03890	
TCA FIRING TIME (TOTAL)	SEC	10 MAX.	—	—	—	3.0	
OXIDIZER SAMPLE NUMBER			—	—	—	274	
FUEL SAMPLE NUMBER			—	—	—	270	

R-15075-1

SPECIFICATION NUMBER	REVISION	AMENDMENT			
RAO 220-354	N/C	3	DNA	SERIAL NO.	4057181
			52-52701-271	PART NO.	208160-21

SE- 7 (REA) CALIBRATED PERFORMANCE DATA

PART NAME THRUST CHAMBER 25 LB ASSY OF

5.2.1

CONFIDENTIAL

Downgraded at 3 year intervals:
declassified after 12 years

CONFIDENTIAL

THIS MATERIAL CONTAINS INFORMATION AFFECTING THE NATIONAL DEFENSE OF THE UNITED STATES WITHIN THE MEANING OF THE ESPIONAGE LAWS, TITLE 18 U.S.C., SECTIONS 793 AND 794. ITS TRANSMISSION OR THE REVELATION OF ITS CONTENTS IN ANY MANNER TO AN UNAUTHORIZED PERSON IS PROHIBITED BY LAW.

GROUP 4
Downgraded at 3 year intervals:
declassified after 12 years

R-15075-1

CHARACTERISTICS	UNITS	SPECIFICATION LIMITS	RUN ****** TEST DATA	RUN******* TEST DATA	RUN ****** TEST DATA	RUN 187 FINAL TEST DATA	INSP.
HOT FIRE TEST DATA--TEST SITE	-	-	-	-	-	NFL	
ADJUST TO STANDARD CONDITIONS							
THRUST	LB.	23 ± 1.2	—	—	-	24.0	
MIXTURE RATIO	O/F	1.30 ± .04	—	—	-	1.28	
SPECIFIC IMPULSE	SEC	DNA	—	—	-	289.	
INJECTOR END Pc	PSIA	DNA	—	—	-	138.1	
CHARACTERISTIC VELOCITY	FT/SEC	DNA	—	—	-	5381.	
ADJUST TO RATED CONDITIONS							
THRUST	LB.	23 ± 1.2	—	—	-	23.0	
MIXTURE RATIO	O/F	1.30 ± .04	—	—	-	1.30	
SPECIFIC IMPULSE	SEC	272 MIN.	—	—	-	289.	
				—			OP MAC 38

365

SPECIFICATION NUMBER	REVISION	AMENDMENT		
RAo 220-354	N/C	3	DNA 52-52701-271	SERIAL NO. 4057181 PART NO. 208160-21

SE-7 (REA) CALIBRATED PERFORMANCE DATA

PART NAME THRUST CHAMBER 25 LB ASSY OF

5.2.2

GROUP 4
Downgraded at 3 year intervals:
declassified after 12 years

~~CONFIDENTIAL~~

THE FOLLOWING IS INFORMATION RELATIVE TO THE CLEANLINESS LEVEL OF THE PROPELLANT UTILIZED IN THE HOT-FIRE ACCEPTANCE TEST OF THE THRUST CHAMBER ASSEMBLY.

THE INFLUENT PARTICULATE COUNT OF THE PROPELLANT WAS:

		LIMITS	ACTUAL COUNT MMH - FUEL	ACTUAL COUNT NTO - OXID
	< 10	*	DNA	DNA
	10 - 25	100	42	40
	25 - 50	20	6	16
	50 - 100	5	4	4
	100 - 300	1	1	1
	300 - 1000	0	0	0
	> 1000	0	0	0
FIBERS	300 - 3000	0	0	0
FIBERS	> 3000	0	0	0

* NOTE: " NOT TO BE COUNTED BUT NO SLURRY OF FINE PARTICLES WHICH COVERS MORE THAN AN ESTIMATED 5 PERCENT OF THE TOTAL EFFECTIVE FILTER AREA SHALL BE ALLOWED." AT THE DISCRETION OF QUALITY ASSURANCE, A WEIGHT DETERMINATION OF TOTAL CONTAMINATION MAY BE MADE AS A REFEREE TEST IN BORDERLINE CASES. THE MAXIMUM ALLOWABLE WEIGHT OF CONTAMINANTS SHALL BE 0.001 GRAM (1 MG).

CLASS 4

INSP. ANR 208

SPECIFICATION NUMBER	REVISION	AMENDMENT		
RA0615-003	B	#2	52052701-271 PART NO. 208160-21	
SE-7 INFORMATION - CONTAMINATION			PART NAME THRUST CHAMBER, 25 LB., ASSY OF	5.3

SCD 52-52701-273

R-15075-1

"CERTIFICATION IS HEREBY GIVEN THAT THE DELIVERABLE END ITEM COVERED BY THIS LOG BOOK WAS MANUFACTURED, INSPECTED AND TESTED IN ACCORDANCE WITH PRESCRIBED DRAWINGS, SPECIFICATION AND QUALITY ASSURANCE PROVISIONS. INSPECTION AND TEST RECORDS ARE ON FILE VERIFYING COMPLIANCE WITH APPLICABLE DRAWINGS AND SPECIFICATIONS, EXCEPT AS NOTED HEREIN"

LOG BOOK ACCEPTANCE

DAT #1 (BRD #1)

SPACE ENGINES ENGINEERING	SPACE ENGINES QUALITY CONTROL	McDONNELL QUALITY REPRESENTATIVE	GOV'T INSPECTION AGENCY QUALITY REPRESENTATIVE
R D Pesty	Wm E Reitz	C. W. Michaelis	[illegible]
DATE 9/30/64	DATE 9/30/64	DATE 9/30/64	DATE 30 Sept 64

CONTENTS

SECTION I – DELIVERABLE END ITEM ASSEMBLY LOG

RECORDS CONTAINED IN THIS SECTION ARE PERTINENT TO THE DELIVERABLE END ITEM ACCEPTANCE AND ALSO INCLUDE MODEL CONFIGURATION DATA, PERTINENT DETAILS OF SHORT SHIPMENTS, COMPONENT VARIATIONS, AGE SENSITIVE PARTS RECORD, WEIGHT AND SERIALIZATION RECORDS.

SECTION II – ACCEPTANCE TEST LOG

RECORDS OF ASSEMBLY ACCEPTANCE TESTS ARE PRESENTED IN THIS SECTION WITH PERFORMANCE DATA AND SUMMARY DATA ON INSPECTIONS AND ACCEPTANCE.

GENERAL INFORMATION

THIS LOG BOOK IS PROVIDED FOR SERVICE USE IN RECORDING PERTINENT HISTORICAL DATA AND ALL CHANGES FROM THE ORIGINAL CONFIGURATION. IT IS REQUESTED THIS LOG BOOK ACCOMPANY THE DELIVERABLE END ITEM WHEN TRANSFERRED BETWEEN ROCKETDYNE AND USING AGENCIES.

GROUP-4
Downgraded at 3 year intervals; Declassified after 12 years

ROCKETDYNE
A DIVISION OF NORTH AMERICAN AVIATION, INC.
– SPACE ENGINES

LOG BOOK SPECIFICS

McDONNELL	ITEM	ROCKETDYNE
	LOG BOOK DATE	30 SEPT 64
	DWG CHG LTR	DNA
Y20161R	CONTRACT NO.	
	GEN ORDER NO.	5252
SCD52-52701-273	SPEC NO.	
DNA	SERIAL NO.	4057133
52-52701-273	PART NO.	208160 -31

THIS MATERIAL CONTAINS INFORMATION AFFECTING THE NATIONAL DEFENSE OF THE UNITED STATES WITHIN THE MEANING OF THE ESPIONAGE LAWS, TITLE 18 U.S.C., SECTIONS 793 AND 794, THE TRANSMISSION OR THE REVELATION OF ITS CONTENTS IN ANY MANNER TO AN UNAUTHORIZED PERSON IS PROHIBITED BY LAW.

SE 7 DELIVERABLE END ITEM – LOG BOOK IDENTIFICATION

PART NAME THRUST CHAMBER, 25 LB., ASSY OF

1.0

367

DELIVERABLE END ITEM

THIS LOG BOOK CONTAINS INFORMATION PERTINENT TO THE DELIVERABLE END ITEM AS SPECIFIED HEREIN BY SERIAL NUMBER AND PART NUMBER. IT IS NECESSARY THAT ALL ENTRIES BE WRITTEN IN INK OR TYPED FOR PERMANENT RECORD. ENTRIES SUCH AS SERIALIZATION, WEIGHT, APPLICABLE MCR'S, ACCEPTANCE TEST DATA AND CALIBRATION DATA WILL BE ENTERED BY ROCKETDYNE AT THE TIME OF DELIVERY.

IT IS REQUESTED THAT THIS LOG BOOK ACCOMPANY THIS DELIVERABLE END ITEM IF THE ITEM IS RETURNED TO ROCKETDYNE FOR REPAIR, MODIFICATION OR RETEST. ROCKETDYNE WILL THEN ENTER REPAIR, MODIFICATION AND RETEST DATA IN THIS LOG BOOK.

THE FORMAT OF PAGES IN THIS LOG BOOK SHALL NOT BE REVISED WITHOUT OBTAINING APPROVAL OF ROCKETDYNE SPACE ENGINES QUALITY CONTROL.

52-52701-273 PART NO. 208160-31

PART NAME THRUST CHAMBER, 25 LB., ASSY OF 2.0

R-15075-1

1.0 LOG BOOK IDENTIFICATION

2.0 FOREWORD

3.0 CONTENTS

4.0 MODULE/COMPONENT ASSEMBLY LOG--SECTION I

4.1 CONFIGURATION & SERIALIZATION LOG

4.2 MCR VERIFICATION

4.3 VARIATION LOG

4.4 REPLACEMENT LOG

5.0 COMPONENT ACCEPTANCE TEST LOG--SECTION II

5.1 COMPONENT ACCEPTANCE TEST

5.1.1 COMPONENT ACCEPTANCE TEST

5.1.2 COMPONENT ACCEPTANCE TEST

5.1.3 COMPONENT ACCEPTANCE TEST

5.1.4 COMPONENT ACCEPTANCE TEST

5.1.5 COMPONENT ACCEPTANCE TEST

5.2 CALIBRATED PERFORMANCE DATA

5.2.1 CALIBRATED PERFORMANCE DATA

5.2.2 CALIBRATED PERFORMANCE DATA

5.3 INFORMATION--CONTAMINATION

5.2A CALIBRATED CORRECTED DATA

5.2.1A CALIBRATED CORRECTED DATA

5.2.2A CALIBRATED CORRECTED DATA

SECTION I

52-52701-273 PART NO. 208160-31

SE-7 MODULE / COMPONENT ASSEMBLY LOG

PART NAME THRUST CHAMBER, 25 LB., ASSY OF

4.0

IND. NO.	PART NUMBER	REV. LTR.	PART NAME	SERIAL NO.	AGE CONTROL DATE OF MFG.	INSP.
1	208160-31	DNA	THRUST CHAMBER, 25 LB., ASSY OF	4057133	2Q64	ANR 208
2	208161-11	DNA	BODY, THRUST CHAMBER, ASSY OF	4060634	2Q64	ANR 208
2	208166	DNA	SHELL, THRUST CHAMBER, ASSY OF	8500503		ANR 208
3	208530-11	DNA	INJECTOR, THRUST CHAMBER, ASSY OF	7075619		ANR 208
2	407559	DNA	VALVE, OXIDIZER, T/C, ASSY OF	4057572		ANR 208
2	407560	DNA	VALVE, FUEL, T/C, ASSY OF	4055169		ANR 208

DNA SERIAL NO. 4057133

52-52701-273 PART NO. 208160-31

SE- 7 CONFIGURATION & SERIALIZATION LOG

PART NAME THRUST CHAMBER, 25 LB., ASSY OF

4.1

MCR / ECP NO.	DATE	TITLE	DATE	INSP.
SE6-062	6 JAN 64	COMPONENT CLEANING; PROVISION FOR	30 SEPT 64	ANR 208
SE6-064	30 JUL 63	TCA, ACCEPTANCE TESTS; REVISION OF	30 SEPT 64	ANR 208
SE6-133	22 APR 64	TCA PROPELLANT VALVES; ADDITIONAL REQUIREMENTS FOR	30 SEPT 64	ANR 208
SE6-139	15 APR 64	PLACEMENT OF HAYNES STELLITE #3 SAND CAST ON APPROVED MATERIAL LIST	30 SEPT 64	ANR 208
SE6-144	15 APR 64	TCA INJECTORS; REDESIGN OF	30 SEPT 64	ANR 208
SE6-179	16 JUN 64	TUBE STUBS; MARKINGS OF	30 SEPT 64	ANR 208
SE6-080	28 DEC 63	THRUST CHAMBER ASSEMBLIES, FABRICATION MATERIAL; APPROVAL OF	30 SEPT 64	ANR 208
SE6-085	30 JUL 63	CUSTOMER TEST SURVEILLANCE; REQUIREMENTS FOR	30 SEPT 64	ANR 208
SE7-25	9 APR 63	25 LB. TCA MOUNTING HOLES; RELOCATION OF	30 SEPT 64	ANR 208
SE7-29	31 MAY 63	THRUST CHAMBER ASSEMBLY, 25 LB. CHANGES TO	30 SEPT 64	ANR 208

NASA

R-15075-1

DNA	SERIAL NO.	4057133	
52-52701-273	PART NO.	208160-31	
SE-7 DELIVERABLE END ITEM-MCR VERIFICATION	PART NAME	THRUST CHAMBER, 25 LB., ASSY OF	4.2

R-15075-1

MR NO.	PART OR COMP. INVOLVED	PART NUMBER	SERIAL NUMBER	BRIEF DESCRIPTION OF VARIATION AND MATERIAL REVIEW BOARD DISPOSITION	INSP.
MRR # 71917	T.C.A. 25 LB.	208160-31	4057133	DISCREPANCY: CONDITION A: P/N 208160-31 S/N 4057133 TCA DETAIL "D" OF DWG. 208160. .136 DIA. HOLE DRILLED INTO COMBUSTION CHAMBER HAS 3 CHIPPED OUT AREAS ON THE I.D. OF HOLE IN THE LINER. TWO (2) CHIPPED AREAS MEASURE .004 X .004. THE OTHER MEASURES .003 X .003. CONDITION B: ACCUMULATED HOT FIRE TIME IS 21.0 SEC. DISPOSITION: ACCEPTABLE TO USE FOR SYSTEM DAT.	

DNA SERIAL NO. 4057133

52-52701-273 PART NO. 208160-31

SE-7 DELIVERABLE END ITEM — VARIATION LOG

PART NAME THRUST CHAMBER, 25 LB., ASSY OF

4.3

374

PART NO.	PART NAME	SERIAL NO.	REASON FOR REPLACEMENT	REPLACED BY		INSP.
				PART NO.	SERIAL NO.	
			NONE THIS DATE - 30 SEPT 64			

R-15075-1

DNA	SERIAL NO.	4057133	
52-52701-273	PART NO.	208160-31	
SE-7 DELIVERABLE END ITEM--REPLACEMENT LOG	PART NAME	THRUST CHAMBER, 25 LB., ASSY OF	4.4

SECTION II

52-52701-273 PART NO. 208160-31

SE-7 COMPONENT ACCEPTANCE TEST LOG

PART NAME THRUST CHAMBER, 25 LB., ASSY OF

5.0

PERFORMANCE PARAMETERS	PARAGRAPH NUMBER	UNITS	SPECIFICATION LIMITS	ACCEPTANCE TEST DATA	INSP.
ELECTRICAL RESISTANCE TESTS--TCA PROPELLANT VALVES	4.2				
BODY TEMPERATURE					
OXIDIZER	4.2.4	DEGREES F	70 ± 5	68	ANR 208
FUEL	4.2.11	DEGREES F	70 ± 5	68	ANR 208
COIL RESISTANCE					
OXIDIZER	4.2.5	OHMS	42 ± 2	41.72	ANR 208
FUEL	4.2.11	OHMS	42 ± 2	41.67	ANR 208
CONTINUITY RESISTANCE					
OXIDIZER	4.2.9	OHMS	1.0 MAX.	.045	ANR 208
FUEL	4.2.11	OHMS	1.0 MAX.	.05	ANR 208
DIELECTRIC STRENGTH TEST--PROPELLANT VALVES	4.3				
CURRENT LEAKAGE					
OXIDIZER	4.3.8	MICROAMPS	500 MAX.	76	ANR 208
FUEL	4.3.11	MICROAMPS	500 MAX.	74	ANR 208
PROOF PRESSURE TEST--TCA PROPELLANT VALVES	4.4				
VALVES PRESSURIZED FOR NOT LESS THAN 3 MINUTES					
OXIDIZER					
STEP I	4.4.3	PSIG	500 ± 10	VERIFIED	ANR 208
STEP II	4.4.5	PSIG	500 ± 10	VERIFIED	ANR 208

SPECIFICATION NUMBER	REVISION	AMENDMENT	DNA	SERIAL NO.	4057133
RA0220-268	B	#4	52-52701-273	PART NO.	208160-31

SE-7 COMPONENT ACCEPTANCE TEST

PART NAME THRUST CHAMBER, 25 LB., ASSY OF

5.1

PERFORMANCE PARAMETERS	PARAGRAPH NUMBER	UNITS	SPECIFICATION LIMITS	ACCEPTANCE TEST DATA	INSP.
PROOF PRESSURE TEST--TCA PROPELLANT VALVES (CONTINUED)					
FUEL					
STEP I	4.4.7	PSIG	500 ± 10	VERIFIED	ANR 208
STEP II	4.4.7	PSIG	500 ± 10	VERIFIED	ANR 208
INSPECTED VISUALLY FOR DAMAGE OR DEFORMATION					
OXIDIZER					
STEP I	4.4.4	DNA	NONE ALLOWED	NONE DETECTED	ANR 208
STEP II	4.4.5	DNA	NONE ALLOWED	NONE DETECTED	ANR 208
FUEL					
STEP I	4.4.7	DNA	NONE ALLOWED	NONE DETECTED	ANR 208
STEP II	4.4.7	DNA	NONE ALLOWED	NONE DETECTED	ANR 208
PROOF PRESSURE AND LEAKAGE TEST--THRUST CHAMBER	4.5				
PROOF PRESSURE TEST					
THRUST CHAMBER PRESSURIZED FOR NOT LESS THAN 5 MINUTES AT					
STEP I	4.5.8	PSIG	392 ± 10	VERIFIED	ANR 208
STEP II	4.5.10	PSIG	392 ± 10	VERIFIED	ANR 208

SPECIFICATION NUMBER RA0220-268	REVISION B	AMENDMENT #4	DNA 52-52701-273	SERIAL NO. 4057133 PART NO. 208160-31
SE- 7 COMPONENT ACCEPTANCE TEST			PART NAME THRUST CHAMBER, 25 LB., ASSY OF	5.1.1

PERFORMANCE PARAMETERS	PARAGRAPH NUMBER	UNITS	SPECIFICATION LIMITS	ACCEPTANCE TEST DATA	INSP.
PROOF PRESSURE AND LEAKAGE TEST--THRUST CHAMBER (CONTINUED)					
LEAKAGE TEST					
STEP I	4.5.8	DNA	NONE ALLOWED	NONE DETECTED	ANR 208
STEP II	4.5.10	DNA	NONE ALLOWED	NONE DETECTED	ANR 208
INSPECTED VISUALLY FOR DAMAGE OR DEFORMATION	4.5.14	DNA	NONE ALLOWED	NONE DETECTED	ANR 208
FUNCTIONAL TEST--TCA PROPELLANT VALVES	4.6				
OPENING RESPONSE TIME					
OXIDIZER	4.6.17	SEC.	0.0065 MAX.	.0040	ANR 208
FUEL	4.6.8	SEC.	0.0065 MAX.	.0042	ANR 208
CLOSING RESPONSE TIME					
OXIDIZER	4.6.17	SEC.	0.002 MAX.	.0014	ANR 208
FUEL	4.6.10	SEC.	0.002 MAX.	.0020	ANR 208
CLOSING DROP OUT VOLTAGE					
OXIDIZER	4.6.17	VOLT (DC)	1 MIN.	1.25	ANR 208
FUEL	4.6.13	VOLT (DC)	1 MIN.	1.25	ANR 208

SPECIFICATION NUMBER	REVISION	AMENDMENT			
RA0220-268	B	#4	DNA	SERIAL NO.	4057133
			52-52701-273	PART NO.	208160-31
SE-7 COMPONENT ACCEPTANCE TEST			PART NAME	THRUST CHAMBER, 25 LB., ASSY OF	5.1.

R-15075-1

PERFORMANCE PARAMETERS	PARAGRAPH NUMBER	UNITS	SPECIFICATION LIMITS	ACCEPTANCE TEST DATA	INSP.
*LEAKAGE TEST--TCA PROPELLANT VALVES	4.8				
SEAT LEAKAGE RATE					
OXIDIZER	4.8.17	SCC/MIN	2.21 MAX.	LESS THAN 0.1	ANR 208
FUEL	4.8.22	SCC/MIN	2.21 MAX.	LESS THAN 0.1	ANR 208
*PRE-TEST DATA					
DRY WEIGHT (EXCLUDING PROTECTIVE CLOSURES)	4.1.3	LB.	DNA	3.25	ANR 208
NOZZLE EXIT DIAMETER					
SECTION A-A		INCH	DNA	2.248	ANR 208
THROAT DIAMETER					
SECTION A-A		INCH	DNA	.358	ANR 208
B-B		INCH	DNA	.358	ANR 208
C-C		INCH	DNA	.358	ANR 208
D-D		INCH	DNA	.358	ANR 208
** POST HOT-FIRE DATA					
PROOF PRESSURE TEST					
DRY WEIGHT (EXCLUDING PROTECTIVE COVERS & CLOSURES)	4.17.1	LB.	DNA	3.28	ANR 208
THRUST CHAMBER PRESSURIZED FOR NOT LESS THAN 5 MINUTES					
STEP I	4.17.4	PSIG	392 ± 10	392	ANR 208
STEP II	4.17.4	PSIG	392 ± 10	392	ANR 208

SPECIFICATION NUMBER	REVISION	AMENDMENT			
*RA0220-268	B	#4	DNA	SERIAL NO.	4057133
**RA0220-354	A	NONE	52-52701-273	PART NO.	208160-31
SE-7 COMPONENT ACCEPTANCE TEST			PART NAME THRUST CHAMBER, 25 LB., ASSY OF		5.1.3

PERFORMANCE PARAMETERS	PARAGRAPH NUMBER	UNITS	SPECIFICATION LIMITS	ACCEPTANCE TEST DATA	INSP.
POST HOT-FIRE DATA (CONTINUED)					
LEAKAGE TEST					
STEP I	4.17.4	DNA	NONE ALLOWED	NONE DETECTED	ANR 208
STEP II	4.17.4	DNA	NONE ALLOWED	NONE DETECTED	ANR 208
INSPECTED VISUALLY FOR DAMAGE OR DEFORMATION	4.17.4	DNA	NONE ALLOWED	NONE DETECTED	ANR 208
LEAK TEST -- WELDED JOINTS					
LEAK TEST					
INLET TUBE PRESSURIZED WITH GASEOUS HELIUM					
OXIDIZER	4.17.5	PSIG	500 ± 10	VERIFIED	ANR 208
FUEL	4.17.8	PSIG	500 ± 10	VERIFIED	ANR 208
JOINT LEAKAGE RATE					
OXIDIZER	4.17.6	SCC/SEC	10^{-6} MAX.	LESS THAN 10^{-6}	ANR 208
FUEL	4.17.8	SCC/SEC	10^{-6} MAX.	LESS THAN 10^{-6}	ANR 208
LEAKAGE TEST -- TCA PROPELLANT VALVES					
SEAT LEAKAGE RATE					
OXIDIZER	4.17.9	SCC/SEC	2.21 MAX.	LESS THAN 0.1	ANR 208
FUEL	4.17.9	SCC/SEC	2.21 MAX.	LESS THAN 0.1	ANR 208

SPECIFICATION NUMBER	REVISION	AMENDMENT		
RA0220-354	A	NONE	DNA 52-52701-273	SERIAL NO. 4057133 PART NO. 208160-31
SE-7 COMPONENT ACCEPTANCE TEST			PART NAME THRUST CHAMBER, 25 LB., ASSY OF	5.1.1

PERFORMANCE PARAMETERS	PARAGRAPH NUMBER	UNITS	SPECIFICATION LIMITS	ACCEPTANCE TEST DATA	INSP.
THROAT DIAMETER (DELIVERED CONDITION)	4.18.1				
SECTION A-A		INCH	DNA	.357	ANR 208
B-B		INCH	DNA	.357	ANR 208
C-C		INCH	DNA	.357	ANR 208
D-D		INCH	DNA	.357	ANR 208
DRY WEIGHT IN DELIVERED CONDITION (EXCLUDING PROTECTIVE COVERS AND CLOSURES)	4.18.2	LB.	DNA	3.13	ANR 208

SPECIFICATION NUMBER	REVISION	AMENDMENT			
RA0220-354	A	NONE	DNA 52-52701-273	SERIAL NO. 4057133	PART NO. 208160 -31
SE-7 COMPONENT ACCEPTANCE TEST			PART NAME THRUST CHAMBER, 25 LB., ASSY OF		5.1.5

CONFIDENTIAL

THIS MATERIAL CONTAINS INFORMATION AFFECTING THE NATIONAL DEFENSE OF THE UNITED STATES WITHIN THE MEANING OF THE ESPIONAGE LAWS, TITLE 18 U.S.C., SECTIONS 793 AND 794. ITS TRANSMISSION OR THE REVELATION OF ITS CONTENTS IN ANY MANNER TO AN UNAUTHORIZED PERSON IS PROHIBITED BY LAW.

GROUP 4
Downgraded at 3 year intervals; declassified after 12 years

SEE PAGE 5.2A FOR CORRECTED CALIBRATED DATA.

382

CHARACTERISTICS	UNITS	SPECIFICATION LIMITS	RUN 181 TEST DATA	RUN 215 TEST DATA	RUN 147 TEST DATA	RUN 148 FINAL TEST DATA	INSP.
HOT FIRE TEST DATA--TEST SITE	-	-	NFL	NFL	NFL	NFL	ANR 930
CELL LOCATION	-	-	1-C	1-C	1-D	1-D	ANR 930
CELL NUMBER	-	-	379	379	379	379	
TEST DATE	-	-	24 July 64	21 Aug 64	27 Aug 64	27 Aug 64	ANR 930
TEST DURATION	SEC.	2 MIN.	3.0	3.0	3.0	3.0	
ENVIRONMENTAL Pc	PSIA	0.16 MAX	.0572	.0716	.0590	.0596	
AMBIENT PRESSURE	PSIA	DNA	12.08	12.21	12.08	12.08	ANR 930
AMBIENT TEMPERATURE	°F	DNA	90.0	86.0	82.0	82.0	ANR 930
TIME OF DATA SLICE-START	SEC.	DNA	2.8	2.8	2.8	2.8	
TIME OF DATA SLICE-END	SEC.	DNA	2.8	2.8	2.8	2.8	ANR 930
OXIDIZER TEMPERATURE	°F	DNA	79.2	70.4	68.9	68.9	ANR 930
FUEL TEMPERATURE	°F	DNA	79.3	74.8	65.8	66.0	ANR 930
OXIDIZER DENSITY	LB/FT^3	DNA	90.72	91.20	91.20	91.20	ANR 930
FUEL DENSITY	LB/FT^3	DNA	54.41	54.55	54.67	54.67	

R-15075-1

SPECIFICATION NUMBER	REVISION	AMENDMENT		
RAO 220-354	A	NONE	DNA 52-52701-273	SERIAL NO. 4057133 PART NO. 208160-31

SE- 7 (REA) CALIBRATED PERFORMANCE DATA

PART NAME THRUST CHAMBER 25 LB. ASSY. OF

5.2

CONFIDENTIAL

GROUP 4
Downgraded at 3 year intervals; declassified after 12 years

CONFIDENTIAL

THIS MATERIAL CONTAINS INFORMATION AFFECTING THE NATIONAL DEFENSE OF THE UNITED STATES WITHIN THE MEANING OF THE ESPIONAGE LAWS, TITLE 18 U.S.C., SECTIONS 793 AND 794. ITS TRANSMISSION OR THE REVELATION OF ITS CONTENTS IN ANY MANNER TO AN UNAUTHORIZED PERSON IS PROHIBITED BY LAW.

GROUP 4
Downgraded at 3 year intervals; declassified after 12 years

SEE PAGE 5.2A FOR CORRECTED CALIBRATED DATA.

R-15075-1

CHARACTERISTICS	UNITS	SPECIFICATION LIMITS	RUN 236 TEST DATA	RUN 173 TEST DATA	RUN 175 TEST DATA	RUN ***** FINAL TEST DATA	INSP.
HOT FIRE TEST DATA--TEST SITE	-	-	NFL	NFL	NFL	-	ANR 990
CELL LOCATION	-	-	1-B	1-C	1-C	-	ANR 990
CELL NUMBER	-	-	379	379	379	-	ANR 990
TEST DATE	-	-	2 July 64	15 July 64	16 July 64	-	[illegible]
TEST DURATION	SEC.	2 MIN.	3.0	3.0	3.0	-	ANR 990
ENVIRONMENTAL Pc	PSIA	0.16 MAX	.04800	.04980	.04860	-	[illegible]
AMBIENT PRESSURE	PSIA	DNA	11.94	12.24	12.10	-	[illegible]
AMBIENT TEMPERATURE	°F	DNA	68.0	78.0	85.0	-	ANR 990
TIME OF DATA SLICE-START	SEC.	DNA	2.8	2.8	2.8	-	[illegible]
TIME OF DATA SLICE-END	SEC.	DNA	2.8	2.8	2.8	-	[illegible]
OXIDIZER TEMPERATURE	°F	DNA	67.5	75.5	73.5	-	ANR 990
FUEL TEMPERATURE	°F	DNA	73.9	76.0	75.5	-	[illegible]
OXIDIZER DENSITY	LB/FT^3	DNA	91.27	90.71	91.18	-	[illegible]
FUEL DENSITY	LB/FT^3	DNA	54.57	54.45	54.65	-	ANR 990

383

SPECIFICATION NUMBER	REVISION	AMENDMENT		
RAO 220-354	A	NONE	DNA: 52-52701-273	SERIAL NO. 4057133 PART NO. 208160-31

SE- 7 (REA) CALIBRATED PERFORMANCE DATA

PART NAME THRUSR CHAMBER, 25 LB., ASSY OF

5.2

CONFIDENTIAL

GROUP 4
Downgraded at 3 year intervals

CONFIDENTIAL

THIS MATERIAL CONTAINS INFORMATION AFFECTING THE NATIONAL DEFENSE OF THE UNITED STATES WITHIN THE MEANING OF THE ESPIONAGE LAWS TITLE 18 U.S.C. SECTIONS 793 AND 794. ITS TRANSMISSION OR THE REVELATION OF ITS CONTENTS IN ANY MANNER TO AN UNAUTHORIZED PERSON IS PROHIBITED BY LAW.

GROUP 4
Downgraded at 3 year intervals; declassified after 12 years

SEE PAGE 5.2.1A FOR CORRECTED CALIBRATED DATA

384

CHARACTERISTICS	UNITS	SPECIFICATION LIMITS	RUN 181 TEST DATA	RUN 215 TEST DATA	RUN 147 TEST DATA	RUN 148 FINAL TEST DATA	INSP.
HOT FIRE TEST DATA--TEST SITE	-	-	NFL	NFL	NFL	NFL	
OXIDIZER INLET PRESSURE	PSIA	292 ± 10	284.8	294.3	290.2	288.8	
FUEL INLET PRESSURE	PSIA	292 ± 10	295.4	290.7	294.0	293.5	
OXIDIZER FLOWRATE	LB/SEC	DNA	.0454	.0473	.0459	.0455	
FUEL FLOWRATE	LB/SEC	DNA	.0339	.0346	.0356	.0356	
THRUST	LB.	DNA	23.1	23.4	23.6	23.6	
MIXTURE RATIO	O/F	DNA	1.34	1.37	1.29	1.28	
SPECIFIC IMPULSE	SEC	DNA	292.	285.	290.	291.	
INJECTOR END Pc	PSIA	DNA	132.3	136.9	136.3	135.5	
CHARACTERISTIC VELOCITY	FT/SEC	DNA	5408.	5419.	5415.	5410.	
THROAT DIAMETER	INCH	DNA	.358	.358	.358	.358	
FUEL ORIFICE DIAMETER	INCH	DNA	.04107	.04460	.04460	.04460	
OXIDIZER ORIFICE DIAMETER	INCH	DNA	.03650	.03800	.03800	.03800	
TCA FIRING TIME (TOTAL)	SEC	15 MAX.	12.0	15.0	18.0	21.0	
OXIDIZER SAMPLE NUMBER	-	-	247.	296.	300.	300.	
FUEL SAMPLE NUMBER	-	-	246.	298.	303.	303.	

R-15075-1

SPECIFICATION NUMBER	REVISION	AMENDMENT		
RAO 220-354	A	NONE	DNA 52-52701-273	SERIAL NO. 4057133 PART NO. 208160-31

SE-7 (REA) CALIBRATED PERFORMANCE DATA

PART NAME THRUST CHAMBER 25 LB. ASSY. OF

5.2.1

GROUP 4
Downgraded at 3 year intervals; declassified after 12 years

NATIONAL DEFENSE OF THE UNITED STATES WITHIN THE MEANING OF THE [illegible] LAWS, [illegible] TRANS-MISSION OR THE REVELATION OF ITS CONTENTS IN ANY MANNER TO AN UNAUTHORIZED PERSON IS PROHIBITED BY LAW.

GROUP 4
Downgraded at 3 year intervals; declassified after 12 years

SEE PAGE 5.2.1A FOR CORRECTED CALIBRATED DATA.

R-15075-1

CHARACTERISTICS	UNITS	SPECIFICATION LIMITS	RUN 236 TEST DATA	RUN 173 TEST DATA	RUN 175 TEST DATA	RUN ****** FINAL TEST DATA	INSP.
HOT FIRE TEST DATA--TEST SITE	-	-	NFL	NFL	NFL	-	
OXIDIZER INLET PRESSURE	PSIA	292 ± 10	297.8	296.6	298.5	-	
FUEL INLET PRESSURE	PSIA	292 ± 10	290.9	293.4	295.2	-	
OXIDIZER FLOWRATE	LB/SEC	DNA	.04813	.04838	.04618	-	
FUEL FLOWRATE	LB/SEC	DNA	.03524	.03518	.03399	-	
THRUST	LB.	DNA	24.1	24.3	23.1	-	
MIXTURE RATIO	O/F	DNA	1.37	1.38	1.36	-	
SPECIFIC IMPULSE	SEC	DNA	289.	291.	288.	-	
INJECTOR END Pc	PSIA	DNA	140.0	140.1	134.1	-	
CHARACTERISTIC VELOCITY	FT/SEC	DNA	5438.	5429.	5417.	-	
THROAT DIAMETER	INCH	DNA	.358	.358	.358	-	
FUEL ORIFICE DIAMETER	INCH	DNA	.04490	.04490	.04107	-	
OXIDIZER ORIFICE DIAMETER	INCH	DNA	.03885	.03885	.03650	-	
TCA FIRING TIME (TOTAL)	SEC	15 MAX.	3.0	6.0	9.0	-	
OXIDIZER SAMPLE NUMBER	-	-	247.	252.	254.	-	
FUEL SAMPLE NUMBER	-	-	246.	253.	253.	-	

385

SPECIFICATION NUMBER	REVISION	AMENDMENT		
RAO 220-354	A	NONE	DNA 52-52701-273	SERIAL NO. 4057133 PART NO. 208160-31

SE- 7 (REA) CALIBRATED PERFORMANCE DATA

PART NAME THRUST CHAMBER 25 LB. ASSY. OF

5.2.1

GROUP 4
Downgraded at 3 year intervals; declassified after 12 years

CONFIDENTIAL

THIS MATERIAL CONTAINS INFORMATION AFFECTING THE NATIONAL DEFENSE OF THE UNITED STATES WITHIN THE MEANING OF THE ESPIONAGE LAWS, TITLE 18 U.S.C. SECTIONS 793 AND 794. ITS TRANSMISSION OR THE REVELATION OF ITS CONTENTS IN ANY MANNER TO AN UNAUTHORIZED PERSON IS PROHIBITED BY LAW.

GROUP 4
Downgraded at 3 year intervals:
declassified after 12 years

SEE PAGE 5.2.2A FOR CORRECTED CALIBRATED DATA.

386

CHARACTERISTICS	UNITS	SPECIFICATION LIMITS	RUN 181 TEST DATA	RUN 215 TEST DATA	RUN 147 TEST DATA	RUN 148 FINAL TEST DATA	INSP.
HOT FIRE TEST DATA--TEST SITE	-	-	NFL	NFL	NFL	NFL	ANR
ADJUST TO STANDARD CONDITIONS	-	-	-	-	-	-	
THRUST	LB.	23.0 + 1.2	23.5	23.5	23.8	23.8	
MIXTURE RATIO	O/F	1.30 ± .05	1.37	1.34	1.30	1.29	ANR
SPECIFIC IMPULSE	SEC	DNA	295.	289.	293.	294.	ANR
INJECTOR END Pc	PSIA	DNA	133.1	136.3	135.9	135.5	
CHARACTERISTIC VELOCITY	FT/SEC	DNA	5416.	5413.	5417.	5413	ANR
ADJUST TO RATED CONDITIONS	-	-	-	-	-	-	
THRUST	LB.	23.0	23.0	23.0	23.0	23.0	
MIXTURE RATIO	O/F	1.30	1.30	1.30	1.30	1.30	ANR
SPECIFIC IMPULSE	SEC	272 MIN.	294.	288.	293.	294.	ANR

R-15075-1

SPECIFICATION NUMBER	REVISION	AMENDMENT
RAO- 220-230	NC	#3
RAO- 220-354	A	NONE

DNA 52-52701-273

SERIAL NO. 4057133

PART NO. 208160-31

SE-7 (REA) CALIBRATED PERFORMANCE DATA

PART NAME THRUST CHAMBER 25 LB. ASSY. OF

5.2.2

CONFIDENTIAL

GROUP 4
Downgraded at 3 year intervals:

THIS MATERIAL CONTAINS INFORMATION AFFECTING THE NATIONAL DEFENSE OF THE UNITED STATES WITHIN THE MEANING OF THE ESPIONAGE LAWS, TITLE 18 U.S.C., SECTIONS 793 AND 794. ITS TRANSMISSION OR THE REVELATION OF ITS CONTENTS IN ANY MANNER TO AN UNAUTHORIZED PERSON IS PROHIBITED BY LAW.

GROUP 4
Downgraded at 3 year intervals: declassified after 12 years

SEE PAGE 5.2.2A FOR CORRECTED CALIBRATED DATA

R-15075-1

CHARACTERISTICS	UNITS	SPECIFICATION LIMITS	RUN 236 TEST DATA	RUN 173 TEST DATA	RUN 175 TEST DATA	RUN******* FINAL TEST DATA	INSP.
HOT FIRE TEST DATA--TEST SITE	-	-	NFL	NFL	NFL	-	ANR 930
ADJUST TO STANDARD CONDITIONS	-	-	-	-	-	-	
THRUST	LB.	23 ±1.2	24.0	24.3	23.0	-	
MIXTURE RATIO	O/F	1.30 ±.05	1.32	1.35	1.33	-	ANR 930
SPECIFIC IMPULSE	SEC	DNA	290.	293.	290.	-	ANR 930
INJECTOR END Pc	PSIA	DNA	138.6	138.8	132.1	-	
CHARACTERISTIC VELOCITY	FT/SEC	DNA	5429.	5425.	5412.	-	ANR 930
ADJUST TO RATED CONDITIONS	-	-	-	-	-	-	ANR 930
THRUST	LB.	23.0	23.0	23.0	23.0	-	
MIXTURE RATIO	O/F	1.30	1.30	1.30	1.30	-	ANR 930
SPECIFIC IMPULSE	SEC	272 MIN.	290.	293.	290.	-	ANR 930
							ANR 930
							ANR 930

387

SPECIFICATION NUMBER	REVISION	AMENDMENT
RAO 220-230	NC	#3
RAO 220-354	A	NONE

DNA 52-52701-273

SERIAL NO. 4057133

PART NO. 208160-31

SE-7 (REA) CALIBRATED PERFORMANCE DATA

PART NAME THRUST CHAMBER 25 LB. ASSY. OF

5.2.2

GROUP 4
Downgraded at 3 year intervals: declassified after 12 years

* DATA CORRECTED TO REFLECT OXIDIZER FLOWRATE CORRECTION.

CHARACTERISTICS	UNITS	SPECIFICATION LIMITS	RUN TEST DATA	RUN TEST DATA	RUN *147 TEST DATA	RUN *148 FINAL TEST DATA	INSP.
HOT FIRE TEST DATA--TEST SITE	-	-	-	-	NFL	NFL	ANR 208
CELL LOCATION	-	-	-	-	1-D	1-D	ANR 208
CELL NUMBER	-	-	-	-	379	379	ANR 208
TEST DATE	-	-	-	-	27 AUG 64	27 AUG 64	ANR 208
TEST DURATION	SEC.	2 MIN.	-	-	3.0	3.0	ANR 208
ENVIRONMENTAL P_c	PSIA	0.16 MAX.	-	-	.05900	.05960	ANR 208
AMBIENT PRESSURE	PSIA	DNA	-	-	12.08	12.08	ANR 208
AMBIENT TEMPERATURE	°F	DNA	-	-	82.0	82.0	ANR 208
TIME OF DATA SLICE-START	SEC.	DNA	-	-	2.8	2.8	ANR 208
TIME OF DATA SLICE-END	SEC.	DNA	-	-	2.8	2.8	ANR 208
OXIDIZER TEMPERATURE	°F	DNA	-	-	68.9	68.9	ANR 208
FUEL TEMPERATURE	°F	DNA	-	-	65.8	66.0	ANR 208
OXIDIZER DENSITY	LB/FT^3	DNA	-	-	91.00	91.00	ANR 208
FUEL DENSITY	LB/FT^3	DNA	-	-	54.67	54.67	ANR 208
							NASA

SPECIFICATION NUMBER	REVISION	AMENDMENT		
RA0220-354	A	NONE	DNA 52-52701-273	SERIAL NO. 4057133 PART NO. 208160-31

SE-7 (REA) CALIBRATED PERFORMANCE DATA

PART NAME THRUST CHAMBER, 25 LB., ASSY OF

5.2 A

388

R-15075-1

* DATA CORRECTED TO REFLECT OXIDIZER FLOWRATE CORRECTION.

CHARACTERISTICS	UNITS	SPECIFICATION LIMITS	RUN TEST DATA	RUN TEST DATA	RUN *147 TEST DATA	RUN *148 FINAL TEST DATA	INSP.
HOT FIRE TEST DATA--TEST SITE	-	-	-	-	NFL	NFL	ANR 208
OXIDIZER INLET PRESSURE	PSIA	292 ± 10	-	-	290.2	288.8	ANR 208
FUEL INLET PRESSURE	PSIA	292 ± 10	-	-	294.0	293.5	ANR 208
OXIDIZER FLOWRATE	LB/SEC	DNA	-	-	.0469	.0465	ANR 208
FUEL FLOWRATE	LB/SEC	DNA	-	-	.0356	.0356	ANR 208
THRUST	LB.	DNA	-	-	23.6	23.6	ANR 208
MIXTURE RATIO	O/F	DNA	-	-	1.32	1.31	ANR 208
SPECIFIC IMPULSE	SEC.	DNA	-	-	286.	287.	ANR 208
INJECTOR END P_c	PSIA	DNA	-	-	136.3	135.5	ANR 208
CHARACTERISTIC VELOCITY	FT/SEC.	DNA	-	-	5352.	5347.	ANR 208
THROAT DIAMETER	INCH	DNA	-	-	.358	.358	ANR 208
FUEL ORIFICE DIAMETER	INCH	DNA	-	-	.04460	.04460	ANR 208
OXIDIZER ORIFICE DIAMETER	INCH	DNA	-	-	.03800	.03800	ANR 208
TCA FIRING TIME (TOTAL)	SEC.	15 MAX.	-	-	18.0	21.0	ANR 208
OXIDIZER SAMPLE NUMBER	-	-	-	-	300.	300.	ANR 208
FUEL SAMPLE NUMBER	-	-	-	-	303.	303.	ANR 208

R-15075-1

389

SPECIFICATION NUMBER	REVISION	AMENDMENT		
RA0220-354	A	NONE	DNA 52-52701-273	SERIAL NO. 4057133 PART NO. 208160 -31

SE-7 (REA) CALIBRATED PERFORMANCE DATA

PART NAME THRUST CHAMBER, 25 LB., ASSY OF

5.2.1 A

* DATA CORRECTED TO REFLECT OXIDIZER FLOWRATE CORRECTION.

390

CHARACTERISTICS	UNITS	SPECIFICATION LIMITS	RUN TEST DATA	RUN TEST DATA	RUN *147 TEST DATA	RUN *148 FINAL TEST DATA	INSP.
HOT FIRE TEST DATA--TEST SITE	-	-	-	-	NFL	NFL	ANR 208
ADJUST TO STANDARD CONDITIONS	-	-	-	-	-	-	
THRUST	LB.	23 ± 1.2	-	-	23.8	23.8	ANR 208
MIXTURE RATIO	O/F	1.30 ± .05	-	-	1.33	1.32	ANR 208
SPECIFIC IMPULSE	SEC.	DNA	-	-	289.	290.	ANR 208
INJECTOR END Pc	PSIA	DNA	-	-	136.0	135.6	ANR 208
CHARACTERISTIC VELOCITY	FT/SEC.	DNA	-	-	5354.	5350.	ANR 208
ADJUST TO RATED CONDITIONS	-	-	-	-	-	-	
THRUST	LB.	23	-	-	23.0	23.0	ANR 208
MIXTURE RATIO	O/F	1.3	-	-	1.30	1.30	ANR 208
SPECIFIC IMPULSE	SEC.	272 MIN.	-	-	289.	290.	ANR 208

R-15075-1

SPECIFICATION NUMBER	REVISION	AMENDMENT		
RA0220-354	A	NONE	DNA	SERIAL NO. 4057133
RA0220-230	N/C	#3	52-52701-273	PART NO. 208160 -31

SE-7 (REA) CALIBRATED PERFORMANCE DATA

PART NAME THRUST CHAMBER, 25 LB., ASSY OF

5.2.2 A

R-15075-1

THE FOLLOWING IS INFORMATION RELATIVE TO THE CLEANLINESS LEVEL OF THE PROPELLANT UTILIZED IN THE HOT-FIRE ACCEPTANCE TEST OF THE THRUST CHAMBER ASSEMBLY.

THE INFLUENT PARTICULATE COUNT OF THE PROPELLANT WAS:

		LIMITS	ACTUAL COUNT MMH - FUEL	ACTUAL COUNT NTO - OXID
	< 10	*	DNA	DNA
	10 - 25	100	89	23
	25 - 50	20	16	12
	50 - 100	5	2	1
	100 - 300	1	1	1
	300 - 1000	0	0	0
	> 1000	0	0	0
FIBERS	300 - 3000	0	0	0
FIBERS	> 3000	0	0	0

* NOTE: " NOT TO BE COUNTED BUT NO SLURRY OF FINE PARTICLES WHICH COVERS MORE THAN AN ESTIMATED 5 PERCENT OF THE TOTAL EFFECTIVE FILTER AREA SHALL BE ALLOWED." AT THE DISCRETION OF QUALITY ASSURANCE, A WEIGHT DETERMINATION OF TOTAL CONTAMINATION MAY BE MADE AS A REFEREE TEST IN BORDERLINE CASES. THE MAXIMUM ALLOWABLE WEIGHT OF CONTAMINANTS SHALL BE 0.001 GRAM (1 MG).

CLASS 4

INSP. ANR 208

SPECIFICATION NUMBER	REVISION	AMENDMENT		
RAC615-003	B	#2	52-52701-273 PART NO. 208160-31	
SE- 7 INFORMATION - CONTAMINATION			PART NAME THRUST CHAMBER, 25 LB., ASSY OF	5.3

SEQUENCE NO.
MAC 8870 (REV. 7 JUNE 57)
Q. C. No. 99

McDONNELL AIRCRAFT CORPORATION
MATERIAL REVIEW RECORD

№ 71917

2 September 1964

PAGE 1 OF 2

COPIES TO DEPTS.

NAME: Thrust Chamber Assembly

VENDOR NAME AND ADDRESS: Rocketdyne, 6633 Canoga Avenue, Canoga Park, Calif

PART NO.: 208160-31

OF ASSEMBLY NO.: SCD52-52701-273

TYPE

STOCK NO.

PURCHASE ORDER NO.: Y 20161

RECEIVING REPORT NO.

DATE RECEIVED AT MAC

QUANTITY REJECTED		JOB ORDER	RELEASE OR ITEM	CODE	LOCATION OF PARTS	ELDG.
(1) One	☐ GFE ☐ GOM	306			Vendor	
QUANTITY ACCEPTED	☐ MAC ☐ CFE	MODEL: 133 P	SERIAL NO.: 4057133	CUSTOMER AIRPLANE NO.	TOOLING CHECK REQUESTED	

REASON FOR REJECTION: Condition A: P/N 208160-31 S/N 4057133 TCA Detail "D" of dwg. 208160, .136 dia. [illegible]e drilled into combustion chamber has 3 chipped out areas on the I.D. of hole in the liner. Two (2) chipped areas measure .004 X .004. The other measures .003 X .003 (See Sketch Page 2 of 2)

Condition B: Accumulated hot fire time is 21.0 sec.

Shipment of this hardware in the condition reflected in this MRR must be authorized by a written waiver from the McDonnell Buyer or Resident Representative. 600[illegible]-5 C240[illegible]

SIGNATURE OF PERSON INITIATING THIS MRR & DATE: [illegible] 9-2-64

INSPECTION SUPERVISION APPROVAL SIGNATURE & DATE: T. J. [illegible] 9-[illegible]-64

MATERIALS REVIEW BOARD'S INSTRUCTIONS

USE AS IS	SCRAP	REWORK	RESPONSIBILITY	RETURN TO VENDOR
	QTY.	QTY.	MAC ☐ VENDOR ☒	QTY.

DISCREPANCY IS NOT CONSIDERED SUFFICIENT TO MATERIALLY AFFECT THE PHYSICAL AND FUCNTIONAL DESIGN REQUIREMENTS, THEREFORE, ACCEPTABLE TO USE FOR SYSTEM DAT.

NO TWX SENT TO ROCKETDYNE: DISPOSITIONED, IN-HOUSE AT ROCKETDYNE.

392

DEPT. DETERMINATIONS BY: [illegible] 9/21/64 BUYER

R-15075-1

RETURN TO VENDOR | RETAIN AT MAC | CHARGE | VENDOR TO BE CHARGED | REWORK | SCRAP

QTY. | S.R. NO. | REWORK ☐ REPLACE ☐ | QTY. | REWORK ☐ SCRAP ☐ | VENDOR ☐ MAC ☐ | UNIT $ LOT $ | $ | $ | PROD. PLNG. APPROVAL

AGREED MAC SHOP REPR. | MAC Q. C. REPR. APPROVAL & DATE: [illegible] 24 Sep 64 | MAC-ENG REPR. APPROVAL & DATE: [illegible] 24 Sep 64 | CUSTOMER REPR. APPROVAL & DATE: [illegible] 21 Sep 64

REWORK SATISFACTORILY | MAC INSP. | DATE | CUSTOMER INSP. | DATE | CORRECTIVE ACTION GENERAL FOREMAN

DISCREPANCY			DISPOSITION	
DISC. CODE	MATL. CODE	QTY.	DISP CODE	QTY.
			1	
			2	
			3	
			4	
			5	
			6	
			7	

MRR No. 74917

MDR No.

Page 2 of 2

Contract 74

ASSY. NO. 20440-31

DEFECTIVE DETAIL NO.

PART NAME THROAT CHAMBER ASSY 2K10

DATE 9/2/64

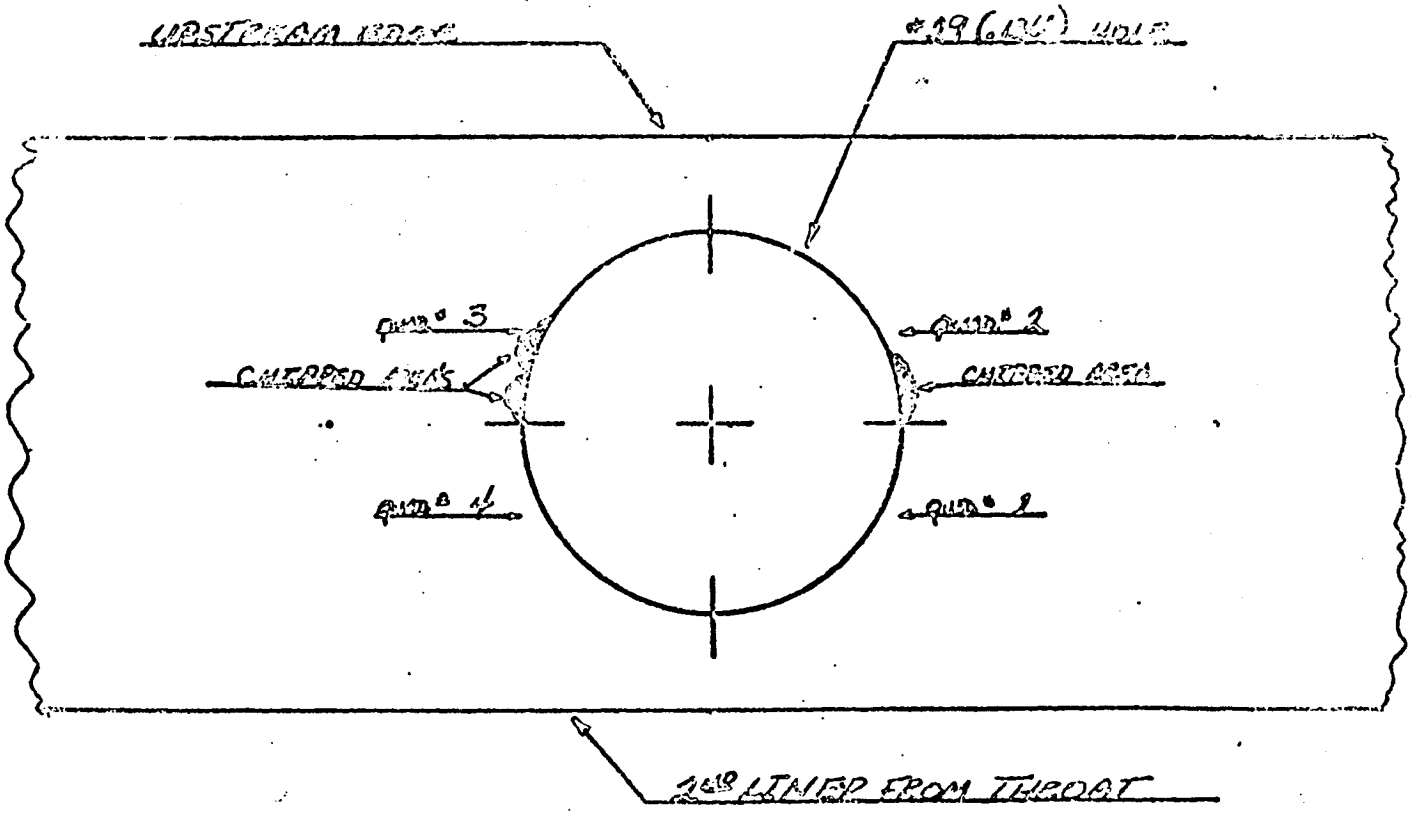

R L Manton
MAC Engrg
24 Sep 64

MAC
24 Sep 64

R-15075-1

393

MATERIAL REVIEW RECORD
(CONTINUATION SHEET)

MAC 661A (REV. 24 APR. 59)

INTERNAL LETTER
NORTH AMERICAN AVIATION, INC.

IL 4397-5054

DATE 24 September 1964

TO ADDRESS Those Concerned

FROM ADDRESS Performance Analysis D/896-397

PHONE 6131

SUBJECT Corrections to TCA Hot-Fire Performance Data Due to Oxidizer Flowmeter Calibration Error.

Thrust chamber assembly log books containing this letter include hot-performance data which have been corrected for an oxidizer flowmeter calibration error.

The error, discovered subsequent to the hot-fire tests, was introduced by an improperly calibrated standard volume used to calibrate oxidizer flowmeters. The error was systematic in nature such that the actual oxidizer flowrate was 2.2 percent higher than indicated by the flowmeter.

Hot-fire performance data contained in this log book have been corrected by increasing the oxidizer flowrate measured under "site" conditions by 2.2 percent. All other parameters have been corrected according to their dependence on oxidizer flowrate by normal data processing techniques. Only data from the final hot-fire acceptance test(s) have been corrected.

A. D. Rolland
A. D. Rolland
Supervisor
Performance Analysis Unit
Space Engine Division

ADR:gls

Approved: G K Cooper
G. K. Cooper
Group Leader
Structures and Analysis
Space Engine Division

R-15075-1

CONFIDENTIAL

SCD 52-52701-271

R-15075-1

"CERTIFICATION IS HEREBY GIVEN THAT THE DELIVERABLE END ITEM COVERED BY THIS LOG BOOK WAS MANUFACTURED, INSPECTED AND TESTED IN ACCORDANCE WITH PRESCRIBED DRAWINGS, SPECIFICATION AND QUALITY ASSURANCE PROVISIONS. INSPECTION AND TEST RECORDS ARE ON FILE VERIFYING COMPLIANCE WITH APPLICABLE DRAWINGS AND SPECIFICATIONS, EXCEPT AS NOTED HEREIN"

LOG BOOK ACCEPTANCE DAT #8 (CRD #8)

SPACE ENGINES ENGINEERING	SPACE ENGINES QUALITY CONTROL	McDONNELL QUALITY REPRESENTATIVE	GOV'T INSPECTION AGENCY QUALITY REPRESENTATIVE
R.D. Pinto	Wm E Keith	J. E. Parker	Bernard R Duffy AFQA
DATE 9/30/64	DATE 9/30/64	DATE 9-30-64	DATE 9-30-64

CONTENTS

SECTION I – DELIVERABLE END ITEM ASSEMBLY LOG

RECORDS CONTAINED IN THIS SECTION ARE PERTINENT TO THE DELIVERABLE END ITEM ACCEPTANCE AND ALSO INCLUDE MODEL CONFIGURATION DATA, PERTINENT DETAILS OF SHORT SHIPMENTS, COMPONENT VARIATIONS, AGE SENSITIVE PARTS RECORD, WEIGHT AND SERIALIZATION RECORDS.

SECTION II – ACCEPTANCE TEST LOG

RECORDS OF ASSEMBLY ACCEPTANCE TESTS ARE PRESENTED IN THIS SECTION WITH PERFORMANCE DATA AND SUMMARY DATA ON INSPECTIONS AND ACCEPTANCE.

GENERAL INFORMATION

THIS LOG BOOK IS PROVIDED FOR SERVICE USE IN RECORDING PERTINENT HISTORICAL DATA AND ALL CHANGES FROM THE ORIGINAL CONFIGURATION. IT IS REQUESTED THIS LOG BOOK ACCOMPANY THE DELIVERABLE END ITEM WHEN TRANSFERRED BETWEEN ROCKETDYNE AND USING AGENCIES.

GROUP-4
Downgraded at 3 year intervals;
declassified after 12 years

ROCKETDYNE – SPACE ENGINES
A DIVISION OF NORTH AMERICAN AVIATION, INC.

LOG BOOK SPECIFICS

McDONNELL	ITEM	ROCKETDYNE
THIS MATERIAL CONTAINS INFORMATION AFFECTING THE NATIONAL DEFENSE OF THE UNITED STATES WITHIN THE MEANING OF THE ESPIONAGE LAWS, TITLE 18 U.S.C., SECTIONS 793 AND 794. ITS TRANSMISSION OR THE REVELATION OF ITS CONTENTS IN ANY MANNER TO AN UNAUTHORIZED PERSON IS PROHIBITED BY LAW.		
	LOG BOOK DATE	30 SEPT 64
	DWG CHG LTR	DNA
Y-20161R	CONTRACT NO.	
	GEN ORDER NO.	5252
SCD52-52701-271	SPEC NO.	
DNA	SERIAL NO.	1057184
52-52701-271	PART NO.	208160-21

SE 7 DELIVERABLE END ITEM – LOG BOOK IDENTIFICATION

PART NAME THRUST CHAMBER, 25 LB., ASSY OF

1.0

395

CONFIDENTIAL

DELIVERABLE END ITEM

THIS LOG BOOK CONTAINS INFORMATION PERTINENT TO THE DELIVERABLE END ITEM AS SPECIFIED HEREIN BY SERIAL NUMBER AND PART NUMBER. IT IS NECESSARY THAT ALL ENTRIES BE WRITTEN IN INK OR TYPED FOR PERMANENT RECORD. ENTRIES SUCH AS SERIALIZATION, WEIGHT, APPLICABLE MCR'S, ACCEPTANCE TEST DATA AND CALIBRATION DATA WILL BE ENTERED BY ROCKETDYNE AT THE TIME OF DELIVERY.

IT IS REQUESTED THAT THIS LOG BOOK ACCOMPANY THIS DELIVERABLE END ITEM IF THE ITEM IS RETURNED TO ROCKETDYNE FOR REPAIR, MODIFICATION OR RETEST. ROCKETDYNE WILL THEN ENTER REPAIR, MODIFICATION AND RETEST DATA IN THIS LOG BOOK.

THE FORMAT OF PAGES IN THIS LOG BOOK SHALL NOT BE REVISED WITHOUT OBTAINING APPROVAL OF ROCKETDYNE SPACE ENGINES QUALITY CONTROL.

52-52701-271	PART NO. 208160-21	
PART NAME THRUST CHAMBER, 25 LB., ASSY OF		2.0

R-15075-1

1.0 LOG BOOK IDENTIFICATION

2.0 FOREWORD

3.0 CONTENTS

4.0 MODULE/COMPONENT ASSEMBLY LOG--SECTION I

4.1 CONFIGURATION & SERIALIZATION

4.2 MCR VERIFICATION

4.3 VARIATION LOG

4.4 REPLACEMENT LOG

5.0 COMPONENT ACCEPTANCE TEST LOG--SECTION II

5.1 COMPONENT ACCEPTANCE TEST

5.1.1 COMPONENT ACCEPTANCE TEST

5.1.2 COMPONENT ACCEPTANCE TEST

5.1.3 COMPONENT ACCEPTANCE TEST

5.1.4 COMPONENT ACCEPTANCE TEST

5.2 CALIBRATED PERFORMANCE DATA

5.2.1 CALIBRATED PERFORMANCE DATA

5.2.2 CALIBRATED PERFORMANCE DATA

5.3 INFORMATION--CONTAMINATION

SECTION I

52-52701-277 PART NO. 208160-21

SE-7 MODULE / COMPONENT ASSEMBLY LOG

PART NAME THRUST CHAMBER, 25 LB., ASSY OF

4.0

IND. NO.	PART NUMBER	REV. LTR.	PART NAME	SERIAL NO.	AGE CONTROL DATE OF MFG.	INSP.
1	208160-21	DNA	THRUST CHAMBER, 25 LB., ASSY OF	4057184	3Q64	ANR 208
2	208161-11	DNA	BODY, THRUST CHAMBER, ASSY OF	4059556	3Q64	ANR 208
2	208166	DNA	SHELL, THRUST CHAMBER, ASSY OF	8899810		ANR 208
3	208530-11	DNA	INJECTOR, THRUST CHAMBER, ASSY OF	7048907		ANR 208
2	408579	DNA	VALVE, OXIDIZER, T/C, ASSY OF	4055234		ANR 208
2	408580	DNA	VALVE, FUEL, T/C, ASSY OF	4055200		ANR 208

DNA SERIAL NO. 4057184

52-52701-271 PART NO. 208160-21

SE- 7 CONFIGURATION & SERIALIZATION LOG

PART NAME THRUST CHAMBER, 25 LB., ASSY OF

4.1

MCR / ECP NO.	DATE	TITLE	DATE	INSP.
SE6-062	6 JAN 64	COMPONENT CLEANING; PROVISION FOR	30 SEPT 64	ANR 208
SE6-064	30 JUL 63	TCA, ACCEPTANCE TESTS; REVISION OF	30 SEPT 64	ANR 208
SE6-133	22 APR 64	TCA PROPELLANT VALVES; ADDITIONAL REQUIREMENTS FOR	30 SEPT 64	ANR 208
SE6-139	15 APR 64	PLACEMENT OF HAYNES STELLITE #3 SAND CAST ON APPROVED MATERIAL LIST	30 SEPT 64	ANR 208
SE6-144	15 APR 64	TCA INJECTORS; REDESIGN OF	30 SEPT 64	ANR 208
SE6-179	16 JUN 64	TUBE STUBS; MARKINGS OF	30 SEPT 64	ANR 208
SE6-080	28 DEC 63	THRUST CHAMBER ASSEMBLIES, FABRICATION MATERIAL; APPROVAL OF	30 SEPT 64	ANR 208
SE6-085	30 JUL 63	CUSTOMER TEST SURVEILLANCE; REQUIREMENT FOR	30 SEPT 64	ANR 208
SE7-25	9APR 63	25 LB. TCA MOUNTING HOLES; RELOCATION OF	30 SEPT 64	ANR 208
SE7-29	31 MAY 63	THRUST CHAMBER ASSEMBLY, 25 LB. CHANGES TO	30 SEPT 64	ANR 208

DNA	SERIAL NO.	4057184	
52-52701-271	PART NO.	208160-21	
SE-7 DELIVERABLE END ITEM-MCR VERIFICATION	PART NAME	THRUST CHAMBER, 25 LB., ASSY OF	4.2

MCR / ECP NO.	DATE	TITLE	DATE	INSP.
SE6-062	6 JAN 64	COMPONENT CLEANING; PROVISION FOR	30 SEPT 64	ANR 208
SE6-064	30 JUL 63	TCA, ACCEPTANCE TESTS; REVISION OF	30 SEPT 64	ANR 208
SE6-133	22 APR 64	TCA PROPELLANT VALVES; ADDITIONAL REQUIREMENTS FOR	30 SEPT 64	ANR 208
SE6-139	15 APR 64	PLACEMENT OF HAYNES STELLITE #3 SAND CAST ON APPROVED MATERIAL LIST	30 SEPT 64	ANR 208
SE6-144	15 APR 64	TCA INJECTORS; REDESIGN OF	30 SEPT 64	ANR 208
SE6-179	16 JUN 64	TUBE STUBS; MARKINGS OF	30 SEPT 64	ANR 208
SE6-080	28 DEC 63	THRUST CHAMBER ASSEMBLIES, FABRICATION MATERIAL; APPROVAL OF	30 SEPT 64	ANR 208
SE6-085	30 JUL 63	CUSTOMER TEST SURVEILLANCE; REQUIREMENT FOR	30 SEPT 64	ANR 208
SE7-25	9APR 63	25 LB. TCA MOUNTING HOLES; RELOCATION OF	30 SEPT 64	ANR 208
SE7-29	31 MAY 63	THRUST CHAMBER ASSEMBLY, 25 LB. CHANGES TO	30 SEPT 64	ANR 208

DNA SERIAL NO. 4057184
52-52701-271 PART NO. 208160-21

SE-7 DELIVERABLE END ITEM-MCR VERIFICATION

PART NAME THRUST CHAMBER, 25 LB., ASSY OF

R-15075-1

MR NO.	PART OR COMP. INVOLVED	PART NUMBER	SERIAL NUMBER	BRIEF DESCRIPTION OF VARIATION AND MATERIAL REVIEW BOARD DISPOSITION	INSP.
MRR #71920	TCA 25 LB.	208160-21	4057184	DISCREPANCY: CONDITION A: THROAT INSERT HAS A LONGITUDINAL CRACK STARTING AT THE DOWNSTREAM EDGE AND EXTENDING .450 TOWARDS THE MINOR DIA. IT'S MAX. WIDTH IS .0015 CONDITION B: THE SECOND LINER FROM THE THROAT INSERT HAS A CRACK EXTENDING THE ENTIRE WIDTH OF THE LINER. MAX. WIDTH OF CRACK IS .0002. DISPOSITION: ACCEPTABLE TO USE FOR SYSTEM DAT.	ANR 209
600-N-5 37275	TCA 25 LB.	208160-21	4057184	DISCREPANCY: FINAL INSPECTION SCN 40 1. SHELL ASSY HAS SEVERAL NICKS LOCATED ON OPPOSITE SIDE OF CHAMBER FROM MOUNTING TAB. NICKS RUN IN DEPTH FROM . 002" TO .007" LARGEST IS 5/64 x 3/64. DISPOSITION: USE AS IS	ANR 209

DNA	SERIAL NO.	4057184	
52-52701-271	PART NO.	208160 -21	
SE-7 DELIVERABLE END ITEM — VARIATION LOG	PART NAME	THRUST CHAMBER, 25 LB., ASSY OF	4.3

PART NO.	PART NAME	SERIAL NO.	REASON FOR REPLACEMENT	REPLACED BY		INSP.
				PART NO.	SERIAL NO.	
			NONE THIS DATE (30 SEPT 64)			ANR 208

DNA

52-52701-271

SERIAL NO. 4057184

PART NO. 208160 -21

SE-7 DELIVERABLE END ITEM -- REPLACEMENT LOG

PART NAME THRUST CHAMBER, 25 LB., ASSY OF

4.4

SECTION II

52-52701-271 PART NO. 208160-21

SE-7 COMPONENT ACCEPTANCE TEST LOG

PART NAME THRUST CHAMBER, 25 LB., ASSY OF

5.0

PERFORMANCE PARAMETERS	PARAGRAPH NUMBER	UNITS	SPECIFICATION LIMITS	ACCEPTANCE TEST DATA	INSP.
ELECTRICAL RESISTANCE TESTS--TCA PROPELLANT VALVES	4.2				
BODY TEMPERATURE					
OXIDIZER	4.2.4	DEGREES F	70 ± 5	70	ANR 203
FUEL	4.2.11	DEGREES F	70 ± 5	70	ANR 203
COIL RESISTANCE					
OXIDIZER	4.2.5	OHMS	42 ± 2	41.10	ANR 203
FUEL	4.2.11	OHMS	42 ± 2	41.01	ANR 203
CONTINUITY RESISTANCE					
OXIDIZER	4.2.9	OHMS	1.0 MAX.	.02	ANR 203
FUEL	4.2.11	OHMS	1.0 MAX.	.07	ANR 203
DIELECTRIC STRENGTH TEST--PROPELLANT VALVES	4.3				
CURRENT LEAKAGE					
OXIDIZER	4.3.8	MICROAMPS	500 MAX.	32	ANR 203
FUEL	4.3.11	MICROAMPS	500 MAX.	36	ANR 203
PROOF PRESSURE TEST--TCA PROPELLANT VALVES	4.4				
VALVES PRESSURIZED FOR NOT LESS THAN 3 MINUTES					
OXIDIZER					
STEP I	4.4.3	PSIG	500 ± 10	VERIFIED	ANR 203
STEP II	4.4.5	PSIG	500 ± 10	VERIFIED	ANR 203

SPECIFICATION NUMBER	REVISION	AMENDMENT	DNA	SERIAL NO. 4057184
RA0220-354	N/C	#3	52-52701-271	PART NO. 208160 -21

SE-7 COMPONENT ACCEPTANCE TEST

PART NAME THRUST CHAMBER, 25 LB., ASSY OF

5.1

PERFORMANCE PARAMETERS	PARAGRAPH NUMBER	UNITS	SPECIFICATION LIMITS	ACCEPTANCE TEST DATA	INSP.
PROOF PRESSURE TEST--TCA PROPELLANT VALVES (CONTINUED)					
FUEL					
STEP I	4.4.7	PSIG	500 ± 10	VERIFIED	ANR 208
STEP II	4.4.7	PSIG	500 ± 10	VERIFIED	ANR 208
INSPECTED VISUALLY FOR DAMAGE OR DEFORMATION					
OXIDIZER					
STEP I	4.4.4	DNA	NONE ALLOWED	NONE DETECTED	ANR 208
STEP II	4.4.5	DNA	NONE ALLOWED	NONE DETECTED	ANR 208
FUEL					
STEP I	4.4.7	DNA	NONE ALLOWED	NONE DETECTED	ANR 208
STEP II	4.4.7	DNA	NONE ALLOWED	NONE DETECTED	ANR 208
PROOF PRESSURE AND LEAKAGE TEST--THRUST CHAMBER	4.5				
PROOF PRESSURE TEST					
THRUST CHAMBER PRESSURIZED FOR NOT LESS THAN 5 MINUTES AT					
STEP I	4.5.8	PSIG	392 ± 10	VERIFIED	ANR 208
STEP II	4.5.10	PSIG	392 ± 10	VERIFIED	ANR 208

SPECIFICATION NUMBER	REVISION	AMENDMENT			
RA0220-354	N/C	#3	DNA	SERIAL NO.	4057184
			52-52701-271	PART NO.	208160 -21
SE- 7 COMPONENT ACCEPTANCE TEST			PART NAME THRUST CHAMBER, 25 LB., ASSY OF		5.1.1

PERFORMANCE PARAMETERS	PARAGRAPH NUMBER	UNITS	SPECIFICATION LIMITS	ACCEPTANCE TEST DATA	INSP.
PROOF PRESSURE AND LEAKAGE TEST--THRUST CHAMBER (CONTINUED)					
LEAKAGE TEST					
STEP I	4.5.8	DNA	NONE ALLOWED	NONE DETECTED	
STEP II	4.5.10	DNA	NONE ALLOWED	NONE DETECTED	
INSPECTED VISUALLY FOR DAMAGE OR DEFORMATION	4.5.14	DNA	NONE ALLOWED	NONE DETECTED	
FUNCTIONAL TEST--TCA PROPELLANT VALVES	4.6				
OPENING RESPONSE TIME					
OXIDIZER	4.6.17	SEC.	0.0065 MAX.	.0041	
FUEL	4.6.8	SEC.	0.0065 MAX.	.0035	
CLOSING RESPONSE TIME					
OXIDIZER	4.6.17	SEC.	0.002 MAX.	.0016	
FUEL	4.6.10	SEC.	0.002 MAX.	.0015	
CLOSING DROP OUT VOLTAGE					
OXIDIZER	4.6.17	VOLT (DC)	1 MIN.	1.3	
FUEL	4.6.13	VOLT (DC)	1 MIN.	1.3	

R-15075-1

SPECIFICATION NUMBER	REVISION	AMENDMENT
RA0220-354	N/C	#3

DNA SERIAL NO. 4057184

52-52701-271 PART NO. 208160 -21

SE-7 COMPONENT ACCEPTANCE TEST

PART NAME THRUST CHAMBER, 25 LB., ASSY OF

5.1.

PERFORMANCE PARAMETERS	PARAGRAPH NUMBER	UNITS	SPECIFICATION LIMITS	ACCEPTANCE TEST DATA	INSP.
* LEAKAGE TEST--TCA PROPELLANT VALVES	4.8				
SEAT LEAKAGE RATE					
OXIDIZER	4.8.17	SCC/MIN	2.21 MAX.	LESS THAN 0.1	
FUEL	4.8.22	SCC/MIN	2.21 MAX.	LESS THAN 0.1	
** PRE-TEST DATA					
DRY WEIGHT (EXCLUDING PROTECTIVE CLOSURES)	4.1.3	LB.	DNA	3.21	
NOZZLE EXIT DIAMETER					
SECTION A-A		INCH	DNA	2.240	
THROAT DIAMETER					
SECTION A-A		INCH	DNA	.358	
B-B		INCH	DNA	.358	
C-C		INCH	DNA	.358	
D-D		INCH	DNA	.358	
** POST HOT-FIRE DATA					
PROOF PRESSURE TEST					
DRY WEIGHT (EXCLUDING PROTECTIVE COVERS & CLOSURES)	4.17.1	LB.	DNA	3.25	
THRUST CHAMBER PRESSURIZED FOR NOT LESS THAN 5 MINUTES					
STEP I	4.17.4	PSIG	392 ± 10	392	
STEP II	4.17.4	PSIG	392 ± 10	391	

407

SPECIFICATION NUMBER	REVISION	AMENDMENT
* PA0220-354	N/C	#3
** PA0220-354	A	NONE

DNA SERIAL NO. 4057184

52-52701-271 PART NO. 208160 -21

SE - 7 COMPONENT ACCEPTANCE TEST

PART NAME THRUST CHAMBER, 25 LB., ASSY OF

5.1.3

PERFORMANCE PARAMETERS	PARAGRAPH NUMBER	UNITS	SPECIFICATION LIMITS	ACCEPTANCE TEST DATA	INSP.
POST HOT-FIRE DATA (CONTINUED)					
LEAKAGE TEST					
STEP I	4.17.4	DNA	NONE ALLOWED	NONE DETECTED	ANR 208
STEP II	4.17.4	DNA	NONE ALLOWED	NONE DETECTED	ANR 208
INSPECTED VISUALLY FOR DAMAGE OR DEFORMATION	4.17.4	DNA	NONE ALLOWED	NONE DETECTED	ANR 208
LEAK TEST -- WELDED JOINTS					
LEAK TEST					
INLET TUBE PRESSURIZED WITH GASEOUS HELIUM					
OXIDIZER	4.17.5	PSIG	500 ± 10	VERIFIED	ANR 208
FUEL	4.17.8	PSIG	500 ± 10	VERIFIED	ANR 208
JOINT LEAKAGE RATE					
OXIDIZER	4.17.6	SCC/SEC	10^{-6} MAX.	2.2×10^{-7}	ANR 208
FUEL	4.17.8	SCC/SEC	10^{-6} MAX.	1.5×10^{-7}	ANR 208
LEAKAGE TEST -- TCA PROPELLANT VALVES					
SEAT LEAKAGE RATE					
OXIDIZER	4.17.9	SCC/SEC	2.21 MAX.	LESS THAN 0.1	ANR 208
FUEL	4.17.9	SCC/SEC	2.21 MAX.	LESS THAN 0.1	ANR 208

SPECIFICATION NUMBER	REVISION	AMENDMENT		
RA0220-354	A	NONE	DNA 52-52701-271	SERIAL NO. 4057184 PART NO. 208160-21
SE-7 COMPONENT ACCEPTANCE TEST			PART NAME THRUST CHAMBER, 25 LB., ASSY OF	5.1.1

THIS MATERIAL CONTAINS INFORMATION AFFECTING

PERFORMANCE PARAMETERS	PARAGRAPH NUMBER	UNITS	SPECIFICATION LIMITS	ACCEPTANCE TEST DATA	INSP.
THROAT DIAMETER (DELIVERED CONDITION)	4.18.1				
SECTION A-A		INCH	DNA	.358	ANH 208
B-B		INCH	DNA	.358	ANH 208
C-C		INCH	DNA	.358	ANH 208
D-D		INCH	DNA	.358	ANH 208
DRY WEIGHT IN DELIVERED CONDITION (EXCLUDING PROTECTIVE COVERS AND CLOSURES)	4.18.2	LB.	DNA	3.11	ANH 208

SPECIFICATION NUMBER	REVISION	AMENDMENT		
RA0220-354	A	NONE	DNA	SERIAL NO. 4057184
			52-52701-271	PART NO. 208160-21
SE-7 COMPONENT ACCEPTANCE TEST			PART NAME THRUST CHAMBER, 25 LB., ASSY OF	5.1.5

Downgr d at 3 year intervals:
declassified after 12 years

CONFIDENTIAL

THE NATIONAL DEFENSE OF THE UN Y STATES WITHIN THE MEANING OF THE ESPIO GE LAWS, TITLE 18 U.S.C., SECTIONS 793 AND 794. ITS TRANSMISSION OR THE REVELATION OF ITS CONTENTS IN ANY MANNER TO AN UNAUTHORIZED PERSON IS PROHIBITED BY LAW.

410

CHARACTERISTICS	UNITS	SPECIFICATION LIMITS	RUN 145 TEST DATA	RUN 146 TEST DATA	RUN 165 TEST DATA	RUN 166 FINAL TEST DATA	INSP.
HOT FIRE TEST DATA - TEST SITE			NFL	NFL	NFL	NFL	AMR 995
CELL LOCATION			1-D	1-D	1-D	1-D	AMR 995
CELL NUMBER			379	379	379	379	AMR 995
TEST DATE			27 Aug 64	27 Aug 64	3 Sept. 64	3 Sept. 64	AMR 995
TEST DURATION	SEC.	2 MIN.	3.0	3.0	3.0	3.0	AMR 995
ENVIRONMENTAL Pc	PSIA	.16 MAX.	.05160	.05160	.05720	.05740	AMR 995
AMBIENT PRESSURE	PSIA	DNA	12.15	12.15	12.17	12.17	AMR 995
AMBIENT TEMPERATURE	°F	DNA	60.0	60.0	73.0	73.0	AMR 995
TIME OF DATA SLICE-START	SEC.	DNA	2.8	2.8	2.8	2.8	AMR 995
TIME OF DATA SLICE-END	SEC,	DNA	2.8	2.8	2.8	2.8	AMR 995
OXIDIZER TEMPERATURE	°F	DNA	79.9	80.0	71.8	72.9	AMR 995
FUEL TEMPERATURE	°F	DNA	65.8	66.4	67.9	69.0	AMR 995
OXIDIZER DENSITY	LB/FT^3	DNA	90.71	90.71	90.33	90.24	AMR 995
FUEL DENSITY	LB/FT^3	DNA	54.67	54.65	54.64	54.60	AMR 995

R-15075-1

SPECIFICATION NUMBER RA0220-354 A NONE

DNA 52-52701-271

SERIAL NO. 4057184

PART NO. 208160-21

SE-7 (REA) CALIBRATED PERFORMANCE DATA

PART NAME THRUST CHAMBER, 25 LB., ASSY OF

5.2

CONFIDENTIAL

GROUP 4
Downgraded at 3 year intervals;
declassified after 12 years

CONFIDENTIAL

THIS MATERIAL CONTAINS INFORMATION AFFECTING THE NATIONAL DEFENSE OF THE UNITED STATES WITHIN THE MEANING OF THE ESPIONAGE LAWS, TITLE 18 U.S.C., SECTIONS 793 AND 794. ITS TRANSMISSION OR THE REVELATION OF ITS CONTENTS IN ANY MANNER TO AN UNAUTHORIZED PERSON IS PROHIBITED BY LAW.

R-15075-1

CHARACTERISTICS	UNITS	SPECIFICATION LIMITS	RUN 145 TEST DATA	RUN 146 TEST DATA	RUN 165 TEST DATA	RUN 166 FINAL TEST DATA	INSP.
HOT FIRE TEST DATA - TEST SITE			NFL	NFL	NFL	NFL	
OXIDIZER INLET PRESSURE	PSIA	292 ± 10	296.1	299.1	293.6	289.7	
FUEL INLET PRESSURE	PSIA	292 ± 10	296.7	296.7	287.7	291.7	
OXIDIZER FLOWRATE	LB/SEC.	DNA	.04629	.04668	.04742	.04727	
FUEL FLOWRATE	LB/SEC.	DNA	.03630	.03642	.03575	.03631	
THRUST	LB.	DNA	23.7	23.8	23.9	23.8	
MIXTURE RATIO	O/F	DNA	1.28	1.28	1.33	1.30	
SPECIFIC IMPULSE	SEC.	DNA	287.	287.	287.	285.	
INJECTOR END Pc	PSIA	DNA	136.3	137.5	138.1	137.7	
CHARACTERISTIC VELOCITY	FT/SEC.	DNA	5346.	5358.	5379.	5337.	
THROAT DIAMETER	IN.	DNA	.358	.358	.358	.358	
FUEL ORIFICE DIAMETER	IN.	DNA	.05185	.05185	.05185	.05185	
OXIDIZER ORIFICE DIAMETER	IN.	DNA	.03820	.03820	.03820	.03820	
TCA FIRING TIME (TOTAL)	SEC.	15 MAX.	3.0	6.0	9.0	12.0	
OXIDIZER SAMPLE NUMBER			300.	300.	306.	306.	
FUEL SAMPLE NUMBER			303.	303.	309.	309.	

411

SPECIFICATION NUMBER
RA0220-354 A NONE

DNA 52-52701- 271

SERIAL NO. 4057184
PART NO. 208160- 21

SE-7 (REA) CALIBRATED PERFORMANCE DATA

PART NAME THRUST CHAMBER, 25 LB., ASSY OF

Sr2.1

CONFIDENTIAL

CONFIDENTIAL

412

CHARACTERISTICS	UNITS	SPECIFICATION LIMITS	RUN 145 TEST DATA	RUN 146 TEST DATA	RUN 165 TEST DATA	RUN 166 FINAL TEST DATA	INSP.
HOT FIRE TEST DATA--TEST SITE			NFL	NFL	NFL	NFL	ANR 208
ADJUST TO STANDARD CONDITIONS							
THRUST	LB.	23 ± 1.2	23.6	23.7	24.1	24.1	ANR 208
MIXTURE RATIO	O/F	1.30 ± .05	1.27	1.27	1.30	1.31	ANR 208
SPECIFIC IMPULSE	SEC	DNA	289.	289.	290.	288.	[illegible]
INJECTOR END Pc	PSIA	DNA	134.7	135.3	138.1	138.1	[illegible]
CHARACTERISTIC VELOCITY	FT/SEC	DNA	5345.	5353.	5371.	5339.	[illegible]
ADJUST TO RATED CONDITIONS							
THRUST	LB.	23	23.0	23.0	23.0	23.0	[illegible]
MIXTURE RATIO	O/F	1.3	1.30	1.30	1.30	1.30	ANR 208
SPECIFIC IMPULSE	SEC	272 MIN.	290.	290.	290.	290.	ANR 208

R-15075-1

SPECIFICATION NUMBER	REVISION	AMENDMENT
RA0220-230	N/C	#3
RA0220-354	A	NONE

DNA SERIAL NO. 4057184

52-52701-271 PART NO. 208160-21

SE-7 (REA) CALIBRATED PERFORMANCE DATA

PART NAME THRUST CHAMBER, 100 LB., ASSY OF

5.2.2

CONFIDENTIAL

R-15075-1

THE FOLLOWING IS INFORMATION RELATIVE TO THE CLEANLINESS LEVEL OF THE PROPELLANT UTILIZED IN THE HOT-FIRE ACCEPTANCE TEST OF THE THRUST CHAMBER ASSEMBLY.

THE INFLUENT PARTICULATE COUNT OF THE PROPELLANT WAS:

		LIMITS	ACTUAL COUNT MMH - FUEL	ACTUAL COUNT NTO - OXID
	< 10	*	DNA	DNA
	10 - 25	100	49	95
	25 - 50	20	6	3
	50 - 100	5	0	0
	100 - 300	1	0	0
	300 - 1000	0	0	0
	> 1000	0	0	0
FIBERS	300 - 3000	0	0	0
FIBERS	> 3000	0	0	0

* NOTE: " NOT TO BE COUNTED BUT NO SLURRY OF FINE PARTICLES WHICH COVERS MORE THAN AN ESTIMATED 5 PERCENT OF THE TOTAL EFFECTIVE FILTER AREA SHALL BE ALLOWED." AT THE DISCRETION OF QUALITY ASSURANCE, A WEIGHT DETERMINATION OF TOTAL CONTAMINATION MAY BE MADE AS A REFEREE TEST IN BORDERLINE CASES. THE MAXIMUM ALLOWABLE WEIGHT OF CONTAMINANTS SHALL BE 0.001 GRAM (1 MG).

CLASS 4

INSP. ANR 208

413

SPECIFICATION NUMBER	REVISION	AMENDMENT		
RAC615-003	B	#2	52-52701-271	PART NO. 4057134
SE-7 INFORMATION - CONTAMINATION			PART NAME THRUST CHAMBER, 25 LB., ASSY OF	53

McDONNELL AIRCRAFT CORPORATION
MATERIAL REVIEW RECORD

24 September 1964

PAGE 1 OF 2

Thrust Chamber Assembly	Rocketdyne 6633 Canoga Avenue Canoga Park, Calif
200160 21 — SCD52-52701-271	
	Purchase Order No.: Y 20161

(1) On:	GFE / COM	306			Vendor	
	MAC / GFE	133 P	405718A			

Condition A: Thrust Insert has a longitudinal crack starting at the [illegible] and extending .450 towards the minor dia. It's max. width is .0015. Condition B: The [illegible] liner from the thrust insert has a crack extending the entire width of the liner. [illegible] of crack is .0002. (See sketch page 2 of 2)

Shipment of this hardware in the condition reflected in this MRR must be authorized by a written waiver from the McDonnell Buyer or Resident Representative. 6001-[illegible]

Signature of Person Authorized: [illegible] Date: 9-14-64

Inspection Supervision Approval Signature: [illegible] Date: [illegible]

MATERIALS REVIEW BOARD'S INSTRUCTIONS

SE AS IS	SCRAP	REWORK	RESPONSIBILITY	RETURN TO VENDOR
	QTY.	QTY.	MAC ☐ VENDOR ☒	QTY.

DISCREPANCY IS NOT CONSIDERED SUFFICIENT TO MATERIALLY AFFECT THE PHYSICAL AND FUNCTIONAL DESIGN REQUIREMENTS, THEREFORE, ACCEPTABLE TO USE FOR SYSTEM DAT.

NO TWX SENT TO MAC: DISPOSITIONED IN-HOUSE AT ROCKETDYNE.

414

R-15075-1

RETURN TO VENDOR	RETAIN AT MAC	CHARGE	VENDOR TO BE CHARGED		
S.R. NO.	REWORK / REPLACE / QTY.	REWORK / SCRAP	VENDOR / MAC	UNIT / LOT	REWORK $ / SCRAP $
					$ / $

[illegible] Date: [illegible]

ASSY. NO. 203.60-21

PART NAME THRUST CHAMBER ASSY

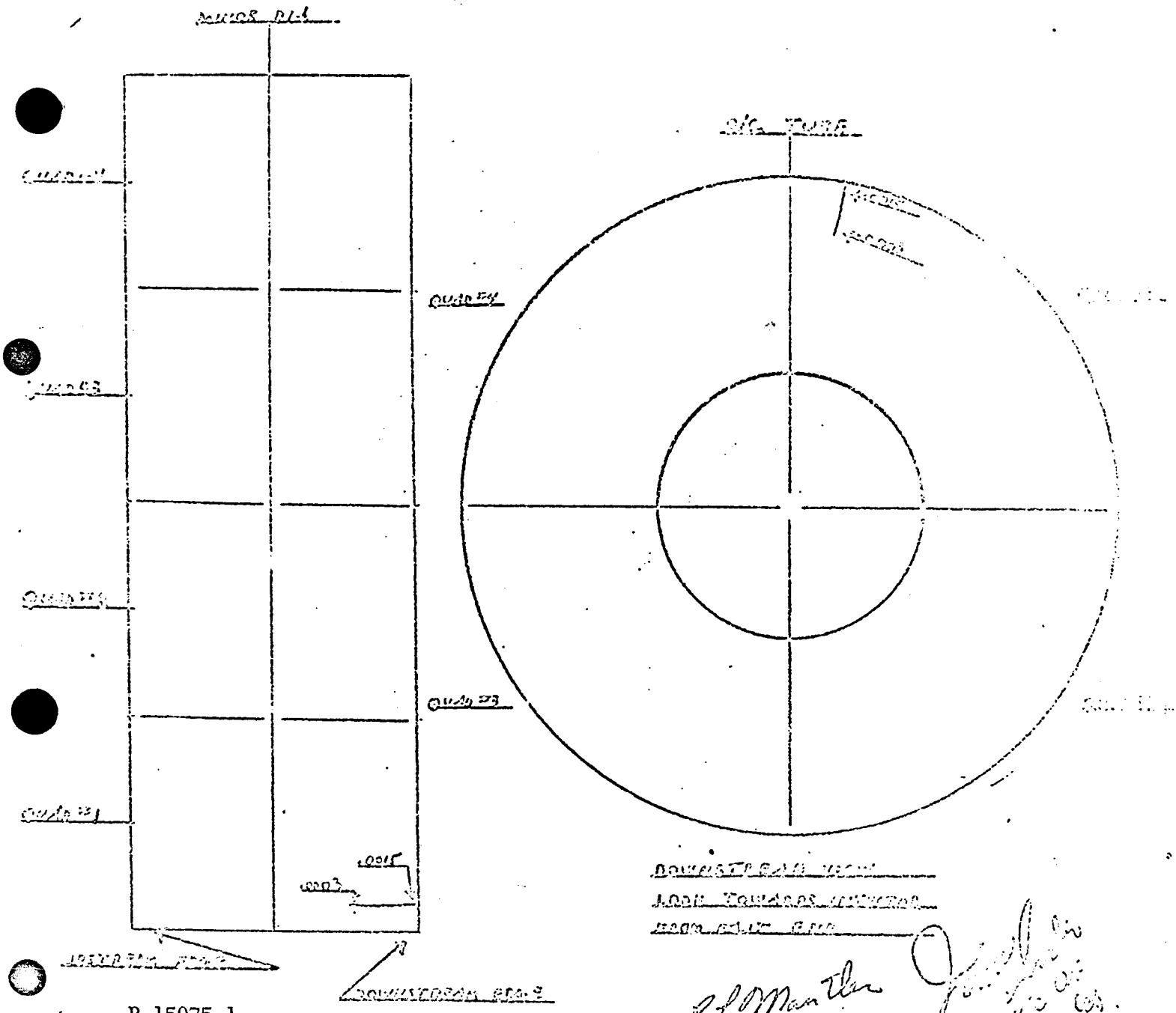

R-15075-1

DISCREPANCY			DISPOSITION		
DRG. CODE	MAT'L CODE	QTY.	DISP CODE		QTY.
1			1		
2			2		
3			3		
4			4		
5			5		
6			6		
7			7		

ASSY. NO. 208169-21

DISCREPANCY DATE

PART NAME THRUST CHAMBER ASSY

DATE

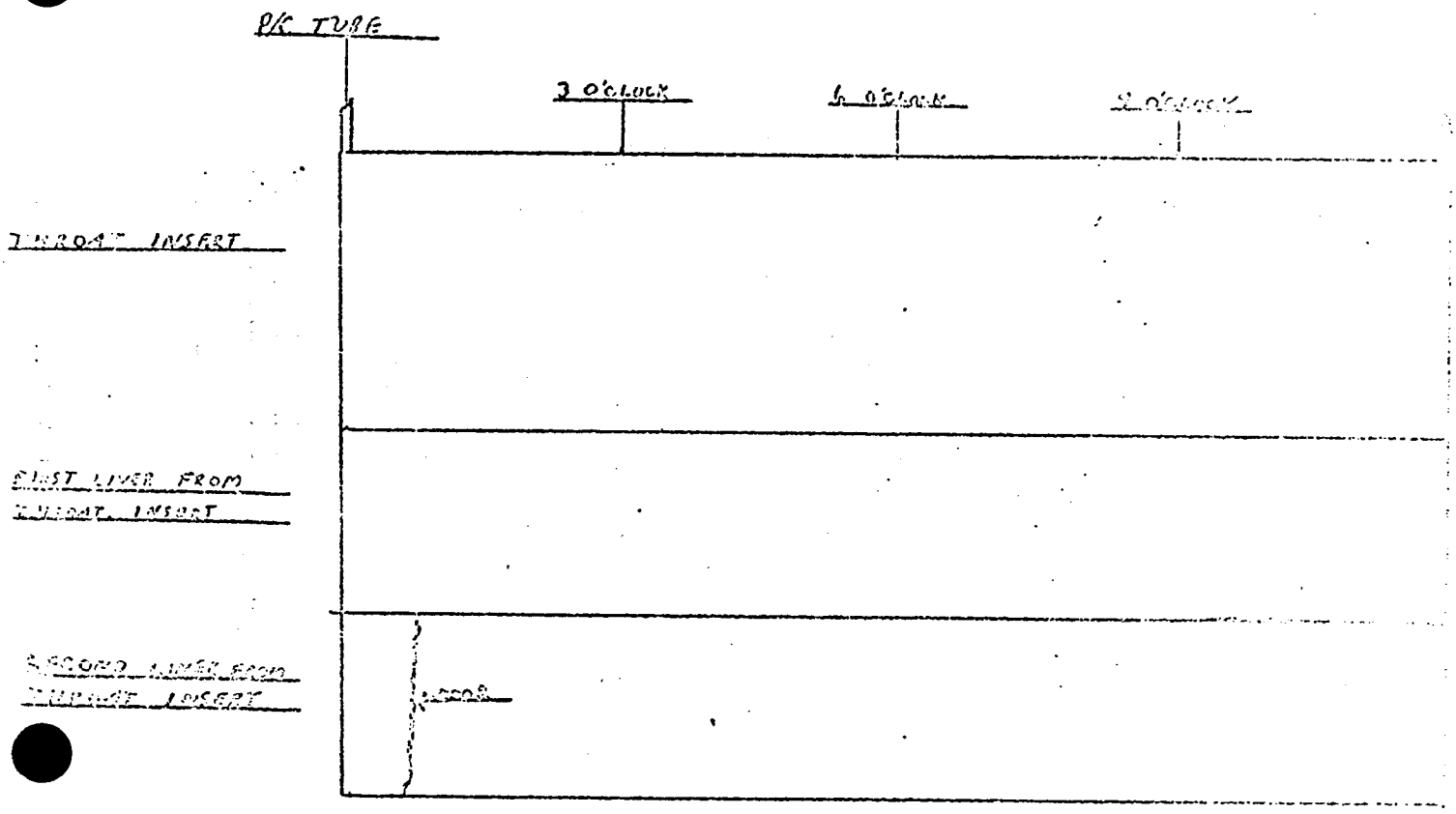

R L Martin
MC Engr
15 Sept 69

CONFIDENTIAL

SCD 52-52701-273

R-15075-1

"CERTIFICATION IS HEREBY GIVEN THAT THE DELIVERABLE END ITEM COVERED BY THIS LOG BOOK WAS MANUFACTURED, INSPECTED AND TESTED IN ACCORDANCE WITH PRESCRIBED DRAWINGS, SPECIFICATION AND QUALITY ASSURANCE PROVISIONS. INSPECTION AND TEST RECORDS ARE ON FILE VERIFYING COMPLIANCE WITH APPLICABLE DRAWINGS AND SPECIFICATIONS, EXCEPT AS NOTED HEREIN"

LOG BOOK ACCEPTANCE

DAT #3 (BRD #12)

ROCKETDYNE ENGINEERING	ROCKETDYNE QUALITY ASSURANCE	McDONNELL QUALITY REPRESENTATIVE	GOV'T INSPECTION AGENCY QUALITY REPRESENTATIVE
[illegible]	W. E. Keitz	J. E. Eiler	Leonard Taylor
DATE 10/28/64	DATE 10/28/64	DATE 10-28-64	DATE 10-28-64

CONTENTS

SECTION I – DELIVERABLE END ITEM ASSEMBLY LOG

RECORDS CONTAINED IN THIS SECTION ARE PERTINENT TO THE DELIVERABLE END ITEM ACCEPTANCE AND ALSO INCLUDE MODEL CONFIGURATION DATA, PERTINENT DETAILS OF SHORT SHIPMENTS, COMPONENT VARIATIONS, AGE SENSITIVE PARTS RECORD, WEIGHT AND SERIALIZATION RECORDS.

SECTION II – ACCEPTANCE TEST LOG

RECORDS OF ASSEMBLY ACCEPTANCE TESTS ARE PRESENTED IN THIS SECTION WITH PERFORMANCE DATA AND SUMMARY DATA ON INSPECTIONS AND ACCEPTANCE.

GENERAL INFORMATION

THIS LOG BOOK IS PROVIDED FOR SERVICE USE IN RECORDING PERTINENT HISTORICAL DATA AND ALL CHANGES FROM THE ORIGINAL CONFIGURATION. IT IS REQUESTED THIS LOG BOOK ACCOMPANY THE DELIVERABLE END ITEM WHEN TRANSFERRED BETWEEN ROCKETDYNE AND USING AGENCIES.

GROUP-4
Downgraded at 3 year intervals;
Declassified after 12 years

ROCKETDYNE
A DIVISION OF NORTH AMERICAN AVIATION, INC.

LOG BOOK SPECIFICS

McDONNELL	ITEM	ROCKETDYNE
THIS MATERIAL CONTAINS INFORMATION AFFECTING THE NATIONAL DEFENSE OF THE UNITED STATES WITHIN THE MEANING OF THE ESPIONAGE LAWS, TITLE 18 U.S.C., SECTIONS 793 AND 794. THE TRANSMISSION OR THE REVELATION OF ITS CONTENTS IN ANY MANNER TO AN UNAUTHORIZED PERSON IS PROHIBITED BY LAW.		
	LOG BOOK DATE	28 OCT. 64
	DWG CHG LTR	DNA
Y20161R	CONTRACT NO.	
	GEN ORDER NO.	5252
SCD52-52701-273	SPEC NO.	
DNA	SERIAL NO.	1057123
52-52701-273	PART NO.	208160-31

SE-7 DELIVERABLE END ITEM – LOG BOOK IDENTIFICATION

PART NAME THRUST CHAMBER, 25 LB., ASSY OF

1.0

417

DELIVERABLE END ITEM

THIS LOG BOOK CONTAINS INFORMATION PERTINENT TO THE DELIVERABLE END ITEM AS SPECIFIED HEREIN BY SERIAL NUMBER AND PART NUMBER. IT IS NECESSARY THAT ALL ENTRIES BE WRITTEN IN INK OR TYPED FOR PERMANENT RECORD. ENTRIES SUCH AS SERIALIZATION, WEIGHT, APPLICABLE MCR'S, ACCEPTANCE TEST DATA AND CALIBRATION DATA WILL BE ENTERED BY ROCKETDYNE AT THE TIME OF DELIVERY.

IT IS REQUESTED THAT THIS LOG BOOK ACCOMPANY THIS DELIVERABLE END ITEM IF THE ITEM IS RETURNED TO ROCKETDYNE FOR REPAIR, MODIFICATION OR RETEST. ROCKETDYNE WILL THEN ENTER REPAIR, MODIFICATION AND RETEST DATA IN THIS LOG BOOK.

THE FORMAT OF PAGES IN THIS LOG BOOK SHALL NOT BE REVISED WITHOUT OBTAINING APPROVAL OF ROCKETDYNE SPACE ENGINES QUALITY CONTROL.

52-52701-273 PART NO. 208160 -31

PART NAME THRUST CHAMBER, 25 LB., ASSY OF 2.0

R-15075-1

1.0 LOG BOOK IDENTIFICATION

2.0 FOREWORD

3.0 CONTENTS

4.0 MODULE/COMPONENT ASSEMBLY LOG--SECTION I

4.1 CONFIGURATION & SERIALIZATION LOG

4.2 MCR VERIFICATION

4.3 VARIATION LOG

4.4 REPLACEMENT LOG

5.0 COMPONENT ACCEPTANCE TEST LOG--SECTION II

5.1 COMPONENT ACCEPTANCE TEST

5.1.1 COMPONENT ACCEPTANCE TEST

5.1.2 COMPONENT ACCEPTANCE TEST

5.1.3 COMPONENT ACCEPTANCE TEST

5.1.4 COMPONENT ACCEPTANCE TEST

5.1.5 COMPONENT ACCEPTANCE TEST

5.2 CALIBRATED PERFORMANCE DATA

5.2.1 CALIBRATED PERFORMANCE DATA

5.2.2 CALIBRATED PERFORMANCE DATA

5.3 INFORMATION--CONTAMINATION

SECTION I

52-52701-273 PART NO. 208160-31

SE-7 MODULE / COMPONENT ASSEMBLY LOG

PART NAME THRUST CHAMBER, 25 LB., ASSY OF

4.0

IND. NO.	PART NUMBER	REV. LTR.	PART NAME	SERIAL NO.	AGE CONTROL DATE OF MFG.	INSP.
1	208160-31	DNA	THRUST CHAMBER, 25 LB., ASSY OF	4057123	3 Q 64	ANR 208
2	208161-11	DNA	BODY, THRUST CHAMBER, ASSY OF	4058917	3 Q 64	ANR 208
2	208166	DNA	SHELL, THRUST CHAMBER, ASSY OF	8503444		ANR 208
3	208530-11	DNA	INJECTOR, THRUST CHAMBER, ASSY OF	705C040		ANR 208
2	407559	DNA	VALVE, OXIDIZER, T/C, ASSY OF	4057574		ANR 208
2	407560	DNA	VALVE, FUEL, T/C, ASSY OF	4056548		ANR 208

R-15075-1

421

DNA SERIAL NO. 4057123

52-52701-273 PART NO. 208160-31

SE-7 CONFIGURATION & SERIALIZATION LOG

PART NAME THRUST CHAMBER, 25 LB., ASSY OF

4.1

MCR / ECP NO.	DATE	TITLE	DATE	INSP.
SE6-062	6 JAN 64	COMPONENT CLEANING; PROVISION FOR	28 OCT 64	ANR 208
SE6-064	30 JUL 63	TCA, ACCEPTANCE TESTS; REVISION OF	28 OCT 64	ANR 208
SE6-133	22 APR 64	TCA PROPELLANT VALVES; ADDITIONAL REQUIREMENTS FOR	28 OCT 64	ANR 208
SE6-139	15 APR 64	PLACEMENT OF HAYNES STELLITE #3 SAND CAST ON APPROVED MATERIAL LIST	28 OCT 64	ANR 208
SE6-144	15 APR 64	TCA INJECTORS; REDESIGN OF	28 OCT 64	ANR 208
SE6-179	16 JUN 64	TUBE STUBS; MARKINGS OF	28 OCT 64	ANR 208
SE6-080	28 DEC 63	THRUST CHAMBER ASSEMBLIES, FABRICATION MATERIAL; APPROVAL OF	28 OCT 64	ANR 208
SE6-085	30 JUN 63	CUSTOMER TEST SURVEILLANCE; REQUIREMENTS FOR	28 OCT 64	ANR 208
SE6-098	9 OCT 64	THRUST CHAMBER ASSEMBLIES; REDESIGN OF	28 OCT 64	ANR 208
SE6-130	9 OCT 64	"O" RING REQUIREMENTS, ELECTRICAL CONNECTORS	28 OCT 64	ANR 208
SE7-25	9 APR 63	25 LB. TCA MOUNTING HOLES; RELOCATION OF	28 OCT 64	ANR 208
SE7-29	31 MAY 63	THRUST CHAMBER ASSEMBLY, 25 LB. CHANGES TO	28 OCT 64	ANR 208

DNA	SERIAL NO.	4057123	
52-52701-273	PART NO.	208160-31	
SE-7 DELIVERABLE END ITEM-MCR VERIFICATION	PART NAME THRUST CHAMBER, 25 LB., ASSY OF		4.2

R-15075-1

MR NO.	PART OR COMP. INVOLVED	PART NUMBER	SERIAL NUMBER	BRIEF DESCRIPTION OF VARIATION AND MATERIAL REVIEW BOARD DISPOSITION	INS
MRR #71136	TCA	208160-31	4057123	DISCREPANCY: CONDITION A: THROAT INSERT HAS ONE LONGITUDINAL CRACK .003 WIDE LOCATED AT 12 O'CLOCK USING PC TUBE AS REFERENCE TO 12 O'CLOCK. CRACK IS WITHIN ACCEPTANCE CRITERIA PER NCI. DISPOSITION: ACCEPTABLE TO USE.	ANR 208
MRR #71672	TCA	208160-61	4057123	DISCREPANCY: CONDITION A: THE MTG. BOSS ON THE OXID. SIDE 10/32 NF 3B THREAD ACCEPTS THE NO GO GAGE FREELY FOR FOUR AND ONE HALF TURNS. MAX. ALLOWABLE IS THREE TURNS. DISPOSITION: ACCEPTABLE AS IS FOR DAT.	ANR 208

423

DNA SERIAL NO. 4057123

52-52701-273 PART NO. 208160-31

SE-7 DELIVERABLE END ITEM — VARIATION LOG

PART NAME THRUST CHAMBER, 25 LB., ASSY OF

4.

PART NO.	PART NAME	SERIAL NO.	REASON FOR REPLACEMENT	REPLACED BY PART NO.	REPLACED BY SERIAL NO.	INSP.
			NONE THIS DATE - 26 OCTOBER 1964			ATR 208

DNA	SERIAL NO.	4057123	
52-52701-273	PART NO.	208160-31	
SE-7 DELIVERABLE END ITEM--REPLACEMENT LOG	PART NAME	THRUST CHAMBER, 25 LB., ASSY OF	4.4

SECTION II

52-52701-273 PART NO. 208160-31

SE-7 COMPONENT ACCEPTANCE TEST LOG

PART NAME THRUST CHAMBER, 25 LB., ASSY OF 5.0

PERFORMANCE PARAMETERS	PARAGRAPH NUMBER	UNITS	SPECIFICATION LIMITS	ACCEPTANCE TEST DATA	INSP.
[illegible] TESTS--TCA PROPELLANT VALVES	4.2				
BODY TEMPERATURE					
OXIDIZER	4.2.4	DEGREES F	70 ± 5	69	ANR 208
FUEL	4.2.11	DEGREES F	70 ± 5	69	ANR 208
COIL RESISTANCE					
OXIDIZER	4.2.5	OHMS	42 +2 -3	40.55	ANR 208
FUEL	4.2.11	OHMS	42 +2 -3	42.85	ANR 208
CONTINUITY RESISTANCE					
OXIDIZER	4.2.9	OHMS	1.0 MAX.	.068	ANR 208
FUEL	4.2.11	OHMS	1.0 MAX.	.085	ANR 208
DIELECTRIC STRENGTH TEST--PROPELLANT VALVES	4.3				
CURRENT LEAKAGE					
OXIDIZER	4.3.8	MICROAMPS	500 MAX.	24	ANR 208
FUEL	4.3.11	MICROAMPS	500 MAX.	30	ANR 208
PROOF PRESSURE TEST--TCA PROPELLANT VALVES	4.4				
VALVES PRESSURIZED FOR NOT LESS THAN 3 MINUTES					
OXIDIZER					
STEP I	4.4.3	PSIG	500 ± 10	VERIFIED	ANR 208
STEP II	4.4.5	PSIG	500 ± 10	VERIFIED	ANR 208

SPECIFICATION NUMBER	REVISION	AMENDMENT			
AMO 220-354	N/C	#3	DNA 52-52701-273	SERIAL NO. 4057123	PART NO. 208160-31
SE-7 COMPONENT ACCEPTANCE TEST			PART NAME THRUST CHAMBER, 25 LB., ASSY OF		5.1

PERFORMANCE PARAMETERS	PARAGRAPH NUMBER	UNITS	SPECIFICATION LIMITS	ACCEPTANCE TEST DATA	INSP
PROOF PRESSURE TEST--TCA PROPELLANT VALVES (CONTINUED)					
FUEL					
STEP I	4.4.7	PSIG	500 ± 10	VERIFIED	ANR 208
STEP II	4.4.7	PSIG	500 ± 10	VERIFIED	ANR 208
INSPECTED VISUALLY FOR DAMAGE OR DEFORMATION					
OXIDIZER					
STEP I	4.4.4	DNA	NONE ALLOWED	NONE DETECTED	ANR 208
STEP II	4.4.5	DNA	NONE ALLOWED	NONE DETECTED	ANR 205
FUEL					
STEP I	4.4.7	DNA	NONE ALLOWED	NONE DETECTED	ANR 208
STEP II	4.4.7	DNA	NONE ALLOWED	NONE DETECTED	ANR 208
PROOF PRESSURE AND LEAKAGE TEST--THRUST CHAMBER	4.5				
PROOF PRESSURE TEST					
THRUST CHAMBER PRESSURIZED FOR NOT LESS THAN 5 MINUTES AT					
STEP I	4.5.8	PSIG	392 ± 10	VERIFIED	ANR 208
STEP II	4.5.10	PSIG	392 ± 10	VERIFIED	ANR 208

SPECIFICATION NUMBER	REVISION	AMENDMENT			
RAO 220-354	N/C	#3	DNA	SERIAL NO.	4057123
			52-52701-273	PART NO.	208160-31
SE-7 COMPONENT ACCEPTANCE TEST			PART NAME THRUST CHAMBER, 25 LB., ASSY OF		5.1

PERFORMANCE PARAMETERS	PARAGRAPH NUMBER	UNITS	SPECIFICATION LIMITS	ACCEPTANCE TEST DATA	DISP.
PROOF PRESSURE AND LEAKAGE TEST--THRUST CHAMBER (CONTINUED)					
LEAKAGE TEST					
STEP I	4.5.8	DNA	NONE ALLOWED	[illegible]	[illegible]
STEP II	4.5.10	DNA	NONE ALLOWED	[illegible]	[illegible]
INSPECTED VISUALLY FOR DAMAGE OR DEFORMATION	4.5.14	DNA	NONE ALLOWED	[illegible]	[illegible]
FUNCTIONAL TEST--TCA PROPELLANT VALVES	4.6				
OPENING RESPONSE TIME					
OXIDIZER	4.6.17	SEC.	0.0065 MAX.	.0037	[illegible]
FUEL	4.6.8	SEC.	0.0065 MAX.	.0046	[illegible]
CLOSING RESPONSE TIME					
OXIDIZER	4.6.17	SEC.	0.002 MAX.	.0014	[illegible]
FUEL	4.6.10	SEC.	0.002 MAX.	.0015	[illegible]
CLOSING DROP OUT VOLTAGE					
OXIDIZER	4.6.17	VOLT (DC)	1 MIN.	1.8	[illegible]
FUEL	4.6.13	VOLT (DC)	1 MIN.	1.3	[illegible]

R-15075-1

SPECIFICATION NUMBER	REVISION	AMENDMENT		
RAO 220-354	N/C	#3	DNA	SERIAL NO. 4057123
			52-52701-273	PART NO. 203160-31
SE-7 COMPONENT ACCEPTANCE TEST			PART NAME THRUST CHAMBER, 25 LB., ASSY OF	5.1.[illegible]

PERFORMANCE PARAMETERS	PARAGRAPH NUMBER	UNITS	SPECIFICATION LIMITS	ACCEPTANCE TEST DATA	INSP.
* LEAKAGE TEST--TCA PROPELLANT VALVES	4.8				
SEAT LEAKAGE RATE					
OXIDIZER	4.8.17	SCC/MIN	2.21 MAX.	LESS THAN 0.1	ANR 208
FUEL	4.8.22	SCC/MIN	2.21 MAX.	LESS THAN 0.1	ANR 208
* PRE-TEST DATA					
DRY WEIGHT (EXCLUDING PROTECTIVE CLOSURES)	4.1.3	LB.	DNA	3.20	ANR 208
NOZZLE EXIT DIAMETER					
SECTION A-A		INCH	DNA	2.240	ANR 208
THROAT DIAMETER					
SECTION A-A		INCH	DNA	.358	ANR 208
B-B		INCH	DNA	.358	ANR 208
C-C		INCH	DNA	.358	ANR 208
D-D		INCH	DNA	.358	ANR 208
** POST HOT-FIRE DATA					
PROOF PRESSURE TEST					
DRY WEIGHT (EXCLUDING PROTECTIVE COVERS & CLOSURES)	4.17.1	LB.	DNA	3.25	ANR 208
THRUST CHAMBER PRESSURIZED FOR NOT LESS THAN 5 MINUTES					
STEP I	4.17.4	PSIG	392 ± 10	390	ANR 208
STEP II	4.17.4	PSIG	392 ± 10	391	ANR 208

SPECIFICATION NUMBER	REVISION	AMENDMENT
* RAO 220-354	N/C	#3
** RAO 220-354	A	#1

SE-7 COMPONENT ACCEPTANCE TEST

DNA SERIAL NO. 4057123

52-52701-273 PART NO. 208160-31

PART NAME THRUST CHAMBER, 25 LB., ASSY OF

PERFORMANCE PARAMETERS	PARAGRAPH NUMBER	UNITS	SPECIFICATION LIMITS	PERFORMANCE OF DNA	INSP.
POST HOT-FIRE DATA (CONTINUED)					
LEAKAGE TEST					
STEP I	4.17.4	DNA	NONE ALLOWED	[illegible]	[illegible]
STEP II	4.17.4	DNA	NONE ALLOWED	[illegible]	[illegible]
INSPECTED VISUALLY FOR DAMAGE OR DEFORMATION	4.17.4	DNA	NONE ALLOWED	[illegible]	[illegible]
LEAK TEST -- WELDED JOINTS					
LEAK TEST					
INLET TUBE PRESSURIZED WITH GASEOUS HELIUM					
OXIDIZER	4.17.5	PSIG	500 ± 10	VERIFIED	[illegible]
FUEL	4.17.8	PSIG	500 ± 10	VERIFIED	[illegible]
JOINT LEAKAGE RATE					
OXIDIZER	4.17.6	SCC/SEC	10^{-6} MAX.	1.8×10^{-7}	[illegible]
FUEL	4.17.8	SCC/SEC	10^{-6} MAX.	1.5×10^{-7}	[illegible]
LEAKAGE TEST -- TCA PROPELLANT VALVES					
SEAT LEAKAGE RATE					
OXIDIZER	4.17.9	SCC/SEC	2.21 MAX.	LESS THAN 0.1	[illegible]
FUEL	4.17.9	SCC/SEC	2.21 MAX.	LESS THAN 0.1	[illegible]

SPECIFICATION NUMBER	REVISION	AMENDMENT	DNA	SERIAL NO. 4057123
RA0220-354	A	#1	52-52701-273	PART NO. 208160-31
SE-7 COMPONENT ACCEPTANCE TEST			PART NAME THRUST CHAMBER, 15 LB., ASSY OF	5.1.1

R-15075-1

PERFORMANCE PARAMETERS	PARAGRAPH NUMBER	UNITS	SPECIFICATION LIMITS	ACCEPTANCE TEST DATA	INSP.
THROAT DIAMETER (DELIVERED CONDITION)	4.18.1				
SECTION A-A		INCH	DNA	.358	ANR 208
B-B		INCH	DNA	.358	ANR 208
C-C		INCH	DNA	.358	ANR 208
D-D		INCH	DNA	.358	ANR 208
DRY WEIGHT IN DELIVERED CONDITION (EXCLUDING PROTECTIVE COVERS AND CLOSURES)	4.18.2	LB.	DNA	3.09	ANR 208

431

SPECIFICATION NUMBER	REVISION	AMENDMENT			
RA0220-354	A	#1	DNA 52-52701-273	SERIAL NO. 4057123	PART NO. 208160 -31
SE-7 COMPONENT ACCEPTANCE TEST			PART NAME THRUST CHAMBER, 25 LB., ASSY OF		5.1.5

CONFIDENTIAL

432

CHARACTERISTICS	UNITS	SPECIFICATION LIMITS	RUN ***** TEST DATA	RUN ***** TEST DATA	RUN 282 TEST DATA	RUN 283 FINAL TEST DATA	INSP.
HOT FIRE TEST DATA - TEST SITE	-	-	-	-	NFL	NFL	
CELL LOCATION	-	-	-	-	1-C	1-C	
CELL NUMBER	-	-	-	-	379	379	
TEST DATE	-	-	-	-	15 OCT 64	15 OCT 64	
TEST DURATION	SEC.	2 MIN.	-	-	3.0	3.0	
ENVIRONMENTAL Pc	PSIA	.16 MAX.	-	-	.05860	.05960	
AMBIENT PRESSURE	PSIA	DNA	-	-	12.15	12.15	
AMBIENT TEMPERATURE	°F	DNA	-	-	65.0	65.0	
TIME OF DATA SLICE-START	SEC.	DNA	-	-	2.8	2.8	
TIME OF DATA SLICE-END	SEC,	DNA	-	-	2.8	2.8	
OXIDIZER TEMPERATURE	°F	DNA	-	-	62.9	59.9	
FUEL TEMPERATURE	°F	DNA	-	-	61.8	60.4	
OXIDIZER DENSITY	LB/FT^3	DNA	-	-	91.14	91.38	
FUEL DENSITY	LB/FT^3	DNA	-	-	54.80	54.84	

R-15075-1

~~CONFIDENTIAL~~

SPECIFICATION NUMBER RA0220-354 A NONE

DNA 52-52701-273

SERIAL NO. 4057123

PART NO. 208160-31

SE-7 (REA) CALIBRATED PERFORMANCE DATA

PART NAME THRUST CHAMBER, 25 LB., ASSY OF

5.2

CONFIDENTIAL

GROUP 4
Downgraded at 3 year intervals;
declassified after 12 years

THIS MATERIAL CONTAINS INFORMATION AFFECTING THE NATIONAL DEFENSE OF THE UNITED STATES WITHIN THE MEANING OF THE ESPIONAGE LAWS, TITLE 18 U.S.C., SECTIONS 793 AND 794. ITS TRANSMISSION OR THE REVELATION OF ITS CONTENTS IN ANY MANNER TO AN UNAUTHORIZED PERSON IS PROHIBITED BY LAW.

R-15075-1

CHARACTERISTICS	UNITS	SPECIFICATION LIMITS	RUN ***** TEST DATA	RUN ***** TEST DATA	RUN 282 TEST DATA	RUN 283 FINAL TEST DATA	INSP.
HOT FIRE TEST DATA -- TEST SITE	-	-	-	-	NFL	NFL	
OXIDIZER INLET PRESSURE	PSIA	292 ± 10	-	-	295.0	295.0	
FUEL INLET PRESSURE	PSIA	292 ± 10	-	-	293.9	293.9	
OXIDIZER FLOWRATE	LB/SEC.	DNA	-	-	.04679	.04681	
FUEL FLOWRATE	LB/SEC.	DNA	-	-	.03591	.03594	
THRUST	LB.	DNA	-	-	23.8	24.0	
MIXTURE RATIO	O/F	DNA	-	-	1.30	1.30	
SPECIFIC IMPULSE	SEC.	DNA	-	-	288.	289.	
INJECTOR END Pc	PSIA	DNA	-	-	136.2	136.2	
CHARACTERISTIC VELOCITY	FT/SEC.	DNA	-	-	5332.	5329.	
THROAT DIAMETER	IN.	DNA	-	-	.358	.358	
FUEL ORIFICE DIAMETER	IN.	DNA	-	-	.04485	.04485	
OXIDIZER ORIFICE DIAMETER	IN.	DNA	-	-	.03900	.03900	
TCA FIRING TIME (TOTAL)	SEC.	15 MAX.	-	-	3.0	6.0	
OXIDIZER SAMPLE NUMBER	-	-	-	-	342	342	
FUEL SAMPLE NUMBER	-	-	-	-	343	343	

433

CONFIDENTIAL

SPECIFICATION NUMBER RA0220-354 A NONE

DNA 52-52701-273

SERIAL NO. 4057123

PART NO. 208160-31

SE-7 (REA) CALIBRATED PERFORMANCE DATA

PART NAME THRUST CHAMBER, 25 LB., ASSY OF

5.2.1

CONFIDENTIAL

GROUP 4
Downgraded at 3 year intervals;
declassified after 12 years

THIS MATERIAL CONTAINS INFORMATION AFFECTING THE NATIONAL DEFENSE OF THE UNITED STATES WITHIN THE MEANING OF THE ESPIONAGE LAWS, TITLE 18 U.S.C., SECTIONS 793 AND 794. ITS TRANSMISSION OR THE REVELATION OF ITS CONTENTS IN ANY MANNER TO AN UNAUTHORIZED PERSON IS PROHIBITED BY LAW.

434

CHARACTERISTICS	UNITS	SPECIFICATION LIMITS	RUN ***** TEST DATA	RUN ***** TEST DATA	RUN 282 TEST DATA	RUN 283 FINAL TEST DATA	INSP.
HOT FIRE TEST DATA - TEST SITE	-	-	-	-	NFL	NFL	
ADJUST TO STANDARD CONDITIONS							
THRUST	LB.	23 ± 1.2	-	-	23.8	23.9	
MIXTURE RATIO	O/F	1.30 ± .05	-	-	1.29	1.29	
SPECIFIC IMPULSE	SEC.	DNA	-	-	290.	292.	
INJECTOR END Pc	PSIA	DNA	-	-	134.9	134.8	
CHARACTERISTIC VELOCITY	FT/SEC.	DNA	-	-	5329.	5326.	
ADJUST TO RATED CONDITIONS							
THRUST	LB.	23	-	-	23.0	23.0	
MIXTURE RATIO	O/F	1.3	-	-	1.30	1.30	
SPECIFIC IMPULSE	SEC.	272 MIN.	-	-	290.	292.	

R-15075-1

CONFIDENTIAL

SPECIFICATION NUMBER
RA0220-354 A NONE
RA0220-230 N/C #3

DNA
52-52701-273

SERIAL NO. 4057123
PART NO. 208160-31

SE- 7 (REA) CALIBRATED PERFORMANCE DATA

PART NAME THRUST CHAMBER, 25 LB., ASSY OF

5.2.2

R-15075-1

THE FOLLOWING IS INFORMATION RELATIVE TO THE CLEANLINESS LEVEL OF THE PROPELLANT UTILIZED IN THE HOT-FIRE ACCEPTANCE TEST OF THE THRUST CHAMBER ASSEMBLY.

THE INFLUENT PARTICULATE COUNT OF THE PROPELLANT WAS:

		LIMITS	ACTUAL COUNT MMH - FUEL	ACTUAL COUNT NTO - OXID
	< 10	*	DNA	DNA
	10 - 25	100	106	73
	25 - 50	20	13	7
	50 - 100	5	4	0
	100 - 300	1	1	0
	300 - 1000	0	0	0
	> 1000	0	0	0
FIBERS	300 - 3000	0	0	0
FIBERS	> 3000	0	0	0

* NOTE: " NOT TO BE COUNTED BUT NO SLURRY OF FINE PARTICLES WHICH COVERS MORE THAN AN ESTIMATED 5 PERCENT OF THE TOTAL EFFECTIVE FILTER AREA SHALL BE ALLOWED." AT THE DISCRETION OF QUALITY ASSURANCE, A WEIGHT DETERMINATION OF TOTAL CONTAMINATION MAY BE MADE AS A REFEREE TEST IN BORDERLINE CASES. THE MAXIMUM ALLOWABLE WEIGHT OF CONTAMINANTS SHALL BE 0.001 GRAM (1 MG).

CLASS 4

INSP. ANR 208

435

SPECIFICATION NUMBER	REVISION	AMENDMENT		
RAC615-003	B	#2	52-52701-273 PART NO. 208160-31	
SE-7 INFORMATION - CONTAMINATION			PART NAME THRUST CHAMBER, 25 LB., ASSY OF	5.3

McDONNELL AIRCRAFT CORPORATION
MATERIAL REVIEW RECORD

20 Oct. 1964

Thrust Chamber Assembly

208160-31

SCD 52-52701-273

Rocketdyne
6633 Canoga Avenue
Canoga Park, Calif.

Y 20161

QUANTITY REJECTED			JOB ORDER	REFERENCE OF ITEM	CODE	DESCRIPTION OF DEFECT	
1 (one)	☐	OFE	30			Voodoo	
	☐	GOM					
QUANTITY ACCEPTED	☐	MAC					
0	☐	OFE	13 P	4057123			

REASON FOR REPORT: Thrust Chamber has one longitudinal crack .005 wide located at 12 O'clock using PC tube as a reference to 12 [illegible] criteria per ICD.

BID # 32

Shipment of this hardware in the condition reflected on this MRR cannot be accepted by a written waiver from the McDonnell Buyer or Resident Representative. 600[illegible]-6 # [illegible]

SIGNATURE OF PERSON HAVING THIS MRR: [illegible] DATE: 20 Oct. 1964

INSPECTION SUPERVISION APPROVAL SIGNATURE: [illegible]

MATERIALS REVIEW BOARD'S INSTRUCTIONS

USE AS IS	SCRAP	REWORK	RESPONSIBILITY	RETURN TO VENDOR
	QTY.	QTY.	MAC ☐ VENDOR ☒	

DISCREPANCY IS NOT CONSIDERED SUFFICIENT TO MATERIALLY AFFECT THE PHYSICAL AND FUNCTIONAL DESIGN REQUIREMENTS, THEREFORE, ACCEPTABLE TO USE.

NO TWX SENT TO MAC: DISPOSITIONED IN-HOUSE AT ROCKETDYNE.

436

R-15075-1

M.R.B. DETERMINATIONS BY: [illegible] BUYER

RETURN TO VENDOR		RETAIN AT MAC		CHARGE	VENDOR TO BE CHARGED	REWORK	SCRAP
QTY.	S.R. NO.	REWORK ☐ REPLACE ☐	QTY.	REWORK ☐ SCRAP ☒	VENDOR ☐ MAC ☐	UNIT $ LOT $	$ $

REMARKS: PROD. ENG. APPROVAL

ALLED MAC SHOP REPR.

MAC Q. ENG. APPROVAL & DATE: [illegible] 20 Oct 1964

MAC ENG. OPS. APPROVAL & DATE: [illegible] 20 Oct 1964

MAC PROD. CONTROL APPROVAL & DATE: [illegible] 22 Oct 1964

REWORK

Page 2 of 2

C 3773½

ASSY. NO. 206160-31

DESCRIPTION: Thrust Chamber Assy.

DATE 10/-0/64

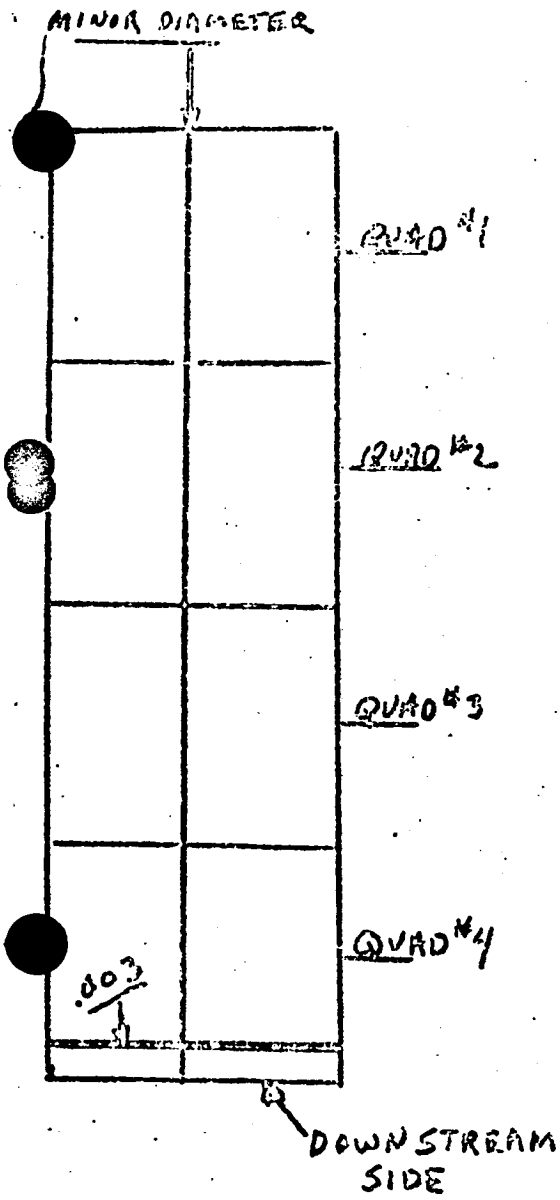

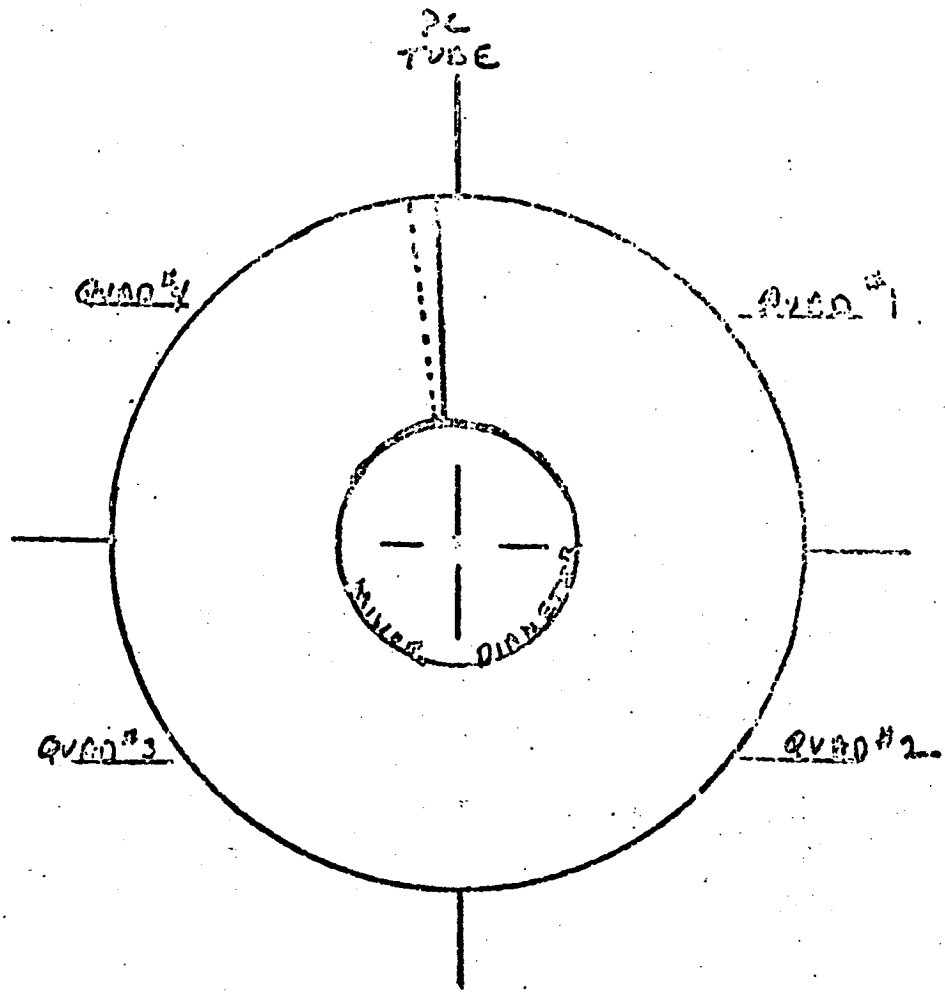

DOWN STREAM VIEW
LOOKING TOWARD INJECTOR

R-15075-1

R L Mantler MAC Engrg 22 Oct 64

MAC Oct. 22 Oct 64

~~CONFIDENTIAL~~

SCD52-52701-271
S/N 4057178

"CERTIFICATION IS HEREBY GIVEN THAT THE DELIVERABLE END ITEM COVERED BY THIS LOG BOOK WAS MANUFACTURED, INSPECTED AND TESTED IN ACCORDANCE WITH PRESCRIBED DRAWINGS, SPECIFICATION AND QUALITY ASSURANCE PROVISIONS. INSPECTION AND TEST RECORDS ARE ON FILE VERIFYING COMPLIANCE WITH APPLICABLE DRAWINGS AND SPECIFICATIONS, EXCEPT AS NOTED HEREIN"

LOG BOOK ACCEPTANCE

DAT #2 (CRD #2)

SPACE ENGINES ENGINEERING	SPACE ENGINES QUALITY CONTROL	McDONNELL QUALITY REPRESENTATIVE	GOV'T INSPECTION AGENCY QUALITY REPRESENTATIVE
M. H. Macaulay	Wm E. Reitz	A. Bernstein	[illegible]
DATE 9/11/64	DATE 9/11/64	DATE 9.12.64	DATE 14 Sept 64

CONTENTS

SECTION I – DELIVERABLE END ITEM ASSEMBLY LOG

RECORDS CONTAINED IN THIS SECTION ARE PERTINENT TO THE DELIVERABLE END ITEM ACCEPTANCE AND ALSO INCLUDE MODEL CONFIGURATION DATA, PERTINENT DETAILS OF SHORT SHIPMENTS, COMPONENT VARIATIONS, AGE SENSITIVE PARTS RECORD, WEIGHT AND SERIALIZATION RECORDS.

SECTION II – ACCEPTANCE TEST LOG

RECORDS OF ASSEMBLY ACCEPTANCE TESTS ARE PRESENTED IN THIS SECTION WITH PERFORMANCE DATA AND SUMMARY DATA ON INSPECTIONS AND ACCEPTANCE.

GENERAL INFORMATION

THIS LOG BOOK IS PROVIDED FOR SERVICE USE IN RECORDING PERTINENT HISTORICAL DATA AND ALL CHANGES FROM THE ORIGINAL CONFIGURATION. IT IS REQUESTED THIS LOG BOOK ACCOMPANY THE DELIVERABLE END ITEM WHEN TRANSFERRED BETWEEN ROCKETDYNE AND USING AGENCIES.

GROUP-4
Downgraded at 3 year intervals;
declassified after 12 years

ROCKETDYNE – SPACE ENGINES
A DIVISION OF NORTH AMERICAN AVIATION, INC.

LOG BOOK SPECIFICS

McDONNELL	ITEM	ROCKETDYNE
[illegible] PROHIBITED BY LAW.	[illegible]	[illegible]
	LOG BOOK DATE	11 SEPT. 1964
	DWG CHG LTR	DNA
Y-20161R	CONTRACT NO.	
	GEN ORDER NO.	5252
SCD52-52701-271	SPEC NO.	
DNA	SERIAL NO.	4057178
52-52701-271	PART NO.	208160-21

SE 7 DELIVERABLE END ITEM – LOG BOOK IDENTIFICATION

PART NAME THRUST CHAMBER, 25 LB., ASSY OF

1.0

R-15075-1

~~CONFIDENTIAL~~

R-15075-1

DELIVERABLE END ITEM

.THIS LOG BOOK CONTAINS INFORMATION PERTINENT TO THE DELIVERABLE END ITEM AS SPECIFIED HEREIN BY SERIAL NUMBER AND PART NUMBER. IT IS NECESSARY THAT ALL ENTRIES BE WRITTEN IN INK OR TYPED FOR PERMANENT RECORD. ENTRIES SUCH AS SERIALIZATION, WEIGHT, APPLICABLE MCR'S, ACCEPTANCE TEST DATA AND CALIBRATION DATA WILL BE ENTERED BY ROCKETDYNE AT THE TIME OF DELIVERY.

IT IS REQUESTED THAT THIS LOG BOOK ACCOMPANY THIS DELIVERABLE END ITEM IF THE ITEM IS RETURNED TO ROCKETDYNE FOR REPAIR, MODIFICATION OR RETEST. ROCKETDYNE WILL THEN ENTER REPAIR, MODIFICATION AND RETEST DATA IN THIS LOG BOOK.

THE FORMAT OF PAGES IN THIS LOG BOOK SHALL NOT BE REVISED WITHOUT OBTAINING APPROVAL OF ROCKETDYNE SPACE ENGINES QUALITY CONTROL.

52-52701-271 PART NO. 208160-21

PART NAME THRUST CHAMBER, 25 LB., ASSY OF 2.0

1.0 LOG BOOK IDENTIFICATION

2.0 FOREWORD

3.0 CONTENTS

4.0 MODULE/COMPONENT ASSEMBLY LOG--SECTION I

4.1 CONFIGURATION & SERIALIZATION LOG

4.2 MCR VERIFICATION

4.3 VARIATION LOG

4.4. REPLACEMENT LOG

5.0 COMPONENT ACCEPTANCE TEST LOG--SECTION II

5.1 COMPONENT ACCEPTANCE TEST

5.1.1 COMPONENT ACCEPTANCE TEST

5.1.2 COMPONENT ACCEPTANCE TEST

5.1.3 COMPONENT ACCEPTANCE TEST

5.1.4 COMPONENT ACCEPTANCE TEST

5.1.5 COMPONENT ACCEPTANCE TEST

5.2 CALIBRATED PERFORMANCE DATA

5.2.1 CALIBRATED PERFORMANCE DATA

5.2.2 CALIBRATED PERFORMANCE DATA

5.3 INFORMATION--CONTAMINATION

SECTION I

52-52701-271 PART NO. 208160-21

SE-7 MODULE / COMPONENT ASSEMBLY LOG

PART NAME THRUST CHAMBER, 25 LB., ASSY OF

4.0

IND. NO.	PART NUMBER	REV. LTR.	PART NAME	SERIAL NO.	AGE CONTROL DATE OF MFG.	INSP.
1	208160-21	DNA	THRUST CHAMBER, 25 LB., ASSY OF	4057178	1Q64	ANR 208
2	208161-11	DNA	BODY, THRUST CHAMBER, ASSY OF	4055516	1Q64	ANR 208
2	208166	DNA	SHELL, THRUST CHAMBER, ASSY OF	8503026		ANR 208
3	208530-11	DNA	INJECTOR, THRUST CHAMBER, ASSY OF	7029352		ANR 208
2	407559	DNA	VALVE, OXIDIZER, T/C, ASSY OF	4057579		ANR 208
2	407560	DNA	VALVE, FUEL, T/C, ASSY OF	9272475		ANR 208

DNA SERIAL NO. 4057178

52-52701-271 PART NO. 208160-21

SE- 7 CONFIGURATION & SERIALIZATION LOG

PART NAME THRUST CHAMBER, 25 LB., ASSY OF

4.1

NCR / ECP NO.	DATE	TITLE	DATE	INSP.
SE6-62	6 JAN 64	COMPONENT CLEANING; PROVISION FOR	11 SEPT. 64	ANR 208
SE6-64	30 JUL 63	TCA, ACCEPTANCE TESTS; REVISION OF	11 SEPT. 64	ANR 208
SE6-133	22 APR 64	TCA PROPELLANT VALVES; ADDITIONAL REQUIREMENTS FOR	11 SEPT. 64	ANR 208
SE6-139	15 APR 64	PLACEMENT OF HAYNES STELLITE #3 SAND CAST ON APPROVED MATERIAL LIST	11 SEPT. 64	ANR 208
SE6-144	15 APR 64	TCA INJECTORS; REDESIGN OF	11 SEPT. 64	ANR 208
SE6-179	16 JUN 64	TUBE STUBS; MARKING OF	11 SEPT. 64	ANR 208
SE6-80	28 DEC 63	THRUST CHAMBER ASSEMBLIES, FABRICATION MATERIAL; APPROVAL OF	11 SEPT. 64	ANR 208
SE7-25	9 APR 63	25 LB. TCA, MOUNTING HOLES; RELOCATION OF	11 SEPT. 64	ANR 208
SE7-29	31 MAY 63	THRUST CHAMBER ASSY., 25; CHANGES TO	11 SEPT. 64	ANR 208
SE6-85	30 JUL 63	CUSTOMER TEST SURVEILLANCE; REQUIREMENT FOR	11 SEPT. 64	ANR 208

DNA 52-52701-271 SERIAL NO. 4057178 PART NO. 208160-21

SE-7 DELIVERABLE END ITEM-MCR VERIFICATION

PART NAME THRUST CHAMBER, 25 LB., ASSY OF

4.2

MR NO.	PART OR COMP. INVOLVED	PART NUMBER	SERIAL NUMBER	BRIEF DESCRIPTION OF VARIATION AND MATERIAL REVIEW BOARD DISPOSITION	INSP.
MRR 58742	THRUST CHAMBER ASSEMBLY	208160-21	4057178	DISCREPANCY: CONDITION A: TCA'S DID NOT MEET THE REQUIREMENTS OF SCD52-52701 WHICH CALLS FOR ± 3% ABSOLUTE ERROR IN MIXTURE RATIO. TEST RESULTS WERE AS FOLLOWS: S/N 4057178 STD. 1.34 SHOULD BE 1.30 ± .01 DISPOSITION: ACCEPTABLE TO USE.	ANR 208
MRR 58705	THRUST CHAMBER ASSEMBLY	208160-21	4057178	DISCREPANCY: CONDITION A: THROAT DIA. .358 ± .001 CHECKS .364 (I.D.) DISPOSITION: ACCEPTABLE TO USE FOR SYSTEM DAT ONLY	ANR 208
MRR 58705 NOR #1	THRUST CHAMBER ASSEMBLY	208160-21	4057178	DISCREPANCY: CONDITION A: THROAT DIAMETER .358 ± .001 CHECKS .364 (I.D.) REASON FOR N.O.R. #1: S/N 4057195 WAS GIVEN AS S/N. SHOULD BE: 4057178. DISPOSITION: ACCEPTABLE TO USE.	ANR 208

R-15075-1

DNA SERIAL NO. 4057178
52-52701-271 PART NO. 208160-21

SE-7 DELIVERABLE END ITEM — VARIATION LOG

PART NAME THRUST CHAMBER, 25 LB., ASSY OF

R-15075-1

PART NO.	PART NAME	SERIAL NO.	REASON FOR REPLACEMENT	REPLACED BY		INSP.
				PART NO.	SERIAL NO.	
			NONE THIS DATE (11 SEPT. 1964)			ANR 208

DNA	SERIAL NO.	4057178	
52-52701-271	PART NO.	208160-21	
SE-7 DELIVERABLE END ITEM--REPLACEMENT LOG	PART NAME	THRUST CHAMBER, 25 LB., ASSY OF	4.4

SECTION II

	52-52701-271 PART NO. 208160-21	
SE-7 COMPONENT ACCEPTANCE TEST LOG	PART NAME THRUST CHAMBER, 25 LB., ASSY OF	5.0

PERFORMANCE PARAMETERS	PARAGRAPH NUMBER	UNITS	SPECIFICATION LIMITS	ACCEPTANCE TEST DATA	INSI
ELECTRICAL RESISTANCE TESTS--TCA PROPELLANT VALVES	4.2				
BODY TEMPERATURE					
OXIDIZER	4.2.4	DEGREES F	70 ± 5	69	ANR 208
FUEL	4.2.11	DEGREES F	70 ± 5	69	ANR 208
COIL RESISTANCE					
OXIDIZER	4.2.5	OHMS	42 ± 2	40.67	ANR 208
FUEL	4.2.11	OHMS	42 ± 2	40.59	ANR 208
CONTINUITY RESISTANCE					
OXIDIZER	4.2.9	OHMS	1.0 MAX.	.246	ANR 208
FUEL	4.2.11	OHMS	1.0 MAX.	.208	ANR 208
DIELECTRIC STRENGTH TEST--PROPELLANT VALVES	4.3				
CURRENT LEAKAGE					
OXIDIZER	4.3.8	MICROAMPS	500 MAX.	28	ANR 208
FUEL	4.3.11	MICROAMPS	500 MAX.	31	ANR 208
PROOF PRESSURE TEST--TCA PROPELLANT VALVES	4.4				
VALVES PRESSURIZED FOR NOT LESS THAN 3 MINUTES					
OXIDIZER					
STEP I	4.4.3	PSIG	500 ± 10	VERIFIED	ANR 208
STEP II	4.4.5	PSIG	500 ± 10	VERIFIED	ANR 208

R-15075-1

447

SPECIFICATION NUMBER	REVISION	AMENDMENT	DNA	SERIAL NO.	4057178
RA0220-354	N/C	#3	52-52701-271	PART NO.	208160-21

SE-7 COMPONENT ACCEPTANCE TEST

PART NAME THRUST CHAMBER, 25 LB., ASSY OF

PERFORMANCE PARAMETERS	PARAGRAPH NUMBER	UNITS	SPECIFICATION LIMITS	ACCEPTANCE TEST DATA	INSP.
PROOF PRESSURE TEST--TCA PROPELLANT VALVES (CONTINUED)					
FUEL					
STEP I	4.4.7	PSIG	500 ± 10	VERIFIED	ANR 208
STEP II	4.4.7	PSIG	500 ± 10	VERIFIED	ANR 208
INSPECTED VISUALLY FOR DAMAGE OR DEFORMATION					
OXIDIZER					
STEP I	4.4.4	DNA	NONE ALLOWED	NONE DETECTED	ANR 208
STEP II	4.4.5	DNA	NONE ALLOWED	NONE DETECTED	ANR 208
FUEL					
STEP I	4.4.7	DNA	NONE ALLOWED	NONE DETECTED	ANR 208
STEP II	4.4.7	DNA	NONE ALLOWED	NONE DETECTED	ANR 208
PROOF PRESSURE AND LEAKAGE TEST--THRUST CHAMBER	4.5				
PROOF PRESSURE TEST					
THRUST CHAMBER PRESSURIZED FOR NOT LESS THAN 5 MINUTES AT					
STEP I	4.5.8	PSIG	392 ± 10	VERIFIED	ANR 208
STEP II	4.5.10	PSIG	392 ± 10	VERIFIED	ANR 208

SPECIFICATION NUMBER	REVISION	AMENDMENT			
RA0220-354	N/C	#3	DNA	SERIAL NO.	4057178
			52-52701-271	PART NO.	208160 -21
SE- 7 COMPONENT ACCEPTANCE TEST			PART NAME THRUST CHAMBER, 25 LB., ASSY OF		5.1.1

PERFORMANCE PARAMETERS	PARAGRAPH NUMBER	UNITS	SPECIFICATION LIMITS	ACCEPTANCE TEST DATA	INSP.
PROOF PRESSURE AND LEAKAGE TEST--THRUST CHAMBER (CONTINUED)					
LEAKAGE TEST					
STEP I	4.5.8	DNA	NONE ALLOWED	NONE DETECTED	ANR 208
STEP II	4.5.10	DNA	NONE ALLOWED	NONE DETECTED	ANR 208
INSPECTED VISUALLY FOR DAMAGE OR DEFORMATION	4.5.14	DNA	NONE ALLOWED	NONE DETECTED	ANR 208
FUNCTIONAL TEST--TCA PROPELLANT VALVES	4.6				
OPENING RESPONSE TIME					
OXIDIZER	4.6.17	SEC.	0.0065 MAX.	.0034	ANR 208
FUEL	4.6.8	SEC.	0.0065 MAX.	.0037	ANR 208
CLOSING RESPONSE TIME					
OXIDIZER	4.6.17	SEC.	0.002 MAX.	.0015	ANR 208
FUEL	4.6.10	SEC.	0.002 MAX.	.0016	ANR 208
CLOSING DROP OUT VOLTAGE					
OXIDIZER	4.6.17	VOLT (DC)	1 MIN.	1.5	ANR 208
FUEL	4.6.13	VOLT (DC)	1 MIN.	1.5	ANR 208

SPECIFICATION NUMBER	REVISION	AMENDMENT			
RA0220-354	N/C	#3	DNA	SERIAL NO.	4057178
			52-52701-271	PART NO.	208160-21
SE-7 COMPONENT ACCEPTANCE TEST			PART NAME THRUST CHAMBER, 25 LB., ASSY OF		5.1.1

PERFORMANCE PARAMETERS	PARAGRAPH NUMBER	UNITS	SPECIFICATION LIMITS	ACCEPTANCE TEST DATA	INSP.
LEAKAGE TEST--TCA PROPELLANT VALVES	4.8				
SEAT LEAKAGE RATE					
OXIDIZER	4.8.17	SCC/MIN	2.21 MAX.	LESS THAN 0.1	ANR 208
FUEL	4.8.22	SCC/MIN	2.21 MAX.	LESS THAN 0.1	ANR 208
PRE-TEST DATA					
DRY WEIGHT (EXCLUDING PROTECTIVE CLOSURES)	4.1.3	LB.	DNA	3.06	ANR 208
NOZZLE EXIT DIAMETER					
SECTION A-A		INCH	DNA	2.240	ANR 208
THROAT DIAMETER					
SECTION A-A		INCH	DNA	.364	ANR 208
B-B		INCH	DNA	.364	ANR 208
C-C		INCH	DNA	.364	[illegible]
D-D		INCH	DNA	.364	ANR 208
POST HOT-FIRE DATA					
PROOF PRESSURE TEST					
DRY WEIGHT (EXCLUDING PROTECTIVE COVERS & CLOSURES)	4.17.1	LB.	DNA	3.15	ANR 208
THRUST CHAMBER PRESSURIZED FOR NOT LESS THAN 5 MINUTES					
STEP I	4.17.4	PSIG	392 ± 10	392	ANR 208
STEP II	4.17.4	PSIG	392 ± 10	392	ANR 208

SPECIFICATION NUMBER	REVISION	AMENDMENT			
RA0220-354	N/C	#3	DNA	SERIAL NO.	4057178
			52-52701-271	PART NO.	208160 -21
SE-7 COMPONENT ACCEPTANCE TEST			PART NAME THRUST CHAMBER, 25 LB., ASSY OF		5.1.3

PERFORMANCE PARAMETERS	PARAGRAPH NUMBER	UNITS	SPECIFICATION LIMITS	ACCEPTANCE TEST DATA	INSP.
POST HOT-FIRE DATA (CONTINUED)					
LEAKAGE TEST					
STEP I	4.17.4	DNA	NONE ALLOWED	NONE DETECTED	ANR 208
STEP II	4.17.4	DNA	NONE ALLOWED	NONE DETECTED	ANR 208
INSPECTED VISUALLY FOR DAMAGE OR DEFORMATION	4.17.4	DNA	NONE ALLOWED	NONE DETECTED	ANR 208
LEAK TEST -- WELDED JOINTS					
LEAK TEST					
INLET TUBE PRESSURIZED WITH GASEOUS HELIUM					
OXIDIZER	4.17.5	PSIG	500 ± 10	VERIFIED	ANR 208
FUEL	4.17.8	PSIG	500 ± 10	VERIFIED	ANR 208
JOINT LEAKAGE RATE					
OXIDIZER	4.17.6	SCC/SEC	10^{-6} MAX.	LESS THAN 10^{-6}	ANR 208
FUEL	4.17.8	SCC/SEC	10^{-6} MAX.	LESS THAN 10^{-6}	ANR 208
LEAKAGE TEST -- TCA PROPELLANT VALVES					
SEAT LEAKAGE RATE					
OXIDIZER	4.17.9	SCC/SEC	2.21 MAX.	LESS THAN 0.1	ANR 208
FUEL	4.17.9	SCC/SEC	2.21 MAX.	LESS THAN 0.1	ANR 208

SPECIFICATION NUMBER	REVISION	AMENDMENT			
RA0220-354	N/C	#3	DNA	SERIAL NO.	4057178
			52-52701-271	PART NO.	208160-21
SE-7 COMPONENT ACCEPTANCE TEST			PART NAME THRUST CHAMBER, 25 LB., ASSY OF		5.1.1

PERFORMANCE PARAMETERS	PARAGRAPH NUMBER	UNITS	SPECIFICATION LIMITS	ACCEPTANCE TEST DATA	INSP.
NOZZLE EXIT DIAMETER					
SECTION A-A		INCH	DNA	2.240	ANR 208
THROAT DIAMETER (DELIVERED CONDITION)	4.18.1				
SECTION A-A		INCH	DNA	.364	ANR 208
B-B		INCH	DNA	.364	ANR 208
C-C		INCH	DNA	.364	ANR 208
D-D		INCH	DNA	.364	ANR 208
DRY WEIGHT IN DELIVERED CONDITION (EXCLUDING PROTECTIVE COVERS AND CLOSURES)	4.18.2	LB.	DNA	3.00	ANR 208

SPECIFICATION NUMBER	REVISION	AMENDMENT			
RA0220-354	N/C	#3	DNA	SERIAL NO.	4057178
			52-52701-271	PART NO.	208160-21
SE-7 COMPONENT ACCEPTANCE TEST			PART NAME THRUST CHAMBER, 25 LB., ASSY OF		5.1.5

~~CONFIDENTIAL~~

CHARACTERISTICS	UNITS	SPECIFICATION LIMITS	RUN ***** TEST DATA	RUN ****** TEST DATA	RUN ***** TEST DATA	RUN 190 FINAL TEST DATA	INSP.
HOT FIRE TEST DATA--TEST SITE	-	-	-	-	-	NFL	ANR 208
CELL LOCATION	-	-	-	-	-	1-C	ANR 208
CELL NUMBER	-	-	-	-	-	379	ANR 208
TEST DATE	-	-	-	-	-	10 AUG 1964	ANR 208
TEST DURATION	SEC.	2 MIN.	-	-	-	3.0	ANR 208
ENVIRONMENTAL P_c	PSIA	0.16 MAX.	-	-	-	.0584	ANR 208
AMBIENT PRESSURE	PSIA	DNA	-	-	-	12.19	ANR 208
AMBIENT TEMPERATURE	°F	DNA	-	-	-	80.0	ANR 208
TIME OF DATA SLICE-START	SEC.	DNA	-	-	-	2.8	ANR 208
TIME OF DATA SLICE-END	SEC.	DNA	-	-	-	2.8	ANR 208
OXIDIZER TEMPERATURE	°F	DNA	-	-	-	74.7	ANR 208
FUEL TEMPERATURE	°F	DNA	-	-	-	76.0	ANR 208
OXIDIZER DENSITY	LB/FT^3	DNA	-	-	-	90.80	ANR 208
FUEL DENSITY	LB/FT^3	DNA	-	-	-	54.54	ANR 208

SPECIFICATION NUMBER	REVISION	AMENDMENT			
RA0220-354	N/C	3	DNA	SERIAL NO.	4057178
			52-52701-271	PART NO.	208160-21
SE-7 (REA) CALIBRATED PERFORMANCE DATA			PART NAME	THRUST CHAMBER, 25 LB., ASSY OF	5.2

~~CONFIDENTIAL~~

454

CHARACTERISTICS	UNITS	SPECIFICATION LIMITS	RUN ****** TEST DATA	RUN ******* TEST DATA	RUN ****** TEST DATA	RUN 190 FINAL TEST DATA	INSP.
HOT FIRE TEST DATA--TEST SITE	-	-	-	-	-	NFL	ANR 209
OXIDIZER INLET PRESSURE	PSIA	292 ± 10	-	-	-	291.0	ANR 209
FUEL INLET PRESSURE	PSIA	292 ± 10	-	-	-	289.6	ANR 209
OXIDIZER FLOWRATE	LB/SEC.	DNA	-	-	-	.0467	ANR 209
FUEL FLOWRATE	LB/SEC.	DNA	-	-	-	.0346	[illegible]
THRUST	LB.	DNA	-	-	-	23.3	ANR 209
MIXTURE RATIO	O/F	DNA	-	-	-	1.35	[illegible]
ASYMPTOTIC IMPULSE	SEC.	DNA	-	-	-	287.	ANR 209
COMBUSTOR END P_c	PSIA	DNA	-	-	-	131.5	[illegible]
CHARACTERISTIC VELOCITY	FT/SEC.	DNA	-	-	-	5422.	ANR 209
THROAT DIAMETER	INCH	DNA	-	-	-	.364	ANR 209
FUEL ORIFICE DIAMETER	INCH	DNA	-	-	-	.04590	ANR 209
OXIDIZER ORIFICE DIAMETER	INCH	DNA	-	-	-	.03900	ANR 209
TCA FIRING TIME (TOTAL)	SEC.	10 MAX.	-	-	-	3.0	ANR 209
OXIDIZER SAMPLE NUMBER	-	-	-	-	-	278	ANR 209
FUEL SAMPLE NUMBER	-	-	-	-	-	279	ANR 209

R-15075-1

SPECIFICATION NUMBER RA0220-354	REVISION N/C	AMENDMENT 3	DNA 52-52701-271	SERIAL NO. 4057178 PART NO. 208160-21
SE- 7 (REA) CALIBRATED PERFORMANCE DATA			PART NAME THRUST CHAMBER, 25 LB., ASSY OF	5.2.1

~~CONFIDENTIAL~~

R-15075-1

CHARACTERISTICS	UNITS	SPECIFICATION LIMITS	RUN ****** TEST DATA	RUN ******* TEST DATA	RUN ****** TEST DATA	RUN 190 FINAL TEST DATA	INSP.
HOT FIRE TEST DATA--TEST SITE	-	-	-	-	-	NFL	ANR 208
ADJUST TO STANDARD CONDITIONS							
THRUST	LB.	23 ± 1.2	-	-	-	23.6	ANR 208
MIXTURE RATIO	O/F	1.30 ± .04	-	-	-	1.34 *	ANR 208
SPECIFIC IMPULSE	SEC.	DNA	-	-	-	289.	ANR 208
INJECTOR END Pc	PSIA	DNA	-	-	-	131.7	ANR 208
CHARACTERISTIC VELOCITY	FT/SEC.	DNA	-	-	-	5419.	ANR 208
ADJUST TO RATED CONDITIONS							
THRUST	LB.	23	-	-	-	23.0	ANR 208
MIXTURE RATIO	O/F	1.3	-	-	-	1.30	ANR 208
SPECIFIC IMPULSE	SEC.	272 MIN.	-	-	-	289.	ANR 208
* REF. MRR 58742							

455

SPECIFICATION NUMBER	REVISION	AMENDMENT
RA0220-354	N/C	3
RA0220-230	N/C	2

DNA SERIAL NO. 4057178

52-52701-271 PART NO. 208160-21

SE-7 (REA) CALIBRATED PERFORMANCE DATA

PART NAME THRUST CHAMBER, 25 LB., ASSY OF

5.2.2

~~CONFIDENTIAL~~

THE FOLLOWING IS INFORMATION RELATIVE TO THE CLEANLINESS LEVEL OF THE PROPELLANT UTILIZED IN THE HOT-FIRE ACCEPTANCE TEST OF THE THRUST CHAMBER ASSEMBLY.

THE INFLUENT PARTICULATE COUNT OF THE PROPELLANT WAS:

		LIMITS	ACTUAL COUNT MMH - FUEL	ACTUAL COUNT NTO - OXID
	< 10	*	DNA	DNA
	10 - 25	100	77	23
	25 - 50	20	12	9
	50 - 100	5	4	3
	100 - 300	1	1	0
	300 - 1000	0	0	0
	> 1000	0	0	0
FIBERS	300 - 3000	0	0	0
FIBERS	> 3000	0	0	0

* NOTE: " NOT TO BE COUNTED BUT NO SLURRY OF FINE PARTICLES WHICH COVERS MORE THAN AN ESTIMATED 5 PERCENT OF THE TOTAL EFFECTIVE FILTER AREA SHALL BE ALLOWED." AT THE DISCRETION OF QUALITY ASSURANCE, A WEIGHT DETERMINATION OF TOTAL CONTAMINATION MAY BE MADE AS A REFEREE TEST IN BORDERLINE CASES. THE MAXIMUM ALLOWABLE WEIGHT OF CONTAMINANTS SHALL BE 0.001 GRAM (1 MG).

CLASS 4

INSP. ANR 208

SPECIFICATION NUMBER	REVISION	AMENDMENT		
RA0615-003	B	#2	52-52701-271 PART NO. 209160-21	
SE- 7 INFORMATION - CONTAMINATION			PART NAME THRUST CHAMBER, 25 LB., ASSY OF	5.3

~~CONFIDENTIAL~~

R-15075-1

"CERTIFICATION IS HEREBY GIVEN THAT THE DELIVERABLE END ITEM COVERED BY THIS LOG BOOK WAS MANUFACTURED, INSPECTED AND TESTED IN ACCORDANCE WITH PRESCRIBED DRAWINGS, SPECIFICATION AND QUALITY ASSURANCE PROVISIONS. INSPECTION AND TEST RECORDS ARE ON FILE VERIFYING COMPLIANCE WITH APPLICABLE DRAWINGS AND SPECIFICATIONS, EXCEPT AS NOTED HEREIN"

LOG BOOK ACCEPTANCE DAT #1 (CRD #9)

ROCKETDYNE ENGINEERING	ROCKETDYNE QUALITY ASSURANCE	McDONNELL QUALITY REPRESENTATIVE	GOV'T INSPECTION AGENCY QUALITY REPRESENTATIVE
[illegible]	[illegible]	[illegible]	[illegible]
DATE 10/24/64	DATE 24 OCT. 1964	DATE 24 Oct 64	DATE 24 Oct 64

CONTENTS

SECTION I – DELIVERABLE END ITEM ASSEMBLY LOG

RECORDS CONTAINED IN THIS SECTION ARE PERTINENT TO THE DELIVERABLE END ITEM ACCEPTANCE AND ALSO INCLUDE MODEL CONFIGURATION DATA, PERTINENT DETAILS OF SHORT SHIPMENTS, COMPONENT VARIATIONS, AGE SENSITIVE PARTS RECORD, WEIGHT AND SERIALIZATION RECORDS.

SECTION II – ACCEPTANCE TEST LOG

RECORDS OF ASSEMBLY ACCEPTANCE TESTS ARE PRESENTED IN THIS SECTION WITH PERFORMANCE DATA AND SUMMARY DATA ON INSPECTIONS AND ACCEPTANCE.

GENERAL INFORMATION

THIS LOG BOOK IS PROVIDED FOR SERVICE USE IN RECORDING PERTINENT HISTORICAL DATA AND ALL CHANGES FROM THE ORIGINAL CONFIGURATION. IT IS REQUESTED THIS LOG BOOK ACCOMPANY THE DELIVERABLE END ITEM WHEN TRANSFERRED BETWEEN ROCKETDYNE AND USING AGENCIES.

ROCKETDYNE
A DIVISION OF NORTH AMERICAN AVIATION, INC.

GROUP-4
Downgraded at 3 year intervals; declassified after 12 years

LOG BOOK SPECIFICS

McDONNELL	ITEM	ROCKETDYNE
THIS MATERIAL CO[illegible]TAINS INFORMATIO[illegible] AFFECTING THE NATIONAL D[illegible]FENSE OF THE U[illegible]TED STATES WITHIN THE MEA[illegible]NG OF THE ESPI[illegible]AGE LAWS, TITLE 18 U.S.C., S[illegible]TIONS 793 AND [illegible] ITS TRANSMISSION OR THE [illegible]VELATION OF ITS [illegible]ONTENTS IN ANY MANNER TO AN UNAUTHORIZE[illegible] PERSON IS PROHIBITED BY LAW		
	LOG BOOK DATE	24 OCTOBER 64
	DWG CHG LTR	DNA
Y20161R	CONTRACT NO.	
	GEN ORDER NO.	5252
SCD52-52701-271	SPEC NO.	
DNA	SERIAL NO	4057[illegible]1
52-52701-271	PART NO	20[illegible]-21

SE-7 DELIVERABLE END ITEM – LOG BOOK IDENTIFICATION

PART NAME THRUST CHA[illegible]ER, [illegible] ASSY [illegible]

1.0

457

~~CONFIDENTIAL~~

DELIVERABLE END ITEM

THIS LOG BOOK CONTAINS INFORMATION PERTINENT TO THE DELIVERABLE END ITEM AS SPECIFIED HEREIN BY SERIAL NUMBER AND PART NUMBER. IT IS NECESSARY THAT ALL ENTRIES BE WRITTEN IN INK OR TYPED FOR PERMANENT RECORD. ENTRIES SUCH AS SERIALIZATION, WEIGHT, APPLICABLE MCR'S, ACCEPTANCE TEST DATA AND CALIBRATION DATA WILL BE ENTERED BY ROCKETDYNE AT THE TIME OF DELIVERY.

IT IS REQUESTED THAT THIS LOG BOOK ACCOMPANY THIS DELIVERABLE END ITEM IF THE ITEM IS RETURNED TO ROCKETDYNE FOR REPAIR, MODIFICATION OR RETEST. ROCKETDYNE WILL THEN ENTER REPAIR, MODIFICATION AND RETEST DATA IN THIS LOG BOOK.

THE FORMAT OF PAGES IN THIS LOG BOOK SHALL NOT BE REVISED WITHOUT OBTAINING APPROVAL OF ROCKETDYNE SPACE ENGINES QUALITY CONTROL.

52-52701-271 PART NO. 208160-21

PART NAME THRUST CHAMBER, 25 LB., ASSY OF 2.0

1.0 LOG BOOK IDENTIFICATION

2.0 FOREWORD

3.0 CONTENTS

4.0 MODULE/COMPONENT ASSEMBLY LOG--SECTION I

4.1 CONFIGURATION & SERIALIZATION LOG

4.2 MCR VERIFICATION

4.3 VARIATION LOG

4.4 REPLACEMENT LOG

5.0 COMPONENT ACCEPTANCE TEST LOG--SECTION II

5.1 COMPONENT ACCEPTANCE TEST

5.1.1 COMPONENT ACCEPTANCE TEST

5.1.2 COMPONENT ACCEPTANCE TEST

5.1.3 COMPONENT ACCEPTANCE TEST

5.1.4 COMPONENT ACCEPTANCE TEST

5.1.5 COMPONENT ACCEPTANCE TEST

5.2 CALIBRATED PERFORMANCE DATA

5.2.1 CALIBRATED PERFORMANCE DATA

5.2.2 CALIBRATED PERFORMANCE DATA

5.3 INFORMATION--CONTAMINATION

52-52701-271 PART NO. 208160-21

CONTENTS--SE-7 LOG BOOK

PART NAME THRUST CHAMBER, 25 LB., ASSY OF

SECTION I

52-52701-271 PART NO. 208160-21

SE-7 MODULE / COMPONENT ASSEMBLY LOG

PART NAME THRUST CHAMBER, 25 LB., ASSY OF

IND. NO.	PART NUMBER	REV. LTR.	PART NAME	SERIAL NO.	AGE CONTROL DATE OF MFG.	INSP.
1	208160-21	DNA	THRUST CHAMBER, 25 LB., ASSY OF	4057121	3 Q 64	ANR 208
2	208160-11	DNA	BODY, THRUST CHAMBER, ASSY OF	4059962	3 Q 64	ANR 208
2	208166	DNA	SHELL, THRUST CHAMBER, ASSY OF	8506984		ANR 208
3	408530-11	DNA	INJECTOR, THRUST CHAMBER, ASSY OF	7028421		ANR 208
2	407559	DNA	VALVE, OXIDIZER, T/C, ASSY OF	4057733		ANR 208
2	407560	DNA	VALVE, FUEL, T/C, ASSY OF	4059523		ANR 208

DNA SERIAL NO. 4057121

52-52701-271 PART NO. 208160-21

SE- 7 CONFIGURATION & SERIALIZATION LOG

PART NAME THRUST CHAMBER, 25 LB., ASSY OF

4.1

MCR / ECP NO.	DATE	TITLE	DATE	INSP.
SE6-062	6 JAN 64	COMPONENT CLEANING; PROVISION FOR	24 OCT 64	ANR 721
SE6-064	30 JUL 63	TCA, ACCEPTANCE TESTS; REVISION OF	24 OCT 64	ANR 721
SE6-080	28 DEC 63	THRUST CHAMBER ASSEMBLIES, FABRICATION MATERIAL; APPROVAL OF	24 OCT 64	ANR 721
SE6-133	22 APR 64	TCA PROPELLANT VALVES; ADDITIONAL REQUIREMENTS FOR	24 OCT 64	721
SE6-144	15 APR 64	TCA INJECTORS; REDESIGN OF	24 OCT 64	ANR 721
SE6-179	16 JUN 64	TUBE STUBS; MARKINGS OF	24 OCT 64	ANR 721
SE6-098	9 OCT 64	THRUST CHAMBER ASSEMBLIES; REDESIGN OF	24 OCT 64	ANR 721
SE6-130	9 OCT 64	"O" RING REQUIREMENTS, ELECTRICAL CONNECTORS	24 OCT 64	ANR 721
SE7-25	9 APR 63	25 LB., TCA MOUNTING HOLES; RELOCATION OF	24 OCT 64	ANR 721
SE6-085	30 JUL 63	CUSTOMER TEST SURVEILLANCE; REQUIREMENT FOR	24 OCT 64	ANR 721
SE6-195	9 JUL 64	LIQUID CALIBRATION TESTS; DE[illegible]TION OF	24 OCT 64	ANR 721
SE6-139	15 APR 64	PLACEMENT OF HAYNES STELLITE #3 SAND CAST ON APPROVED MATERIAL LIST	24 OCT 64	ANR 721

R-15075-1

	DNA	SERIAL NO.	4057121
	52-52701-271	PART NO.	208160-21
SE-7 DELIVERABLE END ITEM-MCR VERIFICATION	PART NAME THRUST CHAMBER, 25 LB., ASSY OF		4.2

R-15075-1

MR NO.	PART OR COMP. INVOLVED	PART NUMBER	SERIAL NUMBER	BRIEF DESCRIPTION OF VARIATION AND MATERIAL REVIEW BOARD DISPOSITION	INSP.
MAC MRR #71613	SE-7 T.C.A.	208160-21	4057121	DISCREPANCY: CONDITION A: TCA HAS EXCELDED MAX. ALLOWABLE HOT FIRE TIME PER RA0220-354. ACCUMULATED HOT FIRE TIME IS 24.0 SEC. CONDITION B: THROAT INSERT HAS TWO (2) LONGITUDINAL CRACK. ONE CRACK EXTENDS FROM THE UPSTREAM EDGE TO THE MINOR DIA. IS .0009 WIDE. THE OTHER CRACK EXTENDS FROM THE UPSTREAM EDGE TO THE DOWNSTREAM EDGE. MAX. WIDTH IS .0007. DEPTH OF CRACK IS SUSPECTED TO BE FULL PENETRATION. CRACKS ARE WITH IN NCI CRITERIA. REF. 600N-5 C22146 DISPOSITION: ACCEPTABLE TO USE FOR SYSTEM DAT.	ANR 208

463

DNA SERIAL NO. 4057121

52-52701-271 PART NO. 208160-21

SE-7 DELIVERABLE END ITEM — VARIATION LOG

PART NAME THRUST CHAMBER, 25 LB., ASSY OF

4.3

PART NO.	PART NAME	SERIAL NO.	REASON FOR REPLACEMENT	REPLACED BY		INSP.
				PART NO.	SERIAL NO.	
			NONE THIS DATE 24 OCT 1964			721

DNA	SERIAL NO.	4057121	
52-52701-271	PART NO.	208160-21	
SE-7 DELIVERABLE END ITEM--REPLACEMENT LOG	PART NAME	THRUST CHAMBER, 25 LB., ASSY OF	4.4

SECTION II

52-52701-271 PART NO. 208160 -21

SE-7 COMPONENT ACCEPTANCE TEST LOG

PART NAME THRUST CHAMBER, 25 LB., ASSY OF

5.0

PERFORMANCE PARAMETERS	PARAGRAPH NUMBER	UNITS	SPECIFICATION LIMITS	ACCEPTANCE TEST DATA	INSP.
ELECTRICAL RESISTANCE TESTS---TCA PROPELLANT VALVES	4.2				
BODY TEMPERATURE					
OXIDIZER	4.2.4	DEGREES F	70 ± 5	69	ANR 208
FUEL	4.2.11	DEGREES F	70 ± 5	69	ANR 208
COIL RESISTANCE					
OXIDIZER	4.2.5	OHMS	42 ± 2	41.890	ANR 208
FUEL	4.2.11	OHMS	42 ± 2	40.24	ANR 208
CONTINUITY RESISTANCE					
OXIDIZER	4.2.9	OHMS	1.0 MAX.	.019	ANR 208
FUEL	4.2.11	OHMS	1.0 MAX.	.084	ANR 208
DIELECTRIC STRENGTH TEST--PROPELLANT VALVES	4.3				
CURRENT LEAKAGE					
OXIDIZER	4.3.8	MICROAMPS	500 MAX.	29	ANR 208
FUEL	4.3.11	MICROAMPS	500 MAX.	26	ANR 208
PROOF PRESSURE TEST--TCA PROPELLANT VALVES	4.4				
VALVES PRESSURIZED FOR NOT LESS THAN 3 MINUTES					
OXIDIZER					
STEP I	4.4.3	PSIG	500 ± 10	VERIFIED	ANR 208
STEP II	4.4.5	PSIG	500 ± 10	VERIFIED	ANR 208

SPECIFICATION NUMBER	REVISION	AMENDMENT	DNA	SERIAL NO. 4057121
RA0220-354	N/C	#3	52-52701-271	PART NO. 208160-21

SE-7 COMPONENT ACCEPTANCE TEST

PART NAME THRUST CHAMBER, 25 LB., ASSY OF

5.1

PERFORMANCE PARAMETERS	PARAGRAPH NUMBER	UNITS	SPECIFICATION LIMITS	ACCEPTANCE TEST DATA	INSP.
PROOF PRESSURE TEST--TCA PROPELLANT VALVES (CONTINUED)					
FUEL					
STEP I	4.4.7	PSIG	500 ± 10	VERIFIED	ANR 208
STEP II	4.4.7	PSIG	500 ± 10	VERIFIED	ANR 208
INSPECTED VISUALLY FOR DAMAGE OR DEFORMATION					
OXIDIZER					
STEP I	4.4.4	DNA	NONE ALLOWED	NONE DETECTED	ANR 208
STEP II	4.4.5	DNA	NONE ALLOWED	NONE DETECTED	ANR 208
FUEL					
STEP I	4.4.7	DNA	NONE ALLOWED	NONE DETECTED	ANR 208
STEP II	4.4.7	DNA	NONE ALLOWED	NONE DETECTED	ANR 208
PROOF PRESSURE AND LEAKAGE TEST--THRUST CHAMBER	4.5				
PROOF PRESSURE TEST					
THRUST CHAMBER PRESSURIZED FOR NOT LESS THAN 5 MINUTES AT					
STEP I	4.5.8	PSIG	392 ± 10	VERIFIED	ANR 208
STEP II	4.5.10	PSIG	392 ± 10	VERIFIED	ANR 208

SPECIFICATION NUMBER	REVISION	AMENDMENT			
RA0220-354	N/C	#3	DNA 52-52701-271	SERIAL NO. 4057121	PART NO. 203160-21
SE-7 COMPONENT ACCEPTANCE TEST			PART NAME THRUST CHAMBER, 25 LB., ASSY OF		5.1.2

PERFORMANCE PARAMETERS	PARAGRAPH NUMBER	UNITS	SPECIFICATION LIMITS	ACCEPTANCE TEST DATA	INSP.
PROOF PRESSURE AND LEAKAGE TEST--THRUST CHAMBER (CONTINUED)					
LEAKAGE TEST					
STEP I	4.5.8	DNA	NONE ALLOWED	NONE DETECTED	ANR 208
STEP II	4.5.10	DNA	NONE ALLOWED	NONE DETECTED	ANR 208
INSPECTED VISUALLY FOR DAMAGE OR DEFORMATION	4.5.14	DNA	NONE ALLOWED	NONE DETECTED	ANR 208
FUNCTIONAL TEST--TCA PROPELLANT VALVES	4.6				
OPENING RESPONSE TIME					
OXIDIZER	4.6.17	SEC.	0.0065 MAX.	.0042	ANR 208
FUEL	4.6.8	SEC.	0.0065 MAX.	.0046	ANR 208
CLOSING RESPONSE TIME					
OXIDIZER	4.6.17	SEC.	0.002 MAX.	.0014	ANR 208
FUEL	4.6.10	SEC.	0.002 MAX.	.0016	ANR 208
CLOSING DROP OUT VOLTAGE					
OXIDIZER	4.6.17	VOLT (DC)	1 MIN.	1.4	ANR 208
FUEL	4.6.13	VOLT (DC)	1 MIN.	1.2	ANR 208

R-15075-1

SPECIFICATION NUMBER	REVISION	AMENDMENT			
RA0220-354	N/C	#3	DNA	SERIAL NO.	4057121
			52-52701-271	PART NO.	208160-21
SE-7 COMPONENT ACCEPTANCE TEST			PART NAME THRUST CHAMBER, 25 LB., ASSY OF		5.1.2

PERFORMANCE PARAMETERS	PARAGRAPH NUMBER	UNITS	SPECIFICATION LIMITS	ACCEPTANCE TEST DATA	INSP.
* LEAKAGE TEST--TCA PROPELLANT VALVES	4.8				
SEAT LEAKAGE RATE					
OXIDIZER	4.8.17	SCC/MIN	2.21 MAX.	LESS THAN 0.1	ANR 208
FUEL	4.8.22	SCC/MIN	2.21 MAX.	LESS THAN 0.1	ANR 208
* PRE-TEST DATA					
DRY WEIGHT (EXCLUDING PROTECTIVE CLOSURES)	4.1.3	LB.	DNA	3.16	ANR 208
NOZZLE EXIT DIAMETER					
SECTION A-A		INCH	DNA	2.265	ANR 208
THROAT DIAMETER					
SECTION A-A		INCH	DNA	.357	ANR 208
B-B		INCH	DNA	.357	ANR 208
C-C		INCH	DNA	.357	ANR 208
D-D		INCH	DNA	.357	ANR 208
** POST HOT-FIRE DATA					
PROOF PRESSURE TEST					
DRY WEIGHT (EXCLUDING PROTECTIVE COVERS & CLOSURES)	4.17.1	LB.	DNA	3.18	ANR 208
THRUST CHAMBER PRESSURIZED FOR NOT LESS THAN 5 MINUTES					
STEP I	4.17.4	PSIG	392 ± 10	392	ANR 208
STEP II	4.17.4	PSIG	392 ± 10	392	ANR 208

SPECIFICATION NUMBER	REVISION	AMENDMENT
* RA0220-354	N/C	#3
** RA0220-354	A	#1

DNA SERIAL NO. 4057121

52-52701-271 PART NO. 208160 -21

SE-7 COMPONENT ACCEPTANCE TEST

PART NAME THRUST CHAMBER, 25 LB., ASSY OF

5.1.3

PERFORMANCE PARAMETERS	PARAGRAPH NUMBER	UNITS	SPECIFICATION LIMITS	ACCEPTANCE TEST DATA	INSP.
POST HOT-FIRE DATA (CONTINUED)					
LEAKAGE TEST					
STEP I	4.17.4	DNA	NONE ALLOWED	NONE DETECTED	ANR 208
STEP II	4.17.4	DNA	NONE ALLOWED	NONE DETECTED	ANR 208
INSPECTED VISUALLY FOR DAMAGE OR DEFORMATION	4.17.4	DNA	NONE ALLOWED	NONE DETECTED	ANR 208
LEAK TEST -- WELDED JOINTS					
LEAK TEST					
INLET TUBE PRESSURIZED WITH GASEOUS HELIUM					
OXIDIZER	4.17.5	PSIG	500 ± 10	VERIFIED	ANR 208
FUEL	4.17.8	PSIG	500 ± 10	VERIFIED	ANR 208
JOINT LEAKAGE RATE					
OXIDIZER	4.17.6	SCC/SEC	10^{-6} MAX.	LESS THAN 10^{-6}	ANR 208
FUEL	4.17.8	SCC/SEC	10^{-6} MAX.	LESS THAN 10^{-6}	ANR 208
LEAKAGE TEST -- TCA PROPELLANT VALVES					
SEAT LEAKAGE RATE					
OXIDIZER	4.17.9	SCC/SEC	2.21 MAX.	LESS THAN 0.1	ANR 208
FUEL	4.17.9	SCC/SEC	2.21 MAX.	LESS THAN 0.1	ANR 208

SPECIFICATION NUMBER	REVISION	AMENDMENT		
RA0220-354	A	#1	DNA 52-52701-271	SERIAL NO. 4057121 PART NO. 208160-21
SE 7 COMPONENT ACCEPTANCE TEST			PART NAME THRUST CHAMBER, 25 LB., ASSY OF	5.1.1

R-15075-1

PERFORMANCE PARAMETERS	PARAGRAPH NUMBER	UNITS	SPECIFICATION LIMITS	ACCEPTANCE TEST DATA	INSP.
THROAT DIAMETER (DELIVERED CONDITION)	4.18.1				
SECTION A-A		INCH	DNA	.358	ANR 208
B-B		INCH	DNA	.358	ANR 208
C-C		INCH	DNA	.358	ANR 208
D-D		INCH	DNA	.358	ANR 208
DRY WEIGHT IN DELIVERED CONDITION (EXCLUDING PROTECTIVE COVERS AND CLOSURES)	4.18.2	LB.	DNA	3.27	ANR 208

471

SPECIFICATION NUMBER	REVISION	AMENDMENT			
RA0220-354	A	#1	DNA	SERIAL NO.	4057121
			52-52701-271	PART NO.	208160-21
SE-7 COMPONENT ACCEPTANCE TEST			PART NAME	THRUST CHAMBER, 25 LB., ASSY OF	5.1.5

472

CHARACTERISTICS	UNITS	SPECIFICATION LIMITS	RUN 239 TEST DATA	RUN 246 TEST DATA	RUN 247 TEST DATA	RUN 300 TEST DATA	INSP.
HOT FIRE TEST DATA - TEST SITE	-	-	NFL	NFL	NFL	NFL	
CELL LOCATION	-	-	1-C	1-C	1-C	1-B	
CELL NUMBER	-	-	379	379	379	379	
TEST DATE	-	-	9 Sept 64	12 Sept 64	12 Sept 64	22 Sept 64	
TEST DURATION	SEC.	2 MIN.	3.0	3.0	3.0	3.0	
ENVIRONMENTAL Pc	PSIA	.16 MAX.	.0664	.0596	.0644	.0602	
AMBIENT PRESSURE	PSIA	DNA	12.15	12.14	12.14	12.28	
AMBIENT TEMPERATURE	°F	DNA	54.0	66.0	66.0	84.0	
TIME OF DATA SLICE-START	SEC.	DNA	2.8	2.8	2.8	2.8	
TIME OF DATA SLICE-END	SEC,	DNA	2.8	2.8	2.8	2.8	
OXIDIZER TEMPERATURE	°F	DNA	57.0	68.2	68.8	61.5	
FUEL TEMPERATURE	°F	DNA	61.0	73.2	72.9	59.3	
OXIDIZER DENSITY	LB/FT^3	DNA	91.39	90.22	90.18	91.09	
FUEL DENSITY	LB/FT^3	DNA	54.79	54.47	54.48	54.66	

R-15075-1

SPECIFICATION NUMBER RA0220-35 REV. A AMEND. NONE

DNA 52-52701- 271

SERIAL NO. 4057121

PART NO. 208160-21

SE-7 (REA) CALIBRATED PERFORMANCE DATA

PART NAME THRUST CHAMBER, 25 LB., ASSY OF

5.2

R-15075-1

CHARACTERISTICS	UNITS	SPECIFICATION LIMITS	RUN 301 TEST DATA	RUN 302 TEST DATA	RUN 307 TEST DATA	RUN 308 FINAL TEST DATA	INSP.
HOT FIRE TEST DATA - TEST SITE	-	-	NFL	NFL	NFL	NFL	
CELL LOCATION	-	-	1-B	1-B	1-B	1-B	
CELL NUMBER	-	-	379	379	379	379	
TEST DATE	-	-	22 SEPT 64	22 SEPT 64	23 SEPT 64	23 SEPT 64	
TEST DURATION	SEC.	2 MIN.	3.0	3.0	3.0	3.0	
ENVIRONMENTAL Pc	PSIA	.16 MAX.	.0658	.0664	.0636	.0624	
AMBIENT PRESSURE	PSIA	DNA	12.23	12.23	12.23	12.23	
AMBIENT TEMPERATURE	^{o}F	DNA	70.0	70.0	70.0	70.0	
TIME OF DATA SLICE-START	SEC.	DNA	2.8	2.8	2.8	2.8	
TIME OF DATA SLICE-END	SEC,	DNA	2.8	2.8	2.8	2.8	
OXIDIZER TEMPERATURE	^{o}F	DNA	67.3	68.3	65.4	65.6	
FUEL TEMPERATURE	^{o}F	DNA	68.7	68.9	64.8	64.4	
OXIDIZER DENSITY	LB/FT^3	DNA	90.64	90.56	91.41	91.39	
FUEL DENSITY	LB/FT^3	DNA	54.36	54.36	54.36	54.37	

473

SPECIFICATION NUMBER RA0220-354 REV. A AMEND. NONE

DNA 52-52701-271

SERIAL NO. 4057121

PART NO. 208160-21

SE-7 (REA) CALIBRATED PERFORMANCE DATA

PART NAME THRUST CHAMBER, 25 LB., ASSY OF

5.2

Downgraded at 3 year intervals; Declassified after 12 years

THE NATIONAL DEFENSE OF THE UNITED STATES WITHIN THE MEANING OF THE ESPIONAGE LAWS, TITLE 18, U.S.C., SECTIONS 793 AND 794. THE TRANSMISSION OR THE REVELATION OF ITS CONTENTS IN ANY MANNER TO AN UNAUTHORIZED PERSON IS PROHIBITED BY LAW.

CHARACTERISTICS	UNITS	SPECIFICATION LIMITS	RUN 301 TEST DATA	RUN 302 TEST DATA	RUN 307 TEST DATA	RUN 308 FINAL TEST DATA	INSP.
HOT FIRE TEST DATA - TEST SITE	-	-	NFL	NFL	NFL	NFL	
OXIDIZER INLET PRESSURE	PSIA	292 ± 10	295.6	296.1	292.1	292.6	
FUEL INLET PRESSURE	PSIA	292 ± 10	289.3	290.3	287.9	287.9	
OXIDIZER FLOWRATE	LB/SEC.	DNA	.04536	.04549	.04592	.04590	
FUEL FLOWRATE	LB/SEC.	DNA	.03555	.03572	.03345	.03339	
THRUST	LB.	DNA	23.0	23.1	22.7	22.7	
MIXTURE RATIO	O/F	DNA	1.28	1.27	1.37	1.37	
SPECIFIC IMPULSE	SEC.	DNA	285.	285.	286.	286.	
INJECTOR END Pc	PSIA	DNA	134.4	134.4	132.3	132.3	
CHARACTERISTIC VELOCITY	FT/SEC.	DNA	5379.	5359.	5399.	5404.	
THROAT DIAMETER	IN.	DNA	.358	.358	.358	.358	
FUEL ORIFICE DIAMETER	IN.	DNA	.04490	.04490	.04460	.04460	
OXIDIZER ORIFICE DIAMETER	IN.	DNA	.03725	.03725	.03725	.03725	
TCA FIRING TIME (TOTAL)	SEC.	15 MAX.	15.0	18.0	21.0	24.0	
OXIDIZER SAMPLE NUMBER	-	-	325.	325.	325.	325.	
FUEL SAMPLE NUMBER	-	-	326.	326.	326.	326.	

SPECIFICATION NUMBER REV. A
RA0220-354 AMEND. NONE

DNA
52-52701- 271

SERIAL NO. 4057121
PART NO. 208160- 21

SE-7 (NEA) CALIBRATED PERFORMANCE DATA

PART NAME THRUST CHAMBER, 25 LB., ASSY OF

5.2.1

174

R-15075-1

Downgraded at 3 year intervals; Declassified after 12 years

GROUP 4
Downgraded at 3 year intervals
CONFIDENTIAL

THIS MATERIAL CONTAINS INFORMATION AFFECTING THE NATIONAL DEFENSE OF THE UNITED STATES WITHIN THE MEANING OF THE ESPIONAGE LAWS, TITLE 18, U.S.C., SECTIONS 793 AND 794. ITS TRANSMISSION OR THE REVELATION OF ITS CONTENTS IN ANY MANNER TO AN UNAUTHORIZED PERSON IS PROHIBITED BY LAW.

R-15075-1

CHARACTERISTICS	UNITS	SPECIFICATION LIMITS	RUN 239 TEST DATA	RUN 246 TEST DATA	RUN 247 TEST DATA	RUN 300 TEST DATA	INSP.
EOT FIRE TEST DATA - TEST SITE	-	-	NFL	NFL	NFL	NFL	
ADJUST TO STANDARD CONDITIONS	-	-	-	-	-	--	-
THRUST	LB.	23 ± 1.2	23.7	23.5	23.6	23.5	
MIXTURE RATIO	O/F	1.30 ± .05	1.35	1.29	1.29	1.26	
SPECIFIC IMPULSE	SEC.	DNA	288.	291.	292.	290.	
INJECTOR END Pc	PSIA	DNA	137.4	132.9	133.4	134.3	
CHARACTERISTIC VELOCITY	FT/SEC.	DNA	5373.	5290.	5316.	5367.	
ADJUST TO RATED CONDITIONS	-	-	-	-	-	-	-
THRUST	LB.	23	23.0	23.0	23.0	23.0	
MIXTURE RATIO	O/F	1.3	1.30	1.30	1.30	1.30	
SPECIFIC IMPULSE	SEC.	266 MIN.	287.	291.	292.	291.	

475

RA0220-230
REV. N/C AMEND. #3

SPECIFICATION NUMBER
RA0220-354 REV. A AMEND. NONE

DNA
52-52701-271

SERIAL NO. 4057121
PART NO. 208160-21

SE- 7 (REA) CALIBRATED PERFORMANCE DATA

PART NAME THRUST CHAMBER, 25 LB., ASSY OF

5.2.2

Downgraded at 3 year intervals
declassified after 12 years

GROUP 4
Downgraded at 3 year intervals
declassified after 12 years

476

CHARACTERISTICS	UNITS	SPECIFICATION LIMITS	RUN 301 TEST DATA	RUN 302 TEST DATA	RUN 307 TEST DATA	RUN 308 FINAL TEST DATA	INSP.
HOT FIRE TEST DATA - TEST SITE	-	-	NFL	NFL	NFL	NFL	
ADJUST TO STANDARD CONDITIONS	-	-	-	-	-	-	-
THRUST	LB.	23 ± 1.2	23.2	23.3	23.0	22.9	
MIXTURE RATIO	O/F	1.30 ± .05	1.24	1.24	1.34	1.34	
SPECIFIC IMPULSE	SEC.	DNA	287.	287.	289.	288.	
INJECTOR END Pc	PSIA	DNA	133.8	133.7	132.3	132.3	
CHARACTERISTIC VELOCITY	FT/SEC.	DNA	5367.	5348.	5392.	5397.	
ADJUST TO RATED CONDITIONS	-	-	-	-	-	-	-
THRUST	LB.	23	23.0	23.0	23.0	23.0	
MIXTURE RATIO	O/F	1.3	1.30	1.30	1.30	1.30	
SPECIFIC IMPULSE	SEC.	266 MIN.	288.	288.	289.	288.	

R-15075-1

RA0220-230
REV. H/C AMEND. #3

SPECIFICATION NUMBER
RA0220-354 REV. A AMEND NONE

DNA
52-52701-271

SERIAL NO. 1057121
PART NO. 208160-21

SE- 7 (REA) CALIBRATED PERFORMANCE DATA

PART NAME THRUST CHAMBER, 25 LB., ASSY OF

5.2.2

Downgraded at 3 year intervals
declassified after 12 years

GROUP 4
Downgraded at 3 year intervals:
declassified after 12 years

CONFIDENTIAL

THIS MATERIAL CONTAINS INFORMATION AFFECTING THE NATIONAL DEFENSE OF THE UNITED STATES WITHIN THE MEANING OF THE ESPIONAGE LAWS, TITLE 18 U.S.C., SECTIONS 793 AND 794. ITS TRANSMISSION OR THE REVELATION OF ITS CONTENTS IN ANY MANNER TO AN UNAUTHORIZED PERSON IS PROHIBITED BY LAW.

R-15075-1

CHARACTERISTICS	UNITS	SPECIFICATION LIMITS	RUN 239 TEST DATA	RUN 246 TEST DATA	RUN 247 TEST DATA	RUN 300 TEST DATA	INSP.
HOT FIRE TEST DATA - TEST SITE	-	-	NFL	NFL	NFL	NFL	
OXIDIZER INLET PRESSURE	PSIA	292 ± 10	296.6	298.1	297.1	290.5	
FUEL INLET PRESSURE	PSIA	292 ± 10	291.5	295.8	291.8	292.4	
OXIDIZER FLOWRATE	LB/SEC.	DNA	.04824	.04641	.04623	.04524	
FUEL FLOWRATE	LB/SEC.	DNA	.03483	.03544	.03505	.03589	
THRUST	LB.	DNA	23.7	23.6	23.5	23.3	
MIXTURE RATIO	O/F	DNA	1.38	1.31	1.32	1.26	
SPECIFIC IMPULSE	SEC.	DNA	285.	288.	289.	287.	
INJECTOR END Pc	PSIA	DNA	138.7	134.5	134.4	134.5	
CHARACTERISTIC VELOCITY	FT/SEC.	DNA	5379.	5294.	5323.	5367.	
THROAT DIAMETER	IN.	DNA	.357	.357	.357	.358	
FUEL ORIFICE DIAMETER	IN.	DNA	.04560	.04490	.04490	.04490	
OXIDIZER ORIFICE DIAMETER	IN.	DNA	.03870	.03725	.03725	.03725	
TCA FIRING TIME (TOTAL)	SEC.	15 MAX.	3.0	6.0	9.0	12.0	
OXIDIZER SAMPLE NUMBER	-	-	315.	317.	317.	325.	
FUEL SAMPLE NUMBER	-	-	314.	314.	314.	326.	

477

SPECIFICATION NUMBER REV. A
RA0220-354 AMEND. NONE

DNA
52-52701-271

SERIAL NO. 4057121
PART NO. 208160-21

SE-7 (REA) CALIBRATED PERFORMANCE DATA

PART NAME THRUST CHAMBER, 25 LB., ASSY OF

5.2.1

GROUP 4
Downgraded at 3 year intervals:
declassified after 12 years

[redacted]

THE FOLLOWING IS INFORMATION RELATIVE TO THE CLEANLINESS LEVEL OF THE PROPELLANT UTILIZED IN THE HOT-FIRE ACCEPTANCE TEST OF THE THRUST CHAMBER ASSEMBLY.

THE INFLUENT PARTICULATE COUNT OF THE PROPELLANT WAS:

		LIMITS	ACTUAL COUNT MMH - FUEL	ACTUAL COUNT NTO - OXID
	< 10	*	DNA	DNA
	10 - 25	100	90	42
	25 - 50	20	13	5
	50 - 100	5	1	0
	100 - 300	1	0	0
	300 - 1000	0	0	0
	> 1000	0	0	0
FIBERS	300 - 3000	0	0	0
FIBERS	> 3000	0	0	0

* NOTE: " NOT TO BE COUNTED BUT NO SLURRY OF FINE PARTICLES WHICH COVERS MORE THAN AN ESTIMATED 5 PERCENT OF THE TOTAL EFFECTIVE FILTER AREA SHALL BE ALLOWED." AT THE DISCRETION OF QUALITY ASSURANCE, A WEIGHT DETERMINATION OF TOTAL CONTAMINATION MAY BE MADE AS A REFEREE TEST IN BORDERLINE CASES. THE MAXIMUM ALLOWABLE WEIGHT OF CONTAMINANTS SHALL BE 0.001 GRAM (1 MG).

CLASS 4

INSP. ANH 208

R-15075-1

SPECIFICATION NUMBER	REVISION	AMENDMENT			
RA0615-003	B	#2	DNA 52-52701-271	SERIAL NO. 4057121 PART NO. 208160-21	
SE-7 INFORMATION - CONTAMINATION			PART NAME THRUST CHAMBER, 25 LB., ASSY OF		5.3

~~CONFIDENTIAL~~

SCD 52-52701-277
S/N 4054769

R-15075-1

"CERTIFICATION IS HEREBY GIVEN THAT THE DELIVERABLE END ITEM COVERED BY THIS LOG BOOK WAS MANUFACTURED, INSPECTED AND TESTED IN ACCORDANCE WITH PRESCRIBED DRAWINGS, SPECIFICATION AND QUALITY ASSURANCE PROVISIONS. INSPECTION AND TEST RECORDS ARE ON FILE VERIFYING COMPLIANCE WITH APPLICABLE DRAWINGS AND SPECIFICATIONS, EXCEPT AS NOTED HEREIN"

LOG BOOK ACCEPTANCE (DAT UNIT #15) (CRD #15)

SPACE ENGINES ENGINEERING	SPACE ENGINES QUALITY CONTROL	McDONNELL QUALITY REPRESENTATIVE	GOV'T INSPECTION AGENCY QUALITY REPRESENTATIVE
A. D. Colland	Wm E Reitz	C. W. Michaelis	Chester A Mielnicki
DATE 9/14/64	DATE 9/14/64	DATE 9/14/64	DATE 14 Sept 64

CONTENTS

SECTION I – DELIVERABLE END ITEM ASSEMBLY LOG

RECORDS CONTAINED IN THIS SECTION ARE PERTINENT TO THE DELIVERABLE END ITEM ACCEPTANCE AND ALSO INCLUDE MODEL CONFIGURATION DATA, PERTINENT DETAILS OF SHORT SHIPMENTS, COMPONENT VARIATIONS, AGE SENSITIVE PARTS RECORD, WEIGHT AND SERIALIZATION RECORDS.

SECTION II – ACCEPTANCE TEST LOG

RECORDS OF ASSEMBLY ACCEPTANCE TESTS ARE PRESENTED IN THIS SECTION WITH PERFORMANCE DATA AND SUMMARY DATA ON INSPECTIONS AND ACCEPTANCE.

GENERAL INFORMATION

THIS LOG BOOK IS PROVIDED FOR SERVICE USE IN RECORDING PERTINENT HISTORICAL DATA AND ALL CHANGES FROM THE ORIGINAL CONFIGURATION. IT IS REQUESTED THIS LOG BOOK ACCOMPANY THE DELIVERABLE END ITEM WHEN TRANSFERRED BETWEEN ROCKETDYNE AND USING AGENCIES.

GROUP-4
Downgraded at 3 year intervals;
declassified after 12 years

LOG BOOK SPECIFICS

McDONNELL	ITEM	ROCKETDYNE
THIS MATERIAL CONTAINS INFORMATION AFFECTING THE NATIONAL DEFENSE OF THE UNITED STATES WITHIN THE MEANING OF THE ESPIONAGE LAWS, TITLE 18 U.S.C., SECTIONS 793 AND 794. ITS TRANSMISSION OR THE REVELATION OF ITS CONTENTS IN ANY MANNER TO AN UNAUTHORIZED PERSON IS PROHIBITED BY LAW.		
	LOG BOOK DATE	14 SEPTEMBER 64
	DWG CHG LTR	DNA
Y20161R	CONTRACT NO.	
	GEN ORDER NO.	5252
SCD52-52701-277	SPEC NO.	
DNA	SERIAL NO.	4054769
52-52701-277	PART NO.	207540-21

479

ROCKETDYNE – SPACE ENGINES
A DIVISION OF NORTH AMERICAN AVIATION, INC.

~~CONFIDENTIAL~~

SE-7 DELIVERABLE END ITEM – LOG BOOK IDENTIFICATION | PART NAME THRUST CHAMBER, 100 LB., ASSY OF | 1.0

DELIVERABLE END ITEM

THIS LOG BOOK CONTAINS INFORMATION PERTINENT TO THE DELIVERABLE END ITEM AS SPECIFIED HEREIN BY SERIAL NUMBER AND PART NUMBER. IT IS NECESSARY THAT ALL ENTRIES BE WRITTEN IN INK OR TYPED FOR PERMANENT RECORD. ENTRIES SUCH AS SERIALIZATION, WEIGHT, APPLICABLE MCR'S, ACCEPTANCE TEST DATA AND CALIBRATION DATA WILL BE ENTERED BY ROCKETDYNE AT THE TIME OF DELIVERY.

IT IS REQUESTED THAT THIS LOG BOOK ACCOMPANY THIS DELIVERABLE END ITEM IF THE ITEM IS RETURNED TO ROCKETDYNE FOR REPAIR, MODIFICATION OR RETEST. ROCKETDYNE WILL THEN ENTER REPAIR, MODIFICATION AND RETEST DATA IN THIS LOG BOOK.

THE FORMAT OF PAGES IN THIS LOG BOOK SHALL NOT BE REVISED WITHOUT OBTAINING APPROVAL OF ROCKETDYNE SPACE ENGINES QUALITY CONTROL.

	DNA	SERIAL NO.	4054769
	52-52701-277	PART NO.	207540-21
FOREWORD--SE-7 LOG BOOK	PART NAME THRUST CHAMBER 100 LB., ASSY OF		2.0

1.0 LOG BOOK IDENTIFICATION

2.0 FOREWORD

3.0 CONTENTS

4.0 MODULE/COMPONENT ASSEMBLY LOG--SECTION I

4.1 CONFIGURATION & SERIALIZATION LOG

4.2 MCR VERIFICATION

4.3 VARIATION LOG

4.4 REPLACEMENT LOG

5.0 COMPONENT ACCEPTANCE TEST LOG--SECTION II

5.1 COMPONENT ACCEPTANCE TEST

5.1.1 COMPONENT ACCEPTANCE TEST

5.1.2 COMPONENT ACCEPTANCE TEST

5.1.3 COMPONENT ACCEPTANCE TEST

5.1.4 COMPONENT ACCEPTANCE TEST

5.1.5 COMPONENT ACCEPTANCE TEST

5.2 CALIBRATED PERFORMANCE DATA

5.2.1 CALIBRATED PERFORMANCE DATA

5.2.2 CALIBRATED PERFORMANCE DATA

5.3 INFORMATION--CONTAMINATION

SECTION I

52-52701-277 PART NO. 207540-21

SE-7 MODULE / COMPONENT ASSEMBLY LOG

PART NAME THRUST CHAMBER 100 LB., ASSY OF

4.0

IND. NO.	PART NUMBER	REV. LTR.	PART NAME	SERIAL NO.	AGE CONTROL DATE OF MFG.	INSP.
1	207540-21	C	THRUST CHAMBER,	4054769	3Q64	ANR 142
2	207541-11	C	BODY, THRUST CHAMBER, ASSY OF	4060913	3Q64	ANR 142
2	207548	A	SHELL, THRUST CHAMBER, ASSY OF	8502298		ANR 142
3	207543	N/C	INJECTOR, THRUST CHAMBER, ASSY OF	4064083		ANR 142
2	407561	D	VALVE, OXIDIZER, T/C, ASSY OF	9237802		ANR 142
2	407662	D	VALVE, FUEL, T/C, ASSY OF	9239576		ANR 142

DNA 52-52701-277

SERIAL NO. 4054769

PART NO. 207540-21

SE-7 CONFIGURATION & SERIALIZATION LOG

PART NAME THRUST CHAMBER, 100 LB., ASSY OF

4.1

MCR / ECP NO.	DATE	TITLE	DATE	INSP.
SE6-062	6 JAN 64	COMPONENT CLEANING; PROVISION FOR	14 SEP 64	ANR 142
SE6-064	30 JUL 63	TCA, ACCEPTANCE TESTS; REVISION OF	14 SEP 64	ANR 142
SE6-080	28 DEC 63	THRUST CHAMBER ASSEMBLIES, FABRICATION MATERIAL; APPROVAL OF	14 SEP 64	ANR 142
SE6-133	22 APR 64	TCA PROPELLANT VALVES; ADDITIONAL REQUIREMENTS FOR	14 SEP 64	ANR 142
SE6-139	15 APR 64	PLACEMENT OF HAYNES STELLITE #3 SAND CAST ON APPROVED MATERIAL LIST	14 SEP 64	ANR 142
SE6-144	15 APR 64	TCA INJECTORS; REDESIGN OF	14 SEP 64	ANR 142
SE6-179	16 JUN 64	TUBE STUBS; MARKING OF	14 SEP 64	ANR 142
SE7-041	15 APR 64	85# AND 100# THRUST CHAMBER ASSEMBLIES, PROPELLANT VALVES, INLET TUBES, MATERIAL; CHANGE TO 304L BAR PER QQ-S-763	14 SEP 64	ANR 142
SE7-085	30 APR 64	85 & 100 LB. TCA DIMENSIONS; CHANGES TO	14 SEP 64	ANR 142

DNA 52-52701-277	SERIAL NO.	4054769	
	PART NO.	207540-21	
SE-7 DELIVERABLE END ITEM-MCR VERIFICATION	PART NAME	THRUST CHAMBER, 100 LB., ASSY OF	4.2

R-15075-1

MR NO.	PART OR COMP. INVOLVED	PART NUMBER	SERIAL NUMBER	BRIEF DESCRIPTION OF VARIATION AND MATERIAL REVIEW BOARD DISPOSITION	INSP.
				NONE THIS DATE 14 SEP 64	ANR 206

DNA SERIAL NO. 4054769

52-52701-277 PART NO. 207540-21

SE-7 DELIVERABLE END ITEM — VARIATION LOG

PART NAME THRUST CHAMBER, 100 LB., ASSY OF

4.3

PART NO.	PART NAME	SERIAL NO.	REASON FOR REPLACEMENT	REPLACED BY		INSP.
				PART NO.	SERIAL NO.	
			NONE THIS DATE 14 SEP 64			ANR 208

DNA 52-52701-277

SERIAL NO. 4054769

PART NO. 207540-21

SE-7 DELIVERABLE END ITEM--REPLACEMENT LOG

PART NAME THRUST CHAMBER, 100 LB., ASSY OF

4.4

R-15075-1

SECTION II

487

52-52701-277 PART NO. 207540-21

SE-7 COMPONENT ACCEPTANCE TEST LOG

PART NAME THRUST CHAMBER, 100 LB., ASSY OF

5.0

PERFORMANCE PARAMETERS	PARAGRAPH NUMBER	UNITS	SPECIFICATION LIMITS	ACCEPTANCE TEST DATA	INSP.
ELECTRICAL RESISTANCE TESTS--TCA PROPELLANT VALVES	4.2				
BODY TEMPERATURE					
OXIDIZER	4.2.4	DEGREES F	70 ± 5	70	ANR 208
FUEL	4.2.11	DEGREES F	70 ± 5	70	ANR 208
COIL RESISTANCE					
OXIDIZER	4.2.5	OHMS	42 ± 2	42.13	ANR 208
FUEL	4.2.11	OHMS	42 ± 2	41.78	ANR 208
CONTINUITY RESISTANCE					
OXIDIZER	4.2.9	OHMS	1.0 MAX.	.07	ANR 208
FUEL	4.2.11	OHMS	1.0 MAX.	.414	ANR 208
DIELECTRIC STRENGTH TEST--TCA PROPELLANT VALVES	4.3				
CURRENT LEAKAGE					
OXIDIZER	4.3.8	MICROAMPS	500 MAX.	57	ANR 208
FUEL	4.3.11	MICROAMPS	500 MAX.	52	ANR 208
PROOF PRESSURE TEST--TCA PROPELLANT VALVES	4.4				
VALVES PRESSURIZED FOR NOT LESS THAN 3 MINUTES					
OXIDIZER					
STEP I	4.4.3	PSIG	500	VERIFIED	ANR 208
STEP II	4.4.5	PSIG	500	VERIFIED	ANR 208

SPECIFICATION NUMBER RA0220-349 | REVISION B | AMENDMENT NONE

DNA 52-52701-277 | SERIAL NO. 4054769 | PART NO. 207540-21

SE-7 COMPONENT ACCEPTANCE TEST

PART NAME THRUST CHAMBER, 100 LB., ASSY OF

PERFORMANCE PARAMETERS	PARAGRAPH NUMBER	UNITS	SPECIFICATION LIMITS	ACCEPTANCE TEST DATA	INSP.
PROOF PRESSURE TEST--TCA PROPELLANT VALVES (CONTINUED)	4.4				
FUEL					
STEP I	4.4.7	PSIG	500	VERIFIED	ANR 208
STEP II	4.4.7	PSIG	500	VERIFIED	ANR 208
INSPECTED VISUALLY FOR DAMAGE OR DEFORMATION					
OXIDIZER					
STEP I	4.4.4	DNA	NONE ALLOWED	NONE DETECTED	ANR 208
STEP II	4.4.5	DNA	NONE ALLOWED	NONE DETECTED	ANR 208
FUEL					
STEP I	4.4.7	DNA	NONE ALLOWED	NONE DETECTED	ANR 208
STEP II	4.4.7	DNA	NONE ALLOWED	NONE DETECTED	ANR 208

SPECIFICATION NUMBER	REVISION	AMENDMENT			
RA0220-349	B	NONE	DNA	SERIAL NO.	4054769
			52-52701-277	PART NO.	207540-21

SE-7 COMPONENT ACCEPTANCE TEST

PART NAME THRUST CHAMBER, 100 LB., ASSY OF

5.1.1

PERFORMANCE PARAMETERS	PARAGRAPH NUMBER	UNITS	SPECIFICATION LIMITS	ACCEPTANCE TEST DATA	INSP.
PROOF PRESSURE AND LEAKAGE TEST--THRUST CHAMBER	4.5				
PROOF PRESSURE TEST					
THRUST CHAMBER PRESSURIZED FOR NOT LESS THAN 5 MINUTES AT					
STEP I	4.5.8	PSIG	392 ± 10	VERIFIED	ANR 208
STEP II	4.5.10	PSIG	392 ± 10	VERIFIED	ANR 208
LEAKAGE TEST					
STEP I	4.5.8	DNA	NONE ALLOWED	NONE DETECTED	ANR 208
STEP II	4.5.10	DNA	NONE ALLOWED	NONE DETECTED	ANR 208
INSPECTED VISUALLY FOR DAMAGE OR DEFORMATION	4.5.14	DNA	NONE ALLOWED	NONE DETECTED	ANR 208
FUNCTIONAL TEST--TCA PROPELLANT VALVES	4.6				
OPENING RESPONSE TIME					
OXIDIZER	4.6.17	SEC.	0.021 MAX.	.0185	ANR 208
FUEL	4.6.8	SEC.	0.021 MAX.	.0175	ANR 208
CLOSING RESPONSE TIME					
OXIDIZER	4.6.17	SEC.	0.005 MAX.	.0032	ANR 208
FUEL	4.6.10	SEC.	0.005 MAX.	.0033	ANR 208
CLOSING DROP OUT VOLTAGE					
OXIDIZER	4.6.17	VOLT (DC)	1 MIN.	2.1	ANR 208
FUEL	4.6.13	VOLT (DC)	1 MIN.	2	ANR 208

SPECIFICATION NUMBER	REVISION	AMENDMENT			
RA0220-349	B	NONE	DNA	SERIAL NO.	4054769
			52-52701-277	PART NO.	207540-21

SE-7 COMPONENT ACCEPTANCE TEST

PART NAME THRUST CHAMBER, 100 LB., ASSY OF

5.1.2

PERFORMANCE PARAMETERS	PARAGRAPH NUMBER	UNITS	SPECIFICATION LIMITS	ACCEPTANCE TEST DATA	INSP.
LEAKAGE TEST -TCA PROPELLANT VALVES	4.7				
SEAT LEAKAGE RATE					
OXIDIZER	4.7.17	SCC/MIN	2.23 MAX.	LESS THAN 0.1	ANR 208
FUEL	4.7.22	SCC/MIN	2.23 MAX.	LESS THAN 0.1	ANR 208
PRE-TEST DATA					
DRY WEIGHT (EXCLUDING PROTECTIVE COVERS & CLOSURES)	4.1.3	LB.	DNA	8.86	ANR 208
NOZZLE EXIT DIAMETER					
SECTION A-A		INCH	DNA	4.450	ANR 208
THROAT DIAMETER					
SECTION A-A		INCH	DNA	.708	ANR 208
B-B		INCH	DNA	.708	ANR 208
C-C		INCH	DNA	.708	ANR 208
D-D		INCH	DNA	.708	ANR 208
POST HOT-FIRE DATA					
PROOF PRESSURE TEST					
DRY WEIGHT (EXCLUDING PROTECTIVE COVERS & CLOSURES)	4.14.1	LB.	DNA	8.85	ANR 208
THRUST CHAMBER PRESSURIZED FOR NOT LESS THAN 5 MINUTES					

SPECIFICATION NUMBER RA0220-349 | REVISION B | AMENDMENT NONE

DNA | SERIAL NO. 4054769
52-52701-277 | PART NO. 207540-21

SE-7 COMPONENT ACCEPTANCE TEST | PART NAME THRUST CHAMBER, 100 LB., ASSY OF | 5.1.3

PERFORMANCE PARAMETERS	PARAGRAPH NUMBER	UNITS	SPECIFICATION LIMITS	ACCEPTANCE TEST DATA	INSP.
POST HOT-FIRE DATA (CONTINUED)					
PROOF PRESSURE TEST					
STEP I	4.14.5	PSIG	392 ± 10	392	ANR 208
STEP II	4.14.5	PSIG	392 ± 10	392	ANR 208
LEAKAGE TEST THRUST CHAMBER					
STEP I	4.14.5	DNA	NONE ALLOWED	NONE DETECTED	ANR 208
STEP II	4.14.5	DNA	NONE ALLOWED	NONE DETECTED	ANR 208
INSPECTED VISUALLY FOR DAMAGE OR DEFORMATION	4.14.5	DNA	NONE ALLOWED	NONE DETECTED	ANR 208
LEAKAGE TEST--TCA PROPELLANT VALVES					
SEAT LEAKAGE RATE					
OXIDIZER	4.14.5	SCC/MIN	2.23 MAX.	LESS THAN 0.1	ANR 208
FUEL	4.14.5	SCC/MIN	2.23 MAX.	LESS THAN 0.1	ANR 208
LEAK TEST--WELDED JOINTS					
LEAK TEST					
PRESSURIZED INLET TUBE WITH GASEOUS HELIUM					
OXIDIZER	4.14.6	PSIG	500 ± 10	VERIFIED	ANR 208
FUEL	4.14.9	PSIG	500 ± 10	VERIFIED	ANR 208

SPECIFICATION NUMBER	REVISION	AMENDMENT			
RA0220-349	B	NONE	DNA	SERIAL NO.	4054769
			52-52701-277	PART NO.	207540-21
SE-7 COMPONENT ACCEPTANCE TEST			PART NAME	THRUST CHAMBER, 100 LB., ASSY OF	5.1.4

PERFORMANCE PARAMETERS	PARAGRAPH NUMBER	UNITS	SPECIFICATION LIMITS	ACCEPTANCE TEST DATA	INSP.
LEAK TEST--WELDED JOINTS (CONTINUED)					
JOINT LEAKAGE RATE					
OXIDIZER	4.14.7	SCC/SEC	10^{-6} MAX.	LESS THAN 10^{-6}	ANR 208
FUEL	4.14.9	SCC/SEC	10^{-6} MAX.	LESS THAN 10^{-6}	ANR 208
INSPECTED VISUALLY FOR CLEANLINESS, CORROSION, DETERIORATION, DAMAGE OR DEFORMATION	4.14.10	DNA	NONE ALLOWED	NONE DETECTED	ANR 208
NOZZLE EXIT DIAMETER					
SECTION A-A		INCH	DNA	4.450	ANR 208
THROAT DIAMETER (DELIVERED CONDITION)	4.15.1				
SECTION A-A		INCH	DNA	.708	ANR 208
B-B		INCH	DNA	.708	ANR 208
C-C		INCH	DNA	.708	ANR 208
D-D		INCH	DNA	.708	ANR 208
DRY WEIGHT (DELIVERABLE CONDITION) (EXCLUDING PROTECTIVE COVERS & CLOSURES)	4.15.2	LB.	DNA	8.68	ANR 208
INSPECTED VISUALLY FOR CLEANLINESS, CORROSION, DETERIORATION, DAMAGE OR DEFORMATION	4.15.3	DNA	NONE ALLOWED	NONE DETECTED	ANR 208

SPECIFICATION NUMBER	REVISION	AMENDMENT			
RA0220-349	B	NONE	DNA	SERIAL NO.	4054769
			52-52701-277	PART NO.	207540-21
SE- 7 COMPONENT ACCEPTANCE TEST			PART NAME	THRUST CHAMBER, 100 LB., ASSY OF	5.1.5

CONFIDENTIAL

494

CHARACTERISTICS	UNITS	SPECIFICATION LIMITS	RUN 233 TEST DATA	RUN ***** TEST DATA	RUN ***** TEST DATA	RUN 234 FINAL TEST DATA	INSP.
HOT FIRE TEST DATA--TEST SITE	-	-	NFL	-	-	NFL	ANR 990
CELL LOCATION	-	-	1-A	-	-	1-A	ANR 990
CELL NUMBER	-	-	379	-	-	379	ANR 990
TEST DATE	-	-	27 Aug 64	-	-	27 Aug 64	ANR 990
TEST DURATION	SEC.	3 MIN.	3.0	-	-	3.0	ANR 990
ENVIRONMENTAL Pc	PSIA	0.16 MAX	.0810	-	-	.0812	ANR 990
AMBIENT PRESSURE	PSIA	DNA	12.08	-	-	12.08	ANR 990
AMBIENT TEMPERATURE	°F	DNA	82.0	-	-	82.0	ANR 990
TIME OF DATA SLICE-START	SEC.	DNA	2.8	-	-	2.8	ANR 990
TIME OF DATA SLICE-END	SEC.	DNA	2.8	-	-	2.8	ANR 990
OXIDIZER TEMPERATURE	°F	DNA	68.0	-	-	70.0	ANR 990
FUEL TEMPERATURE	°F	DNA	67.0	-	-	68.0	ANR 990
OXIDIZER DENSITY	LB/FT^3	DNA	91.25	-	-	91.15	ANR 990
FUEL DENSITY	LB/FT^3	DNA	54.63	-	-	54.60	ANR 990

R-15075-1

SPECIFICATION NUMBER	REVISION	AMENDMENT		
RAO 220-349	B	N/C	DNA	SERIAL NO. 4054769
			52-52701-277	PART NO. 207540-21

SE- 7 (REA) CALIBRATED PERFORMANCE DATA

PART NAME THRUST CHAMBER,100 LB ASSY OF

5.2

~~CONFIDENTIAL~~

CONFIDENTIAL

THIS MATERIAL CONTAINS INFORMATION AFFECTING THE NATIONAL DEFENSE OF THE UNITED STATES WITHIN THE MEANING OF THE ESPIONAGE LAWS, TITLE 18 U.S.C., SECTIONS 793 AND 794. ITS TRANSMISSION OR THE REVELATION OF ITS CONTENTS IN ANY MANNER TO AN UNAUTHORIZED PERSON IS PROHIBITED BY LAW.

GROUP 4
Downgraded at 3 year intervals;
declassified after 12 years

R-15075-1

CHARACTERISTICS	UNITS	SPECIFICATION LIMITS	RUN 233 TEST DATA	RUN ****** TEST DATA	RUN ***** TEST DATA	RUN 234 FINAL TEST DATA	INSP.
HOT FIRE TEST DATA--TEST SITE	-	-	NFL	-	-	NFL	
OXIDIZER INLET PRESSURE	PSIA	283 ± 10	283.7	-	-	283.7	
FUEL INLET PRESSURE	PSIA	286 ± 10	287.2	-	-	288.7	
OXIDIZER FLOWRATE	LB/SEC	DNA	.1890	-	-	.1894	
FUEL FLOWRATE	LB/SEC	DNA	.1188	-	-	.1186	
THRUST	LB.	DNA	94.1	-	-	93.8	
MIXTURE RATIO	O/F	DNA	1.59	-	-	1.60	
SPECIFIC IMPULSE	SEC	DNA	306.	-	-	304.	
INJECTOR END Pc	PSIA	DNA	134.1	-	-	132.5	
CHARACTERISTIC VELOCITY	FT/SEC	DNA	5519.	-	-	5450.	
THROAT DIAMETER	INCH	DNA	.708	-	-	.708	
FUEL ORIFICE DIAMETER	INCH	DNA	.07805	-	-	.07805	
OXIDIZER ORIFICE DIAMETER	INCH	DNA	.08616	-	-	.08616	
TCA FIRING TIME (TOTAL)	SEC	10 MAX.	3.0	-	-	6.0	
OXIDIZER SAMPLE NUMBER	-	-	300.	-	-	300.	
FUEL SAMPLE NUMBER	-	-	303.	-	-	303.	

495

SPECIFICATION NUMBER	REVISION	AMENDMENT		
RAO 220-349	B	N/C	DNA 52-52701-277	SERIAL NO. 4054769 PART NO. 207540-21

SE- 7 (REA) CALIBRATED PERFORMANCE DATA

PART NAME THRUST CHAMBER 100 LB ASSY CF

5.2.3

CONFIDENTIAL

GROUP 4
Downgraded at 3 year intervals:

CONFIDENTIAL

THIS MATERIAL CONTAINS INFORMATION AFFECTING THE NATIONAL DEFENSE OF THE UNITED STATES WITHIN THE MEANING OF THE ESPIONAGE LAWS, TITLE 18 U.S.C., SECTIONS 793 AND 794. ITS TRANSMISSION OR THE REVELATION OF ITS CONTENTS IN ANY MANNER TO AN UNAUTHORIZED PERSON IS PROHIBITED BY LAW.

GROUP 4
Downgraded at 3 year intervals;
declassified after 12 years

CHARACTERISTICS	UNITS	SPECIFICATION LIMITS	RUN 233 TEST DATA	RUN ***** TEST DATA	RUN ****** TEST DATA	RUN 234 FINAL TEST DATA	INSP.
HOT FIRE TEST DATA--TEST SITE	-	-	NFL	-	-	NFL	
ADJUST TO STANDARD CONDITIONS							
THRUST	LB.	94.5 ± 4.7	94.9	-	-	94.4	
MIXTURE RATIO	O/F	1.60 ± .06	1.58	-	-	1.60	
SPECIFIC IMPULSE	SEC	DNA	310.	-	-	309.	
INJECTOR END Pc	PSIA	DNA	133.4	-	-	131.7	
CHARACTERISTIC VELOCITY	FT/SEC	DNA	5516.	-	-	5450.	
ADJUST TO RATED CONDITIONS							
THRUST	LB.	94.5	94.5	-	-	94.5	
MIXTURE RATIO	O/F	1.60	1.60	-	-	1.60	
SPECIFICATION LIMITS	SEC	280 MIN.	310.	-	-	309.	

SPECIFICATION NUMBER	REVISION	AMENDMENT
RAO 220-349 RAO 220-232	B NC	N/C #1

DNA 52-52701-277 SERIAL NO. 4054769
PART NO. 207540-21

SE-7 (REA) CALIBRATED PERFORMANCE DATA

PART NAME THRUST CHAMBER 100 LB ASSY CF

5.2.2

CONFIDENTIAL
Downgraded at 3 year intervals;
declassified after 12 years

R-15075-1

THE FOLLOWING IS INFORMATION RELATIVE TO THE CLEANLINESS LEVEL OF THE PROPELLANT UTILIZED IN THE HOT-FIRE ACCEPTANCE TEST OF THE THRUST CHAMBER ASSEMBLY.

THE INFLUENT PARTICULATE COUNT OF THE PROPELLANT WAS:

		LIMITS	ACTUAL COUNT MMH - FUEL	ACTUAL COUNT NTO - OXID
	< 10	*	DNA	DNA
	10 - 25	100	89	23
	25 - 50	20	16	12
	50 - 100	5	2	1
	100 - 300	1	1	1
	300 - 1000	0	0	0
	> 1000	0	0	0
FIBERS	300 - 3000	0	0	0
FIBERS	> 3000	0	0	0

* NOTE: " NOT TO BE COUNTED BUT NO SLURRY OF FINE PARTICLES WHICH COVERS MORE THAN AN ESTIMATED 5 PERCENT OF THE TOTAL EFFECTIVE FILTER AREA SHALL BE ALLOWED." AT THE DISCRETION OF QUALITY ASSURANCE, A WEIGHT DETERMINATION OF TOTAL CONTAMINATION MAY BE MADE AS A REFEREE TEST IN BORDERLINE CASES. THE MAXIMUM ALLOWABLE WEIGHT OF CONTAMINANTS SHALL BE 0.001 GRAM (1 MG).

CLASS 4

INSP. ANR 208

SCD52-52701-277
S/N 4060932

CONFIDENTIAL

"CERTIFICATION IS HEREBY GIVEN THAT THE DELIVERABLE END ITEM COVERED BY THIS LOG BOOK WAS MANUFACTURED, INSPECTED AND TESTED IN ACCORDANCE WITH PRESCRIBED DRAWINGS, SPECIFICATION AND QUALITY ASSURANCE PROVISIONS. INSPECTION AND TEST RECORDS ARE ON FILE VERIFYING COMPLIANCE WITH APPLICABLE DRAWINGS AND SPECIFICATIONS, EXCEPT AS NOTED HEREIN"

LOG BOOK ACCEPTANCE

DAT UNIT #17 (CRD #16)

SPACE ENGINES ENGINEERING	SPACE ENGINES QUALITY CONTROL	McDONNELL QUALITY REPRESENTATIVE	GOV'T INSPECTION AGENCY QUALITY REPRESENTATIVE
M. H. Marolin	Wm E. Ritz	C. W. Michaels	[illegible]
DATE 8-24-64	DATE 8/24/64	DATE 24 AUGUST 1964	DATE 24 AUG 64

CONTENTS

SECTION I – DELIVERABLE END ITEM ASSEMBLY LOG

RECORDS CONTAINED IN THIS SECTION ARE PERTINENT TO THE DELIVERABLE END ITEM ACCEPTANCE AND ALSO INCLUDE MODEL CONFIGURATION DATA, PERTINENT DETAILS OF SHORT SHIPMENTS, COMPONENT VARIATIONS, AGE SENSITIVE PARTS RECORD, WEIGHT AND SERIALIZATION RECORDS.

SECTION II – ACCEPTANCE TEST LOG

RECORDS OF ASSEMBLY ACCEPTANCE TESTS ARE PRESENTED IN THIS SECTION WITH PERFORMANCE DATA AND SUMMARY DATA ON INSPECTIONS AND ACCEPTANCE.

GENERAL INFORMATION

THIS LOG BOOK IS PROVIDED FOR SERVICE USE IN RECORDING PERTINENT HISTORICAL DATA AND ALL CHANGES FROM THE ORIGINAL CONFIGURATION. IT IS REQUESTED THIS LOG BOOK ACCOMPANY THE DELIVERABLE END ITEM WHEN TRANSFERRED BETWEEN ROCKETDYNE AND USING AGENCIES.

GROUP-4
Downgraded at 3 year intervals;
declassified after 12 years

ROCKETDYNE – SPACE ENGINES
A DIVISION OF NORTH AMERICAN AVIATION, INC.

LOG BOOK SPECIFICS

McDONNELL	ITEM	ROCKETDYNE
THIS MATERIAL CONTAINS INFORMATION AFFECTING THE NATIONAL DEFENSE OF THE UNITED STATES WITHIN THE MEANING OF THE ESPIONAGE LAWS, TITLE 18 U.S.C., SECTIONS 793 AND 794. ITS TRANSMISSION OR THE REVELATION OF ITS CONTENTS IN ANY MANNER TO AN UNAUTHORIZED PERSON IS PROHIBITED BY LAW.		
	LOG BOOK DATE	24 AUGUST 1964
	DWG CHG LTR	DNA
Y20161R	CONTRACT NO.	
	GEN ORDER NO.	5252
SCD52-52701-277	SPEC NO.	
DNA	SERIAL NO.	4060932
52-52701-277	PART NO.	207540-21

SE-7 DELIVERABLE END ITEM – LOG BOOK IDENTIFICATION

PART NAME THRUST CHAMBER ASSEMBLY, 100 LB.

1.0

R-15075-1

CONFIDENTIAL

DELIVERABLE END ITEM

THIS LOG BOOK CONTAINS INFORMATION PERTINENT TO THE DELIVERABLE END ITEM AS SPECIFIED HEREIN BY SERIAL NUMBER AND PART NUMBER. IT IS NECESSARY THAT ALL ENTRIES BE WRITTEN IN INK OR TYPED FOR PERMANENT RECORD. ENTRIES SUCH AS SERIALIZATION, WEIGHT, APPLICABLE MCR'S, ACCEPTANCE TEST DATA AND CALIBRATION DATA WILL BE ENTERED BY ROCKETDYNE AT THE TIME OF DELIVERY.

IT IS REQUESTED THAT THIS LOG BOOK ACCOMPANY THIS DELIVERABLE END ITEM IF THE ITEM IS RETURNED TO ROCKETDYNE FOR REPAIR, MODIFICATION OR RETEST. ROCKETDYNE WILL THEN ENTER REPAIR, MODIFICATION AND RETEST DATA IN THIS LOG BOOK.

THE FORMAT OF PAGES IN THIS LOG BOOK SHALL NOT BE REVISED WITHOUT OBTAINING APPROVAL OF ROCKETDYNE SPACE ENGINES QUALITY CONTROL.

	DNA	SERIAL NO.	4060932
	52-52701-277	PART NO.	207540-21
FOREWORD--SE-7 LOG BOOK	PART NAME	THRUST CHAMBER ASSEMBLY, 100 LB.	2.0

1.0 LOG BOOK IDENTIFICATION

2.0 FOREWORD

3.0 CONTENTS

4.0 MODULE/COMPONENT ASSEMBLY LOG--SECTION I

4.1 CONFIGURATION & SERIALIZATION LOG

4.2 MCR VERIFICATION

4.3 VARIATION LOG

4.4 REPLACEMENT LOG

5.0 COMPONENT ACCEPTANCE TEST LOG--SECTION II

5.1 COMPONENT ACCEPTANCE TEST

5.1.1 COMPONENT ACCEPTANCE TEST

5.1.2 COMPONENT ACCEPTANCE TEST

5.1.3 COMPONENT ACCEPTANCE TEST

5.1.4 COMPONENT ACCEPTANCE TEST

5.1.5 COMPONENT ACCEPTANCE TEST

5.2 CALIBRATED PERFORMANCE DATA

5.2.1 CALIBRATED PERFORMANCE DATA

5.2.2 CALIBRATED PERFORMANCE DATA

5.3 INFORMATION--CONTAMINATION

SECTION I

52-52701-277 PART NO. 207540-21

SE-7 MODULE / COMPONENT ASSEMBLY LOG

PART NAME THRUST CHAMBER, 100 LB., ASSY OF 4.0

502

IND. NO.	PART NUMBER	REV. LTR.	PART NAME	SERIAL NO.	AGE CONTROL DATE OF MFG.	INSP.
1	207540-21	DNA	THRUST CHAMBER, 100 LB. ASSEMBLY	4060932	2Q64	ANR 209
2	207541-11	DNA	BODY, THRUST CHAMBER, ASSY OF	4059333	2Q64	ANR 209
2	207548	DNA	SHELL, THRUST CHAMBER, ASSY OF	8502285		ANR 208
3	207543	DNA	INJECTOR, THRUST CHAMBER, ASSY OF	4060483		ANR 208
2	407561	DNA	VALVE, OXIDIZER, T/C, ASSY OF	9237782		ANR 208
2	407662	DNA	VALVE, FUEL, T/C, ASSY OF	9239568		ANR 208

DNA SERIAL NO. 4060932

52-52701-277 PART NO. 207540-21

SE-7 CONFIGURATION & SERIALIZATION LOG

PART NAME THRUST CHAMBER ASSEMBLY, 100 LB.

4.1

R-15075-1

MCR / ECP NO.	DATE	TITLE	DATE	INSP.
SE6-62	6JAN64	COMPONENT CLEANING; PROVISION FOR	24 AUG 64	ANR 208
SE6-64	30JUL64	TCA, ACCEPTANCE TESTS; REVISION OF	24 AUG 64	ANR 208
SE6-80	28DEC63	THRUST CHAMBER ASSEMBLIES, FABRICATION MATERIAL; APPROVAL OF	24 AUG 64	ANR 208
SE6-85	30JUL63	CUSTOMER TEST SURVEILLANCE; REQUIREMENT FOR	24 AUG 64	ANR 208
SE6-133	22APR64	TCA PROPELLANT VALVES; ADDITIONAL REQUIREMENTS FOR	24 AUG 64	ANR 208
SE6-139	15APR64	PLACEMENT OF HAYNES STELLITE #3 SAND CAST ON APPROVED MATERIAL LIST	24 AUG 64	ANR 208
SE6-144	15APR64	TCA INJECTORS; REDESIGN OF	24 AUG 64	ANR 208
SE6-179	16JUN64	TUBE STUBS; MARKING OF	24 AUG 64	ANR 208
SE6-233	7AUG64	ELECTRICAL CONNECTOR "O" RINGS; REPLACEMENT OF	24 AUG 64	ANR 208
SE7-41	15APR64	85# AND 100# THRUST CHAMBER ASSEMBLIES, PROPELLANT VALVES, INLET TUBES, MATERIAL; CHANGE TO 304L BAR PER QQ-S-763	24 AUG 64	ANR 208
SE7-85	30APR64	85 AND 100 LB. TCA DIMENSIONS; CHANGES TO	24 AUG 64	ANR 208

VIEW A

DNA SERIAL NO. 4060932

52-52701-277 PART NO. 207540-21

SE-7 DELIVERABLE END ITEM-MCR VERIFICATION

PART NAME THRUST CHAMBER ASSEMBLY, 100 LB.

4.2

MR NO.	PART OR COMP. INVOLVED	PART NUMBER	SERIAL NUMBER	BRIEF DESCRIPTION OF VARIATION AND MATERIAL REVIEW BOARD DISPOSITION	INSP.
600-N-5 C21045	SE-7	207540-21	4060932	DISCREPANCY: 1 PC .196 $^{+.006}_{-.000}$ SLOTTED HOLE IN 207548-7 TAB. REF ZONE 5 OF 207540 B/P IS .210 AT END OF HOLE NEAREST 207548-5 FLANGE & .208 AT OPPOSITE END OF SAME HOLE. DISPOSITION: ACCEPTABLE AS IS.	ANA 721
600-N-5 C17132	SE-7	207540-21	4060932	DISCREPANCY: THE .052 DIA HOLE INSIDE OF P/C BOSS HAS INDENTATION AT ONE SIDE WHERE BROKEN DRILL WAS REMOVED WITH ELOX APPROXIMATELY .050 DIA X .050 IN DEPTH. PISPOSITION: USE AS IS	ANA 721

R-15075-1

DNA	SERIAL NO.	4060932	
52-52701-277	PART NO.	207540-21	
SE-7 DELIVERABLE END ITEM — VARIATION LOG	PART NAME	THRUST CHAMBER ASSEMBLY, 100 LB.	4.3

R-15075-1

PART NO.	PART NAME	SERIAL NO.	REASON FOR REPLACEMENT	REPLACED BY		INSP.
				PART NO.	SERIAL NO.	
			NONE THIS DATE - 24 AUGUST 1964			ANR 208

DNA	SERIAL NO.	4060932	
52-52701-277	PART NO.	207540-21	
SE-7 DELIVERABLE END ITEM--REPLACEMENT LOG	PART NAME	THRUST CHAMBER ASSEMBLY, 100 LB.	4.4

SECTION II

52-52701-277 PART NO. 207540-21

SE-7 COMPONENT ACCEPTANCE TEST LOG

PART NAME THRUST CHAMBER ASSEMBLY, 100 LB.

5.0

R-15075-1

PERFORMANCE PARAMETERS	PARAGRAPH NUMBER	UNITS	SPECIFICATION LIMITS	ACCEPTANCE TEST DATA	INSP.
ELECTRICAL RESISTANCE TESTS--TCA PROPELLANT VALVES	4.2				
BODY TEMPERATURE					
OXIDIZER	4.2.4	DEGREES F	70 ± 5	71	ANR 208
FUEL	4.2.11	DEGREES F	70 ± 5	71	ANR 208
COIL RESISTANCE					
OXIDIZER	4.2.5	OHMS	42 ± 2	41.67	ANR 208
FUEL	4.2.11	OHMS	42 ± 2	41.00	ANR 208
CONTINUITY RESISTANCE					
OXIDIZER	4.2.9	OHMS	1.0 MAX.	.260	ANR 208
FUEL	4.2.11	OHMS	1.0 MAX.	.294	ANR 208
DIELECTRIC STRENGTH TEST--TCA PROPELLANT VALVES	4.3				
CURRENT LEAKAGE					
OXIDIZER	4.3.8	MICROAMPS	500 MAX.	70	ANR 208
FUEL	4.3.11	MICROAMPS	500 MAX.	74	ANR 208
PROOF PRESSURE TEST--TCA PROPELLANT VALVES	4.4				
VALVES PRESSURIZED FOR NOT LESS THAN 3 MINUTES					
OXIDIZER					
STEP I	4.4.3	PSIG	500	VERIFIED	ANR 208
STEP II	4.4.5	PSIG	500	VERIFIED	ANR 208

507

SPECIFICATION NUMBER	REVISION	AMENDMENT			
RA0220-349	B	NONE	DNA 52-52701-277	SERIAL NO. 4060932	PART NO. 207540-21

SE-7 COMPONENT ACCEPTANCE TEST

PART NAME THRUST CHAMBER ASSEMBLY, 100 LB.

PERFORMANCE PARAMETERS	PARAGRAPH NUMBER	UNITS	SPECIFICATION LIMITS	ACCEPTANCE TEST DATA	INSP.
PROOF PRESSURE TEST--TCA PROPELLANT VALVES (CONTINUED)	4.4				
FUEL					
STEP I	4.4.7	PSIG	500	VERIFIED	ANR 208
STEP II	4.4.7	PSIG	500	VERIFIED	ANR 208
INSPECTED VISUALLY FOR DAMAGE OR DEFORMATION					
OXIDIZER					
STEP I	4.4.4	DNA	NONE ALLOWED	NONE DETECTED	ANR 208
STEP II	4.4.5	DNA	NONE ALLOWED	NONE DETECTED	ANR 208
FUEL					
STEP I	4.4.7	DNA	NONE ALLOWED	NONE DETECTED	ANR 208
STEP II	4.4.7	DNA	NONE ALLOWED	NONE DETECTED	ANR 208

SPECIFICATION NUMBER	REVISION	AMENDMENT			
RA0220-349	B	NONE	DNA	SERIAL NO.	4060932
			52-52701-277	PART NO.	207540-21
SE-7 COMPONENT ACCEPTANCE TEST			PART NAME	THRUST CHAMBER ASSEMBLY, 100 LB.	5.1.1

PERFORMANCE PARAMETERS	PARAGRAPH NUMBER	UNITS	SPECIFICATION LIMITS	ACCEPTANCE TEST DATA	INSP.
PROOF PRESSURE AND LEAKAGE TEST--THRUST CHAMBER	4.5				
PROOF PRESSURE TEST					
THRUST CHAMBER PRESSURIZED FOR NOT LESS THAN 5 MINUTES AT					
STEP I	4.5.8	PSIG	392 ± 10	VERIFIED	ANR 208
STEP II	4.5.10	PSIG	392 ± 10	VERIFIED	ANR 208
LEAKAGE TEST					
STEP I	4.5.8	DNA	NONE ALLOWED	NONE DETECTED	ANR 208
STEP II	4.5.10	DNA	NONE ALLOWED	NONE DETECTED	ANR 208
INSPECTED VISUALLY FOR DAMAGE OR DEFORMATION	4.5.14	DNA	NONE ALLOWED	NONE DETECTED	ANR 208
FUNCTIONAL TEST--TCA PROPELLANT VALVES	4.6				
OPENING RESPONSE TIME					
OXIDIZER	4.6.17	SEC.	0.021 MAX.	.018	ANR 208
FUEL	4.6.8	SEC.	0.021 MAX.	.017	ANR 208
CLOSING RESPONSE TIME					
OXIDIZER	4.6.17	SEC.	0.005 MAX.	.0025	ANR 208
FUEL	4.6.10	SEC.	0.005 MAX.	.0036	ANR 208
CLOSING DROP OUT VOLTAGE					
OXIDIZER	4.6.17	VOLT (DC)	1 MIN.	2.2	ANR 208
FUEL	4.6.13	VOLT (DC)	1 MIN.	1.6	ANR 208

SPECIFICATION NUMBER	REVISION	AMENDMENT
RA0220-349	B	NONE

DNA SERIAL NO. 4060932

52-52701-277 PART NO. 207540-21

SE-7 COMPONENT ACCEPTANCE TEST

PART NAME THRUST CHAMBER ASSEMBLY, 100 LB.

PERFORMANCE PARAMETERS	PARAGRAPH NUMBER	UNITS	SPECIFICATION LIMITS	ACCEPTANCE TEST DATA	INSP.
LEAKAGE TEST -TCA PROPELLANT VALVES	4.7				
SEAT LEAKAGE RATE					
OXIDIZER	4.7.17	SCC/MIN	2.23 MAX.	LESS THAN 0.1	ANR 208
FUEL	4.7.22	SCC/MIN	2.23 MAX.	LESS THAN 0.1	ANR 208
PRE-TEST DATA					
DRY WEIGHT (EXCLUDING PROTECTIVE COVERS & CLOSURES)	4.1.3	LB.	DNA	9.17	ANR 208
NOZZLE EXIT DIAMETER					
SECTION A-A		INCH	DNA	4.456	ANR 208
THROAT DIAMETER					
SECTION A-A		INCH	DNA	.709	ANR 208
B-B		INCH	DNA	.709	ANR 208
C-C		INCH	DNA	.709	ANR 208
D-D		INCH	DNA	.709	ANR 208
POST HOT-FIRE DATA					
PROOF PRESSURE TEST					
DRY WEIGHT (EXCLUDING PROTECTIVE COVERS & CLOSURES)	4.14.1	LB.	DNA	9.15	ANR 208
THRUST CHAMBER PRESSURIZED FOR NOT LESS THAN 5 MINUTES					

SPECIFICATION NUMBER	REVISION	AMENDMENT			
RA0220-349	B	NONE	DNA	SERIAL NO.	4060932
			52-52701-277	PART NO.	207540-21
SE-7 COMPONENT ACCEPTANCE TEST			PART NAME	THRUST CHAMBER ASSEMBLY, 100 LB.	5.1.3

PERFORMANCE PARAMETERS	PARAGRAPH NUMBER	UNITS	SPECIFICATION LIMITS	ACCEPTANCE TEST DATA	INSP.
POST HOT-FIRE DATA (CONTINUED)					
PROOF PRESSURE TEST					
STEP I	4.14.5	PSIG	392 ± 10	VERIFIED	ANR 208
STEP II	4.14.5	PSIG	392 ± 10	VERIFIED	ANR 208
LEAKAGE TEST THRUST CHAMBER					
STEP I	4.14.5	DNA	NONE ALLOWED	NONE DETECTED	ANR 208
STEP II	4.14.5	DNA	NONE ALLOWED	NONE DETECTED	ANR 208
INSPECTED VISUALLY FOR DAMAGE OR DEFORMATION	4.14.5	DNA	NONE ALLOWED	NONE DETECTED	ANR 208
LEAKAGE TEST--TCA PROPELLANT VALVES					
SEAT LEAKAGE RATE					
OXIDIZER	4.14.5	SCC/MIN	2.23 MAX.	LESS THAN 0.1	ANR 208
FUEL	4.14.5	SCC/MIN	2.23 MAX.	LESS THAN 0.1	ANR 208
LEAK TEST--WELDED JOINTS					
LEAK TEST					
PRESSURIZED INLET TUBE WITH GASEOUS HELIUM					
OXIDIZER	4.14.6	PSIG	500 ± 10	VERIFIED	ANR 208
FUEL	4.14.9	PSIG	500 ± 10	VERIFIED	ANR 208

SPECIFICATION NUMBER	REVISION	AMENDMENT			
RA0220-349	"B"	NONE	DNA 52-52701-277	SERIAL NO. 4060932	PART NO. 207540-21
SE-7 COMPONENT ACCEPTANCE TEST			PART NAME THRUST CHAMBER ASSEMBLY, 100 LB.		5.1.4

PERFORMANCE PARAMETERS	PARAGRAPH NUMBER	UNITS	SPECIFICATION LIMITS	ACCEPTANCE TEST DATA	INSP.
LEAK TEST--WELDED JOINTS (CONTINUED)					
JOINT LEAKAGE RATE					
OXIDIZER	4.14.7	SCC/SEC	10^{-6} MAX.	LESS THAN 10^{-6}	ANR 208
FUEL	4.14.9	SCC/SEC	10^{-6} MAX.	LESS THAN 10^{-6}	ANR 208
INSPECTED VISUALLY FOR CLEANLINESS, CORROSION, DETERIORATION, DAMAGE OR DEFORMATION	4.14.10	DNA	NONE ALLOWED	NONE DETECTED	ANR 208
NOZZLE EXIT DIAMETER					
SECTION A-A		INCH	DNA	4.456	ANR 208
THROAT DIAMETER (DELIVERED CONDITION)	4.15.1				
SECTION A-A		INCH	DNA	.708	ANR 208
B-B		INCH	DNA	.709	ANR 208
C-C		INCH	DNA	.708	ANR 208
D-D		INCH	DNA	.708	ANR 208
DRY WEIGHT (DELIVERABLE CONDITION) (EXCLUDING PROTECTIVE COVERS & CLOSURES)	4.15.2	LB.	DNA	8.99	ANR 208
INSPECTED VISUALLY FOR CLEANLINESS, CORROSION, DETERIORATION, DAMAGE OR DEFORMATION	4.15.3	DNA	NONE ALLOWED	NONE DETECTED	ANR 208

SPECIFICATION NUMBER	REVISION	AMENDMENT			
RA0220-349	B	NONE	DNA	SERIAL NO.	4060932
			52-52701-277	PART NO.	207540-21
SE- 7 COMPONENT ACCEPTANCE TEST			PART NAME THRUST CHAMBER ASSEMBLY, 100 LB.		5.1.5

R-15075-1

CHARACTERISTICS	UNITS	SPECIFICATION LIMITS	RUN ***** TEST DATA	RUN ***** TEST DATA	RUN ***** TEST DATA	RUN 208 FINAL TEST DATA	INSP.
HOT FIRE TEST DATA--TEST SITE	-	-	-	-	-	NFL	
CELL LOCATION	-	-	-	-	-	1-A	
CELL NUMBER	-	-	-	-	-	379	
TEST DATE	-	-	-	-	-	5 AUG 64	
TEST DURATION	SEC.	2 MIN	-	-	-	3.0	
ENVIRONMENTAL Pc	PSIA	0.16 MAX	-	-	-	.0796	
AMBIENT PRESSURE	PSIA	DNA	-	-	-	12.25	
AMBIENT TEMPERATURE	°F	DNA	-	-	-	90.0	
TIME OF DATA SLICE-START	SEC.	DNA	-	-	-	2.8	
TIME OF DATA SLICE-END	SEC.	DNA	-	-	-	2.8	
OXIDIZER TEMPERATURE	°F	DNA	-	-	-	75.0	
FUEL TEMPERATURE	°F	DNA	-	-	-	74.0	
OXIDIZER DENSITY	LB/FT^3	DNA	-	-	-	90.60	
FUEL DENSITY	LB/FT^3	DNA	-	-	-	54.95	

513

SPECIFICATION NUMBER	REVISION	AMENDMENT		
RAO 220-349	B	NONE	DNA 52-52701-277	SERIAL NO. 4060932 PART NO. 207540-21
SE- 7 (REA) CALIBRATED PERFORMANCE DATA			PART NAME THRUST CHAMBER, 100 LB., ASSY CF	5.2

CONFIDENTIAL

THIS MATERIAL CONTAINS INFORMATION AFFECTING THE NATIONAL DEFENSE OF THE UNITED STATES WITHIN THE MEANING OF THE ESPIONAGE LAWS, TITLE 18 U.S.C., SECTIONS 793 AND 794. ITS TRANSMISSION OR THE REVELATION OF ITS CONTENTS IN ANY MANNER TO AN UNAUTHORIZED PERSON IS PROHIBITED BY LAW.

GROUP 4
Downgraded at 3 year intervals;
Declassified after 12 years

514

CHARACTERISTICS	UNITS	SPECIFICATION LIMITS	RUN ***** TEST DATA	RUN ***** TEST DATA	RUN ***** TEST DATA	RUN 208 FINAL TEST DATA	INSP
HOT FIRE TEST DATA--TEST SITE	-	-	-	-	-	NFL	
OXIDIZER INLET PRESSURE	PSIA	283 ±10	-	-	-	286.0	
FUEL INLET PRESSURE	PSIA	286 ±10	-	-	-	286.4	
OXIDIZER FLOWRATE	LB/SEC	DNA	-	-	-	.1958	
FUEL FLOWRATE	LB/SEC	DNA	-	-	-	.1207	
THRUST	LB.	DNA	-	-	-	93.6	
MIXTURE RATIO	O/F	DNA	-	-	-	1.62	
SPECIFIC IMPULSE	SEC	DNA	-	-	-	296.	
INJECTOR END Pc	PSIA	DNA	-	-	-	135.1	
CHARACTERISTIC VELOCITY	FT/SEC	DNA	-	-	-	5421.	
THROAT DIAMETER	INCH	DNA	-	-	-	.709	
FUEL ORIFICE DIAMETER	INCH	DNA	-	-	-	.07815	
OXIDIZER ORIFICE DIAMETER	INCH	DNA	-	-	-	.08575	
TCA FIRING TIME (TOTAL)	SEC	10 MAX.	-	-	-	3.0	
OXIDIZER SAMPLE NUMBER	-	-	-	-	-	268	
FUEL SAMPLE NUMBER	-	-	-	-	-	270	

R-15075-1

SPECIFICATION NUMBER	REVISION	AMENDMENT			
RAO 220-349	B	NONE	DNA	SERIAL NO.	4060932
			52-52701-277	PART NO.	207540-21
SE- 7 (REA) CALIBRATED PERFORMANCE DATA			PART NAME	THRUST CHAMBER, 100 LB., ASSY OF	5.2

CONFIDENTIAL
Declassified after 12 years

CONFIDENTIAL

GROUP 4
Downgraded at 3 year intervals:
declassified after 12 years

THIS MATERIAL CONTAINS INFORMATION AFFECTING THE NATIONAL DEFENSE OF THE UNITED STATES WITHIN THE MEANING OF THE ESPIONAGE LAWS, TITLE 18 U.S.C., SECTIONS 793 AND 794. ITS TRANSMISSION OR THE REVELATION OF ITS CONTENTS IN ANY MANNER TO AN UNAUTHORIZED PERSON IS PROHIBITED BY LAW.

R-15075-1

CHARACTERISTICS	UNITS	SPECIFICATION LIMITS	RUN ***** TEST DATA	RUN ***** TEST DATA	RUN ***** TEST DATA	RUN 208 FINAL TEST DATA	INSP.
HOT FIRE TEST DATA--TEST SITE	-	-	-	-	-	NFL	
ADJUST TO STANDARD CONDITIONS							
THRUST	LB.	94.5 ±4.7	-	-	-	94.2	
MIXTURE RATIO	O/F	1.60 ±.05	-	-	-	1.60	
SPECIFIC IMPULSE	SEC	DNA	-	-	-	300.	
INJECTOR END Pc	PSIA	DNA	-	-	-	134.1	
CHARACTERISTIC VELOCITY	FT/SEC	DNA	-	-	-	5416.	
ADJUST TO RATED CONDITIONS							
THRUST	LB.	94.5	-	-	-	94.5	
MIXTURE RATIO	O/F	1.60	-	-	-	1.60	
SPECIFIC IMPULSE	SEC	280 MIN.	-	-	-	299.	

515

SPECIFICATION NUMBER	REVISION	AMENDMENT
RAO 220-349	B	NONE
RAO 220-232	NC	#1

DNA SERIAL NO. 4060932
52-52701-277 PART NO. 207540-21

SE-7 (REA) CALIBRATED PERFORMANCE DATA

PART NAME THRUST CHAMBER, 100 LB., ASSY OF

5.2.2

GROUP 4
Downgraded at 3 year intervals:
declassified after 12 years

CONFIDENTIAL

THE FOLLOWING IS INFORMATION RELATIVE TO THE CLEANLINESS LEVEL OF THE PROPELLANT UTILIZED IN THE HOT-FIRE ACCEPTANCE TEST OF THE THRUST CHAMBER ASSEMBLY.

THE INFLUENT PARTICULATE COUNT OF THE PROPELLANT WAS:

		LIMITS	ACTUAL COUNT MMH - FUEL	ACTUAL COUNT NTO - OXID
	< 10	*	DNA	DNA
	10 - 25	100	33	21
	25 - 50	20	11	9
	50 - 100	5	2	3
	100 - 300	1	1	0
	300 - 1000	0	0	0
	> 1000	0	0	0
FIBERS	300 - 3000	0	0	0
FIBERS	> 3000	0	0	0

* NOTE: " NOT TO BE COUNTED BUT NO SLURRY OF FINE PARTICLES WHICH COVERS MORE THAN AN ESTIMATED 5 PERCENT OF THE TOTAL EFFECTIVE FILTER AREA SHALL BE ALLOWED." AT THE DISCRETION OF QUALITY ASSURANCE, A WEIGHT DETERMINATION OF TOTAL CONTAMINATION MAY BE MADE AS A REFEREE TEST IN BORDERLINE CASES. THE MAXIMUM ALLOWABLE WEIGHT OF CONTAMINANTS SHALL BE 0.001 GRAM (1 MG).

CLASS 4

INSP. ANR 206

SPECIFICATION NUMBER	REVISION	AMENDMENT		
RA0615-003	B	#2	52-52701-277 PART NO. 207540-21	
SE- 7 INFORMATION - CONTAMINATION			PART NAME THRUST CHAMBER ASSEMBLY, 100 LB.	5.3

~~CONFIDENTIAL~~

SCD52-52701-275
S/N 4060057

R-15075-1

"CERTIFICATION IS HEREBY GIVEN THAT THE DELIVERABLE END ITEM COVERED BY THIS LOG BOOK WAS MANUFACTURED, INSPECTED AND TESTED IN ACCORDANCE WITH PRESCRIBED DRAWINGS, SPECIFICATION AND QUALITY ASSURANCE PROVISIONS. INSPECTION AND TEST RECORDS ARE ON FILE VERIFYING COMPLIANCE WITH APPLICABLE DRAWINGS AND SPECIFICATIONS, EXCEPT AS NOTED HEREIN"

LOG BOOK ACCEPTANCE DAT #11 (CRD #12)

SPACE ENGINES ENGINEERING	SPACE ENGINES QUALITY CONTROL	McDONNELL QUALITY REPRESENTATIVE	GOV'T INSPECTION AGENCY QUALITY REPRESENTATIVE
N. H. Marsden 0L	Wm E Reitz	Lonnie L Skinner	[illegible]
DATE 8-27-64	DATE 8-27-64	DATE 8-27-64	DATE 27 AUG 64

CONTENTS

SECTION I – DELIVERABLE END ITEM ASSEMBLY LOG

RECORDS CONTAINED IN THIS SECTION ARE PERTINENT TO THE DELIVERABLE END ITEM ACCEPTANCE AND ALSO INCLUDE MODEL CONFIGURATION DATA, PERTINENT DETAILS OF SHORT SHIPMENTS, COMPONENT VARIATIONS, AGE SENSITIVE PARTS RECORD, WEIGHT AND SERIALIZATION RECORDS.

SECTION II – ACCEPTANCE TEST LOG

RECORDS OF ASSEMBLY ACCEPTANCE TESTS ARE PRESENTED IN THIS SECTION WITH PERFORMANCE DATA AND SUMMARY DATA ON INSPECTIONS AND ACCEPTANCE.

GENERAL INFORMATION

THIS LOG BOOK IS PROVIDED FOR SERVICE USE IN RECORDING PERTINENT HISTORICAL DATA AND ALL CHANGES FROM THE ORIGINAL CONFIGURATION. IT IS REQUESTED THIS LOG BOOK ACCOMPANY THE DELIVERABLE END ITEM WHEN TRANSFERRED BETWEEN ROCKETDYNE AND USING AGENCIES.

GROUP-4
Downgraded at 3 year intervals;
declassified after 12 years

ROCKETDYNE – SPACE ENGINES
A DIVISION OF NORTH AMERICAN AVIATION, INC.

LOG BOOK SPECIFICS

McDONNELL	ITEM	ROCKETDYNE
	THIS MATERIAL CONTAINS INFORMATION AFFECTING THE NATIONAL DEFENSE OF THE UNITED STATES WITHIN THE MEANING OF THE ESPIONAGE LAWS, TITLE 18 U.S.C., SECTIONS 793 AND 794. ITS TRANSMISSION OR THE REVELATION OF ITS CONTENTS IN ANY MANNER TO AN UNAUTHORIZED PERSON IS PROHIBITED BY LAW.	
	LOG BOOK DATE	27 AUGUST 1964
	DWG CHG LTR	DNA
Y-20161R	CONTRACT NO.	
	GEN ORDER NO.	5252
SCD52-52701-275	SPEC NO.	
DNA	SERIAL NO.	4060057
52-52701-275	PART NO.	207510-21

SE-7 DELIVERABLE END ITEM – LOG BOOK IDENTIFICATION | PART NAME THRUST CHAMBER ASSEMBLY, 85 LB. | 1.0

517

~~CONFIDENTIAL~~

DELIVERABLE END ITEM

THIS LOG BOOK CONTAINS INFORMATION PERTINENT TO THE DELIVERABLE END ITEM AS SPECIFIED HEREIN BY SERIAL NUMBER AND PART NUMBER. IT IS NECESSARY THAT ALL ENTRIES BE WRITTEN IN INK OR TYPED FOR PERMANENT RECORD. ENTRIES SUCH AS SERIALIZATION, WEIGHT, APPLICABLE MCR'S, ACCEPTANCE TEST DATA AND CALIBRATION DATA WILL BE ENTERED BY ROCKETDYNE AT THE TIME OF DELIVERY.

IT IS REQUESTED THAT THIS LOG BOOK ACCOMPANY THIS DELIVERABLE END ITEM IF THE ITEM IS RETURNED TO ROCKETDYNE FOR REPAIR, MODIFICATION OR RETEST. ROCKETDYNE WILL THEN ENTER REPAIR, MODIFICATION AND RETEST DATA IN THIS LOG BOOK.

THE FORMAT OF PAGES IN THIS LOG BOOK SHALL NOT BE REVISED WITHOUT OBTAINING APPROVAL OF ROCKETDYNE SPACE ENGINES QUALITY CONTROL.

R-15075-1

1.0 LOG BOOK IDENTIFICATION

2.0 FOREWORD

3.0 CONTENTS

4.0 MODULE/COMPONENT ASSEMBLY LOG--SECTION I

4.1 CONFIGURATION & SERIALIZATION LOG

4.2 MCR VERIFICATION

4.3 VARIATION LOG

4.4 REPLACEMENT LOG

5.0 COMPONENT ACCEPTANCE TEST LOG--SECTION II

5.1 COMPONENT ACCEPTANCE TEST

5.1.1 COMPONENT ACCEPTANCE TEST

5.1.2 COMPONENT ACCEPTANCE TEST

5.1.3 COMPONENT ACCEPTANCE TEST

5.1.4 COMPONENT ACCEPTANCE TEST

5.1.5 COMPONENT ACCEPTANCE TEST

5.2 CALIBRATED PERFORMANCE DATA

5.2.1 CALIBRATED PERFORMANCE DATA

5.2.2 CALIBRATED PERFORMANCE DATA

5.3 INFORMATION--CONTAMINATION

SECTION I

52-52701-275 PART NO. 207510-21

SE-7 MODULE / COMPONENT ASSEMBLY LOG

PART NAME THRUST CHAMBER ASSEMBLY, 85 LB.

4.0

IND. NO.	PART NUMBER	REV. LTR.	PART NAME	SERIAL NO.	AGE CONTROL DATE OF MFG.	INSP.
1	207510-21	DNA	THRUST CHAMBER, 85 LB. ASSY	4060057	3Q63	ANR 208
2	207511-11	DNA	BODY, THRUST CHAMBER, ASSY OF	4055640	3Q63	ANR 208
2	207518	DNA	SHELL, THRUST CHAMBER, ASSY OF	8501810		ANR 208
3	207525	DNA	INJECTOR, THRUST CHAMBER, ASSY OF	4057585		ANR 208
2	407561	DNA	VALVE, OXIDIZER, T/C, ASSY OF	9244306		ANR 208
2	407662	DNA	VALVE, FUEL, T/C, ASSY OF	9239567		ANR 208

DNA SERIAL NO. 4060057

52-52701-275 PART NO. 207510-21

SE-7 CONFIGURATION & SERIALIZATION LOG

PART NAME THRUST CHAMBER ASSEMBLY, 85 LB.

4.1

522

MCR / ECP NO.	DATE	TITLE	DATE	INSP.
SE6-62	6 JAN 64	COMPONENT CLEANING; PROVISION FOR	27 AUG 64	ANR 208
SE6-64	30 JUL 63	TCA, ACCEPTANCE TESTS; REVISION OF	27 AUG 64	ANR 208
SE6-80	28 DEC 63	THRUST CHAMBER ASSEMBLIES, FABRICATION MATERIAL; APPROVAL OF	27 AUG 64	ANR 208
SE6-85	30 JUL 63	CUSTOMER TEST SURVEILLANCE; REQUIREMENT FOR	27 AUG 64	ANR 208
SE6-133	22 APR 64	TCA PROPELLANT VALVES; ADDITIONAL REQUIREMENTS FOR	27 AUG 64	ANR 208
SE6-139	15 APR 64	PLACEMENT OF HAYNES STELLITE #3 SAND CAST ON APPROVED MATERIAL LIST	27 AUG 64	ANR 208
SE6-144	15 APR 64	TCA INJECTORS; REDESIGN OF	27 AUG 64	ANR 208
SE6-179	16 JUN 64	TUBE STUBS; MARKING OF	27 AUG 64	ANR 208
SE6-233	18 AUG 64	ELECTRICAL CONNECTOR "O" RINGS; REPLACEMENT OF	27 AUG 64	ANR 208
SE7-41	15 APR 64	85# AND 100# THRUST CHAMBER ASSEMBLIES, PROPELLANT VALVES, INLET TUBES, MATERIAL; CHANGE TO 304L BAR PER QQ-S-763	27 AUG 64	ANR 208
SE7-85	30 APR 64	85 AND 100 LB. TCA DIMENSIONS; CHANGES TO	27 AUG 64	ANR 208

NASA 1-B

R-15075-1

DNA SERIAL NO. 4060057

52-52701-275 PART NO. 207510-21

SE-7 DELIVERABLE END ITEM - MCR VERIFICATION

PART NAME THRUST CHAMBER ASSEMBLY, 85 LB.

4.2

MR NO.	PART OR COMP. INVOLVED	PART NUMBER	SERIAL NUMBER	BRIEF DESCRIPTION OF VARIATION AND MATERIAL REVIEW BOARD DISPOSITION	INSP.
MRR #56457	SE-7	207510-21	4060057	DISCREPANCY: CONDITION A-COMBUSTION CHAMBER LINER, WITH P. C. HOLE, IS CRACKED. CRACK EXTENDS FROM P. C. HOLE TO THE UPSTREAM EDGE OF LINER. APPROX. WIDTH OF CRACK IS .0003. DISPOSITION: OK TO USE FOR DAT.	ANR 208
MRR #58781	SE-7	207510-21	4060057	DISCREPANCY: CONDITION A: CHIPPED OUT AREA IN ABLATIVE SHORT END. MEASURING APPROX. ½" LONG BY 1/8" DEEP BY 1/8" WIDE. OTHERWISE OK. NOTE: CHIPPED OUT AREA HAS BEEN FILLED IN WITH EPOXY & BONDED TO MEET EXIT CONTOUR. REF. 600N-5 # C24025 DISPOSITION: ACCEPTABLE TO USE FOR COMPONENT DAT UNIT NUMBER (2).	ANR 208

NASA M

DNA SERIAL NO. 4060057

52-52701-275 PART NO. 207510-21

SE-7 DELIVERABLE END ITEM — VARIATION LOG

PART NAME THRUST CHAMBER ASSEMBLY, 85 LB.

4.3

PART NO.	PART NAME	SERIAL NO.	REASON FOR REPLACEMENT	REPLACED BY		INSP.
				PART NO.	SERIAL NO.	
			NONE THIS DATE (27 AUGUST 1964)			ANR 208

DNA	SERIAL NO.	4060057	
52-52701-275	PART NO.	207510-21	
SE-7 DELIVERABLE END ITEM--REPLACEMENT LOG	PART NAME	THRUST CHAMBER, 85 LB., ASSY OF	4.4

SECTION II

52-52701-275 PART NO. 207510-21

SE-7 COMPONENT ACCEPTANCE TEST LOG

PART NAME THRUST CHAMBER ASSEMBLY, 85 LB.

5.0

PERFORMANCE PARAMETERS	PARAGRAPH NUMBER	UNITS	SPECIFICATION LIMITS	ACCEPTANCE TEST DATA	INSP.
ELECTRICAL RESISTANCE TESTS--TCA PROPELLANT VALVES	4.2				
BODY TEMPERATURE					
OXIDIZER	4.2.4	DEGREES F	70 ± 5	69	ANR 208
FUEL	4.2.11	DEGREES F	70 ± 5	69	ANR 208
COIL RESISTANCE					
OXIDIZER	4.2.5	OHMS	42 ± 2	41.18	ANR 208
FUEL	4.2.11	OHMS	42 ± 2	41.05	ANR 208
CONTINUITY RESISTANCE					
OXIDIZER	4.2.9	OHMS	1.0 MAX.	.124	ANR 208
FUEL	4.2.11	OHMS	1.0 MAX.	.120	ANR 208
DIELECTRIC STRENGTH TEST--TCA PROPELLANT VALVES	4.3				
CURRENT LEAKAGE					
OXIDIZER	4.3.8	MICROAMPS	500 MAX.	50	ANR 208
FUEL	4.3.11	MICROAMPS	500 MAX.	52	ANR 208
PROOF PRESSURE TEST--TCA PROPELLANT VALVES	4.4				
VALVES PRESSURIZED FOR NOT LESS THAN 3 MINUTES					
OXIDIZER					
STEP I	4.4.3	PSIG	500	VERIFIED	ANR 208
STEP II	4.4.5	PSIG	500	VERIFIED	ANR 208

SPECIFICATION NUMBER	REVISION	AMENDMENT			
RA0220-348	A	NONE	DNA 52-52701-275	SERIAL NO. 4060057	PART NO. 2510-21
SE-7 COMPONENT ACCEPTANCE TEST			PART NAME THRUST CHAMBER ASSEMBLY, 85 LB.		5.1

R-15075-1

PERFORMANCE PARAMETERS	PARAGRAPH NUMBER	UNITS	SPECIFICATION LIMITS	ACCEPTANCE TEST DATA	INSP.
PROOF PRESSURE TEST--TCA PROPELLANT VALVES (CONTINUED)	4.4				
FUEL					
STEP I	4.4.7	PSIG	500	VERIFIED	ANR 208
STEP II	4.4.7	PSIG	500	VERIFIED	ANR 208
INSPECTED VISUALLY FOR DAMAGE OR DEFORMATION					
OXIDIZER					
STEP I	4.4.4	DNA	NONE ALLOWED	NONE DETECTED	ANR 208
STEP II	4.4.5	DNA	NONE ALLOWED	NONE DETECTED	ANR 208
FUEL					
STEP I	4.4.7	DNA	NONE ALLOWED	NONE DETECTED	ANR 208
STEP II	4.4.7	DNA	NONE ALLOWED	NONE DETECTED	ANR 208

527

SPECIFICATION NUMBER	REVISION	AMENDMENT
RA0220-348	A	NONE

DNA SERIAL NO. 4060057

52-52701-275 PART NO. 207510-21

SE-7 COMPONENT ACCEPTANCE TEST

PART NAME THRUST CHAMBER ASSEMBLY, 85 LB.

PERFORMANCE PARAMETERS	PARAGRAPH NUMBER	UNITS	SPECIFICATION LIMITS	ACCEPTANCE TEST DATA	INSP.
PROOF PRESSURE AND LEAKAGE TEST--THRUST CHAMBER	4.5				
PROOF PRESSURE TEST					
THRUST CHAMBER PRESSURIZED FOR NOT LESS THAN 5 MINUTES AT					
STEP I	4.5.8	PSIG	392 ± 10	VERIFIED	ANR 208
STEP II	4.5.10	PSIG	392 ± 10	VERIFIED	ANR 208
LEAKAGE TEST					
STEP I	4.5.8	DNA	NONE ALLOWED	NONE DETECTED	ANR 208
STEP II	4.5.10	DNA	NONE ALLOWED	NONE DETECTED	ANR 208
INSPECTED VISUALLY FOR DAMAGE OR DEFORMATION	4.5.14	DNA	NONE ALLOWED	NONE DETECTED	ANR 208
FUNCTIONAL TEST--TCA PROPELLANT VALVES	4.6				
OPENING RESPONSE TIME					
OXIDIZER	4.6.17	SEC.	0.021 MAX.	0.019	ANR 203
FUEL	4.6.8	SEC.	0.021 MAX.	0.018	ANR 208
CLOSING RESPONSE TIME					
OXIDIZER	4.6.17	SEC.	0.005 MAX.	0.003	ANR 208
FUEL	4.6.10	SEC.	0.005 MAX.	0.0036	ANR 208
CLOSING DROP OUT VOLTAGE					
OXIDIZER	4.6.17	VOLT (DC)	1 MIN.	2	ANR 208
FUEL	4.6.13	VOLT (DC)	1 MIN.	2	ANR 208

SPECIFICATION NUMBER	REVISION	AMENDMENT			
RA0220-348	A	NONE	DNA	SERIAL NO.	4060057
			52-52701-275	PART NO.	207510-21
SE-7 COMPONENT ACCEPTANCE TEST			PART NAME	THRUST CHAMBER ASSEMBLY, 85 LB.	5.1.2

PERFORMANCE PARAMETERS	PARAGRAPH NUMBER	UNITS	SPECIFICATION LIMITS	ACCEPTANCE TEST DATA	INSP.
LEAKAGE TEST -TCA PROPELLANT VALVES	4.7				
SEAT LEAKAGE RATE					
OXIDIZER	4.7.17	SCC/MIN	2.23 MAX.	LESS THAN 0.1	ANR 208
FUEL	4.7.22	SCC/MIN	2.23 MAX.	LESS THAN 0.1	ANR 208
PRE-TEST DATA					
DRY WEIGHT (EXCLUDING PROTECTIVE COVERS & CLOSURES)	4.1.3	LB.	DNA	8.18	ANR 208
NOZZLE EXIT DIAMETER					
SECTION A-A		INCH	DNA	4.200	ANR 208
THROAT DIAMETER					
SECTION A-A		INCH	DNA	.673	ANR 208
B-B		INCH	DNA	.673	ANR 208
C-C		INCH	DNA	.673	ANR 208
D-D		INCH	DNA	.673	ANR 208
POST HOT-FIRE DATA					
PROOF PRESSURE TEST					
DRY WEIGHT (EXCLUDING PROTECTIVE COVERS & CLOSURES)	4.14.1	LB.	DNA	8.45	ANR 208
THRUST CHAMBER PRESSURIZED FOR NOT LESS THAN 5 MINUTES					

SPECIFICATION NUMBER	REVISION	AMENDMENT			
RA0220-348	A	NONE	DNA	SERIAL NO.	4060057
			52-52701-275	PART NO.	207510-21

SE-7 COMPONENT ACCEPTANCE TEST

PART NAME THRUST CHAMBER ASSEMBLY, 85 LB.

5.1.3

PERFORMANCE PARAMETERS	PARAGRAPH NUMBER	UNITS	SPECIFICATION LIMITS	ACCEPTANCE TEST DATA	INSP.
POST HOT-FIRE DATA (CONTINUED)					
PROOF PRESSURE TEST					
STEP I	4.14.5	PSIG	392 ± 10	VERIFIED	ANR 208
STEP II	4.14.5	PSIG	392 ± 10	VERIFIED	ANR 208
LEAKAGE TEST THRUST CHAMBER					
STEP I	4.14.5	DNA	NONE ALLOWED	NONE DETECTED	ANR 208
STEP II	4.14.5	DNA	NONE ALLOWED	NONE DETECTED	ANR 208
INSPECTED VISUALLY FOR DAMAGE OR DEFORMATION	4.14.5	DNA	NONE ALLOWED	NONE DETECTED	ANR 208
LEAKAGE TEST--TCA PROPELLANT VALVES					
SEAT LEAKAGE RATE					
OXIDIZER	4.14.5	SCC/MIN	2.23 MAX.	LESS THAN 0.1	ANR 208
FUEL	4.14.5	SCC/MIN	2.23 MAX.	LESS THAN 0.1	ANR 208
LEAK TEST--WELDED JOINTS					
LEAK TEST					
PRESSURIZED INLET TUBE WITH GASEOUS HELIUM					
OXIDIZER	4.14.6	PSIG	500 ± 10	VERIFIED	ANR 208
FUEL	4.14.9	PSIG	500 ± 10	VERIFIED	ANR 208

SPECIFICATION NUMBER	REVISION	AMENDMENT	DNA	SERIAL NO. 4060057
RA0220-348	A	NONE	52-52701-275	PART NO. 207510-21

SE-7 COMPONENT ACCEPTANCE TEST

PART NAME THRUST CHAMBER ASSEMBLY, 85 LB.

R-15075-1

PERFORMANCE PARAMETERS	PARAGRAPH NUMBER	UNITS	SPECIFICATION LIMITS	ACCEPTANCE TEST DATA	INSP.
LEAK TEST--WELDED JOINTS (CONTINUED)					
JOINT LEAKAGE RATE					
OXIDIZER	4.14.7	SCC/SEC	10^{-6} MAX.	1.7×10^{-8}	ANR 208
FUEL	4.14.9	SCC/SEC	10^{-6} MAX.	8.7×10^{-7}	ANR 208
INSPECTED VISUALLY FOR CLEANLINESS, CORROSION, DETERIORATION, DAMAGE OR DEFORMATION	4.14.10	DNA	NONE ALLOWED	NONE DETECTED	ANR 208
NOZZLE EXIT DIAMETER					
SECTION A-A		INCH	DNA	4.263	ANR 208
THROAT DIAMETER (DELIVERED CONDITION)	4.15.1				
SECTION A-A		INCH	DNA	.672	ANR 208
B-B		INCH	DNA	.672	ANR 208
C-C		INCH	DNA	.673	ANR 208
D-D		INCH	DNA	.672	ANR 208
DRY WEIGHT (DELIVERABLE CONDITION) (EXCLUDING PROTECTIVE COVERS & CLOSURES)	4.15.2	LB.	DNA	8.25	ANR 208
INSPECTED VISUALLY FOR CLEANLINESS, CORROSION, DETERIORATION, DAMAGE OR DEFORMATION	4.15.3	DNA	NONE ALLOWED	NONE DETECTED	ANR 208

SPECIFICATION NUMBER	REVISION	AMENDMENT			
RA0220-348	A	NONE	DNA	SERIAL NO.	4060057
			52-52701-275	PART NO.	207510-21
SE- 7 COMPONENT ACCEPTANCE TEST			PART NAME	THRUST CHAMBER ASSEMBLY, 85 LB.	5.1.5

532

CHARACTERISTICS	UNITS	SPECIFICATION LIMITS	RUN TEST DATA	RUN TEST DATA	RUN TEST DATA	RUN 162 FINAL TEST DATA	INSP.
HOT FIRE TEST DATA--TEST SITE	-	-	-	-	-	NFL	ANR 208
CELL LOCATION	-	-	-	-	-	1-A	ANR 208
CELL NUMBER	-	-	-	-	-	379	ANR 208
TEST DATE	-	-	-	-	-	5 JUN 64	ANR 208
TEST DURATION	SEC.	3 MIN	-	-	-	3.0	ANR 208
ENVIRONMENTAL Pc	PSIA	0.16 MAX	-	-	-	.0680	ANR 208
AMBIENT PRESSURE	PSIA	DNA	-	-	-	12.03	ANR 208
AMBIENT TEMPERATURE	°F	DNA	-	-	-	62.0	ANR 208
TIME OF DATA SLICE-START	SEC.	DNA	-	-	-	2.8	ANR 208
TIME OF DATA SLICE-END	SEC.	DNA	-	-	-	2.8	ANR 208
OXIDIZER TEMPERATURE	°F	DNA	-	-	-	54.5	ANR 208
FUEL TEMPERATURE	°F	DNA	-	-	-	56.5	ANR 208
OXIDIZER DENSITY	LB/FT^3	DNA	-	-	-	92.10	ANR 208
FUEL DENSITY	LB/FT^3	DNA	-	-	-	55.31	ANR 208

R-15075-1

SPECIFICATION NUMBER	REVISION	AMENDMENT		
RA0220-348	A	NONE	DNA 52-52701-275	SERIAL NO. 4060057 PART NO. 207510-21

SE- 7 (REA) CALIBRATED PERFORMANCE DATA

PART NAME THRUST CHAMBER 85 LB., ASSY OF

5.2

R-15075-1

CHARACTERISTICS	UNITS	SPECIFICATION LIMITS	RUN TEST DATA	RUN TEST DATA	RUN TEST DATA	RUN 162 FINAL TEST DATA	INSP.
HOT FIRE TEST DATA--TEST SITE	-	-	-	-	-	NFL	ANR 208
OXIDIZER INLET PRESSURE	PSIA	285 ± 10	-	-	-	290.4	ANR 208
FUEL INLET PRESSURE	PSIA	287 ± 10	-	-	-	285.3	ANR 208
OXIDIZER FLOWRATE	LB/SEC	DNA	-	-	-	.1656	ANR 208
FUEL FLOWRATE	LB/SEC	DNA	-	-	-	.1025	ANR 208
THRUST	LB.	DNA	-	-	-	79.4	ANR 208
MIXTURE RATIO	O/F	DNA	-	-	-	1.62	ANR 208
SPECIFIC IMPULSE	SEC	DNA	-	-	-	296.	ANR 208
INJECTOR END Pc	PSIA	DNA	-	-	-	125.5	ANR 208
CHARACTERISTIC VELOCITY	FT/SEC	DNA	-	-	-	5355.	ANR 208
THROAT DIAMETER	INCH	DNA	-	-	-	.673	ANR 208
FUEL ORIFICE DIAMETER	INCH	DNA	-	-	-	.06546	ANR 208
OXIDIZER ORIFICE DIAMETER	INCH	DNA	-	-	-	.07269	ANR 208
TCA FIRING TIME (TOTAL)	SEC	10 MAX.	-	-	-	3.0	ANR 208
OXIDIZER SAMPLE NUMBER	-	-	-	-	-	233	ANR 208
FUEL SAMPLE NUMBER	-	-	-	-	-	234	ANR 208

533

SPECIFICATION NUMBER	REVISION	AMENDMENT			
RA0220-348	A	NONE	DNA	SERIAL NO.	4060057
			52-52701-275	PART NO.	207510-21

SE- 7 (REA) CALIBRATED PERFORMANCE DATA

PART NAME THRUST CHAMBER 85 LB., ASSY OF

5.2.1

534

CHARACTERISTICS	UNITS	SPECIFICATION LIMITS	RUN TEST DATA	RUN TEST DATA	RUN TEST DATA	RUN 162 FINAL TEST DATA	INSP.
HOT FIRE TEST DATA--TEST SITE	-	-	-	-	-	NFL	ANR 208
ADJUST TO STANDARD CONDITIONS							
THRUST	LB.	79 ± 3.9	-	-	-	79.2	ANR 208
MIXTURE RATIO	O/F	1.60 ± .05	-	-	-	1.57	ANR 208
SPECIFIC IMPULSE	SEC	DNA	-	-	-	299.	ANR 208
INJECTOR END Pc	PSIA	DNA	-	-	-	123.6	ANR 203
CHARACTERISTIC VELOCITY	FT/SEC	DNA	-	-	-	5341.	ANR 208
ADJUST TO RATED CONDITIONS							
THRUST	LB.	79	-	-	-	79.0	ANR 208
MIXTURE RATIO	O/F	1.6	-	-	-	1.60	ANR 208
SPECIFIC IMPULSE	SEC	280 MIN.	-	-	-	299.	ANR 208

R-15075-1

SPECIFICATION NUMBER	REVISION	AMENDMENT
RA0220-348	A	NONE
RA0220-231	NONE	#2

DNA SERIAL NO. 4060057

52-52701-275 PART NO. 207510-21

SE-7 (REA) CALIBRATED PERFORMANCE DATA

PART NAME THRUST CHAMBER 85 LB., ASSY OF

5.2.2

R-15075-1

THE FOLLOWING IS INFORMATION RELATIVE TO THE CLEANLINESS LEVEL OF THE PROPELLANT UTILIZED IN THE HOT-FIRE ACCEPTANCE TEST OF THE THRUST CHAMBER ASSEMBLY.

THE INFLUENT PARTICULATE COUNT OF THE PROPELLANT WAS:

		LIMITS	ACTUAL COUNT MMH - FUEL	ACTUAL COUNT NTO - OXID
	< 10	*	DNA	DNA
	10 - 25	100	82	41
	25 - 50	20	18	9
	50 - 100	5	3	2
	100 - 300	1	0	1
	300 - 1000	0	0	0
	> 1000	0	0	0
FIBERS	300 - 3000	0	0	0
FIBERS	> 3000	0	0	0

* NOTE: " NOT TO BE COUNTED BUT NO SLURRY OF FINE PARTICLES WHICH COVERS MORE THAN AN ESTIMATED 5 PERCENT OF THE TOTAL EFFECTIVE FILTER AREA SHALL BE ALLOWED." AT THE DISCRETION OF QUALITY ASSURANCE, A WEIGHT DETERMINATION OF TOTAL CONTAMINATION MAY BE MADE AS A REFEREE TEST IN BORDERLINE CASES. THE MAXIMUM ALLOWABLE WEIGHT OF CONTAMINANTS SHALL BE 0.001 GRAM (1 MG).

CLASS 4

INSP. ANR 208

535

SPECIFICATION NUMBER	REVISION	AMENDMENT		
RA0615-003	B	#1	52-52701-275 PART NO. 207510-21	
SE-7 INFORMATION - CONTAMINATION			PART NAME THRUST CHAMBER ASSEMBLY, 85 LB.	5.3

536

"CERTIFICATION IS HEREBY GIVEN THAT THE DELIVERABLE END ITEM COVERED BY THIS LOG BOOK WAS MANUFACTURED, INSPECTED AND TESTED IN ACCORDANCE WITH PRESCRIBED DRAWINGS, SPECIFICATION AND QUALITY ASSURANCE PROVISIONS. INSPECTION AND TEST RECORDS ARE ON FILE VERIFYING COMPLIANCE WITH APPLICABLE DRAWINGS AND SPECIFICATIONS, EXCEPT AS NOTED HEREIN"

LOG BOOK ACCEPTANCE

DAT #3 (CRD #10)

SPACE ENGINES ENGINEERING	SPACE ENGINES QUALITY CONTROL	McDONNELL QUALITY REPRESENTATIVE	GOV'T INSPECTION AGENCY QUALITY REPRESENTATIVE
RD Pastre	Wm E Ritz	J. E. Gile	John Cayme
DATE 9/30/64	DATE 9/30/64	DATE 9-30-64	DATE 30 Sept 1964

CONTENTS

SECTION I – DELIVERABLE END ITEM ASSEMBLY LOG

RECORDS CONTAINED IN THIS SECTION ARE PERTINENT TO THE DELIVERABLE END ITEM ACCEPTANCE AND ALSO INCLUDE MODEL CONFIGURATION DATA, PERTINENT DETAILS OF SHORT SHIPMENTS, COMPONENT VARIATIONS, AGE SENSITIVE PARTS RECORD, WEIGHT AND SERIALIZATION RECORDS.

SECTION II – ACCEPTANCE TEST LOG

RECORDS OF ASSEMBLY ACCEPTANCE TESTS ARE PRESENTED IN THIS SECTION WITH PERFORMANCE DATA AND SUMMARY DATA ON INSPECTIONS AND ACCEPTANCE.

GENERAL INFORMATION

THIS LOG BOOK IS PROVIDED FOR SERVICE USE IN RECORDING PERTINENT HISTORICAL DATA AND ALL CHANGES FROM THE ORIGINAL CONFIGURATION. IT IS REQUESTED THIS LOG BOOK ACCOMPANY THE DELIVERABLE END ITEM WHEN TRANSFERRED BETWEEN ROCKETDYNE AND USING AGENCIES.

GROUP 4
Downgraded at 3 year intervals;
declassified after 12 years

ROCKETDYNE – SPACE ENGINES
A DIVISION OF NORTH AMERICAN AVIATION, INC.

R-15075-1

LOG BOOK SPECIFICS

McDONNELL	ITEM	ROCKETDYNE
THIS MATERIAL CONTAINS INFORMATION AFFECTING THE NATIONAL DEFENSE OF THE UNITED STATES WITHIN THE MEANING OF THE ESPIONAGE LAWS, TITLE 18 U.S.C., SECTIONS 793 AND 794. ITS TRANSMISSION OR THE REVELATION OF ITS CONTENTS IN ANY MANNER TO AN UNAUTHORIZED PERSON IS PROHIBITED BY LAW.		
	LOG BOOK DATE	30 SEPTEMBER 64
	DWG CHG LTR	DNA
Y-20161R	CONTRACT NO.	
	GEN ORDER NO.	5252
SCD52-52701-275	SPEC NO.	
DNA	SERIAL NO.	4058404
52-52701-275	PART NO.	207510-21

SE-7 DELIVERABLE END ITEM – LOG BOOK IDENTIFICATION

PART NAME THRUST CHAMBER, 85 LB., ASSY. OF

1.0

R-15075-1

DELIVERABLE END ITEM

THIS LOG BOOK CONTAINS INFORMATION PERTINENT TO THE DELIVERABLE END ITEM AS SPECIFIED HEREIN BY SERIAL NUMBER AND PART NUMBER. IT IS NECESSARY THAT ALL ENTRIES BE WRITTEN IN INK OR TYPED FOR PERMANENT RECORD. ENTRIES SUCH AS SERIALIZATION, WEIGHT, APPLICABLE MCR'S, ACCEPTANCE TEST DATA AND CALIBRATION DATA WILL BE ENTERED BY ROCKETDYNE AT THE TIME OF DELIVERY.

IT IS REQUESTED THAT THIS LOG BOOK ACCOMPANY THIS DELIVERABLE END ITEM IF THE ITEM IS RETURNED TO ROCKETDYNE FOR REPAIR, MODIFICATION OR RETEST. ROCKETDYNE WILL THEN ENTER REPAIR, MODIFICATION AND RETEST DATA IN THIS LOG BOOK.

THE FORMAT OF PAGES IN THIS LOG BOOK SHALL NOT BE REVISED WITHOUT OBTAINING APPROVAL OF ROCKETDYNE SPACE ENGINES QUALITY CONTROL.

537

	DNA	SERIAL NO.	4058404
	52-52701-275	PART NO.	207510-21
FOREWORD--SE-7 LOG BOOK	PART NAME	THRUST CHAMBER, 85 LB., ASSY OF	2.0

538

1.0 LOG BOOK IDENTIFICATION

2.0 FOREWORD

3.0 CONTENTS

4.0 MODULE/COMPONENT ASSEMBLY LOG--SECTION I

4.1 CONFIGURATION & SERIALIZATION LOG

4.2 MCR VERIFICATION

4.3 VARIATION LOG

4.4 REPLACEMENT LOG

5.0 COMPONENT ACCEPTANCE TEST LOG--SECTION II

5.1 COMPONENT ACCEPTANCE TEST

5.1.1 COMPONENT ACCEPTANCE TEST

5.1.2 COMPONENT ACCEPTANCE TEST

5.1.3 COMPONENT ACCEPTANCE TEST

5.1.4 COMPONENT ACCEPTANCE TEST

5.1.5 COMPONENT ACCEPTANCE TEST

5.2 CALIBRATED PERFORMANCE DATA

5.2.1 CALIBRATED PERFORMANCE DATA

5.2.2 CALIBRATED PERFORMANCE DATA

5.3 INFORMATION--CONTAMINATION

R-15075-1

52-52701-275 PART NO. 207510-21

CONTENTS--SE-7 LOG BOOK

PART NAME THRUST CHAMBER, 85 LB., ASSY OF

3.0

SECTION I

52-52701-275 PART NO. 207510-21

SE-7 MODULE / COMPONENT ASSEMBLY LOG

PART NAME THRUST CHAMBER, 85 LB., ASSY. OF

4.0

510

IND. NO.	PART NUMBER	REV. LTR.	PART NAME	SERIAL NO.	AGE CONTROL DATE OF MFG.	INSP.
1	207510-21	DNA	THRUST CHAMBER, 85 LB., ASSY. OF	4058404	2Q64	
2	207511-11	DNA	BODY, THRUST CHAMBER, ASSY OF	4060529	2Q64	
2	207518	DNA	SHELL, THRUST CHAMBER, ASSY OF	8500321		
3	207525	DNA	INJECTOR, THRUST CHAMBER, ASSY OF	4054904		
2	407561	DNA	VALVE, OXIDIZER, T/C, ASSY OF	9237793		
2	407662	DNA	VALVE, FUEL, T/C, ASSY OF	9239564		

DNA SERIAL NO. 4058404

52-52701-275 PART NO. 207510-21

SE-7 CONFIGURATION & SERIALIZATION LOG

PART NAME THRUST CHAMBER, 85 LB., ASSY. OF

4.1

R-15075-1

MCR / ECP NO.	DATE	TITLE	DATE	INSP.
SE6-62	6 JAN 64	COMPONENT CLEANING; PROVISION FOR	30 SEP. 64	ANR 208
SE6-64	30 JUL 63	TCA, ACCEPTANCE TESTS; REVISION OF	30 SEP. 64	ANR 208
SE6-80	28 DEC 63	THRUST CHAMBER ASSEMBLIES, FABRICATION MATERIAL; APPROVAL OF	30 SEP. 64	ANR 208
SE6-133	22 APR 64	TCA PROPELLANT VALVES; ADDITIONAL REQUIREMENTS FOR	30 SEP. 64	ANR 208
SE6-139	15 APR 64	PLACEMENT OF HAYNES STELLITE #3 SAND CAST ON APPROVED MATERIAL LIST	30 SEP. 64	ANR 208
SE6-144	15 APR 64	TCA INJECTORS; REDESIGN OF	30 SEP. 64	ANR 208
SE6-179	16 JUN 64	TUBE STUBS; MARKINGS OF	30 SEP. 64	ANR 208
SE7-41	15 APR 64	85# AND 100# THRUST CHAMBER ASSEMBLIES, PROPELLANT VALVES, INLET TUBES, MATERIAL; CHANGE TO 304L BAR PER QQ-S-763	30 SEP. 64	ANR 208
SE7-85	30 APR 64	85# AND 100# TCA DIMENSIONS; CHANGES TO	30 SEP. 64	ANR 208

DNA SERIAL NO. 4058404

52-52701-275 PART NO. 207510-21

SE-7 DELIVERABLE END ITEM - MCR VERIFICATION

PART NAME THRUST CHAMBER, 85 LB., ASSY. OF

4.2

MR NO.	PART OR COMP. INVOLVED	PART NUMBER	SERIAL NUMBER	BRIEF DESCRIPTION OF VARIATION AND MATERIAL REVIEW BOARD DISPOSITION	INSP.
56453	TCA 85 LB.	207510-21	4058404	DISCREPANCY: CONDITION A: MOUNTING TAB IS MISLOCATED OFF CENTER LINE OF CHAMBER, FROM .019 AT THE BASE TO .040 AT THE TOP- TOWARD FUEL SIDE OF TCA CONDITION B: .019 +.006 -.000 DIA HOLES (10) PLACES ARE SHIFTED .015 PAST CENTERLINE DOWNSTREAM DIRECTION. NOTE: HOLE PATTERN IS WITHIN B/P REQUIREMENT . CONDITION C: SHELL HAS GAUGE AT 11 O'CLOCK (USING P/C BOSS AS 12 O'CLOCK) .015 DEEP X 3/32 DIA. DISPOSITION: ACCEPTABLE AS IS FOR DAT.	
71676	TCA 85 LB.	207510-21	4058404	DISCREPANCY: CONDITION A: THROAT INSERT HAS A CRACK EXTENDING FROM THE DOWNSTREAM EDGE TO THE UPSTREAM EDGE. MAX. WIDTH OF CRACK IS 0005. CONDITION B: THROAT INSERT HAS TWO (2) CHIPPED OUT AREAS NEAR THE UPSTREAM EDGE. ONE (1) CHIP IS .010 LONG X .002 WIDE. THE OTHER CHIP IS .003 LONG X .001 WIDE. DISPOSITION: ACCEPTABLE TO USE AS IS.	

DNA 52-52701-275 SERIAL NO. 4058404 PART NO. 207510-21

SE-7 DELIVERABLE END ITEM — VARIATION LOG

PART NAME THRUST CHAMBER, 85 LB., ASSY OF

4.3

PART NO.	PART NAME	SERIAL NO.	REASON FOR REPLACEMENT	REPLACED BY		INSP.
				PART NO.	SERIAL NO.	
			NONE THIS DATE (30 SEPTEMBER 1964)			

DNA	SERIAL NO.	4058404	
52-52701-275	PART NO.	207510-21	
SE-7 DELIVERABLE END ITEM--REPLACEMENT LOG	PART NAME	THRUST CHAMBER, 85 LB., ASSY. OF	4.4

SECTION II

52-52701-275 PART NO. 207510-21

SE-7 COMPONENT ACCEPTANCE TEST LOG

PART NAME THRUST CHAMBER, 85 LB., ASSY OF

5.0

R-15075-1

PERFORMANCE PARAMETERS	PARAGRAPH NUMBER	UNITS	SPECIFICATION LIMITS	ACCEPTANCE TEST DATA	INSP.
ELECTRICAL RESISTANCE TESTS--TCA PROPELLANT VALVES	4.2				
BODY TEMPERATURE					
OXIDIZER	4.2.4	DEGREES F	70 ± 5	69	
FUEL	4.2.11	DEGREES F	70 ± 5	69	
COIL RESISTANCE					
OXIDIZER	4.2.5	OHMS	42 $^{+2}_{-3}$	43.54	
FUEL	4.2.11	OHMS	42 $^{+2}_{-3}$	43.24	
CONTINUITY RESISTANCE					
OXIDIZER	4.2.9	OHMS	1.0 MAX.	0.11	
FUEL	4.2.11	OHMS	1.0 MAX.	0.16	
DIELECTRIC STRENGTH TEST--TCA PROPELLANT VALVES	4.3				
CURRENT LEAKAGE					
OXIDIZER	4.3.8	MICROAMPS	500 MAX.	58	
FUEL	4.3.11	MICROAMPS	500 MAX.	61	
PROOF PRESSURE TEST--TCA PROPELLANT VALVES	4.4				
VALVES PRESSURIZED FOR NOT LESS THAN 3 MINUTES					
OXIDIZER					
STEP I	4.4.3	PSIG	500	VERIFIED	
STEP II	4.4.5	PSIG	500	VERIFIED	

SPECIFICATION NUMBER	REVISION	AMENDMENT			
RAO 220-348	B	NONE	DNA 52-52701-275	SERIAL NO. 4058404	PART NO. 207510-21

SE-7 COMPONENT ACCEPTANCE TEST

PART NAME THRUST CHAMBER, 85 LB., ASSY OF

PERFORMANCE PARAMETERS	PARAGRAPH NUMBER	UNITS	SPECIFICATION LIMITS	ACCEPTANCE TEST DATA	INSP.
PROOF PRESSURE TEST--TCA PROPELLANT VALVES (CONTINUED)	4.4				
FUEL					
STEP I	4.4.7	PSIG	500	VERIFIED	
STEP II	4.4.7	PSIG	500	VERIFIED	
INSPECTED VISUALLY FOR DAMAGE OR DEFORMATION					
OXIDIZER					
STEP I	4.4.4	DNA	NONE ALLOWED	NONE DETECTED	
STEP II	4.4.5	DNA	NONE ALLOWED	NONE DETECTED	
FUEL					
STEP I	4.4.7	DNA	NONE ALLOWED	NONE DETECTED	
STEP II	4.4.7	DNA	NONE ALLOWED	NONE DETECTED	

SPECIFICATION NUMBER	REVISION	AMENDMENT			
RAO 220-348	B	NONE	DNA	SERIAL NO.	4058404
			52-52701-275	PART NO.	207510-21
SE-7 COMPONENT ACCEPTANCE TEST			PART NAME	THRUST CHAMBER, 85 LB., ASSY OF	5.1.1

PERFORMANCE PARAMETERS	PARAGRAPH NUMBER	UNITS	SPECIFICATION LIMITS	ACCEPTANCE TEST DATA	INSP.
PROOF PRESSURE AND LEAKAGE TEST--THRUST CHAMBER	4.5				
PROOF PRESSURE TEST					
THRUST CHAMBER PRESSURIZED FOR NOT LESS THAN 5 MINUTES AT					
STEP I	4.5.8	PSIG	392 ± 10	VERIFIED	
STEP II	4.5.10	PSIG	392 ± 10	VERIFIED	
LEAKAGE TEST					
STEP I	4.5.8	DNA	NONE ALLOWED	NONE DETECTED	
STEP II	4.5.10	DNA	NONE ALLOWED	NONE DETECTED	
INSPECTED VISUALLY FOR DAMAGE OR DEFORMATION	4.5.14	DNA	NONE ALLOWED	NONE DETECTED	
FUNCTIONAL TEST--TCA PROPELLANT VALVES	4.6				
OPENING RESPONSE TIME					
OXIDIZER	4.6.17	SEC.	0.021 MAX.	.0187	
FUEL	4.6.8	SEC.	0.021 MAX.	.018	
CLOSING RESPONSE TIME					
OXIDIZER	4.6.17	SEC.	0.005 MAX.	.0029	
FUEL	4.6.10	SEC.	0.005 MAX.	.0034	
CLOSING DROP OUT VOLTAGE					
OXIDIZER	4.6.17	VOLT (DC)	1 MIN.	2.3	
FUEL	4.6.13	VOLT (DC)	1 MIN.	1.8	

SPECIFICATION NUMBER RAO 220-348 | REVISION B | AMENDMENT NONE

DNA | SERIAL NO. 4058404

52-52701-275 | PART NO. 207510-21

SE-7 COMPONENT ACCEPTANCE TEST

PART NAME THRUST CHAMBER, 85 LB., ASSY. OF

548

PERFORMANCE PARAMETERS	PARAGRAPH NUMBER	UNITS	SPECIFICATION LIMITS	ACCEPTANCE TEST DATA	INSP.
* LEAKAGE TEST - TCA PROPELLANT VALVES	4.7				
SEAT LEAKAGE RATE					
OXIDIZER	4.7.17	SCC/MIN	2.23 MAX.	LESS THAN 0.1	
FUEL	4.7.21	SCC/MIN	2.23 MAX.	LESS THAN 0.1	
* PRE-TEST DATA					
DRY WEIGHT (EXCLUDING PROTECTIVE COVERS & CLOSURES)	4.1.3	LB.	DNA	8.32	
NOZZLE EXIT DIAMETER					
SECTION A-A		INCH	DNA	4.179	
THROAT DIAMETER					
SECTION A-A		INCH	DNA	.672	
B-B		INCH	DNA	.672	
C-C		INCH	DNA	.672	
D-D		INCH	DNA	.672	
** POST HOT-FIRE DATA					
PROOF PRESSURE TEST					
DRY WEIGHT (EXCLUDING PROTECTIVE COVERS & CLOSURES)	4.14.1	LB.	DNA	8.30	
THRUST CHAMBER PRESSURIZED FOR NOT LESS THAN 5 MINUTES					

R-15075-1

SPECIFICATION NUMBER	REVISION	AMENDMENT
* RAO 220-348	B	NONE
** RAO 220-348	B	#1

DNA SERIAL NO. 4058404

52-52701-275 PART NO. 207540-21

SE-7 COMPONENT ACCEPTANCE TEST

PART NAME THRUST CHAMBER, 85 LB., ASSY. OF

5.1.3

PERFORMANCE PARAMETERS	PARAGRAPH NUMBER	UNITS	SPECIFICATION LIMITS	ACCEPTANCE TEST DATA	INSP.
POST HOT-FIRE DATA (CONTINUED)					
PROOF PRESSURE TEST					
STEP I	4.14.5	PSIG	392 ± 10	392	
STEP II	4.14.5	PSIG	392 ± 10	392	
LEAKAGE TEST THRUST CHAMBER					
STEP I	4.14.5	DNA	NONE ALLOWED	NONE DETECTED	
STEP II	4.14.5	DNA	NONE ALLOWED	NONE DETECTED	
INSPECTED VISUALLY FOR DAMAGE OR DEFORMATION	4.14.5	DNA	NONE ALLOWED	NONE DETECTED	
LEAKAGE TEST--TCA PROPELLANT VALVES					
SEAT LEAKAGE RATE					
OXIDIZER	4.14.5	SCC/MIN	2.23 MAX.	LESS THAN 0.1	
FUEL	4.14.5	SCC/MIN	2.23 MAX.	LESS THAN 0.1	
LEAK TEST--WELDED JOINTS					
LEAK TEST					
PRESSURIZED INLET TUBE WITH GASEOUS HELIUM					
OXIDIZER	4.14.6	PSIG	500 ± 10	VERIFIED	
FUEL	4.14.9	PSIG	500 ± 10	VERIFIED	

SPECIFICATION NUMBER	REVISION	AMENDMENT			
RAO 220-348	B	#1	DNA	SERIAL NO.	4058404
			52-52701-275	PART NO.	207510-21
SE-7 COMPONENT ACCEPTANCE TEST			PART NAME	THRUST CHAMBER, 85 LB., ASSY. OF	5.1.4

PERFORMANCE PARAMETERS	PARAGRAPH NUMBER	UNITS	SPECIFICATION LIMITS	ACCEPTANCE TEST DATA	INSP.
LEAK TEST--WELDED JOINTS (CONTINUED)					
JOINT LEAKAGE RATE					
OXIDIZER	4.14.7	SCC/SEC	10^{-6} MAX.	LESS THAN 10^{-6}	
FUEL	4.14.9	SCC/SEC	10^{-6} MAX.	LESS THAN 10^{-6}	
INSPECTED VISUALLY FOR CLEANLINESS, CORROSION, DETERIORATION, DAMAGE OR DEFORMATION	4.14.10	DNA	NONE ALLOWED	NONE DETECTED	
THROAT DIAMETER (DELIVERED CONDITION)	4.15.1				
SECTION A-A		INCH	DNA	.672	
B-B		INCH	DNA	.672	
C-C		INCH	DNA	.672	
D-D		INCH	DNA	.672	
DRY WEIGHT (DELIVERABLE CONDITION) (EXCLUDING PROTECTIVE COVERS & CLOSURES)	4.15.2	LB.	DNA	8.12	
INSPECTED VISUALLY FOR CLEANLINESS, CORROSION, DETERIORATION, DAMAGE OR DEFORMATION	4.15.3	DNA	NONE ALLOWED	NONE DETECTED	

SPECIFICATION NUMBER	REVISION	AMENDMENT			
RAO 220-348	B	#1	DNA	SERIAL NO.	4058404
			52-52701-275	PART NO.	207510-21
SE-7 COMPONENT ACCEPTANCE TEST			PART NAME	THRUST CHAMBER, 85 LB., ASSY. OF	5.1.5

R-15075-1

CHARACTERISTICS	UNITS	SPECIFICATION LIMITS	RUN 256 TEST DATA	RUN 257 TEST DATA	RUN 274 TEST DATA	RUN 275 FINAL TEST DATA	INSP.
HOT FIRE TEST DATA - TEST SITE			NFL	NFL	NFL	NFL	ANR 900
CELL LOCATION			1-A	1-A	1-A	1-A	ANR 900
CELL NUMBER			379	379	379	379	ANR 900
TEST DATE			8 Sept 64	8 Sept 64	16 Sept 64	16 Sept 64	ANR 900
TEST DURATION	SEC.	3 MIN.	3.0	3.0	3.0	3.0	ANR 900
ENVIRONMENTAL Pc	PSIA	.16 MAX.	.0818	.0814	.0788	.0790	ANR 900
AMBIENT PRESSURE	PSIA	DNA	12.13	12.13	12.15	12.15	ANR 900
AMBIENT TEMPERATURE	°F	DNA	70.0	70.0	70.0	70.0	ANR 900
TIME OF DATA SLICE-START	SEC.	DNA	2.8	2.8	2.8	2.8	ANR 900
TIME OF DATA SLICE-END	SEC.	DNA	2.8	2.8	2.8	2.8	ANR 900
OXIDIZER TEMPERATURE	°F	DNA	58.2	60.5	68.0	72.5	ANR 900
FUEL TEMPERATURE	°F	DNA	63.0	65.0	67.0	67.0	ANR 900
OXIDIZER DENSITY	LB/FT^3	DNA	91.37	91.19	90.64	90.28	ANR 900
FUEL DENSITY	LB/FT^3	DNA	54.73	54.67	54.67	54.67	ANR 900

551

SPECIFICATION NUMBER RA0220- 348 B #1

DNA 52-52701-275

SERIAL NO. 4058404

PART NO. 207510-21

SE- 7 (REA) CALIBRATED PERFORMANCE DATA

PART NAME THRUST CHAMBER, 85 LB., ASSY OF

5.2

CONFIDENTIAL
GROUP 4
Downgraded at 3 year intervals
declassified after 12 years

THIS MATERIAL CONTAINS INFORMATION AFFECTING THE NATIONAL DEFENSE OF THE UNITED STATES WITHIN THE MEANING OF THE ESPIONAGE LAWS, TITLE 18 U.S.C. SECTIONS 793 AND 794. ITS TRANSMISSION OR THE REVELATION OF ITS CONTENTS IN ANY MANNER TO AN UNAUTHORIZED PERSON IS PROHIBITED BY LAW.

552

CHARACTERISTICS	UNITS	SPECIFICATION LIMITS	RUN 256 TEST DATA	RUN 257 TEST DATA	RUN 274 TEST DATA	RUN 275 FINAL TEST DATA	INSP.
HOT FIRE TEST DATA - TEST SITE			NFL	NFL	NFL	NFL	ANR 995
OXIDIZER INLET PRESSURE	PSIA	285 ± 10	289.6	289.0	287.7	290.2	ANR 995
FUEL INLET PRESSURE	PSIA	287 ± 10	288.4	288.4	285.4	285.9	ANR 995
OXIDIZER FLOWRATE	LB/SEC.	DNA	.1619	.1617	.1656	.1666	ANR 995
FUEL FLOWRATE	LB/SEC.	DNA	.1021	.1017	.1013	.1010	ANR 995
THRUST	LB.	DNA	75.9	76.3	76.4	77.4	ANR 995
MIXTURE RATIO	O/F	DNA	1.59	1.59	1.63	1.65	ANR 995
SPECIFIC IMPULSE	SEC.	DNA	288.	290.	286.	289.	ANR 995
INJECTOR END Pc	PSIA	DNA	121.8	122.4	122.6	123.2	ANR 995
CHARACTERISTIC VELOCITY	FT/SEC.	DNA	5265.	5304.	5240.	5252.	ANR 995
THROAT DIAMETER	INCH	DNA	.672	.672	.672	.672	ANR 995
FUEL ORIFICE DIAMETER	INCH	DNA	.06460	.06460	.06460	.06460	ANR 995
OXIDIZER ORIFICE DIAMETER	INCH	DNA	.07138	.07138	.07138	.07138	ANR 995
TCA FIRING TIME (TOTAL)	SEC.	15 MAX.	3.0	6.0	9.0	12.0	ANR 995
OXIDIZER SAMPLE NUMBER			315	315	321	321	ANR 995
FUEL SAMPLE NUMBER			314	314	323	323	ANR 995

R-15075-1

SPECIFICATION NUMBER RA0220-348 B #1	DNA	SERIAL NO. 4058404	
	52-52701-275	PART NO. 207510-21	
SE-7 (REA) CALIBRATED PERFORMANCE DATA	PART NAME THRUST CHAMBER, 85 LB., ASSY OF		5.2.1

CONFIDENTIAL
Downgraded at 3 years
declassified after 12 years

CONFIDENTIAL

THE NATIONAL DEFENSE OF THE UNITED STATES WITHIN THE MEANING OF THE ESPIONAGE LAWS, TITLE 18 U.S.C., SECTIONS 793 AND 794. ITS TRANSMISSION OR THE REVELATION OF ITS CONTENTS IN ANY MANNER TO AN UNAUTHORIZED PERSON IS PROHIBITED BY LAW.

GROUP 4
Downgraded at 3 year intervals:
declassified after 12 years

R-15075-1

CHARACTERISTICS	UNITS	SPECIFICATION LIMITS	RUN 256 TEST DATA	RUN 257 TEST DATA	RUN 274 TEST DATA	RUN 275 FINAL TEST DATA	INSP.
HOT FIRE TEST DATA - TEST SITE			NFL	NFL	NFL	NFL	ANR 995
ADJUST TO STANDARD CONDITIONS							
THRUST	LB.	79.0 ± 3.9	76.1	76.6	77.1	77.8	ANR 995
MIXTURE RATIO	O/F	1.60 ± .06	1.56	1.57	1.61	1.61	ANR 995
SPECIFIC IMPULSE	SEC.	DNA	291.	294.	290.	293.	ANR 995
INJECTOR END Pc	PSIA	DNA	120.3	121.1	121.9	122.1	ANR 995
CHARACTERISTIC VELOCITY	FT/SEC.	DNA	5256.	5297.	5232.	5242.	ANR 995
ADJUST TO RATED CONDITIONS							
THRUST	LB.	79.0	79.0	79.0	79.0	79.0	ANR 995
MIXTURE RATIO	O/F	1.6	1.60	1.60	1.60	1.60	ANR 995
SPECIFIC IMPULSE	SEC.	280 MIN.	292.	294.	290.	293.	ANR 995
							OP MAC 58

553

SPECIFICATION NUMBER RA0220-348 B #1

DNA 52-52701-275

SERIAL NO. 4058404

PART NO. 207510-21

SE- 7 (REA) CALIBRATED PERFORMANCE DATA

PART NAME THRUST CHAMBER, 85 LB. ASSY OF

5.2.2

CONFIDENTIAL

Downgraded at 3 year intervals;
declassified after 12 years

THE FOLLOWING IS INFORMATION RELATIVE TO THE CLEANLINESS LEVEL OF THE PROPELLANT UTILIZED IN THE HOT-FIRE ACCEPTANCE TEST OF THE THRUST CHAMBER ASSEMBLY.

THE INFLUENT PARTICULATE COUNT OF THE PROPELLANT WAS:

		LIMITS	ACTUAL COUNT MMH - FUEL	ACTUAL COUNT NTO - OXID
	< 10	*	DNA	DNA
	10 - 25	100	75	43
	25 - 50	20	17	4
	50 - 100	5	1	1
	100 - 300	1	0	0
	300 - 1000	0	0	0
	> 1000	0	0	0
FIBERS	300 - 3000	0	0	0
FIBERS	> 3000	0	0	0

* NOTE: " NOT TO BE COUNTED BUT NO SLURRY OF FINE PARTICLES WHICH COVERS MORE THAN AN ESTIMATED 5 PERCENT OF THE TOTAL EFFECTIVE FILTER AREA SHALL BE ALLOWED." AT THE DISCRETION OF QUALITY ASSURANCE, A WEIGHT DETERMINATION OF TOTAL CONTAMINATION MAY BE MADE AS A REFEREE TEST IN BORDERLINE CASES. THE MAXIMUM ALLOWABLE WEIGHT OF CONTAMINANTS SHALL BE 0.001 GRAM (1 MG).

CLASS 4

INSP. _____

SPECIFICATION NUMBER	REVISION	AMENDMENT		
RA0615-003	B	#2	52-52701-275 PART NO. 207510-21	
SE-7 INFORMATION - CONTAMINATION			PART NAME THRUST CHAMBER, 85 LB., ASSY. OF	5.3

ACQUISITION

DD FORM 1000 (REV. 7 JUNE 57)

McDONNELL AIRCRAFT CORPORATION
MATERIAL REVIEW RECORD

77676

PAGE 1 OF 2

DATE 23 September 1964

COPIES TO DEPTS

TITLE: Thrust Chamber Assy

VENDOR NAME AND ADDRESS: Rocketdyne, 6633 Canoga Avenue, Canoga Park, Calif

PART NO.: 207510-21

DE DISCREPANCY NO.: SCD52-52701-275

PURCHASE ORDER NO.: Y20161

QUANTITY REJECTED			AIR CRAFT	RECEIVED FROM STOCK	CODE	LOCATION OF PARTS	BLDG.
(1) One	☐	GFE	306			Vendor	
	☐	COM					
QUANTITY ACCEPTED	☐	MAC	MODEL	SERIAL NO.	CUSTOMER REPLACEMENT NO.	TOOLING CHECK REQUESTED	
	☐	CFE	133 P	4058404			

REASON FOR REJECTION: Condition A: Throat insert has a crack extending from the downstream edge to the upstream edge. Max. width of crack is .0005. Condition B: Throat insert has two (2) chipped out areas near the upstream edge. One (1) chip is .010 long X .002 wide. The other chip is .003 long X .001 wide.

Shipment of this hardware in the condition reflected in this MRR must be authorized by a written waiver from the McDonnell Buyer or Resident Representative. 600N-5 C37218

SIGNATURE OF PERSON INITIATING THIS MRR: T. J. Cornilson DATE 9-23-64

INSPECTION SUPERVISION APPROVAL SIGNATURE: T. J. Cornilson DATE 9-23-64

MATERIALS REVIEW BOARD'S INSTRUCTIONS

USE AS IS	SCRAP	REWORK	RESPONSIBILITY	RETURN TO VENDOR
	QTY.	QTY.	MAC ☐ VENDOR ☒	QTY.

DISCREPANCY IS NOT CONSIDERED SUFFICIENT TO MATERIALLY AFFECT THE PHYSICAL AND FUNCTIONAL DEISNG REQUIREMENTS, THEREFORE, ACCEPTABLE TO USE.

NO TWX SENT TO MAC: DISPOSITIONED IN-HOUSE AT ROCKETDYNE.

R-15075-1

555

ENG. DEPT. DISPOSITIONED BY: J. R. Harrison 9/23/64 BUYER

VENDOR TO BE CHARGED X

RETURN TO VENDOR	RETAIN AT MAC	CHARGE	REWORK	SCRAP
R.R. NO.	QTY.	VENDOR	USE $	$
REPAIR ☐ REPLACE ☐	REWORK ☐ SCRAP ☐	MAC	LOT $	$

FACIL. PURG. APPROVAL

MAC'S SUP. REPR.

MAC'S QUALITY ENGR. APPROVAL & DATE: 23 Sep 64

MAC'S ENGR. APPROVAL & DATE: 23 Sep 64

REWORK INSPECTOR'S NAME

MAC REPR.

DATE

CONTROLLER NAME

DATE

CORRECTIVE ACTION SYSTEMS PROCESSOR NAME

DISCREPANCY			DISPOSITION	
DISC. CODE	MATL. CODE	QTY.	DISP CODE	QTY.
1			1	
			2	
			3	
4			4	
5			5	
6			6	
7			7	

NOR No. 71876

Page 2 of 5

C 37210

ASSY. NO. 207510-21

DEFECTIVE DETAIL NO. 4058404

PART NAME THRUSTCHAMBER ASSY.

DATE 9/18/64

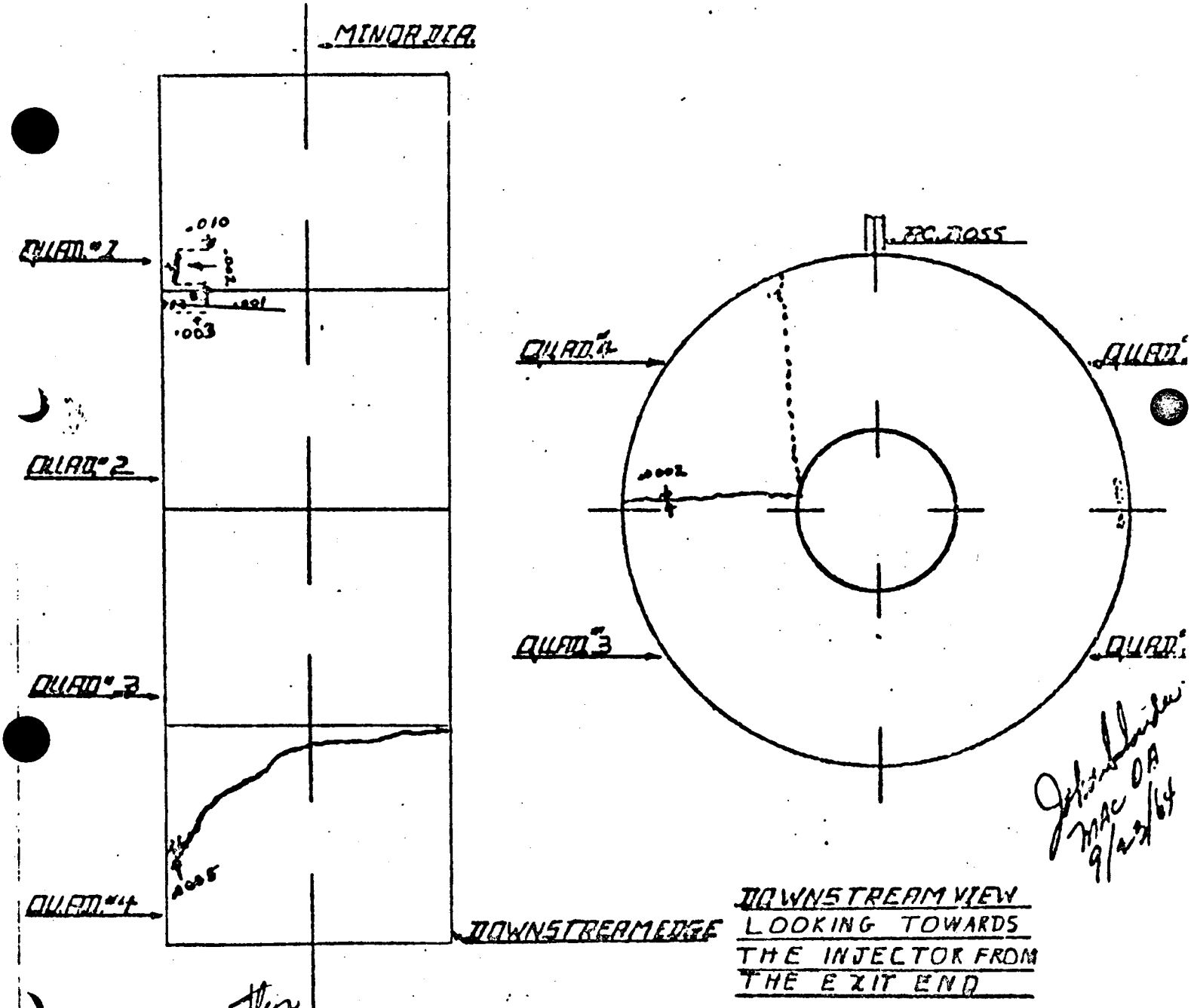

DOWNSTREAM VIEW LOOKING TOWARDS THE INJECTOR FROM THE EXIT END

J. Hoffman MAC QA 9/23/64

C. L. Mattler MAC Engrg 23 Sep 64

MATERIAL REVIEW REPORT
(CONTINUATION SHEET)

R-15075-1

MAC 861A (REV. 24 APR. 59)

SCD52-52701-277
S/N 4064382

R-15075-1

"CERTIFICATION IS HEREBY GIVEN THAT THE DELIVERABLE END ITEM COVERED BY THIS LOG BOOK WAS MANUFACTURED, INSPECTED AND TESTED IN ACCORDANCE WITH PRESCRIBED DRAWINGS, SPECIFICATION AND QUALITY ASSURANCE PROVISIONS. INSPECTION AND TEST RECORDS ARE ON FILE VERIFYING COMPLIANCE WITH APPLICABLE DRAWINGS AND SPECIFICATIONS, EXCEPT AS NOTED HEREIN"

LOG BOOK ACCEPTANCE

DAT UNIT #7 (CRD 19)

SPACE ENGINES ENGINEERING	SPACE ENGINES QUALITY CONTROL	McDONNELL QUALITY REPRESENTATIVE	GOV'T INSPECTION AGENCY QUALITY REPRESENTATIVE
[illegible]	Wm. E. [illegible]	[illegible]	[illegible]
DATE 8-13-64	DATE 8/13/64	DATE 8/12/64	DATE 13 AUG 1964

CONTENTS

SECTION I – DELIVERABLE END ITEM ASSEMBLY LOG

RECORDS CONTAINED IN THIS SECTION ARE PERTINENT TO THE DELIVERABLE END ITEM ACCEPTANCE AND ALSO INCLUDE MODEL CONFIGURATION DATA, PERTINENT DETAILS OF SHORT SHIPMENTS, COMPONENT VARIATIONS, AGE SENSITIVE PARTS RECORD, WEIGHT AND SERIALIZATION RECORDS.

SECTION II – ACCEPTANCE TEST LOG

RECORDS OF ASSEMBLY ACCEPTANCE TESTS ARE PRESENTED IN THIS SECTION WITH PERFORMANCE DATA AND SUMMARY DATA ON INSPECTIONS AND ACCEPTANCE.

GENERAL INFORMATION

THIS LOG BOOK IS PROVIDED FOR SERVICE USE IN RECORDING PERTINENT HISTORICAL DATA AND ALL CHANGES FROM THE ORIGINAL CONFIGURATION. IT IS REQUESTED THIS LOG BOOK ACCOMPANY THE DELIVERABLE END ITEM WHEN TRANSFERRED BETWEEN ROCKETDYNE AND USING AGENCIES.

GROUP-4
Downgraded at 3 year intervals;
declassified after 12 years

ROCKETDYNE – SPACE ENGINES
A DIVISION OF NORTH AMERICAN AVIATION, INC.

LOG BOOK SPECIFICS

McDONNELL	ITEM	ROCKETDYNE
THIS MATERIAL CONTAINS INFORMATION AFFECTING THE NATIONAL DEFENSE OF THE UNITED STATES WITHIN THE MEANING OF THE ESPIONAGE LAWS, TITLE 18 U.S.C., SECTIONS 793 AND 794. ITS TRANSMISSION OR THE REVELATION OF ITS CONTENTS IN ANY MANNER TO AN UNAUTHORIZED PERSON IS PROHIBITED BY LAW.		
	LOG BOOK DATE	13 AUGUST 1964
	DWG CHG LTR	DNA
Y20161R	CONTRACT NO.	
	GEN ORDER NO.	5252
SCD52-52701-277	SPEC NO.	
DNA	SERIAL NO.	4064382
52-52701-277	PART NO.	207540-21

SE-7 DELIVERABLE END ITEM – LOG BOOK IDENTIFICATION | PART NAME THRUST CHAMBER, 100 LB., ASSY OF | 1.0

557

DELIVERABLE END ITEM

THIS LOG BOOK CONTAINS INFORMATION PERTINENT TO THE DELIVERABLE END ITEM AS SPECIFIED HEREIN BY SERIAL NUMBER AND PART NUMBER. IT IS NECESSARY THAT ALL ENTRIES BE WRITTEN IN INK OR TYPED FOR PERMANENT RECORD. ENTRIES SUCH AS SERIALIZATION, WEIGHT, APPLICABLE MCR'S, ACCEPTANCE TEST DATA AND CALIBRATION DATA WILL BE ENTERED BY ROCKETDYNE AT THE TIME OF DELIVERY.

IT IS REQUESTED THAT THIS LOG BOOK ACCOMPANY THIS DELIVERABLE END ITEM IF THE ITEM IS RETURNED TO ROCKETDYNE FOR REPAIR, MODIFICATION OR RETEST. ROCKETDYNE WILL THEN ENTER REPAIR, MODIFICATION AND RETEST DATA IN THIS LOG BOOK.

THE FORMAT OF PAGES IN THIS LOG BOOK SHALL NOT BE REVISED WITHOUT OBTAINING APPROVAL OF ROCKETDYNE SPACE ENGINES QUALITY CONTROL.

1.0 LOG BOOK IDENTIFICATION

2.0 FOREWORD

3.0 CONTENTS

4.0 MODULE/COMPONENT ASSEMBLY LOG--SECTION I

4.1 CONFIGURATION & SERIALIZATION LOG

4.2 MCR VERIFICATION

4.3 VARIATION LOG

4.4 REPLACEMENT LOG

5.0 COMPONENT ACCEPTANCE TEST LOG--SECTION II

5.1 COMPONENT ACCEPTANCE TEST

5.1.1 COMPONENT ACCEPTANCE TEST

5.1.2 COMPONENT ACCEPTANCE TEST

5.1.3 COMPONENT ACCEPTANCE TEST

5.1.4 COMPONENT ACCEPTANCE TEST

5.1.5 COMPONENT ACCEPTANCE TEST

5.2 CALIBRATED PERFORMANCE DATA

5.2.1 CALIBRATED PERFORMANCE DATA

5.2.2 CALIBRATED PERFORMANCE DATA

5.3 INFORMATION--CONTAMINATION

SECTION I

52-52701-277 PART NO. 207540-21

SE-7 MODULE / COMPONENT ASSEMBLY LOG

PART NAME THRUST CHAMBER, 100 LB., ASSY OF

4.0

IND. NO.	PART NUMBER	REV. LTR.	PART NAME	SERIAL NO.	AGE CONTROL DATE OF MFG.	INSP.
1	207540-81	DNA	THRUST CHAMBER, 100 LB. ASSY OF	4064382	1 Q 64	ANR 208
2	207541-11	DNA	BODY, THRUST CHAMBER, ASSY OF	4056076	1 Q 64	ANR 208
2	207548	DNA	SHELL, THRUST CHAMBER, ASSY OF	8502277		ANR 208
3	207543	DNA	INJECTOR, THRUST CHAMBER, ASSY OF	4058086		ANR 208
2	407561	DNA	VALVE, OXIDIZER, T/C, ASSY OF	9244203		ANR 208
2	407662	DNA	VALVE, FUEL, T/C, ASSY OF	8720835		ANR 208

NASA

DNA SERIAL NO. 4064382

52-52701-277 PART NO. 207540-21

SE-7 CONFIGURATION & SERIALIZATION LOG

PART NAME THRUST CHAMBER, 100 LB., ASSY OF

4.1

562

MCR / ECP NO.	DATE	TITLE	DATE	INSP.
SE6-62	6 JAN 64	COMPONENT CLEANING; PROVISION FOR	13 AUG 64	ANR 208
SE6-64	30 JUL 63	TCA, ACCEPTANCE TESTS; REVISION OF	13 AUG 64	ANR 208
SE6-80	28 DEC 63	THRUST CHAMBER ASSEMBLIES, FABRICATION MATERIAL; APPROVAL OF	13 AUG 64	ANR 208
SE6-85	30 JUL 63	CUSTOMER TEST SURVEILLANCE; REQUIREMENTS FOR	13 AUG 64	ANR 208
SE6-133	22 APR 64	TCA PROPELLANT VALVES; ADDITIONAL REQUIREMENTS FOR	13 AUG 64	ANR 208
SE6-139	15 APR 64	PLACEMENT OF HAYNES STELLITE #3 SAND CAST ON APPROVED MATERIAL LIST	13 AUG 64	ANR 208
SE6-144	15 APR 64	TCA INJECTORS; REDESIGN OF	13 AUG 64	ANR 208
SE6-179	16 JUN 64	TUBE STUBS; MARKINGS OF	13 AUG 64	ANR 208
SE7-41	15 APR 64	85# AND 100# THRUST CHAMBER ASSEMBLIES, PROPELLANT VALVES, INLET TUBES, MATERIAL; CHANGE TO 304L BAR PER QQ-S-763	13 AUG 64	ANR 208
SE7-85	30 APR 64	85 AND 100 LB. TCA DIMENSIONS; CHANGES TO	13 AUG 64	ANR 208

R-15075-1

DNA	SERIAL NO.	4064382	
52-58701-277	PART NO.	207540-21	
SE-7 DELIVERABLE END ITEM - MCR VERIFICATION	PART NAME	THRUST CHAMBER, 100 LB., ASSY OF	4.2

R-15075-1

MR NO.	PART OR COMP. INVOLVED	PART NUMBER	SERIAL NUMBER	BRIEF DESCRIPTION OF VARIATION AND MATERIAL REVIEW BOARD DISPOSITION	INSP
56403	THRUST CHAMBER ASSEMBLY	207540-21	4064382	CONDITION A: THROAT INSERT IS CRACKED IN (2) PLACES. NO MORE THAN ONE CRACK EXISTS IN ANY ONE 90° QUADRANT. CONDITION B: THE LINER WITH THE PC HOLE HAS A CRACK .0002 WIDE ACROSS THE LINER AT THE C/L OF THE HOLE. DISPOSITION: DISCREPANCIES ARE NOT CONSIDERED SUFFICIENT TO MATERIALLY AFFECT THE PHYSICAL AND FUNCTIONAL DESIGN REQUIREMENTS, THEREFORE, ACCEPTABLE TO USE FOR DAT.	ANR 208

563

DNA	SERIAL NO.	4064382	
52-52701-277	PART NO.	207540-21	
SE-7 DELIVERABLE END ITEM — VARIATION LOG	PART NAME	THRUST CHAMBER, 100 LB., ASSY OF	4.3

564

PART NO.	PART NAME	SERIAL NO.	REASON FOR REPLACEMENT	REPLACED BY		INSP.
				PART NO.	SERIAL NO.	
			NONE THIS DATE 13 AUGUST 1964			ANR 208

DM SERIAL NO. 4064382

52-52701-277 PART NO. 207540-21

SE-7 DELIVERABLE END ITEM--REPLACEMENT LOG

PART NAME THRUST CHAMBER ASSEMBLY, 100 LB.

4.4

R-15075-1

SECTION II

52-52701-277 PART NO. 207540-21

SE-7 COMPONENT ACCEPTANCE TEST LOG

PART NAME THRUST CHAMBER, 100 LB., ASSY OF

5.0

PERFORMANCE PARAMETERS	PARAGRAPH NUMBER	UNITS	SPECIFICATION LIMITS	ACCEPTANCE TEST DATA	INSP.
ELECTRICAL RESISTANCE TESTS--TCA PROPELLANT VALVES	4.2				
BODY TEMPERATURE					
OXIDIZER	4.2.4	DEGREES F	70 ± 5	69	ANR 208
FUEL	4.2.11	DEGREES F	70 ± 5	69	ANR 208
COIL RESISTANCE					
OXIDIZER	4.2.5	OHMS	42 ± 2	41.32	
FUEL	4.2.11	OHMS	42 ± 2	41.76	ANR 208
CONTINUITY RESISTANCE					
OXIDIZER	4.2.9	OHMS	1.0 MAX.	.113	ANR 208
FUEL	4.2.11	OHMS	1.0 MAX.	.119	ANR 208
DIELECTRIC STRENGTH TEST--TCA PROPELLANT VALVES	4.3				
CURRENT LEAKAGE					
OXIDIZER	4.3.8	MICROAMPS	500 MAX.	54	ANR 208
FUEL	4.3.11	MICROAMPS	500 MAX.	62	ANR 208
PROOF PRESSURE TEST--TCA PROPELLANT VALVES	4.4				
VALVES PRESSURIZED FOR NOT LESS THAN 3 MINUTES					
OXIDIZER					
STEP I	4.4.3	PSIG	500	VERIFIED	ANR 208
STEP II	4.4.5	PSIG	500	VERIFIED	ANR 208

SPECIFICATION NUMBER	REVISION	AMENDMENT			
RA0220-349	"A"	NONE	DMA 52-52701-277	SERIAL NO. 4064382	PART NO. 307540-21

SE-7 COMPONENT ACCEPTANCE TEST

PART NAME THRUST CHAMBER, 100 LB., ASSY OF

5.1

R-15075-1

PERFORMANCE PARAMETERS	PARAGRAPH NUMBER	UNITS	SPECIFICATION LIMITS	ACCEPTANCE TEST DATA	INSP.
PROOF PRESSURE TEST--TCA PROPELLANT VALVES (CONTINUED)	4.4				
FUEL					
STEP I	4.4.7	PSIG	500	VERIFIED	ANR 208
STEP II	4.4.7	PSIG	500	VERIFIED	ANR 208
INSPECTED VISUALLY FOR DAMAGE OR DEFORMATION					
OXIDIZER					
STEP I	4.4.4	DNA	NONE ALLOWED	NONE DETECTED	ANR 208
STEP II	4.4.5	DNA	NONE ALLOWED	NONE DETECTED	ANR 208
FUEL					
STEP I	4.4.7	DNA	NONE ALLOWED	NONE DETECTED	ANR 208
STEP II	4.4.7	DNA	NONE ALLOWED	NONE DETECTED	ANR 208

PERFORMANCE PARAMETERS	PARAGRAPH NUMBER	UNITS	SPECIFICATION LIMITS	ACCEPTANCE TEST DATA	INSP.
PROOF PRESSURE AND LEAKAGE TEST--THRUST CHAMBER	4.5				
PROOF PRESSURE TEST					
THRUST CHAMBER PRESSURIZED FOR NOT LESS THAN 5 MINUTES AT					
STEP I	4.5.8	PSIG	392 ± 10	VERIFIED	ANR 208
STEP II	4.5.10	PSIG	392 ± 10	VERIFIED	ANR 208
LEAKAGE TEST					
STEP I	4.5.8	DNA	NONE ALLOWED	VERIFIED	ANR 208
STEP II	4.5.10	DNA	NONE ALLOWED	VERIFIED	ANR 208
INSPECTED VISUALLY FOR DAMAGE OR DEFORMATION	4.5.14	DNA	NONE ALLOWED	VERIFIED	ANR 208
FUNCTIONAL TEST--TCA PROPELLANT VALVES	4.6				
OPENING RESPONSE TIME					
OXIDIZER	4.6.17	SEC.	0.021 MAX.	.0180	ANR 208
FUEL	4.6.8	SEC.	0.021 MAX.	.0175	ANR 208
CLOSING RESPONSE TIME					
OXIDIZER	4.6.17	SEC.	0.005 MAX.	.0036	ANR 208
FUEL	4.6.10	SEC.	0.005 MAX.	.0036	ANR 208
CLOSING DROP OUT VOLTAGE					
OXIDIZER	4.6.17	VOLT (DC)	1 MIN.	2.	ANR 208
FUEL	4.6.13	VOLT (DC)	1 MIN.	2.	ANR 208

SPECIFICATION NUMBER	REVISION	AMENDMENT			
RA0220-349	"A"	NONE	DNA	SERIAL NO.	4064382
			52-52701-277	PART NO.	207540-21

SE-7 COMPONENT ACCEPTANCE TEST

PART NAME THRUST CHAMBER, 100 LB., ASSY OF

5.1.2

PERFORMANCE PARAMETERS	PARAGRAPH NUMBER	UNITS	SPECIFICATION LIMITS	ACCEPTANCE TEST DATA	INSP.
LEAKAGE TEST -TCA PROPELLANT VALVES	4.7				
SEAT LEAKAGE RATE					
OXIDIZER	4.7.17	SCC/MIN	2.23 MAX.	LESS THAN 0.1	ANR 208
FUEL	4.7.22	SCC/MIN	2.23 MAX.	LESS THAN 0.1	ANR 208
PRE-TEST DATA					
DRY WEIGHT (EXCLUDING PROTECTIVE COVERS & CLOSURES)	4.1.3	LB.	DNA	8.60	ANR 208
NOZZLE EXIT DIAMETER					
SECTION A-A		INCH	DNA	4.450	ANR 208
THROAT DIAMETER					
SECTION A-A		INCH	DNA	.709	ANR 206
B-B		INCH	DNA	.709	ANR 206
C-C		INCH	DNA	.709	[illegible]
D-D		INCH	DNA	.709	ANR 208
POST HOT-FIRE DATA					
PROOF PRESSURE TEST					
DRY WEIGHT (EXCLUDING PROTECTIVE COVERS & CLOSURES)	4.14.1	LB.	DNA	8.94	ANR 208
THRUST CHAMBER PRESSURIZED FOR NOT LESS THAN 5 MINUTES					

SPECIFICATION NUMBER	REVISION	AMENDMENT		
RA0220-349	"A"	NONE	DNA	SERIAL NO. 1064382
			52 2701-277	PART NO. 207540-21

SE-7 COMPONENT ACCEPTANCE TEST

PART NAME THRUST CHAMBER, 100 LB., ASSY OF

5.1.3

PERFORMANCE PARAMETERS	PARAGRAPH NUMBER	UNITS	SPECIFICATION LIMITS	ACCEPTANCE TEST DATA	INSP.
POST HOT-FIRE DATA (CONTINUED)					
PROOF PRESSURE TEST					
STEP I	4.14.5	PSIG	392 ± 10	VERIFIED	ANR 208
STEP II	4.14.5	PSIG	392 ± 10	VERIFIED	ANR 208
LEAKAGE TEST THRUST CHAMBER					
STEP I	4.14.5	DNA	NONE ALLOWED	NONE DETECTED	ANR 208
STEP II	4.14.5	DNA	NONE ALLOWED	NONE DETECTED	ANR 208
INSPECTED VISUALLY FOR DAMAGE OR DEFORMATION	4.14.5	DNA	NONE ALLOWED	NONE DETECTED	ANR 208
LEAKAGE TEST--TCA PROPELLANT VALVES					
SEAT LEAKAGE RATE					
OXIDIZER	4.14.5	SCC/MIN	2.23 MAX.	<0.1	ANR 208
FUEL	4.14.5	SCC/MIN	2.23 MAX.	<0.1	ANR 208
LEAK TEST--WELDED JOINTS					
LEAK TEST					
PRESSURIZED INLET TUBE WITH GASEOUS HELIUM					
OXIDIZER	4.14.6	PSIG	500 ± 10	VERIFIED	ANR 208
FUEL	4.14.9	PSIG	500 ± 10	VERIFIED	ANR 208

PERFORMANCE PARAMETERS	PARAGRAPH NUMBER	UNITS	SPECIFICATION LIMITS	ACCEPTANCE TEST DATA	INSP.
LEAK TEST--WELDED JOINTS (CONTINUED)					
JOINT LEAKAGE RATE					
OXIDIZER	4.14.7	SCC/SEC	10^{-6} MAX.	$< 10^{-6}$	ANR 208
FUEL	4.14.9	SCC/SEC	10^{-6} MAX.	$< 10^{-6}$	ANR 208
INSPECTED VISUALLY FOR CLEANLINESS, CORROSION, DETERIORATION, DAMAGE OR DEFORMATION	4.14.10	DNA	NONE ALLOWED	NONE DETECTED	ANR 208
NOZZLE EXIT DIAMETER					
SECTION A-A		INCH	DNA	4.450	ANR 208
THROAT DIAMETER (DELIVERED CONDITION)	4.15.1				
SECTION A-A		INCH	DNA	.709	ANR 208
B-B		INCH	DNA	.709	ANR 208
C-C		INCH	DNA	.709	ANR 208
D-D		INCH	DNA	.709	ANR 208
DRY WEIGHT (DELIVERABLE CONDITION) (EXCLUDING PROTECTIVE COVERS & CLOSURES)	4.15.2	LB.	DNA	8.67	ANR 208
INSPECTED VISUALLY FOR CLEANLINESS, CORROSION, DETERIORATION, DAMAGE OR DEFORMATION	4.15.3	DNA	NONE ALLOWED	NONE DETECTED	ANR 208

SPECIFICATION NUMBER	REVISION	AMENDMENT
RA0220-349	A	NONE

DNA SERIAL NO. 4064382
52-52701-277 PART NO. 207540-21

SE- 7 COMPONENT ACCEPTANCE TEST

PART NAME THRUST CHAMBER ASSEMBLY, 100 LB.

CHARACTERISTICS	UNITS	SPECIFICATION LIMITS	RUN TEST DATA	RUN TEST DATA	RUN TEST DATA	RUN 161 FINAL TEST DATA	INSP.
[illegible] TEST DATA - [illegible]	-	-	-	-	-	[illegible]	ANR 208
CELL LOCATION	-	-	-	-	-	1-A	ANR 208
CELL NUMBER	-	-	-	-	-	379	ANR 208
TEST DATE	-	-	-	-	-	26 MAY 64	ANR 208
[illegible] DURATION	SEC.	3 MIN.	-	-	-	3.0	ANR 208
[illegible] Pc	DBZA	.16 MAX.	-	-	-	.0766	ANR 208
[illegible] PRESSURE	DBZA	DNA	-	-	-	12.01	ANR 208
[illegible]	°F	DNA	-	-	-	42.0	ANR 208
TIME OF DATA SINGLE-[illegible]	SEC.	DNA	-	-	-	2.3	ANR 208
TIME OF DATA DUAL-END	[illegible]	DNA	-	-	-	2.3	ANR 208
[illegible]	°F	DNA	-	-	-	40.0	ANR 208
[illegible]	°F	DNA	-	-	-	43.3	ANR 208
[illegible] DENSITY	LB/FT³	DNA	-	-	-	93.01	ANR 208
[illegible] DENSITY	LB/FT³	DNA	-	-	-	55.73	ANR 208

SPECIFICATION [illegible] NUMBER RA0220-349

[illegible] SERIAL NO. [illegible] 2

52-527 [illegible] 277 PART NO. [illegible]

SE[illegible] CALIBRATED PERFORMANCE DATA

PART NAME THRUST CHAMBER, 100 LB., ASSY OF

5.2

R-15075-1

CHARACTERISTICS	UNITS	SPECIFICATION LIMITS	RUN TEST DATA	RUN TEST DATA	RUN TEST DATA	RUN 161 FINAL TEST DATA	INSP.
HOT FIRE TEST DATA - TEST SITE	-	-	-	-	-	NFL	ANR 208
OXIDIZER INLET PRESSURE	PSIA	283 ± 10	-	-	-	283.0	ANR 208
FUEL INLET PRESSURE	PSIA	286 ± 10	-	-	-	285.7	ANR 208
OXIDIZER FLOWRATE	LB/SEC.	DNA	-	-	-	.1947	ANR 208
FUEL FLOWRATE	LB/SEC.	DNA	-	-	-	.1209	ANR 208
THRUST	LB.	DNA	-	-	-	93.8	ANR 208
MIXTURE RATIO	O/F	DNA	-	-	-	1.61	ANR 208
SPECIFIC IMPULSE	SEC.	DNA	-	-	-	297.	ANR 208
INJECTOR END Pc	PAIA	DNA	-	-	-	134.2	ANR 208
CHARACTERISTIC VELOCITY	FT/SEC.	DNA	-	-	-	5403.	ANR 208
THROAT DIAMETER	INCH	DNA	-	-	-	.709	ANR 208
FUEL ORIFICE DIAMETER	INCH	DNA	-	-	-	.07760	ANR 208
OXIDIZER ORIFICE DIAMETER	INCH	DNA	-	-	-	.08570	ANR 208
TCA FIRING TIME (TOTAL)	SEC.	10 MAX.	-	-	-	3.0	ANR 208
OXIDIZER SAMPLE NUMBER		-	-	-	-	225	ANR 208
FUEL SAMPLE NUMBER	-	-	-	-	-	226	ANR 208

SPECIFICATION NUMBER 0220-349

DNA 52-52701-277

SERIAL NO. 4061332

PART NO. 207540-21

573

SE- 7 (REA) CALIBRATED PERFORMANCE DATA

PART NAME THRUST CHAMBER, 100 LB., ASSY OF

5.2.1

574

CHARACTERISTICS	UNITS	SPECIFICATION LIMITS	RUN TEST DATA	RUN TEST DATA	RUN TEST DATA	RUN 161 FINAL TEST DATA	INSP.
HOT FIRE TEST DATA - TEST SITE	-	-	-	-	-	NFL	ANR 208
ADJUST TO STANDARD CONDITIONS							
THRUST	LB.	94.5 ± 4.7	-	-	-	94.0	ANR 208
MIXTURE RATIO	O/F	1.60 ± .05	-	-	-	1.60	ANR 208
SPECIFIC IMPULSE	SEC.	DNA	-	-	-	301.	ANR 208
INJECTOR END Pc	PSIA	DNA	-	-	-	132.9	ANR 208
CHARACTERISTIC VELOCITY	FT/SEC.	DNA	-	-	-	5[illegible]0.	ANR 208
ADJUST TO RATED CONDITIONS							
THRUST	LB.	94.5	-	-	-	94.5	ANR 208
MIXTURE RATIO	O/F	1.6	-	-	-	1.60	ANR 208
SPECIFIC IMPULSE	SEC.	MIN.	-	-	-	301.	ANR 208

R-15075-1

SPECIFICATION NUMBER
RA0220-349 and RA0220-232

RPA 52-52701-277

SERIAL NO. [illegible]

PART NO. 2[illegible]7540-21

SE- 7 (REA) CALIBRATED PERFORMANCE DATA

PART NAME THRUST CHAMBER, 100 LB. ASSY OF

5.2.3

R-15075-1

THE FOLLOWING IS INFORMATION RELATIVE TO THE CLEANLINESS LEVEL OF THE PROPELLANT UTILIZED IN THE HOT-FIRE ACCEPTANCE TEST OF THE THRUST CHAMBER ASSEMBLY.

THE INFLUENT PARTICULATE COUNT OF THE PROPELLANT WAS:

		LIMITS	ACTUAL COUNT MMH - FUEL	ACTUAL COUNT NTO - OXID
	< 10	*	DNA	DNA
	10 - 25	100	82	84
	25 - 50	20	3	10
	50 - 100	5	1	2
	100 - 300	1	0	0
	300 - 1000	0	0	0
	> 1000	0	0	0
FIBERS	300 - 3000	0	0	0
FIBERS	> 3000	0	0	0

* NOTE: " NOT TO BE COUNTED BUT NO SLURRY OF FINE PARTICLES WHICH COVERS MORE THAN AN ESTIMATED 5 PERCENT OF THE TOTAL EFFECTIVE FILTER AREA SHALL BE ALLOWED." AT THE DISCRETION OF QUALITY ASSURANCE, A WEIGHT DETERMINATION OF TOTAL CONTAMINATION MAY BE MADE AS A REFEREE TEST IN BORDERLINE CASES. THE MAXIMUM ALLOWABLE WEIGHT OF CONTAMINANTS SHALL BE 0.001 GRAM (1 MG).

CLASS 4

INSP. ANR 208

575

SPECIFICATION NUMBER	REVISION	AMENDMENT		
RA0615-003	B	#1	52-52701-277 PART NO. 207540-21	
SE- 7 INFORMATION - CONTAMINATION			PART NAME THRUST CHAMBER ASSEMBLY, 100 LB.	5.3

[redacted]

SCD 52-52701-277

576

"CERTIFICATION IS HEREBY GIVEN THAT THE DELIVERABLE END ITEM COVERED BY THIS LOG BOOK WAS MANUFACTURED, INSPECTED AND TESTED IN ACCORDANCE WITH PRESCRIBED DRAWINGS, SPECIFICATION AND QUALITY ASSURANCE PROVISIONS. INSPECTION AND TEST RECORDS ARE ON FILE VERIFYING COMPLIANCE WITH APPLICABLE DRAWINGS AND SPECIFICATIONS, EXCEPT AS NOTED HEREIN"

LOG BOOK ACCEPTANCE

DAT #4

SPACE ENGINES ENGINEERING	SPACE ENGINES QUALITY CONTROL	McDONNELL QUALITY REPRESENTATIVE	GOV'T INSPECTION AGENCY QUALITY REPRESENTATIVE
R. D. Collard	L. B. Sanders	C. H. Michaels	M. A. Holstead
DATE 11 July 1964	DATE 11 July 64	DATE 11 July 1964	DATE 11 July 1964

CONTENTS

SECTION I – DELIVERABLE END ITEM ASSEMBLY LOG

RECORDS CONTAINED IN THIS SECTION ARE PERTINENT TO THE DELIVERABLE END ITEM ACCEPTANCE AND ALSO INCLUDE MODEL CONFIGURATION DATA, PERTINENT DETAILS OF SHORT SHIPMENTS, COMPONENT VARIATIONS, AGE SENSITIVE PARTS RECORD, WEIGHT AND SERIALIZATION RECORDS.

SECTION II – ACCEPTANCE TEST LOG

RECORDS OF ASSEMBLY ACCEPTANCE TESTS ARE PRESENTED IN THIS SECTION WITH PERFORMANCE DATA AND SUMMARY DATA ON INSPECTIONS AND ACCEPTANCE.

GENERAL INFORMATION

THIS LOG BOOK IS PROVIDED FOR SERVICE USE IN RECORDING PERTINENT HISTORICAL DATA AND ALL CHANGES FROM THE ORIGINAL CONFIGURATION. IT IS REQUESTED THIS LOG BOOK ACCOMPANY THE DELIVERABLE END ITEM WHEN TRANSFERRED BETWEEN ROCKETDYNE AND USING AGENCIES.

COMP-4
Downgraded at 3 year intervals;
declassified after 12 years

ROCKETDYNE – SPACE ENGINES
A DIVISION OF NORTH AMERICAN AVIATION, INC.

R-15075-1

LOG BOOK SPECIFICS

McDONNELL	ITEM	ROCKETDYNE
THIS MATERIAL CONTAINS INFORMATION AFFECTING THE NATIONAL DEFENSE OF THE UNITED STATES WITHIN THE MEANING OF THE ESPIONAGE LAWS, TITLE 18, U.S.C., SECTIONS 793 AND 794. ITS TRANSMISSION OR THE REVELATION OF ITS CONTENTS IN ANY MANNER TO AN UNAUTHORIZED PERSON IS PROHIBITED BY LAW.		
	LOG BOOK DATE	11 JULY 1964
	DWG CHG LTR	DNA
Y20161R	CONTRACT NO.	
	GEN ORDER NO.	5252
SCD52-52701-277	SPEC NO.	
DNA	SERIAL NO.	4058956
52-52701-277	PART NO.	207540-21

SE-7 DELIVERABLE END ITEM – LOG BOOK IDENTIFICATION

PART NAME THRUST CHAMBER, 100 LB., ASSY OF

1.0

[redacted]

DELIVERABLE END ITEM

THIS LOG BOOK CONTAINS INFORMATION PERTINENT TO THE DELIVERABLE END ITEM AS SPECIFIED HEREIN BY SERIAL NUMBER AND PART NUMBER. IT IS NECESSARY THAT ALL ENTRIES BE WRITTEN IN INK OR TYPED FOR PERMANENT RECORD. ENTRIES SUCH AS SERIALIZATION, WEIGHT, APPLICABLE MCR'S, ACCEPTANCE TEST DATA AND CALIBRATION DATA WILL BE ENTERED BY ROCKETDYNE AT THE TIME OF DELIVERY.

IT IS REQUESTED THAT THIS LOG BOOK ACCOMPANY THIS DELIVERABLE END ITEM IF THE ITEM IS RETURNED TO ROCKETDYNE FOR REPAIR, MODIFICATION OR RETEST. ROCKETDYNE WILL THEN ENTER REPAIR, MODIFICATION AND RETEST DATA IN THIS LOG BOOK.

THE FORMAT OF PAGES IN THIS LOG BOOK SHALL NOT BE REVISED WITHOUT OBTAINING APPROVAL OF ROCKETDYNE SPACE ENGINES QUALITY CONTROL.

	DNA	SERIAL NO.	4058956
	52-52701-277	PART NO.	207540-21
FOREWORD--SE-7 LOG BOOK	PART NAME	THRUST CHAMBER, 100 LB., ASSY OF	2.0

1.0 LOG BOOK IDENTIFICATION

2.0 FOREWORD

3.0 CONTENTS

4.0 MODULE/COMPONENT ASSEMBLY LOG--SECTION I

4.1 CONFIGURATION & SERIALIZATION LOG

4.2 MCR VERIFICATION

4.3 VARIATION LOG

4.4 REPLACEMENT LOG

5.0 COMPONENT ACCEPTANCE TEST LOG--SECTION II

5.1 COMPONENT ACCEPTANCE TEST

5.1.1 COMPONENT ACCEPTANCE TEST

5.1.2 COMPONENT ACCEPTANCE TEST

5.1.3 COMPONENT ACCEPTANCE TEST

5.1.4 COMPONENT ACCEPTANCE TEST

5.1.5 COMPONENT ACCEPTANCE TEST

5.2 CALIBRATED PERFORMANCE DATA

5.2.1 CALIBRATED PERFORMANCE DATA

5.2.2 CALIBRATED PERFORMANCE DATA

5.3 INFORMATION--CONTAMINATION

SECTION I

52-52701-277 PART NO. 207540-21

SE-7 MODULE / COMPONENT ASSEMBLY LOG

PART NAME THRUST CHAMBER, 100 LB., ASSY OF

4.0

580

IND. NO.	PART NUMBER	REV. LTR.	PART NAME	SERIAL NO.	AGE CONTROL DATE OF MFG.	INSP.
1	207540-21	DNA	THRUST CHAMBER,	4058956	1 Q 64	ANR 142
2	207541-11	DNA	BODY, THRUST CHAMBER, ASSY OF	4056067	1 Q 64	ANR 142
2	207548	DNA	SHELL, THRUST CHAMBER, ASSY OF	8500381		ANR 142
3	207543	DNA	INJECTOR, THRUST CHAMBER, ASSY OF	7039136		ANR 142
2	407561	DNA	VALVE, OXIDIZER, T/C, ASSY OF	9244061		ANR 142
2	407662	DNA	VALVE, FUEL, T/C, ASSY OF	8722232		ANR 142

DNA SERIAL NO. 4058956

52-52701-277 PART NO. 207540-21

SE-7 CONFIGURATION & SERIALIZATION LOG

PART NAME THRUST CHAMBER, 100 LB., ASSY OF

4.1

R-15075-1

MCR / ECP NO.	DATE	TITLE	DATE	INSP.
SE6-062	6 JAN 64	COMPONENT CLEANING; PORVISION FOR	11 JULY 64	ANR 645
SE6-064	30 JUL 63	TCA, ACCEPTANCE TESTS; REVISION OF	11 JULY 64	ANR 645
SE6-133	22 APR 64	TCA PROPELLANT VALVES; ADDITIONAL REQUIREMENTS FOR	11 JULY 64	ANR 645
SE6-139	15 APR 64	PLACEMENT OF HAYNES STELLITE #3 SAND CAST ON APPROVED MATERIAL LIST	11 JULY 64	ANR 645
SE6-144	15 APR 64	TCA INJECTORS; REDESIGN OF	11 JULY 64	ANR 645
SE6-179	13 MAR 64	TUBE STUBS; MARKINGS OF	11 JULY 64	ANR 645
SE7-41	15 APR 64	85# AND 100# THRUST CHAMBER ASSEMBLIES, PROPELLANT VALVES, INLET TUBES, MATERIAL; CHANGE TO 304L BAR PER QQ-S-763	11 JULY 64	ANR 645
SE6-75	4 FEB 64	MAC REPORT 8518, INCORPORATION OFZ	11 JULY 64	ANR 645
SE6-80	28 DEC 63	THRUST CHAMBER ASSEMBLIES, FABRICATION MATERIAL ; APPROVAL OF	11 JULY 64	ANR 645
SE7-85	30 APR 64	85# & 100 LB. TCA DIMENSIONS; CHANGES TO	11 JULY 64	ANR 645
SE6-85	30 JUL 63	CUSTOMER TEST SURVEILLANCE; REQUIREMENTS FOR	11 JULY 64	ANR 645
SE6-195	9 JUL 64	LIQUID CALIBRATION TESTS; DELETION OF	11 JULY 64	ANR 645

DNA _____ SERIAL NO. 4058956

52-52701-277 PART NO. 207540-21

SE-7 DELIVERABLE END ITEM-MCR VERIFICATION

PART NAME THRUST CHAMBER, 100 LB., ASSY OF

4.2

582

MR NO.	PART OR COMP. INVOLVED	PART NUMBER	SERIAL NUMBER	BRIEF DESCRIPTION OF VARIATION AND MATERIAL REVIEW BOARD DISPOSITION	INSP.
MAC MRR #55330	TCA	207540-21	4058956	DISCREPANCY: CONDITION A: PER 207540 B/P EO R141865: 1.30 DIM. IS 1.336 ON ELECTRICAL CONNECTOR ONLY. (FUEL SIDE). CONDITION B: PER 207540 B/P EO R141865 C/L of 407572 TUBE MAY DEVIATE WITHIN .015 DIA. FUEL TUBE DEVIATES .022 REF: 2.00 DIM. IS 2.014 AT BASE & 1.992 AT END OF TUBE. DISPOSITION: ACCEPTABLE TO USE FOR DAT.	
MAC MRR #56448	TCA	207540-21	4058956	DISCREPANCY: CONDITION A: 3.55 ± .03 DIM FROM THE C/L OF THE BOSS TO THE END OF THE ELECTRICAL CONNECTOR IS 3.499 ON THE FUEL SIDE. CONDITION B: 3.55 ± .03 DIM. FROM THE C/L OF THE BOSS TO THE END OF THE RECEPTACLE IS 3.156 ON THE OXIDIZER SIDE. REF: B/P 103892. DISPOSITION: ACCEPTABLE TO USE.	
MAC MRR #58560	TCA	207540-61	4058956	DISCREPANCY: CONDITION A: 5.20 ± .03 DIM. (C/L OF 10-32 THDS. TO FACE OF TUBE) IS 5.160 (OXIDIZER VALVE) DISPOSITION: ACCEPTABLE TO USE.	

R-15075-1

DNA	SERIAL NO.	4058956	
52-52701-277	PART NO.	207540-21	
SE-7 DELIVERABLE END ITEM — VARIATION LOG	PART NAME	THRUST CHAMBER, 100 LB., ASSY OF	4.3

MR NO.	PART OR COMP. INVOLVED	PART NUMBER	SERIAL NUMBER	BRIEF DESCRIPTION OF VARIATION AND MATERIAL REVIEW BOARD DISPOSITION	INSP.
MAC MRR #58570	TCA	207540-61	4058956	DISCREPANCY: THE SECOND (2ND) LINER DOWNSTREAM OF INJECTOR IS CHIPPED (ON ITS EDGE) .060 LONG X .020 WIDE X .007 (APPROX) DEEP; THE P.C. LINER IS CHIPPED ADJACENT TO THE P.C. HOLE (BOTH SIDES) .020 WIDE X .020 LONG. (DEPTH NOT MEASURABLE) NOTE! THIS CONDITION EXISTS AFTER COMPLETE HOT-FIRE SEQUENCES. SEE SKETCH. DISPOSITION: ACCEPTABLE TO USE IN DAT TEST.	AWR M2

DNA 52-52701-277 SERIAL NO. 4058956 PART NO. 207540-21

SC-7 DELIVERABLE END ITEM — VARIATION LOG

PART NAME THRUST CHAMBER, 100 LB., ASSY OF

4.3

584

PART NO.	PART NAME	SERIAL NO.	REASON FOR REPLACEMENT	REPLACED BY		INSP.
				PART NO.	SERIAL NO.	
			NONE THIS DATE 11 JULY 64			ANR 645

R-15075-1

DNA SERIAL NO. 4058956

52-52701-277 PART NO. 207540-21

SE-7 DELIVERABLE END ITEM--REPLACEMENT LOG

PART NAME THRUST CHAMBER, 100 LB., ASSY OF

4.4

SECTION II

52-52701-277 PART NO. 207540-21

SE-7 COMPONENT ACCEPTANCE TEST LOG

PART NAME THRUST CHAMBER, 100 LB., ASSY OF

5.0

PERFORMANCE PARAMETERS	PARAGRAPH NUMBER	UNITS	SPECIFICATION LIMITS	ACCEPTANCE TEST DATA	INSP.
ELECTRICAL RESISTANCE TESTS--TCA PROPELLANT VALVES	4.2				
BODY TEMPERATURE					
OXIDIZER	4.2.4	DEGREES F	70 ± 5	68	ANR 142
FUEL	4.2.11	DEGREES F	70 ± 5	68	ANR 142
COIL RESISTANCE					
OXIDIZER	4.2.5	OHMS	42 ± 2	41.20	ANR 142
FUEL	4.2.11	OHMS	42 ± 2	40.86	ANR 142
CONTINUITY RESISTANCE					
OXIDIZER	4.2.9	OHMS	1.0 MAX.	.05	ANR 142
FUEL	4.2.11	OHMS	1.0 MAX.	.05	ANR 142
DIELECTRIC STRENGTH TEST--TCA PROPELLANT VALVES	4.3				
CURRENT LEAKAGE					
OXIDIZER	4.3.8	MICROAMPS	500 MAX.	40	ANR 142
FUEL	4.3.11	MICROAMPS	500 MAX.	24	ANR 142
PROOF PRESSURE TEST--TCA PROPELLANT VALVES	4.4				
VALVES PRESSURIZED FOR NOT LESS THAN 3 MINUTES					
OXIDIZER					
STEP I	4.4.3	PSIG	500	VERIFIED	ANR 142
STEP II	4.4.5	PSIG	500	VERIFIED	ANR 142

SPECIFICATION NUMBER	REVISION	AMENDMENT			
RA0220-349	N/C	#1	DNA 52052701-277	SERIAL NO. 4058956	PART NO. 207540-21

SE-7 COMPONENT ACCEPTANCE TEST

PART NAME THRUST CHAMBER, 100 LB., ASSY OF

5.1

PERFORMANCE PARAMETERS	PARAGRAPH NUMBER	UNITS	SPECIFICATION LIMITS	ACCEPTANCE TEST DATA	INSP.
PROOF PRESSURE TEST--TCA PROPELLANT VALVES (CONTINUED)	4.4				
FUEL					
STEP I	4.4.7	PSIG	500	VERIFIED	AMR 142
STEP II	4.4.7	PSIG	500.	VERIFIED	AMR 142
INSPECTED VISUALLY FOR DAMAGE OR DEFORMATION					
OXIDIZER					
STEP I	4.4.4	DNA	NONE ALLOWED	NONE DETECTED	AMR 142
STEP II	4.4.5	DNA	NONE ALLOWED	NONE DETECTED	AMR 142
FUEL					
STEP I	4.4.7	DNA	NONE ALLOWED	NONE DETECTED	AMR 142
STEP II	4.4.7	DNA	NONE ALLOWED	NONE DETECTED	AMR 142

SPECIFICATION NUMBER	REVISION	AMENDMENT			
RA0220-349	N/C	#1	DNA	SERIAL NO.	4058956
			52-52701-277	PART NO.	207540-21
SE-7 COMPONENT ACCEPTANCE TEST			PART NAME	THRUST CHAMBER, 100 LB., ASSY OF.	5.1.1

PERFORMANCE PARAMETERS	PARAGRAPH NUMBER	UNITS	SPECIFICATION LIMITS	ACCEPTANCE TEST DATA	INSP.
PROOF PRESSURE AND LEAKAGE TEST--THRUST CHAMBER	4.5				
PROOF PRESSURE TEST					
THRUST CHAMBER PRESSURIZED FOR NOT LESS THAN 5 MINUTES AT					
STEP I	4.5.8	PSIG	392 ± 10	VERIFIED	AHR 142
STEP II	4.5.10	PSIG	392 ± 10	VERIFIED	AHR 142
LEAKAGE TEST					
STEP I	4.5.8	DNA	NONE ALLOWED	NONE DETECTED	AHR 142
STEP II	4.5.10	DNA	NONE ALLOWED	NONE DETECTED	AHR 142
INSPECTED VISUALLY FOR DAMAGE OR DEFORMATION	4.5.14	DNA	NONE ALLOWED	NONE DETECTED	AHR 142
FUNCTIONAL TEST--TCA PROPELLANT VALVES	4.6				
OPENING RESPONSE TIME					
OXIDIZER	4.6.17	SEC.	0.021 MAX.	0.0175	AHR 142
FUEL	4.6.8	SEC.	0.021 MAX.	0.0180	AHR 142
CLOSING RESPONSE TIME					
OXIDIZER	4.6.17	SEC.	0.005 MAX.	0.0025	AHR 142
FUEL	4.6.10	SEC.	0.005 MAX.	0.004	AHR 142
CLOSING DROP OUT VOLTAGE					
OXIDIZER	4.6.17	VOLT (DC)	1 MIN.	2.0	AHR 142
FUEL	4.6.13	VOLT (DC)	1 MIN.	1.5	AHR 142

SPECIFICATION NUMBER	REVISION	AMENDMENT
RA0220-349	N/C	#1

DNA SERIAL NO. 4058956

52-52701-277 PART NO. 207540-21

SE-7 COMPONENT ACCEPTANCE TEST

PART NAME THRUST CHAMBER, 100 LB. ASSY OF

5.1.2

R-15075-1

PERFORMANCE PARAMETERS	PARAGRAPH NUMBER	UNITS	SPECIFICATION LIMITS	ACCEPTANCE TEST DATA	INSP.
LEAKAGE TEST -TCA PROPELLANT VALVES	4.7				
SEAT LEAKAGE RATE					
OXIDIZER	4.7.17	SCC/MIN	2.23 MAX.	LESS THAN 0.1	AMR 142
FUEL	4.7.22	SCC/MIN	2.23 MAX.	LESS THAN 0.1	AMR 142
PRE-TEST DATA					
DRY WEIGHT (EXCLUDING PROTECTIVE COVERS & CLOSURES)	4.1.3	LB.	DNA	8.73	AMR 142
NOZZLE EXIT DIAMETER					
SECTION A-A		INCH	DNA	4.450	AMR 142
THROAT DIAMETER					
SECTION A-A		INCH	DNA	.7144	AMR 142
B-B		INCH	DNA	.7140	AMR 142
C-C		INCH	DNA	.7140	AMR 142
D-D		INCH	DNA	.7102	AMR 142
POST HOT-FIRE DATA					
PROOF PRESSURE TEST					
DRY WEIGHT (EXCLUDING PROTECTIVE COVERS & CLOSURES)	4.14.1	LB.	DNA	8.70	AMR 142
THRUST CHAMBER PRESSURIZED FOR NOT LESS THAN 5 MINUTES					

SPECIFICATION NUMBER	REVISION	AMENDMENT			
RA0220-349	N/C	#1	DNA	SERIAL NO.	4058956
			52-52701-277	PART NO.	207540-21
SE-7 COMPONENT ACCEPTANCE TEST			PART NAME	THRUST CHAMBER, 100 LB., ASSY OF	5.1.3

PERFORMANCE PARAMETERS	PARAGRAPH NUMBER	UNITS	SPECIFICATION LIMITS	ACCEPTANCE TEST DATA	INSP.
POST HOT-FIRE DATA (CONTINUED)					
PROOF PRESSURE TEST					
STEP I	4.14.5	PSIG	392 ± 10	VERIFIED	AHR 142
STEP II	4.14.5	PSIG	392 ± 10	VERIFIED	AHR 142
LEAKAGE TEST THRUST CHAMBER					
STEP I	4.14.5	DNA	NONE ALLOWED	NONE DETECTED	AHR 142
STEP II	4.14.5	DNA	NONE ALLOWED	NONE DETECTED	AHR 142
INSPECTED VISUALLY FOR DAMAGE OR DEFORMATION	4.14.5	DNA	NONE ALLOWED	NONE DETECTED	AHR 142
LEAKAGE TEST--TCA PROPELLANT VALVES					
SEAT LEAKAGE RATE					
OXIDIZER	4.14.5	SCC/MIN	2.23 MAX.	LESS THAN 0.1	AHR 142
FUEL	4.14.5	SCC/MIN	2.23 MAX.	LESS THAN 0.1	AHR 142
LEAK TEST--WELDED JOINTS					
LEAK TEST					
PRESSURIZED INLET TUBE WITH GASEOUS HELIUM					
OXIDIZER	4.14.6	PSIG	500 ± 10	VERIFIED	AHR 142
FUEL	4.14.9	PSIG	500 ± 10	VERIFIED	AHR 142

SPECIFICATION NUMBER	REVISION	AMENDMENT			
RA0[illegible]-149	B	NONE	DNA	SERIAL NO.	4058956
			52-52701-277	PART NO.	207540-21

SE-7 COMPONENT ACCEPTANCE TEST

PART NAME THRUST CHAMBER, 100 LB., ASSY OF

5.1.4

R-15075-1

PERFORMANCE PARAMETERS	PARAGRAPH NUMBER	UNITS	SPECIFICATION LIMITS	ACCEPTANCE TEST DATA	INSP.
LEAK TEST--WELDED JOINTS (CONTINUED)					
JOINT LEAKAGE RATE					AMR M2
OXIDIZER	4.14.7	SCC/SEC	10^{-6} MAX.	$<9.0 \times 10^{-7}$	AMR M2
FUEL	4.14.9	SCC/SEC	10^{-6} MAX.	$<6.8 \times 10^{-7}$	AMR M2
INSPECTED VISUALLY FOR CLEANLINESS, CORROSION, DETERIORATION, DAMAGE OR DEFORMATION	4.14.10	DNA	NONE ALLOWED	VERIFIED	
NOZZLE EXIT DIAMETER					AMR M2
SECTION A-A		INCH	DNA	4.451	
THROAT DIAMETER (DELIVERED CONDITION)	4.15.1				AMR M2
SECTION A-A		INCH	DNA	.714	AMR M2
B-B		INCH	DNA	.714	AMR M2
C-C		INCH	DNA	.714	AMR M2
D-D		INCH	DNA	.714	AMR M2
DRY WEIGHT (DELIVERABLE CONDITION)	4.15.2	LB.	DNA	8.56	
(EXCLUDING PROTECTIVE COVERS & CLOSURES)					AMR M2
INSPECTED VISUALLY FOR CLEANLINESS, CORROSION, DETERIORATION, DAMAGE OR DEFORMATION	4.15.3	DNA	NONE ALLOWED	VERIFIED	

SPECIFICATION NUMBER	REVISION	AMENDMENT			
RA0220-349	B	NONE	DNA	SERIAL NO.	4058956
			52-52701-277	PART NO.	207540-21
SE- 7 COMPONENT ACCEPTANCE TEST			PART NAME	THRUST CHAMBER, 100 LB., ASSY OF	5.1.5

CONFIDENTIAL

592

CHARACTERISTICS	UNITS	SPECIFICATION LIMITS	RUN TEST DATA	RUN TEST DATA	RUN TEST DATA	RUN 125 FINAL TEST DATA	INSP.
HOT FIRE TEST DATA--TEST SITE	-	-	-	-	-	NTF	AMR 142
CELL LOCATION	-	-	-	-	-	1-A	AMR 142
CELL NUMBER	-	-	-	-	-	379	AMR 142
TEST DATE	-	-	-	-	-	11 MAR 64	AMR 142
TEST DURATION	SEC.	-	-	-	-	3.0	AMR 142
ENVIRONMENTAL Pc	PSIA	0.16 MAX	-	-	-	.0852	AMR 142
AMBIENT PRESSURE	PSIA	DNA	-	-	-	12.15	AMR 142
AMBIENT TEMPERATURE	°F	DNA	-	-	-	33.0	AMR 142
TIME OF DATA SLICE-START	SEC.	DNA	-	-	-	2.8	AMR 142
TIME OF DATA SLICE-END	SEC.	DNA	-	-	-	2.8	AMR 142
OXIDIZER TEMPERATURE	°F	DNA	-	-	-	41.5	AMR 142
FUEL TEMPERATURE	°F	DNA	-	-	-	37.5	AMR 142
OXIDIZER DENSITY	LB/FT^3	DNA	-	-	-	92.54	AMR 142
FUEL DENSITY	LB/FT^3	DNA	-	-	-	55.83	AMR 142

R-15075-1

SPECIFICATION NUMBER	REVISION	AMENDMENT		
RA0220-349	N/C	#1	DNA 52-52701-277	SERIAL NO. 4058956 PART NO. 207540-21

SE- 7 (REA) CALIBRATED PERFORMANCE DATA

PART NAME THRUST CHAMBER, 100 LB., ASSY OF

5.2

CONFIDENTIAL

CONFIDENTIAL

R-15075-1

CHARACTERISTICS	UNITS	SPECIFICATION LIMITS	RUN TEST DATA	RUN TEST DATA	RUN TEST DATA	RUN 125 FINAL TEST DATA	INSP.
HOT FIRE TEST DATA--TEST SITE	-	-	-	-	-	NTF	
OXIDIZER INLET PRESSURE	PSIA	283 ± 10	-	-	-	287.0	
FUEL INLET PRESSURE	PSIA	286 ± 10	-	-	-	288.1	
OXIDIZER FLOWRATE	LB/SEC	DNA	-	-	-	.1957	
FUEL FLOWRATE	LB/SEC	DNA	-	-	-	.1212	
THRUST	LB.	DNA	-	-	-	93.8	
MIXTURE RATIO	O/F	DNA	-	-	-	1.62	
SPECIFIC IMPULSE	SEC	DNA	-	-	-	296.	
INJECTOR END Pc	PSIA	DNA	-	-	-	133.5	
CHARACTERISTIC VELOCITY	FT/SEC	DNA	-	-	-	5415.	
THROAT DIAMETER	INCH	DNA	-	-	-	.7132	
FUEL ORIFICE DIAMETER	INCH	DNA	-	-	-	.07540	
OXIDIZER ORIFICE DIAMETER	INCH	DNA	-	-	-	.08410	
TCA FIRING TIME (TOTAL)	SEC	10 MAX.	-	-	-	3.0	
OXIDIZER SAMPLE NUMBER	-	-	-	-	-	160	
FUEL SAMPLE NUMBER	-	-	-	-	-	161	

593

SPECIFICATION NUMBER	REVISION	AMENDMENT
RA0220-349	N/C	#1

DNA SERIAL NO. 4058956

52-52701-277 PART NO. 207540-21

SE- 7 (REA) CALIBRATED PERFORMANCE DATA

PART NAME THRUST CHAMBER, 100 LB., ASSY

CONFIDENTIAL

594

CHARACTERISTICS	UNITS	SPECIFICATION LIMITS	RUN TEST DATA	RUN TEST DATA	RUN TEST DATA	RUN 125 FINAL TEST DATA	INSP.
HOT FIRE TEST DATA--TEST SITE	-	-	-	-	-	NTF	
ADJUST TO STANDARD CONDITIONS							
THRUST	LB.	94.5 ± 4.7	-	-	-	93.9	
MIXTURE RATIO	O/F	1.60 ± .05	-	-	-	1.60	
SPECIFIC IMPULSE	SEC	DNA	-	-	-	300.	
INJECTOR END Pc	PSIA	DNA	-	-	-	131.3	
CHARACTERISTIC VELOCITY	FT/SEC	DNA	-	-	-	5410.	
ADJUST TO RATED CONDITIONS							
THRUST	LB.	94.5	-	-	-	94.5	
MIXTURE RATIO	O/F	1.6	-	-	-	1.60	
SPECIFIC IMPULSE	SEC	280 MIN.	-	-	-	300	

R-15075-1

SPECIFICATION NUMBER	REVISION	AMENDMENT			
RA0220-349	N/C	#1	DNA 52-52701-277	SERIAL NO. 4058956	PART NO. 207540-21

SE-7 (REA) CALIBRATED PERFORMANCE DATA

PART NAME THRUST CHAMBER, 100 LB., ASSY OF

5.2.2

R-15075-1

THE FOLLOWING IS INFORMATION RELATIVE TO THE CLEANLINESS LEVEL OF THE PROPELLANT UTILIZED IN THE HOT-FIRE ACCEPTANCE TEST OF THE THRUST CHAMBER ASSEMBLY.

THE INFLUENT PARTICULATE COUNT OF THE PROPELLANT WAS:

		LIMITS	ACTUAL COUNT MMH - FUEL	ACTUAL COUNT NTO - OXID
	10 - 25	500	77	199
	25 - 50	100	14	22
	50 - 100	18	5	4
	100 - 300	6	0	1
	300 - 1000	1	0	0
	> 1000	0	0	0
FIBERS	300 - 3000	4	0	0
FIBERS	> 3000	0	0	0

CLASS 7

INSP. [illegible]

595

SPECIFICATION NUMBER	REVISION	AMENDMENT		
RA0615-003	B	#1	52-52701-277 PART NO. 207540-21	
SE- 7 INFORMATION--CONTAMINATION			PART NAME THRUST CHAMBER. 100 LB., ASSY OF	5.3

~~CONFIDENTIAL~~

SCD52-52701-277
S/N 4054766

"CERTIFICATION IS HEREBY GIVEN THAT THE DELIVERABLE END ITEM COVERED BY THIS LOG BOOK WAS MANUFACTURED, INSPECTED AND TESTED IN ACCORDANCE WITH PRESCRIBED DRAWINGS, SPECIFICATION AND QUALITY ASSURANCE PROVISIONS. INSPECTION AND TEST RECORDS ARE ON FILE VERIFYING COMPLIANCE WITH APPLICABLE DRAWINGS AND SPECIFICATIONS, EXCEPT AS NOTED HEREIN"

LOG BOOK ACCEPTANCE DAT #12 (CRD #10)

SPACE ENGINES ENGINEERING	SPACE ENGINES QUALITY CONTROL	McDONNELL QUALITY REPRESENTATIVE	GOV'T INSPECTION AGENCY QUALITY REPRESENTATIVE
N H Marsden a.l.	Wm E. Kirby	C. W. Nichols	[illegible]
DATE 8-24-64	DATE 8/24/64	DATE 24 AUGUST 1964	DATE 24 AUG 64

CONTENTS

SECTION I – DELIVERABLE END ITEM ASSEMBLY LOG

RECORDS CONTAINED IN THIS SECTION ARE PERTINENT TO THE DELIVERABLE END ITEM ACCEPTANCE AND ALSO INCLUDE MODEL CONFIGURATION DATA, PERTINENT DETAILS OF SHORT SHIPMENTS, COMPONENT VARIATIONS, AGE SENSITIVE PARTS RECORD, WEIGHT AND SERIALIZATION RECORDS.

SECTION II – ACCEPTANCE TEST LOG

RECORDS OF ASSEMBLY ACCEPTANCE TESTS ARE PRESENTED IN THIS SECTION WITH PERFORMANCE DATA AND SUMMARY DATA ON INSPECTIONS AND ACCEPTANCE.

GENERAL INFORMATION

THIS LOG BOOK IS PROVIDED FOR SERVICE USE IN RECORDING PERTINENT HISTORICAL DATA AND ALL CHANGES FROM THE ORIGINAL CONFIGURATION. IT IS REQUESTED THIS LOG BOOK ACCOMPANY THE DELIVERABLE END ITEM WHEN TRANSFERRED BETWEEN ROCKETDYNE AND USING AGENCIES.

GROUP-4
Downgraded at 3 year intervals;
declassified after 12 years

ROCKETDYNE – SPACE ENGINES
A DIVISION OF NORTH AMERICAN AVIATION, INC.

LOG BOOK SPECIFICS

McDONNELL	ITEM	ROCKETDYNE
THIS MATERIAL CONTAINS INFORMATION AFFECTING THE NATIONAL DEFENSE OF THE UNITED STATES WITHIN THE MEANING OF THE ESPIONAGE LAWS, TITLE 18 U.S.C., SECTIONS 793 AND 794. ITS TRANSMISSION OR THE REVELATION OF ITS CONTENTS IN ANY MANNER TO AN UNAUTHORIZED PERSON IS PROHIBITED BY LAW.		
	LOG BOOK DATE	24 AUGUST 1964
	DWG CHG LTR	DNA
Y-20161R	CONTRACT NO.	
	GEN ORDER NO.	5252
SCD52-52701-277	SPEC NO.	
DNA	SERIAL NO.	4054766
52-52701-277	PART NO.	207540-21

SE-7 DELIVERABLE END ITEM – LOG BOOK IDENTIFICATION

PART NAME THRUST CHAMBER ASSEMBLY, 100 LB.

1.0

R-15075-1

~~CONFIDENTIAL~~

DELIVERABLE END ITEM

THIS LOG BOOK CONTAINS INFORMATION PERTINENT TO THE DELIVERABLE END ITEM AS SPECIFIED HEREIN BY SERIAL NUMBER AND PART NUMBER. IT IS NECESSARY THAT ALL ENTRIES BE WRITTEN IN INK OR TYPED FOR PERMANENT RECORD. ENTRIES SUCH AS SERIALIZATION, WEIGHT, APPLICABLE MCR'S, ACCEPTANCE TEST DATA AND CALIBRATION DATA WILL BE ENTERED BY ROCKETDYNE AT THE TIME OF DELIVERY.

IT IS REQUESTED THAT THIS LOG BOOK ACCOMPANY THIS DELIVERABLE END ITEM IF THE ITEM IS RETURNED TO ROCKETDYNE FOR REPAIR, MODIFICATION OR RETEST. ROCKETDYNE WILL THEN ENTER REPAIR, MODIFICATION AND RETEST DATA IN THIS LOG BOOK.

THE FORMAT OF PAGES IN THIS LOG BOOK SHALL NOT BE REVISED WITHOUT OBTAINING APPROVAL OF ROCKETDYNE SPACE ENGINES QUALITY CONTROL.

	DNA	SERIAL NO.	4054766
	52-52701-277	PART NO.	207540-21
FOREWORD--SE-7 LOG BOOK	PART NAME	THRUST CHAMBER ASSEMBLY, 100 LB.	2.0

1.0 LOG BOOK IDENTIFICATION

2.0 FOREWORD

3.0 CONTENTS

4.0 MODULE/COMPONENT ASSEMBLY LOG--SECTION I

4.1 CONFIGURATION & SERIALIZATION LOG

4.2 MCR VERIFICATION

4.3 VARIATION LOG

4.4 REPLACEMENT LOG

5.0 COMPONENT ACCEPTANCE TEST LOG--SECTION II

5.1 COMPONENT ACCEPTANCE TEST

5.1.1 COMPONENT ACCEPTANCE TEST

5.1.2 COMPONENT ACCEPTANCE TEST

5.1.3 COMPONENT ACCEPTANCE TEST

5.1.4 COMPONENT ACCEPTANCE TEST

5.1.5 COMPONENT ACCEPTANCE TEST

5.2 CALIBRATED PERFORMANCE DATA

5.2.1 CALIBRATED PERFORMANCE DATA

5.2.2 CALIBRATED PERFORMANCE DATA

5.3 INFORMATION--CONTAMINATION

SECTION I

52-52701-277 PART NO. 207540-21

SE-7 MODULE / COMPONENT ASSEMBLY LOG

PART NAME THRUST CHAMBER ASSEMBLY, 100 LB.

4.0

009

IND. NO.	PART NUMBER	REV. LTR.	PART NAME	SERIAL NO.	AGE CONTROL DATE OF MFG.	INSP.
1	207540-21	DNA	THRUST CHAMBER, 100 LB., ASSY OF	4054766	1Q64	ANR 208
2	207541-11	DNA	BODY, THRUST CHAMBER, ASSY OF	4056077	1Q64	ANR 208
2	207548	DNA	SHELL, THRUST CHAMBER, ASSY OF	8500898		ANR 208
3	207543	DNA	INJECTOR, THRUST CHAMBER, ASSY OF	4058097		ANR 208
2	407561	DNA	VALVE, OXIDIZER, T/C, ASSY OF	9244318		ANR 208
2	407662	DNA	VALVE, FUEL, T/C, ASSY OF	9239547		ANR 208

R-15075-1

DNA SERIAL NO. 4054766

52-52701-277 PART NO. 207540-21

SE-7 CONFIGURATION & SERIALIZATION LOG

PART NAME THRUST CHAMBER ASSEMBLY, 100 LB.

4.1

MCR / ECP NO.	DATE	TITLE	DATE	INSP.
SE6-62	6 JAN 64	COMPONENT CLEANING; PROVISION FOR	24 AUG 64	ANR 208
SE6-64	30 JUL 64	TCA, ACCEPTANCE TESTS; REVISION OF	24 AUG 64	ANR 208
SE6-80	28 DEC 63	THRUST CHAMBER ASSEMBLIES, FABRICATION MATERIAL; APPROVAL OF	24 AUG 64	ANR 208
SE6-85	30 JUL 63	CUSTOMER TEST SURVEILLANCE; REQUIREMENT FOR	24 AUG 64	ANR 208
SE6-133	22 APR 64	TCA PROPELLANT VALVES; ADDITIONAL REQUIREMENTS FOR	24 AUG 64	ANR 208
SE6-139	15 APR 64	PLACEMENT OF HAYNES STELLITE #3 SAND CAST ON APPROVED MATERIAL LIST	24 AUG 64	ANR 208
SE6-144	15 APR 64	TCA INJECTORS; REDESIGN OF	24 AUG 64	ANR 208
SE6-179	16 JUN 64	TUBE STUBS; MARKING OF	24 AUG 64	ANR 208
SE6-233	7 AUG 64	ELECTRICAL CONNECTOR "O" RINGS; REPLACEMENT OF	24 AUG 64	ANR 208
SE7-41	15 APR 64	85# AND 100# THRUST CHAMBER ASSEMBLIES, PROPELLANT VALVES, INLET TUBES, MATERIAL; CHANGE TO 304L BAR PER QQ-S-763	24 AUG 64	ANR 208
SE7-85	30 APR 64	85 AND 100 LB. TCA DIMENSIONS; CHANGES TO	24 AUG 64	ANR 208

NASA

DNA	SERIAL NO.	4054766	
52-52701-277	PART NO.	207540-21	
SE-7 DELIVERABLE END ITEM-MCR VERIFICATION	PART NAME	THRUST CHAMBER ASSEMBLY, 100 LB.	4.2

MR NO.	PART OR COMP. INVOLVED	PART NUMBER	SERIAL NUMBER	BRIEF DESCRIPTION OF VARIATION AND MATERIAL REVIEW BOARD DISPOSITION	INSP.
MRR #58798	TCA	207540-21	4054766	DISCREPANCY: CONDITION A: THROAT INSERT HAS A CRACK EXTENDING FROM THE UPSTREAM SIDE OF THE THROAT TO THE DOWNSTREAM SIDE. THE CRACK AT THE WIDEST POINT IS .0015. REF. 600N-5 C24129 DISPOSITION: ACCEPTABLE TO USE FOR DAT SYSTEM.	ANR 208

DNA SERIAL NO. 4054766

52-52701-277 PART NO. 207540-21

SE-7 DELIVERABLE END ITEM — VARIATION LOG

PART NAME THRUST CHAMBER ASSEMBLY, 100 LB.

4.3

PART NO.	PART NAME	SERIAL NO.	REASON FOR REPLACEMENT	REPLACED BY		INSP.
				PART NO.	SERIAL NO.	
	NONE THIS DATE (24 AUG 64)					ANR 208

DNA	SERIAL NO.	4054766	
52-52701-277	PART NO.	207540-21	
SE-7 DELIVERABLE END ITEM--REPLACEMENT LOG	PART NAME THRUST CHAMBER ASSEMBLY, 100 LB.		4.4

R-15075-1

SECTION II

52-52701-277 PART NO. 207540-21

SE-7 COMPONENT ACCEPTANCE TEST LOG

PART NAME THRUST CHAMBER ASSEMBLY, 100 LB.

5.0

PERFORMANCE PARAMETERS	PARAGRAPH NUMBER	UNITS	SPECIFICATION LIMITS	ACCEPTANCE TEST DATA	INSP.
ELECTRICAL RESISTANCE TESTS--TCA PROPELLANT VALVES	4.2				
BODY TEMPERATURE					
OXIDIZER	4.2.4	DEGREES F	70 ± 5	70	ANR 208
FUEL	4.2.11	DEGREES F	70 ± 5	70	ANR 208
COIL RESISTANCE					
OXIDIZER	4.2.5	OHMS	42 ± 2	41.15	ANR 208
FUEL	4.2.11	OHMS	42 ± 2	40.95	ANR 208
CONTINUITY RESISTANCE					
OXIDIZER	4.2.9	OHMS	1.0 MAX.	.141	ANR 208
FUEL	4.2.11	OHMS	1.0 MAX.	.145	ANR 208
DIELECTRIC STRENGTH TEST--TCA PROPELLANT VALVES	4.3				
CURRENT LEAKAGE					
OXIDIZER	4.3.8	MICROAMPS	500 MAX.	62	ANR 208
FUEL	4.3.11	MICROAMPS	500 MAX.	51	ANR 208
PROOF PRESSURE TEST--TCA PROPELLANT VALVES	4.4				
VALVES PRESSURIZED FOR NOT LESS THAN 3 MINUTES					
OXIDIZER					
STEP I	4.4.3	PSIG	500	VERIFIED	ANR 208
STEP II	4.4.5	PSIG	500	VERIFIED	ANR 208

SPECIFICATION NUMBER	REVISION	AMENDMENT			
RA0220-349	B	NONE	DNA 52-52701-277	SERIAL NO. 4054766	PART NO. 207540-21

SE-7 COMPONENT ACCEPTANCE TEST

PART NAME THRUST CHAMBER ASSEMBLY, 100 LB.

PERFORMANCE PARAMETERS	PARAGRAPH NUMBER	UNITS	SPECIFICATION LIMITS	ACCEPTANCE TEST DATA	INSP.
PROOF PRESSURE TEST--TCA PROPELLANT VALVES (CONTINUED)	4.4				
FUEL					
STEP I	4.4.7	PSIG	500	VERIFIED	ANR 208
STEP II	4.4.7	PSIG	500	VERIFIED	ANR 208
INSPECTED VISUALLY FOR DAMAGE OR DEFORMATION					
OXIDIZER					
STEP I	4.4.4	DNA	NONE ALLOWED	VERIFIED	ANR 208
STEP II	4.4.5	DNA	NONE ALLOWED	VERIFIED	ANR 208
FUEL					
STEP I	4.4.7	DNA	NONE ALLOWED	VERIFIED	ANR 208
STEP II	4.4.7	DNA	NONE ALLOWED	VERIFIED	ANR 208

SPECIFICATION NUMBER	REVISION	AMENDMENT			
RA0220-349	B	NONE	DNA	SERIAL NO.	4054766
			52-52701-277	PART NO.	207510-21
SE-7 COMPONENT ACCEPTANCE TEST			PART NAME	THRUST CHAMBER ASSEMBLY, 100 LB.	5.1.1

PERFORMANCE PARAMETERS	PARAGRAPH NUMBER	UNITS	SPECIFICATION LIMITS	ACCEPTANCE TEST DATA	INSP.
PROOF PRESSURE AND LEAKAGE TEST--THRUST CHAMBER	4.5				
PROOF PRESSURE TEST					
THRUST CHAMBER PRESSURIZED FOR NOT LESS THAN 5 MINUTES AT					
STEP I	4.5.8	PSIG	392 ± 10	VERIFIED	ANR 208
STEP II	4.5.10	PSIG	392 ± 10	VERIFIED	ANR 208
LEAKAGE TEST					
STEP I	4.5.8	DNA	NONE ALLOWED	VERIFIED	ANR 208
STEP II	4.5.10	DNA	NONE ALLOWED	VERIFIED	ANR 203
INSPECTED VISUALLY FOR DAMAGE OR DEFORMATION	4.5.14	DNA	NONE ALLOWED	VERIFIED	ANR 208
FUNCTIONAL TEST--TCA PROPELLANT VALVES	4.6				
OPENING RESPONSE TIME					
OXIDIZER	4.6.17	SEC.	0.021 MAX.	.018	ANR 208
FUEL	4.6.8	SEC.	0.021 MAX.	.0185	ANR 208
CLOSING RESPONSE TIME					
OXIDIZER	4.6.17	SEC.	0.005 MAX.	.0036	ANR 208
FUEL	4.6.10	SEC.	0.005 MAX.	.0036	ANR 208
CLOSING DROP OUT VOLTAGE					
OXIDIZER	4.6.17	VOLT (DC)	1 MIN.	1.9	ANR 208
FUEL	4.6.13	VOLT (DC)	1 MIN.	2.0	ANR 208

SPECIFICATION NUMBER	REVISION	AMENDMENT			
RA0220-349	B	NONE	DNA	SERIAL NO.	4054766
			52-52701-277	PART NO.	207540-21
SE-7 COMPONENT ACCEPTANCE TEST			PART NAME	THRUST CHAMBER ASSEMBLY, 100 LB.	5.1.2

PERFORMANCE PARAMETERS	PARAGRAPH NUMBER	UNITS	SPECIFICATION LIMITS	ACCEPTANCE TEST DATA	INSP.
LEAKAGE TEST -TCA PROPELLANT VALVES	4.7				
SEAT LEAKAGE RATE					
OXIDIZER	4.7.17	SCC/MIN	2.23 MAX.	.2	ANR 208
FUEL	4.7.22	SCC/MIN	2.23 MAX.	.4	ANR 208
PRE-TEST DATA					
DRY WEIGHT (EXCLUDING PROTECTIVE COVERS & CLOSURES)	4.1.3	LB.	DNA	8.78	ANR 208
NOZZLE EXIT DIAMETER					
SECTION A-A		INCH	DNA	4.475	ANR 208
THROAT DIAMETER					
SECTION A-A		INCH	DNA	.710	ANR 208
B-B		INCH	DNA	.710	ANR 208
C-C		INCH	DNA	.710	ANR 208
D-D		INCH	DNA	.710	ANR 208
POST HOT-FIRE DATA					
PROOF PRESSURE TEST					
DRY WEIGHT (EXCLUDING PROTECTIVE COVERS & CLOSURES)	4.14.1	LB.	DNA	8.93	ANR 208
THRUST CHAMBER PRESSURIZED FOR NOT LESS THAN 5 MINUTES					

SPECIFICATION NUMBER	REVISION	AMENDMENT			
RA0220-349	B	NONE	DNA	SERIAL NO.	4054766
			52-52701-277	PART NO.	207540-21
SE-7 COMPONENT ACCEPTANCE TEST			PART NAME	THRUST CHAMBER ASSEMBLY, 100 LB.	5.1.3

PERFORMANCE PARAMETERS	PARAGRAPH NUMBER	UNITS	SPECIFICATION LIMITS	ACCEPTANCE TEST DATA	INSP.
POST HOT-FIRE DATA (CONTINUED)					
PROOF PRESSURE TEST					
STEP I	4.14.5	PSIG	392 ± 10	VERIFIED	ANR 208
STEP II	4.14.5	PSIG	392 ± 10	VERIFIED	ANR 208
LEAKAGE TEST THRUST CHAMBER					
STEP I	4.14.5	DNA	NONE ALLOWED	NONE DETECTED	ANR 208
STEP II	4.14.5	DNA	NONE ALLOWED	NONE DETECTED	ANR 208
INSPECTED VISUALLY FOR DAMAGE OR DEFORMATION	4.14.5	DNA	NONE ALLOWED	NONE DETECTED	ANR 208
LEAKAGE TEST--TCA PROPELLANT VALVES					
SEAT LEAKAGE RATE					
OXIDIZER	4.14.5	SCC/MIN	2.23 MAX.	LESS THAN 0.1	ANR 208
FUEL	4.14.5	SCC/MIN	2.23 MAX.	LESS THAN 0.1	ANR 208
LEAK TEST--WELDED JOINTS					
LEAK TEST					
PRESSURIZED INLET TUBE WITH GASEOUS HELIUM					
OXIDIZER	4.14.6	PSIG	500 ± 10	VERIFIED	ANR 208
FUEL	4.14.9	PSIG	500 ± 10	VERIFIED	ANR 208

SPECIFICATION NUMBER	REVISION	AMENDMENT			
RA0220-349	B	NONE	DNA	SERIAL NO.	4054766
			52-52701-277	PART NO.	207540-21
SE-7 COMPONENT ACCEPTANCE TEST			PART NAME	THRUST CHAMBER ASSEMBLY, 100 LB.	5.1.4

PERFORMANCE PARAMETERS	PARAGRAPH NUMBER	UNITS	SPECIFICATION LIMITS	ACCEPTANCE TEST DATA	INSP.
LEAK TEST--WELDED JOINTS (CONTINUED)					
JOINT LEAKAGE RATE					
OXIDIZER	4.14.7	SCC/SEC	10^{-6} MAX.	LESS THAN 10^{-6}	ANR 208
FUEL	4.14.9	SCC/SEC	10^{-6} MAX.	LESS THAN 10^{-6}	ANR 208
INSPECTED VISUALLY FOR CLEANLINESS, CORROSION, DETERIORATION, DAMAGE OR DEFORMATION	4.14.10	DNA	NONE ALLOWED	NONE DETECTED	ANR 208
NOZZLE EXIT DIAMETER					
SECTION A-A		INCH	DNA	4.468	ANR 208
THROAT DIAMETER (DELIVERED CONDITION)	4.15.1				
SECTION A-A		INCH	DNA	.711	ANR 208
B-B		INCH	DNA	.711	ANR 208
C-C		INCH	DNA	.711	ANR 208
D-D		INCH	DNA	.711	ANR 208
DRY WEIGHT (DELIVERABLE CONDITION) (EXCLUDING PROTECTIVE COVERS & CLOSURES)	4.15.2	LB.	DNA	8.59	ANR 208
INSPECTED VISUALLY FOR CLEANLINESS, CORROSION, DETERIORATION, DAMAGE OR DEFORMATION	4.15.3	DNA	NONE ALLOWED	NONE DETECTED	ANR 208

SPECIFICATION NUMBER	REVISION	AMENDMENT
RA0220-349	B	NONE

SE-7 COMPONENT ACCEPTANCE TEST

DNA — SERIAL NO. 4054766

52-52701-277 — PART NO. 207540-21

PART NAME THRUST CHAMBER ASSEMBLY, 100 LB.

AIR FORCE

MACDONNELL

R-15075-1

CHARACTERISTICS	UNITS	SPECIFICATION LIMITS	RUN ***** TEST DATA	RUN ***** TEST DATA	RUN ***** TEST DATA	RUN 201 FINAL TEST DATA	INSP.
HOT FIRE TEST DATA--TEST SITE	-	-	-	-	-	NFL	
CELL LOCATION	-	-	-	-	-	1-A	
CELL NUMBER	-	-	-	-	-	379	
TEST DATE	-	-	-	-	-	28 July 64	
TEST DURATION	SEC.	3.0 MIN	-	-	-	3.0	
ENVIRONMENTAL Pc	PSIA	0.16 MAX	-	-	-	.06880	
AMBIENT PRESSURE	PSIA	DNA	-	-	-	12.09	
AMBIENT TEMPERATURE	°F	DNA	-	-	-	81.	
TIME OF DATA SLICE-START	SEC.	DNA	-	-	-	2.8	
TIME OF DATA SLICE-END	SEC.	DNA	-	-	-	2.8	
OXIDIZER TEMPERATURE	°F	DNA	-	-	-	77.5	
FUEL TEMPERATURE	°F	DNA	-	-	-	76.5	
OXIDIZER DENSITY	LB/FT^3	DNA	-	-	-	90.93	
FUEL DENSITY	LB/FT^3	DNA	-	-	-	54.24	

611

SPECIFICATION NUMBER	REVISION	AMENDMENT	DNA	SERIAL NO. 4054766
RAO 220-349	B	NONE	52-52701-277	PART NO. 207540-21

SE- 7 (REA) CALIBRATED PERFORMANCE DATA

PART NAME THRUST CHAMBER, 100 LB., ASSY OF

5.2

CONFIDENTIAL

THIS MATERIAL CONTAINS INFORMATION AFFECTING THE NATIONAL DEFENSE OF THE UNITED STATES WITHIN THE MEANING OF THE ESPIONAGE LAWS, TITLE 18 U.S.C., SECTIONS 793 AND 794. ITS TRANSMISSION OR THE REVELATION OF ITS CONTENTS IN ANY MANNER TO AN UNAUTHORIZED PERSON IS PROHIBITED BY LAW.

GROUP 4
Downgraded at 3 year intervals;
declassified after 12 years

612

CHARACTERISTICS	UNITS	SPECIFICATION LIMITS	RUN ****** TEST DATA	RUN ****** TEST DATA	RUN ****** TEST DATA	RUN 201 FINAL TEST DATA	INSP.
HOT FIRE TEST DATA--TEST SITE	-	-	-	-	-	NFL	
OXIDIZER INLET PRESSURE	PSIA	283 ±10	-	-	-	286.2	
FUEL INLET PRESSURE	PSIA	286 ±10	-	-	-	284.4	
OXIDIZER FLOWRATE	LB/SEC	DNA	-	-	-	.19347	
FUEL FLOWRATE	LB/SEC	DNA	-	-	-	.12087	
THRUST	LB.	DNA	-	-	-	94.5	
MIXTURE RATIO	O/F	DNA	-	-	-	1.60	
SPECIFIC IMPULSE	SEC	DNA	-	-	-	301.	
INJECTOR END Pc	PSIA	DNA	-	-	-	133.8	
CHARACTERISTIC VELOCITY	FT/SEC	DNA	-	-	-	5423.	
THROAT DIAMETER	INCH	DNA	-	-	-	.710	
FUEL ORIFICE DIAMETER	INCH	DNA	-	-	-	.07945	
OXIDIZER ORIFICE DIAMETER	INCH	DNA	-	-	-	.08500	
TCA FIRING TIME (TOTAL)	SEC	10 MAX.	-	-	-	3.0	
OXIDIZER SAMPLE NUMBER	-	-	-	-	-	260	
FUEL SAMPLE NUMBER	-	-	-	-	-	261	

R-15075-1

SPECIFICATION NUMBER	REVISION	AMENDMENT		
RAO 220-349	B	NONE	DNA 52-52701-277	SERIAL NO. 4054766 PART NO. 207540-21

SE- 7 (REA) CALIBRATED PERFORMANCE DATA

PART NAME THRUST CHAMBER, 100 LB., ASSY OF

5.2.1

Downgraded at 3 year intervals;
declassified after 12 years

CONFIDENTIAL

CONFIDENTIAL

WITHIN THE MEANING OF THE ESPIONAGE LAWS, TITLE 18, U.S.C., SECTIONS 793 AND 794. ITS MISSION OR THE REVELATION OF ITS CONTENTS IN ANY MANNER TO AN UNAUTHORIZED PERSON IS PROHIBITED BY LAW.

GROUP 4
Downgraded at 3 year intervals;
declassified after 12 years

R-15075-1

CHARACTERISTICS	UNITS	SPECIFICATION LIMITS	RUN ****** TEST DATA	RUN ******* TEST DATA	RUN ****** TEST DATA	RUN 201 FINAL TEST DATA	INSP.
HOT FIRE TEST DATA--TEST SITE	-	-	-	-	-	NFL	
ADJUST TO STANDARD CONDITIONS	-	-	-	-	-		
THRUST	LB.	94.5 ±4.7	-	-	-	95.0	
MIXTURE RATIO	O/F	1.60 ±.05	-	-	-	1.56	
SPECIFIC IMPULSE	SEC	DNA	-	-	-	303.	
INJECTOR END Pc	PSIA	DNA	-	-	-	133.0	
CHARACTERISTIC VELOCITY	FT/SEC	DNA	-	-	-	5410.	
ADJUST TO RATED CONDITIONS							
THRUST	LB.	94.5	-	-	-	94.5	
MIXTURE RATIO	O/F	1.60	-	-	-	1.60	
SPECIFIC IMPULSE	SEC	280 MIN.	-	-	-	304.	

613

SPECIFICATION NUMBER	REVISION	AMENDMENT
RAO 220-349	B	NONE
RAO 220-232	NC	#1

DNA SERIAL NO. 4054766
52-52701-277 PART NO. 207540-21

SE- 7 (REA) CALIBRATED PERFORMANCE DATA

PART NAME THRUST CHAMBER, 100 LB., ASSY OF

5.2.2

Downgraded at 3 year intervals;
declassified after 12 years

CONFIDENTIAL

THE FOLLOWING IS INFORMATION RELATIVE TO THE CLEANLINESS LEVEL OF THE PROPELLANT UTILIZED IN THE HOT-FIRE ACCEPTANCE TEST OF THE THRUST CHAMBER ASSEMBLY.

THE INFLUENT PARTICULATE COUNT OF THE PROPELLANT WAS:

		LIMITS	ACTUAL COUNT MMH - FUEL	ACTUAL COUNT NTO - OXID
	< 10	*	DNA	DNA
	10 - 25	100	90	44
	25 - 50	20	13	4
	50 - 100	5	4	0
	100 - 300	1	0	0
	300 - 1000	0	0	0
	> 1000	0	0	0
FIBERS	300 - 3000	0	0	0
FIBERS	> 3000	0	0	0

* NOTE: " NOT TO BE COUNTED BUT NO SLURRY OF FINE PARTICLES WHICH COVERS MORE THAN AN ESTIMATED 5 PERCENT OF THE TOTAL EFFECTIVE FILTER AREA SHALL BE ALLOWED." AT THE DISCRETION OF QUALITY ASSURANCE, A WEIGHT DETERMINATION OF TOTAL CONTAMINATION MAY BE MADE AS A REFEREE TEST IN BORDERLINE CASES. THE MAXIMUM ALLOWABLE WEIGHT OF CONTAMINANTS SHALL BE 0.001 GRAM (1 MG).

CLASS 4

INSP. ANL 208

SPECIFICATION NUMBER	REVISION	AMENDMENT		
RA0615-003	B	#2	52-52701-277 PART NO. 207540-21	
SE-7 INFORMATION - CONTAMINATION			PART NAME THRUST CHAMBER ASSEMBLY, 100 LB.	5.3

SCD 52-52701-277
S/N 4054760

R-15075-1

"CERTIFICATION IS HEREBY GIVEN THAT THE DELIVERABLE END ITEM COVERED BY THIS LOG BOOK WAS MANUFACTURED, INSPECTED AND TESTED IN ACCORDANCE WITH PRESCRIBED DRAWINGS, SPECIFICATION AND QUALITY ASSURANCE PROVISIONS. INSPECTION AND TEST RECORDS ARE ON FILE VERIFYING COMPLIANCE WITH APPLICABLE DRAWINGS AND SPECIFICATIONS, EXCEPT AS NOTED HEREIN"

LOG BOOK ACCEPTANCE

DAT #6 (CRD #18)

SPACE ENGINES ENGINEERING	SPACE ENGINES QUALITY CONTROL	McDONNELL QUALITY REPRESENTATIVE	GOV'T INSPECTION AGENCY QUALITY REPRESENTATIVE
[illegible]	Virgil W. Craig	A. Boorstein	[illegible]
DATE 9/30/64	DATE 9-30-64	DATE 9.30.64	DATE 30 SEPT 1964

CONTENTS

SECTION I – DELIVERABLE END ITEM ASSEMBLY LOG

RECORDS CONTAINED IN THIS SECTION ARE PERTINENT TO THE DELIVERABLE END ITEM ACCEPTANCE AND ALSO INCLUDE MODEL CONFIGURATION DATA, PERTINENT DETAILS OF SHORT SHIPMENTS, COMPONENT VARIATIONS, AGE SENSITIVE PARTS RECORD, WEIGHT AND SERIALIZATION RECORDS.

SECTION II – ACCEPTANCE TEST LOG

RECORDS OF ASSEMBLY ACCEPTANCE TESTS ARE PRESENTED IN THIS SECTION WITH PERFORMANCE DATA AND SUMMARY DATA ON INSPECTIONS AND ACCEPTANCE.

GENERAL INFORMATION

THIS LOG BOOK IS PROVIDED FOR SERVICE USE IN RECORDING PERTINENT HISTORICAL DATA AND ALL CHANGES FROM THE ORIGINAL CONFIGURATION. IT IS REQUESTED THIS LOG BOOK ACCOMPANY THE DELIVERABLE END ITEM WHEN TRANSFERRED BETWEEN ROCKETDYNE AND USING AGENCIES.

GROUP-4
Downgraded at 3 year intervals;
declassified after 12 years

615

ROCKETDYNE – SPACE ENGINES
A DIVISION OF NORTH AMERICAN AVIATION, INC.

LOG BOOK SPECIFICS

McDONNELL	ITEM	ROCKETDYNE
THIS MATERIAL CONTAINS INFORMATION AFFECTING THE NATIONAL DEFENSE OF THE UNITED STATES WITHIN THE MEANING OF THE ESPIONAGE LAWS, TITLE 18 U.S.C., SECTIONS 793 AND 794. ITS TRANSMISSION OR THE REVELATION OF ITS CONTENTS IN ANY MANNER TO AN UNAUTHORIZED PERSON IS PROHIBITED BY LAW.		
	LOG BOOK DATE	30 SEPT 64
	DWG CHG LTR	DNA
Y20161R	CONTRACT NO.	
	GEN ORDER NO.	5252
SCD52-52701-277	SPEC NO.	
DNA	SERIAL NO.	4054760
52-52701-277	PART NO.	207540-21

SE-7 DELIVERABLE END ITEM – LOG BOOK IDENTIFICATION

PART NAME THRUST CHAMBER, 100 LB., ASSY OF

1.0

DELIVERABLE END ITEM

THIS LOG BOOK CONTAINS INFORMATION PERTINENT TO THE DELIVERABLE END ITEM AS SPECIFIED HEREIN BY SERIAL NUMBER AND PART NUMBER. IT IS NECESSARY THAT ALL ENTRIES BE WRITTEN IN INK OR TYPED FOR PERMANENT RECORD. ENTRIES SUCH AS SERIALIZATION, WEIGHT, APPLICABLE MCR'S, ACCEPTANCE TEST DATA AND CALIBRATION DATA WILL BE ENTERED BY ROCKETDYNE AT THE TIME OF DELIVERY.

IT IS REQUESTED THAT THIS LOG BOOK ACCOMPANY THIS DELIVERABLE END ITEM IF THE ITEM IS RETURNED TO ROCKETDYNE FOR REPAIR, MODIFICATION OR RETEST. ROCKETDYNE WILL THEN ENTER REPAIR, MODIFICATION AND RETEST DATA IN THIS LOG BOOK.

THE FORMAT OF PAGES IN THIS LOG BOOK SHALL NOT BE REVISED WITHOUT OBTAINING APPROVAL OF ROCKETDYNE SPACE ENGINES QUALITY CONTROL.

1.0 LOG BOOK IDENTIFICATION

2.0 FOREWORD

3.0 CONTENTS

4.0 MODULE/COMPONENT ASSEMBLY LOG--SECTION I

4.1 CONFIGURATION & SERIALIZATION LOG

4.2 MCR VERIFICATION

4.3 VARIATION LOG

4.4 REPLACEMENT LOG

5.0 COMPONENT ACCEPTANCE TEST LOG--SECTION II

5.1 COMPONENT ACCEPTANCE TEST

5.1.1 COMPONENT ACCEPTANCE TEST

5.1.2 COMPONENT ACCEPTANCE TEST

5.1.3 COMPONENT ACCEPTANCE TEST

5.1.4 COMPONENT ACCEPTANCE TEST

5.1.5 COMPONENT ACCEPTANCE TEST

5.2 CALIBRATED PERFORMANCE DATA

5.2.1 CALIBRATED PERFORMANCE DATA

5.2.2 CALIBRATED PERFORMANCE DATA

5.3 INFORMATION--CONTAMINATION

SECTION I

52-52701-277 PART NO. 207540-21

SE-7 MODULE / COMPONENT ASSEMBLY LOG

PART NAME THRUST CHAMBER 100 LB., ASSY OF

4.0

IND. NO.	PART NUMBER	REV. LTR.	PART NAME	SERIAL NO.	AGE CONTROL DATE OF MFG.	INSP.
1	207540-21	DNA	THRUST CHAMBER, 100 LB., ASSY OF	4054760	3Q64	AHQ 142
2	207541-11	DNA	BODY, THRUST CHAMBER, ASSY OF	4058972	3Q64	AHQ 142
2	207548	DNA	SHELL, THRUST CHAMBER, ASSY OF	8500304		AHQ 142
3	207543	DNA	INJECTOR, THRUST CHAMBER, ASSY OF	4060049		AHQ 142
2	407561	DNA	VALVE, OXIDIZER, T/C, ASSY OF	9237805		AHQ 142
2	407662	DNA	VALVE, FUEL, T/C, ASSY OF	4057622		AHQ 142

DNA SERIAL NO. 4054760

52-52701-277 PART NO. 207540-21

SE-7 CONFIGURATION & SERIALIZATION LOG

PART NAME THRUST CHAMBER, 100 LB., ASSY OF

4.1

620

MCR / ECP NO.	DATE	TITLE	DATE	INSP.
SE6-062	6 JAN 64	COMPONENT CLEANING; PROVISION FOR	30 SEPT 64	
SE6-064	30 JUL 63	TCA, ACCEPTABLE TESTS; REVISION OF	30 SEPT 64	
SE6-133	22 APR 64	TCA PROPELLANT VALVES; ADDITIONAL REQUIREMENTS FOR	30 SEPT 64	
SE6-139	15 APR 64	PLACEMENT OF HAYNES STELLITE #3 SAND CAST ON APPROVED MATERIAL LIST	30 SEPT 64	
SE6-144	15 APR 64	TCA INJECTORS; REDESIGN OF	30 SEPT 64	
SE6-179	16 JUN 64	TUBE STUBS; MARKINGS OF	30 SEPT 64	
SE6-080	28 DEC 63	THRUST CHAMBER ASSEMBLIES, FABRICATION MATERIAL; APPROVAL OF	30 SEPT 64	
SE6-085	30 JUL 63	CUSTOMER TEST SURVEILLANCE; REQUIREMENTS FOR	30 SEPT 64	
SE7-041	15 APR 64	85# AND 100# THRUST CHAMBER ASSEMBLIES, PROPELLANT VALVES, INLET TUBES, MATERIAL; CHANGES TO 304L BAR PER QQ-S-763	30 SEPT 64	
SE7-085	30 APR 64	85# AND 100# TCA DIMENSIONS; CHANGES TO	30 SEPT 64	

DNA SERIAL NO. 4054760

52-52701-277 PART NO. 207540-21

SE-7 DELIVERABLE END ITEM - MCR VERIFICATION

PART NAME THRUST CHAMBER, 100 LB., ASSY OF

4.2

R-15075-1

MR NO.	PART OR COMP. INVOLVED	PART NUMBER	SERIAL NUMBER	BRIEF DESCRIPTION OF VARIATION AND MATERIAL REVIEW BOARD DISPOSITION	INSP.
600-N #22132	TCA 100 LB.	207540-21	4054760	DISCREPANCY: POST HOT FIRE SCN. NO. 40 PART FAILED TO COMPLY WITH REQUIREMENTS OF I.C.F. T-5036140 IN THAT THE "GO" NO GO" GAGE DET. NO. 308 WILL NOT BE ACCEPTED ON THE OXID. SIDE - HEIGHT OF ELECTRICAL CONNECTOR SHOULD BE 3.550 + .060 -.090 CHECKS OUT AT 3.455 . DISPOSITION: USE AS IS PER 600-N-#22132	
MAC MRR #71675	TCA 100 LB.	207540-21	4054760	DISCREPANCY: CONDITION A: THROAT INSERT HAS A CRACK EXTENDING FROM THE DOWNSTREAM EDGE TO THE UPSTREAM EDGE MAXIMUM WIDTH OF CRACK IS .0005 (SEE SKETCH PAGE 2 OF 2) CONDITION A FALLS WITHIN THE CRACKED THROAT CRITERIA PER NCI DISPOSITION: DISCREPANCY IS NOT CONSIDERED SUFFICIENT TO MATERIALLY AFFECT THE PHYSICAL AND FUNCTIONAL DESIGN REQUIREMENTS, THEREFORE, ACCEPTABLE TO USE, PER MAC MRR #71675	

DNA 52-52701-277 SERIAL NO. 4054760 PART NO. 207540-21

SE-7 DELIVERABLE END ITEM — VARIATION LOG

PART NAME THRUST CHAMBER, 100 LB., ASSY OF

4.3

622

PART NO.	PART NAME	SERIAL NO.	REASON FOR REPLACEMENT	REPLACED BY		INSP.
				PART NO.	SERIAL NO.	
			NONE THIS DATE 30 SEPT 64			

R-15075-1

DNA SERIAL NO. 4054760

52-52701-277 PART NO. 207540-21

SE-7 DELIVERABLE END ITEM--REPLACEMENT LOG

PART NAME THRUST CHAMBER, 100 LB., ASSY OF

4.4

R-15075-1

SECTION II

M NASA

52-52701-277 PART NO. 207540-21

SE-7 COMPONENT ACCEPTANCE TEST LOG

PART NAME THRUST CHAMBER, 100 LB., ASSY OF

5.0

PERFORMANCE PARAMETERS	PARAGRAPH NUMBER	UNITS	SPECIFICATION LIMITS	ACCEPTANCE TEST DATA	INSP.
ELECTRICAL RESISTANCE TESTS--TCA PROPELLANT VALVES	4.2				
BODY TEMPERATURE					
OXIDIZER	4.2.4	DEGREES F	70 ± 5	70	
FUEL	4.2.11	DEGREES F	70 ± 5	70	
COIL RESISTANCE					
OXIDIZER	4.2.5	OHMS	42 ± 2/3	42.36	
FUEL	4.2.11	OHMS	42 ± 2/3	41.46	
CONTINUITY RESISTANCE					
OXIDIZER	4.2.9	OHMS	1.0 MAX.	.040	
FUEL	4.2.11	OHMS	1.0 MAX.	.025	
DIELECTRIC STRENGTH TEST--TCA PROPELLANT VALVES	4.3				
CURRENT LEAKAGE					
OXIDIZER	4.3.8	MICROAMPS	500 MAX.	40	
FUEL	4.3.11	MICROAMPS	500 MAX.	46	
PROOF PRESSURE TEST--TCA PROPELLANT VALVES	4.4				
VALVES PRESSURIZED FOR NOT LESS THAN 3 MINUTES					
OXIDIZER					
STEP I	4.4.3	PSIG	500	VERIFIED	
STEP II	4.4.5	PSIG	500	VERIFIED	

SPECIFICATION NUMBER	REVISION	AMENDMENT	DNA	SERIAL NO.	4054760
RA0220-349	B	NONE	52-52701-277	PART NO.	207540-21

SE-7 COMPONENT ACCEPTANCE TEST

PART NAME THRUST CHAMBER, 100 LB., ASSY OF

5.1

PERFORMANCE PARAMETERS	PARAGRAPH NUMBER	UNITS	SPECIFICATION LIMITS	ACCEPTANCE TEST DATA	INSP.
PROOF PRESSURE TEST--TCA PROPELLANT VALVES (CONTINUED)	4.4				
FUEL					
STEP I	4.4.7	PSIG	500	VERIFIED	
STEP II	4.4.7	PSIG	500	VERIFIED	
INSPECTED VISUALLY FOR DAMAGE OR DEFORMATION					
OXIDIZER					
STEP I	4.4.4	DNA	NONE ALLOWED	NONE DETECTED	
STEP II	4.4.5	DNA	NONE ALLOWED	NONE DETECTED	
FUEL					
STEP I	4.4.7	DNA	NONE ALLOWED	NONE DETECTED	
STEP II	4.4.7	DNA	NONE ALLOWED	NONE DETECTED	

SPECIFICATION NUMBER	REVISION	AMENDMENT			
RA0220-349	B	NONE	DNA	SERIAL NO.	4054760
			52-52701-277	PART NO.	207540-21
SE-7 COMPONENT ACCEPTANCE TEST			PART NAME	THRUST CHAMBER, 100 LB., ASSY OF	5.1.1

PERFORMANCE PARAMETERS	PARAGRAPH NUMBER	UNITS	SPECIFICATION LIMITS	ACCEPTANCE TEST DATA	INSP.
PROOF PRESSURE AND LEAKAGE TEST--THRUST CHAMBER	4.5				
PROOF PRESSURE TEST					
THRUST CHAMBER PRESSURIZED FOR NOT LESS THAN 5 MINUTES AT					
STEP I	4.5.8	PSIG	392 ± 10	VERIFIED	
STEP II	4.5.10	PSIG	392 ± 10	VERIFIED	
LEAKAGE TEST					
STEP I	4.5.8	DNA	NONE ALLOWED	NONE DETECTED	
STEP II	4.5.10	DNA	NONE ALLOWED	NONE DETECTED	
INSPECTED VISUALLY FOR DAMAGE OR DEFORMATION	4.5.14	DNA	NONE ALLOWED	NONE DETECTED	
FUNCTIONAL TEST--TCA PROPELLANT VALVES	4.6				
OPENING RESPONSE TIME					
OXIDIZER	4.6.17	SEC.	0.021 MAX.	.0165	
FUEL	4.6.8	SEC.	0.021 MAX.	.017	
CLOSING RESPONSE TIME					
OXIDIZER	4.6.17	SEC.	0.005 MAX.	.0032	
FUEL	4.6.10	SEC.	0.005 MAX.	.0032	
CLOSING DROP OUT VOLTAGE					
OXIDIZER	4.6.17	VOLT (DC)	1 MIN.	2.0	
FUEL	4.6.13	VOLT (DC)	1 MIN.	2.0	

SPECIFICATION NUMBER	REVISION	AMENDMENT			
RA0220-349	B	NONE	DNA	SERIAL NO.	4054760
			52-52701-277	PART NO.	207540-21

SE-7 COMPONENT ACCEPTANCE TEST

PART NAME THRUST CHAMBER, 100 LB., ASSY OF

R-15075-1

PERFORMANCE PARAMETERS	PARAGRAPH NUMBER	UNITS	SPECIFICATION LIMITS	ACCEPTANCE TEST DATA	INSP.
LEAKAGE TEST -TCA PROPELLANT VALVES	4.7				
SEAT LEAKAGE RATE					
OXIDIZER	4.7.17	SCC/MIN	2.23 MAX.	LESS THAN 0.1	
FUEL	4.7.22	SCC/MIN	2.23 MAX.	LESS THAN 0.1	
PRE-TEST DATA					
DRY WEIGHT (EXCLUDING PROTECTIVE COVERS & CLOSURES)	4.1.3	LB.	DNA	9.06	
NOZZLE EXIT DIAMETER					
SECTION A-A		INCH	DNA	4.505	
THROAT DIAMETER					
SECTION A-A		INCH	DNA	.708	
B-B		INCH	DNA	.708	
C-C		INCH	DNA	.708	
D-D		INCH	DNA	.708	
POST HOT-FIRE DATA					
PROOF PRESSURE TEST					
DRY WEIGHT (EXCLUDING PROTECTIVE COVERS & CLOSURES)	4.14.1	LB.	DNA	9.05	
THRUST CHAMBER PRESSURIZED FOR NOT LESS THAN 5 MINUTES					

SPECIFICATION NUMBER	REVISION	AMENDMENT			
RA0220-349	B	#1	DNA	SERIAL NO.	4054760
			52-52701-277	PART NO.	207540-21
SE-7 COMPONENT ACCEPTANCE TEST			PART NAME	THRUST CHAMBER, 100 LB., ASSY OF	5.1.3

627

PERFORMANCE PARAMETERS	PARAGRAPH NUMBER	UNITS	SPECIFICATION LIMITS	ACCEPTANCE TEST DATA	INSP.
POST HOT-FIRE DATA (CONTINUED)					
PROOF PRESSURE TEST					
STEP I	4.14.5	PSIG	392 ± 10	392	
STEP II	4.14.5	PSIG	392 ± 10	391	
LEAKAGE TEST THRUST CHAMBER					
STEP I	4.14.5	DNA	NONE ALLOWED	NONE DETECTED	
STEP II	4.14.5	DNA	NONE ALLOWED	NONE DETECTED	
INSPECTED VISUALLY FOR DAMAGE OR DEFORMATION	4.14.5	DNA	NONE ALLOWED	NONE DETECTED	
LEAKAGE TEST--TCA PROPELLANT VALVES					
SEAT LEAKAGE RATE					
OXIDIZER	4.14.5	SCC/MIN	2.23 MAX.	LESS THAN 0.1	
FUEL	4.14.5	SCC/MIN	2.23 MAX.	LESS THAN 0.1	
LEAK TEST--WELDED JOINTS					
LEAK TEST					
PRESSURIZED INLET TUBE WITH GASEOUS HELIUM					
OXIDIZER	4.14.6	PSIG	500 ± 10	VERIFIED	
FUEL	4.14.9	PSIG	500 ± 10	VERIFIED	

SPECIFICATION NUMBER	REVISION	AMENDMENT			
RA0220-349	B	#1	DNA	SERIAL NO.	4054760
			52-52701-277	PART NO.	207540-21
SE-7 COMPONENT ACCEPTANCE TEST			PART NAME	THRUST CHAMBER, 100 LB., ASSY OF	5.1.4

PERFORMANCE PARAMETERS	PARAGRAPH NUMBER	UNITS	SPECIFICATION LIMITS	ACCEPTANCE TEST DATA	INSP.
LEAK TEST--WELDED JOINTS (CONTINUED)					
JOINT LEAKAGE RATE					
OXIDIZER	4.14.7	SCC/SEC	10^{-6} MAX.	LESS THAN 10^{-6}	
FUEL	4.14.9	SCC/SEC	10^{-6} MAX.	LESS THAN 10^{-6}	
INSPECTED VISUALLY FOR CLEANLINESS, CORROSION, DETERIORATION, DAMAGE OR DEFORMATION	4.14.10	DNA	NONE ALLOWED	NONE DETECTED	
THROAT DIAMETER (DELIVERED CONDITION)	4.15.1				
SECTION A-A		INCH	DNA	.709	
B-B		INCH	DNA	.709	
C-C		INCH	DNA	.709	
D-D		INCH	DNA	.709	
DRY WEIGHT (DELIVERABLE CONDITION) (EXCLUDING PROTECTIVE COVERS & CLOSURES)	4.15.2	LB.	DNA	8.93	
INSPECTED VISUALLY FOR CLEANLINESS, CORROSION, DETERIORATION, DAMAGE OR DEFORMATION	4.15.3	DNA	NONE ALLOWED	NONE DETECTED	

SPECIFICATION NUMBER	REVISION	AMENDMENT			
RA0220-349	B	#1	DNA	SERIAL NO.	4054760
			52-52701-277	PART NO.	207540-21

SE-7 COMPONENT ACCEPTANCE TEST

PART NAME THRUST CHAMBER, 100 LB., ASSY OF

630

CHARACTERISTICS	UNITS	SPECIFICATION LIMITS	RUN ****** TEST DATA	RUN ****** TEST DATA	RUN 265 TEST DATA	RUN 266 FINAL TEST DATA	INSP.
HOT FIRE TEST DATA--TEST SITE	-	-	-	-	NFL	NFL	
CELL LOCATION	-	-	-	-	1-A	1-A	
CELL NUMBER	-	-	-	-	379	379	
TEST DATE	-	-	-	-	14 Sep 64	14 Sep 64	
TEST DURATION	SEC.	-	-	-	3.0	3.0	
ENVIRONMENTAL Pc	PSIA	0.16 MAX	-	-	.0796	.0796	
AMBIENT PRESSURE	PSIA	DNA	-	-	12.15	12.15	
AMBIENT TEMPERATURE	°F	DNA	-	-	74.0	74.0	
TIME OF DATA SLICE-START	SEC.	DNA	-	-	2.8	2.8	
TIME OF DATA SLICE-END	SEC.	DNA	-	-	2.8	2.8	
OXIDIZER TEMPERATURE	°F	DNA	-	-	70.4	74.8	
FUEL TEMPERATURE	°F	DNA	-	-	66.0	67.0	
OXIDIZER DENSITY	LB/FT^3	DNA	-	-	90.44	90.10	
FUEL DENSITY	LB/FT^3	DNA	-	-	54.70	54.67	

R-15075-1

SPECIFICATION NUMBER	REVISION	AMENDMENT		
RAO 220-349	B	#1	DNA 52-52701-277	SERIAL NO. 4054760 PART NO. 207540-21

SE- 7 (REA) CALIBRATED PERFORMANCE DATA

PART NAME THRUST CHAMBER, 100 LB., ASSY OF

5.2

CONFIDENTIAL

THIS MATERIAL CONTAINS INFORMATION AFFECTING THE NATIONAL DEFENSE OF THE UNITED STATES WITHIN THE MEANING OF THE ESPIONAGE LAWS, TITLE 18 U.S.C., SECTIONS 793 AND 794. ITS TRANSMISSION OR THE REVELATION OF ITS CONTENTS IN ANY MANNER TO AN UNAUTHORIZED PERSON IS PROHIBITED BY LAW.

GROUP 4
Downgraded at 3 year intervals:
declassified after 12 years

R-15075-1

CHARACTERISTICS	UNITS	SPECIFICATION LIMITS	RUN ****** TEST DATA	RUN ******** TEST DATA	RUN 265 TEST DATA	RUN 266 FINAL TEST DATA	INSP.
HOT FIRE TEST DATA - TEST SITE	-	-	-	-	NFL	NFL	ANR 990
OXIDIZER INLET PRESSURE	PSIA	283 ± 10	-	-	278.5	280.5	ANR 990
FUEL INLET PRESSURE	PSIA	286 ± 10	-	-	285.0	286.5	ANR 990
OXIDIZER FLOWRATE	LB/SEC.	DNA	-	-	.1911	.1919	ANR 990
FUEL FLOWRATE	LB/SEC.	DNA	-	-	.1222	.1222	ANR 990
THRUST	LB.	DNA	-	-	90.5	90.8	ANR 990
MIXTURE RATIO	O/F	DNA	-	-	1.56	1.57	ANR 990
SPECIFIC IMPULSE	SEC.	DNA	-	-	289.	289.	ANR 990
INJECTOR END Pc	PSIA	DNA	-	-	129.1	129.3	ANR 990
CHARACTERISTIC VELOCITY	FT/SEC.	DNA	-	-	5220.	5215.	ANR 990
THROAT DIAMETER	INCH	DNA	-	-	.708	.708	ANR 990
FUEL ORIFICE DIAMETER	INCH	DNA	-	-	.07700	.07700	ANR 990
OXIDIZER ORIFICE DIAMETER	INCH	DNA	-	-	.08480	.08480	ANR 990
TCA FIRING TIME (TOTAL)	SEC.	15 MAX.	-	-	3.0	6.0	ANR 990
OXIDIZER SAMPLE NUMBER	-	-	-	-	318	318	ANR 990
FUEL SAMPLE NUMBER	-	-	-	-	320	320	ANR 990

631

SPECIFICATION NUMBER RAO220-349 REV. B AMEND. #1

DNA 52-52701-277

SERIAL NO. 4054760

PART NO. 207540-21

SE-7 (REA) CALIBRATED PERFORMANCE DATA

PART NAME THRUST CHAMBER, 100 LB., ASSY OF

5.2.1

Downgraded at 3 year intervals;
declassified after 12 years

CONFIDENTIAL

THIS MATERIAL CONTAINS INFORMATION AFFECTING THE NATIONAL DEFENSE OF THE UNITED STATES WITHIN THE MEANING OF THE ESPIONAGE LAWS, TITLE 18 U.S.C., SECTIONS 793 AND 794. ITS TRANSMISSION OR THE REVELATION OF ITS CONTENTS IN ANY MANNER TO AN UNAUTHORIZED PERSON IS PROHIBITED BY LAW.

GROUP 4
Downgraded at 3 year intervals:
declassified after 12 years

632

CHARACTERISTICS	UNITS	SPECIFICATION LIMITS	RUN ****** TEST DATA	RUN ******* TEST DATA	RUN 265 TEST DATA	RUN 266 FINAL TEST DATA	INSP.
HOT FIRE TEST DATA - TEST SITE	-	-	-	-	NFL	NFL	AHR 990
ADJUST TO STANDARD CONDITIONS	-	-	-	-	-	-	-
THRUST	LB.	94.5 ± 4.7	-	-	92.4	92.3	AHR 990
MIXTURE RATIO	O/F	1.60 ± .06	-	-	1.58	1.58	AHR 990
SPECIFIC IMPULSE	SEC.	DNA	-	-	293.	293.	AHR 990
INJECTOR END Pc	PSIA	DNA	-	-	130.0	129.7	AHR 990
CHARACTERISTIC VELOCITY	FT/SEC.	DNA	-	-	5225.	5219.	AHR 990
ADJUST TO RATED CONDITIONS	-	-	-	-	-	-	-
THRUST	LB.	94.5	-	-	94.5	94.5	AHR 990
MIXTURE RATIO	O/F	1.6	-	-	1.60	1.60	AHR 990
SPECIFIC IMPULSE	SEC.	280 MIN.	-	-	293.	293.	AHR 990

R-15075-1

* REVISION B AMEND. #1
** REVISION N/C AMEND. #2

SPECIFICATION NUMBER
* RA0220-349 and ** RA0220-232

DNA 52-52701-277

SERIAL NO. 4054760
PART NO. 207540-21

SE- 7 (REA) CALIBRATED PERFORMANCE DATA

PART NAME THRUST CHAMBER, 100 LB. ASSY OF

5.2.2

CONFIDENTIAL
Downgraded at 3 year intervals:
declassified after 12 years

R-15075-1

THE FOLLOWING IS INFORMATION RELATIVE TO THE CLEANLINESS LEVEL OF THE PROPELLANT UTILIZED IN THE HOT-FIRE ACCEPTANCE TEST OF THE THRUST CHAMBER ASSEMBLY.

THE INFLUENT PARTICULATE COUNT OF THE PROPELLANT WAS:

		LIMITS	ACTUAL COUNT MMH - FUEL	ACTUAL COUNT NTO - OXID
	< 10	*	DNA	DNA
	10 - 25	100	31	35
	25 - 50	20	4	4
	50 - 100	5	1	1
	100 - 300	1	0	1
	300 - 1000	0	0	0
	> 1000	0	0	0
FIBERS	300 - 3000	0	0	0
FIBERS	> 3000	0	0	0

* NOTE: " NOT TO BE COUNTED BUT NO SLURRY OF FINE PARTICLES WHICH COVERS MORE THAN AN ESTIMATED 5 PERCENT OF THE TOTAL EFFECTIVE FILTER AREA SHALL BE ALLOWED." AT THE DISCRETION OF QUALITY ASSURANCE, A WEIGHT DETERMINATION OF TOTAL CONTAMINATION MAY BE MADE AS A REFEREE TEST IN BORDERLINE CASES. THE MAXIMUM ALLOWABLE WEIGHT OF CONTAMINANTS SHALL BE 0.001 GRAM (1 MG).

CLASS 4

INSP. [illegible]

633

SPECIFICATION NUMBER	REVISION	AMENDMENT		SERIAL NO. 4054760	
RA0615-003	B	#2	52-52701-277	PART NO. 207540-21	
SE- 7 INFORMATION - CONTAMINATION			PART NAME THRUST CHAMBER, 100 LB., ASSY OF		5.3

SEQUENCE NO.

MAC 2610 (REV. 7 JUNE 67)
Q. C. No. 59

McDONNELL AIRCRAFT CORPORATION
MATERIAL REVIEW RECORD

No 15075

PAGE 1 OF 2

DATE 9-21-64

COPIES TO DEPTS. → | SHOP FOREMAN | CUST. INSP.

PART NAME: Thrust Chamber Assembly

PART NO. / OF ASSEMBLY NO.: 207540-21 SCD52-52701-277

STOCK NO.:

VENDOR NAME AND ADDRESS: Rocketdyne, 6633 Canoga Avenue, Canoga Park, Calif

PURCHASE ORDER NO.: X 20161

RECEIVING REPORT NO.:

DATE RECEIVED AT MAC:

QUANTITY REJECTED		JOB ORDER	RELEASE OR ITEM	CODE	LOCATION OF PARTS	BLDG.
(1) One	☐ GFE ☐ GOM	306			Vendor	
QUANTITY ACCEPTED	☐ MAC ☐ CFE	**MODEL**	**SERIAL NO.**	**CUSTOMER AIRPLANE NO.**	**TOOLING CHECK REQUESTED**	
		133 P	4054760			

REASON FOR REJECTION: Condition A: Throat insert has a crack extending from the downstream edge to the upstream edge maximum width of crack is .0005 (See Sketch page 2 of 2)

Condition A falls within the cracked throat criteria per NCI.

Shipment of this hardware in the condition reflected in this MRR mustbe authorized by a written waiver from the McDonnell Buyer or Resident Representative. 600N-5 C22128

SIGNATURE OF PERSON INITIATING THIS MRR: [signature] DATE: 9-22-64

INSPECTION SUPERVISION APPROVAL SIGNATURE: [signature] DATE: 9-22-64

MATERIALS REVIEW BOARD'S INSTRUCTIONS

USE AS IS	SCRAP	REWORK	RESPONSIBILITY	RETURN TO VENDOR
QTY.	QTY.	QTY.	MAC ☐ VENDOR ☒	QTY.

DISCREPANCY IS NOT CONSIDERED SUFFICIENT TO MATERIALLY AFFECT THE PHYSICAL AND FUNCTIONAL DESIGN REQUIREMENTS, THEREFORE, ACCEPTABLE TO USE.

NO TWX SENT TO MAC: DISPOSITIONED IN-HOUSE AT ROCKETDYNE.

MGR. DEPT. DETERMINATIONS BY: [signature] 9/25/64 BUYER

VENDOR TO BE CHARGED: Y

SIGNATURE

RETURN TO VENDOR: G.R. NO. REWORK ☐ REPLACE ☐ QTY.

RETAIN AT MAC: REWORK ☐ SCRAP ☐

CHARGE: VENDOR ☐ MAC ☐

	REWORK	SCRAP
MAC	$	$
VDR	$	$

PROD. ENGR. APPROVAL

FIELD MAC SHOP REPR.

MAC Q. C. REPR. APPROVAL & DATE: [signature] 9/25

MAC ENGINEERING APPROVAL & DATE: [signature] 25 Sep 64

CUST. INSP. REPR. APPROVAL & DATE: [signature] 25 Sep 64

REWORK SATISFACTORILY COMPLETED: MAC INSP. 634 DATE

CUSTOMER INSP. DATE

CORRECTIVE ACTION GENERAL FOREMAN DATE

R-15075-1

DISPOSITION			DISPOSITION	
DISC. CODE	MATL. CODE	QTY.	DISP CODE	QTY.
1			1	
2			2	
3			3	
4			4	
5			5	
6			6	
7			7	

MRB No. 7675

FOR No.

Page ____ of ____

C 22120-8

ASSY. NO.	DEFECTIVE DETAIL NO.
2075440-21	

PART NAME	DATE
THRUST CHAMBER ASSY.	9-19-64

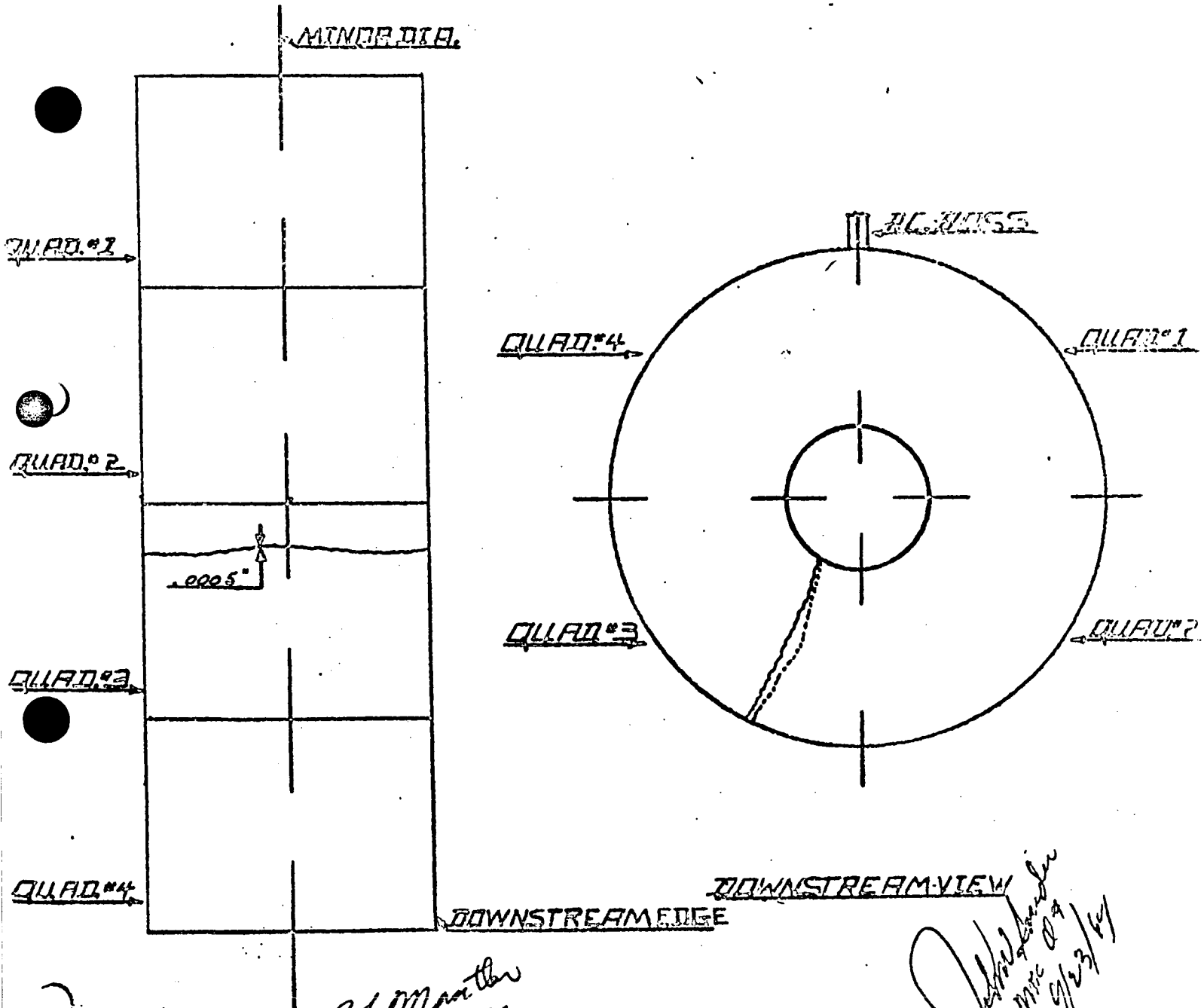

R J Martin
MAC Engrg
23 Sep 64

MATERIAL REVIEW RECORD

R-15075-1

MAC 261A (REV. 24 APR. 59)

MODULE/COMPONENT LOG BOOK IDENTIFICATION

MANUFACTURER	ROCKETDYNE, A DIVISION OF NORTH AMERICAN AVIATION, INC.
MC DONNELL SCD NUMBER	52-52700-235 ROCKETDYNE PART NUMBER NA5-27350T1
NOMENCLATURE	INDICATOR, TEMPERATURE, PRESSURE (DAT UNIT)
CONTRACT NUMBER	Y20161R
WEIGHT	1.37 LBS.
DRAWING CHANGE LETTER	DNA
DATE	17 JUNE 1964

"Certification is hereby given that the Module/Component covered by this Log Book was manufactured, inspected and tested in accordance with subject drawings, specifications and Quality Assurance provisions except as recorded here-in."

ROCKETDYNE QUALITY ASSURANCE	MC DONNELL QUALITY REPRESENTATIVE	GOV'T INSPECTION AGENCY QUALITY REPRESENTATIVE
Wm E. Reith 6/17/64	J. E. Eb 6/18/64	N. Felice 18 JUN 64

PART NO.	NA5-27350T1
SERIAL NO.	113

FOREWORD

MODULE/COMPONENT LOG BOOK

THIS BOOK CONTAINS INFORMATION PERTINENT TO THE MODULE/COMPONENT AS SPECIFIED HEREIN BY SERIAL NUMBER AND MODEL NUMBER. IT IS NECESSARY THAT ALL ENTRIES BE WRITTEN IN INK OR TYPED FOR PERMANENT RECORD. ENTRIES SUCH AS CUSTODY, PRESERVATION, SERIALIZATION, APPLICABLE ENGINEERING CHANGE PROPOSALS, ACCEPTANCE RUN DATA, CALIBRATION AND WEIGHT DATA WILL BE ENTERED AND/OR INCLUDED BY ROCKETDYNE AT TIME OF DELIVERY. ENTRIES SUCH AS REWORK, KIT INSTALLATION, REMOVALS, VEHICLE MATING, ADDITIONAL STATIC FIRING TIME AND CUSTODY WILL BE MADE BY THE CUSTOMER.

IF FOR ANY REASON THIS MODULE/COMPONENT IS RETURNED TO ROCKETDYNE FOR MODIFICATION AND/OR REPAIRS, THIS LOG BOOK MUST ACCOMPANY THE MODULE/COMPONENT. MODIFICATION ENTRIES WILL BE ENTERED BY ROCKETDYNE AND CUSTODY RECORDS WILL BE MAINTAINED.

THE PAGES IN THIS LOG BOOK SHALL NOT BE REVISED WITHOUT OBTAINING APPROVAL OF THE ROCKETDYNE PROGRAM OFFICE, ROCKETDYNE QUALITY CONTROL, AND THE CUSTOMER REPRESENTATIVE.

THIS LOG BOOK IS APPROVED FOR USE ON:

PART NUMBER NA5-27350 T1 PART NAME INDICATOR, TEMPERATURE AND PRESSURE

DATE	PROGRAM OFFICE	QUALITY ASSURANCE	PURCHASER
13 NOV 1963	W. E. McCrevey	R. B. Smith	John L. Snider

GENERAL INFORMATION

THIS LOG BOOK IS PROVIDED FOR SERVICE USE IN RECORDING PERTINENT HISTORICAL DATA AND ALL CHANGES FROM THE ORIGINAL CONFIGURATION. IT SHALL ACCOMPANY THE MODULE/COMPONENT WHEN TRANSFERRED BETWEEN ROCKETDYNE AND USING AGENCIES. THIS LOG BOOK SHALL BE KEPT WITH THE VEHICLE RECORDS WHEN THE MODULE/COMPONENT IS INSTALLED IN A VEHICLE.

SECTION I - MODULE/COMPONENT ASSEMBLY LOG

RECORDS CONTAINED IN THIS SECTION ARE PERTINENT TO THE MODULE/COMPONENT ACCEPTANCE AND ALSO INCLUDES MODEL CONFIGURATION DATA, PERTINENT DETAILS OF SHORT SHIPMENTS, COMPONENT DEVIATIONS, AGE SENSITIVE PARTS RECORD AND WEIGHT RECORD.

SECTION II - ACCEPTANCE TEST LOG

RECORDS OF ASSEMBLY ACCEPTANCE TESTS ARE PRESENTED IN THIS SECTION WITH PERFORMANCE DATA AND SUMMARY DATA ON INSPECTIONS AND ACCEPTANCE.

FORM REVISION DATE NEW 15 APRIL 1963

MODULE/COMPONENT ASSEMBLY LOG

SECTION I

MODULE COMPONENT SERIALIZATION LOG

MODEL NO.	CONTRACT NUMBER	McDONNELL SCO NUMBER
SE-6	Y20161R	52-52700-235

PART NUMBER	COMPONENT	SERIAL NO.	PLAN NO.	LOT NO.	LTR CHG	DATE	INSP	REMARKS
NAS-273501	[illegible] TP. IND	113	E07562-1	DNA	DNA	17JUN64	[illegible]	ASSY. DATE 2 Q 64

M NASA 09E

R-15075-1

MODULE COMPONENT REPLACEMENT LOG

MODEL NO.	CONTRACT NUMBER	McDONNELL SCD NUMBER
SE-6	Y20161R	52-52700-235

PART NUMBER	COMPONENT	SERIAL NO.	PLAN NO.	LOT NO.	LTR CHG	DATE	INSP	REMARKS
NA5-27350T1	PRESS.TEMP.IND.	113	B07562-1	DNA	DNA	17JUN64	[illegible]	NONE THIS DATE

641

FORM REVISION DATE NEW 15 APRIL 1963

MCR VERIFICATION

PART NUMBER	MODEL NO.	CONTRACT NUMBER	SERIAL NUMBER	Mc DONNELL SCD NUMBER
NA5-27350T1	SE-6	Y20161R	113	52-52700-235

MCR/ECP NO.	DATE	TITLE	DATE	INSP.
SE6-11	12SEP64	PRESSURE TEMPERATURE INDICATOR, P/N NA5-27294; REVISION TO	17JUN64	
SE6-61	31MAY63	PRESSURE-TEMPERATURE INDICATOR; CHANGES TO	17JUN64	
SE6-75	4FEB64	MAC REPORT 8518, INCORPORATION OF	17JUN64	
SE6-113	30AUG63	P-T INDICATOR, RESPONSE TIME; CHANGES TO	17JUN64	
SE6-130	7FEB64	"O" RING REQUIREMENTS, ELECTRICAL CONNECTORS	17JUN64	

(19103)

R-15075-1

MODULE/COMPONENT VARIATION LOG

DATE 17JUNE64

MODEL NO.	CONTRACT NO.	McDONNELL SCD NUMBER
SE-6	Y20161R	52-52700-235

PART NUMBER	PART NAME	SERIAL NUMBER	TYPE OF DISPOSITION
NA5-27350T1	INDICATOR, TEMP., PRESS.	113	NONE

VARIATION: NONE THIS DATE 17 JUNE 1964

ACTION TAKEN:

INSP. AHR 498

PART NUMBER	PART NAME	SERIAL NUMBER	TYPE OF DISPOSITION

VARIATION:

ACTION TAKEN:

INSP

PART NUMBER	PART NAME	SERIAL NUMBER	TYPE DISPOSITION

VARIATION:

ACTION TAKEN:

INSP

643

FORM REVISION DATE NEW 6 MAY 1963

SECTION II

ACCEPTANCE TEST LOG

COMPONENT ACCEPTANCE TEST LOG

MODEL NUMBER	CONTRACT NUMBER	McDONNELL SCD NUMBER
SE-6	Y20161R	52-52700-235

PART NUMBER	PART NAME	SERIAL NUMBER	SPECIFICATION NUMBER	REVISION
NA5-27350T1	INDICATOR, TEMPERATURE AND PRESSURE	113	NA5-27350	E

DIELECTRIC STRENGTH - PARA. 4.3.2.1

	LIMITS	ACTUAL
PINS "A" & "D"	1 MILLIAMPERE	NONE DET.
PINS "A" & CASE	"	NONE DET.
PINS "D" & CASE	"	NONE DET.

INDICATOR RESISTANCE - PARA. 4.3.2.2

	LIMITS	ACTUAL
PINS "A" & "B"	10,000 ± 100 OHMS	10,010
PINS "D" & "E"	4,000 ± 40 OHMS	4,004

CALIBRATION - PARA. 4.3.2.3

V-PRESS VOLTS	LIMITS	PRESSURE INDICATOR VOLTAGE ASCENDING	PRESSURE INDICATOR VOLTAGE DESCENDING
0	0 ± .1	0	0
.5	↓	0.536	0.532
1.0		1.030	1.034
1.5		1.544	1.542
2.0		2.023	2.049
2.5		2.554	2.557
3.0		3.047	3.041
3.5		3.554	3.550
4.0		4.060	[illegible]
4.5		4.524	4.527
5.0		4.997	4.996

V-TEMP VOLTS	LIMITS	TEMPERATURE INDICATOR VOLTAGE ASCENDING	TEMPERATURE INDICATOR VOLTAGE DESCENDING
0	0 ± .008	0	0.0003
.0723	↓	0.739	0.0744
.1422		0.1453	0.1458
.2098		0.2132	0.2122
.2753		0.2768	0.2763
.3386		0.3358	0.3354
.4000		0.3997	0.402

INSP

R-15075-1

645

(30123)

This page intentionally left blank.

APPENDIX D

APPENDIX D

DESIGN APPROVAL TEST SPECIFICATION AND DATA

This page intentionally left blank.

DESIGN APPROVAL TEST

FOR THE ORBIT ATTITUDE AND MANEUVER SYSTEM

(SE-7)

ENGINE SYSTEM

McDonnell Part Number	52-52701
Rocketdyne Part Number	99-106156
Test Number	106156-401

ROCKETDYNE

A DIVISION OF NORTH AMERICAN AVIATION, INC.

6633 CANOGA AVENUE

CANOGA PARK, CALIFORNIA

(FINAL) APPROVAL

EFF: 138P DAT CONT. DWG: 52-52701

3-10-65

PREPARED BY

DAT UNIT
D896/388

APPROVED BY

R. W. Helsel
Sr. Project Engineer
Gemini

NO. OF PAGES 413

REVISIONS

DATE March 10 - 65

DATE	REV. BY	PAGES AFFECTED	REMARKS	MAC Approval	
18 Aug 64	TGK	177	Corrected to Figure 43		A
18 Aug 64	TGK	179	Added "A" D/S		A
18 Aug 64	TGK	179	Added port "9"		A
18 Aug 64	TGK	182	Chg. para. nos.		A
18 Aug 64	TGK	185	Deleted opening "2A"		A
18 Aug 64	TGK	194	Was clockwise		A
18 Aug 64	TGK	206	Deleted Ref. port press.		A
18 Aug 64	TGK	Table I	Chg. torque & add opening requirement		

649

R-15075-1

DATE	REV. BY	PAGES AFFECTED	REMARKS	MAC APPROVAL
18 Aug. 64	TGK	34	Deleted vacuum system	RL Duc
18 Aug. 64	TGK	32,33,34	Added G_3, G_4, G_5, G_6	RL Duc
18 Aug. 64	TGK	146	Chg procedure of para.7.1.4.1	RL Duc
18 Aug. 64	TGK	148	Add procedure to para.7.1.4.21	RL Duc
10 Mar 65			and 7.1.4.24 and 7.1.4.27.	
	TGK	5, 8	Correct NAA P/N	RL Duc
	TGK	8	Correct TCA P/N	RL Duc
	TGK	13	Add Figure No.	RL Duc
	TGK	12	Chg. NOTE	RL Duc
	TGK	32	Delete timer from ECP	RL Duc
	TGK	40	Add Equipment	RL Duc
	TGK	46,49,53,56,60,	Chg prop supply pressure	RL Duc
		63,65,68,70,72		
	TGK	141	Chg. para. order	RL Duc
	TGK	142	Correct valve no.	RL Duc
	TGK	147	Chg. "subsequent" to "prior"	RL Duc
	TGK	163	Chg. "chop" to "A"	RL Duc
	TGK	163	Was "1.0 millisec/cm"	RL Duc
	TGK	164	Was "10.0 volts/cm"	RL Duc
	TGK	189	Chg. procedure	RL Duc
	TGK	189	Chg. "leakage" to "displace-	RL Duc
			ment"	
	TGK	190,191,198,207	Chg. para nos.	RL Duc
		208, 249, 259		
	TGK	Figure 49, page 19	Chg. solenoid valves to hand	RL Duc
			valves	
	TGK	Figure 58	Interchange A&B on 6S connector	RL Duc
	TGK	Table I	Chg. manual valve OPEN	RL Duc
			to 4 turns	
650	TGK	Table I	Add torque requirement if aluminum crush gaskets are used.	R-15075-1

FORM R 18-0-4

DATE	REV.BY	PAGES AFFECTED	REMARKS	MAC APPROVAL
10 Mar 65	JJN	59,60,61,62	Control vaccum rate	RL Jrm
	JJN	116, 118	Lower Purge Pressure to	RL Jrm
			90 psig	
	JJN	210	Remove sine survey	RL Jrm
			w/single shakers.	
	JJN	211	Add valve numbers	RL Jrm
	JJN	217,218,219	Chg. leak procedure	RL Jrm
		220, 221		
	TGK	178,219,220	Deleted redundant wording	RL Jrm
	TGK	179	Deleted closing valves which were not opened	RL Jrm
	TGK	Table I	Revised torque requirements	RL Jrm
	TGK	11	Corrected Figure No.	RL Jrm
	TGK	282	Chg. "GN_2" to "He"	RL Jrm
	TGK	64,67	Corrected Figure Nos.	RL Jrm
	EC	40,41,42,43,	Two thermocouples	RL Jrm
		44	were required	
	TGK	59,61	Add req for launch attitude	RL Jrm
	TGK	61	was "By weight"	RL Jrm
	TGK	61	Deleted req for deionized water	RL Jrm
	JJN	216	He supply was 0-3600 psig	RL Jrm
	JJN	219,220,221	Chg. procedure	RL Jrm
	JJN	223, 225,226,	Chg. pars.numbers	RL Jrm
		227,228,229		

DATE	REV. BY	PAGES/PARAGRAPHS AFFECTED	REMARKS	MAC APPROVAL	
12 Oct. 1965	RWD	11/3.11	Cartridges No. Req'd 4	R. L. Free	C
		30/4.0	P/N 99-106161		C
		38.1/5.2.3	Added Equipment		C
		44/6.1.2.1.1.1	Deleted sentence "---- remove 3-way valve"		C
		45/6.1.2.1.1.3.2	Added "------- open 3-way valve"		C
		46/6.1.2.1.1.4.2	Added - evacuation system		C
		46/6.1.2.1.1.4.6	Added - viewing sight gauges		C
		46/6.1.2.1.1.4.9	Changed to Fig. 25		C
		46/6.1.2.1.1.4.10	Changed to detanking		C
		47/6.1.2.1.1.4.13	Deleted		C
		48/6.1.2.1.2.1	Deleted sentence "---- remove 3-way valve"		C
		49/6.1.2.1.2.3.2	Added - "open 3-way valve"		C
		50/6.1.2.1.2.4.2	Added - evacuation syst.		C
		51/6.1.2.1.2.4.13	Deleted	R. L. Free 10-15-65	C
		52/6.1.2.2.1.1	Deleted sentence "---- remove 3-way valve"		C
		53/6.1.2.2.1.4.1	Added - "open 3-way valve"		C
		53/6.1.2.2.1.4.3	Added - evacuation syst.		C
		54/6.1.2.2.1.4.17	Deleted		C
		55/6.1.2.2.2.1	Deleted sentence "---- remove 3-way valve"		C
		56/6.1.2.2.2.4.1	Added - "open 3-way valve"		C
		56/6.1.2.2.2.4.3	Added - evacuation system		C
		58/6.1.2.2.2.4.17	Deleted		C
		128/6.4.2.2.1.6.2	Deleted		C
		128/6.4.2.2.1.6.3	Changed to 1 ± 5 psia or less		C
		365/Fig. 25	Added Fig. 22 & changed Vd2 to VdO		C
		366/Fig. 29	Added Fig. 24		C
		411/Table (6)	Added E.A. On-Time to +38		C
		411/Table 6	Added - Inch DIGRs at cutoff		C
		404/Table 3	Reidentified Name of Test - Liquid Calibr.		C
		406/Table 5	Deleted Pr.Sup.Pr.(FLT)-OSC Added Note (6)		C
			Deleted OXID & Fuel Pa (Pkg C & D) -OSC		
		407/Table 5	Added Note (5)		C
12 Oct. 1965	RWD	408/Table 5	Added Note (5)	R. L. Free	C

FORM R 18-0-4

ORBIT ATTITUDE AND MANEUVER SYSTEM

SE7 ENGINE SYSTEM

McDonnell Part Number	52-52701
Rocketdyne Part Number	99-106156
Test Number	106156-401

SE7 ENGINE SYSTEM DESCRIPTION

The SE7 Engine System to be subjected to the Design Approval Tests described herein consists of the following components: A pressurant tank for storing high pressure helium, a Component Package "A" for isolating the pressurant in the pressurant tank until it is required; a pressure regulator to regulate the pressurant from storage pressure to operating pressure; a Component Package "E", an assemblage consisting of a pressure switch, a normally open and a normally closed cartridge valve and a solenoid valve for remotely controlling the regulation of pressurant in the event of a regulator malfunction; a Component Package "B" which includes check valves for isolating propellant vapors from each other and relief valves to vent the pressure in case of overpressurization; two positive explusion type propellant tanks which provide a means of forcing the propellants to the thrust chamber assemblies (TCA's); a Component Package "C" for isolating the oxidizer, nitrogen tetroxide, in the oxidizer tank until it is required; a Component Package "D" for isolating the fuel, monomethyl hydrazine, in the fuel tank until it is required; two propellant shutoff valves, one in each propellant service, for providing a means of positively inhibiting propellant leakage from the TCA propellant valves once the Component Packages "C" and "D" cartridge valves have been opened; eight TCA's each of which provides a nominal thrust of 23.0 lbs in a vacuum environment, and consists of two fixed orifices sized for a mixture ratio of 1.3, two fast acting solenoid type propellant valves, an injector, an ablative type body with a metallic outer shell; two TCA's each of which provides a nominal thrust of 79.0 lbs in a vacuum environment and consists of two fixed orifices sized for a mixture ratio of 1.6, two fast acting solenoid type propellant valves, an injector, an ablative type body with a metallic outer shell; six TCA's each of which provides a nominal thrust of 94.5 lbs in a vacuum environment, and consists of two fixed orifices sized for a mixture ratio of 1.6, two fast acting solenoid type propellant valves, an injector, an ablative type body with a metallic outer shell; interconnecting plumbing supplied by McDonnell Aircraft Corporation.

SE7 ENGINE SYSTEM DESCRIPTION
(continued)

Engine System operation is effected in the following manner; the pyrotechnic cartridges are fired in Component Packages "A", "C" and "D" which force the respective normally closed cartridge valves to open. The He pressurant in the pressurant tank flows through Component Package "A" and through the normally open cartridge valve of Component Package "E" to the pressure regulator where it is regulated to Engine System operating pressure. Component Package "E" is a safety feature which is employed in the event of a pressure regulator malfunction; it provides a means of manually controlling the Engine System operating pressure by automatically (actuation of a pressure switch) firing a normally open and closed cartridge valve and thereby shunting the pressurant to a manually operated solenoid valve instead of the pressure regulator. The regulated He pressure surrounds the positive expulsion propellant tank bladders and forces, by compression, the propellant to flow through Component Packages "C" and "D" into the propellant manifolds connected to the TCA's. When it is required that a TCA or combination of TCA's be fired, the fuel and oxidizer solenoid propellant valves on the TCA(s) are electrically energized thus allowing the hypergolic propellants to mix, burn and generate thrust.

All Engine System Hardware, except the TCA's and TCA propellant feed system plumbing, is installed on a Gemini Spacecraft OAMS Module Structural Assembly. This Assemblage (Tank Module), along with the TCA's and TCA propellant feed system plumbing is mounted on a simulated Gemini spacecraft structure duplicating, with respect to TCA location, the envelope dimensions of the actual spacecraft. A structure skin to facilitate environmental temperature conditioning is also used. The SE7 Engine System is used in the Gemini Spacecraft Orbit Attitude and Maneuver System to provide attitude control and maneuver capability for the Gemini Spacecraft Mission.

TABLE OF CONTENTS

Paragraph No.		Page No.
1.0	SCOPE	
1.1	Effectivity	
2.0	APPLICABLE DOCUMENTS	
2.1	McDonnell Aircraft Specifications	
2.2	Military Specifications	
2.3	Rocketdyne Specifications & Memorandums	
2.4	Rocketdyne Drawings	
3.0	GENERAL REQUIREMENTS	
3.1	SE7 Engine System Assembly	
3.2	Safety	
3.3	Handling	
3.4	Photographic Coverage	
3.5	Maintenance	
3.6	Failures	
3.7	Test Witnessing	
3.8	Instrumentation	
3.9	Cleanliness Requirements	
3.10	Report	
3.11	Sampling & Analysis of Propellants	
3.12	Abbreviations	
3.13	Post Test Hardware Disposition	
4.0	TEST PROGRAM	
4.1	Test Sequence	
5.0	EQUIPMENT AND MATERIALS	
5.1	Material	
5.2	Equipment	
5.2.1	Functional and Acceptance Tests	
5.2.2	Vibration Test	
5.2.3	Hot Fire Test Facility (SSFL) Equipment	
6.0	OPERATIONAL PROCEDURES	
6.1	Loading Procedures	
6.2	Drain and Clean	
6.3	Hot Fire Test Facility Installation	
6.4	Hot Fire Test Procedure	
6.5	Data Reduction - Hot Fire Tests	
6.6	Post Test Procedure	
7.0	DESIGN APPROVAL TEST PROCEDURES	
7.1	Functional Test	
7.2	Vibration Test	
7.3	Functional Test	
7.4	Acceptance Test	
7.5	Mission Duty Cycle, High Temperature	
7.6	Hot Fire Calibration	

TABLE OF CONTENTS

FIGURES

1. SE7 Engine System
2. Component Assembly, Package "A"
3. Component Assembly, Package "B"
4. Component Assembly, Package "C"
5. Component Assembly, Package "D"
6. Component Assembly, Package "E"
7. Schematic, Component Package "E"
8. Tank Assembly, Pressurant
9. Tank Assembly, Propellant
10. Pressure Regulator
11. Cartridge
12. Motor Operated Shutoff Valve
13. 25# Thrust Chamber Assembly
14. 85# Thrust Chamber Assembly
15. 100# Thrust Chamber Assembly
16. TCA Numbering Location
17. Cartridge Valve Bypass Assembly
18. He Tanking Service Connections
19. Tank Pressure vs Gas Temperature, Helium
20. Pressurant Tank Charge Pressure Determination - Cartridge Valves Fired
21. Oxidizer System Loading Service Connections
22. Nitrogen Tetroxide - Volume of 245.8 lbs vs Temperature
23. Fuel System Loading Service Connections
24. Monomethyl Hydrazine - Volume of 155.3 lbs vs Temperature
25. Oxidizer De-tanking and Utilization Determination
26. Fuel De-tanking and Utilization Determination
27. "Freon" Loading Service Connections
28. Alcohol Loading Service Connections
29. Oxidizer ("Freon") Drain and Clean Service Connections
30. Fuel (Alcohol) Drain and Clean Service Connections
31. Oxidizer System Evacuation Schematic
32. Fuel System Evacuation Schematic
33. "Freon MF" Drain and Clean Service Connections (Tank Module)
34. Alcohol Drain and Clean Service Connections (Tank Module)
35. Engine System Tank Module and Pneumatic Test Console Test Setup
36. Engine System Gross External Leakage Test Setup
37. Schematic, Pressure - Temperature Indicator and Flight Transducer Calibration, Source Pressure - Test Setup
38. Schematic, Pressure - Temperature Indicator and Flight Transducer Calibration, Regulated Pressure - Auxiliary Pressurant Supply Test Setup
39. Diagram, Pressure - Temperature Indicator and Flight Transducer Calibration - Viewing Angle

FORM R 18-G-4

TABLE OF CONTENTS

FIGURES

continued

40. Schematic, Pressure Regulator Reference Pressure Cavity Evacuation System
41. Schematic, Pressurant Regulator Functional Test Setup
42. Schematic, Component Package "B" Relief Valve Flow Test Setup
43. Schematic, Component Package "B" Relief Valve Leakage Test Setup
44. Schematic, Component Package "B" Inter Check Valve Reverse Seat Leakage Test Setup
45. Schematic, Component Package "B" Check Valve Reverse Seat Leakage (OXID and FUEL) Test Setup
46. Schematic, Component Package "B" Burst Diaphragm Leakage Test Setup
47. Schematic, Propellant Tank Bladder Leak Test Setup
48. Curve, TCA Propellant Valve Response (opening and closing)
49. Schematic, Liquid Calibration Service Connections and Instrumentation Attach Points
50. Curve, Power Spectral Density vs Frequency
51. Vibration Test Assembly - R Axis Orientation
52. Vibration Test Assembly - Z Axis Orientation
53. Vibration Test Accelerometer Locations- OAMS Structure
54. Vibration Test Accelerometer Locations- Component Panel
55. Schematic, Vibration Test Leak Test Setup
56. Schematic, Vibration Test Setup
57. Schematic, Component Package "A" and Component Package "B" Flight Transducers
58. Schematic, Transducer Calibration Test Setup
59. Curve, PSOV Response, (opening and closing)
60. Schematic, Auxilary Pressurant Supply Test Setup, Acceptance Test

FORM R 18-D-4

TABLES

1. Torque Values - Component Package Manual Valves and Resistoflex Fittings

2. Instrumentation Requirements

3. TCA Propellant Valve Actuation Requirements

DESIGN APPROVAL TEST
ORBIT ATTITUDE AND MANEUVER SYSTEM
(SE7)

TEST NO. 106156-401 SHEET 1 OF 413

PART NO. 2-DAY CONFIG. {MAC / NAA} 14-DAY CONFIG. {MAC 52-52701 / NAA 99-106156}

Reference: (a) MAC SCD 52-52701, Rev. F.

1.0 SCOPE

This specification establishes the method of test and the test equipment required to conduct the Design Approval Tests on the SE7 Engine System for the McDonnell Aircraft Corporation Model 133P Orbit Attitude and Maneuver System as specified in McDonnell Aircraft Corporation Specification Control Drawing 52-52701, Revision F., Paragraph 5.2.2.

1.1 Effectivity

The requirements of the Design Approval Tests shall be accomplished upon an SE7 Tank Module, (Rocketdyne P/N 99-106161) which has initially demonstrated fulfillment of the Functional Test requirements, Paragraph 7.1 of this specification and an SE7 Engine System Assembly, (Rocketdyne P/N 99-106156), which has initially demonstrated fulfillment of the Acceptance Test requirements, Paragraph 7.4, of this specification.

PREPARED BY: J. Mayne	DATE	APPROVED FOR NAA:	DATE
CHECKED BY:	DATE		

DESIGN APPROVAL TEST
ORBIT ATTITUDE AND MANEUVER SYSTEM
(SET)

TEST NO. 106156-401 SHEET 2 OF 413
PART NO. 2-DAY CONFIG. {MAC / NAA} 14-DAY CONFIG. {MAC 52-52701 / NAA 00-106156}

Reference: (a) MAC SCD 52-52701, Rev. F.

2.0 APPLICABLE DOCUMENTS

The documents listed in this specification are for reference only except those marked with an asterisk (*). If the requirements of this specification conflict with those listed below, the requirements of this specification shall govern except in the case of SCD 52-52701, which is the contractual controlling document.

2.1 McDonnell Aircraft Specifications

*SCD 52-52701	Specification Control Drawing, MAC Model 133P, Orbit Attitude and Maneuver System, dated 9 August 1963
*Report #8392	Standard Engineering Responsibilities, Technical Data Requirements and Product Support Recommendations, Model 133P SCD Equipment, dated 8 October 1962

2.2 Military Specifications

MIL-L-25567	Leak Test Compound, Oxygen Systems, dated 7 January 1959
MIL-P-26539A	Propellant, Nitrogen Tetroxide, dated 31 July 1961
MIL-P-27401A	Propellant, Nitrogen, Pressurizing, dated 7 November 1960

PREPARED BY:	DATE	APPROVED FOR NAA:	DATE
J. Mayne			
CHECKED BY:	DATE		
	6-29-64		6-29-64

DESIGN APPROVAL TEST
ORBIT ATTITUDE AND MANEUVER SYSTEM
(SE7)

TEST NO. 106156-401 SHEET 3 OF 413

PART NO. 2-DAY CONFIG. { MAC / NAA } 14-DAY CONFIG. { MAC 52-52701 / NAA 99-106156 }

2.2 (continued)	MIL-P-27404A	Propellant, Monomethyl Hydrazine, dated 3 April 1962
	Federal Stock Number 6830-263-9842	Helium Cylinder
	MIL-B-131C	Dobeckman Metallam 777-V

PREPARED BY:	DATE	APPROVED FOR NAA:	DATE
J. Mayne			
CHECKED BY:	DATE		
	8-12-64		8-12-64

DESIGN APPROVAL TEST
ORBIT ATTITUDE AND MANEUVER SYSTEM
(SE7)

TEST NO. 106156-401 SHEET 4 OF 413

PART NO. 2-DAY CONFIG. {MAC / NAA} 14-DAY CONFIG. {MAC 52-52701 / NAA 99-106156}

.3 Rocketdyne Specifications and Memorandums

RAO 110-015	Cleaning of Components and Parts for Use in Storable Propellants, dated 26 December 1963
RAO 112-002	Lubricants, Anti-Seize Compounds and Gasketing Type Seal Compounds for Rocket Engines, dated 29 July 1963
RAO 115-105	Leak Testing with a Helium Mass Spectrometer Leak Detector, General Specification for, dated 15 July 1963
RAO 201-050	Acceptance Test Instrumentation Requirements, dated 9 August 1961
RAO 220-201	Gemini OAMS Fuel Tanks Acceptance Test, dated 12 December 1963
RAO 220-202	Gemini OAMS Oxidizer Tanks Acceptance Test, dated 12 December 1963
RAO 220-200	Gemini Pressurant Tank Acceptance Test, dated 1 July 1963
RAO 220-210	Component Assembly Package "A" Acceptance Test Procedure, dated 11 October 1963
RAO 220-211	Component Assembly Package "B", 555930, 557140-11, 557305 and 557305-11 Acceptance Test Procedure, dated 30 March 1964

PREPARED BY:	DATE	APPROVED FOR NAA:	DATE
J. Mayne			
CHECKED BY:	DATE		
	6-29-64		6-29-64

DESIGN APPROVAL TEST
ORBIT ATTITUDE AND MANEUVER SYSTEM
(SE7)

TEST NO. 106156-401 SHEET 5 OF 413

PART NO. 2-DAY CONFIG. {MAC / NAA} 14-DAY CONFIG. {MAC 52-52701 / NAA ~~99~~-106156} B

2.3 (cont'd)	RAO 220-206	Component Assembly Package "C" Acceptance Test Procedure, dated 27 January 1964
	RAO 220-207	Component Assembly Package "D" Acceptance Test Procedure, dated 27 January 1964
	RAO 220-212	Component Assembly Package "E" Acceptance Test Procedure, dated 11 November 1963
	RAO 220-268	Gemini SE7, Thrust Chamber Assembly Acceptance Test Procedure, dated 22 October 1963
	RAO 220-348	Gemini SE7, Thrust Chamber Assembly Acceptance Test Procedure, dated 21 February 1964
	RAO 220-354	Gemini SE7, Thrust Chamber Assembly Acceptance Test Procedure, dated 24 March 1964
	RAO 607-009	In Place Brazing of Tubes and Fittings for Space Engines, dated 30 December 1963
	RAO 610-002	Ultrasonic Cleaning of Space Engine Hardware, dated 24 October 1963
	RAO 610-009	Chemical Cleaning of Filter Elements for Space Engines, dated 22 April 1964

PREPARED BY:	DATE	APPROVED FOR NAA:	DATE
J. Mayne			
CHECKED BY:	DATE		
[illegible]	6-29-64	[illegible]	6-29-64

DESIGN APPROVAL TEST
ORBIT ATTITUDE AND MANEUVER SYSTEM
(SE7)

TEST NO. 106156-401 SHEET 6 OF 413

PART NO. 2-DAY CONFIG. MAC / NAA — 14-DAY CONFIG. MAC 52-52701 / NAA 99-106156

8.3 (cont'd)	RAO 615-003 Rev. B	Solid Particle Contamination, classification of Levels and Methods of Measurement, for Space Engines, dated 21 March 1964
	RAO 616-005	SE7 Propulsion System: Inter and Intra Plant Handling, dated 20 March 1963
	NA5-28078T3	Valve, Propellant Shut-off, Motor Operated
	NA5-27294T1	Indicator, Pressure-Temperature
	NA5-28070T2	Regulator, Pressurant
	NA5-28082T1	Cartridge
	NA5-28088T1	Cartridge
	CEM 4132-47	Standard Operating Procedure - Safety Requirement, Test and Storage of Explosive Cartridges and/or components with Explosive Cartridge installed, dated 8 August 1963
	SEM 3331-3013	Operation Manual SE7 Engine Electrical Control System, dated 8 October 1963
	SEM 3331-3004	Operation Manual SE7 Engine Electrical Control System, dated 27 August 1963

PREPARED BY:	DATE	APPROVED FOR NAA:	DATE
J. Mayne			
CHECKED BY:	DATE		

DESIGN APPROVAL TEST
ORBIT ATTITUDE AND MANEUVER SYSTEM
(SE7)

TEST NO. 106156-401 SHEET 7 OF 413

PART NO. 2-DAY CONFIG. { MAC ____ NAA ____ } 14-DAY CONFIG. { MAC 52-52701 NAA 99-106156 }

2.3 (cont'd)	SEM 4388-4040	Pulse Performance Data Reduction Procedure, dated 22 July 1964
	NA5-28081T3	Cartridge Valve, Component Packages "C" and "D"

PREPARED BY:	DATE	APPROVED FOR NAA:	DATE
J. Mayne			
CHECKED BY:	DATE		

DESIGN APPROVAL TEST
ORBIT ATTITUDE AND MANEUVER SYSTEM
(SE7)

TEST NO. 106156-401 SHEET 8 OF 413

PART NO. 2-DAY CONFIG. {MAC ____ NAA ____} 14-DAY CONFIG. {MAC 52-52701 NAA 99-106156} B

2.4 Rocketdyne Drawings

103654	Tank, Pressurant, He	
103655	Tank, Propellant, Oxidizer	
103660	Tank, Propellant, Fuel	
208160-21	Thrust Chamber 25#, Assembly of	
208160-31	Thrust Chamber 25#, Assembly of	
207510-21	Thrust Chamber 85#, Assembly of	
207540-21	Thrust Chamber 100#, Assembly of	B
406886	Component Package "C"	
406887	Component Package "D"	
556870	Component Package "A"	
557000	Component Package "E"	
557305	Component Package "B"	
9017831-31	Throat Plug, 25 lb Thrust Chamber	
9017844-31	Throat Plug, 85 & 100 lb Thrust Chamber	
99-106156	Engine System Assembly, Installation	
99-501808	Wiring Harness Assy - Engine Bulkhead	
99-501809	Wiring Harness Assy - Engine Bulkhead to 85# and 100# TCA's	

PREPARED BY:	DATE	APPROVED FOR NAA:	DATE
J Mayne			
CHECKED BY:	DATE		

Rev. B Date 3-10-65

R-15075-1

DESIGN APPROVAL TEST
ORBIT ATTITUDE AND MANEUVER SYSTEM
(SE7)

TEST NO. 106156-401 SHEET 9 OF 413

PART NO. 2-DAY CONFIG. {MAC ____ NAA ____} 14-DAY CONFIG. {MAC 52-52701 NAA 99-106156}

2.4 (cont'd)	99-501810	Wiring Harness Assy - Engine Bulkhead to Squib Valves
	99-501807-11	Wiring Harness Assy - Engine Bulkhead to Pressure Transducers
	99-103420	Sub Frame Assy. Adapter System
	99-103490	Structure, Adapter System, Assy of
	99-106161	Tank Module Installation - 14 day
	99-103760	Structure Cover and Flame Insert Installation
	99-103356	Structure Installation Vertical Support
	99-103359	Platform Assy
	99-103340	Trunnion Spider Adapter System, Assy of
	99-103389	Diffuser Installation
	RK 398-00025	SE7 Transport Package
	99-9017055	Electrical Checkout Panel
	99-103729	Pneumatic Test Console
	99-103326	Bypass Assembly

PREPARED BY:	DATE	APPROVED FOR NAA:	DATE
J. Mayne			
CHECKED BY:	DATE		
	6-29-64		6-29-64

DESIGN APPROVAL TEST
ORBIT ATTITUDE AND MANEUVER SYSTEM
(SE7)

TEST NO. 106156-401 SHEET 10 OF 413

PART NO. 2-DAY CONFIG. {MAC / NAA} 14-DAY CONFIG. {MAC 52-52701 / NAA 99-106156}

Reference: (a) MAC SCD 52-52701, Rev. F.

3.0 GENERAL REQUIREMENTS

3.1 SE7 Engine System Tank Module and Engine System

The Engine System Tank Module and the SE7 Engine System respectively shall be assembled per Rocketdyne Drawings 99-106161 and 99-106156 as schematically illustrated in Figure 1. The Engine System shall be identical to the Gemini Spacecraft flight configuration except for the deviations discussed in this section. Assembly of the Engine System shall be accomplished in a clean room which conforms to the cleanliness requirements of a Class III area per Rocketdyne Specification RAO 615-003, Rev. B.

3.1.1 Component Hardware

Each Engine System component assembly shall be acceptance tested per the applicable Acceptance Test Specification and must meet all production standards prior to installation into the Engine System. The following components shall be used:

PREPARED BY:	DATE	APPROVED FOR NAA:	DATE
J. Mayne			
CHECKED BY:	DATE		
[illegible]	6-29	[illegible]	6-29-64

DESIGN APPROVAL TEST
ORBIT ATTITUDE AND MANEUVER SYSTEM
(SE7)

TEST NO. 106156-401 SHEET 11 OF 413

PART NO. 2-DAY CONFIG. {MAC / NAA} 14-DAY CONFIG. {MAC 52-52701 / NAA 99-106156}

3.1.1 (cont'd)

Component Name	Part Number Rocketdyne	Part Number MAC	Number Required	Applicable Acceptance Test Specification	Schematic Figure	
Component Package "A"	556870	52-52700-151	1	RAO 200-210	2	
Component Package "B"	557305	52-52700-203	1	RAO 220-211	3	
Component * Package "C"	403886	52-52701-235	1	RAO 220-206	4	
Component * Package "D"	403887	52-52701-237	1	RAO 220-207	5	
Component Package "E"	557000	52-52701-175	1	RAO 220-212	6 & 7	
Pressurant Tank	103654	52-52700-169	1	RAO 220-200	8	
Fuel Tank	103660	52-52701-211	1	RAO 220-201	9	
Oxidizer Tank	103655	52-52701-177	1	RAO 220-202	9	
Regulator	NA5-28070T2	52-52700-177	1		10	B
Cartridges N/C	NA5-28082T1	52-52700-104	4		11	C
Cartridges N/O	NA5-28088T1	52-52701-233	1		11	
PSOV	NA5-28078T3	52-52701-187	2		12	

PREPARED BY: J. Mayne DATE

CHECKED BY: [illegible] 6-29-64 DATE

APPROVED FOR NAA: [illegible] 6-29-64 DATE

R-15075-1 [illegible] Date 3-10-65

Rev. C R. L. [illegible] Date 10-14-65

DESIGN APPROVAL TEST
ORBIT ATTITUDE AND MANEUVER SYSTEM
(SE7)

TEST NO. 106156-401 SHEET 12 OF 413

PART NO. 2-DAY CONFIG. {MAC / NAA} 14-DAY CONFIG. {MAC 52-52701 / NAA 99-106156}

3.1.1 (cont'd)

Component Name	Part Number Rocketdyne	Part Number MAC	Number Required	Applicable Acceptance Specification	Schematic Figure
TCA 25#	208160-21	52-52701-271	4	RAO 220-354 or	13
	208160-31	52-52701-273	4	RAO 220-268	13
TCA 85#	207510-21	52-52701-275	2	RAO 220-348	14
TCA 100#	207540-21	52-52701-277	6	RAO 220-349	15

*NOTE: Component Packages "C" and "D" shall have fired cartridges (NA5-28082T1) and cartridge valves (NA5-28081T3) installed during the tests of Paragraphs 7.2. Prior to and following the testing of Paragraph 7.2, unfired cartridges and cartridge valves shall be installed. B

PREPARED BY:	DATE	APPROVED FOR NAA:	DATE
J. Mayne			
CHECKED BY:	DATE		
3-10-65		3-10-65	

DESIGN APPROVAL TEST
ORBIT ATTITUDE AND MANEUVER SYSTEM
(SE7)

NAME OF TEST 106156-401 TEST NO. _____ SHEET 13 OF 413
PART NO. 2-DAY CONFIG. {MAC _____ NAA _____ 14-DAY CONFIG. {MAC 52-52701 NAA 99-106156

3.1.1.1 Thrust Chamber Assembly Configuration (Figures 13, 14 & 15) B

3.1.1.1.1 25#, 85# and 100# TCA's P/N's 208160-21, 207510-21 & 207540-21

These TCA configurations are identical to the deliverable TCA configurations (P/N's 208160-61, 207510-61 and 207540-61) except that on the 25# TCA (P/N 208160-21) the chamber pressure (Pc) tube and fitting are retained and on the 85# and 100# TCA's (P/N's 207510-21 and 207540-21, respectively) the Pc Boss is not closed after hot fire calibration. The Pc taps on these TCA's will aid in determining Engine System operating characteristics by allowing for chamber pressure measurements during the various hot fire tests to be conducted. The 25# TCA's of this configuration will be used in positions 2, 4, 6 and 8. The 85# TCA's will be used in positions 11 and 12 and the 100# TCA's will be used in positions 9, 10, 13, 14, 15 and 16 as indicated in Figure 16 . B

3.1.1.1.2 25# TCA, P/N 208160-31

This configuration is identical to the 25# TCA's described in paragraph 3.1.1.1.1 (P/N 208160-21) except that an additional high frequency Pc tap is installed directly through the chamber wall in order to more accurately measure TCA transient response characteristics. A high frequency response pressure transducer will be close coupled to this tap during the various hot fire tests to be conducted. TCA's of this configuration will be used in positions 1, 3, 5 and 7 as indicated in Figure 16 . B

PREPARED BY: J Mayne	DATE	APPROVED FOR NAA:	DATE
CHECKED BY: [signature]	DATE 6-29-64	[signature]	6-29-64

DESIGN APPROVAL TEST
ORBIT ATTITUDE AND MANEUVER SYSTEM
(SE7)

TEST NO. 106156-401 SHEET 14 OF 413

PART NO. 2-DAY CONFIG. {MAC / NAA} 14-DAY CONFIG. {MAC 52-52701 / NAA 99-106156}

3.1.2 Engine System Test Structures

3.1.2.1 OAMS Module Structural Assembly

The MAC supplied structure shall be fitted with SE7 Engine System components in accordance with Rocketdyne Drawing 99-106161 (Tank Module) and subjected to the tests of Paragraphs 7.1 through 7.3.

3.1.2.2 Rocketdyne Adapter Structure P/N 99-103490

The SE7 Engine System TCA's, MAC supplied TCA Propellant Feed System Plumbing, and the Tank Module, Paragraph 3.1.2.1, shall be assembled and mounted on the Adapter Structure which simulates, with respect to dimensions and component orientation, the configuration of the actual Gemini spacecraft; additionally The Structure provides bulkheads for termination of special test plumbing and electrical harnesses used in conjunction with the tests of Paragraphs 7.4 through 7.6.

3.1.2.2.1 Rocketdyne Trunnion Spider Adapter System P/N 99-103430

To facilitate handling, the Trunnion Spider Adapter System shall be installed on the ends of the adapter structure.

3.1.2.3 Rocketdyne Sub Frame Assembly P/N 99-103420

To facilitate handling and provide a rigid stand, a Sub Frame shall be attached to the Adapter Structure at all times except during the Drain and Clean Procedures of Paragraph 6.2.1.

PREPARED BY: J. Mayne	DATE	APPROVED FOR NAA:	DATE
CHECKED BY: [illegible]	DATE 6-29-64	[illegible] 6-29-64	

DESIGN APPROVAL TEST
ORBIT ATTITUDE AND MANEUVER SYSTEM
(SE7)

TEST NO. 106156-401 SHEET 15 OF 413

PART NO. 2-DAY CONFIG. {MAC ____ NAA ____} 14-DAY CONFIG. {MAC 52-52701 NAA 99-106156}

3.1.2.4 Rocketdyne Vertical Support Structure P/N 99-103356

During the Drain and Clean Procedures of Paragraph 6.2.1, the Engine System shall be placed in an upright position and rigidly held by the Vertical Support Structure.

3.1.2.5 Rocketdyne Structure Cover and Flame Insert P/N 99-103760

In order to effectively contain and control the environmental temperature of the Engine System components for the test of Paragraph 7.5, the Adapter Structure shall be completely covered with an insulated jacket with the exception of the TCA exits.

3.1.2.6 Rocketdyne Diffuser P/N 99-103389

During the test of Paragraph 7.5, a Diffuser Assembly shall be installed within the Adapter Structure to effect uniform distribution of incoming temperature conditioned gas.

3.1.3 Engine System Plumbing

3.1.3.1 MAC supplied plumbing shall be brazed into the Engine System per RAO 607-009.

3.1.3.2 In addition to the normal Engine System plumbing of Paragraph 3.1.3.1, the following lines shall be added by Rocketdyne for test purposes:

PREPARED BY: J. Mayne	DATE	APPROVED FOR NAA:	DATE
CHECKED BY:	DATE 6-29-64		6-29-64

DESIGN APPROVAL TEST
ORBIT ATTITUDE AND MANEUVER SYSTEM
(SE7)

TEST NO. 106156-401 SHEET 16 OF 413

PART NO. 2-DAY CONFIG. {MAC / NAA} 14-DAY CONFIG. {MAC 52-52701 / NAA 99-106156}

.1.3.2.1 A line from the HI PRESS GAS CHG VALVE PORT - 1 on Component Package "A" to the bulkhead on the Engine System Adapter Structure. This line shall be connected to a facility supplied solenoid operated valve, located downstream from the bulkhead, which provides a remote means of safety, in accordance with Rocketdyne Safety Department Directives, tanking and venting the Engine System pressurant at operating pressures. This line shall be installed during the tests of Paragraphs 7.4 through 7.6.

3.1.3.2.2 One each line from the OXID VENT PORT - 6 and the FUEL VENT PORT - 4 on Component Package "B" to the bulkhead on the Engine System Adapter Structure. Each of these lines shall be connected to a facility supplied solenoid operated valve, located downstream from the bulkhead, which provides a remote means of safely, in accordance with Rocketdyne Safety Department Directives, venting the pressurant from the respective propellant tank when the Engine System propellant tanks are pressurized to operating pressure. These lines shall be installed during the tests of Paragraphs 7.4 through 7.6.

3.1.3.2.3 One each auxilary line and hand valve will be installed between the FUEL PURGE - 16 and OXID PURGE - 13 and the bulkhead on the Engine System Adapter Structure. The hand valves will be attached to the Structure between the tank purge ports and bulkhead. This arrangement is required to safely drain the tanks without the trapped propellant in the tank purge tubes spilling out when the redundant seal is removed during draining and purging of the propellant tanks. These lines and hand valves shall be installed during the tests of Paragraphs 7.4 through 7.6.

PREPARED BY:	DATE	APPROVED FOR NAA:	DATE
J. Mayne			
CHECKED BY:	DATE		

DESIGN APPROVAL TEST
ORBIT ATTITUDE AND MANEUVER SYSTEM
(SE7)

TEST NO. 106156-401 SHEET 17 OF 413
PART NO. 2-DAY CONFIG. {MAC / NAA} 14-DAY CONFIG. {MAC 52-52701 / NAA 99-106156}

3.1.3.2.4 A special adapter shall be fitted over the pressure regulator reference pressure cavity port (Figure 40) and connected to a vacuum source in order to effect the proper regulation pressure during Mission Duty Cycle Testing.

3.1.4 Electrical Harnesses

Four (4) electrical harnesses, fabricated by Rocketdyne, will be used on the Engine System: P/N 99-501808, between the 25# TCA propellant valves and the bulkhead; P/N 99-501809, between the 85# and 100# TCA propellant valves and the bulkhead, P/N 99-501810, between the Component Packages "A", "C" and "D" cartridge valves and the bulkhead; P/N 99-501811, between the Component Packages "A" and "B" pressure transducers and the bulkhead.

3.2 Safety

3.2.1 All safety precautions necessary to comply with this procedure shall be in accordance with Rocketdyne Safety Department Directives.

3.2.2 During installation of cartridges, NA5-28082T1 and NA5-28088T1, and while assembled on Packages "A", "C", "D" and "E", standard operating procedure outlined in DEM 4132-47 shall be observed. When the Engine System is not in test the electrical harness connectors shall be removed from each cartridge and shorting plugs (Figure 11) installed.

PREPARED BY:	DATE	APPROVED FOR NAA:	DATE
J. Mayne			
APPROVED BY:	6-29-64 DATE		6-29-64

DESIGN APPROVAL TEST
ORBIT ATTITUDE AND MANEUVER SYSTEM
(SE7)

TEST NO. 106156-401 SHEET 18 OF 413

PART NO. 2-DAY CONFIG. {MAC / NAA} 14-DAY CONFIG. {MAC 52-52721 / NAA 29-106156}

3.3 Handling

3.3.1 When shipping the Engine from one facility to another, it shall be installed on the Sub Frame, P/N 29-103420, and covered with a protective canvas.

3.3.2 During transport of the Engine System Tank Module it shall be placed in a special Transport Package, RK 328-00025, enclosure.

PREPARED BY: J. Mayne	DATE	APPROVED FOR NAA:	DATE
CHECKED BY:	DATE		6-29-64

DESIGN APPROVAL TEST
ORBIT ATTITUDE AND MANEUVER SYSTEM
(SE7)

TEST NO. 106156-401 SHEET 19 OF 413

PART NO. 2-DAY CONFIG. {MAC ____ NAA ____} 14-DAY CONFIG. {MAC 52-52701 NAA 99-106156}

3.4 Photographic Coverage

3.4.1 Photographs shall be taken of each different test setup and shall be included in the final test report. Three preliminary copies of these pictures shall be forwarded to the Rocketdyne Gemini Project Office within 14 days from the exposure date.

3.4.2 In case of failure, photographs, which provide visual evidence, shall be taken of the Engine System or component thereof. Sufficient views shall be taken to provide complete visual coverage of the failure, including photomicrographs when applicable.

3.5 Maintenance

Servicing, adjustment, or replacement of Engine System components shall not be permitted unless specifically stated in this specification.

3.5.1 Lubrication of fittings is permitted as follows:

3.5.1.1 All resistoflex caps shall be lubricated every second removal per RAO 112-002 except Aroclor 1254 shall be the lubricant used.

3.5.1.2 All Engine System Component Package manual valves shall be lubricated with one (1) to three (3) drops of Aroclor 1254, heated to the liquid state, after every 100 cycles of actuation.

3.5.1.3 Manual valve OPEN is defined as 4 turns counterclockwise from the full CLOSED position. Torque per the values indicated in Table I. B

PREPARED BY:	DATE	APPROVED FOR NAA:	DATE
J. Mayne		[illegible]	6-29-64
CHECKED BY: [illegible]	6-29-64 DATE		

[illegible] Date 3-10-65

DESIGN APPROVAL TEST
ORBIT ATTITUDE AND MANEUVER SYSTEM
(SE7)

TEST NO. 106156-401 SHEET 20 OF 413
PART NO. 2-DAY CONFIG. {MAC / NAA} 14-DAY CONFIG. {MAC 52-52701 / NAA 99-106156}

3.6 Failures

3.6.1 In the event that any Engine System Component fails to pass any part of the Design Approval Tests, (paragraphs 7.2, 7.3, 7.5, and 7.6), immediately discontinue all testing of the Engine System and notify the Rocketdyne Gemini Project Office. The Gemini Project Office shall notify MAC in accordance with paragraph 2.5.2 of MAC Report 8392.

3.6.2 McDonnell Aircraft Corporation and Rocketdyne shall jointly review the failure and determine the corrective action to be taken and the point in the test procedure where retesting is to begin.

3.6.3 Special failure criteria shall be applicable in accordance with the following:

3.6.3.1 TCA's, P/N 208160-31: Failures directly attributed to the existence of the high frequency Pc tap, paragraph 3.1.1.1.2, such as burn out, performance decay, etc., shall not constitute a Design Approval Test failure.

3.6.3.2 Functional or structural failure of any component of the Engine System during or subsequent to vibration testing, as result of inducing forces in excess of design requirements, shall not constitute a Design Approval Test failure.

3.6.3.3 Failures directly attributed to MAC supplied Engine System plumbing, paragraph 3.1.3.1, and the brazing fittings (Reference Rocketdyne Drawing 99-106156) shall be the responsibility of McDonnell Aircraft Corporation; analysis and correction shall be undertaken by MAC.

PREPARED BY:	DATE	APPROVED FOR NAA:	DATE
J. Mayne			
CHECKED BY:	DATE		
[illegible]	6-29-64	[illegible]	6-29-64

DESIGN APPROVAL TEST
ORBIT ATTITUDE AND MANEUVER SYSTEM
(SE7)

TEST NO. 106156-401 SHEET 21 OF 413

PART NO. 2-DAY CONFIG. { MAC ____ NAA ____ } 14-DAY CONFIG. { MAC 52-52701 NAA 99-106156 }

3.6.3.4 Failure of, or failure(s) attributed to, the rigid lines connected between the Engine System HI PRESS. GAS CHG. VALVE PORT-1, the HI PRESS GAS TEST PORT-2, the OXID. TANK VENT-6, the FUEL TANK VENT-4, and the COMPONENT SHELF shall not constitute a Design Approval Test Failure.

3.6.3.5 In the event that performance of the procedures of this specification impose cycling in excess of the design life (8) on the propellant tank bladders, no failure criteria shall be applicable.

PREPARED BY:	DATE	APPROVED FOR NAA:	DATE
J. Mayne			
CHECKED BY:	DATE		
	6-29-64		6-29-64

DESIGN APPROVAL TEST
ORBIT ATTITUDE AND MANEUVER SYSTEM
(SE7)

TEST NO. 106156-401 SHEET 22 OF 413

PART NO. 2-DAY CONFIG. {MAC ____ NAA ____} 14-DAY CONFIG. {MAC 52-52701 NAA 99-106156}

3.7 Test Witnessing (paragraph 6.2.1.3 of reference a)

3.7.1 Each Design Approval Test shall be witnessed and the test data certified by Rocketdyne inspection and the Government Inspection Agency having cognizance at the testing facility. McDonnell and Government Inspectors shall be notified 4 hours in advance of all tests.

3.7.2 MAC Engineering shall be notified 3 days in advance of the schedule date of any Design Approval Test. If MAC Engineering indicates a desire to witness any test, notification shall again be performed 4 hours prior to the beginning of the test. Actual testing shall not commence prior to the arrival of all witnessess unless prior waiver is obtained. Notification of the MAC Resident Engineering Office shall constitute notification of MAC Engineering.

3.8 Instrumentation (paragraph 6.2.1.2 of reference a)

3.8.1 Instruments shall be calibrated to insure accuracy of ±2 percent of the full scale range of the instrument being used, except where instrumentation accuracy is otherwise specified. Calibration records shall be maintained and made available to authorized personnel upon request.

3.8.2 Only the TCA's (paragraph 3.1.1.1) will be modfied for instrumentation purposes. All other measurements will be obtained via the Engine System access ports provided or external surface mounting.

PREPARED BY:	DATE	APPROVED FOR NAA:	DATE
J. Mayne			
CHECKED BY:	DATE		

DESIGN APPROVAL TEST
ORBIT ATTITUDE AND MANEUVER SYSTEM
(SE7)

TEST NO. 106156-401 SHEET 23 OF 413

PART NO. 2-DAY CONFIG. {MAC / NAA} 14-DAY CONFIG. {MAC 52-52701 / NAA 99-106156}

3.8.3 During the liquid Calibration Test, (paragraph 7.4.6), safety fluid flow rates will be measured by replacing the cartridge valves in Component Packages "C" and "D" with special hypass fixtures P/N 99-103326, which have provisions for the installation of flowmeters and other instrumentation.

3.9 Cleanliness Requirements

3.9.1 Propellant loaded into the tanking equipment shall be filtered through a 2 micron nominal, 10 micron absolute filter. Propellant fill lines between the tanking equipment and the Engine System shall contain a 2 micron nominal, 10 micron absolute filter located as near the Engine System fill ports as possible. The propellant fill lines between the tanking equipment end point filter and the Engine System shall be cleaned per Rocketdyne Specification RA0110-015 prior to the loading of propellant.

3.9.2 All fluids used during Engine System cleaning and flushing procedures shall be filtered through a 2 micron nominal, 10 micron absolute filter.

3.9.3 Pressurant used to charge the Engine System pressurant tank shall be filtered through a 2 micron nominal, 10 micron absolute filter located as near as possible to the Engine System pressurant charge port.

3.9.4 All test lines between the test setup end point filters and the Engine System shall be cleaned per RA0110-015. Care shall be exercised to prevent entry of foreign matter into the Engine System and the test lines whenever they are disconnected from one another. All filters used in the test set-up shall be cleaned per RAO 610-009.

PREPARED BY:	DATE	APPROVED FOR NAA:	DATE
J. Mayne		S Hide	6-29-64
CHECKED BY:	DATE		
[illegible]	6 29 64		

DESIGN APPROVAL TEST
ORBIT ATTITUDE AND MANEUVER SYSTEM
(SE7)

TEST NO. 106156-401 SHEET 24 OF 413

PART NO. 2-DAY CONFIG. {MAC / NAA} 14-DAY CONFIG. {MAC 52-52701 / NAA 99-106156}

3.10 Report

3.10.1 Data

Data shall consist of, but not be limited to, the following:

3.10.1.1 Data Sheets

Subsequent to and a part of each individual test of this specification are data sheets for recording the applicable data.

3.10.1.2 Test Records

All instrumentation recordings, direct inking graphic recorders, oscillographs, etc., required in this specification for monitoring test parameters of the individual tests shall be readily identifiable with respect to:

Test Name
Test Facility
Time: Date:
Test Parameter

3.10.1.3 Acceptance Test Data

Acceptance Test data for all component hardware installed on the Engine System, prior to and during the Design Approval Tests, shall be retained and made a part of the final test report.

3.10.1.4 Test Summary

In the final report all data, direct and derived, obtained during the Design Approval Test series shall be analyzed and discussed.

PREPARED BY:	DATE	APPROVED FOR NAA	DATE
J. Mayne		[illegible]	8-12-64
CHECKED BY: [illegible]	8-12-64 DATE		

DESIGN APPROVAL TEST
ORBIT ATTITUDE AND MANEUVER SYSTEM
(SE7)

TEST NO. 106156-401 SHEET 25 OF 413

PART NO. 2-DAY CONFIG. {MAC ____ NAA ____} 14-DAY CONFIG. {MAC 52-52701 NAA 99-106156}

3.10.1.4 (cont'd) Any significent trends leading to pertinent conclusions or recommendations shall be included as a part of the report.

3.11 Sampling and Analysis of Propellants

Samples of propellant shall be obtained for analysis, immediately prior to introducing propellant into the Engine System tanks, for the purpose of determining specific gravity and composition. The data from the analysis shall be recorded on the Test Data sheets provided in this specification and employed in the reduction of the test data obtained during the test in which the propellant was consumed.

PREPARED BY:	DATE	APPROVED FOR NAA:	DATE
J. Mayne			
CHECKED BY:	6-29-64		6-29-64

~~CONFIDENTIAL~~

Part III

A Reproduced Copy

OF

CLASSIFICATION CHANGE

To UNCLASSIFIED

By authority of GSS-[illegible] 1165V

Changed by O. Hirschhorn 12/31/72

Classification Branch, NASA

Scientific and Technical Information Facility

[redacted]1

Reproduced for NASA

by the

NASA Scientific and Technical Information Facility

~~CONFIDENTIAL~~

FFNo 672 Aug 65

DESIGN APPROVAL TEST
ORBIT ATTITUDE AND MANEUVER SYSTEM
(SE7)

[redacted]

TEST NO. 106156-401 SHEET 26 OF 413

PART NO. 2-DAY CONFIG. {MAC / NAA} 14-DAY CONFIG. {MAC 52-52701 / NAA 99-106156}

3.12 Abbreviations

AC	Alternating Current
cm	centimeter
cps	cycles per second
DAT	Design Approval Test
DC	Direct Current
F	Degrees Fahrenheit
GN_2	Nitrogen, gaseous
He	Helium
HL & L	Hand Loader
HP	High Pressure
I	Current
KC	Kilocycles
LP	Low Pressure
MAC	McDonnell Aircraft Corporation
ml	Milliliters
mv	millivolt
OAMS	Orbit Attitude & Maneuver System

PREPARED BY:	DATE	APPROVED FOR NAA:	DATE
J. Mayne		[illegible]	6-29-64
CHECKED BY: [illegible]	6-29-64		

DESIGN APPROVAL TEST
ORBIT ATTITUDE AND MANEUVER SYSTEM
(SE7)

TEST NO. 106156-101 SHEET 27 OF 413

PART NO. 2-DAY CONFIG. {MAC / NAA} 14-DAY CONFIG. {MAC 52-52701 / NAA 99-106156}

3.12 Abbreviations (cont'd)

NC	Normally Closed
ppm	parts per million
psia	pounds per square inch absolute
psig	pounds per square inch gage
RMS	Root Mean Square
scc	standard cubic centimeters
sccs	standard cubic inches per second
SCD	Specification Control Drawing (McDonnell Aircraft Corp.)
scfm	standard cubic feet per minute
S/V	Solenoid Valve
V	volts
Ω	ohms
U/S	upstream
D/S	downstream
DIGR	Direct Inking Graphic Recorder
SSFL	Santa Susana Field Laboratory
PSOV	Propellent Shutoff Valve

PREPARED BY: J. Mayne DATE

CHECKED BY: [signature] DATE 6-29-64

APPROVED FOR NAA: [signature] DATE 6-29-64

DESIGN APPROVAL TEST
ORBIT ATTITUDE AND MANEUVER SYSTEM
(SE7)

TEST NO. 106156-401 SHEET 28 OF 413

PART NO. 2-DAY CONFIG. {MAC / NAA} 14-DAY CONFIG. {MAC 52-52701 / NAA 99-106156}

3.12 Abbreviations (cont'd)

G	Gravity Units
PS-C	Package "C" Pressure Switch
PS-D	Package "D" Pressure Switch
PTC	Pneumatic Test Console
ECP	Electrical Checkout Panel
PSD	Power Spectral Density
NO	Normally Open

PREPARED BY:	DATE	APPROVED FOR NAA:	DATE
J. Mayne		[illegible]	8-12-64
CHECKED BY: [illegible]	8-12-64		

DESIGN APPROVAL TEST
ORBIT ATTITUDE AND MANEUVER SYSTEM
(SE7)

TEST NO. 106156-401 SHEET 29 OF 413

PART NO. 2-DAY CONFIG. {MAC / NAA} 14-DAY CONFIG. {MAC 52-52701 / NAA 99-106156}

3.13 Post Test Hardware Disposition

Upon successful completion of all Design Approval Tests and following the final drain and clean operations the component hardware shall be debrazed from the Engine System, per RA0607-009, cleaned as required for shipment, packaged in accordance with RA0616-005 and shipped directly to MAC, St. Louis.

PREPARED BY:	DATE	APPROVED FOR NAA:	DATE
J. Mayne			
CHECKED BY:	DATE		
	6-29-64		6-29-64

DESIGN APPROVAL TEST
ORBIT ATTITUDE AND MANEUVER SYSTEM
(SE7)

TEST NO. 106156-401 SHEET 30 OF 413

PART NO. 2-DAY CONFIG. {MAC / NAA} 14-DAY CONFIG. {MAC 52-52701 / NAA 99-106156}

4.0 Test Program

One SE7 Engine System Tank Module, P/N 99-106161, shall be subjected to the Design Approval Tests in accordance with the requirements specified herein. Upon successful completion of the tests the Tank Module shall be installed and become an integral part of an SE7 Engine System, P/N 99-106156. The SE7 Engine System shall then be subjected to the Design Approval Tests in accordance with the requirements specified herein. C

4.1 Test Sequence

The order of testing shall be as follows:

Test	Para	Page	SCD Reference
*Functional Test (Tank Module)	7.1		5.2.2.1
Proof Pressure	7.1.3		5.2.2.1
Gross External Leakage	7.1.4		5.2.2.1
Functional & Internal Leakage	7.1.5		5.2.2.1
Vibration Test (Tank Module)	7.2		5.2.2.2
Functional Test (Tank Module)	7.3		5.2.2.1
Proof Pressure	7.3.3		5.2.2.1
Gross External Leakage	7.3.4		5.2.2.1
Functional & Internal Leakage	7.3.5		5.2.2.1
*Acceptance Test(Engine System)	7.4		5.2.2.1
Proof Pressure	7.4.3		5.2.2.1
Gross External Leakage	7.4.4		5.2.2.1
Functional & Internal Lkg.	7.4.5		5.2.2.1
Liquid Calibration	7.4.6		5.2.2.1

PREPARED BY:	DATE	APPROVED FOR NAA:	DATE
J. Mayne			
CHECKED BY:	DATE		
	6-29-64		6-29-64

DESIGN APPROVAL TEST
ORBIT ATTITUDE AND MANEUVER SYSTEM
(SE7)

TEST NO. 106156-401 SHEET 31 OF 413

PART NO. 2-DAY CONFIG. {MAC ____ NAA ____ 14-DAY CONFIG. {MAC 52-52701 NAA 99-106156

4.1 (continued)	Test	Para	Page	SCD Reference
	Mission Cycle, High Temp, 160°F (Engine System)	7.5		5.2.2.5
	Hot Fire Calibration	7.6		5.2.2.7

*Failure of these tests does not constitute a Design Approval Test Failure.

PREPARED BY: J. Mayne	DATE	APPROVED FOR NAA:	DATE
CHECKED BY:	DATE 8-12-64		8-12-64

DESIGN APPROVAL TEST
ORBIT ATTITUDE AND MANEUVER SYSTEM
(SE7)

TEST NO. 106156-401 SHEET 32 OF 413

PART NO. 2-DAY CONFIG. {MAC ____ NAA ____} 14-DAY CONFIG. {MAC 52-52701 NAA 99-106156}

Reference: a) MAC SCD 52-52701, Revision F.

5.0 EQUIPMENT AND MATERIALS (Equivalent Items May be Used)

The following equipment, or equivalent, shall be used where applicable.

5.1 Material

Nitrogen Tetroxide	MIL-P-26529A (Oxidizer)
Monomethyl Hydrazine	MIL-P-27404A (Fuel)
Freon TF	Commercial Grade
Alcohol	(Reagent Grade Isopropyl Alcohol, AM CHEM SOC standard
Helium	Federal Stock No. 6830-263-9842
Nitrogen	MIL-P-27401A
Leak Test Compound	MIL-L-25567
Freon MF	Commercial Grade

5.2 Equipment

5.2.1 Functional and Acceptance Tests

Pneumatic Test Console (PTC)	As shown schematically in Figure 28 and drawing 99-103729
Electrical Checkout Panel (ECP)	P/N 99-9017055. B
Flowmeter (F_1)	0-20 SCFM scale rated for Helium at 70F and 14.7 psia, .4 SCFM maximum per scale division, ±2% accuracy full scale
Pressure Gauge (G_6)	0-500 psig range, .1 % accuracy full scale A

PREPARED BY: J. Mayne	DATE	APPROVED FOR NAA:	DATE
CHECKED BY: C W Dimus	DATE 8-12-64		8-12-64

690 REVISION A R. L. Jue Dated 8-26-64
REVISION B R. L. Jue Dated 3-10-65

DESIGN APPROVAL TEST
ORBIT ATTITUDE AND MANEUVER SYSTEM
(SE7)

TEST NO. 106156-101 SHEET 33 OF 413

PART NO. 2-DAY CONFIG. {MAC / NAA} 14-DAY CONFIG. {MAC 52-52701 / NAA 99-106156}

5.2.1 (continued)

Thermocouple	Iron - Constantan
Auxilary Vacuum Gauge	National Research Corp. Model 763
Pressure Gauge (G_1)	0-600 psig 1/10% accuracy full scale
Pressure Gauge (G_2)	0-30 psig, 1/4% accuracy full scale
Burette	25 ml capacity
Graduated Cylinder	50 ml capacity
Beaker	400 ml (approx) capacity
Dobeckmun Metalam 777-V	(MIL-B-131 C)
Instrumentation (Liquid Calibration)	Table 2
Filters (5 req'd)	10 micron absolute, 2 micron nominal
Tanks with sight gauges and associated pressurizing and venting equipment for transfer of safety fluids (Freon TF and alcohol) (2 req'd)	Twenty Five Gallons min. capacity working pressure 50 psig min.
Pressure Gauge (G_3)	0-15 psig range, 1/4 % accuracy full scale

PREPARED BY: J. Mayne DATE

CHECKED BY: 6-29-64 DATE

APPROVED FOR NAA: 6-29-64 DATE

R-15075-1 N A R. L. Fre Dated 8-26-64

DESIGN APPROVAL TEST
ORBIT ATTITUDE AND MANEUVER SYSTEM
(SE7)

TEST NO. 106156-401 SHEET 34 OF 413

PART NO. 2-DAY CONFIG. {MAC ____ NAA ____} 14-DAY CONFIG. {MAC 52-52701 NAA 99-106156}

5.2.1 (continued)

	Hand Valves (12 req'd)	1/4 inch
	Vacuum Gauge	0-15 psia ±5% accuracy full scale
	Pressure Gauge (2 req'd)	0-100 psig ±1% accuracy full scale
	Potentiometer	Leads and Northrup
	Torque Wrench (2 req'd)	0-50 in lbs and 0-600 in lbs
	TCA Throat Plugs (8 req'd)	P/N 9017831-31
	Solenoid Valve (2 req'd)	3 way, 1/4 inch
	Pressure Gauge (G_4)	**0-100 psig range, 1 % accuracy full scale** A
	Bypass Assembly (2 req'd)	P/N 99-103326
	GN_2 Source	3000 psig
	He Source	6000 psig
	Helium Mass Spectrometer	CEC Type 24-120AMB Leak Detector (or equivalent) CEC Model Mandatory
	Micrometer Valve (V_1)	**Hoke Model Mandatory**
	Pressure Regulator (R_1)	Nullmatic, Model 40-30 Mandatory
	Pressure Gauge (G_5)	0-5000 psig range, .1 % accuracy full scale A

PREPARED BY:	DATE	APPROVED FOR NAA:	DATE
J. Mayne			
CHECKED BY:	DATE 6-29-64		6-29-64

REVISION A R L Dace Dated 8-25-66

DESIGN APPROVAL TEST
ORBIT ATTITUDE AND MANEUVER SYSTEM
(SE7)

TEST NO. 106156-401 SHEET 35 OF 413

PART NO. 2-DAY CONFIG. {MAC ____ NAA ____} 14-DAY CONFIG. {MAC 52-52701 NAA 99-106156}

5.2.1 (cont'd)	Fans, electric, (2 req'd)	Oscillating type, 10 inch minimum fan diameter.	B
	Wrenches	Internal 3/16" Hex External 3/16" Hex	
	Voltmeter (E_1)	Cubic Corp. San Diego, Calif. Model VRO-70, .5% accuracy.	
	D.C. Power Supply	26 ± .5 volts	
	Hand Loader (L_1)	0 - 600 psig, self venting	
	TCA Seal Fixtures	P/N K4-3008 (25# TCA) P/N K4-3009 (85# TCA) P/N K3-3010 (100# TCA)	B

PREPARED BY:	DATE	APPROVED FOR NAA:	DATE
J. Mayne		[illegible]	3-10-65
CHECKED BY: [illegible]	3-10-65		

R-15075-1 [illegible] Date 3-10-65

DESIGN APPROVAL TEST
ORBIT ATTITUDE AND MANEUVER SYSTEM
(SE7)

TEST NO. 106156-401 SHEET 36 OF 413

PART NO. 2-DAY CONFIG. {MAC ____ NAA ____} 14-DAY CONFIG. {MAC 52-52701 NAA 99-106156}

5.2.2 Vibration Test

Vibration System	Ling A310 2 req'd. Ling A275 1 req'd. capable of sinusoidal and random vibration in 2 planes, Z and R while maintaining system attitude
Vibration Fixtures (6 req'd)	P/N AE-000519
Tape Recorder (4 req'd)	14 Channel FM
Accelerometers (60 req'd)	Gulton Model 315 or Endevco Models 2226, 2227, 2229 or equivalent ± 5% 20 to 2KC
D.C. Power Supply	28 V ±.5
D.C. Power Supply	5 ± .5V
Shaker Frame (Z Axis)	AE-002013
Thruster Ring (Z Axis)	AE-002014
Vibration Stand (R Axis)	AE-000516
Anchor Plate (2 Req'd)	AE-000517
Blast Curtains	AE-000518
A275 Adapter	AE-000520

PREPARED BY:	DATE	APPROVED FOR NAA:	DATE
J. Mayne		[illegible]	6-29-64
CHECKED BY: [illegible]	6-29-64		

DESIGN APPROVAL TEST
ORBIT ATTITUDE AND MANEUVER SYSTEM
(SE7)

TEST NO. 106156-401 SHEET 37 OF 413

PART NO. 2-DAY CONFIG. {MAC / NAA} 14-DAY CONFIG. {MAC 52-52701 / NAA 99-106156}

5.2.2 (continued)

Amplifiers 60 req'd)	Endevco Model 2607, 2609, 2504, 2516B or Columbia 8003 $G_a = \pm 3\%$ 5 to 40 KC
Oscillograph	CEC - 2 Channels Minimum
Scale	0-500 lbs range, Accuracy ±5% of Full Scale, readable to 0.5#
Facility Solenoid Valve	3 way, 1/4 inch
Facility Solenoid Valve (2 req'd)	2 way H/C 1/4 inch
Tanks with associated pressurizing and venting equipment for transfer of safety fluids (Freon TF and Alcohol) (req'd)	Twenty-Five gallons min. capacity working pressure 50 psig min.
GN_2 Source	3000 psig
Filters (6 req'd)	2 micron nominal, 10 micron absolute
Hand Valves (12 req'd)	1/4 inch, 8 for 500 psig Freon, Alcohol, or GN_2 , 4 for 3000 psig GN_2 or GH_e
Vacuum Gauge (1 req'd)	0-15 psia ±5% accuracy Full Scale
Pressure Gauge (2 req'd)	0-500 psig ±1% accuracy
Pressure Gauge (G_1)	0-5000 psig, .25% Full Scale
Pressure Gauge (2 req'd)	0-300 psig ±1% accuracy Full Scale

PREPARED BY:	DATE	APPROVED FOR NAA:	DATE
J. Mayne			
CHECKED BY:	DATE		
	6-29-64		6-29-64

DESIGN APPROVAL TEST
ORBIT ATTITUDE AND MANEUVER SYSTEM
(SE7)

TEST NO. 106156-401 SHEET 38 OF 413

PART NO. 2-DAY CONFIG. {MAC ____ NAA ____} 14-DAY CONFIG. {MAC 52-52701 NAA 99-106156}

5.2.2 (continued)

Evacuation System	1 psia Capability
Torque Wrench (2 req'd)	0-50 in. lbs and 0-600 in lbs.
Wrenches	Internal 3/16"Hex External 3/16"Hex
Tube Assembly, AN to Resistoflex (4 each req'd)	1/4 inch, 5/16 inch and 3/8 inch
Pressure Regulators (3).	1 ea. 0-5000 6000 psig inlet 2 ea. 0-500 3000 psig inlet
Gasecus Helium Supply	3600 psig

PREPARED BY:	DATE	APPROVED FOR NAA:	DATE
J. Mayne		[illegible]	6-29-64
CHECKED BY: [illegible]	6-29-64		

DESIGN APPROVAL TEST
ORBIT ATTITUDE AND MANEUVER SYSTEM
(SE7)

TEST NO. 106156-401 SHEET 38.1 OF

PART NO. 2-DAY CONFIG. {MAC / NAA} 14-DAY CONFIG. {MAC 52-52701 / NAA 99-106156}

C .5.2.3 Hot Fire Tests

Engine Manual Firing Control System	Per Rocketdyne Drawing 99-501803
Mission Cycle Firing Control System	Per Rocketdyne Drawing 99-501804
Programmed Magnetic Tape	Per Rocketdyne Internal Letter 4388-2021, dated 21 May 1964
Propellant Volumetric Metering System	Per Rocketdyne Internal Letter 2388-2045, dated 29 Aug. 1962
DC Power Supply	28 V ± .5
DC Power Supply	5 V ± .5
Helium Source	0 - 6000 psig
Gaseous Nitrogen Source	0 - 4000 psig
Environmental Temperature Conditioning System	Capable of conditioning the Engine System hardware to a pre-test temperature of 160 ± 5 F
Pressure, Temperature and Time Sequence Transducers and Recorders	Per Table 5
Wrenches	Internal 3/16" Hex External 3/16" Hex
Evacuation System	2 psia max.

PREPARED BY:	DATE	APPROVED FOR NAA:	DATE
J. Mayne			
CHECKED BY:	DATE		

R-15075-1 Date 10-14-65

DESIGN APPROVAL TEST
ORBIT ATTITUDE AND MANEUVER SYSTEM
(SE7)

NAME OF TEST OPERATIONAL PROCEDURES TEST NO. 106156-401 SHEET 39 OF 413

PART NO. 2-DAY CONFIG. {MAC ____ NAA ____ 14-DAY CONFIG. {MAC 52-52701 NAA 99-106156

Reference a: MAC SCD 52-52701, Revision F

6.0 OPERATIONAL PROCEDURES

This section contains the standard operational procedures which shall be used in the Functional, paragraph 7.1, Acceptance, paragraph 7.4, and the Design Approval Tests, paragraphs 7.2, 7.3, 7.5 and 7.6, of this specification.

PREPARED BY: J. Mayne	DATE	APPROVED FOR NAA:	DATE
CHECKED BY:	DATE 6-29-64		6-29-64

DESIGN APPROVAL TEST
ORBIT ATTITUDE AND MANEUVER SYSTEM
(SE7)

NAME OF TEST LOADING PROCEDURES TEST NO. 106156-401 SHEET 40 OF 413
PART NO. 2-DAY CONFIG. {MAC / NAA} 14-DAY CONFIG. {MAC 52-52701 / NAA 99-106156}

Reference a: MAC SCD 52-52701, Rev. F.

6.1 Loading Procedures

6.1.1 Pressurant Loading

6.1.1.1 He. Tanking (cartridges unfired)

6.1.1.1.1 System Condition

All engine components are considered installed and Component Package "A" is closed (unfired). Connect the He. fill lines as shown in Figure 18.

NOTE: Torque values of Table 1 shall be utilized at all times.

6.1.1.1.2 He. Fill

6.1.1.1.2.1 Turn on the following instrumentation recorders (Figure 18)

6.1.1.1.2.1.1 Pressurant supply pressure transducer in Component Package "A". B

6.1.1.1.2.1.2 Pressurant tank skin temperature. B

6.1.1.1.2.2 Open Facility Pressurant Fill Valve and the Pressurant Tank Solenoid Valve as shown in Figure 18 and charge the pressurant tank to 3600 psig.

6.1.1.1.2.3 Close the Facility Pressurant Fill Valve.

PREPARED BY:	DATE	APPROVED FOR NAA:	DATE
J. Mayne			
CHECKED BY:	DATE		
	6-29-64		6-29-64

Rev. B Date 3-10-65

DESIGN APPROVAL TEST
ORBIT ATTITUDE AND MANEUVER SYSTEM
(SE7)

NAME OF TEST LOADING PROCEDURES TEST NO. 106156-401 SHEET 41 OF 413
PART NO. 2-DAY CONFIG. {MAC / NAA} 14-DAY CONFIG. {MAC 52-52701 / NAA 99-106156}

6.1.1.1.2.4	The following procedure shall be utilized to determine the amount tanked:	
6.1.1.1.2.4.1	After 60 minutes, read the tank skin temperature and pressurant supply pressure.	B
6.1.1.1.2.4.2	Plot point on Figure 19	
6.1.1.1.2.4.3	If point plotted is below curve proceed with paragraph 6.1.1.1.2.5	
6.1.1.1.2.4.4	If point plotted is above curve proceed with paragraph 6.1.1.1.2.8.	
6.1.1.1.2.4.5	If point plotted is within curve proceed with paragraph 6.1.1.1.2.11.	
6.1.1.1.2.5	Open Facility Pressurant Valve and pressurize to point above curve of Figure 19 at average temperature of paragraph 6.1.1.1.2.4.1.	
6.1.1.1.2.6	After 60 minutes, read the tank skin temperature and pressurant supply pressure.	B
6.1.1.1.2.7	Repeat paragraphs 6.1.1.1.2.4.2 through 6.1.1.1.2.4.5.	
6.1.1.1.2.8	Open High Pressure Vent until pressure decreases to point below curve of Figure 19 at average temperature of paragraph 6.1.1.1.2.4.1.	
6.1.1.1.2.9	After 60 minutes, read the tank skin temperature and pressurant supply pressure.	B

PREPARED BY:	DATE	APPROVED FOR NAA:	DATE
J. Mayne		[illegible]	6-29-64
CHECKED BY: [illegible]	DATE 6-29-64		

DESIGN APPROVAL TEST
ORBIT ATTITUDE AND MANEUVER SYSTEM
(SE7)

NAME OF TEST LOADING PROCEDURES TEST NO. 106156-401 SHEET 42 OF 413
PART NO. 2-DAY CONFIG. {MAC / NAA} 14-DAY CONFIG. {MAC 52-52701 / NAA 99-106156}

6.1.1.1.2.10 Repeat paragraphs 6.1.1.1.2.4.2 through 6.1.1.1.2.4.5.

6.1.1.1.2.11 Close the Pressurant Tank Solenoid Valve.

6.1.1.1.2.12 Turn off instrumentation recorders.

6.1.1.1.2.13 Remove the High Pressure He source from the Pressurant Tank Solenoid Valve.

6.1.1.2 He Tanking (cartridges fired)

6.1.1.2.1. System Condition

All engine components are considered installed and Component Package "A" is open (fired), but the PSOV are closed. Connect the He fill lines as shown in Figure 18.

NOTE: Torque values of Table 1 shall be utilized at all times.

6.1.1.2.2 He Fill

6.1.1.2.2.1 Turn on the following instrumentation recorders (Figure 18)

6.1.1.2.2.1.1 Pressurant supply pressure transducer in Component Package "A". B

6.1.1.2.2.1.2 Pressurant tank skin temperature. B

PREPARED BY: J. Mayne	DATE	APPROVED FOR NAA:	DATE
CHECKED BY:	DATE 6-29-64		6-29-64

B-15075-1rv.B Date 3-10-65

DESIGN APPROVAL TEST
ORBIT ATTITUDE AND MANEUVER SYSTEM
(SE7)

NAME OF TEST LOADING PROCEDURES TEST NO. 106156-401 SHEET 43 OF 413
PART NO. 2-DAY CONFIG. {MAC / NAA} 14-DAY CONFIG. {MAC 52-52701 / NAA 99-106156}

6.1.1.2.2.2	Open the Facility Pressurant Fill Valve and the Pressurant Tank Solenoid Valve as shown in Figure 18 and charge the pressurant tank to 3300 psig.	
6.1.1.2.2.3	Close the Facility Pressurant Fill Valve.	
6.1.1.2.2.4	The following procedure shall be utilized to determine the amount tanked.	
6.1.1.2.2.4.1	After 60 minutes, read the tank skin temperature and pressurant supply pressure.	B
6.1.1.2.2.4.2	Calculate pressure from Figure 20	
6.1.1.2.2.4.3	If tank pressure is below calculated pressure proceed with paragraph 6.1.1.2.2.5.	
6.1.1.2.2.4.4	If tank pressure is above calculated pressure proceed with paragraph 6.1.1.2.2.8.	
6.1.1.2.2.4.5	If tank pressure is within 20 psig of calculated pressure proceed with paragraph 6.1.1.2.2.11.	
6.1.1.2.2.5	Open Facility Pressurant Valve and pressurize to point slightly above calculated pressure of Figure 20	
6.1.1.2.2.6	After 60 minutes, read the skin temperature and pressurant supply pressure.	B
6.1.1.2.2.7	Repeat paragraphs 6.1.1.2.2.4.2 through 6.1.1.2.2.4.5.	

PREPARED BY: J. Mayne	DATE	APPROVED FOR NAA:	DATE
CHECKED BY:	DATE 6-29-64	6-29-64	

DESIGN APPROVAL TEST
ORBIT ATTITUDE AND MANEUVER SYSTEM
(SE7)

NAME OF TEST LOADING PROCEDURES TEST NO. 106156-401 SHEET 44 OF 413
PART NO. 2-DAY CONFIG. {MAC / NAA} 14-DAY CONFIG. {MAC 52-52701 / NAA 99-106156}

6.1.1.2.2.8 Open High Pressure Vent until pressure decreases to point slightly below calculated pressure of Figure 20

6.1.1.2.2.9 After 60 minutes, read the tank skin temperature pressurant supply pressure. B

6.1.1.2.2.10 Repeat paragraphs 6.1.1.2.2.4.2 through 6.1.1.2.2.4.5.

6.1.1.2.2.11 Close the Pressurant Tank Solenoid Valve.

6.1.1.2.2.12 Turn off instrumentation recorders.

6.1.1.2.2.13 Remove the High Pressure He source from the Pressurant Tank Solenoid Valve.

6.1.2 Propellant Loading

6.1.2.1 Fill (Clean System)

6.1.2.1.1 Oxidizer Fill Procedure

6.1.2.1.1.1 System Condition

All the engine components are considered to be installed and sealed and the Engine System is considered to be clean and dry. C

Connect the propellant fill system and GN_2 source lines as schematically illustrated in Figure 21. All valves are considered closed except the tank isolation cartridge valves may be either fired or unfired and the OXID TANK VENT VALVE - 6A in Component Package "B" is open.

NOTE: Torque values of Table 1 shall be utilized at all times.

PREPARED BY:	DATE	APPROVED FOR NAA:	DATE
J. Mayne			
CHECKED BY:	DATE		
	6-29-64		6-29-64

DESIGN APPROVAL TEST
ORBIT ATTITUDE AND MANEUVER SYSTEM
(SE7)

NAME OF TEST LOADING PROCEDURES TEST NO. 106156-401 SHEET 45 OF 413

PART NO: 2-DAY CONFIG. {MAC / NAA} 14-DAY CONFIG. {MAC 52-52701 / NAA 99-106156}

6.1.2.1.1.2	Bleed Propellant
6.1.2.1.1.2.1	Admit propellant up to the facility Propellant Fill Valve.
6.1.2.1.1.2.2	Open the Fill Bleed Valve to remove all air from the propellant supply line.
6.1.2.1.1.2.3	Close the Fill Bleed Valve when only liquid flows.
6.1.2.1.1.3	Evacuate System
	For the initial filling, it will be necessary to evacuate the propellant tank bladder, the propellant feed system and the propellant charge line.
6.1.2.1.1.3.1	Verify OXID TANK VENT VALVE -6A in Component Package "B" is open.
6.1.2.1.1.3.2	Open the Facility Vent Valve. and the three-way solenoid valve connected to Component Package B. C
6.1.2.1.1.3.3	Operate the evacuating system.
6.1.2.1.1.3.4	Open the Vacuum Shutoff Valve.
6.1.2.1.1.3.5	Open the OXID CHG VALVE - 11A in Component Package "C".
6.1.2.1.1.3.6	Operate the vacuum system until a pressure of 2.0 psia or less is present in the system when the cartridge valves are not fired and 4.0 psia or less if they are fired.
6.1.2.1.1.3.7	Close the OXID CHG VALVE - 11A in Component Package "C".
6.1.2.1.1.3.8	Close the Vacuum Shutoff Valve.
6.1.2.1.1.3.9	Stop the evacuating system operation.

PREPARED BY:	DATE	APPROVED FOR NAA:	DATE
J. Mayne		[illegible]	8-12-64
CHECKED BY: [illegible]	8-12-64		

DESIGN APPROVAL TEST
ORBIT ATTITUDE AND MANEUVER SYSTEM
(SE7)

TEST NO. LOADING PROCEDURES SHEET 46 OF 413

PART NO. 2-DAY CONFIG. MAC ____ NAA ____ 14-DAY CONFIG. MAC 52-52701 NAA 99-106156

6.1.2.1.1.4	Fill the System	
6.1.2.1.1.4.1	Pressurize the propellant supply to 50 psig maximum.	B
6.1.2.1.1.4.2	Open the facility Propellant Fill Valve and admit propellant up to the OXID CHG VALVE - 11A in Component Package "C". Attach the evacuation system to port 6 of Component Package "B" and reduce the press. to 4 psia or less. Maintain vacuum throughout filling procedure.	C
6.1.2.1.1.4.3	Record propellant supply volume and supply temperature.	
6.1.2.1.1.4.4	Determine volume to be tanked from Figure 22.	
6.1.2.1.1.4.5	Open the OXID CHG VALVE - 11A in Component Package "C".	
6.1.2.1.1.4.6	Continue to fill until propellant no longer flows into the system as determined by viewing the tanking equipment sight gauges.	C
6.1.2.1.1.4.7	Close the OXID CHG VALVE - 11A in Component Package "C".	
6.1.2.1.1.4.8	Record propellant supply volume and supply temperature.	
6.1.2.1.1.4.9	Determine volume to be detanked from Figure 25.	C
6.1.2.1.1.4.10	Detanking: If the volume tanked is over the required perform the following (if the required amount has been tanked, proceed to paragraph 6.1.2.1.1.4.11).	C
6.1.2.1.1.4.10.1	Close the Facility Vent Valve.	
6.1.2.1.1.4.10.2	Vent the propellant supply pressure.	

PREPARED BY:	DATE	APPROVED FOR NAA:	DATE
J. Mayne			
CHECKED BY: [illegible]	DATE 6-29-64		

R-15075-1 [illegible] Date 3-10-65

Rev. C. [illegible] Date 10-14-65

DESIGN APPROVAL TEST
ORBIT ATTITUDE AND MANEUVER SYSTEM
(SE7)

NAME OF TEST LOADING PROCEDURES TEST NO. 106156-401 SHEET 47 OF 413

PART NO. 2-DAY CONFIG. {MAC ____ NAA ____ 14-DAY CONFIG. {MAC 52-52700 NAA 99-106156

6.1.2.1.1.4.10.3	Open the GHe Supply Valve and pressurize OXID TANK VENT - 6 in Component Package "B" to 10 psig.
6.1.2.1.1.4.10.4	Open the OXID CHG VALVE - 11A and allow the excess volume determined from paragraph 6.1.2.1.1.4.9 to flow out then close the OXID CHG VALVE - 11A in Component Package "C".
6.1.2.1.1.4.10.5	Close the GHe Supply Valve.
6.1.2.1.1.4.10.6	Open the Facility Vent Valve and vent pressure to 0 psig.
6.1.2.1.1.4.11	Vent the propellant supply pressure.
6.1.2.1.1.4.12	Remove the GHe source from the Component Package "B" vent line (oxid side).
6.1.2.1.1.4.13	Deleted. C
6.1.2.1.1.4.14	Close the 3 way Solenoid Valve on the Component Package "B" vent line (oxid side).
6.1.2.1.1.4.15	Close the Propellant Fill Valve.
6.1.2.1.1.4.16	Operate the evacuation system.
6.1.2.1.1.4.17	Open the Vacuum Shutoff Valve.
6.1.2.1.1.4.18	After 5 minutes close the Vacuum Shutoff Valve.

PREPARED BY:	DATE	APPROVED FOR NAA:	DATE
J. Mayne		[illegible]	6-29-64
CHECKED BY: [illegible]	6-29-64		

706 r. C [illegible] Date 10-14-65

DESIGN APPROVAL TEST
ORBIT ATTITUDE AND MANEUVER SYSTEM
(SE7)

NAME OF TEST LOADING PROCEDURES TEST NO. 106156-401 SHEET 48 OF 413
PART NO. 2-DAY CONFIG. {MAC / NAA} 14-DAY CONFIG. {MAC 52-52701 / NAA 99-106156}

6.1.2.1.1.4.19 Stop the evacuation system.

6.1.2.1.1.4.20 Remove oxidizer supply from OXID CHG PORT - 11.

CAUTION: Care should be taken not to spill any residual NTO left in fill tubes. Any that is spilled should be removed from the system.

6.1.2.1.1.4.21 Replace the caps on OXID CHG PORT - 11 and OXID CHG VALVE-11A in Component Package "C".

6.1.2.1.2 Fuel Fill Procedure

6.1.2.1.2.1 System Condition

All the engine components are considered to be installed and sealed and the Engine System is considered to be clean and dry. C

Connect the propellant fill system and GN_2 source lines as schematically illustrated in Figure 23 All valves are considered closed except the tank isolation cartridge valves may be either fired or unfired and the FUEL TANK VENT VALVE - 4A in Component Package "B" is open.

6.1.2.1.2.2 Bleed Propellant

6.1.2.1.2.2.1 Admit propellant up to the facility Propellant Fill Valve.

6.1.2.1.2.2.2 Open the Fill Bleed Valve to remove all air from the propellant supply line.

PREPARED BY:	DATE	APPROVED FOR NAA:	DATE
J. Mayne			
CHECKED BY:	DATE		
	6-29-64		6-29-64

R-15075-1; R. L. Fine Date 10-14-65

DESIGN APPROVAL TEST
ORBIT ATTITUDE AND MANEUVER SYSTEM
(SE7)

NAME OF TEST LOADING PROCEDURES TEST NO. 106156-401 SHEET 49 OF 413
PART NO. 2-DAY CONFIG. {MAC / NAA} 14-DAY CONFIG. {MAC 52-52701 / NAA 99-106156}

6.1.2.1.2.2.3 Close the Fill Bleed Valve when only liquid flows.

6.1.2.1.2.3 Evacuate System

For the initial filling, it will be necessary to evacuate the propellant tank bladder, the propellant feed system and the propellant charge line.

6.1.2.1.2.3.1 Verify FUEL TANK VENT VALVE - 4A in Component Package "B" is open.

6.1.2.1.2.3.2 Open the Facility Vent Valve and the three-way solenoid valve connected to Component Package B. C

6.1.2.1.2.3.3 Operate the evacuating system.

6.1.2.1.2.3.4 Open the Vacuum Shutoff Valve.

6.1.2.1.2.3.5 Open the FUEL CHG VALVE - 15A in Component Package "D".

6.1.2.1.2.3.6 Operate the vacuum pump until a pressure of 2.0 psia or less is present in the system when the cartridge valves are not fired and 4.0 psia or less if they are fired.

6.1.2.1.2.3.7 Close the FUEL CHG VALVE - 15A in Component Package "D".

6.1.2.1.2.3.8 Close the Vacuum Shutoff Valve.

6.1.2.1.2.3.9 Stop the evacuating system operation.

6.1.2.1.2.4 Fill the System

6.1.2.1.2.4.1 Pressurize the propellant supply to 50 psig maximum. B

PREPARED BY: J. Mayne	DATE	APPROVED FOR NAA:	DATE
CHECKED BY:	DATE		

DESIGN APPROVAL TEST
ORBIT ATTITUDE AND MANEUVER SYSTEM
(SE7)

NAME OF TEST LOADING PROCEDURES TEST NO. 106156-401 SHEET 50 OF 413

PART NO. 2-DAY CONFIG. {MAC / NAA} 14-DAY CONFIG. {MAC 52-52701 / NAA 99-106156}

6.1.2.1.2.4.2	Open the facility Propellant Fill Valve and admit propellant up to the FUEL CHG VALVE - 15A in Component Package "D". Attach the evacuation system to port 4 of Comp. Pkg. "B" and reduce the press. to 4 psia or less. Maintain vacuum throughout filling procedure.	C
6.1.2.1.2.4.3	Record propellant supply volume and supply temperature.	
6.1.2.1.2.4.4	Determine volume to be tanked from Figure 24.	
6.1.2.1.2.4.5	Open the FUEL CHG VALVE - 15A in Component Package "D".	
6.1.2.1.2.4.6	Continue to fill until the required volume of paragraph 6.1.2.1.1.4.4 has been tanked. (As the desired amount is approached the FUEL CHG VALVE - 15A in Component Package "D" may be closed slightly to slow the flow).	
6.1.2.1.2.4.7	Close the FUEL CHG VALVE - 15A in Component Package "D".	
6.1.2.1.2.4.8	Record propellant supply volume and supply temperature.	
6.1.2.1.2.4.9	Determine volume tanked from Figure 24.	
6.1.2.1.2.4.10	Should the volume tanked be over the required, perform the following; (if the required amount has been tanked, proceed to paragraph 6.1.2.1.2.4.11.).	
6.1.2.1.2.4.10.1	Close the Facility Vent Valve.	
6.1.2.1.2.4.10.2	Vent the propellant supply pressure.	
6.1.2.1.2.4.10.3	Open the GN_2 supply valve and pressurize FUEL TANK VENT - 4 in Component Package "B" to 10 psig.	

PREPARED BY:	DATE	APPROVED FOR NAA:	DATE
J. Mayne			
CHECKED BY:	DATE		
	6-29-64		6-29-64

R-15075-1 Date 10-14-65

DESIGN APPROVAL TEST
ORBIT ATTITUDE AND MANEUVER SYSTEM
(SE7)

NAME OF TEST LOADING PROCEDURES TEST NO. 106156-401 SHEET 51 OF 413

PART NO. 2-DAY CONFIG. {MAC / NAA} 14-DAY CONFIG. {MAC 52-52701 / NAA 99-106156}

6.1.2.1.2.4.10.4	Open the FUEL CHG VALVE - 15A and allow the excess volume determined from paragraph 6.1.2.1.2.4.7 to flow out then close FUEL CHG VALVE - 15A in Component Package "D".
6.1.2.1.2.4.10.5	Close the GN_2 Supply Valve.
6.1.2.1.2.4.10.6	Open the Facility Vent Valve and vent pressure to 0 psig.
6.1.2.1.2.4.11	Vent the propellant supply pressure.
6.1.2.1.2.4.12	Remove the GN_2 source from Package "B" vent line (fuel side).
6.1.2.1.2.4.13	Deleted. C
6.1.2.1.2.4.14	Close the 3 way Solenoid Valve on the Component Package "B" vent line (fuel side).
6.1.2.1.2.4.15	Close the Propellant Fill Valve.
6.1.2.1.2.4.16	Operate the evacuation system.
6.1.2.1.2.4.17	Open the Vacuum Shutoff Valve.
6.1.2.1.2.4.18	After 5 minutes close the Vacuum Shutoff Valve.
6.1.2.1.2.4.19	Stop the evacuation system.
6.1.2.1.2.4.20	Remove the fuel supply from FUEL CHG PORT - 15.

CAUTION: Care should be taken not to spill any residual MMH left in fill tubes. Any that is spilled should be removed from the system.

PREPARED BY: J. Mayne	DATE	APPROVED FOR NAA:	DATE
CHECKED BY:	DATE 6-29-64		6-29-64

DESIGN APPROVAL TEST
ORBIT ATTITUDE AND MANEUVER SYSTEM
(SE7)

NAME OF TEST LOADING PROCEDURES TEST NO. 106156-401 SHEET 52 OF 413
PART NO. 2-DAY CONFIG. {MAC / NAA} 14-DAY CONFIG. {MAC 52-52701 / NAA 99-106156}

6.1.2.1.2.4.21 Replace the caps on FUEL CHG PORT - 15 and FUEL CHG VALVE - 15A in Component Package "D".

6.1.2.2 Refill - System Partially Loaded

This procedure will be used to determine the amount used during the High Temperature MDC (paragraph 7.5) and to tank for the Hot Fire Calibration (paragraph 7.6.1 and 7.6.3).

6.1.2.2.1 Oxidizer Refill Procedure

6.1.2.2.1.1 System Condition

The refilling procedure shall be used when the system is partially filled with propellant. All valves are to be closed except the tank isolation cartridge valves and OXID TANK VENT VALVE - 6A in Component Package "B". C

. . . . . Connect the propellant fill system and GN_2 source lines per Figure 21.

NOTE: Torque values of Table 1 shall be utilized at all times.

6.1.2.2.1.2 Bleed Propellant

6.1.2.2.1.2.1 Admit propellant up to the facility Propellant Fill Valve.

6.1.2.2.1.2.2 Open the Fill Bleed Valve to remove all air from the propellant supply line.

6.1.2.2.1.2.3 Close the Fill Bleed Valve when only liquid flows.

PREPARED BY: J. Mayne	DATE	APPROVED FOR NAA:	DATE
CHECKED BY: [illegible]	6-29-64	[illegible]	6-29-64

DESIGN APPROVAL TEST
ORBIT ATTITUDE AND MANEUVER SYSTEM
(SE7)

NAME OF TEST LOADING PROCEDURES TEST NO. 106156-401 SHEET 53 OF 413

PART NO. 2-DAY CONFIG. {MAC / NAA} 14-DAY CONFIG. {MAC 52-52701 / NAA 99-106156}

6.1.2.2.1.3	Evacuate System	
	Refilling requires only evacuation of the facility Feed System.	
6.1.2.2.1.3.1	Open the Vacuum Shutoff Valve.	
6.1.2.2.1.3.2	Operate the evacuation system until a pressure of 2.0 psia or less is present in the system.	
6.1.2.2.1.3.3	Close the Vacuum Shutoff Valve.	
6.1.2.2.1.3.4	Stop the evacuating system.	
6.1.2.2.1.3.5	Verify OXID TANK VENT VALVE - 6A in Component Package "B" is open.	
6.1.2.2.1.4	Fill the System	
6.1.2.2.1.4.1	Open the Facility Vent Valve and the three-way solenoid valve connected to Component Package B.	C
6.1.2.2.1.4.2	Pressurize the propellant supply to 50 psig.	B
6.1.2.2.1.4.3	Open the facility Propellant Fill Valve and admit propellant up to the OXID CHG VALVE - 11A in Component Package "C". Attach the evacuation system to port 6 of Comp. Package B and reduce the press. to 4 psia or less. Maintain vacuum throughout filling procedure.	C
6.1.2.2.1.4.4	Record the propellant supply volume and supply temperature.	
6.1.2.2.1.4.5	Open the OXID CHG VALVE - 11A in Component Package "C".	
6.1.2.2.1.4.6	Continue to fill until the propellant no longer flows into the system as determined by viewing the tanking equipment sight gauges.	
6.1.2.2.1.4.7	Close the OXID CHG VALVE - 11A in Component Package "C".	

PREPARED BY:	DATE	APPROVED FOR NAA:	DATE
J. Mayne			
CHECKED BY:	DATE		
	8-12-64		8-12-64

DESIGN APPROVAL TEST
ORBIT ATTITUDE AND MANEUVER SYSTEM
(SE7)

NAME OF TEST LOADING PROCEDURES TEST NO. 106156-401 SHEET 54 OF 413

PART NO. 2-DAY CONFIG. {MAC / NAA} 14-DAY CONFIG. {MAC 52-52701 / NAA 99-106156}

6.1.2.2.1.4.8	Record propellant supply volume and supply temperature.
6.1.2.2.1.4.9	Determine volume to be detanked and the amount used from Figure 25.
6.1.2.2.1.4.10	Close the Facility Vent Valve.
6.1.2.2.1.4.11	Open the GN_2 Supply Valve and pressurize OXID TANK VENT - 6 in Component Package "B" to 15 psig.
6.1.2.2.1.4.12	Vent the propellant supply pressure.
6.1.2.2.1.4.13	Open the OXID CHG VALVE - 11A and allow volume determined from paragraph 6.1.2.2.1.4.9 to flow out then close OXID CHG VALVE - 11A in Component Package "C".
6.1.2.2.1.4.14	Close the GN_2 Supply Valve.
6.1.2.2.1.4.15	Open the Facility Vent Valve and vent pressure to 0 psig.
6.1.2.2.1.4.16	Remove the GN_2 source from the Component Package "B" vent line (oxid side).
6.1.2.2.1.4.17	Deleted. C
6.1.2.2.1.4.18	Close the three (3) way Solenoid Valve on the Component Package "B" vent line (oxid side).
6.1.2.2.1.4.19	Close the Propellant Fill Valve.
6.1.2.2.1.4.20	Operate evacuating system.

PREPARED BY: J. Mayne DATE	APPROVED FOR NAA: DATE
CHECKED BY: Gardner 6-29-64 DATE	L G Eide 6-29-64

DESIGN APPROVAL TEST
ORBIT ATTITUDE AND MANEUVER SYSTEM
(SE7)

NAME OF TEST LOADING PROCEDURES TEST NO. 106156-401 SHEET 55 OF 413
PART NO. 2-DAY CONFIG. {MAC / NAA} 14-DAY CONFIG. {MAC 52-52701 / NAA 99-106156}

6.1.2.2.1.4.21 Open Vacuum Shutoff Valve.

6.1.2.2.1.4.22 After five (5) minutes close Vacuum Shutoff Valve.

6.1.2.2.1.4.23 Stop evacuation system.

6.1.2.2.1.4.24 Remove Oxidizer Supply from OXID CHG PORT - 11 in Component Package "C".

CAUTION: Care should be taken not to spill any residual NTO left in fill tubes. Any that is spilled should be removed from the system.

6.1.2.2.1.4.25 Replace caps on OXID CHG PORT - 11 and OXID CHG VALVE - 11A in Component Package "C".

6.1.2.2.2 Fuel Refill Procedure

6.1.2.2.2.1 System Condition

The refilling procedure shall be used when the system is partially filled with propellant. All valves are to be closed except the tank isolation cartridge valves and the FUEL TANK VENT VALVE - 4A in Component Package "B". C

Connect the propellant fill system and GN_2 source lines per Figure 23.

NOTE: Torque values of Table 1 shall be utilized at all times.

PREPARED BY: J. Mayne	DATE	APPROVED FOR NAA:	DATE
CHECKED BY:	DATE		

DESIGN APPROVAL TEST
ORBIT ATTITUDE AND MANEUVER SYSTEM
(SE7)

NAME OF TEST LOADING PROCEDURES TEST NO. 106156-401 SHEET 56 OF 413
PART NO. 2-DAY CONFIG. {MAC / NAA} 14-DAY CONFIG. {MAC 52-52701 / NAA 99-106156}

6.1.2.2.2.2 Bleed Propellant

6.1.2.2.2.2.1 Admit propellant up to the facility Propellant Fill Valve.

6.1.2.2.2.2.2 Open the Fill Bleed Valve to remove all air from the Propellant Supply Line.

6.1.2.2.2.2.3 Close the Fill Bleed Valve when only liquid flows.

6.1.2.2.2.3 Evacuate System

Refilling requires only evacuation of the facility feed system.

6.1.2.2.2.3.1 Open the Vacuum Shutoff Valve.

6.1.2.2.2.3.2 Operate the evacuation system until a pressure of 2.0 psia or less is present in the system.

6.1.2.2.2.3.3 Close the Vacuum Shutoff Valve.

6.1.2.2.2.3.4 Stop the evacuating system.

6.1.2.2.2.3.5 Verify FUEL TANK VENT VALVE - 4A in Component Package "B" is open.

6.1.2.2.2.4 Fill the System

6.1.2.2.2.4.1 Open the Facility Vent Valve and the three way solenoid valve connected to Component Package B. C

6.1.2.2.2.4.2 Pressurize the propellant supply to 50 psig maximum. B

6.1.2.2.2.4.3 Open the facility Propellant Fill Valve and admit propellant up to the FUEL CHG VALVE - 15A in Component Package "D". C
Attach the evacuation system to port 4 of Component Package "B" and reduce the pressure to 4 psia or less. Maintain vacuum throughout filling procedure.

PREPARED BY: J. Kayne	DATE	APPROVED FOR NAA:	DATE
CHECKED BY: [illegible]	8-12-64	[illegible]	8-12-64

DESIGN APPROVAL TEST
ORBIT ATTITUDE AND MANEUVER SYSTEM
(SE7)

NAME OF TEST LOADING PROCEDURES TEST NO. 106156-401 SHEET 57 OF 413
PART NO. 2-DAY CONFIG. {MAC / NAA} 14-DAY CONFIG. {MAC 52-52701 / NAA 99-106156}

1.2.2.2.4.4	Record the propellant supply volume and supply temperature.
6.1.2.2.2.4.5	Open the FUEL CHG VALVE - 15A in Component Package "D".
6.1.2.2.2.4.6	Continue to fill until the propellant no longer flows into the system as determined by viewing the tanking equipment sight gauges.
6.1.2.2.2.4.7	Close the FUEL CHG VALVE - 15A in Component Package "D".
6.1.2.2.2.4.8	Record propellant supply volume and supply temperature.
6.1.2.2.2.4.9	Determine volume to be detanked and the amount used from Figure 26.
6.1.2.2.2.4.10	Close the Facility Vent Valve.
6.1.2.2.2.4.11	Open the GN_2 Supply Valve and pressurize FUEL TANK VENT - 4 in Component Package "B" to 10 psig.
6.1.2.2.2.4.12	Vent the propellant supply pressure.
6.1.2.2.2.4.13	Open the FUEL CHG VALVE - 15A and allow volume determined from paragraph 6.1.2.2.2.4.9 to flow out then close FUEL CHG VALVE - 15A in Component Package "D".
6.1.2.2.2.4.14	Close the GN_2 Supply Valve.
6.1.2.2.2.4.15	Open the Facility Vent Valve and vent pressure to 0 psig.
6.1.2.2.2.4.16	Remove GN_2 source from the Component Package "B" vent line (fuel side).

PREPARED BY:	J. Mayne	DATE	APPROVED FOR NAA: DATE
CHECKED BY:		DATE 6-29-64	6-29-64

DESIGN APPROVAL TEST
ORBIT ATTITUDE AND MANEUVER SYSTEM
(SE7)

NAME OF TEST LOADING PROCEDURES TEST NO. 106156-401 SHEET 58 OF 413

PART NO. 2-DAY CONFIG. {MAC / NAA} 14-DAY CONFIG. {MAC 52-52701 / NAA 99-106156}

6.1.2.2.2.4.17	Deleted.	C
6.1.2.2.2.4.18	Close the three (3) way Solenoid Valve on the Component Package "B" vent line (oxid side).	
6.1.2.2.2.4.19	Close the Propellant Fill Valve.	
6.1.2.2.2.4.20	Operate evacuation system.	
6.1.2.2.2.4.21	Open Vacuum Shutoff Valve.	
6.1.2.2.2.4.22	After five (5) minutes close Vacuum Shutoff Valve.	
6.1.2.2.2.4.23	Stop evacuation system.	
6.1.2.2.2.4.24	Remove Fuel Supply from FUEL CHG PORT - 15 in Component Package "D".	
	CAUTION: Care should be taken not to spill any residual MMH left in fill tubes. Any that is spilled should be removed from the system.	
6.1.2.2.2.4.25	Replace caps on FUEL CHG PORT - 15 and FUEL CHG VALVE - 15A in Component Package "D".	
6.1.3	Safety Fluids (Freon and Alcohol)	
6.1.3.1	Initial Fill	
6.1.3.1.1	Tanking for Vibration	
6.1.3.1.1.1	"Freon MF" Fill Procedure	

PREPARED BY:	DATE	APPROVED FOR NAA:	DATE
J. Mayne			
CHECKED BY:	DATE		
	6-29-64		6-29-64

DESIGN APPROVAL TEST
ORBIT ATTITUDE AND MANEUVER SYSTEM
(SE7)

NAME OF TEST LOADING PROCEDURES TEST NO. 106156-401 SHEET 59 OF 413
PART NO. 2-DAY CONFIG. {MAC / NAA} 14-DAY CONFIG. {MAC 52-52701 / NAA 99-106156}

6.1.3.1.1.1.1 System Condition

This procedure will be performed on the Tank Module only. All the engine components are considered to be installed and sealed and the Engine System is considered to be clean and dry. Connect the "Freon MF" fill system lines as schematically illustrated in Figure 27. All valves are considered closed except the OXID TANK VENT VALVE - 6A in Component Package "B" is open. The tank module shall be in the launch attitude. B

NOTE: Torque values of Table 1 shall be utilized at all times.

6.1.3.1.1.1.2 Bleed "Freon MF"

6.1.3.1.1.1.2.1 Admit "Freon MF" up to the facility "Freon MF" Fill Valve.

6.1.3.1.1.1.2.2 Open the Fill Bleed Valve to remove all air from the "Freon MF" supply line.

6.1.3.1.1.1.2.3 Close the Fill Bleed Valve when only liquid flows.

6.1.3.1.1.1.3 Evacuate System

When filling with cartridge valves unfired, it will be necessary to evacuate the propellant tank bladder and the propellant charge line.

6.1.3.1.1.1.3.1 Open Facility Vent Valve

6.1.3.1.1.1.3.2 Operate the evacuating system.

6.1.3.1.1.1.3.2.1 Open the Bypass Valve. B

6.1.3.1.1.1.3.3 Open the Vacuum Shutoff Valve and adjust the vacuum Bypass Valve to limit the vacuum to 7 inches Hg. B

PREPARED BY:	DATE	APPROVED FOR NAA:	DATE
J. Mayne		[illegible]	3-10-65
CHECKED BY: [illegible]	3-10-65		

DESIGN APPROVAL TEST
ORBIT ATTITUDE AND MANEUVER SYSTEM
(SE7)

NAME OF TEST LOADING PROCEDURES TEST NO. 106156-401 SHEET 60 OF 413
PART NO. 2-DAY CONFIG. {MAC / NAA} 14-DAY CONFIG. {MAC 52-52701 / NAA 99-106156}

6.1.3.1.1.1.3.4	Open the OXID CHG VALVE - 11A in Component Package "C".	
6.1.3.1.1.1.3.5	Operate the vacuum system until a pressure of 2.0 psia or less is present in the system, by closing the vacuum Bypass Valve after a five (5) minute period.	B
6.1.3.1.1.1.3.6	Close the OXID CHG VALVE - 11A in Component Package "C".	
6.1.3.1.1.1.3.7	Close the Vacuum Shutoff Valve.	
6.1.3.1.1.1.3.8	Stop the evacuating system operation.	
6.1.3.1.1.1.3.9	Verify OXID TANK VENT VALVE - 6A in Component Package "B" is open.	
6.1.3.1.1.1.4	<u>Fill the System</u>	
6.1.3.1.1.1.4.1	Pressurize the "Freon MF" supply to 50 psig maximum.	B
6.1.3.1.1.1.4.2	Open the facility Propellant Fill Valve and admit "Freon MF" up to the OXID CHG VALVE - 11A in Component Package "C".	
6.1.3.1.1.1.4.3	Record the total tanking system weight.	
6.1.3.1.1.1.4.4	Open the OXID CHG VALVE - 11A in Component Package "C".	
6.1.3.1.1.1.4.5	Continue to fill until 259 $^{+0}_{-5}$ pounds "Freon MF" are tanked.	
6.1.3.1.1.1.4.6	Close the OXID CHG VALVE - 11A in Component Package "C".	
6.1.3.1.1.1.4.7	Close the facility Vent Valve.	
6.1.3.1.1.1.4.8	Close the OXID TANK VENT VALVE - 6A in Component Package "B".	

PREPARED BY:	DATE	APPROVED FOR NAA:	DATE
J. Mayne		[signature]	3-10-65
CHECKED BY: [signature]	3-10-65		

R-15075-1 [signature] Date 3-10-65

DESIGN APPROVAL TEST
ORBIT ATTITUDE AND MANEUVER SYSTEM
(SE7)

NAME OF TEST LOADING PROCEDURES TEST NO. 106156-401 SHEET 61 OF 413
PART NO. 2-DAY CONFIG. {MAC / NAA} 14-DAY CONFIG. {MAC 52-52701 / NAA 99-106156}

6.1.3.1.1.1.4.9 Close the "Freon MF" Fill Valve.

6.1.3.1.1.1.4.10 Depressurize the "Freon MF" supply.

6.1.3.1.1.1.4.11 Remove "Freon MF" supply from the OXID CHG PORT - 11 in Component Package "C".

NOTE: Care should be taken not to spill any residual "Freon MF" left in fill tubes. Any that is spilled should be removed from the system.

6.1.3.1.1.1.4.12 Replace caps on OXID CHG PORT - 11 and OXID CHG VALVE - 11A in Component Package "C".

6.1.3.1.1.1.4.13 Remove the Facility Vent Valve from the OXID TANK VENT VALVE - 6A in Component Package "B".

6.1.3.1.1.1.4.14 Replace caps on OXID TANK VENT - 6 and OXID TANK VENT VALVE 6A in Component Package "B".

6.1.3.1.1.2 Alcohol Fill Procedure

The alcohol referred to in this paragraph is a mixture, by volume of approximately 63% isopropyl alcohol and 37% distilled water. B

6.1.3.1.1.2.1 System Condition

This procedure will be performed on the Tank Module only. The engine components are considered to be installed and sealed and the Module is considered to be clean and dry. Connect the alcohol fill system lines as schematically illustrated in Figure 28. All valves are considered closed except the FUEL TANK VENT VALVE - 4A in Component Package "B" is open. The tank module shall be in the launch attitude. B

NOTE: Torque values of Table 1 shall be utilized at all times.

PREPARED BY:	DATE	APPROVED FOR NAA:	DATE
J. Mayne		[illegible]	3-10-65
CHECKED BY: [illegible]	3-10-65		

DESIGN APPROVAL TEST
ORBIT ATTITUDE AND MANEUVER SYSTEM
(SE7)

NAME OF TEST LOADING PROCEDURES TEST NO. 106156-401 SHEET 62 OF 413

PART NO. 2-DAY CONFIG. {MAC ____ NAA ____ 14-DAY CONFIG. {MAC 52-52701 NAA 99-106156

6.1.3.1.1.2.2 Bleed Alcohol

6.1.3.1.1.2.2.1 Admit propellant up to the facility Alcohol Fill Valve.

6.1.3.1.1.2.2.2 Open the Fill Bleed Valve to remove all air from the alcohol supply line.

6.1.3.1.1.2.2.3 Close the Fill Bleed Valve when only liquid flows.

6.1.3.1.1.2.3 Evacuate System

When filling with the cartridge valves unfired, it will be necessary to evacuate the propellant tank bladder and the propellant charge line.

6.1.3.1.1.2.3.1 Open the Facility Vent Valve

6.1.3.1.1.2.3.1.1 Open the vacuum bypass valve. B

6.1.3.1.1.2.3.2 Operate the evacuation system, and adjust the vacuum Bypass Valve to limit the vacuum to 7 inches HG. B

6.1.3.1.1.2.3.3 Open the Vacuum Shutoff Valve.

6.1.3.1.1.2.3.4 Open the FUEL CHG VALVE - 15A in Component Package "D".

6.1.3.1.1.2.3.5 Operate the vacuum system until a pressure of 2.0 psia or less is present in the system, by slowly closing the vacuum Bypass Valve after a 5 minute time. B

6.1.3.1.1.2.3.6 Close the FUEL CHG VALVE - 15A in Component Package "D".

6.1.3.1.1.2.3.7 Close the Vacuum Shutoff Valve.

6.1.3.1.1.2.3.8 Stop the evacuating system operation.

6.1.3.1.1.2.3.9 Verify FUEL TANK VENT VALVE - 4A in Component Package "B" is open.

PREPARED BY:	DATE	APPROVED FOR NAA:	DATE
J. Mayne			
CHECKED BY:	DATE		
	3-10-65		3-10-65

R-15075-1 Date

DESIGN APPROVAL TEST
ORBIT ATTITUDE AND MANEUVER SYSTEM
(SE7)

NAME OF TEST LOADING PROCEDURES TEST NO. 106156-401 SHEET 63 OF 413
PART NO. 2-DAY CONFIG. {MAC ____ NAA ____ 14-DAY CONFIG. {MAC 52-52701 NAA 99-106156

6.1.3.1.1.2.4 Fill the System

6.1.3.1.1.2.4.1 Pressurize the Alcohol Supply to 50 psig maximum. B

6.1.3.1.1.2.4.2 Open the facility Propellant Fill Valve and admit alcohol up to the FUEL CHG VALVE - 15A in Component Package "D".

6.1.3.1.1.2.4.3 Record the total tanking system weight.

6.1.3.1.1.2.4.4 Open the FUEL CHG VALVE - 15A in Component Package "D".

6.1.3.1.1.2.4.5 Continue to fill until 155.3^{+0}_{-5} pounds of alcohol are tanked.

6.1.3.1.1.2.4.6 Close the FUEL CHG VALVE - 15A in Component Package "D".

6.1.3.1.1.2.4.7 Close the facility Vent Valve.

6.1.3.1.1.2.4.8 Close the FUEL TANK VENT VALVE - 4A in Component Package "B".

6.1.3.1.1.2.4.9 Close the Alcohol Fill Valve.

6.1.3.1.1.2.4.10 Depressurize the Alcohol Supply.

6.1.3.1.1.2.4.11 Remove Alcohol Supply from FUEL CHG PORT - 15 in Component Package "D".

NOTE: Care should be taken not to spill any residual alcohol left in fill tubes. Any that is spilled should be removed from the system.

PREPARED BY: J. Mayne	DATE	APPROVED FOR NAA:	DATE
CHECKED BY:	DATE 6-29-64		

722 B Date 3-10-65

DESIGN APPROVAL TEST
ORBIT ATTITUDE AND MANEUVER SYSTEM
(SE7)

NAME OF TEST LOADING PROCEDURES TEST NO. 106156-401 SHEET 64 OF 413
PART NO. 2-DAY CONFIG. {MAC / NAA} 14-DAY CONFIG. {MAC 52-52701 / NAA 99-106156}

6.1.3.1.1.2.4.12 Replace caps on FUEL CHG PORT - 15 and FUEL CHG VALVE - 15A in Component Package "D".

6.1.3.1.1.2.4.13 Remove the Facility Vent Valve from the FUEL TANK VENT - 4 in Component Package "B".

6.1.3.1.1.2.4.14 Replace caps on FUEL TANK VENT - 4 and FUEL TANK VENT VALVE - 4A in Component Package "B".

6.1.3.1.2 Tanking For Liquid Calibration

6.1.3.1.2.1 "Freon TF" Fill Procedure

6.1.3.1.2.1.1 System Condition

All the engine components are considered to be installed and sealed and the Engine System is considered to be clean and dry. Connect the propellant fill system and vent lines as schematically illustrated in Figure 27 All valves are considered closed except the tank isolation cartridge valves in Component Packages "C" and "D" are replaced by a bypass assemblies (Figure 17) and flowmeters and the OXID TANK VENT VALVE - 6A in Component Package "B" is open. B

6.1.3.1.2.1.2 Bleed "Freon TF"

6.1.3.1.2.1.2.1 Admit "Freon TF" up to the facility "Freon TF" Fill Valve.

6.1.3.1.2.1.2.2 Open the Fill Bleed Valve to remove all air from the "Freon TF" supply line.

6.1.3.1.2.1.2.3 Close the Fill Bleed Valve when only liquid flows.

PREPARED BY:	DATE	APPROVED FOR NAA:	DATE
J. Mayne			
CHECKED BY:	DATE 6-29-64		6-29-64

R-15075-1 r.B Date 8-10-65

DESIGN APPROVAL TEST
ORBIT ATTITUDE AND MANEUVER SYSTEM
(SE7)

NAME OF TEST LOADING PROCEDURES TEST NO. 106156-401 SHEET 65 OF 413
PART NO. 2-DAY CONFIG. {MAC / NAA} 14-DAY CONFIG. {MAC 52-52701 / NAA 99-106156}

6.1.3.1.2.1.3 Evacuate System

For the initial filling, it will be necessary to evacuate the propellant tank bladder, the propellant feed system to the TCA's and the propellant charge line.

6.1.3.1.2.1.3.1 Open the Facility Vent Valve

6.1.3.1.2.1.3.2 Operate the evacuating system.

6.1.3.1.2.1.3.3 Open the Vacuum Shutoff Valve.

6.1.3.1.2.1.3.4 Open the OXID CHG VALVE - 11A in Component Package "C" slowly.

6.1.3.1.2.1.3.5 Operate the vacuum system until a pressure of 7.0 psia or less is present in the system.

NOTE: Do paragraphs 6.1.3.1.1.1.3.6 through 6.1.3.1.1.1.4.2 as rapidly as possible to prevent vacuum decay.

6.1.3.1.2.1.3.6 Close the OXID CHG VALVE - 11A in Component Package "C".

6.1.3.1.2.1.3.7 Close the Vacuum Shutoff Valve.

6.1.3.1.2.1.3.8 Stop the evacuating system operation.

6.1.3.1.2.1.3.9 Verify OXID TANK VENT VALVE - 6A in Component Package "B" is open.

6.1.3.1.2.1.4 Fill the System

6.1.3.1.2.1.4.1 Pressurize "Freon TF" supply to 50 psig maximum. B

6.1.3.1.2.1.4.2 Open the facility Propellant Fill Valve and admit "Freon TF" up to the OXID CHG VALVE - 11A in Component Package "C".

PREPARED BY: J. Mayne	DATE	APPROVED FOR NAA:	DATE
CHECKED BY:	DATE 8-12-64		8-12-64

724
Rev. B Date 3-10-65

DESIGN APPROVAL TEST
ORBIT ATTITUDE AND MANEUVER SYSTEM
(SE7)

NAME OF TEST LOADING PROCEDURES TEST NO. 106156-401 SHEET 66 OF 413
PART NO. 2-DAY CONFIG. {MAC / NAA} 14-DAY CONFIG. {MAC 52-52701 / NAA 99-106156}

6.1.3.1.2.1.4.3 Open the OXID CHG VALVE - 11A in Component Package "C".

6.1.3.1.2.1.4.4 Continue to fill until "Freon TF" no longer flows into the system as determined by viewing the tanking equipment sight gauges.

6.1.3.1.2.1.4.5 Vent "Freon TF" supply pressure.

6.1.3.1.2.1.4.6 Close the OXID CHG VALVE - 11A in Component Package "C".

6.1.3.1.2.1.4.7 Close the Facility Vent Valve.

6.1.3.1.2.1.4.8 Close the "Freon TF" Fill Valve.

6.1.3.1.2.1.4.9 Remove the "Freon TF" supply from OXID CHG PORT - 11 in Component Package "C".

NOTE: Care should be taken not to spill any residual "Freon TF" left in fill tubes. Any that is spilled should be removed from the system.

6.1.3.1.2.1.4.10 Replace caps on OXID CHG PORT - 11 and OXID CHG VALVE - 11A in Component Package "C".

6.1.3.1.2.1.4.11 Install three (3) way Solenoid Valve (N/O position) on the Component Package "B" vent line (oxid side) downstream (when venting) of bulkhead.

PREPARED BY: J. Mayne	DATE	APPROVED FOR NAA:	DATE
CHECKED BY:	DATE 6-29-64		6-29-64

DESIGN APPROVAL TEST
ORBIT ATTITUDE AND MANEUVER SYSTEM
(SE7)

NAME OF TEST LOADING PROCEDURES TEST NO. 106156-401 SHEET 67 OF 413
PART NO. 2-DAY CONFIG. {MAC / NAA} 14-DAY CONFIG. {MAC 52-52701 / NAA 99-106156}

6.1.3.1.2.2 Alcohol Fill Procedure

6.1.3.1.2.2.1 System Condition

All the engine components are considered to be installed and sealed and the Engine System is considered to be clean and dry. Connect the propellant fill system and vent lines as schematically illustrated in Figure 28 All valves are considered closed except the tank isolation cartridge valves in Component Packages "C" and "D" are replaced by a bypass (Figure 17) and flowmeters and the FUEL TANK VENT VALVE - 4A in Component Package "B" is open. B

6.1.3.1.2.2.2 Bleed Alcohol

6.1.3.1.2.2.2.1 Admit alcohol up to the facility alcohol Fill Valve.

6.1.3.1.2.2.2.2 Open the Fill Bleed Valve to remove all air from the alcohol supply line.

6.1.3.1.2.2.2.3 Close the Fill Bleed Valve when only liquid flows.

6.1.3.1.2.2.3 Evacuate System

For the initial filling it will be necessary to evacuate the propellant tank bladder, the propellant feed system and the propellant charge line.

6.1.3.1.2.2.3.1 Open the Facility Vent Valve

6.1.3.1.2.2.3.2 Operate the evacuating system.

6.1.3.1.2.2.3.3 Open the Vacuum Shutoff Valve.

PREPARED BY:	DATE	APPROVED FOR NAA:	DATE
J. Mayne			
CHECKED BY:	DATE		
	6-29-64		6-29-64

Rev. B Date 3-10-65

DESIGN APPROVAL TEST
ORBIT ATTITUDE AND MANEUVER SYSTEM
(SE7)

NAME OF TEST LOADING PROCEDURES TEST NO. 106156-401 SHEET 68 OF 413
PART NO. 2-DAY CONFIG. {MAC / NAA} 14-DAY CONFIG. {MAC 52-52701 / NAA 99-106156}

6.1.3.1.2.2.3.4 Open the FUEL CHG VALVE - 15A in Component Package "D" slowly.

6.1.3.1.2.2.3.5 Operate the vacuum system until a pressure of 7.0 psia or less is present in the system.

NOTE: Do paragraphs 6.1.3.1.1.2.3.7 through 6.1.3.1.1.2.4.2 as rapidly as possible to prevent vacuum decay.

6.1.3.1.2.2.3.6 Close the FUEL CHG VALVE - 15A in Component Package "D".

6.1.3.1.2.2.3.7 Close the Vacuum Shutoff Valve.

6.1.3.1.2.2.3.8 Stop the evacuating system operation.

6.1.3.1.2.2.3.9 Verify FUEL TANK VENT VALVE - 4A in Component Package "B" is open.

6.1.3.1.2.2.4 Fill the System

6.1.3.1.2.2.4.1 Pressurize alcohol supply to 50 psig maximum. B

6.1.3.1.2.2.4.2 Open the facility Propellant Fill Valve and admit alcohol up to the FUEL CHG VALVE - 15A in Component Package "D".

6.1.3.1.2.2.4.3 Open the FUEL CHG VALVE - 15A in Component Package "D".

6.1.3.1.2.2.4.4 Continue to fill until alcohol no longer flows into system as determined by viewing the tanking equipment sight gauges.

6.1.3.1.2.2.4.5 Vent Alcohol supply pressure.

6.1.3.1.2.2.4.6 Close the FUEL CHG VALVE - 15A in Component Package "D".

6.1.3.1.2.2.4.7 Close the Facility Vent Valve.

PREPARED BY: J. Mayne	DATE	APPROVED FOR NAA:	DATE
CHECKED BY:	DATE 8-12-64		8-12-64

R-15075-1 R L Dua Date 3-10-65

DESIGN APPROVAL TEST
ORBIT ATTITUDE AND MANEUVER SYSTEM
(SE7)

NAME OF TEST LOADING PROCEDURES TEST NO. 106156-401 SHEET 69 OF 413
PART NO. 2-DAY CONFIG. {MAC ____ NAA ____ 14-DAY CONFIG. {MAC 52-52701 NAA 99-106156

1.3.1.2.2.4.8 Close the Alcohol Fill Valve.

6.1.3.1.2.2.4.9 Remove the Alcohol supply from FUEL CHG PORT - 15 in Component Package "D".

NOTE: Care should be taken not to spill any residual Alcohol left in fill tubes. Any that is spilled should be removed from the system.

6.1.3.1.2.2.4.10 Replace caps on FUEL CHG PORT - 15 and FUEL CHG VALVE - 15A in Component Package "D".

6.1.3.1.2.2.4.11 Install three (3) way Solenoid Valve (N/O position) on the Component Package "B" vent line downstream (when venting) at the bulkhead.

6.1.3.2 Refill for Liquid Calibration

6.1.3.2.1 "Freon TF" Refill Procedure

6.1.3.2.1.1 System Condition

The refilling procedure shall be used when the system is partially filled with safety fluid. All valves are to be closed except the tank isolation cartridge valves and the OXID TANK VENT VALVE - 6A in Component Package "B". Connect the propellant fill system lines per Figure 27.

NOTE: Torque values of Table 1 shall be utilized at all times.

PREPARED BY: J. Mayne	DATE	APPROVED FOR NAA:	DATE
CHECKED BY: [illegible]	6-29-64	[illegible]	6-29-64

DESIGN APPROVAL TEST
ORBIT ATTITUDE AND MANEUVER SYSTEM
(SE7)

NAME OF TEST LOADING PROCEDURES TEST NO. 106156-401 SHEET 70 OF 413
PART NO. 2-DAY CONFIG. {MAC / NAA} 14-DAY CONFIG. {MAC 52-52701 / NAA 99-106156}

6.1.3.2.1.2	Bleed "Freon TF"
6.1.3.2.1.2.1	Admit "Freon TF" up to the facility "Freon TF" Fill Valve.
6.1.3.2.1.2.2	Open the Fill Bleed Valve to remove all air from the "Freon TF" supply line.
6.1.3.2.1.2.3	Close the Fill Bleed Valve when only liquid flows.
6.1.3.2.1.3	Evacuate System
	Refilling requires only evacuation of the facility feed system.
6.1.3.2.1.3.1	Open the Vacuum Shutoff Valve.
6.1.3.2.1.3.2	Operate the evacuation system until a pressure of 2.0 psia or less is present in the feed lines.
6.1.3.2.1.3.3	Close the Vacuum Shutoff Valve.
6.1.3.2.1.3.4	Stop the evacuating system.
6.1.3.2.1.3.5	Verify OXID TANK VENT VALVE - 6A in Component Package "B" is open.
6.1.3.2.1.4	Fill the System
6.1.3.2.1.4.1	Open the facility Vent Valve.
6.1.3.2.1.4.2	Pressurize the "Freon TF" supply to 50 psig maximum. B
6.1.3.2.1.4.3	Open the facility Propellant Fill Valve and admit propellant up to the OXID CHG VALVE - 11A in Component Package "C".

PREPARED BY: J. Mayne DATE	APPROVED FOR NAA: DATE
CHECKED BY: 8-12-64 DATE	8-12-64

DESIGN APPROVAL TEST
ORBIT ATTITUDE AND MANEUVER SYSTEM
(SE7)

NAME OF TEST LOADING PROCEDURES TEST NO. 106156-401 SHEET 71 OF 413
PART NO. 2-DAY CONFIG. {MAC ____ NAA ____ 14-DAY CONFIG. {MAC 52-52701 NAA 99-106156

6.1.3.2.1.4.4 Open the OXID CHG VALVE - 11A in Component Package "C".

6.1.3.2.1.4.5 Continue to fill until the "Freon TF" no longer flows into the system as determined by viewing the tanking equipment sight gauges.

6.1.3.2.1.4.6 Vent "Freon TF" supply pressure.

6.1.3.2.1.4.7 Close the OXID CHG VALVE - 11A in Component Package "C".

6.1.3.2.1.4.8 Close the facility Vent Valve.

6.1.3.2.1.4.9 Close "Freon TF" Fill Valve.

6.1.3.2.1.4.10 Remove "Freon TF" supply from OXID CHG PORT - 11.

NOTE: Care should be taken not to spill any residual "Freon TF" left in fill tubes. Any that is spilled should be removed from the system.

6.1.3.2.1.4.11 Replace caps on OXID CHG PORT - 11 and OXID CHG VALVE - 11A in Component Package "C".

6.1.3.2.2 Alcohol Refill Procedure

6.1.3.2.2.1 System Condition

The refilling procedure shall be used when the system is partially filled with safety fluid. All valves are to be closed except the tank isolation cartridge valves and the FUEL TANK VENT VALVE - 4A in Component Package "B". Connect the propellant fill system lines per Figure 28.

NOTE: Torque values of Table 1 shall be utilized at all times.

PREPARED BY: J. Mayne	DATE	APPROVED FOR NAA:	DATE
CHECKED BY:	DATE 6-29-64		6-29-64

DESIGN APPROVAL TEST
ORBIT ATTITUDE AND MANEUVER SYSTEM
(SE7)

NAME OF TEST LOADING PROCEDURES TEST NO. 106156-401 SHEET 72 OF 413
PART NO. 2-DAY CONFIG. {MAC / NAA} 14-DAY CONFIG. {MAC 52-52701 / NAA 99-106156}

6.1.3.2.2.2	Bleed Alcohol
6.1.3.2.2.2.1	Admit alcohol up to the facility alcohol Fill Valve.
6.1.3.2.2.2.2	Open the Fill Bleed Valve to remove all air from the Alcohol supply line.
6.1.3.2.2.2.3	Close the Fill Bleed Valve when only liquid flows.
6.1.3.2.2.3	Evacuate System
	Refilling requires only evacuation of the facility feed system.
6.1.3.2.2.3.1	Open the Vacuum Shutoff Valve.
6.1.3.2.2.3.2	Operate the evacuation system until a pressure of 2.0 psia or less is present in the system.
6.1.3.2.2.3.3	Close the Vacuum Shutoff Valve.
6.1.3.2.2.3.4	Stop the evacuating system.
6.1.3.2.2.3.5	Verify FUEL TANK VENT VALVE - 6A in Component Package "B" is open.
6.1.3.2.2.4	Fill the System
6.1.3.2.2.4.1	Open the Facility Vent Valve.
6.1.3.2.2.4.2	Pressurize the alcohol supply to 50 psig maximum. B
6.1.3.2.2.4.3	Open the facility Propellant Fill Valve and admit propellant up to the FUEL CHG VALVE - 15A in Component Package "D".

PREPARED BY:	DATE	APPROVED FOR NAA:	DATE
J. Mayne			
CHECKED BY:	DATE		
	8-12-64		8-12-64

DESIGN APPROVAL TEST
ORBIT ATTITUDE AND MANEUVER SYSTEM
(SE7)

NAME OF TEST LOADING PROCEDURES TEST NO. 106156-401 SHEET 73 OF 413
PART NO. 2-DAY CONFIG. {MAC / NAA} 14-DAY CONFIG. {MAC 52-52701 / NAA 99-106156}

1.3.2.2.4.4	Open the FUEL CHG VALVE - 15A in Component Package "D".
6.1.3.2.2.4.5	Continue to fill until the alcohol no longer flows into the system as determined by viewing the tanking equipment sight gauges.
6.1.3.2.2.4.6	Vent alcohol supply pressure.
6.1.3.2.2.4.7	Close the FUEL CHG VALVE - 15A in Component Package "D".
6.1.3.2.2.4.8	Close the facility Vent Valve.
6.1.3.2.2.4.9	Close Alcohol Fill Valve.
6.1.3.2.2.4.10	Remove Alcohol supply from FUEL CHG PORT - 15.
	NOTE: Care should be taken not to spill any residual alcohol left in fill tubes. Any that is spilled should be removed from the system.
6.1.3.2.2.4.11	Replace caps on FUEL CHG PORT - 15 and FUEL CHG VALVE - 15A in Component Package "D".

PREPARED BY:	DATE	APPROVED FOR NAA:	DATE
J. Mayne			
CHECKED BY:	DATE		
	6-29-64		6-29-64

Approved para. 6.2 thru 6.2.1.2.3.1.2.2 and associated data page and figure

(FINAL) APPROVAL
(without) (with) approval (or waiver) does not relieve purchase order conditions.
This drawing is subject to change such approval does not relieve purchase order conditions as provided in N.A.O. 5-1-0170.
CONT. DWG. 52-0170
3-3-65
EFF. DATE 1337
8-3-65

DESIGN APPROVAL TEST
ORBIT ATTITUDE AND MANEUVER SYSTEM
(SE7)

NAME OF TEST DRAIN AND CLEAN PROCEDURES TEST NO. 106156-401 SHEET 74 OF 413

PART NO. 2-DAY CONFIG. {MAC ____ NAA ____ 14-DAY CONFIG. {MAC 52-52701 NAA 99-106156

6.2 Drain and Clean Procedures (System in Vertical position)

6.2.1 Propellants (NTO & MMH) (Record all specified data on paragraph 7.6.7.4.)

6.2.1.1 Oxidizer Drain and Clean Procedure

6.2.1.1.1 System Condition

The Engine System is full of propellant from the propellant tank to the TCA's. All valves are considered closed except the tank isolation cartridge valves, the PSOV and the auxiliary oxidizer purge valves. The TCA throat seals and service connections are installed per Figure 29.

NOTE: Torque values of Table 1 shall be utilized at all times.

6.2.1.1.2 Oxidizer Drain

6.2.1.1.2.1 Open the OXID TANK VENT VALVE - 6A in Component Package "B".

6.2.1.1.2.2 Open the Oxidizer Purge Valve.

6.2.1.1.2.3 Open the #2 Oxidizer Drain Valve connected to the Oxidizer Purge Valve.

6.2.1.1.2.4 Open the #1 GN_2 Supply Valve and admit 50 $\pm$2 psig GN_2 to the OXID CHG PORT - 11 in Component Package "C".

6.2.1.1.2.5 Open the OXID CHG VALVE - 11A in Component Package "C".

PREPARED BY: J.Mayne	DATE	APPROVED FOR NAA:	DATE
CHECKED BY:	DATE 2-22-65		8-3-65

DESIGN APPROVAL TEST
ORBIT ATTITUDE AND MANEUVER SYSTEM
(SE7)

NAME OF TEST DRAIN AND CLEAN PROCEDURES TEST NO. 106156-401 SHEET 75 OF 413
PART NO. 2-DAY CONFIG. {MAC ____ NAA ____ 14-DAY CONFIG. {MAC 52-52701 NAA 99-106156

6.2.1.1.2.6	When NTO no longer flows from the #2 Oxidizer Drain Valve, close the #2 Oxidizer Drain Valve connected to the Oxidizer Purge Valve.
6.2.1.1.2.7	Actuate with 26 VDC all the TCA NTO propellant valves then immediately reduce to 10 VDC.
6.2.1.1.2.8	When NTO no longer flows from the TCA's, close the #1 GN_2 Supply Valve connected to Component Package "C" then deactuate the TCA NTO valves.
6.2.1.1.2.9	Close the OXID CHG VALVE - 11A in Component Package "C".
6.2.1.1.3	<u>Oxidizer System Cleaning</u>
6.2.1.1.3.1	Regulate "Freon MF" pressure to 50 ±5 psig.
6.2.1.1.3.2	Open the OXID CHG VALVE - 11A in Component Package "C".
6.2.1.1.3.3	Open #1 "Freon MF" Drain Valve.
6.2.1.1.3.4	Open the "Freon MF" Supply Valve to admit "Freon MF" to the OXID PURGE - 13 port.
6.2.1.1.3.5	When the "Freon MF" flows from #1 "Freon MF" drain close the OXID CHG VALVE - 11A in Component Package "C" and the #1 "Freon MF" Drain Valve.
6.2.1.1.3.6	Using a 26 VDC signal, actuate #11, #12, #13, #14, #15 and #16 TCA, NTO propellant valves (Figure 16) for approximately ten (10) minutes cycling all valves off for approximately 2 seconds every minute.
6.2.1.1.3.7	Using a 26 VDC signal, actuate #1, #2, #3, #4, #5, #6, #7, #8, #9 and #10 TCA, NTO propellant valves (Figure 16) for approximately ten (10) minutes cycling all valves off for approximately 2 seconds every minute.

PREPARED BY:	DATE	APPROVED FOR NAA:	DATE
J.Mayne			
CHECKED BY:	DATE		
[illegible]	2-23-65	[illegible]	2-24-65

DESIGN APPROVAL TEST
ORBIT ATTITUDE AND MANEUVER SYSTEM
(SE7)

NAME OF TEST DRAIN AND CLEAN PROCEDURES TEST NO. 106156-401 SHEET 76 OF 413
PART NO. 2-DAY CONFIG. {MAC ____ NAA ____ 14-DAY CONFIG. {MAC 52-52701 NAA 99-106156

6.2.1.1.3.8	Open the OXID CHG VALVE - 11A and the OXID TEST VALVE - 12A in Component Package "C".
6.2.1.1.3.9	Open the #1 "Freon MF" Drain Valve connected to Component Package "C". (Reference Figure 29.)
6.2.1.1.3.10	After two (2) minutes, close the "Freon MF" Drain Valve connected to Component Package "C".
6.2.1.1.3.11	Repeat steps 6.2.1.1.3.9 and 6.2.1.1.3.10 three (3) more times.
6.2.1.1.3.12	Reduce pressure of "Freon MF" supply from 50 to 0 psig.
6.2.1.1.3.13	Close the "Freon MF" Supply Valve.
6.2.1.1.3.14	Let the Engine System stand a minimum of fifteen (15) minutes. (Record this stand time.)
6.2.1.1.3.15	Regulate the #1 GN_2 supply to 50 psig.
6.2.1.1.3.16	Open the #2 "Freon MF" Drain Valve connected to the Oxidizer Purge Valve.
6.2.1.1.3.17	Open the #1 GN_2 Supply Valve and admit 50 $\pm$2 psig GN_2 through the OXID CHG PORT - 11 and OXID TEST PORT - 12 in Component Package "C".
6.2.1.1.3.18	Take a 100 ml sample of the fluid flowing from the #2 "Freon MF" Drain Valve and when "Freon MF" no longer flows from the #2 "Freon MF" Drain Valve, close the #1 GN_2 Supply Valve connected to the OXID CHG PORT - 11 and the OXID TEST PORT - 12 in Component Package "C". Analyze the liquid sample per RA0615-022 and record the result.

PREPARED BY: J.Mayne DATE	APPROVED FOR NAA: DATE
CHECKED BY: 3-3-65 DATE	3-3-65

DESIGN APPROVAL TEST
ORBIT ATTITUDE AND MANEUVER SYSTEM
(SE7)

NAME OF TEST DRAIN AND CLEAN PROCEDURES TEST NO. 106156-401 SHEET 77 OF 413

PART NO. 2-DAY CONFIG. {MAC ____ NAA ____ 14-DAY CONFIG. {MAC 52-52701 NAA 99-106156

6.2.1.1.3.19	Close the #2 "Freon MF" Drain Valve connected to the Oxidizer Purge Valve.
6.2.1.1.3.20	Reduce the pressure at the #1 GN_2 Supply Valve from 50 to 0 psig.
6.2.1.1.3.21	Regulate "Freon MF" pressure to 50±5 psig.
6.2.1.1.3.22	Close the OXID TEST VALVE - 12A in Component Package "C".
6.2.1.1.3.23	Open the #1 "Freon MF" Drain Valve.
6.2.1.1.3.24	Open the "Freon MF" Supply Valve to admit "Freon MF" to the OXID PURGE - 13 port.
6.2.1.1.3.25	When only "Freon MF" flows from #1 "Freon MF" drain close the OXID CHG VALVE - 11A in Component Package "C" and the #1 "Freon MF" Drain Valve.
6.2.1.1.3.26	Using a 26 VDC signal, cycle the #14 and #16 TCA NTO propellant valves 25 times as follows:
6.2.1.1.3.26.1	Ten seconds on (minimum)
6.2.1.1.3.26.2	Two seconds off (maximum)
6.2.1.1.3.27	Repeat paragraph 6.2.1.1.3.26 with #11 and #12 TCA NTO propellant valves.
6.2.1.1.3.28	Repeat paragraph 6.2.1.1.3.26 with #13 and #15 TCA NTO propellant valves.
6.2.1.1.3.29	Repeat paragraph 6.2.1.1.3.26 with #2 and #5 TCA NTO propellant valves.

PREPARED BY: J. Mayne	DATE	APPROVED FOR NAA:	DATE
CHECKED BY: R. O. McMahon	DATE 2-23-65		2-24-65

DESIGN APPROVAL TEST
ORBIT ATTITUDE AND MANEUVER SYSTEM
(SE7)

NAME OF TEST DRAIN AND CLEAN PROCEDURES TEST NO. 106156-401 SHEET 78 OF 413

PART NO. 2-DAY CONFIG. {MAC ____ NAA ____ 14-DAY CONFIG. {MAC 52-52701 NAA 99-106156

6.2.1.1.3.30	Repeat paragraph 6.2.1.1.3.26 with #3 and #4 TCA NTO propellant valves.
6.2.1.1.3.31	Repeat paragraph 6.2.1.1.3.26 with #9 and #10 TCA NTO propellant valves.
6.2.1.1.3.32	Repeat paragraph 6.2.1.1.3.26 with #7 and #8 TCA NTO propellant valves.
6.2.1.1.3.33	Repeat paragraph 6.2.1.1.3.26 with #1 and #6 TCA NTO propellant valves.
6.2.1.1.3.34	Actuate with 26 VDC all TCA NTO propellant valves for 15 seconds, and then reduce "Freon MF" pressure to 30 ±2 psig.
6.2.1.1.3.35	Actuate with 26 VDC #1, #5, #12 and #13 TCA NTO propellant valves and obtain at least 100 ml "Freon MF" sample from each valve actuated.
6.2.1.1.3.36	Deactuate #1,#5, #12 and #13 TCA NTO propellant valves.
6.2.1.1.3.37	Open the OXID CHG VALVE - 11A and OXID TEST VALVE - 12A in Component Package "C".
6.2.1.1.3.38	Open the #1 "Freon MF" Drain Valve connected to Component Package "C".
6.2.1.1.3.39	After three (3) minutes of flow, obtain a 100 ml sample of Freon MF then close the #1 "Freon MF" Drain Valve connected to Component Package "C".

PREPARED BY:	DATE	APPROVED FOR NAA:	DATE
J. Mayne		[illegible]	2-24-65
CHECKED BY: [illegible]	2-23-65		

DESIGN APPROVAL TEST
ORBIT ATTITUDE AND MANEUVER SYSTEM
(SE7)

NAME OF TEST DRAIN AND CLEAN PROCEDURE TEST NO. 106156-401 SHEET 79 OF 413

PART NO. 2-DAY CONFIG. {MAC / NAA} 14-DAY CONFIG. {MAC 52-52701 / NAA 99-106156}

6.2.1.1.3.40	Analyze the samples from paragraphs 6.2.1.1.3.35 and 6.2.1.1.3.39 per RA0615-022. (Record these results.)
6.2.1.1.3.40.1	If the sample shows a concentration greater than 1 ppm NTO repeat paragraphs 6.2.1.1.3.21 and 6.2.1.1.3.26 through 6.2.1.1.3.40.
6.2.1.1.3.40.2	If the sample contains less than 1 ppm NTO continue to paragraph 6.2.1.1.3.41.
6.2.1.1.3.41	Depressurize the "Freon MF" Supply.
6.2.1.1.3.42	Close the "Freon MF" Supply Valve.
6.2.1.1.3.43	Open the #2 "Freon MF" Drain Valve connected to the Oxidizer Purge Valve.
6.2.1.1.3.44	Open the #1 GN_2 Supply Valve and admit 50 $\pm$2 psig GN_2 through the OXID CHG PORT - 11 and OXID TEST PORT -12 in Component Package "C".
6.2.1.1.3.45	When "Freon MF" no longer flows from the #2 "Freon MF" Drain Valve, close the #1 GN_2 Supply Valve connected to the OXID CHG PORT - 11 in Component Package "C".
6.2.1.1.3.46	Close the #2 "Freon MF" Drain Valve connected to the Oxidizer Purge Valve.
6.2.1.1.3.47	Close the OXID CHG VALVE - 11A and OXID TEST VALVE - 12A in Component Package "C".

PREPARED BY:	DATE	APPROVED FOR NAA:	DATE
J.Mayne		[illegible]	2-24-65
CHECKED BY: R.O. McMahon	2-23-65		

DESIGN APPROVAL TEST
ORBIT ATTITUDE AND MANEUVER SYSTEM
(SE7)

NAME OF TEST DRAIN AND CLEAN PROCEDURES TEST NO. 106156-401 SHEET 80 OF 413
PART NO. 2-DAY CONFIG. {MAC ____ NAA ____ 14-DAY CONFIG. {MAC 52-52701 NAA 99-106156

6.2.1.1.3.48	Close the Oxidizer Purge Valve.
6.2.1.1.3.49	Adjust the #2 GN_2 Supply to supply 150 ±5 psig to the Oxidizer Purge Valve.
6.2.1.1.3.50	Slowly open the Oxidizer Purge Valve.
6.2.1.1.3.51	Using a 12 ±1 VDC signal, cycle the #14 and #16 TCA NTO propellant valves twenty-five (25) times as follows:
6.2.1.1.3.51.1	Ten (10) seconds on (minimum)
6.2.1.1.3.51.2	Two (2) seconds off (maximum)
6.2.1.1.3.52	Repeat paragraph 6.2.1.1.3.51 with #11 and #12 TCA NTO propellant valves.
6.2.1.1.3.53	Repeat paragraph 6.2.1.1.3.51 with #13 and #15 TCA NTO propellant valves.
6.2.1.1.3.54	Repeat paragraph 6.2.1.1.3.51 with #2 and #5 TCA NTO propellant valves.
6.2.1.1.3.55	Repeat paragraph 6.2.1.1.3.51 with #3 and #4 TCA NTO propellant valves.
6.2.1.1.3.56	Repeat paragraph 6.2.1.1.3.51 with #9 and #10 TCA NTO propellant valves.
6.2.1.1.3.57	Repeat paragraph 6.2.1.1.3.51 with #7 and #8 TCA NTO propellant valves.

PREPARED BY:	DATE	APPROVED FOR NAA:	DATE
J.Mayne		[illegible]	2-24-65
CHECKED BY: [illegible]	DATE 2-23-65		

DESIGN APPROVAL TEST
ORBIT ATTITUDE AND MANEUVER SYSTEM
(SE7)

NAME OF TEST DRAIN AND CLEAN PROCEDURES TEST NO. 106156-401 SHEET 81 OF 413
PART NO. 2-DAY CONFIG. {MAC / NAA} 14-DAY CONFIG. {MAC 52-52701 / NAA 99-106156}

6.2.1.1.3.58	Repeat paragraph 6.2.1.1.3.51 with #1 and #6 TCA NTO propellant valves.
6.2.1.1.3.59	Using a 12 ±1 VDC signal, cycle all sixteen (16) TCA NTO propellant valves for forty (40) minutes as follows:
6.2.1.1.3.59.1	Ten (10) seconds on (minimum)
6.2.1.1.3.59.2	Two (2) seconds off (maximum)
6.2.1.1.3.60	Open the OXID CHG VALVE - 11A and the OXID TEST VALVE - 12A in Component Package "C".
6.2.1.1.3.61	Open the #1 "Freon MF" Drain Valve connected to Component Package "C".
6.2.1.1.3.62	After approximately five (5) minutes, close the OXID CHG VALVE - 11A and the OXID TEST VALVE - 12A in Component Package "C".
6.2.1.1.3.63	Reduce the pressure to the OXID PURGE - 13 port to 0 psig.
6.2.1.1.3.64	Disconnect the servicing connections from the Oxidizer Purge Valve and from the OXID CHG PORT - 11 and the OXID TEST PORT - 12 in Component Package "C".
6.2.1.1.3.65	Open the OXID CHG VALVE- 11A in Component Package "C".
6.2.1.1.3.66	Using the vapor detector, determine the NTO and "Freon MF" vapor concentrations at the OXID CHG PORT - 11, at the OXID PURGE - 13 port and at TCA's #1, #5, #12 and #13 with the TCA oxidizer propellant valves open. (Close TCA valves after sampling.) (Record these values.)

PREPARED BY:	DATE	APPROVED FOR NAA:	DATE
J.Mayne		[illegible]	2-24-65
CHECKED BY: [illegible]	2-23-65		

DESIGN APPROVAL TEST
ORBIT ATTITUDE AND MANEUVER SYSTEM
(SE7)

NAME OF TEST DRAIN AND CLEAN PROCEDURES TEST NO. 106156-401 SHEET 82 OF 413
PART NO. 2-DAY CONFIG. {MAC ____ NAA ____ 14-DAY CONFIG. {MAC 52-52701 NAA 99-106156

6.2.1.1.3.66.1	If vapor concentration is less than 20 ppm, continue with paragraph 6.2.1.1.3.81.
6.2.1.1.3.66.2	If either vapor concentration is greater than 20 ppm, reinstall the #2 GN_2 Supply Line, the #1 "Freon MF" Drain Line and related plumbing and close all valves except the OXID TANK VENT VALVE - 6A in Component Package "B" and the PSOV.
6.2.1.1.3.66.3	Repeat paragraphs 6.2.1.1.3.48 through 6.2.1.1.3.50 and 6.2.1.1.3.59 through 6.2.1.1.3.66 until vapor concentration is less than 20 ppm "Freon MF" and NTO, then proceed to paragraph 6.2.1.1.3.81.
6.2.1.1.3.66.4	If after any two consecutive repetitions of paragraph 6.2.1.1.3.66.3 the vapor concentration of the NTO and "Freon MF" have not changed and dropped below 20 ppm, proceed to paragraph 6.2.1.1.3.67.
6.2.1.1.3.67	Connect an evacuation system to the OXID CHG PORT - 11 in Component Package "C" and to the OXID TANK VENT - 6 in Component Package "B". (Figure 31)
6.2.1.1.3.68	Close the Oxidizer Purge Valve.
6.2.1.1.3.69	Verify that the OXID CHG VALVE - 11A in Component Package "C" and the OXID TANK VENT VALVE - 6A in Component Package "B" are open.

PREPARED BY:	DATE	APPROVED FOR NAA:	DATE
J.Mayne			
CHECKED BY:	DATE		
R.O. McWilson	3-3-65		3-3-65

DESIGN APPROVAL TEST
ORBIT ATTITUDE AND MANEUVER SYSTEM
(SE7)

NAME OF TEST DRAIN AND CLEAN PROCEDURES TEST NO. 106156-401 SHEET 83 OF 413

PART NO. 2-DAY CONFIG. {MAC ____ NAA ____ 14-DAY CONFIG. {MAC 52-52701 NAA 99-106156

6.2.1.1.3.70	Verify that the Vacuum Shutoff Valves are closed.
6.2.1.1.3.71	Turn on the evacuation system.
6.2.1.1.3.72	Open the #2 Vacuum Shutoff Valve connected to the OXID TANK VENT - 6 in Component Package "B".
6.2.1.1.3.73	Open the #1 Vacuum Shutoff Valve connected to the OXID CHG PORT - 11 in Component Package "C".
6.2.1.1.3.74	Vacuum dry the system for a minimum of 240 minutes.
6.2.1.1.3.75	Close the OXID TANK VENT VALVE - 6A in Component Package "B".
6.2.1.1.3.76	Turn off the evacuation system and vent the vacuum system.
6.2.1.1.3.77	Open the OXID TANK VENT VALVE - 6A in Component Package "B".
6.2.1.1.3.78	Disconnect the evacuation system from the OXID CHG PORT - 11 in Component Package "C" and from the OXID TANK VENT - 6 in Component Package "B".
6.2.1.1.3.79	Remove the Oxidizer Purge Valve from OXID PURGE - 13.
6.2.1.1.3.80	Using the vapor detector, determine the NTO and "Freon MF" vapor concentration at the OXID PURGE - 13 port, the OXID CHG PORT - 11 in Component Package "C" and at TCA's #1,#5, #12 and #13 with the TCA oxidizer propellant valves open. (Close TCA valves after sampling.) (Record these values.)

PREPARED BY:	DATE	APPROVED FOR NAA:	DATE
J. Mayne		[illegible]	2-24-65
CHECKED BY: R.O. McPhee	2-23-65		

IL 5388-6143

INTERNAL LETTER
North American Aviation, Inc.

DATE 24 March 1965

TO Those Concerned
Address

FROM Gemini DAT Unit
Address D/896-388

SUBJECT Procedural Deviation - Design Approval Test Specification 106156-401

During the SE7 oxidizer system cleaning procedure per the DAT specification, the liquid NTO concentration was reduced to 1 ppm and the system was then purged three times without reducing the NTO vapor concentration significantly. Per the specification, the system was then vacuumed for three separate four hour periods and the NTO concentration still remained as high as 800 ppm.

As the specification now reads, this vacuuming must continue indefinitely until 20 ppm is attained. It is obvious that the vacuuming operation is not reducing the NTO vapor concentration at an acceptable rate and therefore an additional paragraph will be added as follows to provide for repeating the flushing and purging operation if three consecutive vacuuming operations are **unsuccessful.**

6.2.1.1.3.80.1.1 If after performing paragraph 6.2.1.1.3.80.1 two times the NTO vapor concentration remains above 20 ppm, repeat paragraphs 6.2.1.1.3.21 through 6.2.1.1.3.66.4.

The following unrelated corrections should also be made to other portions of the specification.

6.2.1.2.3.89.3 Change the callout "6.2.1.2.3.83" to "6.2.1.2.3.82".

6.2.1.2.3.89.5 Change the callout "6.2.1.2.3.48" to "6.2.1.2.3.72, 6.2.1.2.3.73 and 6.2.1.2.3.82".

6.2.1.2.3.103 Change the callout "MMH" to "'Freon-MF'".

6.2.1.2.3.103.1 Change the callout "MMH" to "'Freon-MF'".

6.2.1.2.3.103.2 Change the callout "MMH" to "'Freon-MF'".

Approved: R. G. Fide
Supervisor
Gemini DAT Unit

R. O. McMahon
Gemini DAT Unit

S. Scott
MAC Engineering

R-15075-1

FORM R 18-0-4

DESIGN APPROVAL TEST
ORBIT ATTITUDE AND MANEUVER SYSTEM
(SE7)

NAME OF TEST DRAIN AND CLEAN PROCEDURES TEST NO. 106156-401 SHEET 84 OF 413
PART NO. 2-DAY CONFIG. {MAC ____ NAA ____ 14-DAY CONFIG. {MAC 52-52701 NAA 99-106156

6.2.1.1.3.80.1	If either the NTO or "Freon MF" vapor concentration is greater than 20 ppm at any of these ports, reinstall the Oxidizer Purge Valve on OXID PURGE - 13 and repeat paragraphs 6.2.1.1.3.67 through 6.2.1.1.3.80.
6.2.1.1.3.80.2	If the NTO and "Freon MF" vapor concentration is less than 20 ppm, proceed to paragraph 6.2.1.1.3.81.
6.2.1.1.3.81	With a vapor detector determine the NTO and "Freon MF" concentration at the OXID TANK VENT - 6. (Record these values.)
6.2.1.1.3.81.1	If the NTO or "Freon MF" concentration is greater than 20 ppm continue with paragraph 6.2.1.1.3.82.
6.2.1.1.3.81.2	If the NTO and "Freon MF" concentration is less than 20 ppm, proceed to paragraph 6.2.1.1.3.91.
6.2.1.1.3.82	Connect an evacuation system to the OXID TANK VENT - 6 in Component Package "B" and to the OXID CHG PORT - 11 in Component Package "C".
6.2.1.1.3.83	Close the Oxidizer Purge Valve.
6.2.1.1.3.84	Verify that the OXID CHG VALVE - 11A in Component Package "C" and the OXID TANK VENT VALVE - 6A in Component Package "B" are open.
6.2.1.1.3.85	Turn on the Evacuation System.
6.2.1.1.3.86	Open the #2 Vacuum Shutoff Valve connected to the OXID TANK VENT - 6 in Component Package "B" and then open the #1 Vacuum Shutoff Valve connected to Component Package "C".
6.2.1.1.3.87	Vacuum both sides of the bladder for a minimum of 120 minutes.

PREPARED BY: J. Mayne	DATE	APPROVED FOR NAA:	DATE
CHECKED BY: [illegible]	3-3-65	[illegible]	3-3-65

DESIGN APPROVAL TEST
ORBIT ATTITUDE AND MANEUVER SYSTEM
(SE7)

NAME OF TEST DRAIN AND CLEAN PROCEDURES TEST NO. 106156-401 SHEET 85 OF 413
PART NO. 2-DAY CONFIG. {MAC ____ / NAA ____} 14-DAY CONFIG. {MAC 92-[illegible]01 / NAA 92-106156}

6.2.1.1.3.88	Turn off the evacuating system and vent first the vacuum system connected to Component Package "C" and then the system connected to Component Package "B".
6.2.1.1.3.89	Disconnect the evacuation system from the OXID TANK VENT - 6 in Component Package "B" and from the OXID CHG PORT - 11 in Component Package "C".
6.2.1.1.3.90	Using the vapor detector determine the NTO and "Freon MF" concentration at the OXID TANK VENT - 6 in Component Package "B". (Record these values.)
6.2.1.1.3.90.1	If the NTO or "Freon MF" concentration is greater than 20 ppm, repeat paragraphs 6.2.1.1.3.82 through 6.2.1.1.3.90.
6.2.1.1.3.90.2	If the NTO and "Freon MF" concentration is less than 20 ppm continue with paragraph 6.2.1.1.3.91.
6.2.1.1.3.91	Close all valves and allow the system to stand for a minimum of 1 hour.
6.2.1.1.3.92	After a minimum of 1 hour open the Oxidizer Purge Valve, the OXID TANK VENT VALVE - 6A in Component Package "B" and the OXID CHG VALVE - 11A in Component Package "C".
6.2.1.1.3.93	Using a vapor detector determine the NTO and "Freon MF" concentration at the OXID PURGE - 13 port, the OXID CHG PORT - 11 in Component Package "C" and at TCA's #1, #5, #12 and #13 with the TCA oxidizer propellant valves open. (Close TCA valves after sampling.) (Record these values.)
6.2.1.1.3.93.1	If either the NTO or "Freon MF" concentration is greater than 20 ppm, repeat paragraphs 6.2.1.1.3.66.2 through 6.2.1.1.3.89 and 6.2.1.1.3.91 through 6.2.1.1.3.93.
6.2.1.1.3.93.2	If the NTO and "Freon MF" concentration are less than 20 ppm, proceed to paragraph 6.2.1.1.3.94.

PREPARED BY: J.Mayne	DATE	APPROVED FOR NAA:	DATE
CHECKED BY: [illegible]	DATE 3-3-65	[illegible]	3-3-65

DESIGN APPROVAL TEST
ORBIT ATTITUDE AND MANEUVER SYSTEM
(SE7)

NAME OF TEST DRAIN AND CLEAN PROCEDURES TEST NO. 106156-401 SHEET 86 OF 413
PART NO. 2-DAY CONFIG. {MAC ____ NAA ____ 14-DAY CONFIG. {MAC 52-52701 NAA 99-106156

6.2.1.1.3.94	Using a vapor detector determine the NTO and "Freon MF" vapor concentration at the OXID TANK VENT - 6 in Component Package "B". (Record these values.)
6.2.1.1.3.94.1	If either vapor concentration is greater than 20 ppm, repeat paragraphs 6.2.1.1.3.82 through 6.2.1.1.3.90.
6.2.1.1.3.94.2	If both vapor concentrations are less than 20 ppm, proceed to paragraph 6.2.1.1.3.95.
6.2.1.1.3.95	Repeat paragraphs 6.2.1.1.3.91 through 6.2.1.1.3.94 after a minimum of 24 hours.
6.2.1.1.3.96	Close the OXID CHG VALVE - 11A, install caps on the OXID CHG VALVE - 11A and OXID CHG PORT - 11 in Component Package "C".
6.2.1.1.3.97	Install caps on the OXID TEST PORT - 12 and OXID TEST VALVE - 12A in Component Package "C".
6.2.1.1.3.98	Replace the "O"Rings P/N RD 262-4014-1002 on the redundant seal and replace seal in OXID PURGE - 13.
6.2.1.1.3.99	Close the OXID TANK VENT VALVE - 6A and replace caps on the OXID TANK VENT VALVE - 6A and OXID TANK VENT - 6 in Component Package "B".
6.2.1.2	Fuel Drain and Clean Procedure
6.2.1.2.1	System Condition

The Engine System is full of propellant from the propellant tank to the TCA's. All valves are considered closed except the tank isolation cartridge valves, the PSOV and the auxiliary fuel purge valves. The TCA throat seals and service connections are installed per Figure 30.

NOTE: Torque values of Table 1 shall be utilized at all times.

PREPARED BY: J.Mayne	DATE	APPROVED FOR NAA:	DATE
CHECKED BY: R.C. Van Nelson	DATE 2-27-65		3-3-65

DESIGN APPROVAL TEST
ORBIT ATTITUDE AND MANEUVER SYSTEM
(SE7)

NAME OF TEST DRAIN AND CLEAN PROCEDURES TEST NO. 106156-401 SHEET 87 OF 413
PART NO. 2-DAY CONFIG. {MAC ____ NAA ____ 14-DAY CONFIG. {MAC 52-52701 NAA 99-106156

6.2.1.2.2	Fuel Drain
6.2.1.2.2.1	Open the FUEL TANK VENT VALVE - 4A in Component Package "B".
6.2.1.2.2.2	Open the Fuel Purge Valve.
6.2.1.2.2.3	Open the #2 Fuel Drain Valve connected to the Fuel Purge Valve.
6.2.1.2.2.4	Open the #1 GN_2 Supply Valve and admit 50 $\pm$2 psig GN_2 to the FUEL CHG PORT - 15 in Component Package "D".
6.2.1.2.2.5	Open the FUEL CHG VALVE - 15A in Component Package "D".
6.2.1.2.2.6	When MMH no longer flows from the #2 Fuel Drain Valve, close the #2 Fuel Drain Valve connected to the Fuel Purge Valve.
6.2.1.2.2.7	Actuate with 26 VDC all the TCA MMH propellant valves then immediately reduce to 10 VDC.
6.2.1.2.2.8	When MMH no longer flows from the TCA's close the #1 GN_2 Supply Valve connected to Component Package "D" then deactuate the TCA MMH valves.
6.2.1.2.2.9	Close the FUEL CHG VALVE - 15A in Component Package "D".
6.2.1.2.3	Fuel System Cleaning
6.2.1.2.3.1	Regulate alcohol pressure to 50 $\pm$5 psig.
6.2.1.2.3.2	Open the FUEL CHG VALVE - 15A in Component Package "D".
6.2.1.2.3.3	Open the #1 Alcohol Drain Valve.

PREPARED BY: J. Mayne	DATE	APPROVED FOR NAA:	DATE
CHECKED BY:	DATE 2-23-65		2-24-65

DESIGN APPROVAL TEST
ORBIT ATTITUDE AND MANEUVER SYSTEM
(SE7)

NAME OF TEST DRAIN AND CLEAN PROCEDURES TEST NO. 106156-401 SHEET 88 OF 413

PART NO. 2-DAY CONFIG. {MAC ____ / NAA ____} 14-DAY CONFIG. {MAC 52-52701 / NAA 99-106156}

6.2.1.2.3.4	Open the alcohol Supply Valve to admit alcohol to the FUEL PURGE - 16 port.
6.2.1.2.3.5	When only alcohol flows from the #1 Alcohol Drain close the FUEL CHG VALVE - 15A in Component Package "D" and the #1 Alcohol Drain Valve.
6.2.1.2.3.6	Using a 26 VDC signal, actuate #11, #12, #13, #14, #15 and #16 TCA, MMH propellant valves (Figure 16) for appproximately ten (10) minutes cycling all valves off for approximately 2 seconds every minute.
6.2.1.2.3.7	Using a 26 VDC signal, actuate #1, #2, #3, #4, #5, #6, #7, #8, #9 and #10 TCA MMH propellant valves (Figure 16) for approximately ten (10) minutes cycling all valves off for approximately 2 seconds every minute.
6.2.1.2.3.8	Open the FUEL CHG VALVE - 15A and the FUEL TEST VALVE - 14A in Component Package "D".
6.2.1.2.3.9	Open the #1 Alcohol Drain Valve connected to Component Package "D".
6.2.1.2.3.10	After two (2) minutes, close the Alcohol Drain Valve connected to Component Package "D".
6.2.1.2.3.11	Repeat steps 6.2.1.2.3.9 and 6.2.1.2.3.10 three (3) more times.
6.2.1.2.3.12	Reduce pressure of the alcohol supply from 50 to 0 psig.
6.2.1.2.3.13	Close the Alcohol Supply Valve.
6.2.1.2.3.14	Let the Engine System stand a minimum of fifteen (15) minutes. (Record this stand time.)

PREPARED BY: J.Mayne	DATE	APPROVED FOR NAA: R Heide	DATE 2-24-65
CHECKED BY: R.O. McMahan	DATE 2-23-65		

IL 5388-6127

INTERNAL LETTER
North American Aviation, Inc. DATE 12 March 1965

TO Those Concerned
Address

SUBJECT Procedural Deviation - SE7 DAT Engine System - S/C 3

REFERENCE (a) DAT Specification 106156-401
(b) Rocketdyne Process Specification RA0615-022

cc: Dinius
NAASC

The above reference (a) specifies that the Alcohol-MMH samples taken during the drain and clean procedures of paragraph 6.2.1.2.3.18, 6.2.1.2.3.40 be analyzed in accordance with the procedures of Rocketdyne Process Specification RA0615-022. The reagents and procedures specified in the process specification do not provide satisfactory results. The Analytical Chemical Unit, D/591-359, has developed a modification of the procedures outlined in the process specification which provides more satisfactory results. Basically the modification consists of the following:

1. The effluent sample size is increased from 5 ml to 10 ml (reference b, paragraph 3.4.1).

2. The indicator solution consists of 25 ml of para-dimethylaminobenzaldehyde and 15 ml of 0.1 N HCl.

3. The color change of the combined solutions (items 1 and 2) is compared with a standard which consists of the solution of item 2 mixed with an uncontaminated 10 ml sample of alcohol.

4. Colormetric interpretation shall be:

Contaminant	Concentration (ppm)	Color
MMH	1	Light chartreuse
	0	Yellow to orange

In view of the aforementioned the requirement to analyze the Alcohol-MMH samples per RA0615-022 shall be deleted. Analysis shall be performed in accordance with the procedures utilized by D/591-359.

Approved: R. G. Eide
Supervisor
Gemini DAT Unit

R. O. McMahon
Gemini DAT Unit

S. Scott
MAC Engineering

R-15075-1

FORM R 18-0-4

DESIGN APPROVAL TEST
ORBIT ATTITUDE AND MANEUVER SYSTEM
(SE7)

NAME OF TEST DRAIN AND CLEAN PROCEDURES TEST NO. 106156-401 SHEET 89 OF 413

PART NO. 2-DAY CONFIG. {MAC ____ NAA ____ 14-DAY CONFIG. {MAC 52-52701 NAA 99-106156

6.2.1.2.3.15	Regulate the #1 GN_2 supply to 50 psig.
6.2.1.2.3.16	Open the #2 Alcohol Drain Valve connected to the Fuel Purge Valve.
6.2.1.2.3.17	Open #1 GN_2 Supply Valve and admit 50 ±2 psig GN_2 through the FUEL CHG PORT - 15 and FUEL TEST PORT - 14 in Component Package "D".
6.2.1.2.3.18	Take a 100 ml sample of the fluid flowing from the #2 Alcohol Drain Valve and when alcohol no longer flows from the #2 Alcohol Drain Valve, close the #1 GN_2 Supply Valve connected to the FUEL CHG PORT - 15 and FUEL TEST PORT - 14 in Component Package "D". Analyze the liquid sample per RA0615-022 and record the result.
6.2.1.2.3.19	Close the #2 Alcohol Drain Valve connected to the Fuel Purge Valve.
6.2.1.2.3.20	Reduce the pressure at the #1 GN_2 Supply Valve from 50 to 0 psig.
6.2.1.2.3.21	Regulate alcohol pressure to 50 ±5 psig.
6.2.1.2.3.22	Close the FUEL TEST VALVE - 14A in Component Package "D".
6.2.1.2.3.23	Open the #1 Alcohol Drain Valve.
6.2.1.2.3.24	Open the Alcohol Supply Valve to admit alcohol to the FUEL PURGE - 16 port.
6.2.1.2.3.25	When only alcohol flows from the #1 Alcohol Drain close the FUEL CHG VALVE - 15A in Component Package "D" and the #1 Alcohol Drain Valve.

PREPARED BY: J. Mayne	DATE	APPROVED FOR NAA:	DATE
CHECKED BY: R.O. McMahon	DATE 3-3-65	R. Heide	3-3-65

DESIGN APPROVAL TEST
ORBIT ATTITUDE AND MANEUVER SYSTEM
(SE7)

NAME OF TEST DRAIN AND CLEAN PROCEDURES TEST NO. 106156-401 SHEET 90 OF 413

PART NO. 2-DAY CONFIG. {MAC ____ NAA ____ 14-DAY CONFIG. {MAC 52-52701 NAA 99-106156

6.2.1.2.3.26	Using a 26 VLC signal cycle #14 and #16 TCA MMH propellant valves 25 times as follows:
6.2.1.2.3.26.1	Ten seconds on (minimum)
6.2.1.2.3.26.2	Two seconds off (maximum)
6.2.1.2.3.27	Repeat paragraph 6.2.1.2.3.26 with #11 and #12 TCA MMH propellant valves.
6.2.1.2.3.28	Repeat paragraph 6.2.1.2.3.26 with #13 and #15 TCA MMH propellant valves.
6.2.1.2.3.29	Repeat paragraph 6.2.1.2.3.26 with #2 and #5 TCA MMH propellant valves.
6.2.1.2.3.30	Repeat paragraph 6.2.1.2.3.26 with #3 and #4 TCA MMH propellant valves.
6.2.1.2.3.31	Repeat paragraph 6.2.1.2.3.26 with #9 and #10 TCA MMH propellant valves.
6.2.1.2.3.32	Repeat paragraph 6.2.1.2.3.26 with #7 and #8 TCA MMH propellant valves.
6.2.1.2.3.33	Repeat paragraph 6.2.1.2.3.26 with #1 and #6 TCA MMH propellant valves.
6.2.1.2.3.34	Actuate with 26 VLC all TCA MMH propellant valves for fifteen seconds and then reduce alcohol pressure to 30 ±2 psig.

PREPARED BY:	DATE	APPROVED FOR NAA:	DATE
J.Mayne			
CHECKED BY:	DATE		
	2-23-65		2-24-65

R-15075-1

DESIGN APPROVAL TEST
ORBIT ATTITUDE AND MANEUVER SYSTEM
(SE7)

NAME OF TEST DRAIN AND CLEAN PROCEDURES TEST NO. 106156-401 SHEET 91 OF 413

PART NO. 2-DAY CONFIG. {MAC ____ NAA ____ 14-DAY CONFIG. {MAC 52-52701 NAA 99-106156

6.2.1.2.3.35	Actuate with 26 VDC #1, #5, #12 and #13 TCA MMH propellant valves and obtain at least a 100 ml alcohol sample from each TCA actuated.
6.2.1.2.3.36	Deactuate #1, #5, #12 and #13 TCA MMH propellant valves.
6.2.1.2.3.37	Open the FUEL CHG VALVE - 15A and FUEL TEST VALVE - 14A in Component Package "D".
6.2.1.2.3.38	Open the #1 Alcohol Drain Valve connected to Component Package "D".
6.2.1.2.3.39	After 3 minutes of flow take a 100 ml sample of alcohol then close the #1 Alcohol Drain Valve connected to Component Package "D".
6.2.1.2.3.40	Analyze the samples from paragraphs 6.2.1.2.3.35 and 6.2.1.2.3.39 per RA0615-022. (Record these values.)
6.2.1.2.3.40.1	If any sample shows a concentration greater than 1 ppm MMH repeat paragraphs 6.2.1.2.3.21 and 6.2.1.2.3.26 through 6.2.1.2.3.40.
6.2.1.2.3.40.2	If the samples contain less than 1 ppm MMH continue to paragraph 6.2.1.1.3.41.
6.2.1.2.3.41	Depressurize the Alcohol Supply.
6.2.1.2.3.42	Close the Alcohol Supply Valve.
6.2.1.2.3.43	Open the #2 Alcohol Drain Valve connected to the Fuel Purge Valve.

PREPARED BY:	DATE	APPROVED FOR NAA:	DATE
J. Mayne			
CHECKED BY:	DATE		
	2-23-65		2-24-65

DESIGN APPROVAL TEST
ORBIT ATTITUDE AND MANEUVER SYSTEM
(SE7)

NAME OF TEST DRAIN AND CLEAN PROCEDURES TEST NO. 106156-401 SHEET 92 OF 413
PART NO. 2-DAY CONFIG. {MAC ____ NAA ____ 14-DAY CONFIG. {MAC 52-52701 NAA 99-106156

6.2.1.2.3.44	Open the #1 GN_2 Supply Valve and admit 50 ±2 psig GN_2 through the FUEL CHG PORT - 15 and FUEL TEST PORT - 14 in Component Package "D".
6.2.1.2.3.45	When alcohol no longer flows from the #2 Alcohol Drain Valve, close the #1 GN_2 Supply Valve connected to the FUEL CHG PORT - 15 and FUEL TEST PORT - 14 in Component Package "D".
6.2.1.2.3.46	Close the #2 Alcohol Drain Valve.
6.2.1.2.3.47	Proceed to paragraph 6.2.1.2.3.70.
6.2.1.2.3.48	Regulate "Freon MF" pressure to 50 ±5 psig.
6.2.1.2.3.49	Close the FUEL TEST VALVE - 14A in Component Package "D".
6.2.1.2.3.50	Open the #1 Alcohol ("Freon MF") Drain Valve.
6.2.1.2.3.51	Open the Alcohol ("Freon MF") Supply Valve to admit "Freon MF" to the FUEL PURGE - 16 port.
6.2.1.2.3.52	When only "Freon MF" flows from the #1 Alcohol ("Freon MF") Drain close the FUEL CHG VALVE - 15A in Component Package "D" and the #1 Alcohol ("Freon MF") Drain Valve.
6.2.1.2.3.53	Using a 26 VDC signal cycle #14 and #16 TCA MMH propellant valves twenty-five (25) times as follows:
6.2.1.2.3.53.1	Ten (10) seconds on (minimum)
6.2.1.2.3.53.2	Two (2) seconds off (maximum)

PREPARED BY:	DATE	APPROVED FOR NAA:	DATE
J.Mayne			
CHECKED BY:	DATE		
	2-23-65		2-24-65

DESIGN APPROVAL TEST
ORBIT ATTITUDE AND MANEUVER SYSTEM
(SE7)

NAME OF TEST DRAIN AND CLEAN PROCEDURES TEST NO. 106156-401 SHEET 93 OF 413
PART NO. 2-DAY CONFIG. {MAC / NAA} 14-DAY CONFIG. {MAC 52-52701 / NAA ~~99-106156~~}

6.2.1.2.3.54	Repeat paragraph 6.2.1.2.3.53 with #11 and #12 TCA MMH propellant valves.
6.2.1.2.3.55	Repeat paragraph 6.2.1.2.3.53 with #13 and #15 TCA MMH propellant valves.
6.2.1.2.3.56	Repeat paragraph 6.2.1.2.3.53 with #2 and #5 TCA MMH propellant valves.
6.2.1.2.3.57	Repeat paragraph 6.2.1.2.3.53 with #3 and #4 TCA MMH propellant valves.
6.2.1.2.3.58	Repeat paragraph 6.2.1.2.3.53 with #9 and #10 TCA MMH propellant valves.
6.2.1.2.3.59	Repeat paragraph 6.2.1.2.3.53 with #7 and #8 TCA MMH propellant valves.
6.2.1.2.3.60	Repeat paragraph 6.2.1.2.3.53 with #1 and #6 TCA MMH propellant valves.
6.2.1.2.3.61	Actuate with 26 VDC all TCA MMH propellant valves for fifteen (15) seconds.
6.2.1.2.3.62	Open the FUEL CHG VALVE - 15A the FUEL TEST VALVE - 14A in Component Package "L" and the #1 Alcohol ("Freon MF") Drain Valve.
6.2.1.2.3.63	After three (3) minutes of flow, close the #1 Alcohol ("Freon MF") Drain Valve connected to Component Package "D".
6.2.1.2.3.64	Depressurize the "Freon MF" Supply.

PREPARED BY:	DATE	APPROVED FOR NAA:	DATE
J.Mayne		R F Eide	2-24-65
CHECKED BY: R.O. McMahon	DATE 2-23-65		

DESIGN APPROVAL TEST
ORBIT ATTITUDE AND MANEUVER SYSTEM
(SE7)

NAME OF TEST DRAIN AND CLEAN PROCEDURES TEST NO. 106156-401 SHEET 94 OF 413
PART NO. 2-DAY CONFIG. {MAC ____ NAA ____ 14-DAY CONFIG. {MAC 52-52701 NAA 99-106156

6.2.1.2.3.65	Close the Alcohol ("Freon MF") Supply Valve.
6.2.1.2.3.66	Open the #2 Alcohol ("Freon MF") Drain Valve connected to the Fuel Purge Valve.
6.2.1.2.3.67	Open the #1 GN_2 Supply Valve and admit 50 ±2 psig GN_2 through the FUEL CHG PORT - 15 and FUEL TEST PORT - 14 in Component Package "D".
6.2.1.2.3.68	When "Freon MF" no longer flows from the #2 Alcohol ("Freon MF") Drain Valve, close the #1 GN_2 Supply Valve connected to the FUEL CHG PORT - 15 and FUEL TEST PORT - 14 in Component Package "D".
6.2.1.2.3.69	Close the #2 Alcohol ("Freon MF") Drain Valve connected to the Fuel Purge Valve.
6.2.1.2.3.70	Close the FUEL CHG VALVE - 15A and FUEL TEST VALVE - 14A in Component Package "D".
6.2.1.2.3.71	Close the Fuel Purge Valve.
6.2.1.2.3.72	Adjust the #2 GN_2 Supply to supply 150 ±5 psig to the Fuel Purge Valve.
6.2.1.2.3.73	Slowly open the Fuel Purge Valve.
6.2.1.2.3.74	Using a 12 ±1 VDC signal cycle #14 and #16 TCA MMH propellant valves 25 times as follows:
6.2.1.2.3.74.1	Ten (10) seconds on (minimum)
6.2.1.2.3.74.2	Two (2) seconds off (maximum)

PREPARED BY: J.Mayne	DATE	APPROVED FOR NAA:	DATE
CHECKED BY:	DATE 2-23-65		2-24-65

DESIGN APPROVAL TEST
ORBIT ATTITUDE AND MANEUVER SYSTEM
(SE7)

NAME OF TEST DRAIN AND CLEAN PROCEDURES TEST NO. 106156-401 SHEET 95 OF 413
PART NO. 2-DAY CONFIG. {MAC ____ NAA ____ 14-DAY CONFIG. {MAC 52-52701 NAA 99-106156

6.2.1.2.3.75	Repeat paragraph 6.2.1.2.3.74 with #11 and #12 TCA MMH propellant valves.
6.2.1.2.3.76	Repeat paragraph 6.2.1.2.3.74 with #13 and #15 TCA MMH propellant valves.
6.2.1.2.3.77	Repeat paragraph 6.2.1.2.3.74 with #2 and #5 TCA MMH propellant valves.
6.2.1.2.3.78	Repeat paragraph 6.2.1.2.3.74 with #3 and #4 TCA MMH propellant valves.
6.2.1.2.3.79	Repeat paragraph 6.2.1.2.3.74 with #9 and #10 TCA MMH propellant valves.
6.2.1.2.3.80	Repeat paragraph 6.2.1.2.3.74 with #7 and #8 TCA MMH propellant valves.
6.2.1.2.3.81	Repeat paragraph 6.2.1.2.3.74 with #1 and #6 TCA MMH propellant valves.
6.2.1.2.3.82	Using a 12 ±1 VDC signal cycle all sixteen (16) TCA MMH propellant valves for forty (40) minutes as follows:
6.2.1.2.3.82.1	Ten (10) seconds on (minimum)
6.2.1.2.3.82.1	Two (2) seconds off (maximum)
6.2.1.2.3.83	Open the FUEL CHG VALVE - 15A and the FUEL TEST VALVE - 14A in Component Package "D".

PREPARED BY:	DATE	APPROVED FOR NAA:	DATE
J.Mayne			
CHECKED BY:	DATE		
	2-23-65		2-24-65

DESIGN APPROVAL TEST
ORBIT ATTITUDE AND MANEUVER SYSTEM
(SE7)

NAME OF TEST DRAIN AND CLEAN PROCEDURES TEST NO. 106156-401 SHEET 96 OF 413

PART NO. 2-DAY CONFIG. {MAC ____ NAA ____ 14-DAY CONFIG. {MAC 52-52701 NAA 99-106156

6.2.1.2.3.84	Open the #1 Alcohol ("Freon MF") Drain Valve connected to Component Package "D".
6.2.1.2.3.85	After approximately five (5) minutes, close the FUEL CHG VALVE - 15A and the FUEL TEST VALVE - 14A in Component Package "D".
6.2.1.2.3.86	Reduce the pressure to the FUEL PURGE - 16 port to 0 psig.
6.2.1.2.3.87	Disconnect the servicing connection from the Fuel Purge Valve and from the FUEL CHG PORT - 15 and the FUEL TEST PORT - 14 in Component Package "D".
6.2.1.2.3.88	Open the FUEL CHG VALVE - 15A in Component Package "D".
6.2.1.2.3.89	Using the vapor detector, determine the MMH and alcohol ("Freon MF") vapor concentration at the FUEL CHG PORT - 15, at the FUEL PURGE - 16 port and at TCA's #1, #5, #12 and #13 with the TCA fuel propellant valves open. (Close TCA valves after sampling.) (Record these values.)
6.2.1.2.3.89.1	If vapor concentrations are less than 20 ppm continue with paragraph 6.2.1.2.3.104.
6.2.1.2.3.89.2	If either vapor concentration is greater than 20 ppm reinstall the #2 GH_2 Supply Lines, the #1 Alcohol ("Freon MF") Drain Line and related plumbing of Figure 30 and close all valves except the FUEL TANK VENT VALVE - 4A in Component Package "B" and the PSOV.
6.2.1.2.3.89.3	Repeat paragraphs 6.2.1.2.3.72, 6.2.1.2.3.73 and 6.2.1.2.3.83 through 6.2.1.2.3.89 until the vapor concentration is less than 20 ppm Alcohol ("Freon MF") and MMH then proceed to paragraph 6.2.1.2.3.104.

PREPARED BY: J.Mayne	DATE	APPROVED FOR NAA:	DATE
CHECKED BY: R. O. McMahon	DATE 3-3-65		3-3-65

DESIGN APPROVAL TEST
ORBIT ATTITUDE AND MANEUVER SYSTEM
(SE7)

NAME OF TEST DRAIN AND CLEAN PROCEDURES TEST NO. 106156-401 SHEET 97 OF 413
PART NO. 2-DAY CONFIG. {MAC ____ NAA ____ 14-DAY CONFIG. {MAC 52-52701 NAA 99-106156

6.2.1.2.3.89.4	If after any two consecutive repetitions of paragraph 6.2.1.2.3.89.3 the alcohol vapor concentration has not changed and dropped below 20 ppm, perform paragraphs 6.2.1.2.3.48 through 6.2.1.2.3.89.
6.2.1.2.3.89.5	If after any two consecutive repetitions of paragraphs 6.2.1.2.3.48 through 6.2.1.2.3.89 the vapor concentration of "Freon MF" has not changed and dropped below 20 ppm, perform paragraphs 6.2.1.2.3.90 through 6.2.1.2.3.103.
6.2.1.2.3.90	Connect an evacuation system to the FUEL CHG PORT - 15 in Component Package "D" and to the FUEL TANK VENT - 4 in Component Package "B" (Figure 32).
6.2.1.2.3.91	Close the Fuel Purge Valve.
6.2.1.2.3.92	Verify that the FUEL CHG VALVE - 15A in Component Package "D" and the FUEL TANK VENT VALVE - 4A in Component Package "B" are open.
6.2.1.2.3.93	Verify that the Vacuum Shutoff Valves are closed.
6.2.1.2.3.94	Turn on the evacuation system.
6.2.1.2.3.95	Open the #2 Vacuum Shutoff Valve connected to the FUEL TANK VENT - 4 in Component Package "B".
6.2.1.2.3.96	Open the #1 Vacuum Shutoff Valve connected to the FUEL CHG PORT - 15 in Component Package "D".
6.2.1.2.3.97	Vacuum dry the system for a minimum of 240 minutes.

PREPARED BY: J. Mayne	DATE	APPROVED FOR NAA:	DATE
CHECKED BY:	DATE 3-3-65		3-3-65

DESIGN APPROVAL TEST
ORBIT ATTITUDE AND MANEUVER SYSTEM
(SE7)

NAME OF TEST DRAIN AND CLEAN PROCEDURES TEST NO. 106156-401 SHEET 98 OF 413
PART NO. 2-DAY CONFIG. {MAC ____ NAA ____ 14-DAY CONFIG. {MAC 52-52401 NAA 99-106156

6.2.1.2.3.98	Close the FUEL TANK VENT VALVE - 4A in Component Package "B".
6.2.1.2.3.99	Turn off the evacuation system and vent the vacuum system.
6.2.1.2.3.100	Open the FUEL TANK VENT VALVE - 4A in Component Package "B".
6.2.1.2.3.101	Disconnect the evacuation system from the FUEL CHG PORT - 15 in Component Package "D" and from the FUEL TANK VENT - 4 in Component Package "B".
6.2.1.2.3.102	Remove the Fuel Purge Valve from FUEL PURGE - 16.
6.2.1.2.3.103	Using the vapor detector determine the MMH vapor concentration at the FUEL PURGE - 16 port, the FUEL CHG PORT - 15 in Component Package "D" and the TCA's #1, #5, #12 and #13 with the TCA fuel propellant valves open. (Close TCA valves after sampling.) (Record these values.)
6.2.1.2.3.103.1	If the MMH vapor concentration is greater than 20 ppm at any of these ports, reinstall the Fuel Purge Valve on the FUEL PURGE - 16 and repeat paragraphs 6.2.1.2.3.90 through 6.2.1.2.3.103.
6.2.1.2.3.103.2	If the MMH vapor concentration is less than 20 ppm, proceed to paragraph 6.2.1.2.3.104.
6.2.1.2.3.104	With a vapor detector determine the MMH and Alcohol ("Freon MF") concentration at the FUEL TANK VENT - 4. (Record this value.)
6.2.1.2.3.104.1	If the MMH or Alcohol ("Freon MF") concentration is greater than 20 ppm continue with paragraph 6.2.1.2.3.105.
6.2.1.2.3.104.2	If the MMH and Alcohol ("Freon MF") concentration is less than 20 ppm proceed to paragraph 6.2.1.2.3.114.

PREPARED BY: J.Mayne	DATE	APPROVED FOR NAA:	DATE
CHECKED BY: R.O. McMahon	DATE 2-23-65	S. Heide	2-24-65

DESIGN APPROVAL TEST
ORBIT ATTITUDE AND MANEUVER SYSTEM
(SE7)

NAME OF TEST DRAIN AND CLEAN PROCEDURES TEST NO. 106156-401 SHEET 99 OF 413

PART NO. 2-DAY CONFIG. {MAC ____ NAA ____ 14-DAY CONFIG. {MAC 52-52701 NAA 99-106156

6.2.1.2.3.105	Connect an evacuation system to the FUEL TANK VENT - 4 in Component Package "B" and to the FUEL CHG PORT - 15 in Component Package "D" (Figure 32).
6.2.1.2.3.106	Close the Fuel Purge Valve.
6.2.1.2.3.107	Verify that the FUEL CHG VALVE - 15A in Component Package "D" and the FUEL TANK VENT VALVE - 4A in Component Package "B" are open.
6.2.1.2.3.108	Turn on the Evacuation System.
6.2.1.2.3.109	Open the #2 Vacuum Shutoff Valve connected to the FUEL TANK VENT - 4 in Component Package "B" and then open the #1 Vacuum Shutoff Valve connected to Component Package "D".
6.2.1.2.3.110	Vacuum both sides of the bladder for a minimum of 120 minutes.
6.2.1.2.3.111	Turn off the Evacuation System and vent first the vacuum system connected to Component Package "D" and then the vacuum system connected to Component Package "B".
6.2.1.2.3.112	Disconnect the evacuation system from the FUEL TANK VENT - 4 in Component Package "B" and from the FUEL CHG PORT - 15 in Component Package "D".
6.2.1.2.3.113	Using a vapor detector, determine the MMH and Alcohol ("Freon MF") concentration at the FUEL TANK VENT - 4 in Component Package "B". (Record this value.)
6.2.1.2.3.113.1	If the MMH or Alcohol ("Freon MF") concentration is greater than 20 ppm repeat paragraphs 6.2.1.2.3.105 through 6.2.1.2.3.113.
6.2.1.2.3.113.2	If the MMH and Alcohol ("Freon MF") concentration is less than 20 ppm continue with paragraph 6.2.1.2.3.114.

PREPARED BY: J.Mayne	DATE	APPROVED FOR NAA:	DATE
CHECKED BY: R O McMillan	DATE 3-3-65		3-3-65

DESIGN APPROVAL TEST
ORBIT ATTITUDE AND MANEUVER SYSTEM
(SE7)

NAME OF TEST DRAIN AND CLEAN PROCEDURES TEST NO. 106156-401 SHEET 100 OF 413
PART NO. 2-DAY CONFIG. {MAC ____ NAA ____ 14-DAY CONFIG. {MAC 52-52701 NAA 99-106156

6.2.1.2.3.114	Close all the valves and allow the system to stand for a minimum of 1 hour.
6.2.1.2.3.115	After a minimum of 1 hour open the Fuel Purge Valve, the FUEL TANK VENT VALVE - 4A in Component Package "B" and the FUEL CHG VALVE - 15A in Component Package "D".
6.2.1.2.3.116	Using a vapor detector determine the MMH and Alcohol ("Freon MF") concentration at the FUEL PURGE - 16 port, the FUEL CHG PORT - 15 in Component Package "D" and at TCA's #1, #5, #12 and #13 with the TCA fuel propellant valves open. (Close TCA valves after sampling.) (Record these values.)
6.2.1.2.3.116.1	If the MMH or Alcohol concentration is greater than 20 ppm, repeat paragraphs 6.2.1.2.3.48 through 6.2.1.2.3.89 and 6.2.1.2.3.114 through 6.2.1.2.3.116.
6.2.1.2.3.116.2	If only the "Freon MF" concentration is greater than 20 ppm, repeat paragraphs 6.2.1.2.3.82 through 6.2.1.2.3.89.
6.2.1.2.3.116.3	If the MMH and Alcohol ("Freon MF") concentrations are less than 20 ppm, proceed to paragraph 6.2.1.2.3.117.
6.2.1.2.3.117	Using a vapor detector determine the MMH and Alcohol ("Freon MF") concentration at the FUEL TANK VENT - 4 in Component Package "B". (Record this value.)
6.2.1.2.3.117.1	If the MMH or Alcohol ("Freon MF") concentration is greater than 20 ppm, repeat paragraphs 6.2.1.2.3.105 through 6.2.1.2.3.113.
6.2.1.2.3.117.2	If the MMH and Alcohol ("Freon MF") concentration is less than 20 ppm, proceed to paragraph 6.2.1.2.3.118.

PREPARED BY: J. Mayne DATE	APPROVED FOR NAA: DATE
CHECKED BY: R. O. Mellor 3-3-65 DATE	R. J. Eide 3-3-65

DESIGN APPROVAL TEST
ORBIT ATTITUDE AND MANEUVER SYSTEM
(SE7)

NAME OF TEST DRAIN AND CLEAN PROCEDURES TEST NO. 106156-401 SHEET 101 OF 413
PART NO. 2-DAY CONFIG. {MAC ____ NAA ____ 14-DAY CONFIG. {MAC 52-52701 NAA 99-106156

6.2.1.2.3.118	Repeat paragraphs 6.2.1.2.3.114 through 6.2.1.2.3.117 after a minimum of 24 hours.
6.2.1.2.3.119	Close the FUEL CHG VALVE - 15A, install caps on FUEL CHG VALVE - 15A and FUEL CHG PORT - 15 in Component Package "L".
6.2.1.2.3.120	Install caps on the FUEL TEST PORT - 14 and FUEL TEST VALVE - 14A in Component Package "L".
6.2.1.2.3.121	Replace the "O"Rings P/N RD-262-4014-1001 on the redundant seal and replace seal in FUEL PURGE - 16.
6.2.1.2.3.122	Close the FUEL TANK VENT VALVE - 4A and replace caps on the FUEL TANK VENT VALVE - 4A and FUEL TANK VENT - 4 in Component Package "B".

PREPARED BY: J.Mayne DATE	APPROVED FOR NAA: DATE
CHECKED BY: [illegible] 2-23-65 DATE	[illegible] 2-24-65

DESIGN APPROVAL TEST
ORBIT ATTITUDE AND MANEUVER SYSTEM
(SE7)

NAME OF TEST DRAIN AND CLEAN PROCEDURES TEST NO. 106156-401 SHEET 102 OF 413
PART NO. 2-DAY CONFIG. {MAC ____ NAA ____ 14-DAY CONFIG. {MAC 52-52701 NAA 99-106156

6.2.2 Safety Fluids

6.2.2.1 Post Liquid Calibration

6.2.2.1.1 "Freon TF" Drain and Clean

6.2.2.1.1.1 System Condition

The Engine System is full of safety fluid from the propellant tanks to the TCA's. All valves are considered closed except the tank isolation cartridge valves are replaced by Bypass Assemblies and the PSOV's are open. The TCA throat seals and service connections are installed per Figure 29.

NOTE: Torque values of Table 1 shall be utilized at all times.

6.2.2.1.1.2 "Freon TF" Drain

6.2.2.1.1.2.1 Open the #1 "Freon TF" Drain Valve connected to Component Package "C".

6.2.2.1.1.2.2 Open the OXID CHG VALVE - 11A in Component Package "C".

6.2.2.1.1.2.3 When liquid stops flowing from the #1 "Freon TF" drain valve, close OXID CHG VALVE - 11A in Component Package "C".

6.2.2.1.1.2.4 Close the #1 "Freon TF" Drain Valve connected to Component Package "C".

PREPARED BY: J. Mayne	DATE	APPROVED FOR NAA:	DATE
CHECKED BY: [illegible]	DATE 6-29-64	[illegible]	6-29-64

DESIGN APPROVAL TEST
ORBIT ATTITUDE AND MANEUVER SYSTEM
(SE7)

NAME OF TEST DRAIN AND CLEAN PROCEDURES TEST NO. 106156-401 SHEET 103 OF 413

PART NO. 2-DAY CONFIG. {MAC / NAA} 14-DAY CONFIG. {MAC 52-52701 / NAA 99-106156}

6.2.2.1.1.2.5	Replace the flowmeter and related instrumentation on Bypass Assembly with clean short stainless steel tubing.
6.2.2.1.1.2.6	Open the OXID TANK VENT VALVE - 6A in Component Package "B".
6.2.2.1.1.2.7	Open the Oxidizer Purge Valve.
6.2.2.1.1.2.8	Open the #2 "Freon TF" Drain Valve connected to the Oxidizer Purge Valve.
6.2.2.1.1.2.9	Open the #1 GN_2 Supply Valve and admit 30 $\pm$2 psig GN_2 to the OXID CHG PORT - 11 in Component Package "C".
6.2.2.1.1.2.10	Open the OXID CHG VALVE - 11A in Component Package "C".
6.2.2.1.1.2.11	When "Freon TF" no longer flows from the #2 "Freon TF" Drain Valve, close the #1 GN_2 Supply Valve connected to Component Package "C".
6.2.2.1.1.2.12	Close the OXID CHG VALVE - 11A in Component Package "C".
6.2.2.1.1.2.13	Close the #2 "Freon TF" Drain Valve connected to the Oxidizer Purge Valve.
6.2.2.1.1.3	<u>System Clean</u>
6.2.2.1.1.3.1	Open the #2 GN_2 Supply Valve to supply 50 $\pm$2 psig GN_2 to the Oxidizer Purge Valve.
6.2.2.1.1.3.2	Open the #11, #12, #13, #14, #15 and #16 TCA Oxidizer Propellant Valves.

PREPARED BY:	DATE	APPROVED FOR NAA:	DATE
J. Mayne			
CHECKED BY:	DATE		
	6-29-64		6-29-64

DESIGN APPROVAL TEST
ORBIT ATTITUDE AND MANEUVER SYSTEM
(SE7)

NAME OF TEST DRAIN AND CLEAN PROCEDURES TEST NO. 106156-401 SHEET 104 OF 413

PART NO. 2-DAY CONFIG. {MAC ____ NAA ____ 14-DAY CONFIG. {MAC 52-52701 NAA 99-106156

6.2.2.1.1.3.3	After approximately six (6) minutes of actuation, deactuate these six (6) propellant valves.
6.2.2.1.1.3.4	Open the #1, #2, #3, #4, #5, #6, #7, #8, #9 and #10 TCA Oxidizer Propellant Valves.
6.2.2.1.1.3.5	After approximately ten (10) minutes of actuation, deactuate these ten (10) propellant valves.
6.2.2.1.1.3.6	Open the #1 "Freon TF" Drain Valve connected to Component Package "C".
6.2.2.1.1.3.7	Open the OXID CHG VALVE - 11A in Component Package "C".
6.2.2.1.1.3.8	After approximately thirty (30) seconds, close the OXID CHG VALVE - 11A in Component Package "C".
6.2.2.1.1.3.9	Close the #1 "Freon TF" Drain Valve connected to Component Package "C".
6.2.2.1.1.3.10	Close the Oxidizer Purge Valve.
6.2.2.1.1.3.11	Adjust the #2 GN_2 Supply to supply 125 ±5 psig to the Oxidizer Purge Valve.
6.2.2.1.1.3.12	Slowly open the Oxidizer Purge Valve.
6.2.2.1.1.3.13	Actuate all sixteen (16) of the TCA Oxidizer Propellant Valves.
6.2.2.1.1.3.14	After approximately three (3) minutes deactuate all sixteen (16) of the Oxidizer Propellant Valves.

PREPARED BY:	DATE	APPROVED FOR NAA:	DATE
J. Mayne			
CHECKED BY:	DATE		
[illegible]	6-29-64	[illegible]	6-29-64

DESIGN APPROVAL TEST
ORBIT ATTITUDE AND MANEUVER SYSTEM
(SE7)

NAME OF TEST DRAIN AND CLEAN PROCEDURES TEST NO. 106156-401 SHEET 105 OF 413

PART NO. 2-DAY CONFIG. {MAC ____ NAA ____ 14-DAY CONFIG. {MAC 52-52701 NAA 99-106156

.2.2.1.1.3.15	Actuate with 26 VDC the #14 and #16 TCA NTO propellant valves.
6.2.2.1.1.3.16	After GN_2 flow for approximately six (6) minutes at #14 and #16 TCA's, actuate with 26 VDC #11 and #12 TCA NTO propellant valves and then deactuate #14 and #16 TCA NTO valves.
6.2.2.1.1.3.17	After GN_2 flow for approximately six (6) minutes at #11 and #12 TCA's actuate with 26 VDC #13 and #15 TCA NTO propellant valves and then deactuate #11 and #12 TCA NTO valves.
6.2.2.1.1.3.18	After GN_2 flow for approximately six (6) minutes at #13 and #15 TCA's, actuate with 26 VDC #2 and #5 TCA's NTO propellant valves and then deactuate #13 and #15 TCA NTO valves.
6.2.2.1.1.3.19	After GN_2 flow for approximately three (3) minutes at #2 and #5 TCA's, actuate with 26 VDC #3 and #4 TCA NTO propellant valves and then deactuate #2 and #5 TCA NTO valves.
6.2.2.1.1.3.20	After GN_2 flow for approximately three (3) minutes at #3 and #4 TCA's, actuate with 26 VDC #9 and #10 TCA NTO propellant valves then deactuate #3 and #4 TCA NTO valves.
6.2.2.1.1.3.21	After GN_2 flow for approximately six (6) minutes at #9 and #10 TCA's, actuate with 26 VDC #7 and #8 TCA NTO propellant valves and then deactuate #9 and #10 TCA NTO valves.

PREPARED BY:	DATE	APPROVED FOR NAA:	DATE
J. Mayne			
CHECKED BY:	DATE		
	6-29-64		6-29-64

DESIGN APPROVAL TEST
ORBIT ATTITUDE AND MANEUVER SYSTEM
(SE7)

NAME OF TEST DRAIN AND CLEAN PROCEDURES TEST NO. 106156-401 SHEET 106 OF 413

PART NO. 2-DAY CONFIG. {MAC ____ NAA ____ 14-DAY CONFIG. {MAC 52-52701 NAA 99-106156

6.2.2.1.1.3.22	After GN_2 flow for approximately three (3) minutes at #7 and #8 TCA's, actuate with 26 VDC #1 and #6 TCA NTO propellant valves and then deactuate #7 and #8 TCA NTO valves.
6.2.2.1.1.3.23	After GN_2 flow for approximately three (3) minutes at #1 and #6 TCA's, actuate with 26 VDC #14 and #16 TCA NTO propellant valves and then deactuate #1 and #6 TCA NTO valves.
6.2.2.1.1.3.24	Repeat paragraphs 6.2.2.1.1.3.16 through 6.2.2.1.1.3.23 three (3) times.
6.2.2.1.1.3.25	Repeat paragraphs 6.2.2.1.1.3.16 through 6.2.2.1.1.3.22 one (1) time.
6.2.2.1.1.3.26	After GN_2 flow for approximately three (3) minutes at #1 and #6 TCA NTO valves, deactuate #1 and #6 TCA valves.
6.2.2.1.1.3.27	Open the OXID CHG VALVE - 11A in Component Package "C".
6.2.2.1.1.3.28	Open the #1 "Freon TF" Drain Valve connected to Component Package "C".
6.2.2.1.1.3.29	After approximately six (6) minutes, close the OXID CHG VALVE - 11A in Component Package "C".
6.2.2.1.1.3.30	Reduce the pressure to the OXID PURGE - 13 port to 0 psig.

PREPARED BY:	DATE	APPROVED FOR NAA:	DATE
J. Mayne			
CHECKED BY:	DATE		
[illegible]	6-29-64	[illegible]	6-29-64

R-15075-1

DESIGN APPROVAL TEST
ORBIT ATTITUDE AND MANEUVER SYSTEM
(SE7)

NAME OF TEST DRAIN AND CLEAN PROCEDURES TEST NO. 106156-401 SHEET 107 OF 413
PART NO. 2-DAY CONFIG. {MAC ____ NAA ____ 14-DAY CONFIG. {MAC 52-52701 NAA 99-106156

6.2.2.1.1.3.31	Disconnect the servicing connection from the Oxidizer Purge Valve and from the OXID CHG PORT - 11 in Component Package "C".
6.2.2.1.1.3.32	Open the OXID CHG VALVE - 11A in Component Package "C".
6.2.2.1.1.3.33	Connect an evacuation system to the OXID CHG PORT - 11 in Component Package "C" and to the OXID TANK VENT - 6 in Component Package "B". (Figure 31)
6.2.2.1.1.3.34	Close the Oxidizer Purge Valve.
6.2.2.1.1.3.35	Verify that the OXID CHG VALVE - 11A in Component Package "C" and the OXID TANK VENT VALVE - 6A in Component Package "B" are open.
6.2.2.1.1.3.36	Verify that the Vacuum Shutoff Valves are closed.
6.2.2.1.1.3.37	Turn on the evacuation system.
6.2.2.1.1.3.38	Open the #2 Vacuum Shutoff Valve connected to the OXID TANK VENT - 6 in Component Package "B".
6.2.2.1.1.3.39	Open the #1 Vacuum Shutoff Valve connected to the OXID CHG PORT - 11 in Component Package "C".
6.2.2.1.1.3.40	Vacuum dry the system for a minimum of 360 minutes.
6.2.2.1.1.3.41	Close the OXID TANK VENT VALVE - 6A in Component Package "B".
6.2.2.1.1.3.42	Turn off the evacuation system.
6.2.2.1.1.3.43	Open the OXID TANK VENT VALVE - 6A in Component Package "B".

PREPARED BY:	DATE	APPROVED FOR NAA:	DATE
J. Mayne			
CHECKED BY:	DATE		
	6-29-64		6-29-64

DESIGN APPROVAL TEST
ORBIT ATTITUDE AND MANEUVER SYSTEM
(SE7)

NAME OF TEST DRAIN AND CLEAN PROCEDURES TEST NO. 106156-401 SHEET 108 OF 413
PART NO. 2-DAY CONFIG. {MAC / NAA} 14-DAY CONFIG. {MAC 52-52701 / NAA 99-106156}

6.2.2.1.1.3.44 Disconnect the evacuation system from the OXID CHG PORT - 11 in Component Package "C" and from the OXID TANK VENT - 6 in Component Package "B".

6.2.2.1.1.3.45 Close the OXID CHG VALVE - 11A, install caps on the OXID CHG VALVE - 11A and OXID CHG PORT - 11 in Component Package "C".

6.2.2.1.1.3.46 Close the OXID TANK VENT VALVE - 6A and replace caps on the OXID TANK VENT VALVE - 6A and OXID TANK VENT - 6 in Component Package "B".

6.2.2.1.1.3.47 Remove the Bypass Assembly P/N 99-103326 from Component Package "C" and install a cartridge valve, P/N NA5-28081T1 per Rocketdyne Drawing 406886.

6.2.2.1.2 Alcohol Drain and Clean Procedure

6.2.2.1.2.1 System Condition

The Engine System is full of safety fluid from the propellant tank to the TCA's. All valves are considered closed except the tank isolation cartridge valves are replaced by Bypass Assemblies and the PSOV is open. The TCA throat seals and service connections are installed per Figure 30.

6.2.2.1.2.2 Alcohol Drain

6.2.2.1.2.2.1 Open the #1 Alcohol Drain Valve connected to Component Package "D".

PREPARED BY: J. Mayne	DATE	APPROVED FOR NAA:	DATE
CHECKED BY: [illegible]	DATE 6-29-64	[illegible]	6-29-64

DESIGN APPROVAL TEST
ORBIT ATTITUDE AND MANEUVER SYSTEM
(SE7)

NAME OF TEST DRAIN AND CLEAN PROCEDURES TEST NO. 106156-401 SHEET 109 OF 413

PART NO. 2-DAY CONFIG. {MAC / NAA} 14-DAY CONFIG. {MAC 52-52701 / NAA 99-106156}

6.2.2.1.2.2.2	Open the FUEL CHG VALVE - 15A in Component Package "D".
6.2.2.1.2.2.3	When liquid stops flowing from the #1 Alcohol Drain Valve, close FUEL CHG VALVE - 15A in Component Package "D".
6.2.2.1.2.2.4	Close the #1 Alcohol Drain Valve connected to Component Package "D".
6.2.2.1.2.2.5	Replace the flowmeter and related instrumentation on Bypass Assembly with clean short stainless steel tubing.
6.2.2.1.2.2.6	Open the FUEL TANK VENT VALVE - 4A in Component Package "B".
6.2.2.1.2.2.7	Open the Fuel Purge Valve.
6.2.2.1.2.2.8	Open the #2 Alcohol Drain Valve connected to the Fuel Purge Valve.
6.2.2.1.2.2.9	Open the #1 GN_2 Supply Valve and admit 30 $\pm$2 psig GN_2 to the FUEL CHG PORT - 15 in Component Package "D".
6.2.2.1.2.2.10	Open the FUEL CHG VALVE - 15A in Component Package "D".
6.2.2.1.2.2.11	When alcohol no longer flows from the #2 Alcohol Drain Valve, close the #1 GN_2 Supply Valve connected to Component Package "D".
6.2.2.1.2.2.12	Close the #1 GN_2 Supply Valve connected to the FUEL CHG VALVE - 15A in Component Package "D".
6.2.2.1.2.2.13	Close the #2 Alcohol Drain Valve connected to the Fuel Purge Valve.

PREPARED BY:	DATE	APPROVED FOR NAA:	DATE
J. Mayne		[illegible]	6-29-64
CHECKED BY: [illegible]	DATE 6-29-64		

DESIGN APPROVAL TEST
ORBIT ATTITUDE AND MANEUVER SYSTEM
(SE7)

NAME OF TEST DRAIN AND CLEAN PROCEDURES TEST NO. 106156-401 SHEET 110 OF 413
PART NO. 2-DAY CONFIG. {MAC / NAA} 14-DAY CONFIG. {MAC 52-52701 / NAA 99-106156}

6.2.2.1.2.3	System Clean
6.2.2.1.2.3.1	Open the #2 GN_2 Supply Valve to supply 50 ±2 psig GN_2 to the Fuel Purge Valve.
6.2.2.1.2.3.2	Open the #11, #12, #13, #14, #15 and #16 TCA Fuel Propellant Valves.
6.2.2.1.2.3.3	After approximately six (6) minutes of actuation, deactuate these six (6) propellant valves.
6.2.2.1.2.3.4	Open the #1, #2, #3, #4, #5, #6, #7, #8, #9 and #10 TCA Fuel Propellant Valves.
6.2.2.1.2.3.5	After approximately ten (10) minutes of actuation, deactuate these ten (10) propellant valves.
6.2.2.1.2.3.6	Open the #1 Alcohol Drain Valve connected to Component Package "D".
6.2.2.1.2.3.7	Open the FUEL CHG VALVE - 15A in Component Package "D".
6.2.2.1.2.3.8	After approximately thirty (30) seconds, close the FUEL CHG VALVE - 15A in Component Package "D".
6.2.2.1.2.3.9	Close the #1 Alcohol Drain Valve connected to Component Package "D".
6.2.2.1.2.3.10	Close the Fuel Purge Valve.
6.2.2.1.2.3.11	Adjust the #2 GN_2 Supply to supply 125 ±5 psig to the Fuel Purge Valve.

PREPARED BY:	DATE	APPROVED FOR NAA:	DATE
J. Mayne			
CHECKED BY:	DATE		
	6-29-64		6-29-64

DESIGN APPROVAL TEST
ORBIT ATTITUDE AND MANEUVER SYSTEM
(SE7)

NAME OF TEST DRAIN AND CLEAN PROCEDURES TEST NO. 106156-401 SHEET 111 OF 413
PART NO. 2-DAY CONFIG. {MAC / NAA} 14-DAY CONFIG. {MAC 52-52701 / NAA 99-106156}

.2.2.1.2.3.12	Slowly open the Fuel Purge Valve.
6.2.2.1.2.3.13	Actuate all sixteen (16) of the TCA Fuel Propellant Valves.
6.2.2.1.2.3.14	After approximately three (3) minutes deactuate all sixteen (16) of these Fuel Propellant Valves.
6.2.2.1.2.3.15	Actuate with 26 VDC the #14 and #16 TCA MMH propellant valves.
6.2.2.1.2.3.16	After GN_2 flow for approximately six (6) minutes at #14 and #16 TCA's, actuate with 26 VDC #11 and #12 TCA MMH propellant valves and then deactuate #14 and #16 TCA MMH valves.
6.2.2.1.2.3.17	After GN_2 flow for approximately six (6) minutes at #11 and #12 TCA's, actuate with 26 VDC #13 and #15 TCA MMH propellant valves and then deactuate #11 and #12 TCA MMH valves.
6.2.2.1.2.3.18	After GN_2 flow for approximately six (6) minutes at #13 and #15 TCA's, actuate with 26 VDC #2 and #5 TCA's MMH propellant valves and then deactuate #13 and #15 TCA MMH valves.
6.2.2.1.2.3.19	After GN_2 flow for approximately three (3) minutes at #2 and #5 TCA's, actuate with 26 VDC #3 and #4 TCA MMH propellant valves and then deactuate #2 and #5 TCA MMH valves.

PREPARED BY: J. Mayne	DATE	APPROVED FOR NAA:	DATE
CHECKED BY: [illegible]	DATE 6-29-64	[illegible]	6-29-64

DESIGN APPROVAL TEST
ORBIT ATTITUDE AND MANEUVER SYSTEM
(SE7)

NAME OF TEST DRAIN AND CLEAN PROCEDURES TEST NO. 106156-401 SHEET 112 OF 413

PART NO. 2-DAY CONFIG. {MAC ____ NAA ____} 14-DAY CONFIG. {MAC 52-52701 NAA 99-106156}

6.2.2.1.2.3.20	After GN_2 flow for approximately three (3) minutes at #3 and #4 TCA's, actuate with 26 VDC #9 and #10 TCA MMH propellant valves and then deactuate #3 and #4 TCA MMH valves.
6.2.2.1.2.3.21	After GN_2 flow for approximately six (6) minutes at #9 and #10 TCA's, actuate with 26 VDC #7 and #8 TCA MMH propellant valves and then deactuate #9 and #10 TCA MMH valves.
6.2.2.1.2.3.22	After GN_2 flow for approximately three (3) minutes at #7 and #8 TCA's, actuate with 26 VDC #1 and #6 TCA MMH propellant valves and then deactuate #7 and #8 TCA MMH valves.
6.2.2.1.2.3.23	After GN_2 flow for approximately three (3) minutes at #1 and #6 TCA's, actuate with 26 VDC #14 and #16 TCA MMH propellant valves and then deactuate #1 and #6 TCA MMH valves.
6.2.2.1.2.3.24	Repeat paragraphs 6.2.2.1.2.3.16 through 6.2.2.1.2.3.23 three (3) times.
6.2.2.1.2.3.25	Repeat paragraphs 6.2.2.1.2.3.16 through 6.2.2.1.2.3.22 one (1) time.
6.2.2.1.2.3.26	After GN_2 flow for approximately three (3) minutes at #1 and #6 TCA MMH valves, deactuate #1 and #6 TCA MMH valves.
6.2.2.1.2.3.27	Open the FUEL CHG VALVE - 15A in Component Package "D".

PREPARED BY: J. Mayne	DATE	APPROVED FOR NAA:	DATE
CHECKED BY:	DATE 6-29-64		6-29-64

DESIGN APPROVAL TEST
ORBIT ATTITUDE AND MANEUVER SYSTEM
(SE7)

NAME OF TEST DRAIN AND CLEAN PROCEDURES TEST NO. 106156-401 SHEET 113 OF 413

PART NO. 2-DAY CONFIG. {MAC / NAA} 14-DAY CONFIG. {MAC 52-52701 / NAA 99-106156}

6.2.2.1.2.3.28	Open the #1 Alcohol Drain Valve connected to Component Package "D".
6.2.2.1.2.3.29	After approximately six (6) minutes, close the FUEL CHG VALVE - 15A in Component Package "D".
6.2.2.1.2.3.30	Reduce the pressure to the FUEL PURGE - 16 port to 0 psig.
6.2.2.1.2.3.31	Disconnect the servicing connection from the Fuel Purge Valve and from the FUEL CHG PORT - 15 in Component Package "D".
6.2.2.1.2.3.32	Open the FUEL CHG VALVE - 15A in Component Package "D".
6.2.2.1.2.3.33	Connect an evacuation system to the FUEL CHG PORT - 15 in Component Package "D" and to the FUEL TANK VENT - 4 in Component Package "B". (Figure 32).
6.2.2.1.2.3.34	Close the Fuel Purge Valve.
6.2.2.1.2.3.35	Verify that the FUEL CHG VALVE - 15A in Component Package "D" and the FUEL TANK VENT VALVE - 4A in Component Package "B" are open.
6.2.2.1.2.3.36	Verify that the Vacuum Shutoff Valves are closed.
6.2.2.1.2.3.37	Turn on the evacuation system.
6.2.2.1.2.3.38	Open the #2 Vacuum Shutoff Valve connected to the FUEL TANK VENT - 4 in Component Package "B".

PREPARED BY:	DATE	APPROVED FOR NAA:	DATE
J. Mayne			
CHECKED BY:	DATE		
	6-29-64		6-29-64

DESIGN APPROVAL TEST
ORBIT ATTITUDE AND MANEUVER SYSTEM
(SE7)

NAME OF TEST DRAIN AND CLEAN PROCEDURES TEST NO. 106156-401 SHEET 114 OF 413

PART NO. 2-DAY CONFIG. {MAC ____ NAA ____ 14-DAY CONFIG. {MAC 52-52701 NAA 99-106156

6.2.2.1.2.3.39	Open the #1 Vacuum Shutoff Valve connected to the FUEL CHG PORT - 11 in Component Package "D".
6.2.2.1.2.3.40	Vacuum dry the system for a minimum of 360 minutes.
6.2.2.1.2.3.41	Close the FUEL TANK VENT VALVE - 4A in Component Package "B".
6.2.2.1.2.3.42	Turn off the evacuation system.
6.2.2.1.2.3.43	Open the FUEL TANK VENT VALVE - 4A in Component Package "B".
6.2.2.1.2.3.44	Disconnect the evacuation system from the FUEL CHG PORT - 15 in Component Package "D" and from the FUEL TANK VENT - 4 in Component Package "B".
6.2.2.1.2.3.45	Close the FUEL CHG VALVE - 15A, install caps on the FUEL CHG VALVE - 15A and FUEL CHG PORT - 15 in Component Package "D".
6.2.2.1.2.3.46	Close the FUEL TANK VENT VALVE - 4A and replace caps on the FUEL TANK VENT VALVE - 4A and FUEL TANK VENT - 4 in Component Package "B".
6.2.2.1.2.3.47	Remove the Bypass Assembly P/N 99-103326 from Component Package "D" and install a cartridge valve, P/N NA5-28081T1 per Rocketdyne Drawing 406887.

PREPARED BY:	DATE	APPROVED FOR NAA:	DATE
J. Mayne			
CHECKED BY:	DATE		
	6-29-64		6-29-64

DESIGN APPROVAL TEST
ORBIT ATTITUDE AND MANEUVER SYSTEM
(SE7)

NAME OF TEST DRAIN AND CLEAN PROCEDURES TEST NO. 106156-401 SHEET 115 OF 413
PART NO. 2-DAY CONFIG. {MAC / NAA} 14-DAY CONFIG. {MAC 52-52701 / NAA 99-106156}

6.2.2.2 Vibration, Tank Module Only

6.2.2.2.1 "Freon MF" Drain and Clean Procedure

6.2.2.2.1.1 System (Tank Module) Condition

The Tank Module is full of safety fluid from the propellant tank to the PSOV. All valves are considered closed except the cartridge valves in Packages "C" and "D" are fired. The service connections are installed per Figure 33.

NOTE: Torque values of Table 1 shall be utilized at all times.

6.2.2.2.1.2 "Freon MF" Drain

6.2.2.2.1.2.1 Open the OXID CHG VALVE - 11A in Component Package "C".

6.2.2.2.1.2.2 Open the OXID TANK VENT VALVE - 6A in Component Package "B".

6.2.2.2.1.2.3 Open the Oxidizer Purge Valve.

6.2.2.2.1.2.4 Open the "Freon MF" Drain Valve connected to the Oxidizer Purge Valve.

6.2.2.2.1.2.5 Open the #1 GN_2 Supply Valve and admit 30 $\pm$2 psig GN_2 through the OXID CHG PORT - 11 in Component Package "C".

6.2.2.2.1.2.6 When "Freon MF" no longer flows from the "Freon MF" Drain Valve, close the #1 GN_2 Supply Valve connected to Component Package "C".

PREPARED BY:	DATE	APPROVED FOR NAA:	DATE
J. Mayne			
CHECKED BY:	DATE		
	6-29-64		6-29-64

DESIGN APPROVAL TEST
ORBIT ATTITUDE AND MANEUVER SYSTEM
(SE7)

NAME OF TEST DRAIN AND CLEAN PROCEDURES TEST NO. 106156-401 SHEET 116 OF 413
PART NO. 2-DAY CONFIG. {MAC ____ NAA ____ 14-DAY CONFIG. {MAC 52-52701 NAA 99-106156

6.2.2.2.1.2.7	Close the OXID CHG VALVE - 11A in Component Package "C".	
6.2.2.2.1.2.8	Close the "Freon MF" Drain Valve connected to the Oxidizer Purge Valve.	
6.2.2.2.1.3	"Freon MF" Purge	
6.2.2.2.1.3.1	Slowly open the #2 GN_2 Supply Valve connected to the Oxidizer Purge Valve to supply 90 ±5 psig GN_2 to the Oxidizer Purge Valve.	B
6.2.2.2.1.3.2	Open the facility Vent Valve connected to Component Package "C".	
6.2.2.2.1.3.3	Open the OXID CHG VALVE - 11A in Component Package "C".	
6.2.2.2.1.3.4	After sixty (60) minutes, close the #2 GN_2 Supply Valve connected to the Oxidizer Purge Valve and allow pressure to decay to 0 psig.	
6.2.2.2.1.3.5	Close the OXID CHG VALVE - 11A in Component Package "C".	
6.2.2.2.1.3.6	Close the Oxidizer Purge Valve.	
6.2.2.2.1.3.7	Close the OXID TANK VENT VALVE - 6A in Component Package "B".	
6.2.2.2.1.3.8	Remove the Facility Vent and #1 GN_2 supply from OXID CHG PORT - 11 and replace caps on OXID CHG PORT - 11 and OXID CHG VALVE - 11A in Component Package "C".	

PREPARED BY:	DATE	APPROVED FOR NAA:	DATE
J. Mayne			
CHECKED BY:	DATE		
[illegible]	6-29-64	[illegible]	6-29-64

DESIGN APPROVAL TEST
ORBIT ATTITUDE AND MANEUVER SYSTEM
(SE7)

NAME OF TEST DRAIN AND CLEAN PROCEDURES TEST NO. 106156-401 SHEET 117 OF 413

PART NO. 2-DAY CONFIG. {MAC / NAA} 14-DAY CONFIG. {MAC 52-52701 / NAA 99-106156}

6.2.2.2.1.3.9 Remove purge lines from OXID PURGE - 13, install new "O" Rings P/N RD-262-4014-1002 on the redundant caps and replace redundant caps in OXID PURGE - 13.

6.2.2.2.1.3.10 Remove Filter and line from OXID TANK VENT - 6 and install caps on OXID TANK VENT - 6 and OXID TANK VENT VALVE - 6A in Component Package "B".

6.2.2.2.2 Alcohol Drain and Clean Procedure

6.2.2.2.2.1 System (Tank Module) Condition

The Tank Module is full of safety fluid from the propellant tank to the PSOV. All valves are considered closed except the cartridge valves in Packages "C" and "D" are fired. The service connections are installed per Figure 34.

NOTE: Torque values of Table 1 shall be utilized at all times.

6.2.2.2.2.2 Alcohol Drain

6.2.2.2.2.2.1 Open the FUEL CHG VALVE - 15A in Component Package "D".

6.2.2.2.2.2.2 Open the FUEL TANK VENT VALVE - 4A in Component Package "B".

6.2.2.2.2.2.3 Open the Fuel Purge Valve.

6.2.2.2.2.2.4 Open the Alcohol Drain Valve connected to the Fuel Purge Valve.

PREPARED BY: J. Mayne	DATE	APPROVED FOR NAA:	DATE
CHECKED BY:	DATE 6-29-64		6-29-64

DESIGN APPROVAL TEST
ORBIT ATTITUDE AND MANEUVER SYSTEM
(SE7)

NAME OF TEST DRAIN AND CLEAN PROCEDURES TEST NO. 106156-401 SHEET 118 OF 413
PART NO. 2-DAY CONFIG. {MAC / NAA} 14-DAY CONFIG. {MAC 52-52701 / NAA 99-105156}

6.2.2.2.2.2.5	Open the #1 GN_2 Supply Valve and admit 30 ±2 psig GN_2 through the FUEL CHG PORT - 15 in Component Package "D".
6.2.2.2.2.2.6	When alcohol no longer flows from the Alcohol Drain Valve, close the #1 GN_2 Supply Valve connected to Component Package "D".
6.2.2.2.2.2.7	Close the FUEL CHG VALVE - 15A in Component Package "D".
6.2.2.2.2.2.8	Close the Alcohol Drain Valve connected to the Fuel Purge Valve.
6.2.2.2.2.3	Alcohol Purge
6.2.2.2.2.3.1	Slowly open the #2 GN_2 Supply Valve connected to the Fuel Purge Valve to supply 90 ±5 psig GN_2 to the Fuel Purge Valve. B
6.2.2.2.2.3.2	Open the facility Vent Valve connected to Component Package "D".
6.2.2.2.2.3.3	Open the FUEL CHG VALVE - 15A in Component Package "D".
6.2.2.2.2.3.4	After sixty (60) minutes close the #2 GN_2 Supply Valve connected to the Fuel Purge Valve and allow the pressure to decay to 0 psig.
6.2.2.2.2.3.5	Close the FUEL CHG VALVE - 15A in Component Package "D".
6.2.2.2.2.3.6	Close the Fuel Purge Valve.
6.2.2.2.2.3.7	Close the FUEL TANK VENT VALVE - 4A in Component Package "B".

PREPARED BY:	DATE	APPROVED FOR NAA:	DATE
J. Mayne			
CHECKED BY:	DATE		
	6-29-64		6-29-64

DESIGN APPROVAL TEST
ORBIT ATTITUDE AND MANEUVER SYSTEM
(SE7)

NAME OF TEST DRAIN AND CLEAN PROCEDURES TEST NO. 106156-401 SHEET 119 OF 413

PART NO. 2-DAY CONFIG. {MAC / NAA} 14-DAY CONFIG. {MAC 52-52701 / NAA 99-106156}

6.2.2.2.3.8	Remove the Facility Vent and GN_2 Supply from FUEL CHG PORT - 15 and replace caps on FUEL CHG PORT - 15 and FUEL CHG VALVE - 15A in Component Package "D".
6.2.2.2.2.3.9	Remove Purge lines from FUEL PURGE - 16, install new "O" Rings P/N RD-262-4014-1001 in the redundant caps and replace redundant caps in FUEL PURGE - 16.
6.2.2.2.2.3.10	Remove Filter and line from FUEL TANK VENT - 4 and install caps on FUEL TANK VENT - 4 and FUEL TANK VENT VALVE - 6A in Component Package "B".

PREPARED BY:	DATE	APPROVED FOR NAA:	DATE
J. Mayne			
CHECKED BY:	DATE		
[illegible]	6-29-64	[illegible]	6-29-64

DESIGN APPROVAL TEST
ORBIT ATTITUDE AND MANEUVER SYSTEM (SE7)

NAME OF TEST HOT FIRE FACILITY INSTALLATION TEST NO. 106156-401 SHEET 120 OF 413
PART NO. 2-DAY CONFIG. {MAC ____ NAA ____ 14-DAY CONFIG. {MAC 52-52701 NAA 99-106156

6.3 Hot Fire Test Facility Installation

6.3.1 General

6.3.1.1 The Engine System for test shall be in accordance with Rocketdyne Drawing 99-106156, Figure 61 and the following:

6.3.1.1.1 The OAMS adapter structure, P/N 99-103490 (Reference: Paragraph 3.1.2.2), Trunnion Spider adapter system, P/N 103430, (Reference: Paragraph 3.1.2.2.1); the Sub Frame Assembly, P/N 99-103420, (Reference: Paragraph 3.1.2.3); the Vertical Support structure, P/N 99-103356, (Reference: Paragraph 3.1.2.4); the Structure Cover and Flame Insert, P/N 99-103760, (Reference: Paragraph 3.1.2.5) and the Diffuser, P/N 99-103389, (Reference: Paragraph 3.1.2.6) shall be employed during the test of paragraphs 7.5 and 7.6.

6.3.1.1.2 Special tube assemblies with "Dynatube" to "AN" type fittings shall be provided for installation of instrumentation at the Component Package "B" RFG OUT TEST-3 port, Component Package "C" OXID TEST PORT-12 and Component Package "D" FUEL TEST PORT-14.

6.3.1.2 Cleanliness requirements with respect to instrumentation and facility connections to the Engine System shall be in accordance with paragraph 3.9.

6.3.1.2.1 Whenever a hot fire test is not eminent, and the entire Engine System can not be adequately protected from exposure, the TCA exit nozzles shall be covered.

6.3.1.3 Maintenance of the Engine System shall be in accordance with paragraph 3.5.

PREPARED BY:	DATE	APPROVED FOR NAA:	DATE
E. Charles		[illegible]	11-30-64
CHECKED BY: [illegible]	11-23-64		

DESIGN APPROVAL TEST
ORBIT ATTITUDE AND MANEUVER SYSTEM
(SE7)

NAME OF TEST HOT FIRE FACILITY INSTALLATION TEST NO. 106156-401 SHEET 121 OF 413
PART NO. 2-DAY CONFIG. {MAC ____ NAA ____} 14-DAY CONFIG. {MAC 52-52701 NAA 99-106156}

6.3.1.3.1 Opening and closing of the Engine System manual valves and test ports shall be in accordance with paragraph 3.5.1.3 and Table I.

6.3.1.4 Special storage and handling of the magnetic tape required for conducting the Mission Duty Cycle Tests shall be in accordance with IL 4331-3068.

6.3.2 Installation

6.3.2.1 Provide an SE7 Manually Programmed and Tape Programmed Engine Firing Control System as described, respectively, in Rocketdyne Specifications SFM 3331-3013 and SFM 3331-3004 and schematically shown in Rocketdyne Drawings 99-501803 and 99-501804.

6.3.2.2 There will be one (1) exception to the Engine Firing Control System provided for test in accordance with Rocketdyne Drawing 99-501803.

6.3.2.2.1 The Auxiliary Pressurizing Solenoid Valve shall not be installed.

6.3.2.3 Provide propellant loading capabilities in accordance with paragraph 6.1.2.

6.3.2.4 Provide pressurant loading capabilities in accordance with paragraph 6.1.1.1.

6.3.2.5 Provide the pressure regulator reference pressure cavity evacuation system in accordance with paragraph 3.1.3.2.4 and Figure 40.

6.3.2.6 Instrumentation requirements shall be in accordance with paragraph 3.8, Figure 61 and Tables 5, 6 and 7.

PREPARED BY:	DATE	APPROVED FOR NAA:	DATE
E. Charles		R H Eide	11-30-64
CHECKED BY:	DATE		
[illegible]	11-23-64		

DESIGN APPROVAL TEST
ORBIT ATTITUDE AND MANEUVER SYSTEM
(SE7)

NAME OF TEST HOT FIRE FACILITY INSTALLATION TEST NO. 106156-401 SHEET 122 OF 413
PART NO. 2-DAY CONFIG. {MAC ____ NAA ____ 14-DAY CONFIG. {MAC 52-52701 NAA 99-106156

6.3.3	Test Conditions
6.3.3.1	The Hot Fire Calibration tests of paragraph 7.6 shall be conducted at the following environmental conditions:
6.3.3.1.1	Temperature shall be local ambient.
6.3.3.1.2	Pressure shall be local ambient.
6.3.3.2	The Mission Duty Cycle Test of paragraph 7.5 shall be conducted under the following environmental conditions.
6.3.3.2.1	Temperature
6.3.3.2.1.1	Prior to commencing the MDC the Engine System components shall be pre-conditioned and demonstrate a stabilized value of 160 $\pm 5^{\circ}$ F for a minimum period of two (2) hours.
6.3.3.2.1.2	During the MDC the test facility temperature conditioning system shall provide a hot gas supply of 160 $\pm 5^{\circ}$ F to the Engine System throughout the test; the Engine System components shall be permitted to seek their own thermal equilibrium.
6.3.3.2.2	Pressure
6.3.3.2.2.1	Environmental pressure shall be local ambient.
6.3.3.2.2.2	The Engine System regulator reference cavity shall be evacuated to 1 $\pm .5$ psia prior to initiating the hot fire.

PREPARED BY:	DATE	APPROVED FOR NAA:	DATE
E.Charles			
CHECKED BY:	DATE		
12-23-64		12-21-64	

IL 5388-6052

INTERNAL LETTER
North American Aviation, Inc.

DATE 12 October 1965

TO Those Concerned
Address

FROM Gemini DAT-RAT Unit
Address D/896-388

SUBJECT SE-7 Engine System DAT - S/C-3.

REFERENCE (a) Test Procedure 106156-401.

cc:
R. [illegible]ius
[illegible]-388
E. Charles
896-388
R. Weaver
896-388
C. Hann
096-204
W. Pilipski
[illegible]6-204
A. Schauer
096-204
B. Kelly
NAAQC

The following changes shall be made to the above referenced test procedure:

* 1. Paragraph 6.1.2.1.1.4.6 - Change to read: "Continue to fill until propellant no longer flows into the system as determined by viewing the tanking equipment sight gauges."

* 2. Paragraphs 6.1.2.1.1.4.9 - Change to read: "Determine volume to be detanked from Figure 25".

* 3. Paragraphs 6.1.2.1.1.4.10 - Change to read: "Detanking."

4. Paragraph 6.4.2.2.1.2 - Add the requirement to heavily insulate the propellant tanks.

5. Paragraph 6.3.3.2.1.1 - Change to read: "Prior to commencing the MDC the Engine System Components shall be pre-conditioned to a temperature of 160 ± 5 F with the exception of the propellant tanks which shall be pre-conditioned to 90 ± 10 F.

6. Paragraph 6.4.2.2.1.6.2 - Delete.

7. Paragraph 6.4.2.2.1.6.3 - Change "1 ± .5 psia" to "1.5 psia or less."

8. Table 6 - E.A. recorder shall be kept on fast until 38 seconds of run time has elapsed.

9. Paragraph 6.4.2.2.1.6.4 - Because of an error in the magnetic tape it shall be necessary to fire TCA #15 manually at 12579, 12611, 12664 and 12766 seconds of elapsed run time. The durations are 20, 47, 16 and 33 seconds, respectively.

* 10. Table 6 - After cutoff inch DIGRs manually once every five minutes to obtain maximum TCA soakback temperature.

for
T. G. Kniffin
Gemini DAT-RAT Unit

Approved:
R. G. Eide
Supervisor
Gemini DAT-RAT Unit

for
S. Scott
MAC Engineering

* Incorporated in specification.

Retyped from original, dated 5 February 1965

DESIGN APPROVAL TEST
ORBIT ATTITUDE AND MANEUVER SYSTEM
(SE7)

NAME OF TEST HOT FIRE TEST PROCEDURES TEST NO. 106156-401 SHEET 123 OF 413

PART NO. 2-DAY CONFIG. {MAC ____ NAA ____ 14-DAY CONFIG. {MAC 52-52701 NAA 99-106156

6.4 Hot Fire Test Procedures

6.4.1 Preparation for conducting the tests of paragraphs 7.5 and 7.6 shall be in accordance with this paragraph.

6.4.1.1 Select the applicable Engine Firing Control System for test.

6.4.1.1.1 The SE7 Manually Programmed Engine Firing Control System shall be employed for the tests of paragraph 7.6.

6.4.1.1.2 The SE7 Tape Programmed Engine Firing Control System shall be employed for the tests of paragraph 7.5.

6.4.1.1.2.1 Mission Duty Cycle OSM-404 and OSA-306 (Reference a) shall be provided on a magnetic tape for controlling firing commands to the Engine System TCA's and the instrumentation sequencing of Table 6 .

6.4.1.2 Conduct a checkout of the Applicable Engine Firing Control System to verify electrical continuity and proper connection of the electrical harnesses.

6.4.1.3 Verify that the instrumentation of Table 5 has been installed and perform the required pre-test pressure verifications.

6.4.1.4 Verify the following on the Engine System:

(a) Component Package "A"

(1) HI PRESS GAS CHG VALVE - 1A is open and capped
(2) HI PRESS GAS TEST VALVE - 2A is closed and port 2 and 2A capped.

PREPARED BY:	DATE	APPROVED FOR NAA:	DATE
E. Charles		R. Eide	11-30-64
CHECKED BY: Tadmus	11-23-64		

DESIGN APPROVAL TEST
ORBIT ATTITUDE AND MANEUVER SYSTEM
(SE7)

NAME OF TEST HOT FIRE TEST PROCEDURES TEST NO. 106156-401 SHEET 124 OF 413
PART NO. 2-DAY CONFIG. {MAC ____ NAA ____ 14-DAY CONFIG. {MAC 52-52701 NAA 99-106156

6.4.1.4 (continued)

(b) Component Package "E"

(1) BYPASS VALVE TEST - 19A is open and capped

(c) Component Package "B"

(1) FUEL TANK VENT VALVE - 4A is open and capped
(2) INTER CHECK VALVE TEST - 5 is capped
(3) OXID TANK VENT VALVE - 6A is open and capped
(4) RELIEF VALVE TEST OXID - 7 is capped
(5) RELIEF VALVE TEST FUEL - 8 is capped
(6) OXID RELIEF VENT - 9 is open
(7) FUEL RELIEF VENT - 10 is open

(d) Oxidizer Tank

(1) The valve connected to the OXID PURGE - 13 port shall be closed.

(e) Fuel tank

(1) The valve connected to the FUEL PURGE - 16 port shall be closed.

(f) Component Package "C"

(1) OXID CHG VALVE - 11A shall be closed and capped; also the OXID CHG PORT - 11 capped.
(2) OXID TEST VALVE - 12A is open and capped

PREPARED BY: E. Charles	DATE	APPROVED FOR NAA:	DATE
CHECKED BY: 12-23-64	DATE	12-28-64	

DESIGN APPROVAL TEST
ORBIT ATTITUDE AND MANEUVER SYSTEM
(SE7)

TEST NO. HOT FIRE TEST PROCEDURES SHEET 125 OF 413
PART NO. 2-DAY CONFIG. MAC ____ NAA ____ 14-DAY CONFIG. MAC 52-52701 NAA 99-106156

6.4.1.4 (continued)

(g) Component Package "D"

(1) FUEL CHG VALVE - 15A shall be closed and capped and the FUEL CHG PORT - 15 capped.

(2) FUEL TEST VALVE - 14A is open and capped.

(h) Propellant Shutoff Valves (PSOV) in the oxidizer and fuel manifolds shall be open.

NOTE: Torque values and Manual Valve operation shall be as defined in Table 1.

6.4.1.5 Throat measurements of each Engine System TCA shall be performed and recorded on the data sheets. Pre and Post measurements shall be performed on the initial hot fire test of the TCA; subsequent measurements shall be performed post test only.

6.4.2 Hot Fire Mission Duty Cycle Tests

6.4.2.1 General

6.4.2.1.1 Perform the procedures described in paragraph 6.4.1

6.4.2.1.2 A "dry-run" of the tape programmed Mission Duty Cycle Test is required prior to initiating the actual test. The "dry run" is required to insure the following:

(a) Fulfillment of the TCA firing sequencing and durations specified in OSA-306 and OSM-404.

(b) Proper scheduling of the data sampling.

PREPARED BY: E.Charles	DATE	APPROVED FOR NAA: B Geide 12-28-64	DATE
CHECKED BY: 12-28-64	DATE		

DESIGN APPROVAL TEST
ORBIT ATTITUDE AND MANEUVER SYSTEM
(SE7)

NAME OF TEST HOT FIRE TEST PROCEDURES TEST NO. 106156-401 SHEET 126 OF 413

PART NO. 2-DAY CONFIG. {MAC ____ NAA ____ 14-DAY CONFIG. {MAC 52-52701 NAA 99-106156

6.4.2.1.2.1 The "dry run" will consist of the following:

(a) Disconnect **at the Engine System bulkhead bracket the** electrical harnesses J33 and J34 connectors (Reference: Rocketdyne Drawing 99-501803) from the Power Distribution Panel supply cables, P/N 99-9017040-11 and 99-9017040-21.

(b) Connect the P33 and P34 connectors of the Power Distribution Panel supply cables to the test facility Engine System simulator electrical box.

(c) Operate the tape programmed control system for the complete Duty Cycle (including all data recording).

(d) Verify from the recorded data that the sequence of events and firing durations are in accordance with the requirements of the Mission Duty Cycles OSM-404 and OSA-306.

(e) Verify that the data recording sequencing is in accordance with Table 6.

(f) Disconnect the P33 and P34 connectors of the Power Distribution Panel supply cables from the facility Engine System simulator electrical box.

(g) Connect the P33 and P34 connectors of step (f) to the Engine System J33 and J34 connectors at the Engine System bulkhead.

6.4.2.2 Mission Duty Cycle High Temperature Test.

6.4.2.2.1 <u>General</u>

6.4.2.2.1.1 Load the Engine System propellant tanks in accordance with paragraph 6.1.2.1.

PREPARED BY:	DATE	APPROVED FOR NAA:	DATE
E.Charles			
CHECKED BY:	DATE		
[illegible]	12-28-64	[illegible]	12-28-64

DESIGN APPROVAL TEST
ORBIT ATTITUDE AND MANEUVER SYSTEM
(SE7)

NAME OF TEST HOT FIRE TEST PROCEDURES TEST NO. 106156-401 SHEET 127 OF 413
PART NO. 2-DAY CONFIG. {MAC ____ NAA ____ 14-DAY CONFIG. {MAC 52-52701 NAA 99-106156

6.4.2.2.1.1.1	Oxidizer, Nitrogen Tetroxide, quantity shall be such that the total load is 245.8 lb.
6.4.2.2.1.1.2	Fuel, Monomethyl Hydrazine, quantity shall be such that the total load is 155.3 lb.
6.4.2.2.1.2	Install the Special Covers, P/N 99-103760 (Reference: paragraph 3.1.2.5).
6.4.2.2.1.3	Verify that the Engine System, with respect to facility plumbing and instrumentation, is in accordance with Figure 61.
6.4.2.2.1.4	Charge the Engine System pressurant tank with He in accordance with paragraph 6.1.1.1.
6.4.2.2.1.5	Engine System Pressurization.
6.4.2.2.1.5.1	Assure that all switches on the SE7 Mission Cycle Control Panel, P/N 99-9017321 (Reference: Rocketdyne Drawing 99-501804) are in the OFF position.
6.4.2.2.1.5.2	Provide 26 VDC to the Engine Firing Control System. Do not throw the DC PWR switch on the Mission Cycle Control Panel to the ON position.
6.4.2.2.1.5.3	Adjust the Mission Cycle Control Panel switches in accordance with the following:
6.4.2.2.1.5.3.1	Throw the DC POWER switch to the ON position.
6.4.2.2.1.5.3.2	Throw the PROPELLANT SHUTOFF VALVES switch to the OPEN position and hold until the corresponding lights above the switch come on.

PREPARED BY:	DATE	APPROVED FOR NAA:	DATE
E.Charles			
CHECKED BY:	DATE		
[illegible]	12-28-64	[illegible]	12-28-64

DESIGN APPROVAL TEST
ORBIT ATTITUDE AND MANEUVER SYSTEM
(SE7)

NAME OF TEST HOT FIRE TEST PROCEDURES TEST NO. 106156-401 SHEET 128 OF 413
PART NO. 2-DAY CONFIG. {MAC / NAA} 14-DAY CONFIG. {MAC 52-52701 / NAA 99-106156}

6.4.2.2.1.5.3.3	Throw the MAN DIGR DRIVE and MAN OSC DRIVE switches to the ON position.	
6.4.2.2.1.5.4	After approximately three (3) seconds, throw the ISOLATION VALVES switch to the OPEN position.	
6.4.2.2.1.5.5	After a minimum of ten (10) seconds, throw the MAN DIGR DRIVE, MAN OSC DRIVE and the DC POWER switches to the OFF position.	
6.4.2.2.1.5.6	Verify Engine System Pressurization by observing the applicable Engine System pressure measurements. Engine System pressures downstream from the Pressurant Regulator shall be 295 ±15 psia.	
6.4.2.2.1.6	Engine System MDC.	
6.4.2.2.1.6.1	Provide the environmental temperature requirement specified in paragraph 6.3.3.2.1.	
6.4.2.2.1.6.2	Deleted.	C
6.4.2.2.1.6.3	Evacuate the Engine System regulator reference cavity to a pressure of 1 ±.5 psia or less and maintain the pressure for the duration of the test.	C
6.4.2.2.1.6.4	Conduct the tape programmed, OSA-306 and OSM-404 Mission Duty Cycle Test in accordance with the procedures of SEM 3331-3004.	

PREPARED BY:	DATE	APPROVED FOR NAA:	DATE
E.Charles			
CHECKED BY:	DATE		
[illegible]	12-28-64	[illegible]	12-28-64

DESIGN APPROVAL TEST
ORBIT ATTITUDE AND MANEUVER SYSTEM
(SE7)

NAME OF TEST HOT FIRE TEST PROCEDURES TEST NO. 106156-401 SHEET 129 OF 413
PART NO. 2-DAY CONFIG. {MAC / NAA} 14-DAY CONFIG. {MAC 52-52701 / NAA 99-106156}

.4.2.2.1.6.5	Perform the post test procedures of paragraphs 6.6 .
6.4.3	Hot Fire Calibration
6.4.3.1	Verify that the Engine System for test, with respect to facility plumbing and instrumentation installation, is in accordance with Figure 61.
6.4.3.2	Pressurize the Engine System pressurant tank to 3300 ±100 psig, He and close the facility Pressurant Fill Valve (Reference: Figure 61).
6.4.3.3	Assure that all switches on the SE7 Manually Programmed Engine Firing Control System Control Console are in the OFF position.
6.4.3.4	Provide 28 VDC to the Engine Firing Control System. Do not throw the DC PWR switch on the Control Console Panel to the ON position.
6.4.3.5	Adjust the Engine Firing Control System Control Console in accordance with the following:
.4.3.5.1	Turn the INSTR DRIVE DURATION knob to provide a duration of 300 seconds.
6.4.3.5.2	Throw the DIGR DRIVE and the OSC DRIVE switches to the ON position.
6.4.3.5.3	Set the CHARTS DRIVE selector switch in the AUTO position.
6.4.3.5.4	Turn the PROGRAM DELAY knob to provide 2 seconds delay.

PREPARED BY:	DATE	APPROVED FOR NAA:	DATE
E.Charles		G Eidl	12-28-64
CHECKED BY:	DATE		
[illegible]	12-28-64		

DESIGN APPROVAL TEST
ORBIT ATTITUDE AND MANEUVER SYSTEM
(SE7)

NAME OF TEST HOT FIRE TEST PROCEDURE TEST NO. 106156-401 SHEET 130 OF 413

PART NO. 2-DAY CONFIG. {MAC ____ NAA ____ 14-DAY CONFIG. {MAC 52-52701 NAA 99-106156

6.4.3.5.5	Turn the CART FIRING DELAY knob to provide .01 seconds delay.
6.4.3.5.6	Set the DELAY TO START dials on the Timing Module #3 to provide zero (0) seconds delay.
6.4.3.5.7	Set the selector switch in the AUTO position.
6.4.3.5.8	Set the ON TIME dials to provide 3 seconds delay.
6.4.3.5.9	Set the selector switch in the lower right corner of the Timing Module #3 to the BYPASS position.
6.4.3.5.10	Throw the CLOCK AC POWER switch to the ON position.
6.4.3.5.11	Throw the ISOLATION VALVES switch to the OPEN position.
6.4.3.5.12	Throw the ARM switch to the ON position.
6.5.3.5.13	Throw the DC PWR switch to the ON position
6.4.3.5.14	Set the THRUST CHAMBER ASSEMBLY #1 toggle switch in the ON position.
6.4.3.5.15	Press the START switch.
6.4.3.5.16	Upon completion of the pulse, throw the DC PWR switch to the OFF position and return the TCA toggle switch to the OFF position.
6.4.3.5.17	Throw the DC PWR switch to the ON position.
	NOTE: Allow approximately 5 seconds between OFF-ON actuation.

PREPARED BY: E.Charles	DATE	APPROVED FOR NAA:	DATE
CHECKED BY: [illegible]	12-28-64	[illegible]	12-28-64

DESIGN APPROVAL TEST
ORBIT ATTITUDE AND MANEUVER SYSTEM
(SE7)

NAME OF TEST HOT FIRE TEST PROCEDURES TEST NO. 106156-401 SHEET 131 OF 413

PART NO. 2-DAY CONFIG. {MAC ____ NAA ____ 14-DAY CONFIG. {MAC 52-52701 NAA 99-106156

6.4.2.5.18	Repeat paragraphs 6.4.3.5.14 through 6.4.3.5.17 for each subsequent step of the Hot Fire Calibration Test Sequence of Table 4.
6.4.3.5.19	Perform the post test procedures of paragraph 6.6.

PREPARED BY:	DATE	APPROVED FOR NAA:	DATE
CHECKED BY: [illegible] 12-28-64	DATE	[illegible] 12-28-64	

DESIGN APPROVAL TEST
ORBIT ATTITUDE AND MANEUVER SYSTEM
(SE7)

NAME OF TEST Data Reduction - Hot Fire Tests TEST NO. 106156-401 SHEET ____ OF ____
PART NO. 2-DAY CONFIG. { MAC ____ NAA ____ } 14-DAY CONFIG. { MAC 52-52701 NAA 99-106156 }

6.5 Data Reduction - Hot Fire Tests

Further evaluation of the SE-7 Engine System mission duty cycle test data requirements following the preparation of the DAT Specification (106156-401) indicated that reduction and analysis of this test data could be accomplished more expeditiously and appropriately than as required by the procedure of Rocketdyne Internal Letter 4397-5008 as required in the specification. The procedures used in the reduction and analysis of this test data were as follows:

Ref. Para. 6.5.2.1.1

TCA Unit total impulse (corrected to rated altitude) for one of each type of unit (pitch, yaw-roll, and maneuver).

1. As a function of command signal width.
2. As a function of cumulative unit firing time at a constant command signal width.

A. To determine TCA Pulse Total Impulse (I_t) for the 25 lb thrust TCA's (pitch and yaw-roll) during pulse mode operation, the following method was utilized.

Pulse Total Impulse (I_t) = Area under thrust chamber pressure vs time trace (oscillograph) x TCA throat area x Thrust Coefficient

$$\text{lb-sec} = \frac{\text{lb-sec}}{\text{in}^2} \times \text{in}^2 \times C_f \text{ (dimensionless)}$$

1. Area under Thrust Chamber Pressure vs Time Curve - determined by mechanical integration (planimeter) of the oscillograph chamber pressure recording.
2. TCA Throat Area - Average value from pre- and post-test measurements.
3. Thrust Coefficient - Value determined from TCA acceptance test data (standard conditions), RA0220-354.

DESIGN APPROVAL TEST
ORBIT ATTITUDE AND MANEUVER SYSTEM
(SE7)

NAME OF TEST Data Reduction - Hot Fire Tests TEST NO. 106156-401 SHEET ____ OF ____
PART NO. 2-DAY CONFIG. { MAC ____ NAA ____ } 14-DAY CONFIG. { MAC 52-52701 NAA 99-106156 }

B. To determine 100 lb, 85 lb, and 25 lb thrust TCA total impulse values during steady state operation, the following method was utilized.

Total Impulse (I_t) = Steady state chamber pressure x operating duration x TCA throat area x thrust coefficient

$$\text{lb-sec} = \frac{\text{lb}}{\text{in}^2} \times \text{sec} \times \text{in}^2 \times C_f \text{ (dimensionless)}$$

1. Steady State Chamber Pressure - determined from Direct Inking Graphic Recordings.
2. Operating Duration - determined from Esterline Angus Sequence Recordings.
3. TCA Throat Area - average from pre- and post-test measurements.
4. Thrust Coefficient - value determined from TCA acceptance test data (standard conditions), RA0220-354 for the 25 lb TCA, RA0220-348 for the 85 lb TCA and RA0220-349 for the 100 lb TCA.

Ref. Para. 6.5.2.1.4

Engine System cumulative total impulse (I_t) for the Mission Duty Cycle Test.

Engine System I_t (cumulative) = [I_t(individual TCA's at each signal width) x Number of Pulses at each signal width]

A. I_t (individual TCA's at each signal width) - Data determined from ~~I_t vs signal-width curves for 25 lb thrust~~ TCA's during pulse mode operation and calculated as in Para. 6.5.2.1.1, above, for 25 lb, 85 lb, and 100 lb thrust TCA's during steady state operation.

DESIGN APPROVAL TEST
ORBIT ATTITUDE AND MANEUVER SYSTEM
(SE7)

NAME OF TEST Data Reduction - Hot Fire Tests TEST NO. 106156-401 SHEET ____ OF ____
PART NO. 2-DAY CONFIG. { MAC ____ NAA ____ } 14-DAY CONFIG. { MAC 52-52701 NAA 99-106156 }

B. Number of Pulses at each Signal Width - Data determined from Esterline Angus Sequence Recordings.

Ref. Para. 6.5.2.1.5

Engine System overall specific impulse for the Mission Duty Cycle Test.

$$\text{Engine System } I_{sp} = \frac{\text{Engine System } I_t \text{ (cumulative)}}{\text{Total propellant consumed}}$$

A. System I_t (cumulative) - Determined as in Para. 6.5.2.1.4, above.

B. Total Propellant Consumed - Determined per Para. 7.5.7.3.

Ref. Para. 6.5.2.1.6

Engine System overall propellant mixture ratio for the Mission Duty Cycle Test.

$$MR_{(\text{overall system})} = \frac{\text{Total Oxidizer Consumed}}{\text{Total Fuel Consumed}}$$

A. Total Oxidizer Consumed - Determined per Para. 7.5.7.3.

B. Total Fuel Consumed - Determined per Para. 7.5.7.3.

DESIGN APPROVAL TEST
ORBIT ATTITUDE AND MANEUVER SYSTEM
(SE7)

NAME OF TEST DATA REDUCTION - HOT FIRE TESTS TEST NO. 106156-401 SHEET 132 OF 413
PART NO. 2-DAY CONFIG. {MAC ____ NAA ____ 14-DAY CONFIG. {MAC 52-52701 NAA 99-106156

6.5 DATA REDUCTION - HOT FIRE TESTS

6.5.1 Recorded Data:

6.5.1.1 Recorded data shall consist of those parameters listed in Table 5.

6.5.1.2 Data recording for the Hot Fire Calibration Tests shall be in accordance with Table 7.

6.5.1.3 Data recording for the Mission Duty Cycle Test (paragraph 7.5) shall be on a scheduled sampling basis in accordance with Table 6.

6.5.2 Data Reduction for the Hot Fire Tests of paragraphs 7.5 and 7.6 shall be in accordance with SEM 4397-5008.

6.5.2.1 The data reduction program, described in SEM 4397-5008, provides the following derived data:

6.5.2.1.1 TCA unit total impulse (corrected to rated altitude) for one of each type of unit (pitch, yaw-roll and manuever).

(1) As a function of command signal width.
(2) As a function of cumulative unit firing time at a constant command signal width.

6.5.2.1.2 TCA unit pulse characteristics consisting of chamber pressure, valve voltage and valve current, superimposed, as a function of time for representative pulse durations for one of each type of unit (pitch, yaw-roll and manuever).

6.5.2.1.3 TCA unit pulse characteristics as a function of unit cumulative firing time.

PREPARED BY:	DATE	APPROVED FOR NAA:	DATE
E. Charles			
CHECKED BY:	DATE		
	11-23-64		11-30-64

DESIGN APPROVAL TEST
ORBIT ATTITUDE AND MANEUVER SYSTEM
(SE7)

NAME OF TEST DATA REDUCTION - HOT FIRE TESTS TEST NO. 106156-401 SHEET 133 OF 413

PART NO. 2-DAY CONFIG. { MAC / NAA } 14-DAY CONFIG. { MAC 52-52701 / NAA 99-106156 }

6.5.2.1.4 System cumulative total impulse for each of the Mission Duty Cycle Tests.

6.5.2.1.5 System overall specific impulse for each Mission Duty Cycle Test.

6.5.2.1.6 System overall propellant mixture ratio for each Mission Duty Cycle Test.

6.5.2.1.7 For TCA propellant valves the mean and deviation of the response and simultaneity (from receipt of signal to full open or closed).

PREPARED BY:	DATE	APPROVED FOR NAA:	DATE
E. Charles			
CHECKED BY:	DATE		
	11-23-64		11-30-64

DESIGN APPROVAL TEST
ORBIT ATTITUDE AND MANEUVER SYSTEM
(SE7)

NAME OF TEST POST TEST PROCEDURE TEST NO. 106156-401 SHEET 134 OF 413

PART NO: 2-DAY CONFIG. {MAC ____ NAA ____ 14-DAY CONFIG. {MAC 52-52701 NAA 99-106156

6 Post Test Procedure

6.6.1 General

6.6.1.1 The following procedures shall be performed subsequent to each of the tests of paragraphs 7.5 and 7.6 unless otherwise specified.

6.6.1.1.1 Assure that the Engine System Firing Control System has been de-energized.

6.6.1.1.2.1 Provide the following Engine System instrumentation (Reference: Table 5, Instrumentation Requirements, DIGRS):

6.6.1.1.2.1.1 Pressurant Supply Pressure.

6.6.1.1.2.1.2 Oxidizer Supply Pressure.

6.6.1.1.2.1.3 Fuel Supply Pressure.

6.6.1.1.2.2 OPEN the facility VENT VALVE connected to the Engine System Component Package "A" HI PRESS GAS CHG VALVE PORT -1 and allow the pressure to vent until the Pressurant Supply Pressure recorder indicates zero (0) psig.

6.6.1.1.2.3 OPEN the facility VENT VALVE connected to the Engine System Component Package "B" OXID TANK VENT VALVE - 6 port and allow the pressure to vent until the Oxidizer Supply Pressure recorder indicates a stabilized minimum value.

PREPARED BY: E.Charles	DATE	APPROVED FOR NAA:	DATE
CHECKED BY:	DATE		

DESIGN APPROVAL TEST
ORBIT ATTITUDE AND MANEUVER SYSTEM
(SE7)

NAME OF TEST POST TEST PROCEDURE TEST NO. 106156-401 SHEET 135 OF 413

PART NO. 2-DAY CONFIG. {MAC ____ NAA ____ 14-DAY CONFIG. {MAC 52-52701 NAA 99-106156

6.6.1.1.2.4	OPEN the facility VENT VALVE connected to the Engine System Component Package "B" FUEL TANK VENT VALVE -4 port and allow the pressure to vent until the Fuel Supply Pressure recorder indicates a stabilized value.
6.6.1.1.3	Visually inspect the Engine System for significant indications of leakage, damage or deterioration. Record the observations on the applicable data sheets. Photographic documentation shall be required if evidence warrants.
6.6.1.1.4	Measure and record the throat diameter of each TCA.
6.6.1.1.5	Test Records:
6.6.1.1.5.1	All instrumentation test recordings and calibrations shall be certified in accordance with paragraph 3.7.1 and readily identifiable in accordance with paragraph 3.10.1.2.
6.6.1.1.5.2	Test parameter run data, calibrations, verifications and recorder data sheets defining the chart deflection scale factors shall be submitted to the cognizant Rocketdyne Gemini Engineering Representative subsequent to each test.
6.6.2	Post Test Procedures following Specific Tests:
6.6.2.1	Post Mission Duty Cycle Test (Reference: paragraph 7.5)
6.6.2.1.1	Load the Engine System propellant tanks in accordance with the following:
6.6.2.1.1.1	Oxidizer
6.6.2.1.1.1	Perform the procedures of paragraphs 6.1.2.2.1.1 through 6.1.2.2.1.4.12.

PREPARED BY:	DATE	APPROVED FOR NAA:	DATE
E.Charles			
CHECKED BY:	DATE		
[illegible]	12-28-64	[illegible]	12-28-64

DESIGN APPROVAL TEST
ORBIT ATTITUDE AND MANEUVER SYSTEM
(SE7)

NAME OF TEST POST TEST PROCEDURE TEST NO. 106156-401 SHEET 136 OF 413
PART NO. 2-DAY CONFIG. {MAC ____ NAA ____ 14-DAY CONFIG. {MAC 52-52701 NAA 99-106156

6.6.2.1.1.1.2 The total volume to be detanked (Vdo_t) shall be determined as follows:

$$Vdo_t = 5438 - Vg_1 - \frac{205.8 \times 1728}{90.5 + .077(70 - To_2)}$$

NOTE: Vg_1 and To_2 are determined from Figure 25.

6.6.2.1.1.1.3 Open the OXID CHG VALVE - 11A and allow the volume (Vdo_t) determined from paragraph 6.6.2.1.1.1.2 to flow out, then close OXID CHG VALVE - 11A in Component Package "C".

6.6.2.1.1.1.4 Perform the procedures of paragraphs 6.1.2.2.1.3.14 through 6.1.2.2.1.4.25.

6.6.2.1.1.2 Fuel

6.6.2.1.1.2.1 Perform the procedures of paragraphs 6.1.2.2.2.1 through 6.1.2.2.2.4.12.

6.6.2.1.1.2.2 The total volume to be detanked (Vdf_t) shall be determined as follows:

$$Vdf_t = 5425 - Vg_2 - \frac{125.3 \times 1728}{54.87 + .0325\ (70 - Tf_2)}$$

NOTE: Vg_2 and Tf_2 are determined from Figure 26.

6.6.2.1.1.2.3 Open the FUEL CHG VALVE - 15A and allow the volume (Vdf_t) determined from paragraph 6.6.2.1.1.2.2 to flow out, the close FUEL CHG VALVE - 15A in Component Package "D".

PREPARED BY: E.Charles	DATE	APPROVED FOR NAA:	DATE
CHECKED BY:	DATE 12-28-64		12-28-64

DESIGN APPROVAL TEST
ORBIT ATTITUDE AND MANEUVER SYSTEM
(SE7)

NAME OF TEST POST TEST PROCEDURES TEST NO. 106156-401 SHEET 137 OF 413

PART NO. 2-DAY CONFIG. {MAC / NAA} 14-DAY CONFIG. {MAC 52-52701 / NAA 99-106156}

6.6.2.1.1.2.4	Perform the procedures of paragraphs 6.1.2.2.2.4.14 through 6.1.2.2.2.4.25.
6.6.2.2	Post Hot Fire Calibration Test (Reference: paragraph 7.6)
6.6.2.2.1	Perform the following after verification of satisfactory Engine System test operation.
6.6.2.2.1.1	CLOSE the Engine System OXID TEST VALVE - 12A and FUEL TEST VALVE - 14A.
6.6.2.2.1.2	Remove the instrumentation lines connected to the Engine System OXID TEST PORT - 12 and the FUEL TEST PORT - 14. CAUTION: Residual propellant spillage may be encountered during this operation.
6.6.2.2.1.3	Perform the propellant drain and clean procedures of paragraph 6.2.
6.6.2.2.1.4	Disconnect all control and instrumentation wiring from the Engine System.
6.6.2.2.1.5	Disconnect all the associated facility systems from the Engine System; reinstall all Component Package caps and torque in accordance with Table 1.
6.6.2.2.1.6	Re-install all the Engine System protective covers that were supplied with the test hardware.
6.6.2.2.1.7	Remove the Engine System from the test cell.
6.6.2.2.1.8	Prepare the Engine System for shipment.

PREPARED BY:	DATE	APPROVED FOR NAA:	DATE
E.Charles		[signature]	12-28-64
[signature]	12-28-64		

DESIGN APPROVAL TEST
ORBIT ATTITUDE AND MANEUVER SYSTEM
(SE7)

NAME OF TEST TEST PROCEDURES TEST NO. 106156-401 SHEET 138 OF 413

PART NO. 2-DAY CONFIG. {MAC ____ / NAA ____} 14-DAY CONFIG. {MAC 52-52701 / NAA 99-106156}

Reference: (a) MAC SCD 52- 52701, Revision F.

7.0 TEST PROCEDURES

This section contains the individual test procedures which shall be used, in conjunction with paragraph 6.0, for conducting the Acceptance Test and Design Approval Test of this specification.

PREPARED BY:	DATE	APPROVED FOR NAA:	DATE
T. Kniffin			
CHECKED BY:	DATE		

DESIGN APPROVAL TEST
ORBIT ATTITUDE AND MANEUVER SYSTEM
(SE7)

NAME OF TEST FUNCTIONAL TEST TEST NO. 106156-401 SHEET 139 OF 413
PART NO. 2-DAY CONFIG. {MAC / NAA} 14-DAY CONFIG. {MAC 52-52701 / NAA 99-106161}

7.1 Functional Test

7.1.1 General

7.1.1.1 The procedures specified in this paragraph shall be accomplished in the enumerated order.

7.1.1.2 In the event the results of any test are other than those specified, the test shall be terminated and the defective part shall be replaced or assigned for repair solely under the direction of the Gemini Project Office.

7.1.1.2.1 Failures, malfunctions or discrepancies of the Engine System Tank Module to fulfill the requirements of this paragraph shall not constitute a Design Approval Test failure.

7.1.1.2.2 All disassembly and assembly of parts removed or replaced shall be in accordance with the applicable drawings.

7.1.1.2.3 Only those assemblies approved as having complied with all the requirements of the applicable drawings and individual component Acceptance Test Specifications shall be accepted for replacement.

7.1.1.3 All tests shall be performed at ambient temperature.

7.1.1.4 All test lines attached to the Engine System Tank Module shall meet the requirements of paragraph 3.9.4.

7.1.1.5 If testing of the Engine System Tank Module is suspended for a short period (i.e. overnight or weekend) before completion of the tests called out in this paragraph, the Engine System Tank Module shall be temporarily secured as follows:

PREPARED BY:	DATE	APPROVED FOR NAA:	DATE
T. Kniffin			
CHECKED BY:	DATE		
[illegible]	8-12-64	[illegible]	8-12-64

DESIGN APPROVAL TEST
ORBIT ATTITUDE AND MANEUVER SYSTEM
(SE7)

NAME OF TEST FUNCTIONAL TEST TEST NO. 106156-401 SHEET 140 OF 413
PART NO. 2-DAY CONFIG. {MAC / NAA} 14-DAY CONFIG. {MAC 52-52701 / NAA 99-106161}

7.1.1.5.1 CLOSE all Pneumatic Test Console (PTC) valves, electrical switches and vent all PTC and Engine System Tank Module pressures. All vent ports, etc. opened for tests called out in this paragraph shall be closed for protection against entry of foreign matter.

7.1.1.5.2 Before tests are resumed, the position or condition of each valve, switch, connection, etc. shall be checked for compliance with the provisions of paragraphs proceeding the paragraph at which the test is to be resumed.

7.1.1.6 Verify that all hardware installed on the Engine System Tank Module is in accordance with paragraph 3.1.1 and record all the component part numbers and serial numbers as indicated in paragraph 7.1.6.1.

7.1.2. Preparation

7.1.2.1. System Condition

The Engine System Tank Module configuration for test shall be in accordance with Rocketdyne Drawing 99-106161 and Figure 1 except that the lines between the bulkhead and Component Packages "A" and "B" and the Oxidizer and Fuel Propellant Tanks are not installed. The TCA groups and interconnecting tubing downstream of the Propellant Shutoff Valves shall not be installed.

7.1.2.2 Install the Component Packages "A", "C", "D" and "E" cartridges in accordance with CEM 4132-47. Torque the cartridges to 10 ±1 foot-pounds.

PREPARED BY: T. Kniffin	DATE	APPROVED FOR NAA:	DATE
CHECKED BY: [illegible] 8-12-64	DATE	[illegible] 8-12-64	

DESIGN APPROVAL TEST
ORBIT ATTITUDE AND MANEUVER SYSTEM
(SE7)

NAME OF TEST FUNCTIONAL TEST TEST NO. 106156-401 SHEET 141 OF 413
PART NO. 2-DAY CONFIG. {MAC ____ NAA ____ 14-DAY CONFIG. {MAC 52-52701 NAA 99-106161

7.1.2.3	Verify that all the switches and valves on the Electrical Control Panel (ECP) and the Pneumatic Test Console (PTC) are in the "OFF" pr "CLOSED" position.	
7.1.2.4	Place the Engine System Tank Module on the base plate of the enclosure which will later be used in the testing of paragraph 7.1.4.	
7.1.2.5	Connect the ECP to the Engine System Tank Module electrical harness as shown in Rocketdyne drawing number 99-9017055.	
7.1.2.6	Connect the PTC to the Engine System Tank Module as shown in Figure 35.	B
7.1.2.7	Supply 28 VDC to the ECP and the PTC.	B
7.1.2.8	Supply 110 VAC to the ECP oscilloscope.	B
7.1.2.9	Supply 6000 psig He (helium) to the PTC supply port.	B
7.1.2.10	Throw the "DC POWER" switches on the ECP and the PTC to the "ON" position. The "DC POWER" lights will come on.	B
7.1.2.11	Depress the "PRESS TO TEST LIGHTS" button on the ECP and the PTC. All applicable lights on the ECP and PTC will come on. (Reference Rocketdyne drawing number 99-103729 and 99-9017055).	B
7.1.2.12	Throw the ECP "FUEL SUPPLY SHUTOFF VALVE" and "OXID SUPPLY SHUTOFF VALVE" switches to the "CLOSED" position momentarily to insure that the valves are in the closed position.	B
7.1.2.13	OPEN the following Engine System Tank Module manual valves:	

PREPARED BY:	DATE	APPROVED FOR NAA:	DATE
T. Kniffin			
CHECKED BY:	DATE		
[illegible]	3-10-65	[illegible]	3-10-65

R-15075-1 vision B [illegible] Dated 3-10-65

DESIGN APPROVAL TEST
ORBIT ATTITUDE AND MANEUVER SYSTEM
(SE7)

NAME OF TEST FUNCTIONAL TEST TEST NO. 106156-401 SHEET 142 OF 413
PART NO. 2-DAY CONFIG. {MAC ____ NAA ____ 14-DAY CONFIG. {MAC 52-52701 NAA 99-106161

7.1.2.14 (cont'd)
(a) "HI PRESS GAS CHG VALVE - 1A"
(b) "HI PRESS GAS TEST VALVE - 2A"
(c) "FUEL TANK VENT VALVE - 4A"
(d) "OXID TANK VENT VALVE - 6A"
(e) "OXID CHG VALVE - 11A"
(f) "FUEL CHG VALVE - 15A"

B

Manual valve OPEN is defined as 2 1/2 turns counterclockwise from the full "CLOSE" position. Torque per the values indicated in Table I.

7.1.2.15 Insure that the Engine System Tank Module "BYPASS VALVE TEST - 19A" is in the OPEN position.

7.1.2.16 Insure that all PTC vents are OPEN to atmosphere.

7.1.3 Proof Pressure Test

7.1.3.1 Disconnect the pressurizing lines between the PTC "FUEL RELIEF PRESS VALVE" and downstream filter and between the PTC "OXID RELIEF PRESS VALVE" and downstream filter.

7.1.3.2 Connect to the upstream side of the filters (refered to in paragraph 7.1.3.1) an "AUXILIARY PRESSURANT SUPPLY TEST SETUP" as shown in Figure 60.

7.1.3.3 Throw the PTC "PACKAGE "A" U/S PRESS VALVE", the "FUEL TANK PRESS VALVE" and the "OXID TANK PRESS VALVE" switches to the "ON" or "AUTO" position. The light above the "PACKAGE "A" U/S PRESS VALVE" switch will come on.

7.1.3.4 OPEN the PTC "MAIN SUPPLY VALVE", "PRESSURANT SYSTEM PRESSURANT SUPPLY VALVE" and "PROPELLANT SYSTEM PRESSURANT SUPPLY VALVE".

PREPARED BY: T. Kniffin	DATE	APPROVED FOR NAA:	DATE
CHECKED BY: [illegible] 8-12-64	DATE	[illegible] 8-12-64	

Rev. B [illegible] Date 3-10-65

DESIGN APPROVAL TEST
ORBIT ATTITUDE AND MANEUVER SYSTEM
(SE7)

NAME OF TEST FUNCTIONAL TEST TEST NO. 106156-401 SHEET 143 OF 413

PART NO. 2-DAY CONFIG. {MAC / NAA} 14-DAY CONFIG. {MAC 92-92701 / NAA 99-105161}

7.1.3.4.1	Assure that the FACILITY HAND VALVE "A" D/S is CLOSED.
7.1.3.5	Adjust the PTC "HL #1" so that 4500 $^{+100}_{-0}$ psig is read on the "SUPPLY PRESSURE" gauge.
7.1.3.6	Throw the PTC "PACKAGE "C" U/S PRESS VALVE", "PACKAGE "D" U/S PRESS VALVE", "PACKAGE "C" D/S PRESS VALVE" and "PACKAGE"D" D/S PRESS VALVE" switches to the "OPEN" position. The lights above the switches will come on.
7.1.3.7	Simultaneously adjust the PTC "HL #2" and "HL #3" so that 300 ±10 psig is read on the "PRESSURANT SUPPLY PRESSURE" gauge and the "PROPELLANT SUPPLY PRESSURE" gauge. When the pressure reaches 100 psig on the "PROPELLANT SUPPLY PRESSURE" gauge the "PS-C" (PACKAGE "C" PRESSURE SWITCH), "PS-D" (PACKAGE "D" PRESSURE SWITCH), "OXID TANK PRESS VALVE", "FUEL TANK PRESS VALVE", and "PACKAGE "A" D/S PRESS VALVE" lights will come on.
7.1.3.7.1	Slowly OPEN the FACILITY HAND VALVE "A" D/S.
7.1.3.8	Refer to Figure 60. Insure that the Hand Loader L_1 is in the closed position.
7.1.3.9	OPEN the "Auxiliary Pressurant Supply Valve".
7.1.3.10	Adjust "Hand Loader L_1" so that 280 ±10 psig is read on the "Pressure Gauge G_6".
7.1.3.11	Simultaneously adjust PTC "HL #2" and "HL #3" so that 450 $^{+15}_{-0}$ psig is read on the "PROPELLANT SUPPLY PRESSURE" gauge.and the "PRESSURANT SUPPLY PRESSURE" gauge.
7.1.3.12	Maintain the pressures of paragraphs 7.1.3.5 and 7.1.3.11 for a period of 3 $^{+1}_{-0}$ minutes.
7.1.3.13	CLOSE the PTC "MAIN SUPPLY VALVE.

PREPARED BY:	DATE	APPROVED FOR NAA:	DATE
T. Kniffin		S Heide	8-12-64
CHECKED BY: T. Kniffin	8-12-64		

DESIGN APPROVAL TEST
ORBIT ATTITUDE AND MANEUVER SYSTEM
(SE7)

NAME OF TEST FUNCTIONAL TEST TEST NO. 106156-401 SHEET 144 OF 413

PART NO. 2-DAY CONFIG. {MAC / NAA} 14-DAY CONFIG. {MAC 52-52701 / NAA 99-106161}

7.1.3.14 CLOSE the PTC "PROPELLANT SYSTEM PRESSURANT SUPPLY VALVE" and the "PRESSURANT SYSTEM PRESSURANT SUPPLY VALVE".

7.1.3.15 OPEN the PTC "SUPPLY VENT VALVE" and vent the system until the "SUPPLY PRESSURE" gauge reads 0 psig.

7.1.3.16 Throw the "PACKAGE "A" U/S PRESS VALVE" switch to the "CLOSE" position. The light above the switch will go out.

7.1.3.17 Throw the PTC "OXID BLADDER VENT VALVE" and "FUEL BLADDER VENT VALVE" switches to the "OPEN" position. The lights above the switches will come on.

7.1.3.18 OPEN the PTC "PROPELLANT SYSTEM VENT VALVE" and vent the system until 300 ±10 psig is read on the "PRESSURANT SUPPLY PRESSURE" gauge and the "PROPELLANT SUPPLY PRESSURE" gauge. Then CLOSE the "PROPELLANT SYSTEM VENT VALVE".

7.1.3.19 Refer to Figure 60. Turn the "Hand Loader L_1" to the closed position and allow the pressure at "Pressure Gauge G_6" to reduce to 0 psig.

7.1.3.20 CLOSE the "Auxiliary Pressurant Supply Valve".

7.1.3.21 Simultaneously OPEN the PTC "PRESSURANT SYSTEM VENT VALVE" and "PROPELLANT SYSTEM VENT VALVE". When the pressure, as read on the "PROPELLANT SUPPLY PRESSURE" gauge, reads 95 psig the "PS-C", "PS-D", "PACKAGE "A" D/S PRESS VALVE", "OXID TANK PRESS VALVE" and "FUEL TANK PRESS VALVE" lights will go out. When the pressure, as read on the "PROPELLANT SUPPLY PRESSURE" gauge, reads 25 psig throw the "OXID SIDE REGULATOR FLOW VALVE" and "FUEL SIDE REGULATOR FLOW VALVE" switches to the "OPEN" position. The lights above the switches will come on. Continue to vent until the "PRESSURANT SUPPLY PRESSURE" gauge and the "PROPELLANT SUPPLY PRESSURE" gauge each read 0 psig.

PREPARED BY: T. Kriffin	DATE	APPROVED FOR NAA:	DATE
CHECKED BY:	DATE		
8-12-64		8-12-64	

DESIGN APPROVAL TEST
ORBIT ATTITUDE AND MANEUVER SYSTEM
(SE7)

NAME OF TEST FUNCTIONAL TEST TEST NO. 106156-401 SHEET 145 OF 413
PART NO. 2-DAY CONFIG. {MAC / NAA} 14-DAY CONFIG. {MAC 52-52701 / NAA 99-106161}

7.1.3.22 CLOSE the PTC "SUPPLY VENT VALVE", "PRESSURANT SYSTEM VENT VALVE" and "PROPELLANT SYSTEM VENT VALVE" and throw the "OXID BLADDER VENT VALVE", "FUEL BLADDER VENT VALVE", "PACKAGE "C" U/S PRESS VALVE", "PACKAGE "D" U/S PRESS VALVE", "PACKAGE "C" D/S PRESS VALVE", "PACKAGE "D" D/S PRESS VALVE", "OXID SIDE REGULATOR FLOW VALVE", and "FUEL SIDE REGULATOR FLOW VALVE" switches to the CLOSE position. The lights above the switches will go out.

7.1.3.23 Turn the PTC "HL #1", "HL #2" and "HL #3" to the closed position.

7.1.3.24 Disconnect the "AUXILIARY PRESSURANT SUPPLY TEST SETUP" and reconnect the pressurizing lines which were disconnected in paragraph 7.1.3.1.

NOTE: Torque values are as shown in Table I.

7.1.4 <u>Gross External Leakage Test</u>

7.1.4.1 Install the Engine System Tank Module in an enclosure as shown in Figure 36. The walls, floor and ceiling of the enclosure shall be lined with Dobeckmun Metalam 777-V. All valves of Figure 36 shall be CLOSED. Do not seal the enclosure at this time.

7.1.4.2 Connect leakage sensing lines to the downstream side of the Engine System Tank Module "PROPELLANT SHUTOFF VALVES" and to the Engine System "HI PRESS GAS CHG VALVE - 1A" port, the "HI PRESS GAS TEST VALVE - 2A" port, the "FUEL TANK VENT VALVE - 4A" port, the "OXID TANK VENT VALVE - 6A" port, the "OXID CHG VALVE - 11A" port, the "OXID TEST VALVE - 12A" port, the "FUEL TEST VALVE - 14A" port and the "FUEL CHG VALVE - 15A" port.

PREPARED BY:	DATE	APPROVED FOR NAA:	DATE
T. Kniffin		[signature]	8-12-64
CHECKED BY: [signature]	8-12-64		

DESIGN APPROVAL TEST
ORBIT ATTITUDE AND MANEUVER SYSTEM
(SE7)

NAME OF TEST FUNCTIONAL TEST TEST NO. 106156-401 SHEET 146 OF 413

PART NO. 2-DAY CONFIG. {MAC ____ NAA ____ 14-DAY CONFIG. {MAC 52-52701 NAA 99-106161

7.1.4.3 Disconnect the pressurizing lines from the Engine System "HI PRESS GAS CHG VALVE PORT - 1", "HI PRESS GAS TEST PORT - 2", "FUEL TANK VENT PORT - 4", "OXID TANK VENT PORT - 6", "OXID CHG PORT - 11", "OXID TEST PORT - 12", "FUEL TEST PORT - 14" and "FUEL CHG PORT -15". Cap the Engine System ports and pressurizing lines. Torque the caps on the pressurizing lines per Table I. Torque the Engine System caps finger tight. A

7.1.4.4 Locate the free ends of the leakage sensing lines outside of the enclosure.

7.1.4.5 Locate the mass spectrometer outside of the enclosure and locate two electric fans inside the enclosure as shown in Figure 36. Seal the enclosure. A

7.1.4.6 Attach the auxiliary vacuum gauge to the mass spectrometer if not already attached. Begin warming up the mass spectrometer.

NOTE: Minimum warm up shall be one (1) hour.

7.1.4.7 Attach a fixed sampling probe to the mass spectrometer.

7.1.4.8 Locate the sampling probe inside of the enclosure so that the mass spectrometer is monitoring the helium concentration inside the enclosure.

7.1.4.9 Turn on the electric fans.

7.1.4.10 Adjust the accumulator valve on the mass spectrometer so that the reference vacuum gauge on the mass spectrometer panel is reading approximately 0.1 microns.

7.1.4.11 Note and record the reading of the auxiliary vacuum gauge. When future readings are taken of the leak indicator the accumulator valve shall first be adjusted so that the auxiliary vacuum gauge is reading this value.

PREPARED BY: T. Kniffin	DATE	APPROVED FOR NAA:	DATE
CHECKED BY:	DATE		

REVISION A Dated 8-26-64

DESIGN APPROVAL TEST
ORBIT ATTITUDE AND MANEUVER SYSTEM
(SE7)

NAME OF TEST: FUNCTIONAL TEST TEST NO. 106156-401 SHEET 147 OF 413
PART NO. 2-DAY CONFIG. {MAC / NAA} 14-DAY CONFIG. {MAC 52-52701 / NAA 99-106161}

7.1.4.12 Vent the enclosure and purge with gaseous nitrogen at a pressure of approximately 50 psig as read on pressure gauge G_4 for a period of thirty minutes minimum. The purpose of the purge is to lower the helium concentration in the enclosure and produce a low initial reading on the mass spectrometer indicator prior to the following testing. B

7.1.4.13 Allow the mass spectrometer indicator to stabilize.

7.1.4.14 Disconnect the helium supply line downstream of valve V_3 from the enclosure.

7.1.4.15 Adjust pressure regulator R_1 so that 2 $\pm$1 psig is read on pressure gauge G_3.

7.1.4.16 OPEN valves V_1 and V_3. Purge for a period of one to two minutes to fill the line with helium.

7.1.4.17 CLOSE valves V_1 and V_3 and adjust the pressure regulator to zero psig as read on the pressure gauge G_3. Immediately connect the helium supply line downstream of valve V_3 to the enclosure.

7.1.4.18 OPEN valve V_2.

7.1.4.19 Adjust V_1 and R_1 to produce a constant leak rate of 48 $\pm$ 2 standard cubic centimeters per hour as measured by the burette at ambient temperature and pressure. Burette measurements shall be made over a period of approximately fifteen minutes.

7.1.4.20 Record the leak rate on the data sheet.

PREPARED BY:	DATE	APPROVED FOR NAA:	DATE
T. Kniffin		R J Leide	8-12-64
CHECKED BY: J. Desimone	8-12-64		

DESIGN APPROVAL TEST
ORBIT ATTITUDE AND MANEUVER SYSTEM
(SE7)

NAME OF TEST FUNCTIONAL TEST TEST NO. 106156-401 SHEET 148 OF 413
PART NO. 2-DAY CONFIG. {MAC / NAA} 14-DAY CONFIG. {MAC 52-52701 / NAA 99-106161}

7.1.4.21 OPEN valve V_3 and CLOSE valve V_2. Pressurize the facility lines according to paragraphs 7.1.4.29 through 7.1.4.33.1. A

7.1.4.22 Record the mass spectrometer indicator reading on the data sheet and plot the value on the sheet of graph paper provided. Enclose the plotted point with a small circle.

7.1.4.23 Repeat paragraph 7.1.4.22 at ten minute intervals for a period of five hours.

7.1.4.24 At the end of the five hour period CLOSE valve V_3 and OPEN valve V_2. Depressurize the facility lines according to paragraphs 7.1.4.36 through 7.1.4.41. A

7.1.4.25 Measure the leak rate with the burette. The leak rate shall be 48 ± 2 standard cubic centimeters per hour.

7.1.4.25.1 If leak rate is not in accordance with 7.1.4.25 repeat paragraph 7.1.4.12 to 7.1.4.25.

7.1.4.26 Disregard the first hour of testing and draw a straight line through the points just plotted on the graph paper which most closely represents the slope generated by the points.

7.1.4.27 OPEN the enclosure and reconnect the pressurizing lines which were disconnected in paragraph 7.1.4.3. Then seal the enclosure. A

NOTE: Torque values are shown in Table I. A

7.1.4.28 Allow the mass spectrometer indicator to stabilize.

7.1.4.29 Throw the PTC "PACKAGE "A" U/S PRESS VALVE" switch to the "OPEN" position. The light above the switch will come on.

PREPARED BY:	DATE	APPROVED FOR NAA:	DATE
T. Kniffin			
CHECKED BY:	DATE		
	8-26-64		8-26-64

REVISION A Dated 8-26-64

DESIGN APPROVAL TEST
ORBIT ATTITUDE AND MANEUVER SYSTEM
(SE7)

NAME OF TEST FUNCTIONAL TEST TEST NO. 106156-401 SHEET 149 OF 413

PART NO. 2-DAY CONFIG. {MAC / NAA} 14-DAY CONFIG. {MAC 52-52701 / NAA 99-106161}

7.1.4.30	OPEN the PTC "MAIN SUPPLY VALVE", "PRESSURANT SYSTEM PRESSURANT SUPPLY VALVE" and "PROPELLANT SYSTEM PRESSURANT SUPPLY VALVE".
7.1.4.31	Adjust the PTC "HL #1" so that 3000 ±100 psig is read on the "SUPPLY PRESSURE" gauge.
7.1.4.31.1	Assure that the FACILITY HAND VALVE "A" D/S is CLOSED.
7.1.4.32	Throw the PTC "PACKAGE "C" U/S PRESS VALVE", "PACKAGE "D" U/S PRESS VALVE", "PACKAGE "C" D/S PRESS VALVE" and "PACKAGE "D" D/S PRESS VALVE" switches to the "OPEN" position. The lights above the switches will come on.
7.1.4.33	Simultaneously adjust the PTC "HL #2" and "HL #3" so that 300 +10 psig is read on the "PRESSURANT SUPPLY PRESSURE" gauge and the "PROPELLANT SUPPLY PRESSURE" gauge. When the pressure reaches 100 psig on the "PROPELLANT SUPPLY PRESSURE" gauge the "PS-C" (PACKAGE "C" PRESSURE SWITCH"), "PS-D" (PACKAGE "D" PRESSURE SWITCH), "OXID TANK PRESS VALVE ", "FUEL TANK PRESS VALVE" and "PACKAGE "A" D/S PRESS VALVE" lights will come on.
7.1.4.33.1	Slowly OPEN the FACILITY HAND VALVE "A" D/S.
7.1.4.34	Record the mass spectrometer indicator reading on the data sheet and plot the value on the sheet of graph paper provided. Enclose the plotted point with a small triangle.
7.1.4.35	Repeat paragraph 7.1.4.34 at ten (10) minute intervals for a period of five hours.
7.1.4.36	At the end of the five hour period, CLOSE the PTC "MAIN SUPPLY VALVE", the "PROPELLANT SYSTEM PRESSURANT SUPPLY VALVE" and the "PRESSURANT SYSTEM PRESSURANT SUPPLY VALVE".

PREPARED BY:	DATE	APPROVED FOR NAA:	DATE
T. Kniffin			
CHECKED BY:	DATE		
[illegible]	8-12-64	[illegible]	8-12-64

DESIGN APPROVAL TEST
ORBIT ATTITUDE AND MANEUVER SYSTEM
(SE7)

NAME OF TEST FUNCTIONAL TEST TEST NO. 106156-401 SHEET 150 OF 413
PART NO. 2-DAY CONFIG. {MAC / NAA} 14-DAY CONFIG. {MAC 52-52701 / NAA 99-106161}

7.1.4.37 OPEN the PTC "SUPPLY VENT VALVE" and vent until the "SUPPLY PRESSURE" gauge reads 0 psig. Then throw the "PACKAGE "A" U/S PRESS VALVE" switch to the CLOSE position. The light above the switch will go out.

7.1.4.38 Throw the PTC "OXID BLADDER VENT VALVE" and "FUEL BLADDER VENT VALVE" switches to the "OPEN" position. The lights above the switches will come on.

7.1.4.39 Simultaneously OPEN the PTC "PRESSURANT SYSTEM VENT VALVE" and "PROPELLANT SYSTEM VENT VALVE". When the pressure, as read on the "PROPELLANT SUPPLY PRESSURE" gauge, reads 95 psig the "PS-C", "PS-D", "PACKAGE "A" D/S PRESS VALVE", "OXID TANK PRESS VALVE" ahd "FUEL TANK PRESS VALVE" lights will go out. When the pressure, as read on the "PROPELLANT SUPPLY PRESSURE" gauge, reads 25 psig throw the "OXID SIDE REGULATOR FLOW VALVE" and "FUEL SIDE REGULATOR FLOW VALVE" switches to the "OPEN" position. The lights above the switches will come on. Continue to vent until the "PRESSURANT SUPPLY PRESSURE" gauge and the "PROPELLANT SUPPLY PRESSURE" gauge each read 0 psig.

7.1.4.40 CLOSE the PTC "SUPPLY VENT VALVE", "PRESSURANT SYSTEM VENT VALVE" and "PROPELLANT SYSTEM VENT VALVE" and throw the "OXID BLADDER VENT VALVE", "FUEL BLADDER VENT VALVE", "PACKAGE "C" U/S PRESS VALVE", "PACKAGE "D" U/S PRESS VALVE", "PACKAGE "C" D/S PRESS VALVE", "PACKAGE "D" D/S PRESS VALVE, "OXID SIDE REGULATOR FLOW VALVE", and "FUEL SIDE REGULATOR FLOW VALVE" switches to the CLOSE position. The light above the switches will go out.

7.1.4.41 Turn the PTC "HL #1", "HL #2" and "HL #3" to the closed position, and CLOSE the FACILITY HAND VALVE "A" D/S.

7.1.4.42 Disregard the first hour of testing and draw a straight line through the points just plotted on the graph paper which

PREPARED BY: T. Kniffin	DATE	APPROVED FOR NAA:	DATE
CHECKED BY: [illegible] 8-12-64	DATE	[illegible] 8-12-64	

DESIGN APPROVAL TEST
ORBIT ATTITUDE AND MANEUVER SYSTEM
(SE7)

NAME OF TEST FUNCTIONAL TEST TEST NO. 106156-401 SHEET 151 OF 413
PART NO. 2-DAY CONFIG. {MAC / NAA} 14-DAY CONFIG. {MAC 52-52701 / NAA 99-105161}

7.1.4.42 (cont'd)	most closely represents the slope generated by the points.
7.1.4.43	Compare the two straight line curves of paragraphs 7.1.4.26 and 7.1.4.42. It shall be considered that excessive leakage has occured if the curve generated by Tank Module leakage has a greater slope than the curve generated by the calibrated leak (paragraph 7.1.4.26). If Tank Module leakage is not excessive, proceed directly to paragraph 7.1.4.45.
7.1.4.44	If the leakage of paragraph 7.1.4.43 is excessive perform the following:
7.1.4.44.1	Remove the enclosure from around the Tank Module.
7.1.4.44.2	OPEN the PTC "MAIN SUPPLY VALVE".
7.1.4.44.3	Throw the PTC "A U/S" switch to the "OPEN" position. The light above the switch will come on.
7.1.4.44.4	Adjust the PTC "HL #1" to indicate 1500 psig on the "SUPPLY PRESSURE" gauge.
7.1.4.44.5	Using the mass spectrometer sampling probe scan all pneumatic lines, connections, fittings and welded seams of the Tank Module Pressurant Tank and the Component Package "A". Note the point(s) or areas of leakage and record.
7.1.4.44.6	CLOSE the PTC "MAIN SUPPLY VALVE". OPEN the PTC "SUPPLY VENT VALVE" and allow the "SUPPLY PRESSURE" gauge to indicate 0 psig.
7.1.4.44.7	CLOSE the PTC "SUPPLY VENT VALVE".

PREPARED BY:	DATE	APPROVED FOR NAA:	DATE
T. Kniffin			
CHECKED BY:	DATE		
[illegible]	8-12-64	[illegible]	8-12-64

DESIGN APPROVAL TEST
ORBIT ATTITUDE AND MANEUVER SYSTEM
(SE7)

NAME OF TEST FUNCTIONAL TEST TEST NO. 106156-401 SHEET 152 OF 413

PART NO. 2-DAY CONFIG. {MAC / NAA} 14-DAY CONFIG. {MAC 52-52701 / NAA 99-106161}

7.1.4.44.8 Throw the PTC "A U/S" switch to the "CLOSED" position. The light above the switch will go off.

7.1.4.44.9 OPEN the PTC "MAIN SUPPLY VALVE", "PRESSURANT SYSTEM PRESSURANT SUPPLY VALVE", "PROPELLANT SYSTEM PRESSURANT SUPPLY VALVE" and FACILITY HAND VALVE "A" D/S.

7.1.4.44.10 Adjust the PTC "HL #1" so that 125 psig is read on the "SUPPLY PRESSURE" gauge.

7.1.4.44.11 Throw the PTC "PACKAGE "C" U/S PRESS VALVE", "PACKAGE "D" U/S PRESS VALVE" "PACKAGE "C" D/S PRESS VALVE" and "PACKAGE "D" D/S PRESS VALVE" switches to the "OPEN" position. The lights above the switches will come on.

7.1.4.44.12 Simultaneously adjust the PTC "HL #2" and "HL #3" so that 125 psig is read on the "PRESSURANT SUPPLY PRESSURE" gauge and the "PROPELLANT SUPPLY PRESSURE" gauge. When the pressure reaches 100 psig on the "PROPELLANT SUPPLY PRESSURE" gauge the "PS-C" (PACKAGE "C" PRESSURE SWITCH), "PS-D" (PACKAGE "D" PRESSURE SWITCH), OXID TANK PRESS VALVE", "FUEL TANK PRESS VALVE", and "PACKAGE "A" D/S PRESS VALVE" lights will come on.

7.1.4.44.13 Using the mass spectrometer sampling probe scan all pneumatic and propellant lines, connections, fittings and welded seams of the Tank Module from the Component Package "A" outlet port to the Component Package "C" and "D" inlets and manual charge valves. Note the point(s) or areas of leakage and record.

7.1.4.44.14 Using the mass spectrometer sampling probe scan all propellant lines, connections, fittings and welded seams of the Tank Module from Component Packages "C" and "D" outlet ports to the Propellant Shutoff Valve outlets. Note the point(s) or areas of leakage and record.

PREPARED BY: T. Kniffin	DATE	APPROVED FOR NAA:	DATE
CHECKED BY: [illegible]	8-12-64	[illegible]	8-12-64

DESIGN APPROVAL TEST
ORBIT ATTITUDE AND MANEUVER SYSTEM
(SE7)

NAME OF TEST FUNCTIONAL TEST TEST NO. 106156-401 SHEET 153 OF 413

PART NO. 2-DAY CONFIG. {MAC / NAA} 14-DAY CONFIG. {MAC 52-52701 / NAA 99-106161}

7.1.4.44.15 CLOSE the PTC "MAIN SUPPLY VALVE", "PRESSURANT SYSTEM PRESSURANT SUPPLY VALVE" and "PROPELLANT SYSTEM PRESSURANT SUPPLY VALVE".

7.1.4.44.16 OPEN the PTC "SUPPLY VENT VALVE" and vent until the "SUPPLY PRESSURE" gauge reads 0 psig.

7.1.4.44.17 Throw the PTC "OXID BLADDER VENT VALVE" and "FUEL BLADDER VENT VALVE" switches to the "OPEN" position. The lights above the switches will come on.

7.1.4.44.18 Simultaneously OPEN the PTC "PRESSURANT SYSTEM VENT VALVE" and "PROPELLANT SYSTEM VENT VALVE". When the pressure, as read on the "PROPELLANT SUPPLY PRESSURE" gauge, reads 95 psig the "PS-C", "PS-D", "PACKAGE "A" D/S PRESS VALVE", "OXID TANK PRESS VALVE" and "FUEL TANK PRESS VALVE" lights will go out. When the pressure, as read on the "PROPELLANT SUPPLY PRESSURE" gauge, reads 25 psig throw the "OXID SIDE REGULATOR FLOW VALVE" and "FUEL SIDE REGULATOR FLOW VALVE" switches to the "OPEN" position. The lights above the switches will come on. Continue to vent until the "PRESSURANT SUPPLY PRESSURE" gauge and the "PROPELLANT SUPPLY PRESSURE" gauge each read 0 psig.

7.1.4.44.19 CLOSE the PTC "SUPPLY VENT VALVE", "PRESSURANT SYSTEM VENT VALVE" and "PROPELLANT SYSTEM VENT VALVE" and throw the "OXID BLADDER VENT VALVE", "FUEL BLADDER VENT VALVE", "PACKAGE "C" U/S PRESS VALVE", "PACKAGE "D" U/S PRESS VALVE", "PACKAGE "C" D/S PRESS VALVE", "PACKAGE "D" D/S PRESS VALVE", "OXID SIDE REGULATOR FLOW VALVE", and "FUEL SIDE REGULATOR FLOW VALVE" switches to the CLOSE position. The lights above the switches will go out.

7.1.4.44.20 Turn the PTC "HL #1", "HL #2" and the "HL #3" to the full closed position, and CLOSE the FACILITY HAND VALVE "A" D/S.

PREPARED BY:	DATE	APPROVED FOR NAA:	DATE
T. Kniffin			
CHECKED BY:	DATE		
[illegible]	8-12-64	[illegible]	8-12-64

DESIGN APPROVAL TEST
ORBIT ATTITUDE AND MANEUVER SYSTEM
(SE7)

NAME OF TEST FUNCTIONAL TEST TEST NO. 106156-401 SHEET 154 OF 413

PART NO. 2-DAY CONFIG. {MAC ____ NAA ____ 14-DAY CONFIG. {MAC 52-52701 NAA 99-106161

7.1.4.44.21 Disconnect the PTC test lines from the Engine System and close all the Component Package manual valves. Re-install all the resistoflex caps on the Component Package ports.

NOTE: Torque values are as shown in Table I.

7.1.4.44.22 Disconnect the ECP electrical connectors from the Tank Module electrical harness.

7.1.4.44.23 Return the Tank Module to the clean room as called out in paragraph 3.1 and repair as necessary.

7.1.4.44.24 Upon completion of Tank Module repair repeat the procedures of paragraph 7.1.1.1 through 7.1.4.43 except for 7.1.2.2.

7.1.4.45. Remove the leakage sensing lines which were installed in paragraph 7.1.4.4.

PREPARED BY:	DATE	APPROVED FOR NAA:	DATE
T. Kniffin		[illegible]	8-12-64
CHECKED BY: [illegible]	8-12-64		

DESIGN APPROVAL TEST
ORBIT ATTITUDE AND MANEUVER SYSTEM
(SE7)

NAME OF TEST FUNCTIONAL TEST TEST NO. 106156-401 SHEET 155 OF 413
PART NO. 2-DAY CONFIG. {MAC / NAA} 14-DAY CONFIG. {MAC 52-52701 / NAA 99-106161}

7.1.5 Functional and Internal Leakage

7.1.5.1 Packages "A", "C", "D" and "E" Cartridge Bridge Continuity Test

7.1.5.1.1 Throw the "CARTRIDGE BRIDGE CONTINUITY TEST" switch on the ECP to the "ON" position. The "PACKAGE "A" PRESSURANT TANK", "PACKAGE "C" OXIDIZER TANK", "PACKAGE "D" FUEL TANK, "PACKAGE "E" NORMALLY CLOSED" and PACKAGE "E" NORMALLY OPEN" lights on the ECP shall come on.

7.1.5.1.2 Throw the "CARTRIDGE BRIDGE CONTINUITY TEST" switch to the "OFF" position. The lights of paragraph 7.1.5.1.1 shall go off.

7.1.5.2 Pressure-Temperature Indicator and Flight Transducer Calibration

7.1.5.2.1 Connect pressure gauge G_5 to the pressurizing line between the PTC and the Tank Module "HI PRESS GAS CHG VALVE PORT - 1" as indicated in Figure 37.

7.1.5.2.2 Connect the "AUXILIARY PRESSURANT SUPPLY TEST SETUP" to the Tank Module "REG OUT TEST - 3" port as shown in Figure 38.

7.1.5.2.3 Disconnect the MG 06-12-8S receptacle from the Component Package "A" Transducer.

7.1.5.2.3.1 Connect the Pressure-Temperature Indicator, and Auxiliary D.C. Power Supply to the Component Package "A" Flight Transducer as schematically shown in Figure 58.

PREPARED BY:	DATE	APPROVED FOR NAA:	DATE
T. Kniffin			
CHECKED BY:	DATE		
[illegible]	8-12-64	[illegible]	8-12-64

DESIGN APPROVAL TEST
ORBIT ATTITUDE AND MANEUVER SYSTEM
(SE7)

NAME OF TEST FUNCTIONAL TEST TEST NO. 106156-401 SHEET 156 OF 413

PART NO. 2-DAY CONFIG. {MAC / NAA} 14-DAY CONFIG. {MAC 52-52701 / NAA 99-106161}

7.1.5.2.3.2	With the selector knob on the voltmeter set to "LINE, adjust the coarse and fine potentiometers so that 5. ± .025 VDC are applied to the transducer.
7.1.5.2.4	Mount the Pressure-Temperature Indicator, P/N NA5-27350T1 into the viewing fixture, P/N 24973 or equivalent to achieve the correct viewing angle as noted in Figure 39.
7.1.5.2.4.1	When reading the Pressure-Temperature Indicator, align the wire sight with the eye and the number 50 on the temperature scale. Then move only the eye to read the pressure scale.
7.1.5.2.5	Source Pressure
7.1.5.2.5.1	Throw the "DC POWER" switches on the PTC to the "ON" position.
7.1.5.2.5.2	Verify that the Engine System Tank Module Manual Valve "HI PRESS GAS CHG VALVE - 1A" is OPEN.
7.1.5.2.5.3	Throw the PTC "PACKAGE "A" U/S PRESS VALVE" switch to the "OPEN" position. The light above the switch will come on.
7.1.5.2.5.4	OPEN the PTC "MAIN SUPPLY VALVE". Adjust the PTC "HL #1" so that 300 ±7.5 psig is read on the "SUPPLY PRESSURE" gauge.
7.1.5.2.5.4.1	Observe and record the corresponding Pressure-Temperature Indicator reading on the data sheet provided.
7.1.5.2.5.4.2	Repeat Paragraph 7.1.5.2.5.4 and 7.1.5.2.5.4.1 for each pressure required in the data sheet of paragraph 7.1.6.5.

PREPARED BY:	DATE	APPROVED FOR NAA:	DATE
T. G. Kniffin		[illegible]	8-12-64
CHECKED BY: [illegible]	8-12-64		

DESIGN APPROVAL TEST
ORBIT ATTITUDE AND MANEUVER SYSTEM
(SE7)

NAME OF TEST FUNCTIONAL TEST TEST NO. 106156-401 SHEET 157 OF 413
PART NO. 2-DAY CONFIG. {MAC / NAA} 14-DAY CONFIG. {MAC 52-52701 / NAA 99-106161}

7.1.5.2.5.5	CLOSE the PTC "MAIN SUPPLY VALVE".
7.1.5.2.5.5.1	OPEN the PTC "SUPPLY VENT VALVE" and vent until the "SUPPLY PRESSURE" gauge reads 0 psig.
7.1.5.2.5.5.2	Throw the "PACKAGE "A" U/S PRESS VALVE" switch on the PTC to the "CLOSED" position. The light will go out.
7.1.5.2.5.5.3	CLOSE the PTC "SUPPLY VENT VALVE".
7.1.5.2.5.5.4	Remove pressure gauge G_5 and cap the associated pressure tap in the pressurizing line between the PTC and Engine System Tank Module.
7.1.5.2.6	Regulated Pressure
7.1.5.2.6.1	Connect the Component Package "B" "REGULATED PRESSURE FLIGHT TRANSDUCER" to the DC power supply and voltmeter V_1 as schematically shown in Figure 58.
7.1.5.2.6.2	Verify that voltmeter V_1 reads 5 ± .025 VDC, if not, readjust it.
7.1.5.2.6.3	Close the Engine System Tank Module "HI PRESS GAS TEST VALVE - 2A". Torque per the value indicated in Table I.
7.1.5.2.6.4	OPEN the PTC "MAIN SUPPLY VALVE", "PRESSURANT SYSTEM PRESSURANT SUPPLY VALVE" and "PROPELLANT SYSTEM PRESSURANT SUPPLY VALVE".
7.1.5.2.6.5	Adjust the PTC "HL #1" so that 3000 ±100 psig is read on the "SUPPLY PRESSURE" gauge.

PREPARED BY:	DATE	APPROVED FOR NAA:	DATE
T. G. Kniffin		[illegible]	8-12-64
CHECKED OUT: [illegible]	8-12-64		

DESIGN APPROVAL TEST
ORBIT ATTITUDE AND MANEUVER SYSTEM
(SE7)

NAME OF TEST FUNCTIONAL TEST TEST NO. 106156-401 SHEET 158 OF 413
PART NO. 2-DAY CONFIG. {MAC / NAA} 14-DAY CONFIG. {MAC 52-52701 / NAA 99-106161}

.1.5.2.6.6 Throw the PTC "PACKAGE "C" U/S PRESS VALVE", "PACKAGE "D" U/S PRESS VALVE", "OXID RELIEF PRESS VALVE", and "FUEL RELIEF PRESS VALVE" switches to the "OPEN" position. The lights above the switches will come on.

7.1.5.2.6.7 Simultaneously adjust the PTC "HL #2" and "HL #3" so that 350 ±10 psig is read on the "PRESSURANT SUPPLY PRESSURE" gauge and the "PROPELLANT SUPPLY PRESSURE" gauge. When the pressure reaches 100 psig on the "PROPELLANT SUPPLY PRESSURE" gauge the "PS-C" (PACKAGE "C" PRESSURE SWITCH), "PS-D" (PACKAGE "D" PRESSURE SWITCH), OXID TANK PRESS VALVE", "FUEL TANK PRESS VALVE", and "PACKAGE "A" D/S PRESS VALVE" lights will come on.

7.1.5.2.6.8 Using the "AUXILIARY PRESSURANT SUPPLY TEST SETUP" shown in Figure 48, supply pressures to the Engine System. "REG OUT TEST - 3" port as indicated in paragraph 7.1.6.5 and record the corresponding Pressure-Temperature Indicator readings on the data sheet provided.

7.1.5.2.6.8.1 The procedure for supplying the required pressures to the Engine System "REG OUT TEST - 3" port shall be as follows; Reference Figure 38.

7.1.5.2.6.8.1.1 Verify that hand loader L_1 is in the full closed position.

7.1.5.2.6.8.1.2 OPEN the "AUXILIARY PRESSURANT SUPPLY VALVE".

7.1.5.2.6.8.1.3 Adjust hand loader L_1 so as to yield the first pressure required in the "Supply Pressure Required" column per paragraph 7.1.7.5 as indicated on pressure gauge G_6.

7.1.5.2.6.8.1.4 Observe and record the corresponding Pressure-Temperature Indicator reading on the data sheet provided.

PREPARED BY:	DATE	APPROVED FOR NAA:	DATE
T. G. Kniffin			
CHECKED BY:	DATE		
	8-12-64		8-12-64

DESIGN APPROVAL TEST
ORBIT ATTITUDE AND MANEUVER SYSTEM
(SE7)

NAME OF TEST FUNCTIONAL TEST TEST NO. 106156-401 SHEET 159 OF 413

PART NO. 2-DAY CONFIG. {MAC ____ NAA ____ 14-DAY CONFIG. {MAC 52-52701 NAA 99-106161

7.1.5.2.6.8.1.5 Repeat paragraphs 7.1.5.2.6.8.1.3 and 7.1.5.2.6.8.1.4 for each pressure required per paragraph 7.1.6.5, regulated pressure.

7.1.5.2.6.9 Close the "AUXILIARY PRESSURANT SUPPLY VALVE".

7.1.5.2.6.10 Turn hand loader L_1 to the full closed position and ven the "AUXILIARY PRESSURANT SUPPLY SYSTEM" until pressure gauge G_6 indicates 0 psig.

7.1.5.2.6.11 CLOSE the PTC "MAIN SUPPLY VALVE", PRESSURANT SYSTEM PRESSURANT SUPPLY VALVE" and "PROPELLANT SYSTEM PRESSURANT SUPPLY VALVE".

7.1.5.2.6.12 OPEN the PTC "SUPPLY VENT VALVE" and vent until the "SUPPLY PRESSURE" gauge reads 0 psig.

7.1.5.2.6.13 Throw the PTC "OXID BLADDER VENT VALVE" and "FUEL BLADDER VENT VALVE" switches to the "OPEN" position. The lights above the switches will come on.

7.1.5.2.6.14 Simultaneously OPEN the PTC "PRESSURANT SYSTEM VENT VALVE" and "PROPELLANT SYSTEM VENT VALVE". When the pressure, as read on the "PROPELLANT SUPPLY PRESSURE" gauge, reads 95 psig the "PS-C", "PS-D", "PACKAGE "A" D/S PRESS VALVE", "OXID TANK PRESS VALVE" and "FUEL TANK PRESS VALVE" lights will go out. When the pressure, as read on the "PROPELLANT SUPPLY PRESSURE" gauge reads 25 psig throw the "OXID SIDE REGULATOR FLOW VALVE" and "FUEL SIDE REGULATOR FLOW VALVE" switches to the "OPEN" position. The lights above the switches will come on. Continue to vent until the "PRESSURANT SUPPLY PRESSURE" gauge and the "PROPELLANT SUPPLY PRESSURE" gauge each read 0 psig.

PREPARED BY:	DATE	APPROVED FOR NAA:	DATE
T. G. Kniffin		[illegible]	8-12-64
CHECKED BY: [illegible]	8-12-64		

DESIGN APPROVAL TEST
ORBIT ATTITUDE AND MANEUVER SYSTEM
(SE7)

NAME OF TEST FUNCTIONAL TEST TEST NO. 106156-401 SHEET 160 OF 413

PART NO. 2-DAY CONFIG. {MAC / NAA} 14-DAY CONFIG. {MAC 52-52701 / NAA 99-106161}

7.1.5.2.6.15 CLOSE the PTC "SUPPLY VENT VALVE", "PRESSURANT SYSTEM VENT VALVE" and "PROPELLANT SYSTEM VENT VALVE" and throw the "OXID BLADDER VENT VALVE", "FUEL BLADDER VENT VALVE", "PACKAGE "C" U/S PRESS VALVE", "PACKAGE "D" U/S PRESS VALVE", "OXID SIDE REGULATOR FLOW VALVE", and "FUEL SIDE REGULATOR FLOW VALVE" switches to the CLOSE position. The lights above the switches will go out.

7.1.5.2.6.16 Turn the PTC "HL #1", "HL #2" and "HL #3" to the closed position.

7.1.5.2.6.17 Disconnect the "AUXILIARY PRESSURANT SUPPLY SYSTEM SETUP" from the Engine System "REG OUT TEST - 3" port.

7.1.5.2.6.18 Replace the cap on the Engine System "REG OUT TEST - 3" port and torque per the value indicated in Table I.

7.1.5.2.6.19 OPEN the Engine System Tank Module "HI PRESS GAS TEST VALVE- 2A" 2 1/2 turns.

PREPARED BY:	DATE	APPROVED FOR NAA:	DATE
T. G. Kniffin		[illegible]	8-12-64
CHECKED BY: [illegible]	DATE		

DESIGN APPROVAL TEST
ORBIT ATTITUDE AND MANEUVER SYSTEM
(SE7)

NAME OF TEST FUNCTIONAL TEST TEST NO. 106156-401 SHEET 161 OF 413
PART NO. 2-DAY CONFIG. {MAC / NAA} 14-DAY CONFIG. {MAC 52-52701 / NAA 99-106161}

7.1.5.3 COMPONENT PACKAGE "E"

7.1.5.3.1 Solenoid Valve Response (Opening)

7.1.5.3.1.1 Remove the cap and CLOSE the Tank Module "BYPASS VALVE TEST - 19A". Remove the cap from the Tank Module "REG OUT TEST - 3" port.

NOTE: Torque values are as shown on Table I.

7.1.5.3.1.2 Insure that the FACILITY HAND VALVE "A" D/S is CLOSED.

7.1.5.3.1.3 OPEN the PTC "MAIN SUPPLY VALVE", "PRESSURANT SYSTEM PRESSURANT SUPPLY VALVE" and "PROPELLANT SYSTEM PRESSURANT SUPPLY VALVE".

7.1.5.3.1.4 Adjust the PTC "HL #1" so that 3000 ±100 psig is read on the "SUPPLY PRESSURE" gauge.

7.1.5.3.1.5 Assure that the FACILITY HAND VALVE "A" D/S is CLOSED.

7.1.5.3.1.6 Throw the PTC "PACKAGE "C" U/S PRESS VALVE" and "PACKAGE "D" U/S PRESS VALVE" switches to the "OPEN" position. The lights above the switches will come on.

7.1.5.3.1.7 Simultaneously adjust the PTC "HL #2" and "HL #3" so that 300 ±10 psig is read on the "PRESSURANT SUPPLY PRESSURE" gauge and the "PROPELLANT SUPPLY PRESSURE" gauge. When the pressure reaches 100 psig on the "PROPELLANT SUPPLY PRESSURE" gauge the "PS-C" (PACKAGE "C" PRESSURE SWITCH"), "PS-D" (PACKAGE "D" PRESSURE SWITCH), "OXID TANK PRESS VALVE", "FUEL TANK PRESS VALVE" and "PACKAGE "A" D/S PRESS VALVE" lights will come on.

7.1.5.3.1.8 Slowly OPEN the FACILITY HAND VALVE "A" D/S.

PREPARED BY: T. Kniffin	DATE	APPROVED FOR NAA:	DATE
CHECKED BY: [signature]	8-12-64	[signature]	8-12-64

DESIGN APPROVAL TEST
ORBIT ATTITUDE AND MANEUVER SYSTEM
(SE7)

NAME OF TEST FUNCTIONAL TEST TEST NO. 106156-401 SHEET 162 OF 413

PART NO. 2-DAY CONFIG. {MAC / NAA} 14-DAY CONFIG. {MAC 52-52701 / NAA 99-106161}

7.1.5.3.1.9	Turn the DC Power Supply unit "ON".
7.1.5.3.1.9.1	Adjust the DC Power Supply Input Voltmeter to indicate 26 ± 4 VDC.
7.1.5.3.1.10	Throw the ECP "DC" Power" switch to the "OFF" position.
7.1.5.3.1.11	Connect an electrical lead from the electrical connector "E_1" on the "ELECTRICAL CHECKOUT JACK PANEL" to the black connector located directly to the left of the ECP oscilloscope "CHANNEL A POLARITY" knob. Connect another electrical lead from the electrical connector "E_2" to the upper red connector located directly to the left of the "CHANNEL A POLARITY" knob.
7.1.5.3.1.12	Adjust the ECP oscilloscope as follows:
7.1.5.3.1.12.1	Rotate the "INTENSITY" knob clockwise until a "click" is felt.
7.1.5.3.1.12.2	Adjust the "A VERT. SENSITIVITY" (black) knob to "0.1 volts/cm" in the "DC" quadrant. Rotate the "VERNIER" (red) knob clockwise until a "click" is felt.
7.1.5.3.1.12.3	Adjust the "B VERT. SENSITIVITY" (black) knob to the "OFF" position.

PREPARED BY:	DATE	APPROVED FOR NAA:	DATE
T. Kniffin		[illegible]	8-12-64
CHECKED BY: [illegible]	8-12-64		

DESIGN APPROVAL TEST
ORBIT ATTITUDE AND MANEUVER SYSTEM
(SE7)

NAME OF TEST FUNCTIONAL TEST TEST NO. 106156-401 SHEET 163 OF 413

PART NO. 2-DAY CONFIG. {MAC / NAA} 14-DAY CONFIG. {MAC 52-52701 / NAA 99-106161}

7.1.5.3.1.12.4	Adjust the "SWEEP TIME HORIZ. SENS." (black) knob to "5.0 millisec/cm". Rotate the "VERNIER" (red) knob clockwise until a "click" is felt.	B
7.1.5.3.1.12.5	Throw the "SWEEP TIME HORIZ. SENS." switch to the "DC" position.	
7.1.5.3.1.12.6	Throw the "SWP. EXP." switch to the "X1" position.	
7.1.5.3.1.12.7	Adjust the "SYNC" (black) knob to the "INT + " position. Adjust the "TRIGGER LEVEL" (red) knob to approximately the midway position.	
7.1.5.3.1.12.8	Adjust the "VERT. PRESENTATION" (black) knob to the "A" position. Adjust the "CHANNEL A POLARITY" (red) knob to the "POS UP" position.	B
7.1.5.3.1.12.9	Adjust the "INTENSITY" and "SCALE" knobs to the full clockwise position.	
7.1.5.3.1.12.10	Adjust the "VERTICAL POSITION A" (black) knob and the "HORIZ. POSITION" knob to produce a pinpoint beam of light five centimeters to the left of the vertical grid line and one centimeter below the horizontal grid line. Adjustment of the "TRIGGER LEVEL" (red) knob may also be necessary.	
7.1.5.3.1.12.11	Adjust the "FOCUS" knob to bring the beam into focus.	
7.1.5.3.1.12.12	Adjust the "INTENSITY" knob counterclockwise to partially reduce the brightness of the beam. The purpose of this is to extend the life of the cathode ray tube.	
7.1.5.3.1.12.13	Throw the ECP "SCOPE TRACE SELECTOR" switch to the "ENERGIZE" position.	

PREPARED BY:	DATE	APPROVED FOR NAA:	DATE
T. Kniffin		[signature]	8-12-64
CHECKED BY: [signature]	8-12-64		

DESIGN APPROVAL TEST
ORBIT ATTITUDE AND MANEUVER SYSTEM
(SE7)

NAME OF TEST FUNCTIONAL TEST TEST NO. 106156-401 SHEET 164 OF 413
PART NO. 2-DAY CONFIG. {MAC / NAA} 14-DAY CONFIG. {MAC 52-52701 / NAA 99-106161}

7.1.5.3.1.12.14 Throw the ECP "PACKAGE "E" SOLENOID VALVE" switch to the "ON" position.

7.1.5.3.1.12.15 Throw the ECP "PROP VALVE POWER" switch to the "ON" position and simultaneously take a photograph of the oscilloscope screen display. Measure and record the total response time per Figure 48A. Maximum response time shall be 0.022 seconds.

7.1.5.3.1.12.16 Throw the ECP "PROP VALVE POWER" switch to the "OFF" position.

NOTE: If oscilloscope does not trigger properly, readjust the "TRIGGER LEVEL" (red) knob and repeat paragraph 7.1.5.3.1.15 and 7.1.5.3.1.16.

7.1.5.3.2. Solenoid Valve Response (Closing)

7.1.5.3.2.1 Throw the ECP "SCOPE TRACE SELECTOR" switch to the "DEENERGIZE" position.

7.1.5.3.2.2 Adjust the ECP oscilloscope as follows:

7.1.5.3.2.2.1 Adjust the "A VERT. SENSITIVITY" (black) knob to "0.1 volts/cm" in the "DC" quadrant. B

7.1.5.3.2.2.2 Adjust the "VERTICAL POSITION A" (black) knob so that the upper beam is two centimeters above the horizontal grid line.

7.1.5.3.2.3 Throw the ECP "PROP VALVE POWER" switch to the "ON" position and then to the "OFF" position and simultaneously take a photograph of the oscilloscope screen display. Measure and record total response time per Figure 48B. Maximum response time shall be 0.050 seconds.

PREPARED BY: T. Kniffin	DATE	APPROVED FOR NAA:	DATE
CHECKED BY:	DATE 8-12-64		8-12-64

DESIGN APPROVAL TEST
ORBIT ATTITUDE AND MANEUVER SYSTEM
(SE7)

NAME OF TEST FUNCTIONAL TEST TEST NO. 106156-401 SHEET 165 OF 413
PART NO. 2-DAY CONFIG. {MAC / NAA} 14-DAY CONFIG. {MAC 52-52701 / NAA 99-106161}

7.1.5.3.2.4 Throw the ECP "PACKAGE "E" SOLENOID VALVE" switch to the "OFF" position.

7.1.5.3.2.5 CLOSE the PTC "MAIN SUPPLY VALVE", "PRESSURANT SYSTEM PRESSURANT SUPPLY VALVE" and "PROPELLANT SYSTEM PRESSURANT SUPPLY VALVE.

7.1.5.3.2.6 OPEN the PTC "SUPPLY VENT VALVE" and vent until the "SUPPLY PRESSURE" gauge reads 0 psig.

7.1.5.3.2.7 Throw the PTC "OXID BLADDER VENT VALVE" and "FUEL BLADDER VENT VALVE" switches to the "OPEN" position. The lights above the switches will come on.

7.1.5.3.2.8 Simultaneously OPEN the PTC "PRESSURANT SYSTEM VENT VALVE" and "PROPELLANT SYSTEM VENT VALVE". When the pressure, as read on the "PROPELLANT SUPPLY PRESSURE" gauge, reads 95 psig the "PS-C", "PS-D", "PACKAGE "A" D/S PRESS VALVE", "OXID TANK PRESS VALVE" and "FUEL TANK PRESS VALVE" lights will go out. When the pressure, as read on the "PROPELLANT SUPPLY PRESSURE" gauge, reads 25 psig throw the "OXID SIDE REGULATOR FLOW VALVE" and "FUEL SIDE REGULATOR FLOW VALVE" switches to the "OPEN" position. The lights above the switches will come on. Continue to vent until the "PRESSURANT SUPPLY PRESSURE" gauge and the "PROPELLANT SUPPLY PRESSURE" gauge each read 0 psig.

7.1.5.3.2.9 CLOSE the PTC "SUPPLY VENT VALVE", "PRESSURANT SYSTEM VENT VALVE" and "PROPELLANT SYSTEM VENT VALVE" and throw the "OXID BLADDER VENT VALVE", "FUEL BLADDER VENT VALVE", "PACKAGE "C" U/S PRESS VALVE", "PACKAGE "D" U/S PRESS VALVE", "OXID SIDE REGULATOR FLOW VALVE", and "FUEL SIDE REGULATOR FLOW VALVE" switches to the CLOSE position. The lights above the switches will go out.

PREPARED BY:	DATE	APPROVED FOR NAA:	DATE
T. Kniffin			
CHECKED BY:	DATE		
			8-12-64

DESIGN APPROVAL TEST
ORBIT ATTITUDE AND MANEUVER SYSTEM
(SE7)

NAME OF TEST FUNCTIONAL TEST TEST NO. 106156-401 SHEET 164 OF 413

PART NO. 2-DAY CONFIG. {MAC / NAA} 14-DAY CONFIG. {MAC 52-52701 / NAA 99-106151}

7.1.5.3.2.10 Turn the PTC "HL #1", "HL #2" and the "HL #3" to the full closed position and CLOSE the FACILITY HAND VALVE "A" D/S.

7.1.5.3.2.11 Open the Tank Module "BY PASS VALVE TEST-19A" and replace the cap. Replace the cap on the "REGOUT TEST-3" port.

NOTE: Torque values are as shown in Table I.

PREPARED BY:	DATE	APPROVED FOR NAA:	DATE
T. Kniffin			
CHECKED BY:	DATE		
	8-12-64		8-12-64

DESIGN APPROVAL TEST
ORBIT ATTITUDE AND MANEUVER SYSTEM
(SE7)

NAME OF TEST FUNCTIONAL TEST TEST NO. 106156-401 SHEET 167 OF 413
PART NO. 2-DAY CONFIG. {MAC / NAA} 14-DAY CONFIG. {MAC 52-52701 / NAA 99-106161}

7.1.5.3.3 Pressure Switch Actuation Pressures

7.1.5.3.3.1 Disconnect the pressurizing line downstream of the "PACKAGE "C" D/S PRESS VALVE" from the "OXID TEST PORT - 12". Connect the pressurizing line to the Component Package "B" "REG OUT TEST - 3" port.

7.1.5.3.3.2 Disconnect the pressurizing line downstream of the "PACKAGE "D" PRESS VALVE" from the "FUEL TEST PORT - 14". Connect to the pressurizing line a pressure gauge (G_1).

7.1.5.3.3.3 OPEN the PTC "MAIN SUPPLY VALVE", "PRESSURANT SYSTEM PRESSURANT SUPPLY VALVE" and "PROPELLANT SYSTEM PRESSURANT SUPPLY VALVE".

7.1.5.3.3.4 Adjust the PTC "HL #1" so that 3000 ±100 psig is read on the "SUPPLY PRESSURE" gauge.

7.1.5.3.3.5 Assure that the FACILITY HAND VALVE "A" D/S is CLOSED.

7.1.5.3.3.6 Throw the PTC "PACKAGE "C" U/S PRESS VALVE", "PACKAGE "D" U/S PRESS VALVE", "PACKAGE "C" D/S PRESS VALVE", "PACKAGE "D" D/S PRESS VALVE", "OXID RELIEF PRESS VALVE" and "FUEL RELIEF PRESS VALVE" switches to the "OPEN" position. The lights above the switches will come on.

7.1.5.3.3.7 Simultaneously adjust the PTC "HL #2" and "HL #3" so that 300 ±10 psig is read on the "PRESSURANT SUPPLY PRESSURE" gauge and the "PROPELLANT SUPPLY PRESSURE" gauge. When the pressure reaches 100 psig on the "PROPELLANT SUPPLY PRESSURE" gauge the "PS-C" (PACKAGE "C" PRESSURE SWITCH"), "PS-D"(PACKAGE "D" PRESSURE SWITCH). "OXID TANK PRESS VALVE", "FUEL TANK PRESS VALVE" and "PACKAGE "A" D/S PRESS VALVE" lights will come on.

7.1.5.3.3.8 Slowly OPEN the FACILITY HAND VALVE "A" D/S.

PREPARED BY: T. Kniffin	DATE	APPROVED FOR NAA:	DATE
CHECKED BY: [illegible]	8-12-64	[illegible]	8-12-64

DESIGN APPROVAL TEST
ORBIT ATTITUDE AND MANEUVER SYSTEM
(SE7)

NAME OF TEST FUNCTIONAL TEST TEST NO. 106156-401 SHEET 168 OF 413
PART NO. 2-DAY CONFIG. {MAC / NAA} 14-DAY CONFIG. {MAC 52-52701 / NAA 99-106161}

7.1.5.3.3.9 Slowly increase the pressure at pressure gauge G_1 by simultaneously adjusting HL #2 and HL #3 until the ECP "CLOSE PRESSURE SWITCH" light comes on. As read by pressure gauge G_1 the actuation pressure shall be 380 +10 psia. Record the actuation pressure on the data sheet.

7.1.5.3.3.10 CLOSE the PTC "MAIN SUPPLY VALVE", the "PROPELLANT SYSTEM PRESSURANT SUPPLY VALVE" and the "PRESSURANT SYSTEM PRESSURANT SUPPLY VALVE".

7.1.5.3.3.11 OPEN the PTC "SUPPLY VENT VALVE" and vent until the "SUPPLY PRESSURE" gauge reads 0 psig.

7.1.5.3.3.12 Throw the PTC "OXID BLADDER VENT VALVE" and "FUEL BLADDER VENT VALVE" switches to the "OPEN" position. The lights above the switches will come on.

7.1.5.3.3.13 Slowly decrease the pressure at pressure gauge G_1 by simultaneously cracking OPEN the PTC "PROPELLANT SYSTEM VENT VALVE" and the "PRESSURANT SYSTEM VENT VALVE" until the ECP "CLOSE PRESSURE SWITCH" light goes off. As read by G_1 the minimum de-actuation pressure shall be 225 psia.

7.1.5.3.3.14 Continue to vent the pressure. When the pressure, as read on the "PROPELLANT SUPPLY PRESSURE" gauge, reads 95 psig the "PS-C", "PS-D", "PACKAGE "A" D/S PRESS VALVE", "OXID TANK PRESS VALVE" and "FUEL TANK PRESS VALVE" lights will go out. When the pressure, as read on the "PROPELLANT SUPPLY PRESSURE" gauge, reads 25 psig throw the "OXID SIDE REGULATOR FLOW VALVE" and "FUEL SIDE REGULATOR FLOW VALVE" switches to the "OPEN" position. The lights above the switches will come on. Continue to vent until the "PRESSURANT SUPPLY PRESSURE" gauge and the "PROPELLANT SUPPLY PRESSURE" gauge each read 0 psig.

PREPARED BY:	DATE	APPROVED FOR NAA:	DATE
T. Kniffin			
CHECKED BY:	DATE		
	8-12-64		8-12-64

DESIGN APPROVAL TEST
ORBIT ATTITUDE AND MANEUVER SYSTEM
(SE7)

NAME OF TEST FUNCTIONAL TEST TEST NO. 106156-401 SHEET 169 OF 413

PART NO. 2-DAY CONFIG. {MAC / NAA} 14-DAY CONFIG. {MAC 52-52701 / NAA 99-106161}

7.1.5.3.3.15 CLOSE the PTC "SUPPLY VENT VALVE", "PRESSURANT SYSTEM VENT VALVE" and "PROPELLANT SYSTEM VENT VALVE" and throw the "OXID BLADDER VENT VALVE", "FUEL BLADDER VENT VALVE", "PACKAGE "C" U/S PRESS VALVE", PACKAGE "D" U/S PRESS VALVE", "PACKAGE "C" D/S PRESS VALVE", "PACKAGE "D" D/S PRESS VALVE", "OXID SIDE REGULATOR FLOW VALVE", and "FUEL SIDE REGULATOR FLOW VALVE" switches to the CLOSE position. The light above the switches will go out.

7.1.5.3.3.16 Turn the PTC "HL #1" "HL #2" and "HL #3" to the closed position, and CLOSE the FACILITY HAND VALVE "A" D/S.

7.1.5.3.3.17 Disconnect the pressurizing line which was connected to the "REG OUT TEST - 3" port per paragraph 7.1.5.3.3.1 and replace the cap. Reconnect the pressurizing line per Figure 35.

7.1.5.3.3.18 Disconnect the pressure gauge (G_1) which was connected per paragraph 7.1.5.3.3.2 and reconnect the pressurizing line per Figure 35.

PREPARED BY:	DATE	APPROVED FOR NAA:	DATE
T. Kniffin			
CHECKED BY:	DATE		
	8-12-64		8-12-64

DESIGN APPROVAL TEST
ORBIT ATTITUDE AND MANEUVER SYSTEM
(SE7)

NAME OF TEST FUNCTIONAL TEST TEST NO. 106156-401 SHEET 170 OF 413
PART NO. 2-DAY CONFIG. {MAC / NAA} 14-DAY CONFIG. {MAC 52-52701 / NAA 99-106161}

7.1.5.4 Pressure Regulator

7.1.5.4.1 Test facility pneumatic and electrical connections to the Engine System shall be in accordance with paragraphs 7.1.2.5 and 7.1.2.6 and the following:

7.1.5.4.1.1 Connect a 0-600 psig pressure gauge (G_1) to the Tank Module "REG OUT TEST - 3" port per Figure 41.

7.1.5.4.1.2 Connect to the PTC "PRESSURANT SYSTEM VENT VALVE" outlet a flowmeter (F_1) as shown in Figure 41.

7.1.5.4.2 OPEN the PTC "MAIN SUPPLY VALVE", "PRESSURANT SYSTEM PRESSURANT SUPPLY VALVE" and "PROPELLANT SYSTEM PRESSURANT SUPPLY VALVE".

7.1.5.4.3 Adjust the PTC "HL #1" so that 275 $\pm^{25}_{0}$ psig is read on the "SUPPLY PRESSURE" gauge.

7.1.5.4.3.1 Assure that the FACILITY HAND VALVE "A" D/S is CLOSED.

7.1.5.4.4 Throw the PTC "PACKAGE "C" U/S PRESS VALVE" and "PACKAGE "D" U/S PRESS VALVE" switches to the "OPEN" position. The lights above the switches will come on.

7.1.5.4.5 Throw the PTC "OXID BLADDER VENT VALVE" and "FUEL BLADDER VENT VALVE" switches to the "OPEN" position. The lights above the switches will come on.

7.1.5.4.6 Simultaneously adjust the PTC "HL #2" and "HL #3" so that 250 $\pm$25 psig is read on the "PRESSURANT SUPPLY PRESSURE" gauge and the "PROPELLANT SUPPLY PRESSURE" gauge. When the pressure reaches 100 psig on the "PROPELLANT SUPPLY PRESSURE"

PREPARED BY:	DATE	APPROVED FOR NAA:	DATE
T. Kniffin			
CHECKED BY:	DATE		
	8-12-64		8-12-64

DESIGN APPROVAL TEST
ORBIT ATTITUDE AND MANEUVER SYSTEM
(SE7)

NAME OF TEST FUNCTIONAL TEST TEST NO. 106156-401 SHEET 171 OF 413
PART NO. 2-DAY CONFIG. {MAC / NAA} 14-DAY CONFIG. {MAC 52-52701 / NAA 99-106161}

7.1.5.4.6 (cont'd)	gauge the "PS-C" (PACKAGE "C" PRESSURE SWITCH), "PS-D" (PACKAGE "D" PRESSURE SWITCH), OXID TANK PRESS VALVE", FUEL TANK PRESS VALVE" and "PACKAGE "A" D/S PRESS VALVE" lights will come on.
7.1.5.4.6.1	Slowly OPEN FACILITY HANL VALVE "A" D/S.
7.1.5.4.7	CLOSE the PTC "PROPELLANT SYSTEM PRESSURANT SUPPLY VALVE" and the "PRESSURANT SYSTEM PRESSURANT SUPPLY VALVE".
7.1.5.4.8	Adjust, slowly, the PTC "HL #1" until the "SUPPLY PRESSURE" gauge indicates 3000 ±100 psig.
7.1.5.4.9	Record the value indicated on the pressure gauge (G_1). The pressure reading at the pressure gauge (G_1) shall be 295 ±15 psig.
7.1.5.4.10	OPEN, slowly, the PTC "PRESSURANT SYSTEM VENT VALVE" until the flowmeter (F_1) reads 8.7 ±.4 SCFM. Record the pressure indicated on the pressure gauge (G_1). The pressure at the gauge (G_1) shall be 295 ±15 psig.
7.1.5.4.11	OPEN, slowly, the PTC "PRESSURANT SYSTEM VENT VALVE" until the flowmeter (F_1) reads 17.4 ±.4 SCFM. Record the pressure indicated on the pressure gauge (G_1). The pressure at the gauge (G_1) shall be 295 ±15 psig.
7.1.5.4.12	CLOSE the PTC "PRESSURANT SYSTEM VENT VALVE". The pressure indicated on the pressure gauge (G_1) shall be 295 ±15 psig. Record the indicated value.
7.1.5.4.13	CLOSE the PTC "MAIN SUPPLY VALVE".

PREPARED BY:	DATE	APPROVED FOR NAA:	DATE
T. Kniffin			
CHECKED BY:	DATE		
	8-12-64		8-12-64

DESIGN APPROVAL TEST
ORBIT ATTITUDE AND MANEUVER SYSTEM
(SE7)

NAME OF TEST FUNCTIONAL TEST TEST NO. 106156-401 SHEET 172 OF 413
PART NO. 2-DAY CONFIG. {MAC / NAA} 14-DAY CONFIG. {MAC 52-52701 / NAA 99-106161}

7.1.5.4.14 Remove the flowmeter which was installed per paragraph 7.1.5.4.1.2.

7.1.5.4.15 OPEN the PTC "SUPPLY VENT VALVE" and vent until the "SUPPLY PRESSURE" gauge reads 0 psig.

7.1.5.4.16 Simultaneously OPEN the PTC "PRESSURANT SYSTEM VENT VALVE" and "PROPELLANT SYSTEM VENT VALVE". When the pressure, as read on the "PROPELLANT SUPPLY PRESSURE" gauge, reads 95 psig the "PS-C", "PS-D", "PACKAGE "A" D/S PRESS VALVE", "OXID TANK PRESS VALVE" and "FUEL TANK PRESS VALVE" lights will go out. When the pressure, as read on the "PROPELLANT SUPPLY PRESSURE" gauge, reads 25 psig throw the "OXID SIDE REGULATOR FLOW VALVE" and "FUEL SIDE REGULATOR FLOW VALVE" switches to the "OPEN" position. The lights above the switches will come on. Continue to vent until the "PRESSURANT SUPPLY PRESSURE" gauge and the "PROPELLANT SUPPLY PRESSURE" gauge each read 0 psig.

7.1.5.4.17 CLOSE the PTC "SUPPLY VENT VALVE", "PRESSURANT SYSTEM VENT VALVE" and "PROPELLANT SYSTEM VENT VALVE" and throw the "OXID BLADDER VENT VALVE", "FUEL BLADDER VENT VALVE", "PACKAGE "C" U/S PRESS VALVE", "PACKAGE "D" U/S PRESS VALVE", "OXIDIZER REGULATOR FLOW VALVE" and "FUEL SIDE REGULATOR FLOW VALVE" switches to the CLOSE position. The lights above the switches will go out.

7.1.5.4.18 Turn the PTC "HL #1", "HL #2" and "HL #3" to the closed position.

7.1.5.4.19 Remove the test equipment installed in paragraphs 7.1.5.4.1.1 and 7.1.5.4.1.2 and re-install the cap on the Tank Module "REG OUT TEST - 3" port. Re-torque the cap per Table I.

7.1.5.4.20 CLOSE the FACILITY HAND VALVE "A" D/S.

PREPARED BY:	DATE	APPROVED FOR NAA:	DATE
T. Kniffin			
CHECKED BY:	DATE		
	8-12-64		8-12-64

DESIGN APPROVAL TEST
ORBIT ATTITUDE AND MANEUVER SYSTEM
(SE7)

NAME OF TEST FUNCTIONAL TEST TEST NO. 106156-401 SHEET 173 OF 413
PART NO. 2-DAY CONFIG. {MAC / NAA} 14-DAY CONFIG. {MAC 52-52701 / NAA 99-106161}

7.1.5.5 COMPONENT PACKAGE "B"

7.1.5.5.1 Relief Valves (Oxidizer and Fuel)

7.1.5.5.1.1 Cracking Pressure, Reseat Pressure and Minimum Flow

7.1.5.5.1.1.1 Attach a flowmeter (F_1) to the Component Package "B" "OXID RELIEF VENT PORT - 9" as shown in Figure 42.

7.1.5.5.1.1.2 OPEN, slowly, the PTC "MAIN SUPPLY VALVE", the "PROPELLANT SYSTEM PRESSURANT SUPPLY VALVE" and the "PRESSURANT SYSTEM PRESSURANT SUPPLY VALVE".

7.1.5.5.1.1.3 OPEN, slowly, the PTC "HL #1" until the "SUPPLY PRESSURE" gauge indicates 3000 ±100 psig.

7.1.5.5.1.1.4 Throw the PTC "PACKAGE "C" U/S PRESS VALVE" to the "OPEN" position. The light above the switch will come on.

7.1.5.5.1.1.5 Simultaneously adjust the PTC "HL #2" and "HL #3" until the "PROPELLANT SUPPLY PRESSURE" gauge and the "PRESSURANT SUPPLY PRESSURE" gauge indicate 300 ±10 psig. The PTC "PS-C", and the "OTPV" lights will come on.

7.1.5.5.1.1.6 Throw the PTC "OXID RELIEF PRESS VALVE" to the "OPEN" position. The light above the switch will come on.

7.1.5.5.1.1.7 Simultaneously and slowly adjust the PTC "HL #2" and "HL #3" until the flowmeter indicates that the oxidizer side RELIEF VALVE has opened. Record the cracking pressures on the data sheet. The maximum cracking pressure shall be 430 psig.

7.1.5.5.1.1.8 Simultaneously adjust the PTC "HL #2", and "HL #3" until the "PROPELLANT SUPPLY PRESSURE" gauge and the "PRESSURANT SUPPLY PRESSURE" gauge indicate 430 ±5 psig.

PREPARED BY:	DATE	APPROVED FOR NAA:	DATE
T. Kniffin			
CHECKED BY:	DATE		
	8-12-64		8-12-64

DESIGN APPROVAL TEST
ORBIT ATTITUDE AND MANEUVER SYSTEM
(SE7)

NAME OF TEST FUNCTIONAL TEST TEST NO. 106156-401 SHEET 174 OF 413

PART NO. 2-DAY CONFIG. {MAC / NAA} 14-DAY CONFIG. {MAC 52-52701 / NAA 99-106161}

7.1.5.5.1.1.9	Observe and record the flow monitored by the flowmeter (F_1). Minimum flow shall be .695 SCFM.
7.1.5.5.1.1.10	Throw the PTC "OXID BLADDER VENT VALVE" switch to the "OPEN" position. The light above the switch will come on.
7.1.5.5.1.1.11	CLOSE the PTC "MAIN SUPPLY VALVE" PRESSURANT SYSTEM PRESSURANT SUPPLY VALVE" and "PROPELLANT SYSTEM PRESSURANT SUPPLY VALVE".
7.1.5.5.1.1.12	Slowly OPEN the PTC "PROPELLANT SYSTEM VENT VALVE" and allow the pressure, as read on the "PRESSURANT SUPPLY PRESSURE" gauge, to drop until the "RELIEF VALVE reseats , as indicated by the flowmeter. Then CLOSE the "PROPELLANT SYSTEM VENT VALVE". Record the reseat pressure on the data sheet. The minimum reseat pressure shall be 370 psig.
7.1.5.5.1.1.12.1	OPEN the "SUPPLY VENT VALVE" until the supply pressure gauge indicates 0 psig.
7.1.5.5.1.1.13	OPEN the PTC "PRESSURANT SYSTEM VENT VALVE" and the "PROPELLANT SYSTEM VENT VALVE" and vent the system until the "PROPELLANT SUPPLY PRESSURE" gauge indicates 0 psig. The "PS-C" and the "OTPV" lights will go off. Throw the PTC "OSR" switch to the OPEN position when the "PROPELLANT SUPPLY PRESSURE" gauge indicates 25 psig. The light above the switch will come on.
7.1.5.5.1.1.14	Throw the PTC "OXID RELIEF PRESS VALVE" to the "CLOSE" position. The light above the switch will go out.
7.1.5.5.1.1.15	CLOSE the PTC "SUPPLY VENT VALVE", "PRESSURANT SYSTEM VENT VALVE" and "PROPELLANT SYSTEM VENT VALVE" and throw the "OXID BLADDER VENT VALVE", "PACKAGE "C" U/S PRESS VALVE", and "OXID SIDE REGULATOR FLOW VALVE" switches to the CLOSE position. The lights above the switches will go out.
7.1.5.5.1.1.16	Turn the PTC "HL #1", "HL #2" and "HL #3" to the closed position.

PREPARED BY:	DATE	APPROVED FOR NAA:	DATE
T. Kniffin		[illegible]	8-12-64
CHECKED BY: [illegible]	8-12-64		

DESIGN APPROVAL TEST
ORBIT ATTITUDE AND MANEUVER SYSTEM
(SE7)

NAME OF TEST FUNCTIONAL TEST TEST NO. 106156-401 SHEET 175 OF 413

PART NO. 2-DAY CONFIG. {MAC / NAA} 14-DAY CONFIG. {MAC 52-52701 / NAA 99-106161}

7.1.5.5.1.1.17	Remove the flowmeter from the engine system "OXID RELIEF VENT PORT - 9".
7.1.5.5.1.1.18	Attach the flowmeter (F_1) to the COMPONENT PACKAGE "B" "FUEL RELIEF VENT PORT - 10" similar to the test setup shown on Figure 32.
7.1.5.5.1.1.19	OPEN, slowly, the PTC "MAIN SUPPLY VALVE", the "PROPELLANT SYSTEM PRESSURANT SUPPLY VALVE" and the "PRESSURANT SYSTEM PRESSURANT SUPPLY VALVE".

PREPARED BY:	DATE	APPROVED FOR NAA:	DATE
T. Kniffin			
CHECKED BY:	DATE		
	8-12-64		8-12-64

R-15075-1

DESIGN APPROVAL TEST
ORBIT ATTITUDE AND MANEUVER SYSTEM
(SE7)

NAME OF TEST FUNCTIONAL TEST TEST NO. 106156-401 SHEET 176 OF 413
PART NO. 2-DAY CONFIG. {MAC / NAA} 14-DAY CONFIG. {MAC 52-52701 / NAA 99-106161}

7.1.5.5.1.1.20	OPEN, slowly, the PTC "HL #1" until the "SUPPLY PRESSURE gauge indicates 3000 ±100 psig.
7.1.5.5.1.1.21	Throw the PTC "PACKAGE "D" U/S PRESS VALVE" switch to the "OPEN" position. The light above the switch will come on.
7.1.5.5.1.1.22	Throw the PTC "FUEL RELIEF PRESS VALVE" switch to the "OPEN" position. The light above the switch will come on.
7.1.5.5.1.1.23	Simultaneously adjust the PTC "HL #2" and "HL #3" until the "PROPELLANT SUPPLY PRESSURE" gauge indicates 300 ±10 psig. The PTC "PS-D" and the "FUEL TANK PRESS VALVE" lights will come on.
7.1.5.5.1.1.24	Simultaneously and slowly adjust the PTC "HL #2" and "HL #3" until the flowmeter indicates that the fuel side RELIEF VALVE has opened. Record the cracking pressures on the data sheet. The maximum cracking pressure shall be 430 psig.
7.1.5.5.1.1.25	Simultaneously adjust the PTC "HL #2", and "HL #3" until the "PROPELLANT SUPPLY PRESSURE" gauge and the "PRESSURANT SUPPLY PRESSURE" gauge indicate 430 ±5 psig.
7.1.5.5.1.1.26	Observe and record the flow monitored by the flowmeter (F_1). Minimum flow shall be .695 SCFM.
7.1.5.5.1.1.27	Throw the PTC "FUEL BLADDER VENT VALVE" switch to the "OPEN" position. The light above the switch will come on.
7.1.5.5.1.1.28	CLOSE the PTC "MAIN SUPPLY VALVE", "PRESSURANT SYSTEM PRESSURANT SUPPLY VALVE" and "PROPELLANT SYSTEM PRESSURANT SUPPLY VALVE".
7.1.5.5.1.1.29	Slowly OPEN the PTC "PROPELLANT SYSTEM VENT VALVE" and allow the pressure, as read on the "PRESSURANT SUPPLY PRESSURE"

PREPARED BY: T. Kniffin	DATE	APPROVED FOR NAA:	DATE
CHECKED BY: [signature]	DATE 8-12-64	[signature]	8-12-64

DESIGN APPROVAL TEST
ORBIT ATTITUDE AND MANEUVER SYSTEM
(SE7)

NAME OF TEST FUNCTIONAL TEST TEST NO. 106156-401 SHEET 177 OF 413
PART NO. 2-DAY CONFIG. {MAC / NAA} 14-DAY CONFIG. {MAC 52-52701 / NAA 99-106161}

7.1.5.5.1.1.29 (cont'd)	gauge, to drop until the RELIEF VALVE reseats, as indicated by the flowmeter. Then CLOSE the "PROPELLANT SYSTEM VENT VALVE". Record the reseat pressure on the data sheet. The minimum reseat pressure shall be 370 psig.
7.1.5.5.1.1.30	OPEN the PTC "PRESSURANT SYSTEM VENT VALVE" and the "PROPELLANT SYSTEM VENT VALVE" and vent system until the "PROPELLANT SUPPLY PRESSURE" gauge indicates 0 psig. The "PS-D" and the "FUEL TANK PRESS VALVE" lights will go off. Throw the PTC "OXID SIDE REGULATOR FLOW VALVE" switch to the OPEN position when the "PROPELLANT SUPPLY PRESSURE" gauge indicates 25 psig. The light above the switch will come on.
7.1.5.5.1.1.31	Throw the PTC "FUEL RELIEF PRESS VALVE" switch to the "CLOSE" position. The light above the switch will go out.
7.1.5.5.1.1.32	CLOSE the PTC "SUPPLY VENT VALVE", "PRESSURANT SYSTEM VENT VALVE" and "PROPELLANT SYSTEM VENT VALVE" and throw the "OXID BLADDER VENT VALVE", "PACKAGE "C" U/S PRESS VALVE", and "FUEL SIDE REGULATOR FLOW VALVE" switches to the CLOSE position. The lights above the switches will go out.
7.1.5.5.1.1.33	Turn the PTC "HL #1", "HL #2" and "HL #3" to the closed position.
7.1.5.5.1.1.34	Remove the flowmeter from the Engine System "FUEL RELIEF VENT PORT - 10".
7.1.5.5.1.2	Seat Leakage
7.1.5.5.1.2.1	Connect the burette test setup as shown in Figure 43 to the Engine System "OXID RELIEF VENT PORT - 9" and the "FUEL RELIEF VENT PORT - 10". A

PREPARED BY:	DATE	APPROVED FOR NAA:	DATE
T. Kniffin			
CHECKED BY:	DATE		
[illegible]	8-12-64	[illegible]	8-12-64

DESIGN APPROVAL TEST
ORBIT ATTITUDE AND MANEUVER SYSTEM
(SE7)

NAME OF TEST FUNCTIONAL TEST TEST NO. 106156-401 SHEET 178 OF 413

PART NO. 2-DAY CONFIG. {MAC / NAA} 14-DAY CONFIG. {MAC 52-52701 / NAA 99-106161}

7.1.5.5.1.2.2	OPEN the PTC "MAIN SUPPLY VALVE", "PRESSURANT SYSTEM PRESSURANT SUPPLY VALVE" and "PROPELLANT SYSTEM PRESSURANT SUPPLY VALVE".
7.1.5.5.1.2.3	Adjust the PTC "HL #1" so that 3000 ±100 psig is read on the "SUPPLY PRESSURE" gauge.
7.1.5.5.1.2.3.1	Assure that the FACILITY HAND VALVE "A" D/S is Closed.
7.1.5.5.1.2.4	Throw the PTC "PACKAGE "C" U/S PRESS VALVE", "PACKAGE "D" U/S PRESS VALVE", OXID RELIEF PRESS VALVE", and "FUEL RELIEF PRESS VALVE" switches to the "OPEN" position. The lights above the switches will come on. B
7.1.5.5.1.2.5	Simultaneously adjust the PTC "HL #2" and "HL #3" so that 371 $^{+0}_{-5}$ psig is read on the "PRESSURANT SUPPLY PRESSURE" gauge and the "PROPELLANT SUPPLY PRESSURE" gauge. When the pressure reaches 100 psig on the "PROPELLANT SUPPLY PRESSURE" gauge the "PS-C" (PACKAGE "C" PRESSURE SWITCH), "PS-D" (PACKAGE "D" PRESSURE SWITCH), "OXID TANK PRESS VALVE", "FUEL TANK PRESS VALVE", and "PACKAGE "A" D/S PRESS VALVE" lights will come on.
7.1.5.5.1.2.5.1	Slowly OPEN the FACILITY HAND VALVE "A" D/S.
7.1.5.5.1.2.6	Assure that the PTC "PRESSURANT SUPPLY PRESSURE" gauge indicates 371 $^{+0}_{-5}$ psig.
7.1.5.5.1.2.7	Observe, for a twenty (20) minute period, the displacement in the burette(s). Maximum allowable leakage per valve for a twenty minute period shall be 1.7 cc. Record the leakage.
7.1.5.5.1.2.8	CLOSE the PTC "MAIN SUPPLY VALVE", "PRESSURANT SYSTEM PRESSURANT SUPPLY VALVE" and "PROPELLANT SYSTEM PRESSURANT SUPPLY VALVE".
7.1.5.5.1.2.9	OPEN the PTC "SUPPLY VENT VALVE" and vent until the "SUPPLY PRESSURE" gauge reads 0 psig.

PREPARED BY:	DATE	APPROVED FOR NAA:	DATE
T. Kniffin		[signature]	8-12-64
CHECKED BY: [signature]	8-12-64		

Rev.B [signature] Date 3-10-65

DESIGN APPROVAL TEST
ORBIT ATTITUDE AND MANEUVER SYSTEM
(SE7)

NAME OF TEST FUNCTIONAL TEST TEST NO. 106156-401 SHEET 179 OF 413
PART NO. 2-DAY CONFIG. {MAC / NAA} 14-DAY CONFIG. {MAC 52-52701 / NAA 99-106161}

7.1.5.5.1.2.10 Throw the PTC "OXID BLADDER VENT VALVE" and "FUEL BLADDER VENT VALVE" switches to the "OPEN" position. The lights above the switches will come on.

7.1.5.5.1.2.11 Simultaneously OPEN the PTC "PRESSURANT SYSTEM VENT VALVE" and "PROPELLANT SYSTEM VENT VALVE". When the pressure, as read on the "PROPELLANT SUPPLY PRESSURE" gauge, reads 95 psig the "PS-C", "PS-D", "PACKAGE "A" D/S PRESS VALVE", "OXID TANK PRESS VALVE" and "FUEL TANK PRESS VALVE" lights will go out. When the pressure, as read on the "PROPELLANT SUPPLY PRESSURE" gauge, reads 25 psig throw the "OXID SIDE REGULATOR FLOW VALVE" and "FUEL SIDE REGULATOR FLOW VALVE" switches to the "OPEN" position. The lights above the switches will come on. Continue to vent until the "PRESSURANT SUPPLY PRESSURE" gauge each read 0 psig.

7.1.5.5.1.2.12 CLOSE the PTC "SUPPLY VENT VALVE", "PRESSURANT SYSTEM VENT VALVE" and "PROPELLANT SYSTEM VENT VALVE" and throw the "OXID BLADDER VENT VALVE", "FUEL BLADDER VENT VALVE", "PACKAGE "C" U/S PRESS VALVE", "PACKAGE "D" U/S PRESS VALVE", "OXID SIDE REGULATOR FLOW VALVE", and "FUEL SIDE REGULATOR FLOW VALVE" switches to the CLOSE position. The lights above the switches will go out. B

7.1.5.5.1.2.13 Turn the PTC "HL #1", "HL #2" and "HL #3" to the closed position and CLOSE the FACILITY HAND VALVE "A" D/S. A

7.1.5.5.1.2.14 Remove the burette test setup from the Engine System "FUEL RELIEF VENT PORT - 10" and the "OXID RELIEF VENT PORT - 9". A

PREPARED BY: T. Kniffin	DATE	APPROVED FOR NAA:	DATE
CHECKED BY:	DATE 8-12-64		8-12-64

R-15075-1
REVISION A R. L. Jones Dated 8-26-64
Revision B R. L. Jones Dated 9-10-65

DESIGN APPROVAL TEST
ORBIT ATTITUDE AND MANEUVER SYSTEM
(SE7)

NAME OF TEST FUNCTIONAL TEST TEST NO. 106156-401 SHEET 180 OF 413

PART NO. 2-DAY CONFIG. {MAC / NAA} 14-DAY CONFIG. {MAC 52-52701 / NAA 99-106161}

7.1.5.5.2	Check Valve Reverse Seat Leakage
7.1.5.5.2.1	Oxidizer - D/S
7.1.5.5.2.1.1	CLOSE the Engine System "FUEL TANK VENT VALVE - 4A" and the "FUEL CHG VALVE - 15A. NOTE; Torque values are as shown in Table I.
7.1.5.5.2.1.2	Connect to the Engine System "INTER CHECK VALVE TEST - 5" the burette test setup as shown in Figure 44.
7.1.5.5.2.1.3	OPEN the PTC "MAIN SUPPLY VALVE", "PRESSURANT SYSTEM PRESSURANT SUPPLY VALVE" and "PROPELLANT SYSTEM PRESSURANT SUPPLY VALVE".
7.1.5.5.2.1.4	Adjust the PTC "HL #1" so that 1500 ±100 psig is read on the "SUPPLY PRESSURE" gauge.
7.1.5.5.2.1.5	Throw the PTC "PACKAGE "C" U/S PRESS VALVE" switch to the "OPEN" position. The lights above the switch will come on.
7.1.5.5.2.1.6	Simultaneously adjust the PTC "HL #2" and "HL #3" so that 300 ±10 psig is read on the "PRESSURANT SUPPLY PRESSURE" gauge and the "PROPELLANT SUPPLY PRESSURE" gauge. When the pressure reaches 100 psig on the "PROPELLANT SUPPLY PRESSURE" gauge the "PS-C" (PACKAGE "C" PRESSURE SWITCH), and "OXID TANK PRESS VALVE" lights will come on.
7.1.5.5.2.1.6.1	Observe for a fifteen (15) minute period the displacement in the burette. Maximum allowable leakage for the fifteen minute period shall be 2.0 scc. Record the leakage.
7.1.5.5.2.1.7	CLOSE the PTC "MAIN SUPPLY VALVE", "PRESSURANT SYSTEM PRESSURANT SUPPLY VALVE" and "PROPELLANT SYSTEM PRESSURANT SUPPLY VALVE".
7.1.5.5.2.1.8	OPEN the PTC "SUPPLY VENT VALVE" and vent until the "SUPPLY PRESSURE" gauge reads 0 psig.

PREPARED BY:	DATE	APPROVED FOR NAA:	DATE
T. Kniffin		[illegible]	8-12-64
CHECKED BY: [illegible]	8-12-64		

DESIGN APPROVAL TEST
ORBIT ATTITUDE AND MANEUVER SYSTEM
(SE7)

NAME OF TEST FUNCTIONAL TEST TEST NO. 106156-401 SHEET 181 OF 413
PART NO. 2-DAY CONFIG. {MAC / NAA} 14-DAY CONFIG. {MAC 52-52701 / NAA 99-106161}

7.1.5.5 2.1.9	Throw the PTC "OXID BLADDER VENT VALVE" switch to the "OPEN" position. The light above the switch will come on.
7.1.5.5.2.1.10	Simultaneously OPEN the PTC "PRESSURANT SYSTEM VENT VALVE" and "PROPELLANT SYSTEM VENT VALVE". When the pressure, as read on the "PROPELLANT SUPPLY PRESSURE" gauge, reads 95 psig the "PS-C" , and "OXID TANK PRESS VALVE" lights will go out. When the pressure, as read on the "PROPELLANT SUPPLY PRESSURE" gauge, reads 25 psig throw the "OXID SIDE REGULATOR FLOW VALVE" switch to the "OPEN" position. The light above the switch will come on. Continue to vent until the "PRESSURANT SUPPLY PRESSURE" gauge and the "PROPELLANT SUPPLY PRESSURE" gauge each read 0 psig.
7.1.5.5.2.1.11	CLOSE the PTC "SUPPLY VENT VALVE", "PRESSURANT SYSTEM VENT VALVE" and "PROPELLANT SYSTEM VENT VALVE" and throw the "OXID BLADDER VENT VALVE", "PACKAGE "C" U/S PRESS VALVE", and "OXID SIDE REGULATOR FLOW VALVE" switches to the CLOSE position. The lights above the switches will go out.
7.1.5.5.2.1.12	Turn the PTC "HL #1", "HL #2" and "HL #3" to the closed position.
7.1.5.5.2.1.13	Disconnect the burette test setup from the Engine System "INTER CHECK VALVE TEST - 5" port.
7.1.5.5.2.2	Oxidizer - U/S
7.1.5.5.2.2.1	Connect to the Engine System "REG OUT TEST - 3" port the burette test setup as shown in Figure 45.
7.1.5.5.2.2.2	Disconnect the PTC pressurizing line from the Engine System "RELIEF VALVE TEST OXID - 7" port and connect it to the Engine System "INTER CHECK VALVE TEST - 5" port.

PREPARED BY:	DATE	APPROVED FOR NAA:	DATE
T. Kniffin		[illegible]	8-12-64
CHECKED BY: [illegible]	DATE 8-12-64		

DESIGN APPROVAL TEST
ORBIT ATTITUDE AND MANEUVER SYSTEM
(SE7)

NAME OF TEST FUNCTIONAL TEST TEST NO. 106156-401 SHEET 182 OF 413
PART NO. 2-DAY CONFIG. {MAC / NAA} 14-DAY CONFIG. {MAC 52-52701 / NAA 99-106161}

7.1.5.5.2.2.3	Cap the Engine System "RELIEF VALVE TEST OXID - 7" port.
7.1.5.5.2.2.4	OPEN the PTC "MAIN SUPPLY VALVE", "PRESSURANT SYSTEM PRESSURANT SUPPLY VALVE" and "PROPELLANT SYSTEM PRESSURANT SUPPLY VALVE".
7.1.5.5.2.2.5	Adjust the PTC "HL #1" so that 1500 ±100 psig is read on the "SUPPLY PRESSURE " gauge.
7.1.5.5.2.2.6	Throw the PTC "PACKAGE "C" U/S PRESS VALVE", "OXID RELIEF PRESS VALVE" switches to the "OPEN" position. The lights above the switches will come on.
7.1.5.5.2.2.7	Simultaneously adjust the PTC "HL #2" and "HL #3" so that 300 ±10 psig is read on the "PRESSURANT SUPPLY PRESSURE" gauge and the "PROPELLANT SUPPLY PRESSURE" gauge. When the pressure reaches 100 psig on the "PROPELLANT SUPPLY PRESSURE " gauge the "PS-C" (PACKAGE "C" PRESSURE SWITCH), and "OXID TANK PRESS VALVE", lights will come on.
7.1.5.5.2.2.8	Observe for a fifteen (15) minute period the displacement in the burette. Maximum allowable leakage for a fifteen minute period shall be 2.0 scc. Record the leakage.
7.1.5.5.2.2.9	Repeat paragraphs 7.1.5.5.2.1.7 through 7.1.5.5.2.1.12. A
7.1.5.5.2.2.10	Disconnect the PTC pressurizing line to the Engine System "INTER CHECK VALVE TEST - 5" port and cap the port. Reconnect the pressurizing line to the Engine System "RELIEF VALVE TEST OXID - 7" port.

NOTE: Torque values are as shown in Table I.

PREPARED BY:	DATE	APPROVED FOR NAA:	DATE
T. Kniffin		[illegible]	8-12-64
CHECKED BY: [illegible]	8-12-64		

DESIGN APPROVAL TEST
ORBIT ATTITUDE AND MANEUVER SYSTEM
(SE7)

NAME OF TEST FUNCTIONAL TEST TEST NO. 106156-401 SHEET 183 OF 413
PART NO. 2-DAY CONFIG. {MAC / NAA} 14-DAY CONFIG. {MAC 52-52701 / NAA 99-106161}

7.1.5.5.2.3 Fuel

7.1.5.5.2.3.1 OPEN the Engine System "FUEL TANK VENT VALVE - 4A" and the "FUEL CHG VALVE - 15A".

7.1.5.5.2.3.2 Assure that the burette test setup of paragraph 7.1.5.5.2.2.1 is connected to the Engine System "REG OUT TEST - 3" port.

7.1.5.5.2.3.3 CLOSE the Engine System "OXID TANK VENT VALVE - 6A" and the "OXID CHG VALVE - 11A".

NOTE: Torque values are as shown in Table I.

7.1.5.5.2.3.4 OPEN the PTC "MAIN SUPPLY VALVE", "PRESSURANT SYSTEM PRESSURANT SUPPLY VALVE" and "PROPELLANT SYSTEM PRESSURANT SUPPLY VALVE".

7.1.5.5.2.3.5 Adjust the PTC "HL #1" so that 1500 ±100 psig is read on the "SUPPLY PRESSURE" guage.

7.1.5.5.2.3.6 Throw the PTC "PACKAGE "D" U/S PRESS VALVE", switch to the "OPEN" position. The light above the switch will come on.

7.1.5.5.2.3.7 Simultaneously adjust the PTC "HL #2" and "HL #3" so that 300 ±10 psig is read on the "PRESSURANT SUPPLY PRESSURE" gauge and the "PROPELLANT SUPPLY PRESSURE" gauge. When the pressure reaches 100 psig on the "PROPELLANT SUPPLY PRESSURE" gauge the "PS-D" (PACKAGE "D" PRESSURE SWITCH), and "FUEL TANK PRESS VALVE", lights will come on.

7.1.5.5.2.3.8 Observe for a fifteen (15) minute period the displacement in the burette. Maximum allowable leakage for a fifteen minute period shall be 2.0 scc. Record the leak rate.

PREPARED BY:	DATE	APPROVED FOR NAA:	DATE
T. Kniffin		[illegible]	8-12-64
CHECKED BY: [illegible]	8-12-64		

DESIGN APPROVAL TEST
ORBIT ATTITUDE AND MANEUVER SYSTEM
(SE7)

NAME OF TEST FUNCTIONAL TEST TEST NO. 106156-401 SHEET 184 OF 413
PART NO. 2-DAY CONFIG. {MAC / NAA} 14-DAY CONFIG. {MAC 52-52701 / NAA 99-106161}

7.1.5.5.2.3.9 CLOSE the PTC "MAIN SUPPLY VALVE", "PRESSURANT SYSTEM PRESSURANT SUPPLY VALVE" and "PROPELLANT SYSTEM PRESSURANT SUPPLY VALVE".

7.1.5.5.2.3.10 OPEN the PTC "SUPPLY VENT VALVE" and vent until the "SUPPLY PRESSURE" gauge reads 0 psig.

7.1.5.5.2.3.11 Throw the PTC "FUEL BLADDER VENT VALVE" switch to the "OPEN" position. The light above the switch will come on.

7.1.5.5.2.3.12 Simultaneously OPEN the PTC "PRESSURANT SYSTEM VENT VALVE" and "PROPELLANT SYSTEM VENT VALVE". When the pressure, as read on the "PROPELLANT SUPPLY PRESSURE" gauge, reads 95 psig the "PS-D", and "FUEL TANK PRESS VALVE" lights will go out. When the pressure, as read on the "PROPELLANT SUPPLY PRESSURE" gauge, reads 25 psig throw the "FUEL SIDE REGULATOR FLOW VALVE" switch to the "OPEN" position. The light above the switch will come on. Continue to vent until the "PRESSURANT SUPPLY PRESSURE" gauge and the "PROPELLANT SUPPLY PRESSURE" gauge each read 0 psig.

7.1.5.5.2.3.13 CLOSE the PTC "SUPPLY VENT VALVE", "PRESSURANT SYSTEM VENT VALVE" and "PROPELLANT SYSTEM VENT VALVE" and throw the "FUEL BLADDER VENT VALVE", "PACKAGE "D" U/S PRESS VALVE", and "FUEL SIDE REGULATOR FLOW VALVE", switches to the CLOSE position. The lights above the switches will go out.

7.1.5.5.2.3.14 Turn the PTC "HL #1", "HL #2" and "HL #3" to the closed position.

7.1.5.5.2.3.15 Disconnect the burette test setup from the Engine System "REG OUT TEST - 3" port and replace the cap.

NOTE: Torque values are as shown in Table I.

PREPARED BY:	DATE	APPROVED FOR NAA:	DATE
T. Kniffin			
CHECKED BY:	DATE		
	8-12-64		8-12-64

DESIGN APPROVAL TEST
ORBIT ATTITUDE AND MANEUVER SYSTEM
(SE7)

NAME OF TEST: FUNCTIONAL TEST — TEST NO. 106156-401 — SHEET 185 OF 413

PART NO. 2-DAY CONFIG. {MAC / NAA} — 14-DAY CONFIG. {MAC 52-52702 / NAA 99-106161}

7.1.5.5.2.3.16	OPEN the Engine System "OXID TANK VENT VALVE - 6A", and the "OXID CHG VALVE - 11A".	
7.1.5.5.3	Burst Diaphragm Leakage (Oxidizer and Fuel)	
7.1.5.5.3.1	Disconnect the PTC pressurizing lines to the Engine System "RELIEF VALVE TEST OXID - 7" and "RELIEF VALVE TEST FUEL - 8" ports and cap the lines.	
7.1.5.5.3.2	Connect leakage sensing lines to the Engine System "RELIEF VALVE TEST OXID - 7" and the "RELIEF VALVE TEST FUEL - 8" ports as shown in Figure 46. Immerse the free ends of the leakage sensing lines in a beaker of water.	A
7.1.5.5.3.3	OPEN the PTC "MAIN SUPPLY VALVE", "PRESSURANT SYSTEM PRESSURANT SUPPLY VALVE" and "PROPELLANT SYSTEM PRESSURANT SUPPLY VALVE".	A
7.1.5.5.3.4	Adjust the PTC "HL #1" so that 400 ±25 psig is read on the "SUPPLY PRESSURE" gauge.	A
7.1.5.5.3.5	Assure that the FACILITY HAND VALVE "A" D/S is Closed.	A
7.1.5.5.3.6	Throw the PTC "PACKAGE "C" U/S PRESS VALVE", "PACKAGE "D" U/S PRESS VALVE", switches to the "OPEN" position. The lights above the switches will come on.	
7.1.5.5.3.7	Simultaneously adjust the PTC "HL #2" and "HL #3" so that 300 ±10 psig is read on the "PRESSURANT SUPPLY PRESSURE" gauge and the "PROPELLANT SUPPLY PRESSURE" gauge. When the pressure reaches 100 psig on the "PROPELLANT SUPPLY PRESSURE" gauge the "PS-C" (PACKAGE "C" PRESSURE SWITCH), "PS-D" (PACKAGE "D" PRESSURE SWITCH), "OXID TANK PRESS VALVE", "FUEL TANK PRESS VALVE", and "PACKAGE "A" D/S PRESS VALVE" lights will come on.	

PREPARED BY:	DATE	APPROVED FOR NAA:	DATE
T. Kniffin		[illegible]	8-12-64
CHECKED BY: [illegible]	8-12-64		

R-15075-1 N.A. [illegible] Dated 8-26-64

DESIGN APPROVAL TEST
ORBIT ATTITUDE AND MANEUVER SYSTEM
(SE7)

NAME OF TEST FUNCTIONAL TEST TEST NO. 106156-401 SHEET 186 OF 413
PART NO. 2-DAY CONFIG. {MAC / NAA} 14-DAY CONFIG. {MAC 52-52701 / NAA 99-106161}

7.1.5.5.3.8 Observe for a ten (10) minute period the immersed ends of the leakage sensing lines. No leakage is allowed.

7.1.5.5.3.9 CLOSE the PTC "MAIN SUPPLY VALVE", "PRESSURANT SYSTEM PRESSURAN SUPPLY VALVE" and "PROPELLANT SYSTEM PRESSURANT SUPPLY VALVE".

7.1.5.5.3.10 OPEN the PTC "SUPPLY VENT VALVE" and vent until the "SUPPLY PRESSURE" gauge reads 0 psig.

7.1.5.5.3.11 Throw the PTC "OXID BLADDER VENT VALVE" and "FUEL BLADDER VENT VALVE" switches to the "OPEN" position. The lights above the switches will come on.

7.1.5.5.3.12 Simultaneously OPEN the PTC "PRESSURANT SYSTEM VENT VALVE" and "PROPELLANT SYSTEM VENT VALVE". When the pressure, as read on the "PROPELLANT SUPPLY PRESSURE" gauge, reads 95 psig the "PS-C", "PS-D", "PACKAGE "A" D/S PRESS VALVE", "OXID TANK PRESS VALVE" and "FUEL TANK PRESS VALVE" lights will go out. When the pressure, as read on the "PROPELLANT SUPPLY PRESSURE" gauge, reads 25 psig throw the "OXID SIDE REGULATOR FLOW VALVE" and "FUEL SIDE REGULATOR FLOW VALVE" switches to the "OPEN" position. The lights above the switches will come on. Continue to vent until the "PRESSURANT SUPPLY PRESSURE" gauge and the "PROPELLANT SUPPLY PRESSURE" gauge each read 0 psig.

7.1.5.5.3.13 CLOSE the PTC "SUPPLY VENT VALVE", "PRESSURANT SYSTEM VENT VALVE", and "PROPELLANT SYSTEM VENT VALVE" and throw the "OXID BLADDER VENT VALVE", "FUEL BLADDER VENT VALVE", "PACKAGE "C" U/S PRESS VALVE", "PACKAGE "D" U/S PRESS VALVE", OXID SIDE REGULATOR FLOW VALVE", and "FUEL SIDE REGULATOR FLOW VALVE" switches to the CLOSE position. The lights above the switches will go out.

PREPARED BY: T. Kniffin	DATE	APPROVED FOR NAA:	DATE
CHECKED BY:	DATE 8-12-64		8-12-64

DESIGN APPROVAL TEST
ORBIT ATTITUDE AND MANEUVER SYSTEM
(SE7)

NAME OF TEST FUNCTIONAL TEST TEST NO. 106156-401 SHEET 187 OF 413
PART NO. 2-DAY CONFIG. {MAC / NAA} 14-DAY CONFIG. {MAC 52-52701 / NAA 99-106161}

7.1.5.5.3.14	Turn the PTC "HL #1", "HL #2" and "HL #3" to the closed position.
7.1.5.5.3.15	Disconnect the leakage sensing lines from the Engine System "RELIEF VALVE TEST OXID - 7" and the "RELIEF VALVE TEST FUEL - 8" ports and re-install the PTC pressurizing lines to the Engine System ports.
7.1.5.6	Propellant Tank Bladder Leakage (Oxidizer and Fuel)
7.1.5.6.1	Disconnect the Helium supply source from the PTC and connect in its place a GN_2 supply source.
7.1.5.6.2	Disconnect the PTC pressurizing lines to the Engine System "HI PRESS GAS CHG VALVE - 2", the "FUEL TANK VENT PORT - 4" and the "OXID TANK VENT PORT - 6". Cap the PTC pressurizing lines, and the Engine System ports. NOTE: Torque values are shown on Table I.
7.1.5.6.3	Remove the caps from the Engine System "OXID PURGE - 13" and the "FUEL PURGE - 16" ports.
7.1.5.6.4	OPEN the PTC "MAIN SUPPLY VALVE".
7.1.5.6.5.	Adjust the PTC "HL #1" to indicate 200 ±25 psig on the "SUPPLY PRESSURE" gauge.
7.1.5.6.6	OPEN the PTC "PROPELLANT SYSTEM PRESSURANT SUPPLY VALVE".
7.1.5.6.7	Throw the PTC "PACKAGE "C" U/S PRESS VALVE" and "PACKAGE "D" U/S" PRESS VALVE" switches to the "OPEN" position. The lights above the switches will come on.
7.1.5.6.8	Adjust the PTC "HL #2" until 20 ±5 psig is indicated on the "PROPELLANT SUPPLY PRESSURE" gauge.

PREPARED BY:	DATE	APPROVED FOR NAA:	DATE
T. Kniffin		[signature]	8-12-64
CHECKED BY: [signature]	8-12-64		

R-15075-1

DESIGN APPROVAL TEST
ORBIT ATTITUDE AND MANEUVER SYSTEM
(SE7)

NAME OF TEST FUNCTIONAL TEST TEST NO. 106156-401 SHEET 188 OF 413
PART NO. 2-DAY CONFIG. {MAC / NAA} 14-DAY CONFIG. {MAC 52-52701 / NAA 99-106161}

7.1.5.6.9	Assure that the pressure of paragraph 7.1.5.6.8 has stabilized.
7.1.5.6.10	Allow the purge to continue for a twenty (20) minute period.
7.1.5.6.11	Throw the PTC "PACKAGE "C" U/S PRESS VALVE" and "PACKAGE "D" U/S PRESS VALVE" switches to the "CLOSE" position. The lights above the switches will go out.
7.1.5.6.12	CLOSE the PTC "PROPELLANT SYSTEM PRESSURANT SUPPLY VALVE".
7.1.5.6.13	OPEN the PTC "PROPELLANT SYSTEM VENT VALVE" and vent the system until the "PROPELLANT SUPPLY PRESSURE" gauge indicates 0 psig.
7.1.5.6.14	CLOSE the PTC "PROPELLANT SYSTEM VENT VALVE".
7.1.5.6.15	Turn the PTC "HL #2" to the full closed position.
7.1.5.6.16	Connect one 0-30 psig pressure gauge (G_2) to the Engine System "OXID PURGE - 13" port and another to the "FUEL PURGE - 16" port. Remove the caps from the "FUEL TANK VENT PORT - 4" and the "OXID TANK VENT PORT - 6".
7.1.5.6.17	OPEN the PTC "PROPELLANT SYSTEM PRESSURANT SUPPLY VALVE" and throw the "PACKAGE "C" U/S PRESS VALVE" and the "PACKAGE "D" U/S PRESS VALVE" switches to the "OPEN" position. The lights above the switches will come on.
7.1.5.6.18	Adjust the PTC "HL #2" until 15 $\pm$.5 psig is indicated on the pressure gauge (s) G_2 (reference paragraph 7.1.5.6.16).
7.1.5.6.19	Assure that the pressure of paragraph 7.1.5.6.18 has stabilized.

PREPARED BY:	DATE	APPROVED FOR NAA:	DATE
T. Kniffin		[illegible]	8-12-64
CHECKED BY: [illegible]	8-12-64		

DESIGN APPROVAL TEST
ORBIT ATTITUDE AND MANEUVER SYSTEM
(SE7)

NAME OF TEST FUNCTIONAL TEST TEST NO. 106156-401 SHEET 189 OF 413

PART NO. 2-DAY CONFIG. {MAC / NAA} 14-DAY CONFIG. {MAC 52-52701 / NAA 99-106161}

7.1.5.6.20	After a period of one (1) hour of pressurization, connect to the Engine System "FUEL TANK VENT PORT - 4" and the "OXID TANK VENT PORT - 6" the burette test setup as shown in Figure 47.	
7.1.5.6.21	Observe for a five (5) minute period the displacement in the burettes. Record the indicated displacement.	B
7.1.5.6.22	Repeat paragraph 7.1.5.6.21 at intervals of fifteen minutes for a period of two hours or for some other time period as directed by the Rocketdyne Project Office.	B
7.1.5.6.23	If the recorded displacements determined above do not show a decrease and the most recent burette readings are relatively high (5 scc or more in fifteen minutes) it is permissable at the discretion of the Rocketdyne Project Office, to disconnect the burette test setup and to connect to the "FUEL TANK VENT PORT - 4" and/or the "OXID TANK VENT PORT -6" as applicable a vacuum pump. The vacuum pump should be operated for a period of approximately one hour. During this time the internal bladder pressure shall be maintained at 15 ±.5 psig. After the evacuation period reconnect the burette test setup and repeat the above procedure starting with paragraph 7.1.5.6.21.	B
7.1.5.6.24	CLOSE the Engine System "FUEL TANK VENT VALVE - 4A" and the "OXID TANK VENT VALVE - 6A". NOTE: Torque values are as shown in Table I.	B
7.1.5.6.25	Remove the leakage sensing apparatus from the Engine System vent ports.	B
7.1.5.6.26	By use of the PTC "HL #2" and the "PROPELLANT SYSTEM VENT VALVE" reduce the indicated pressure on the pressure gauge G_2 to 2 ±0.2 psig.	B

PREPARED BY:	DATE	APPROVED FOR NAA:	DATE
T. Kniffin			
CHECKED BY:	DATE		
[illegible]	3-10-65	[illegible]	3-10-65

DESIGN APPROVAL TEST
ORBIT ATTITUDE AND MANEUVER SYSTEM
(SE7)

NAME OF TEST FUNCTIONAL TEST TEST NO. 106156-401 SHEET 190 OF 413

PART NO. 2-DAY CONFIG. {MAC / NAA} 14-DAY CONFIG. {MAC 52-52701 / NAA 99-106161}

7.1.5.6.27	OPEN the Engine System "FUEL TANK VENT PORT - 4A" and the "OXID TANK VENT PORT - 6A".	
7.1.5.6.28	Assure that the pressure of paragraph 7.1.5.6.26 has stabilized.	B
7.1.5.6.29	Re-connect the leakage sensing apparatus of paragraph 7.1.5.6.20	
7.1.5.6.30	Observe for a fifteen (15) minute period the volume displacement in the burettes. Record the indicated leakage.	
7.1.5.6.31	Repeat paragraph 7.1.5.6.30 continuously for 2 1/2 hours or until 2 consecutive readings are each less than .35 scc GN_2 in fifteen minutes.	B
7.1.5.6.32	If two consecutive readings have not been less than .35 scc GN_2 in fifteen minutes continue taking readings at the discretion of the Rocketdyne Project Office.	
7.1.5.6.33	Remove the leakage sensing apparatus from the Engine System.	
7.1.5.6.34	CLOSE the PTC "HL #2".	
7.1.5.6.35	OPEN the PTC "PROPELLANT SYSTEM VENT VALVE" and vent the system until the "PROPELLANT SUPPLY PRESSURE" gauge indicates 0 psig.	
7.1.5.6.36	Throw the PTC "PACKAGE "C" U/S PRESS VALVE" and the "PACKAGE "D" U/S PRESS VALVE" switches to the CLOSED position. The lights above the switches will go off.	

PREPARED BY:	DATE	APPROVED FOR NAA:	DATE
T. Kniffin		[illegible]	8-12-64
CHECKED BY: [illegible]	8-12-64		

DESIGN APPROVAL TEST
ORBIT ATTITUDE AND MANEUVER SYSTEM
(SE7)

NAME OF TEST FUNCTIONAL TEST TEST NO. 106156-401 SHEET 191 OF 413
PART NO. 2-DAY CONFIG. {MAC / NAA} 14-DAY CONFIG. {MAC 52-52701 / NAA 99-106161}

7.1.5.6.37	CLOSE the Engine System "FUEL TANK VENT VALVE - 4A" and the "OXID TANK VENT VALVE - 6A" and replace the caps on the "FUEL TANK VENT PORT - 4" and the "OXID TANK VENT PORT - 6". NOTE: Torque values are as shown in Table I.	B
7.1.5.6.38	Remove the pressure gauge(s) G_2 attached to the Engine System "OXID PURGE - 13" and the "FUEL PURGE - 16" ports and replace the caps. NOTE: Torque values are as shown in Table I.	B
7.1.5.6.39	CLOSE the PTC "MAIN SUPPLY VALVE" and the "PROPELLANT SYSTEM SUPPLY VALVE" and turn the "HL #1" to the full closed position.	B
7.1.5.6.40	OPEN the PTC "SUPPLY VENT VALVE" and vent the system until the "SUPPLY PRESSURE" gauge indicates 0 psig.	B
7.1.5.6.41	CLOSE the PTC "SUPPLY VENT VALVE".	B

PREPARED BY:	DATE	APPROVED FOR NAA:	DATE
T. Kniffin		[illegible]	8-12-64
CHECKED BY: [illegible]	8-12-64		

[illegible] Date 3-10-65

DESIGN APPROVAL TEST
ORBIT ATTITUDE AND MANEUVER SYSTEM
(SE7)

NAME OF TEST FUNCTIONAL TEST TEST NO. 106156-401 SHEET 192 OF 413
PART NO. 2-DAY CONFIG. {MAC / NAA} 14-DAY CONFIG. {MAC 52-52701 / NAA 99-106161}

7.1.5.7 Propellant Shutoff (Motor) Valve

7.1.5.7.1 Opening Response

7.1.5.7.1.1 There are three electrical jacks located directly to the left of the ECP "CARTRIDGE VALVE BRIDGE CONTINUITY TEST" switch. Connect an electrical lead from the "COMM." (black) jack to the black connector located directly to the left of the oscilloscope "CHANNEL A POLARITY" knob. Connect another lead from the ECP "OXID" (red) jack to the upper red connector located directly to the left of the oscilloscope "CHANNEL A POLARITY" knob.

7.1.5.7.1.2 Insure that the DC POWER SUPPLY is turned on. The DC POWER SUPPLY output voltage shall be 26 ± 4 VDC.

7.1.5.7.1.3 Insure that the ECP "DC POWER" switch is at the "ON" position.

7.1.5.7.1.4 Adjust the oscilloscope as follows:

7.1.5.7.1.4.1 Rotate the "INTENSITY" knob clockwise until a "click" is felt.

7.1.5.7.1.4.2 Adjust the "A VERT. SENSITIVITY" (black) knob to "10 volts/cm" in the "DC" quadrant. Rotate the "VERNIER" (red) knob clockwise until a "click" is felt.

PREPARED BY:	DATE	APPROVED FOR NAA:	DATE
T. Kniffin		[illegible]	8-12-64
CHECKED BY: [illegible]	8-12-64		

DESIGN APPROVAL TEST
ORBIT ATTITUDE AND MANEUVER SYSTEM
(SE7)

NAME OF TEST FUNCTIONAL TEST TEST NO. 106156-401 SHEET 193 OF 413
PART NO. 2-DAY CONFIG. {MAC / NAA} 14-DAY CONFIG. {MAC 52-52701 / NAA 99-106161}

7.1.5.7.1.4.3	Adjust the "B VERT. SENSITIVITY" (black) knob to the "OFF" position.
7.1.5.7.1.4.4	Adjust the "SWEEP TIME HORIZ. SENS." (black) knob to "200 millisec/cm". Rotate the "VERNIER" (red) knob clockwise until a "click" is felt.
7.1.5.7.1.4.5	Throw the "SWEEP TIME HORIZ. SENS." switch to the "DC" position.
7.1.5.7.1.4.6	Throw the "SWP. EXP." switch to the "X1" position.
7.1.5.7.1.4.7	Adjust the "VERT. PRESENTATION" (black) knob to the "A" position. Adjust the "CHANNEL A POLARITY" (red) knob to the "POS. UP" position.
7.1.5.7.1.4.8	Adjust the "INTENSITY" and "SCALE" knobs to the full clockwise position.
7.1.5.7.1.4.9	Adjust the "SYNC" (black) knob to the "INT +" position. Adjust the "TRIGGER LEVEL" (red) knob to approximately the midway position.
7.1.5.7.1.4.10	Adjust the "VERTICAL POSITION A" (black) knob and the "HORIZ. POSITION" knob to produce on the screen a pinpoint beam of light located on the horizontal grid line and five centimeters to the left of the vertical grid line. Adjustment of the "TRIGGER LEVEL" (red) knob may also be necessary.
7.1.5.7.1.4.11	Adjust the "FOCUS" knob to bring the beam into focus.
7.1.5.7.1.4.12	Adjust the "INTENSITY" knob counterclockwise to partially reduce the brightness of the beam . The purpose of this is to extend the life of the cathode ray tube.

PREPARED BY:	DATE	APPROVED FOR NAA:	DATE
T. Kniffin		[illegible]	8-12-64
CHECKED BY: [illegible]	8-12-64		

DESIGN APPROVAL TEST
ORBIT ATTITUDE AND MANEUVER SYSTEM
(SE7)

NAME OF TEST FUNCTIONAL TEST TEST NO. 106156-401 SHEET 194 OF 413
PART NO. 2-DAY CONFIG. {MAC / NAA} 14-DAY CONFIG. {MAC 52-52701 / NAA 99-106161}

7.1.5.7.1.4.13 Turn the "TRIGGER LEVEL" (red) knob **counterclockwise** until a "click" is felt. A

7.1.5.7.1.4.14 Using a stopwatch adjust the "SWEEP TIME HORIZ. SENS. VERNIER" (red) knob so that the beam is traversing the screen at a rate of two centimeters per second.

7.1.5.7.1.4.15 Adjust the "TRIGGER LEVEL" (red) knob so that only a pinpoint beam of light is shown in the screen. Reposition the beam per paragraph 7.1.5.7.1.4.10 as necessary.

7.1.5.7.1.5 Throw the ECP "OXIDIZER SUPPLY SHUTOFF VALVE" switch and the "FUEL SUPPLY SHUTOFF VALVE" switch to the "CLOSE" position. After fifteen seconds has elapsed return the switches to the "OFF" position.

7.1.5.7.1.6 Throw the ECP "OXIDIZER SUPPLY SHUTOFF VALVE" switch to the "OPEN" position and observe the oscilloscope screen. A typical valve opening (or closing) trace is shown on Figure 59. Maximum valve opening time shall be twelve seconds. Record the opening time on the data sheet.

NOTE: If oscilloscope does not trigger properly, readjust the "TRIGGER LEVEL" (red) knob and repeat paragraph 7.1.5.7.1.5 and 7.1.5.7.1.6.

7.1.5.7.1.7 Throw the ECP "OXIDIZER SUPPLY SHUTOFF VALVE" switch to the "CLOSE" position and observe the oscilloscope screen. Maximum valve closing time shall be twelve seconds. Record the closing time on the data sheet.

7.1.5.7.1.8 Throw the ECP "OXIDIZER SUPPLY SHUTOFF VALVE" switch to the "OFF" position.

PREPARED BY: T. Kniffin	DATE	APPROVED FOR NAA:	DATE
CHECKED BY:	DATE		

DESIGN APPROVAL TEST
ORBIT ATTITUDE AND MANEUVER SYSTEM
(SE7)

NAME OF TEST FUNCTIONAL TEST TEST NO. 106156-401 SHEET 195 OF 413
PART NO. 2-DAY CONFIG. {MAC / NAA} 14-DAY CONFIG. {MAC 52-52701 / NAA 99-106161}

7.1.5.7.1.9	Remove the electrical lead of paragraph 7.1.5.7.1.1 from the ECP "OXID" (red) jack and insert into the "FUEL" (red) jack.
7.1.5.7.1.10	Repeat paragraphs 7.1.5.7.1.6 through 7.1.5.7.1.8 for the "FUEL SUPPLY SHUTOFF VALVE".
7.1.5.7.1.11	Remove the electrical leads from the ECP and oscilloscope.
7.1.5.7.1.12	Disconnect the PTC from the Engine System.
7.1.5.7.1.13	CLOSE all the Engine System manual valves and re-install the resistoflex caps on all the access ports.
	NOTE: Torque values are as shown in Table I.

PREPARED BY:	DATE	APPROVED FOR NAA:	DATE
T. Kniffin			
CHECKED BY:	DATE		
	8-12-64		8-12-64

DESIGN APPROVAL TEST
ORBIT ATTITUDE AND MANEUVER SYSTEM
(SE7)

NAME OF TEST FUNCTIONAL TEST TEST NO. 106156-40 SHEET 196 OF 413

PART NO. 2-DAY CONFIG {MAC / NAA} 14-DAY CONFIG {MAC 52-52701 / NAA 99-106161}

7.1.6 Test Data
7.1.6.1 Engine System Identification

Engine System Name: OAMS

McDonnell Part No.: 52-52701

Rocketdyne Part No.: 99-106161

Component Name	Part Number Rocketdyne	Part Number MAC	Serial Number
Component Package "A"	556870	52-52700-151	4055340
Component Package "B"	557305	52-52700-203	4053265
Component Package "C"	406886	52-52701-235	4055325
Component Package "D"	406887	52-52701-237	4055331
Pressurant Tank	103654	52-52701-169	4051910
Fuel Tank	103660	52-52701-211	4051935
Oxid Tank	103655	52-52701-177	4051231
Regulator	NAS-2[illegible]0702-2	52-52700-177	132
PSOV(OXID)	NAS-2[illegible]0273-1	52-52053-3	114
PSOV(FUEL)	NAS-2[illegible]0273-1	52-52053-3	115
Component Package "E"	557000	52-52701-175	4055393
N.O. Cartridge	[illegible]-2[illegible]0271-1	52-52701-233	041
N.C. Cartridge	[illegible]-2[illegible]0271-1	52-52700-201	239

PREPARED BY: DATE	PERFORMED BY: DATE	WITNESSED FOR NAA: DATE	CERTIFIED FOR McDONNELL DATE
J. Kniffin		M. J. Fogarty 8/14/64	waived by R.L. Fae 8/14/64
			VERIFIED BY USAF DATE [illegible] 10/27/1

DESIGN APPROVAL TEST
ORBIT ATTITUDE AND MANEUVER SYSTEM
(SE7)

NAME OF TEST FUNCTIONAL TEST TEST NO. 106156-401 SHEET 197 OF 413

PART NO. 2-DAY CONFIG {MAC / NAA} 14-DAY CONFIG {MAC 52-52701 / NAA 99-106161}

7.1.6.1 (cont'd)

Component Name	Part Number Rocketdyne	Part Number NAA	Serial Number
Component Package "A" Cartridge	NR5-28082TI-1	52-52700-201	214
Component Package "C" Cartridge	NR5-28082TI-1	52-52700-201	238
Component Package "D" Cartridge	NR5-28082TI-1	52-52700-201	241
P-T Indicator	NR5-27350TH	52-52700-235	113
TCA #1			
TCA #2			
TCA #3			
TCA #4			
TCA #5			
TCA #6			
TCA #7			
TCA #8			

DNA

PREPARED BY: DATE	PERFORMED BY: DATE	WITNESSED FOR NAA: DATE	CERTIFIED FOR McDONNELL DATE
T.Kniffin	[illegible] 8/14/64	M. J. Fogarty 8/14/64	WAIVED BY R.L. FRI 8/27/64
			VERIFIED BY USAF 8/14/64 DATE
			R.M. Lyons

ROCKETDYNE

INSPECTION DISCREPANCY AND CORRECTION RECORD

MAKE ENTRY CLEAR AND CONCISE, USE INK

Serial No. DAT-OAW

TEST Dwg. No. 106156-401

Model

DCP No.	Ent'd By & Date	DESCRIPTION OF DISCREPANCY AND ACTION TAKEN	CLEARED BY Mech. & Date	Lead-man & Date	Insp. & Date
1	8/12/64 ANR 921	PART NO. THE PNEUMATIC & ELECTRICAL CONSOLE, WHICH WAS USED IN PROOF PRESS TEST, IS NOT CERTIFIED TO PERFORM SAID OPERATION ON SE-7			
		ACTION TAKEN: CONSOLE IS NOW CERTIFIED FOR USE ON SE-6 AND SE-7 DAT SYS.	ANR 180 8/15/64	ANR 180 8/15/64	ANR 180 8/15/64
2	8/12/64 ANR 921	PART NO. THE PROOF PRESSURE TEST WAS RUN WITHOUT CARTRIDGE #NAS-280 INSTALLED IN THE PACKAGE "E" AS IS REQUIRED PER PARA 7.1.2.2.			
		ACTION TAKEN: CARTRIDGE P/N NAS-280827T1-1 S/N 239 IS NOW INSTALLED IN PKG. E	6843 S96 8/14/64	6843 S96 8/14/64	ANR 180 8/14/64
3	8/12/64 ANR 921	PART NO. REFER TO PARA. 7.1.2.14 PER DAT, FOLLOWING STEP "E" OF THIS OPERATION, THE OXID TEST VALVE-12A & FUEL TEST VALVE-14A WERE ALSO TURNED TO OPEN POSITION.			
		ACTION TAKEN: IL DTD 11-23-64. IL SIGNED BY GEMINI PROJECT OFFICE & MACDONNELL DATED 13 AUG 64 (DEVIATION 106156-401)	6843 8/18/64	6843 8/18/64	ANR 921 8/19/64
4	8/12/64 ANR 921	PART NO. REFER TO PARA. 7.1.2.16 PER DAT. THE P.T.C. VENTS WERE PUT IN CLOSED POSITION. 8/13/64 ANR 921			
		ACTION TAKEN:			
5	8/14/64 ANR 921	PART NO. THE TEST FACILITY PRESS. LINES WERE DISCONNECTED FROM THE ENGINE SYSTEM AND PLUGGED PRIOR TO PARA. 7.1.4.3. AND PRESSURIZED WITH HELIUM TO THE PRESSURES OF PARAGRAPHS 7.1.4.3.1. & 7.1.4.3.3. DURING PERFORMANCE OF PARA. 7.1.4.2.1. THRU 7.1.4.2.4.			
		ACTION TAKEN: THIS PROCEDURE WILL BE INCORPORATED IN THE "A" CHANGE PER T.I.	8/17/64		ANR 921

864

R-15075-1

Form R 25-U Rev. 12-57

DESIGN APPROVAL TEST
ORBIT ATTITUDE AND MANEUVER SYSTEM
(SE7)

NAME OF TEST FUNCTIONAL TEST TEST NO. 106156-401 SHEET 198 OF 413

PART NO. 2-DAY CONFIG {MAC / NAA} 14-DAY CONFIG {MAC 52-52701 / NAA 99-106161}

7.1.6.2 Proof Pressure of Engine System

The Engine System was subjected to a proof pressure test in accordance with paragraph 7.1.3 YES (Yes or No).

Remarks:

*WITH THE EXCEPTIONS LISTED IN SQWR'S

*1 & 2 TEST WAS OTHERWISE COMPLETED IN ACCORDANCE WITH TEST PROCEDURE PARA. 7.1.3

7.1.6.3 Gross External Leak Check

Auxiliary vacuum gauge reading 8×10^{-4} mm Hg.

Calibrated Leak rate (Per Paragraph 7.1.4.20) 49 scc/hr

Calibration Leak rate (Per Paragraph 7.1.4.26) 46 scc/hr

PREPARED BY:	DATE	PERFORMED BY:	DATE	WITNESSED FOR NAA:	DATE	CERTIFIED FOR McDONNELL	DATE
T.Kniffin				H. J. Fogarty	8/14/64	WAIVED BY R. L. FRANK	8/27/64
						VERIFIED BY USAF R. M. Payne	8/14/64 DATE

DESIGN APPROVAL TEST
ORBIT ATTITUDE AND MANEUVER SYSTEM
(SE7)

NAME OF TEST FUNCTIONAL TEST TEST NO. 106156-401 SHEET 199 OF 413

PART NO. 2-DAY CONFIG {MAC / NAA} 14-DAY CONFIG {MAC 52-52701 / NAA 99-106161}

7.1.6.3 (cont'd)

Mass spectrometer indicator readings (ten minute intervals) for calibrated leak.

Time	Reading	Time	Reading
2210	32	0040	70
2220	39	0050	72
2230	41	0100	74
2240	45	0110	76
2250	47	0120	78
2300	50	0130	80
2310	52	0140	82
2320	55	0150	84
2330	56	0200	86
2340	58	0210	88
2350	60	0220	90
2400	62	0230	92
0010	64	0240	94
0020	67	0250	96
0030	68	0310	98
		0320	100

Mass spectrometer indicator readings (ten minute intervals) for Engine System leakages.

Time	Reading	Time	Reading
1510	19	1530	24
1520	22	1540	27

PREPARED BY:	DATE	PERFORMED BY:	DATE	WITNESSED FOR NAA:	DATE	CERTIFIED FOR McDONNELL	DATE
T.Kniffin		C. J. Clemons	8/14/64	M. J. Fogarty	8/14/64	WAIVED BY R.L. FREE	10/27/64
						VERIFIED BY USAF H.P. Bracken	8/8/64

DESIGN APPROVAL TEST
ORBIT ATTITUDE AND MANEUVER SYSTEM
(SE7)

NAME OF TEST FUNCTIONAL TEST TEST NO. 106156-401 SHEET 200 OF 413
PART NO. 2-DAY CONFIG. {MAC / NAA} 14-DAY CONFIG. {MAC 52-52701 / NAA 99-106161}

7.1.6.3 (continued)

Time	Reading
1550	30
1600	32
1610	33
1620	36
1630	38
1640	40
1650	40
1700	40
1710	38
1720	28
1730	36
1740	36
1750	37

Time	Reading
1800	38
1810	39
1820	40
1830	41
1840	42
1850	43
1900	45
1910	46
1920	48
1930	50
1940	52
1950	54
2000	53
2010	52
2020	52
2030	52
2040	52
2050	53
2100	53
2110	53
2120	52

PREPARED BY:	DATE	PERFORMED BY:	DATE	WITNESSED FOR NAA:	DATE	CERTIFIED FOR McDONNELL	DATE
T. Kniffin		C. J. Ellman	8/14/64			WAIVED BY R.L. FREE	10/27/64
						VERIFIED BY USAF	DATE
						H.P. Beasley	9/16

DESIGN APPROVAL TEST
ORBIT ATTITUDE AND MANEUVER SYSTEM
(SE7)

NAME OF TEST FUNCTIONAL TEST TEST NO. 106156-401 SHEET 201 OF 413
PART NO. 2-DAY CONFIG. {MAC / NAA} 14-DAY CONFIG. {MAC 52-52701 / NAA 99-106161}

7.1.63
(continued)

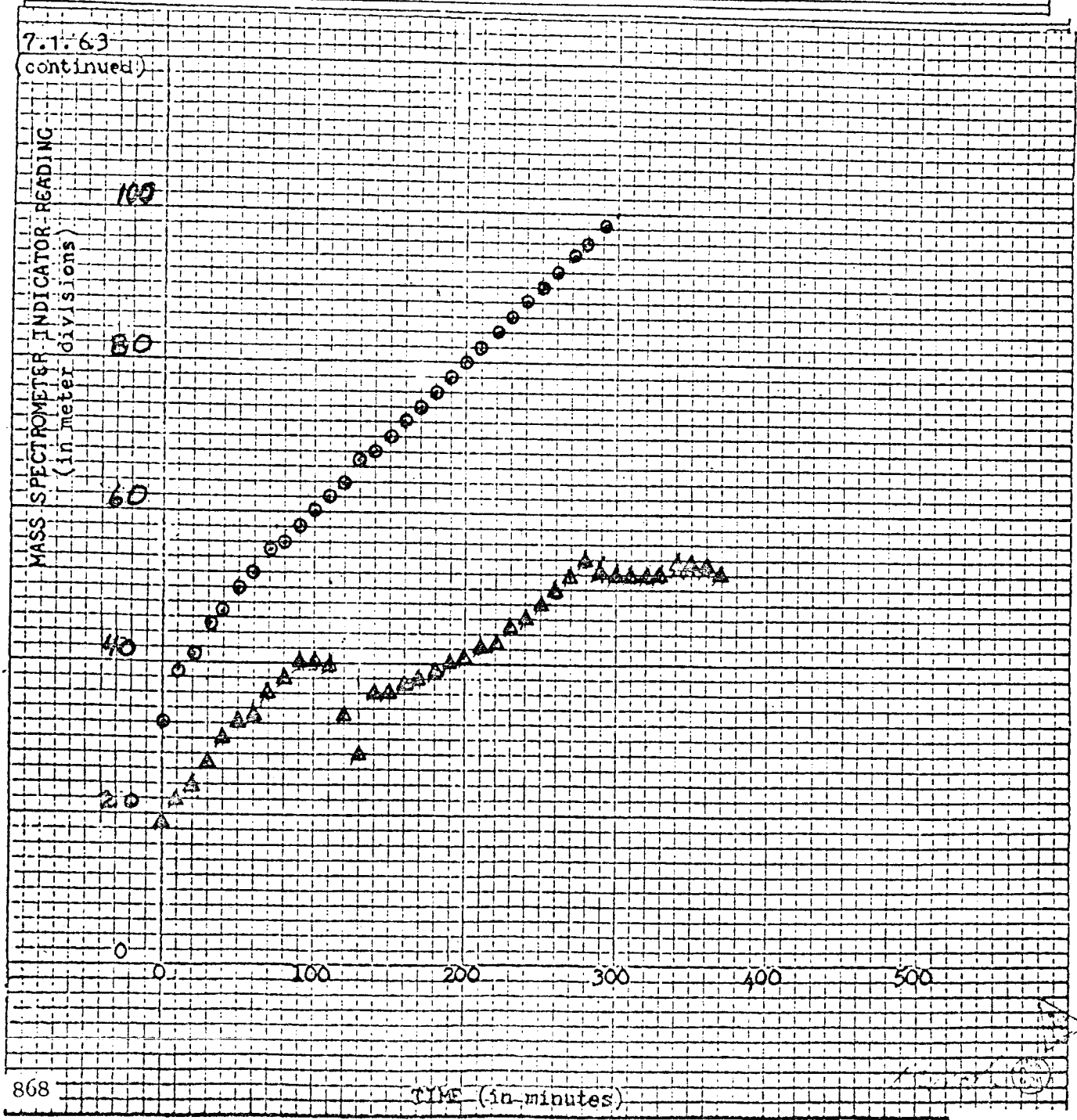

R-15075-1

DESIGN APPROVAL TEST
ORBIT ATTITUDE AND MANEUVER SYSTEM
(SE7)

NAME OF TEST FUNCTIONAL TEST TEST NO. 106156-401 SHEET 202 OF 413
PART NO. 2-DAY CONFIG. {MAC / NAA} 14-DAY CONFIG. {MAC 52-52701 / NAA 99-106161}

7.1.6.3 (continued) If it is necessary to perform a point leak check per paragraph 7.1.4.14 enter locations of leakage here.

DNA 5/14/64

7.1.6.4 Packages "A", "C", "D" & "E" Cartridge Bridge Continuity Test

The ECP "CARTRIDGE BRIDGE CONTINUITY TEST" switch was thrown to the "ON" position. The following lights came on.

	Yes	No
PACKAGE "A" PRESSURANT TANK	YES	
PACKAGE "E" NORMALLY OPEN	YES	
PACKAGE "E" NORMALLY CLOSED	YES	
PACKAGE "C" OXID TANK	YES	
PACKAGE "D" FUEL TANK	YES	

PREPARED BY: DATE	PERFORMED BY: DATE	WITNESSED FOR NAA: DATE	CERTIFIED FOR McDONNELL DATE
T. Kniffin		5/14/64	REVIEWED BY R. L. FREE 10/27/64
			VERIFIED BY USAF DATE

DESIGN APPROVAL TEST
ORBIT ATTITUDE AND MANEUVER SYSTEM
(SE7)

NAME OF TEST FUNCTIONAL TEST TEST NO. 106156-401 SHEET 203 OF 413

PART NO. 2-DAY CONFIG {MAC ____ NAA ____} 14-DAY CONFIG {MAC 52-52701 NAA 99-106161}

7.1.6.5 Source Pressure (Reference Paragraph 7.1.5.2.5)

The input voltage was 5.0 volts (5 ±.025 volts).

Supply Pressure Required (±7.5psi) (psia)	Pressure-Temperature Indicator Reading		
	Minimum Allowed	Actual (X10)	Maximum Allowed
300	100	300	500
3500	3300	3470	3700
3000	2800	3000	3200
2500	2300	2500	2700
2000	1800	1900	2200
1500	1300	1500	1700
1000	800	1000	1200
500	300	500	700
300	100	300	500

PREPARED BY: DATE	PERFORMED BY: DATE	WITNESSED FOR NAA: DATE	CERTIFIED FOR McDONNELL DATE
T.Kniffin		8-15-64 J. Hughes	CHECKED BY R.L. EPPE 10/27/64
			VERIFIED BY USAF DATE 23 Oct 64

DESIGN APPROVAL TEST
ORBIT ATTITUDE AND MANEUVER SYSTEM
(SE7)

NAME OF TEST FUNCTIONAL TEST TEST NO. 106156-401 SHEET 204 OF 413

PART NO. 2-DAY CONFIG {MAC ____ NAA ____} 14-DAY CONFIG {MAC 52-52701 NAA 99-106161}

7.1.6.5 (cont'd)

Regulated Pressure (Reference paragraph 7.1.5.2.6)

The input voltage was 5.00 volts (5 ±.025 volts)

Supply Pressure Required (±2.5psi)	Pressure-Temperature Indicator Reading		
	Minimum Allowed	Actual	Maximum Allowed
50	30	55	70
200	180	215	220
250	230	267	270
300	280	312	320
350	330	361	370
300	280	316	320
250	230	268	270
200	180	212	220
50	30	69	70

PREPARED BY: DATE	PERFORMED BY: DATE	WITNESSED FOR NAA: DATE	CERTIFIED FOR McDONNELL DATE
T.Kniffin		8-15-64	WAIVED BY R.L. FREE 10/27/64
			VERIFIED BY USAF DATE NA 23 Oct 64

ROCKETDYNE
A DIVISION OF NORTH AMERICAN AVIATION INC

DESIGN APPROVAL TEST
ORBIT ATTITUDE AND MANEUVER SYSTEM
(SE7)

NAME OF TEST FUNCTIONAL TEST TEST NO. 106156-401 SHEET 205 OF 413
PART NO. 2-DAY CONFIG. { MAC ____ NAA ____ } 14-DAY CONFIG. { MAC 52-52701 NAA 99-106161 }

7.1.6.6 Package "E" Solenoid Valve Response (Reference Paragraph 7.1.5.3)

Opening response time .014 seconds (.022 maximum)

Closing response time .014 seconds (.050 maximum)

7.1.6.7 Package "E" Pressure Switch Actuation Pressures (Reference paragraph 7.1.5.3.3)

Actuation Pressure 388.6* psia. (380 ±10)

De-actuation Pressure 319.6 psia (225 minimum)

* 374 PSIG + 14.6 }
⊕ 305 PSIG + 14.6 } ‡
‡ 29.7 IN. HG. @ 9 PM

PREPARED BY: DATE	PERFORMED BY: DATE	WITNESSED FOR NAA: DATE	CERTIFIED FOR McDONNELL: DATE
T. Kniffin		8-15-64	VERIFIED BY USAF: DATE

872 t Form 1453

R-15075-1

DESIGN APPROVAL TEST
ORBIT ATTITUDE AND MANEUVER SYSTEM
(SE7)

NAME OF TEST FUNCTIONAL TEST TEST NO. 106156-401 SHEET 206 OF 413

PART NO. 2-DAY CONFIG {MAC ____ NAA ____} 14-DAY CONFIG {MAC 52-52701 NAA 99-106161}

7.1.6.8 Pressure Regulator Flow Test (Reference paragraph 7.1.5.4)

Reference Pressure Sensing Port Pressure * (1.0 max) psia

Flow	Output Pressure
zero	297.5 (295 ±15) psig
8.7 ±.4 SCFM	294.0 (295 ±15) psig
17.4 ±4 SCFM	275.0 (295 ±15) psig
zero	298.5 (295 ±15) psig

7.1.6.9 Package B Relief Valves (Reference paragraph 7.1.5.5.1)

	Oxid.	Fuel	
Cracking Pressure	390 psig	335 psig	(430 max) psig
Flow (at 430 ±5 psig)	>5000 scim	>5000	(1200 min) scim
Reseat Pressure	383 psig	380	(370 min) psig
Seat Leakage (at 371 +0 -5 psig)	0-9	0-6	(1.7 max) scc/20 minutes

7.1.6.10 Reverse Seat Leakage Test of Check Valves (Reference paragraph 7.1.5.5.2)

Oxidizer Check Valve (downstream)	10	(2.0 max) scc/15 minutes
Oxidizer Check Valve (upstream)	7.2	(2.0 max) scc/15 minutes
Fuel Check Valve	0.6	(2.0 max) scc/15 minutes

* REF. SQWK. # 11 & 12

PREPARED BY: DATE	PERFORMED BY: DATE	WITNESSED FOR NAA: DATE	CERTIFIED FOR McDONNELL DATE
T.Kniffin	12/6/64	12-12-64	WAIVED BY R.L. FREE 12/27/64
			VERIFIED BY USAF DATE

IL 4388-5168

INTERNAL LETTER
North American Aviation, Inc.

DATE 4 November 1964

TO Those Concerned
Address

FROM Gemini DAT-RAT Unit
Address D/896-388

PHONE 6107

SUBJECT SE7 Engine System (DAT S/C 3) Component Package "B" Oxidizer Check Valves

REFERENCE (a) OFR No. 13361R, dated 16 August 1964

During the pre-vibration functional of the SE7 Engine System tank module the Component Package "B" oxidizer valves were found to be leaking approximately 10 scc in 15 minutes during the reverse seat leakage test (paragraph 7.1.5.5.2 of test procedure 106156-401). Component Package "B" was not replaced; remedial action was deferred until completion of vibration of the tank module. During the post-vibration functional the Component Package "B" oxidizer check valves were again subjected to the reverse seat leakage test with the results that the downstream check valve leaked 0.4 scc in 15 minutes and the upstream check valve had zero leakage. Allowable leakage per test procedure 106156-401 is 2.0 scc in 15 minutes for each check valve.

It is the considered conclusions, based upon the aforementioned results, that the initial leakage values are attributed to contaminants lodged on the seating surfaces of the check valves; apparently vibration and subsequent functional tests on the Engine System effected dislodgment of the contaminants.

Testing of the Engine System with the component installed shall continue. Failure analysis shall be deferred until completion of Engine System testing.

T. G. Kniffin
Gemini DAT-RAT Unit

Approved: R. G. Eide
Supervisor
Gemini DAT-RAT Unit

for R. Mantler
MAC Engineering

874

FORM R 18-G-4

R-15075-1

DESIGN APPROVAL TEST
ORBIT ATTITUDE AND MANEUVER SYSTEM
(SE7)

NAME OF TEST FUNCTIONAL TEST TEST NO. 106156-401 SHEET 207 OF 413

PART NO. 2-DAY CONFIG {MAC ____ NAA ____} 14-DAY CONFIG {MAC 52-52701 NAA 99-106161}

7.1.6.11 Leakage Test of Burst Diaphrams

Leakage tests were performed per paragraph 7.1.5.5.3. No Leakage was found. TRUE (True or False)

7.1.6.12 Propellant Tank Bladder Leak Check (Reference Paragraph 7.1.5.6.)

Leakage (Per Paragraph 7.1.5.6.21 & 7.1.5.6.22)	OXID TANK	FUEL TANK
	ZERO	47.5 scc
	ZERO	42.6 scc
	ZERO	39.0 scc
	ZERO	37.2 scc
	ZERO	33.0 scc
	ZERO	28.8 scc
	ZERO	12.7 scc
	ZERO	7.8 scc

Leakage (Per Paragraph 7.1.5.6.24)

DNA

PREPARED BY: DATE	PERFORMED BY: DATE	WITNESSED FOR NAA: DATE	CERTIFIED FOR McDONNELL DATE
T.Kniffin	8/16/64	H. J. Fogarty 8/16/64	CERTIFIED BY R.B. FREE 10/27/64
			VERIFIED BY USAF DATE 23 Nov 64

DESIGN APPROVAL TEST
ORBIT ATTITUDE AND MANEUVER SYSTEM
(SE7)

NAME OF TEST FUNCTIONAL TEST TEST NO. 106156-401 SHEET 208 OF 413

PART NO. 2-DAY CONFIG {MAC / NAA} 14-DAY CONFIG {MAC 52-52701 / NAA 99-106161}

7.1.6.12 (cont'd)

Leakage (Per Paragraph 7.1.5.6.31 and 7.1.5.6.32-Two consecutive readings shall be less than .35 scc/25 minutes for each tank, fuel and oxidizer)

OXID TANK	FUEL TANK
ZERO	0.6 scc
ZERO	ZERO
ZERO	ZERO
ZERO	ZERO
DNA	

7.1.6.13 Propellant Shutoff Valve

	OXID	FUEL
Opening response time	2.0	2.0 (12 max) sec
Closing response time	2.0	2.0 (12 max) sec

PREPARED BY: DATE	PERFORMED BY: DATE	WITNESSED FOR NAA: DATE	CERTIFIED FOR McDONNELL DATE
T.Kniffin		ell. J. Fogarty 8/16/64	
			VERIFIED BY USAF DATE

ROCKETDYNE

INSPECTION DISCREPANCY AND CORRECTION RECORD

MAKE ENTRY CLEAR AND CONCISE, USE INK

Serial No. 0187419
~~Dwg. No.~~ TEST 106156-401
Model SE→

DCP No.	Ent'd By & Date	DESCRIPTION OF DISCREPANCY AND ACTION TAKEN	CLEARED BY Mech. & Date	Lead-man & Date	Insp. & Date
6	8/15/64 ANR 921	PART NO. TABLE 1 DEFINES CLOSING TORQUE OF 19A AS 57±3 IN. LB. COUNTER-CLOCKWISE. REFER=RA0220-212 (COMP. PACK. "E" Accept. Test) PARA. 4.7.1. WHICH DEFINES CLOSED AS 37±3 IN CLOCKWISE DIRRECTION. PARA. 4.7.2. DEFINES OPEN AS 57±3 IN COUNTERCLOCKWISE DIRRECTION.			
		ACTION TAKEN: ACCEPTABLE PER MACDONNELL & Rocketdyne ~~REFER~~ I.L. 15 AUG 64 (PACKAGE "E" MANUAL)	6843 8/19/64	6843 8/19/64	ANR 921 8/19/64
7	8/15/64 ANR 921	PART NO. UNDER OPERATION "Solenoid Valve Response" PARA 7.1.5.3.1.1. REQUIRES BYPASS VALVE=19A To be Closed. NOTE FOLLOWING REFERS TO TABLE 1 REFER SQK #6 Valve WAS Closed with 37±3 in.lbs. IN clockwise dirrection.			
		ACTION TAKEN: ACCEPTABLE PER MACDONNELL & ROCKETDYNE: REFER I.L. 15 AUG. 64 (PACKAGE "E" MANUAL)	6843 8/19/64	6843 8/19/64	ANR 921 8/19/64
8	8/15/64 ANR 921	PART NO. PRESSURE TEMP. INDICATOR & FLIGHT TRANSDUCER CALIBRATION, OPERATION PARA 7.1.5.2. WAS LEFT OUT OF SEQUENCE LISTED IN DAT. PROCEDURE.			
		ACTION TAKEN: P.T. INDICATOR WAS INSTALLED AND PARA. 7.1.5.2 SATISFACTORILY COMPLETED	6843 8/15/64	6843 8/15/64	ANR 360 8/15/64
9	ANR 360 8/15/64	PART NO. PRESSURE GAGES G_3 & G_4 FIG #36, G_5 FIG #37 AND G_6 FIG #38 ARE NOT LISTED UNDER EQUIPMENT AND MATERIALS LIST PARA. 5. OF 106156-401 TEST PROCEDURE			
		ACTION TAKEN: TO BE INCORPORATED IN SPEC ON "A" CHANGE SEE I.L. TO THAT EFFECT.	6843 8/19/64	6843 8/19/64	ANR 921 8/19/64
10	ANR 360 8/15/64	PART NO. THE RESISTOFLEX CAP SEAL OF HIGH PRESS. GAS CHG. PORT #1 HAD SCRATCHED SEALING SURFACE COMP. PKG. "A" S/N #055340.			
		ACTION TAKEN: DOES NOT AFFECT LEAKAGE - THEREFORE Acceptable	6843 8/19/64	6845 8/19/64	ANR 921 8/19/64

R-15075-1

877

Form R 25-U Rev. 12-57

ROCKETDYNE

INSPECTION DISCREPANCY AND CORRECTION RECORD

MAKE ENTRY CLEAR AND CONCISE, USE INK

Serial No. 0187412

Dwg. No. 99-106161

Model SE-7

DCP No.	Ent'd By & Date	DESCRIPTION OF DISCREPANCY AND ACTION TAKEN	CLEARED BY Mech. & Date	Lead-man & Date	Insp. & Date
11	ANR 160 8/16/64	PART NO. EXCESSIVE LEAKAGE AT OXID D/S CK. VALVE PKG. "B" DURING REVERSE SEAT LEAKAGE TEST, LEAKAGE WAS 10 SCC. IN 15 MINUTES. S/B 2.0 SCC. MAX. REF PARA. 7.1.5.5.2.1.6.1 OF 106156-401 PROCEDURE			
	ACTION TAKEN	ACCEPTABLE PER T.L. (R.L. MANTLER - MCDONNELL) 19 AUG 64 IL 4388-5168 DTD 4 NOV 64 * ~~IL 4388-5173 DTD 20 NOV 64~~ ANR 228	8/19/64	8/19/64	ANR 921 8/19/64
12	ANR 160 8/16/64	PART NO. EXCESSIVE LEAKAGE AT OXID U/S CK. VALVE PKG. "B" DURING REVERSE SEAT LEAKAGE TEST, LEAKAGE WAS 7.2 SCC. S/B 2.0 SCC. MAX. IN 15 MIN. REF. PARA. 7.1.5.5.2 OF 106156-401 PROCEDURE			
	ACTION TAKEN	ACCEPTABLE PER T.L. (R.L. MANTLER - MCDONNELL) 19 AUG 64 IL 4388-5168 DTD 4 NOV 64	8/19/64	8/19/64	ANR 921 8/19/64
13 ✓	8/28/64 ANR 921	PART NO. DAT. LEAK TEST REFER 7.2.2.2.3 WAS NOT COMPLIED WITH IN THAT 2000 PSIG WAS USED IN PLACE OF 3000 PSIG AS SUPPLY PRESS.			
	ACTION TAKEN	SPECIFICATION CHANGED TO REFLECT LOWER PRESSURE (PER T.L. DATED 8/31/64 - JIM NARDI) IL 4388-5101 DTD 8-31-64	8/31/64	8/31/64	ANR 921 8/31/64
14 ✓	8/28/64 ANR 921	PART NO. PROCEEDURE OUT OF SEQUENCE, IN THAT ACCELEROMETERS WERE NOT INSTALLED PRIOR TO LEAK TEST. PARA. 7.2.2.2.2.			
	ACTION TAKEN	NOTE ADDED TO DAT SPEC. STATING THE SEQUENCE OF 'IN' MAX ITEMS WAS NOT CRITICAL IL 4388-5101 PER T.L. DATED 8/31/64 - J. NARDI	8/31/64	8/31/64	ANR 921 8/31/64
15 ✓	8/28/64 ANR 921	PART NO. REFER PARA 7.2.2.2.2.4 & -12 & -17 & -22 PROCEEDURE VAGUE IN THAT NO INDICATION IS GIVEN AS TO NUMBER OF TURNS WHICH WOULD INDICATE FLOW REQUIRED FOR TEST			
	ACTION TAKEN	INFORMATION ONLY	8/28/64 ANR 921		

878

Form R 25-U Rev. 12-57 * WRITTEN IN ERROR. (ANR 228)

R-15075-1

ROCKETDYNE

INSPECTION DISCREPANCY AND CORRECTION RECORD

MAKE ENTRY CLEAR AND CONCISE, USE INK

Serial No. C187414

Dwg. No 99-106161

Model SE-7

DCP No.	Ent'd By & Date	DESCRIPTION OF DISCREPANCY AND ACTION TAKEN	CLEARED BY Mech. & Date	Lead-man & Date	Insp. & Date
#40	ANR 924 10/16/64	PART NO. TANK ASSY, OXID P/N-103655; S/N-4051231 HAS NO INSPECTION STAMP ON LEAD SEAL ON FLANGE BOLTS SAFTYWIRE.			
		ACTION TAKEN: Inspection has cleared the discrep with Insp stamp on seals.	X	ANR 924 12/17/64	ANR 924
#41	ANR 924 10/16/64	PART NO. TANK ASSY, FUEL P/N-103660; S/N-4051935. NO INSPECTION STAMP ON LEAD SEAL ON SAFTYWIRE OF FLANGE BOLTS.			
		ACTION TAKEN: Inspection has cleared the discrep with Inspection stamp	X	ANR 924 12/17/64	ANR 924
#42	ANR 673 10/20/64	PART NO. PRESSURE SWITCH ACTUATION TEST REF PARA. 7.1.5, 33.2 WAS CHANGED PER I.L DATED 10-20-64 OR Per McDonnell Engineer R.L. Free.			
		ACTION TAKEN: FOR INFORMATION ONLY.	X	ANR 924 10-20-64	ANR 924
#43	ANR 921 10/28/64	PART NO. 99-106161 FAILED FUEL TANK BLADDER LEAK TEST PARA 7.33.12 SPEC. REQUIRES .35 cc/15 ALL READINGS EXCEED REQUIREMENT.			
		ACTION TAKEN: REF IL #388-5237 DTD 20NOV64 AND OFR # 07428 R OK TO PROCEED WITH TEST TRANSFERRED TO STORAGE		ANR 930	ANR 930
#44	ANR 941 11/4/64	PART NO. BRACKETS #99-103952 (2 PCS) WERE MOVED OUT RADIALLY TO ALLOW ROOM TO ATTACH LEAK CHECK COVERS TO T.C.A.s #S/N 4054769 & S/N 4060932. OPEN END OF T.C.A. IS UNSUPPORTED.			
		ACTION TAKEN: Brackets will be installed at completion of acceptance testing (para 7.4) BRACKETS INSTALLED 12-16-64		ANR 924 12-16-64	ANR 924

R-15075-1

879

Form # 25-11 Rev. 12-57

X STAMPED IN FOLDER

DESIGN APPROVAL TEST
ORBIT ATTITUDE AND MANEUVER SYSTEM
(SE7)

NAME OF TEST VIBRATION TEST TEST NO. 106156-401 SHEET 209 OF 413

PART NO. 2-DAY CONFIG. {MAC / NAA} 14-DAY CONFIG. {MAC 52-52701 / NAA 99-106161}

7.2 Vibration Test

7.2.1 General

7.2.1.1 Random vibration input to the Engine System tank module shall be in accordance with the shaped power spectral density curve of Figure 50. The test shall be conducted for eight (8) minutes in each of two axes.

7.2.1.1.1 No smaller than three (3) sigma clippers shall be used to limit the input level.

7.2.1.1.2 The Engine System tank module shall be subjected to random vibration along each of two (2) axes as defined in Figures 51 and 52. They shall be designated Z and R.

7.2.1.1.3 Vibration table equalization shall be accomplished at 2.0 ±0.5 G RMS to establish the initial spectrum shape. No time limit shall be placed on the low level equalization run.

7.2.1.1.3.1 Test level equalization time for the purpose of verifying spectrum shape, shall not exceed 20% of the total test duration for each individual axis.

7.2.1.1.4 The Power Spectral Density (PSD) will be varied per Figure 50 from 20 to 2000 CPS with a plus 100%, minus 50% tolerance when analyzed with 1/3 - octave or narrower filters.

7.2.1.1.4.1 The overall vibration level is to be 7.0 G's RMS plus 15%, minus 0%.

PREPARED BY:	DATE	APPROVED FOR NAA:	DATE
J. Nardi			
CHECKED BY:	DATE		
[illegible]	8-12-64	[illegible]	8-12-64

DESIGN APPROVAL TEST
ORBIT ATTITUDE AND MANEUVER SYSTEM
(SE7)

NAME OF TEST VIBRATION TEST TEST NO. 106156-401 SHEET 210 OF 413
PART NO. 2-DAY CONFIG. {MAC / NAA} 14-DAY CONFIG. {MAC 52-52701 / NAA 99-10661}

7.2.1.2	A sine wave survey shall be performed on the Engine System tank module prior to each plane of vibration.	
7.2.1.2.1	The sine wave survey shall be a one (1) g peak maximum logarithmic sweep from 40 to 2000 cps in 5 ±0.5 minutes.	B
7.2.1.2.1.1	The maximum response of all accelerometers shall be recorded during the sine survey.	B
7.2.1.2.1.2	The system shall be pressurized at 125 ±5 psig during the sine wave survey.	
7.2.1.2.2	One sine wave survey shall be performed in each axis of vibration, with allthree shakers vibrating simultaneously, in phase, controlling from one shaker.	B
7.2.1.3	A module leak test shall be performed prior to and following vibration to assure the tank module integrity and determine vibration effects.	
7.2.2	Preparation	
7.2.2.1	System Condition	
7.2.2.1.1	The Engine System tank module shall be as described in paragraph 3.1 and the following:	
7.2.2.1.1.1	Two rigid jumper lines shall be installed from the Component Package "A" "HI PRESS GAS CHG VALVE PORT - 1" and the "HI PRESS GAS TEST PORT - 2" to the component panel.	
7.2.2.1.1.2	Two rigid jumper lines shall be installed from Component Package "B" "FUEL TANK VENT - 4" and "OXID TANK VENT - 6" to the component test panel.	

PREPARED BY:	DATE	APPROVED FOR NAA:	DATE
J. Nardi			
CHECKED BY:	DATE		
	3-10-65		3-10-65

Rev. B Date 3-10 65

DESIGN APPROVAL TEST
ORBIT ATTITUDE AND MANEUVER SYSTEM
(SE7)

NAME OF TEST VIBRATION TEST TEST NO. 106156-401 SHEET 211 OF 413
PART NO. 2-DAY CONFIG. {MAC / NAA} 14-DAY CONFIG. {MAC 52-52701 / NAA 99-106161}

7.2.2.1.1.3 Two (2) fired cartridge valves, P/N NA528081 will have been installed on Component Packages "C" and "D" prior to vibration.

7.2.2.1.1.4 A remote pressurizing and venting line with a flex coil shall be attached to the two lines in Paragraph 7.2.2.1.1.1.

7.2.2.1.1.5 A remote venting line with a flex coil shall be attached to the two lines in Paragraph 7.2.2.1.1.2 from the component panel.

7.2.2.1.1.6 The following tank module valves shall be left in the OPEN position (1 turn) during vibration with the caps re-installed and torqued per Table I.

1. "HI PRESS GAS CHG VALVE PORT - 1A" B
2. "HI PRESS GAS TEST PORT - 2A" B
3. "FUEL TANK VENT PORT - 4A" B
4. "OXID TANK VENT PORT - 6A" B

7.2.2.2 <u>Test Installation</u>

7.2.2.2.1 <u>Instrumentation</u>

7.2.2.2.1.1 <u>Accelerometers</u>

Prior to the start of testing, a system instrumentation calibration utilizing the voltage insertion method shall be performed; frequency response at 200 CPS, 1 KC and 2 KC shall be verified. This insertion test shall be reduced to a one point check on the second axis of vibration. In the event of commutation of Data collection during the vibration run, instrumentation output shall be permanently recorded on magnetic tape at no less than one (1) minute intervals. Installation of accelerometers shall

PREPARED BY:	DATE	APPROVED FOR NAA:	DATE
J. Nardi			
CHECKED BY:	DATE		
	8-19-64		8-19-64

DESIGN APPROVAL TEST
ORBIT ATTITUDE AND MANEUVER SYSTEM
(SE7)

NAME OF TEST VIBRATION TEST TEST NO. 106156-401 SHEET 212 OF 413
PART NO. 2-DAY CONFIG. {MAC / NAA} 14-DAY CONFIG. {MAC 52-52701 / NAA 99-106161}

7.2.2.2.1.1 (cont'd) be in accordance with Figures 53 and 54 and the following:

7.2.2.2.1.1.1 Tanks - Oxidizer and Fuel:

Mount one (1) accelerometer equi-distant from the tank flange and bottom bearing pivot reading normal to the center line at the tank. The accelerometer shall be in line with the tank pressurizing inlet tube.

7.2.2.2.1.1.1.2 Tank Flange

Three (3) accelerometers mounted on the tank flange and correlated to the x, y and z spacecraft axes.

PREPARED BY:	DATE	APPROVED FOR NAA:	DATE
J. Nardi			
CHECKED BY:	DATE		
[illegible]	8-12-64	[illegible]	8-12-64

DESIGN APPROVAL TEST
ORBIT ATTITUDE AND MANEUVER SYSTEM
(SE7)

NAME OF TEST VIBRATION TEST TEST NO. 106156-401 SHEET 213 OF 413
PART NO. 2-DAY CONFIG. {MAC / NAA} 14-DAY CONFIG. {MAC 52-52701 / NAA 99-106161}

7.2.2.2.1.1.1.3 Bottom Tank Mount

Three (3) accelerometers, mounted on the lower tank mount and recording the three spacecraft axes.

7.2.2.2.1.1.1.4 Pressurant Tank

Three (3) accelerometers mounted along the peripherial center equidistant from the two attach points on the tank. Reading along the three spacecraft axes.

7.2.2.2.1.1.1.5 Pressurant Tank Flange Mount

Three (3) accelerometers mounted on the tank flange and reading the three spacecraft axes simultaneously.

7.2.2.2.1.1.1.6 Pressurant Tank Stud Mount

One (1) accelerometer mounted on the tank mount adjacent to the stud and reading along the centerline of the tank.

7.2.2.2.1.1.1.7 Component Shelf

Five (5) accelerometers, two (2) mounted adjacent to "C" Package reading along the z axes, and normal to the plane of the shelf, one (1) mounted adjacent to the "B" Package, one (1) adjacent to the "E" Package, and one (1) adjacent to the "A" Package, reading normal to the plane of the shelf.

7.2.2.2.1.1.1.8 Component Packages and Valves

Mount one (1) accelerometer on each of the following Components reading normal to the shelf plane. "A" Package, "B" Package, "I" Package, "D" Package, one motor operated valve, and the regulator.

PREPARED BY:	DATE	APPROVED FOR NAA:	DATE
J. Nardi		[illegible]	8-12-64
CHECKED BY: [illegible]	8-12-64		

DESIGN APPROVAL TEST
ORBIT ATTITUDE AND MANEUVER SYSTEM
(SE7)

NAME OF TEST VIBRATION TEST TEST NO. 106156-401 SHEET 214 OF 413
PART NO. 2-DAY CONFIG. {MAC / NAA} 14-DAY CONFIG. {MAC 52-52701 / NAA 99-106161}

7.2.2.2.1.1.1.9 Three (3) accelerometers mounted adjacent to each primary attach fitting. The accelerometers shall be mounted so as to record the line of force of the adjacent vibrator, and the spacecraft x and y axes.

7.2.2.2.1.1.1.10 Three (3) accelerometers mounted on the MAC P/N 52-52008 center beam at the bottom between the two MAC P/N 52-52009 beams. These accelerometers shall record the spacecraft x, y and z axes.

7.2.2.2.1.1.1.11 Three (3) accelerometers mounted on the end of each beam (MAC P/N 52-52009) adjacent to the MAC P/N 52-52015 channel reading x, y and z.

7.2.2.2.1.1.1.12 Two (2) accelerometers mounted at the midpoint of the MAC P/N 52-52009 beams, one (1) located in the z plane and the second located 90° from the z plane and perpendicular to the beam centerline.

7.2.2.2.1.1.1.13 Two (2) accelerometers, one (1) mounted in the z axis on the MAC P/N 52-52010 blast shield support beam, and one (1) mounted normal to this beam at the midpoint.

7.2.2.2.1.1.1.14 One (1) mounted on the MAC P/N 52-52010 blast shield support beam, adjacent to the pressurant tank flange mount and normal to the beam.

7.2.2.2.1.1.1.15 One (1) mounted perpendicular to 52-52008 center support at it's midpoint

7.2.2.2.1.1.1.16 <u>Control Accelerometers</u>

Three attach point accelerometers, one (1) mounted adjacent to each attach point of the vibration exciter to the

PREPARED BY:	DATE	APPROVED FOR NAA:	DATE
J. Nardi			
CHECKED BY:	DATE		
	8-12-64		8-12-64

DESIGN APPROVAL TEST
ORBIT ATTITUDE AND MANEUVER SYSTEM
(SE7)

NAME OF TEST VIBRATION TEST TEST NO. 106156-401 SHEET 215 OF 413
PART NO. 2-DAY CONFIG. {MAC / NAA} 14-DAY CONFIG. {MAC 52-52701 / NAA 99-106161}

7.2.2.2.1.1.1.16 (cont'd) system module. They shall be mounted so as to record line of force of the adjacent shaker. One of the three shall be utilized as the control accelerometer for the random input.

7.2.2.2.1.2 Pressures Measurements

Continuous recordings shall be provided of the following traces:

7.2.2.2.1.2.1

Location	CEC (or equivalent) Accuracy (%)	Range
Supply Pressure-Pkg. "A" Flt. Transducer	±1.25	0-5000 psig
Regulated Press. Pkg."B" Flt. Transducer	±1.50	0-500 psig

7.2.2.2.1.3 Strain Gauges

The five tube stubs on the pressurant and propellant tanks shall have strain gauges attached adjacent to the transition braze on the Titanium Parent Metal.

7.2.2.2.1.3.1 The strain gauges shall be installed 90° apart on each tube stub.

7.2.2.2.1.3.2 Redundant strain gauges shall be installed where space allows.

PREPARED BY:	DATE	APPROVED FOR NAA:	DATE
J. Nardi			
CHECKED BY:	DATE		
[illegible]	8-12-64	[illegible]	8-12-64

DESIGN APPROVAL TEST
ORBIT ATTITUDE AND MANEUVER SYSTEM
(SE7)

NAME OF TEST VIBRATION TEST TEST NO. 106156-401 SHEET 216 OF 413
PART NO. 2-DAY CONFIG. {MAC / NAA} 14-DAY CONFIG. {MAC 52-52701 / NAA 99-106161}

7.2.2.2.2 Leak Test

7.2.2.2.2.1 Connect the Engine System tank module to the facility leak test pressurizing lines schematically shown in Figure 55.

NOTE: Torque values for all Engine System tank module manual valves and access ports shall be in accordance with Table I.

7.2.2.2.2.2 Assure that all Tank Module and test facility hand valves and loaders are in the CLOSED position at the start of the test.

7.2.2.2.2.3 Connect a 0-2000 psig He supply to the facility leak test manifold. B

7.2.2.2.2.4 OPEN the Engine System Tank Module HI PRESS GAS CHG VALVE - 1A.

7.2.2.2.2.5 OPEN the facility PRESSURANT SUPPLY VALVE.

7.2.2.2.2.6 OPEN, slowly, the facility HP loader so that 1500 $^{+50}_{-0}$ psig is indicated on gauge (G_1).

PREPARED BY:	DATE	APPROVED FOR NAA:	DATE
J. Nardi			
CHECKED BY:	DATE		
	8-12-64		8-12-64

DESIGN APPROVAL TEST
ORBIT ATTITUDE AND MANEUVER SYSTEM
(SE7)

NAME OF TEST VIBRATION TEST TEST NO. 106156-401 SHEET 217 OF 413

PART NO. 2-DAY CONFIG {MAC ____ NAA ____} 14-DAY CONFIG {MAC 52-52701 NAA 99-106161}

7.2.2.2.2.7	Using the Mass Spectrometer sampling probe, scan all pneumatic lines, connections, fittings and welded seams of the Tank Module Pressurant Tank up to and including the Cartridge Valve of Component Package "A". Record the specific location(s) of any extensive leakage.	
7.2.2.2.2.7.1	Close the Tank Module "HI PRESS GAS CHG VALVE - 1A".	B
7.2.2.2.2.8	CLOSE the facility loader HP.	
7.2.2.2.2.9	OPEN the facility PRESSURANT VENT VALVE and allow gauge (G_1) to indicate 0 psig.	
7.2.2.2.2.10	CLOSE the facility PRESSURANT VENT VALVE, and the facility leak test PRESSURANT SUPPLY VALVE.	
7.2.2.2.2.11	OPEN the Tank Module OXID CHG VALVE - 11A and OXID TEST VALVE - 12A.	B
7.2.2.2.2.12	OPEN, slowly the facility leak test loader (LP_2) so that the gauge (G_3) indicated 125 $^{+5}_{-0}$ psig.	B
7.2.2.2.2.13	Using the Mass Spectrometer sampling probe, scan all propellant lines, connections, fittings and welded seams of the Engine System from the Oxidizer Tank Outlet to the Oxidizer Propellant Shutoff Valve inlet. Record the specific location(s) of extensive leakage.	
7.2.2.2.2.14	CLOSE the OXID CHG VALVE - "11A".	B
7.2.2.2.2.15	CLOSE the facility leak test loader (LP_2); the gauge (G_3) shall indicate 0 psig.	
7.2.2.2.2.16	CLOSE the OXID TEST VALVE - 12A.	
	NOTE: Torque values are as shown in Table I.	

PREPARED BY:	DATE	APPROVED FOR NAA:	DATE
J.Nardi		R Heide	3-10-65
CHECKED BY: C.T. Jones	DATE 3-10-65		

Rev.B R L Sue Date 3-10-65

DESIGN APPROVAL TEST
ORBIT ATTITUDE AND MANEUVER SYSTEM
(SE7)

NAME OF TEST VIBRATION TEST TEST NO. 106156-401 SHEET 218 OF 413

PART NO. 2-DAY CONFIG. {MAC / NAA} 14-DAY CONFIG. {MAC 52-52701 / NAA 99-106161}

7.2.2.2.2.17	Slowly OPEN the Engine System Tank Module "FUEL TEST VALVE -14A, and the "FUEL CHG VALVE - 15A".	B
7.2.2.2.2.18	Repeat paragraph 7.2.2.2.2.12.	
7.2.2.2.2.19	Using the Mass Spectrometer sampling probe, scan all propellant lines, connections, fittings and welded seams of the Engine System from the "FUEL TANK OUTLET" to the FUEL PROPELLANT SHUTOFF VALVE" inlet. Record the specific location(s) of extensive leakage.	B
7.2.2.2.2.19.1	CLOSE the FUEL CHG VALVE - 15A.	B
7.2.2.2.2.20	Repeat paragraph 7.2.2.2.2.15.	
7.2.2.2.2.21	CLOSE the Engine System Tank Module FUEL TEST VALVE - 14A.	
7.2.2.2.2.22	OPEN, slowly, the facility leak test loader (LP_1) so that the gauge (G_3) indicates 125 $^{+5}_{-0}$ psig.	B
7.2.2.2.2.23	OPEN the Engine System Tank Module OXID CHG VALVE - 11A, the FUEL CHG VALVE - 15A, the OXID TANK VENT VALVE - 6A, and the FUEL TANK VENT VALVE -4A.	B
7.2.2.2.2.24	OPEN, slowly, the facility leak test loader (LP_1) so that the gauge (G_2) indicates 115 $^{+5}_{-0}$ psig.	
7.2.2.2.2.25	Using the Mass Spectrometer sampling probe, scan all pneumatic lines, connections, fittings and welded seams from Component Package "A" outlet to the oxidizer and fuel tank inlets. Record the specific location(s) of leakage.	
7.2.2.2.2.26	CLOSE the facility loader (LP_1) and OPEN the Propellant Facility Tank Vent Valve, the gauge (G_2) shall indicate 0 psig. CLOSE the Facility Propellant Tank Vent Valve	

PREPARED BY:	DATE	APPROVED FOR NAA:	DATE
J. Nardi			
CHECKED BY:	DATE		
[illegible]	3-10-65	[illegible]	3-10-65

Rev. B [illegible] Date 3-10-65

R-15075-1

DESIGN APPROVAL TEST
ORBIT ATTITUDE AND MANEUVER SYSTEM
(SE7)

NAME OF TEST VIBRATION TEST TEST NO. 106156-401 SHEET 219 OF 413
PART NO. 2-DAY CONFIG. {MAC / NAA} 14-DAY CONFIG. {MAC 52-52701 / NAA 99-106161}

7.2.2.2.2.26 (cont'd)	when G_2 indicates 0 psig.	
7.2.2.2.2.27	CLOSE the facility leak test loader (LP_2); the gauge (G_3) shall indicate 0 psig.	
7.2.2.2.2.27.1	OPEN the facility "PRESSURANT VENT VALVE".	B
7.2.2.2.2.27.2	Slowly OPEN the HI PRESS GAS CHG VALVE - "1A".	B
7.2.2.2.2.28	Remove the test lines from the following PORTS: "Reg out test -3" "Oxid chg port -11" "Oxid test port -12" "Fuel chg port -15" "Fuel test port -14" CLOSE all manual valves on the system.	B
7.2.3	Test Procedure (NOTE: Paragraphs 7.2.3.2 thru 7.2.3.4 may be performed in any sequence).	B
7.2.3.1	Vibration in the R Axis	
7.2.3.1.1	Inspect the tank module to assure no visual damage from shipment is apparent. Inspect the module to assure conformance to P/N 99-106161 and Figure I.	B
7.2.3.2	Leak check the tank module per Paragraph 7.2.2.2.2.	B
7.2.3.3	Connect the instrumentation called out in Section 7.2.2.2.1 of this specification.	
7.2.3.4	Fasten the OAMS module to the three vibration exciters by the spacecraft attach points using three (3) bolts furnished torqued to 450 to 500 in. lbs. The lower attach points will be mounted into a fixed structure which duplicates the spacecraft mounting.	

PREPARED BY:	DATE	APPROVED FOR NAA:	DATE
J. J. Nardi			
CHECKED BY:	DATE		
	3-10-65		3-10-65

DESIGN APPROVAL TEST
ORBIT ATTITUDE AND MANEUVER SYSTEM
(SE7)

NAME OF TEST VIBRATION TEST TEST NO. 106156-401 SHEET 220 OF 413

PART NO. 2-DAY CONFIG. {MAC / NAA} 14-DAY CONFIG. {MAC 52-52701 / NAA 99-106156}

7.2.3.4.1	Attach the test set-up shown in Figure 56. OPEN 1A and 2A $2\frac{1}{2}$T. OPEN 6A and 4A one (1) turn. Replace and torque caps.	B
7.2.3.4.2	Install the fired cartridge valves, P/N NA5-28081 to the component packages C and D. Torque 40 to 50 in. lbs.	
7.2.3.5	Charge the Engine System Tank Module propellant tanks with safety fluids in accordance with Paragraph 6.1.3.1.1.	
7.2.3.6	Prior to the start of the test, perform the system electrical calibration utilizing the voltage insertion method. Verify the frequency response at 200 cps, 1 KC and 2 KC.	B
7.2.3.7	Pressurize the test tank with GHe according to the following procedure:	
7.2.3.7.1	OPEN the Pressurant Supply Valve. Slowly adjust pressure regulator (HP) until 125 ±5 psig is registered on pressure gauge (G_1).	
7.2.3.8	Perform a sine wave survey per Paragraph 7.2.1.2.	
7.2.3.9	Response data from all accelerometers during the sine wave survey shall be reduced to X-Y recordings of G's versus frequency.	B
7.2.3.10	Pressurize the system for random testing per the following procedure:	
7.2.3.10.1	Slowly adjust the pressure regulator (HP) until 3000 $^{+100}_{-0}$ psig. is registered on pressure gauge (G_1).	B

PREPARED BY:	DATE	APPROVED FOR NAA:	DATE
J. J. Nardi			
CHECKED BY:	DATE		
	3-10-65		3-10-65

Rev. B Date 3-10-65

R-15075-1

DESIGN APPROVAL TEST
ORBIT ATTITUDE AND MANEUVER SYSTEM
(SE7)

NAME OF TEST VIBRATION TEST TEST NO. 106156-401 SHEET 221 OF 413

PART NO. 2-DAY CONFIG. {MAC / NAA} 14-DAY CONFIG. {MAC 52-5,701 / NAA 99-106'61}

7.2.3.10.2 Wait fifteen (15) minutes minimum and then close the Pressurant Supply Valve.

7.2.3.10.3 Wait until the test tank pressurestabilizes.

7.2.3.10.4 Pressure stabilization is defined as a maximum change of 5 psig during a ten (10) minute interval.

7.2.3.10.5 If the test tank pressure stabilizes at a value other than 3000 $^{+100}_{-0}$ psig, repressurize as required by repeating the procedure of Paragraphs 7.2.3.10.1 through 7.2.3.10.5. B

7.2.3.10.6 Verify operation of the two flight pressure transducers on the recording chart.

PREPARED BY: J.J. Nardi	DATE	APPROVED FOR NAA:	DATE
CHECKED BY: [illegible]	3-10-65	[illegible]	3-10-65

DESIGN APPROVAL TEST
ORBIT ATTITUDE AND MANEUVER SYSTEM
(SE7)

NAME OF TEST VIBRATION TEST TEST NO. 106156-401 SHEET 222 OF 413

PART NO. 2-DAY CONFIG. MAC ____ NAA ____ 14-DAY CONFIG. MAC 52-52701 NAA 99-106161

7.2.3.11	Equalize the shakers as called for in paragraph 7.2 and the following:
7.2.3.11.1	Perform the initial 2.0 ±0.5 G equalization runs to establish approximate spectrum shape.
7.2.3.11.2	The System module shall be vibrated at the test level and the input from each exciter analyzed to verify spectrum shape and also to establish response data calibration levels.
7.2.3.11.3	Repeat the run as required to assure proper spectrum shape, remaining within the time allowance of Paragraph 7.2.1.1.3.1
7.2.3.11.4	From the data acquired during the sine wave survey, the preliminary tests on the dummy OAMS system, and the equalization runs; one shaker will be selected to maintain the spectrum as generated by the automatic equalizer.
7.2.3.11.5	Analyze all three shaker inputs following equalization for spectrum comparision.
7.2.3.12	Subject the system to the random vibration spectrum as shown in Figure 50 for a duration of 8 minutes ±10 seconds.
7.2.3.13	Upon completion of test, vent the high and low pressure systems, OPEN the "PRESSURANT VENT VALVE" and the "PROPELLANT TANK VENT VALVE".
7.2.3.14	Random response and control data is to be analyzed at intervals of To + 10 seconds, To + 22 seconds and at To +450 seconds. (Reference paragraph 7.2.1.1.4).
7.2.3.15	The data shall be presented in the form of PSD versus frequency recordings.

PREPARED BY:	DATE	APPROVED FOR NAA:	DATE
J. Nardi		[illegible]	8-12-64
CHECKED BY: [illegible]	8-12-64		

INTERNAL LETTER
North American Aviation, Inc.

IL 4383-5103
DATE 12 October 1965

TO C. Lamb
Address D/554, NAAQC

FROM J. J. Nardi
Address Gemini Project Office

SUBJECT Deviations to the DAT SE-7 Specification.

The vibration test for the SE-7 OAMS shall be changed as follows:

* Paragraph 7.2.3.4.1 OPEN 1A and 2A two and one half turns.
* Remove paragraph 7.2.3.6.1.1.
* Renumber 7.2.3.4.1 and 7.2.3.6.1.2 as required.

Perform a leak check per paragraph 7.2.2.2.2. following the R-Axis.

J. J. Nardi, Rocketdyne

for V. Noonan, McDonnell

* Incorporated in specification

Retyped from original, dated 2 September 1964

FORM R 18-0-4

DESIGN APPROVAL TEST
ORBIT ATTITUDE AND MANEUVER SYSTEM
(SE7)

NAME OF TEST VIBRATION TEST TEST NO. 106156-401 SHEET 223 OF 413
PART NO. 2-DAY CONFIG. {MAC / NAA} 14-DAY CONFIG. {MAC 52-52701 / NAA 99-106161}

7.2.3.15.1	At the discretion of the cognizant Rocketdyne personnel, G^2 versus time recordings may be requested to verify consistency of G RMS levels throughout the test duration.
7.2.4	Vibration in the Z Axis
7.2.4.1	Re-install the system module to the three vibration exciters as shown in Figure 52.
7.2.4.2	Connect the applicable instrumentation for the Z axis test.
7.2.4.3	Repeat paragraphs 7.2.3.3 through 7.2.3.15. B
7.2.5	Post Test Requirements
7.2.5.1	The system shall be drained and cleaned per paragraph 6.2.2.2 of this specification at the conclusion of the test.
7.2.5.1.1	Perform the Leak Test of paragraph 7.2.2.2.2.
7.2.5.2	A list of all the accelerometers, amplifiers, and transducers utilized shall be included as part of the test data along with the calibration date, range, response, model number, serial number, and location utilized.
7.2.5.3	Two copies of all instrumentation tapes and X-Y plots shall be reproduced and sent to Rocketdyne as soon after the testing as possible. All tapes must be identified as to system, axis of vibration, type of vibration, position monitored, calibration level and accelerometer numbers. One of these tapes along with preliminary copies of the data shall be forwarded to MAC Engineering as soon as possible.

PREPARED BY:	DATE	APPROVED FOR NAA:	DATE
J.J. Nardi			
CHECKED BY:	DATE		
[illegible]	3-10-65	[illegible]	3-10-65

Rev. B [illegible] Date 3-10-65

DESIGN APPROVAL TEST
ORBIT ATTITUDE AND MANEUVER SYSTEM
(SE7)

NAME OF TEST VIBRATION TEST TEST NO. 106156-401 SHEET 224 OF 413

PART NO. 2-DAY CONFIG. { MAC / NAA } 14-DAY CONFIG. { MAC 52-52701 / NAA 9S-106161 }

7.2.5.4 Visual Inspection

Perform a critical visual inspection of all components, brackets, tubing, braze joints, and structure and record any physical effects from the vibration test under the remarks section of the data sheet. Dye penetrant checks of **any critical area may be checked at the descretion of N.A.A. Inspection, USAFQC, or McDonnell Aircraft.**

PREPARED BY:	DATE	APPROVED FOR NAA:	DATE
J. Nardi			
CHECKED BY:	DATE		
	8-12-64		8-12-64

ROCKETDYNE

INSPECTION DISCREPANCY AND CORRECTION RECORD

MAKE ENTRY CLEAR AND CONCISE, USE INK

Serial No. 0187419

Dwg. No. 99-106161

Model SE-7

DCP No.	Ent'd By & Date	DESCRIPTION OF DISCREPANCY AND ACTION TAKEN	CLEARED BY Mech. & Date	Lead-man & Date	Insp. & Date
16	8/28/64 ANR 921	PART NO. 7.2.3.4. OF TEST PROCEDURE LEAK CHECK, PER. PARA. 7.2.2.2.2.14 & .19 IS INVALID IN THAT PNEUMATIC FLOW IS PROHIBITED FROM ENTERING SYSTEM DUE TO NORMALLY CLOSED VALVES. REFER FIGURE 55. ALSO SEE PREPARATION PARA 7.2.2.1.3			
		ACTION TAKEN: SPECIFICATION CHANGED TO REFLECT OPENING MANUAL VALVES "11A" AND "15A"	8/31/64	8/31/64	8/31/64 ANR 921
17	8/28/64 ANR 921	PART NO. RESISTOFLEX CAPS WERE NOT INSTALLED PER PARA. 7.2.3.2. WERE NOT INSTALLED DUE TO PROTRUDING VALVE STEMS ON 11A, 15A, 4A, 6A (INDICATING OPEN POSITION)			
		ACTION TAKEN: MANUAL VALVES WERE CLOSED, RESISTOFLEX CAPS TORQUED IN PLACE, THEN OPENED AFTER LEAK CHECK	8/31/64	8/31/64	8/31/64 ANR 921
18	8/29/64 ANR 921	PART NO. REFER PARA. 6.1.3.1.1.4.1; SPEC. REQUIRES 15 PSIG. 25 PSIG WAS APPLIED			
		ACTION TAKEN: SPECIFICATION CHANGED TO REFLECT HIGHER PRESSURE	8/31/64	8/31/64	8/31/64 ANR 921
19	8/29/64 ANR 921	PART NO. REFER PARA. 7.2.2.4.1 (ALSO SEE SQUAK # 14) WHICH REFERS TO 7.2.2.2.1 WHICH REQUIRES INSTALLATION OF INSTRUMENTATION; THIS HAS NOT BEEN DONE. (OUT OF SEQUENCE)			
		ACTION TAKEN: SPECIFICATION CHANGED TO REFLECT SEQUENCE OF INITIAL TESTING	8/31/64	8/31/64	8/31/64 ANR 921
20	8/29/64 ANR 921	PART NO. REFER PARA. 7.2.2.4.2 THE MODULE HAS NOT BEEN MOUNTED IN VIBRATION FIXTURE. (OUT OF SEQUENCE)			
		ACTION TAKEN: SPECIFICATION CHANGED TO REFLECT SEQUENCE OF INITIAL TESTING	8/31/64	8/31/64	8/31/64 ANR 921

R-15075-1

897

Form R 25-U Rev. 12-57

ROCKETDYNE

INSPECTION DISCREPANCY AND CORRECTION RECORD

MAKE ENTRY CLEAR AND CONCISE, USE INK

Serial No. 0187419

Dwg. No. 99-106161

Model SE-7

DCP No.	Ent'd By & Date	DESCRIPTION OF DISCREPANCY AND ACTION TAKEN	CLEARED BY Mech. & Date	Lead-man & Date	Insp. & Date
21	8/29/64 ANR 921	PART NO. REFER PARA 6.1.3.1.1.1.3.4 WHICH REQUIRES PORT 11 TO BE OPENED by OPENING "11A" FIGURE "ONE" (1) SHOWS OPEN AS 2½ TURNS VALVE WAS OPENED 4½ TURNS.			
	ACTION TAKEN	SPECIFICATION CHANGED TO ALLOW TANKING AT A HIGHER PRESSURE. PER I.L. DATED 8/31/64 - J. NARDI	8/31/64	8/31/64	ANR 921 8/31/64
22	8/31/64 ANR 921	PART NO. REFER TO PARA. 6.1.3.1.2. OF FILL PROCEDURE WHICH REQUIRES 63% (by WEIGHT) ISOPROPYL ALCOHOL & 37% DISTILLED, DEIONIZED WATER. THIS IS CHANGED TO READ 76% (BY VOLUME) ETHYL ALCOHOL & 24% DISTILLED WATER. SPECIFICATION TO BE CHANGED TO ALLOW ETHYL ALCOHOL & DISTILLED WATER.			
		PART NO. ~~SEE DISCREP. #22 ABOVE~~			
	ACTION TAKEN	SPEC. WILL BE CHANGED to allow ETHYL ALCOHOL AND DISTILLED WATER TO BE USED.	8/31/64	8/31/64	ANR 921 9/3/64
23	8/31/64 ANR 921	PART NO. REFER TEST PROCEDURE PARA 7.2.3.5 WHICH REFERS TO PARA. 6.1.3.1.7 WHICH REQUIRES FREON MF TO BE USED. FREON 11 WHICH IS EQUIVALENT TO FREON MF WAS USED IN ITS PLACE.			
	ACTION TAKEN	INFORMATION ONLY!	8/31/64 ANR 921	ANR 921	ANR 921
24	9/1/64 ANR 921	PART NO. NAS-1057T3-055 (SPACER) WAS EXTENDED .060" LOCATED ON CLAMP ASSY #9M145-4 (LOCATED ON PRINT 99-106161) (SEC. 7-8)			
	ACTION TAKEN	THIS OPERATION WAS SUPERVISED BY U. NORDIN (MAC) SEE I.L. 4388-5104	9/3/64 ANR 921	R-15075-1	9/3/64

898

Form R 25-U Rev. 12-57

INTERNAL LETTER
NORTH AMERICAN AVIATION, INC.

IL 4388-5101

DATE 8-31-64

TO C. LAMB
ADDRESS NAAQC D/554
(Show Dept., Group, Div. & Location)

FROM J.J. NARDI
ADDRESS GEMINI PROJECT OFFICE
HOUSTON, TEXAS

PHONE HU 8-2697

SUBJECT SE-7 OAMS SPECIFICATION CHANGES TO 106156-401

The following changes will be incorporated the "B" change of the SE-7 OAMS DAT specification 106156-401.

DCP Number	Action Taken
14, 19, and 20	The initial sequence of events, i. e., Filling, leak checking and installation into the fixture, was varied to accelerate testing.
13	The change was to eliminate the requirement for a booster pump to bring bottle GHe from 2200 p ig to 3600 psig. The Leak check requires 1500 psig as the maximum pressure.
16	The test was written with ~~open~~ OPENED fired cartridges valves installed. The test was run with the normally closed isolation valve, (P/N NA5-28081) not fired. This required opening and closing of the following Tank Module hand valves: Paragraph 7.2.2.2.2.12 OPEN the "OXID CHG VALVE-11A" Paragraph 7.2.2.2.2.17 OPEN the "FUEL CHG VALVE-15A" Paragraph 7.2.2.2.2.21 CLOSE the "FUEL CHG VALVE-15A"
17	The caps cannot be installed under certain dimensional stack-ups with the Tank Module manual valves in the OPEN position (2½ turns OPEN).

R-15075-1

18 & 21 This pressure was increased from 15 psig to 25 psig to overcome the pressure drop through ¼" loading lines. The manual valve, "OXID CHG VALVE-11A", was opened to the stop for the same reason.

22 The loading procedure for simulated propellant loadi ng for vibration, Paragraph 6.1.3.1.1.2 was changed to 76% Ethyl Alcohol and 24% distilled Water by volume. This change was made to facilitate testing and did not effect the test program.

J.J. NARDI
GEMINI PROJECT OFFICE
ROCKETDYNE-SPACE ENGINES

V. NOONAN
MAC REPRESENTATIVE

ROCKETDYNE

INSPECTION DISCREPANCY AND CORRECTION RECORD

MAKE ENTRY CLEAR AND CONCISE, USE INK

Serial No. 0187414

Dwg. No. 99-106161

Model SE-7

DCP No.	Ent'd By & Date	DESCRIPTION OF DISCREPANCY AND ACTION TAKEN	CLEARED BY Mech. & Date	Lead-man & Date	Insp. & Date
26	9/1/64 ANR 921	PART NO. DURING CARTRIDGE REMOVAL (PARA. 7.2.3.4.1) SPEC. APPROX. 4 LBS OF ALCOHOL & WATER WAS LOST DUE TO A HEAD PRESS. WHICH WAS NOT ANTICIPATED — THROUGH PORT 15 A			
ACTION TAKEN		EVEN THOUGH THE FINAL AMOUNT WAS 2 LBS UNDER TOLERANCE, IT WAS ACCEPTABLE PER T.L. 4388-5102	9/9/64	9/9/64	ANR 921 9/9/64
26	9/1/64 ANR 921	PART NO. PARA. 7.2.12.1 WAS NOT COMPLIED WITH IN THAT THE BAND WIDTH ~~WAS~~ WAS FROM 40-2000 CPS (SPEC. REQUIRES 20-2000 CPS) — THE BAND WIDTH WAS CHANGED BECAUSE OF EQUIPMENT LIMITATIONS			
ACTION TAKEN		ACCEPTED BY ENGINEERING & MAC. PER. TL 4388-5104	9/9/64	9/9/64	ANR 921 9/9/64
27	9/4/64 ANR 921	PART NO. AFTER SINE SURVEYS AND RANDOM EQUALIZATION RUNS IT WAS NOTED THAT THE PRESS. TANK HOLDDOWN BOLTS AND THE SUPPORT NUT HAD WORKED LOOSE (~~NO~~ SHEETS WERE REQUIRED)			
ACTION TAKEN		TWO AN960C10L WASHERS WERE ADDED BETWEEN PRESS. TANK AND BRACKET (PER MAC PROCEDURE (TL 4388-5104	9/9/64	9/9/64	ANR 921 9/9/64
28	9/1/64 ANR 921	PART NO. PRIOR TO VIBRATION TESTING THE OAMS MODULE SUPPORT LINKAGE WAS REMOVED AND REPLACED PER MAC DWG. 52-52009 CHANGE 609695			
ACTION TAKEN		INFORMATION ONLY	ANR 921 9/1/64	ANR 921	ANR 921
29	9/4/64 ANR 921	PART NO. BOLTS WHICH WERE USED TO REPLACE PRESS. TANK HOLDDOWN BOLTS (SEE SQK #27) WERE NOT THE PROPER BOLT — POINT CALL FOR 60 H NAS 675 UH — THE BOLTS USED WERE NAS 675 UHR			
ACTION TAKEN		Accepted per T.L. 4388-5104	9/9/64	9/9/64	ANR 921 9/9/64

R-15075-1

901

Form R 25-U Rev. 12-57

ROCKETDYNE

INSPECTION DISCREPANCY AND CORRECTION RECORD

MAKE ENTRY CLEAR AND CONCISE, USE INK

Serial No. 01F7414

Dwg. No. 97-106161

Model SE-7

DCP No.	Ent'd By & Date	DESCRIPTION OF DISCREPANCY AND ACTION TAKEN	CLEARED BY Mech. & Date	Lead-man & Date	Insp. & Date
30	9/4/64 ANR 921	PART NO. IN AN EFFORT TO SECURE THE PRESS TANK 2 ADDITIONAL WASHERS WERE ADDED TO Hold down ASSY. SEE SQUAK # 27 & 29			
		ACTION TAKEN: Accepted per I.L. 4388-5104	ANR 921 9/3/64	9/3/64	ANR 921 9/3/64
31	9/10/64 ANR 921	PART NO. DURING LEAK CHECK PER I.L. #4388-5103 PARA 7.2.2.2, PRESS. WAS NOT APPLIED TO LOW PRESS. PROPELLANT SIDE.			
		ACTION TAKEN: THIS LEAK CHECK WAS PERFORMED BETWEEN AXIS AS AN ADDITIONAL REQUIREMENT. PRESS ACCEPTED PER I.L. 4388-5108	10/2/64 ANR 921		10/2/64 ANR 921
32	9/17/64 ANR 921	PART NO. DURING VIBRATION IN THE "Z" AXIS THE SINE WAVE SURVEYS FOR EACH SHAKER WERE NOT RUN — (ALL THREE "WAS ~~WERE~~ RUN) REFER PARA 7.2.2.3 — TO 7.2.3.8 which REFERS TO 7.2.1.2			
		ACTION TAKEN: ACCEPTED PER I.L. 4388-5108 — IT IS FELT THAT THIS DATA IS ALL THAT IS NECESSARY	10/2/64 ANR 921		10/2/64 ANR 921
33	9/18/64 ANR 921	PART NO. TERM (MAJOR RESONENT) IS CHANGED TO "MAJOR RESPONCES" — WHERE EVER FOUND			
		ACTION TAKEN: IT IS FELT THAT THE TERM "MAJOR RESONANT" IS MORE LEADING — THE RESPONCES RECORDED WERE >2 G'S INPUT	ANR 921 9/24/64		ANR 921 9/24/64
34	9/18/64 ANR 673	PART NO. ALL DATA (X-Y PLOTS) ARE IDENTIFIED WITH FIGURE 51 PER THE FOLLOWING SHAKER #1 = THRUSTER #2, SHAKER #2 = 275, SHAKER #3 = THRUSTER 1.			
		ACTION TAKEN: INFORMATIONAL ONLY	ANR 921 9/18/64		

902

R-15075-1

Form R 25-U Rev. 12-57

INTERNAL LETTER
NORTH AMERICAN AVIATION, INC.

I.L. 4388-5104

DATE .Sept. 8, 1964

TO C. T. Lamb
ADDRESS Dept. 554-940
(Show Dept., Group, Div. & Location)

FROM .J. J. Nardi
ADDRESS .Gemini Project Office
Houston, Texas

PHONE .HU 3-2697

SUBJECT . SE-7 OAMS SPECIFICATION CHANGES TO 106156-401

The following changes will be incorporated in the "B" change of the SE-7 OAMS DAT Specification # 106156-401.

Refer to DCP number	
24	A spacer, p/n NAS-1057T3-055 was extended .060" on the clamp Ass'y # 9M145-4 to bring the .250 line from the "A" package inlet to the pressurant tank. This was required to meet the minimum clearance of .015".
26	Paragraph #7.2.1.2.1 was changed from 20-2000cps to 40-2000 cps because of equipment limitations.
27 & 30	Two AN960C10L washers were added between the pressurant tank and the bracket. This change was in accordance withan exsisting MAC proceedure.
29	For use in this test only, two NAS 673VV8 bolts were used in the pressurant tank bracket. It is felt that this will have no effect on the Vibration Tests.
	(Refer also DCP 26) A sine wave survey was run from 20-60 cps at a level of 1G input on all shakers simultainiously; this, it is felt will give the necessary low frequency data.
	The first 10 sec. of the test level Random equalization burst was run with 1500 psig instead of 3000 psig (required per DAT) due to safety regulations of this instalation.
	The pressure required during the 20-60cps Sine Survey was increased from 125 psig to 1500 psig to add stiffness.
	A spacer was added to the Press. tank mount to secure the tank.

V. Noonan
MAC Representative

J. J. Nardi
Gemini Project Office
Rocketdyne-Space Engines

R-15075-1

FORM 131-R-1 NEW 1-62

INTERNAL LETTER
NORTH AMERICAN AVIATION, INC.

DATE 30 September 1964

TO C. Lamb
ADDRESS D/554

FROM T. G. Kniffin
ADDRESS D/896-388

PHONE 6608

SUBJECT Changes to 3E7 OAMS Design Approval Test Specification 106156-401

DCP No.	Action Taken
31	A leak check was performed per IL 4338-5103 and paragraph 7.2.2.2.2 except that pressure was not applied below the Package "A" isolation cartridge valve due to the fact that the propellant tanks were loaded with simulated propellants. Testing did not go beyond paragraph 7.2.2.2.2.11.
32	Sine wave survey per paragraph 7.2.3.8 was run with three shakers running simultaneously only which is a deviation to paragraph 7.2.1.2 which also requires each shaker to be run independently. It was felt that data obtained from running shakers independently would be superfluous.
33	Reference paragraph 7.2: The term "major resonant" is to be replaced by the term "major response" wherever found. The term "major resonant" was felt to be misleading.
34	Figure 51 shall be reidentified as follows: "Shaker #1" to "Thruster #2," "Shaker #3" to "Thruster #1," "Shaker #2" to "275". All pertinent data (X-Y plots) shall be so identified.

Troy Kniffin
T. G. Kniffin
Gemini DAT-RAT Unit

Approved R. L. Free
for R. L. Mantler
Resident Engineer - MAC

DESIGN APPROVAL TEST
ORBIT ATTITUDE AND MANEUVER SYSTEM
(SE7)

NAME OF TEST Vibration Test TEST NO. 106156-401 SHEET ____ OF ____
PART NO. 2-DAY CONFIG. { MAC ____ NAA ____ } 14-DAY CONFIG. { MAC 52-52701 NAA 99-106161 }

7.2.7 Test Data -

The readings of the sinusoidal major responses and random vibration gain values were obtained from graphic plots (X-Y) of tape recordings of acceleronmeter excitation monitored during the tests. The graphic plots, entitled "OAMS VIBRATION ANALYSIS PLOTS OF GT-2 OAMS VIBRATION TEST", dated November 1964, were prepared by the Structures and Mechanics and the Instrumentation and Electronics Systems Divisions of NASA, MCS-Houston, Texas, Copies of these plots may be obtained from NASA as reproducible masters were not made available for utilization in this report.

The sinusoidal major response data was recorded for G peak output values which exceeded the input value by a factor of three.

The random gain value data was acquired from G^2/cps versus frequency readings recorded during a ten second interval just prior to the end of the random vibration input. An analysis of the G^2 versus time plots of the random vibration revealed no significant periods during the total random run wherein additional G^2/cps versus frequency graphic plots were warranted. The maximum loads were evidenced during the period wherein the G^2/cps versus frequency readings were actually plotted. The G^2 versus time plot of the control shaker indicated an overall input level of 7.28 G RMS.

DESIGN APPROVAL TEST
ORBIT ATTITUDE AND MANEUVER SYSTEM
(SE7)

NAME OF TEST VIBRATION TEST TEST NO. 106156-401 SHEET 225 OF 413

PART NO. 2-DAY CONFIG {MAC / NAA} 14-DAY CONFIG {MAC 52-52701 / NAA 99-106161}

		Inspection Stamp
7.2.7	Test Data	
7.2.7.1	Engine System Tank Module Identification	
7.2.7.1.1	McDonnell Part No. 52-52701	
7.2.7.1.2	Rocketdyne Part No. 99-106161	
7.2.7.2	System Condition	
7.2.7.2.1	The Engine System Tank Module was visually inspected and does conform to Rocketdyne Drawing 99-106161 and Figure 1 of this specification.	ANR 921 8/28/64
7.2.7.2.2	The accelerometers were installed on the Engine System Tank Module per paragraph 7.2.2.2. and Figures 53 and 54.	ANR 921 9/1/64
7.2.7.3	System Leak Check	
7.2.7 3.1	The System was modified as shown in Figure 55 for the leak check.	ANR 921 8/28/64
7.2.7.3.2	The Pressurant Tank was pressurized to 1500 $^{+50}_{-0}$ psig.	ANR 921 8/28/64
7.2.7.3.2	Leakage (~~was~~ was not) detected at the brazed fittings and connections as noted in paragraph 7.2.2.2.2.7.	ANR 921 8/28/64

PREPARED BY: DATE	PERFORMED BY: DATE	WITNESSED FOR NAA: DATE	CERTIFIED FOR McDONNELL DATE
J. Nardi	9-3-64	ANR 921	R.L. Jr 10-2-64
			VERIFIED BY USAF DATE 9/4/

DESIGN APPROVAL TEST
ORBIT ATTITUDE AND MANEUVER SYSTEM
(SE7)

NAME OF TEST VIBRATION TEST TEST NO. 106156-401 SHEET 226 OF 413

PART NO. 2-DAY CONFIG {MAC / NAA} 14-DAY CONFIG {MAC 52-52701 / NAA 00-106161}

		Inspection Stamp
7.2.7.3.2 (cont'd)	Specific Locations of extensive leakage (if none, write none). NONE	ANR 921 8/28/64
7.2.7.3.3	Leakage (~~was~~, was not) detected at the locations defined in paragraph 7.2.2.2.2.14.	ANR 921 8/28/64
	Specific locations of extensive leakage (if none, write none). NONE	ANR 921 8/28/64

PREPARED BY: DATE	PERFORMED BY: DATE	WITNESSED FOR NAA: DATE	CERTIFIED FOR McDONNELL DATE
J. Nardi	S. Lombardo 9-4-64	[illegible] 9/4/64 ANR 921	R. L. Fue 10-2-64
			VERIFIED BY USAF 9/4/64 DATE ANR 921

ROCKETDYNE
A DIVISION OF NORTH AMERICAN AVIATION INC

DESIGN APPROVAL TEST
ORBIT ATTITUDE AND MANEUVER SYSTEM
(SE7)

NAME OF TEST VIBRATION TEST TEST NO. 106156-401 SHEET 227 OF 413

PART NO. 2-DAY CONFIG. { MAC / NAA } 14-DAY CONFIG. { MAC 52-52701 / NAA 99-106161 }

7.2.7.3.4 Leakage (~~was~~, was not) detected at the locations defined in Paragraph 7.2.2.2.2.19. Inspection Stamp ANR 921 8/28/64

Specific locations of extensive leakage (if none, write none).

NONE

ANR 921 8/28/64

7.2.7.3.5 Leakage (~~was~~, was not) detected at the locations defined in Paragraph 7.2.2.2.2.24. ANR 921 8/28/64

Specific locations of extensive leakage (if none, write none).

NONE

ANR 921 8/28/64

7.2.7.3.6 Leakage (~~was~~, was not) detected at the locations defined in Paragraph 7.2.2.2.2.26. ANR 921 8/28/64

Specific locations of extensive leakage (if none, write none).

PREPARED BY: DATE	PERFORMED BY: DATE	WITNESSED FOR NAA: DATE	CERTIFIED FOR McDONNELL: DATE
J. Nardi	9-4-64		10-2-64
			VERIFIED BY USAF: 9/4/64 DATE

908 Form 1453

R-15075-1

DESIGN APPROVAL TEST
ORBIT ATTITUDE AND MANEUVER SYSTEM
(SE7)

NAME OF TEST VIBRATION TEST TEST NO. 106156-401 SHEET 228 OF 413

PART NO. 2-DAY CONFIG {MAC / NAA} 14-DAY CONFIG {MAC 52-52701 / NAA 66-106161}

		Inspection Stamp
7.2.7.3.6 (cont'd)	NONE	ANR 921 4/28/64
7.2.7.3.7	All resistoflex caps were replaced and torqued in accordance with Table I.	ANR 921 9/1/64
7.2.7.4	Vibration Data from the R Axis	
7.2.7.4.1	All the associated instrumentation is installed per paragraph 7.2.2.2.1 and Figures 53 and 54 unless otherwise noted (Reference paragraph 7.2.3.2).	ANR 921 9/2/64
7.2.7.4.2	The tank module was mounted to the three (3) vibration shakers per Figure 51, R Axis: (Reference paragraph 7.2.3.3).	ANR 921 9/1/64
7.2.7.4.3	The tank module satisfactorily passed the leak check of Paragraph 7.2.2.2.2 (Reference paragraph 7.2.3.4).	ANR 921 8/27/64
7.2.7.4.4	The tank module oxidizer tank was loaded with 255 (ANR 921) lbs. of Freon MF (Reference paragraph 7.2.3.5).	ANR 921 8/29/64
7.2.7.4.5	The tank module fuel tank was loaded with 152 (ANR 921) lbs. of alcohol (Reference paragraph 7.2.3.5).	ANR 921 9/29/64

PREPARED BY: DATE	PERFORMED BY: DATE	WITNESSED FOR NAA: DATE	CERTIFIED FOR McDONNELL DATE
J. Nardi	S. Lombardo 9-4-64	[illegible] 9/4/64	R. L. Frie 10-2-64
			VERIFIED BY USAF 9/4/64 DATE Robert M. Cyrus

IL 4388-5102

INTERNAL LETTER
North American Aviation, Inc.

DATE 9-30-65

TO C. T. Lamb
Address D/554-944

FROM J. J. Nardi
Address GEMINI PROJECT OFFICE
HOUSTON, TEXAS

SUBJECT SE-7 OAMS SPECIFICATION DEVIATION.

During the cartridge removal operation per para. 7.2.3.4.2 of the DAT Specification 106156-401, approximately four pounds of fuel (alcohol and water) was lost due to the head pressure. This leaves 148 pounds of fuel in the fuel tank. 152 pounds of simulated propellant was loaded during the tanking operation. The DAT specification calls for 155 $\pm$ 5 (allows a minimum of 150). With this loss the weight is 2 pounds under the specification allowance.

It is felt that this will not affect the forthcoming Vibration Test.

for R. L. Free
V. NOONAN
MAC REPRESENTATIVE

Robinins for
J. J. NARDI
GEMINI PROJECT OFFICE
ROCKETDYNE-SPACE ENGINES

Retyped from original copy, dated 9-1-64

ROCKETDYNE
A DIVISION OF NORTH AMERICAN AVIATION INC

DESIGN APPROVAL TEST
ORBIT ATTITUDE AND MANEUVER SYSTEM
(SE7)

NAME OF TEST VIBRATION TEST TEST NO. 106156-4 SHEET 229 OF 413

PART NO. 2-DAY CONFIG. { MAC ____ NAA ____ } 14-DAY CONFIG. { MAC 52-52701 NAA 99-106161 }

		Inspection Stamp
7.2.7.4.6	The pressurant tank was charged to 125 psig (Reference paragraph 7.2.3.6)	9/11/64 ANR 921
7.2.7.4.7	The instrumentation system was calibrated at 200 cps, 1KC cps, and 2KC cps (Reference paragraph 7.2.3.8).	9/11/64 ANR 921
7.2.7.4.8	The ~~1G~~ sine wave survey was conducted in 5'7" minutes from 20 to 2000 cps with shaker number one (1) in operation (Reference paragraph 7.2.3.9).	9/11/64 ANR 921
7.2.7.4.8.1	The following major resonant points were noted (Reference paragraph 7.2.3.9).	9/13/64 ANR 921

Locations	Input(g's) Acceleration Measured(g's) FREQ.	PEAK	Axis Resonance Measured in(X,Y,Z or R)
OXID TANK BOSS	200 CPS	3.6 G's	"X" AXIS ANR 921
PRESS TANK FLANGE	50 CPS	2.2 G	"Y" AXIS ANR 921
PROP. FUEL TANK BOSS	278 CPS	3.4 G	"X" AXIS
PRESS TANK FLANGE	95 CPS	2.7 G	"Z" AXIS
ADJ. TO "C" PACK	55 CPS	2.2 G	NORM. TO SHELF
PROP FUEL TANK-BOSS	210 CPS	3.1 G	"Y" AXIS
PRESS. TANK FLANGE	50 CPS	2.7 G	"X" AXIS
PROP. FUEL TANK BOSS	90 CPS	3.75 G	"Z" AXIS
PRESS TANK STUD END	100 CPS	8.0 G	CENTER LINE OF TANK

PREPARED BY: DATE	PERFORMED BY: DATE	WITNESSED FOR NAA: DATE	CERTIFIED FOR McDONNELL: DATE
J. Nardi	J. Nardi 9-23-64	ANR 921 9/11/64	R. L. Fue 10-2-64 ANR 921
R-15075-1			VERIFIED BY USAF: 9/24/64 DATE

Test Form 1453

DESIGN APPROVAL TEST
ORBIT ATTITUDE AND MANEUVER SYSTEM
(SE7)

NAME OF TEST VIBRATION TEST TEST NO. 106156-401 SHEET ____ OF ____

PART NO. 2-DAY CONFIG. { MAC ____ / NAA ____ } 14-DAY CONFIG. { MAC 52-52701 / NAA 99-106161 }

(This sheet is in addition to page 229 Para. 7.2.7.4.8.1 . one "g" sine wave survey, recording major responses of the "R" axis OAMS test. Note: Pressure tank was loose during all "R" axis tests.)

Accelerometer Locations	Freq. cps	Acceleration g's Peak	Response Axis
SHAKER #1 - THRUSTER #2			
OXID TANK FLANGE	200	3.3	X - AXIS
OXID TANK FLANGE	1400	4.4	X - AXIS
TB PACKAGE	190	3.4	NORM. TO SHELF
MOTOR OPER. VALVE	190	3.1	NORM. TO SHELF
MOTOR OPER. VALVE	380	5.0	NORM. TO SHELF
FUEL TANK FLANGE	205	3.3	Y - AXIS
REGULATOR O.T.S	80	3.4	NORM. TO SHELF
REGULATOR O.T.S	190	3.7	NORM. TO SHELF
REGULATOR O.T.S	445	2.8	NORM. TO SHELF
[illegible] PACKAGE	260	2.9	NORM. TO SHELF
FUEL TANK FLANGE	275	2.3	X - AXIS
CENTER ATTACH FITNG	60	4.3	Y - AXIS
O.T.S ATTACH FITNG	90	3.1	X - AXIS

ROCKETDYNE
A DIVISION OF NORTH AMERICAN AVIATION INC

DESIGN APPROVAL TEST
ORBIT ATTITUDE AND MANEUVER SYSTEM
(SE7)

NAME OF TEST VIBRATION TEST TEST NO. 106156-401 SHEET 230 OF 413

PART NO. 2-DAY CONFIG. { MAC / NAA } 14-DAY CONFIG. { MAC 52-52701 / NAA 90-106161 }

		Inspection Stamp
7.2.7.4.9	The 1 G sine wave survey was conducted in 5' 6" minutes from 20 to 2000 cps with shaker number two (2) in operation. Reference paragraph 7.2.3.8).	9/11/64 ANR 921
7.2.7.4.9.1 *	The following major resonant points were noted. (Reference paragraph 7.2.3.9).	

Location	Input	Acceleration Measured	Axis Measured
* SEE IL 4388-5108, DATED 30 SEPT. 1964			
X-Y PLOTS OF DATA NOT PERFORMED			

7.2.7.4.10	The 1 G sine wave survey was conducted in 5' 3" minutes from 20 to 2000 cps with shaker number 3 in operation. (Reference paragraph 7.2.3.9).	9/11/64 ANR 921
7.2.7.4.10.1	The following major resonant points were noted. (Reference paragraph 7.2.3.9).	9/11/64 ANR 921

PREPARED BY: DATE	PERFORMED BY: DATE	WITNESSED FOR NAA: DATE	CERTIFIED FOR McDONNELL: DATE
J. Nardi	J. Nardi 9-23-64	E J Lamb 9/16/64	
R-15075-1			VERIFIED BY USAF:

Test Form 1453

ROCKETDYNE
A DIVISION OF NORTH AMERICAN AVIATION INC

DESIGN APPROVAL TEST
ORBIT ATTITUDE AND MANEUVER SYSTEM
(SE7)

NAME OF TEST VIBRATION TEST TEST NO. 106156-401 SHEET 231 OF 413

PART NO. 2-DAY CONFIG. { MAC / NAA } 14-DAY CONFIG. { MAC 52-52701 / NAA 99-106161 }

7.2.7.4.10.1 (cont'd)

Location	Input FREQUENCY CPS	Acceleration Measured G's PEAK	Axis Measured	Inspection Stamp
MOTOR OPERATED VALVE	375	4.1	NORM. TO SHELF	ANR 921
REGULATOR	95	2.8	NORM TO SHELF	
PRESS TANK STUD	90	12.6	C/L OF TANK	
OXID. TANK FLANGE	130	19.2	'Z' AXIS	
OXID TANK FLANGE	1130	20.5	'Y' AXIS	
OXID TANK FLANGE	210	2.35	'X' AXIS	
OXID TANK BOSS	210	3.0	'Y' AXIS	
OXID TANK BOSS	210	2.6	'X' AXIS	
OXID TANK BOSS	680	2.0	'Z' AXIS	
PRESS TANK FLANGE	55	2.1	'Y' AXIS	
FUEL TANK BOSS	360	3.0	'X' AXIS	
FUEL TANK BOSS	90	3.5	'X' AXIS	

ALSO SEE ADDIONAL PAGE

7.2.7.4.11 The 1 G sine wave survey was conducted in 5' 1" minutes from 20 to 2000 cps with all shakers running simultaneously, (reference paragraph 7.2.3.9). 9/11/64 ANR 921

7.2.7.4.11.1 The following major resonant points were noted. (Reference paragraph 7.2.3.9). 9/18/64 ANR 921

PREPARED BY: DATE	PERFORMED BY: DATE	WITNESSED FOR NAA: DATE	CERTIFIED FOR McDONNELL: DATE
J. Nardi	J. J. Nardi 9-23-64	J. J. Nardi 9/25/64 ANR 921	K. L. Lee 10-2-64
			VERIFIED BY USAF: 9/22/64 DATE Robert M. Clyne

914 t Form 1453 R-15075-1

DESIGN APPROVAL TEST
ORBIT ATTITUDE AND MANEUVER SYSTEM
(SE7)

NAME OF TEST VIBRATION TEST TEST NO 106156-401 SHEET ____ OF ____

PART NO. 2-DAY CONFIG. { MAC ____ / NAA ____ } 14-DAY CONFIG. { MAC 52-52701 / NAA 99-106161 }

(This sheet is in addition to page 231 Para. 7.2.7.4.10.1, one "g" sine wave survey, recording major responses of the "R" axis OAMS test. Note: Pressure tank was loose during all "R" axis tests.)

Accelerometer Locations	Freq. cps	Acceleration g's Peak	Response Axis
SHAKER #3 - THRUSTER #1			
PRESS. TANK FLANGE	90	2.2	Z-AXIS
ADJ TO C PACKAGE	55	2.2	NORM. TO SHELF
FUEL TANK BOSS	90	3.2	Y-AXIS
PRESS. TANK FLANGE	60	3.5	X-AXIS
FUEL TANK BOSS	90	3.6	Z-AXIS
PRESS TANK STUD	130	5.6	℄ OF TANK
PRESS TANK STUD	1130	16.9	℄ OF TANK
PRESS TANK SHELL	130	3.0	HORIZONTAL INBOARD
PRESS TANK SHELL	1130	9.8	HORIZONTAL INBOARD
CENTER ATTACH FITNG	55	4.4	Y-AXIS
CENTER ATTACH FITNG	910	2.7	Y-AXIS
F.T.S ATTACH FITNG	90	3.9	Y-AXIS

DESIGN APPROVAL TEST
ORBIT ATTITUDE AND MANEUVER SYSTEM
(SE7)

NAME OF TEST VIBRATION TEST TEST NO. 106156-401 SHEET 232 OF 413

PART NO. 2-DAY CONFIG {MAC ____ NAA ____} 14-DAY CONFIG {MAC 52-52701 NAA 00-106161}

7.2.7.4.11.1 Location	~~Input~~ FREQUENCY C.P.S.	Acceleration Measured Gs PEAK	Axis Measured	Inspection Stamp
PACKAGE "E"	200	3.0	NORMAL TO SHELF	
PACKAGE "D"	200	3.0	NORMAL TO SHELF	
PACKAGE "B"	200	6.0	NORMAL TO SHELF	
MOTOR OPERATED VALVE	200	8.2	NORMAL TO SHELF	ANR 921
FUEL TANK FLANGE	150	3.3	Y AXIS	ANR 921
FUEL TANK FLANGE	220	4.9	Y AXIS	
REGULATOR	100	5.8	NORMAL TO SHELF	
PACKAGE "A"	100	3.7	NORMAL TO SHELF	
PACKAGE "A"	200	3.8	NORMAL TO SHELF	
ADJ. TO "E" PACK	200	2.3	NORMAL TO SHELF	
OXID TANK BOSS	145	4.8	Y AXIS	
OXID TANK BOSS	200	4.0	Y AXIS	
OXID TANK BOSS	200	4.4	X AXIS	

SEE NEXT REMAINING PAGE

7.2.7.4.12 The test level equalization run at 7 G. RMS was run and analyzed (Reference paragraph 7.2.3.12). 9/11/64 ANR 921

7.2.7.4.13 Total equalization time accumulated was 26 seconds. (Reference paragraph 7.2.3.12). 9/11/64

7.2.7.4.14 The spectrum was within $^{+100\%}_{-50\%}$ of Figure 50 YES (Yes or No). 9/11/64

7.2.7.4.15 The system was subjected to 8 minutes of random vibration (Reference paragraph 7.2.3.13). 9/11/64

PREPARED BY: DATE	PERFORMED BY: DATE	WITNESSED FOR NAA: DATE	CERTIFIED FOR McDONNELL DATE
J. Nardi	J. Nardi 9-23-64	ANR 921	R. L. Tree 10-2-64
			VERIFIED BY USAF 9/22/64 DATE Robert M. Cyprus

DESIGN APPROVAL TEST
ORBIT ATTITUDE AND MANEUVER SYSTEM
(SE7)

NAME OF TEST VIBRATION TEST TEST NO 106156-401 SHEET ____ OF ____

PART NO. 2-DAY CONFIG. { MAC ____ / NAA ____ } 14-DAY CONFIG. { MAC 52-52701 / NAA 99-106161 }

(This sheet is in addition to page 232 Para. 7.2.7.4.11.1, one "g" sine wave survey, recording major responses of the "R" axis OAMS test. Note: Pressure tank was loose during all "R" axis tests.)

Accelerometer Locations	Freq. cps	Acceleration g's Peak	Response Axis
ALL SHAKERS			
OXID TANK BOSS	1335	3.1	X-AXIS
OXID TANK BOSS	1340	3.1	Z-AXIS
52-52009 BEAM MID-SPAN F.T.S	200	2.6	⊥ TO BEAM ℄ HORIZONTAL
FUEL TANK BOSS	200	4.0	X-AXIS
FUEL TANK BOSS	1130	3.7	X-AXIS
FUEL TANK BOSS	1250	3.9	X-AXIS
PRESS TANK FLANGE	140	3.0	Z-AXIS
ADJ. TO C PACKAGE	200	3.7	NORM. TO SHELF
FUEL TANK BOSS	150	3.4	Y-AXIS
FUEL TANK BOSS	200	4.7	Y-AXIS
FUEL TANK BOSS	150	3.0	Z-AXIS
PRESS TANK FLANGE	60	3.3	X-AXIS
ADJ TO A PACKAGE	230	3.0	NORM. TO SHELF
PRESS TANK STUD	150	20.0	℄ OF TANK
OXID TANK FLANGE	150	4.7	Y-AXIS
OXID TANK FLANGE	200	4.1	X-AXIS

DESIGN APPROVAL TEST
ORBIT ATTITUDE AND MANEUVER SYSTEM
(SE7)

NAME OF TEST VIBRATION TEST TEST NO 106156-101 SHEET ____ OF ____

PART NO. 2-DAY CONFIG. { MAC ____ / NAA ____ } 14-DAY CONFIG. { MAC 52-52701 / NAA 99-106161 }

(This sheet is in addition to page 232 Para. 7.2.7.4.11.1. one "g" sine wave survey, recording major responses of the "R" axis OAMS test. Note: Pressure tank was loose during all "R" axis tests.)

Accelerometer Locations	Freq. cps	Acceleration g's Peak	Response Axis
PRESS. TANK SHELL	140	2.2	Z-AXIS

DESIGN APPROVAL TEST
ORBIT ATTITUDE AND MANEUVER SYSTEM
(SE7)

NAME OF TEST VIBRATION TEST TEST NO. 106156-401 SHEET ____ OF ____

PART NO. 2-DAY CONFIG. { MAC ____ / NAA ____ } 14-DAY CONFIG. { MAC 52-52701 / NAA 99-106161 }

R-Axis Vibration Gain Value Data

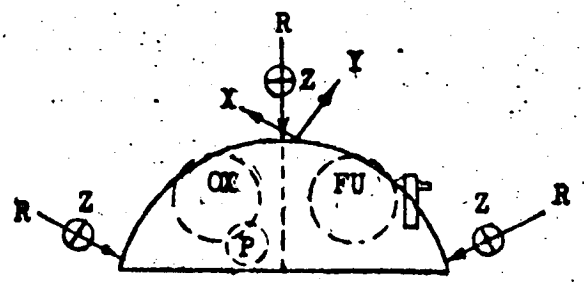

Accelerometer Location	Direction Measured	Response g^2/cps	Freq. cps	Inputs #1	#2	#3
STRUCTURE						
BEAM MID SPAN O.T.S	⊥ TO ℄	3.5	520	.06	.17	.21
BEAM MIDSPAN F.T.S	⊥ TO ℄	.08	160	.07	.06	.05
TANKS						
OXID TANK FLANGE	Y	.39	160	.07	.06	.05
OXID TANK FLANGE	X	.25	180	.08	.12	.07
OXID TANK BOSS	Y	.63	180	.08	.12	.07
OXID TANK BOSS	Z	.33	720	.02	.09	.08
OXID TANK BOSS	X	.27	200	.08	.13	.08
FUEL TANK BOSS	Z	.82	660	.03	.10	.10
FUEL TANK BOSS	Y	.28	220	.08	.13	.08
FUEL TANK BOSS	X	.15	200	.08	.13	.08
FUEL TANK BOSS	X	.20	1000	.01	.03	.03
FUEL TANK FLANGE	Y	.38	200	.08	.13	.08

DESIGN APPROVAL TEST
ORBIT ATTITUDE AND MANEUVER SYSTEM
(SE7)

NAME OF TEST VIBRATION TEST TEST NO. 106156-401 SHEET ____ OF ____

PART NO. 2-DAY CONFIG. { MAC ____ NAA ____ } 14-DAY CONFIG. { MAC 52-52701 NAA 99-106161 }

R-Axis Vibration Gain Value Data

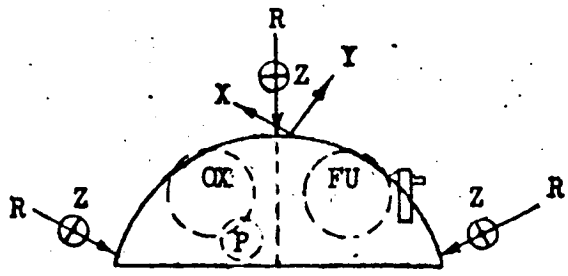

Accelerometer Location	Direction Measured	Response g^2/cps	Freq. cps	Inputs #1	#2	#3
COMPONENTS						
E PACKAGE	⊥ TO SHELF	.23	190	.08	.13	.08
D PACKAGE	↓	.18	200	.08	.13	.08
B PACKAGE		.64	200	.08	.13	.08
P.S.O.V.		.60	200	.08	.13	.08
REGULATOR		.40	200	.08	.13	.08
A PACKAGE		.14	200	.08	.13	.08
ADJ TO A PKG		.23	200	.08	.13	.08
ADJ TO E PKG		.16	200	.08	.13	.08
ADJ TO C PKG	⊥ TO SHELF	.26	200	.08	.13	.08

DESIGN APPROVAL TEST
ORBIT ATTITUDE AND MANEUVER SYSTEM
(SE7)

NAME OF TEST VIBRATION TEST TEST NO. 106156-401 SHEET 233 OF 413

PART NO. 2-DAY CONFIG {MAC / NAA} 14-DAY CONFIG {MAC 52-52701 / NAA 00-106161}

		Inspection Stamp
7.2.7.4.16	The PSD versus frequency plot for the control accelerometer was within the +100% -50% tolerance-band. (Reference paragraph 7.2.3.13)	9/18/64 ANR 92A
7.2.7.5	Vibration Data from the Z Axis	
7.2.7.5.1	All the associated instrumentation is installed per paragraph 7.2.2.2.1, Figures 53 and 54 unless otherwise noted. (Reference paragraph 7.2.3.2).	9/17/64 ANR 921
7.2.7.5.2	The tank module was mounted to the three (3) vibration shakers per Figure 52, Z Axis; (Reference paragraph 7.2.3.3.2.)	9/12/64

PREPARED BY: DATE	PERFORMED BY: DATE	WITNESSED FOR NAA: DATE	CERTIFIED FOR McDONNELL DATE
J. Nardi	J. J. Nardi 9-23-64	E. J. [illegible] 9/23/64 ANR 921	R. L. Fue 10-2-64
			VERIFIED BY USAF 9/23/64 DATE

ROCKETDYNE
A DIVISION OF NORTH AMERICAN AVIATION INC

DESIGN APPROVAL TEST
ORBIT ATTITUDE AND MANEUVER SYSTEM
(SE7)

NAME OF TEST VIBRATION TEST TEST NO. 106156-401 SHEET 234 OF 413

PART NO. 2-DAY CONFIG. { MAC / NAA } 14-DAY CONFIG. { MAC 52-52701 / NAA 99-106161 }

		Inspection Stamp
7.2.7.5.3	The pressurant tank was charged to 125 psig (Reference paragraph 7.2.3.6).	9/17/64
7.2.7.5.4	The instrumentation system was calibrated at 200 cps, 1000 cps, and 2000 cps (Reference paragraph 7.2.3.8).	9/17/64
7.2.7.5.5	The 1 G sine wave survey was conducted in 4'47" minutes from 20 to 2000 cps with shaker ~~number one~~ ALL SHAKERS (1) in operation * (Reference paragraph 7.2.3.9).	9/17/64
7.2.7.5.6.	The following major resonant points were noted (Reference paragraph 7.2.3.9).	

Locations	~~Input (g's)~~ Frequency cps	Acceleration Measured (g's) Peak	Axis Resonance Measured in (X, Y, Z or R)
E.T.S. ATTACH FITTING	660	2.8	'Z' AXIS
O.T.S. ATTACH FITTING	570	4.5	'Y' AXIS
"	420	3.9	'X' AXIS
"	660	4.2	'Z' AXIS
"	1000	4.5	"
'B' PACKAGE	360	3.0	NORM. TO SHELF
52-52009 BEAM MID SPAN, O.T.S.	120	4.5	⊥ TO ℄
"	740	3.9	"
MOTOR OPERATED VALVE	360	4.2	NORM. TO SHELF
(ALSO SEE ADDITIONAL PAGE)			

* NO DATA SHEET PROVIDED FOR TOP OF ALL SHAKERS DCD-22 (AVP 92)

PREPARED BY: DATE	PERFORMED BY: DATE	WITNESSED FOR NAA: DATE	CERTIFED FOR McDONNELL: DATE
J. Nardi	J. J. Nardi 9-23-64	E J Lamb 9/23/64	VERIFIED BY USAF: DATE

DESIGN APPROVAL TEST
ORBIT ATTITUDE AND MANEUVER SYSTEM
(SE7)

NAME OF TEST VIBRATION TEST TEST NO 106156-401 SHEET ____ OF ____

PART NO. 2-DAY CONFIG. { MAC ____ / NAA ____ } 14-DAY CONFIG. { MAC 52-52701 / NAA 99-106161 }

ALL SHAKERS

(This sheet is in addition to page 234 Para. 7.2.7.5.6.. . one "g" sine wave survey, recording major responses of the "R" axis OAMS test. [redacted]

Accelerometer Locations	Freq. cps	Acceleration g's Peak	Response Axis
REGULATOR	100	5.6	NORM. TO SHELF
A PACKAGE	90	3.9	↕
ADJ TO A PKG	90	3.0	↕
ADJ TO A PKG	1240	2.8	NORM TO SHELF
PRESS TANK SHELL	40	10.5	HORIZONTAL INBOARD
PRESS TANK STUD END	1680	3.2	℄ OF TANK
PRESS TANK STUD END	1940	3.0	℄ OF TANK
OXID TANK FLANGE	160	4.9	Y-AXIS
OXID TANK BOSS END	170	3.5	Y-AXIS
OXID TANK BOSS END	940	3.9	Z-AXIS
OXID TANK BOSS END	1030	3.5	Z-AXIS
BEAM MID SPAN F.T.S	180	4.4	⊥ TO ℄
BEAM MID SPAN F.T.S	440	3.9	⊥ TO ℄
BEAM MID SPAN F.T.S	600	4.0	⊥ TO ℄
FUEL TANK BOSS END	350	3.1	X-AXIS
FUEL TANK BOSS END	1010	3.1	X-AXIS
FUEL TANK BOSS END	1130	3.5	X-AXIS

DESIGN APPROVAL TEST
ORBIT ATTITUDE AND MANEUVER SYSTEM
(SE7)

NAME OF TEST VIBRATION TEST TEST NO. 106156-401 SHEET ____ OF ____

PART NO. 2-DAY CONFIG. { MAC ____ / NAA ____ } 14-DAY CONFIG. { MAC 52-52701 / NAA 99-106161 }

ALL SHAKERS (This sheet is in addition to page 234 Para. 7.2.7.5.6 . . one "g" sine wave survey, recording major responses of the "R" axis OAMS test. [redacted])

Accelerometer Locations	Freq. cps	Acceleration g's Peak	Response Axis
PRESS TANK FLANGE	100	3.3	Z-AXIS
PRESS TANK FLANGE	170	3.6	Z-AXIS
FUEL TANK BOSS END	1000	3.5	Y-AXIS
PRESS TANK FLANGE	120	3.5	X-AXIS
FUEL TANK BOSS END	590	3.5	Z-AXIS
FUEL TANK BOSS END	1010	3.9	Z-AXIS
FUEL TANK BOSS END	1520	3.0	Z-AXIS

ROCKETDYNE
A DIVISION OF NORTH AMERICAN AVIATION INC

DESIGN APPROVAL TEST
ORBIT ATTITUDE AND MANEUVER SYSTEM
(SE7)

NAME OF TEST VIBRATION TEST TEST NO. 106156-401 SHEET 235 OF 413

PART NO. 2-DAY CONFIG. { MAC / NAA } 14-DAY CONFIG. { MAC 52-52701 / NAA 00-106161 }

		Inspection Stamp
7.2.7.5.7	The 1 G sine wave survey was conducted in *DNA minutes from 20 to 2000 cps with shaker number two (2) in operation. Reference paragraph 7.2.3.9)	12-12-64
7.2.7.5.7.1	The following major resonant points were noted. (Reference paragraph 7.2.3.9).	12-12-64

Location	Input	Acceleration Measured	Axis Measured
DNA	DNA	DNA	DNA
* SEE IL 4388-5108			

7.2.7.5.8	* The 1 G sine wave survey was conducted in DNA minutes from 20 to 2000 cps with shaker number 3 in operation. (Reference paragraph 7.2.3.9).	12-12-64
7.2.7.5.9	The following major resonant points were noted. (Reference paragraph 7.2.3.9).	12-12-64

* REFER I.L. 4388-5108

PREPARED BY: DATE	PERFORMED BY: DATE	WITNESSED FOR NAA: DATE	CERTIFIED FOR McDONNELL: DATE
J. Nardi	J. Nardi 9-23-64	12-12-64	10-2-64
R-15075-1			VERIFIED BY USAF: DATE 14 Oct 64

925

Test Form 1453

DESIGN APPROVAL TEST
ORBIT ATTITUDE AND MANEUVER SYSTEM
(SE7)

NAME OF TEST VIBRATION TEST TEST NO. 106156-401 SHEET 236 OF 413

PART NO. 2-DAY CONFIG {MAC / NAA} 14-DAY CONFIG {MAC 52-52701 / NAA 89-106161}

7.2.7.5.9 (cont'd)

Location	Input	Acceleration Measured	Axis Measured	Inspection Stamp
DNA	DNA	DNA	DNA	12-12-64
SEE IL 4388-5108				

7.2.7.5.10 The system was pressurized to test level of 3000 $^{+100}_{-0}$ psig. (Reference paragraph 7.2.3.6.2) 9/17/64

7.2.7.5.11 The test level equalization run at 7.0 G. RMS was run and analyzed. (Reference paragraph 7.2.3.12) 9/17/64

7.2.7.5.12 Total equalization time accumulated was 30 seconds. (Reference paragraph 7.2.3.12) 9/17/64

7.2.7.5.13 The spectrum was within $^{+100\%}_{-50\%}$ of Figure 50 YES (yes or no). 9/17/64

7.2.7.5.14 The system was subjected to 8.0" minutes of random vibration. (Reference paragraph 7.2.3.13). 9/17/64

PREPARED BY: DATE	PERFORMED BY: DATE	WITNESSED FOR NAA: DATE	CERTIFIED FOR McDONNELL DATE
J. Nardi	J. Nardi 9-23-64		10-2-64
			VERIFIED BY USAF DATE 11/22/64

DESIGN APPROVAL TEST
ORBIT ATTITUDE AND MANEUVER SYSTEM
(SE7)

NAME OF TEST VIBRATION TEST TEST NO. 106156-401 SHEET ____ OF ____

PART NO. 2-DAY CONFIG. { MAC ____ NAA ____ } 14-DAY CONFIG. { MAC 52-52701 NAA 99-106161 }

Z-Axis Vibration Gain Value Data

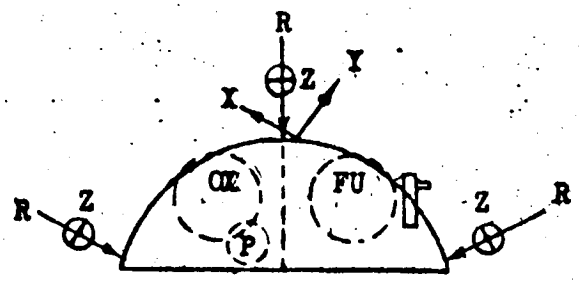

Accelerometer Location	Direction Measured	Response g^2/cps	Freq. cps	Inputs #1	#2	#3
STRUCTURE						
BEAM MIDSPAN F.T.S	⊥ To ℄	.67	600	.04	.09	1.0
BEAM MIDSPAN O.T.S	⊥ To ℄	.50	600	.04	.09	1.0
TANKS						
OXID TANK FLANGE	Z	.12	580	.055	.14	.15
OXID TANK BOSS END	Y	.23	950	.02	.06	.045
OXID TANK BOSS END	X	.19	600	.04	.09	.10
OXID TANK BOSS END	X	.17	950	.02	.06	.045
OXID TANK BOSS END	X	.12	1300	.01	.02	.03
OXID TANK BOSS END	Z	2.0	590	.04	.09	.10
FUEL TANK BOSS END	Y	.38	600	.04	.09	.10
FUEL TANK BOSS END	Z	3.5	560	.055	.14	.15
FUEL TANK FLANGE	Z	.10	640	.04	.09	.09
PRESS TANK SHELL	Z	.06	100	.05	.03	.03
PRESS TANK FLANGE	Y	.09	60	.03	.03	.03

DESIGN APPROVAL TEST
ORBIT ATTITUDE AND MANEUVER SYSTEM
(SE7)

NAME OF TEST VIBRATION TEST TEST NO. 106156-401 SHEET ____ OF ____

PART NO. 2-DAY CONFIG. { MAC ____ NAA ____ } 14-DAY CONFIG. { MAC 52-52701 NAA 99-106161 }

Z-Axis Vibration Gain Value Data

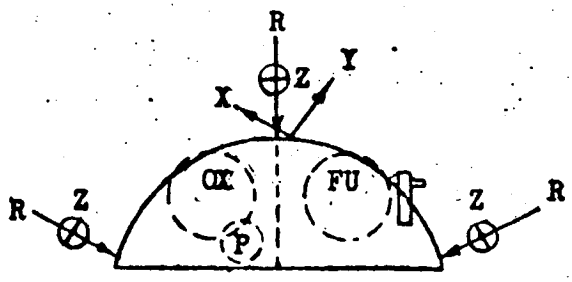

Accelerometer Location	Direction Measured	Response g^2/cps	Freq. cps	Inputs #1	Inputs #2	Inputs #3
PRESS TANK FLANGE	Z	.16	300	.07	.13	.15
PRESS TANK FLANGE	X	.15	140	.05	.05	.04
COMPONENTS						
B PACKAGE	⊥ TO SHELF	.28	360	.065	.09	.12
P.S.O.V	⊥ TO SHELF	.30	360	.065	.09	.12
A PACKAGE	⊥ TO SHELF	.14	380	.065	.09	.12

DESIGN APPROVAL TEST
ORBIT ATTITUDE AND MANEUVER SYSTEM
(SE7)

NAME OF TEST VIBRATION TEST TEST NO. 106156-401 SHEET 237 OF 413

PART NO. 2-DAY CONFIG {MAC / NAA} 14-DAY CONFIG {MAC 52-52701 / NAA 99-106161}

		Inspection Stamp
7.2.7.5.15	The PSD versus frequency plot for the control accelerometer was within the +100%, -50% tolerance-bank. (Reference paragraph 7.2.3.13)	9/29/64 ANR 921
7.2.7.6	System Leak Check Following Axis Vibration	
7.2.7.6.1	The additional lines required for leak checking the module as shown in Figure 55 were added.	9/29/64 ANR 921
7.2.7.6.2	The Pressurant Tank was pressurized to 1500 $^{+50}_{-0}$ psig.	9/29/64 ANR 921
7.2.7.6.3	Leakage (~~was~~, was not) detected at the brazed fittings and connections as noted in Paragraph 7.2.2.2.2.7.	9/29/64 WAS NOT
	Specific locations of extensive leakage (if none, write none).	
	NONE	
		9/29/64 ANR 921

PREPARED BY:	DATE	PERFORMED BY:	DATE	WITNESSED FOR NAA:	DATE	CERTIFIED FOR McDONNELL	DATE
J. Nardi		J. J. Nardi	9-23-64	E. J. Lamb ANR 921	9/29/64	R. E. Jones	10-2-64
						VERIFIED BY USAF Robert M. Ayers	DATE 9/29/64

ROCKETDYNE
A DIVISION OF NORTH AMERICAN AVIATION INC

DESIGN APPROVAL TEST
ORBIT ATTITUDE AND MANEUVER SYSTEM
(SE7)

NAME OF TEST VIBRATION TEST TEST NO. 106156-401 SHEET 238 OF 413

PART NO. 2-DAY CONFIG. { MAC ____ NAA ____ } 14-DAY CONFIG. { MAC 52-52701 NAA 99-106161 }

		Inspection Stamp
7.2.7.6.4	Leakage (~~was~~, was not) detected at the locations defined in Paragraph 7.2.2.2.2.14. WAS NOT	9/20/64
7.2.7.6.5	Leakage (~~was~~, ~~was not~~ WAS NOT) detected at the locations defined in Paragraph 7.2.2.2.2.19	9/20/64
	Specific locations of extensive leakage (if none, write none). NONE	9/20/64

PREPARED BY: DATE	PERFORMED BY: DATE	WITNESSED FOR NAA: DATE	CERTIFED FOR McDONNELL: DATE
J. Nardi	J. Nardi 9-23-64	9/23/64	10-2-64
			VERIFIED BY USAF: DATE Robert M. Clyde

930st Form 1453

R-15075-1

ROCKETDYNE
A DIVISION OF NORTH AMERICAN AVIATION INC

DESIGN APPROVAL TEST
ORBIT ATTITUDE AND MANEUVER SYSTEM
(SE7)

NAME OF TEST VIBRATION TEST TEST NO. 106156-401 SHEET 239 OF 413

PART NO. 2-DAY CONFIG. { MAC ____ NAA ____ } 14-DAY CONFIG. { MAC 52-52701 NAA 99-106161 }

		Inspection Stamp
7.2.7.6.6	Leakage (~~was~~ was not) detected at the locations defined in Paragraph 7.2.2.2.2.26. NONE	9/29/64 ANR 921
7.2.7.6.7	All resistoflex caps were replaced and torqued in accordance with Table 1.	9/29/64 ANR 921
7.2.7.7	The System was drained and cleaned per Paragraph 6.2.2.2 (Reference Paragraph 7.2.5)	9/29/64
7.2.7.8	The following accelerometers and amplifiers were utilized during the test. (Reference Paragraph 7.2.5.2).	

Accelerometers S/N	Model No.	Calib. Date	Amplifier S/N	Model No.	Calib. Date	Location
JB28	2226	8/25/64	C-48 648	2607	8/25/64	"E" PACK NORMAL TO SHELF
JB38	2226	8/25/64	C-49 649	2607	8/25/64	"D" PACK NORMAL TO SHELF
JB11	2226	8/25/64	C-50 650	2607	8/25/64	"B" PACK NORMAL TO SHELF
JB50	2226	8/25/64	C-51 651	2607	8/25/64	FROM OPOR VALVE NORMAL TO SHELF
JB34	2226	8/25/64	C-52 652	2607	8/25/64	FUEL TANK "Y" FLANGE
JB39	2226	8/25/64	C-53 [illegible]	2607	8/25/64	RES. OTS OF FUEL [illegible]

PREPARED BY:	DATE	PERFORMED BY:	DATE	WITNESSED FOR NAA:	DATE	CERTIFIED FOR McDONNELL	DATE
J. Nardi		J. Nardi	9-23-64	C. T. Hook	9/25/64 ANR 921	R. L. Price	10-2-64
						VERIFIED BY USAF: Robert M. [illegible]	

R-15075-1

Test Form 1453

ROCKETDYNE
A DIVISION OF NORTH AMERICAN AVIATION INC

DESIGN APPROVAL TEST
ORBIT ATTITUDE AND MANEUVER SYSTEM
(SE7)

NAME OF TEST VIBRATION TEST TEST NO. 106156-401 SHEET 240 OF 413

PART NO. 2-DAY CONFIG. { MAC ____ NAA ____ } 14-DAY CONFIG. { MAC 52-52701 NAA 52-106161 }

7.2.7.9 (cont'd)

Accelerometers S/N	Model No.	Calib. Date	Amplifier S/N	Model No.	Calib. Date	Location
JB13	2226	8/25/64	C-55 655	2607	8/25/64	"A" PACK NORMAL TO SHELF
JA14	2227	8/25/64	C-56 656	2607	8/25/64	ADJ. TO "C" PACK PERP. TO SHELF
JB09	2226	8/25/64	C-57 657	2607	8/25/64	FUEL TANK "X" AXIS FLANGE
JA24	2607	8/25/64	C-59 659	2607	8/25/64	ADJ. TO "C" PACK "Z" AXIS
JB07	2607	8/25/64	C-60 660	2607	8/25/64	FUEL TANK "Z" AXIS FLANGE
JA18	2227	8/13/64	C-35	2616	8/13/64	BOSS END OXID TANK "Y" AXIS
JA21	2227	8/13/64	C-36	2616	8/13/64	BOSS END OXID TANK "X" AXIS
JA23	2227	8/13/64	C-37	2616	8/13/64	BOSS END OXID TANK "Z" AXIS
HA27	2227	8/13/64	C-38	2616	8/13/64	52-52069 BEAM MID-SPAN F.T.S.
JA19	2227	8/13/64	C-39	2616	8/13/64	PRESS. TANK FLANGE "Y" AXIS
JA11	2227	8/13/64	C-40	2616	8/13/64	BOSS END FUEL TANK "X" AXIS
JA25	2227	8/13/64	C-41	2616	8/13/64	PRESS TANK FLANGE "Z" AXIS
HA28	2227	8/13/64	C-42	2616	8/13/64	ADJ. TO "C" PACK NORMAL TO SHELF
JA15	2227	8/13/64	C-43	2616	8/13/64	BOSS END FUEL TANK "Y" AXIS
JA20	2227	8/13/64	C-44	2616	8/13/64	ADJ. TO "C" PACK "Z" AXIS

PREPARED BY: DATE	PERFORMED BY: DATE	WITNESSED FOR NAA: DATE	CERTIFIED FOR McDONNELL: DATE
J. Nardi	J. J. Nardi 9-23-64	[illegible] 9/23/64	[illegible] 10-2-64
			VERIFIED BY USAF: DATE [illegible] 9/25/64

9321 Form 1453

R-15075-1

ROCKETDYNE
A DIVISION OF NORTH AMERICAN AVIATION INC

DESIGN APPROVAL TEST
ORBIT ATTITUDE AND MANEUVER SYSTEM
(SE7)

NAME OF TEST VIBRATION TEST TEST NO. 106156-401 SHEET 241 OF 243

PART NO. 2-DAY CONFIG. { MAC / NAA } 14-DAY CONFIG. { MAC 52-52701 / NAA 90-106161 }

7.2.7.9 (cont'd)

Accelerometers S/N	Model No.	Calib. Date	Amplifier S/N	Model No.	Calib. Date	Location
JA16	2227	8/13/64	C-45	2616	8/13/64	PRESS. TANK FLANGE "Y" AXIS
JA22	2227	8/13/64	C-46	2616	8/13/64	BOSS END FUEL TANK "Z" AXIS
JB26	2226	8/26/64	C-26	2625	8/26/64	PRESS. TANK HORIZ SHELL INB
JB44	2226	8/26/64	C-27	2625	8/26/64	PRESS TANK STUB END "Z" DIRECTION
JB-24	2226	8/26/64	C-28	2625	8/26/64	OXID. TANK OXID "Y" AXIS
JB-21	2226	8/26/64	C-29	2625	8/26/64	PRESS TANK HOR. SHELL CURB'D
JB45	2226	8/26/64	C-30	2625	8/26/64	FUEL TANK PERIPHERAL
JB23	2226	8/26/64	C-31	2625	8/26/64	OXID TANK PERIPHERAL SHELL SEAM
JB29	2226	8/26/64	C-32	2625	8/26/64	OXID. TANK "X" AXIS FLANGE
JB22	2226	8/26/64	C-33	2625	8/26/64	OXID TANK "Z" AXIS FLANGE
JB25	2226	8/26/64	C-34	2625	8/26/64	PRESS. TANK "Z" AXIS SHELL
GA26	2227	8/28/64	C-16	2625	8/28/64	SE-9 2009 MID-STM OTS
GA98	2221	8/28/64	C-20	2625	8/28/64	ADJ. TO "B" PACK MOUNTED TO SHELF
GA93	2221	8/28/64	C-24	2625	8/28/64	ADJ TO "E" PACK MOUNTED TO SHELF
GA97	2221	8/28/64	C-25	2625	8/28/64	ADJ. TO "A" PACK MOUNTED TO SHELF

PREPARED BY: DATE	PERFORMED BY: DATE	WITNESSED FOR NAA: DATE	CERTIFIED FOR McDONNELL: DATE
J. Nardi	J. J. Nardi 9-23-64	[illegible] 9/23/64 (NAA 921)	R. L. Fuller 10-2-64
R-15075-1			VERIFIED BY LOAR: [illegible]

Test Form 1453

ROCKETDYNE
A DIVISION OF NORTH AMERICAN AVIATION INC

DESIGN APPROVAL TEST
ORBIT ATTITUDE AND MANEUVER SYSTEM
(SE7)

NAME OF TEST VIBRATION TEST TEST NO. 106156-401 SHEET 242 OF 413

PART NO. 2-DAY CONFIG. { MAC / NAA } 14-DAY CONFIG. { MAC 52-52701 / NAA 99-106161 }

7.2.7.9 (cont'd)

Accelerometers S/N	Model No.	Calib. Date	Amplifier S/N	Model No.	Calib. Date	Location
GA37B	2228B	7/21/64	C-1	8003	7/21/64	CENTER ATTACH FITTING "Y" AXIS
"	"	"	C-2	"	"	"X" AXIS
"	"	"	C-3	"	"	"Z" AXIS
GA31B	2228B	7/21/64	C-4	8003	7/21/64	F.T.S. ATTACH FITTING "X" AXIS
"	"	"	C-5	"	"	"Y" AXIS
"	"	"	C-6	"	"	"Z" AXIS
GA06	2228B	7/21/64	C-7	8003	7/21/64	O.T.S. ATTACH FITTING "Y"
"	"	"	C-8	"	"	" "X"
"	"	"	C-9	"	"	" "Z"

PREPARED BY: DATE	PERFORMED BY: DATE	WITNESSED FOR NAA: DATE	CERTIFIED FOR McDONNELL: DATE
J. Nardi	J. Nardi 9-23-64	C.T. Lamb 9/23/64 (NAA 921)	R.A. Dru 10-2-64
			VERIFIED BY USAF: DATE Robert M. [illegible] 9/23/64

934 st Form 1493

R-15075-1

ROCKETDYNE
A DIVISION OF NORTH AMERICAN AVIATION INC

DESIGN APPROVAL TEST
ORBIT ATTITUDE AND MANEUVER SYSTEM
(SE7)

NAME OF TEST VIBRATION TEST TEST NO. 106156-401 SHEET 243 OF 413

PART NO. 2-DAY CONFIG. { MAC ____ NAA ____ } 14-DAY CONFIG. { MAC 52-52701 NAA 99-106161 }

7.2.7.9 (cont'd)

Accelerometers S/N	Model No.	Calib. Date	Amplifier S/N	Model No.	Calib. Date	Location

PREPARED BY: DATE	PERFORMED BY: DATE	WITNESSED FOR NAA: DATE	CERTIFED FOR McDONNELL: DATE
J. Nardi	J. Nardi 7-23-69		10-2-68
R-15075-1			VERIFIED BY USAF: DATE

935

Test Form 1453

DESIGN APPROVAL TEST
ORBIT ATTITUDE AND MANEUVER SYSTEM
(SE7)

NAME OF TEST VIBRATION TEST TEST NO. 106156-401 SHEET 244 OF 413

PART NO. 2-DAY CONFIG {MAC / NAA} 14-DAY CONFIG {MAC 52-52701 / NAA 9[illegible]-106161}

7.2.7.9 (cont'd)

Accelerometers			Amplifier			
S/N	Model No.	Calib. Date	S/N	Model No.	Calib. Date	Location

7.2.7.10 The Tank Module was inspected and the following items noted:

NO DAMAGE NOTED

SEE D.C.P.'s FOR DEVIATIONS (ANR 921)

Inspection Stamp

PREPARED BY: DATE	PERFORMED BY: DATE	WITNESSED FOR NAA. DATE	CERTIFIED FOR McDONNELL DATE
J. Nardi 936	J. Nardi 4-23-64	(ANR 921)	10-2-64
			VERIFIED BY USAF 4/22/64

R-15075-1

ROCKETDYNE

INSPECTION DISCREPANCY AND CORRECTION RECORD

MAKE ENTRY CLEAR AND CONCISE, USE INK

Serial No. 0187419
Dwg. No. 99-106161
Model SE-7

DCP No.	Ent'd By & Date	DESCRIPTION OF DISCREPANCY AND ACTION TAKEN	CLEARED BY Mech. & Date	Leadman & Date	Insp. & Date
11	ANR 360 8/16/64	PART NO. EXCESSIVE LEAKAGE ~~AT~~ OXID D/S CK. VALVE PKG. "B" DURING REVERSE SEAT LEAKAGE TEST, LEAKAGE WAS 10 SCC. IN 15 MINUTES S/B 2.0 SCC. MAX. REF. PARA. 7.1.5.5.2.1.6.1 OF 106156-401 PROCEDURE			
		ACTION TAKEN: ACCEPTABLE PER T.L. (R.L. MANTLER - MACDONNELL) 19 AUG 64 IL 4388-5168 DTD 4 NOV 64 ~~IL 4388-5101 DTD 30 Nov 64~~ ANR 228	8/19/64	8/19/64	ANR 921 8/19/64
12	ANR 360 8/16/64	PART NO. EXCESSIVE LEAKAGE AT OXID D/S CK. VALVE PKG. "B" DURING REVERSE SEAT LEAKAGE TEST, LEAKAGE WAS 7.2 SCC. S/B 2.0 SCC. MAX. IN 15 MIN. REF. PARA. 7.1.5.5.2 OF 106156-401 PROCEDURE			
		ACTION TAKEN: ACCEPTABLE PER T.L. (R.L. MANTLER - MACDONNELL) 19 AUG 64 IL 4388-5168 DTD 4 NOV 64	8/19/64	8/19/64	ANR 921 8/19/64
13 ✓	8/28/64 ANR 921	PART NO. DAT. LEAK TEST REFER 7.2.2.2.3 WAS NOT COMPLIED WITH IN THAT 2000 PSIG WAS USED IN PLACE OF 3600 PSIG AS SUPPLY PRESS.			
		ACTION TAKEN: SPECIFICATION CHANGED TO REFLECT LOWER PRESSURE (PER T.L. DATED 8/31/64 - JIM NARDI) IL 4388-5101 DTD 8-31-64	8/31/64	8/31/64	ANR 921 8/31/64
14 ✓	8/28/64 ANR 921	PART NO. PROCEEDURE OUT OF SEQUENCE, IN THAT ACCELEROMETERS WERE NOT INSTALLED PRIOR TO LEAK TEST. PARA. 7.2.2.2.2.			
		ACTION TAKEN: NOTE ADDED TO DAT SPEC. STATING THE SEQUENCE OF INTAK ITEMS WAS NOT CRITICAL IL 4388-5101 PER T.L. DATED 8/31/64 - J. NARDI	8/31/64	8/31/64	ANR 921 8/31/64
15 ✓	8/28/64 ANR 921	PART NO. REFER PARA 7.2.2.2.2.4 & -12 & -17 & -22 PROCEEDURE VAGUE IN THAT NO INDICATION IS GIVEN AS TO NUMBER OF TURNS WHICH WOULD INDICATE FLOW REQUIRED FOR TEST			
		ACTION TAKEN: INFORMATION ONLY	ANR 921	8/28/64 ANR 921	937

R-15075-1

Form R 25-U Rev. 12-57 * WRITTEN IN ERROR. ANR 228

ROCKETDYNE

INSPECTION DISCREPANCY AND CORRECTION RECORD

MAKE ENTRY CLEAR AND CONCISE, USE INK

Serial No. 0187414

Dwg. No. 99-106161

Model SE-7

DCP No.	Ent'd By & Date	DESCRIPTION OF DISCREPANCY AND ACTION TAKEN POST VIBRTION RECEIVING INSPECTION	CLEARED BY Mech. & Date	Lead-man & Date	Insp. & Date
#35	ANR 94 10/16/64	PART NO. PACKAGE "A" HAS NO NAMEPLATE OR RECORD OF WHERE NAMEPLATE IS LOCATED.			
ACTION TAKEN		Nameplate shall be installed Nameplate was installed 12/17/64 TDK Troy Kauffman		ANR 224 12-17-64	ANR 224
#36	ANR 94 10/16/64	PART NO. NO CLOSURE ON PACKAGE "A" PRESSURE TRANSDUCER.			
ACTION TAKEN		Proper closure is available and will be installed following functional testing. Troy Kauffman	X	ANR 94 10/27/64	ANR 94
#37	ANR 94 10/16/64	PART NO. HI PRESSURE PORTS 1 & 2 DO NOT HAVE PROPER CAPS, REF. PACKAGE "A"			
ACTION TAKEN		Proper caps are available and will be installed following functional testing. Troy Kauffman	X	ANR 94 10/27/64	ANR 94
#38	ANR 94 10/16/64	PART NO. NO CLOSURE ON PACKAGE "B" PRESSURE TRANSDUCER.			
ACTION TAKEN		Proper closure is available and will be installed. Troy Kauffman	X	ANR 94 10/27/64	ANR 94
#39	ANR 94 10/16/64	PART NO. PACKAGE "B" FUEL VENT PORT IS OPEN TO ATM.			
ACTION TAKEN		This is necessary for safety. However the ports have been covered with plastic tape. Troy Kauffman	X	ANR 94 10/	ANR 94

938

R-15075-1

Form R 25-U Rev. 12-57

ROCKETDYNE

INSPECTION DISCREPANCY AND CORRECTION RECORD

MAKE ENTRY CLEAR AND CONCISE, USE INK

Serial No. C187414

Dwg. No. 99-106161

Model SE-7

DCP No.	Ent'd By & Date	DESCRIPTION OF DISCREPANCY AND ACTION TAKEN	CLEARED BY Mech. & Date	Lead-man & Date	Insp. & Date
# 40	ANR 94 10/16/64	PART NO. TANK ASSY, OXID P/N-103655; S/N-4051231 HAS NO INSPECTION STAMP ON LEAD SEAL ON FLANGE BOLTS SAFTYWIRE.			
	ACTION TAKEN	Inspection has cleared the discrep with Insp stamp on seals.	X 12/17/64		
# 41	ANR 94 10/16/64	PART NO. TANK ASSY, FUEL P/N-103660; S/N-4051935. NO INSPECTION STAMP ON LEAD SEAL ON SAFTYWIRE OF FLANGE BOLTS.			
	ACTION TAKEN	Inspection has cleared the discrep with Inspection stamp	X 12/17/64		
# 42	ANR 673 10/20/64	PART NO. PRESSURE SWITCH ACTUATION TEST REF PARA. 7.1.5.33.2 WAS CHANGED PER I.L DATED 10-20-64 OR Per Mcdonnell Engineer R.L. Free.			
	ACTION TAKEN	FOR INFORMATION ONLY.	X 10-20-64		
# 43	ANR 921 10/28/64	PART NO. 99-106161 FAILED FUEL TANK BLADDER LEAK TEST para 7.33.12 SPEC. REQUIRES .35 scc/15 ALL READINGS EXCEED REQUIREMENT.			
	ACTION TAKEN	REF IL #388-5237 DTD 20NOV64 AND OFR # 07428 R OK TO PROCEED WITH TEST TRANSFERRED TO SHORTAGE		ANR 930	ANR 930 1-15-65
# 44	ANR 941 12/15/64	PART NO. BRACKETS #99-103952 (2 PCS) WERE MOVED OUT RADIALLY TO ALLOW ROOM TO ATTACH LEAK CHECK COVERS TO TCA's #S/N 4054769 & S/N 4060932. OPEN END OF T.C.A. IS UNSUPPORTED.			
	ACTION TAKEN	Brackets will be installed at completion of acceptance testing (para 7.4) BRACKETS INSTALLED 12-16-64		ANR 224	ANR 224 12-16-64

R-15075-1

Form R 25-U Rev. 12-57

STAMPED IN ERROR

939

DESIGN APPROVAL TEST
ORBIT ATTITUDE AND MANEUVER SYSTEM
(SE7)

NAME OF TEST FUNCTIONAL TEST TEST NO. 106156-401 SHEET 245 OF 413
PART NO. 2-DAY CONFIG. {MAC / NAA} 14-DAY CONFIG. {MAC 52-52701 / NAA 99-106161}

7.3 **Functional Test**

7.3.1 General

7.3.1.1 The procedures specified in this paragraph shall be performed subsequent to the Vibration Test, paragraph 7.2.

7.3.1.2 If, following the Vibration Test, paragraph 7.2, the results of any test in this paragraph are other than those specified, the failure criteria of paragraph 3.6 shall be applicable.

7.3.1.3 All tests of this paragraph shall be performed at ambient temperature.

PREPARED BY: T. Kniffin	DATE	APPROVED FOR NAA:	DATE
CHECKED BY:	DATE		

DESIGN APPROVAL TEST
ORBIT ATTITUDE AND MANEUVER SYSTEM
(SE7)

NAME OF TEST FUNCTIONAL TEST TEST NO. 106156-401 SHEET 246 OF 413
PART NO. 2-DAY CONFIG. {MAC / NAA} 14-DAY CONFIG. {MAC 52-52701 / NAA 99-106161}

7.3.1.4 All test lines attached to the Engine System shall meet the requirements of paragraph 3.9.

7.3.1.5 If testing of the Engine System is suspended for a short period (i.e. overnight or weekend) before completion of the tests called out in this paragraph, the Engine System shall be temporarily secured as follows:

7.3.1.5.1 CLOSE all Pneumatic Test Console (PTC) valves, electrical switches and vent all PTC and Engine System pressures. All vent ports, etc. opened for tests called out in this paragraph shall be closed for protection against entry of foreign matter.

7.3.1.5.2 Before tests are resumed, the position or condition of each valve, switch, connection, etc. shall be checked for compliance with the provisions of paragraphs preceeding the paragraph at which the test is to be resumed.

7.3.2 Preparation and Test Procedure

Repeat paragraphs 7.1.2.1 through 7.1.5 inclusive.

PREPARED BY:	DATE	APPROVED FOR NAA:	DATE
T. Kniffin			
CHECKED BY:	DATE		
[illegible]	9-21-64	[illegible]	9-22-64

DESIGN APPROVAL TEST
ORBIT ATTITUDE AND MANEUVER SYSTEM
(SE7)

NAME OF TEST FUNCTIONAL TEST TEST NO. 106156-401 SHEET 247 OF 413

PART NO. 2-DAY CONFIG {MAC / NAA} 14-DAY CONFIG {MAC 52-52701 / NAA 99-106161}

7.3.3 Test Data
7.3.3.1 Engine System Identification

Engine System Name: OAMS

McDonnell Part No.: 52-52701

Rocketdyne Part No.: 99-106161

Component Name	Part Number Rocketdyne	Part Number MAC	Serial Number
	* REF DCP#35,36,37		
Component Package "A"	556870	52-52700-151	4055340
	* REF DCP# 38,39		
Component Package "B"	557305	52-52700-203	4053265
Component Package "C"	406886	52-52701-235	4055325
Component Package "D"	406887	52-52701-237	4055331
Pressurant Tank	103654	52-52701-169	4051910 REF DCP# 41
Fuel Tank	103660	52-52701-211	4051935
Oxid Tank	103655	52-52701-177	4051231 REF DCP# 40
Regulator	NAS-28070T2-2	52-52700-177	132
PSOV(OXID)	NAS-28078T3-1	52-52053-3	114
PSOV(FUEL)	NAS-28078T3-1	52-52053-3	116
Component Package "E"	557000	52-52701-175	4055393
N.O. Cartridge	NAS-28[illegible]T1-1	52-52701-[illegible]	041
N.C. Cartridge	NAS-2[illegible]T1-1	52-52702-301	339

PREPARED BY: DATE	PERFORMED BY: DATE	WITNESSED FOR NAA: DATE	CERTIFIED FOR McDONNELL DATE
T. Kniffin	Johnson 10-14-64	Johnson * VOID 12-17-64 10-14-64	WAIVED BY R.L. FREE 10-14-64
			VERIFIED BY USAF 12/17 DATE

* WRITTEN & STAMPED IN ERROR

DESIGN APPROVAL TEST
ORBIT ATTITUDE AND MANEUVER SYSTEM
(SE7)

NAME OF TEST FUNCTIONAL TEST TEST NO. 106156-401 SHEET 248 OF 413

PART NO. 2-DAY CONFIG {MAC / NAA} 14-DAY CONFIG {MAC 52-52701 / NAA 00-106161}

7.3.3.1 (cont'd)

Component Name	Part Number Rocketdyne	Part Number MAC	Serial Number
Component Package "A" Cartridge	NAS-28082T1-1	52-52700-201	214
Component Package "C" Cartridge	NAS-28082T1-1	52-52700-201	238
Component Package "D" Cartridge	NAS-2808T1-1	52-52700-201	241
P-T Indicator	NAS-27350T1-1	52-52700-235	113

PREPARED BY: DATE	PERFORMED BY: DATE	WITNESSED FOR NAA: DATE	CERTIFIED FOR McDONNELL DATE
T. Kniffin	Tony Kniffin 10-16-64	R. Lamb 10/16/64 (ANR 921)	R. L. [illegible] (ANR 921)
			VERIFIED BY USAF DATE 16 OCT 64

DESIGN APPROVAL TEST
ORBIT ATTITUDE AND MANEUVER SYSTEM
(SE7)

NAME OF TEST FUNCTIONAL TEST TEST NO. 106156-401 SHEET 249 OF 413

PART NO. 2-DAY CONFIG {MAC / NAA} 14-DAY CONFIG {MAC 52-52701 / NAA 99-106161}

7.3.3.2 Proof Pressure of Engine System

The Engine System was subjected to a proof pressure test in accordance with paragraph 7.1.3 YES (Yes or No).

Remarks:

NONE

7.3.3.3 Gross External Leak Check

Auxiliary vacuum gauge reading 3.9×10^{-4} cc Hg

Calibrated Leak rate (Per Paragraph 7.1.4.20) 47.8 scc/hr

Calibration Leak rate (Per Paragraph 7.1.4.26) 47.0 scc/hr

PREPARED BY:	DATE	PERFORMED BY:	DATE	WITNESSED FOR NAA:	DATE	CERTIFIED FOR McDONNELL	DATE
T.Kniffin		C. J. Klemen	10-17-64	C. J. Lamb	10-26-64		
						VERIFIED BY USAF	DATE 17 OCT 64

DESIGN APPROVAL TEST
ORBIT ATTITUDE AND MANEUVER SYSTEM
(SE7)

NAME OF TEST FUNCTIONAL TEST TEST NO. 106156-401 SHEET 250 OF 413

PART NO. 2-DAY CONFIG {MAC / NAA} 14-DAY CONFIG {MAC 52-52701 / NAA 99-106161}

7.3.3.3 (cont'd) Mass spectrometer indicator readings (ten minute intervals) for calibrated leak.

Time	Reading	Time	Reading
11:50	14	14:20	50
12:00	18	14:30	52
12:10	21	14:40	56
12:20	25	14:50	55
12:30	25	15:00	58
12:40	29	15:10	60
12:50	29	15:20	62
13:00	36	15:30	66
13:10	36	15:40	67
13:20	38	15:50	69
13:30	38	16:00	71
13:40	40	16:10	74
13:50	44	16:20	76
14:00	46	16:30	78
14:10	47	16:40	83
		16:50	86

Mass spectrometer indicator readings (ten minute intervals) for Engine System leakages.

Time	Reading	Time	Reading
12:00	24	12:20	21
12:10	20	12:30	21

PREPARED BY:	DATE	PERFORMED BY:	DATE	WITNESSED FOR NAA:	DATE	CERTIFIED FOR McDONNELL	DATE
T.Kniffin		[illegible]	10/17/64	[illegible]	10/17/64	ISSUED BY R.L. FREE	10-17-64
						VERIFIED BY USAF [illegible]	10/17/64 DATE

DESIGN APPROVAL TEST
ORBIT ATTITUDE AND MANEUVER SYSTEM
(SE7)

NAME OF TEST: FUNCTIONAL TEST — TEST NO. 106156-401 — SHEET 251 OF 413

PART NO. 2-DAY CONFIG. { MAC / NAA } — 14-DAY CONFIG. { MAC 52-52701 / NAA 99-106161 }

7.3.3.3 (continued)

Time	Reading	Time	Reading
12:40	21	14:50	25
12:50	22	15:00	26
13:00	22	15:10	27
13:10	23	15:20	27
13:20	24	15:30	27
13:30	23	15:40	28
13:40	23	15:50	28
13:50	24	16:00	29
14:00	26	16:10	28
14:10	26	16:20	30
14:20	24	16:30	30
14:30	25	16:40	28
14:40	25	16:50	28
		17:00	29

PREPARED BY:	DATE	PERFORMED BY:	DATE	WITNESSED FOR NAA:	DATE	CERTIFIED FOR McDONNELL	DATE
T. Kniffin		[signature]	10/10/64	[signature]	10/10/64	RECEIVED BY R. L. FREE	10/10/64
						VERIFIED BY USAF [signature]	10/10/64 DATE

ROCKETDYNE
A DIVISION OF NORTH AMERICAN AVIATION, INC

DESIGN APPROVAL TEST
ORBIT ATTITUDE AND MANEUVER SYSTEM
(SE7)

NAME OF TEST FUNCTIONAL TEST TEST NO. 106156-401 SHEET 252 OF 413
PART NO. 2-DAY CONFIG. {MAC / NAA} 14-DAY CONFIG. {MAC 52-52701 / NAA 99-106161}

7.3.3.3
(continued)

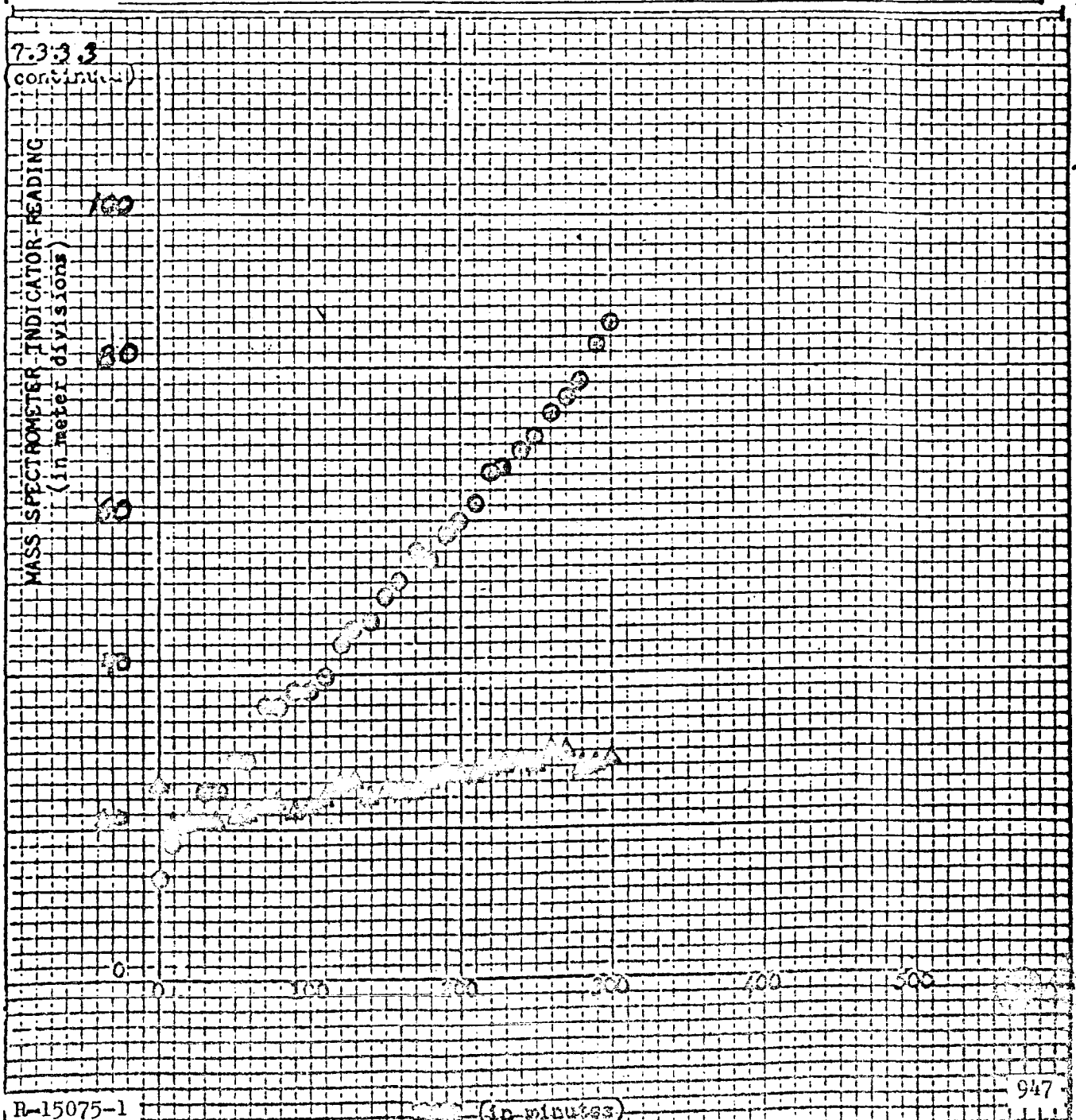

R-15075-1

DESIGN APPROVAL TEST
ORBIT ATTITUDE AND MANEUVER SYSTEM
(SE7)

NAME OF TEST FUNCTIONAL TEST TEST NO. 106156-401 SHEET 253 OF 413
PART NO. 2-DAY CONFIG. {MAC / NAA} 14-DAY CONFIG. {MAC 52-52701 / NAA 99-106161}

7.3.3.3 (continued) If it is necessary to perform a point leak check per paragraph 7.1.4.44 enter locations of leakage here.

DNA (ANR 921)

7.3.3.4 Packages "A", "C", "D" & "E" Cartridge Bridge Continuity Test

The ECP "CARTRIDGE BRIDGE CONTINUITY TEST" switch was thrown to the "ON" position. The following lights came on.

	Yes	No
PACKAGE "A" PRESSURANT TANK	YES	
PACKAGE "E" NORMALLY OPEN	YES	
PACKAGE "E" NORMALLY CLOSED	YES	
PACKAGE "C" OXID TANK	YES	
PACKAGE "D" FUEL TANK	YES	

PREPARED BY: DATE	PERFORMED BY: DATE	WITNESSED FOR NAA: DATE	CERTIFIED FOR McDONNELL DATE
T. Kniffin	10-19-64	10/19/64	VERIFIED BY USAF DATE 19 OCT 64

DESIGN APPROVAL TEST
ORBIT ATTITUDE AND MANEUVER SYSTEM
(SE7)

NAME OF TEST FUNCTIONAL TEST TEST NO. 106156-401 SHEET 254 OF 413

PART NO. 2-DAY CONFIG {MAC / NAA} 14-DAY CONFIG {MAC 52-52701 / NAA 99-106161}

7.3.3.5 Source Pressure (Reference Paragraph 7.1.5.2.5)

The input voltage was 5.02 volts (5 ±.025 volts).

Supply Pressure Required (±7.5psi) (psia)	Pressure-Temperature Indicator Reading		
	Minimum Allowed	Actual (X10)	Maximum Allowed
300	100	250	500
3500	3300	3450	3700
3000	2800	3000	3200
2500	2300	2500	2700
2000	1800	2000	2200
1500	1300	1500	1700
1000	800	1000	1200
500	300	500	700
300	100	300	500

PREPARED BY:	DATE	PERFORMED BY:	DATE	WITNESSED FOR NAA:	DATE	CERTIFIED FOR McDONNELL	DATE
T.Kniffin		C J Olsen	10-19-64	C F Smith	10/19/64	R L FREE	10/19/64
						VERIFIED BY USAF	DATE 19 OCT 64

DESIGN APPROVAL TEST
ORBIT ATTITUDE AND MANEUVER SYSTEM
(SE7)

NAME OF TEST FUNCTIONAL TEST TEST NO. 106156-401 SHEET 255 OF 413

PART NO. 2-DAY CONFIG {MAC ____ NAA ____} 14-DAY CONFIG {MAC 52-52701 NAA 99-106161}

7.3.3.5 (cont'd)

Regulated Pressure (Reference paragraph 7.1.5.2.6)

The input voltage was 5.0 volts (5 ±.025 volts)

Supply Pressure Required (±2.5psi)	Pressure-Temperature Indicator Reading		
	Minimum Allowed	Actual	Maximum Allowed
50	30	50	70
200	180	200	220
250	230	250	270
300	280	300	320
350	330	350	370
300	280	300	320
250	230	250	270
200	180	200	220
50	30	50	70

PREPARED BY: DATE	PERFORMED BY: DATE	WITNESSED FOR NAA: DATE	CERTIFIED FOR McDONNELL DATE
T.Kniffin	C J Ulmer 10-19-64	J Kent 10-19-64	R.A. FREE
			VERIFIED BY USAF DATE 19 OCT 64

ROCKETDYNE
A DIVISION OF NORTH AMERICAN AVIATION INC

DESIGN APPROVAL TEST
ORBIT ATTITUDE AND MANEUVER SYSTEM
(SE7)

NAME OF TEST FUNCTIONAL TEST TEST NO. 106156-401 SHEET 256 OF 413

PART NO. 2-DAY CONFIG. { MAC ____ NAA ____ } 14-DAY CONFIG. { MAC 52-52701 NAA 99-106161 }

7.3.3.6 Package "E" Solenoid Valve Response (Reference Paragraph 7.1.5.3)

Opening response time .005 seconds (.022 maximum)

Closing response time .014 seconds (.050 maximum)

7.3.3.7 Package "E" Pressure Switch Actuation Pressures (Reference paragraph 7.1.5.3.3)

Actuation Pressure * 389 psia (380 ±10)

De-actuation Pressure * 319 psia (225 minimum)

* REF I.L. DATED 10-20-64 FOR CHANGE OF GAUGE G1 REF DCP #42

*③ E.I.A. 10-20-64 ACTUAL READING .005 SEC.

PREPARED BY: DATE	PERFORMED BY: DATE	WITNESSED FOR NAA: DATE	CERTIFIED FOR McDONNELL DATE
T. Kniffin	[signature] 10/20/64	[signature] 10/20/64	WAIVE BY R. L. KREE 10/20/64
R-15075-1			VERIFIED BY USAF: DATE [signature] 23 Nov 64

Test Form 1453

DESIGN APPROVAL TEST
ORBIT ATTITUDE AND MANEUVER SYSTEM
(SE7)

NAME OF TEST FUNCTIONAL TEST TEST NO. 106156-401 SHEET 257 OF 413

PART NO. 2-DAY CONFIG {MAC / NAA} 14-DAY CONFIG {MAC 52-52701 / NAA 99-106161}

7.3.3.8 Pressure Regulator Flow Test (Reference paragraph 7.1.5.4)

Flow	Output Pressure
zero	299.0 (295 ±15) psig
8.7 ±.4 SCFM	297.0 (295 ±15) psig
17.4 ±4 SCFM	296.5 (295 ±15) psig
zero	299.0 (295 ±15) psig

7.3.3.9 Package B Relief Valves (Reference paragraph 7.1.5.5.1)

	Oxid.	Fuel	
Cracking Pressure	390	383	(430 max) psig
Flow (at 430 ±5 psig)	30,000	30,000	(1200 min) scim
Reseat Pressure	384	380	(370 min) psig
Seat Leakage (at 371 +0 -5 psig)	ZERO	ZERO	(1.7 max) scc/20 minutes

7.3.3.10 Reverse Seat Leakage Test of Check Valves (Reference paragraph 7.1.5.5.2)

Oxidizer Check Valve (downstream)	.4	(2.0 max) scc/15 minutes
Oxidizer Check Valve (upstream)	0.0	(2.0 max) scc/15 minutes
Fuel Check Valve	ZERO	(2.0 max) scc/15 minutes

PREPARED BY: DATE	PERFORMED BY: DATE	WITNESSED FOR NAA: DATE	CERTIFIED FOR McDONNELL DATE
T. Kniffin	10/20/64		VERIFIED BY USAF DATE

DESIGN APPROVAL TEST
ORBIT ATTITUDE AND MANEUVER SYSTEM
(SE7)

NAME OF TEST FUNCTIONAL TEST TEST NO. 106156-401 SHEET 258 OF 413

PART NO. 2-DAY CONFIG {MAC / NAA} 14-DAY CONFIG {MAC 52-52701 / NAA 99-106161}

7.3.3.11 Leakage Test of Burst Diaphrams

Leakage tests were performed per paragraph 7.1.5.5.3. No Leakage was found. TRUE (True or False)

7.3.3.12 Propellant Tank Bladder Leak Check (Reference Paragraph 7.1.5.6)

	OXID TANK	FUEL TANK
Leakage (Per Paragraph 7.1.5.6.21 & 7.1.5.6.22)	31.9	10.8
	31.5	9.2
	30.5	10.3
	30.0	9.7
	29.4	9.8
	29.7	9.8
	29.5	9.2
	28.8	9.2
Leakage (Per Paragraph 7.1.5.6.24)	28.2	8.1
	27.5	7.4
	27.4	8.0
	27.2	7.1
	27.0	7.8
	27.0	7.3
	26.5	7.2
	26.6	7.3

PREPARED BY:	DATE	PERFORMED BY:	DATE	WITNESSED FOR NAA:	DATE	CERTIFIED FOR McDONNELL	DATE
T. Kniffin		C. Oliver	10-20-64	[illegible]	10-20-64	[illegible]	
R-15075-1						VERIFIED BY USAF	DATE 21 OCT 64

DESIGN APPROVAL TEST
ORBIT ATTITUDE AND MANEUVER SYSTEM
(SE7)

NAME OF TEST FUNCTIONAL TEST TEST NO. 106156-401 SHEET 259 OF 413

PART NO. 2-DAY CONFIG {MAC / NAA} 14-DAY CONFIG {MAC 52-52701 / NAA 99-106161}

7.3.3.12 (cont'd)

Leakage (Per Paragraph 7.1.5.6.31 and 7.1.5.6.32-Two consecutive readings shall be less than .35 scc/15 minutes for each tank, fuel and oxidizer)

OXID TANK	FUEL TANK
ZERO	~~1.5~~
ZERO	1.4
ZERO	1.3
ZERO	1.3
ZERO	1.8
ZERO	2.0
ZERO	1.9
ZERO	1.9
	1.9

*SEE DCP #43

7.3.3.13 Propellant Shutoff Valve

	OXID	FUEL
Opening response time	2.2	2.2 (12 max) sec
Closing response time	2.2	2.2 (12 max) sec

PREPARED BY:	DATE	PERFORMED BY:	DATE	WITNESSED FOR NAA:	DATE	CERTIFIED FOR McDONNELL	DATE
T.Kniffin		[illegible]	10-26-64	[illegible]		[illegible]	
						VERIFIED BY USAF	DATE 14 DEC 64

IL 4388-5161

INTERNAL LETTER
North American Aviation, Inc.

DATE 2 November 1964

TO Those Concerned
Address

FROM Gemini DAT-RAT Unit
Address D/896-388

PHONE 6107

SUBJECT SE7 Engine System (DAT - S/C 3) Fuel Propellant Tank

REFERENCE (a) TWX RC9523

During post-vibration functional testing of the SE7 tank module (test procedure 106156-401) the fuel propellant tank bladder was found to be leaking at a rate of 2.0 scc in 15 minutes. Allowable leakage per test procedure 106156-401 is .35 scc in 15 minutes. It should be mentioned that the allowable leakage per test procedure 103660-401, which is the Design Approval Test of the fuel propellant tank as a component, is 1.2 scc in 15 minutes.

The local McDonnell Aircraft Corporation engineering representatives have concurred with Rocketdyne that the low leakage rate of the bladder will not be detrimental to subsequent Design Approval Testing per test procedure 106156-401. Therefore, testing of the SE7 Engine System shall continue in accordance with test procedure 106156-401.

Troy Kniffin
T. G. Kniffin
Gemini DAT-RAT Unit

Approved: R G Eide
R. G. Eide
Supervisor
Gemini DAT-RAT Unit

R L Mantler
R. Mantler
MAC Engineering

FORM R 18-0-4

IL 4388-5237

INTERNAL LETTER
North American Aviation, Inc.

DATE 20 November 1964

TO Those Concerned
Address

FROM Gemini DAT-RAT Unit
Address D/896-388

SUBJECT SE7 Engine System (S/C 3) - DAT

REFERENCE (a) Design Approval Test Procedure 106156-401
(b) OFR 07428R

During bladder leak test per reference (a) the fuel tank exhibited excessive leakage. Leakage was 2 cc of helium in fifteen minutes. Allowable leakage is .35 cc of helium in fifteen minutes.

McDonnell Aircraft Corporation and Rocketdyne have decided that testing is to continue. Failure analysis of the bladder will be performed at completion of the test program.

T. G. Kniffin
T. G. Kniffin
Gemini DAT-RAT Unit

Approved: R. L. Free
R. L. Free
MAC Engineering

DESIGN APPROVAL TEST
ORBIT ATTITUDE AND MANEUVER SYSTEM
(SE7)

NAME OF TEST ACCEPTANCE TEST TEST NO. 106156-401 SHEET 260 OF 413
PART NO. 2-DAY CONFIG. {MAC ____ NAA ____ 14-DAY CONFIG. {MAC 52-52701 NAA 99-106156

7.4 Acceptance Test (Engine System)

7.4.1 General

7.4.1.1 The procedures specified in this paragraph shall be performed on the complete SE7 Engine System which includes as an integral part the SE7 Tank Module which was previously tested in this specification.

7.4.1.2 If the results of any test in this paragraph are other than those specified the failure criteria of paragraph 3.6 shall be applicable unless the discrepancy occurs in that part of the Engine System which is downstream of the Propellant Shutoff Valves.

7.4.1.3 In the event of a discrepancy downstream of the Propellant Shutoff Valves the discrepant item shall be repaired and testing resumed. If the repair effects the leaktight integrity of the Engine System the testing of paragraphs 7.4.3 and 7.4.4 shall be repeated.

7.4.1.4 All tests of this paragraph shall be performed at ambient temperature.

7.4.1.5 All test lines attached to the Engine System shall meet the requirements of paragraph 3.9.4.

7.4.1.6 If testing of the Engine System is suspended for a short period (i.e. overnight or weekend) before completion of the tests called out in this paragraph; the Engine System shall be temporarily secured as follows:

7.4.1.6.1 CLOSE all Pneumatic Test Console (PTC) valves, electrical switches and vent all PTC and Engine System pressures. All vent ports, etc. opened for tests called out in this paragraph shall be closed for protection against entry of foreign matter.

PREPARED BY:	DATE	APPROVED FOR NAA:	DATE
T. Kniffin			
CHECKED BY:	DATE		
	9-21-64		9-22-64

DESIGN APPROVAL TEST
ORBIT ATTITUDE AND MANEUVER SYSTEM
(SE7)

NAME OF TEST ACCEPTANCE TEST TEST NO. 106156-401 SHEET 261 OF 413
PART NO. 2-DAY CONFIG. {MAC / NAA} 14-DAY CONFIG. {MAC 52-52701 / NAA 99-106156}

7.4.1.6.2 Before tests are resumed, the position or condition of each valve, switch, connection, etc. shall be checked for compliance with the provisions of paragraphs preceeding the paragraph at which the test is to be resumed.

7.4.2 Preparation

7.4.2.1 System Condition

The Engine System configuration for test shall be in accordance with Rocketdyne Drawing 99-106161 and Figure 1 except that the lines between the bulkhead and Component Packages "A" and "B" and the Oxidizer and Fuel Propellant Tanks are not installed.

7.4.2.2 Verify that all the switches and valves on the Electrical Control Panel (ECP) and the Pneumatic Test Console (PTC) are in the "OFF" or "CLOSED" position.

7.4.2.3 Place the Engine System on the base plate of the enclosure which will later be used in the testing of paragraph 7.4.4. The Engine System is to be oriented in the "launch" position.

7.4.2.4 Connect the ECP to the Engine System electrical harness as shown in Rocketdyne Drawing Number 99-9017055.

7.4.2.5 Connect the PTC to the Engine System as shown in Figure 35.

7.4.2.6 Supply 28 VDC to the ECP and the PTC.

7.4.2.7 Supply 110 VAC to the ECP oscilloscope.

7.4.2.8 Supply 6000 psig He (helium) to the PTC supply port.

7.4.2.9 Throw the "DC POWER" switches on the ECP and the PTC to the "ON" position. The "DC POWER" lights will come on.

PREPARED BY:	DATE	APPROVED FOR NAA:	DATE
T. Kniffin		R. E. Eide	9-22-64
CHECKED BY:	DATE		
[illegible]	9-21-64		

INTERNAL LETTER
North American Aviation, Inc.

DATE 24 November 1964

TO Those Concerned
Address

FROM Gemini DAT-RAT Unit
Address D/896-388

SUBJECT SE7 Engine System (S/C 3) DAT, Test Procedure 106156-401

Change paragraph 7.4.2.5 as follows:

Connect the PTC to the Engine System as shown in Figure 35 except that the pressurizing lines downstream of ORPV and FRPV shall not be installed. The pressurizing lines shall be capped off and ports 7 and 8 shall remain capped.

T. G. Kniffin
T. G. Kniffin
Gemini DAT-RAT Unit

Approved: R. L. Free
R. L. Free
MAC Engineering

DESIGN APPROVAL TEST
ORBIT ATTITUDE AND MANEUVER SYSTEM
(SE7)

NAME OF TEST ACCEPTANCE TEST TEST NO. 106156-401 SHEET 262 OF 413

PART NO. 2-DAY CONFIG. {MAC ____ NAA ____ 14-DAY CONFIG. {MAC 52-52701 NAA 99-106156

7.4.2.10 Depress the "PRESS TO TEST LIGHTS" button on the ECP and the PTC. All applicable lights on the ECP and PTC will come on. (Reference Rocketdyne drawing number 99-103729 and 99-9017055).

7.4.2.11 Throw the ECP "FUEL SUPPLY SHUTOFF VALVE" and "OXID SUPPLY SHUTOFF VALVE" switches to the "OPEN" position momentarily to insure that the valves are in the "OPEN" position.

7.4.2.12 OPEN the following Engine System manual valves:

(a) "HI PRESS GAS CHG VALVE - 1A"
(b) "HI PRESS GAS TEST VALVE - 2A"
(c) "FUEL TANK VENT VALVE - 4A"
(d) "OXID TANK VENT VALVE - 6A"
(e) "OXID CHG VALVE - 11A"
(f) "FUEL CHG VALVE - 15A"
(g) "OXID TEST VALVE - 12A"
(h) "FUEL TEST VALVE - 14A"

Manual valve OPEN is defined as 4 turns counterclockwise from the full "CLOSE" position. Torque per the values indicated in Table I.

7.4.2.13 Insure that the Engine System Tank Module "BYPASS VALVE TEST - 19A" is in the OPEN position.

7.4.2.14 Insure that all PTC vents are OPEN to atmosphere.

PREPARED BY:	DATE	APPROVED FOR NAA:	DATE
T. Kniffin			
CHECKED BY:	DATE		

DESIGN APPROVAL TEST
ORBIT ATTITUDE AND MANEUVER SYSTEM
(SE7)

NAME OF TEST ACCEPTANCE TEST TEST NO. 106156-401 SHEET 263 OF 413

PART NO. 2-DAY CONFIG. {MAC / NAA} 14-DAY CONFIG. {MAC 52-52701 / NAA 99-106156}

7.4.3	Proof Pressure Test
7.4.3.1	Throw the PTC "FUEL TANK PRESS VALVE" and the "OXID TANK PRESS VALVE" switches to the "AUTO" position.
7.4.3.2	OPEN the PTC "MAIN SUPPLY VALVE" and "PROPELLANT SYSTEM PRESSURANT SUPPLY VALVE".
7.4.3.2.1	Assure that the FACILITY HAND VALVE "A" D/S is CLOSED.
7.4.3.3	Adjust the PTC "HL #1, so that 3000 $\pm$100 psig is read on the "SUPPLY PRESSURE" gage.
7.4.3.4	Throw the PTC "PACKAGE "C" D/S PRESS VALVE" and "PACKAGE "D" D/S PRESS VALVE" switches to the "OPEN" position. The lights above the switches will come on.
7.4.3.5	Adjust PTC "HL #2" so that 450 $^{+15}_{-0}$psig is read on the "PROPELLANT SUPPLY PRESSURE" gauge.
7.4.3.6	Maintain the pressure of paragraph 7.4.3.5 for a period of 3 $^{+1}_{-0}$ minutes.
7.4.3.7	CLOSE the PTC "MAIN SUPPLY VALVE".
7.4.3.8	CLOSE the PTC "PROPELLANT SYSTEM PRESSURANT SUPPLY VALVE".
7.4.3.9	OPEN the PTC "SUPPLY VENT VALVE" and vent the system until the "SUPPLY PRESSURE" gauge reads 0 psig.
7.4.3.10	OPEN the PTC "PROPELLANT SYSTEM VENT VALVE" and vent the system until zero psig is read on the "PROPELLANT SUPPLY PRESSURE" gauge. Then CLOSE the "PROPELLANT SYSTEM VENT VALVE".

PREPARED BY: T. Kniffin	DATE	APPROVED FOR NAA:	DATE
CHECKED BY:	DATE		
11-2-64		11-2-64	

DESIGN APPROVAL TEST
ORBIT ATTITUDE AND MANEUVER SYSTEM
(SE7)

NAME OF TEST ACCEPTANCE TEST TEST NO. 106156-401 SHEET 264 OF 413

PART NO. 2-DAY CONFIG. {MAC / NAA} 14-DAY CONFIG. {MAC 52-52701 / NAA 99-106156}

7.4.3.11 CLOSE the PTC "SUPPLY VENT VALVE" and "PROPELLANT SYSTEM VENT VALVE" and throw the "PACKAGE "C" D/S PRESS VALVE" and "PACKAGE "D" D/S PRESS VALVE" switches to the CLOSE position. The lights above the switches will go out.

7.4.3.12 Turn the PTC "HL #1" and "HL #2" to the closed position.

PREPARED BY:	DATE	APPROVED FOR NAA:	DATE
T. Kniffin		R. H. Eide	11-2-64
CHECKED BY:	DATE		
[illegible]	11-2-64		

DESIGN APPROVAL TEST
ORBIT ATTITUDE AND MANEUVER SYSTEM
(SE7)

NAME OF TEST ACCEPTANCE TEST TEST NO 106156-401 SHEET 265 OF 413
PART NO. 2-DAY CONFIG. {MAC / NAA} 14-DAY CONFIG. {MAC 52-52701 / NAA 99-106156}

7.4.4 Gross External Leakage Test

7.4.4.1 Install the Engine System in an enclosure as shown in Figure 36. The walls, floor and ceiling of the enclosure shall be lined with Dobeckmun Metalam 777-V. All valves of Figure 36 shall be closed. Do not seal the enclosure at this time.

7.4.4.2 Install the TCA seal fixtures on each of the Thrust Chamber Assemblies (TCA).

7.4.4.3 Connect leakage overboard lines to each of the TCA seal fixture ports and to the Engine System "HI PRESS GAS CHG VALVE - 1A" port, the "HI PRESS GAS TEST VALVE - 2A" port, the "FUEL TANK VENT VALVE - 4A" port, the "OXID TANK VENT VALVE - 6A" port, the "OXID CHG VALVE - 11A" port, the "OXID TEST VALVE - 12A" port, the "FUEL TEST VALVE - 14A" port and the "FUEL CHG VALVE - 15A" port.

7.4.4.4 Locate the free ends of the leakage overboard lines outside of the enclosure.

7.4.4.5 Locate the mass spectrometer outside of the enclosure and locate two electric fans inside the enclosure as shown in Figure 36.

7.4.4.6 Attach the auxiliary vacuum gauge to the mass spectrometer if not already attached. Begin warming up the mass spectrometer.

7.4.4.7 Attach a fixed sampling probe to the mass spectrometer

PREPARED BY:	DATE	APPROVED FOR NAA:	DATE
T. Kniffin			
CHECKED BY:	DATE		
[illegible]	11-2-64	[illegible]	11-2-64

DESIGN APPROVAL TEST
ORBIT ATTITUDE AND MANEUVER SYSTEM
(SE7)

NAME OF TEST ACCEPTANCE TEST TEST NO. 106156-401 SHEET 266 OF 413
PART NO. 2-DAY CONFIG. {MAC / NAA} 14-DAY CONFIG. {MAC 52-52701 / NAA 99-106156}

7.4.4.8	Locate the sampling probe inside of the enclosure so that the mass spectrometer is monitoring the helium concentration inside the enclosure. Seal the enclosure.
7.4.4.9	Turn on the electric fans.
7.4.4.10	Adjust the accumulator valve on the mass spectrometer so that the reference vacuum gauge on the mass spectrometer panel is reading approximately 0.1 microns.
7.4.4.11	Note and record the reading of the auxiliary vacuum gauge. When future readings are taken of the leak indicator the accumulator valve shall first be adjusted so that the auxiliary vacuum gauge is reading this value.
7.4.4.12	Vent the enclosure and purge with gaseous nitrogen at a pressure of approximately 50 psig as read on pressure gauge G_4 for a period of thirty minutes minimum. The purpose of the purge is to lower the helium concentration in the enclosure and produce a low initial reading on the mass spectrometer indicator prior to the following testing.
7.4.4.13	Allow the mass spectrometer indicator to stabilize.
7.4.4.14	Disconnect the helium supply line downstream of valve V_3 from the enclosure.
7.4.4.15	Adjust pressure regulator R_1 so that 2 ±1 psig is read on pressure gauge G_3.
7.4.4.16	OPEN valves V_1 and V_3. Purge for a period of one to two minutes to fill the line with helium.
7.4.4.17	CLOSE valves V_1 and V_3 and adjust the pressure regulator to zero psig as read on the pressure gauge G_3. Immediately connect the helium supply line downstream of valve V_3 to the enclosure.
7.4.4.18	OPEN valve V_2.

PREPARED BY:	DATE	APPROVED FOR NAA:	DATE
T. Kniffin		R. Heide	11-2-64
CHECKED BY:	DATE		
[illegible]	11-2-64		

DESIGN APPROVAL TEST
ORBIT ATTITUDE AND MANEUVER SYSTEM
(SE7)

NAME OF TEST ACCEPTANCE TEST TEST NO. 106156-401 SHEET 267 OF 413

PART NO. 2-DAY CONFIG. {MAC / NAA} 14-DAY CONFIG. {MAC 52-52701 / NAA 99-106156}

7.4.4.19 Adjust V_1 and R_1 to produce a constant leak rate of 48 ±2 standard cubic centimeters per hour as measured by the burette at ambient temperature and pressure. Burette measurements shall be made over a period of approximately fifteen minutes.

7.4.4.20 Record the leak rate on the data sheet.

7.4.4.21 OPEN valve V_3 and CLOSE V_2.

7.4.4.22 Record the mass spectrometer indicator reading on the data sheet and plot the value on the sheet of graph paper provided. Enclose the plotted point with a small circle.

7.4.4.23 Repeat paragraph 7.4.4.22 at ten minute intervals for a period of five hours.

7.4.4.24 At the end of the five hour period CLOSE valve V_3 and OPEN VALVE V_2.

7.4.4.25 Measure the leak rate with the burette and record. The leak rate shall be 48 ±2 standard cubic centimeters per hour.

7.4.4.26 If leak rateis not in accordance with 7.4.4.25 repeat paragraph 7.4.4.12 to 7.4.4.25.

7.4.4.27 Disregard the first hour of testing and draw a straight line through the points just plotted on the graph paper which most closely represents the slope generated by the points.

PREPARED BY:	DATE	APPROVED FOR NAA:	DATE
T. Kniffin			
CHECKED BY:	DATE		
	11-2-64		11-2-64

DESIGN APPROVAL TEST
ORBIT ATTITUDE AND MANEUVER SYSTEM
(SE7)

NAME OF TEST ACCEPTANCE TEST TEST NO. 106156-401 SHEET 268 OF 413
PART NO. 2-DAY CONFIG. {MAC / NAA} 14-DAY CONFIG. {MAC 52-52701 / NAA 99-106156}

7.4.4.28 Allow the mass spectrometer indicator to stabilize.

7.4.4.29 Throw the PTC "PACKAGE "A" U/S PRESS VALVE" switch to the "OPEN" position. The light above the switch will come on.

7.4.4.30 OPEN the PTC "MAIN SUPPLY VALVE", "PRESSURANT SYSTEM PRESSURANT SUPPLY VALVE" and "PROPELLANT SYSTEM PRESSURANT SUPPLY VALVE".

7.4.4.31 Adjust the PTC "HL #1" so that 3000 ±100 psig is read on the "SUPPLY PRESSURE" gauge.

7.4.4.32 Throw the PTC "PACKAGE "C" U/S PRESS VALVE", "PACKAGE "D" U/S PRESS VALVE", "PACKAGE "C" D/S PRESS VALVE" and "PACKAGE "D" D/S PRESS VALVE" switches to the "OPEN" position. The lights above the switches will come on.

7.4.4.33 Simultaneously adjust the PTC "HL #2" and "HL #3" so that 300 ±10 psig is read on the "PRESSURANT SUPPLY PRESSURE" gauge and the "PROPELLANT SUPPLY PRESSURE" gauge. When the pressure reaches 100 psig on the "PROPELLANT SUPPLY PRESSURE" gauge the "PS-C" (PACKAGE "C" PRESSURE SWITCH"), "PS-D (PACKAGE "D" PRESSURE SWITCH), "OXID TANK, PRESS VALVE", "FUEL TANK PRESS VALVE", and "PACKAGE "A" D/S PRESS VALVE" lights will come on.

7.4.4.33.1 Slowly OPEN the FACILITY HAND VALVE "A" D/S.

7.4.4.34 Record the mass spectrometer indicator reading on the data sheet and plot the value on the sheet of graph paper provided. Enclose the plotted point with a small triangle.

7.4.4.35 Repeat paragraph 7.4.4.34 at ten (10) minute intervals for a period of five hours.

PREPARED BY:	DATE	APPROVED FOR NAA:	DATE
T. Kniffin		[illegible]	9-22-64
CHECKED BY: [illegible]	9-21-64		

DESIGN APPROVAL TEST
ORBIT ATTITUDE AND MANEUVER SYSTEM
(SE7)

NAME OF TEST ~~ACCEPTANCE TEST~~ TEST NO. 196156-401 SHEET 269 OF 413
PART NO. 2-DAY CONFIG. {MAC / NAA} 14-DAY CONFIG. {MAC 52-52701 / NAA 99-106156}

7.4.4.36 At the end of the five hour period, CLOSE the PTC "MAIN SUPPLY VALVE", the "PROPELLANT SYSTEM PRESSURANT SUPPLY VALVE" and the "PRESSURANT SYSTEM PRESSURANT SUPPLY VALVE".

7.4.4.37 OPEN the PTC "SUPPLY VENT VALVE" and vent until the "SUPPLY PRESSURE" gauge reads 0 psig. Then throw the "PACKAGE "A" U/S PRESS VALVE" switch to the CLOSE position. The light above the switch will go out.

7.4.4.38 Throw the PTC "OXID BLADDER VENT VALVE" and "FUEL BLADDER VENT VALVE" switches to the "OPEN" position. The lights above the swtiches will come on.

7.4.4.39 Simultaneously OPEN the PTC "PRESSURANT SYSTEM VENT VALVE" and "PROPELLANT SYSTEM VENT VALVE". When the pressure, as read on the "PROPELLANT SUPPLY PRESSURE" gauge, reads 96 psig the "PS-C" "PS-D", "PACKAGE "A" D/S PRESS VALVE", "OXID TANK PRESS VALVE" and "FUEL TANK PRESS VALVE" lights will go out. When the pressure, as read on the "PROPELLANT SUPPLY PRESSURE" gauge, reads 25 psig throw the "OXID SIDE REGULATOR FLOW VALVE" and "FUEL SIDE REGULATOR FLOW VALVE" switches to the "OPEN" position. The lights above the switches will come on. Continue to vent until the "PRESSURANT SUPPLY PRESSURE" gauge and the "PROPELLANT SUPPLY PRESSURE" gauge each read 0 psig.

7.4.4.40 CLOSE the PTC "SUPPLY VENT VALVE", "PRESSURANT SYSTEM VENT VALVE" and "PROPELLANT SYSTEM VENT VALVE" and throw the "OXID BLADDER VENT VALVE", "FUEL BLADDER VENT VALVE", "PACKAGE "C" U/S PRESS VALVE", "PACKAGE "D" U/S PRESS VALVE", "PACKAGE "C" D/S PRESS VALVE", "PACKAGE "D" D/S PRESS VALVE, "OXID SIDE REGULATOR FLOW VALVE", and "FUEL SIDE REGULATOR FLOW VALVE" switches to the CLOSE position. The light above the switches will go out.

PREPARED BY:	DATE	APPROVED FOR NAA:	DATE
T. Kniffin			
CHECKED BY:	DATE		
	9-21-64		9-22-64

DESIGN APPROVAL TEST
ORBIT ATTITUDE AND MANEUVER SYSTEM
(SE7)

NAME OF TEST ACCEPTANCE TEST TEST NO. 106156-401 SHEET 270 OF 413
PART NO. 2-DAY CONFIG. {MAC ____ NAA ____ 14-DAY CONFIG. {MAC 52-52701 NAA 99-106156

7.4.4.41 Turn the PTC "HL #1", "HL #2" and "HL #3" to the closed position, and CLOSE the FACILITY HAND VALVE "A" D/S.

7.4.4.42 Disregard the first hour of testing and draw a straight line through the points just plotted on the graph paper which most closely represents the slope generated by the points.

7.4.4.43 Compare the two straight line curves of paragraphs 7.4.4.26 and 7.4.4.42. It shall be considered that excessive leakage has occured if the curve generated by Engine System leakage has a greater slope than the curve generated by the calibrated leak (paragraph 7.4.4.26). If Engine System leakage is not excessive, proceed directly to paragraph 7.4.4.45.

7.4.4.44 If the leakage of paragraph 7.4.4.43 is excessive perform the following:

7.4.4.44.1 Remove the enclosure from around the Engine System.

7.4.4.44.2 OPEN the PTC "MAIN SUPPLY VALVE".

7.4.4.44.3 Throw the PTC "PACKAGE "A" U/S PRESS VALVE" switch to the "OPEN" position. The light above the switch will come on.

7.4.4.44.4 Adjust the PTC HL #1" to indicate 1500 psig on the "SUPPLY PRESSURE" gauge.

7.4.4.44.5 Using the mass spectrometer sampling probe scan all pneumatic lines, connections, fittings and welded seams of Engine System Pressurant Tank and the Component Package "A". Note the point(s) or areas of leakage and record.

7.4.4.44.6 CLOSE the PTC "MAIN SUPPLY VALVE". OPEN the PTC "SUPPLY VENT VALVE" and allow the "SUPPLY PRESSURE" gauge to indicate 0 psig.

PREPARED BY:	DATE	APPROVED FOR NAA:	DATE
T. Kniffin		[illegible]	9-22-64
CHECKED BY: [illegible]	9-21-64		

DESIGN APPROVAL TEST
ORBIT ATTITUDE AND MANEUVER SYSTEM
(SE7)

NAME OF TEST ACCEPTANCE TEST TEST NO. 106156-401 SHEET 271 OF 473
PART NO. 2-DAY CONFIG. {MAC / NAA} 14-DAY CONFIG. {MAC 52-52801 / NAA 99-106156}

7.4.4.44.7 CLOSE the PTC "SUPPLY VENT VALVE".

7.4.4.44.8 Throw the PTC "PACKAGE "A" U/S PRESS VALVE" switch to the "CLOSED" position. The light above the switch will go off.

7.4.4.44.9 OPEN the PTC "MAIN SUPPLY VALVE", "PRESSURANT SYSTEM PRESSURANT SUPPLY VALVE", "PROPELLANT SYSTEM PRESSURANT SUPPLY VALVE" and FACILITY HAND VALVE "A" D/S.

7.4.4.44.10 Adjust the PTC "HL #1" so that 125 psig is read on the "SUPPLY PRESSURE" gauge.

7.4.4.44.11 Throw the PTC "PACKAGE "C" U/S PRESS VALVE", "PACKAGE "D" U/S PRESS VALVE" "PACKAGE "C" D/S PRESS VALVE" and "PACKAGE "D" D/S PRESS VALVE" switches to the "OPEN" position. The lights above the switches will come on.

7.4.4.44.12 Simultaneously adjust the PTC "HL #2" and "HL #3" so that 125 psig is read on the "PRESSURANT SUPPLY PRESSURE" gauge and the "PROPELLANT SUPPLY PRESSURE" gauge. When the pressure reaches 100 psig on the "PROPELLANT SUPPLY PRESSURE" gauge the "PS-C" (PACKAGE "C" PRESSURE SWITCH), "PS-D" (PACKAGE "D" PRESSURE SWITCH), OXID TANK PRESS VALVE", "FUEL TANK PRESS VALVE", and "PACKAGE "A" D/S PRESS VALVE" lights will come on.

7.4.4.44.13 Using the mass spectrometer sampling probe scan all pneumatic and propellant lines, connections, fittings and welded seams of the Engine System from the Component Package "A" outlet port to the Component Package "C" and "D" inlets and manual charge valves. Note the points (s) or areas of leakage and record.

7.4.4.44.14 Using the mass spectrometer sampling probe scan all propellant lines, connections, fittings and welded seams of the Engine System from Component Packages "C" and "D" outlet ports to

PREPARED BY: T. Kniffin	DATE	APPROVED FOR NAA:	DATE
CHECKED BY:	DATE		
[illegible]	9-21-64	[illegible]	9-22-64

DESIGN APPROVAL TEST
ORBIT ATTITUDE AND MANEUVER SYSTEM
(SE7)

NAME OF TEST ACCEPTANCE TEST TEST NO. 106156-401 SHEET 272 OF 413
PART NO. 2-DAY CONFIG. {MAC / NAA} 14-DAY CONFIG. {MAC 52-52701 / NAA 99-106156}

7.4.4.44.14 (continued)	the Thrust Chamber Assemblies. Note the point(s) or area(s) of leakage and record.
7.4.4.44.15	CLOSE the PTC "MAIN SUPPLY VALVE", "PRESSURANT SYSTEM PRESSURANT SUPPLY VALVE" and "PROPELLANT SYSTEM PRESSURANT SUPPLY VALVE".
7.4.4.44.16	OPEN the PTC "SUPPLY VENT VALVE" and vent until the "SUPPLY PRESSURE" gauge reads 0 psig.
7.4.4.44.17	Throw the PTC "OXID BLADDER VENT VALVE" and "FUEL BLADDER VENT VALVE" switches to the "OPEN" position. The lights above the switches will come on.
7.4.4.44.18	Simultaneously OPEN the PTC "PRESSURANT SYSTEM VENT VALVE" and "PROPELLANT SYSTEM VENT VALVE. When the pressure, as read on the "PROPELLANT SYPPLY PRESSURE" gauge, reads 95 psig the "PS-C", "PS-D", "PACKAGE "A" D/S PRESS VALVE", "OXID TANK PRESS VALVE", and "FUEL TANK PRESS VALVE" light will go out. When the pressure, as read on the "PROPELLANT SUPPLY PRESSURE" gauge reads 25 psig throw the "OXID SIDE REGULATOR FLOW VALVE" and "FUEL SIDE REGULATOR FLOW VALVE" switches to the "OPEN" position. The lights above the switches will come on. Continue to vent until the "PRESSURANT SUPPLY PRESSURE" gauge and the "PROPELLANT SUPPLY PRESSURE" gauge each read 0 psig.
7.4.4.44.19	CLOSE the PTC "SUPPLY VENT VALVE" "PRESSURANT SYSTEM VENT VALVE" and "PROPELLANT SYSTEM VENT VALVE" and throw the "OXID BLADDER VENT VALVE", "FUEL BLADDER VENT VALVE", "PACKAGE "C" U/S PRESS VALVE", "PACKAGE "D" U/S PRESS VALVE", "PACKAGE "C" D/S PRESS VALVE", "PACKAGE "D" D/S PRESS VALVE", "OXID SIDE REGULATOR FLOW VALVE", AND "FUEL SIDE REGULATOR FLOW VALVE" switches to the CLOSE position. The lights above the switches will go out.
7.4.4.44.20	Turn the PTC "HL #1", "HL #2" and the "HL #3" to the full closed position, and CLOSE the FACILITY HAND VALVE "A" D/S.

PREPARED BY:	DATE	APPROVED FOR NAA:	DATE
T. Kniffin		[illegible]	9-22-64
CHECKED BY: [illegible]	9-21-64		

DESIGN APPROVAL TEST
ORBIT ATTITUDE AND MANEUVER SYSTEM
(SE7)

NAME OF TEST ACCEPTANCE TEST TEST NO. 106156-401 SHEET 273 OF 413
PART NO. 2-DAY CONFIG. {MAC ____ NAA ____ 14-DAY CONFIG. {MAC 52-52701 NAA 99-106156

7.4.4.44.21 Disconnect the PTC test lines from the Engine System and close all the Component Package manual valves. Re-install all the resistoflex caps on the Component Package ports.

NOTE: Torque values are as shown in Table I.

7.4.4.44.22 Disconnect the ECP electrical connectors from the Engine System electrical harness.

7.4.4.44.23 Return the Engine System to the clean room as called out in paragraph 3.1 and repair as necessary.

7.4.4.44.24 Upon completion of Engine System repair repeat the procedures of paragraph 7.4.1.1 through 7.4.4.43.

7.4.4.45 Remove the leakage sensing lines which were installed in paragraph 7.4.4.4.

PREPARED BY:	DATE	APPROVED FOR NAA:	DATE
T. Kniffin		[illegible]	9-22-64
CHECKED BY: [illegible]	9-21-64		

DESIGN APPROVAL TEST
ORBIT ATTITUDE AND MANEUVER SYSTEM
(SE7)

NAME OF TEST ACCEPTANCE TEST TEST NO. 106156-401 SHEET 274 OF 413

PART NO. 2-DAY CONFIG. {MAC / NAA} 14-DAY CONFIG. {MAC 52-52701 / NAA 99-106156}

7.4.5	Functional and Internal Leakage
7.4.5.1	TCA Propellant Valve Functional
7.4.5.1.1	Opening Response
7.4.5.1.1.1	OPEN the PTC "MAIN SUPPLY VALVE".
7.4.5.1.1.2	Adjust the PTC "HL #1" so that the "SUPPLY PRESSURE" gauge indicates 400 ±25 psig.
7.4.5.1.1.3	OPEN the PTC "PROPELLANT SYSTEM PRESSURANT SUPPLY VALVE".
7.4.5.1.1.4	Throw the PTC "PACKAGE "C" D/S PRESS VALVE" and the "PACKAGE "D" D/S PRESS VALVE" switches to the OPEN position.
7.4.5.1.1.5	Adjust the PTC "HL #2" so that the "PROPELLANT SUPPLY PRESSURE" gauge indicates 300 ±10 psig.
7.4.5.1.1.6	Turn the DC Power Supply Unit "ON".
7.4.5.1.1.6.1	Adjust the DC Power Supply Input Voltmeter to indicate 26 ±.5 VDC.
7.4.5.1.1.7	Throw the ECP "DC Power" switch to the "OFF" position.
7.4.5.1.1.8	Connect an electrical lead from the electrical connector "E_1" on the "ELECTRICAL CHECKOUT JACK PANEL" to the black connector located directly to the left of the ECP oscilloscope "CHANNEL A POLARITY" knob. Connect another electrical lead from the electrical connector E_2 to the upper red connector located directly to the left of the "CHANNEL A POLARITY" knob. Connect another electrical lead from the electrical connector "E_3" to the upper red connector located directly to the right of the "CHANNEL A POLARITY" knob. Connect another electrical lead from the electrical connect "E_4" to the black connector located directly to the right of the "CHANNEL A POLARITY" knob.

PREPARED BY:	DATE	APPROVED FOR NAA:	DATE
T. Kniffin		[illegible]	9-22-64
CHECKED BY: [illegible]	9-21-64		

DESIGN APPROVAL TEST
ORBIT ATTITUDE AND MANEUVER SYSTEM
(SE7)

NAME OF TEST ACCEPTANCE TEST TEST NO. 106156-401 SHEET 275 OF 413
PART NO. 2-DAY CONFIG. {MAC / NAA} 14-DAY CONFIG. {MAC 52-52701 / NAA 99-106156}

7.4.5.1.1.9 Adjust the ECP oscilloscope as follows:

7.4.5.1.1.9.1 Rotate the "INTENSITY" knob clockwise until a "click" is felt.

7.4.5.1.1.9.2 Adjust the "A VERT. SENSITIVITY" (black) knob to "0.1 volts/cm" in the "DC" quadrant. Rotate the "VERNIER" (red) knob clockwise until a "click" is felt.

7.4.5.4.4.9.3 Adjust the "B VERT. SENSITIVITY" (black) knob to "0.1 volts/cm" in the "DC" quanrant. Rotate the "VERNIER" (red) knob clockwise until a "clock" is felt.

7.4.5.1.1.9.4 Adjust the "SWEEP TIME HORIZ. SENS." (black) knob to "1.0 millisec/cm". Rotate the "VERNIER" (red) knob clockwise until a "click" is felt.

7.4.5.1.1.9.5 Throw the "SWEEP TIME HORIZ. SENS." switch to the "DC" position.

7.4.5.1.1.9.6 Throw the "SWP. EXP." switch to the "X1" position.

7.4.5.1.1.9.7 Adjust the "SYNC" (black) knob to the "INT +" position. Adjust the "TRIGGER LEVEL" (red) knob to approximately the midway position.

7.4.5.1.1.9.8 Adjust the "VERT. PRESENTATION" (black) knob to the "CHOP" position. Adjust the "CHANNEL A POLARITY" (red) knob to the "POS UP" position.

7.4.5.1.1.9.9 Adjust the "INTENSITY" and "SCALE" knobs to the full clockwise position.

7.4.5.1.1.9.10 Adjust the "VERTICAL POSITION A" (black) knob and the "HORIZ. POSITION" knob to produce a pinpoint beam of light five

PREPARED BY:	DATE	APPROVED FOR NAA:	DATE
T. Kniffin		[illegible]	9-22-64
CHECKED BY: [illegible]	9-21-64		

DESIGN APPROVAL TEST
ORBIT ATTITUDE AND MANEUVER SYSTEM
(SE7)

NAME OF TEST ACCEPTANCE TEST TEST NO. 106156-401 SHEET 276 OF 413
PART NO. 2-DAY CONFIG. {MAC / NAA} 14-DAY CONFIG. {MAC 52-52701 / NAA 99-106156}

7.4.5.1.1.9.10 (cont'd) centimeters to the left of the vertical grid line and one centimeter below the horizontal grid line. Adjustment of the "TRIGGER LEVEL" (red) knob may also be necessary.

7.4.5.1.1.9.11 Adjust the "VERTICAL POSITION B" (red) knob to produce another pinpoint beam of light five centimeters to the left of the vertical grid line and two centimeters below the horizontal line.

7.4.5.1.1.9.12 Adjust the "FOCUS" knob to bring the beams into focus.

7.4.5.1.1.9.13 Adjust the "INTENSITY" knob counterclockwise to partially reduce the brightness of the beams. The purpose of this is to extend the life of the cathode ray tube.

7.4.5.1.1.10 Throw the ECP "SCOPE TRACE SELECTOR" switch to the "ENERGIZE" position.

7.4.5.1.1.11 Throw the ECP "NO. 1 TCA" switch to the "ON" position.

7.4.5.1.1.12 Throw the ECP "PROP VALVE POWER" switch to the "ON" position and simultaneously take a photograph ofthe oscilloscope screen display. Measure and record the total response time per Figure 48A. Maximum response time shall be 0.0065 seconds for the 25 lb TCA's and .021 seconds for the 85 and 100 lb TCA's.

NOTE: Adjust the "SWEEP TIME HORIZ. SENS." (black) knob to "5.0 millisec/cm" while taking opening response traces of the 85 and 100 lb propellant valves.

7.4.5.1.1.13 Throw the ECP "NO1 TCA" switch to the "OFF" position.

PREPARED BY:	DATE	APPROVED FOR NAA:	DATE
T. Kniffin			
CHECKED BY:	DATE		
[illegible]	9-21-64	[illegible]	9-22-64

DESIGN APPROVAL TEST
ORBIT ATTITUDE AND MANEUVER SYSTEM
(SE7)

NAME OF TEST ACCEPTANCE TEST TEST NO. 106156-401 SHEET 277 OF 413
PART NO. 2-DAY CONFIG. {MAC / NAA} 14-DAY CONFIG. {MAC 52-52701 / NAA 99-106156}

7.4.5.1.1.13 (cont'd)	NOTE: If oscilloscope does not trigger properly, readjust the "TRIGGER LEVEL" (red) knob and repeat paragraphs 7.4.5.1.1.12 and 7.4.5.1.1.13.
7.4.5.1.1.14	Repeat paragraphs 7.4.5.1.1.10 through 7.4.5.1.1.13 for each of the remaining TCA's of the Engine System.
7.4.5.1.2	Closing Response
7.4.5.1.2.1	Throw the ECP "SCOPE TRACE SELECTOR" switch to the "DEENERGIZE" position.
7.4.5.1.2.2	Adjust the ECP oscilloscope as follows:
7.4.5.1.2.2.1	Adjust the "A VERT. SENSITIVITY" (black) knob and the "B VERT. SENSITIVITY" (black) knob each to 10.0 volts/cm" in the "DC" quadrant.
7.4.5.1.2.2.2	Adjust the "VERTICAL POSITION A" (black) knob so that the upper beam is three centimeters above the horizontal grid line.
7.4.5.1.2.2.3	Adjust the "VERTICAL POSITION B" (red) knob so that the lower beam is one centimeter above the horizontal grid line.
7.4.5.1.2.3	Throw the ECP "NO. 1 TCA" switch to the "ON" position.
7.4.5.1.2.4	Throw the ECP "PROP. VALVE POWER" switch to the "ON" position and then to the "OFF" position and simultaneously take a photograph of the oscilloscope screen display. Measure and record total response time per Figure 48B. Maximum response time shall be .0035 seconds for the 25 lb TCA's and .075 seconds for the 85 and 100 lb TCA's.

PREPARED BY:	DATE	APPROVED FOR NAA:	DATE
T. Kniffin			
CHECKED BY:	DATE		
[illegible]	9-21-64	[illegible]	9-22-64

DESIGN APPROVAL TEST
ORBIT ATTITUDE AND MANEUVER SYSTEM
(SE7)

NAME OF TEST ACCEPTANCE TEST TEST NO. 106156-401 SHEET 278 OF 413

PART NO. 2-DAY CONFIG. {MAC ____ NAA ____ 14-DAY CONFIG. {MAC 52-52701 NAA 99-106156

NOTE: Adjust the "SWEEP TIME HORIZ. SENS." (black) knob to "10.0 millisec/cm" while taking closing response traces of the 85 and 100 lb propellant valves.

7.4.5.1.2.5 Throw the ECP "NO. 1 TCA" switch to the "OFF" position.

7.4.5.1.2.6 Repeat paragraphs 7.4.5.1.2.3 through 7.4.5.1.2.5 for each of the remaining TCA's of the Engine System.

7.4.5.1.2.7 CLOSE the PTC "MAIN SUPPLY VALVE".

7.4.5.1.2.8 OPEN the PTC "PROPELLANT SYSTEM VENT VALVE" and vent the system until the "PROPELLANT SUPPLY PRESSURE" gauge indicates 0 psig.

7.4.5.1.2.9 CLOSE the PTC "PROPELLANT SYSTEM VENT VALVE", the "PROPELLANT SYSTEM PRESSURANT SUPPLY VALVE" and turn "HL #1" and "HL #2" to the full closed position.

7.4.5.1.2.10 Remove the electrical leads from the ECP and oscilloscope.

PREPARED BY: T. Kniffin	DATE	APPROVED FOR NAA:	DATE
CHECKED BY: Hawkins	DATE 9-21-64	[illegible]	9-22-64

DESIGN APPROVAL TEST
ORBIT ATTITUDE AND MANEUVER SYSTEM
(SE7)

NAME OF TEST ACCEPTANCE TEST TEST NO. 106156-401 SHEET 279 OF 413
PART NO. 2-DAY CONFIG. {MAC ____ NAA ____ 14-DAY CONFIG. {MAC 52-52701 NAA 99-106156

7.4.5.1.3	Propellant Valve Leakage
7.4.5.1.3.1	Install the throat plugs into the TCA's and attach leakage sensing lines to the throat plug ports. Place the free ends of the leakage sensing lines in beakers of water.
7.4.5.1.3.2	Open the PTC "MAIN SUPPLY VALVE" and the "PROPELLANT SYSTEM PRESSURANT SUPPLY VALVE".
7.4.5.1.3.3	Adjust the PTC "HL #1" to 1000 ±100 psig.
7.4.5.1.3.4	Throw the PTC "PACKAGE "C" D/S PRESS VALVE" switch to the "OPEN" position. The light above the switch will come on.
7.4.5.1.3.5	Adjust the PTC "HL #2" to 300 ±10 psig. Pressure is now being applied to the inlet of the TCA oxidizer propellant valves. Observe the leakage lines for a period of 15 minutes.
7.4.5.1.3.6	If any bubbles are observed from a TCA leakage sensing line, connect that leakage sensing line to a burette test setup and measure the leakage over a period of fifteen (15) minutes.
7.4.5.1.3.7	Maximum allowable leakage for each TCA oxidizer propellant valve is 20 scc for a fifteen (15) minute period. Record the leakage. If no bubbles are observed, record zero leakage.
7.4.5.1.3.8	CLOSE the "PROPELLANT SYSTEM PRESSURANT SUPPLY VALVE".
7.4.5.1.3.9	OPEN the "PROPELLANT SYSTEM VENT VALVE" and vent the system until the "PROPELLANT SUPPLY PRESSURE" gauge reads 0 psig.
7.4.5.1.3.10	Adjust "HL #2" to the CLOSED position.
7.4.5.1.3.11	Throw the PTC "PACKAGE "C" D/S PRESS VALVE" switch to the CLOSED position. The light above the switch will go out.

PREPARED BY:	DATE	APPROVED FOR NAA:	DATE
T. Kniffin		[illegible]	9-22-64
CHECKED BY [illegible]	9-21-64		

DESIGN APPROVAL TEST
ORBIT ATTITUDE AND MANEUVER SYSTEM
(SE7)

NAME OF TEST ACCEPTANCE TEST TEST NO. 106156-401 SHEET 280 OF 413
PART NO. 2-DAY CONFIG. {MAC / NAA} 14-DAY CONFIG. {MAC 52-52701 / NAA 99-106156}

7.4.5.1.3.12	CLOSE the "PROPELLANT SYSTEM VENT VALVE".
7.4.5.1.3.13	OPEN the "PROPELLANT SYSTEM PRESSURANT SUPPLY VALVE".
7.4.5.1.3.14	Throw the PTC "PACKAGE "D" D/S PRESS VALVE" switch to the OPEN position. The light above the switch will go on.
7.4.5.1.3.15	Adjust PTC "HL #2" to 300 ±10 psig. Pressure is now being applied to the inlet side of the TCA fuel propellant valves. Observe the leakage lines for a period of 15 minutes.
7.4.5.1.3.16	If any bubbles are observed from a TCA leakage sensing line, connect that leakage sensing line to a burette test setup and measure the leakage over a period of fifteen (15) minutes.
7.4.5.1.3.17	Maximum allowable leakage for each TCA fuel propellant valve is 20 scc for the fifteen (15) minute period. Record the leakage. If no bubbles are observed record zero leakage.
7.4.5.1.3.18	"CLOSE" the PTC "MAIN SUPPLY VALVE" and the "PROPELLANT SYSTEM PRESSURANT SUPPLY VALVE".
7.4.5.1.3.19	OPEN the "PROPELLANT SYSTEM VENT VALVE" and vent the system until the "PROPELLANT SUPPLY PRESSURE" gauge reads 0 psig.
7.4.5.1.3.20	Throw the PTC "PACKAGE "D" D/S PRESS VALVE" switch to the "CLOSE" position. The light above the switch will go out.
7.4.5.1.3.21	CLOSE the "PROPELLANT SYSTEM VENT VALVE".
7.4.5.1.3.22	CLOSE the PTC "MAIN SUPPLY VALVE".
7.4.5.1.3.23	OPEN the PTC "SUPPLY VENT VALVE" and vent the pressure until the "SUPPLY PRESSURE" gauge reads 0 psig.

PREPARED BY:	DATE	APPROVED FOR NAA:	DATE
T. Kniffin		[illegible]	9-22-64
CHECKED BY: [illegible]	9-21-64		

DESIGN APPROVAL TEST
ORBIT ATTITUDE AND MANEUVER SYSTEM
(SE7)

NAME OF TEST ACCEPTANCE TEST TEST NO. 106156-401 SHEET 281 OF 413
PART NO. 2-DAY CONFIG. {MAC / NAA} 14-DAY CONFIG. {MAC 52-52701 / NAA 99-106156}

7.4.5.1.3.24 CLOSE the PTC "HL #1", "HL #2" and the "SUPPLY VENT VALVE".

7.4.5.1.3.25 Remove the leakage sensing lines from each of the TCA seal fixtures.

7.4.5.1.3.26 Remove the TCA seal fixtures from the TCA's.

7.4.6. . . Liquid Calibration

7.4.6.1 Preparation

7.4.6.1.1 Remove the isolation valves from PACKAGES "C" and "D" and attach in their place the CARTRIDGE VALVE REPLACEMENT BLOCKS (P/N 99-103326) as shown in Figure 17.

7.4.6.1.2 Attach to the PACKAGE "C" CARTRIDGE VALVE REPLACEMENT BLOCK a flowmeter (F_3), a delta P pressure transducer (G_5), a pressure transducer (G_4) and a temperature sensor (T_1) as shown in Figure 49.

7.4.6.1.3 Attach to the PACKAGE "D" CARTRIDGE VALVE REPLACEMENT BLOCK a flowmeter (F_4), a delta P pressure transducer (G_5), a pressure transducer (G_4) and a temperature sensor (T_1) as shown in Figure 49.

7.4.6.1.4 Install a throat plug (P/N 9017831 or 9017844) in each TCA with drain lines to handle the test fluid discharge as shown in Figure 49.

7.4.6.1.5 Fill the Engine System oxidizer propellant tank with Freon TF per paragraph 6.1.3.1.2.1.

NOTE: Do not remove the Facility Vent Valve and line connected to the "OXID TANK VENT - 6".

PREPARED BY: T. Kniffin	DATE	APPROVED FOR NAA:	DATE
CUSTOMER BY:	DATE 11-2-64		11-2-64

DESIGN APPROVAL TEST
ORBIT ATTITUDE AND MANEUVER SYSTEM
(SE7)

NAME OF TEST ACCEPTANCE TEST TEST NO. 106156-401 SHEET 282 OF 413
PART NO. 2-DAY CONFIG. {MAC / NAA} 14-DAY CONFIG. {MAC 52-52701 / NAA 99-106156}

7.4.6.1.6 Fill the Engine System fuel propellant tank with isopropyl alcohol per paragraph 6.1.3.1.2.2.

NOTE: Do not remove the Facility Vent Valve and line connected to the "FUEL TANK VENT - 4".

7.4.6.1.7 Remove the resistoflex caps on the Engine System "HI PRESS GAS TEST PORT - 2", and the "HI PRESS GAS TEST VALVE - 2A".

7.4.6.1.8 Install the test facility service connections as shown in Figure 49.

7.4.6.1.9 OPEN the Engine System "HI PRESS GAS TEST VALVE - 2A".

7.4.6.1.10 Assure that the Engine System "OXID TANK VENT VALVE - 6A" and the "FUEL TANK VENT VALVE - 4A" are in the full open position.

7.4.6.1.11 Disconnect the electrical harness at the TCA fuel propellant valves.

7.4.6.1.12 Connect a 3000 ±100 psig He supply to the "HI PRESS GAS TEST PORT - 2" as shown in Figure 49. B

7.4.6.1.13 Provide 28 VDC to the ECP.

PREPARED BY:	DATE	APPROVED FOR NAA:	DATE
T. Kniffin		R H Eide	11-2-64
CHECKED BY:	DATE		
[illegible]	11-2-64		

Rev. B [illegible] Date [illegible]

DESIGN APPROVAL TEST
ORBIT ATTITUDE AND MANEUVER SYSTEM
(SE7)

NAME OF TEST ACCEPTANCE TEST TEST NO. 106156-401 SHEET 283 OF 413

PART NO. 2-DAY CONFIG. {MAC ____ NAA ____ 14-DAY CONFIG. {MAC 52-52701 NAA 99-106156

7.4.6.2 Test Procedure

7.4.6.2.1 OPEN the facility GN_2 supply valve.

7.4.6.2.2 Instrumentation shall be in accordance with Table II and Figure 49. Data shall be recorded continuously during TCA operation.

7.4.6.2.3 Actuation of the TCA's shall be effected in the following manner:

7.4.6.2.3.1 Set the TCA No. 1 switch on the ECP panel to "ON" position.

7.4.6.2.3.2 Throw the ECP "DC POWER" switch to the "ON" position and hold for the duration specified in the "Signal On Time" column of Table 3.

7.4.6.2.3.3 Sequentially perform the operations of paragraphs 7.4.6.2.3.1 and 7.4.6.2.3.2 for the subsequent "Test Operations" and TCA NO's" of Table 3.

7.4.6.2.4 Reinstall the electrical harness, P/N 99-501805, connections to the TCA fuel propellant valves.

7.4.6.2.5 Disconnect the electrical hraness, P/N 99-501805, at the TCA oxidizer propellant valves.

PREPARED BY:	DATE	APPROVED FOR NAA:	DATE
E. Charles			
CHECKED BY:	DATE		
	11-2-64		11-2-64

DESIGN APPROVAL TEST
ORBIT ATTITUDE AND MANEUVER SYSTEM
(SE7)

NAME OF TEST ACCEPTANCE TEST TEST NO. 106156-401 SHEET 284 OF 413

PART NO. 2-DAY CONFIG. {MAC ____ NAA ____ 14-DAY CONFIG. {MAC 52-52701 NAA 99-106156

7.4.6.2.6 Repeat paragraphs 7.4.6.2.3.

7.4.6.3 Post Test

7.4.6.3.1 CLOSE the facility GN_2 supply valve.

7.4.6.3.2 OPEN the Facility Vent Valves connected to the "OXID TANK VENT PORT - 6" and the "FUEL TANK VENT PORT - 4" and allow the pressure to vent.

7.4.6.3.3 Remove the test facility service connections of paragraph 7.4.6.18.

7.4.6.3.4 CLOSE the "HI PRESS GAS TEST VALVE - 2A" and replace the cap on the "HI PRESS GAS TEST PORT - 2".

7.4.6.3.5 Re-install the electrical harness, P/N 99-501805, connections to the TCA oxidizer propellant valves.

7.4.6.3.6 Perform the procedures of paragraph 6.2.2.1.1 and 6.2.2.1.2.

7.4.6.3.7 Disconnect the ECP electrical connections to the Engine System.

7.4.6.3.8 Assure that all the Engine System manual valves are closed and that the resistoflex caps to the access ports are properly installed.

. . . . NOTE: Torque values of Table I shall be utilized.

7.4.6.3.9 Prepare the Engine System for shipment in accordance with paragraph 3.3.1.

7.4.6.3.10 Reduce the test data in accordance with paragraph 7.4.7.5.

PREPARED BY: T. Kniffin	DATE	APPROVED FOR NAA: R. T. Eide	DATE 11-2-64
CHECKED BY: [illegible]	DATE 11-2-64		

ROCKETDYNE
A DIVISION OF NORTH AMERICAN AVIATION, INC

DESIGN APPROVAL TEST
ORBIT ATTITUDE AND MANEUVER SYSTEM
(SE7)

NAME OF TEST ACCEPTANCE TEST TEST NO. 106156-401 SHEET 285 OF 413

PART NO. 2-DAY CONFIG. {MAC / NAA} 14-DAY CONFIG. {MAC 52-52701 / NAA 99-106156}

7.4.7
7.4.7.1

Test Data
Engine System Identification

Engine System Name: OAMS

McDonnell Part No.: 52-52701

Rocketdyne Part No.: 99-106156

Component Name	Part Number Rocketdyne	Part Number MAC	Serial Number
TCA #1	208160-31	SCD 52-52701-273	4057135
TCA #2	208160-21	SCD 52-52701-271	4058291
TCA #3	208160-31	SCD 52-52701-273	4057134
TCA #4 *	208160-21	SCD 52-52701-271 *	4057179
TCA #5	208160-31	SCD 52-52701-273	4057133
TCA #6	208160-21	SCD 52-52701-271	4057184
TCA #7	208160-31	SCD 52-52701-273	4057123
TCA #8 **	208160-21	SCD 52-52701-271	4057178
TCA #9	207540-21	52-52701-277	4054769
TCA #10	207540-21	52-52701-277	4060932
TCA #11	207510-21	52-52701-275	4060057

** REF. IL 4388-5287 DTD 17 DEC 64 * REF IL 4388-5254 DTD 12-2-64

PREPARED BY: DATE	PERFORMED BY: DATE	WITNESSED FOR NAA: DATE	CERTIFIED FOR McDONNELL: DATE
T. Kniffin	H. E. Wallace 11-30-64	J. Kaye 11-30-64	WAIVED BY R.L. Fox 11-30-64
			VERIFIED BY USAF: DATE Robert M. Myers

R-15075-1

ROCKETDYNE
A DIVISION OF NORTH AMERICAN AVIATION, INC

DESIGN APPROVAL TEST
ORBIT ATTITUDE AND MANEUVER SYSTEM
(SE7)

NAME OF TEST ACCEPTANCE TEST TEST NO. 106156-401 SHEET 286 OF 413

PART NO. 2-DAY CONFIG. { MAC ____ NAA ____ } 14-DAY CONFIG. { MAC 52-52701 NAA 99-106156 }

7.4.7.1
(cont'd)

Component Name	Part Number Rocketdyne	Part Number MAC	Serial Number
TCA #12	207510-21	52-52701-275	4058404
TCA #13	207540-21	52-52701-277	4064382
TCA #14	207540-21	52-52701-277	4058956
TCA #15	207540-21	52-52701-277	4054766
TCA #16	207540-21	52-52701-277	4054760
* TCA * 4	208160-21	SCD 52-52701-271	4057181
** TCA * 8	208160-21	SCD 52-52701-271	4057121

* REF IL 4388-5254 DTD 12-2-64
** REF IL 4388-5287 DTD 12-17-64

PREPARED BY: DATE	PERFORMED BY: DATE	WITNESSED FOR NAA: DATE	CERTIFIED FOR McDONNELL DATE
T. Kniffin	H. E. Wallace 11-30-64	H. Kouge 11-30-64	WAIVED BY R. L. FREE 11-30-64
			VERIFIED BY USAF 11/30/ DATE

R-15075-1

DESIGN APPROVAL TEST
ORBIT ATTITUDE AND MANEUVER SYSTEM
(SE7)

NAME OF TEST ACCEPTANCE TEST TEST NO. 106156-401 SHEET 287 OF 413

PART NO. 2-DAY CONFIG. {MAC ____ / NAA ____} 14-DAY CONFIG. {MAC 52-52701 / NAA 99-106156}

7.4.7.2 Proof Pressure of Engine System

The Engine System was subjected to a proof pressure test in accordance with paragraph 7.4.3 YES (Yes or No).

Remarks:

NONE 11-24-64

PROOF PRESSURE TEST WAS RE-RUN IN ACCORDANCE WITH PARAGRAPH 7.4.3 5 DEC 64 REF IL 4388-5254 DTD 12-2-64

7.4.7.3 Gross External Leak Check

Auxiliary vacuum gauge reading 4×10^{-4} MM OF Hg

Calibrated Leak Rate (Per Paragraph 7.4.4.20) 47.5 scc/hr

Calibration Leak Rate (Per Paragraph 7.4.4.25) 47.5 scc/hr

PREPARED BY: DATE	PERFORMED BY: DATE	WITNESSED FOR NAA: DATE	CERTIFIED FOR McDONNELL DATE
T. Kniffin	S. Lombardo 11-30-64	30 Nov 64	30 Nov. 64
			VERIFIED BY USAF DATE

IL 4388-5254

INTERNAL LETTER
North American Aviation, Inc.

DATE 2 December 1964

TO Those Concerned
Address

FROM Gemini DAT-RAT Unit
Address D/896-388

SUBJECT SE7 Engine System (S/C 3) DAT

REFERENCE (a) Test Procedure 106156-401
(b) OFR 15762R

During gross leak check per paragraph 7.4.4 of reference (a), thrust chamber #4 (P/N 208160-21, S/N 4057179) was found to be leaking at the weld joint between the fuel propellant valve and upstream tube stub and at the fuel side orifice holder.

McDonnell Aircraft Corporation and Rocketdyne have agreed that the TCA is to be replaced and testing is to continue beginning with paragraph 7.4 except that paragraph 7.4.4.14 through 7.4.4.27 shall not be repeated because Rocketdyne feels that the original calibration curve is still valid.

T. G. Kniffin
T. G. Kniffin
Gemini DAT-RAT Unit

Approved: James D. Mavrogenis
J. D. Mavrogenis
MAC Engineering
2-3-64

R. G. Eide
R. G. Eide
Supervisor
Gemini DAT-RAT Unit

ROCKETDYNE

INSPECTION DISCREPANCY AND CORRECTION RECORD

MAKE ENTRY CLEAR AND CONCISE, USE INK

Serial No. C18[illegible]

TEST Dwg. No. 106156-401

Model SE-7

DCP No.	Ent'd By & Date	DESCRIPTION OF DISCREPANCY AND ACTION TAKEN	CLEARED BY Mech. & Date	Leadman & Date	Insp. & Date
45	ANR 224 11/24/64	PART NO. PARA 7.4.2.8 SPECIFIES, "SUPPLY 6000 PSIG HE (helium) TO THE PTC SUPPLY PORT". DURING TEST 5400 PSIG HE WAS SUPPLIED TO THE PTC SUPPLY PORTS.			
		ACTION TAKEN: REF IL DTD 11-24-64		ANR 224 11-24-64	ANR 224
46	ANR 224 11/31/64	PART NO. P/N 208160-21 S/N 4057179 TCA # 4-25# (REF PARA 7.4.4.44) DURING GROSS EXTERNAL LEAKAGE TEST, PARA 7.4.4 EXCESSIVE LEAKAGE WAS NOTICED AT FUEL VALVE OF TCA. 1. AT WELD BETWEEN FUEL VALVE AND FUEL INLET LINE. 2. AT WELD BETWEEN CPV FITTING AND TUBE STUB. 3. AT BRAZE BETWEEN TUBE STUB AND SLEEVE.			
		ACTION TAKEN: REMOVED AND REPLACED TCA #4 S/N 4057179 WITH S/N 4057181 PER RA0607-009 REQUIRMENTS. TUBE STUB AND SLEEVE WERE REPLACED AT TIME OF TCA REPLACEMENT 12/4/64 REF. IL 4388-5254 DTD 12-2-64 & OFR 15762R	DATE 12-4-	ANR 264	ANR 264
47	ANR 224 12/8/64	PART NO. B/P 99-9017055 B BHO: CONNECTOR TABULATION ITEMS 9 THRU 24 FOR THE SE-7 ENG SYSTEM ARE IN ERROR. ALSO, FUEL AND OXID ~~LINES~~ DESIGNATIONS FOR THE SOLENOIDS OF TCA'S 9 THRU 16 ARE REVERSED.			
		ACTION TAKEN: Blueprint will be corrected. Troy Knuff. D/896-388 X6107 12/8/64 Blueprint corrected 1-18-65 Troy Knuff	1-20-65	ANR 930	ANR 930
48	ANR 921 12/13/64	PART NO. NO DATA RECORDING SHEET IS FURNISHED TO RECORD OPERATIONS OF PARA. 7.4.6.2 - 64.6.2.6 WHICH WAS COMPLETED. DATA REQUIRED BY PAGES 276, 277 IS PENDING REDUCTION. NO DATA RECORDING SHEET IS FURNISHED FOR POST TEST OPERATIONS OF PARA. 7.4.6.3 - 64.6.3.10 WHICH IS COMPLETED UPTO PARA. 7.4.6.3.7 TO DATE			
		ACTION TAKEN: INFORMATION ONLY	12/17/64 ANR 921		ANR 921
49	ANR 941 12/14/64	PART NO. 25# TCAs (S/N 4057135 & 4058291) No's 1 & 2 HAVE LEAKS IN VICINITY OF PC BOSSES.** ~~FLOW AT PROBER VALVE WAS MORE 25% OF REQUIRED FLOW DURING "LIQUID CALIBRATION" PARA. 7.4.6~~			
		ACTION TAKEN: Additional TCAs were performed with result [illegible] leakage was indicated. Permanent [illegible]	12/14/64 Troy Knuff		987

R-15075-1

Form R 25-U Rev. 12-57

WRITTEN IN ERROR, (ANR 224) ** SEE DCP # 51 (ANR 224)

DESIGN APPROVAL TEST
ORBIT ATTITUDE AND MANEUVER SYSTEM
(SE7)

NAME OF TEST ACCEPTANCE TEST TEST NO. 106156-401 SHEET 288 OF 413
PART NO. 2-DAY CONFIG. {MAC / NAA} 14-DAY CONFIG. {MAC 52-52701 / NAA 99-106156}

7.4.7.3 (cont'd)

Mass spectrometer indicator readings (ten minute intervals) for calibrated leak.

Time	Reading	Time	Reading
3:15PM	200	5:45	410
3:25	200	5:55	420
3:35	220	6:05	440
3:45	230	6:15	450
3:55	260	6:25	460
4:05	280	6:35	470
4:15	300	6:45	480
4:25	300	6:55	490
4:35	310	7:05	500
4:45	310	7:15	510
4:55	320	7:25	520
5:05	340	7:35	530
5:15	370	7:45	540
5:25	380	7:55	560
5:35	390	8:05	570
		8:15	500

11-30-64

Mass spectrometer indicator readings (ten minute intervals) for Engine System leakages.

REF DCP #46 DTD 12-31-64

Time	Reading	Time	Reading
4:00PM	160	4:20	170
4:10	160	4:30	170

PREPARED BY: DATE	PERFORMED BY: DATE	WITNESSED FOR NAA: DATE	CERTIFIED FOR McDONNELL DATE
T. Kniffin	James M. Bonet 11/30/64	[illegible]	[illegible] 5 DEC 64
			VERIFIED BY USAF DATE
			Robin 12/7/64

DESIGN APPROVAL TEST
ORBIT ATTITUDE AND MANEUVER SYSTEM
(SE7)

NAME OF TEST: ACCEPTANCE TEST — TEST NO. 106156-401 SHEET 289 OF 413

PART NO. 2-DAY CONFIG. { MAC / NAA } — 14-DAY CONFIG. { MAC 52-52701 / NAA 99-106156 }

7.4.7.3 (cont'd)

Time	Reading	Time	Reading
4:40	190	6:50	280
4:50	240	7:00	300
5:00	210	7:10	340
5:10	220	7:20	380
5:20	230	7:30	360
5:30	240	7:40	360
5:40	270	7:50	380
5:50	300	8:00	440
6:00	* VOID 260	8:10	380
6:10	* VOID 260	8:20	390
6:20	300	8:30	390
6:30	300	8:40	420
6:40	300	8:50	420
		9:00	430

* ENTERED IN ERROR

PREPARED BY:	DATE	PERFORMED BY:	DATE	WITNESSED FOR NAA:	DATE	CERTIFIED FOR MCDONNELL	DATE
T. Enniffin		James M. Bonel	12/5/64	J. Kayl	12-5-64	R.L. Frost	12-5-64
						VERIFIED BY USAF	DATE

DESIGN APPROVAL TEST
ORBIT ATTITUDE AND MANEUVER SYSTEM
(SE7)

NAME OF TEST ACCEPTANCE TEST TEST NO. 106156-101 SHEET 290 OF 413
PART NO. 2-DAY CONFIG. {MAC / NAA} 14-DAY CONFIG. {MAC 52-52701 / NAA 99-106156}

7.4.7.3
(continued)

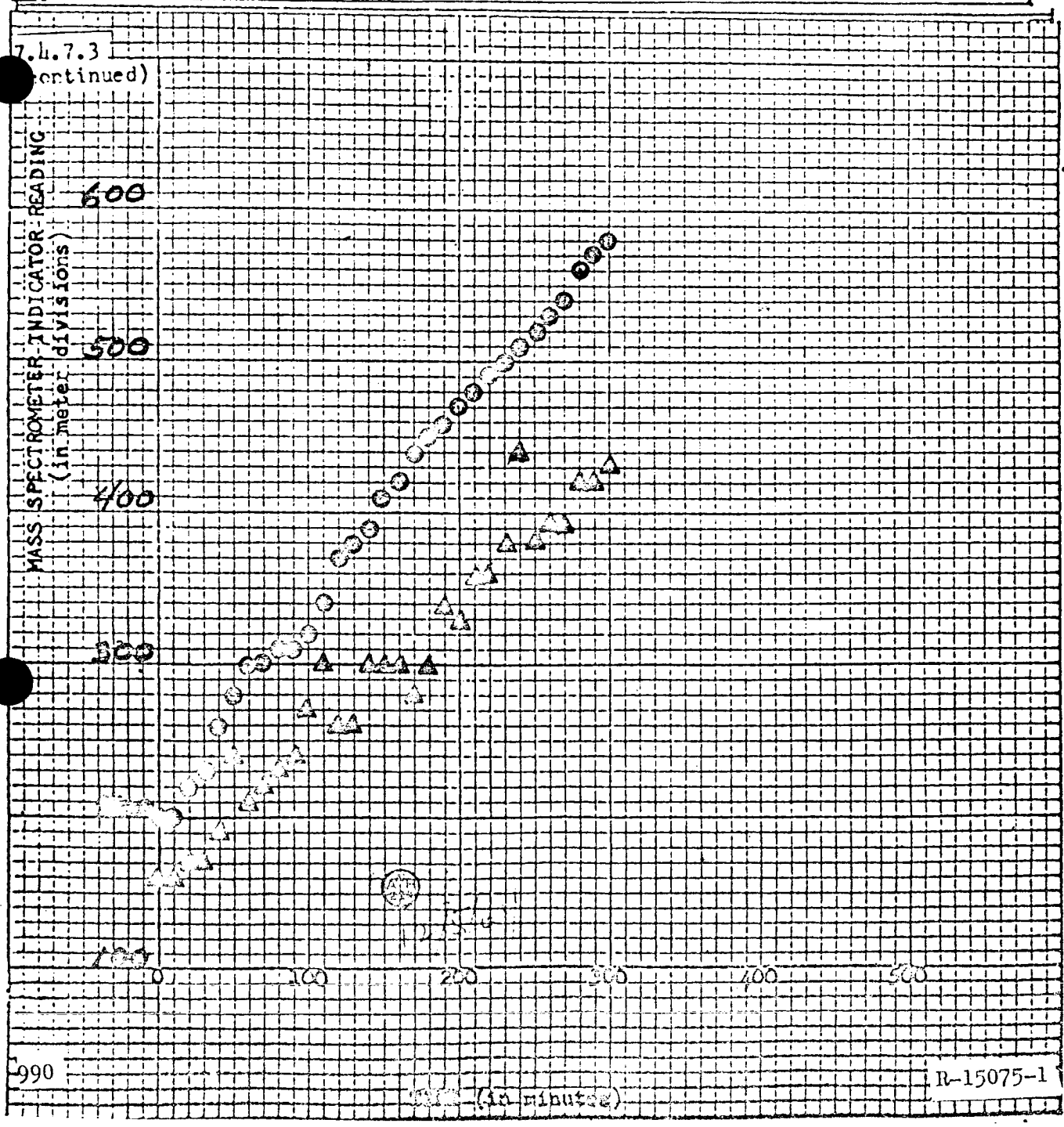

DESIGN APPROVAL TEST
ORBIT ATTITUDE AND MANEUVER SYSTEM
(SE7)

NAME OF TEST ACCEPTANCE TEST TEST NO. 106156-401 SHEET 291 OF 413

PART NO. 2-DAY CONFIG. {MAC / NAA} 14-DAY CONFIG. {MAC 52-52701 / NAA 99-106156}

7.4.7.3 (continued) If it is necessary to perform a point leak check per paragraph 7.4.4.44 enter locations of leakage here.

Refer to IL 4388-5254

DTD 2 DEC 64

7.4.7.4 Checkout of Propellant Valves (Reference Paragraph 7.4.5.1).

Opening response time
25 lb TCA's:

	Oxid Valve	Fuel Valve	
TCA #1	.0039	.0030	(.0065 sec maximum)
TCA #2	.0039	.0035	(.0065 sec maximum)
TCA #3	.0038	.0038	(.0065 sec maximum)
TCA #4	.0039	.0036	(.0065 sec maximum)
TCA #5	.00435	.0038	(.0065 sec maximum)
TCA #6	.0047	.0034	(.0065 sec maximum)

12-6-64

PREPARED BY: DATE	PERFORMED BY: DATE	WITNESSED FOR NAA: DATE	CERTIFIED FOR McDONNELL DATE
T. Kniffin	J. Wallace 12-6-64	K. Kaye 12-6-64	WAIVED BY R.L. FREE
			VERIFIED BY USAF 12/6/64 DATE

DESIGN APPROVAL TEST
ORBIT ATTITUDE AND MANEUVER SYSTEM
(SE7)

NAME OF TEST ACCEPTANCE TEST TEST NO. 106156-401 SHEET 292 OF 413

PART NO. 2-DAY CONFIG. {MAC ____ NAA ____ 14-DAY CONFIG. {MAC 52-52701 NAA 99-106156

7.4.7.4 (continued)

25 lb TCA's

	Oxid Valve	Fuel Valve	
TCA #7	.0037	.0042	(.0065 sec maximum)
TCA #8	.0032	.0034	(.0065 sec maximum)

85 lb TCA's:

	Oxid Valve	Fuel Valve	
TCA #11	.0175	.0175	(.021 sec maximum)
TCA #12	.0172	.0165	(.021 sec maximum)

100 lb TCA'S:

	Oxid Valve	Fuel Valve	
TCA #9	.017	.0160	(.021 sec maximum)
TCA #10	.0175	.0165	(.021 sec maximum)
TCA #13	.0172	.0170	(.021 sec maximum)
TCA #14	.0162	.0170	(.021 sec maximum)
TCA #15	.0172	.0170	(.021 sec maximum)
TCA #16	.0165	.0165	(.021 sec maximum)

PREPARED BY: DATE	PERFORMED BY: DATE	WITNESSED FOR NAA: DATE	CERTIFIED FOR McDONNELL DATE
T. Kniffin	H. Elliott 12-6-64	D. Kaye 12-6-64	WAIVED BY R. L. FIRER
			VERIFIED BY USAF 12/6/64 DATE

DESIGN APPROVAL TEST
ORBIT ATTITUDE AND MANEUVER SYSTEM
(SE7)

NAME OF TEST ACCEPTANCE TEST TEST NO. 106156-401 SHEET 293 OF 413

PART NO. 2-DAY CONFIG. {MAC ____ NAA ____ 14-DAY CONFIG. {MAC 52-52701 NAA 99-106156

7.4.7.4
(continued)

Closing response time
25 lb TCA's:

	Oxid Valve	Fuel Valve	
TCA #1	.0019	.0025	(.0035 sec maximum)
TCA #2	.0021	.0024	(.0035 sec maximum)
TCA #3	.0018	.0023	(.0035 sec maximum)
TCA #4	.0022	.0022	(.0035 sec maximum)
TCA #5	.0020	.0022	(.0035 sec maximum)
TCA #6	.0021	.0023	(.0035 sec maximum)
TCA #7	.0020	.0022	(.0035 sec maximum)
TCA #8	.0020	.0023	(.0035 sec maximum)

85 lb TCA's:

	Oxid Valve	Fuel Valve	
TCA #11	.048	.054	(.075 sec maximum)
TCA #12	.048	.052	(.075 sec maximum)

12-6-64

PREPARED BY: DATE	PERFORMED BY: DATE	WITNESSED FOR NAA: DATE	CERTIFIED FOR McDONNELL DATE
T. Kniffin	C. J. Oliveri 12-6-64	D. Kaye 12-6-64	LAIRED BY R. L. FREE 12-5-64
			VERIFIED BY USAF DATE W. B. Bonbarder 12-6-64

DESIGN APPROVAL TEST
ORBIT ATTITUDE AND MANEUVER SYSTEM
(SE7)

NAME OF TEST: ACCEPTANCE TEST TEST NO. 106156-401 SHEET 294 OF 413

PART NO. 2-DAY CONFIG. {MAC / NAA} 14-DAY CONFIG. {MAC 52-52701 / NAA 99-106156}

7.4.7.4
(continued)

100 lb TCA's:

	Oxid Valve	Fuel Valve	
TCA #9	.052	.048	(.075 sec maximum)
TCA #10	.044	.054	(.075 sec maximum)
TCA #13	.050	.047	(.075 sec maximum)
TCA #14	.044	.054	(.075 sec maximum)
TCA #15	.051	.054	(.075 sec maximum)
TCA #16	.050	.049	(.075 sec maximum)

Leakage
25 lb TCA's:

	Oxid Valve	Fuel Valve	
TCA #1	ZERO	ZERO	(20 scc/15min max)
TCA #2	ZERO	ZERO	(20 scc/15min max)
TCA #3	ZERO	ZERO	(20 scc/15min max)
TCA #4	ZERO	ZERO	(20 scc/15min max)
TCA #5	ZERO	ZERO	(20 scc/15min max)

PREPARED BY: DATE	PERFORMED BY: DATE	WITNESSED FOR NAA: DATE	CERTIFIED FOR McDONNELL DATE
T. Kniffin	12-6-64	12-6-64	WAIVED BY R.L. FREE
			VERIFIED BY USAF DATE

DESIGN APPROVAL TEST
ORBIT ATTITUDE AND MANEUVER SYSTEM
(SE7)

NAME OF TEST ACCEPTANCE TEST TEST NO. 106156-40 SHEET 295 OF 413

PART NO. 2-DAY CONFIG {MAC ____ NAA ____} 14-DAY CONFIG {MAC 52-52701 NAA 99-106156}

7.4.7.4
(continued)

Leakage
25 lb TCA's:

	Oxid Valve	Fuel Valve	
TCA #6	ZERO (ANR 224)	ZERO (ANR 224)	(20 scc/15min max)
TCA #7	ZERO (ANR 224)	ZERO (ANR 224)	(20 scc/15min max)
TCA #8	ZERO	ZERO	(20 scc/15min max)

	Oxid Valve	Fuel Valve	
TCA #11	ZERO (ANR 041)	ZERO (ANR 041)	(20 scc/15min max)
TCA #12	ZERO (ANR 224)	ZERO (ANR 224)	(20 scc/15min max)

100 lb TCA's

	Oxid Valve	Fuel Valve	
TCA #9	1.8 SCC (ANR 041)	ZERO (ANR 041)	(20 scc/15min max)
TCA #10	ZERO (ANR 224)	ZERO (ANR 224)	(20 scc/15min max)
TCA #13	ZERO (ANR 041)	ZERO (ANR 041)	(20 scc/15min max)
TCA #14	ZERO (ANR 224)	ZERO (ANR 224)	(20 scc/15min max)
TCA #15	ZERO (ANR 041)	ZERO (ANR 224)	(20 scc/15min max)
TCA #16	ZERO (ANR 041)	ZERO (ANR 041)	(20 scc/15min max)

12-6-64

PREPARED BY: DATE	PERFORMED BY: DATE	WITNESSED FOR NAA: DATE	CERTIFIED FOR McDONNELL DATE
T. Kniffin	Tom J. Stalnaker 12-6-64	C.R. Kent 6 Dec 64 (ANR 041)	SIGNED BY (ANR 041) R. FREE 6 Dec. 64
			VERIFIED BY USAF DATE 6/Dec/64

DESIGN APPROVAL TEST
ORBIT ATTITUDE AND MANEUVER SYSTEM
(SE7)

NAME OF TEST ACCEPTANCE TEST TEST NO. 106156-403 SHEET 296 OF 413

PART NO. 2-DAY CONFIG. { MAC ____ NAA ____ } 14-DAY CONFIG. { MAC 52-52701 NAA 99-106156 }

7.4.7.5 Liquid Calibration

Test Operation	Test Parameters							
	Oxidizer System				Fuel System			
	Pressure psig (1)	Delta Pr psi (3)	Temp F (5)	Flow gpm (7)	Pressure psig (2)	Delta Pr psi (4)	Temp F (6)	Flow gpm (8)
1	297	0	66	.293	295	0	70	.383
2	296	0	66	.331	295	0	78	.412
3	295	0	68	.312	297	0	79	.412
4	295	0	68	.321	297	0	80	.422
5	295	0	68	.312	294	0	72	.403
6	295	0	68	.302	296	0	80	.422
7	295	0	68	.321	296	0	80	.412
8	296	0	68	.316	296	0	79	.398
9	290	.5	68	1.321	292	.4	70	1.430
10	291	.5	68	1.359	290	.4	77	1.468
11	293	.3	66	1.032	293	.3	69	1.113
12	292	.2	66	.993	292	.3	70	1.075
13	290	.4	66	1.215	291	.4	72	1.315
14	291	.4	65	1.205	291	.3	68	1.219
15	291	.3	64	1.157	291	.4	68	1.353
16	290	.5	64	1.311	290	.4	67	1.468
17	294	0	64	.628	293	.2	67	.777
18	295	0	64	.632	293	.2	67	.815
19	296	0	64	.364	294	.2	67	.796
20	295	0	64	.628	294	.2	67	.815
21	285	1.0	64	2.380	285	.9	77	2.438
22	287	.7	64	1.937	286	.8	77	2.150
23	294	.2	64	.936	290	.4	72	1.247
24	265	2.0	63	4.113	272	2.9	68	4.675
25	283	1.0	63	2.524	283	1.2	67	2.899
26	271	1.7	63	3.757	273	2.4	66	4.204
27	289	.6	63	1.691	288	.8	66	2.207

PREPARED BY: DATE	PERFORMED BY: DATE	WITNESSED FOR NAA: DATE	CERTIFIED FOR McDONNELL: DATE
T. Kniffin	12/11/62	ANR 921	ANR 921
			VERIFIED BY USAF: DATE 15 Dec 62

DESIGN APPROVAL TEST
ORBIT ATTITUDE AND MANEUVER SYSTEM
(SE7)

NAME OF TEST ACCEPTANCE TEST TEST NO. 106156-401 SHEET 297 OF 413

PART NO. 2-DAY CONFIG. { MAC / NAA } 14-DAY CONFIG. { MAC 52-52701 / NAA 99-106156 }

7.4.7.5 (continued)

Test Operation	Test Parameters							
	Oxidizer System				Fuel System			
	Pressure psig (1)	Delta Pr psi (3)	Temp F (5)	Flow gpm (7)	Pressure psig (2)	Delta Pr psi (4)	Temp F (6)	Flow gpm (8)
28	284	1.0	63	2.524	284	1.2	66	2.927
29	279	1.2	63	2.080	281	1.6	66	3.350

( ) Denotes instrumentation transducer location.

PREPARED BY: DATE	PERFORMED BY: DATE	WITNESSED FOR NAA: DATE	CERTIFIED FOR McDONNELL: DATE
T. Kniffin	12/11/64	12-15-64	R L FREE 12-11-64
			VERIFIED BY USAF: DATE 15 DEC 64

R-15075-1

IL 4388-5287

INTERNAL LETTER
North American Aviation, Inc.

DATE 17 December 1964

TO Those Concerned
Address

FROM Gemini DAT-RAT Unit
Address D/896-388

SUBJECT SE7 Engine System DAT (S/C 3)

REFERENCE (a) OFR 12941R

During Liquid Calibration per test procedure 106156-401 TCA #8 demonstrated a flowrate on the oxidizer side which was approximately one-third of that which was expected.

McDonnell Aircraft Corporation and Rocketdyne have decided that TCA #8 is to be replaced and that after replacement the following testing is to be accomplished prior to shipment of the Engine System to Santa Susana Field Laboratory for hot fire testing:

1. Conduct proof pressure of the propellant manifolds in accordance with paragraph 7.4.3 of test procedure 106156-401.

2. Conduct response and leakage tests of TCA #8 in accordance with paragraph 7.4.5.

3. Pressurize the propellant manifolds with helium to 125±10 psig and perform a leak test of the rework braze joints with a mass spectrometer using the sampling probe technique.

4. Perform liquid calibration of TCA #8 per test procedure 106156-401 with the exception that the cartridge valve replacement block is to be modified such that no safety fluids (alcohol or freon) are allowed to enter the propellant tanks. Instead, safety fluids are to be supplied to the cartridge valve replacement block, upstream of the flowmeter from an external source. The external source shall be pressurize to approximately 300 psig such that the pressure immediately downstream of the flowmeter during flow conditions is 295±5 psig.

   Upon completion of liquid calibration the propellant manifold shall be pressurized with GN_2 at 50±5 psig and the TCA solenoid valves actuated for ten minutes minimum to remove safety fluids.

As the above steps are completed the following data is to be entered:

1. The propellant manifolds were subjected to proof pressure of 450 $^{+15}_{-0}$ psig for 3 minutes 460-YES (yes or no).

2. Response (TCA #8)

	Oxid	Fuel	
Opening	.0038	.0040	(.0065 sec maximum)
Closing	.0021	.0032	(.0035 sec maximum)

Leakage (TCA #8) ZERO (20 scc He/15 min maximum)

3. The rework braze joints were leak tested. No leakage was indicated TRUE (true or false).

4. Liquid Calibration

Oxidizer System		Fuel System	
(1) Pressure (psig)	294	(2) Pressure (psig)	297
(3) Delta P (psi)	ZERO	(4) Delta P (psi)	ZERO
(5) Temp (F)	68	(6) Temp (F)	68
(7) Flow (gpm)	.297	(8) Flow (gpm)	.388

T. G. Kniffin
T. G. Kniffin
Gemini DAT-RAT Unit

Approved: R. G. Eide
R. G. Eide
Supervisor
Gemini DAT-RAT Unit

S. Scott
S. Scott
MAC Engineering

ROCKETDYNE

INSPECTION DISCREPANCY AND CORRECTION RECORD

MAKE ENTRY CLEAR AND CONCISE, USE INK

Serial No. 0187414

Dwg. No. 99-106161

Model SE/7

DCP No.	Ent'd By & Date	DESCRIPTION OF DISCREPANCY AND ACTION TAKEN	CLEARED BY Mech. & Date	Lead-man & Date	Insp. & Date
44 50 45	ANR 941 14/TEC. 14	PART NO. CONNECTOR, ELECTRICAL ON SOLENOID VALVE IMMEDIATELY DOWNSTREAM OF OXIDIZER TANK VENT VALVE (6A) ON PKG "B" IS BROKEN.			
ACTION TAKEN		CONNECTOR REPLACED, REPLACED PER RAO 113-006	419 8406	ANR 224	ANR 224 12-15-64
51	ANR 224 12/15/64	PART NO. P/N 204160215/N 4057178 TCA #8 FLOW AT OXIDIZER VALVE WAS APPROX 25% OF EXPECTED FLOW DURING ACCEPTANCE TEST PARA 7.4.6 "LIQUID CALIBRATION" THE ACTUAL FLOW WAS .096 GPM, THE EXPECTED FLOW .3 GPM			
ACTION TAKEN		DFR # 12941R INITIATED 12-15-64 REF. IL 4-XX-0287-17 DEC. 64 REMOVED + REPL. S/N 4057178 WITH S/N 4057121, LEAK CHECKED AT 125 PSIG HEL. JOINTS.	LMC 2.017	817P 18 12-15-	ANR 715 64
52	ANR 224 12/15/64	PART NO. SE-7 ENGINE SYSTEM, ORFICE IDENTIFICATION TAGS ARE MISSING ON THE FOLLOWING TCA'S #4, 5, 8, 11 AND 16.			
ACTION TAKEN		TCA'S HAVE SUCCESSFULLY PASSED PRODUCTION ACCEPTANCE TESTING. TAGS ARE NO LONGER NECESSARY. Jerry Knuffin	1-18-65	ANR 930	ANR 930
53	ANR 12/15/64	PART NO. 99-106161 APPROX 2½" OF 3/16" TUBING AND (1) 3/16" UNION WAS ADDED TO THE FUEL + OXID. LINES AT TCA #8			
ACTION TAKEN		STANDERED PROCEDURE PER RAO607-009 PARA. 4.5 FOR REPLACEMENT OF DAMAGED TUBES	12-	ANR 265 16-	ANR 265 6
54	ANR 224 12/14/64	PART NO. ADDED BRACES ON 25# TCA'S PRESSURE TAPS TO PREVENT DAMAGE DURING TRANSPORTATION TO SANTA SUSANA. (7 BRACES INSTALLED) #3 NOT INSTALLED.			
ACTION 1000		INFORMATION ONLY NO ACTION REQ		ANR 224	ANR 224 R-15075-1 12-14-67

Form R 25-U Rev. 12-57

DESIGN APPROVAL TEST
ORBIT ATTITUDE AND MANEUVER SYSTEM
(SE7)

NAME OF TEST MISSION DUTY CYCLE-HIGH TEMP. TEST NO. 106156-401 SHEET ____ OF ____
PART NO. 2-DAY CONFIG. {MAC ____ NAA ____ 14-DAY CONFIG. {MAC 52-52701 NAA 99-106156

7.5 Mission Duty Cycle High Temperature Test

7.5.1 Conduct the Mission Duty Cycle High Temperature Test in accordance with the applicable general requirements of paragraph 6.4.1 and the specific requirements of paragraph 6.4.2.2.

7.5.2 Failures

7.5.2.1 Determination of any system or component failure shall be in accordance with paragraph 3.6 and the following:

7.5.2.1.1 Any physical damage to or malfunction of the SE7 Engine System or integral component which precludes satisfactory attainment of the test objectives of the SE7 Design Approval Test Specification shall be considered a failure.

7.5.3 Propellant Utilization Determination

7.5.3.1 Determine and record the propellant utilization and partially detank the Engine System in preparation for the Hot Fire Calibration Test of paragraph 7.6 by performing the post test procedures of paragraph 6.6.2.1. Propellant utilization and refill data obtained while conducting the procedures of paragraph 6.6.2.1 shall be recorded as required in paragraphs 7.5.7.3 and 7.6.7.1.3; Propellant Utilization , Mission Duty Cycle - High Temperature, and Propellant Loading Hot Fire Calibration Test respectively.

7.5.4 Data reduction shall be in accordance with paragraph 6.5.

PREPARED BY: E.Charles	DATE	APPROVED FOR NAA:	DATE
CHECKED BY: [illegible]	12-28-64	[illegible]	12-28-64

DESIGN APPROVAL TEST
ORBIT ATTITUDE AND MANEUVER SYSTEM
(SE7)

NAME OF TEST MDC HIGH TEMPERATURE TEST TEST NO. 106156-401 SHEET ____ OF ____

PART NO. 2-DAY CONFIG {MAC ____ / NAA ____} 14-DAY CONFIG {MAC 52-52701 / NAA 99-106156}

7.5.7 Test Data

7.5.7.1 Pre-Test Data

7.5.7.1.1 Engine System Identification

Engine System Name SE-7 OAMS S/C 3

McDonnell Part No. 52-52701

Rocketdyne Part No. 99-106156

Component Name	Part Number Rocketdyne	Part Number MAC	Serial Number
Component Package "A"	556870	52-52700-151	4055340
Component Package "B"	557305	52-52700-203	4053265
Component Package "C"	406886	52-52701-235	4055325
Component Package "D"	406887	52-52701-237	4055331
Component Package "E"	557000	52-52701-175	4055393
Pressurant Tank	103654	52-52701-169	4051910
Fuel Tank	103660	52-52701-211	REF DCP #61 ~~4051232~~ 4066858
Oxid Tank	103655	52-52701-177	4051231
Regulator	NAS-2807072-26	52-52700-177	132

PREPARED BY: DATE	PERFORMED BY: DATE	WITNESSED FOR NAA: DATE	CERTIFIED FOR McDONNELL DATE
E. Charles	[illegible] 2/3/6	[illegible]	[illegible] / VERIFIED BY USAF DATE

DESIGN APPROVAL TEST
ORBIT ATTITUDE AND MANEUVER SYSTEM
(SE7)

NAME OF TEST MDC HIGH TEMPERATURE TEST. TEST NO. 106156-401 SHEET ____ OF ____

PART NO. 2-DAY CONFIG {MAC ____ / NAA ____} 14-DAY CONFIG {MAC 52-52701 / NAA 99-106156}

7.5.7.1.1 (continued)

Component Name	Part Number Rocketdyne	Part Number MAC	Serial Number
PSOV (OXID)	NAS-28078T3-1	52-52053-3	114
PSOV (FUEL)	NAS-28078T3-1	52-52053-3	115
Component Package "A" Cartridge	NAS-28082T1-1	52-52700-201	214
Component Package "C" Cartridge	NAS-28082T1-1	52-52700-201	256
Component Package "D" Cartridge	NAS-28082T1-1	52-52700-201	241
Component Package "E"			
N.O. Cartridge	NAS-28088T1-1	52-52701-233	041
N.C. Cartridge	NAS-28082T1-1	52-52700-201	239
TCA #1	208160-31	52-52701-273	4057135
TCA #2	208160-21	52-52701-271	4058291
TCA #3	208160-31	52-52701-273	4057134

PREPARED BY:	DATE	PERFORMED BY:	DATE	WITNESSED FOR NAA:	DATE	CERTIFIED FOR McDONNELL	DATE
E. Charles		W. Pilipski	2/3/65	D. J. Kelly	2/6/65	[illegible]	2/6/65
						VERIFIED BY USAF	DATE

DESIGN APPROVAL TEST
ORBIT ATTITUDE AND MANEUVER SYSTEM
(SE7)

NAME OF TEST MDS HIGH TEMPERATURE TEST TEST NO. 106156-401 SHEET ____ OF ____

PART NO. 2-DAY CONFIG {MAC ____ NAA ____} 14-DAY CONFIG {MAC 52-52701 NAA 99-106156}

7.5.7.1.1 (continued)

Component Name	Part Number Rocketdyne	Part Number MAC	Serial Number
TCA #4	208160-21	52-52701-271	4057181
TCA #5	208160-3	52-52701-273	4057133
TCA #6	208160-21	52-52701-271	4057184
TCA #7	208160-31	52-52701-273	4057123
TCA #8	208160-21	52-52701-271	4057121
TCA #9	207540-21	52-52701-277	4054769
TCA #10	207540-21	52-52701-277	4060932
TCA #11	207510-21	52-52701-275	4060057
TCA #12	207510-21	52-52701-275	4058404
TCA #13	207540-21	52-52701-277	4064382
TCA #14	207540-21	52-52701-277	4058956
TCA #15	207540-21	52-52701-277	4054766
TCA #16	207540-21	52-52701-277	4054760

PREPARED BY: DATE	PERFORMED BY: DATE	WITNESSED FOR NAA: DATE	CERTIFIED FOR McDONNELL DATE
E. Charles	[illegible] 2/31	[illegible]	[illegible]
			VERIFIED BY USAF DATE

DESIGN APPROVAL TEST
ORBIT ATTITUDE AND MANEUVER SYSTEM
(SE7)

NAME OF TEST MDC HIGH TEMPERATURE TEST TEST NO. 106156-401 SHEET ____ OF ____

PART NO. 2-DAY CONFIG {MAC ____ NAA ____} 14-DAY CONFIG {MAC 52-52701 NAA 99-106156}

7.5.7.1.2 TCA Throat Diameter Data

TCA Throat Diameter, inches	Pre-Test	Post-Test
TCA #1	.3572	.3570
TCA #2	.3578	.3572
TCA #3	.3571	.3571
TCA #4	.3571	.3572
TCA #5	.3572	.3567
TCA #6	.3570	.3566
TCA #7	.3571	.3569
TCA #8	.3578	.3556
TCA #9	.7086	.7037
TCA #10	.7088	.6946
TCA #11	.6722	.6700
TCA #12	.6725	.6663
TCA #13	.7092	.7055
TCA #14	.7085	.6949
TCA #15	.7116	.7077
TCA #16	.7088	.6989

PREPARED BY: DATE	PERFORMED BY: DATE	WITNESSED FOR NAA: DATE	CERTIFIED FOR McDONNELL DATE
E. Charles	V. Pilipski 2/3/65	A. J. Kelly 2/6/65	A. Scott 2/6/65
			VERIFIED BY USAF DATE

ROCKETDYNE

INSPECTION DISCREPANCY AND CORRECTION RECORD

MAKE ENTRY CLEAR AND CONCISE, USE INK

Serial No. 4061873

Dwg. No. 99-106161

Model SE-7

DCP No.	Ent'd By & Date	DESCRIPTION OF DISCREPANCY AND ACTION TAKEN	CLEARED BY Mech. & Date	Lead-man & Date	Insp. & Date
55	ANR 921 12/17/64	PART NO. THE DATA REQUIRED by PARA 7.2.2.4.9.1 & 7.2.2.5.5 (WHICH IS SINE WAVE ACCELEROMETER DATA) IS NOT REDUCED AND ENTERED AS REQUIRED.			
		ACTION TAKEN: TRANSFERRED TO SHORTAGE	1-18-65	ANR 930	ANR 930
# 56	12/29/64 ANR 921	PART NO. 99-106161 S/N 4061873 PACKAGE WAS RECEIVED AT S.S.F.L. WITH "4" OPEN DCP'S REF DCP# 43-47-52 & 55			
		ACTION TAKEN: ALL DCP'S CLEARED 1/20/65	1-20-65	ANR 930	ANR 930
# 57	1/18/65 ANR 930	PART NO. GENERAL: FOUR MULTI-PIN ELECT. CONNECTORS FOR PACKAGE CONTROL & INSTRUMENTATION ARE UN-CAPPED.			
		ACTION TAKEN: Multi-Pin ELECT CONNECTORS CAPPED 1-18-65	1-18-65 0075	1-18-65 0075	1-18-65 ANR 930
# 58	1/26/65 ANR 930	PART NO. 557000 S/N 4055393 COMPONENT PACKAGE "E" FEMALE ELECT. CONN. TO SOLENOID VALVE WILL NOT LOCK ON MATING CONNECTOR. ALSO HAS TAPE HOLDING IT ON.			
		ACTION TAKEN: TAPE REMOVED, CONNECTORS mated & locked	1-29-65 JGL	0962 42	ANR 923
# 59	1/26/65 ANR 930	PART NO. 208160-31 S/N 4057134 TCA #3 DOES NOT HAVE PROVISIONS FOR PC DATA SENSOR AS PER TABLE 5 INSTRUMENTATION REQUIRMENTS FOR HOT FIRE TEST.			
		ACTION TAKEN: Eng #5388-6027 rev'd 1/29/65 deletes requirement for PC data sensor on TCA #3		ANR 923	ANR 923

1006

R-15075-1

Form R 25-U Rev. 12/57

ROCKETDYNE
A DIVISION OF NORTH AMERICAN AVIATION INC

DESIGN APPROVAL TEST
ORBIT ATTITUDE AND MANEUVER SYSTEM
(SE7)

NAME OF TEST MDC HIGH TEMPERATURE TEST TEST NO. 106156-40 SHEET ____ OF ____

PART NO. 2-DAY CONFIG. { MAC ____ / NAA ____ } 14-DAY CONFIG. { MAC 52-52701 / NAA 99-106156 }

7.5.7.1.3 Propellant Loading (Pre-test)

7.5.7.1.3.1 Oxidizer Loading

7.5.7.1.3.1.1 Pre-fill Oxidizer Supply Volume, V_{o1} and Temperature, T_{o1} (paragraph 6.1.2.1.1.4.3) p. 51

V_{o1} = 5920 in^3 T_{o1} = 81.4 °F

REF. DCP #60 (ANR 930) 47°

7.5.7.1.3.1.2 Post-fill Oxidizer Supply Volume, V_{o2} and Temperature, T_{o2} (paragraph 6.1.2.1.1.4.8) p. 51

V_{o2} = 1146 in^3 T_{o2} = 81.4 °F

REF. DCP #60 47°

7.5.7.1.3.1.3 Determine Oxidizer Volume, V_{g1} at $\left[\frac{T_{o1} + T_{o2}}{2}\right]$ from Figure 22. V_{g1} = 4774 in^3

REF. DCP #60

7.5.7.1.3.1.4 Oxidizer Volume Detanked, V_{do}

$V_{do} = 5438 - V_{g1}$ = NONE in^3

7.5.7.1.3.2 Fuel Loading

7.5.7.1.3.2.1 Pre-fill Fuel Supply Volume, V_{f1} and Temperature, T_{f1} (paragraph 6.1.2.1.2.4.3) p. 55

V_{f1} = 6279 in^3 T_{f1} = 83.5 °F

REF. DCP #60 47°

7.5.7.1.3.2.2 Post-fill Fuel Supply Volume, V_{f2} and Temperature, T_{f2} (paragraph ~~6.2.1.2.4.8~~) 6.1.2.1.2.4.8 p. 55

V_{f2} = 1345 in^3 T_{f2} = 83.5 °F

REF. DCP # 60 47°

7.5.7.1.3.2.3 Determine Fuel Volume, V_{g2}, at $\left[\frac{T_{f1} + T_{f2}}{2}\right]$ from Figure 24.

V_{g2} = 4934 in^3

REF. DCP #60

PREPARED BY: DATE	PERFORMED BY: DATE	WITNESSED FOR NAA: DATE	CERTIFIED FOR McDONNELL: DATE
E. Charles			VERIFIED BY USAF: DATE
R-15075-1			1007

Test Form 1453

THIS PAGE VOID PROPELLANTS DETANKED BEFORE 7287
REF. DCP #61 (ANR 930)

ROCKETDYNE
A DIVISION OF NORTH AMERICAN AVIATION INC

DESIGN APPROVAL TEST
ORBIT ATTITUDE AND MANEUVER SYSTEM
(SE7)

NAME OF TEST MDC HIGH TEMPERATURE TEST TEST NO. 106156-401 SHEET ____ OF ____

PART NO. 2-DAY CONFIG. { MAC ____ / NAA ____ } 14-DAY CONFIG. { MAC 52-52701 / NAA 99-106156 }

7.5.7.1.3.2	(continued)
7.5.7.1.3.2.4	Fuel Volume Detanked, V_{dg} $V_{df} = 5425 - V_{g2} =$ NONE in^3
7.5.7.1.4.	Pressurant Loading
7.5.7.1.4.1	Pressurant Tank Pressure = _____ psig at _____ °F.

PREPARED BY: DATE	PERFORMED BY: DATE	WITNESSED FOR NAA: DATE	CERTIFIED FOR McDONNELL: DATE
E. Charles	W. Kulpski 2/6/63		VERIFIED BY USAF: DATE

ROCKETDYNE

INSPECTION DISCREPANCY AND CORRECTION RECORD

MAKE ENTRY CLEAR AND CONCISE, USE INK

Serial No. 406173

Dwg. No. 99-106161

Model SE-7

DCP No.	Ent'd By & Date	DESCRIPTION OF DISCREPANCY AND ACTION TAKEN	CLEARED BY Mech. & Date	Lead-man & Date	Insp. & Date
60	ANR 923 1/29/65	PART NO. GENERAL: Due to limited capacity of facility propellant volumetric tanks paras. 7.5.7.1.3.1.1 thru ~~7.5.7.1.3.2.4~~ 7.5.7.1.3.2.4 (ANR 923) could not be complied with.			
ACTION TAKEN		D-096/204 DISPOSITION EXPLANATION: At propellant temperatures in			
60 Cont'd		~~PART NO.~~ excess of approx. 75°F, the facility propellant volumetric tanks cannot contain design loads for SE 7. This necessitates a temporary halt in SE 7			
ACTION TAKEN		tanking to refill facility tanks. The calculation ~~of~~ method of paras 7.5.7.1.3.1.1			
60 Cont'd		~~PART NO.~~ thru 7.5.7.1.3.2.4 cannot be used in a facility tank retank situation because it assumes a continuous tanking operation, using pre-tanking and post-tanking			
ACTION TAKEN		propellant temperatures to calculate an average temperature during the tanking operation. This			
60 Cont'd		~~PART NO.~~ average temperature is used to calculate the weight of propellant transferred to the SE 7 tanks. D-096/204 CALCULATION METHOD:			
ACTION TAKEN		Since two seperate tanking operations (for each propellant) were done, a weighted			
60 Cont'd		~~PART NO.~~ average method of calculating propellant temperature was used, based on the volume tanked ~~of~~ and the temperature during each seperate			
ACTION TAKEN		operation. The weighted average temperature was then used with figure 22 (NTO) and			

R-15075-1

1009

Form R 25-U Rev. 12-57

ROCKETDYNE

INSPECTION DISCREPANCY AND CORRECTION RECORD

MAKE ENTRY CLEAR AND CONCISE, USE INK

Serial No. 461873

Dwg. No. 99-106161

Model SE-7

DCP No.	Ent'd By & Date	DESCRIPTION OF DISCREPANCY AND ACTION TAKEN	CLEARED BY Mech. & Date	Lead-man & Date	Insp. & Date
60 Cont'd		~~PART NO.~~ figure 24 (MMH) to determine the weight of propellant tanked. CALCULATIONS:			
ACTION TAKEN		NTO vol. tanked at 84°F = ~~4150~~ 3940 in³ NTO vol. tanked at 70°F = 834 in³			
60 Cont'd		~~PART NO.~~ TOTAL NTO vol. tanked = ~~4990~~ 3940 + 834 = 4774 in³ WEIGHTED AVG. TEMP. (NTO) = $\frac{834}{4770}(70°F) + \frac{3940}{4774}(84°F) = 81.4°F$ From figure 22, the volume of 245.8 lbs. of NTO			
ACTION TAKEN		at 81.4°F is 4770 in³.			
60 Cont'd		~~PART NO.~~ MMH vol. tanked at 85°F = 4760 in³ MMH vol. tanked at 69°F = 178 in³ TOTAL MMH vol. tanked = 4760 + 178 = ~~4938~~ 4934 in³			
ACTION TAKEN		WEIGHTED AVG. TEMP. (MMH) = $\frac{178}{\cancel{4938}\ 4934}(69°F) + \frac{4760}{\cancel{4938}\ 4934}(85°F) = 83.5°F$			
60 Cont'd		~~PART NO.~~ From figure 24, the volume of 155.3 lbs. of MMH at 83.5°F is 4930 in³. A. Schaner 0-096/204 1-29-65			
ACTION TAKEN		Volumetric tank retanking: NTO = 1170 in³; MMH = 134 in³	2/6/65	2/6/65 ANR 930	2/4/65
61	1/30/65	PART NO. GENERAL: During temp pre-conditioning FRCD para. 6.3.3.2.1.1, N2H4 was detected emitting from MMH propellant tank vent (overboard) line, creating suspicions of a ruptured (or in some other way defective) MMH tank bladder.			
~~ACTION TAKEN~~ 1010					R-15075-1

Form R 25-U Rev. 12-57

ROCKETDYNE

INSPECTION DISCREPANCY AND CORRECTION RECORD

MAKE ENTRY CLEAR AND CONCISE, USE INK

Serial No. 4061873

Dwg. No. 99-106161

Model SE-7

DCP No.	Ent'd By & Date	DESCRIPTION OF DISCREPANCY AND ACTION TAKEN	CLEARED BY Mech. & Date	Lead-man & Date	Insp. & Date
61 Cont'd		PART NO. Test 989-001, H/F of O.A.O.S, was cancelled as a result			
		ACTION TAKEN: Defective MMH tank replaced with tank assy, P/N 103660, S/N 4066858	2066 2-5	42 0960	ANR 930 2/5/65
62	ANR 923 1/30/65	PART NO. GENERAL: Subsequent to test cancellation & during de-tanking operations, MMH leakage was detected from 15A valve stem, component pkg. "D".			
		ACTION TAKEN: Valve 15A will be closed and capped during hot fire. Jerry Kniffin X6107	2/4/65	2/4/65 0960	2/4/65 ANR 930
63	2/5/65 ANR 930	PART NO. 208160-21 S/N 4057184 TCA #6 PC TUBE LEAKS AROUND FITTING TO TUBE WELD JOINT.			
		ACTION TAKEN: Corrective action approved per IL dated Feb 6, 1965. Jerry Kniffin	2/6/65	2/6/65	2/6/65 ANR 930
64	ANR 923 2/9/65	PART NO. 208160-31, S/N 4057123 (TCA #7) - Pc leak check reveals "fuzz" leakage from between std. contrails Pc x-ducer & x-ducer retaining nut.			
		ACTION TAKEN: Leakage has been repaired with epoxy. Jerry Kniffin X6107	2066 2-9	42 0960	ANR 923 2/9/65
65	ANR 923 2/9/65	PART NO. 208160-31, S/N 4057133 (TCA #5) - Pc leak check reveals excessive leakage from between high response x-ducer retaining nut & T/C outer shell.			
		ACTION TAKEN: Leakage has been repaired with epoxy. Jerry Kniffin X6107	2066 2-9	42 0960 1011	ANR 923 2/9/65

R-15075-1

Form R 25-U Rev. 12-57

IL 5398-6045

INTERNAL LETTER
North American Aviation, Inc.

DATE 2 February 1965

TO Those Concerned
Address

FROM Gemini DAT-RAT Unit
Address D/396-388

SUBJECT Test Procedure 106156-401.

Due to a leaking fuel tank bladder which was observed during high temperature (160 F) conditioning of the Engine System just prior to initiating mission duty cycle test per paragraph 7.5 of above referenced test procedure, it has been decided by McDonnell Aircraft Corporation and Rocketdyne to postpone the mission duty cycle test until the fuel tank can be replaced. Furthermore, in order to expedite the test program it has been decided to replace the fuel tank at the hot fire test site (CTL-III, Cell 39B, SSFL). The old fuel tank shall be removed by cutting the fuel tank pressurant line which connects the fuel tank to Package "B" and the fuel tank fuel discharge line which connects the fuel tank to Package "D". The new fuel tank is to be installed using Resistoflex fittings in the pressurant and fuel lines.

In order to prepare the fuel tank for removal, the following procedure is to be accomplished:

1. Pressurize the fuel tank with GN_2 at 50 psig through port 4 of Package "B".

2. Open port 15 of Package "D" to atmosphere and pressurize the fuel tank purge port with GN_2 to 50 psig. Maintain purge for 15 minutes minimum.

3. Remove the pressure at the fuel tank purge port and then remove the pressure at the Package "B" port 4.

In order to prepare the Engine System for installation of the new fuel tank the following procedure is to be accomplished after removal of the old fuel tank.

1. With ports 4, 5, 6 and the tube stub on Package "B" open to atmosphere purge through port 2 on Package "A" with filtered GN_2 at a pressure of 125 psig for two minutes minimum.

2. With ports 5 and 6 on Package "B" closed and the tube stub on Package "B" open to atmosphere purge through port 4 on Package "B" with filtered isopropyl alcohol at 15 psig for one minute.

3. Repeat Step 1.

4. With ports 4, 5, and 6 closed connect an evacuation system to the open tube stub on Package "B" and evacuate for 30 minutes.

5. With tube stub on Package "D" open to atmosphere purge through port 15 on Package "D" with filtered isopropyl alcohol at 15 psig for one minute.

6. With tube stub on Package "D" open to atmosphere purge through port 15 on Package "D" with filtered GN_2 at 50 psig for two minutes minimum.

7. Connect an evacuation system to the open tube stub on Package "D" and evacuate for 30 minutes with port 15 closed.

T. G. Kniffin
Gemini DAT-RAT Unit

Approved:
R. G. Eide
Supervisor
Gemini DAT-RAT Unit

for S. Scott
MAC Engineering

cc:

R. Dinius	896-388
E. Charles	896-388
C. Hann	096-204
W. Pilipski	096-204
A. Schauer	096-204
D. Kelly	NAAQC

INTERNAL LETTER
North American Aviation, Inc.

IL 5388-6046

DATE 3 February 1965

TO Those Concerned
Address

FROM Gemini DAT-RAT Unit
Address D/896-388

SUBJECT SE-7 Engine DAT S/C-3.

REFERENCE (a) Test Procedure 106156-401.
(b) IL 5388-6045, dated 2 February 1965

cc:
Dinius 896-388
E. Charles 896-388
C. Hann 096-204
W. Pilipski 096-204
D. Kelly NAAQC

Following replacement of the fuel propellant tank which was accomplished per above reference (b) it shall be necessary to proof pressure and leak check the reworked connections. This shall be done by the following procedure:

1. Slowly pressurize the fuel propellant tank to 50 psig through port 15 of Package "D" with helium.

2. Pressurize the fuel propellant tank to 50 psig through port 4 of Package "B" with helium.

3. Simultaneously and slowly increase the pressures at ports 4 and 15 to 450 psig.

4. After three minutes simultaneously reduce the pressures to 125 psig.

5. Apply leak test compound to the reworked connections.

6. Simultaneously reduce the pressures to zero.

T. G. Kniffin
Gemini DAT-RAT Unit

Approved:
R. G. Eide
Supervisor
Gemini DAT-RAT Unit

for S. Scott
MAC Engineering

1014 Retyped from original

R-15075-1

INTERNAL LETTER
North American Aviation, Inc.

IL 5388-6067

DATE 6 February 1965

TO Those Concerned
Address

FROM Gemini DAT-RAT Unit
Address D/896-388

SUBJECT SE-7 Engine System DAT - S/C-3.

REFERENCE Test Procedure 106156-401.

During pre-hot mode MDC leak tests a leak was observed at the braze joint between the nut and the 1/8" tube of the low response Pc tap of TCA #6. MAC and Rocketdyne have decided that the leak is to be repaired with an epoxy type glue and that testing is to continue.

T. G. Kniffin
Gemini DAT-RAT Unit

Approved:
R. G. Eide
Supervisor
Gemini DAT-RAT Unit

for
S. Scott
MAC Engineering

cc:

R. Dinius	896-388
W. Pilipski	096-204
D. Kelly	NAAQC

Retyped from original

ROCKETDYNE
A DIVISION OF NORTH AMERICAN AVIATION INC

DESIGN APPROVAL TEST
ORBIT ATTITUDE AND MANEUVER SYSTEM
(SE7)

NAME OF TEST MDC HIGH TEMPERATURE TEST TEST NO. 106156-401 SHEET ____ OF ____

PART NO. 2-DAY CONFIG. { MAC ____ NAA ____ } 14-DAY CONFIG. { MAC 52-52701 NAA 99-106156 }

7.5.7.1.3 Propellant Loading (Pre-test)

7.5.7.1.3.1 Oxidizer Loading

7.5.7.1.3.1.1 Pre-refill Oxidizer Supply Volume, V_{o1} and Temperature, T_{o1} (paragraph 6.1.2.1.1.4.3)
V_{o1} = 5050 in^3 T_{o1} = 47 °F

7.5.7.1.3.1.2 Post-refill Oxidizer Supply Volume, V_{o2} and Temperature, T_{o2} (paragraph 6.1.2.1.1.4.8)
V_{o2} = 0 in^3 T_{o2} = 47 °F

7.5.7.1.3.1.3 Determine Oxidizer Volume, V_{g1} at $\left[\frac{T_{o1} + T_{o2}}{2}\right]$ from Figure 22. V_{g1} = 4630 in^3

7.5.7.1.3.1.4 Oxidizer Volume Detanked, V_{do}
$V_{do} = 5438 - V_{g1}$ = 400 in^3

7.5.7.1.3.2 Fuel Loading

7.5.7.1.3.2.1 Pre-refill Fuel Supply Volume, V_{f1} and Temperature, T_{f1} (paragraph 6.1.2.1.2.4.3)
V_{f1} = 4990 in^3 T_{f1} = 47 °F

7.5.7.1.3.2.2 Post-refill Fuel Supply Volume, V_{f2} and Temperature, T_{f2} (paragraph 6.2.1.2.4.8)
V_{f2} = 129 in^3 T_{f2} = 47 °F

7.5.7.1.3.2.3 Determine Fuel Volume, V_{g2}, at $\left[\frac{T_{f1} + T_{f2}}{2}\right]$ from Figure 24.
V_{g2} = 4830 in^3

PREPARED BY: DATE	PERFORMED BY: DATE	WITNESSED FOR NAA: DATE	CERTIFIED FOR McDONNELL: DATE
E. Charles	2/6/65	2/6/65	VERIFIED BY USAF: DATE

1016 Form 1453

ROCKETDYNE
A DIVISION OF NORTH AMERICAN AVIATION INC

DESIGN APPROVAL TEST
ORBIT ATTITUDE AND MANEUVER SYSTEM
(SE7)

NAME OF TEST MDC HIGH TEMPERATURE TEST TEST NO. 106156-401 SHEET ____ OF ____

PART NO. 2-DAY CONFIG. { MAC ____ NAA ____ } 14-DAY CONFIG. { MAC 52-52701 NAA 99-106156 }

7.5.7.1.3.2 (continued)

7.5.7.1.3.2.4 Fuel Volume Detanked, V_{dg}

$V_{df} = 5425 - V_{g2} =$ NONE in^3

7.5.7.1.4. Pressurant Loading

7.5.7.1.4.1 Pressurant Tank Pressure = 3660 psig at 168 °F.

PREPARED BY: DATE	PERFORMED BY: DATE	WITNESSED FOR NAA: DATE	CERTIFIED FOR McDONNELL: DATE
E. Charles	A. Schauer 2/6/65	[illegible] 2/6/65	WAIVED BY S. Scott [illegible]
R-15075-1			VERIFIED BY USAF: [illegible] DATE

1017

Test Form 1453

ROCKETDYNE
A DIVISION OF NORTH AMERICAN AVIATION INC

DESIGN APPROVAL TEST
ORBIT ATTITUDE AND MANEUVER SYSTEM
(SE7)

NAME OF TEST MDC HIGH TEMPERATURE TEST TEST NO. 106156-401 SHEET ____ OF ____

PART NO. 2-DAY CONFIG. { MAC ____ / NAA ____ } 14-DAY CONFIG. { MAC 52-52701 / NAA 99-106156 }

7.5.7.2 Hot Fire Test Data

2/1/5

Test Cell Location CTL III

Test Cell Number 39-B

Test Number 989-001

Test Date 2-6-65

Test Start Time 1416

Oxidizer (NTO) Loaded, 246.6 lbs @ 47 °F (7.5.7.1.3.1)

Fuel (MMH) Loaded, 156.2 lbs @ 47 °F (7.5.7.1.3.2)

Pressurant (GHe) Loaded, 3660 psig @ 168 ° F (7.5.7.1.4.1)

Propellant Samples	NTO	MMH
Sample Date	2-4-65	2-4-65
Sample Batch Number	2-78	2-79
Sample Temperature, °F	60°F	77°F
Sample Specific Gravity	1.461	0.869
Met MIL. SPEC. Requirements (yes or no)	NO	

* NO PROPELLANT PARTICAL COUNT TAKEN PER MIL-SPEC

Flight Transducer Supply Voltage 5 VDC

Propellant Valve Supply Voltage 26 VDC

Test Cell Altitude Pressure (SEA LEVEL) 13.8 psia

* SEE IL 5388-6062

PREPARED BY:	DATE	PERFORMED BY:	DATE	WITNESSED FOR NAA:	DATE	CERTIFIED FOR McDONNELL:	DATE
E. Charles		W Pilypski	2/6/65				
						VERIFIED BY USAF:	DATE

1018 R-15075-1

Test Form 1453

IL 5388-6062

INTERNAL LETTER
North American Aviation, Inc.

DATE 10 February 1965

TO Those Concerned
Address

FROM Gemini DAT-RAT Unit
Address D/896-388

SUBJECT SE-7 Engine System - DAT S/C-3

REFERENCES (a) MIL-P-27404A, "Propellant Monomethylhydrazine".
(b) MIL-P-36539A, "Propellant Nitrogen Tetroxide".
(c) Test Procedure 106156-401.

It was never intended in the writing of Reference (c) that the particulate requirements of Reference (a) and (b) be imposed. Therefore, any reference to a particulate (or solid residue) determination shall be ignored.

Paragraph 3.9 of Reference (c) describes the precautions to be taken insofar as propellant cleanliness is concerned.

T. G. Kniffin
Gemini DAT-RAT Unit

Approved: R. G. Eide
Supervisor
Gemini DAT-RAT Unit

for S. Scott
MAC Engineering

cc:

R. Dinins	896-388
E. Charles	896-388
W. Pilipski	096-204
A. Schauer	096-204
D. Kelly	NAAQC

Retyped from original

ROCKETDYNE
A DIVISION OF NORTH AMERICAN AVIATION INC

DESIGN APPROVAL TEST
ORBIT ATTITUDE AND MANEUVER SYSTEM
(SE7)

NAME OF TEST MDC HIGH TEMPERATURE TEST TEST NO. 106156-401 SHEET ____ OF ____
PART NO. 2-DAY CONFIG. { MAC ____ NAA ____ } 14-DAY CONFIG. { MAC 52-52701 NAA 77-106156 }

7.5.7.2 (continued)

The MDC test was conducted in accordance with paragraph 6.4.2 YES (yes or no).

Comments:

(1) PRESSURANT CHARGING PER IL. 5388-6262
(2) MDC, RE: PROPELLANT DEPLETION PER IL. 5388-6263
(3) TEMPERATURE CONDITIONING OF PROPELLANT TANKS PER IL. 5388-6052
(4) MANUALLY OPERATE TCA #15 DUE TO TAPE PROBLEM, PER IL. 5388-6052
(5) TAPE PROGRAM PER IL 4388-2021 (SEE NEXT PAGE)

PREPARED BY: DATE	PERFORMED BY: DATE	WITNESSED FOR NAA: DATE	CERTIFED FOR McDONNELL: DATE
E. Charles		A. J. Kelly	R. L. Fine 2-8-65
			VERIFIED BY USAF: DATE

1020

R-15075-1

Test Form 1453

IL 4388-2021

INTERNAL LETTER
NORTH AMERICAN AVIATION, INC.

DATE 21 May 1964

TO A. D. Rolland
ADDRESS D/896-388

FROM Gemini DAT, RAT and Engine Systems Development Unit
ADDRESS D/896-388

PHONE 6608

SUBJECT Request for IBM Tapes - SE7 Engine System S/C 2 - 5 Mission Duty Cycle

REFERENCE (a) SCD 52-52701, Revision "G", "Orbit Attitude and Maneuvering System," McDonnell Aircraft Corporation

c.896-388
R. W. Dinius
R. O. McMahon
R. R. Weaver
G. V. Setera
R. Baker
J. H. Davis
R. W. Helsel
R. G. Powers

-331
R. W. Allaston
C. A. Miller
R. Goodwin

096-210
C. B. Henn
C. Puckhaber

The Mission Duty Cycle (MDC) for OAMS Capsules 2 through 5 is given in Tables I and II and it is requested that an IBM tape be made of it for testing on SE7 Engine System S/N 003. Testing of the Engine System with this MDC is scheduled for mid-August 1964.

The MDC for Capsules 2 through 5 is given in Figure 4D of reference (a). Figure 4D lists the MDC in terms of phases which establish the time intervals for Engine System operation, and, for each phase, the maneuvers to be performed, the pulse duration, and the total number of pulses. Basically, each phase consists of operating a given set of TCA's through a sequence and the phase totals are obtained by repeating the sequence as required.

Tables I and II are reproductions of the MDC of Figure 4D where Table I details the pitch, yaw, and roll maneuvers, and Table II details the translation maneuvers. However, Tables I and II deviate from Figure 4D in the following areas:

1. The pulse durations, instead of being specified in total impulse per pulse, are given in TCA electrical signal ON time.
2. The mode of Engine System operation, instead of being specified in terms of maneuvers, is given in terms of TCA operating sequence.

Additional information, such as pulse periods and propellant consumption, not given in Figure 4D, are also listed in Tables I and II.

TO A. D. Rolland

FROM Gemini DAT, RAT and Engine Systems Development Unit

SUBJECT Request for IBM Tapes - SE7 Engine System C/C 2 - 5 Mission Duty Cycle

IL 1351-2021

Figure I lists the seventeen (17) TCA operating sequences to be utilized in this MDC. Each phase of the Engine System operation uses only one sequence; however, a sequence may be repeated in other phases by changing the pulse duration and period. The required sequence of TCA operation for each phase of Engine System operation is listed in Tables I and II.

Charge Number: T.O. 5222.

R. H. Hart
Gemini DAT, RAT and Engine
Systems Development Unit

RHH:j

Approved: R. G. Eide
Supervisor
Gemini DAT, RAT and Engine
Systems Development Unit

Enc.
(1) Table I - SE7 Engine System - ADC - Attitude Control TCA's
(2) Table II - SE7 Engine System - MDC - Maneuvering TCA's
(3) Figure I - SE7 Test MDC - Attitude Control TCA Sequence

TABLE

SE7 ENGINE SYSTEM - MISSION DUTY CYCLE

ATTITUDE CONTROL THRUST CHAMBER ASSEMBLIES

Time From Test Start: Phase Start (sec)	Time From Test Start: Phase End (sec)	Sequence Number	Number of Sequences	No. of Firings Yaw TCA	No. of Firings Pitch TCA	Pulse (Electrical Signal) On Time (sec): Yaw	Pulse (Electrical Signal) On Time (sec): Pitch	Sequence Period (sec)	Minimum Pulse Period (sec)	Operating Time Per Yaw TCA (sec)	Propellant Consumption per Yaw TCA (lb)	Operating Time Per Pitch TCA (sec)	Propellant Consumption Per Pitch TCA (sec)
0	15	1	9	36	45	.033	.036	1.667	.128	1.116	.09854	1.530	.1340
15	24	2	1	1	1	4.20	2.10	9.000	—	4.20	.3499	2.10	.1749
24	30	3	1	4	2	0.71	1.05	6.000	.750	2.76	.2299	2.10	.1749
30	11034	4	3	27	18	.018	.018	3.668	183.4	.378	.03602	.252	.02402
11034	11040	3	1	4	2	.71	1.05	6.000	.750	2.76	.2299	2.10	.1749
11040	11300	5	3	27	9	.023	.023	86.660	4.818	.54	.04973	.180	.01658
11300	12160	6	54	162	486	.033	.036	15.290	.815	5.022	.4434	16.524	1.4467
12160	12166	6	2	6	18	.033	.036	3.000	.150	.186	.01642	.612	.05358
12166	12237	7	1	8	2	.71	1.05	51.000	3.00	5.52	.4598	2.10	.1749
12240	12244	9	4	4	24	.031	.062	1.000	.072	.116	.01031	1.44	.1205
12246	12252	8	3	42	6	.055	.032	2.000	.100	2.226	.1677	.180	.01505
12258	12330	8	36	504	72	.055	.032	2.000	.100	26.712	2.2518	2.160	.1914
12336	12342	6	6	18	54	.033	.036	2.667	.133	.558	.04927	1.836	.1607
12342	12345	9	3	3	18	.031	.062	1.000	.072	.087	.00773	1.08	.09040
12390	12409	9	21	21	126	.031	.062	.905	.065	.609	.05414	7.56	.6328
12426	12441	9	17	17	102	.031	.062	.882	.063	.498	.04382	6.12	.5122
12441	12452	6	11	33	99	.033	.036	1.000	.050	1.023	.09033	3.366	.2947
12489	12494	9	12	12	72	.031	.062	.917	.066	.348	.03094	4.32	.3616
12494	12496	7	1	8	2	.71	1.05	82.000	4.82	5.52	.4598	2.10	.1749
12529	12599	9	22	22	132	.031	.062	.909	.065	.638	.05672	7.92	.6629
12611	12658	9	53	53	318	.031	.062	.887	.063	1.537	.1366	19.08	1.5970
12664	12690	9	18	18	108	.031	.062	.890	.063	.552	.04507	6.48	.5424
12710	12729	8	10	140	20	.055	.032	1.900	.095	7.420	.6255	.600	.05316
12734	12761	8	14	196	28	.055	.032	1.930	.097	10.388	.8757	.840	.07442

TABLE I (cont)

SE7 ENGINE SYSTEM - MISSION DUTY CYCLE

ATTITUDE CONTROL THRUST CHAMBER ASSEMBLIES

Time from Test Start						Pulse (Electrical Signal) On Time (sec)								
Phase Start (sec)	Phase End (sec)	Sequence Number	Number of Sequences	No. of Firings Yaw TCA	No. of Firings Pitch TCA	Yaw	Pitch	Sequence of Period (sec)	Minimum Pulse Period (sec)	Operating Time per Yaw TCA (sec)	Propellant Consumption per Yaw TCA (lb)	Operating Time per Pitch TCA (sec)	Propellant Consumption per Pitch TCA (lb)
12766	12799	15	37	37	148	.031	.062	.892	.064	1.073	.09539	8.83	.742
12811	12810	14	3	70		.055		1.800	.090	3.720	.31260		
12840	12838	15	14	14		.031		.930	.065	.406	.03609		
12848	12848	15	21	21		.031		.905	.065	.609	.05414		
12879	12878	14	10	140		.055		1.900	.095	7.420	.62550		
12909	12923	15	23	23		.031		.870	.062	.667	.05930		
12924	12907	16	1	8		.710		77.000	4.530	5.520	.45980		
12947	12947	15	52	52		.031		.846	.060	1.510	.13420		
12967	12968	17	1	6		.055			.0937	.424	.03560		
				1739	1912					102.048		101.460	

TABLE II

SE7 ENGINE SYSTEM – MISSION DUTY CYCLE

MANEUVERING THRUST CHAMBER ASSEMBLIES

Time from Start		Maneuver											
		Forward TCA No's 9 & 10		Aft TCA No's 11 & 12		Lateral Right TCA No 13		Lateral Left TCA No 14		Vertical Down TCA No 16		Vertical Up TCA No 15	
Phase Start (sec)	Phase End (sec)	On Time (sec)	Prop. Cons. (lbs)	On Time (sec)	Prop. Cons. (lbs)	On Time (sec)	Prop. Cons. (lbs)	On Time (sec)	Prop. Cons. (lbs)	On Time (sec)	Prop. Cons. (lbs)	On Time (sec)	Prop. Cons. (lbs)
0	15	15	5.00										
11040	11090	50	17.00										
11090	11110												
11110	11190			80	22.64								
11190	11195												
11195	12195	5	1.67			6	2.00						
12195	12205												
12205	12244									4	1.33		
12246	12252					6	2.00						
12252	12350					72	24.00						
12356	12375	16	5.33										
12375	12395									19	6.33		
12395	12409									19	6.33		
12415	12441									15	5.00		
12441	12452	11	3.66										
12452	12464									11	3.67		
12479	12529											20	6.67
12531	12650											47	15.67
12650	12690											16	5.33
12690	12729									19	6.33		
12729	12763									27	9.00		
12763	12799											33	11.00
12799	12830									9	3.00		
12830	12860												
12860	Propellant Depletion			As required	Prop. Depletion								

FIGURE I

SE7 TEST MISSION CYCLE - ATTITUDE CONTROL
THRUST CHAMBER ASSEMBLY SEQUENCE

SEQUENCE #1

MANEUVER	1 PU	2 PD YR	3 YL	4 PU	5 PD	6 YL RR	7 PU	8 YR	9 PD	10 PU YL RL	11 PD	12 PU YR	13 PD YL	14			
THRUST CHAMBER ASSEMBLY NO. 1		■			■				■		■		■				
2		■			■				■		■		■				
3		■				■		■				■					
4		■						■		■		■					
5	■			■			■			■		■					
6	■			■			■			■		■					
7			■			■				■			■				
8			■			■				■			■				

SEQUENCE #2

MANEUVER	1 PU YR	2 PD YL	3	4	5	6	7	8	9	10	11	12	13	14			
THRUST CHAMBER ASSEMBLY NO. 1		■															
2		■															
3	■																
4	■																
5	■																
6	■																
7		■															
8		■															

FIGURE I (Continued)

SEQUENCE #3

MANEUVER	1 YR	2 PU YL	3 PD YR	4 RL	5 RR	6 PD YL	7 PU YR	8 YL	9	10	11	12	13	14	15	16	17	18	19	20
THRUST CHAMBER ASSEMBLY NO. 1			■			■														
2			■			■														
3	■		■		■		■													
4	■		■	■			■													
5		■					■													
6		■					■													
7		■			■	■		■												
8		■		■		■		■												

SEQUENCE #4

MANEUVER	1 YR	2 PU RR	3 YL	4 PD YR RL	5 PU	6 RL	7 YR RR	8 PU YL	9 PD RL	10 PU RR	11 YL RL	12 PU	13 PD	14 YR RL	15 PD YL	16 PU YR RR	17 PD	18 YL RR	19 PD YR	20 PU
THRUST CHAMBER ASSEMBLY NO. 1				■					■				■		■		■		■	
2				■					■				■		■		■		■	
3	■	■		■			■			■				■		■		■	■	
4	■			■		■	■		■		■			■		■			■	
5		■			■			■		■		■				■				■
6		■			■			■		■		■				■				■
7		■	■				■	■		■	■				■	■		■		
8			■	■		■		■	■		■			■	■			■		

SEQUENCE #5

MANEUVER	1 YR	2 PD YL	3 RR	4 PU RL	5 YL	6 RL	7 PU YR RR	8 PD	9 YL RR	10 YR	11 PU	12 YR RR	13 YL	14 YR RL	15 PD RR	16 RL	17 YR	18 YL	19	20
THRUST CHAMBER ASSEMBLY NO. 1		■						■							■					
2		■						■							■					
3	■		■				■		■	■		■		■	■		■			
4	■			■		■	■			■		■		■		■	■			
5				■			■				■									
6				■			■				■									
7		■	■		■		■		■			■	■		■			■		
8		■		■	■	■			■				■	■		■		■		

SEQUENCE #6

MANEUVER	1 PU	2 PD	3 PU YL	4 PD	5 PU	6 YR	7 PD	8 PU	9 PD RL	10 PU	11 PD	12 PU RR	13 PD	14 PU	15 PD	16 YL	17 PU	18 PD YR	19 PU	20 PD
THRUST CHAMBER ASSEMBLY NO. 1		■		■			■		■		■		■		■			■		■
2		■		■			■		■		■		■		■			■		■
3						■						■						■		
4						■			■									■		
5	■		■		■			■		■		■		■			■		■	
6	■		■		■			■		■		■		■			■		■	
7			■									■				■				
8			■						■							■				

FIGURE I (Continued)

SEQUENCE #7

MANEUVER	1 YL	2 YR RL	3 PD	4 RR	5 RL	6 PU	7 YL	8 YR	9 PD YL	10 PU YR	11 RR	12 RL	13 YR RR	14 YL	15 YR	16 YL	17 YR	18	19	20
THRUST CHAMBER ASSEMBLY NO. 1			■						■											
2			■						■											
3		■		■				■		■	■		■		■		■			
4		■			■			■		■		■	■		■		■			
5						■				■										
6						■				■										
7	■			■			■		■		■		■	■		■				
8	■	■			■		■		■			■		■		■				

SEQUENCE #8

MANEUVER	1 YR RL	2 YL RR	3 PU YR RR	4 RR	5 YR RR	6 YL RL	7 PD RL	8 YR RR	9 YL RR	10 YR RR	11 YL RL	12 YR RL	13 YL RR	14 YR RL	15 YL RL	16 YR RL	17 PD YL	18 YR RR	19 PU YL	20 YR RL
THRUST CHAMBER ASSEMBLY NO. 1							■										■			
2							■										■			
3	■	■	■	■	■			■	■	■		■	■	■		■		■		■
4	■		■		■	■	■	■		■	■	■		■	■	■		■		■
5			■																■	
6			■																■	
7		■	■	■	■	■		■	■	■	■		■		■		■	■	■	
8	■	■				■	■		■		■	■	■	■	■	■	■		■	■

FIGURE I (Continued)

SEQUENCE #9

THRUST CHAMBER ASSEMBLY NO. \ MANEUVER	1 PU	2 PD	3 PU	4 PD	5 YR	6 PD	7 PU	8 PD	9 PU	10 PD	11 PU	12 PD	13 PU	14 YL	15	16	17	18	19	20
1		■		■		■		■		■		■								
2		■		■		■		■		■		■								
3					■															
4					■															
5	■		■				■		■		■		■							
6	■		■				■		■		■		■							
7														■						
8														■						

SEQUENCE #10

THRUST CHAMBER ASSEMBLY NO. \ MANEUVER	1 PU	2 PD YR	3 PU YL	4 PD	5 RR	6 RL	7 PU YR RR	8 PD	9 YR RL	10 YL	11	12	13	14	15	16	17	18	19	20
1		■		■				■												
2		■		■				■												
3		■			■		■		■											
4		■				■	■		■											
5	■		■				■													
6	■		■				■													
7			■		■		■			■										
8			■			■			■	■										

FIGURE I (Continued)

SEQUENCE #11

MANEUVER	1 PU	2 PD	3 PU	4 PD	5 PU YR	6 PD YL	7 PU	8 PD	9 PU RL	10 PD RR	11	12	13	14	15	16	17	18	19	20
THRUST CHAMBER ASSEMBLY NO. 1		■		■		■		■		■										
2		■		■		■		■		■										
3					■					■										
4					■				■											
5	■		■		■		■		■											
6	■		■		■		■		■											
7						■				■										
8						■			■											

SEQUENCE #12

MANEUVER	1 YL	2 YR RL	3 PU	4 PD	5 PU RR	6 PD RL	7 YR RR	8 PU	9 YR	10 YL	11 PD YR RR	12	13	14	15	16	17	18	19	20
THRUST CHAMBER ASSEMBLY NO. 1				■		■					■									
2				■		■					■									
3		■			■		■		■		■									
4		■				■	■		■		■									
5			■		■			■												
6			■		■			■												
7	■				■		■			■	■									
8	■	■				■			■	■										

SEQUENCE #13

MANEUVER	1 PD YR	2 YL	3 PU	4 YL RL	5 PD	6 PU YL	7 YR	8 YL	9 YR	10 PD	11 YL	12 PU	13 YR RL	14 YL RR	15 PD	16 YR RL	17 PU	18 PD YR RR	19 PU	20 YR RR
THRUST CHAMBER ASSEMBLY, NO. 1	■				■					■					■			■		
2	■				■					■					■			■		
3	■						■		■				■	■		■		■		■
4	■			■			■		■				■			■		■		■
5			■			■						■					■		■	
6			■			■						■					■		■	
7		■		■		■		■			■			■				■		■
8		■		■		■		■			■		■	■		■				

SEQUENCE #14

MANEUVER	1 YR RL	2 YL RR	3 YR RR	4 RR	5 YR RR	6 YL RL	7 RL	8 YR RR	9 YL RR	10 YR RR	11 YL RL	12 YR RL	13 YL RR	14 YR RL	15 YL RL	16 YR RL	17 YL	18 YR RR	19 YL	20 YR RL
THRUST CHAMBER ASSEMBLY, NO. 1																				
2																				
3	■	■	■	■	■			■	■	■		■	■	■		■		■		■
4	■		■		■	■	■	■		■	■	■		■	■	■		■		■
5																				
6																				
7		■	■	■	■	■		■	■	■	■		■		■		■	■	■	
8	■	■				■	■		■		■	■	■	■	■	■	■		■	■

SEQUENCE #15

MANEUVER	1 PD	2 PU	3 PD	4 PU	5 YL	6 PD	7 PU	8 PD	9 PU	10 YR	11	12	13	14	15	16	17	18	19	20
THRUST CHAMBER ASSEMBLY, NO. 1	■		■			■		■												
2	■		■			■		■												
3										■										
4										■										
5		■		■			■		■											
6		■		■			■		■											
7					■															
8					■															

SEQUENCE #16

MANEUVER	1 YL	2 YR RL	3 RR	4 RL	5 YL	6 YR	7 YL	8 YR	9 RR	10 RL	11 YR RR	12 YL	13 YR	14 YL	15 YR	16	17	18	19	20
THRUST CHAMBER ASSEMBLY, NO. 1																				
2																				
3		■	■			■		■	■		■		■		■					
4		■		■		■		■		■	■		■		■					
5																				
6																				
7	■		■		■		■		■		■	■		■						
8	■	■		■	■		■			■		■		■						

SEQUENCE #17

MANEUVER		1 YR RL	2 YL RR	3 YR RR	4 RR	5 YR RR	6 YL RL	7 RL	8 YR RR	9 YL RR	10 YR RR	11 YL RL	12	13	14	15	16				
THRUST CHAMBER ASSEMBLY NO.	1																				
	2																				
	3	■	■	■	■	■			■	■	■										
	4	■		■		■	■	■	■		■	■									
	5																				
	6																				
	7		■	■	■	■	■		■	■	■	■									
	8	■	■				■	■		■		■									

INTERNAL LETTER
North American Aviation, Inc.

IL 5388-6262

DATE 13 September 1965

TO Those Concerned

FROM Gemini DAT Unit

SUBJECT SE-7 DAT Engine System S/C-3 - Procedural Deviation - High Temperature MDC.

REFERENCE (a) DAT Specification 106156-401.

The requirements of the above reference (a) to institute charging of the pressurant tank (Reference a, paragraph 6.4.2.2.1.4) prior to commencing temperature conditioning of the system (Reference a, paragraph 6.4.2.2.1.6.1) was not performed. Preliminary (pre-conditioning) operation of the temperature conditioning system requires personnel in close proximity to the system; however, the test facility safety directives prohibit personnel from being in the vicinity of a vessel charged to a pressure of greater than one quarter (1/4) the certified burst pressure and not contained in an explosion proof cell.

In view of the aforementioned circumstances it was mutually agreed that pressurant tank charging would be conducted subsequent to temperature conditioning.

R. Dinius
Gemini DAT Unit

Approved: R. G. Eide
Supervisor
Gemini DAT Unit

R. Free
MAC Resident
Engineering Rep.

IL 5388-6263

INTERNAL LETTER
North American Aviation, Inc.

DATE 13 September 1965

TO Those Concerned

FROM Gemini DAT Unit

SUBJECT SF-7 DAT Engine System S/C-3 - Procedural Deviation - High Temperature MDC.

REFERENCES (a) DAT Specification 106156-401.
(b) MAC SCD 52-52701.

The requirement to conduct firing of the two 85 lb thrust chamber assemblies of the system until propellant depletion was effected following mission duty cycle firing in accordance with OSA-306 and OSM-404 of Reference (b) was not performed.

It was agreed that no significant performance data would be generated and that an accurate determination of propellant utilization for a specific mission cycle would be obscured.

R. Dinius
Gemini DAT Unit

Approved:

R. G. Eide
Supervisor
Gemini DAT Unit

R. Free
MAC Resident
Engineering Rep.

DESIGN APPROVAL TEST
ORBIT ATTITUDE AND MANEUVER SYSTEM
(SE7)

NAME OF TEST MDC HIGH TEMPERATURE TEST TEST NO. 106156-401 SHEET ____ OF ____

PART NO. 2-DAY CONFIG. { MAC ____ / NAA ____ } 14-DAY CONFIG. { MAC 52-52701 / NAA 99-106156 }

7.5.7.3 Propellant Utilization Data (post-MDC)

7.5.7.3.1 Oxidizer Utilization

7.5.7.3.1.1 Pre-refill Oxidizer Supply Volume, V_{o1} and Temperature, T_{o1} (paragraph 6.1.2.2.1.4.4)
V_{o1} = 4670 in^3 T_{o1} = 48 °F

7.5.7.3.1.2 Post-refill Oxidizer Supply Volume, V_{o2} and Temperature, T_{o2} (paragraph 6.1.2.2.1.4.8)
V_{o2} = 1264 in^3 T_{o2} = 47 °F

7.5.7.3.1.3 Determine Oxidizer Volume, V_{g1}, at $\left[\frac{T_{o1} + T_{o2}}{2}\right]$ from Figure 22.
V_{g1} = 4632 in^3.

7.5.7.3.1.4 Determine Volume used, V_{u1}
$V_{u1} = (V_{o1} - V_{o2}) + V_{g1} - 5438$ = 2600 in^3
Oxidizer Utilization = $V_{u1} \left[\frac{90.5 + 0.077 \left(70 - \left[\frac{T_{o1} + T_{o2}}{2}\right]\right)}{1728}\right]$
= 138.5 lbs. NTO

7.5.7.3.2 Fuel Utilization

7.5.7.3.2.1 Pre-refill Fuel Supply Volume, V_{f1}, and Temperature T_{f1} (paragraph 6.1.2.2.2.4.4)
V_{f1} = 5230 in^3 T_{f1} = 45 °F

PREPARED BY: DATE	PERFORMED BY: DATE	WITNESSED BY NASA: DATE	CONFIRMED BY: DATE
E. Charles R-15075-1	G. Schauer 2/8/65	G. Gleason 2/8/65	L. Scott 2/8/65
			VERIFIED BY USAF: DATE

Test Form 1453

DESIGN APPROVAL TEST
ORBIT ATTITUDE AND MANEUVER SYSTEM
(SE7)

NAME OF TEST MDC HIGH TEMPERATURE TEST TEST NO. 106156-401 SHEET ____ OF ____

PART NO. 2-DAY CONFIG. { MAC ____ / NAA ____ } 14-DAY CONFIG. { MAC 52-52701 / NAA 99-106156 }

7.5.7.3.2 (continued)

7.5.7.3.2.2 Post-refill Fuel Supply Volume, V_{f2}, Temperature, T_{f2} (paragraph 6.1.2.2.2.4.8)

V_{f2} = 1390 in^3 T_{f2} = 48 °F

7.5.7.3.2.3 Determine Fuel Volume, V_{g2}, at $\left[\frac{T_{f1} + T_{f2}}{2}\right]$ from Figure 21.

V_{g2} = 4827 in^3

7.5.7.3.2.4 Determine Volume used, V_{u2}

$V_{u2} = (V_{f1} - V_{f2}) + V_{g2} - 5425$ = 3242 in^3

$$\text{Fuel Used} = V_{u2}\left[\frac{54.87 + 0.0325\left(70 - \left[\frac{T_{f1} + T_{f2}}{2}\right]\right)}{1728}\right]$$

= 104.2 lbs. MMH.

PREPARED BY: DATE	PERFORMED BY: DATE	WITNESSED FOR NAA: DATE	CERTIFIED FOR McDONNELL: DATE
E. Charles	A. Schauer 2/8/65	G. Eton 2/8/65	Quality Dept. B. Scott 2/8/65
1038			VERIFIED BY USAF: DATE

R-15075-1

Test Form 1453

ROCKETDYNE
A DIVISION OF NORTH AMERICAN AVIATION INC

DESIGN APPROVAL TEST
ORBIT ATTITUDE AND MANEUVER SYSTEM
(SE7)

NAME OF TEST MDC HIGH TEMPERATURE TEST TEST NO. 106156-401 SHEET ____ OF ____

PART NO. 2-DAY CONFIG. { MAC ____ / NAA ____ } 14-DAY CONFIG. { MAC 52-52701 / NAA 99-106156 }

7.5.74

TCA Post-Test Inspection Data

AMR 930 2/9/65

Enter below, comments on the condition of each TCA resulting from the post-test visual inspection

TCA No.	Post-Test Condition
1	LIGHT GLASSING IN THROAT. NOZZEL BLISTERED SCARF BLISTERED AND ERODED GAS LEAKAGE AROUND HI FREQ PC BOSS.
2	MODERATE GLASSING OVER OF THROAT. GLASS DEPOSITS OF THROAT LIGHT EROSION AT SCARF.
3	GOOD CONDITION - VERY LIGHT GLASSING OF THROAT. GAS LEAKAGE AROUND HI FREQ PC BOSS.
4	LIGHT GLASSING OF THROAT. MODERATE BLISTERING AND LAYER SEPERATION AT SCARF
5	LIGHT GLASSING OF THROAT. SCARF BLISTERED AND PEALED WITH SLIGHT EROSION. GAS LEAKAGE AROUND HI FREQ PC BOSS.
6	MODERATE GLASSING OF THROAT. SCARF PEALED AND BLISTERED MODERATLY. NOZZEL HAS SLIGHT LAYER SEPERATION.
7	GOOD CONDITION. EXCEPT FOR SLIGHT GAS LEAKAGE AROUND HI FREQ PC BOSS
8	LIGHT GLASSING OF THROAT. MODERATE BLISTERING OF SCARF.
9	INJECTOR COMPLETELY COVERED WITH CARBON. MODERATE GLASSING OVER OF THROAT.

AMR 930

PREPARED BY: DATE	PERFORMED BY: DATE	WITNESSED FOR NAA: DATE	CERTIFIED FOR McDONNELL: DATE
E. Charles	[signature] 4-20-65	[signature] 2/9/65 AMR 930	RECEIVED BY S. SCOTT 2/9/65
R-15075-1			VERIFIED BY USAF: DATE

Test Form 1453

ROCKETDYNE
A DIVISION OF NORTH AMERICAN AVIATION INC

DESIGN APPROVAL TEST
ORBIT ATTITUDE AND MANEUVER SYSTEM
(SE7)

NAME OF TEST MDC HIGH TEMPERATURE TEST TEST NO. 106156-401 SHEET ____ OF ____

PART NO. 2-DAY CONFIG. { MAC ____ / NAA ____ } 14-DAY CONFIG. { MAC 52-52701 / NAA 99-106156 }

1.5.7.4 (continued)

2/9/65

TCA No.	Post-Test Condition
10	MODERATE GLASSING IN THROAT. SMALL LAYER SEPERATION IN NOZZEL.
11	INJECTOR COVERED WITH CARBON. HEAVY GLASSING OF THROAT. HEAVY GLASSING, BLISTERING AND EROSION OF SCARF.
12	HEAVY GLASSING OF THROAT. HEAVY GLASSING BLISTERING AND EROSION AT SCARF.
13	INJECTOR COVERED WITH CARBON. MODERATE GLASSING OF THROAT.
14	INJECTOR COVERED WITH CARBON. MODERATE GLASSING OF THROAT
15	MODERATE GLASSING OF THROAT. LAYER SEPERATION AND SEGMENT OF ABLATIVE MISSING D/S OF THROAT
16	INJECTOR COVERED WITH CARBON. MODERATE GLASSING OF THROAT

PREPARED BY: DATE	PERFORMED BY: DATE	WITNESSED FOR NAA: DATE	CERTIFIED FOR McDONNELL: DATE
E. Charles	11-20-65		VERIFIED BY USAF: DATE

1040

R-15075-1

Test Form 1453

ROCKETDYNE
A DIVISION OF NORTH AMERICAN AVIATION INC

DESIGN APPROVAL TEST
ORBIT ATTITUDE AND MANEUVER SYSTEM
(SE7)

NAME OF TEST MDC HIGH TEMPERATURE TEST TEST NO. 106156-401 SHEET ____ OF ____

PART NO. 2-DAY CONFIG. { MAC ____ / NAA ____ } 14-DAY CONFIG. { MAC 52-52701 / NAA 99-106156 }

TCA Pulse Firing Data (From E.A. Recorder)

TCA No.	Number of Pulses	* Pulse Duration
TCA #1	702	0.036
	1	2.100
	8	1.050
	18	0.018
	9	0.023
	1481	0.062
	126	0.032
TCA #2	702	0.036
	1	2.100
	8	1.050
	18	0.018
	9	0.023
	1481	0.062
	126	0.032
TCA #3	225	0.033
	1	4.200
	32	0.710
	26	0.018
	27	0.023
	295	0.031
	1088	0.055
TCA #4	234	0.033
	1	4.200
	32	0.710
	27	0.018
	27	0.023
	296	0.031
	1100	0.055

* NOTE: THE PULSE DURATIONS ARE THOSE THAT WERE REQUIRED PER IL 4388-2021. THE E.A. RECORDER YIELDS INDETERMINANT VALUES FOR SHORT-RAPID PULSE DURATIONS

PREPARED BY: DATE	PERFORMED BY: DATE	WITNESSED FOR NAA: DATE	CERTIFED FOR McDONNELL: DATE
E. Charles	M. S. Shelton	W. E. Lacey	
R-15075-1	9/15/65	9/30/65	VERIFIED BY USAF: DATE 1041

Test Form 1453

ROCKETDYNE
A DIVISION OF NORTH AMERICAN AVIATION INC

DESIGN APPROVAL TEST
ORBIT ATTITUDE AND MANEUVER SYSTEM
(SE7)

NAME OF TEST MDC HIGH TEMPERATURE TEST TEST NO. 106156-401 SHEET ____ OF ____

PART NO. 2-DAY CONFIG. { MAC ____ / NAA ____ } 14-DAY CONFIG. { MAC 52-52701 / NAA 99-106156 }

TCA Pulse Firing Data (From E.A. Recorder)

TCA No.	Number of Pulses	* Pulse Duration
TCA #5	702	0.036
	1	2.100
	8	1.050
	21	0.018
	9	0.023
	1480	0.062
	126	0.032
TCA #6	690	0.036
	1	2.100
	8	1.050
	21	0.018
	9	0.023
	1480	0.062
	126	0.032
TCA #7	255	0.033
	1	4.200
	32	0.710
	26	0.018
	26	0.023
	295	0.031
	1096	0.055
TCA #8	255	0.033
	1	4.200
	32	0.710
	27	0.018
	27	0.023
	295	0.031
	1098	0.055

* SEE NOTE PRECEDING PAGE

PREPARED BY: DATE	PERFORMED BY: DATE	WITNESSED FOR NAA: DATE	CERTIFIED FOR McDONNELL: DATE
E. Charles	M. D. [illegible] 9/12/65	W. E. [illegible] 9/22/65	VERIFIED BY USAF: DATE
1042			R-15075-1

Test Form 1453

ROCKETDYNE
A DIVISION OF NORTH AMERICAN AVIATION INC

DESIGN APPROVAL TEST
ORBIT ATTITUDE AND MANEUVER SYSTEM
(SE7)

NAME OF TEST MDC HIGH TEMPERATURE TEST TEST NO. 106156-401 SHEET ____ OF ____

PART NO. 2-DAY CONFIG. { MAC ____ NAA ____ } 14-DAY CONFIG. { MAC 52-52701 NAA 99-106156 }

TCA No.	Number of Pulses	Pulse Duration
TCA #9	1	15
	1	51.5
	1	4.9
	1	15.5
	1	11.5
TCA #10	1	15
	1	51.5
	1	4.9
	1	15.5
	1	11.5
TCA #11	1	88.5
TCA #12	1	88.5
TCA #13	2	6.2
	1	64.7
TCA #14	1	19.4
	1	27.1
	1	9.0
TCA #15	1	20.1
	1	47
	1	16.2
	1	33
TCA #16	1	4.2
	2	19
	1	14.0
	1	11.1

PREPARED BY: DATE	PERFORMED BY: DATE	WITNESSED FOR NAA: DATE	CERTIFIED FOR McDONNELL: DATE
E. Charles R-15075-1	M. S. Skolion 9/15/65	M. E. Lancy 9/30/65	VERIFIED BY USAF: DATE

Test Form 1453

ROCKETDYNE
A DIVISION OF NORTH AMERICAN AVIATION INC

DESIGN APPROVAL TEST
ORBIT ATTITUDE AND MANEUVER SYSTEM
(SE7)

NAME OF TEST MEC HIGH TEMPERATURE TEST TEST NO. 106156-401 SHEET 306 OF 413

PART NO. 2-DAY CONFIG. { MAC ____ NAA ____ } 14-DAY CONFIG. { MAC 52-52701 NAA 99-106156 }

Test Data From DIGR Charts

Parameter	Start of Test	End of Test
Temperatures		
Test Cell Ambient Temperature	159 F	160°F *
Oxidizer Tank (Skin)	92F	112
Fuel Tank (Skin)	86 F	110
Pressurant Tank (Skin)	155	116
Pressure Regulator (external)	156	154
Reg. Pressurant Line	162	157
TCA #1 (external)	157	564
TCA #2 (external)	152	608
TCA #3 (external)	165	490
TCA #4 (external)	151	454
TCA #5 (external)	167	673
TCA #6 (external)	161	452
TCA #7 (external)	158	400
TCA #8 (external)	160	533
TCA #9 (external)	160	394
TCA #10 (external)	151	454
TCA #11 (external)	167	404
TCA #12 (external)	167	420
TCA #13 (external)	167	338
TCA #14 (external)	167	357
TCA #15 (external)	171	435
TCA #16 (external)	164	406

* MAXIMUM TEMPERATURE ATTAINED

PREPARED BY: DATE	PERFORMED BY: DATE	WITNESSED FOR NAA: DATE	CERTIFIED FOR McDONNELL: DATE
E. Charles 1044	Start by W. Lipski 2/6/65	E. E. Rex VOID 2/16/65	R. J. Fox 7-30-65
			VERIFIED BY USAF: DATE R-15075-1

Test Form 1453

* Stamped in error as test values recorded

ROCKETDYNE
A DIVISION OF NORTH AMERICAN AVIATION INC

DESIGN APPROVAL TEST
ORBIT ATTITUDE AND MANEUVER SYSTEM
(SE7)

NAME OF TEST MDC HIGH TEMPERATURE TEST TEST NO. 106156-401 SHEET 307 OF 413

PART NO. 2-DAY CONFIG. { MAC ____ NAA ____ } 14-DAY CONFIG. { MAC 52-52701 NAA 99-106156 }

Test Data from DIGR Charts

Parameter	Start of Test	End of Test
Pressures		
Pressurant Supply	3420 PSIG	1720 PSIG
Pressurant, Regulated	278 PSIG	281 PSIG
Oxidizer Supply	260 PSIG	272 PSIG
Fuel Supply	274 PSIG	283 PSIG
Altitude (Test Cell)	SEA LEVEL	SEA LEVEL

PREPARED BY: DATE	PURCHASED BY: DATE	WITNESSED BY: DATE	CERTIFIED FOR DELIVERY: DATE
E. Charles	START BY: W. Pilipski 2/6/65	[signature] 2/6/65	[signature] 7-23-65
R-15075-1			VERIFIED BY USAF: DATE
			1045

Test Form 1453

* Stamped in error corrected values reviewed

ROCKETDYNE
A DIVISION OF NORTH AMERICAN AVIATION INC

DESIGN APPROVAL TEST
ORBIT ATTITUDE AND MANEUVER SYSTEM
(SE7)

NAME OF TEST MDC HIGH TEMPERATURE TEST TEST NO. 106196-A01 SHEET ____ OF ____

PART NO. 2-DAY CONFIG. { MAC ____ NAA ____ } 14-DAY CONFIG. { MAC 96-32701 NAA 99-10[illegible] }

System Pneumatic and Propellant Pressures and Supply Voltages

Time From Test Start (Sec)	Pneu. Supply Pressure (Facility Trans.) Psia	Pneu. Supply Pressure (Flight Trans.) Psia	Pneu. Regulator Out Pressure (Facility Trans.) Psia	Pneu. Regulator Out Pressure (Flight Trans.) Psia	Package D Pressure (Fuel) Psia	Package C Pressure (Oxidizer) Psia	Transducer Supply Voltage	System Supply Voltage
-480	3654	3600	14	—	14	14	5.0	25.7
-477.5	3594	—	175	—	151	89		—
-475	3514	—	254	305	238	199		—
-472.5	3439	3385	307	—	305	297		—
5.5	3434	3370	291	293	285	274		25.5
32.4	3354	3300	292	293	290	280		—
11,045	3324	3265	293	294	290	283		—
11,056	3279	3245	292	—	286	277		25.6
11,091	3129	3100	292	—	286	277		—
11,126	3089	3050	293	—	287	279		—
11,193	2824	2840	293	—	287	279		—
11,201	2834	2820	293	—	287	279		25.7
12,214	2844	2820	293	296	286	277		25.7
12,374	2804	2785	293	—	291	284		—
12,312	2789	2765	293	—	292	284	5.0	—

PREPARED BY: DATE	PERFORMED BY: DATE	WITNESSED FOR NAA DATE	CERTIFIED FOR McDONNELL DATE
W. E. Searcy 1046	[illegible] 9/15/65	W. E. Searcy 9/30/65	VERIFIED BY USAF DATE

R-15075+1

Test Form 1453

ROCKETDYNE
A DIVISION OF NORTH AMERICAN AVIATION INC

DESIGN APPROVAL TEST
ORBIT ATTITUDE AND MANEUVER SYSTEM
(SE7)

NAME OF TEST MDC HIGH TEMPERATURE TEST TEST NO. 106156-401 SHEET ____ OF ____

PART NO. 2-DAY CONFIG. { MAC ____ NAA ____ } 14-DAY CONFIG. { MAC 52-52701 NAA 99-106156 }

System Pneumatic and Propellant Pressures and Supply Voltages

Time From Test Start (Sec)	Pneu. Supply Pressure (Facility Trans.) Psia	Pneu. Supply Pressure (Flight Trans.) Psia	Pneu. Regulator Out Pressure (Facility Trans.) Psia	Pneu. Regulator Out Pressure (Flight Trans.) Psia	Package D Pressure (Fuel) Psia	Package C Pressure (Oxidizer) Psia	Transducer Supply Voltage	System Supply Voltage
12,380	2759	2730	293	294	288	281	5.0	25.5
12,425	2559	2550	—	—	292	285		—
12,482	2399	2395	294	294	292	285		25.7
12,520	—	—	—	—	288	281		
12,560	—	—	—	—	284	275		
12,600	2304	2295	—	—	289	281		
12,658	2249	2235	—	—	291	282		
12,680	2159	2150	—	—	290	282		
12,692	—	—	—	—	—	—		
12,736	2114	2100	—	—	292	284		
12,794	2044	2030	—	—	278	269		
12,812	1964	1955	—	—	288	281		
12,843	1909	1910	—	—	289	281		
12,846	1859	1860	—	—	289	—		
13,022	1809	1795	295	294	292	286	5.0	25.7

PREPARED BY: DATE	PERFORMED BY: DATE	WITNESSED FOR NAA: DATE	CERTIFIED FOR McDONNELL: DATE
W. E. Searcy R-15075-1	M. L. Skalion 9/15/65	W. E. Searcy 9/30/65	VERIFIED BY USAF: DATE

Test Form 1453

ROCKETDYNE
A DIVISION OF NORTH AMERICAN AVIATION INC

DESIGN APPROVAL TEST
ORBIT ATTITUDE AND MANEUVER SYSTEM
(SE7)

NAME OF TEST MDC HIGH TEMPERATURE TEST TEST NO. 106156-401 SHEET ____ OF ____

PART NO. 2-DAY CONFIG. { MAC ____ NAA ____ } 14-DAY CONFIG. { MAC 52-52701 NAA 99-106156 }

System Pneumatic and Propellant Pressures and Supply Voltages

Time From Test Start (Sec)	Pneu. Supply Pressure (Facility Trans.) Psia	Pneu. Supply Pressure (Flight Trans.) Psia	Pneu. Regulator Out Pressure (Facility Trans.) Psia	Pneu. Regulator Out Pressure (Flight Trans.) Psia	Package D Pressure (Fuel) Psia	Package C Pressure (Oxidizer) Psia	Transducer Supply Voltage	System Supply Voltage
13077	1764	1750	294	—	293	286	5.0	25.6
13105	—	—	—	294	—	—	—	—
13153	1729	1740	294	295	293	286	5.0	25.6

PREPARED BY: DATE	PERFORMED BY: DATE	WITNESSED FOR NAA: DATE	CERTIFED FOR McDONNELL: DATE
W. E. Searcy 1048	[illegible] 9/30/65	W. E. Searcy 9/30/65	VERIFIED BY USAF: DATE

R-15075-1

Test Form 1453

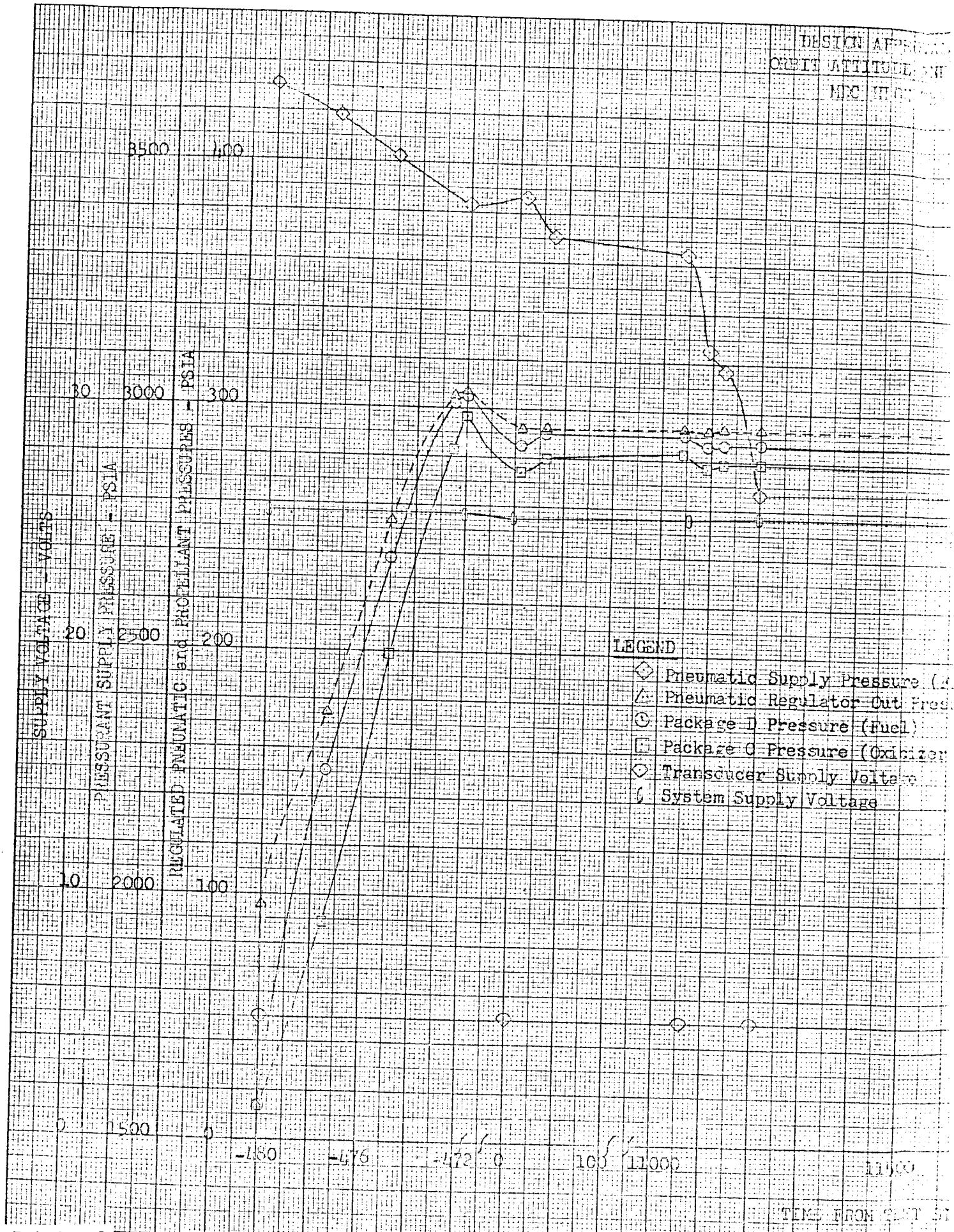
DESIGN AP
ORBIT ATTITUDE
MEC
SUPPLY VOLTAGE - VOLTS
PRESSURANT SUPPLY PRESSURE - PSIA
REGULATED PNEUMATIC and PROPELLANT PRESSURES - PSIA
30
20
10
0
3500
3000
2500
2000
1500
400
300
200
100
0
-480
-476
-472
0
100
11000
11500
LEGEND
Pneumatic Supply Pressure
Pneumatic Regulator Out Pres
Package D Pressure (Fuel)
Package O Pressure (Oxidizer
Transducer Supply Voltage
System Supply Voltage
TIME FROM

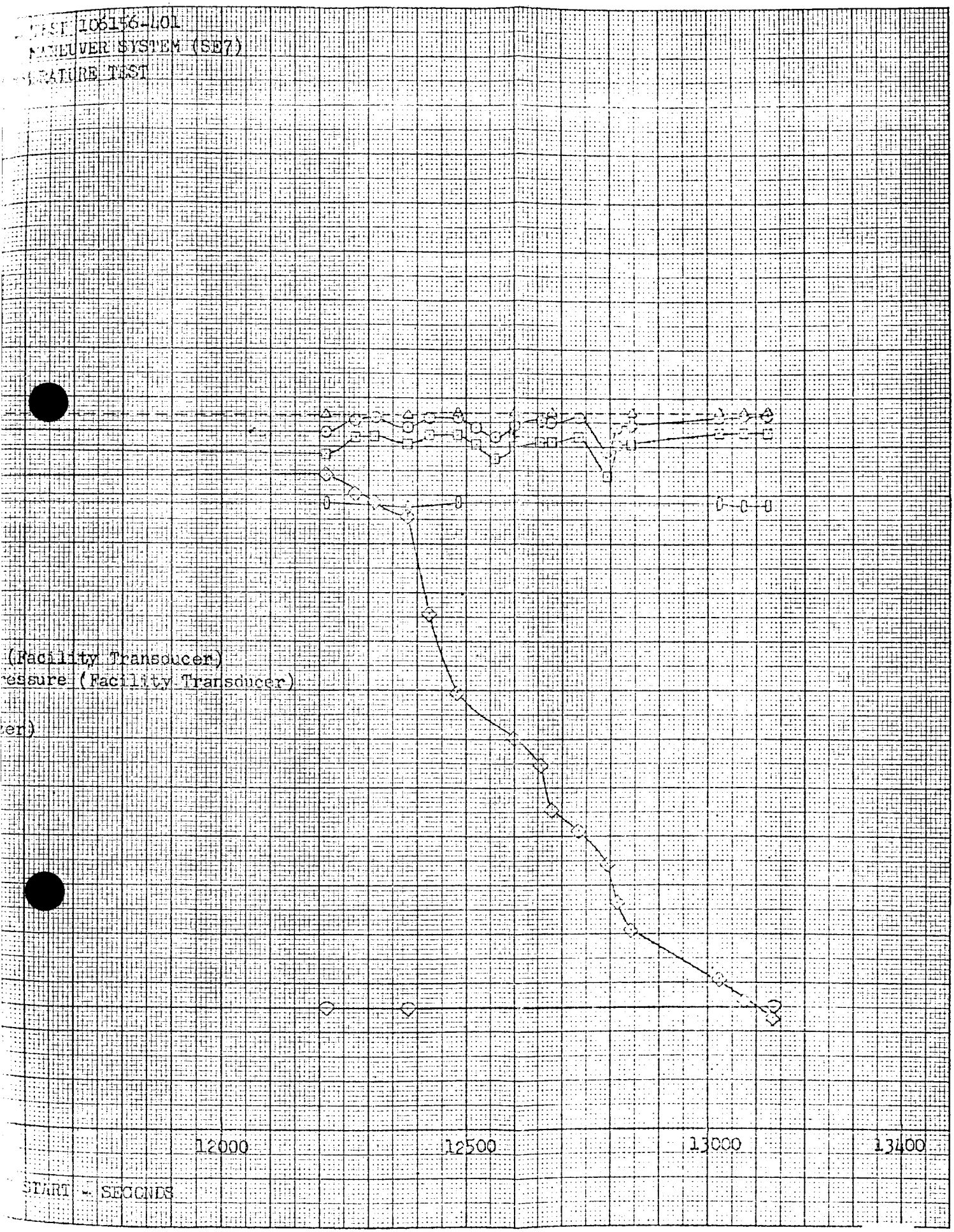
ST 106156-L01
NEUVER SYSTEM (SE7)
ATURE TEST
(Facility Transducer)
essure (Facility Transducer)
er)
12000
12500
13000
13400
START - SECONDS

ROCKETDYNE
A DIVISION OF NORTH AMERICAN AVIATION INC

DESIGN APPROVAL TEST
ORBIT ATTITUDE AND MANEUVER SYSTEM
(SE7)

NAME OF TEST MDC HIGH TEMPERATURE TEST TEST NO. 106156-401 SHEET ____ OF ____

PART NO. 2-DAY CONFIG. { MAC ____ NAA ____ } 14-DAY CONFIG. { MAC 52-52701 NAA 99-106156 }

TCA Surface Temperatures

Time From Test Start (Sec)	TCA #1	TCA #2	TCA #3	TCA #4	TCA #5	TCA #6	TCA #7	TCA #8
32	148	150	161	147	159	157	156	154
11,054	109	138	146	144	151	131	150	152
11,201	113	143	147	147	150	131	149	130
12,214	304	372	258	238	344	316	216	131
12,274	307	376	261	242	348	319	218	227
12,312	323	388	266	247	363	332	220	228
12,380	329	397	269	248	371	340	222	235
12,425	343	411	276	254	386	356	230	237
12,482	357	427	287	268	403	374	247	246
12,520	362	430	293	279	406	377	252	261
12,560	372	437	302	296	414	385	266	268
12,600	384	446	316	322	425	393	284	285
12,658	396	457	335	349	441	406	305	309
12,680	410	465	353	378	447	421	326	336
12,692	414	464	360	385	447	427	332	365

PREPARED BY: DATE	PERFORMED BY: DATE	WITNESSED FOR NAA: DATE	CERTIFIED FOR McDONNELL: DATE
W. E. Searcy	M. S. Skalion 9/15/65	W. E. Searcy 9/20/65	VERIFIED BY USAF: DATE

1050

R-15075-1

Test Form 1453

ROCKETDYNE
A DIVISION OF NORTH AMERICAN AVIATION INC

DESIGN APPROVAL TEST
ORBIT ATTITUDE AND MANEUVER SYSTEM
(SE7)

NAME OF TEST MDC HIGH TEMPERATURE TEST TEST NO. 106156-401 SHEET ____ OF ____

PART NO. 2-DAY CONFIG. { MAC ____ NAA ____ } 14-DAY CONFIG. { MAC 52-52701 NAA 99-106156 }

TCA Surface Temperatures

Time From Test Start (Sec)	TCA #1	TCA #2	TCA #3	TCA #4	TCA #5	TCA #6	TCA #7	TCA #8
12,736	418	460	367	395	453	433	339	385
12,794	432	443	389	424	462	452	367	418
12,812	441	442	404	440	466	445	385	437
12,843	446	437	411	449	469	426	393	445
12,846	—	—	418	454	474	413	400	453
13,022	438	433	443	364	549	313	348	407
13,050	441	443	446	352	562	294	319	405
13,077	452	454	451	342	574	287	309	405
13,105	460	456	458	336	586	279	302	416
13,133	466	466	466	326	597	276	299	430
13,433	523	568	490	259	671	267	300	503
13,733	564	608	488	231	673	259	298	533
14,033	517	545	446	202	611	236	269	492
14,233	445	474	400	191	521	216	246	418
14,633	396	412	363	177	468	203	238	379

PREPARED BY: DATE	PERFORMED BY: DATE	WITNESSED FOR NAA: DATE	CERTIFIED FOR McDONNELL: DATE
W. E. Searcy R-15075-1	W. E. Searcy 9/15/65	W. E. Searcy 9/20/65	VERIFIED BY USAF: DATE

Test Form 1453

ROCKETDYNE
A DIVISION OF NORTH AMERICAN AVIATION INC

DESIGN APPROVAL TEST
ORBIT ATTITUDE AND MANEUVER SYSTEM
(SE7)

NAME OF TEST MDC HIGH TEMPERATURE TEST TEST NO. 106156-401 SHEET ____ OF ____

PART NO. 2-DAY CONFIG. { MAC ____ NAA ____ } 14-DAY CONFIG. { MAC 52-52701 NAA 99-106156 }

TCA Surface Temperature

Time From Test Start (Sec)	TCA #9	TCA #10	TCA #11	TCA #12	TCA #13	TCA #14	TCA #15	TCA #16
32	153	146	159	156	157	161	169	161
11,045	148	134	155	154	157	159	161	158
11,201	152	123	153	155	156	157	157	157
12,214	278	209	404	420	157	162	154	157
12,274	298	336	—	—	—	—	—	—
12,312	—	—	—	—	—	—	—	—
12,380	300	356	398	402	157	160	155	157
12,425	—	—	342	397	—	—	—	—
12,482	—	335	371	386	—	—	—	158
12,520	293	335	362	382	159	161	156	—
12,560	290	337	—	—	165	—	—	—
12,600	294	341	351	372	164	—	—	165
12,658	303	348	—	—	187	—	—	170
12,680	312	359	—	—	206	—	—	—
12,692	315	364	354	366	211	—	—	—

PREPARED BY: DATE	PERFORMED BY: DATE	WITNESSED FOR NAA: DATE	CERTIFIED FOR McDONNELL: DATE
W. E. Searcy	W. S. Lohan 9/15/65	W. E. Searcy 9/20/65	VERIFIED BY USAF: DATE
1052			R-15075-1

Test Form 1453

ROCKETDYNE
A DIVISION OF NORTH AMERICAN AVIATION INC

DESIGN APPROVAL TEST
ORBIT ATTITUDE AND MANEUVER SYSTEM
(SE7)

NAME OF TEST MDC HIGH TEMPERATURE TEST TEST NO. 106156-401 SHEET ____ OF ____

PART NO. 2-DAY CONFIG. { MAC ____ NAA ____ } 14-DAY CONFIG. { MAC 52-52701 NAA 99-106156 }

TCA Surface Temperature

Time From Test Start (Sec)	TCA #9	TCA #10	TCA #11	TCA #12	TCA #13	TCA #14	TCA #15	TCA #16
12,736	325	368	—	—	218	—	—	206
12,794	334	387	353	359	244	—	157	211
12,812	341	397	—		258	—	169	224
12,843	345	404	349	354	266	—	176	234
12,846	—	—	—	—	—	—	—	242
13,022	371	441	315	333	310	171	260	328
13,050	370	445	308	328	309	176	276	340
13,077	371	447	301	326	309	183	290	347
13,105	374	453	300	323	312	189	305	357
13,133	381	454	303	320	317	200	320	365
13,433	394	454	301	314	332	271	395	396
13,733	394	450	293	303	333	328	432	406
14,033	372	433	267	281	321	357	435	404
14,333	348	408	242	264	307	350	418	388
14,633	332	386	237	251	300	347	404	368

PREPARED BY: DATE	PERFORMED BY: DATE	WITNESSED FOR NAA: DATE	CERTIFED FOR McDONNELL: DATE
W. E. Searcy	M. S. Shelton 9/15/65	W. E. Searcy 9/20/65	VERIFIED BY USAF: DATE

R-15075-1

Test Form 1453

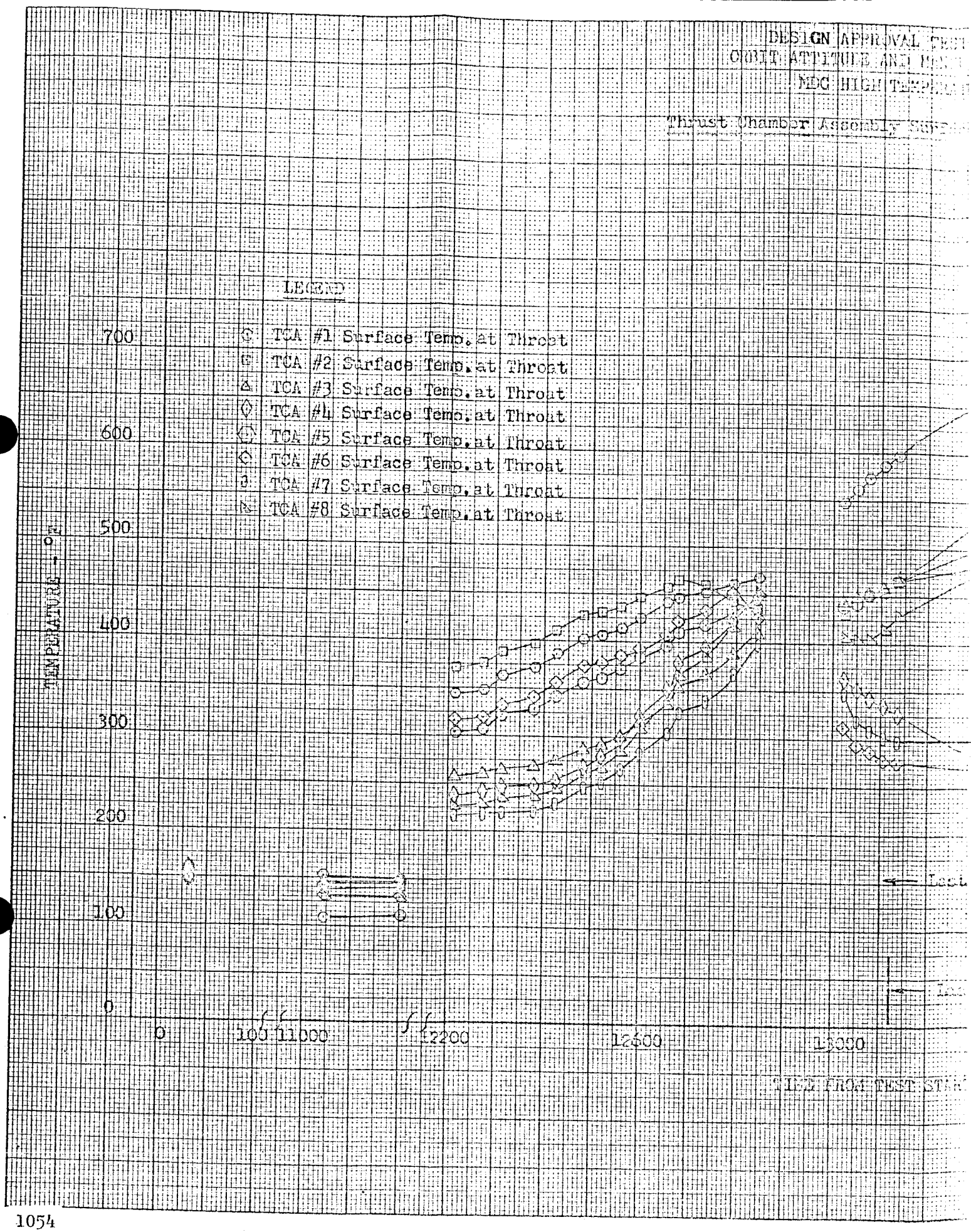
DESIGN APPROVAL TEST
ORBIT ATTITUDE AND MANEUVER
MDC HIGH TEMPERATURE
Thrust Chamber Assembly Surface
LEGEND
TCA #1 Surface Temp. at Throat
TCA #2 Surface Temp. at Throat
TCA #3 Surface Temp. at Throat
TCA #4 Surface Temp. at Throat
TCA #5 Surface Temp. at Throat
TCA #6 Surface Temp. at Throat
TCA #7 Surface Temp. at Throat
TCA #8 Surface Temp. at Throat
TEMPERATURE - °F
700
600
500
400
300
200
100
0
0
10500
11000
11500
12000
12500
13000
TIME FROM TEST START

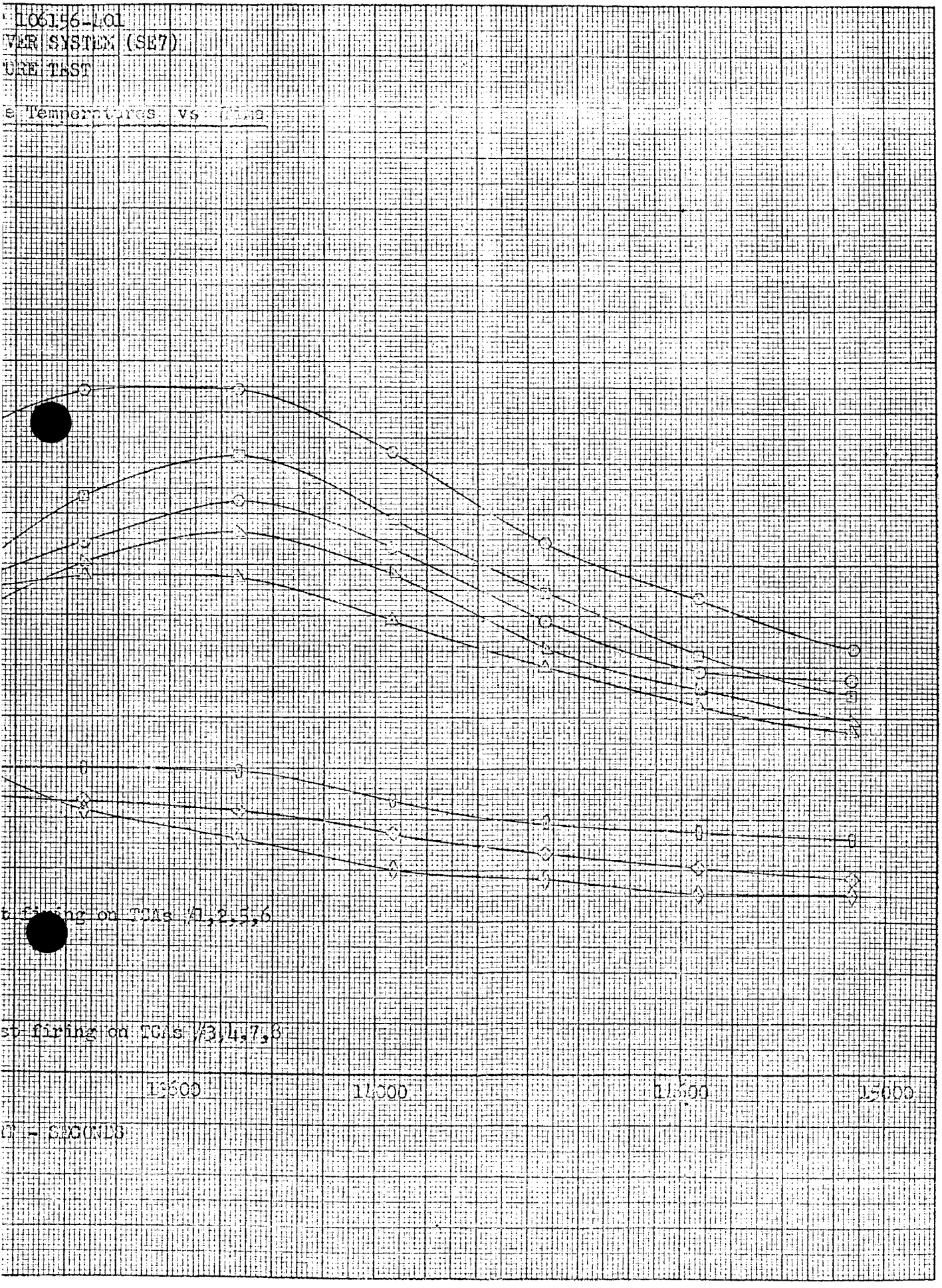
106156-101
VER SYSTEM (SE7)
URE TEST
e Temperatures vs Time
t firing on TCAs #1,2,5,6
st firing on TCAs #3,4,7,8
10000
11000
12000
13000
T - SECONDS

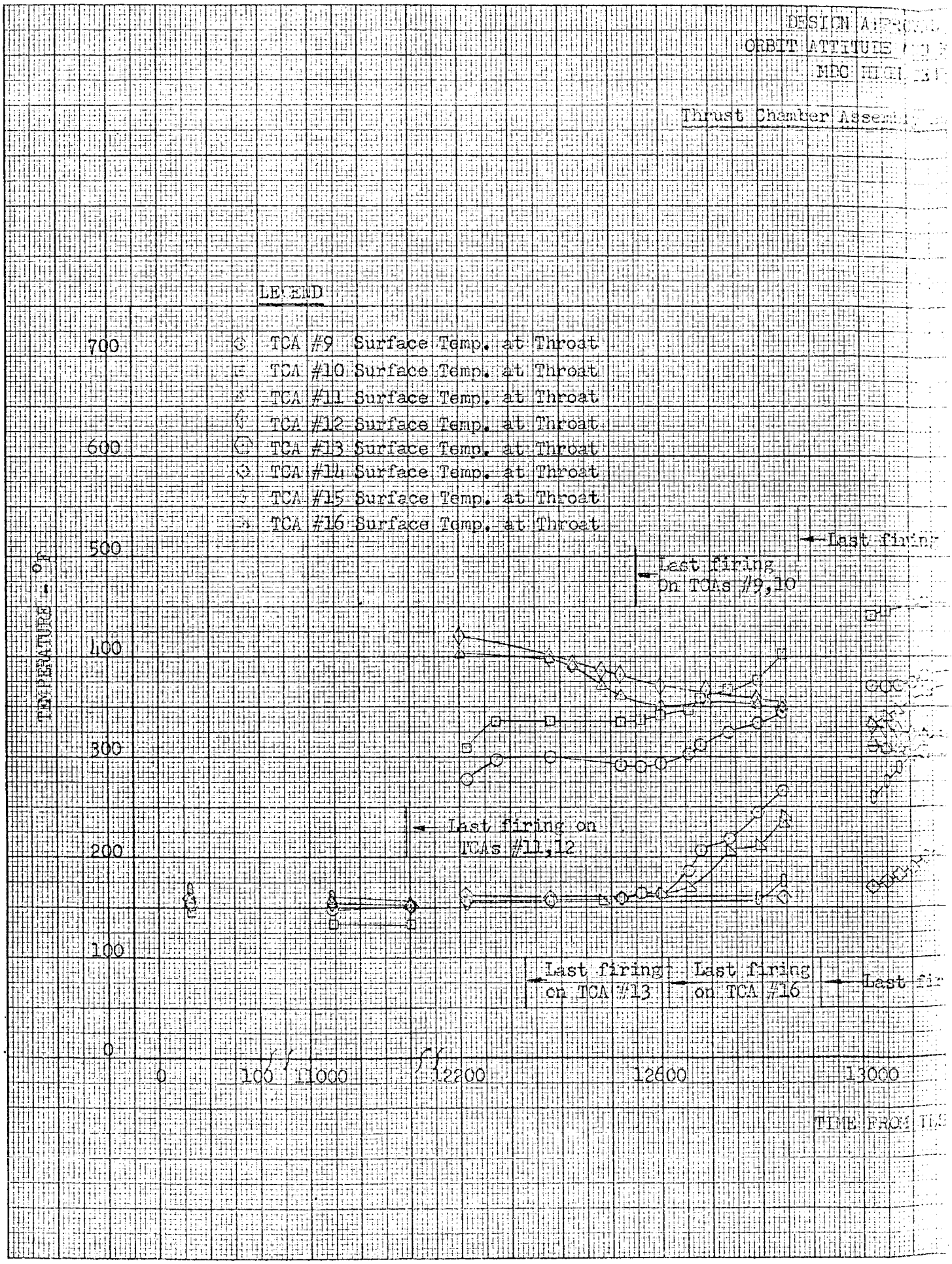
DESIGN A
ORBIT ATTITUDE
MDC
Thrust Chamber Assem
LEGEND
TCA #9 Surface Temp. at Throat
TCA #10 Surface Temp. at Throat
TCA #11 Surface Temp. at Throat
TCA #12 Surface Temp. at Throat
TCA #13 Surface Temp. at Throat
TCA #14 Surface Temp. at Throat
TCA #15 Surface Temp. at Throat
TCA #16 Surface Temp. at Throat
TEMPERATURE - °F
700
600
500
400
300
200
100
0
Last firing on TCAs #9,10
Last firing on TCAs #11,12
Last firing on TCA #13
Last firing on TCA #16
0
100
11000
12200
12600
13000
TIME FRO

TEST 106156-401
NEUVER SYSTEM (SE7)
PERATURE TEST

rface Temperatures vs Time

on TCA #15

ing on TCA #14

13600 14000 14600 15000

ST START - SECONDS

ROCKETDYNE
A DIVISION OF NORTH AMERICAN AVIATION INC

DESIGN APPROVAL TEST
ORBIT ATTITUDE AND MANEUVER SYSTEM
(SE7)

NAME OF TEST MDC HIGH TEMPERATURE TEST TEST NO. 106156-401 SHEET ____ OF ____

PART NO. 2-DAY CONFIG. { MAC ____ NAA ____ } 14-DAY CONFIG. { MAC 52-52701 NAA 99-106156 }

System Surface Temperatures

Time From Test Start (Sec)	Oxidizer Tank (F)	Fuel Tank (F)	Pressurant Tank (F)	Regulated Press. Line (F)	Pressure Regulator (F)	Environmental (F)
0	92	85	158	155	156	159
620	93	86	156	156	156	161
1200	93	86	155	155	156	160
1820	94	87	155	156	155	160
2400	94	88	156	154	154	160
3020	95	88	155	154	154	159
3600	95	88	154	154	154	159
4220	96	88	154	154	153	159
4800	96	89	154	154	153	158
5420	97	89	154	153	152	155
6000	98	90	154	154	152	160
6620	98	90	153	152	152	157
7200	98	90	152	151	151	157
7820	99	91	153	152	151	157
8400	99	91	152	152	150	157
9020	100	91	152	152	150	158
9600	100	92	152	154	151	157
10,220	101	92	152	155	151	164

PREPARED BY: DATE	PERFORMED BY: DATE	WITNESSED FOR NAA: DATE	CERTIFIED FOR McDONNELL: DATE
W. E. Searcy	M. S. Shelton 9/15/65	W. E. Searcy 9/30/65	VERIFIED BY USAF: DATE

1056 R-15075-1

Test Form 1453

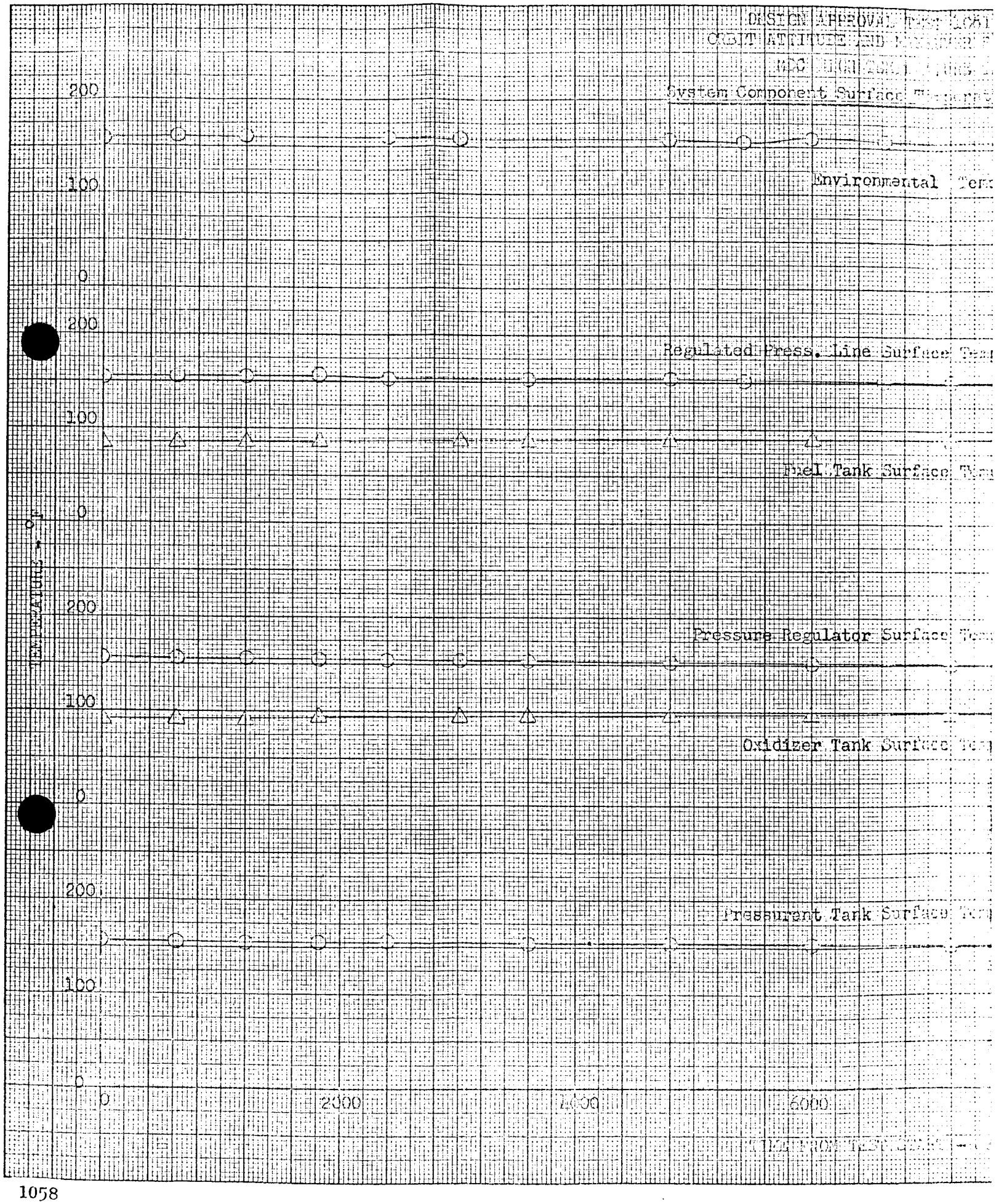
DESIGN APPROVAL
System Component Surface
Environmental
Regulated Press. Line Surface
Fuel Tank Surface
Pressure Regulator Surface
Oxidizer Tank Surface
Pressurant Tank Surface
TEMPERATURE - °F
200
100
0
0
2000
4000
6000

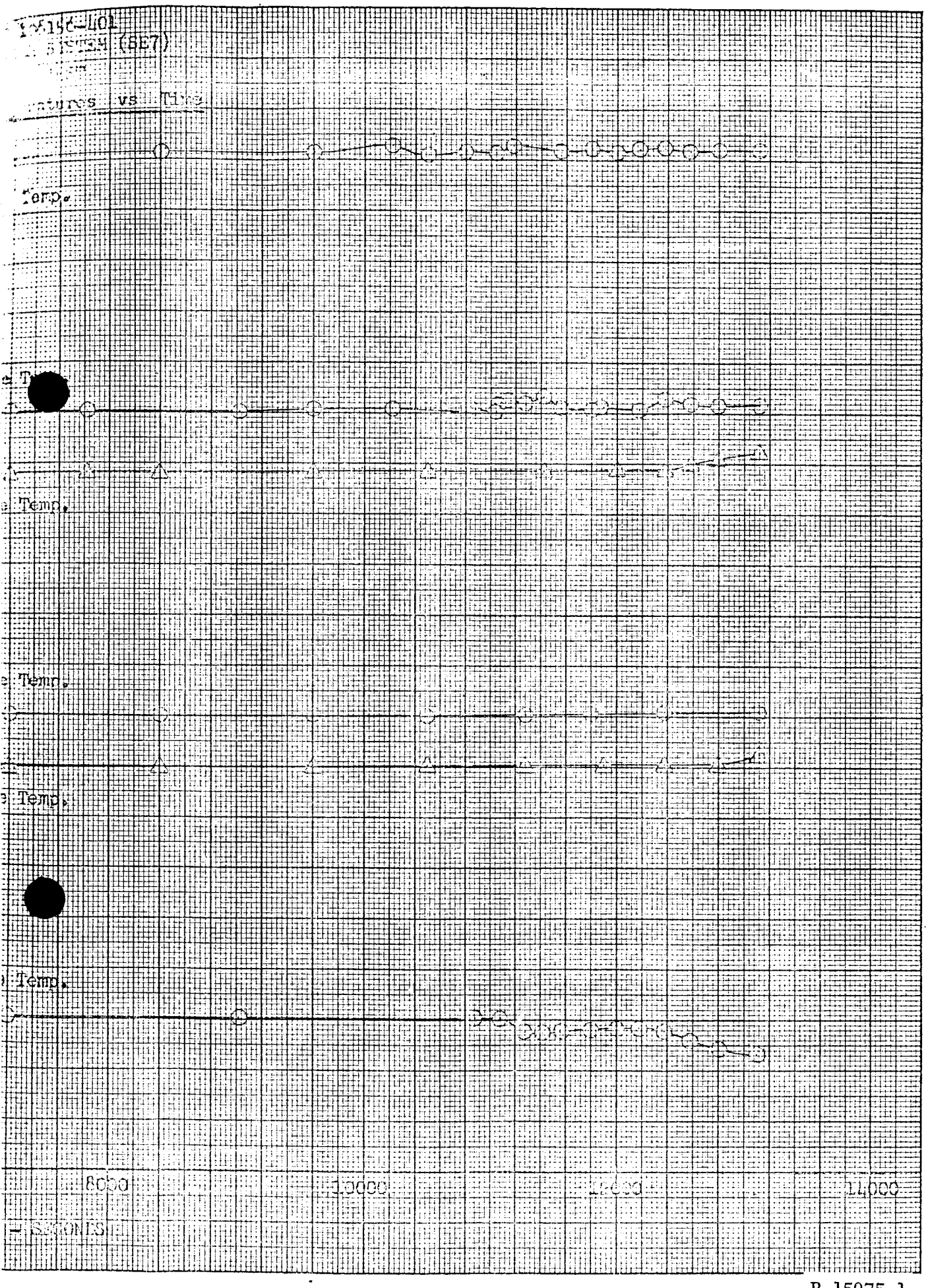
(8E7)
vs
Temp.
Temp.
Temp.
Temp.
Temp.
8000
10000
11000

ROCKETDYNE
A DIVISION OF NORTH AMERICAN AVIATION INC

DESIGN APPROVAL TEST
ORBIT ATTITUDE AND MANEUVER SYSTEM
(SE7)

NAME OF TEST MDC HIGH TEMPERATURE TEST TEST NO. 106156-401 SHEET ____ OF ____

PART NO. 2-DAY CONFIG. { MAC ____ NAA ____ } 14-DAY CONFIG. { MAC 52-52701 NAA 99-106156 }

System Surface Temperatures

Time From Test Start (Sec)	Oxidizer Tank (F)	Fuel Tank (F)	Pressurant Tank (F)	Regulated Press. Line (F)	Pressure Regulator (F)	Environmental (F)
10,550	101	93	152	152	150	155
10,800	101	93	152	152	151	159
10,880	101	93	152	154	151	159
11,040	101	93	152	151	150	157
11,080	102	93	152	161	150	158
11,180	102	93	144	163	151	164
11,280	102	93	139	160	152	161
11,420	102	93	137	166	153	160
11,560	102	94	139	155	152	159
11,800	102	94	140	154	153	161
11,900	102	94	141	156	154	162
12,000	103	94	142	156	154	158
12,180	103	94	143	154	154	161
12,380	103	94	140	164	154	162
12,580	103	100	130	159	154	159
12,800	104	105	121	158	155	160
13,100	113	111	116	157	154	161
13,120	113	112	116	158	155	160

PREPARED BY: DATE	PERFORMED BY: DATE	WITNESSED FOR NAA: DATE	CERTIFIED FOR McDONNELL: DATE
W. E. Searcy	W. S. Skelton 9/15/65	W. E. Searcy 9/30/65	VERIFIED BY USAF: DATE
R-15075-1			

Test Form 1453

ROCKETDYNE
A DIVISION OF NORTH AMERICAN AVIATION INC

DESIGN APPROVAL TEST
ORBIT ATTITUDE AND MANEUVER SYSTEM
(SE7)

NAME OF TEST MDC HIGH TEMPERATURE TEST TEST NO. 106156-401 SHEET ____ OF ____

PART NO. 2-DAY CONFIG. { MAC ____ / NAA ____ } 14-DAY CONFIG. { MAC 52-52701 / NAA 99-106156 }

Individual TCA Pulse Performance and Propellant Valves Response Data

Part No. 208160-31 Serial No. 4057135

Position In System 1 Type Unit Pitch

MDC Sequence No.	MDC Maneuver No.	TCA's Firing	Time From Test Start (Sec)	Stabilized Chamber Press. (Psia)	Pulse I_t (lb-sec)	Cumulative TCA Firing Time (Sec)	Prop. Valves Energize Time (Sec)	Prop. Valves On Time (Sec)	Prop. Valves De-Energize Time (Sec)
1-2	11	1-2-9-10	6	139	0.750	0.361	0.0041	0.0339	0.0032
1-3	2	1-2-9-10	7	146	0.845	0.441	0.0040	0.0400	0.0038
1-4	2	1-2-9-10	8	152	0.934	0.642	0.0041	0.0407	0.0029
1-4	9	1-2-9-10	9	152	0.846	0.722	0.0039	0.0397	0.0036
1-4	13	1-2-7-8 9-10	10	149	0.798	0.802	0.0042	0.0397	0.0037
1-5	2	1-2-9-10	10	150	0.906	0.842	0.0037	0.0419	0.0028
1-6	2	1-2-9-10	12	147	0.826	1.043	0.0041	0.0414	0.0034
1-6	11	1-2-9-10	13	156	0.883	1.163	0.0040	0.0404	0.0036
1-7	2	1-2-9-10	13	150	0.868	1.243	0.0040	0.0404	0.0031
1-8	2	1-2-3-4 9-10	15	157	0.983	1.444	0.0043	0.0418	0.0035
1-8	9	1-2-9-10	16	147	0.833	1.524	0.0041	0.0412	0.0034
1-8	13	1-2-7-8 9-10	16	172	1.032	1.604	0.0041	0.0413	0.0034

PREPARED BY: DATE	REVIEWED BY: DATE	WITNESSED FOR NAA: DATE	CERTIFIED FOR McDONNELL: DATE
W. E. Searcy	M. S. Skolion 9/15/65	W. E. Searcy 9/30/65	VERIFIED BY QCAPT DATE
R-15075-1			1059

Test Form 1453

ROCKETDYNE
A DIVISION OF NORTH AMERICAN AVIATION INC

DESIGN APPROVAL TEST
ORBIT ATTITUDE AND MANEUVER SYSTEM
(SE7)

NAME OF TEST: MDC HIGH TEMPERATURE TEST TEST NO. 106156-L01 SHEET ____ OF ____

PART NO. 2-DAY CONFIG. { MAC ____ / NAA ____ } 14-DAY CONFIG. { MAC 52-52701 / NAA 99-106156 }

Individual TCA Pulse Performance and Propellant Valve Response Data TCA #1

MDC Sequence No.	MDC Maneuver No.	TCA's Firing	Time From Test Start (Sec)	Stabilized Chamber Press (Psia)	Pulse I_t (lb-sec)	Cumulative TCA Firing Time (Sec)	Prop. Valves Energize Time (Sec)	Prop. Valves On Time (Sec)	Prop. Valves De-Energize Time (Sec)
2-1	2	1-2-7-8	23	130	42.247	3.911	0.0045	2.1061	0.0030
3-1	3	1-2-3-4	29	130	20.057	4.912	0.0040	1.0025	0.0031
3-1	6	1-2-7-8	31	135	16.624	5.913	0.0042	1.0020	0.0031
4-1	4	1-2-3-4-8	583	146	0.362	5.938	0.0040	0.0245	0.0034
4-1	9	1-2-4-8	1491	138	0.309	5.962	0.0040	0.0235	0.0035
4-1	13	1-2	2229	128	0.321	5.986	0.0040	0.0245	0.0030
4-1	15	1-2-7-8	2515	127	0.277	6.010	0.0040	0.0245	0.0030
4-1	17	1-2	2961	130	0.335	6.035	0.0040	0.0242	0.0028
4-1	19	1-2-3-4	3327	124	0.316	6.059	0.0040	0.0245	0.0030
4-2	9	1-2-4-8	5152	139	0.363	6.103	0.0040	0.0247	0.0023
4-2	13	1-2	5886	142	0.417	6.132	0.0040	0.0240	0.0030
4-2	15	1-2-7-8	6252	133	0.387	6.156	0.0043	0.0240	0.0037
4-2	17	1-2	6616	134	0.410	6.181	0.0042	0.0244	0.0035

PREPARED BY: DATE	PERFORMED BY: DATE	WITNESSED FOR NAA: DATE	CERTIFIED FOR McDONNELL: DATE
W. E. Searcy	[illegible] 9/15/65	W. E. Searcy 9/30/65	VERIFIED BY USAF: DATE

1060 R-15075-1

Test Form 1453

ROCKETDYNE
A DIVISION OF NORTH AMERICAN AVIATION INC

DESIGN APPROVAL TEST
ORBIT ATTITUDE AND MANEUVER SYSTEM
(SE7)

NAME OF TEST MDC HIGH TEMPERATURE TEST TEST NO. 106156-401 SHEET ____ OF ____

PART NO. 2-DAY CONFIG. { MAC ____ NAA ____ } 14-DAY CONFIG. { MAC 52-52701 NAA 99-106156 }

Individual TCA Pulse Performance and Propellant Valve Response Data TCA #1

MDC Sequence No.	MDC Maneuver No.	TCA's Firing	Time From Test Start (Sec)	Stabilized Chamber Press (Psia)	Pulse I_t (lb-sec)	Cumulative TCA Firing Time (Sec)	Prop. Valves Energize Time (Sec)	Prop. Valves On Time (Sec)	Prop. Valves De-Energize Time (Sec)
4-2	19	1-2-3-4	6983	130	0.395	6.205	0.0041	0.0252	0.0030
4-3	9	1-2-4-8	8494	128	0.323	6.253	0.0040	0.0238	0.0029
4-3	13	1-2	9546	132	0.323	6.278	0.0041	0.0246	0.0029
4-3	15	1-2-7-8	9912	130	0.298	6.302	0.0042	0.0236	0.0029
4-3	17	1-2	10,279	132	0.378	6.326	0.0039	0.0241	0.0029
4-3	19	1-2-3-4	10,647	130	0.320	6.351	0.0041	0.0243	0.0030
6-1	7	1-2	11,322	158	0.914	8.685	0.0039	0.0417	0.0030
7-1	3	1-2	12,222	134	23.378	30.660	0.0041	1.0828	0.0035
8-3	17	1-2-7-8	12,282	171	0.776	33.450	0.0039	0.0368	0.0036
8-1	7	1-2 4-8-13	12,319	156	0.705	33.487	0.0040	0.0210	0.0037
8-1	17	1-2 7-8-13	12,320	155	0.740	33.523	0.0039	0.0373	0.0036
8-2	7	1-2 4-8-13	12,321	159	0.767	33.560	0.0041	0.0354	0.0036

PREPARED BY: DATE	PERFORMED BY: DATE	WITNESSED FOR NAA DATE	CERTIFIED FOR McDONNELL DATE
W. E. Searcy	M. S. Skalion 9/15/65	W. E. Searcy 9/30/65	VERIFIED BY USAF DATE

R-15075-1

Test Form 1453

ROCKETDYNE
A DIVISION OF NORTH AMERICAN AVIATION INC

DESIGN APPROVAL TEST
ORBIT ATTITUDE AND MANEUVER SYSTEM
(SE7)

NAME OF TEST MDC HIGH TEMPERATURE TEST TEST NO. 106156-401 SHEET ____ OF ____

PART NO. 2-DAY CONFIG. { MAC ____ NAA ____ } 14-DAY CONFIG. { MAC 52-[illegible] NAA 99-106[illegible] }

Individual TCA Pulse Performance and Propellant Valve Response Data TCA #1

MDC Sequence No.	MDC Maneuver No.	TCA's Firing	Time From Test Start (Sec)	Stabilized Chamber Press (Psia)	Pulse I_t (lb-sec)	Cumulative TCA Firing Time (Sec)	Prop. Valves Energize Time (Sec)	Prop. Valves On Time (Sec)	Prop. Valves De-Energize Time (Sec)
8-2	17	1-2 1-8-13	12,322	157	0.730	33.597	0.0039	0.0361	0.0036
8-3	7	1-2 4-8-13	12,323	160	0.756	33.632	0.0037	0.0367	0.0034
8-3	17	1-2 7-8-13	12,324	158	0.769	33.670	0.0038	0.0332	0.0037
6-1	9	1-2-4-8 9-10	12,522	152	0.722	54.801	0.0039	0.0420	0.0030
6-1	18	1-2-3-4 9-10	12,522	162	1.007	54.968	0.0037	0.0419	0.0033
6-2	2	1-2-9-10	12,522	163	1.046	55.2[illegible]	0.0040	0.0416	0.0037
6-2	9	1-2-4-8 9-10	12,523	166	1.002	55.177	0.0039	0.0417	0.0032
6-2	18	1-2-3-4 9-10	12,523	170	1.072	55.244	0.0041	0.042[illegible]	0.0033
6-3	2	1-2-9-10	12,523	162	1.063	55.429	0.0037	0.0420	0.0034
6-3	9	1-2-4-8 9-10	12,524	165	1.005	55.553	0.0039	0.0416	0.0033
9-2	2	1-2-16	12,566	156	1.650	57.243	0.0037	0.0675	0.0037
9-2	12	1-2-16	12,566	162	1.684	57.580	0.0040	0.0664	0.0036
9-4	2	1-2-16	12,567	166	1.713	60.051	0.0039	0.0700	0.0030

PREPARED BY: DATE	PERFORMED BY: DATE	WITNESSED FOR NAA: DATE	CERTIFIED FOR McDONNELL: DATE
W. E. Searcy	M. S. [illegible] 9/15/65	W. E. Searcy 9/30/65	VERIFIED BY USAF: DATE

1062

Test Form 1453

R-15075-1

ROCKETDYNE
A DIVISION OF NORTH AMERICAN AVIATION INC

DESIGN APPROVAL TEST
ORBIT ATTITUDE AND MANEUVER SYSTEM
(SE7)

NAME OF TEST MDC HIGH TEMPERATURE TEST TEST NO. 106156-401 SHEET ____ OF ____

PART NO. 2-DAY CONFIG. { MAC ____ NAA ____ } 14-DAY CONFIG. { MAC 52-52701 NAA 99-106156 }

Individual TCA Pulse Performance and Propellant Valve Response Data TCA #1

MDC Sequence No.	MDC Maneuver No.	TCA's Firing	Time From Test Start (Sec)	Stabilized Chamber Press (Psia)	Pulse I_t (lb-sec)	Cumulative TCA Firing Time (Sec)	Prop. Valves Energize Time (Sec)	Prop. Valves On Time (Sec)	Prop. Valves De-Energize Time (Sec)
9-1	12	1-2	12,664	147	1.506	66.187	0.0039	0.0667	0.0033
9-5	2	1-2-15	12,667	157	1.632	67.466	0.0039	0.0669	0.0036
9-5	12	1-2-15	12,668	153	1.595	67.802	0.0038	0.0670	0.0035
9-4	2	1-2	12,699	157	1.617	75.946	0.0040	0.0671	0.0037
9-4	12	1-2	12,700	152	1.570	76.282	0.0041	0.0671	0.0037
9-6	2	1-2	12,701	160	1.617	76.754	0.0037	0.0685	0.0035
9-6	12	1-2	12,702	153	1.580	77.070	0.0037	0.0670	0.0033
9-3	2	1-2	12,753	159	1.603	96.944	0.0038	0.0687	0.0037
9-3	12	1-2	12,754	156	1.559	97.290	0.0037	0.0665	0.0037
9-7	2	1-2	12,757	158	1.600	98.559	0.0040	0.0680	0.0038
8-8	17	1-2-7-8 14	12,813	148	0.724	103.929	0.0038	0.0369	0.0038
8-9	7	1-2-4-8 14	12,814	148	0.728	103.946	0.0039	0.0370	0.0040
8-9	17	1-2-7-8 14	12,815	149	0.755	104.003	0.0038	0.0370	0.0038
8-10	7	1-2-4-8 14	12,816	148	0.719	104.070	0.0037	0.0370	0.0038

PREPARED BY: DATE	PERFORMED BY: DATE	WITNESSED FOR NAA DATE	CERTIFIED FOR McDONNELL: DATE
W. E. Searcy	M. S. Skolion 9/15/65	W. E. Searcy 9/30/65	VERIFIED BY USAF: DATE
R-15075-1			

Test Form 1453

ROCKETDYNE
A DIVISION OF NORTH AMERICAN AVIATION INC

DESIGN APPROVAL TEST
ORBIT ATTITUDE AND MANEUVER SYSTEM
(SE7)

NAME OF TEST MDC HIGH TEMPERATURE TEST TEST NO. 106156-401 SHEET ____ OF ____

PART NO. 2-DAY CONFIG. { MAC ____ NAA ____ } 14-DAY CONFIG. { MAC 52-52701 NAA 99-106156 }

Individual TCA Pulse Performance and Propellant Valve Response Data TCA #1

MDC Sequence No.	MDC Maneuver No.	TCA's Firing	Time From Test Start (Sec)	Stabilized Chamber Press (Psia)	Pulse I_t (lb-sec)	Cumulative TCA Firing Time (Sec)	Prop. Valves Energize Time (Sec)	Prop. Valves On Time (Sec)	Prop. Valves De-Energize Time (Sec)
8-10	17	1-2-7-9 14	12,917	148	0.706	104.077	0.0033	0.0370	0.0022
15-2	8	1-2	12,872	149	1.443	115.674	0.0040	0.0610	0.0039
15-5	1	1-2	12,873	155	1.425	116.284	0.0035	0.0660	0.0033
15-5	8	1-2-15	12,874	149	1.443	116.497	0.0035	0.0664	0.0037
15-1	1	1-2	12,897	149	1.429	124.573	0.0035	0.0655	0.0031
15-1	8	1-2	12,[illegible]	150	1.520	124.391	0.0040	0.0661	0.0021
15-1	8	1-2	13,073	138	1.421	131.10	[illegible]	0.69[illegible]	[illegible]
15-5	1	1-2	13,075	162	1.636	131.90	0.0040	0.0695	[illegible]
15-5	8	1-2	13,[illegible]	156	1.523	132.113	0.0040	0.0681	[illegible]
15-15	1	1-2	13,080	150	1.526	134.0[illegible]	[illegible]	0.069[illegible]	[illegible]
15-15	8	1-2	13,[illegible]	151	1.531	134.1[illegible]	0.0039	0.068[illegible]	[illegible]
15-20	8	1-2	13,082	136	1.374	136.167	0.0039	0.0690	[illegible]
15-45	8	1-2	13,096	146	1.39[illegible]	142.[illegible]	0.0037	0.0670	[illegible]

PREPARED BY:	DATE	PERFORMED BY:	DATE	WITNESSED FOR NAA:	DATE	CERTIFIED FOR McDONNELL:	DATE
W. E. Searcy		[illegible]	[illegible]	W. E. Searcy	7/30/[illegible]	VERIFIED BY USAF:	DATE

1064

R-15075-1

Test Form 1453

[redacted]

Part IV

A Reproduced Copy

OF

[redacted]

CLASSIFICATION CHANGE

To UNCLASSIFIED

By authority of [illegible] 12/31/72

Change [illegible] NASA

Cla[illegible]

Scientific [illegible] Information Facility

Reproduced for NASA

by the

NASA Scientific and Technical Information Facility

[redacted]

FFNo 672 Aug 65

DESIGN APPROVAL TEST
ORBIT ATTITUDE AND MANEUVER SYSTEM
(SE7)

NAME OF TEST MDC HIGH TEMPERATURE TEST TEST NO. 106156-401 SHEET ____ OF ____

PART NO. 2-DAY CONFIG {MAC ____ NAA ____} 14-DAY CONFIG {MAC 52-52701 NAA 99-106156}

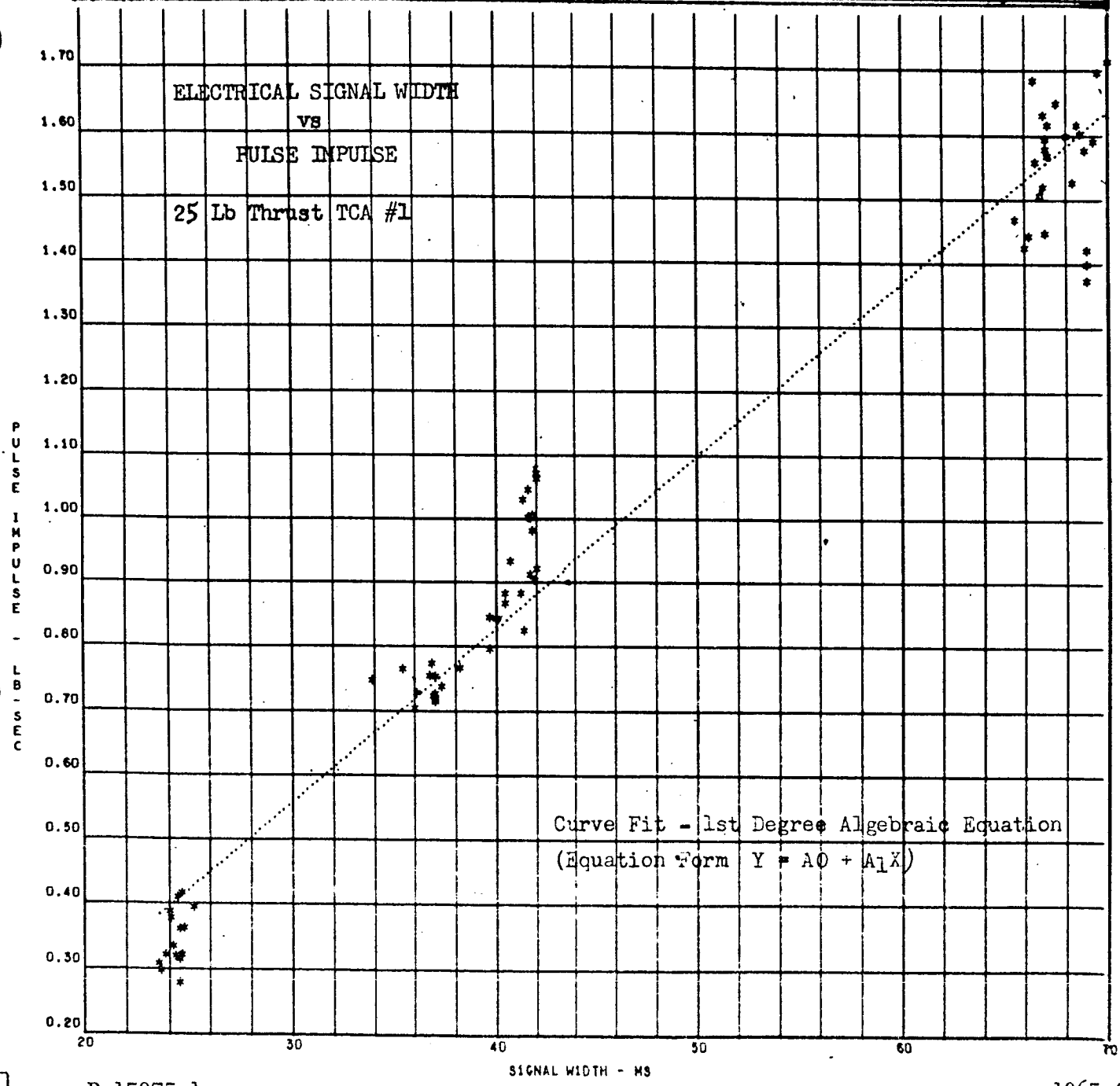

DESIGN APPROVAL TEST
ORBIT ATTITUDE AND MANEUVER SYSTEM
(SE7)

NAME OF TEST MDC HIGH TEMPERATURE TEST TEST NO. 106156-401 SHEET ____ OF ____

PART NO. 2-DAY CONFIG {MAC ____ NAA ____} 14-DAY CONFIG {MAC 52-52701 NAA 99-106156}

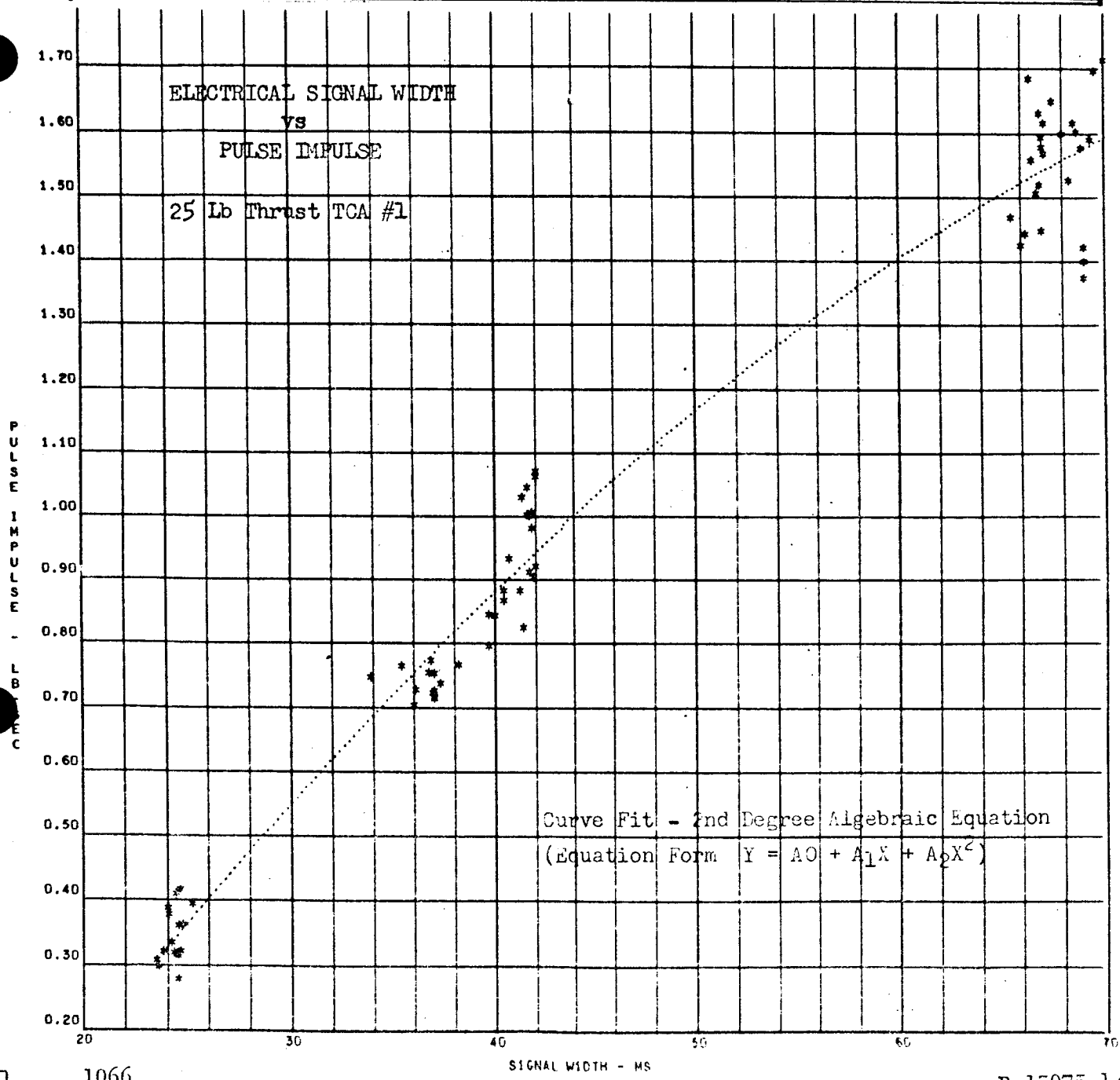

DESIGN APPROVAL TEST
ORBIT ATTITUDE AND MANEUVER SYSTEM
(SE7)

NAME OF TEST MDC HIGH TEMPERATURE TEST TEST NO. 106156-401 SHEET ____ OF ____

PART NO. 2-DAY CONFIG {MAC ____ NAA ____} 14-DAY CONFIG {MAC 52-52701 NAA 99-106156}

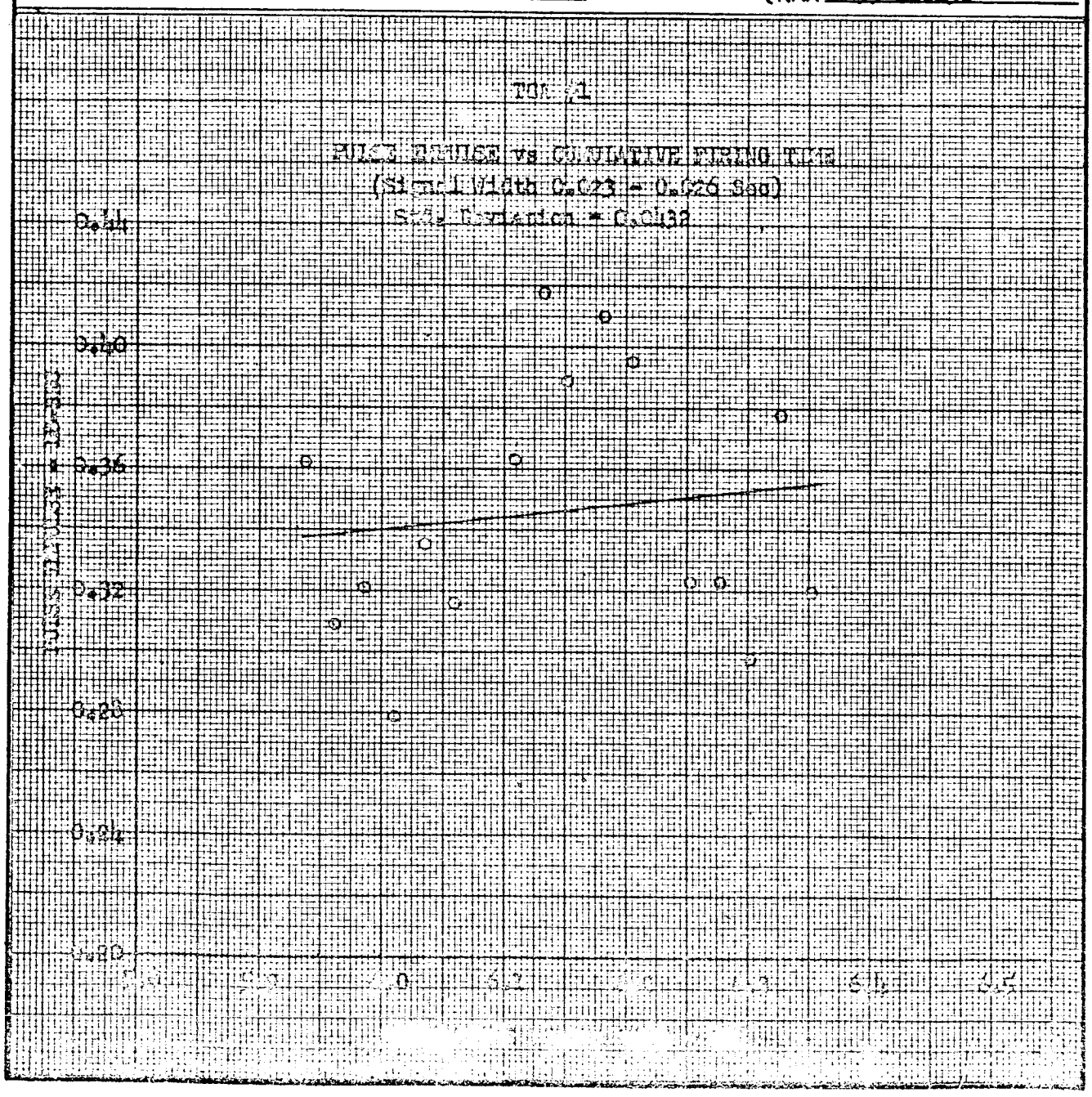

DESIGN APPROVAL TEST
ORBIT ATTITUDE AND MANEUVER SYSTEM
(SE7)

NAME OF TEST IDC HIGH TEMPERATURE TEST TEST NO. 106156-401 SHEET ____ OF ____

PART NO. 2-DAY CONFIG {MAC ____ NAA ____} 14-DAY CONFIG {MAC 52-52701 NAA 99-106156}

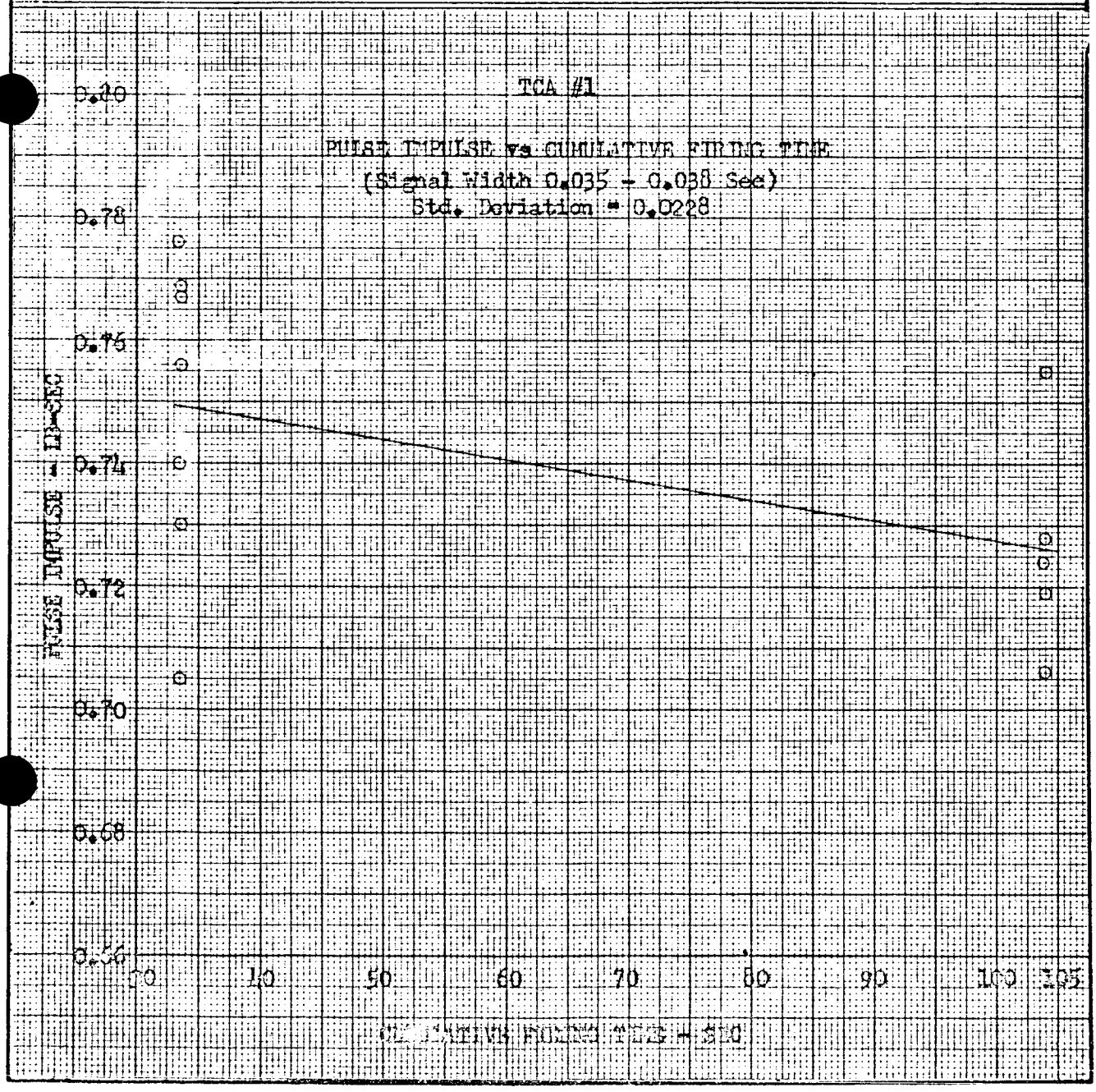

DESIGN APPROVAL TEST
ORBIT ATTITUDE AND MANEUVER SYSTEM
(SE7)

NAME OF TEST MIC HIGH TEMPERATURE TEST TEST NO. 106156-401 SHEET ____ OF ____

PART NO. 2-DAY CONFIG {MAC ____ NAA ____} 14-DAY CONFIG {MAC 52-52701 NAA 99-106156}

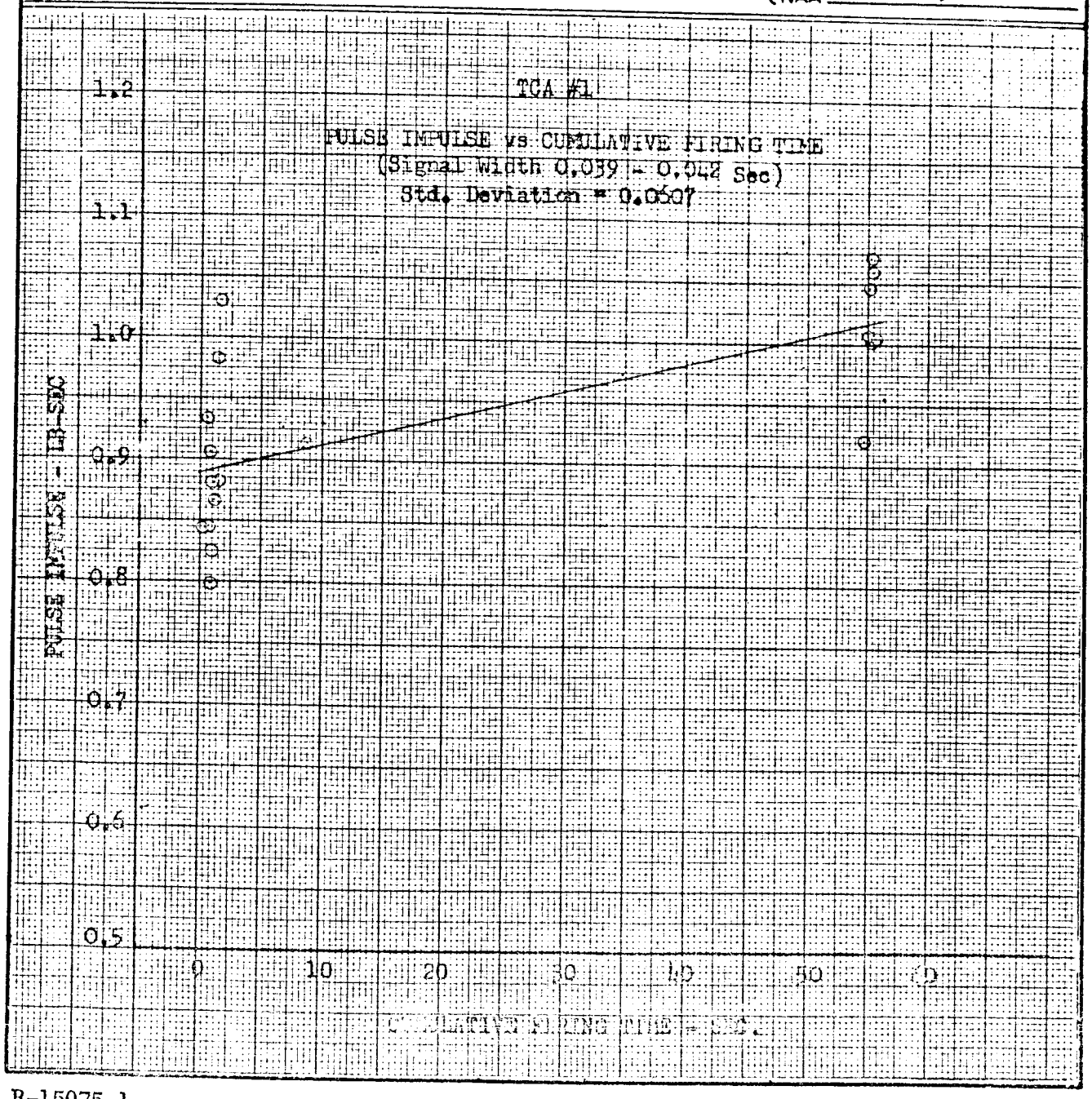

DESIGN APPROVAL TEST
ORBIT ATTITUDE AND MANEUVER SYSTEM
(SE7)

NAME OF TEST MDC HIGH TEMPERATURE TEST TEST NO. 106156-401 SHEET ____ OF ____

PART NO. 2-DAY CONFIG {MAC ____ NAA ____} 14-DAY CONFIG {MAC 52-[illegible]701 NAA 99-106156}

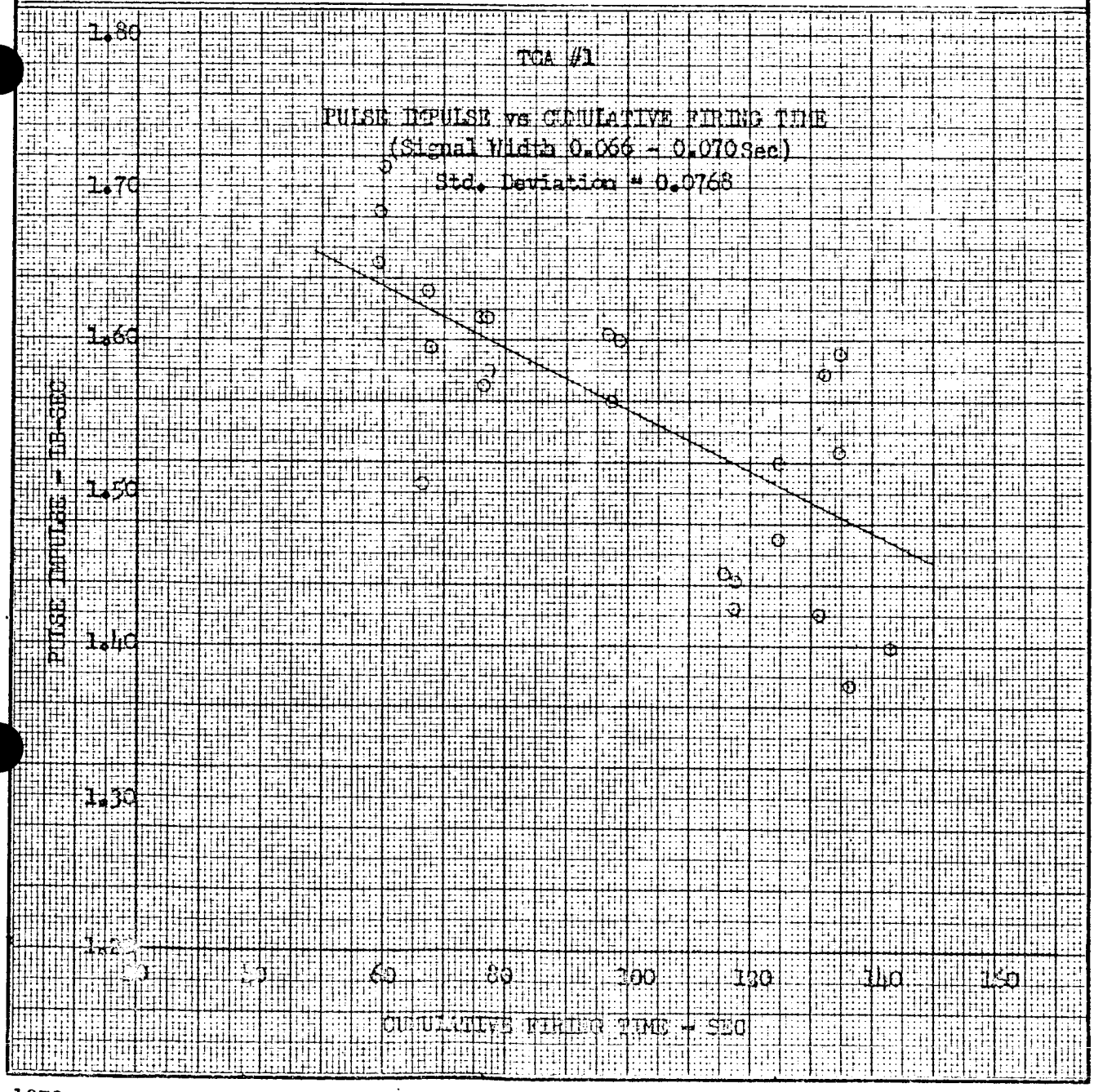

DESIGN APPROVAL TEST
ORBIT ATTITUDE AND MANEUVER SYSTEM
(SE7)

NAME OF TEST MDC HIGH TEMPERATURE TEST NO 106156-401 SHEET ____ OF ____

PART NO. 2-DAY CONFIG. { MAC ____ NAA ____ } 14-DAY CONFIG. { MAC 52-52701 NAA 99-106156 }

Representative TCA Unit Pulse Characteristics TCA #1

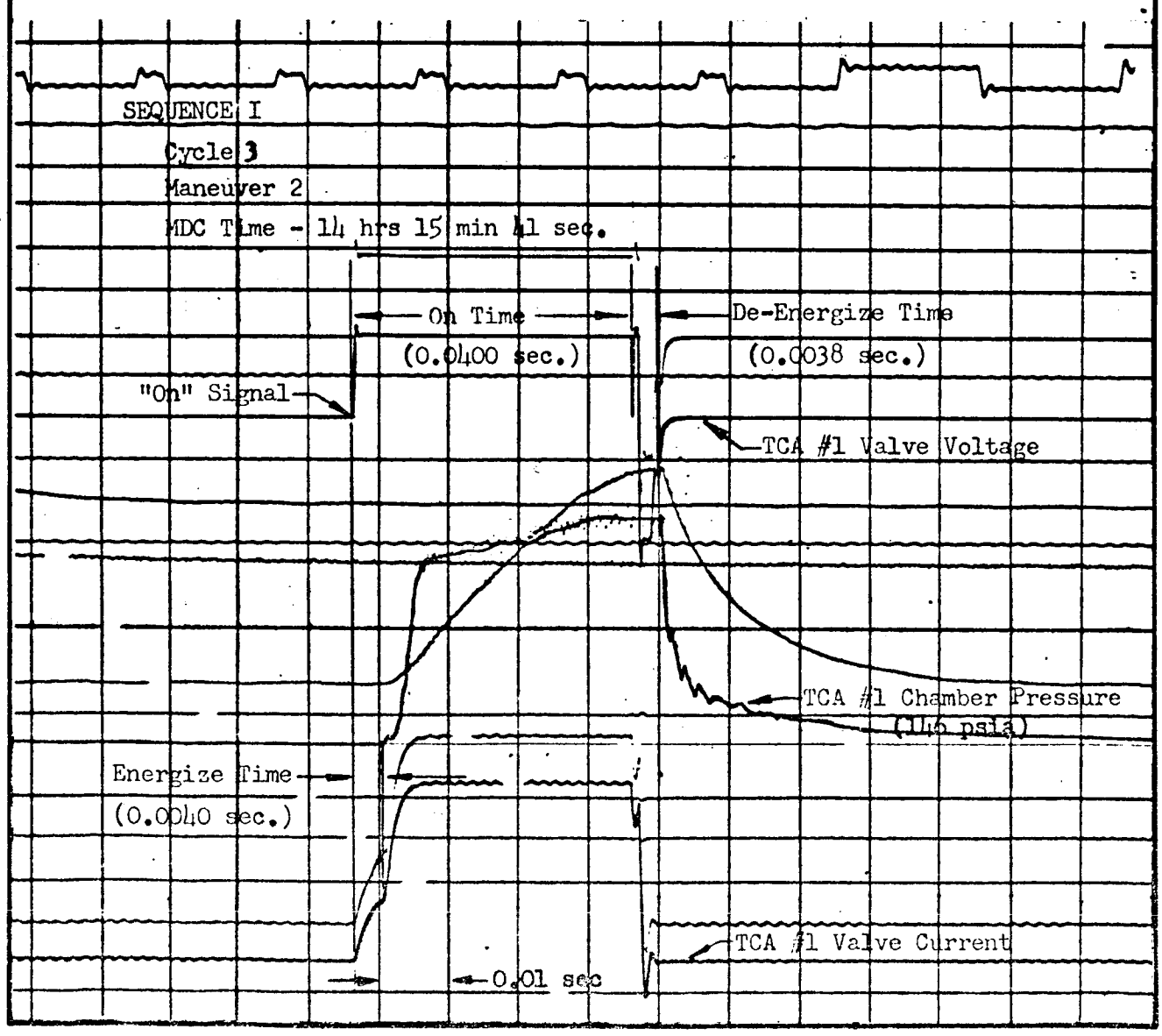

ROCKETDYNE
A DIVISION OF NORTH AMERICAN AVIATION INC

DESIGN APPROVAL TEST
ORBIT ATTITUDE AND MANEUVER SYSTEM
(SE7)

NAME OF TEST MDC HIGH TEMPERATURE TEST NO. 106156-401 SHEET ____ OF ____

PART NO. 2-DAY CONFIG. { MAC ____ NAA ____ } 14-DAY CONFIG. { MAC 52-52701 NAA 99-106156 }

Representative TCA Unit Pulse Characteristics TCA #1

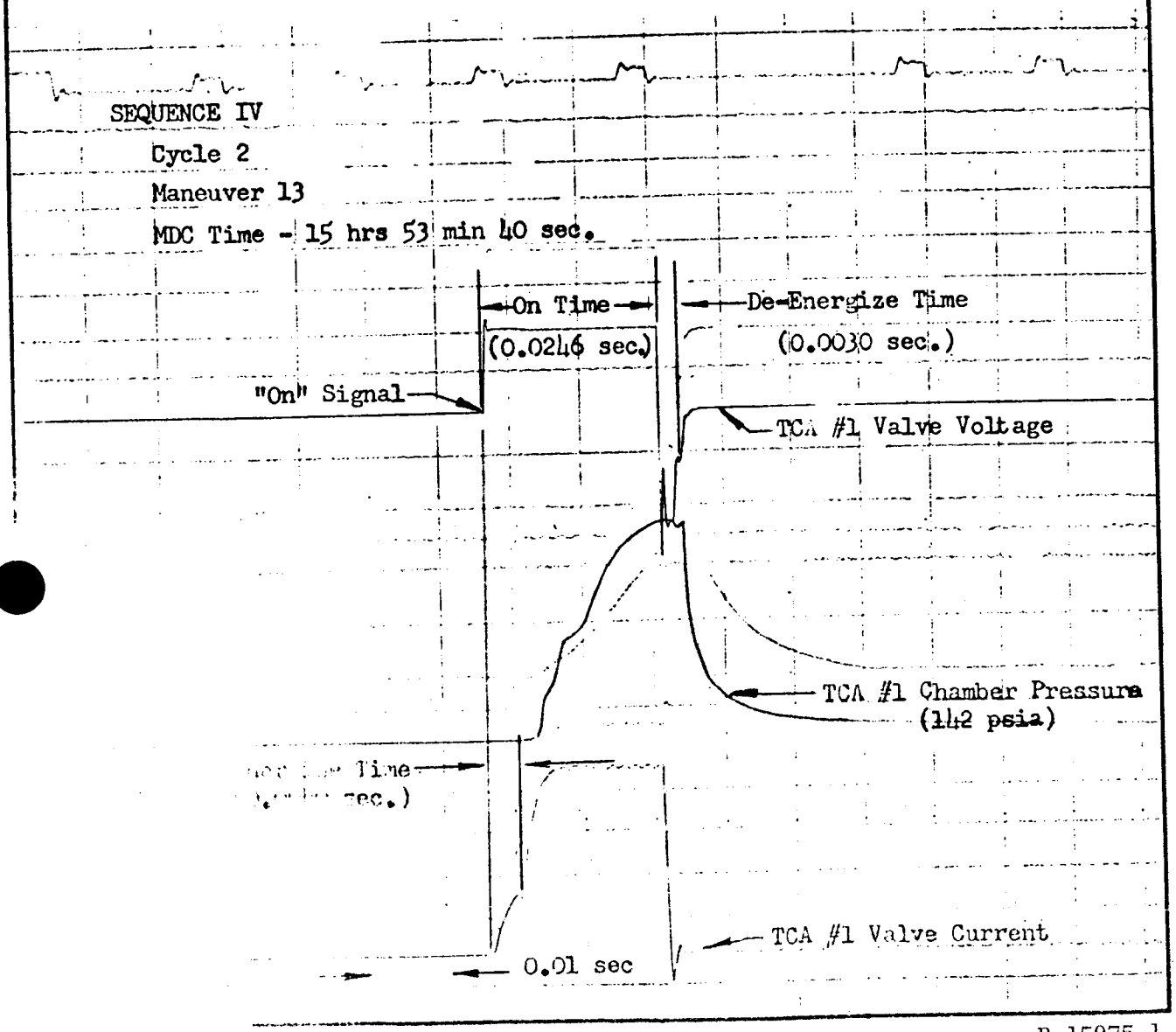

R-15075-1

DESIGN APPROVAL TEST
ORBIT ATTITUDE AND MANEUVER SYSTEM
(SE7)

NAME OF TEST MDC HIGH TEMPERATURE TEST NO. 106156-401 SHEET ____ OF ____

PART NO. 2-DAY CONFIG. { MAC ____ NAA ____ } 14-DAY CONFIG. { MAC 52-52701 NAA 99-106156 }

Representative TCA Unit Pulse Characteristics TCA #1

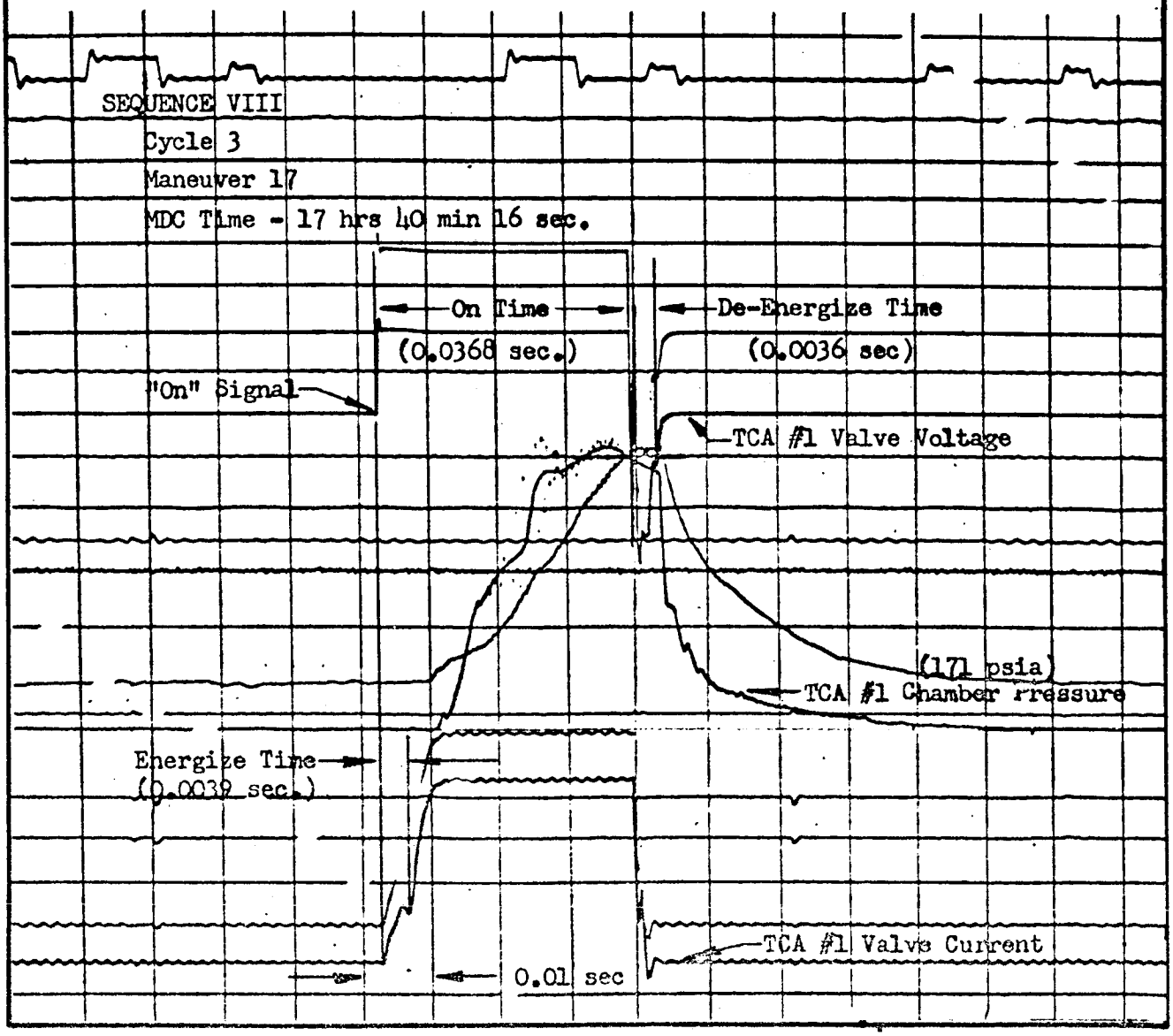

DESIGN APPROVAL TEST
ORBIT ATTITUDE AND MANEUVER SYSTEM
(SE7)

NAME OF TEST MDC HIGH TEMPERATURE TEST NO 106156-401 SHEET ____ OF ____

PART NO. 2-DAY CONFIG. { MAC ____ NAA ____ } 14-DAY CONFIG. { MAC 52-52701 NAA 99-106156 }

Representative TCA Unit Pulse Characteristics TCA #1

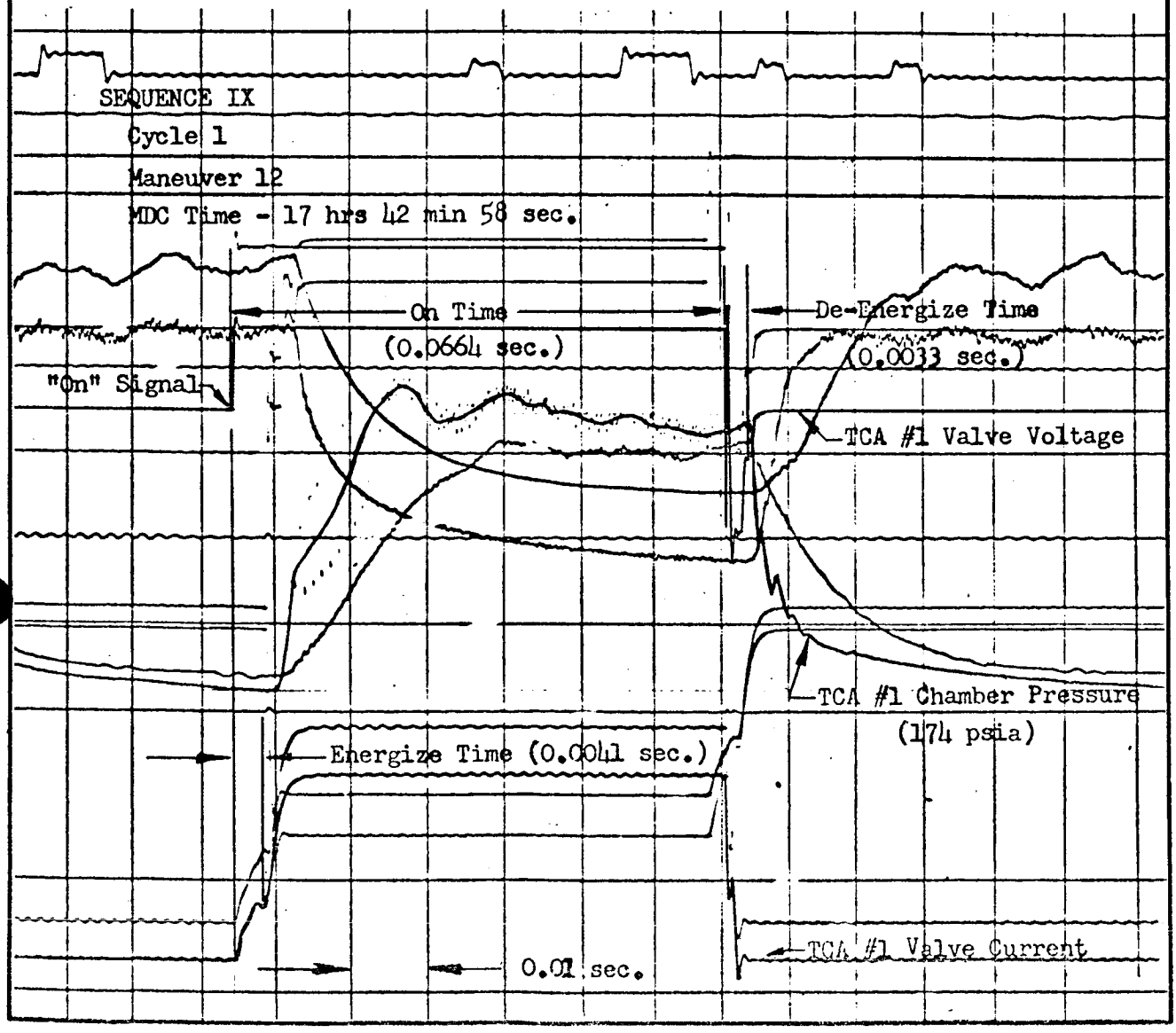

DESIGN APPROVAL TEST
ORBIT ATTITUDE AND MANEUVER SYSTEM
(SE7)

NAME OF TEST MDC HIGH TEMPERATURE TEST NO. 106156-401 SHEET ____ OF ____

PART NO. 2-DAY CONFIG. { MAC ____ NAA ____ } 14-DAY CONFIG. { MAC 52-52701 NAA 99-106156 }

Representative TCA Unit Pulse Characteristics TCA #1

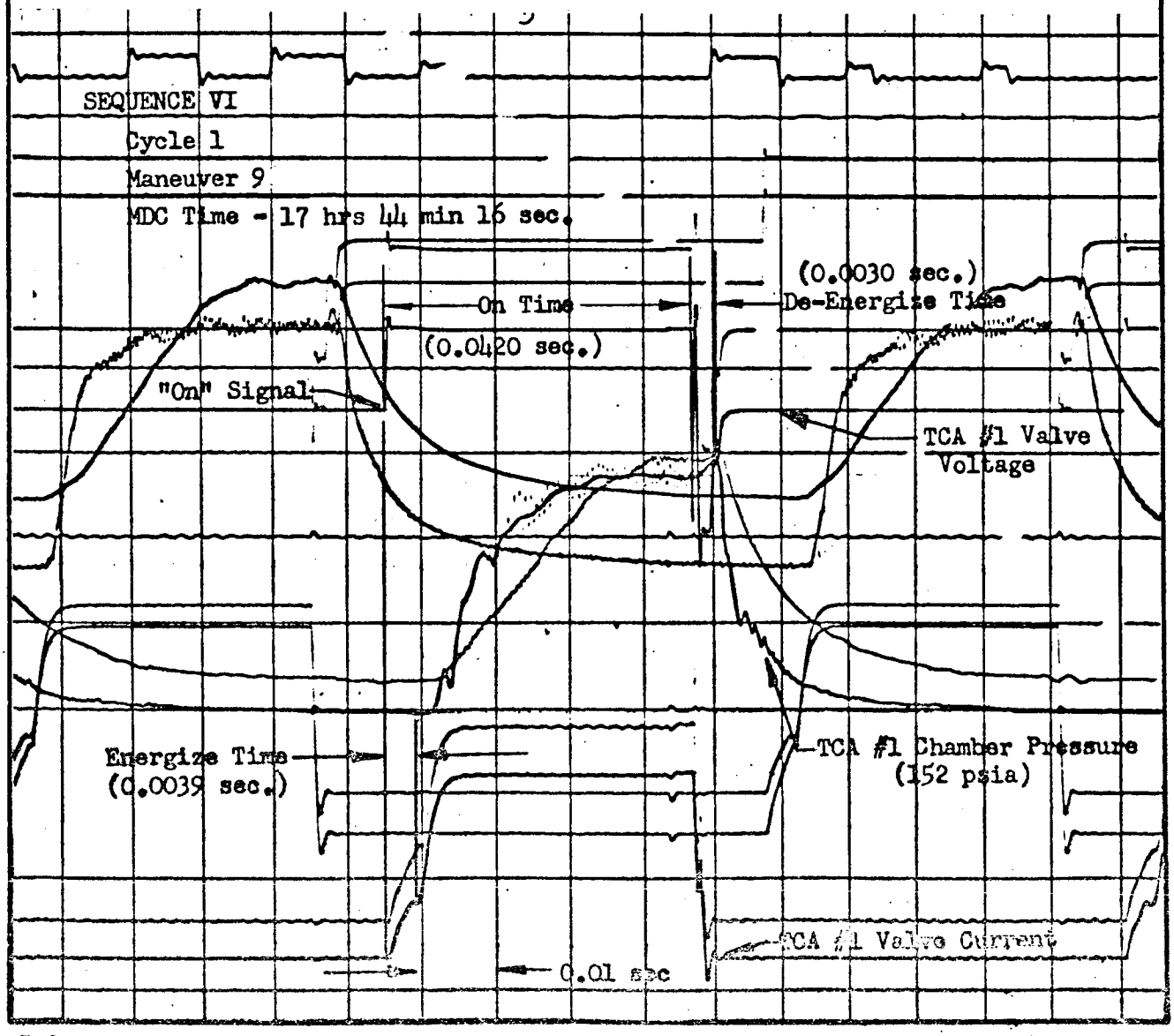

DESIGN APPROVAL TEST
ORBIT ATTITUDE AND MANEUVER SYSTEM
(SE7)

NAME OF TEST MDC HIGH TEMPERATURE TEST NO. 106156-401 SHEET ____ OF ____

PART NO. 2-DAY CONFIG. { MAC ____ NAA ____ } 14-DAY CONFIG. { MAC 52-52701 NAA 99-106156 }

Representative TCA Unit Pulse Characteristics TCA #1

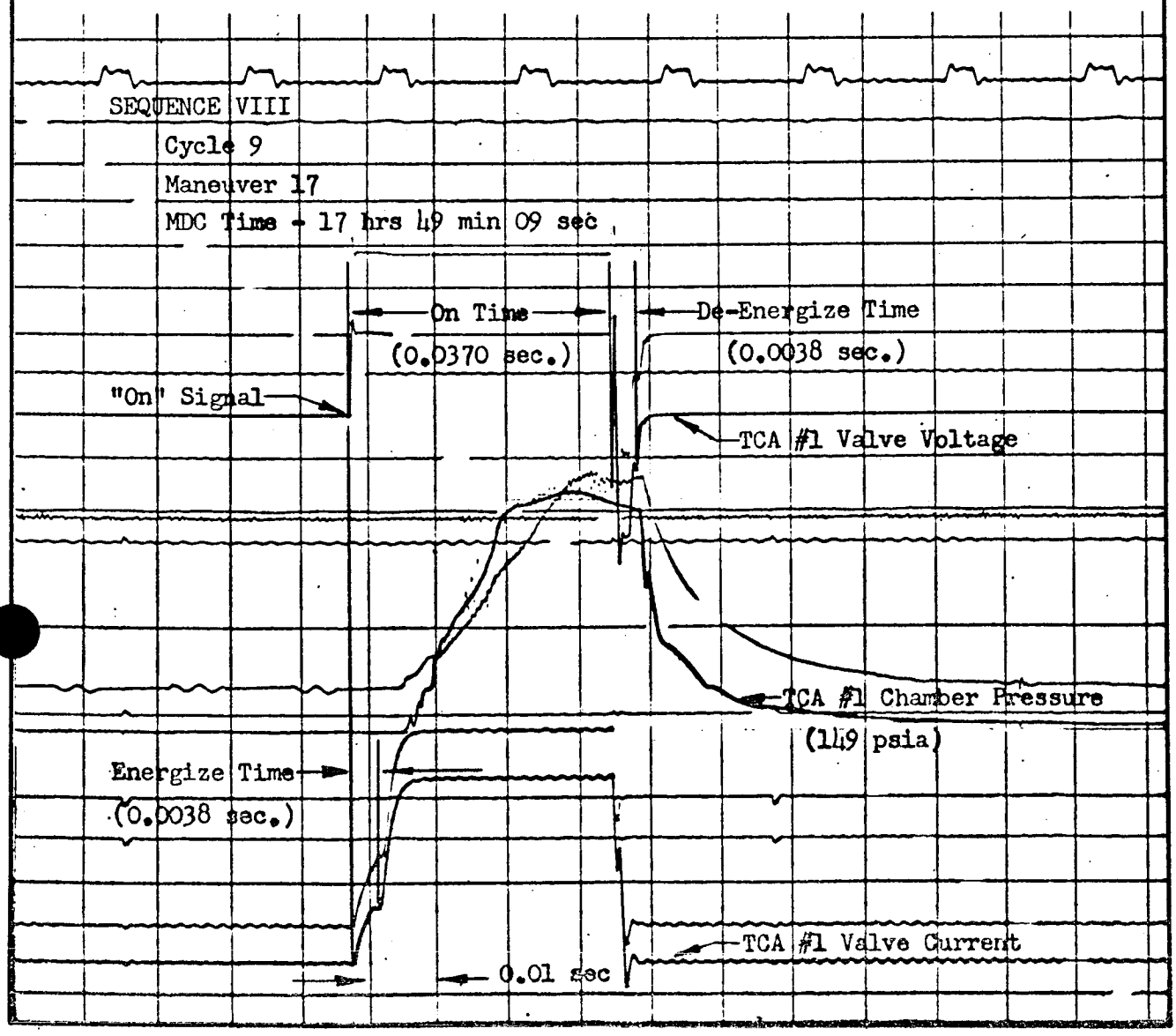

DESIGN APPROVAL TEST
ORBIT ATTITUDE AND MANEUVER SYSTEM
(SE7)

NAME OF TEST MDC HIGH TEMPERATURE TEST NO. 106156-401 SHEET ____ OF ____

PART NO. 2-DAY CONFIG. { MAC ____ NAA ____ } 14-DAY CONFIG. { MAC 52-52701 NAA 99-106156 }

Representative TCA Unit Pulse Characteristics TCA #1

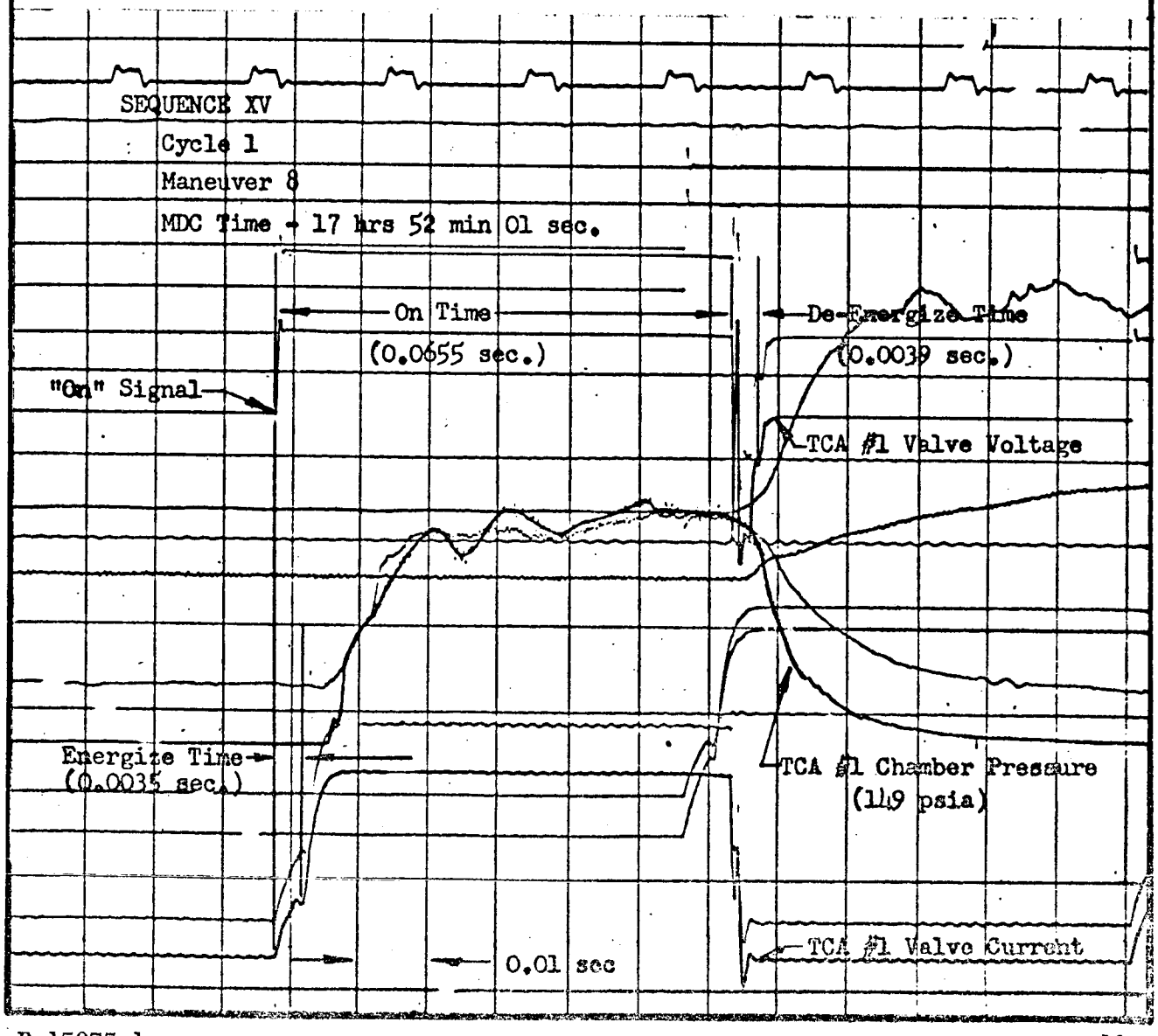

ROCKETDYNE
A DIVISION OF NORTH AMERICAN AVIATION INC

DESIGN APPROVAL TEST
ORBIT ATTITUDE AND MANEUVER SYSTEM
(SE7)

NAME OF TEST MDC HIGH TEMPERATURE TEST TEST NO. 106156-401 SHEET ____ OF ____

PART NO. 2-DAY CONFIG. { MAC ____ / NAA ____ } 14-DAY CONFIG. { MAC 52-52701 / NAA 99-106156 }

Individual TCA Pulse Performance and Propellant Valves Response Data

Part No. 208160-31 Serial No. 4057123

Position In System 7 Type Unit Yaw

MDC Sequence No.	MDC Maneuver No.	TCA's Firing	Time From Test Start (Sec)	Stabilized Chamber Press. (Psia)	Pulse I_t (lb-sec)	Cumulative TCA Firing Time (Sec)	Prop. Valves Energize Time (Sec)	Prop. Valves On Time (Sec)	Prop. Valves De-Energize Time (Sec)
1-2	3	7-8-9-10	5	149	0.754	0.1610	0.0044	0.0312	0.0032
1-2	6	3-7-8 9-10	5	153	0.837	0.1932	0.0045	0.0327	0.0033
1-2	10	4-5-6-7 8-9-10	6	140	0.691	0.2254	0.0045	0.0319	0.0032
1-2	13	1-2-7 8-9-10	6	148	0.761	0.2576	0.0044	0.0314	0.0035
1-4	3	7-8-9-10	8	152	0.776	0.4186	0.0046	0.0305	0.0022
1-4	6	3-7-8 9-10	9	160	0.814	0.4508	0.0044	0.0306	0.0035
1-4	10	4-5-6-7 8-9-10	9	156	0.748	0.4830	0.0045	0.0321	0.0035
1-4	13	1-2-7-8 9-10	10	156	0.832	0.5152	0.0045	0.0331	0.0033
1-6	3	7-8-9-10	12	166	0.925	0.6762	0.0043	0.0346	0.0035
1-6	6	3-7-8 9-10	12	168	0.931	0.7084	0.0046	0.0344	0.0034
1-6	10	4-5-6-7 8-9-10	12	161	0.888	0.7406	0.0044	0.0336	0.0035
1-6	13	1-2-7-8 9-10	13	159	0.875	0.7728	0.0044	0.0341	0.0034

PREPARED BY: DATE	PERFORMED BY: DATE	WITNESSED FOR NAA: DATE	CERTIFIED FOR McDONNELL: DATE
W. E. Searcy	W. L. Skelton 9/15/65	W. E. Searcy 9/30/65	VERIFIED BY USAF: DATE

1078 Form 1453

R-15075-1

ROCKETDYNE
A DIVISION OF NORTH AMERICAN AVIATION INC

DESIGN APPROVAL TEST
ORBIT ATTITUDE AND MANEUVER SYSTEM
(SE7)

NAME OF TEST MDC HIGH TEMPERATURE TEST TEST NO. 106156-401 SHEET ____ OF ____

PART NO. 2-DAY CONFIG. { MAC ____ NAA ____ } 14-DAY CONFIG. { MAC 52-52701 NAA 99-106156 }

Individual TCA Pulse Performance and Propellant Valve Response Data TCA #7

MDC Sequence No.	MDC Maneuver No.	TCA's Firing	Time From Test Start (Sec)	Stabilized Chamber Press (Psia)	Pulse I (lb-sec)	Cumulative TCA Firing Time (Sec)	Prop. Valves Energize Time (Sec)	Prop. Valves On Time (Sec)	Prop. Valves De-Energize Time (Sec)
1-8	3	7-8-9-10	15	164	0.904	0.9338	0.0044	0.0340	0.0035
1-8	6	3-7-8-9-10	16	165	0.915	0.9660	0.0042	0.0340	0.0033
1-8	10	4-5-6-7 8-9-10	16	167	0.806	0.9982	0.0043	0.0289	0.0035
1-8	13	1-2-7-8 9-10	16	162	0.710	1.0304	0.0044	0.0274	0.0033
2-1	2	1-2-7-8	23	140	93.876	5.3587	0.0043	4.1995	0.0039
3-1	2	5-6-7-8	28	141	16.743	6.0717	0.0044	0.7141	0.0035
3-1	5	3-7	30	141	16.534	6.7847	0.0044	0.7045	0.0036
3-1	6	1-2-7-8	31	145	16.846	7.4977	0.0043	0.7143	0.0036
3-1	8	7-8	32	141	16.477	8.2107	0.0044	0.7191	0.0036
4-1	7	3-4-7	232	153	0.281	8.2743	0.0043	0.0159	0.0034
4-1	11	4-7-8	1861	178	0.506	8.3379	0.0042	0.0231	0.0032
4-1	15	1-2-7-8	2595	189	0.529	8.3591	0.0042	0.0231	0.0033

PREPARED BY: DATE	REVIEWED BY: DATE	APPROVED FOR NAA DATE	CERTIFIED FOR McDONNELL DATE
W. E. Searcy	M. S. Skelton 9/15/65	W. E. Searcy 9/30/65	VERIFIED (AFUSAF) DATE

R-15075-1

Test Form 1653

ROCKETDYNE
A DIVISION OF NORTH AMERICAN AVIATION INC

DESIGN APPROVAL TEST
ORBIT ATTITUDE AND MANEUVER SYSTEM
(SE7)

NAME OF TEST MDC HIGH TEMPERATURE TEST TEST NO. 106156-401 SHEET ____ OF ____

PART NO. 2-DAY CONFIG. { MAC ____ NAA ____ } 14-DAY CONFIG. { MAC 52-52701 NAA 99-106156 }

Individual TCA Pulse Performance and Propellant Valve Response Data TCA #7

MDC Sequence No.	MDC Maneuver No.	TCA's Firing	Time From Test Start (Sec)	Stabilized Chamber Press (Psia)	Pulse I (lb-sec)	Cumulative TCA Firing Time (Sec)	Prop. Valves Energize Time (Sec)	Prop. Valves On Time (Sec)	Prop. Valves De-Energize Time (Sec)
4-3	3	7-8	4058	142	0.438	8.4439	0.0043	0.0236	0.0030
4-2	7	3-4-7	4787	155	0.335	8.4651	0.0041	0.0155	0.0034
4-2	11	4-7-8	5519	133	0.411	8.5211	0.0040	0.0235	0.0034
4-2	15	1-2-7-8	6252	128	0.390	8.5499	0.0040	0.0230	0.0035
4-3	3	7-8	7716	141	0.490	8.6347	0.0041	0.0239	0.0034
4-3	7	3-4-7	8449	129	0.249	8.6559	0.0040	0.0154	0.0033
4-3	11	4-7-8	9179	143	0.483	8.7195	0.0040	0.0233	0.0032
4-3	15	1-2-7-8	9912	137	0.460	8.7407	0.0041	0.0227	0.0035
5-1	12	3-4-7	11,103	173	0.506	11.7707	0.0039	0.0196	0.0033
6-1	3	3-6-7-8	11518	174	0.945	2.2804	0.0045	0.0251	0.0033
7-1	4	3-7-13	12,225	140	17.181	19.5947	0.0041	0.0223	0.0035

PREPARED BY: DATE	PERFORMED BY: DATE	WITNESSED FOR NAA: DATE	CERTIFIED FOR McDONNELL: DATE
W. E. Searcy	[illegible] 11/15/65	W. E. Searcy 11/30/65	VERIFIED BY USAF: DATE

1080 Form 1453

R-15075-1

ROCKETDYNE
A DIVISION OF NORTH AMERICAN AVIATION INC

DESIGN APPROVAL TEST
ORBIT ATTITUDE AND MANEUVER SYSTEM
(SE7)

NAME OF TEST MDC HIGH TEMPERATURE TEST TEST NO. 106156-401 SHEET ____ OF ____

PART NO. 2-DAY CONFIG. { MAC ____ / NAA ____ } 14-DAY CONFIG. { MAC 52-52701 / NAA 99-106156 }

Individual TCA Pulse Performance and Propellant Valve Response Data TCA #7

MDC Sequence No.	MDC Maneuver No.	TCA's Firing	Time From Test Start (Sec)	Stabilized Chamber Press (Psia)	Pulse I (lb-sec)	Cumulative TCA Firing Time (Sec)	Prop. Valves Energize Time (Sec)	Prop. Valves On Time (Sec)	Prop. Valves De-Energize Time (Sec)
8-3	8	3-4-7	12,281	191	1.539	25.8869	0.0037	0.0502	0.0037
8-3	9	3-7-8	12,281	182	1.621	25.9405	0.0040	0.0567	0.0037
8-3	10	3-4-7	12,281	182	1.460	25.9941	0.0040	0.0504	0.0038
8-3	11	4-7-8	12,282	182	1.639	26.0477	0.0040	0.0564	0.0037
8-3	12	3-7-8	12,282	180	1.610	26.1013	0.0040	0.0576	0.0036
8-3	15	4-7-8	12,282	182	1.572	26.1549	0.0040	0.0559	0.0037
8-3	17	1-2-7-8	12,282	191	1.671	26.2085	0.0040	0.0577	0.0037
8-3	18	3-4-7	12,282	186	1.442	26.2621	0.0040	0.0496	0.0038
8-3	19	5-6-7-8	12,282	185	1.740	26.3157	0.0041	0.0601	0.0037
8-1	3	3-4-5-6-7-13	12,319	153	1.103	26.4229	0.0039	0.0490	0.0030
8-3	2	3-7-8-13	12,322	178	1.543	27.8901	0.0039	0.0558	0.0036
8-3	3	3-4-5-6-7-13	12,323	176	1.413	27.9257	0.0040	0.0497	0.0037
8-3	4	3-7-13	12,323	176	1.431	27.9773	0.0040	0.0497	0.0037
8-3	5	3-4-7-13	12,323	176	1.414	28.0304	0.0041	0.0499	0.0037
8-3	6	4-7-8-13	12,323	175	1.546	28.0845	0.0040	0.0555	0.0036

PREPARED BY: DATE	REVIEWED BY: DATE	APPROVED FOR ROCKETDYNE DATE	APPROVED FOR NAA/SD DATE
W. E. Searcy	M. S. Skolnick 9/15/65	W. E. Searcy 9/30/65	VERIFIED BY QUALITY DATE

R-15075-1 1081

Test Form 1453

ROCKETDYNE
A DIVISION OF NORTH AMERICAN AVIATION INC

DESIGN APPROVAL TEST
ORBIT ATTITUDE AND MANEUVER SYSTEM
(SE7)

NAME OF TEST MDC HIGH TEMPERATURE TEST TEST NO. 106156-401 SHEET ____ OF ____

PART NO. 2-DAY CONFIG. { MAC ____ / NAA ____ } 14-DAY CONFIG. { MAC 52-52701 / NAA 99-106156 }

Individual TCA Pulse Performance and Propellant Valve Response Data TCA #7

MDC Sequence No.	MDC Maneuver No.	TCA's Firing	Time From Test Start (Sec)	Stabilized Chamber Press (Psia)	Pulse I (lb-sec)	Cumulative TCA Firing Time (Sec)	Prop. Valves Energize Time (Sec)	Prop. Valves On Time (Sec)	Prop. Valves De-Energize Time (Sec)
8-2	15	4-7-8-15	12,324	171	1.454	28.4[illegible]1	0.0031	0.0339	0.0037
6-4	3	5-6-7-8 9-10-11	12,428	161	0.915	53.64[illegible]1	0.0042	0.0364	0.0037
6-4	12	3-5-6-7 9-10-16	12,429	171	0.673	53.6986	0.0037	0.0279	0.0036
6-4	16	7-8-9-10-16	12,430	171	0.942	53.7321	0.0039	0.0366	0.0036
6-5	3	5-6-7-8 9-10-16	12,430	161	0.868	53.7[illegible]6	0.0046	0.0360	0.0036
6-5	12	3-5-6-7 9-10-16	12,432	165	0.664	53.7991	0.0043	0.0280	0.0035
6-5	16	7-8-9-10-16	12,432	171	0.924	53.[illegible]6	0.0040	0.0562	0.0037
9-1	14	7-8-16	12,444	172	0.930	[illegible]	0.0042	0.0364	0.0037
9-5	14	7-8-16	12,446	167	0.915	54.0441	0.0041	0.0367	0.0037
9-5	14	7-8-16	12,447	162	0.197	[illegible]	0.0037	0.0251	0.0037
9-11	14	7-8-16	12,452	163	0.922	54.5[illegible]	0.0039	[illegible]	0.0031
9-15	14	7-8-16	12,454	165	0.918	54.5091	0.0041	0.0356	0.0031

PREPARED BY: DATE	PERFORMED BY: DATE	WITNESSED FOR NAA: DATE	CERTIFED FOR McDONNELL: DATE
W. E. Searcy	[illegible] 9/15/65	W. E. Searcy 9/30/65	VERIFIED BY USAF: DATE

1082

R-15075-1

Test Form 1453

DESIGN APPROVAL TEST
ORBIT ATTITUDE AND MANEUVER SYSTEM
(SE7)

NAME OF TEST MDC HIGH TEMPERATURE TEST TEST NO. 106156-401 SHEET ____ OF ____

PART NO. 2-DAY CONFIG. { MAC ____ NAA ____ } 14-DAY CONFIG. { MAC 52-52701 NAA 99-106156 }

Individual TCA Pulse Performance and Propellant Valve Response Data TCA #7

MDC Sequence No.	MDC Maneuver No.	TCA's Firing	Time From Test Start (Sec)	Stabilized Chamber Press (Psia)	Pulse I_t (lb-sec)	Cumulative TCA Firing Time (Sec)	Prop. Valves Energise Time (Sec)	Prop. Valves On Time (Sec)	Prop. Valves De-Energise Time (Sec)
6-1	12	3-5-6-7-9-10	12,522	148	0.458	55.4681	0.0037	0.0226	0.0035
6-2	3	5-6-7-8 9-10	12,522	147	0.781	55.5271	0.0041	0.0351	0.0037
6-2	12	3-5-6-7 9-10	12,523	151	0.595	55.5566	0.0040	0.0281	0.0036
6-3	3	5-6-7-8 9-10	12,523	151	0.749	55.6156	0.0042	0.0345	0.0038
6-3	12	3-5-6-7 9-10	12,524	151	0.560	55.6451	0.0040	0.0270	0.0037
9-1	14	7-8-16	12,566	157	0850	56.4172	0.0041	0.0370	0.0037
9-3	14	7-8-16	12,567	158	0.870	56.4494	0.0038	0.0364	0.0035
9-1	14	7-8	12,664	158	0.822	62.6238	0.0033	0.0347	0.0035
9-3	14	7-8-15	12,666	155	0.814	62.6950	0.0038	0.0355	0.0036
9-5	14	7-8-15	12,668	159	0.822	62.7162	0.0041	0.0353	0.0036
9-2	14	7-8	12,698	156	0.829	63.4420	0.0037	0.0355	0.0037
9-6	14	7-8	12,702	156	0.843	63.5450	0.0039	0.0356	0.0038
9-1	14	7-8	12,752	164	0.877	65.2235	0.0040	0.0350	0.0037
9-5	14	7-8	12,754	158	0.838	65.4442	0.0040	0.0351	0.0035

PREPARED BY:	REVIEWED BY:	APPROVED BY:	CONCURRENCE
W. E. Searcy	M. S. Skolin 9/15/65	W. E. Searcy 9/30/65	

Test Form 1039

ROCKETDYNE
A DIVISION OF NORTH AMERICAN AVIATION INC

DESIGN APPROVAL TEST
ORBIT ATTITUDE AND MANEUVER SYSTEM
(SE7)

NAME OF TEST MDC HIGH TEMPERATURE TEST TEST NO. 106156-401 SHEET ____ OF ____

PART NO. 2-DAY CONFIG. { MAC ____ NAA ____ } 14-DAY CONFIG. { MAC 52-52701 NAA 99-106156 }

Individual TCA Pulse Performance and Propellant Valve Response Data TCA #7

MDC Sequence No.	MDC Maneuver No.	TCA's Firing	Time From Test Start (Sec)	Stabilized Chamber Press (Psia)	Pulse I (lb-sec)	Cumulative TCA Firing Time (Sec)	Prop. Valves Energize Time (Sec)	Prop. Valves On Time (Sec)	Prop. Valves De-Energize Time (Sec)
8-9	19	5-6-7-8-14	12,815	159	1.481	72.7912	0.0043	0.0512	0.0041
8-10	2	5-11-14	12,816	155	1.242	72.1459	0.0042	0.0565	0.0040
8-10	3	5-4-5-6-7-14	12,816	159	1.280	72.9006	0.0042	0.0507	0.0039
8-10	4	3-7-14	12,816	159	1.236	72.9553	0.0039	0.0506	0.0040
8-10	5	3-4-7-14	12,816	159	1.195	73.0100	0.0041	0.0500	0.0040
8-10	6	4-7-8-14	12,816	155	1.255	73.0647	0.0038	0.0564	0.0039
8-10	19	5-6-7-8-14	12,817	159	1.486	73.5570	0.0043	0.0600	0.0040
15-1	5	7-8	12,872	167	0.816	84.3112	0.0039	0.0323	0.0038
15-4	5	7-8	12,873	165	0.781	84.4106	0.0040	0.0350	0.0037
15-8	5	7-8-15	12,875	163	0.800	84.5420	0.0037	0.0326	0.0035
15-2	5	7-8	12,988	176	0.984	89.4191	0.0039	0.0356	0.0037
16-1	2	3-7	13,012	159	18.181	100.3871	0.0040	0.0524	0.0037
16-1	11	3-4-7	13,047	157	17.815	108.0159	0.0045	0.7049	0.0036

PREPARED BY: DATE	PERFORMED BY: DATE	WITNESSED FOR NAA: DATE	CERTIFIED FOR McDONNELL: DATE
E. Searcy	[illegible] 9/30/65	W. E. Searcy 9/30/65	VERIFIED BY USAF: DATE

1084

R-15075-1

Test Form 1453

ROCKETDYNE
A DIVISION OF NORTH AMERICAN AVIATION INC

DESIGN APPROVAL TEST
ORBIT ATTITUDE AND MANEUVER SYSTEM
(SE7)

NAME OF TEST MDC HIGH TEMPERATURE TEST TEST NO. 106156-401 SHEET ____ OF ____

PART NO. 2-DAY CONFIG. { MAC ____ NAA ____ } 14-DAY CONFIG. { MAC 52-52701 NAA 99-106156 }

Individual TCA Pulse Performance and Propellant Valve Response Data TCA #7

MDC Sequence No.	MDC Maneuver No.	TCA's Firing	Time From Test Start (Sec)	Stabilized Chamber Press (Psia)	Pulse I_t (lb-sec)	Cumulative TCA Firing Time (Sec)	Prop. Valves Energize Time (Sec)	Prop. Valves On Time (Sec)	Prop. Valves De-Energize Time (Sec)
16-1	14	7-8	13,062	157	17.972	104.6303	0.0040	0.7113	0.0037
15-1	5	7-8	13,073	157	0.886	104.4670	0.0037	0.0368	0.0037
15-5	5	7-8	13,075	161	0.879	104.8138	0.0040	0.0354	0.0034
15-10	5	7-8	13,078	159	0.918	104.9973	0.0042	0.0370	0.0036
15-15	5	7-8	13,080	164	0.931	105.1808	0.0040	0.0373	0.0037
15-20	5	7-8	13,083	162	0.945	105.3643	0.0040	0.0369	0.0036
15-25	5	7-8	13,085	163	0.895	105.5478	0.0040	0.0353	0.0037
15-30	5	7-8	13,088	166	0.952	105.7313	0.0039	0.0369	0.0036
15-35	5	7-8	13,090	165	1.002	105.9148	0.0040	0.0380	0.0037
15-40	5	7-8	13,093	167	0.992	106.0983	0.0040	0.0369	0.0039
15-45	5	7-8	13,095	166	0.904	106.2818	0.0040	0.0366	0.0038

PREPARED BY: DATE	PERFORMED BY: DATE	WITNESSED FOR NAA DATE	CERTIFIED FOR McDONNELL DATE
W. E. Searcy	M. L. Skelton 9/15/65	W. E. Searcy 9/30/65	VERIFIED BY USAF DATE
R-15075-1			

Test Form 1453

DESIGN APPROVAL TEST
ORBIT ATTITUDE AND MANEUVER SYSTEM
(SE7)

NAME OF TEST MDC HIGH TEMPERATURE TEST TEST NO. 106156-401 SHEET ____ OF ____

PART NO. 2-DAY CONFIG {MAC ____ NAA ____} 14-DAY CONFIG {MAC 52-52701 NAA 99-106156}

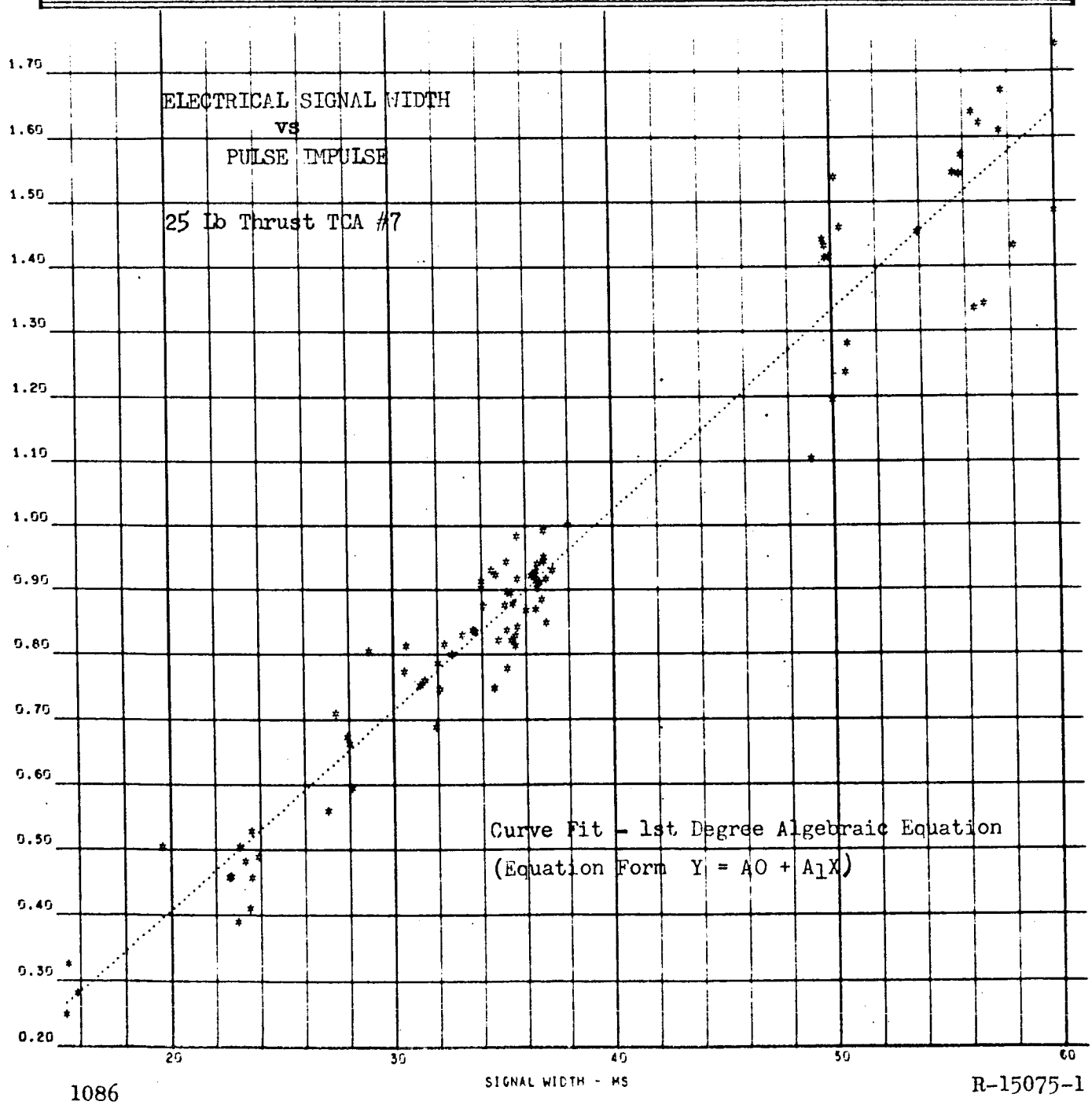

DESIGN APPROVAL TEST
ORBIT ATTITUDE AND MANEUVER SYSTEM
(SE7)

NAME OF TEST MDC HIGH TEMPERATURE TEST TEST NO. 106156-401 SHEET ____ OF ____

PART NO. 2-DAY CONFIG {MAC ____ NAA ____} 14-DAY CONFIG {MAC 52-52701 NAA 99-106156}

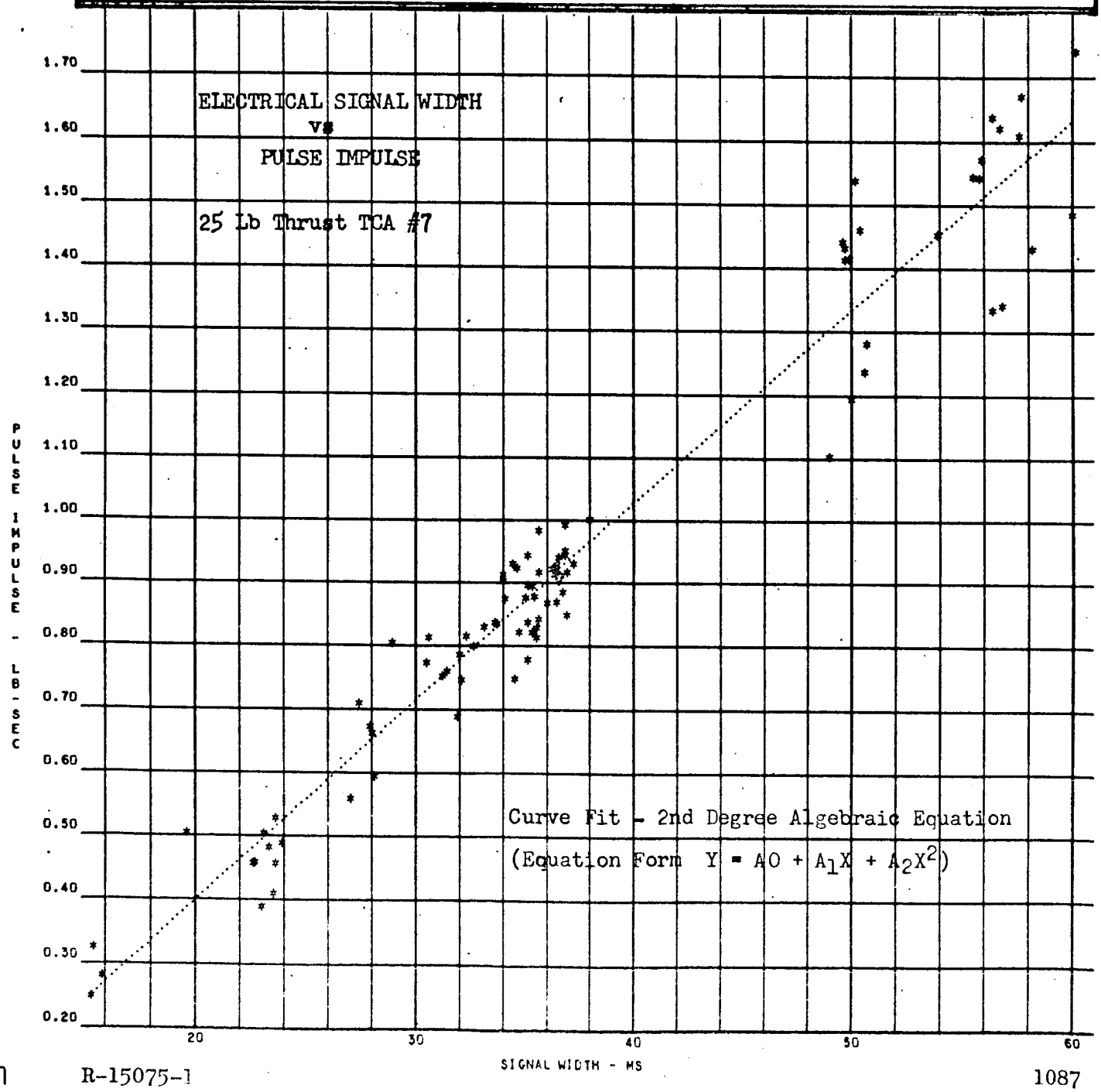

DESIGN APPROVAL TEST
ORBIT ATTITUDE AND MANEUVER SYSTEM
(SE7)

NAME OF TEST MDC HIGH TEMPERATURE TEST TEST NO. 106156-401 SHEET ____ OF ____

PART NO. 2-DAY CONFIG. { MAC ____ / NAA ____ } 14-DAY CONFIG. { MAC 52-52701 / NAA 99-106156 }

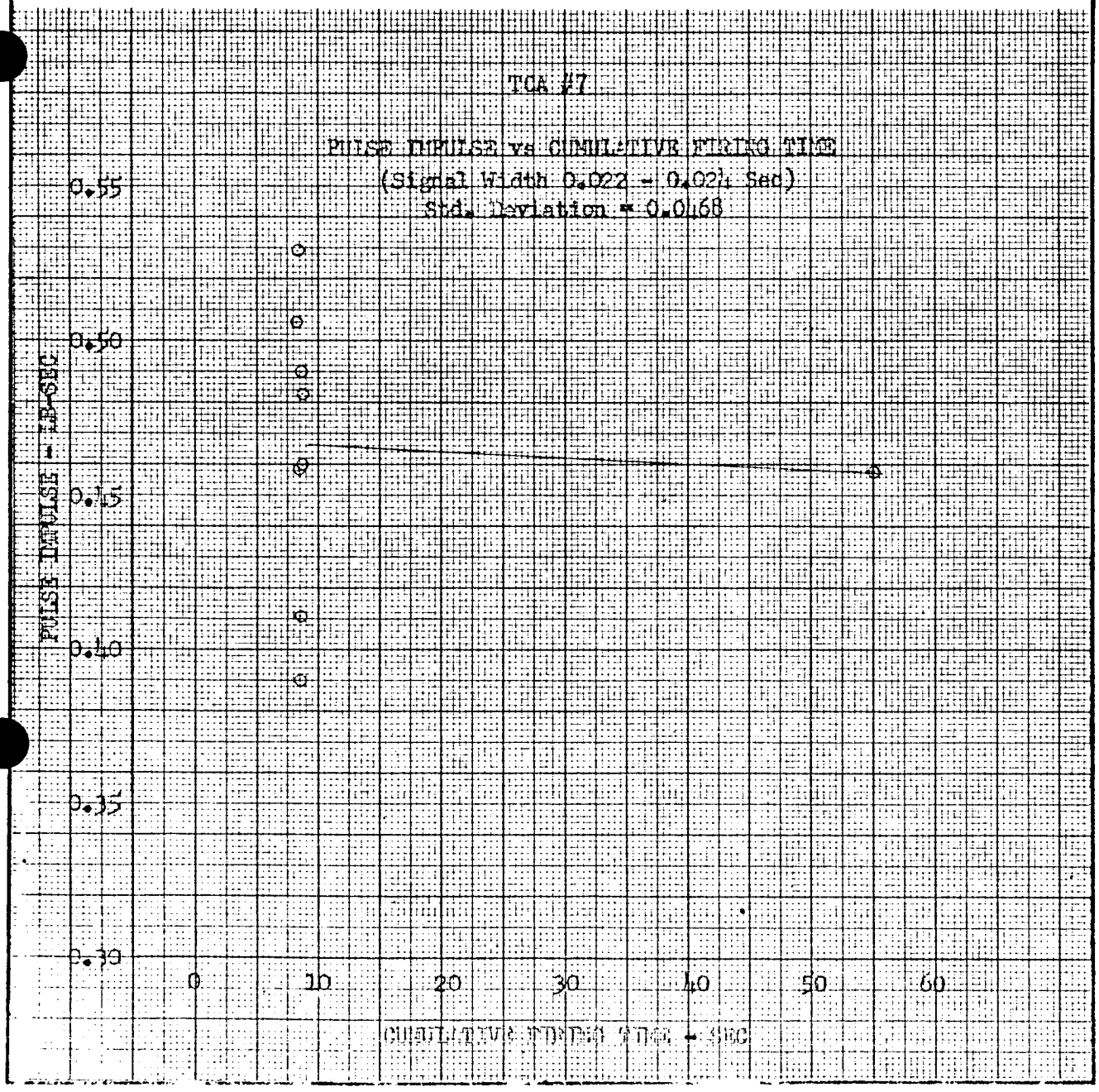

DESIGN APPROVAL TEST
ORBIT ATTITUDE AND MANEUVER SYSTEM
(SE7)

NAME OF TEST MDC HIGH TEMPERATURE TEST TEST NO. 106156-401 SHEET ____ OF ____

PART NO. 2-DAY CONFIG { MAC ____ / NAA ____ } 14-DAY CONFIG { MAC 52-52701 / NAA 99-106156 }

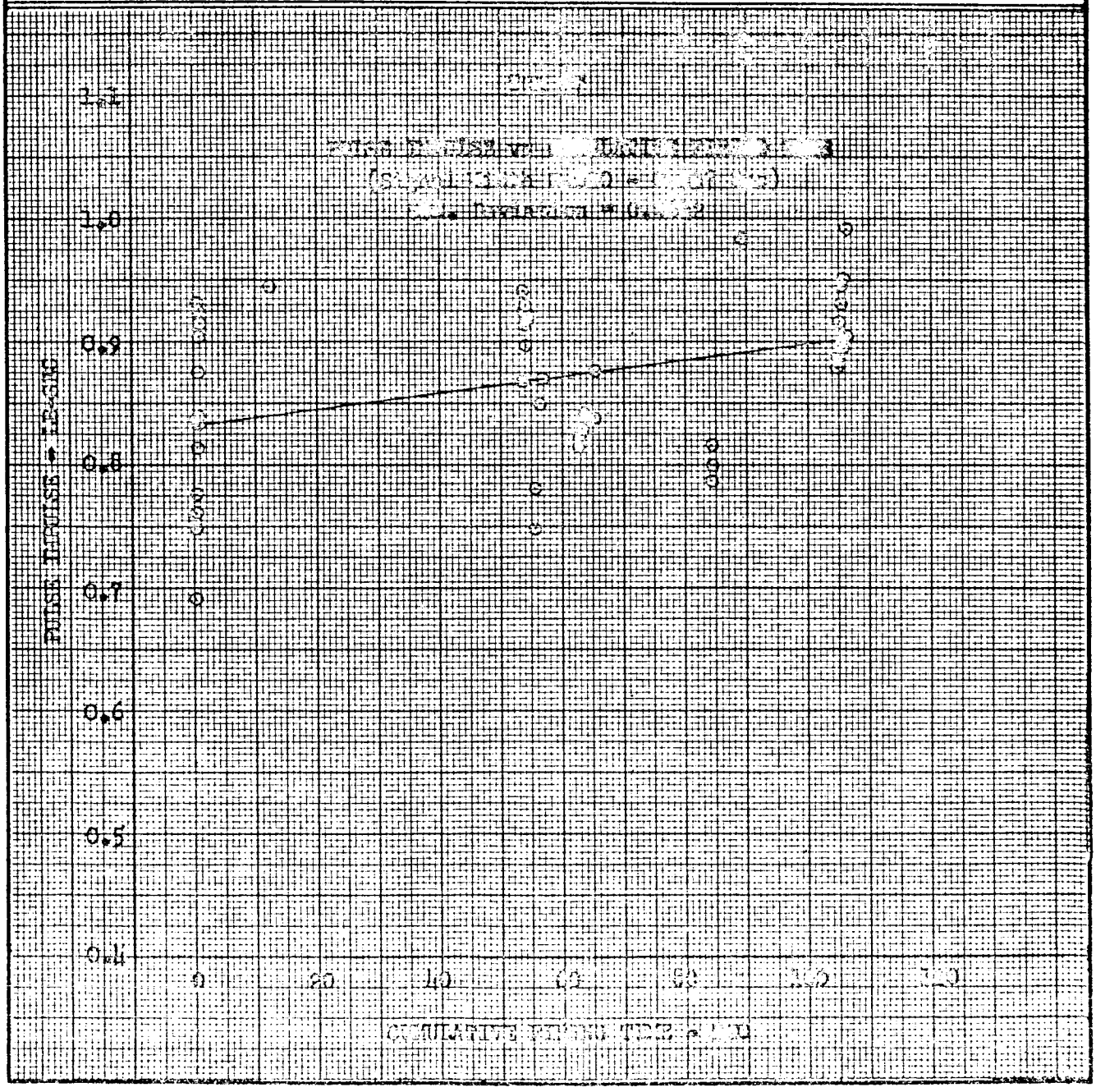

DESIGN APPROVAL TEST
ORBIT ATTITUDE AND MANEUVER SYSTEM
(SE7)

NAME OF TEST MDC HIGH TEMPERATURE TEST TEST NO. 106156-401 SHEET ____ OF ____

PART NO. 2-DAY CONFIG { MAC ____ / NAA ____ } 14-DAY CONFIG { MAC 52-52701 / NAA 99-106156 }

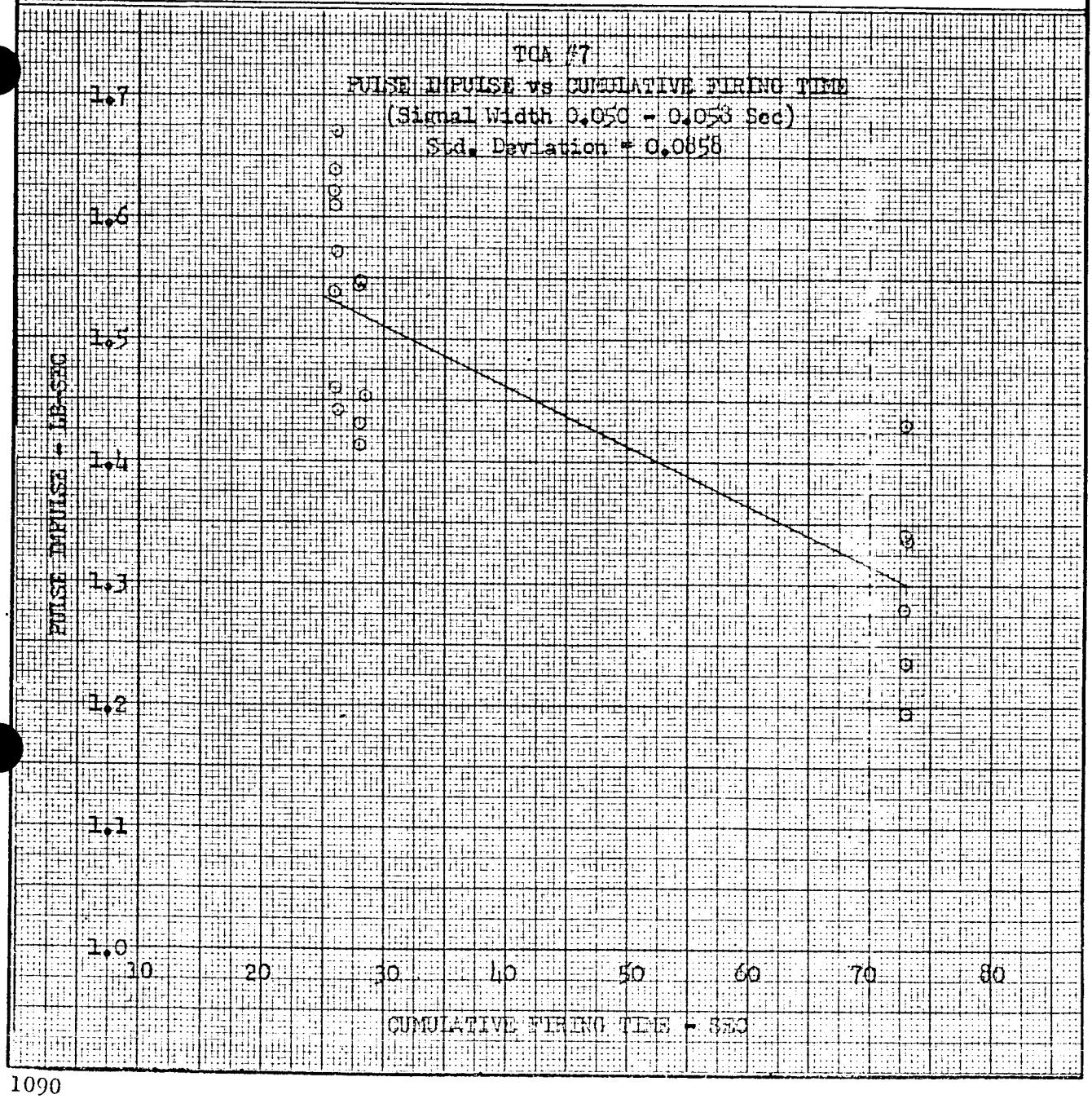

ROCKETDYNE
A DIVISION OF NORTH AMERICAN AVIATION INC

DESIGN APPROVAL TEST
ORBIT ATTITUDE AND MANEUVER SYSTEM
(SE7)

NAME OF TEST MDC HIGH TEMPERATURE TEST NO. 106156-401 SHEET ____ OF ____

PART NO. 2-DAY CONFIG. { MAC ____ NAA ____ } 14-DAY CONFIG. { MAC 52-52701 NAA 99-106156 }

Representative TCA Unit Pulse Characteristics TCA #7

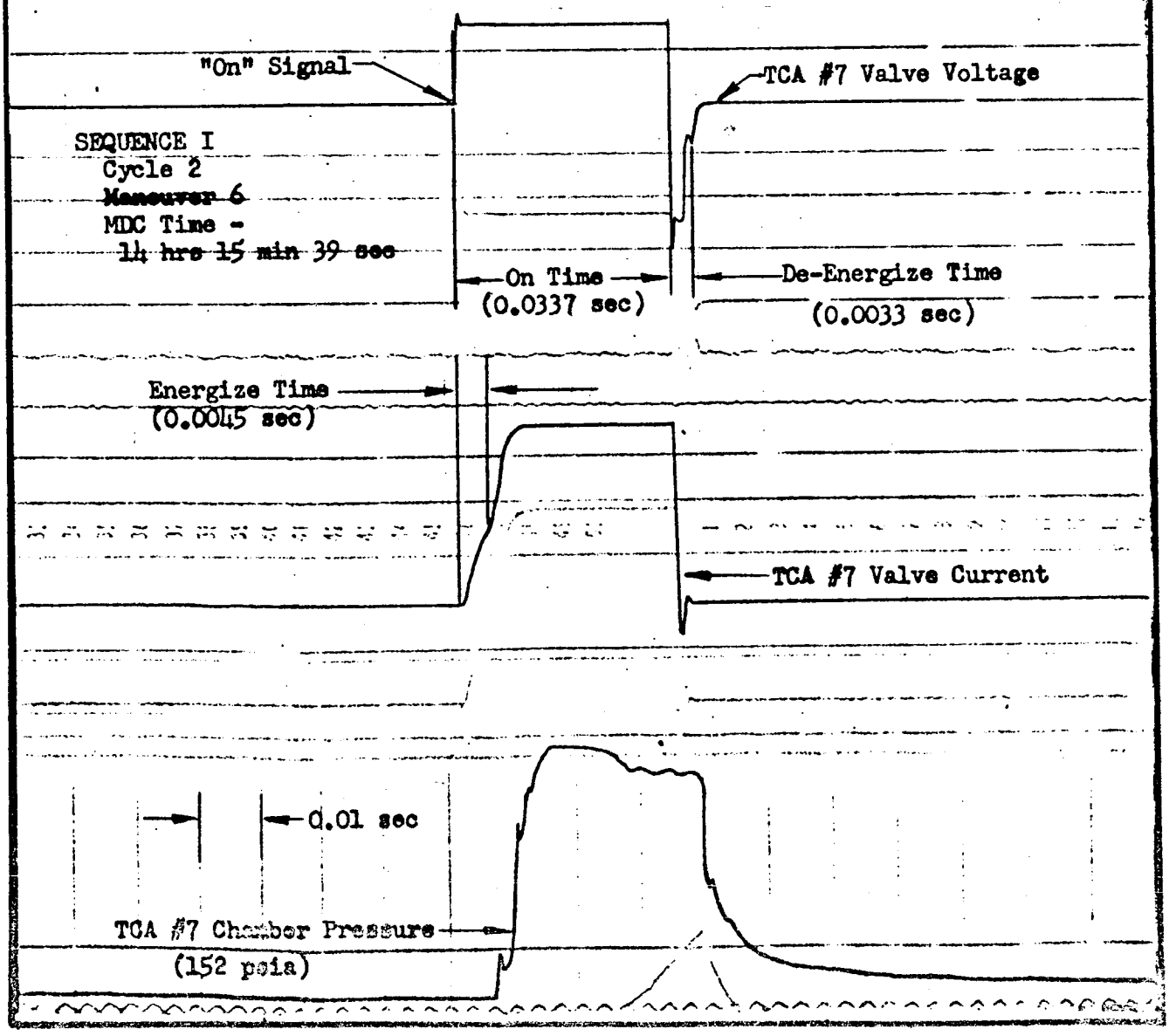

Test Form 1453
R-15075-1

DESIGN APPROVAL TEST
ORBIT ATTITUDE AND MANEUVER SYSTEM
(SE7)

NAME OF TEST MDC HIGH TEMPERATURE TEST NO. 106156-401 SHEET ____ OF ____

PART NO. 2-DAY CONFIG. { MAC ____ / NAA ____ } 14-DAY CONFIG. { MAC 52-52701 / NAA 99-106156 }

Representative TCA Unit Pulse Characteristics TCA #7

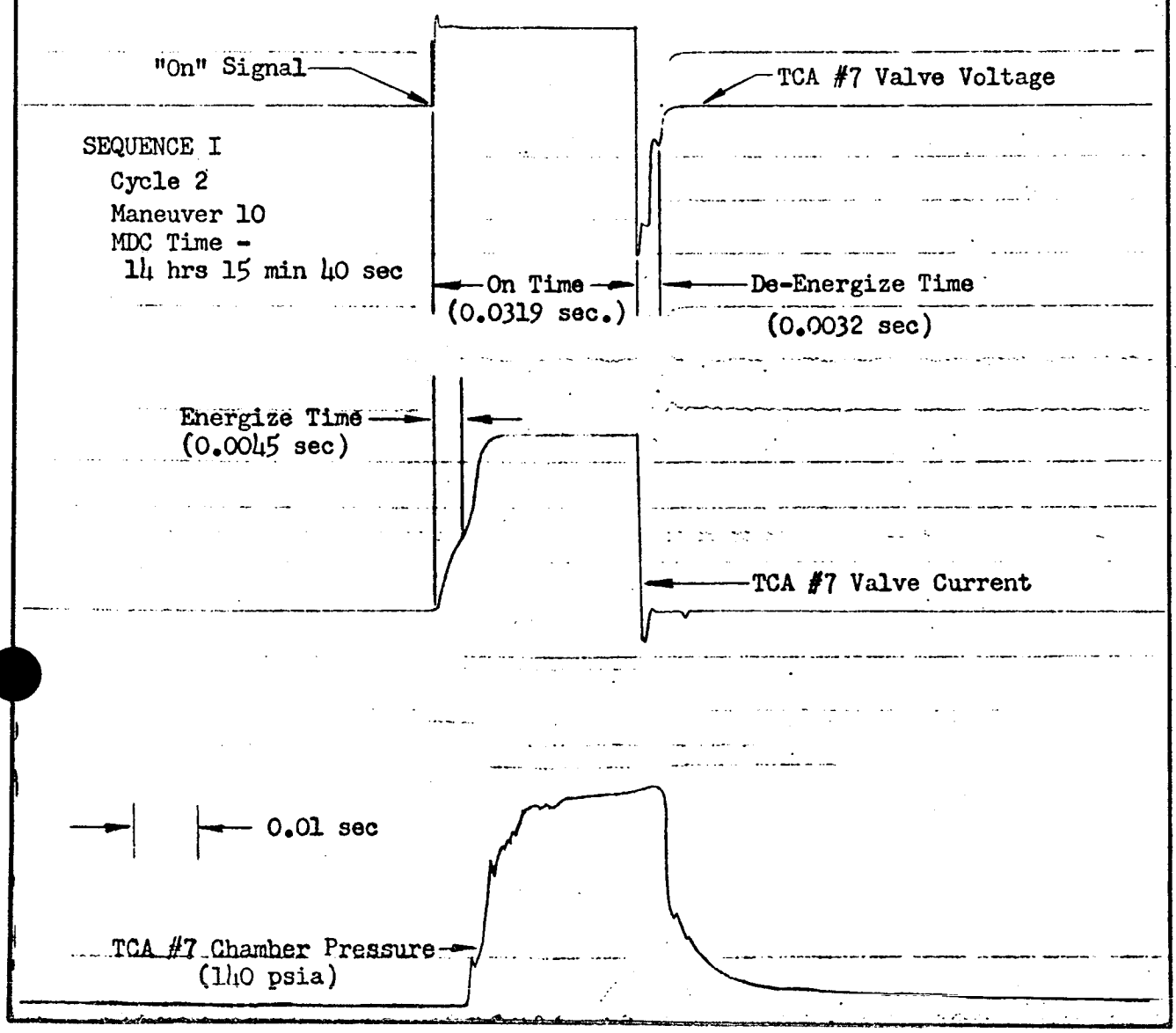

Test Form 1453

ROCKETDYNE
A DIVISION OF NORTH AMERICAN AVIATION INC

DESIGN APPROVAL TEST
ORBIT ATTITUDE AND MANEUVER SYSTEM
(SE7)

NAME OF TEST MDC HIGH TEMPERATURE TEST NO. 106156-401 SHEET ____ OF ____

PART NO. 2-DAY CONFIG. { MAC ____ / NAA ____ } 14-DAY CONFIG. { MAC 52-52701 / NAA 99-106156 }

Representative TCA Unit Pulse Characteristics TCA #7

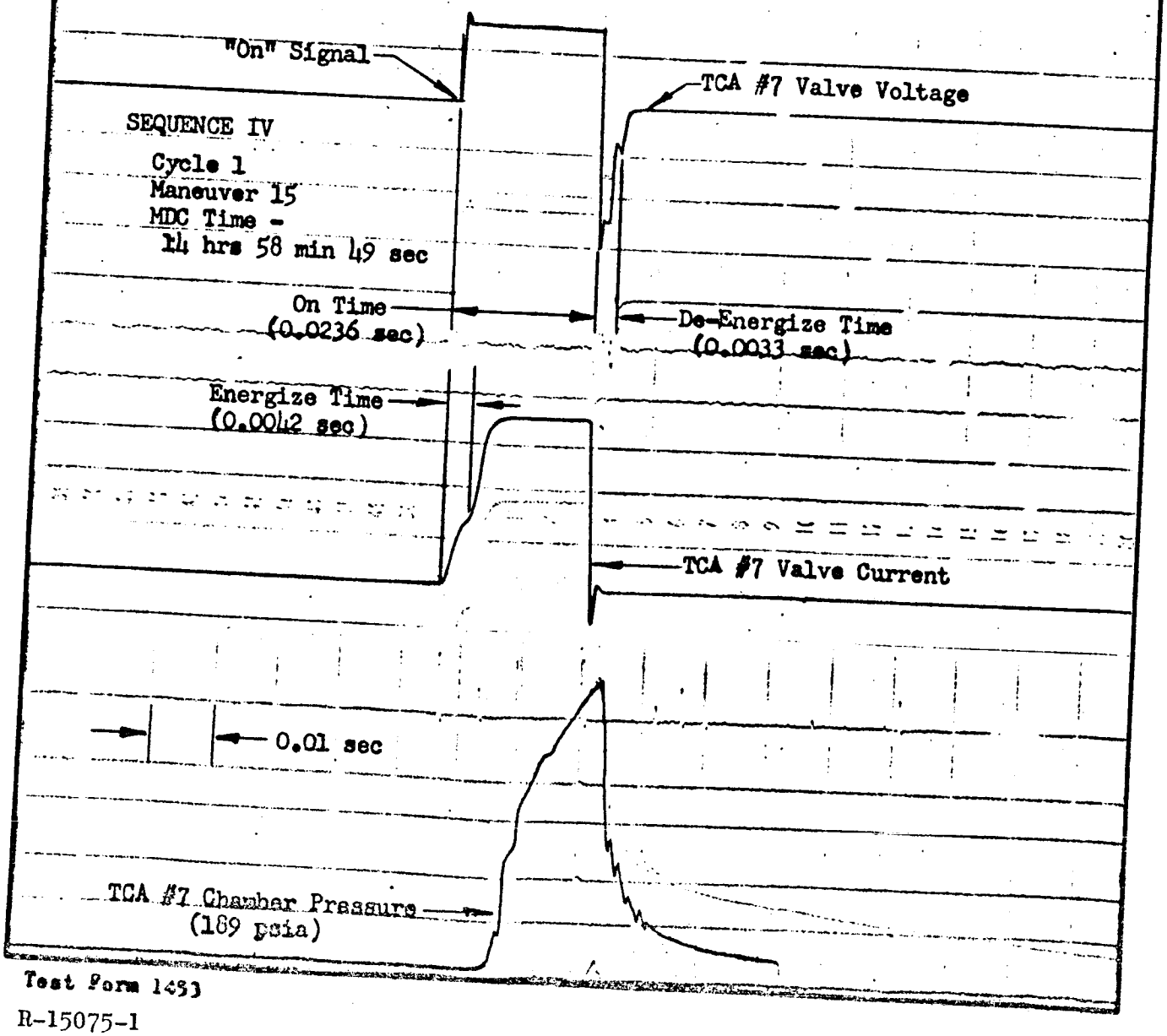

Test Form 1453

R-15075-1

DESIGN APPROVAL TEST
ORBIT ATTITUDE AND MANEUVER SYSTEM
(SE7)

NAME OF TEST MDC HIGH TEMPERATURE TEST NO. 106156-401 SHEET ____ OF ____

PART NO. 2-DAY CONFIG. { MAC ____ / NAA ____ } 14-DAY CONFIG. { MAC 52-52701 / NAA 99-106156 }

Representative TCA Unit Pulse Characteristics TCA #7

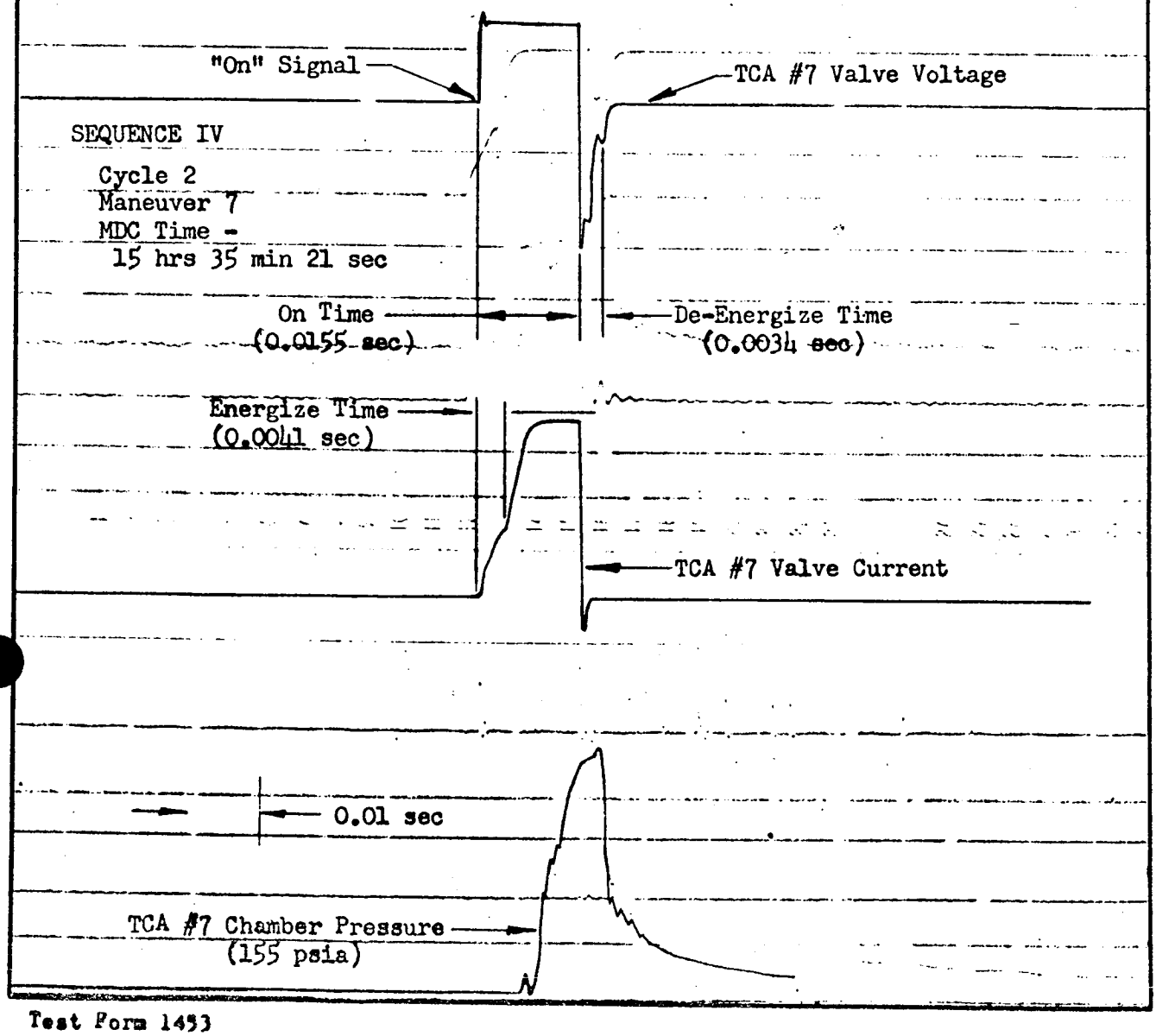

Test Form 1453

DESIGN APPROVAL TEST
ORBIT ATTITUDE AND MANEUVER SYSTEM
(SE7)

NAME OF TEST MDC HIGH TEMPERATURE TEST NO. 106156-401 SHEET ____ OF ____

PART NO. 2-DAY CONFIG. { MAC ____ NAA ____ } 14-DAY CONFIG. { MAC 52-52701 NAA 99-106156 }

Representative TCA Unit Pulse Characteristics TCA #7

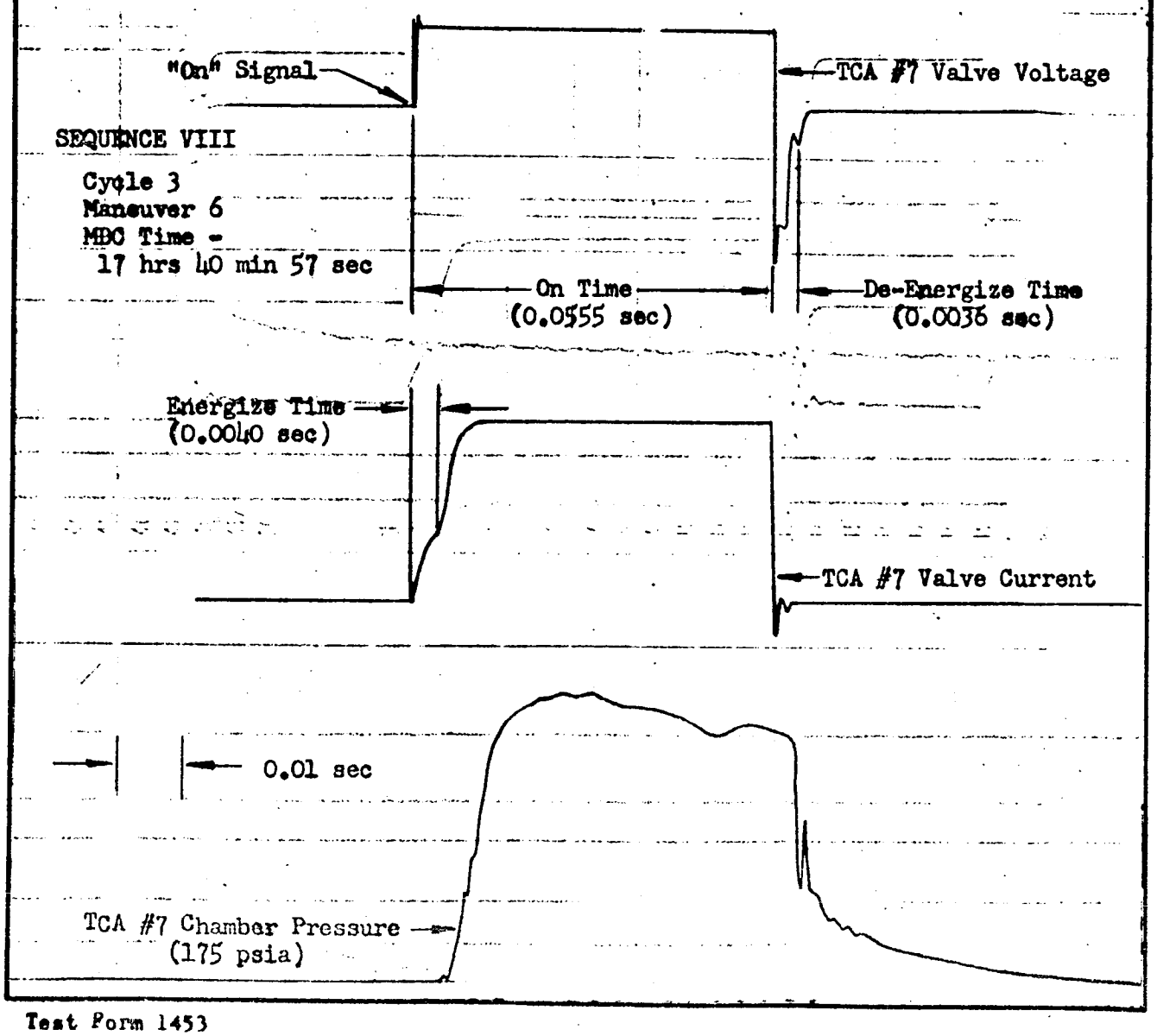

DESIGN APPROVAL TEST
ORBIT ATTITUDE AND MANEUVER SYSTEM
(SE7)

NAME OF TEST MDC HIGH TEMPERATURE TEST NO. 106156-401 SHEET ____ OF ____

PART NO. 2-DAY CONFIG {MAC ____ NAA ____} 14-DAY CONFIG {MAC 52-52701 NAA 99-106156}

Representative TCA Unit Pulse Characteristics TCA #7

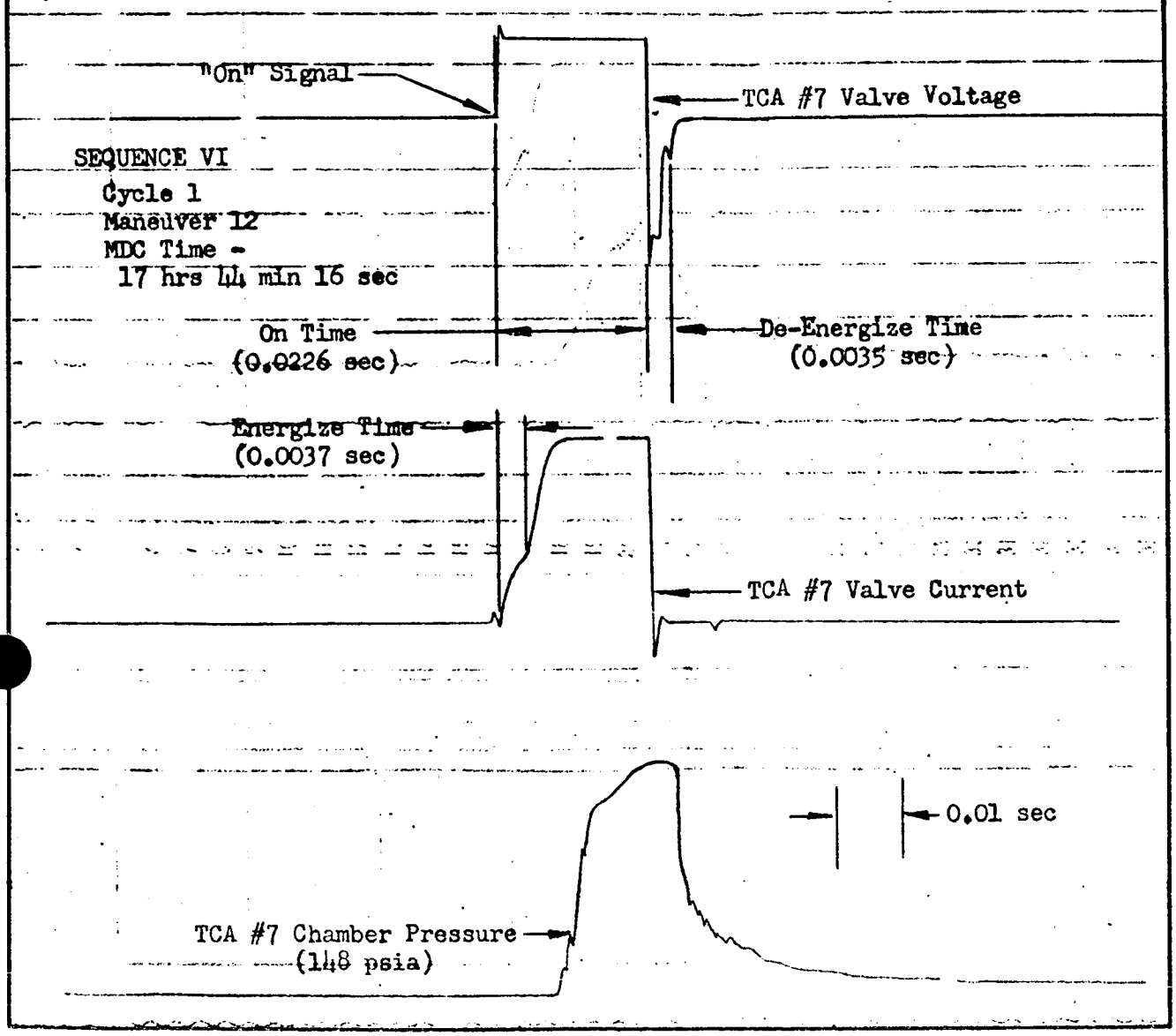

DESIGN APPROVAL TEST
ORBIT ATTITUDE AND MANEUVER SYSTEM
(SE7)

NAME OF TEST MDC HIGH TEMPERATURE TEST NO. 106156-401 SHEET ____ OF ____

PART NO. 2-DAY CONFIG {MAC ____ NAA ____} 14-DAY CONFIG {MAC 52-52701 NAA 99-106156}

Representative TCA Unit Pulse Characteristics **TCA #7**

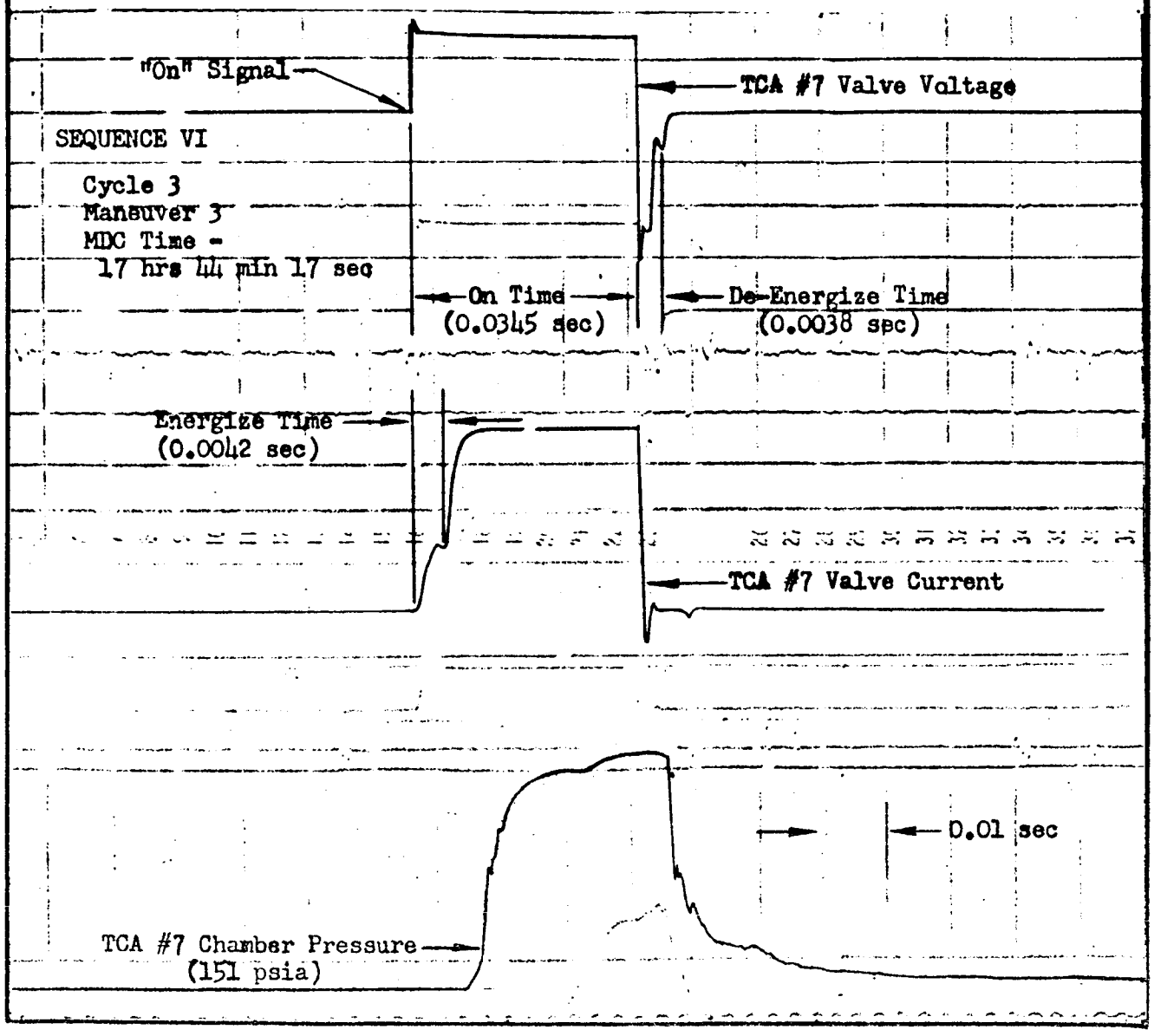

DESIGN APPROVAL TEST
ORBIT ATTITUDE AND MANEUVER SYSTEM
(SE7)

NAME OF TEST MDC HIGH TEMPERATURE TEST NO. 106156-401 SHEET ____ OF ____

PART NO. 2-DAY CONFIG {MAC ____ NAA ____} 14-DAY CONFIG {MAC 52-52701 NAA 99-106156}

Representative TCA Unit Pulse Characteristics TCA #7

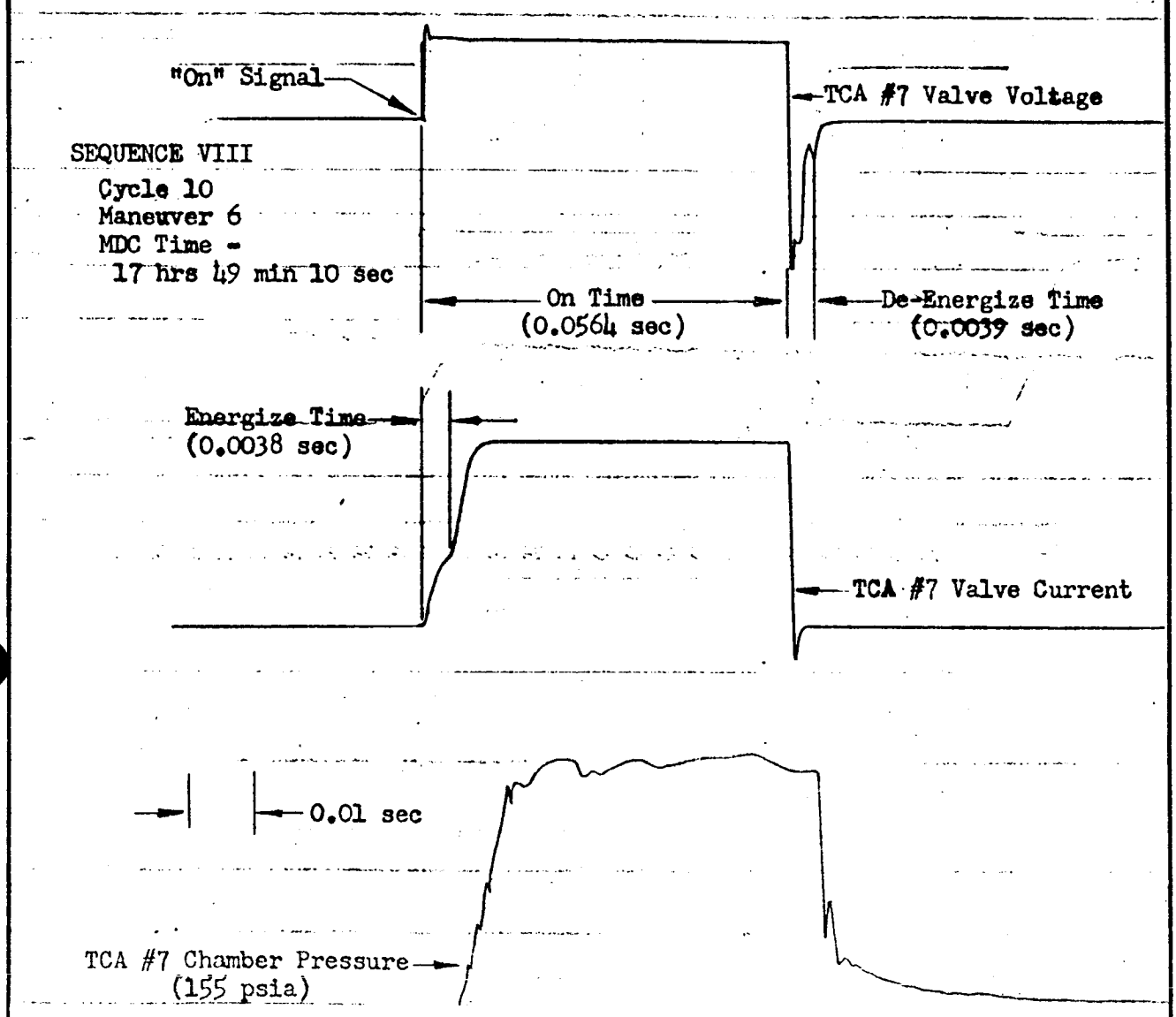

DESIGN APPROVAL TEST
ORBIT ATTITUDE AND MANEUVER SYSTEM
(SE7)

NAME OF TEST MDC HIGH TEMPERATURE TEST NO. 106156-401 SHEET ____ OF ____

PART NO. 2-DAY CONFIG {MAC ____ NAA ____} 14-DAY CONFIG {MAC 52-52701 NAA 99-106156}

Representative TCA Unit Pulse Characteristics TCA #7

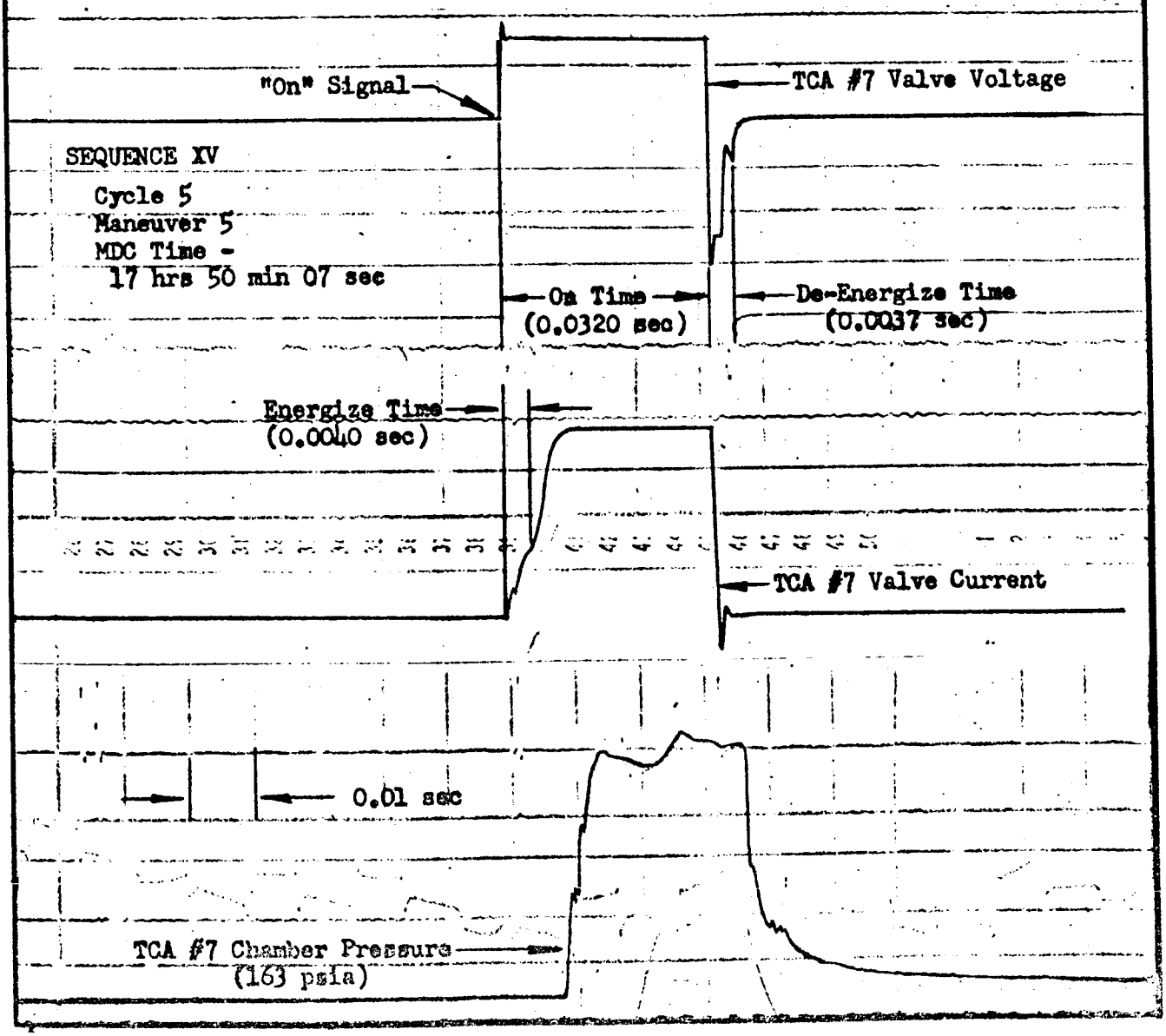

ROCKETDYNE
A DIVISION OF NORTH AMERICAN AVIATION INC

DESIGN APPROVAL TEST
ORBIT ATTITUDE AND MANEUVER SYSTEM
(SE7)

NAME OF TEST MDC HIGH TEMPERATURE TEST TEST NO. 106156-401 SHEET ____ OF ____

PART NO. 2-DAY CONFIG. { MAC ____ NAA ____ } 14-DAY CONFIG. { MAC 52-52701 NAA 99-106156 }

Individual TCA Propellant Valves Response Data

TCA No. 1 Valves

Arithmetic Mean Energize Times: 39.442 milliseconds

Standard Deviation Energize Times: 1.781 milliseconds

Arithmetic Mean De-Energize Times: 33.883 milliseconds

Standard Deviation De-Energize Times: 3.208 milliseconds

TCA No. 7 Valves

Arithmetic Mean Energize Times: 41.030 milliseconds

Standard Deviation Energize Times: 2.410 milliseconds

Arithmetic Mean De-Energize Times: 35.900 milliseconds

Standard Deviation De-Energize Times: 2.139 milliseconds

PREPARED BY: DATE	PERFORMED BY: DATE	WITNESSED FOR NAA: DATE	CERTIFIED FOR McDONNELL: DATE
W. E. Searcy	W. E. Helton 9/15/65	W. E. Searcy 9/30/65	VERIFIED BY QCAP: DATE

1100 R-15075-1

Test Form 1453

ROCKETDYNE
A DIVISION OF NORTH AMERICAN AVIATION INC

DESIGN APPROVAL TEST
ORBIT ATTITUDE AND MANEUVER SYSTEM
(SE7)

NAME OF TEST MDC HIGH TEMPERATURE TEST TEST NO. 106156-401 SHEET ____ OF ____

PART NO. 2-DAY CONFIG. { MAC ____ NAA ____ } 14-DAY CONFIG. { MAC 52-52701 NAA 99-106156 }

Maneuver TCA Test Data

TCA No.	Operating Duration (sec)	Chamber Pressure (psia)
9	15.0	134.6
	51.5	137.4
	4.9	136.0
	15.5	134.2
	11.5	136.2
10	15.0	134.5
	51.5	136.7
	4.9	137.7
	15.5	129.0
	11.5	131.0
11	82.5	125.0
12	82.5	124.7

PREPARED BY: DATE	PERFORMED BY: DATE	WITNESSED FOR NAA: DATE	CERTIFIED FOR McDONNELL: DATE
W. E. Searcy	M. S. Skolion 9/15/65	W. E. Searcy 9/30/65	VERIFIED BY QA: DATE

R-15075-1

Test Form 1453

ROCKETDYNE
A DIVISION OF NORTH AMERICAN AVIATION INC

DESIGN APPROVAL TEST
ORBIT ATTITUDE AND MANEUVER SYSTEM
(SE7)

NAME OF TEST NDC HIGH TEMPERATURE TEST TEST NO. [illegible] SHEET ____ OF ____
PART NO. 2-DAY CONFIG. { MAC ____ NAA ____ } 14-DAY CONFIG. { MAC ____ NAA [illegible] }

Maneuver TCA Test Data

TCA No.	Operating Duration (sec)	Chamber Pressure (psia)
13	6.2	136.1
	64.7	139.1
14	19.4	137.9
	27.1	139.4
	9.0	139.4
15	20.1	141.1
	47.0	141.1
	16.2	138.6
	33.0	138.3
16	4.2	137.0
	19.0	137.0
	14.0	144.2
	11.1	144.2

PREPARED BY: DATE	PERFORMED BY: DATE	WITNESSED FOR NAA DATE	CERTIFIED FOR McDONNELL: DATE
W. E. Searcy 1102	M. S. Skelton 9/15/65	W. E. Searcy 9/30/65	VERIFIED BY USAF: DATE

R-15075-1

Test Form 1453

ROCKETDYNE
A DIVISION OF NORTH AMERICAN AVIATION INC

DESIGN APPROVAL TEST
ORBIT ATTITUDE AND MANEUVER SYSTEM
(SE7)

NAME OF TEST MDC HIGH TEMPERATURE TEST TEST NO. 106156-401 SHEET ____ OF ____

PART NO. 2-DAY CONFIG. { MAC ____ NAA ____ } 14-DAY CONFIG. { MAC 52-52701 NAA 99-106156 }

TCA Pulse Firing Data

TCA No.	Number of Pulses	Mean Pulse Duration (Sec)	Mean I_t Per Pulse (Lb-Sec)	I_t (Lb-Sec)
1	702	0.036	0.72	505.4
	1	2.100	48.7	48.7
	8	1.050	24.4	195.2
	18	0.018	0.23	4.1
	9	0.023	0.36	3.2
	1481	0.062	1.42	2103.0
	126	0.032	0.61	76.9
2	702	0.036	0.72	505.4
	1	2.100	48.7	48.7
	8	1.050	24.4	195.2
	18	0.018	0.23	4.1
	9	0.023	0.36	3.2
	1481	0.062	1.42	2103.0
	126	0.032	0.61	76.9
3	225	0.033	0.81	182.3
	1	4.200	101.2	101.2

PREPARED BY: DATE	PERFORMED BY: DATE	WITNESSED FOR NAAP DATE	CERTIFIED FOR McDONNELL: DATE
W. E. Searcy	M. S. Skolion 9/15/65	W. E. Searcy 9/30/65	VERIFIED BY USAF: DATE
R-15075-1			1103

Test Form 1453

ROCKETDYNE
A DIVISION OF NORTH AMERICAN AVIATION INC

DESIGN APPROVAL TEST
ORBIT ATTITUDE AND MANEUVER SYSTEM
(SE7)

NAME OF TEST MDC HIGH TEMPERATURE TEST TEST NO. 106156-401 SHEET ____ OF ____

PART NO. 2-DAY CONFIG. { MAC ____ NAA ____ } 14-DAY CONFIG. { MAC 52-52701 NAA 99-106156 }

TCA Pulse Firing Data

TCA No.	Number of Pulses	Mean Pulse Duration (Sec)	Mean I_t Per Pulse (Lb-Sec)	I_t (Lb-Sec)
5	32	0.705	16.5	528.0
	26	0.018	0.35	9.1
	27	0.023	0.50	13.5
	295	0.031	0.75	221.3
	1018	0.055	1.48	1610.2
4	234	0.033	0.81	189.5
	1	4.200	101.2	101.2
	32	0.705	16.5	528.0
	27	0.018	0.35	9.5
	27	0.023	0.50	13.5
	296	0.031	0.75	222.0
	1100	0.055	1.48	1620.0
5	702	0.026	0.72	505.4
	1	2.165	22.2	22.2
	8	1.030	25.4	203.2
	21	0.018	0.23	4.8

PREPARED BY: DATE	PERFORMED BY: DATE	WITNESSED FOR NAA: DATE	CERTIFIED FOR McDONNELL: DATE
W. E. Searcy 1104	[illegible] 9/20/65	[illegible] 9/20/65	VERIFIED BY USAF: DATE

R-15075-1

Test Form 1453

ROCKETDYNE
A DIVISION OF NORTH AMERICAN AVIATION INC

DESIGN APPROVAL TEST
ORBIT ATTITUDE AND MANEUVER SYSTEM
(SE7)

NAME OF TEST MDC HIGH TEMPERATURE TEST TEST NO. 106156-401 SHEET ____ OF ____

PART NO. 2-DAY CONFIG. { MAC ____ NAA ____ } 14-DAY CONFIG. { MAC 52-52701 NAA 99-106156 }

TCA Pulse Firing Data

TCA No.	Number of Pulses	Mean Pulse Duration (Sec)	Mean I_t Per Pulse (Lb-Sec)	I_t (Lb-Sec)
5	9	0.023	0.36	3.2
	1480	0.062	1.42	2101.6
	126	0.032	0.61	76.9
6	690	0.036	0.72	505.4
	1	2.105	51.6	51.6
	8	1.050	25.1	200.8
	21	0.018	0.23	4.8
	9	0.023	0.36	3.2
	1480	0.062	1.42	2101.6
	126	0.032	0.61	76.9
7	255	0.033	0.81	206.6
	1	4.200	105.4	105.4
	32	0.705	17.4	556.8
	26	0.018	0.35	9.1
	26	0.023	0.50	13.0
	295	0.031	0.75	221.3

PREPARED BY: DATE	PERFORMED BY: DATE	WITNESSED FOR NAA DATE	CERTIFIED FOR McDONNELL DATE
W. E. Searcy	M. L. Hollon 9/15/65	W. E. Searcy 9/30/65	VERIFIED BY USAF DATE

R-15075-1

Test Form 1453

ROCKETDYNE
A DIVISION OF NORTH AMERICAN AVIATION INC

DESIGN APPROVAL TEST
ORBIT ATTITUDE AND MANEUVER SYSTEM
(SE7)

NAME OF TEST MDC HIGH TEMPERATURE TEST TEST NO. 106156-401 SHEET ____ OF ____

PART NO. 2-DAY CONFIG. { MAC ____ NAA ____ } 14-DAY CONFIG. { MAC 52-52701 NAA 99-106156 }

TCA Pulse Firing Data

TCA No.	Number of Pulses	Mean Pulse Duration (Sec)	Mean I_t Per Pulse (Lb-Sec)	I_t (Lb-Sec)
7	1086	0.055	1.48	1607.3
8	255	0.033	0.81	206.6
	1	4.200	104.2	104.2
	32	0.705	17.3	553.6
	27	0.018	0.35	9.5
	27	0.023	0.50	13.5
	295	0.031	0.75	221.5
	1018	0.055	1.48	1625.0
9	1	15.0	1440.0	1440.0
	1	51.0	5047.0	5047.0
	1	4.9	475.0	475.0
	1	15.5	[illegible]	[illegible]
	1	11.5	[illegible]	[illegible]
10	1	15.0	1277.5	1277.5
	1	51.5	4444.0	4444.0

PREPARED BY: DATE	PERFORMED BY: DATE	WITNESSED FOR NAA: DATE	CERTIFED FOR McDONNELL: DATE
W. E. Searcy	[signature]	[signature]	VERIFIED BY USAFT DATE
1106			R-15075-1

Test Form 1453

ROCKETDYNE
A DIVISION OF NORTH AMERICAN AVIATION INC

DESIGN APPROVAL TEST
ORBIT ATTITUDE AND MANEUVER SYSTEM
(SE7)

NAME OF TEST MDC HIGH TEMPERATURE TEST TEST NO. 106156-401 SHEET ____ OF ____

PART NO. 2-DAY CONFIG. { MAC ____ NAA ____ } 14-DAY CONFIG. { MAC 52-52701 NAA 99-106156 }

TCA Pulse Firing Data

TCA No.	Number of Pulses	Mean Pulse Duration (Sec)	Mean I_t Per Pulse (Lb-Sec)	I_t (Lb-Sec)
10	1	4.9	464.0	464.0
	1	15.5	1374.9	1374.9
	1	11.5	1036.2	1036.2
11	1	82.5	6583.5	6583.5
12	1	82.5	6509.3	6509.3
13	2	6.2	594.0	1188.0
	1	64.7	6334.0	6334.0
14	1	19.4	1852.7	1852.7
	1	27.1	2615.2	2615.2
	1	9	868.5	868.5
15	1	20.1	2018.0	2018.0
	1	47.0	4718.8	4718.8
	1	16.2	1597.3	1597.3

PREPARED BY: DATE	REVIEWED BY: DATE	APPROVED FOR [illegible] DATE	APPROVED FOR [illegible] DATE
W. E. Searcy	M. S. Skolion 9/15/65	W. E. Searcy 9/30/65	VERIFIED BY QA-T DATE
R-15075-1			1107

Test Form 1453

ROCKETDYNE
A DIVISION OF NORTH AMERICAN AVIATION INC

DESIGN APPROVAL TEST
ORBIT ATTITUDE AND MANEUVER SYSTEM
(SE7)

NAME OF TEST MDC HIGH TEMPERATURE TEST TEST NO. 106156-401 SHEET ____ OF ____

PART NO. 2-DAY CONFIG. { MAC ____ / NAA ____ } 14-DAY CONFIG. { MAC 52-52701 / NAA 99-106156 }

TCA Pulse Firing Data

TCA No.	Number of Pulses	Mean Pulse Duration (Sec)	Mean I_t Per Pulse (Lb-Sec)	I_t (Lb-Sec)
15	1	33.0	3247.2	3247.2
16	1	4.2	404.9	404.9
	2	19.0	1783.1	3566.2
	1	14.0	1419.6	1419.6
	1	11.11	1125.5	1125.5

PREPARED BY: DATE	PERFORMED BY: DATE	WITNESSED FOR NAA: DATE	CERTIFIED FOR McDONNELL: DATE
W. E. Searcy	W. E. Searcy 9/15/65	W. E. Searcy 9/30/65	VERIFIED BY USAF: DATE

1108 R-15075-1

Test Form 1453

ROCKETDYNE
A DIVISION OF NORTH AMERICAN AVIATION INC

DESIGN APPROVAL TEST
ORBIT ATTITUDE AND MANEUVER SYSTEM
(SE7)

NAME OF TEST MDC HIGH TEMPERATURE TEST TEST NO. 106156-401 SHEET ____ OF ____

PART NO. 2-DAY CONFIG. { MAC ____ NAA ____ 14-DAY CONFIG. { MAC 52-52701 NAA 99-106156

Overall System Performance

Oxidizer (NTO) Utilized: 138.5 lbs.

Fuel (MMH) Utilized: 104.2 lbs.

System Cumulative Total Impulse: 85,290 lb-sec.

System Overall Isp: 351.4 sec.

System Overall Propellant Mixture Ratio: 1.329

Test Data Comments:

See the following pages

PREPARED BY: DATE	REVIEWED BY: DATE	APPROVED FOR RK: DATE	APPROVED FOR MANAGEMENT: DATE
W. E. Searcy	M. S. Skolnick 9/15/65	W. E. Searcy 9/20/65	APPROVED BY: DATE

R-15075-1

Test Form 1433

DESIGN APPROVAL TEST
ORBIT ATTITUDE AND MANEUVER SYSTEM
(SE7)

NAME OF TEST MDC HIGH TEMPERATURE TEST TEST NO. 106156-401 SHEET ____ OF ____

PART NO. 2-DAY CONFIG. { MAC ____ NAA ____ } 14-DAY CONFIG. { MAC 52-52701 NAA 99-106156 }

TEST DATA COMMENTS

The overall specific impulse value (Isp) of the engine system (351.4 seconds) determined from the test data is obviously incorrect. The nominal specific impulse values for the 25, 85 and 100 pound thrust TCAs operating in a steady state mode are 289, 295, and 298 seconds respectively. Also, the pulse mode specific impulse value of the 25 pound thrust TCAs is lower than that for the steady state mode. Based upon these considerations it is apparent that the overall specific impulse value for the engine system should be within a range of 289 to 298 seconds.

The following input data sources were utilized in calculating the engine system overall specific impulse value:

1. The oxidizer consumed during the test.
2. The fuel consumed during the test.
3. The engine system total impulse which was determined from the following parametric data:
   a. The area under the oscillographic thrust chamber pressure-time traces for the short pulse durations and the values recorded on the direct inking graphic recorders and the Esterline-Angus (E.A.) sequence recorders for the steady state firings.
   b. The average throat area of each TCA obtained from pre and post test measurements.
   c. The thrust coefficient (C_f) calculated from the hot fire acceptance test log data for each TCA.
4. The number of pulses for each specific pulse duration as recorded on the EA sequence recorders and verified by the oscillograph data.

The above data sources were individually analyzed with respect to level of confidence and the relative effect of each on the engine system Isp value. The following considerations provided the basis for establishing the most probably causes for the high engine system Isp value:

1. The engine system overall Isp value is directly dependent upon the propellant consumption data (items 1 and 2 above). There

is no means available for verifying the recorded values. Two considerations which indicate the possible inaccuracy of the recorded data are: (1) The overall system mixture ratio value (1.39) is lower than anticipated. It is estimated that 70 percent of the propellant was consumed by the 85 and 100 pound thrust TCAs which are calibrated to a mixture ratio of 1.6. (2) A comparison of the measured total propellant consumption value (242.7 pounds) with an estimated value of 310 pounds presents an inconceivable divergence.

2. The engine system overall Isp is also directly related to the engine system total impulse data. The total impulse (I_t) value was computed from data recorded during the mission duty cycle test. In reviewing each of the parametric values incorporated in computing the total impulse, namely, the area under the TCA chamber pressure (PC) - on time curve multiplied by the TCA throat area (A_t) multiplied by the TCA thrust coefficient (C_f), the following conclusions were established:

   a. TCA chamber pressure - The accuracy of the measurements were questionable for the short duration pulses due to the adverse environment to which the high frequency P_c transducers were subjected. However, since only 26 percent of the I_t is derived from the 25 pound thrust TCAs, the overall effect should be almost negligible. The P_c transducers for the 85 and 100 pound thrust TCAs, recorded on direct inking graphic recorders, where subjected to less severe environmental conditions as these TCAs operated only in the steady state mode. Consequently, these measurements are regarded with a high degree of confidence.

   b. On time - The accuracy of the on-time measurements for computing total impulse for the 85 and 100 pound thrust TCAs is within ± .01 seconds for each individual operation. Since there were only 25 total operations of the 85 and 100 pound thrust TCA's during the test, the maximum error would be 2.5 seconds. The 2.5 seconds represents a maximum error of only 0.38 percent out of a total of 652.8 seconds of accumulative firing time for the 85 and

100 pound thrust TCA's. It is concluded therefore that the on-time inaccuracies would have a negligible effect on the total impulse for the 85 and 100 pound thrust TCA's.

c. Throat area - Throat measurements were obtained both prior to and subsequent to the test. The maximum percentage change noted for any one of the TCA's was percent. This value was for only one TCA. However, since the mean throat area was utilized in computing the total impulse, the maximum error was only 2 percent.

d. Thrust coefficient - The TCA thrust coefficient utilized in computing the I_t were calculated for each TCA using acceptance test log data. Since C_f is relatively insensitive to reasonable large changes in P_c and mixture ratio, these values are regarded with a high degree of confidence.

The computed total impulse values obtained from test data (pulse mode) and those computed using nominal thrust and on-time as programmed by the mission duty cycle requirement are shown in the following table (page 1114). Comparing the two values for each TCA and for each on-time or operating duration shows very close agreement in addition, the engine system total impulse from the test data is within 2.4% of that which would be expected from nominal TCA operation. This close agreement between the total impulse values obtained and those which would be expected from nominal TCA operation provides additional confidence in the value obtained from the test data.

3. The number of pulses and/or test operations utilized in calculating engine system total impulse were determined from the EA records and verified by oscillograph records at various intervals. This data should be quite accurate and the confidence in its validity is high.

DESIGN APPROVAL TEST
ORBIT ATTITUDE AND MANEUVER SYSTEM
(SE7)

NAME OF TEST MDC HIGH TEMPERATURE TEST TEST NO 106156-401 SHEET ____ OF ____

PART NO. 2-DAY CONFIG. { MAC ____ NAA ____ 14-DAY CONFIG. { MAC 52-52701 NAA 99-106156

Although there are no doubt some errors in the system total impulse computations, the above analysis seems sufficient to conclude that the propellant comsumption data is the more questionable. The propellant loading procedures were reviewed in an attempt to ascertain reason(s) for errors in the propellant consumption data. The results of this review are as follows:

1. The post test propellant tank refill operations require that the propellant tanks be completely filled. This is necessary for computing the quantity of propellant remaining following the mission duty cycle test and thus allowing the quantity of propellant consumed during the test to be calculated. However, the attitude of the propellant tanks during this operation (pressurant supply line approximately 19 degrees above a horizontal plane) and the fact that a vacuum was not required on the pressurant side of the bladder during the refill operation present ideal conditions for gas entrapment between the bladder and tank well. If this occurred, the propellant tanks would not have been completely filled, thus introducing errors in the propellant consumption values directly related to the volume of gas trapped.

2. Errors in reading the sight gage on the test facility propellant fill tanks could be a possible source of error; however, this would seem rather unlikely since the readings were confirmed by inspection personnel.

DESIGN APPROVAL TEST
ORBIT ATTITUDE AND MANEUVER SYSTEM
(SE7)

NAME OF TEST MDC HIGH TEMPERATURE TEST TEST NO. 106156-401 SHEET ____ OF ____

PART NO. 2-DAY CONFIG. { MAC ____ / NAA ____ } 14-DAY CONFIG. { MAC 52-52701 / NAA 99-106156 }

TABLE I

TCA No.	Number of Pulses	Pulse Duration (Sec.)	I_t (LB-Sec) Calculated From Test Data	I_t (LB-Sec) Based On TCA Nominal Performance
1	702	0.036	505.4	581.3
	1	2.100	48.7	48.3
	8	1.050	195.2	193.2
	18	0.018	4.1	7.5
	9	0.023	3.2	4.8
	1481	0.062	2103.0	2111.9
	126	0.032	76.9	92.7
2	702	0.036	505.4	581.3
	1	2.100	48.7	48.3
	8	1.050	195.2	193.2
	18	0.018	4.1	7.5
	9	0.023	3.2	4.8
	1481	0.062	2103.0	2111.9
	126	0.032	76.9	92.7
3	225	0.033	182.3	180.8
	1	4.200	101.2	96.6
	32	0.705	528.0	522.6
	26	0.018	9.1	10.8
	27	0.023	13.5	14.3
	295	0.031	221.3	210.3
	1088	0.055	1610.2	1376.3

DESIGN APPROVAL TEST
ORBIT ATTITUDE AND MANEUVER SYSTEM
(SE7)

NAME OF TEST MDC HIGH TEMPERATURE TEST TEST NO. 106156-401 SHEET ____ OF ____

PART NO. 2-DAY CONFIG. { MAC ____ / NAA ____ } 14-DAY CONFIG. { MAC 52-52701 / NAA 99-106156 }

TABLE I

TCA No.	Number of Pulses	Pulse Duration (Sec.)	I_t (LB-Sec) Calculated From Test Data	I_t (LB-Sec) Based On TCA Nominal Performance
4	234	0.033	189.5	177.6
	1	4.200	101.2	96.6
	32	0.705	528.0	522.6
	27	0.018	9.5	11.2
	27	0.023	13.5	14.3
	296	0.031	222.0	211.0
	1100	0.055	1628.0	1391.5
5	702	0.036	505.4	581.3
	1	2.105	52.2	48.3
	8	1.050	203.2	193.2
	21	0.018	4.8	8.7
	9	0.023	3.2	4.8
	1480	0.062	2101.6	2110.5
	126	0.032	76.9	92.7
6	690	0.036	505.4	571.3
	1	2.105	51.6	48.3
	8	1.050	200.8	193.2
	21	0.018	4.8	8.7
	9	0.023	3.2	4.8
	1480	0.062	2101.6	2110.5
	126	0.032	76.9	92.7

DESIGN APPROVAL TEST
ORBIT ATTITUDE AND MANEUVER SYSTEM
(SE7)

NAME OF TEST MDC HIGH TEMPERATURE TEST TEST NO. 106156-401 SHEET ____ OF ____
PART NO. 2-DAY CONFIG. { MAC ____ / NAA ____ } 14-DAY CONFIG. { MAC 52-52701 / NAA 99-106156 }

TABLE I

TCA No.	Number of Pulses	Pulse Duration (Sec.)	I_t (LB-Sec) Calculated From Test Data	I_t (LB-Sec) Based On TCA Nominal Performance
7	255	0.033	206.6	193.5
	1	4.200	105.4	96.6
	32	0.705	556.8	522.6
	26	0.018	9.1	10.8
	26	0.023	13.0	13.8
	295	0.031	221.3	210.3
	1086	0.055	1607.3	1373.8
8	255	0.033	206.6	193.5
	1	4.200	104.2	96.6
	32	0.705	553.6	522.6
	27	0.018	9.5	11.2
	27	0.023	13.5	14.3
	295	0.031	221.3	210.3
	1098	0.055	1625.0	1389.0
9	1	15.0	1440.0	1417.5
	1	51.0	5047.0	4725.0
	1	4.9	475.0	472.5
	1	15.5	1483.0	1512.0
	1	11.5	1116.7	1039.5
10	1	15.0	1387.5	1417.5
	1	15.5	4841.0	4725.0

DESIGN APPROVAL TEST
ORBIT ATTITUDE AND MANEUVER SYSTEM
(SE7)

NAME OF TEST MDC HIGH TEMPERATURE TEST TEST NO. 106156-401 SHEET ____ OF ____

PART NO. 2-DAY CONFIG. { MAC ____ NAA ____ } 14-DAY CONFIG. { MAC 52-52701 NAA 99-106156 }

TABLE I

TCA No.	Number of Pulses	Pulse Duration (Sec.)	I_t (LB-Sec) Calculated From Test Data	I_t (LB-Sec) Based On TCA Nominal Performance
10	1	4.9	464.0	412.5
	1	15.5	1374.9	1512.0
	1	11.5	1036.2	1039.5
11	1	82.5	6583.5	6320.0
12	1	82.5	6509.3	6320.0
13	2	6.2	1188.0	1134.0
	1	64.7	6334.0	6804.0
14	1	19.4	1852.7	1795.5
	1	27.1	2615.2	2551.5
	1	9	868.5	850.5
15	1	20.1	2018.0	1890.0
	1	47.0	4718.8	4441.5
	1	16.2	1597.3	1512.0
	1	33.0	3247.2	3118.5
16	1	4.2	404.9	378.0
	2	19.0	3566.8	3591.0
	1	14.0	1419.6	1417.5
	1	11.11	1125.5	1039.5

DESIGN APPROVAL TEST
ORBIT ATTITUDE AND MANEUVER SYSTEM
(SE7)

NAME OF TEST HOT FIRE CALIBRATION TEST NO. 106156-401 SHEET 316 OF 413
PART NO. 2-DAY CONFIG. {MAC / NAA} 14-DAY CONFIG. {MAC 52-52701 / NAA 99-106156}

7.6 Hot Fire Calibration Test

7.6.1 Conduct the Hot Fire Calibration Test in accordance with the applicable general requirements of paragraph 6.4.1 and the specific requirements and procedures of paragraph 6.4.3.

7.6.2 Failures

7.6.2.1 Determination of any system or component failure and any action subsequent to a failure shall be in accordance with paragraph 3.6 and the following:

7.6.2.1.1. Any physical damage to or malfunction of the SE7 Engine System or integral component which precludes satisfactory attainment of the test objectives of the SE7 Design Approval Test Specification shall be considered a failure.

7.6.3 Data reduction shall be in accordance with paragraph 6.5.

PREPARED BY:	DATE	APPROVED FOR NAA:	DATE
E.Charles			
CHECKED BY:	DATE		
[illegible]	12-28-64	[illegible]	12-28-64

ROCKETDYNE
A DIVISION OF NORTH AMERICAN AVIATION, INC

DESIGN APPROVAL TEST
ORBIT ATTITUDE AND MANEUVER SYSTEM
(SE7)

NAME OF TEST HOT FIRE CALIBRATION TEST TEST NO. 106156-401 SHEET ____ OF ____

PART NO. 2-DAY CONFIG {MAC ____ NAA ____} 14-DAY CONFIG {MAC 52-52701 NAA 99-106156}

7.6.7 **Test Data**

7.6.7.1 **Pre-Test Data**

7.6.7.1.1 **Engine System Identification**

Engine System Name SE 7 OAMS S/C 3

McDonnell Part No. 52-52701

Rocketdyne Part No. 99-106156

Component Name	Part Number Rocketdyne	Part Number MAC	Serial Number
Component Package "A"	556870	52-52700-151	4055540
Component Package "B"	557305	52-52700-203	4053265
Component Package "C"	406886	52-52701-235	4055325
Component Package "D"	406887	52-52701-237	4055331
Component Package "E"	557000	52-52701-175	4055393
Pressurant Tank	103654	52-52701-169	4051910
Fuel Tank	103660	52-52701-211	4066858
Oxid Tank	103655	52-52701-177	4051231
Regulator	NAS-28070T2-2L	52-52700-177	132

PREPARED BY: DATE	PERFORMED BY: DATE	WITNESSED FOR NAA: DATE	CERTIFIED FOR McDONNELL DATE
E. Charles	2/9/65	2/9/65	WAIVED BY S. SCOTT 2/9/65
			VERIFIED BY USAF DATE

DESIGN APPROVAL TEST
ORBIT ATTITUDE AND MANEUVER SYSTEM
(SE7)

NAME OF TEST HOT FIRE CALIBRATION TEST TEST NO. 106156-401 SHEET ____ OF ____

PART NO. 2-DAY CONFIG {MAC ____ NAA ____} 14-DAY CONFIG {MAC 52-52701 NAA 99-106156}

7.6.7.1.1 (continued)

Component Name	Part Number Rocketdyne	Part Number MAC	Serial Number
PSOV (OXID)	NAS 28078T3-1	52-52053-3	114
PSOV (FUEL)	NAS 28078T3-1	52-52053-3	115
Component Package "A" Cartridge	NAS-28082T1-1	52-52700-201	214
Component Package "C" Cartridge	NAS 28082T1-1	52-52700-201	254
Component Package "D" Cartridge	NAS 28082T1-1	52-52700-201	241
Component Package "E"			
N.O. Cartridge	NAS-28088T1-1	52-52701-233	641
N.C. Cartridge	NAS-28082T1-1	52-52700-201	239
TCA #1	208160-31	52-52701-273	4658135
TCA #2	208160-31	52-52701-271	4658231
TCA #3	208160-31	52-52701-273	4657134

PREPARED BY: DATE	PERFORMED BY: DATE	WITNESSED FOR NAA: DATE	CERTIFIED FOR McDONNELL DATE
E. Charles	[signature] 4/9/65	[signature] 4/9/65	WAIVED BY: [signature] 4/9/65
			VERIFIED BY USAF DATE

ROCKETDYNE
A DIVISION OF NORTH AMERICAN AVIATION, INC

DESIGN APPROVAL TEST
ORBIT ATTITUDE AND MANEUVER SYSTEM
(SE7)

NAME OF TEST HOT FIRE CALIBRATION TEST TEST NO. 106156-401 SHEET ____ OF ____

PART NO. 2-DAY CONFIG {MAC ____ NAA ____} 14-DAY CONFIG {MAC 52-52701 NAA 99-106156}

7.6.7.1.1 (continued)

	Component Name	Part Number Rocketdyne	Part Number MAC	Serial Number
TCA #4		208160-21	52-52701-271	4057181
TCA #5		208160-31	52-52701-273	4057133
TCA #6		208160-21	52-52701-271	4057184
TCA #7		208160-31	52-52701-273	4057123
TCA #8		208160-21	52-52701-271	4057121
TCA #9		207540-21	52-52701-277	4054769
TCA #10		207540-21	52-52701-277	4060932
TCA #11		207510-21	52-52701-275	4060057
TCA #12		207510-21	52-52701-275	4058464
TCA #13		207540-21	52-52701-277	4064382
TCA #14		207540-21	52-52701-277	4058956
TCA #15		207540-21	52-52701-277	4054766
TCA #16		207540-21	52-52701-277	4054760

PREPARED BY: DATE	PERFORMED BY: DATE	WITNESSED FOR NAA: DATE	CERTIFIED FOR MCDONNELL DATE
E. Charles	2/9/65	2/9/65	WAIVED S. SCOTT 2/9/65
			VERIFIED BY USAF DATE

DESIGN APPROVAL TEST
ORBIT ATTITUDE AND MANEUVER SYSTEM
(SE7)

NAME OF TEST HOT FIRE CALIBRATION TEST TEST NO. 106156-401 SHEET ____ OF ____

PART NO. 2-DAY CONFIG {MAC ____ NAA ____} 14-DAY CONFIG {MAC 52-52701 NAA 99-106156}

7.6.7.1.2 TCA Throat Diameter Data

TCA Throat Diameter, inches	Pre-Test	Post-Test
TCA #1	.3570	.3576
TCA #2	.3572	.3576
TCA #3	.3571	.3573
TCA #4	.3572	.3576
TCA #5	.3567	.3570
TCA #6	.3566	.3599
TCA #7	.3569	.3571
TCA #8	.3556	.3572
TCA #9	.7037	.7061
TCA #10	.6946	.6979
TCA #11	.6700	.6730
TCA #12	.6663	.6766
TCA #13	.7055	.7072
TCA #14	.6969	.7024
TCA #15	.7077	.7092
TCA #16	.6959	.7014

PREPARED BY:	DATE	PERFORMED BY:	DATE	WITNESSED FOR NAA:	DATE	CERTIFIED FOR McDONNELL	DATE
E. Charles		[illegible]	2/10/65	[illegible]	2/10/65	[illegible]	
						VERIFIED BY USAF	DATE

DESIGN APPROVAL TEST
ORBIT ATTITUDE AND MANEUVER SYSTEM
(SE7)

NAME OF TEST HOT FIRE CALIBRATION TEST TEST NO. 106156-401 SHEET ____ OF ____

PART NO. 2-DAY CONFIG {MAC ____ / NAA ____} 14-DAY CONFIG {MAC 52-52701 / NAA 99-106156}

7.6.7.1.3 Propellant Loading (Pre-test)

7.6.7.1.3.1 Oxidizer Loading

7.6.7.1.3.1.1 Pre-refill Oxidizer Supply Volume, Vo_1 and Temperature, To_1 (paragraph 6.1.2.1.1.4.3)

Vo_1 = 4670 in^3 To_1 = 48 °F

7.6.7.1.3.1.2 Post-refill Oxidizer Supply Volume, Vo_2 and Temperature, To_2 (paragraph 6.1.2.1.1.4.8)

Vo_2 = 1264 in^3 To_2 = 41 °F

7.6.7.1.3.1.3 Determine Oxidizer Volume, Vg_1 at $\frac{To_1 + To_2}{2}$ from Figure 22. Vg_1 = 4032 in^3

7.6.7.1.3.1.4 Total Oxidizer Volume Detanked (Vdo_t), from paragraph 6.6.2.1.1.2 768 in^3.

7.6.7.1.3.1.5 Oxidizer Loaded (Wox_t),

$$Wox_t = (5438 = Vdo_t) \times \frac{90.5 + .077\,(70 - To_2)}{1728}$$

Wox_t = 249.4 lbs.

7.6.7.1.3.2 Fuel Loading

7.6.7.1.3.2.1 Pre-refill Fuel Supply Volume, Vf_1 and Temperature, Tf_1 (paragraph 6.1.2.1.2.4.3)

Vf_1 = 5230 in^3 Tf_1 = 45 °F

PREPARED BY: DATE	PERFORMED BY: DATE	WITNESSED FOR NAA: DATE	WITNESSED FOR McDONNELL: DATE
E.Charles	A. Schaver 2/8/65	2/8/65	SSCOTT 2/8/65
			VERIFIED BY: DATE

DESIGN APPROVAL TEST
ORBIT ATTITUDE AND MANEUVER SYSTEM
(SE7)

NAME OF TEST HOT FIRE CALIBRATION TEST TEST NO. 106156-401 SHEET ____ OF ____

PART NO. 2-DAY CONFIG {MAC ____ NAA ____} 14-DAY CONFIG {MAC 52-52701 NAA 99-106156}

7.6.7.1.3.2.2 Post-refill Fuel Supply Volume, Vf_2 and Temperature, Tf_2 (paragraph 6.2.1.2.4.8)

Vf_2 = 1390 in^3 Tf_2 = 45 °F

7.6.7.1.3.2.3 Determine Fuel Volume, Vg_2, at $\frac{Tf_1 + Tf_2}{2}$ from Figure 24.

Vg_2 = 4521 in^3

7.6.7.1.3.2.4 Total Fuel Volume Detanked (Vdf_t), from paragraph 6.6.2.1.1.2.2. 600 in^3

7.6.7.1.3.2.5 Fuel Loaded (Wf_t),

$$Wf_t = (5425 - Vdf_t) \times \frac{54.87 + .0325\,(70 - Tf_2)}{1728}$$

Wf_t = 155.2 lbs.

PREPARED BY: DATE	PERFORMED BY: DATE	WITNESSED FOR NAA: DATE	CERTIFIED FOR McDONNELL DATE
E.Charles	C. Schauer 2/8/65	[illegible] 2/8/65	WALTER S. SCOTT 2/8/65
			VERIFIED BY USAF DATE

ROCKETDYNE
A DIVISION OF NORTH AMERICAN AVIATION INC

DESIGN APPROVAL TEST
ORBIT ATTITUDE AND MANEUVER SYSTEM
(SE7)

NAME OF TEST HOT FIRE CALIBRATION TEST TEST NO. 106156-401 SHEET ____ OF ____

PART NO. 2-DAY CONFIG. { MAC ____ / NAA ____ } 14-DAY CONFIG. { MAC 52-52701 / NAA 99-106156 }

7.6.7.2 Hot Fire Test Data

Test Cell Location: CTL III

Test Cell Number: 39-B

Test Number: 989-002

Test Date: 2/9/65

Test Start Time: 2358

Oxidizer (NTO) Loaded, 249.4 lbs @ 47.5 °F (7.6.7.1.3.1)

Fuel (MMH) Loaded, 155.2 lbs @ 46.5 °F (7.6.7.1.3.2)

Pressurant (GHe) Loaded, 3205 psig @ 74 °F (7.6.7.1.4.1)

Propellant Samples	NTO	MMH
Sample Date	2-4-65	2-4-65
Sample Batch Number	2-78	2-79
Sample Temperature, °F	60 F	77 F
Sample Specific Gravity	1.461	0.869
Met MIL. SPEC. Requirements (yes or no)	YES	

Flight Transducer Supply Voltage 5 VDC

Propellant Valve Supply Voltage 26 VDC

Test Cell Altitude Pressure (SEA LEVEL) 13.8 psia

PREPARED BY:	DATE	PERFORMED BY:	DATE	WITNESSED FOR NAA:	DATE	WITNESSED FOR MDAC:
E. Charles		M Kanba (ANR 673)	2/9/65	M Kanba (ANR 673)	2/9/65	Warren Hill S Scott 2/9/65
						WITNESSED BY USAF:

Test Form 1433
R-15075-1

ROCKETDYNE
A DIVISION OF NORTH AMERICAN AVIATION INC

DESIGN APPROVAL TEST
ORBIT ATTITUDE AND MANEUVER SYSTEM
(SE7)

NAME OF TEST HOT FIRE CALIBRATION TEST TEST NO. 106156-401 SHEET ____ OF ____

PART NO. 2-DAY CONFIG. { MAC ____ / NAA ____ } 14-DAY CONFIG. { MAC 52-52701 / NAA 99-106156 }

7.6.7.2 (continued)

Test Data From DIGR Charts

Parameter	Start of Test	End of Test
Temperatures		
Test Cell Ambient Temperature	42°F	42°F
Oxidizer Tank (Skin)	47°F	44°F
Fuel Tank (Skin)	47°F	46°F
Pressurant Tank (Skin)	74°F	36°F
Pressure Regulator (external)	43°F	44°F
Reg. Pressurant Line	40°F	45°F
TCA #1 (external)	45°F	128°F
TCA #2 (external)	45°F	218°F
TCA #3 (external)	49°F	103°F
TCA #4 (external)	40°F	107°F
TCA #5 (external)	42°F	76°F
TCA #6 (external)	45°F	76°F
TCA #7 (external)	44°F	169°F
TCA #8 (external)	45°F	103°F
TCA #9 (external)	44°F	76°F
TCA #10 (external)	45°F	100°F
TCA #11 (external)	45°F	165°F
TCA #12 (external)	46°F	157°F
TCA #13 (external)	47°F	105°F
TCA #14 (external)	46°F	86°F
TCA #15 (external)	45°F	94°F
TCA #16 (external)	48°F	80°F

PREPARED BY: DATE	PERFORMED BY: DATE	WITNESSED FOR NAA: DATE	CERTIFIED FOR McDONNELL: DATE
E. Charles	[signature] 2/9/65	[signature] 2/9/65	WAIVED BY S. [signature] 2/9/65
			VERIFIED BY QA: DATE

1126

Test Form 1453

R-15075-1

ROCKETDYNE
A DIVISION OF NORTH AMERICAN AVIATION INC

DESIGN APPROVAL TEST
ORBIT ATTITUDE AND MANEUVER SYSTEM
(SE7)

NAME OF TEST HOT FIRE CALIBRATION TEST TEST NO. 106156-401 SHEET ____ OF ____

PART NO. 2-DAY CONFIG. { MAC ____ NAA ____ } 14-DAY CONFIG. { MAC 52-52701 NAA 99-106156 }

7.6.7.2 (continued)

Test Data From DIGR Charts

Parameter	Start of Test	End of Test
Pressures		
Pressurant Supply	3205 PSIG	2590 PSIG
Pressurant, Regulated	304.5 PSIG	302 PSIG
Oxidizer Supply	296 PSIG	292.5 PSIG
Fuel Supply	302.5 PSIG	300 PSIG
Altitude (Test Cell)	SEA LEVEL	SEA LEVEL

TCA Pulse Firing Data (From E.A. Recorder)

TCA No.	Number of Pulses	Pulse Duration
TCA #1	4	3.2 Sec. Ea
TCA #2	4	3.2 Sec. Ea.
TCA #3	3	3.2 Sec. Ea.
TCA #4	3	3.2 Sec. Ea.
TCA #5	4	3.2 Sec. Ea.
TCA #6	4	3.2 Sec. Ea.
TCA #7	4	3.2 Sec. Ea.
TCA #8	3	3.2 Sec. Ea.
TCA #9	3	3.2 Sec. Ea.
TCA #10	3	3.2 Sec. Ea.

PREPARED BY: DATE	PERFORMED BY: DATE	WITNESSED FOR NAA: DATE	CERTIFIED FOR MDC: DATE
E. Charles	2/10/65	2/10/65	2/10/65
			VERIFIED USAF: DATE

Test Form 1453

ROCKETDYNE
A DIVISION OF NORTH AMERICAN AVIATION INC

DESIGN APPROVAL TEST
ORBIT ATTITUDE AND MANEUVER SYSTEM
(SE7)

NAME OF TEST HOT FIRE CALIBRATION TEST TEST NO. 106156-403 SHEET ____ OF ____

PART NO. 2-DAY CONFIG. { MAC ____ NAA ____ } 14-DAY CONFIG. { MAC 52-52701 NAA 99-106156 }

7.6.7.2 (continued)

TCA No.	Number of Pulses	Pulse Duration
TCA #11	2	3.2 Sec. ea.
TCA #12	4	3.2 Sec. ea.
TCA #13	3	3.2 Sec. ea.
TCA #14	2	3.2 Sec. ea.
TCA #15	3	3.2 Sec. ea.
TCA #16	3	3.2 Sec. ea.

PREPARED BY: DATE	PERFORMED BY: DATE	WITNESSED FOR NAA: DATE	CERTIFIED FOR McDONNELL: DATE
E. Charles	[illegible] 2/10/65	[illegible] 2/10/65	[illegible]
1128			VERIFIED BY USAF: DATE

R-15075-1

Test Form 1453

ROCKETDYNE
A DIVISION OF NORTH AMERICAN AVIATION INC

DESIGN APPROVAL TEST
ORBIT ATTITUDE AND MANEUVER SYSTEM
(SE7)

NAME OF TEST HOT FIRE CALIBRATION TEST TEST NO. 106156-401 SHEET ____ OF ____

PART NO. 2-DAY CONFIG. { MAC ____ NAA ____ } 14-DAY CONFIG. { MAC 52-52701 NAA 99-106156 }

7.6.7.2 (continued)

The Hot Fire Calibration Test firings were conducted in accordance with Table 4 , YES (yes or no).

Comments: ____

PREPARED BY: DATE	PERFORMED BY: DATE	WITNESSED FOR NAA: DATE	CERTIFIED FOR McDONNELL: DATE
E. Charles	M Ramba 4-20-65	M Ramba 4-20-65	J. Hildebrandt S. Scott 4-20-65
R-15075-1			VERIFIED BY USAF: DATE

Test Form 1453

ROCKETDYNE
A DIVISION OF NORTH AMERICAN AVIATION INC

DESIGN APPROVAL TEST
ORBIT ATTITUDE AND MANEUVER SYSTEM
(SE7)

NAME OF TEST: HOT FIRE CALIBRATION TEST TEST NO. 106156-401 SHEET ____ OF ____

PART NO. 2-DAY CONFIG. { MAC ____ NAA ____ } 14-DAY CONFIG. { MAC 52-52701 NAA 99-106156 }

7.6.7.3 TCA Post-Test Inspection Data

Enter below, comments on the condition of each TCA resulting from the post-test visual inspection

TCA No.	Post-Test Condition
1	NSC from post MDC condition
2	NSC from post MDC condition.
3	NSC from post MDC condition.
4	NSC from post MDC condition
5	NSC from post MDC condition.
6	NSC from post MDC condition.
7	NSC from post MDC condition
8	NSC from post MDC condition
9	NSC from post MDC condition

NSC notes: No significant change

PREPARED BY: DATE	PERFORMED BY: DATE	WITNESSED FOR NAA: DATE	CERTIFIED FOR McDONNELL: DATE
E. Charles	[illegible] 2/10/65	[illegible] 2/10/65	[illegible]
			VERIFIED USAF: DATE

1130 R-15075-1

Test Form 1453

ROCKETDYNE
A DIVISION OF NORTH AMERICAN AVIATION INC

DESIGN APPROVAL TEST
ORBIT ATTITUDE AND MANEUVER SYSTEM
(SE7)

NAME OF TEST HOT FIRE CALIBRATION TEST TEST NO. 106156-401 SHEET ____ OF ____

PART NO. 2-DAY CONFIG. { MAC ____ NAA ____ } 14-DAY CONFIG. { MAC 52-52701 NAA 99-106156 }

7.6.7.3 (continued)

TCA No.	Post-Test Condition
10	NSC from post MDC condition.
11	NSC from post MDC condition.
12	NSC from post MDC condition.
13	NSC from post MDC condition.
14	NSC from post MDC condition.
15	NSC from post MDC condition.
16	Two clks in thrust, 7 e/c & 2.3 e/c using Pc pick up as 12 e/c.; otherwise NSC.

NSC denotes: No Significant Change.

PREPARED BY: DATE	PERFORMED BY: DATE	WITNESSED FOR NAA: DATE	WITNESSED FOR USAF: DATE
E. Charles	2/10/65	2/10/65	S. Scott
R-15075-1			1131

Test Form 1493

ROCKETDYNE
A DIVISION OF NORTH AMERICAN AVIATION INC

DESIGN APPROVAL TEST
ORBIT ATTITUDE AND MANEUVER SYSTEM
(SE7)

NAME OF TEST HOT FIRE CALIBRATION TEST TEST NO. 106156-401 SHEET ____ OF ____

PART NO. 2-DAY CONFIG. { MAC ____ NAA ____ } 14-DAY CONFIG. { MAC 52-52701 NAA 99-106156 }

Hot Fire Test Data
System Pressures

Test Operation	TCA Firing	Pneu. Supply Press (Fac. Trans.) (PSIA)	Pneu. Supply Press (Flt. Trans.) (PSIA)	Pneu. Reg. Press. (Fac. Trans.) (PSIA)	Pneu. Reg. Press (Flt Trans) (PSIA)	Package "C" Pressure (PSIA)	Package "D" Pressure (PSIA)	Chamber Pressure (PSIA)	Press Regulator Ref. Press (PSIA)
1	1	3232	3000	317	317	309	316	136	13.8
2	2	3222	3000	317	317	309	316	148	
3	3	3207	3000	315	316	309	314	139	
4	4	3187	2980	315	316	309	314	153	
5	5	3182	2950	315	315	309	314	117	
6	6	3152	2930	315	315	309	315	—	
7	7	3087	2870	315	315	309	315	151	
8	8	3082	2850	316	315	309	315	145	
9	9	3072	2850	315	314	306	312	137	
10	10	3006	3000	316	315	306	314	142	
11	11	2986	2980	317	315	309	314	138	
12	12	2961	2970	316	317	307	314	133	
13	13	2946	2950	315	317	307	314	148	
14	14	2941	2950	315	317	307	314	146	
15	15	2921	2940	314	315	307	312	140	13.8

PREPARED BY: DATE	PERFORMED BY: DATE	WITNESSED FOR NAA: DATE	CERTIFIED FOR McDONNELL: DATE
W. E. Searcy	[illegible] 9/30/65	W. E. Searcy 10/4/65	VERIFIED BY USAF: DATE

1132

R-15075-1

Test Form 1453

ROCKETDYNE
A DIVISION OF NORTH AMERICAN AVIATION INC

DESIGN APPROVAL TEST
ORBIT ATTITUDE AND MANEUVER SYSTEM
(SE7)

NAME OF TEST HOT FIRE CALIBRATION TEST TEST NO. 106156-401 SHEET ____ OF ____

PART NO. 2-DAY CONFIG. { MAC ____ NAA ____ } 14-DAY CONFIG. { MAC 52-52701 NAA 99-106156 }

Hot Fire Test Data

System Pressures

Test Operation	TCA Firing	Pneu. Supply Press (Fac Trans) (PSIA)	Pneu. Supply Press (Flt Trans) (PSIA)	Pneu. Reg. Press (Fac Trans) (PSIA)	Pneu. Reg. Press (Flt Trans) (PSIA)	Package "C" Pressure (PSIA)	Package "D" Pressure (PSIA)	Chamber Pressure (PSIA)	Press Regulator Ref. Press (PSIA)	
16	16	2911	2920	314	315	307	311	140	13.8	
17	1	2901	2900	315	314	308	314	135		
	2							138		
18	3	2881	2890	315	314	309	314	141		
	4							151		
19	7	2866	2870	316	314	309	314	151		
	8							144		
20	5	2856	2850	316	314	309	314	118		
	6							140		
21	13	2776	2780	316	315	302	309	144		
	15							140		
22	11	2761	2750	316	315	304	311	136		
	12							139		
23	3	2741	2750	317	315	309	314	141		
	4							152	13.7	

PREPARED BY:	DATE	PERFORMED BY:	DATE	WITNESSED BY:		SUPERVISOR:	
W. E. Searcy		M. S. Skelton	9/30/65	W. E. Searcy	10/4/65		

R-15075-1

Test Form 1433

ROCKETDYNE
A DIVISION OF NORTH AMERICAN AVIATION INC

DESIGN APPROVAL TEST
ORBIT ATTITUDE AND MANEUVER SYSTEM
(SE7)

NAME OF TEST HOT FIRE CALIBRATION TEST TEST NO. 106156-401 SHEET ____ OF ____

PART NO. 2-DAY CONFIG. { MAC ____ NAA ____ } 14-DAY CONFIG. { MAC 52-52701 NAA 99-106156 }

Hot Fire Test Data

System Pressures

Test Operation	TCA Firing	Pneu. Supply Press (Fac Trans) (PSIA)	Pneu. Supply Press (Flt Trans) (PSIA)	Pneu. Reg. Press (Fac Trans) (PSIA)	Pneu. Reg. Press (Flt Trans) (PSIA)	Package "C" Pressure (PSIA)	Package "D" Pressure (PSIA)	Chamber Pressure (PSIA)	Press Regulator Ref. Press (PSIA)
23	7							150	13.8
24	1	2721	2720	314	314	299	299	129	
	2							134	
	9							136	
	10							139	
	14							140	
25	1	2691	2700	315	314	300	303	135	
	2							140	
	11							135	
	12							131	
26	9	2671	2670	314	314	294	304	138	
	10							140	
	16							140	
27	7	2651	2670	316	314	304	311	149	
	8							139	13.8

PREPARED BY: DATE	PERFORMED BY: DATE	WITNESSED FOR NAA: DATE	CERTIFIED FOR McDONNELL: DATE
W. E. Searcy 1134	W. L. Kolion 9/30/65	W. E. Searcy 10/4/65	VERIFIED BY: DATE

R-15075-1

Test Form 1453

ROCKETDYNE
A DIVISION OF NORTH AMERICAN AVIATION INC

DESIGN APPROVAL TEST
ORBIT ATTITUDE AND MANEUVER SYSTEM
(SE7)

NAME OF TEST HOT FIRE CALIBRATION TEST TEST NO. 106156-401 SHEET ____ OF ____

PART NO. 2-DAY CONFIG. { MAC ____ NAA ____ } 14-DAY CONFIG. { MAC 52-52701 NAA 99-106156 }

Hot Fire Test Data

System Pressures

Test Operation	TCA Firing	Pneu. Supply Press (Fac Trans) (PSIA)	Pneu. Supply Press (Flt Trans) (PSIA)	Pneu. Reg. Press (Fac Trans) (PSIA)	Pneu. Reg. Press (Flt Trans) (PSIA)	Package "C" Pressure (PSIA)	Package "D" Pressure (PSIA)	Chamber Pressure (PSIA)	Press Regulator Ref. Press (PSIA)
27	16							146	13.8
28	5	2636	2650	314	314	299	307	117	
	6							146	
	11							137	
	12							131	
29	5	2621	2620	314	314	298	304	115	
	6							146	
	13							142	
	15							140	13.8

PREPARED BY: DATE	PERFORMED BY: DATE	WITNESSED FOR NAA: DATE	CERTIFIED FOR McDONNELL: DATE
W. E. Searcy	M. L. Ekolion 9/30/65	W. E. Searcy 10/4/65	VERIFIED BY USAF: DATE
R-15075-1			

Test Form 1453

ROCKETDYNE
A DIVISION OF NORTH AMERICAN AVIATION INC

DESIGN APPROVAL TEST
ORBIT ATTITUDE AND MANEUVER SYSTEM
(SE7)

NAME OF TEST: HOT FIRE CALIBRATION TEST TEST NO. 106156-401 SHEET ____ OF ____

PART NO. 2-DAY CONFIG. { MAC ____ NAA ____ } 14-DAY CONFIG. { MAC 52-52701 NAA 99-106156 }

Hot Fire Test Data

TCA Propellant Valve Response and System Voltage Data

Test Operation	TCA Firing	Firing Duration (Sec)	Energize Time (Sec)	De-Energize Time (Sec)	Sys. Supply Voltage (Volts-DC)	Flt Trans. Supply Voltage (Volts-DC)
1	1	3.22	0.004	0.005	25.8	5.0
2	2	3.24	0.004	0.005	25.8	
3	3	3.22	0.006	0.005	25.8	
4	4	3.23	———	———	25.7	
5	5	3.22	0.004	0.004	25.7	
6	6	3.22	0.004	0.004		
7	7	3.22	0.005	0.005		
8	8	3.22	0.005	0.004		
9	9	3.22	0.017	0.001		
10	10	3.22	0.018	0.001		
11	11	3.22	0.018	0.001		
12	12	3.28	0.018	0.001		
13	13	3.22	0.018	0.001	25.7	
14	14	3.22	0.016	0.001	25.8	
15	15	3.22	0.017	0.001	25.8	
16	16	3.22	0.017	0.001	25.8	
17	1	3.22	0.004	0.004	25.7	
	2	3.22	0.004	0.004	25.7	5.0

PREPARED BY: DATE	PERFORMED BY: DATE	WITNESSED FOR NAA: DATE	CERTIFIED FOR McDONNELL: DATE
W. E. Searcy	[illegible]	W. E. Searcy 10/4/65	VERIFIED BY USAF: DATE
1136			R-15075-1

Test Form 1453

ROCKETDYNE
A DIVISION OF NORTH AMERICAN AVIATION INC

DESIGN APPROVAL TEST
ORBIT ATTITUDE AND MANEUVER SYSTEM
(SE7)

NAME OF TEST HOT FIRE CALIBRATION TEST TEST NO. 106156-401 SHEET ____ OF ____

PART NO. 2-DAY CONFIG. { MAC ____ NAA ____ } 14-DAY CONFIG. { MAC 52-52701 NAA 99-106156 }

Hot Fire Test Data

TCA Propellant Valve Response and System Voltage Data

Test Operation	TCA Firing	Firing Duration (Sec)	Energize Time (Sec)	De-Energize Time (Sec)	Sys. Supply Voltage (Volts-DC)	Flt Trans. Supply Voltage (Volts-DC)
18	3	3.22	—	—	25.7	5.0
	4	3.22	—	—		
19	7	3.22	0.005	0.004		
	8	3.22	0.005	0.003		
20	5	3.22	0.004	0.004		
	6	3.22	0.004	0.004		
21	13	3.22	0.017	0.001		
	15	3.22	0.017	0.001		
22	11	3.22	0.018	0.001		
	12	3.22	0.016	0.001		
23	3	3.22	0.004	0.004		
	4	3.22	0.004	0.003		
	7	3.22	0.004	0.004		
24	1	3.22	0.004	0.003		
	2	3.22	0.004	0.003		
	9	3.22	0.016	0.001		
	10	3.22	0.018	0.001		
	14	3.22	0.015	0.001	25.7	5.0

PREPARED BY: DATE	PERFORMED BY: DATE	WITNESSED FOR NAA: DATE	CERTIFIED FOR McDONNELL: DATE
W. E. Searcy	M. E. Hopkins 9/30/65	W. E. Searcy 10/4/65	VERIFIED BY QAPT: DATE

R-15075-1

Test Form 1453

ROCKETDYNE
A DIVISION OF NORTH AMERICAN AVIATION INC

DESIGN APPROVAL TEST
ORBIT ATTITUDE AND MANEUVER SYSTEM
(SE7)

NAME OF TEST HOT FIRE CALIBRATION TEST TEST NO. 106156-401 SHEET ____ OF ____

PART NO. 2-DAY CONFIG. { MAC ____ NAA ____ } 14-DAY CONFIG. { MAC 52-52701 NAA 99-106156 }

Hot Fire Test Data

TCA Propellant Valve Response and System Voltage Data

Test Operation	TCA Firing	Firing Duration (Sec)	Energize Time (Sec)	De-Energize Time (Sec)	Sys. Supply Voltage (Volts-DC)	Flt Trans. Supply Voltage (Volts-DC)
25	1	3.22	0.004	0.004	25.7	5.0
	2	3.22	0.004	0.003		
	11	3.22	0.018	0.001		
	12	3.22	0.016	0.001		
26	9	3.22	0.017	0.001		
	10	3.22	0.017	0.001		
	16	3.22	0.016	0.001		
27	7	3.22	0.004	0.004		
	8	3.22	0.004	0.003		
	16	3.22	0.016	0.001		
28	5	3.22	0.004	0.004		
	6	3.22	0.004	0.004		
	11	3.22	0.017	0.001		
	12	3.22	0.017	0.001		
29	5	3.22	0.004	0.004		
	6	3.22	0.004	0.004		
	13	3.22	0.017	0.001		
	15	3.22	0.017	0.001	25.7	5.0

PREPARED BY: DATE	PERFORMED BY: DATE	WITNESSED FOR NAA: DATE	CERTIFIED FOR McDONNELL: DATE
W. E. Searcy	[illegible]	W. E. Searcy 10/4/[illegible]	VERIFIED BY USAF: DATE
1138			R-15075-1

Test Form 1453

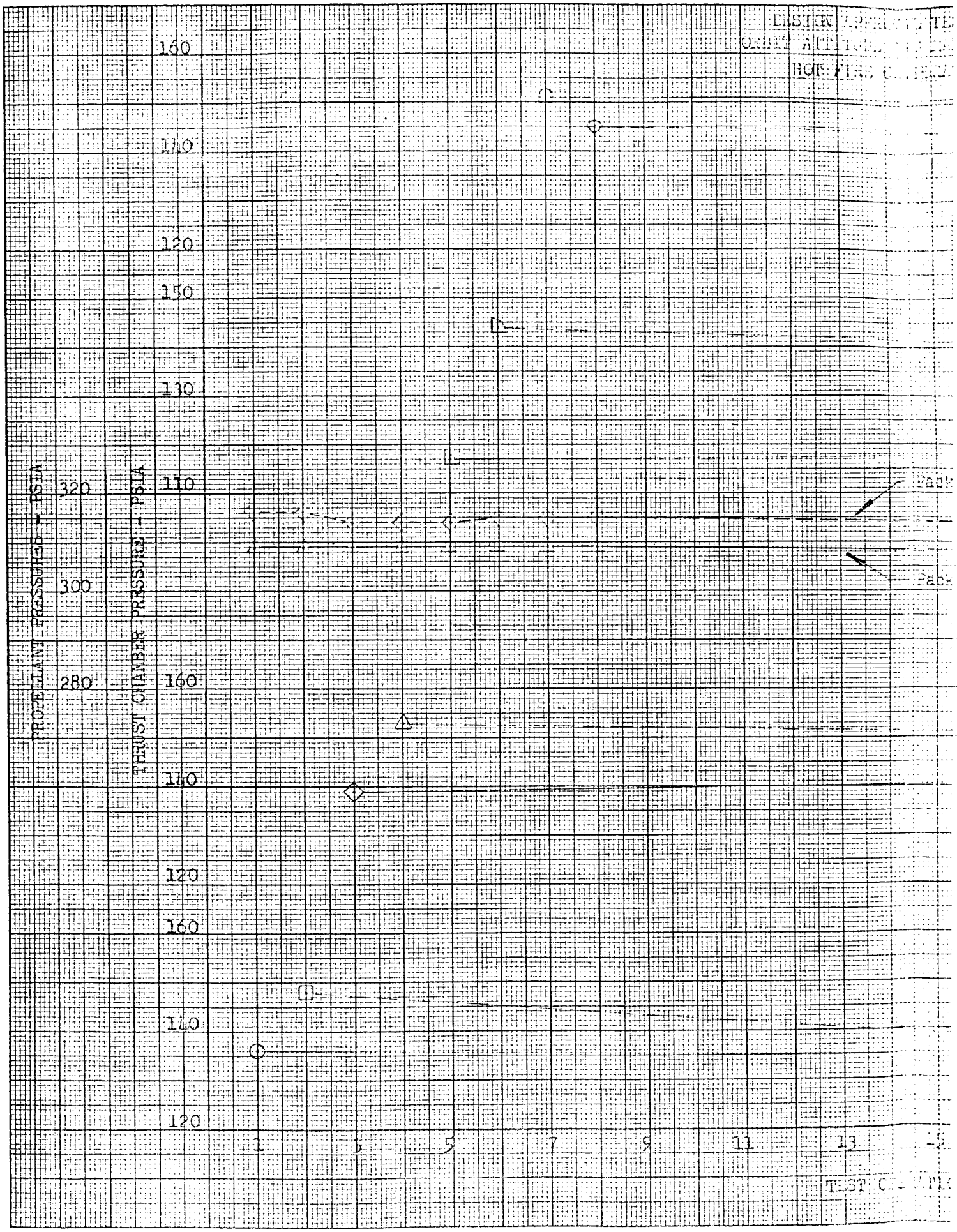
PROPELLANT PRESSURES - PSIA
THRUST CHAMBER PRESSURE - PSIA
320
300
280
160
110
120
150
130
110
160
110
120
160
110
120
1
3
5
7
9
11
13

R-15075-1

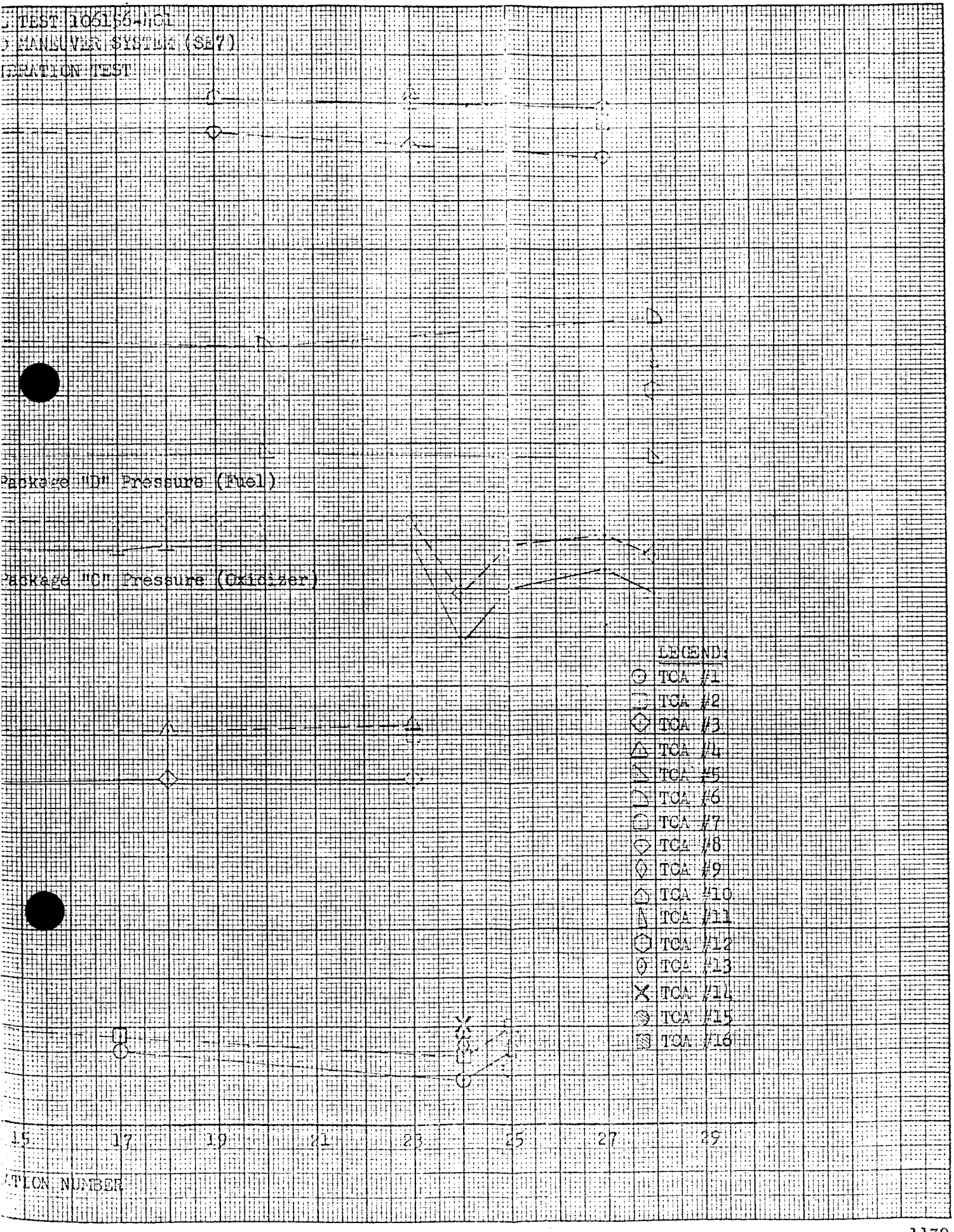
TEST 1061156-HCL
MANEUVER SYSTEM (SE7)
ERATION TEST
Package "D" Pressure (Fuel)
Package "C" Pressure (Oxidizer)
LEGEND:
TCA #1
TCA #2
TCA #3
TCA #4
TCA #5
TCA #6
TCA #7
TCA #8
TCA #9
TCA #10
TCA #11
TCA #12
TCA #13
TCA #14
TCA #15
TCA #16
15
17
19
21
23
25
27
29
TION NUMBER

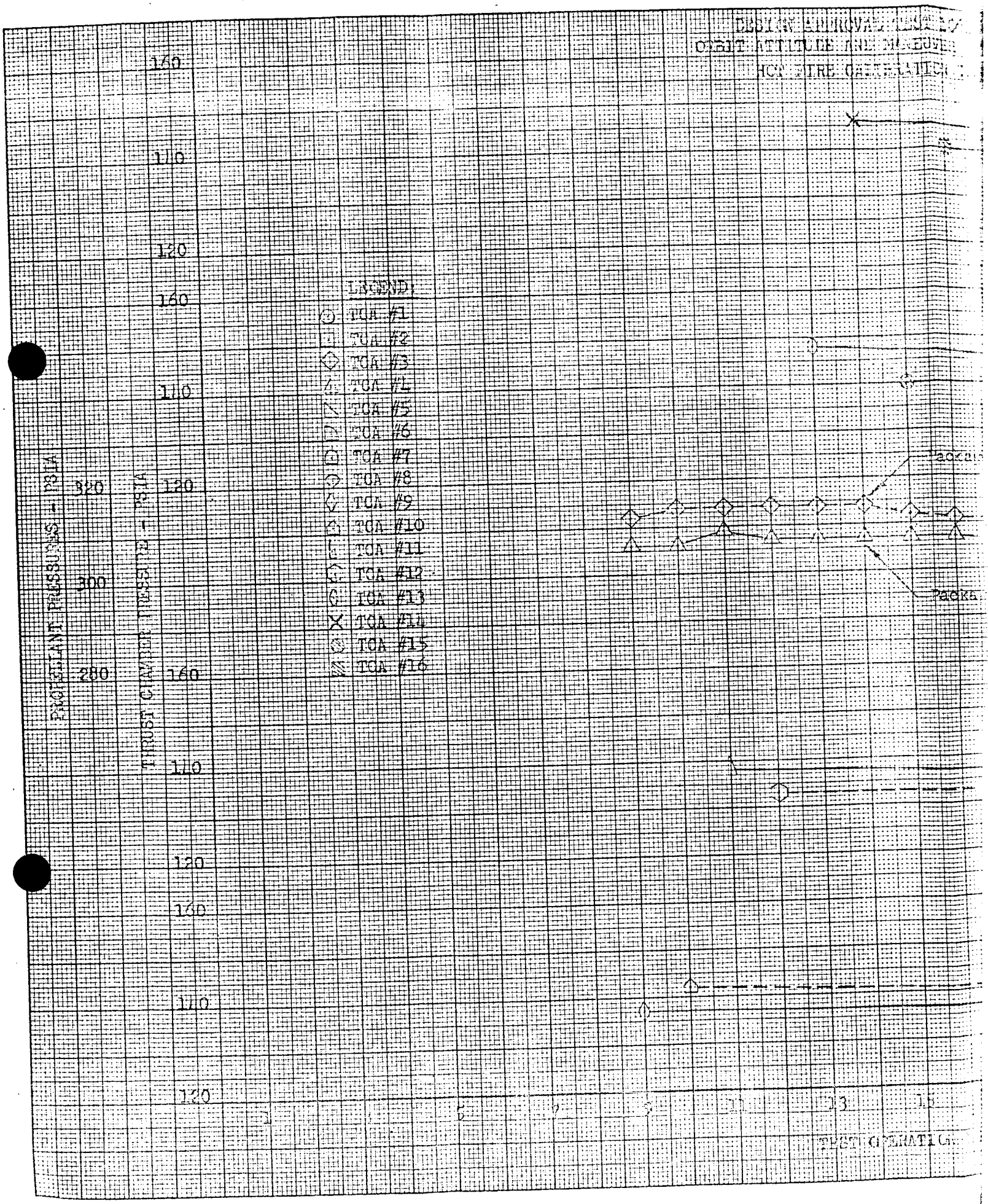
PROPELLANT PRESSURES - PSIA
THRUST CHAMBER PRESSURE - PSIA
320
300
280
160
110
120
160
110
120
160
110
120
160
110
120
LEGEND:
TCA #1
TCA #2
TCA #3
TCA #4
TCA #5
TCA #6
TCA #7
TCA #8
TCA #9
TCA #10
TCA #11
TCA #12
TCA #13
TCA #14
TCA #15
TCA #16
Packa
Packa
TEST GENERATION

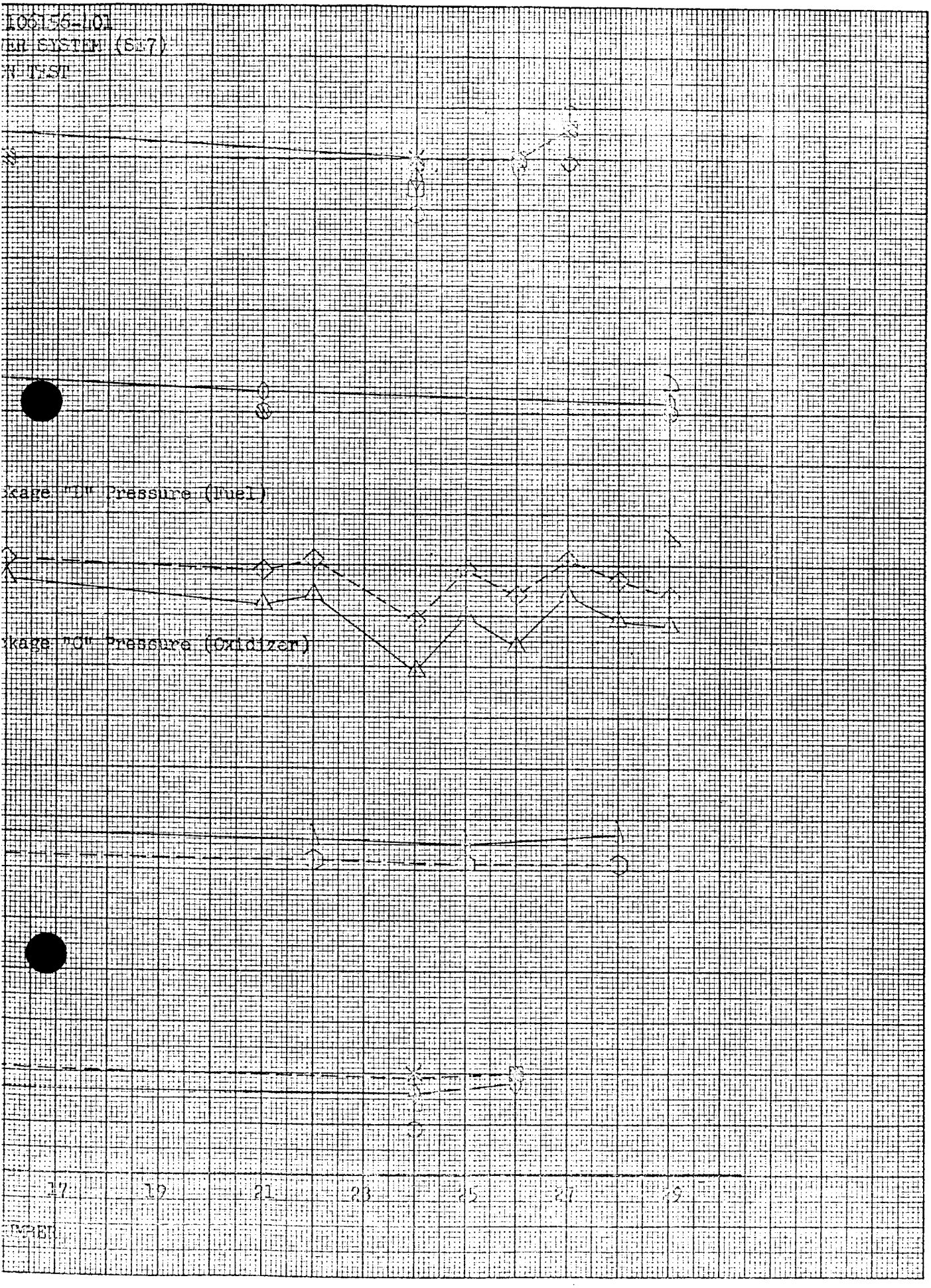
106156-101
ER SYSTEM (617)
N TEST
xkage "D" Pressure (Fuel)
xkage "O" Pressure (Oxidizer)
17
19
21
23
25
27
29

R-15075-1

DESIGN APPROVAL TEST
ORBIT ATTITUDE AND MANEUVER SYSTEM
(SE7)

NAME OF TEST Drain and Clean Procedures TEST NO. 106156-401 SHEET ____ OF ____
PART NO. 2-DAY CONFIG. { MAC ____ NAA ____ 14-DAY CONFIG. { MAC 52-52701 NAA 99-106156

7.6.7.4 Drain and Clean Evaluation

Test Data

The following data sheets were compiled from the test specification data sheets (Pages 1142 to 1165). Due to the number of times various cleaning operations had to be repeated to attain the desired results, the original data sheets do not lend themselves to expedient summarization of the acquired data.

DESIGN APPROVAL TEST
ORBIT ATTITUDE AND MANEUVER SYSTEM
(SE7)

NAME OF TEST Drain and Clean Procedures TEST NO. 106156-401 SHEET ____ OF ____

PART NO. 2-DAY CONFIG {MAC ____ NAA ____} 14-DAY CONFIG {MAC 52-52701 NAA 99-106156}

7.6.7.4 System cleaning data

7.6.7.4.1 Oxidizer system cleaning data

7.6.7.4.1.1 Operation: Liquid NTO concentration following expulsion of first flush fluid sample.

Paragraph	Date	PPM	Results
6.2.1.1.3.18	3-8-65	50	Information only

7.6.7.4.1.2 Operation: Liquid NTO concentration following initial tank and manifold flushing.

Paragraph	Location	Date	PPM	Results
6.2.1.1.3.35	TCA #1	3-8-65	10	Out of spec.
	TCA #5	3-8-65	10	Out of spec.
	TCA #12	3-8-65	10	Out of spec.
	TCA #13	3-8-65	10	Out of spec.
6.2.1.1.3.39	TP 11	3-8-65	10	Out of spec.

7.6.7.4.1.2.1 Second flushing event

Paragraph	Location	Date	PPM	Results
6.2.1.1.3.35	TCA #1	3-9-65	5	Out of spec.
	TCA #5	3-9-65	10	Out of spec.
	TCA #12	3-9-65	1	In spec.
	TCA #13	3-9-65	0	In spec.
6.2.1.1.3.39	TP 11	3-9-65	50	Out of spec.

7.6.7.4.1.2.2 Third flushing event

PREPARED BY:	DATE	APPROVED FOR NAA:	DATE
R. McMahon	10-14-65	R. Heide	10/20/65
CHECKED BY: R. McMahon	DATE 10-19-65		

DESIGN APPROVAL TEST
ORBIT ATTITUDE AND MANEUVER SYSTEM
(SE7)

NAME OF TEST Drain and Clean Procedures TEST NO. 106156-401 SHEET ____ OF ____

PART NO. 2-DAY CONFIG {MAC ____ NAA ____} 14-DAY CONFIG {MAC 52-52701 NAA 99-106156}

Paragraph	Location	Date	PPM	Results
6.2.1.1.3.35	TCA #1	3-10-65	10	Out of spec.
	TCA #5	3-10-65	10	Out of spec.
	TCA #12	3-10-65	10	Out of spec.
	TCA #13	3-10-65	1	In spec.
6.2.1.1.3.39	TP 11	3-10-65	10	Out of spec.

7.6.7.4.1.2.3 Fourth flushing event

Paragraph	Location	Date	PPM	Results
6.2.1.1.3.35	TCA #1	3-10-65	5	Out of spec.
	TCA #5	3-10-65	1	In spec.
	TCA #12	3-10-65	25	Out of spec.
	TCA #13	3-10-65	1	In spec.
6.2.1.1.3.39	TP 11	3-10-65	10	Out of spec.

7.6.7.4.1.2.4 Fifth flushing event

Paragraph	Location	Date	PPM	Results
6.2.1.1.3.35	TCA #1	3-11-65	5	Out of spec.
	TCA #5	3-11-65	5	Out of spec.
	TCA #12	3-11-65	1	In spec.
	TCA #13	3-11-65	5	Out of spec.
6.2.1.1.3.39	TP 11	3-11-65	10	Out of spec.

7.6.7.4.1.2.5 Sixth flushing event

Paragraph	Location	Date	PPM	Results
6.2.1.1.3.35	TCA #1	3-12-65	5	Out of spec.
	TCA #5	3-12-65	10	Out of spec.
	TCA #12	3-12-65	10	Out of spec.
	TCA #13	3-12-65	10	Out of spec.
6.2.1.1.3.39	TP 11	3-12-65	20	Out of spec.

PREPARED BY:	DATE	APPROVED FOR NAA:	DATE
R. McMahon	10-14-65	[illegible]	10-26-65
CHECKED BY: [illegible]	DATE 10-19-65		

DESIGN APPROVAL TEST
ORBIT ATTITUDE AND MANEUVER SYSTEM
(SE7)

NAME OF TEST Drain and Clean Procedures TEST NO. 106156-401 SHEET ____ OF ____

PART NO. 2-DAY CONFIG {MAC ____ NAA ____} 14-DAY CONFIG {MAC 52-52701 NAA 99-106156}

7.6.7.4.1.2.6 Seventh flushing event

Paragraph	Location	Date	PPM	Results
6.2.1.1.3.35	TCA #1	3-12-65	10	Out of spec.
	TCA #5	3-12-65	10	Out of spec.
	TCA #12	3-12-65	>50	Out of spec.
	TCA #13	3-12-65	10	Out of spec.
6.2.1.1.3.39	TP 11	3-12-65	5	Out of spec.

IL 5388-6130 was written to require changing the flush fluid completely after each flushing operation.

7.6.7.4.1.2.7 Eighth flushing event (First flushing event per the new procedure of IL 5388-6130)

Paragraph	Location	Date	PPM	Results
6.2.1.1.3.35	TCA #1	3-16-65	<1	In spec.
	TCA #5	3-16-65	<1	In spec.
	TCA #12	3-16-65	<1	In spec.
	TCA #13	3-16-65	<1	In spec.
6.2.1.1.3.39	TP 11	3-16-65	5	Out of spec.

7.6.7.4.1.2.8 Ninth flushing event (Second flushing event per the new procedure of IL 5388-6130)

Paragraph	Location	Date	PPM	Results
6.2.1.1.3.35	TCA #1	3-17-65	<1	In spec.
	TCA #5	3-17-65	<1	In spec.
	TCA #12	3-17-65	<1	In spec.
	TCA #13	3-17-65	<1	In spec.
	TP 11	3-17-65	<1	In spec.

PREPARED BY:	DATE	APPROVED FOR NAA:	DATE
R. McMahon	10-14-65	B. Haider	10/20/65
CHECKED BY: R. McMahon	DATE 10-19-65		

DESIGN APPROVAL TEST
ORBIT ATTITUDE AND MANEUVER SYSTEM
(SE7)

NAME OF TEST Drain and Clean Procedures TEST NO. 106156-401 SHEET ____ OF ____

PART NO. 2-DAY CONFIG {MAC ____ NAA ____} 14-DAY CONFIG {MAC 52-52701 NAA 99-106156}

7.6.7.4.1.3 Operation: NTO and freon vapor concentration at TCAs and manifold following GN_2 purge.

7.6.7.4.1.3.1 First purging event

Paragraph	Location	Date	PPM NTO	PPM FREON	Result
6.2.1.1.3.66	TP 13	3-18-65	13	>20	In/out of spec.
	TP 11	3-18-65	34	>20	Out of spec.
	TCA #1	3-18-65	800	>20	Out of spec.
	TCA #5	3-18-65	18	>20	In/out of spec.
	TCA #12	3-18-65	45	>20	Out of spec.
	TCA #13	3-18-65	13	>20	In/out of spec.

7.6.7.4.1.3.2 Second purging event

Paragraph	Location	Date	PPM NTO	PPM FREON	Result
6.2.1.1.3.66	TP 13	3-19-65	10	<20	In spec.
	TP 11	3-19-65	6	<20	In spec.
	TCA #1	3-19-65	520	>20	Out of spec.
	TCA #5	3-19-65	26	>20	Out of spec.
	TCA #12	3-19-65	65	>20	Out of spec.
	TCA #13	3-19-65	120	>20	Out of spec.

7.6.7.4.1.3.3 Third purging event

Paragraph	Location	Date	PPM NTO	PPM FREON	Result
6.2.1.1.3.66	TP 13	3-19-65	9	<20	In spec.
	TP 11	3-19-65	17	>20	In/out of spec.
	TCA #1	3-19-65	520	>20	Out of spec.
	TCA #5	3-19-65	60	<20	Out of/in spec.
	TCA #12	3-19-65	103	>20	Out of spec.
	TCA #13	3-19-65	93	>20	Out of spec.

PREPARED BY:	DATE	APPROVED FOR NAA:	DATE
R. McMahon	10-14-65	G. Heide	10/20/65
CHECKED BY: R. McMahon	DATE 10-19-65		

DESIGN APPROVAL TEST
ORBIT ATTITUDE AND MANEUVER SYSTEM
(SE7)

NAME OF TEST Drain and Clean Procedures TEST NO. 106156-401 SHEET ____ OF ____

PART NO. 2-DAY CONFIG {MAC ____ NAA ____} 14-DAY CONFIG {MAC 52-52701 NAA 99-106156}

7.6.7.4.1.4 Operation: Vacuuming of upstream and downstream sides of NTO tank bladder after 3 unsuccessful purges.

7.6.7.4.1.4.1 First vacuum event

Paragraph	Location	Date	PPM NTO	PPM FREON	Results
6.2.1.1.3.80	TP 13	3-19-65	12	>20	In/out of spec.
	TP 11	3-19-65	600	>20	Out of spec.
	TCA #1	3-19-65	>800	>20	Out of spec.
	TCA #5	3-19-65	>800	<20	Out/In spec.
	TCA #12	3-19-65	>800	>20	Out of spec.
	TCA #13	3-19-65	>800	>20	Out of spec.

7.6.7.4.1.4.2 Second vacuum event

Paragraph	Location	Date	PPM NTO	PPM FREON	Results
6.2.1.1.3.80	TP 13	3-22-65	680	>20	Out of spec.
	TP 11	3-22-65	800	<20	Out of/in spec.
	TCA #1	3-22-65	122	>20	Out of spec.
	TCA #5	3-22-65	>800	>20	Out of spec.
	TCA #12	3-22-65	>800	>20	Out of spec.
	TCA #13	3-22-65	>800	>20	Out of spec.

7.6.7.4.1.4.3 Third vacuum event

Paragraph	Location	Date	PPM NTO	PPM FREON	Results
6.2.1.1.3.80	TP 13	3-23-65	292	>20	Out of spec.
	TP 11	3-23-65	196	<20	Out of/in spec.
	TCA #1	3-23-65	1000	>20	Out of spec.
	TCA #5	3-23-65	560	>20	Out of spec.
	TCA #12	3-23-65	16	>20	Out of spec.
	TCA #13	3-23-65	720	>20	Out of spec.

PREPARED BY:	DATE	APPROVED FOR NAA:	DATE
R. McMahon	10-14-65	R. Heide	10/20/65
CHECKED BY: R. McMahon	DATE 10-19-65		

DESIGN APPROVAL TEST
ORBIT ATTITUDE AND MANEUVER SYSTEM
(SE7)

NAME OF TEST Drain and Clean Procedures TEST NO. 106156-401 SHEET ____ OF ____

PART NO. 2-DAY CONFIG {MAC ____ NAA ____} 14-DAY CONFIG {MAC 52-52701 NAA 99-106156}

As the evacuation operation was not reducing the NTO or freon vapor concentration significantly, IL5388-6143 was issued authorizing a flushing operation after two unsuccessful evacuations.

7.6.7.4.1.5 Operation: Liquid NTO concentration following flushing operation required after unsuccessful evacuations.

7.6.7.4.1.5.1 First flushing event

Paragraph	Location	Date	PPM	Results
6.2.1.1.3.35	TCA #1	3-24-65	1	In spec.
	TCA #5	3-24-65	1	In spec.
	TCA #12	3-24-65	1	In spec.
	TCA #13	3-24-65	1	In spec.
	TP 11	3-24-65	1	In spec.

7.6.7.4.1.6 Operation: NTO and freon vapor concentration in manifold and at TCAs following GN_2 purge after supplemental flushing.

7.6.7.4.1.6.1 First purging event (Fourth actual purging event)

Paragraph	Location	Date	PPM NTO	PPM FREON	Results
6.2.1.1.3.66	TP 13	3-25-65	32	>20	Out of spec.
	TP 11	3-25-65	33	<20	Out of/in spec.
	TCA #1	3-25-65	67	>20	Out of spec.
	TCA #5	3-25-65	45	<20	Out of/in spec.
	TCA #12	3-25-65	25	>20	Out of spec.
	TCA #13	3-25-65	48	>20	Out of spec.

7.6.7.4.1.6.2 Second purging event

Paragraph	Location	Date	PPM NTO	PPM FREON	Results
6.2.1.1.3.66	TP 13	3-25-65	12	<20	In spec.

PREPARED BY:	DATE	APPROVED FOR NAA:	DATE
R. McMahon	10-14-65		
CHECKED BY: R. McMahon	DATE 10-20-65	B. Eide	10/20/65

DESIGN APPROVAL TEST
ORBIT ATTITUDE AND MANEUVER SYSTEM
(SE7)

NAME OF TEST Drain and Clean Procedures TEST NO. 106156-401 SHEET ____ OF ____

PART NO. 2-DAY CONFIG {MAC ____ NAA ____} 14-DAY CONFIG {MAC 52-52701 NAA 99-106156}

TP 11	3-25-65	11	<20	In spec.
TCA #1	3-25-65	38	<20	Out of/in spec.
TCA #5	3-25-65	14	<20	In spec.
TCA #12	3-25-65	21	>20	Out of spec.
TCA #13	3-25-65	6	<20	In spec.

7.6.7.4.1.6.3 Third purging event

Paragraph	Location	Date	PPM NTO	PPM FREON	Results
6.2.1.1.3.66	TP 13	3-25-65	8	<20	In spec.
	TP 11	3-25-65	118	<20	Out of/in spec.
	TCA #1	3-25-65	12	<20	In spec.
	TCA #5	3-25-65	6	>20	In/out of spec.
	TCA #12	3-25-65	8	>20	In/out of spec.
	TCA #13	3-25-65	26	>20	Out of spec.

7.6.7.4.1.6.4 Fourth purging event

Paragraph	Location	Date	PPM NTO	PPM FREON	Results
6.2.1.1.3.66	TP 13	3-26-65	3	<20	In spec.
	TP 11	3-26-65	3	<20	In spec.
	TCA #1	3-26-65	4	<20	In spec.
	TCA #5	3-26-65	4	<20	In spec.
	TCA #12	3-26-65	7	>20	Freon Out of spec.
	TCA #13	3-26-65	6	<20	In spec.

Purging considered complete dispite TCA #12 freon vapor concentration.

7.6.7.4.1.7 Operation: NTO and freon vapor concentration at Component Package "B" TP 6 prior to any upstream cleaning event.

Paragraph	Date	PPM NTO	PPM FREON	Results
6.2.1.1.3.81	3-26-65	800	>20	Out of spec.

PREPARED BY:	DATE	APPROVED FOR NAA:	DATE
R. McMahon	10-14-65	[illegible]	10/20/65
CHECKED BY: R. McMahon	DATE 10-20-65		

DESIGN APPROVAL TEST
ORBIT ATTITUDE AND MANEUVER SYSTEM
(SE7)

NAME OF TEST Drain and Clean Procedures TEST NO. 106156-401 SHEET ____ OF ____

PART NO. 2-DAY CONFIG {MAC ____ NAA ____} 14-DAY CONFIG {MAC 52-52701 NAA 99-106156}

7.6.7.4.1.8 Operation: NTO and freon vapor concentration at Component Package "B" TP 6 after upstream evacuation.

7.6.7.4.1.8.1 First evacuation event

Paragraph	Date	PPM NTO	PPM FREON	Results
6.2.1.1.3.90	3-26-65	28	<20	Out/in spec.

7.6.7.4.1.8.2 Second evacuation event

Paragraph	Date	PPM NTO	PPM FREON	Results
6.2.1.1.3.90	3-29-65	110	>20	Out of spec.

7.6.7.4.1.8.3 Third evacuation event

Paragraph	Date	PPM NTO	PPM FREON	Results
6.2.1.1.3.90	3-29-65	1	<20	In spec.

7.6.7.4.1.9 Operation: NTO and freon vapor concentration in manifold and at TCAs after 1 hour wait period.

Paragraph	Location	Date	PPM NTO	PPM FREON	Results
6.2.1.1.3.93	TP 13	3-29-65	212	<20	NTO out of spec.
	TP 11	3-29-65	139	<20	NTO out of spec.
	TCA #1	3-29-65	>800	<20	NTO out of spec.
	TCA #5	3-29-65	181	<20	NTO out of spec.
	TCA #12	3-29-65	>800	<20	NTO out of spec.
	TCA #13	3-29-65	>800	<20	NTO out of spec.
6.2.1.1.3.94	TP 6	3-29-65	208	<20	NTO out of spec.

7.6.7.4.1.10 Operation: NTO and freon vapor concentration in manifold and at TCAs following first GN_2 purge required when 1 hour sample requirements of paragraph 6.2.1.1.3.93 and 6.2.1.1.3.94 were not met.

PREPARED BY:	DATE	APPROVED FOR NAA:	DATE
R. McMahon	10-14-65	[illegible]	10/20/65
CHECKED BY: [illegible]	DATE 10-20-65		

DESIGN APPROVAL TEST
ORBIT ATTITUDE AND MANEUVER SYSTEM
(SE7)

NAME OF TEST Drain and Clean Procedures TEST NO. 106156-401 SHEET ____ OF ____

PART NO. 2-DAY CONFIG {MAC ____ NAA ____} 14-DAY CONFIG {MAC 52-52701 NAA 99-106156}

7.6.7.4.1.10.1 First purging event (Eighth actual purging event)

Paragraph	Location	Date	PPM NTO	PPM FREON	Results
6.2.1.1.3.66	TP 13	3-30-65	16	>20	Freon out of spec
	TP 11	3-30-65	15	>20	Freon out of spec
	TCA #1	3-30-65	8	<20	In spec.
	TCA #5	3-30-65	6	>20	Freon out of spec
	TCA #12	3-30-65	13	>20	Freon out of spec
	TCA #13	3-30-65	11	>20	Freon out of spec

7.6.7.4.1.10.2 Second purging event

Paragraph	Location	Date	PPM NTO	PPM FREON	Results
6.2.1.1.3.66	TP 13	3-30-65	21	<20	In spec.
	TP 11	3-30-65	8	<20	In spec.
	TCA #1	3-30-65	9	<20	In spec.
	TCA #5	3-30-65	5	<20	In spec.
	TCA #12	3-30-65	15	<20	In spec.
	TCA #13	3-30-65	9	<20	In spec.

7.6.7.4.1.11 Operation: NTO and freon vapor concentration at Component Package "B" TP 6.

Paragraph	Date	PPM NTO	PPM FREON	Results
6.2.1.1.3.81	3-31-65	166	<20	Out of/in spec.

7.6.7.4.1.12 Operation: NTO and freon vapor concentration at Component Package "B" TP 6 after one evacuation.

Paragraph	Date	PPM NTO	PPM FREON	Results
6.2.1.1.3.80	3-31-65	11	<20	In spec.

PREPARED BY:	DATE	APPROVED FOR NAA:	DATE
R. McMahon	10-14-65	B. Heida	10/20/65
CHECKED BY: R. McMahon	DATE 10-20-65		

DESIGN APPROVAL TEST
ORBIT ATTITUDE AND MANEUVER SYSTEM
(SE7)

NAME OF TEST Drain and Clean Procedures TEST NO. 106156-401 SHEET ____ OF ____

PART NO. 2-DAY CONFIG {MAC ____ NAA ____} 14-DAY CONFIG {MAC 52-52701 NAA 99-106156}

7.6.7.4.1.13 Operation: NTO and freon vapor concentration in manifold and at TCAs after 1 hour wait period.

Paragraph	Location	Date	PPM NTO	PPM FREON	Results
6.2.1.1.3.93	TP 13	4-1-65	640	<20	NTO out of spec.
	TP 11	4-1-65	520	<20	NTO out of spec.
	TCA #1	4-1-65	105	<20	NTO out of spec.
	TCA #5	4-1-65	125	<20	NTO out of spec.
	TCA #12	4-1-65	6	<20	In spec.
	TCA #13	4-1-65	48	<20	NTO out of spec.
6.2.1.1.3.94	TP 6	4-1-65	48	<20	NTO out of spec.

7.6.7.4.1.14 Operation: NTO and freon vapor concentration in manifold and at TCAs following first GN_2 purge required when 1 hour sample requirements of paragraph 6.2.1.1.3.93 and 6.2.1.1.3.94 were not met.

7.6.7.4.1.14.1 First purge event (Tenth actual purging event)

Paragraph	Location	Date	PPM NTO	PPM FREON	Results
6.2.1.1.3.66	TP 13	4-1-65	5	<20	In spec.
	TP 11	4-1-65	8	<20	In spec.
	TCA #1	4-1-65	12	<20	In spec.
	TCA #5	4-1-65	10	<20	In spec.
	TCA #12	4-1-65	5	<20	In spec.
	TCA #13	4-1-65	9	<20	In spec.

7.6.7.4.1.15 Operation: NTO and freon vapor concentration at component Package "B" TP 6 after evacuation required when sample requirements of paragraph 6.2.1.1.3.94 were not met.

Paragraph	Date	PPM NTO	PPM FREON	Results
6.2.1.1.3.90	4-2-65	11	<20	In spec.

PREPARED BY:	DATE	APPROVED FOR NAA:	DATE
R. McMahon	10-14-65	[signature]	10/20/65
CHECKED BY: [signature]	DATE 10-20-65		

DESIGN APPROVAL TEST
ORBIT ATTITUDE AND MANEUVER SYSTEM
(SE7)

NAME OF TEST Drain and Clean Procedures TEST NO. 106156-401 SHEET ____ OF ____

PART NO. 2-DAY CONFIG {MAC ____ NAA ____} 14-DAY CONFIG {MAC 52-52701 NAA 99-106156}

7.6.7.4.1.16 Operation: NTO and freon vapor concentration in manifold and at TCAs after 10 hour evacuation to try to assure that all samples would remain within specification after a 1 hour wait.

7.6.7.4.1.16.1 First two (2) hours of evacuation

Paragraph	Location	Date	PPM NTO	PPM FREON	Results
6.2.1.1.3.80	TP 13	4-5-65	58	<20	Information only
	TP 11	4-5-65	12	<20	Information only
	TCA #1	4-5-65	6	<20	Information only
	TCA #5	4-5-65	8	<20	Information only
	TCA #12	4-5-65	4	<20	Information only
	TCA #13	4-5-65	4	<20	Information only
6.2.1.1.3.90	TP 6	4-5-65	30	<20	Information only

No samples taken after second two hours of evacuation.

7.6.7.4.1.16.2 Third two (2) hours of evacuation

Paragraph	Location	Date	PPM NTO	PPM FREON	Results
6.2.1.1.3.80	TP 13	4-5-65	5	<20	Information only
	TP 11	4-5-65	7	<20	Information only
	TCA #1	4-5-65	68	<20	Information only
	TCA #5	4-5-65	16	<20	Information only
	TCA #12	4-5-65	7	<20	Information only
	TCA #13	4-5-65	5	<20	Information only
6.2.1.1.3.90	TP 6	4-5-65	46	<20	Information only

7.6.7.4.1.16.3 Fourth two (2) hours of evacuation

Paragraph	Location	Date	PPM NTO	PPM FREON	Results
6.2.1.1.3.80	TP 13	4-5-65	720	<20	Information only
	TP 11	4-5-65	640	<20	Information only

PREPARED BY:	DATE	APPROVED FOR NAA:	DATE
R. McMahon	10-14-65	R. Heide	10/20/65
CHECKED BY: R. McMahon	DATE 10-20-65		

DESIGN APPROVAL TEST
ORBIT ATTITUDE AND MANEUVER SYSTEM
(SE7)

NAME OF TEST Drain and Clean Procedures TEST NO. 106156-401 SHEET ____ OF ____

PART NO. 2-DAY CONFIG {MAC ____ NAA ____} 14-DAY CONFIG {MAC 52-52701 NAA 99-106156}

	TCA #1	4-5-65	800	<20	Information only
	TCA #5	4-5-65	51	<20	Information only
	TCA #12	4-5-65	24	<20	Information only
	TCA #13	4-5-65	>800	<20	Information only
6.2.1.1.3.90	TP 6	4-5-65	7	<20	Information only

7.6.7.4.1.16.4 Fifth two (2) hours of evacuation (IL 5388-6166 published prior to this event eliminating TCA vapor samples as criteria for further cleaning)

Paragraph	Location	Date	PPM NTO	PPM FREON	Results
6.2.1.1.3.80	TP 13	4-6-65	3	<20	In spec.
	TP 11	4-6-65	6	<20	In spec.

7.6.7.4.1.17 Operation: NTO and freon vapor concentrations in manifold and at TCAs after 1 hour wait period.

Paragraph	Location	Date	PPM NTO	PPM FREON	Results
6.2.1.1.3.93	TP 13	4-6-65	4	<20	In spec.
	TP 11	4-6-65	121	<20	Out of/in spec.
	TCA #1	4-6-65	600	<20	Information only
	TCA #5	4-6-65	4	<20	Information only
	TCA #12	4-6-65	102	<20	Information only
	TCA #13	4-6-65	350	<20	Information only
6.2.1.1.3.94	TP 6	4-6-65	160	<20	Out of/in spec.

7.6.7.4.1.18 Operation: NTO and freon vapor concentrations in manifold and at TCAs after 10 hour evacuation required when sample requirements of paragraph 6.2.1.1.3.93 and 6.2.1.1.3.94 were not met.

PREPARED BY:	DATE	APPROVED FOR NAA:	DATE
R. McMahon	10-14-65	B. H. Eide	10/20/65
CHECKED BY: R. McMahon	DATE 10-20-65		

ROCKETDYNE
A DIVISION OF NORTH AMERICAN AVIATION INC

DESIGN APPROVAL TEST
ORBIT ATTITUDE AND MANEUVER SYSTEM
(SE7)

NAME OF TEST Drain and Clean Procedures TEST NO. 106156-401 SHEET ____ OF ____

PART NO. 2-DAY CONFIG {MAC ____ NAA ____ 14-DAY CONFIG {MAC 52-52701 NAA 99-106156

7.6.7.4.1.18.1 After first two (2) hours of evacuation

Paragraph	Location	Date	PPM NTO	PPM FREON	Results
6.2.1.1.3.80	TP 13	4-7-65	2	<20	Information only
	TP 11	4-7-65	4	<20	Information only

7.6.7.4.1.18.2 After second two (2) hours of evacuation

Paragraph	Location	Date	PPM NTO	PPM FREON	Results
6.2.1.1.3.80	TP 13	4-7-65	6	<20	Information only
	TP 11	4-7-65	4	<20	Information only

7.6.7.4.1.18.3 After third two (2) hours of evacuation

Paragraph	Location	Date	PPM NTO	PPM FREON	Results
6.2.1.1.3.80	TP 13	4-8-65	0	<20	Information only
	TP 11	4-8-65	3	<20	Information only

7.6.7.4.1.18.4 After fourth two (2) hours of evacuation

Paragraph	Location	Date	PPM NTO	PPM FREON	Results
6.2.1.1.3.80	TP 13	4-8-65	42	<20	Out of/in spec.
	TP 11	4-8-65	46	<20	Out of/in spec.
	TCA #1	4-8-65	60	<20	Information only
	TCA #5	4-8-65	13	<20	Information only
	TCA #12	4-8-65	10	<20	Information only
	TCA #13	4-8-65	10	<20	Information only
6.2.1.1.3.90	TP 6	4-8-65	18	<20	In spec.

7.6.7.4.1.18.5 After fifth two (2) hours of evacuation

PREPARED BY:	DATE	APPROVED FOR NAA:	DATE
R. McMahon	10-14-65	R. Heide	10/20/65
CHECKED BY: R. McMahon	DATE 10-20-65		

DESIGN APPROVAL TEST
ORBIT ATTITUDE AND MANEUVER SYSTEM
(SE7)

NAME OF TEST Drain and Clean Procedures TEST NO. 106156-401 SHEET ____ OF ____

PART NO. 2-DAY CONFIG {MAC ____ NAA ____} 14-DAY CONFIG {MAC 52-52701 NAA 99-106156}

Paragraph	Location	Date	PPM NTO	PPM FREON	Results
6.2.1.1.3.80	TP 13	4-9-65	11	<20	In spec.
	TP 11	4-9-65	4	<20	In spec.

7.6.7.4.1.19 Operation: NTO and freon vapor concentrations in manifold and at TCAs after 1 hour wait period.

Paragraph	Location	Date	PPM NTO	PPM FREON	Results
6.2.1.1.3.93	TP 13	4-12-65	21	<20	In spec.
	TP 11	4-12-65	2	<20	In spec.
	TCA #1	4-12-65	76	<20	Information only
	TCA #5	4-12-65	25	<20	Information only
	TCA #12	4-12-65	110	<20	Information only
	TCA #13	4-12-65	8	<20	Information only
6.2.1.1.3.94	TP 6	4-12-65	8	<20	In spec.

7.6.7.4.1.20 Operation: NTO and freon vapor concentrations in manifold and at TCAs after 24 hour wait period.

Paragraph	Location	Date	PPM NTO	PPM FREON	Results
6.2.1.1.3.95	TP 13	4-13-65	19	<20	In spec.
	TP 11	4-13-65	2	<20	In spec.
	TCA #1	4-13-65	76	<20	Information only
	TCA #5	4-13-65	71	<20	Information only
	TCA #12	4-13-65	104	>20	Information only
	TCA #13	4-13-65	4	<20	Information only
	TP 6	4-13-65	20	<20	In spec.

PREPARED BY:	DATE	APPROVED FOR NAA:	DATE
R. McMahon	10-14-65	B. T. Eide	10/20/65
CHECKED BY: R. McMahon	DATE 10-19-65		

DESIGN APPROVAL TEST
ORBIT ATTITUDE AND MANEUVER SYSTEM
(SE7)

NAME OF TEST Drain and Clean Procedures TEST NO. 106156-401 SHEET ____ OF ____

PART NO. 2-DAY CONFIG {MAC ____ NAA ____} 14-DAY CONFIG {MAC 52-52701 NAA 99-106156}

7.6.7.4.2 Fuel system cleaning data

7.6.7.4.2.1 Operation: Liquid MMH concentration following expulsion of first flush fluid sample.

Paragraph	Date	PPM	Results
6.2.1.2.3.18	3-9-65	800	Information only

7.6.7.4.2.2 Operation: Liquid MMH concentration following initial tank and manifold flushing.

Paragraph	Location	Date	PPM	Results
6.2.1.2.3.35	TCA #1	3-9-65	10	Out of spec.
	TCA #5	3-9-65	10	Out of spec.
	TCA #12	3-9-65	600	Out of spec.
	TCA #13	3-9-65	125	Out of spec.
6.2.1.2.3.39	TP 15	3-9-65	1	In spec.

7.6.7.4.2.2.1 Second flushing event

Paragraph	Location	Date	PPM	Results
6.2.1.2.3.35	TCA #1	3-10-65	10	Out of spec.
	TCA #5	3-10-65	40	Out of spec.
	TCA #12	3-10-65	10	Out of spec.
	TCA #13	3-10-65	10	Out of spec.
6.2.1.2.3.39	TP 15	3-10-65	8.5	Out of spec.

7.6.7.4.2.2.2 Third flushing event

Paragraph	Location	Date	PPM	Results
6.2.1.2.3.35	TCA #1	3-10-65	10	Out of spec.
	TCA #5	3-10-65	7	Out of spec.
	TCA #12	3-10-65	85	Out of spec.
	TCA #13	3-10-65	70	Out of spec.

PREPARED BY:	DATE	APPROVED FOR NAA:	DATE
R. McMahon	10-14-65	[illegible]	10/21/65
CHECKED BY: [illegible]	DATE 10-20-65		

DESIGN APPROVAL TEST
ORBIT ATTITUDE AND MANEUVER SYSTEM
(SE7)

NAME OF TEST Drain and Clean Procedures TEST NO. 106156-401 SHEET ____ OF ____

PART NO. 2-DAY CONFIG {MAC ____ NAA ____} 14-DAY CONFIG {MAC 52-52701 NAA 99-106156}

6.2.1.2.3.39	TP 15	3-10-65	12	Out of spec.

7.6.7.4.2.2.3 Fourth flushing event

Paragraph	Location	Date	PPM	Results
6.2.1.2.3.35	TCA #1	3-11-65	5	Out of spec.
	TCA #5	3-11-65	3	Out of spec.
	TCA #12	3-11-65	5	Out of spec.
	TCA #13	3-11-65	5	Out of spec.
6.2.1.2.3.39	TP 15	3-11-65	5	Out of spec.

7.6.7.4.2.2.4 Fifth flushing event

Paragraph	Location	Date	PPM	Results
6.2.1.2.3.35	TCA #1	3-12-65	3	Out of spec.
	TCA #5	3-12-65	3	Out of spec.
	TCA #12	3-12-65	3	Out of spec.
	TCA #13	3-12-65	7	Out of spec.
6.2.1.2.3.39	TP 15	3-12-65	2	Out of spec.

7.6.7.4.2.2.5 Sixth flushing event

Paragraph	Location	Date	PPM	Results
6.2.1.2.3.35	TCA #1	3-12-65	3	Out of spec.
	TCA #5	3-12-65	2	Out of spec.
	TCA #12	3-12-65	4	Out of spec.
	TCA #13	3-12-65	11	Out of spec.
6.2.1.2.3.39	TP 15	3-12-65	1	In spec.

IL 5388-6130 was written to require changing the flush fluid completely after each flushing operation.

PREPARED BY:	DATE	APPROVED FOR NAA:	DATE
R. McMahon	10-14-65	B J Eide	10/21/65
CHECKED BY: R. McMahon	DATE 10-20-65		

DESIGN APPROVAL TEST
ORBIT ATTITUDE AND MANEUVER SYSTEM
(SE7)

NAME OF TEST Drain and Clean Procedures TEST NO. 106156-401 SHEET ____ OF ____

PART NO. 2-DAY CONFIG {MAC ____ NAA ____} 14-DAY CONFIG {MAC 52-52701 NAA 99-106156}

7.6.7.4.2.2.6 Seventh flushing event (First flushing event per the new procedure of IL 5388-6130)

Paragraph	Location	Date	PPM	Results
6.2.1.2.3.35	TCA #1	3-17-65	<1	In spec.
	TCA #5	3-17-65	4	Out of spec.
	TCA #12	3-17-65	9	Out of spec.
	TCA #13	3-17-65	60	Out of spec.
6.2.1.2.3.39	TP 15	3-17-65	<1	In spec.

7.6.7.4.2.2.7 Eighth flushing event (Second flushing event per the new procedure of IL 5388-6130)

Paragraph	Location	Date	PPM	Results
6.2.1.2.3.35	TCA #1	3-17-65	<1	In spec.
	TCA #5	3-17-65	<1	In spec.
	TCA #12	3-17-65	<1	In spec.
	TCA #13	3-17-65	<1	In spec.
6.2.1.2.3.39	TP 15	3-17-65	<1	In spec.

7.6.7.4.2.3 Operation: MMH and alcohol vapor concentration at TCAs and manifold following GN_2 purge.

Paragraph	Location	Date	PPM MMH	PPM Alc.	Results
6.2.1.2.3.89	TP 15	3-18-65	16	X	Out of spec.
	TP 16	3-18-65	Liquid	X	Out of spec.
	TCA #1	3-18-65	15	X	Out of spec.
	TCA #5	3-18-65	25	X	Out of spec.
	TCA #12	3-18-65	22	X	Out of spec.
	TCA #13	3-18-65	35	X	Out of spec.

Due to liquid alcohol being extracted from TP 16 while sampling MMH, no alcohol samples were taken. IL 5388-6134 was also written to provide

PREPARED BY:	DATE	APPROVED FOR NAA:	DATE
R. McMahon	10-14-65	B. H. Reide	10/21/65
CHECKED BY: R. McMahon	DATE 10-20-65		

DESIGN APPROVAL TEST
ORBIT ATTITUDE AND MANEUVER SYSTEM
(SE7)

NAME OF TEST Drain and Clean Procedures TEST NO. 106156-401 SHEET ____ OF ____

PART NO. 2-DAY CONFIG {MAC ____ NAA ____ 14-DAY CONFIG {MAC 52-52701 NAA 99-106156

additional GN_2 purging to rid the tank of liquid.

7.6.7.4.2.4 Operation: Alcohol vapor concentration in manifold following 13 auxiliary GN_2 purges per IL 5388-6134.

Paragraph	Location	Date	PPM	Results
6.2.1.2.3.81.4	TP 15	3-19-65	>200	Out of spec.

As thirteen (13) fifteen (15) minute purges per IL 5388-6134 failed to reduce alcohol concentration to less than 100 ppm, system was pressurized through TP 15 with an equivalent of one-half a tank of alcohol drained.

7.6.7.4,2.4.1 Seven (7) additional auxiliary GN_2 purges per IL 5388-6134

Paragraph	Location	Date	PPM	Results
6.2.1.2.3.81.4	TP 15	3-19-65	>200	Out of spec.

7.6.7.4.2.5 Operation: MMH and alcohol vapor concentration at TCAs and manifold following second normal GN_2 purge required when sample requirements of 6.2.1.2.3.81.4 could not be met.

Paragraph	Location	Date	PPM MMH	PPM Alc.	Results
6.2.1.2.3.89	TP 15	3-22-65	22	270	Out of spec.
	TP 16	3-22-65	64	180	Out of spec.
	TCA #1	3-22-65	11	>300	In/out of spec.
	TCA #5	3-22-65	15	>300	In/out of spec.
	TCA #12	3-22-65	17	50	In/out of spec.
	TCA #13	3-22-65	15	280	In/out of spec.

PREPARED BY:	DATE	APPROVED FOR NAA:	DATE
R. McMahon	10-14-65	B Heide	10/21/65
CHECKED BY: R. McMahon	DATE 10-20-65		

DESIGN APPROVAL TEST
ORBIT ATTITUDE AND MANEUVER SYSTEM
(SE7)

NAME OF TEST Drain and Clean Procedures TEST NO. 106156-401 SHEET ____ OF ____

PART NO. 2-DAY CONFIG {MAC ____ NAA ____} 14-DAY CONFIG {MAC 52-52701 NAA 99-106156}

7.6.7.4.2.5.1 Third purging event

Paragraph	Location	Date	PPM MMH	PPM Alc.	Results
6.2.1.2.3.89	TP 15	3-22-65	5	>20	In/out of spec.
	TP 16	3-22-65	5	>20	In/out of spec.
	TCA #1	3-22-65	5	>20	In/out of spec.
	TCA #5	3-22-65	7	>20	In/out of spec.
	TCA #12	3-22-65	5	>20	In/out of spec.
	TCA #13	3-22-65	9	>20	In/out of spec.

7.6.7.4.2.6 Operation: MMH, alcohol and freon vapor concentration in manifold and at TCAs after a freon flush and GN_2 purge required when sample requirements of 6.2.1.2.3.89 were not met.

Paragraph	Location	Date	PPM MMH	PPM Alc.	Freon	Results
6.2.1.2.3.89	TP 15	3-23-65	<5	>20	>20	In/out/out of spec.
	TP 16	3-23-65	6	<20	>20	In/in/out of spec.
	TCA #1	3-23-65	<5	>20	>20	In/out/out of spec.
	TCA #5	3-23-65	7	>20	>20	In/out/out of spec.
	TCA #12	3-23-65	<5	>20	>20	In/out/out of spec.
	TCA #13	3-23-65	<5	>20	>20	In/out/out of spec.

7.6.7.4.2.6.1 Second purging event

Paragraph	Location	Date	PPM MMH	PPM Alc.	Freon	Results
6.2.1.2.3.89	TP 15	3-24-65	<5	N.A.	>20	In/out of spec.
	TP 16	3-24-65	<5	>20	>20	In/out/out of spec.
	TCA #1	3-24-65	7	>20	>20	In/out/out of spec.
	TCA #5	3-24-65	6	N.A.	>20	In/out of spec.
	TCA #12	3-24-65	<5	N.A.	>20	In/out of spec.
	TCA #13	3-24-65	7	N.A.	>20	In/out of spec.

PREPARED BY:	DATE	APPROVED FOR NAA:	DATE
R. McMahon	10-14-65	B. Hecide	
CHECKED BY: R. McMahon	DATE 10-20-65		

DESIGN APPROVAL TEST
ORBIT ATTITUDE AND MANEUVER SYSTEM
(SE7)

NAME OF TEST Drain and Clean Procedures TEST NO. 106156-401 SHEET ____ OF ____

PART NO. 2-DAY CONFIG {MAC ____ NAA ____ 14-DAY CONFIG {MAC 52-52701 NAA 99-106156

7.6.7.4.2.6.2 Third purging event

Paragraph	Location	Date	PPM MMH	PPM Alc.	PPM Freon	Results
6.2.1.2.3.89	TP 15	3-25-65	8	N.A.	>20	In/out of spec.
	TP 16	3-25-65	4	N.A.	>20	In/out of spec.
	TCA #1	3-25-65	8	N.A.	>20	In/out of spec.
	TCA #5	3-25-65	9	N.A.	>20	In/out of spec.
	TCA #12	3-25-65	6	N.A.	>20	In/out of spec.
	TCA #13	3-25-65	10	N.A.	>20	In/out of spec.

7.6.7.4.2.6.3 Fourth purging event

Paragraph	Location	Date	PPM MMH	PPM Alc.	PPM Freon	Results
6.2.1.2.3.89	TP 15	3-26-65	<5	>20	<20	In/out of/in spec.
	TP 16	3-26-65	<5	>20	<20	In/out of/in spec.
	TCA #1	3-26-65	<5	>20	<20	In/out of/in spec.
	TCA #5	3-26-65	<5	>20	>20	In/out/out of spec.
	TCA #12	3-26-65	<5	>20	>20	In/out/out of spec.
	TCA #13	3-26-65	<5	>20	>20	In/out/out of spec.

As the preceding five sets of MMH samples had all been less than 20 ppm, no more MMH sampling was done after the subsequent purging operations. Also, IL 5388-6166 was written to 1) eliminate TCA vapor samples as criteria for further cleaning and 2) raising the allowable flush fluid vapor concentration from 20 ppm to 100 ppm.

N.A.--- No Analysis

PREPARED BY:	DATE	APPROVED FOR NAA:	DATE
R. McMahon	10-14-65	B. J. Eide	10/21/65
CHECKED BY: R. McMahon	DATE 10-20-65		

DESIGN APPROVAL TEST
ORBIT ATTITUDE AND MANEUVER SYSTEM
(SE7)

NAME OF TEST Drain and Clean Procedures TEST NO. 106156-401 SHEET ____ OF ____

PART NO. 2-DAY CONFIG {MAC ____ NAA ____} 14-DAY CONFIG {MAC 52-52701 NAA 99-106156}

7.6.7.4.2.6.4 Fifth purging event

Paragraph	Location	Date	PPM Alc.	PPM Freon	Results
6.2.1.2.3.89	TP 15	3-29-65	48	>20	In spec.
	TP 16	3-29-65	112	>20	Out of/in spec.

7.6.7.4.2.6.5 Sixth purging event

Paragraph	Location	Date	PPM Alc.	PPM Freon	Results
6.2.1.2.3.89	TP 15	3-29-65	33	<20	In spec.
	TP 16	3-29-65	218	>20	Out of spec.

7.6.7.4.2.6.6 Seventh purging event

Paragraph	Location	Date	PPM Alc.	PPM Freon	Results
6.2.1.2.3.89	TP 15	3-30-65	88	20	In spec.
	TP 16	3-30-65	>100	20	Out of/in spec.

7.6.7.4.2.7 Operation: MMH and alcohol vapor concentration in manifold and at TCAs following an evacuation required when the sample requirements of paragraph 6.2.1.2.3.89 could not be met by purging.

Paragraph	Location	Date	PPM MMH	PPM Alc.	Results
6.2.1.2.3.103	TP 15	4-2-65	5	156	In/out of spec.
	TP 16	4-2-65	33	1300	Out of spec.
	TCA #1	4-2-65	7	350	Information only
	TCA #5	4-2-65	<5	1300	Information only
	TCA #12	4-2-65	<5	39	Information only
	TCA #13	4-2-65	<5	1050	Information only
6.2.1.2.3.104	TP 4	4-2-65	9	24	In spec.

PREPARED BY:	DATE	APPROVED FOR NAA:	DATE
R. McMahon	10-14-65	R. F. Eide	10/21/65
CHECKED BY: R. McMahon	DATE 10-20-65		

DESIGN APPROVAL TEST
ORBIT ATTITUDE AND MANEUVER SYSTEM
(SE7)

NAME OF TEST Drain and Clean Procedures TEST NO. 106156-401 SHEET ____ OF ____

PART NO. 2-DAY CONFIG {MAC ____ NAA ____} 14-DAY CONFIG {MAC 52-52701 NAA 99-106156}

7.6.7.4.2.7.1 Second vacuum event

Paragraph	Location	Date	PPM MMH	PPM Alc.	Results
6.2.1.2.3.103	TP 15	4-5-65	<20	2000	In/out of spec.
	TP 16	4-5-65	<20	5000	In/out of spec.

As MMH samples were within specification, no more MMH samples were taken until the alcohol concentration was reduced to 100 ppm.

7.6.7.4.2.7.2 Third and fourth vacuum event

Paragraph	Location	Date	PPM	Results
6.2.1.2.3.103	TP 15	4-6-65	15	In spec.
	TP 16	4-6-65	>400	Out of spec.

7.6.7.4.2.7.3 Fifth vacuum event

Paragraph	Location	Date	PPM	Results
6.2.1.2.3.103	TP 15	4-7-65	11	In spec.
	TP 16	4-7-65	271	Out of spec.

7.6.7.4.2.7.4 Sixth vacuum event

Paragraph	Location	Date	PPM	Results
6.2.1.2.3.103	TP 15	4-8-65	6	In spec.
	TP 16	4-8-65	40	In spec.

7.6.7.4.2.7.5 Seventh vacuum event (To try to assure that all samples would remain within specification after a 1 hour wait)

Paragraph	Location	Date	PPM MMH	PPM Alc.	Results
6.2.1.2.3.103	TP 15	4-8-65	<5	<20	In spec.

PREPARED BY:	DATE	APPROVED FOR NAA:	DATE
R. McMahon	10-14-65	R. J. Cride	10/21/65
CHECKED BY: R. McMahon	DATE 10-20-65		

DESIGN APPROVAL TEST
ORBIT ATTITUDE AND MANEUVER SYSTEM
(SE7)

NAME OF TEST Drain and Clean Procedures TEST NO. 106156-401 SHEET ____ OF ____

PART NO. 2-DAY CONFIG {MAC ____ NAA ____} 14-DAY CONFIG {MAC 52-52701 NAA 99-106156}

	TP 16	4-8-65	19	92	In spec.
	TCA #1	4-8-65	<5	-	In spec.
	TCA #5	4-8-65	<5	-	In spec.
	TCA #12	4-8-65	<5	-	In spec.
	TCA #13	4-8-65	<5	-	In spec.
6.2.1.2.3.104	TP 4	4-8-65	<5	-	In spec.

7.6.7.4.2.8 Operation: MMH and alcohol vapor concentration in manifold and at TCAs after a 1 hour wait period.

Paragraph	Location	Date	PPM MMH	PPM Alc.	Results
6.2.1.2.3.116	TP 15	4-12-65	7	145	In/Out of spec.
	TP 16	4-12-65	10	172	In/Outof spec.
	TCA #1	4-12-65	<5	-	Information only
	TCA #5	4-12-65	<5	-	Information only
	TCA #12	4-12-65	<5	-	Information only
	TCA #13	4-12-65	<5	-	Information only
6.2.1.2.3.117	TP 4	4-12-65	9	50	In spec.

7.6.7.4.2.9 Operation: MMH and alcohol vapor concentration in manifold and at TCAs after a 24 hour wait period.

Paragraph	Location	Date	PPM MMH	PPM Alc.	Results
6.2.1.2.3.118	TP 15	4-13-65	5	2	In spec.
	TP 16	4-13-65	14	205	In/out of spec.
	TCA #1	4-13-65	5	627	Information only
	TCA #5	4-13-65	5	1000	Information only
	TCA #12	4-13-65	5	230	Information only
	TCA #13	4-13-65	5	1300	Information only
	TP 4	4-13-65	10	73	In spec.

Instead of continuing the cleaning procedure, the system was allowed to outgas for two (2) weeks in an attempt to reduce the alcohol vapor concentration to below 100 ppm by leaving TP 15 & TP 16 open.

PREPARED BY:	DATE	APPROVED FOR NAA:	DATE
R. McMahon	10-14-65	R. Hoide	10/21/65
CHECKED BY: R. McMahon	DATE 10-20-65		

DESIGN APPROVAL TEST
ORBIT ATTITUDE AND MANEUVER SYSTEM
(SE7)

NAME OF TEST Drain and Clean Procedures TEST NO. 106156-401 SHEET ____ OF ____

PART NO. 2-DAY CONFIG {MAC ____ NAA ____} 14-DAY CONFIG {MAC 52-52701 NAA 99-106156}

7.6.7.4.2.10 Operation: MMH and alcohol vapor concentration in manifold after two (2) weeks of outgassing.

Paragraph	Location	Date	PPM MMH	PPM Alc.	Results
6.2.1.2.3.118	TP 15	4-27-65	21	32	In spec.
	TP 16	4-27-65	20	15	In spec.
	TP 4	4-27-65	46	14	In spec.

PREPARED BY:	DATE	APPROVED FOR NAA:	DATE
R. McMahon	10-14-65	R. Heide	10/21/65
CHECKED BY: R. McMahon	DATE 10-20-65		

DESIGN APPROVAL TEST
ORBIT ATTITUDE AND MANEUVER SYSTEM
(SE7)

NAME OF TEST DRAIN AND CLEAN PROCEDURES TEST NO. 106156-401 SHEET 330 OF 413

PART NO. 2-DAY CONFIG. { MAC ____ NAA ____ } 14-DAY CONFIG. { MAC 52-52701 NAA 99-106156 }

7.6.7.4 Parameter	Ref. Paragraph	Value
Engine System "Freon MF" Soak Time	6.2.1.1.3.14	30 min
	6.2.1.1.3.18	50 ppm
NTO concentration in Freon	6.2.1.1.3.35 (TCA #1)	10 ppm
	(2nd time if necessary)	5 ppm
	6.2.1.1.3.35 (TCA #5)	10 ppm
	(2nd time if necessary)	10 ppm
	6.2.1.1.3.35 (TCA #12)	10 ppm
	(2nd time if necessary)	1 ppm
	6.2.1.1.3.35 (TCA #13)	10 ppm
	(2nd time if necessary)	0 ppm
	6.2.1.1.3.39	10 ppm
	(2nd time if necessary)	50
OXID CHG PORT -11 NTO vapor concentration	6.2.1.1.3.66	34 ppm
	(2nd time if necessary)	6 ppm
	6.2.1.1.3.80 (if necessary)	600 ppm
	6.2.1.1.3.93 (after 1 hour)	139 ppm
	(2nd time if necessary)	520 ppm
	6.2.1.1.3.93 (after 24 hours)	2 ppm
OXID PURGE - 13 port NTO vapor concentration	6.2.1.1.3.66	13 ppm
	(2nd time if necessary)	10 ppm
	6.2.1.1.3.80 (if necessary)	12 ppm
	6.2.1.1.3.93 (after 1 hour)	212 ppm
	(2nd time if necessary)	640 ppm
	6.2.1.1.3.93 (after 24 hours)	19 ppm

PREPARED BY: DATE	PERFORMED BY: DATE	WITNESSED FOR NAA: DATE	CERTIFIED FOR McDONNELL: DATE
R.McMahon	R.C. Antrim 10/5/65	R.C. Antrim 10/5/65	VERIFIED BY USAF: DATE

RESULTS FOR 3RD + 4TH SAMPLES

DESIGN APPROVAL TEST
ORBIT ATTITUDE AND MANEUVER SYSTEM
(SE7)

NAME OF TEST DRAIN AND CLEAN PROCEDURES TEST NO. 106156-401 SHEET 330 OF 413

PART NO. 2-DAY CONFIG. { MAC ____ NAA ____ } 14-DAY CONFIG. { MAC 52-52701 NAA 99-106156 }

7.6.7.4	Parameter	Ref. Paragraph	Value
	Engine System "Freon MF" Soak Time	6.2.1.1.3.14	____ min
		6.2.1.1.3.18	____ ppm
	NTO concentration in Freon	6.2.1.1.3.35 (TCA #1)	10 ppm
		(2nd time if necessary)	5 ppm
		6.2.1.1.3.35 (TCA #5)	10 ppm
		(2nd time if necessary)	1 ppm
		6.2.1.1.3.35 (TCA #12)	10 ppm
		(2nd time if necessary)	25 ppm
		6.2.1.1.3.35 (TCA #13)	1 ppm
		(2nd time if necessary)	1 ppm
		6.2.1.1.3.39	10 ppm
		(2nd time if necessary)	10
	OXID CHG PORT -11 NTO vapor concentration	6.2.1.1.3.66	ANR 673 17 ppm
		(2nd time if necessary)	ANR 673 11 ppm
		6.2.1.1.3.80 (if necessary)	800 ppm
		6.2.1.1.3.93 (after 1 hour)	171 ppm
		(2nd time if necessary)	2 ppm
		6.2.1.1.3.93 (after 24 hours)	X ppm
	OXID PURGE - 13 port NTO vapor concentration	6.2.1.1.3.66	ANR 673 9 ppm
		(2nd time if necessary)	3 ppm
		6.2.1.1.3.80 (if necessary)	600 ppm
		6.2.1.1.3.93 (after 1 hour)	4 ppm
		(2nd time if necessary)	21 ppm
		6.2.1.1.3.93 (after 24 hours)	X ppm

PREPARED BY: DATE	PERFORMED BY: DATE	WITNESSED FOR NAA: DATE	CERTIFIED FOR USAF: DATE
R.McMahon	ANR 673 4-20-65	ANR 673 4-20-65	WAIVED S. SCOTT 4-20-65
			VERIFIED BY USAF: DATE

DESIGN APPROVAL TEST
ORBIT ATTITUDE AND MANEUVER SYSTEM
(SE7)

NAME OF TEST DRAIN AND CLEAN PROCEDURES TEST NO. 106156-401 SHEET 330 OF 413

PART NO. 2-DAY CONFIG. { MAC ____ NAA ____ 14-DAY CONFIG. { MAC 52-52701 NAA 99-106156

7.6.7.4 Parameter	Ref. Paragraph	Value
Engine System "Freon MF" Soak Time	6.2.1.1.3.14	X min
	6.2.1.1.3.18	X ppm
NTO concentration in Freon	6.2.1.1.3.35 (TCA #1)	5 ppm
	(2nd time if necessary)	5 ppm
	6.2.1.1.3.35 (TCA #5)	5 ppm
	(2nd time if necessary)	10 ppm
	6.2.1.1.3.35 (TCA #12)	1 ppm
	(2nd time if necessary)	10 ppm
	6.2.1.1.3.35 (TCA #13)	5 ppm
	(2nd time if necessary)	10 ppm
	6.2.1.1.3.39	10 ppm
	(2nd time if necessary)	20
OXID CHG PORT -11 NTO vapor concentration	6.2.1.1.3.66	116 ppm
	(2nd time if necessary)	3 ppm
	6.2.1.1.3.80 (if necessary)	196 ppm
	6.2.1.1.3.93 (after 1 hour)	X ppm
	(2nd time if necessary)	X ppm
	6.2.1.1.3.93 (after 24 hours)	X ppm
OXID PURGE - 13 port NTO vapor concentration	6.2.1.1.3.66	8 ppm
	(2nd time if necessary)	8 ppm
	6.2.1.1.3.80 (if necessary)	292 ppm
	6.2.1.1.3.93 (after 1 hour)	X ppm
	(2nd time if necessary)	X ppm
	6.2.1.1.3.93 (after 24 hours)	X ppm

PREPARED BY: DATE	PERFORMED BY: DATE	WITNESSED FOR NAA: DATE	CERTIFIED FOR McDONNELL: DATE
R.McMahon	[signature] 4-20-65	[signature] 4-20-65	REVIEWED BY S SCOTT 4-20-65
	R.C. Ambrose 4/5/65	R.C. Ambrose 4/5/65	VERIFIED BY USAF: DATE

IL 5388-6130

INTERNAL LETTER
North American Aviation, Inc.

DATE 15 March 1965

TO Those Concerned
Address

FROM Gemini DAT Unit
Address D/896-388

SUBJECT Procedural Deviation - SE7 DAT Engine System - S/C 3

REFERENCE (a) DAT Specification 106156-401

The above reference specifies that during the flushing of the oxidizer and fuel systems to attain a propellant concentration in flush fluid of 1 ppm, the bladders remain full of flush fluid during the entire flushing operation. Initial flushing attempts on both propellant systems indicate that the fluid in the tanks is heavily contaminated and that merely diluting this fluid with fresh flush fluid and pushing this fluid through the TCAs does not reduce the contamination level to the desired value. To remedy this situation, the flush fluid will be expelled from the tanks after each flushing and the tanks refilled with fresh flushing fluid if a subsequent flushing cycle is required.

This deviation will be incorporated by changing the paragraphs listed below as follows:

Paragraph 6.2.1.1.3.40.1: "If the sample shows a concentration greater than 1 ppm NTO repeat paragraphs 6.2.1.1.3.15 through 6.2.1.1.3.40."

Paragraph 6.2.1.2.3.40.1: "If any sample shows a concentration greater than 1 ppm MMH repeat paragraphs 6.2.1.2.3.15 through 6.2.1.2.3.40."

R. O. McMahon
Gemini DAT Unit

Approved: R. G. Eide
Supervisor
Gemini DAT Unit

for S. Scott
MAC Engineering

cc. R. W. Diniu

R-15075-1

FORM R 18-0-4

ROCKETDYNE
A DIVISION OF NORTH AMERICAN AVIATION INC

RESULTS FOR 7th & 8th SAMPLES

DESIGN APPROVAL TEST
ORBIT ATTITUDE AND MANEUVER SYSTEM
(SE7)

NAME OF TEST DRAIN AND CLEAN PROCEDURES TEST NO. 106156-401 SHEET 330 OF 413

PART NO. 2-DAY CONFIG. { MAC ____ NAA ____ } 14-DAY CONFIG. { MAC 52-52701 NAA 99-106156 }

	Parameter	Ref. Paragraph	Value
7.6.7.4	Engine System "Freon MF" Soak Time	6.2.1.1.3.14	~~X~~ min
		6.2.1.1.3.18	~~X~~ ppm
	NTO concentration in Freon	6.2.1.1.3.35 (TCA #1)	10 ppm
		(2nd time if necessary)	<1 ppm
		6.2.1.1.3.35 (TCA #5)	10 ppm
		(2nd time if necessary)	<1 ppm
		6.2.1.1.3.35 (TCA #12)	>50 ppm
		(2nd time if necessary)	<1 ppm
		6.2.1.1.3.35 (TCA #13)	10 ppm
		(2nd time if necessary)	<1 ppm
		6.2.1.1.3.39	5 ppm
		(2nd time if necessary)	5
	OXID CHG PORT -11 NTO vapor concentration	6.2.1.1.3.66	15 ppm
		(2nd time if necessary)	8 ppm
		6.2.1.1.3.80 (if necessary)	12 ppm
		6.2.1.1.3.93 (after 1 hour)	~~X~~ ppm
		(2nd time if necessary)	~~X~~ ppm
		6.2.1.1.3.93 (after 24 hours)	~~X~~ ppm
	OXID PURGE - 13 port NTO vapor concentration	6.2.1.1.3.66	3 ppm
		(2nd time if necessary)	16 ppm
		6.2.1.1.3.80 (if necessary)	58 ppm
		6.2.1.1.3.93 (after 1 hour)	~~X~~ ppm
		(2nd time if necessary)	~~X~~ ppm
		6.2.1.1.3.93 (after 24 hours)	~~X~~ ppm

PREPARED BY: DATE	PERFORMED BY: DATE	WITNESSED FOR NAA: DATE	CERTIFIED FOR McDONNELL: DATE
R.McMahon			VERIFIED BY USAF: DATE

ROCKETDYNE
A DIVISION OF NORTH AMERICAN AVIATION INC

RESULTS FOR 9th & 10th SAMPLES

DESIGN APPROVAL TEST
ORBIT ATTITUDE AND MANEUVER SYSTEM
(SE7)

NAME OF TEST DRAIN AND CLEAN PROCEDURES TEST NO. 106156-401 SHEET 330 OF 413

PART NO. 2-DAY CONFIG. { MAC ____ NAA ____ 14-DAY CONFIG. { MAC 52-52701 NAA 99-106156

7.6.7.4 Parameter	Ref. Paragraph	Value
Engine System "Freon MF" Soak Time	6.2.1.1.3.14	~~X~~ min
NTO concentration in Freon	6.2.1.1.3.18	~~X~~ ppm
	6.2.1.1.3.35 (TCA #1)	<1 ppm
	(2nd time if necessary)	~~1~~ ppm
	6.2.1.1.3.35 (TCA #5)	<1 ppm
	(2nd time if necessary)	~~1~~ ppm
	6.2.1.1.3.35 (TCA #12)	<1 ppm
	(2nd time if necessary)	~~1~~ ppm
	6.2.1.1.3.35 (TCA #13)	<1 ppm
	(2nd time if necessary)	~~1~~ ppm
	6.2.1.1.3.39	<1 ppm
	(2nd time if necessary)	~~1~~
OXID CHG PORT -11 NTO vapor concentration	6.2.1.1.3.66	8 ppm
	(2nd time if necessary)	~~X~~ ppm
	6.2.1.1.3.80 (if necessary)	7 ppm
	6.2.1.1.3.93 (after 1 hour)	~~X~~ ppm
	(2nd time if necessary)	~~X~~ ppm
	6.2.1.1.3.93 (after 24 hours)	~~X~~ ppm
OXID PURGE - 13 port NTO vapor concentration	6.2.1.1.3.66	21 ppm
	(2nd time if necessary)	5 ppm
	6.2.1.1.3.80 (if necessary)	5 ppm
	6.2.1.1.3.93 (after 1 hour)	~~X~~ ppm
	(2nd time if necessary)	~~X~~ ppm
	6.2.1.1.3.93 (after 24 hours)	~~X~~ ppm

PREPARED BY: DATE	PROGRAMMED BY: DATE	WITNESSED FOR NAA: DATE	CERTIFIED FOR MCDONNELL: DATE
R.McMahon	A. Johnson 10/6/65	Perkins 10/5/65	VERIFIED BY NAA: DATE

ROCKETDYNE
A DIVISION OF NORTH AMERICAN AVIATION INC

RESULTS FOR 11th ~~[illegible]~~ SAMPLES

DESIGN APPROVAL TEST
ORBIT ATTITUDE AND MANEUVER SYSTEM
(SE7)

NAME OF TEST DRAIN AND CLEAN PROCEDURES TEST NO. 106156-401 SHEET 330 OF 413

PART NO. 2-DAY CONFIG. { MAC ____ NAA ____ 14-DAY CONFIG. { MAC 52-52701 NAA 99-106156

7.6.7.4

Parameter	Ref. Paragraph	Value
Engine System "Freon MF" Soak Time	6.2.1.1.3.14	~~X~~ min
NTO concentration in Freon	6.2.1.1.3.18	ppm
	6.2.1.1.3.35 (TCA #1)	ppm
	(2nd time if necessary)	ppm
	6.2.1.1.3.35 (TCA #5)	ppm
	(2nd time if necessary)	ppm
	6.2.1.1.3.35 (TCA #12)	ppm
	(2nd time if necessary)	ppm
	6.2.1.1.3.35 (TCA #13)	ppm
	(2nd time if necessary)	ppm
	6.2.1.1.3.39	ppm
	(2nd time if necessary)	
OXID CHG PORT -11 NTO vapor concentration	6.2.1.1.3.66	~~X~~ ppm
	(2nd time if necessary)	~~X~~ ppm
	6.2.1.1.3.80 (if necessary)	640 ppm
	6.2.1.1.3.93 (after 1 hour)	~~X~~ ppm
	(2nd time if necessary)	~~X~~ ppm
	6.2.1.1.3.93 (after 24 hours)	~~X~~ ppm
OXID PURGE - 13 port NTO vapor concentration	6.2.1.1.3.66	~~X~~ ppm
	(2nd time if necessary)	~~X~~ ppm
	6.2.1.1.3.80 (if necessary)	720 ppm
	6.2.1.1.3.93 (after 1 hour)	~~X~~ ppm
	(2nd time if necessary)	~~X~~ ppm
	6.2.1.1.3.93 (after 24 hours)	~~X~~ ppm

PREPARED BY: DATE	PERFORMED BY: DATE	WITNESSED FOR NAA: DATE	CERTIFIED FOR McDONNELL: DATE
R.McMahon	R.B. Antrim 11/6/65	R.B. Antrim 11/6/65	VERIFIED BY USAF: DATE

1172
Test Form 1453

R-15075-1

ROCKETDYNE
A DIVISION OF NORTH AMERICAN AVIATION INC

RESULTS FOR 13th ~~[illegible]~~ SAMPLES

DESIGN APPROVAL TEST
ORBIT ATTITUDE AND MANEUVER SYSTEM
(SE7)

NAME OF TEST DRAIN AND CLEAN PROCEDURES TEST NO. 106156-401 SHEET 330 OF 413

PART NO. 2-DAY CONFIG. { MAC ____ NAA ____ } 14-DAY CONFIG. { MAC 52-52701 NAA 99-106156 }

7.6.7.4	Parameter	Ref. Paragraph	Value
	Engine System "Freon MF" Soak Time	6.2.1.1.3.14	~~[illegible]~~ min
	NTO concentration in Freon	6.2.1.1.3.18	~~[illegible]~~ ppm
		6.2.1.1.3.35 (TCA #1)	~~[illegible]~~ ppm
		(2nd time if necessary)	~~[illegible]~~ ppm
		6.2.1.1.3.35 (TCA #5)	~~[illegible]~~ ppm
		(2nd time if necessary)	~~[illegible]~~ ppm
		6.2.1.1.3.35 (TCA #12)	~~[illegible]~~ ppm
		(2nd time if necessary)	~~[illegible]~~ ppm
		6.2.1.1.3.35 (TCA #13)	~~[illegible]~~ ppm
		(2nd time if necessary)	~~[illegible]~~ ppm
		6.2.1.1.3.39	~~[illegible]~~ ppm
		(2nd time if necessary)	
	OXID CHG PORT -11 NTO vapor concentration	6.2.1.1.3.66	~~[illegible]~~ ppm
		(2nd time if necessary)	~~[illegible]~~ ppm
		6.2.1.1.3.80 (if necessary)	6 ppm
		6.2.1.1.3.93 (after 1 hour)	~~[illegible]~~ ppm
		(2nd time if necessary)	~~[illegible]~~ ppm
		6.2.1.1.3.93 (after 24 hours)	~~[illegible]~~ ppm
	OXID PURGE - 13 port NTO vapor concentration	6.2.1.1.3.66	~~[illegible]~~ ppm
		(2nd time if necessary)	~~[illegible]~~ ppm
		6.2.1.1.3.80 (if necessary)	3 ppm
		6.2.1.1.3.93 (after 1 hour)	~~[illegible]~~ ppm
		(2nd time if necessary)	~~[illegible]~~ ppm
		6.2.1.1.3.93 (after 24 hours)	~~[illegible]~~ ppm

PREPARED BY:	REVIEWED BY:	APPROVED BY:	CONCURRENCE FOR THE MODEL OFFICE
R. McMahon	A. Schavero 10/6/65	R. D. Santiw 10/6/65	COMPILED BY

DESIGN APPROVAL TEST
ORBIT ATTITUDE AND MANEUVER SYSTEM
(SE7)

NAME OF TEST DRAIN AND CLEAN PROCEDURES TEST NO. 106156-401 SHEET 330 OF 413

PART NO. 2-DAY CONFIG. { MAC ____ NAA ____ } 14-DAY CONFIG. { MAC 52-52701 NAA 99-106156 }

7.6.7.4	Parameter	Ref. Paragraph	Value
	Engine System "Freon MF" Soak Time	6.2.1.1.3.14	~~X~~ min
	NTO concentration in Freon	6.2.1.1.3.18	~~X~~ ppm
		6.2.1.1.3.35 (TCA #1)	~~X~~ ppm
		(2nd time if necessary)	~~X~~ ppm
		6.2.1.1.3.35 (TCA #5)	~~X~~ ppm
		(2nd time if necessary)	~~X~~ ppm
		6.2.1.1.3.35 (TCA #12)	~~X~~ ppm
		(2nd time if necessary)	~~X~~ ppm
		6.2.1.1.3.35 (TCA #13)	~~X~~ ppm
		(2nd time if necessary)	~~X~~ ppm
		6.2.1.1.3.39	~~X~~ ppm
		(2nd time if necessary)	
	OXID CHG PORT -11 NTO vapor concentration	6.2.1.1.3.66	~~X~~ ppm
		(2nd time if necessary)	~~X~~ ppm
		6.2.1.1.3.80 (if necessary)	4 ppm
		6.2.1.1.3.93 (after 1 hour)	~~X~~ ppm
		(2nd time if necessary)	~~X~~ ppm
		6.2.1.1.3.93 (after 24 hours)	~~X~~ ppm
	OXID PURGE - 13 port NTO vapor concentration	6.2.1.1.3.66	~~X~~ ppm
		(2nd time if necessary)	~~X~~ ppm
		6.2.1.1.3.80 (if necessary)	2 ppm
		6.2.1.1.3.93 (after 1 hour)	~~X~~ ppm
		(2nd time if necessary)	~~X~~ ppm
		6.2.1.1.3.93 (after 24 hours)	~~X~~ ppm

PREPARED BY: DATE	PERFORMED BY: DATE	WITNESSED FOR NAA: DATE	CERTIFED FOR McDONNELL: DATE
R.McMahon	A. L. Henry 10/6/65	R.A. Arthur 10/6/65	VERIFIED BY USAF: DATE

ROCKETDYNE
A DIVISION OF NORTH AMERICAN AVIATION INC

RESULTS FOR 14th SAMPLE

DESIGN APPROVAL TEST
ORBIT ATTITUDE AND MANEUVER SYSTEM
(SE7)

NAME OF TEST DRAIN AND CLEAN PROCEDURES TEST NO. 106156-401 SHEET 330 OF 413

PART NO. 2-DAY CONFIG. { MAC ____ NAA ____ } 14-DAY CONFIG. { MAC 52-52701 NAA 99-106156 }

7.6.7.4 Parameter	Ref. Paragraph	Value
Engine System "Freon MF" Soak Time	6.2.1.1.3.14	~~min~~
NTO concentration in Freon	6.2.1.1.3.18	~~ppm~~
	6.2.1.1.3.35 (TCA #1)	~~ppm~~
	(2nd time if necessary)	~~ppm~~
	6.2.1.1.3.35 (TCA #5)	~~ppm~~
	(2nd time if necessary)	~~ppm~~
	6.2.1.1.3.35 (TCA #12)	~~ppm~~
	(2nd time if necessary)	~~ppm~~
	6.2.1.1.3.35 (TCA #13)	~~ppm~~
	(2nd time if necessary)	~~ppm~~
	6.2.1.1.3.39	~~ppm~~
	(2nd time if necessary)	
OXID CHG PORT -11 NTO vapor concentration	6.2.1.1.3.66	~~ppm~~
	(2nd time if necessary)	~~ppm~~
	6.2.1.1.3.80 (if necessary)	~~ppm~~
	6.2.1.1.3.93 (after 1 hour)	~~ppm~~
	(2nd time if necessary)	~~ppm~~
	6.2.1.1.3.93 (after 24 hours)	~~ppm~~
OXID PURGE - 13 port NTO vapor concentration	6.2.1.1.3.66	~~ppm~~
	(2nd time if necessary)	~~ppm~~
	6.2.1.1.3.80 (if necessary)	~~ppm~~
	6.2.1.1.3.93 (after 1 hour)	~~ppm~~
	(2nd time if necessary)	~~ppm~~
	6.2.1.1.3.93 (after 24 hours)	~~ppm~~

PREPARED BY:	PREPARED BY:		VERIFIED BY USAF
R. McMahon	A. Schwarz 10/6/65	R. Q. Smith 10/6/65	

DESIGN APPROVAL TEST
ORBIT ATTITUDE AND MANEUVER SYSTEM
(SE7)

NAME OF TEST DRAIN AND CLEAN PROCEDURES TEST NO. 106156-401 SHEET 330 OF 413

PART NO. 2-DAY CONFIG. { MAC ____ NAA ____ } 14-DAY CONFIG. { MAC 52-52701 NAA 99-106156 }

7.6.7.4	Parameter	Ref. Paragraph	Value
	Engine System "Freon MF" Soak Time	6.2.1.1.3.14	~~min~~
	NTO concentration in Freon	6.2.1.1.3.18	~~ppm~~
		6.2.1.1.3.35 (TCA #1)	~~ppm~~
		(2nd time if necessary)	~~ppm~~
		6.2.1.1.3.35 (TCA #5)	~~ppm~~
		(2nd time if necessary)	~~ppm~~
		6.2.1.1.3.35 (TCA #12)	~~ppm~~
		(2nd time if necessary)	~~ppm~~
		6.2.1.1.3.35 (TCA #13)	~~ppm~~
		(2nd time if necessary)	~~ppm~~
		6.2.1.1.3.39	~~ppm~~
		(2nd time if necessary)	
	OXID CHG PORT -11 NTO vapor concentration	6.2.1.1.3.66	~~ppm~~
		(2nd time if necessary)	~~ppm~~
		6.2.1.1.3.80 (if necessary)	3 ppm
		6.2.1.1.3.93 (after 1 hour)	~~ppm~~
		(2nd time if necessary)	~~ppm~~
		6.2.1.1.3.93 (after 24 hours)	~~ppm~~
	OXID PURGE - 13 port NTO vapor concentration	6.2.1.1.3.66	~~ppm~~
		(2nd time if necessary)	~~ppm~~
		6.2.1.1.3.80 (if necessary)	0 ppm
		6.2.1.1.3.93 (after 1 hour)	~~ppm~~
		(2nd time if necessary)	~~ppm~~
		6.2.1.1.3.93 (after 24 hours)	~~ppm~~

PREPARED BY: DATE	PERFORMED BY: DATE	WITNESSED FOR NAA: DATE	CERTIFIED FOR McDONNELL: DATE
R.McMahon	R. Schwarz 10/6/65	R.C. Smith 10/6/65	VERIFIED BY USAF: DATE

ROCKETDYNE
A DIVISION OF NORTH AMERICAN AVIATION INC

RESULTS FOR 16th SAMPLE

DESIGN APPROVAL TEST
ORBIT ATTITUDE AND MANEUVER SYSTEM
(SE7)

NAME OF TEST DRAIN AND CLEAN PROCEDURES TEST NO. 106156-401 SHEET 330 OF 413

PART NO. 2-DAY CONFIG. { MAC ____ NAA ____ 14-DAY CONFIG. { MAC 52-52701 NAA 99-106156

7.6.7.4 Parameter	Ref. Paragraph	Value
Engine System "Freon MF" Soak Time	6.2.1.1.3.14	~~min~~
NTO concentration in Freon	6.2.1.1.3.18	~~ppm~~
	6.2.1.1.3.35 (TCA #1) (2nd time if necessary)	~~ppm~~
	6.2.1.1.3.35 (TCA #5) (2nd time if necessary)	~~ppm~~
	6.2.1.1.3.35 (TCA #12) (2nd time if necessary)	~~ppm~~
	6.2.1.1.3.35 (TCA #13) (2nd time if necessary)	~~ppm~~
	6.2.1.1.3.39 (2nd time if necessary)	~~ppm~~
OXID CHG PORT -11 NTO vapor concentration	6.2.1.1.3.66 (2nd time if necessary)	~~ppm~~
	6.2.1.1.3.80 (if necessary)	~~ppm~~
	6.2.1.1.3.93 (after 1 hour) (2nd time if necessary)	46 ppm
	6.2.1.1.3.93 (after 24 hours)	~~ppm~~
OXID PURGE - 13 port NTO vapor concentration	6.2.1.1.3.66 (2nd time if necessary)	~~ppm~~
	6.2.1.1.3.80 (if necessary)	~~ppm~~
	6.2.1.1.3.93 (after 1 hour) (2nd time if necessary)	42 ppm
	6.2.1.1.3.93 (after 24 hours)	~~ppm~~

PREPARED BY: DATE	PROCURED BY: DATE	WITNESSED FOR NAA: DATE	CERTIFIED FOR McDONNELL: DATE
R. McMahon	A. Schauer 10/6/65	R. D. Antrim 10/6/65	VERIFIED BY USAF: DATE

ROCKETDYNE
A DIVISION OF NORTH AMERICAN AVIATION INC

RESULTS FOR 17th SAMPLE

DESIGN APPROVAL TEST
ORBIT ATTITUDE AND MANEUVER SYSTEM
(SE7)

NAME OF TEST DRAIN AND CLEAN PROCEDURES TEST NO. 106156-401 SHEET 330 OF 413

PART NO. 2-DAY CONFIG. { MAC ____ NAA ____ } 14-DAY CONFIG. { MAC 52-52701 NAA 99-106156 }

7.6.7.4 Parameter	Ref. Paragraph	Value
Engine System "Freon MF" Soak Time	6.2.1.1.3.14	~~min~~
NTO concentration in Freon	6.2.1.1.3.18	~~ppm~~
	6.2.1.1.3.35 (TCA #1)	~~ppm~~
	(2nd time if necessary)	~~ppm~~
	6.2.1.1.3.35 (TCA #5)	~~ppm~~
	(2nd time if necessary)	~~ppm~~
	6.2.1.1.3.35 (TCA #12)	~~ppm~~
	(2nd time if necessary)	~~ppm~~
	6.2.1.1.3.35 (TCA #13)	~~ppm~~
	(2nd time if necessary)	~~ppm~~
	6.2.1.1.3.39	~~ppm~~
	(2nd time if necessary)	
OXID CHG PORT -11 NTO vapor concentration	6.2.1.1.3.66	~~ppm~~
	(2nd time if necessary)	~~ppm~~
	6.2.1.1.3.80 (if necessary)	4 ppm
	6.2.1.1.3.93 (after 1 hour)	~~ppm~~
	(2nd time if necessary)	~~ppm~~
	6.2.1.1.3.93 (after 24 hours)	~~ppm~~
OXID PURGE - 13 port NTO vapor concentration	6.2.1.1.3.66	~~ppm~~
	(2nd time if necessary)	~~ppm~~
	6.2.1.1.3.80 (if necessary)	11 ppm
	6.2.1.1.3.93 (after 1 hour)	~~ppm~~
	(2nd time if necessary)	~~ppm~~
	6.2.1.1.3.93 (after 24 hours)	~~ppm~~

PREPARED BY: DATE	PERFORMED BY: DATE	WITNESSED FOR NAA: DATE	CERTIFED FOR McDONNELL: DATE
R.McMahon	J. L. [illegible]	R. C. Smith 10/6/6[illegible]	VERIFIED BY USAF: DATE

1178
T... Form 1453

R-15075-1

ROCKETDYNE
A DIVISION OF NORTH AMERICAN AVIATION INC

RESULTS FOR 1ST & 2nd SAMPLES

DESIGN APPROVAL TEST
ORBIT ATTITUDE AND MANEUVER SYSTEM
(SE7)

NAME OF TEST DRAIN AND CLEAN PROCEDURES TEST NO. 106156-401 SHEET 331 OF 413

PART NO. 2-DAY CONFIG. { MAC ____ NAA ____ } 14-DAY CONFIG. { MAC 52-52701 NAA 99-106156 }

7.6.7.4 (continued)

Parameter	Ref. Paragraph	Value
OXID CHG PORT - 11 "Freon MF" vapor concentration	6.2.1.1.3.66	>>20 ppm
	(2nd time if necessary)	<20 ppm
	6.2.1.1.3.80 (if necessary)	>>20 ppm
	6.2.1.1.3.93 (after 1 hour)	<20 ppm
	(2nd time if necessary)	<20 ppm
	6.2.1.1.3.93 (after 24 hours)	<20 ppm
OXID PURGE - 13 port "Freon MF" vapor concentration	6.2.1.1.3.66	>>20 ppm
	(2nd time if necessary)	<20 ppm
	6.2.1.1.3.80 (if necessary)	>>20 ppm
	6.2.1.1.3.93 (after 1 hour)	<20 ppm
	(2nd time if necessary)	<20 ppm
	6.2.1.1.3.93 (after 24 hours)	<20 ppm
OXID TANK VENT - 6 NTO vapor concentration	6.2.1.1.2.81	800 ppm
	6.2.1.1.3.90 (if necessary)	28 ppm
	6.2.1.1.3.94 (after 1 hour)	48 ppm
	(2nd time if necessary)	8 ppm
	6.2.1.1.3.94 (after 24 hours)	20 ppm

PREPARED BY: DATE	PERFORMED BY: DATE	WITNESSED FOR NAA: DATE	CERTIFIED FOR McDONNELL: DATE
R.McMahon	4-20-65	4-20-65	APPROVED BY S SCOTT 4-20-65
			VERIFIED BY USAF: DATE

R-15075-1
Test Form 1453

ROCKETDYNE
A DIVISION OF NORTH AMERICAN AVIATION INC

RESULTS FOR 3RD + 4TH SAMPLES

DESIGN APPROVAL TEST
ORBIT ATTITUDE AND MANEUVER SYSTEM
(SE7)

NAME OF TEST DRAIN AND CLEAN PROCEDURES TEST NO. 106156-401 SHEET 331 OF 413

PART NO. 2-DAY CONFIG. { MAC ____ NAA ____ 14-DAY CONFIG. { MAC 52-52701 NAA 99-106156

7.6.7.4 (continued)

Parameter	Ref. Paragraph	Value
OXID CHG PORT - 11 "Freon MF" vapor concentration	6.2.1.1.3.66	> 20 ppm
	(2nd time if necessary)	< 20 ppm
	6.2.1.1.3.80 (if necessary)	<20 ppm
	6.2.1.1.3.93 (after 1 hour)	ppm
	(2nd time if necessary)	ppm
	6.2.1.1.3.93 (after 24 hours)	ppm
OXID PURGE - 13 port "Freon MF" vapor concentration	6.2.1.1.3.66	< 20 ppm
	(2nd time if necessary)	< 20 ppm
	6.2.1.1.3.80 (if necessary)	>20 ppm
	6.2.1.1.3.93 (after 1 hour)	ppm
	(2nd time if necessary)	ppm
	6.2.1.1.3.93 (after 24 hours)	ppm
OXID TANK VENT - 6 NTO vapor concentration	6.2.1.1.2.81	ppm
	6.2.1.1.3.90 (if necessary)	110 ppm
	6.2.1.1.3.94 (after 1 hour)	ppm
	(2nd time if necessary)	ppm
	6.2.1.1.3.94 (after 24 hours)	ppm

PREPARED BY: DATE	PERFORMED BY: DATE	WITNESSED FOR NAA: DATE	CERTIFIED FOR McDONNELL: DATE
R.McMahon			VERIFIED BY USAF: DATE

1180

Test Form 1453

R-15075-1

ROCKETDYNE
A DIVISION OF NORTH AMERICAN AVIATION INC

RESULTS FOR 5TH + 6TH SAMPLES

DESIGN APPROVAL TEST
ORBIT ATTITUDE AND MANEUVER SYSTEM
(SE7)

NAME OF TEST DRAIN AND CLEAN PROCEDURES TEST NO. 106156-401 SHEET 331 OF 413

PART NO. 2-DAY CONFIG. { MAC ____ NAA ____ } 14-DAY CONFIG. { MAC 52-52701 NAA 99-106156 }

7.6.7.4 (continued)

Parameter	Ref. Paragraph	Value
OXID CHG PORT - 11 "Freon MF" vapor concentration	6.2.1.1.3.66	<20 ppm
	(2nd time if necessary)	<20 ppm
	6.2.1.1.3.80 (if necessary)	<20 ppm
	6.2.1.1.3.93 (after 1 hour)	ppm
	(2nd time if necessary)	ppm
	6.2.1.1.3.93 (after 24 hours)	ppm
OXID PURGE - 13 port "Freon MF" vapor concentration	6.2.1.1.3.66	<20 ppm
	(2nd time if necessary)	<20 ppm
	6.2.1.1.3.80 (if necessary)	>20 ppm
	6.2.1.1.3.93 (after 1 hour)	ppm
	(2nd time if necessary)	ppm
	6.2.1.1.3.93 (after 24 hours)	ppm
OXID TANK VENT - 6 NTO vapor concentration	6.2.1.1.2.81	ppm
	6.2.1.1.3.90 (if necessary)	ppm
	6.2.1.1.3.94 (after 1 hour)	208 ppm
	(2nd time if necessary)	ppm
	6.2.1.1.3.94 (after 24 hours)	ppm

PREPARED BY: DATE	REVIEWED BY: DATE	APPROVED FOR NAA: DATE	APPROVED BY MCDONNELL: DATE
R. McMahon	[signature] 4-20-65	[signature] 4-20-65	APPROVED BY S. Scott 4-20-65
			VERIFIED BY USAF: DATE

Test Form 1453

DESIGN APPROVAL TEST
ORBIT ATTITUDE AND MANEUVER SYSTEM
(SE7)

NAME OF TEST DRAIN AND CLEAN PROCEDURES TEST NO. 106156-401 SHEET 331 OF 413

PART NO. 2-DAY CONFIG. { MAC ____ NAA ____ } 14-DAY CONFIG. { MAC 52-52701 NAA 99-106156 }

7.6.7.4 (continued)

Parameter	Ref. Paragraph	Value
OXID CHG PORT - 11 "Freon MF" vapor concentration	6.2.1.1.3.66	<20 ppm
	(2nd time if necessary)	>20 ppm
	6.2.1.1.3.80 (if necessary)	<20 ppm
	6.2.1.1.3.93 (after 1 hour)	ppm
	(2nd time if necessary)	ppm
	6.2.1.1.3.93 (after 24 hours)	ppm
OXID PURGE - 13 port "Freon MF" vapor concentration	6.2.1.1.3.66	<20 ppm
	(2nd time if necessary)	>20 ppm
	6.2.1.1.3.80 (if necessary)	<20 ppm
	6.2.1.1.3.93 (after 1 hour)	ppm
	(2nd time if necessary)	ppm
	6.2.1.1.3.93 (after 24 hours)	ppm
OXID TANK VENT - 6 NTO vapor concentration	6.2.1.1.2.81	166 ppm
	6.2.1.1.3.90 (if necessary)	11 ppm
	6.2.1.1.3.94 (after 1 hour)	48 ppm
	(2nd time if necessary)	ppm
	6.2.1.1.3.94 (after 24 hours)	ppm

PREPARED BY: DATE	PERFORMED BY: DATE	WITNESSED FOR NAA: DATE	CERTIFIED FOR McDONNELL: DATE
R.McMahon	[illegible]	R. A. Santrac 10/6/65	VERIFIED BY USAF: DATE

DESIGN APPROVAL TEST
ORBIT ATTITUDE AND MANEUVER SYSTEM
(SE7)

NAME OF TEST DRAIN AND CLEAN PROCEDURES TEST NO. 106156-401 SHEET 331 OF 413

PART NO. 2-DAY CONFIG. { MAC ____ NAA ____ 14-DAY CONFIG. { MAC 52-52701 NAA ~~99~~-106156

7.6.7.4 (continued)

Parameter	Ref. Paragraph	Value
OXID CHG PORT - 11 "Freon MF" vapor concentration	6.2.1.1.3.66	<20 ppm
	(2nd time if necessary)	<20 ppm
	6.2.1.1.3.80 (if necessary)	ppm
	6.2.1.1.3.93 (after 1 hour)	ppm
	(2nd time if necessary)	ppm
	6.2.1.1.3.93 (after 24 hours)	ppm
OXID PURGE - 13 port "Freon MF" vapor concentration	6.2.1.1.3.66	<20 ppm
	(2nd time if necessary)	<20 ppm
	6.2.1.1.3.80 (if necessary)	ppm
	6.2.1.1.3.93 (after 1 hour)	ppm
	(2nd time if necessary)	ppm
	6.2.1.1.3.93 (after 24 hours)	ppm
OXID TANK VENT - 6 NTO vapor concentration	6.2.1.1.2.81	ppm
	6.2.1.1.3.90 (if necessary)	ppm
	6.2.1.1.3.94 (after 1 hour)	ppm
	(2nd time if necessary)	ppm
	6.2.1.1.3.94 (after 24 hours)	ppm

APPROVED BY:	DATE	PREPARED BY:	DATE	[illegible]	[illegible]
R. McMahon		A. Schauer	10/6/65	R. R. Anderson	10/6/65

R-15075-1

Test Form 1653

DESIGN APPROVAL TEST
ORBIT ATTITUDE AND MANEUVER SYSTEM
(SE7)

NAME OF TEST DRAIN AND CLEAN PROCEDURES TEST NO. 106156-401 SHEET 331 OF 413

PART NO. 2-DAY CONFIG. { MAC ____ NAA ____ } 14-DAY CONFIG. { MAC 52-52701 NAA 99-106156 }

7.6.7.4 (continued)

Parameter	Ref. Paragraph	Value
OXID CHG PORT - 11 "Freon MF" vapor concentration	6.2.1.1.3.66	ppm
	(2nd time if necessary)	ppm
	6.2.1.1.3.80 (if necessary)	ppm
	6.2.1.1.3.93 (after 1 hour)	ppm
	(2nd time if necessary)	ppm
	6.2.1.1.3.93 (after 24 hours)	ppm
OXID PURGE - 13 port "Freon MF" vapor concentration	6.2.1.1.3.66	ppm
	(2nd time if necessary)	ppm
	6.2.1.1.3.80 (if necessary)	ppm
	6.2.1.1.3.93 (after 1 hour)	ppm
	(2nd time if necessary)	ppm
	6.2.1.1.3.93 (after 24 hours)	ppm
OXID TANK VENT - 6 NTO vapor concentration	6.2.1.1.2.81	ppm
	6.2.1.1.3.90 (if necessary)	30 ppm
	6.2.1.1.3.94 (after 1 hour)	ppm
	(2nd time if necessary)	ppm
	6.2.1.1.3.94 (after 24 hours)	ppm

PREPARED BY: DATE	PERFORMED BY: DATE	WITNESSED FOR NAA: DATE	CERTIFIED FOR McDONNELL: DATE
R.McMahon	R. Schauer 10/6/65	R. A. Arthur 10/6/65	VERIFIED BY USAF: DATE

DESIGN APPROVAL TEST
ORBIT ATTITUDE AND MANEUVER SYSTEM
(SE7)

NAME OF TEST DRAIN AND CLEAN PROCEDURES TEST NO. 106156-401 SHEET 331 OF 413

PART NO. 2-DAY CONFIG. { MAC ____ NAA ____ } 14-DAY CONFIG. { MAC 52-52701 NAA 99-106156 }

7.6.7.4 (continued)

Parameter	Ref. Paragraph	Value
OXID CHG PORT - 11 "Freon MF" vapor concentration	6.2.1.1.3.66	ppm
	(2nd time if necessary)	ppm
	6.2.1.1.3.80 (if necessary)	ppm
	6.2.1.1.3.93 (after 1 hour)	ppm
	(2nd time if necessary)	ppm
	6.2.1.1.3.93 (after 24 hours)	ppm
OXID PURGE - 13 port "Freon MF" vapor concentration	6.2.1.1.3.66	ppm
	(2nd time if necessary)	ppm
	6.2.1.1.3.80 (if necessary)	ppm
	6.2.1.1.3.93 (after 1 hour)	ppm
	(2nd time if necessary)	ppm
	6.2.1.1.3.93 (after 24 hours)	ppm
OXID TANK VENT - 6 NTO vapor concentration	6.2.1.1.2.81	ppm
	6.2.1.1.3.90 (if necessary)	16 ppm
	6.2.1.1.3.94 (after 1 hour)	ppm
	(2nd time if necessary)	ppm
	6.2.1.1.3.94 (after 24 hours)	ppm

PREPARED BY: DATE	PURPOSED BY: DATE	WITNESSED FOR NAA: DATE	CERTIFIED FOR McDONNELL: DATE
R.McMahon	A. Schauer 10/6/65	R. C. Antrim 10/6/65	VERIFIED BY USAF: DATE

(1)

DESIGN APPROVAL TEST
ORBIT ATTITUDE AND MANEUVER SYSTEM
(SE7)

NAME OF TEST DRAIN AND CLEAN PROCEDURES TEST NO. 106156-401 SHEET 331 OF 413

PART NO. 2-DAY CONFIG. { MAC ____ NAA ____ } 14-DAY CONFIG. { MAC 52-52701 NAA 99-106156 }

7.6.7.4 (continued)

Parameter	Ref. Paragraph	Value
OXID CHG PORT - 11 "Freon MF" vapor concentration	6.2.1.1.3.66	ppm
	(2nd time if necessary)	ppm
	6.2.1.1.3.80 (if necessary)	ppm
	6.2.1.1.3.93 (after 1 hour)	ppm
	(2nd time if necessary)	ppm
	6.2.1.1.3.93 (after 24 hours)	ppm
OXID PURGE - 13 port "Freon MF" vapor concentration	6.2.1.1.3.66	ppm
	(2nd time if necessary)	ppm
	6.2.1.1.3.80 (if necessary)	ppm
	6.2.1.1.3.93 (after 1 hour)	ppm
	(2nd time if necessary)	ppm
	6.2.1.1.3.93 (after 24 hours)	ppm
OXID TANK VENT - 6 NTO vapor concentration	6.2.1.1.2.81	ppm
	6.2.1.1.3.90 (if necessary)	7 ppm
	6.2.1.1.3.94 (after 1 hour)	160 ppm
	(2nd time if necessary)	ppm
	6.2.1.1.3.94 (after 24 hours)	ppm

PREPARED BY: DATE	PERFORMED BY: DATE	WITNESSED FOR NAA: DATE	CERTIFED FOR McDONNELL: DATE
R.McMahon	[illegible]	R.A. Anthac	VERIFIED BY USAF: DATE
1186			

DESIGN APPROVAL TEST
ORBIT ATTITUDE AND MANEUVER SYSTEM
(SE7)

NAME OF TEST DRAIN AND CLEAN PROCEDURES TEST NO. 106156-401 SHEET 331 OF 413

PART NO. 2-DAY CONFIG. { MAC ____ NAA ____ } 14-DAY CONFIG. { MAC 52-52701 NAA 99-106156 }

7.6.7.4 (continued)

Parameter	Ref. Paragraph	Value
OXID CHG PORT - 11 "Freon MF" vapor concentration	6.2.1.1.3.66	____ ppm
	(2nd time if necessary)	____ ppm
	6.2.1.1.3.80 (if necessary)	____ ppm
	6.2.1.1.3.93 (after 1 hour)	____ ppm
	(2nd time if necessary)	____ ppm
	6.2.1.1.3.93 (after 24 hours)	____ ppm
OXID PURGE - 13 port "Freon MF" vapor concentration	6.2.1.1.3.66	____ ppm
	(2nd time if necessary)	____ ppm
	6.2.1.1.3.80 (if necessary)	____ ppm
	6.2.1.1.3.93 (after 1 hour)	____ ppm
	(2nd time if necessary)	____ ppm
	6.2.1.1.3.93 (after 24 hours)	____ ppm
OXID TANK VENT - 6 NTO vapor concentration	6.2.1.1.2.81	____ ppm
	6.2.1.1.3.90 (if necessary)	____ ppm
	6.2.1.1.3.94 (after 1 hour)	____ ppm
	(2nd time if necessary)	____ ppm
	6.2.1.1.3.94 (after 24 hours)	____ ppm

PREPARED BY: DATE	PERFORMED BY: DATE	WITNESSED FOR NAA: DATE	CERTIFIED FOR McDONNELL: DATE
R.McMahon	A. Schauer 10/6/65	R. O. Smith 10/6/65	VERIFIED BY USAF: DATE

R-15075-1

Test Form 1453

DESIGN APPROVAL TEST
ORBIT ATTITUDE AND MANEUVER SYSTEM
(SE7)

NAME OF TEST DRAIN AND CLEAN PROCEDURES TEST NO. 106156-401 SHEET 332 OF 413

PART NO. 2-DAY CONFIG. { MAC ____ NAA ____ } 14-DAY CONFIG. { MAC 52-52701 NAA 99-106156 }

7.6.7.4 (continued)

Parameter	Ref. Paragraph	Value
OXID TANK VENT -6 "Freon MF" vapor concentration	6.2.1.1.3.81	ANR 673 >20 ppm
	6.2.1.1.3.90 (if necessary)	ANR 673 <20 ppm
	6.2.1.1.3.94 (after 1 hour)	<20 ppm
	(2nd time if necessary)	0 ppm
	6.2.1.1.3.94 (after 24 hours)	<20 ppm
TCA #1 NTO vapor concentration	6.2.1.1.3.66	800 ppm
	(2nd time if necessary)	ANR 673 520 ppm
	6.2.1.1.3.80 (if necessary)	800 ppm
	6.2.1.1.3.93 (after 1 hour)	800 ppm
	(2nd time if necessary)	76 ppm
	6.2.1.1.3.93 (after 24 hours)	76 ppm
TCA #1 "Freon MF" vapor concentration	6.2.1.1.3.66	≥20 ppm
	(2nd time if necessary)	ANR 673 >20 ppm
	6.2.1.1.3.80 (if necessary)	>20 ppm
	6.2.1.1.3.93 (after 1 hour)	<20 ppm
	(2nd time if necessary)	0 ppm
	6.2.1.1.3.93 (after 24 hours)	<20 ppm

PREPARED BY: DATE	PERFORMED BY: DATE	WITNESSED FOR NAA: DATE	CERTIFIED FOR McDONNELL: DATE
R.McMahon 1188	4-20-69	4-20-69	VERIFIED BY USAF: DATE

ROCKETDYNE
A DIVISION OF NORTH AMERICAN AVIATION INC

RESULTS FOR 3RD + 4TH SAMPLES

DESIGN APPROVAL TEST
ORBIT ATTITUDE AND MANEUVER SYSTEM
(SE7)

NAME OF TEST DRAIN AND CLEAN PROCEDURES TEST NO. 106156-401 SHEET 332 OF 413

PART NO. 2-DAY CONFIG. { MAC ____ NAA ____ } 14-DAY CONFIG. { MAC 52-52701 NAA 99-106156 }

7.6.7.4 (continued)

Parameter	Ref. Paragraph	Value
OXID TANK VENT -6 "Freon MF" vapor concentration	6.2.1.1.3.81	~~ppm~~
	6.2.1.1.3.90 (if necessary)	>>20 ppm
	6.2.1.1.3.94 (after 1 hour)	~~ppm~~
	(2nd time if necessary)	~~ppm~~
	6.2.1.1.3.94 (after 24 hours)	~~ppm~~
TCA #1 NTO vapor concentration	6.2.1.1.3.66	(AWN 673) 520 ppm
	(2nd time if necessary)	(AWN 673) 38 ppm
	6.2.1.1.3.80 (if necessary)	122 ppm
	6.2.1.1.3.93 (after 1 hour)	600 ppm
	(2nd time if necessary)	76 ppm
	6.2.1.1.3.93 (after 24 hours)	~~ppm~~
TCA #1 "Freon MF" vapor concentration	6.2.1.1.3.66	(AWN 673) >20 ppm
	(2nd time if necessary)	(AWN 673) <20 ppm
	6.2.1.1.3.80 (if necessary)	>20 ppm
	6.2.1.1.3.93 (after 1 hour)	~~ppm~~
	(2nd time if necessary)	~~ppm~~
	6.2.1.1.3.93 (after 24 hours)	~~ppm~~

PREPARED BY: DATE	REVIEWED BY: DATE	CONCURRED BY NAA: DATE	APPROVED BY USAF: DATE
R. McMahon	[signature] (AWN 673) 4-20-65	[signature] (AWN 673) 4-20-64	[signature] S. Scott 4-20-

R-15075-1

Test Form 1453

DESIGN APPROVAL TEST
ORBIT ATTITUDE AND MANEUVER SYSTEM
(SE7)

NAME OF TEST DRAIN AND CLEAN PROCEDURES TEST NO. 106156-401 SHEET 332 OF 413
PART NO. 2-DAY CONFIG. { MAC ____ NAA ____ } 14-DAY CONFIG. { MAC 52-52701 NAA 99-106156 }

7.6.7.4 (continued)

Parameter	Ref. Paragraph	Value
OXID TANK VENT -6 "Freon MF" vapor concentration	6.2.1.1.3.81	X ppm
	6.2.1.1.3.90 (if necessary)	<20 ppm
	6.2.1.1.3.94 (after 1 hour)	X ppm
	(2nd time if necessary)	X ppm
	6.2.1.1.3.94 (after 24 hours)	X ppm
TCA #1 NTO vapor concentration	6.2.1.1.3.66	12 ppm
	(2nd time if necessary)	4 ppm
	6.2.1.1.3.80 (if necessary)	1000 ppm
	6.2.1.1.3.93 (after 1 hour)	X ppm
	(2nd time if necessary)	X ppm
	6.2.1.1.3.93 (after 24 hours)	X ppm
TCA #1 "Freon MF" vapor concentration	6.2.1.1.3.66	<20 ppm
	(2nd time if necessary)	<20 ppm
	6.2.1.1.3.80 (if necessary)	>20 ppm
	6.2.1.1.3.93 (after 1 hour)	X ppm
	(2nd time if necessary)	X ppm
	6.2.1.1.3.93 (after 24 hours)	X ppm

PREPARED BY: DATE	PERFORMED BY: DATE	WITNESSED FOR NAA: DATE	CERTIFIED FOR McDONNELL: DATE
R.McMahon 1190	4-20-65	4-20-65	SCOTT 4-26-65
			VERIFIED BY USAF: DATE

DESIGN APPROVAL TEST
ORBIT ATTITUDE AND MANEUVER SYSTEM
(SE7)

NAME OF TEST DRAIN AND CLEAN PROCEDURES TEST NO. 106156-401 SHEET 332 OF 413

PART NO. 2-DAY CONFIG. { MAC ____ NAA ____ 14-DAY CONFIG. { MAC 52-52701 NAA 99-106156

7.6.7.4 (continued)

Parameter	Ref. Paragraph	Value
OXID TANK VENT -6 "Freon MF" vapor concentration	6.2.1.1.3.81	<20 ppm
	6.2.1.1.3.90 (if necessary)	<20 ppm
	6.2.1.1.3.94 (after 1 hour)	ppm
	(2nd time if necessary)	ppm
	6.2.1.1.3.94 (after 24 hours)	ppm
TCA #1 NTO vapor concentration	6.2.1.1.3.66	ppm
	(2nd time if necessary)	ppm
	6.2.1.1.3.80 (if necessary)	ppm
	6.2.1.1.3.93 (after 1 hour)	ppm
	(2nd time if necessary)	ppm
	6.2.1.1.3.93 (after 24 hours)	ppm
TCA #1 "Freon MF" vapor concentration	6.2.1.1.3.66	<20 ppm
	(2nd time if necessary)	<20 ppm
	6.2.1.1.3.80 (if necessary)	<20 ppm
	6.2.1.1.3.93 (after 1 hour)	ppm
	(2nd time if necessary)	ppm
	6.2.1.1.3.93 (after 24 hours)	ppm

PREPARED BY: DATE	REVIEWED BY: DATE	APPROVED BY: DATE	CONFIRMED FOR RECORDS BY: DATE
R.McMahon	A. Schauer 10/6/65	R.A. Smith 10/7/65	APPROVED BY USAF: DATE

DESIGN APPROVAL TEST
ORBIT ATTITUDE AND MANEUVER SYSTEM
(SE7)

NAME OF TEST DRAIN AND CLEAN PROCEDURES TEST NO. 106156-401 SHEET 332 OF 413

PART NO. 2-DAY CONFIG. { MAC ____ NAA ____ } 14-DAY CONFIG. { MAC 52-52701 NAA 99-106156 }

7.6.7.4 (continued)

Parameter	Ref. Paragraph	Value
OXID TANK VENT -6 "Freon MF" vapor concentration	6.2.1.1.3.81	ppm
	6.2.1.1.3.90 (if necessary)	ppm
	6.2.1.1.3.94 (after 1 hour)	ppm
	(2nd time if necessary)	ppm
	6.2.1.1.3.94 (after 24 hours)	ppm
TCA #1 NTO vapor concentration	6.2.1.1.3.66	12 ppm
	(2nd time if necessary)	ppm
	6.2.1.1.3.80 (if necessary)	61 ppm
	6.2.1.1.3.93 (after 1 hour)	ppm
	(2nd time if necessary)	ppm
	6.2.1.1.3.93 (after 24 hours)	ppm
TCA #1 "Freon MF" vapor concentration	6.2.1.1.3.66	<20 ppm
	(2nd time if necessary)	<20 ppm
	6.2.1.1.3.80 (if necessary)	<20 ppm
	6.2.1.1.3.93 (after 1 hour)	ppm
	(2nd time if necessary)	ppm
	6.2.1.1.3.93 (after 24 hours)	ppm

PREPARED BY: DATE	PERFORMED BY: DATE	WITNESSED FOR NAA: DATE	CERTIFIED FOR McDONNELL: DATE
R. McMahon	R. Johnson 10/6/65	R. A. Antrac 10/6/65	VERIFIED BY USAF: DATE

DESIGN APPROVAL TEST
ORBIT ATTITUDE AND MANEUVER SYSTEM
(SE7)

NAME OF TEST DRAIN AND CLEAN PROCEDURES TEST NO. 106156-401 SHEET 333 OF 413

PART NO. 2-DAY CONFIG. { MAC ____ NAA ____ } 14-DAY CONFIG. { MAC 52-52701 NAA 99-106156- }

7.6.7.4 (continued)

Parameter	Ref. Paragraph	Value
TCA #5 NTO vapor concentration	6.2.1.1.3.66	18 ppm
	(2nd time if necessary)	26 ppm
	6.2.1.1.3.80 (if necessary)	800 ppm
	6.2.1.1.3.93 (after 1 hour)	181 ppm
	(2nd time if necessary)	125 ppm
	6.2.1.1.3.93 (after 24 hours)	71 ppm
TCA #5 "Freon MF" vapor concentration	6.2.1.1.3.66	≫20 ppm
	(2nd time if necessary)	≫20 ppm
	6.2.1.1.3.80 (if necessary)	<<20 ppm
	6.2.1.1.3.93 (after 1 hour)	<20 ppm
	(2nd time if necessary)	0 ppm
	6.2.1.1.3.93 (after 24 hours)	<20 ppm
TCA #12 NTO vapor concentration	6.2.1.1.3.66	45 ppm
	(2nd time if necessary)	65 ppm
	6.2.1.1.3.80 (if necessary)	800 ppm
	6.2.1.1.3.93 (after 1 hour)	800 ppm
	6.2.1.1.3.93 (after 24 hours)	104 ppm
	6.2.1.1.3.93 SECOND TIME – 116 ppm	
TCA #12 "Freon MF" vapor concentration	6.2.1.1.3.66	≫20 ppm
	(2nd time if necessary)	≫20 ppm
	6.2.1.1.3.80 (if necessary)	≫20 ppm
	6.2.1.1.3.93 (after 1 hour)	<20 ppm
	(2nd time if necessary)	0 ppm
	6.2.1.1.3.93 (after 24 hours)	>20 ppm

PREPARED BY: DATE	PERFORMED BY: DATE	WITNESSED FOR NAA: DATE	CERTIFIED FOR McDONNELL: DATE
R. McMahon	4-20-65	4-20-65	WAIVED S. SCOTT 4-20-65
			VERIFIED BY USAF: DATE

ROCKETDYNE
A DIVISION OF NORTH AMERICAN AVIATION INC

RESULTS FOR 3RD + 4TH SAMPLES

DESIGN APPROVAL TEST
ORBIT ATTITUDE AND MANEUVER SYSTEM
(SE7)

NAME OF TEST DRAIN AND CLEAN PROCEDURES TEST NO. 106156-401 SHEET 333 OF 413
PART NO. 2-DAY CONFIG. { MAC ____ NAA ____ } 14-DAY CONFIG. { MAC 52-52701 NAA 99-106156- }

7.6.7.4 (continued)

Parameter	Ref. Paragraph	Value
TCA #5 NTO vapor concentration	6.2.1.1.3.66	60 ppm
	(2nd time if necessary)	44 ppm
	6.2.1.1.3.80 (if necessary)	>800 ppm
	6.2.1.1.3.93 (after 1 hour)	4 ppm
	(2nd time if necessary)	25 ppm
	6.2.1.1.3.93 (after 24 hours)	X ppm
TCA #5 "Freon MF" vapor concentration	6.2.1.1.3.66	<< 20 ppm
	(2nd time if necessary)	<< 20 ppm
	6.2.1.1.3.80 (if necessary)	>20 ppm
	6.2.1.1.3.93 (after 1 hour)	X ppm
	(2nd time if necessary)	X ppm
	6.2.1.1.3.93 (after 24 hours)	X ppm
TCA #12 NTO vapor concentration	6.2.1.1.3.66	103 ppm
	(2nd time if necessary)	21 ppm
	6.2.1.1.3.80 (if necessary)	>800 ppm
	6.2.1.1.3.93 (after 1 hour)	6 ppm
	6.2.1.1.3.93 (after 24 hours)	X ppm
TCA #12 "Freon MF" vapor concentration	6.2.1.1.3.66	<< 20 ppm
	(2nd time if necessary)	<< 20 ppm
	6.2.1.1.3.80 (if necessary)	>20 ppm
	6.2.1.1.3.93 (after 1 hour)	X ppm
	(2nd time if necessary)	X ppm
	6.2.1.1.3.93 (after 24 hours)	X ppm

PREPARED BY: DATE	PERFORMED BY: DATE	WITNESSED FOR NAA: DATE	CERTIFIED FOR McDONNELL: DATE
R. McMahon 1194	[illegible] 8-26-65	[illegible] 8-26-65	[illegible] 8-26-65
			VERIFIED BY USAF: DATE

R-15075-1

Test Form 1453

ROCKETDYNE
A DIVISION OF NORTH AMERICAN AVIATION INC

RESULTS FOR 5TH & 6TH SAMPLES

DESIGN APPROVAL TEST
ORBIT ATTITUDE AND MANEUVER SYSTEM
(SE7)

NAME OF TEST DRAIN AND CLEAN PROCEDURES TEST NO. 106156-401 SHEET 333 OF 413

PART NO. 2-DAY CONFIG. { MAC ____ NAA ____ } 14-DAY CONFIG. { MAC 52-52701 NAA 99-106156- }

7.6.7.4 (continued)

Parameter	Ref. Paragraph	Value
TCA #5 NTO vapor concentration	6.2.1.1.3.66	16 ppm
	(2nd time if necessary)	6 ppm
	6.2.1.1.3.80 (if necessary)	560 ppm
	6.2.1.1.3.93 (after 1 hour)	X ppm
	(2nd time if necessary)	X ppm
	6.2.1.1.3.93 (after 24 hours)	X ppm
TCA #5 "Freon MF" vapor concentration	6.2.1.1.3.66	>20 ppm
	(2nd time if necessary)	<20 ppm
	6.2.1.1.3.80 (if necessary)	>20 ppm
	6.2.1.1.3.93 (after 1 hour)	X ppm
	(2nd time if necessary)	X ppm
	6.2.1.1.3.93 (after 24 hours)	X ppm
TCA #12 NTO vapor concentration	6.2.1.1.3.66	16 ppm
	(2nd time if necessary)	8 ppm
	6.2.1.1.3.80 (if necessary)	16 ppm
	6.2.1.1.3.93 (after 1 hour)	102 ppm
	6.2.1.1.3.93 (after 24 hours)	X ppm
TCA #12 "Freon MF" vapor concentration	6.2.1.1.3.66	>20 ppm
	(2nd time if necessary)	>20 ppm
	6.2.1.1.3.80 (if necessary)	>20 ppm
	6.2.1.1.3.93 (after 1 hour)	X ppm
	(2nd time if necessary)	X ppm
	6.2.1.1.3.93 (after 24 hours)	X ppm

PREPARED BY: DATE	PERFORMED BY: DATE	WITNESSED FOR NAA: DATE	CERTIFIED FOR MCDONNELL: DATE
R.McMahon	4-20-65	4-20-65	WAIVED S. SCOTT 4-20-65
			VERIFIED BY USAF: DATE

DESIGN APPROVAL TEST
ORBIT ATTITUDE AND MANEUVER SYSTEM
(SE7)

NAME OF TEST DRAIN AND CLEAN PROCEDURES TEST NO. 106156-401 SHEET 333 OF 413

PART NO. 2-DAY CONFIG. { MAC ____ NAA ____ } 14-DAY CONFIG. { MAC 52-52701 NAA 99-106156- }

7.6.7.4 (continued)

Parameter	Ref. Paragraph	Value
TCA #5 NTO vapor concentration	6.2.1.1.3.66	4 ppm
	(2nd time if necessary)	6 ppm
	6.2.1.1.3.80 (if necessary)	8 ppm
	6.2.1.1.3.93 (after 1 hour)	ppm
	(2nd time if necessary)	ppm
	6.2.1.1.3.93 (after 24 hours)	ppm
TCA #5 "Freon MF" vapor concentration	6.2.1.1.3.66	>20 ppm
	(2nd time if necessary)	<20 ppm
	6.2.1.1.3.80 (if necessary)	<20 ppm
	6.2.1.1.3.93 (after 1 hour)	ppm
	(2nd time if necessary)	ppm
	6.2.1.1.3.93 (after 24 hours)	ppm
TCA #12 NTO vapor concentration	6.2.1.1.3.66	7 ppm
	(2nd time if necessary)	13 ppm
	6.2.1.1.3.80 (if necessary)	4 ppm
	6.2.1.1.3.93 (after 1 hour)	110 ppm
	6.2.1.1.3.93 (after 24 hours)	ppm
TCA #12 "Freon MF" vapor concentration	6.2.1.1.3.66	>20 ppm
	(2nd time if necessary)	>20 ppm
	6.2.1.1.3.80 (if necessary)	>20 ppm
	6.2.1.1.3.93 (after 1 hour)	ppm
	(2nd time if necessary)	ppm
	6.2.1.1.3.93 (after 24 hours)	ppm

PREPARED BY: DATE	PERFORMED BY: DATE	WITNESSED FOR NAA: DATE	CERTIFED FOR McDONNELL: DATE
R.McMahon	[illegible]	[illegible] 10-5-64	VERIFIED BY USAF: DATE

DESIGN APPROVAL TEST
ORBIT ATTITUDE AND MANEUVER SYSTEM
(SE7)

NAME OF TEST DRAIN AND CLEAN PROCEDURES TEST NO. 106156-401 SHEET 333 OF 413

PART NO. 2-DAY CONFIG. { MAC ____ NAA ____ } 14-DAY CONFIG. { MAC 52-52701 NAA 99-106156- }

7.6.7.4 (continued)

Parameter	Ref. Paragraph	Value
TCA #5 NTO vapor concentration	6.2.1.1.3.66	5 ppm
	(2nd time if necessary)	10 ppm
	6.2.1.1.3.80 (if necessary)	16 ppm
	6.2.1.1.3.93 (after 1 hour)	ppm
	(2nd time if necessary)	ppm
	6.2.1.1.3.93 (after 24 hours)	ppm
TCA #5 "Freon MF" vapor concentration	6.2.1.1.3.66	<20 ppm
	(2nd time if necessary)	ppm
	6.2.1.1.3.80 (if necessary)	ppm
	6.2.1.1.3.93 (after 1 hour)	ppm
	(2nd time if necessary)	ppm
	6.2.1.1.3.93 (after 24 hours)	ppm
TCA #12 NTO vapor concentration	6.2.1.1.3.66	15 ppm
	(2nd time if necessary)	5 ppm
	6.2.1.1.3.80 (if necessary)	7 ppm
	6.2.1.1.3.93 (after 1 hour)	ppm
	6.2.1.1.3.93 (after 24 hours)	ppm
TCA #12 "Freon MF" vapor concentration	6.2.1.1.3.66	<20 ppm
	(2nd time if necessary)	<20 ppm
	6.2.1.1.3.80 (if necessary)	<20 ppm
	6.2.1.1.3.93 (after 1 hour)	ppm
	(2nd time if necessary)	ppm
	6.2.1.1.3.93 (after 24 hours)	ppm

Prepared by: Date	Reviewed by: Date	Approved by (Test Engr) Date	Approved for Rocketdyne Date
R. Hitchcock	A. Schewer 10/6/65	R. O. Amtrac 10/7/65	Approved by NAA Date

DESIGN APPROVAL TEST
ORBIT ATTITUDE AND MANEUVER SYSTEM
(SE7)

NAME OF TEST DRAIN AND CLEAN PROCEDURES TEST NO. 106156-401 SHEET 334 OF 413

PART NO. 2-DAY CONFIG. { MAC ____ NAA ____ } 14-DAY CONFIG. { MAC 52-52701 NAA 99-106156 }

7.6.7.4 (continued)

Parameter	Ref. Paragraph	Value
TCA #13 NTO vapor concentration	6.2.1.1.3.66	13 ppm
	(2nd time if necessary)	120 ppm
	6.2.1.1.3.80 (if necessary)	800 ppm
	6.2.1.1.3.93 (after 1 hour)	800 ppm
	(2nd time if necessary)	48 ppm
	6.2.1.1.3.93 (after 24 hours)	4 ppm
TCA #13 "Freon MF" vapor concentration	6.2.1.1.3.66	>>20 ppm
	(2nd time if necessary)	>>20 ppm
	6.2.1.1.3.80 (if necessary)	<<20 ppm
	6.2.1.1.3.93 (after 1 hour)	<20 ppm
	(2nd time if necessary)	0 ppm
	6.2.1.1.3.93 (after 24 hours)	<20 ppm
Engine System Alcohol Soak Time	6.2.1.2.3.14	120 min
MMH concentration in Alcohol	6.2.1.2.3.18	800 ppm
	6.2.1.2.3.35 (TCA #1)	16 ppm
	(2nd time if necessary)	10.5 ppm
	6.2.1.2.3.35 (TCA #5)	10 ppm
	(2nd time if necessary)	40.5 ppm
	6.2.1.2.3.35 (TCA #12)	600 ppm
	(2nd time if necessary)	10.5 ppm
	6.2.1.2.3.35 (TCA #13)	125 ppm
	(2nd time if necessary)	10.5 ppm
	6.2.1.2.3.39	1 ppm
	(2nd time if necessary)	8.5 ppm

PREPARED BY: DATE	PERFORMED BY: DATE	WITNESSED FOR NAA: DATE	CERTIFIED FOR McDONNELL: DATE
R. McMahon	[illegible] 4-20-65	[illegible] 4-20-65	WAIVED BY S. SCOTT 4-20-65
			VERIFIED BY USAF: DATE

ROCKETDYNE
A DIVISION OF NORTH AMERICAN AVIATION INC

RESULTS FOR 3RD & 4TH SAMPLES

DESIGN APPROVAL TEST
ORBIT ATTITUDE AND MANEUVER SYSTEM
(SE7)

NAME OF TEST DRAIN AND CLEAN PROCEDURES TEST NO. 106156-401 SHEET 334 OF 413

PART NO. 2-DAY CONFIG. { MAC ____ NAA ____ } 14-DAY CONFIG. { MAC 52-52701 NAA 99-106156 }

7.6.7.4 (continued)

Parameter	Ref. Paragraph	Value
TCA #13 NTO vapor concentration	6.2.1.1.3.66	ANR 673 93 ppm
	(2nd time if necessary)	ANR 673 48 ppm
	6.2.1.1.3.80 (if necessary)	>800 ppm
	6.2.1.1.3.93 (after 1 hour)	350 ppm
	(2nd time if necessary)	8 ppm
	6.2.1.1.3.93 (after 24 hours)	~~ppm~~
TCA #13 "Freon MF" vapor concentration	6.2.1.1.3.66	ANR 673 >20 ppm
	(2nd time if necessary)	ANR 673 <20 ppm
	6.2.1.1.3.80 (if necessary)	>20 ppm
	6.2.1.1.3.93 (after 1 hour)	~~ppm~~
	(2nd time if necessary)	~~ppm~~
	6.2.1.1.3.93 (after 24 hours)	~~ppm~~
Engine System Alcohol Soak Time	6.2.1.2.3.14	~~min~~
	6.2.1.2.3.18	~~ppm~~
MMH concentration in Alcohol	6.2.1.2.3.35 (TCA #1)	10 ppm
	(2nd time if necessary)	5 ppm
	6.2.1.2.3.35 (TCA #5)	7 ppm
	(2nd time if necessary)	8 ppm
	6.2.1.2.3.35 (TCA #12)	25 ppm
	(2nd time if necessary)	5 ppm
	6.2.1.2.3.35 (TCA #13)	20 ppm
	(2nd time if necessary)	5 ppm
	6.2.1.2.3.39	7 ppm
	(2nd time if necessary)	5 ppm

PREPARED BY: DATE	REVIEWED BY: DATE	[illegible]	[illegible]
R. McMahon	4-20-65	4-20-65	W. E. S. SCOTT

Results for 5th & 6th [illegible]

DESIGN APPROVAL TEST
ORBIT ATTITUDE AND MANEUVER SYSTEM
(SE7)

NAME OF TEST DRAIN AND CLEAN PROCEDURES TEST NO. 106156-401 SHEET 334 OF 413

PART NO. 2-DAY CONFIG. { MAC ____ NAA ____ } 14-DAY CONFIG. { MAC 52-52701 NAA 99-106156 }

7.6.7.4 (continued)

Parameter	Ref. Paragraph	Value
TCA #13 NTO vapor concentration	6.2.1.1.3.66	6 ppm
	(2nd time if necessary)	26 ppm
	6.2.1.1.3.80 (if necessary)	720 ppm
	6.2.1.1.3.93 (after 1 hour)	ppm
	(2nd time if necessary)	ppm
	6.2.1.1.3.93 (after 24 hours)	ppm
TCA #13 "Freon MF" vapor concentration	6.2.1.1.3.66	>20 ppm
	(2nd time if necessary)	>20 ppm
	6.2.1.1.3.80 (if necessary)	>20 ppm
	6.2.1.1.3.93 (after 1 hour)	ppm
	(2nd time if necessary)	ppm
	6.2.1.1.3.93 (after 24 hours)	ppm
Engine System Alcohol Soak Time	6.2.1.2.3.14	min
	6.2.1.2.3.18	ppm
MMH concentration in Alcohol	6.2.1.2.3.35 (TCA #1)	3 ppm
	(2nd time if necessary)	3 ppm
	6.2.1.2.3.35 (TCA #5)	3 ppm
	(2nd time if necessary)	2 ppm
	6.2.1.2.3.35 (TCA #12)	3 ppm
	(2nd time if necessary)	4 ppm
	6.2.1.2.3.35 (TCA #13)	7 ppm
	(2nd time if necessary)	11 ppm
	6.2.1.2.3.39	2 ppm
	(2nd time if necessary)	1 ppm

PREPARED BY: DATE	PERFORMED BY: DATE	WITNESSED FOR NAA: DATE	CERTIFIED FOR McDONNELL: DATE
R. McMahon	[illegible] 4-20-65	[illegible] 4-20-65	WAIVED BY [illegible] 12-61
			VERIFIED BY USAF: DATE

DESIGN APPROVAL TEST
ORBIT ATTITUDE AND MANEUVER SYSTEM
(SE7)

NAME OF TEST DRAIN AND CLEAN PROCEDURES TEST NO. 106156-401 SHEET 334 OF 413

PART NO. 2-DAY CONFIG. { MAC ____ NAA ____ } 14-DAY CONFIG. { MAC 52-52701 NAA 99-106156 }

7.6.7.4 (continued)

Parameter	Ref. Paragraph	Value
TCA #13 NTO vapor concentration	6.2.1.1.3.66	6 ppm
	(2nd time if necessary)	11 ppm
	6.2.1.1.3.80 (if necessary)	4 ppm
	6.2.1.1.3.93 (after 1 hour)	ppm
	(2nd time if necessary)	ppm
	6.2.1.1.3.93 (after 24 hours)	ppm
TCA #13 "Freon MF" vapor concentration	6.2.1.1.3.66	<20 ppm
	(2nd time if necessary)	>20 ppm
	6.2.1.1.3.80 (if necessary)	<20 ppm
	6.2.1.1.3.93 (after 1 hour)	ppm
	(2nd time if necessary)	ppm
	6.2.1.1.3.93 (after 24 hours)	ppm
Engine System Alcohol Soak Time	6.2.1.2.3.14	min
MMH concentration in Alcohol	6.2.1.2.3.18	ppm
	6.2.1.2.3.35 (TCA #1)	<0.5 ppm
	(2nd time if necessary)	<0.5 ppm
	6.2.1.2.3.35 (TCA #5)	4 ppm
	(2nd time if necessary)	<0.5 ppm
	6.2.1.2.3.35 (TCA #12)	9 ppm
	(2nd time if necessary)	<0.5 ppm
	6.2.1.2.3.35 (TCA #13)	60 ppm
	(2nd time if necessary)	<0.5 ppm
	6.2.1.2.3.39	<0.5 ppm
	(2nd time if necessary)	<0.5 ppm

PREPARED BY: DATE	REVIEWED BY: DATE	WITNESSED FOR NAA: DATE	CERTIFIED FOR McDONNELL: DATE
R. McMahon	R. Schauer 10/6/65	R. V. Antuno 10/6/65	VERIFIED BY USAF: DATE

DESIGN APPROVAL TEST
ORBIT ATTITUDE AND MANEUVER SYSTEM
(SE7)

NAME OF TEST DRAIN AND CLEAN PROCEDURES TEST NO. 106156-401 SHEET 334 OF 413

PART NO. 2-DAY CONFIG. { MAC ____ NAA ____ } 14-DAY CONFIG. { MAC 52-52701 NAA 99-106156 }

7.6.7.4 (continued)

Parameter	Ref. Paragraph	Value
TCA #13 NTO vapor concentration	6.2.1.1.3.66	9 ppm
	(2nd time if necessary)	9 ppm
	6.2.1.1.3.80 (if necessary)	3 ppm
	6.2.1.1.3.93 (after 1 hour)	ppm
	(2nd time if necessary)	ppm
	6.2.1.1.3.93 (after 24 hours)	ppm
TCA #13 "Freon MF" vapor concentration	6.2.1.1.3.66	<20 ppm
	(2nd time if necessary)	<20 ppm
	6.2.1.1.3.80 (if necessary)	<20 ppm
	6.2.1.1.3.93 (after 1 hour)	ppm
	(2nd time if necessary)	ppm
	6.2.1.1.3.93 (after 24 hours)	ppm
Engine System Alcohol Soak Time	6.2.1.2.3.14	min
MMH concentration in Alcohol	6.2.1.2.3.18	ppm
	6.2.1.2.3.35 (TCA #1)	ppm
	(2nd time if necessary)	ppm
	6.2.1.2.3.35 (TCA #5)	ppm
	(2nd time if necessary)	ppm
	6.2.1.2.3.35 (TCA #12)	ppm
	(2nd time if necessary)	ppm
	6.2.1.2.3.35 (TCA #13)	ppm
	(2nd time if necessary)	ppm
	6.2.1.2.3.39	ppm
	(2nd time if necessary)	ppm

PREPARED BY: DATE	PERFORMED BY: DATE	WITNESSED FOR NAA: DATE	CERTIFIED FOR McDONNELL: DATE
R. McMahon	[illegible]	[illegible] 10/6/61	VERIFIED BY USAF: DATE

DESIGN APPROVAL TEST
ORBIT ATTITUDE AND MANEUVER SYSTEM
(SE7)

NAME OF TEST DRAIN AN. CLEAN PROCEDURES TEST NO. 106156-401 SHEET 335 OF 413

PART NO. 2-DAY CONFIG. { MAC ____ NAA ____ } 14-DAY CONFIG. { MAC 52-52701 NAA 99-106156 }

7.6.7.4 (continued)

Parameter	Ref. Paragraph	Value
FUEL CHG PORT - 15 MMH vapor concentration	6.2.1.2.3.89	22 ppm
	(2nd time if necessary)	5 ppm
	6.2.1.2.3.103	3 ppm
	6.2.1.2.3.116 (after 1 hour)	7 ppm
	6.2.1.2.3.116 (after 24 hours)	5 ppm
FUEL PURGE - 16 port MMH vapor concentration	6.2.1.2.3.89	64 ppm
	(2nd time if necessary)	5 ppm
	6.2.1.2.3.103	33 ppm
	6.2.1.2.3.116 (after 1 hour)	10 ppm
	6.2.1.2.3.116 (after 24 hours)	14 ppm
FUEL CHG PORT - 15 Alcohol vapor concentration	6.2.1.2.3.89	270 ppm
	6.2.1.2.3.116 (after 1 hour)	145 ppm
	6.2.1.2.3.116 (after 24 hours)	3 ppm
FUEL PURGE - 16 port Alcohol vapor concentration	6.2.1.2.3.89	180 ppm
	6.2.1.2.3.116 (after 1 hour)	172 ppm
	6.2.1.2.3.116 (after 24 hours)	205 ppm
FUEL CHG PORT - 15 "Freon MF" vapor concentration	6.2.1.2.3.89 (if necessary)	>>20 ppm
	(2nd time if necessary)	<20 ppm
	6.2.1.2.3.116 (if necessary)	0 ppm
	6.2.1.2.3.116 (after 1 hour if necessary)	0 ppm
	6.2.1.2.3.116 (after 24 hours if necessary)	40 ppm

PREPARED BY: DATE	PERFORMED BY: DATE	WITNESSED FOR NAA: DATE	CERTIFIED FOR McDONNELL: DATE
R.McMahon	A. Schauer 7/20/65	7-20-65	7-30-65
			VERIFIED BY USAF: DATE

DESIGN APPROVAL TEST
ORBIT ATTITUDE AND MANEUVER SYSTEM
(SE7)

NAME OF TEST DRAIN AND CLEAN PROCEDURES TEST NO. 106156-401 SHEET 335 OF 413

PART NO. 2-DAY CONFIG. { MAC ____ NAA ____ } 14-DAY CONFIG. { MAC 52-52701 NAA 99-106156 }

7.6.7.4 (continued)

Parameter	Ref. Paragraph	Value
FUEL CHG PORT - 15 MMH vapor concentration	6.2.1.2.3.89	<5 ppm
	(2nd time if necessary)	<5 ppm
	6.2.1.2.3.103	<5 ppm
	6.2.1.2.3.116 (after 1 hour)	X ppm
	6.2.1.2.3.116 (after 24 hours)	X ppm
FUEL PURGE - 16 port MMH vapor concentration	6.2.1,2.3.89	6 ppm
	(2nd time if necessary)	<5 ppm
	6.2.1.2.3.103	19 ppm
	6.2.1.2.3.116 (after 1 hour)	X ppm
	6.2.1.2.3.116 (after 24 hours)	X ppm
FUEL CHG PORT - 15 Alcohol vapor concentration	6.2.1.2.3.81.4	>200 ppm
	(2nd time if necessary)	270 ppm
	6.2.1.2.3.89	X ppm
	6.2.1.2.3.116 (after 1 hour)	X ppm
	6.2.1.2.3.116 (after 24 hours)	X ppm
FUEL PURGE - 16 port Alcohol vapor concentration	6.2.1.2.3.89	>20 ppm
	6.2.1.2.3.116 (after 1 hour)	X ppm
	6.2.1.2.3.116 (after 24 hours)	X ppm
FUEL CHG PORT - 15 "Freon MF" vapor concentration	6.2.1.2.3.89 (if necessary)	>20 ppm
	(2nd time if necessary)	<20 ppm
	6.2.1.2.3.116 (if necessary)	X ppm
	6.2.1.2.3.116 (after 1 hour if necessary)	X ppm
	6.2.1.2.3.116 (after 24 hours if necessary)	X ppm

PREPARED BY: DATE	PERFORMED BY: DATE	WITNESSED FOR NAA: DATE	CERTIFED FOR McDONNELL: DATE
R. McMahon	[illegible]	R.A. Antrim	VERIFIED BY USAF: DATE

DESIGN APPROVAL TEST
ORBIT ATTITUDE AND MANEUVER SYSTEM
(SE7)

NAME OF TEST DRAIN AND CLEAN PROCEDURES TEST NO. 106156-401 SHEET 335 OF 413

PART NO. 2-DAY CONFIG. { MAC ____ NAA ____ } 14-DAY CONFIG. { MAC 52-52701 NAA 99-106156 }

7.6.7.4 (continued)

Parameter	Ref. Paragraph	Value
FUEL CHG PORT - 15 MMH vapor concentration	6.2.1.2.3.89	8 ppm
	(2nd time if necessary)	<5 ppm
	6.2.1.2.3.103	ppm
	6.2.1.2.3.116 (after 1 hour)	ppm
	6.2.1.2.3.116 (after 24 hours)	ppm
FUEL PURGE - 16 port MMH vapor concentration	6.2.1.2.3.89	4 ppm
	(2nd time if necessary)	<5 ppm
	6.2.1.2.3.103	ppm
	6.2.1.2.3.116 (after 1 hour)	ppm
	6.2.1.2.3.116 (after 24 hours)	ppm
FUEL CHG PORT - 15 Alcohol vapor concentration	6.2.1.2.3.81.4	ppm
	(2nd time if necessary)	ppm
	6.2.1.2.3.89	220 ppm
	6.2.1.2.3.116 (after 1 hour)	ppm
	6.2.1.2.3.116 (after 24 hours)	ppm
FUEL PURGE - 16 port Alcohol vapor concentration	6.2.1.2.3.89	<20 ppm
	6.2.1.2.3.116 (after 1 hour)	ppm
	6.2.1.2.3.116 (after 24 hours)	ppm
FUEL CHG PORT - 15 "Freon MF" vapor concentration	6.2.1.2.3.89 (if necessary)	>20 ppm
	(2nd time if necessary)	<20 ppm
	6.2.1.2.3.116 (if necessary)	ppm
	6.2.1.2.3.116 (after 1 hour if necessary)	ppm
	6.2.1.2.3.116 (after 24 hours if necessary)	ppm

Prepared by:	Reviewed by:	Approved by:	Approved by Customer:
R. Kelleher	R. Schauer 10/6/65	R.O. Sutter 10/6	

DESIGN APPROVAL TEST
ORBIT ATTITUDE AND MANEUVER SYSTEM
(SE7)

NAME OF TEST DRAIN AND CLEAN PROCEDURES TEST NO. 106156-401 SHEET 335 OF 413

PART NO. 2-DAY CONFIG. { MAC ____ NAA ____ } 14-DAY CONFIG. { MAC 52-52701 NAA 99-106156 }

7.6.7.4 (continued)

Parameter	Ref. Paragraph	Value
FUEL CHG PORT - 15 MMH vapor concentration	6.2.1.2.3.89	ppm
	(2nd time if necessary)	ppm
	6.2.1.2.3.103	ppm
	6.2.1.2.3.116 (after 1 hour)	ppm
	6.2.1.2.3.116 (after 24 hours)	ppm
FUEL PURGE - 16 port MMH vapor concentration	6.2.1.2.3.89	ppm
	(2nd time if necessary)	ppm
	6.2.1.2.3.103	ppm
	6.2.1.2.3.116 (after 1 hour)	ppm
	6.2.1.2.3.116 (after 24 hours)	ppm
FUEL CHG PORT - 15 Alcohol vapor concentration	6.2.1.2.3.81.4	ppm
	(2nd time if necessary)	ppm
	6.2.1.2.3.89	>20 ppm
	6.2.1.2.3.116 (after 1 hour)	ppm
	6.2.1.2.3.116 (after 24 hours)	ppm
FUEL PURGE - 16 port Alcohol vapor concentration	6.2.1.2.3.89	>20 ppm
	6.2.1.2.3.116 (after 1 hour)	ppm
	6.2.1.2.3.116 (after 24 hours)	ppm
FUEL CHG PORT - 15 "Freon MF" vapor concentration	6.2.1.2.3.89 (if necessary)	20 ppm
	(2nd time if necessary)	<20 ppm
	6.2.1.2.3.116 (if necessary)	ppm
	6.2.1.2.3.116 (after 1 hour if necessary)	ppm
	6.2.1.2.3.116 (after 24 hours if necessary)	ppm

PREPARED BY: DATE	PERFORMED BY: DATE	WITNESSED FOR NAA: DATE	CERTIFED FOR McDONNELL: DATE
R. McMahon 1206	[illegible] 10/6/65	R. D. Smith 10/6/65	VERIFIED BY USAF: DATE

DESIGN APPROVAL TEST
ORBIT ATTITUDE AND MANEUVER SYSTEM
(SE7)

NAME OF TEST DRAIN AND CLEAN PROCEDURES TEST NO. 106156-401 SHEET 335 OF 413
PART NO. 2-DAY CONFIG. { MAC / NAA } 14-DAY CONFIG. { MAC 52-52701 / NAA 99-106156 }

7.6.7.4 (continued)

Parameter	Ref. Paragraph	Value
FUEL CHG PORT - 15 MMH vapor concentration	6.2.1.2.3.89	ppm
	(2nd time if necessary)	ppm
	6.2.1.2.3.103	ppm
	6.2.1.2.3.116 (after 1 hour)	ppm
	6.2.1.2.3.116 (after 24 hours)	ppm
FUEL PURGE - 16 port MMH vapor concentration	6.2.1.2.3.89	ppm
	(2nd time if necessary)	ppm
	6.2.1.2.3.103	ppm
	6.2.1.2.3.116 (after 1 hour)	ppm
	6.2.1.2.3.116 (after 24 hours)	ppm
FUEL CHG PORT - 15 Alcohol vapor concentration	6.2.1.2.3.81.4	ppm
	(2nd time if necessary)	ppm
	6.2.1.2.3.89	>20 ppm
	6.2.1.2.3.116 (after 1 hour)	ppm
	6.2.1.2.3.116 (after 24 hours)	ppm
FUEL PURGE - 16 port Alcohol vapor concentration	6.2.1.2.3.89	>20 ppm
	6.2.1.2.3.116 (after 1 hour)	ppm
	6.2.1.2.3.116 (after 24 hours)	ppm
FUEL CHG PORT - 15 "Freon MF" vapor concentration	6.2.1.2.3.89 (if necessary)	ppm
	(2nd time if necessary)	ppm
	6.2.1.2.3.116 (if necessary)	ppm
	6.2.1.2.3.116 (after 1 hour if necessary)	ppm
	6.2.1.2.3.116 (after 24 hours if necessary)	ppm

PREPARED BY: DATE	REVIEWED BY: DATE	APPROVED BY: DATE	CERTIFIED FOR ENGINEERING USE
R. McMahon	A. Schauer 10/6/65	R. D. Smith 10/6/65	COMPLIED BY USAF DATE

(A)

DESIGN APPROVAL TEST
ORBIT ATTITUDE AND MANEUVER SYSTEM
(SE7)

NAME OF TEST DRAIN AND CLEAN PROCEDURES TEST NO. 106156-401 SHEET 335 OF 413

PART NO. 2-DAY CONFIG. { MAC ____ NAA ____ } 14-DAY CONFIG. { MAC 52-52701 NAA 99-106156 }

7.6.7.4 (continued)

Parameter	Ref. Paragraph	Value
FUEL CHG PORT - 15 MMH vapor concentration	6.2.1.2.3.89	~~ppm~~
	(2nd time if necessary)	~~ppm~~
	6.2.1.2.3.103	~~ppm~~
	6.2.1.2.3.116 (after 1 hour)	~~ppm~~
	6.2.1.2.3.116 (after 24 hours)	~~ppm~~
FUEL PURGE - 16 port MMH vapor concentration	6.2.1.2.3.89	~~ppm~~
	(2nd time if necessary)	~~ppm~~
	6.2.1.2.3.103	~~ppm~~
	6.2.1.2.3.116 (after 1 hour)	~~ppm~~
	6.2.1.2.3.116 (after 24 hours)	~~ppm~~
FUEL CHG PORT - 15 Alcohol vapor concentration	6.2.1.2.3.81.4	~~ppm~~
	(2nd time if necessary)	~~ppm~~
	6.2.1.2.3.89	48 ppm
	6.2.1.2.3.116 (after 1 hour)	~~ppm~~
	6.2.1.2.3.116 (after 24 hours)	~~ppm~~
FUEL PURGE - 16 port Alcohol vapor concentration	6.2.1.2.3.89	112 ppm
	6.2.1.2.3.116 (after 1 hour)	~~ppm~~
	6.2.1.2.3.116 (after 24 hours)	~~ppm~~
FUEL CHG PORT - 15 "Freon MF" vapor concentration	6.2.1.2.3.89 (if necessary)	~~ppm~~
	(2nd time if necessary)	~~ppm~~
	6.2.1.2.3.116 (if necessary)	~~ppm~~
	6.2.1.2.3.116 (after 1 hour if necessary)	~~ppm~~
	6.2.1.2.3.116 (after 24 hours if necessary)	~~ppm~~

PREPARED BY: DATE	PERFORMED BY: DATE	WITNESSED FOR NAA: DATE	CERTIFED FOR McDONNELL: DATE
R. McMahon	A Bohanon 10/6/65	R. A. Antrim 10/6/65	VERIFIED BY USAF: DATE

1208

(A)

DESIGN APPROVAL TEST
ORBIT ATTITUDE AND MANEUVER SYSTEM
(SE7)

NAME OF TEST DRAIN AND CLEAN PROCEDURES TEST NO. 106156-401 SHEET 335 OF 413

PART NO. 2-DAY CONFIG. { MAC ____ NAA ____ 14-DAY CONFIG. { MAC 52-52701 NAA 99-106156

7.6.7.4 (continued)

Parameter	Ref. Paragraph	Value
FUEL CHG PORT - 15 MMH vapor concentration	6.2.1.2.3.89	ppm
	(2nd time if necessary)	ppm
	6.2.1.2.3.103	ppm
	6.2.1.2.3.116 (after 1 hour)	ppm
	6.2.1.2.3.116 (after 24 hours)	ppm
FUEL PURGE - 16 port MMH vapor concentration	6.2.1.2.3.89	ppm
	(2nd time if necessary)	ppm
	6.2.1.2.3.103	ppm
	6.2.1.2.3.116 (after 1 hour)	ppm
	6.2.1.2.3.116 (after 24 hours)	ppm
FUEL CHG PORT - 15 Alcohol vapor concentration	6.2.1.2.3.81.4	ppm
	(2nd time if necessary)	ppm
	6.2.1.2.3.89	33 ppm
	6.2.1.2.3.116 (after 1 hour)	ppm
	6.2.1.2.3.116 (after 24 hours)	ppm
FUEL PURGE - 16 port Alcohol vapor concentration	6.2.1.2.3.89	218 ppm
	6.2.1.2.3.116 (after 1 hour)	ppm
	6.2.1.2.3.116 (after 24 hours)	ppm
FUEL CHG PORT - 15 "Freon MF" vapor concentration	6.2.1.2.3.89 (if necessary)	ppm
	(2nd time if necessary)	ppm
	6.2.1.2.3.116 (if necessary)	ppm
	6.2.1.2.3.116 (after 1 hour if necessary)	ppm
	6.2.1.2.3.116 (after 24 hours if necessary)	ppm

PREPARED BY: DATE	PERFORMED BY: DATE	WITNESSED FOR NAA: DATE	CERTIFIED FOR McDONNELL: DATE
R. McMahon	R. Schauer 10/6/65	R. D. Antrice 10/6/65	VERIFIED BY USAF: DATE

(A)

DESIGN APPROVAL TEST
ORBIT ATTITUDE AND MANEUVER SYSTEM
(SE7)

NAME OF TEST DRAIN AND CLEAN PROCEDURES TEST NO. 106156-401 SHEET 335 OF 413

PART NO. 2-DAY CONFIG. { MAC ____ NAA ____ } 14-DAY CONFIG. { MAC 52-52701 NAA 99-106156 }

7.6.7.4 (continued)

Parameter	Ref. Paragraph	Value
FUEL CHG PORT - 15 MMH vapor concentration	6.2.1.2.3.89	ppm
	(2nd time if necessary)	ppm
	6.2.1.2.3.103	ppm
	6.2.1.2.3.116 (after 1 hour)	ppm
	6.2.1.2.3.116 (after 24 hours)	ppm
FUEL PURGE - 16 port MMH vapor concentration	6.2.1.2.3.89	ppm
	(2nd time if necessary)	ppm
	6.2.1.2.3.103	ppm
	6.2.1.2.3.116 (after 1 hour)	ppm
	6.2.1.2.3.116 (after 24 hours)	ppm
FUEL CHG PORT - 15 Alcohol vapor concentration	6.2.1.2.3.81.4	ppm
	(2nd time if necessary)	ppm
	6.2.1.2.3.89	88 ppm
	6.2.1.2.3.116 (after 1 hour)	ppm
	6.2.1.2.3.116 (after 24 hours)	ppm
FUEL PURGE - 16 port Alcohol vapor concentration	6.2.1.2.3.89	>100 ppm
	6.2.1.2.3.116 (after 1 hour)	ppm
	6.2.1.2.3.116 (after 24 hours)	ppm
FUEL CHG PORT - 15 "Freon MF" vapor concentration	6.2.1.2.3.89 (if necessary)	ppm
	(2nd time if necessary)	ppm
	6.2.1.2.3.116 (if necessary)	ppm
	6.2.1.2.3.116 (after 1 hour if necessary)	ppm
	6.2.1.2.3.116 (after 24 hours if necessary)	ppm

PREPARED BY: DATE	PERFORMED BY: DATE	WITNESSED FOR NAA: DATE	CERTIFIED FOR McDONNELL: DATE
R. McMahon	[illegible]	R. C. Antrice 10/6/65	VERIFIED BY USAF: DATE

(A)

DESIGN APPROVAL TEST
ORBIT ATTITUDE AND MANEUVER SYSTEM
(SE7)

NAME OF TEST DRAIN AND CLEAN PROCEDURES TEST NO. 106156-401 SHEET 335 OF 413

PART NO. 2-DAY CONFIG. { MAC ____ NAA ____ } 14-DAY CONFIG. { MAC 52-52701 NAA 99-106156 }

7.6.7.4 (continued)

Parameter	Ref. Paragraph	Value
FUEL CHG PORT - 15 MMH vapor concentration	6.2.1.2.3.89	ppm
	(2nd time if necessary)	ppm
	6.2.1.2.3.103	ppm
	6.2.1.2.3.116 (after 1 hour)	ppm
	6.2.1.2.3.116 (after 24 hours)	ppm
FUEL PURGE - 16 port MMH vapor concentration	6.2.1.2.3.89	ppm
	(2nd time if necessary)	ppm
	6.2.1.2.3.103	ppm
	6.2.1.2.3.116 (after 1 hour)	ppm
	6.2.1.2.3.116 (after 24 hours)	ppm
FUEL CHG PORT - 15 Alcohol vapor concentration	6.2.1.2.3.81.4	ppm
	(2nd time if necessary)	ppm
	6.2.1.2.3.89	156 ppm
	6.2.1.2.3.116 (after 1 hour)	ppm
	6.2.1.2.3.116 (after 24 hours)	ppm
FUEL PURGE - 16 port Alcohol vapor concentration	6.2.1.2.3.89	>1300 ppm
	6.2.1.2.3.116 (after 1 hour)	ppm
	6.2.1.2.3.116 (after 24 hours)	ppm
FUEL CHG PORT - 15 "Freon MF" vapor concentration	6.2.1.2.3.89 (if necessary)	ppm
	(2nd time if necessary)	ppm
	6.2.1.2.3.116 (if necessary)	ppm
	6.2.1.2.3.116 (after 1 hour if necessary)	ppm
	6.2.1.2.3.116 (after 24 hours if necessary)	ppm

PREPARED BY: DATE	PERFORMED BY: DATE	WITNESSED FOR NAA: DATE	CERTIFIED FOR McDONNELL: DATE
R. McMahon	A. Schauer 10/6/65	R. J. Arthur 10/6/65 (ANA 135)	VERIFIED BY USAF: DATE

IL 5388-6134

INTERNAL LETTER
North American Aviation, Inc.

DATE 19 March 1965

TO Those Concerned
Address

FROM Gemini DAT Unit
Address D/896-388

SUBJECT Procedural Deviation - Design Approval Test Specification 106156-401

After performing the fuel system purge on the SE7 DAT Engine System per the DAT specification, liquid alcohol was drawn from the fuel tank purge tube while attempting to obtain a gas sample. It is therefore apparent that additional purging of the fuel tank is required prior to performing a vapor concentration sampling. The following additional paragraphs will therefore be inserted in the subject specification between paragraph 6.2.1.2.3.81 and paragraph 6.2.1.2.3.82:

6.2.1.2.3.81.1 Open the FUEL CHG VALVE - 15A and the FUEL TEST VALVE - 14A in Component Package "D".

6.2.1.2.3.81.2 Open the #1 Alcohol Drain Valve connected to Component Package "D".

6.2.1.2.3.81.3 After 15 minutes, close the Fuel Purge Valve.

6.2.1.2.3.81.4 Using the vapor detector, determine the Alcohol vapor concentration at the FUEL CHG PORT - 15 in Component Package "D". (Record this value.)

6.2.1.2.3.81.5 If the vapor concentration is less than 100 ppm, close the FUEL CHG VALVE - 15A, the FUEL TEST VALVE - 14A and the #1 Alcohol Drain Valve and open the Fuel Purge Valve. Then continue with paragraph 6.2.1.2.3.82.

6.2.1.2.3.81.6 If the alcohol vapor concentration is greater than 100 ppm, open the Fuel Purge Valve and repeat paragraphs 6.2.1.2.3.81.3 through 6.2.1.2.3.81.5.

R. O. McMahon
Gemini DAT Unit

Approved: R. G. Eide
Supervisor
Gemini DAT Unit

S. Scott
MAC Engineering

FORM R 18-8-4

DESIGN APPROVAL TEST
ORBIT ATTITUDE AND MANEUVER SYSTEM
(SE7)

NAME OF TEST DRAIN AND CLEAN PROCEDURES TEST NO. 106156-401 SHEET 336 OF 413

PART NO. 2-DAY CONFIG {MAC ____ / NAA ____} 14-DAY CONFIG {MAC 52-52701 / NAA 99-106156}

7.6.7.4 (continued)

Parameter	Ref. Paragraph	Value
FUEL PURGE - 16 port "Freon MF" vapor concentration	6.2.1.2.3.89 (if necessary)	>>20 ppm
	(2nd time if necessary)	20 ppm
	6.2.1.2.3.116 (if necessaey)	0 ppm
	6.2.1.2.3.116 (after 1 hour if necessary)	0 ppm
	6.2.1.2.3.116 (after 24 hours if necessary)	80 ppm
FUEL TANK VENT - 4 MMH vapor concentration	6.2.1.2.3.104	<5 ppm
	6.2.1.2.3.113 (if necessary)	___ ppm
	(2nd time if necessary)	___ ppm
	6.2.1.2.3.117 (after 1 hour)	9 ppm
	6.2.1.2.3.117 (after 24 hours)	10 ppm
FUEL TANK VENT - 4 Alcohol vapor concentration	6.2.1.2.3.104	17 ppm
	6.2.1.2.3.113 (if necessary)	___ ppm
	(2nd time if necessary)	___ ppm
	6.2.1.2.3.117 (after 1 hour)	50 ppm
	6.2.1.2.3.117 (after 24 hours)	73 ppm

PREPARED BY: DATE	PERFORMED BY: DATE	WITNESSED FOR NAA: DATE	CERTIFIED FOR McDONNELL DATE
R.McMahon	A. Schauer 7/20/65	Marvin Forde 7-20-65	R L Frew 7-30-65
			VERIFIED BY USAF DATE

DESIGN APPROVAL TEST
ORBIT ATTITUDE AND MANEUVER SYSTEM
(SE7)

NAME OF TEST DRAIN AND CLEAN PROCEDURES TEST NO. 106156-401 SHEET 336 OF 413

PART NO. 2-DAY CONFIG {MAC ____ NAA ____ 14-DAY CONFIG {MAC 52-52701 NAA 99-106156

7.6.7.4 (continued)

Parameter	Ref. Paragraph	Value
FUEL PURGE - 16 port "Freon MF" vapor concentration	6.2.1.2.3.89 (if necessary)	>20 ppm
	(2nd time if necessary)	<20 ppm
	6.2.1.2.3.116 (if necessaey)	ppm
	6.2.1.2.3.116 (after 1 hour if necessary)	ppm
	6.2.1.2.3.116 (after 24 hours if necessary)	ppm
FUEL TANK VENT - 4 MMH vapor concentration	6.2.1.2.3.104	ppm
	6.2.1.2.3.113 (if necessary)	ppm
	(2nd time if necessary)	ppm
	6.2.1.2.3.117 (after 1 hour)	ppm
	6.2.1.2.3.117 (after 24 hours)	ppm
FUEL TANK VENT - 4 Alcohol vapor concentration	6.2.1.2.3.104	ppm
	6.2.1.2.3.113 (if necessary)	ppm
	(2nd time if necessary)	ppm
	6.2.1.2.3.117 (after 1 hour)	ppm
	6.2.1.2.3.117 (after 24 hours)	ppm

PREPARED BY: DATE	PROPOSED BY: DATE	WITNESSED FOR DOA: DATE	CERTIFIED FOR REQUIREMENTS DATE
R. McMahon	A. Schauer 10/6/65	R. D. Santner 10/6/65	APPROVED BY USAF DATE

DESIGN APPROVAL TEST
ORBIT ATTITUDE AND MANEUVER SYSTEM
(SE7)

NAME OF TEST DRAIN AND CLEAN PROCEDURES TEST NO. 106156-401 SHEET 336 OF 413

PART NO. 2-DAY CONFIG {MAC ____ NAA ____} 14-DAY CONFIG {MAC 52-52701 NAA 99-106156}

7.6.7.4 (continued)

Parameter	Ref. Paragraph	Value
FUEL PURGE - 16 port "Freon MF" vapor concentration	6.2.1.2.3.89 (if necessary)	>20 ppm
	(2nd time if necessary)	>20 ppm
	6.2.1.2.3.116 (if necessaey)	ppm
	6.2.1.2.3.116 (after 1 hour if necessary)	ppm
	6.2.1.2.3.116 (after 24 hours if necessary)	ppm
FUEL TANK VENT - 4 MMH vapor concentration	6.2.1.2.3.104	ppm
	6.2.1.2.3.113 (if necessary)	ppm
	(2nd time if necessary)	ppm
	6.2.1.2.3.117 (after 1 hour)	ppm
	6.2.1.2.3.117 (after 24 hours)	ppm
FUEL TANK VENT - 4 Alcohol vapor concentration	6.2.1.2.3.104	ppm
	6.2.1.2.3.113 (if necessary)	ppm
	(2nd time if necessary)	ppm
	6.2.1.2.3.117 (after 1 hour)	ppm
	6.2.1.2.3.117 (after 24 hours)	ppm

PREPARED BY: DATE	PERFORMED BY: DATE	WITNESSED FOR NAA: DATE	CERTIFIED FOR McDONNELL DATE
R.McMahon	P. Johnson 10/6/65	R. O. Antrim 10/6/65	VERIFIED BY USAF DATE

(1)

DESIGN APPROVAL TEST
ORBIT ATTITUDE AND MANEUVER SYSTEM
(SE7)

NAME OF TEST DRAIN AND CLEAN PROCEDURES TEST NO. 106156-401 SHEET 336 OF 413

PART NO. 2-DAY CONFIG {MAC ____ NAA ____ 14-DAY CONFIG {MAC 52-52701 NAA 99-106156

7.6.7.4 (continued)

Parameter	Ref. Paragraph	Value
FUEL PURGE - 16 port "Freon MF" vapor concentration	6.2.1.2.3.89 (if necessary)	<20 ppm
	(2nd time if necessary)	ppm
	6.2.1.2.3.116 (if necessaey)	ppm
	6.2.1.2.3.116 (after 1 hour if necessary)	ppm
	6.2.1.2.3.116 (after 24 hours if necessary)	ppm
FUEL TANK VENT - 4 MMH vapor concentration	6.2.1.2.3.104	ppm
	6.2.1.2.3.113 (if necessary)	ppm
	(2nd time if necessary)	ppm
	6.2.1.2.3.117 (after 1 hour)	ppm
	6.2.1.2.3.117 (after 24 hours)	ppm
FUEL TANK VENT - 4 Alcohol vapor concentration	6.2.1.2.3.104	ppm
	6.2.1.2.3.113 (if necessary)	ppm
	(2nd time if necessary)	ppm
	6.2.1.2.3.117 (after 1 hour)	ppm
	6.2.1.2.3.117 (after 24 hours)	ppm

PREPARED BY: DATE	PERFORMED BY: DATE	WITNESSED FOR NAA: DATE	CERTIFIED FOR McDONNELL DATE
R.McMahon	A Delaney 10/6/65	R. A. Amtsen 10/6/65 (AN 735)	VERIFIED BY USAF DATE (X)

IL 5388-6166

INTERNAL LETTER
North American Aviation, Inc.

DATE 8 April 1965

TO Those Concerned
Address

FROM Gemini DAT Unit
Address D/896-388

SUBJECT Procedural Deviation - Design Approval Test Specification 106156-401

The customer has recently relaxed the requirement on alcohol vapor concentration as pertaining to an acceptably clean system. This relaxation has raised the allowable alcohol vapor concentration after cleaning from 20 ppm to 100 ppm.

The customer has also agreed that vapor concentration sampling at the TCAs does not necessarily give a representative indication of the TCA inlet manifold vapor concentration since various amounts of propellants and flush fluids can be soaked up in the TCA ablative material. Therefore, TCA vapor concentrations will no longer be criteria for further cleaning but will be recorded for information purposes only.

These two revisions effect the following paragraphs:

6.2.1.2.3.89.1
6.2.1.2.3.89.2
6.2.1.2.3.89.3
6.2.1.2.3.89.4
6.2.1.2.3.104.1
6.2.1.2.3.104.2
6.2.1.2.3.113.1
6.2.1.2.3.113.2
6.2.1.2.3.116.1
6.2.1.2.3.116.3
6.2.1.2.3.117.1
6.2.1.2.3.117.2

R. O. McMahon
R. O. McMahon
Gemini DAT Unit

Approved: R. G. Eide (R.O.M)
R. G. Eide
Supervisor
Gemini DAT Unit

S. Scott
S. Scott
MAC Engineering

cc. R. W. Dinius
NAAQC

1218

R-15075-1

FORM R 18-G-4

DESIGN APPROVAL TEST
ORBIT ATTITUDE AND MANEUVER SYSTEM
(SE7)

NAME OF TEST DRAIN AND CLEAN PROCEDURES TEST NO. 106156-401 SHEET 337 OF 413

PART NO. 2-DAY CONFIG. { MAC ____ NAA ____ } 14-DAY CONFIG. { MAC 52-52701 NAA 99-106156 }

7.6.7.4 (continued)

Parameter	Ref Paragraph	Value
FUEL TANK VENT - 4 "Freon MF" vapor concentration	6.2.1.2.3.104 (if necessary)	<20 ppm
	6.2.1.2.3.113 (if necessary)	X ppm
	(2nd time if necessary)	X ppm
	6.2.1.2.3.117 (after 1 hour)	0 ppm
	6.2.1.2.3.117 (after 24 hours)	<20 ppm
TCA #1 MMH vapor concentration	6.2.1.2.3.89	11 ppm
	(2nd time if necessary)	5 ppm
	6.2.1.2.3.103 (if necessary)	7 ppm
	6.2.1.2.3.116 (after 1 hour)	5 ppm
	(2nd time if necessary)	X ppm
	6.2.1.2.3.116 (after 24 hours)	5 ppm
TCA #1 Alcohol vapor concentration	6.2.1.2.3.89	300 ppm
	(2nd time if necessary)	>20 ppm
	6.2.1.2.3.116 (after 1 hour)	964 ppm
	(2nd time if necessary)	X ppm
	6.2.1.2.3.116 (after 24 hours)	627 ppm
TCA #1 "Freon MF" vapor concentration	6.2.1.2.3.89 (if necessary)	>>20 ppm
	(2nd time if necessary)	<20 ppm
	6.2.1.2.3.116 (after 1 hour if necessary)	0 ppm
	(2nd time if necessary)	X ppm
	6.2.1.2.3.116 (after 24 hours if necessary)	<20 ppm

PREPARED BY: DATE	PERFORMED BY: DATE	WITNESSED FOR NAA: DATE	CERTIFIED FOR McDONNELL: DATE
R.McMahon	A. Schauer 7/20/65	Marvin Banks 7-20-65	R L Fuller 7-30-65
			VERIFIED BY USAF: DATE

DESIGN APPROVAL TEST
ORBIT ATTITUDE AND MANEUVER SYSTEM
(SE7)

NAME OF TEST DRAIN AND CLEAN PROCEDURES TEST NO. 106156-401 SHEET 337 OF 413

PART NO. 2-DAY CONFIG. { MAC ____ NAA ____ } 14-DAY CONFIG. { MAC 52-52701 NAA 99-106156 }

7.6.7.4 (continued)

Parameter	Ref Paragraph	Value
FUEL TANK VENT - 4 "Freon MF" vapor concentration	6.2.1.2.3.104 (if necessary)	~~____~~ ppm
	6.2.1.2.3.113 (if necessary)	~~____~~ ppm
	(2nd time if necessary)	~~____~~ ppm
	6.2.1.2.3.117 (after 1 hour)	~~____~~ ppm
	6.2.1.2.3.117 (after 24 hours)	~~____~~ ppm
TCA #1 MMH vapor concentration	6.2.1.2.3.89	<5 ppm
	(2nd time if necessary)	7 ppm
	6.2.1.2.3.103 (if necessary)	~~____~~ ppm
	6.2.1.2.3.116 (after 1 hour)	~~____~~ ppm
	(2nd time if necessary)	~~____~~ ppm
	6.2.1.2.3.116 (after 24 hours)	~~____~~ ppm
TCA #1 Alcohol vapor concentration	6.2.1.2.3.89	>20 ppm
	(2nd time if necessary)	90 ppm
	6.2.1.2.3.116 (after 1 hour)	~~____~~ ppm
	(2nd time if necessary)	~~____~~ ppm
	6.2.1.2.3.116 (after 24 hours)	~~____~~ ppm
TCA #1 "Freon MF" vapor concentration	6.2.1.2.3.89 (if necessary)	>20 ppm
	(2nd time if necessary)	~~____~~ ppm
	6.2.1.2.3.116 (after 1 hour if necessary)	~~____~~ ppm
	(2nd time if necessary)	~~____~~ ppm
	6.2.1.2.3.116 (after 24 hours if necessary)	~~____~~ ppm

PREPARED BY: DATE	PERFORMED BY: DATE	WITNESSED FOR NAA: DATE	CERTIFED FOR McDONNELL: DATE
R.McMahon	[illegible]	[illegible] 10/6/65	VERIFIED BY USAF: DATE

DESIGN APPROVAL TEST
ORBIT ATTITUDE AND MANEUVER SYSTEM
(SE7)

NAME OF TEST DRAIN AND CLEAN PROCEDURES TEST NO. 106156-401 SHEET 337 OF 413

PART NO. 2-DAY CONFIG. { MAC ____ NAA ____ } 14-DAY CONFIG. { MAC 52-52701 NAA 99-106156 }

7.6.7.4 (continued)

Parameter	Ref Paragraph	Value
FUEL TANK VENT - 4 "Freon MF" vapor concentration	6.2.1.2.3.104 (if necessary)	ppm
	6.2.1.2.3.113 (if necessary)	ppm
	(2nd time if necessary)	ppm
	6.2.1.2.3.117 (after 1 hour)	ppm
	6.2.1.2.3.117 (after 24 hours)	ppm
TCA #1 MMH vapor concentration	6.2.1.2.3.89	8 ppm
	(2nd time if necessary)	<5 ppm
	6.2.1.2.3.103 (if necessary)	ppm
	6.2.1.2.3.116 (after 1 hour)	ppm
	(2nd time if necessary)	ppm
	6.2.1.2.3.116 (after 24 hours)	ppm
TCA #1 Alcohol vapor concentration	6.2.1.2.3.89	3 ppm
	(2nd time if necessary)	ppm
	6.2.1.2.3.116 (after 1 hour)	ppm
	(2nd time if necessary)	ppm
	6.2.1.2.3.116 (after 24 hours)	ppm
TCA #1 "Freon MF" vapor concentration	6.2.1.2.3.89 (if necessary)	ppm
	(2nd time if necessary)	ppm
	6.2.1.2.3.116 (after 1 hour if necessary)	ppm
	(2nd time if necessary)	ppm
	6.2.1.2.3.116 (after 24 hours if necessary)	ppm

PREPARED BY: DATE	REVIEWED BY: DATE	CONCURRED BY NAA:	CERTIFIED FOR RECORD: DATE
R. McMahon	R. Delaney 10/6/65	Bill Antrac 10/6/65	APPROVED BY USAF: DATE

DESIGN APPROVAL TEST
ORBIT ATTITUDE AND MANEUVER SYSTEM
(SE7)

NAME OF TEST DRAIN AND CLEAN PROCEDURES TEST NO. 106156-401 SHEET 338 OF 413

PART NO. 2-DAY CONFIG. { MAC ____ NAA ____ } 14-DAY CONFIG. { MAC 52-52701 NAA 99-106156 }

7.6.7.4 (continued)

Parameter	Ref. Paragraph	Value
TCA #5 MMH vapor concentration	6.2.1.2.3.89	15 ppm
	(2nd time if necessary)	7 ppm
	6.2.1.2.3.103 (if necessary)	5 ppm
	6.2.1.2.3.116 (after 1 hour)	5 ppm
	(2nd time if necessary)	X ppm
	6.2.1.2.3.116 (after 24 hours)	5 ppm
TCA #5 Alcohol vapor concentration	6.2.1.2.3.89	300 ppm
	(2nd time if necessary)	>20 ppm
	6.2.1.2.3.116 (after 1 hour)	1003 ppm
	(2nd time if necessary)	X ppm
	6.2.1.2.3.116 (after 24 hours)	1003 ppm
TCA #5 "Freon MF" vapor concentration	6.2.1.2.3.89 (if necessary)	>>20 ppm
	(2nd time if necessary)	>20 ppm
	6.2.1.2.3.116 (after 1 hour if necessary)	<20 ppm
	(2nd time if necessary)	X ppm
	6.2.1.2.3.116 (after 24 hours if necessary)	<20 ppm

PREPARED BY: DATE	PERFORMED BY: DATE	WITNESSED FOR NAA: DATE	CERTIFED FOR McDONNELL: DATE
R.McMahon	A. Schavier 7/20/65	Marvin Wanda 7-20 65	R L Dee 7-30-65
			VERIFIED BY USAF: DATE

DESIGN APPROVAL TEST
ORBIT ATTITUDE AND MANEUVER SYSTEM
(SE7)

NAME OF TEST DRAIN AND CLEAN PROCEDURES TEST NO. 106156-401 SHEET 338 OF 413

PART NO. 2-DAY CONFIG. { MAC ____ NAA ____ } 14-DAY CONFIG. { MAC 52-52701 NAA 99-106156 }

7.6.7.4 (continued)

Parameter	Ref. Paragraph	Value
TCA #5 MMH vapor concentration	6.2.1.2.3.89	7 ppm
	(2nd time if necessary)	6 ppm
	6.2.1.2.3.103 (if necessary)	ppm
	6.2.1.2.3.116 (after 1 hour)	ppm
	(2nd time if necessary)	ppm
	6.2.1.2.3.116 (after 24 hours)	ppm
TCA #5 Alcohol vapor concentration	6.2.1.2.3.89	>20 ppm
	(2nd time if necessary)	>20 ppm
	6.2.1.2.3.116 (after 1 hour)	ppm
	(2nd time if necessary)	ppm
	6.2.1.2.3.116 (after 24 hours)	ppm
TCA #5 "Freon MF" vapor concentration	6.2.1.2.3.89 (if necessary)	>20 ppm
	(2nd time if necessary)	>20 ppm
	6.2.1.2.3.116 (after 1 hour if necessary)	ppm
	(2nd time if necessary)	ppm
	6.2.1.2.3.116 (after 24 hours if necessary)	ppm

PREPARED BY: DATE	PERFORMED BY: DATE	APPROVED FOR NAA: DATE	CERTIFIED FOR ROCKETDYNE: DATE
R. McMahon	R. Delgado 10/6/65	R. G. Gunter 10/6/65	VERIFIED BY USAF: DATE

DESIGN APPROVAL TEST
ORBIT ATTITUDE AND MANEUVER SYSTEM
(SE7)

NAME OF TEST DRAIN AND CLEAN PROCEDURES TEST NO. 106156-401 SHEET 338 OF 413

PART NO. 2-DAY CONFIG. { MAC ____ NAA ____ } 14-DAY CONFIG. { MAC 52-52701 NAA 99-106156 }

7.6.7.4 (continued)

Parameter	Ref. Paragraph	Value
TCA #5 MMH vapor concentration	6.2.1.2.3.89	9 ppm
	(2nd time if necessary)	5 ppm
	6.2.1.2.3.103 (if necessary)	ppm
	6.2.1.2.3.116 (after 1 hour)	ppm
	(2nd time if necessary)	ppm
	6.2.1.2.3.116 (after 24 hours)	ppm
TCA #5 Alcohol vapor concentration	6.2.1.2.3.89	ppm
	(2nd time if necessary)	ppm
	6.2.1.2.3.116 (after 1 hour)	ppm
	(2nd time if necessary)	ppm
	6.2.1.2.3.116 (after 24 hours)	ppm
TCA #5 "Freon MF" vapor concentration	6.2.1.2.3.89 (if necessary)	ppm
	(2nd time if necessary)	ppm
	6.2.1.2.3.116 (after 1 hour if necessary)	ppm
	(2nd time if necessary)	ppm
	6.2.1.2.3.116 (after 24 hours if necessary)	ppm

PREPARED BY: DATE	PERFORMED BY: DATE	WITNESSED FOR NAA: DATE	CERTIFED FOR McDONNELL: DATE
R. McMahon	[illegible] 10/5/65	R. A. Antrim 10/6/65	VERIFIED BY USAF: DATE

DESIGN APPROVAL TEST
ORBIT ATTITUDE AND MANEUVER SYSTEM
(SE7)

NAME OF TEST DRAIN AND CLEAN PROCEDURES TEST NO. 106156-401 SHEET 339 OF 413

PART NO. 2-DAY CONFIG. { MAC ____ NAA ____ } 14-DAY CONFIG. { MAC 52-52701 NAA 99-106156 }

7.6.7.4 (continued)

Parameter	Ref Paragraph	Value
TCA #12 MMH vapor concentration	6.2.1.2.3.89	17 ppm
	(2nd time if necessary)	3 ppm
	6.2.1.2.3.103 (if necessary)	5 ppm
	6.2.1.2.3.116 (after 1 hour)	5 ppm
	(2nd time if necessary)	~~X~~ ppm
	6.2.1.2.3.116 (after 24 hours)	5 ppm
TCA #12 Alcohol vapor concentration	6.2.1.2.3.89	30 ppm
	(2nd time if necessary)	>20 ppm
	6.2.1.2.3.116 (after 1 hour)	178 ppm
	(2nd time if necessary)	~~X~~ ppm
	6.2.1.2.3.116 (after 24 hours)	231 ppm
TCA #12 "Freon MF" vapor concentration	6.2.1.2.3.89 (if necessary)	>>20 ppm
	(2nd time if necessary)	>>20 ppm
	6.2.1.2.3.116 (after 1 hour if necessary)	0 ppm
	(2nd time if necessary)	~~X~~ ppm
	6.2.1.2.3.116 (after 24 hours if necessary)	>20 ppm

PREPARED BY: DATE	PERFORMED BY: DATE	WITNESSED FOR NAA: DATE	CERTIFIED FOR McDONNELL: DATE
R.McMahon	A. Schamer 7/20/65	Marvin Rouba 7-20-65	R L Jue 7-30-65
			VERIFIED BY USAF: DATE

Test Form 1453
R-15075-1

DESIGN APPROVAL TEST
ORBIT ATTITUDE AND MANEUVER SYSTEM
(SE7)

NAME OF TEST DRAIN AND CLEAN PROCEDURES TEST NO. 106156-401 SHEET 339 OF 413

PART NO. 2-DAY CONFIG. { MAC ____ NAA ____ } 14-DAY CONFIG. { MAC 52-52701 NAA 99-106156 }

7.6.7.4 (continued)

Parameter	Ref Paragraph	Value
TCA #12 MMH vapor concentration	6.2.1.2.3.89	<5 ppm
	(2nd time if necessary)	<5 ppm
	6.2.1.2.3.103 (if necessary)	ppm
	6.2.1.2.3.116 (after 1 hour)	ppm
	(2nd time if necessary)	ppm
	6.2.1.2.3.116 (after 24 hours)	ppm
TCA #12 Alcohol vapor concentration	6.2.1.2.3.89	>20 ppm
	(2nd time if necessary)	>20 ppm
	6.2.1.2.3.116 (after 1 hour)	ppm
	(2nd time if necessary)	ppm
	6.2.1.2.3.116 (after 24 hours)	ppm
TCA #12 "Freon MF" vapor concentration	6.2.1.2.3.89 (if necessary)	>20 ppm
	(2nd time if necessary)	>20 ppm
	6.2.1.2.3.116 (after 1 hour if necessary)	ppm
	(2nd time if necessary)	ppm
	6.2.1.2.3.116 (after 24 hours if necessary)	ppm

PREPARED BY: DATE	PERFORMED BY: DATE	WITNESSED FOR NAA: DATE	CERTIFIED FOR McDONNELL: DATE
R.McMahon	[illegible]	R.C. Antrim 10/6/63	VERIFIED BY USAF: DATE

DESIGN APPROVAL TEST
ORBIT ATTITUDE AND MANEUVER SYSTEM
(SE7)

NAME OF TEST DRAIN AND CLEAN PROCEDURES TEST NO. 106156-401 SHEET 339 OF 413

PART NO. 2-DAY CONFIG. { MAC ____ NAA ____ } 14-DAY CONFIG. { MAC 52-52701 NAA 99-106156 }

7.6.7.4 (continued)

Parameter	Ref Paragraph	Value
TCA #12 MMH vapor concentration	6.2.1.2.3.89	6 ppm
	(2nd time if necessary)	<5 ppm
	6.2.1.2.3.103 (if necessary)	ppm
	6.2.1.2.3.116 (after 1 hour)	ppm
	(2nd time if necessary)	ppm
	6.2.1.2.3.116 (after 24 hours)	ppm
TCA #12 Alcohol vapor concentration	6.2.1.2.3.89	ppm
	(2nd time if necessary)	ppm
	6.2.1.2.3.116 (after 1 hour)	ppm
	(2nd time if necessary)	ppm
	6.2.1.2.3.116 (after 24 hours)	ppm
TCA #12 "Freon MF" vapor concentration	6.2.1.2.3.89 (if necessary)	ppm
	(2nd time if necessary)	ppm
	6.2.1.2.3.116 (after 1 hour if necessary)	ppm
	(2nd time if necessary)	ppm
	6.2.1.2.3.116 (after 24 hours if necessary)	ppm

PREPARED BY: DATE	PERFORMED BY: DATE	WITNESSED FOR NAA: DATE	CERTIFIED FOR McDONNELL: DATE
R.McMahon	R. Schauer 10/6/65	R. A. Santucci 10/6/65 (ANR 735)	VERIFIED BY USAF: DATE

DESIGN APPROVAL TEST
ORBIT ATTITUDE AND MANEUVER SYSTEM
(SE7)

NAME OF TEST DRAIN AND CLEAN PROCEDURES TEST NO. 106156-401 SHEET 340 OF 413

PART NO. 2-DAY CONFIG. { MAC ____ NAA ____ } 14-DAY CONFIG. { MAC 52-52701 NAA 99-106156 }

7.6.7.4 (continued)

Parameter	Ref. Paragraph	Value
TCA #13 MMH vapor concentration	6.2.1.2.3.89	15 ppm
	(2nd time if necessary)	9 ppm
	6.2.1.2.3.103 (if necessary)	5 ppm
	6.2.1.2.3.116 (after 1 hour)	5 ppm
	(2nd time if necessary)	~~X~~ ppm
	6.2.1.2.3.116 (after 24 hours)	5 ppm
TCA #13 Alcohol vapor concentration	6.2.1.2.3.89	280 ppm
	(2nd time if necessary)	>20 ppm
	6.2.1.2.3.116 (after 1 hour)	1320 ppm
	(2nd time if necessary)	~~X~~ ppm
	6.2.1.2.3.116 (after 24 hours)	1320 ppm
TCA #13 "Freon MF" vapor concentration	6.2.1.2.3.89 (if necessary)	>>20 ppm
	(2nd time if necessary)	>20 ppm
	6.2.1.2.3.116 (after 1 hour if necessary)	0 ppm
	(2nd time if necessary)	~~X~~ ppm
	6.2.1.2.3.116 (after 24 hours if necessary)	<20 ppm
Engine System (Fuel Side) "Freon MF" Soak Time	6.2.1.2.3.86 (if necessary)	DNU min

PREPARED BY: DATE	PERFORMED BY: DATE	WITNESSED FOR NAA: DATE	CERTIFED FOR McDONNELL: DATE
R.McMahon	A. Schauer 7-2-65	Marvin Ramba 7-2-65	R. [illegible] 7-30-65
			VERIFIED BY USAF: DATE

DESIGN APPROVAL TEST
ORBIT ATTITUDE AND MANEUVER SYSTEM
(SE7)

NAME OF TEST DRAIN AND CLEAN PROCEDURES TEST NO. 106156-401 SHEET 340 OF 413
PART NO. 2-DAY CONFIG. { MAC ____ NAA ____ } 14-DAY CONFIG. { MAC 52-52701 NAA 99-106156 }

7.6.7.4 (continued)

Parameter	Ref. Paragraph	Value
TCA #13 MMH vapor concentration	6.2.1.2.3.89	<5 ppm
	(2nd time if necessary)	7 ppm
	6.2.1.2.3.103 (if necessary)	ppm
	6.2.1.2.3.116 (after 1 hour)	ppm
	(2nd time if necessary)	ppm
	6.2.1.2.3.116 (after 24 hours)	ppm
TCA #13 Alcohol vapor concentration	6.2.1.2.3.89	ppm
	(2nd time if necessary)	ppm
	6.2.1.2.3.116 (after 1 hour)	ppm
	(2nd time if necessary)	ppm
	6.2.1.2.3.116 (after 24 hours)	ppm
TCA #13 "Freon MF" vapor concentration	6.2.1.2.3.89 (if necessary)	>20 ppm
	(2nd time if necessary)	>20 ppm
	6.2.1.2.3.116 (after 1 hour if necessary)	ppm
	(2nd time if necessary)	ppm
	6.2.1.2.3.116 (after 24 hours if necessary)	ppm
Engine System (Fuel Side) "Freon MF" Soak Time	6.2.1.2.3.86 (if necessary)	min

PREPARED BY: DATE	REVIEWED BY: DATE	APPROVED FOR USAF DATE	CERTIFIED FOR McDONNELL DATE
R. McMahon	R. Schewer 10/6/65	R. D. Dorsac 10/6/65	VERIFIED BY USAF DATE

DESIGN APPROVAL TEST
ORBIT ATTITUDE AND MANEUVER SYSTEM
(SE7)

NAME OF TEST DRAIN AND CLEAN PROCEDURES TEST NO. 106156-401 SHEET 340 OF 413
PART NO. 2-DAY CONFIG. { MAC ____ NAA ____ } 14-DAY CONFIG. { MAC 52-52701 NAA 99-106156 }

7.6.7.4 (continued)

Parameter	Ref. Paragraph	Value
TCA #13 MMH vapor concentration	6.2.1.2.3.89	10 ppm
	(2nd time if necessary)	<5 ppm
	6.2.1.2.3.103 (if necessary)	ppm
	6.2.1.2.3.116 (after 1 hour)	ppm
	(2nd time if necessary)	ppm
	6.2.1.2.3.116 (after 24 hours)	ppm
TCA #13 Alcohol vapor concentration	6.2.1.2.3.89	ppm
	(2nd time if necessary)	ppm
	6.2.1.2.3.116 (after 1 hour)	ppm
	(2nd time if necessary)	ppm
	6.2.1.2.3.116 (after 24 hours)	ppm
TCA #13 "Freon MF" vapor concentration	6.2.1.2.3.89 (if necessary)	ppm
	(2nd time if necessary)	ppm
	6.2.1.2.3.116 (after 1 hour if necessary)	ppm
	(2nd time if necessary)	ppm
	6.2.1.2.3.116 (after 24 hours if necessary)	ppm
Engine System (Fuel Side) "Freon MF" Soak Time	6.2.1.2.3.86 (if necessary)	min

PREPARED BY: DATE	PERFORMED BY: DATE	WITNESSED FOR NAA: DATE	CERTIFED FOR McDONNELL: DATE
R.McMahon	[illegible]	R.A. Antrim 10/6/65	VERIFIED BY USAF: DATE

NAME OF TEST:	S
PART NO: MAC:	5
NAA:	9
TEST NO:	1

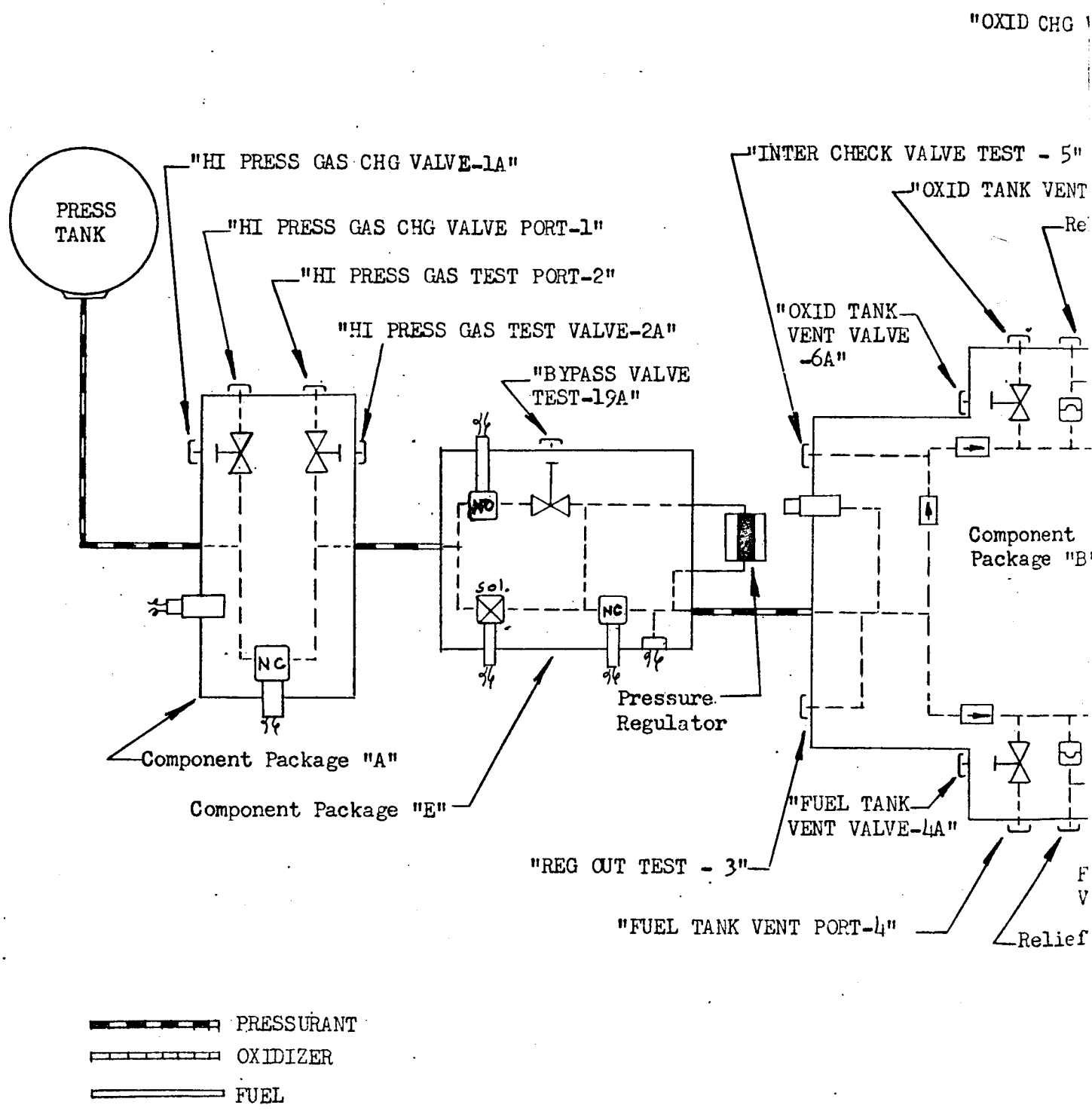

R-15075-1

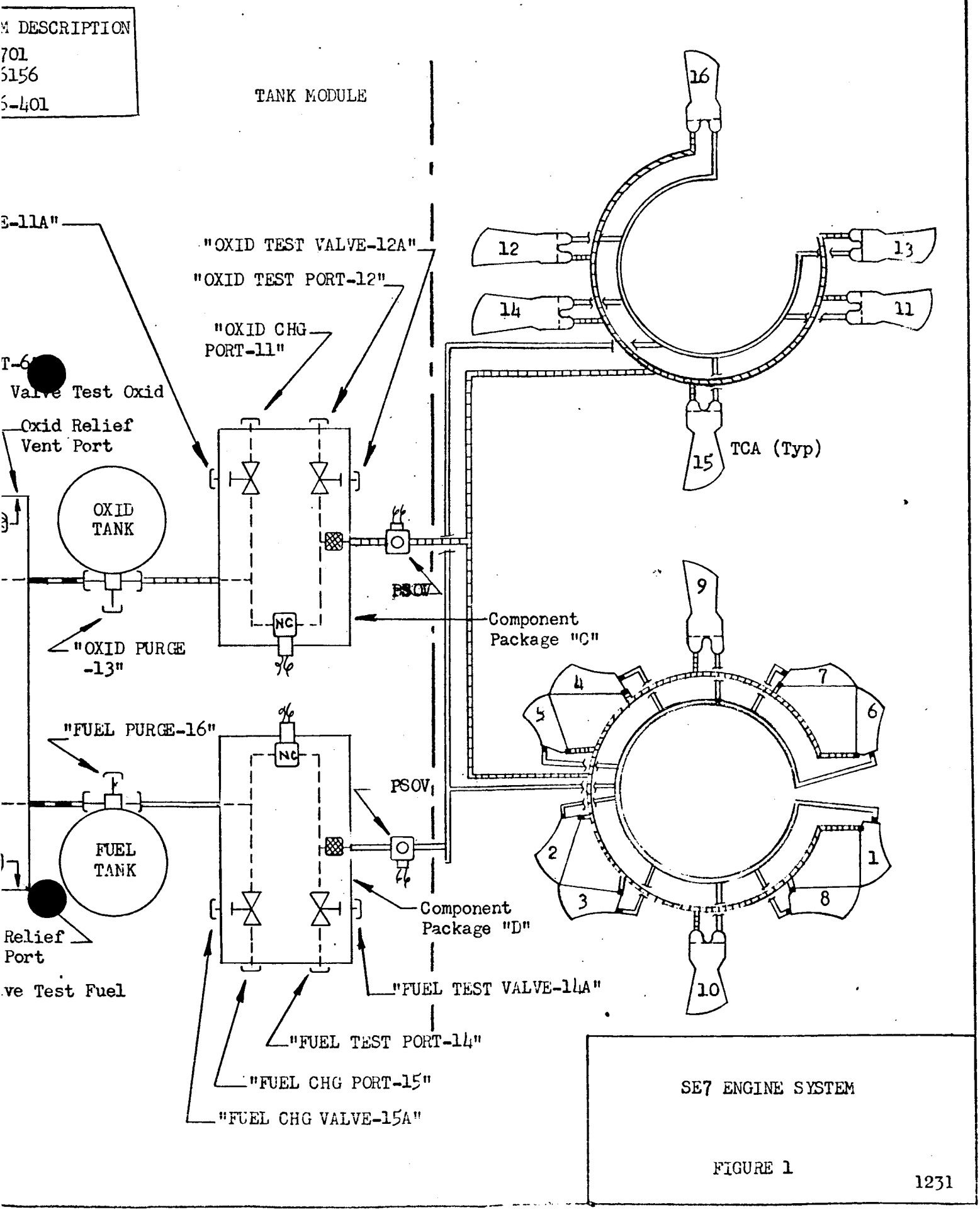

SE7 ENGINE SYSTEM

FIGURE 1

DESIGN APPROVAL TEST
ORBIT ATTITUDE AND MANEUVER SYSTEM
(SE7)

NAME OF TEST COMPONENT DESCRIPTION TEST NO. 106156-401 SHEET 342 OF 413
PART NO. 2-DAY CONFIG. {MAC / NAA} 14-DAY CONFIG. {MAC 52-52701 / NAA 99-106156}

COMPONENT ASSEMBLY, PACKAGE "A" - P/N 556870

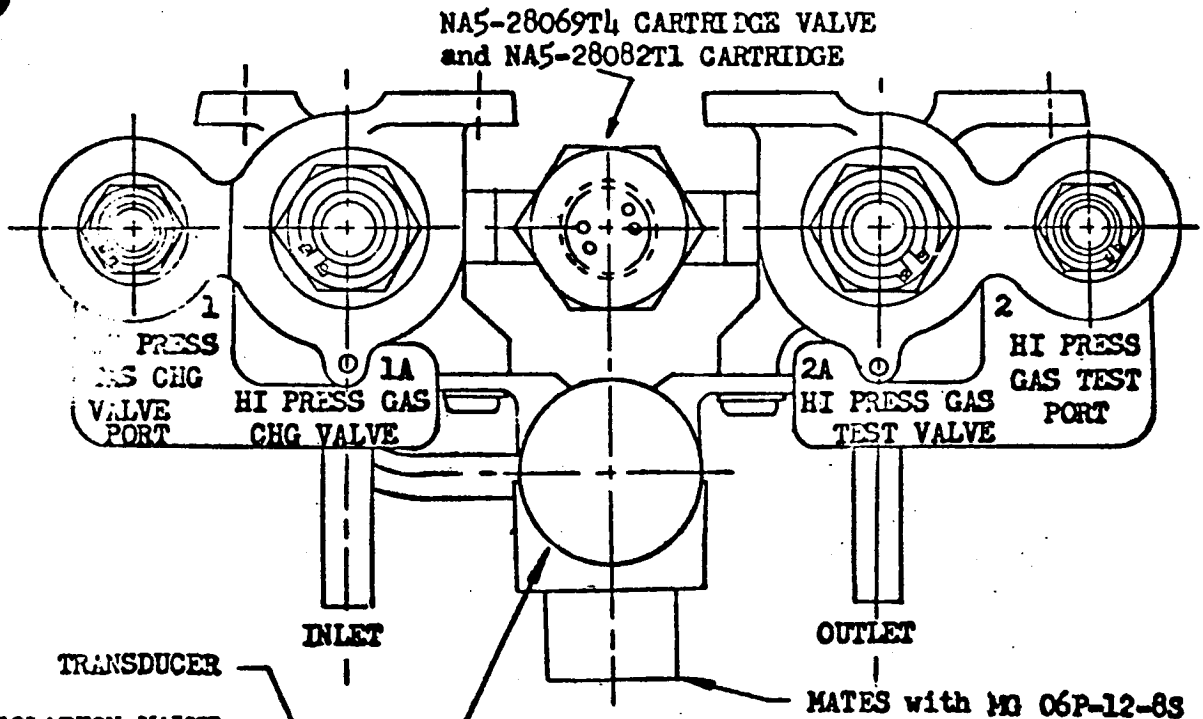

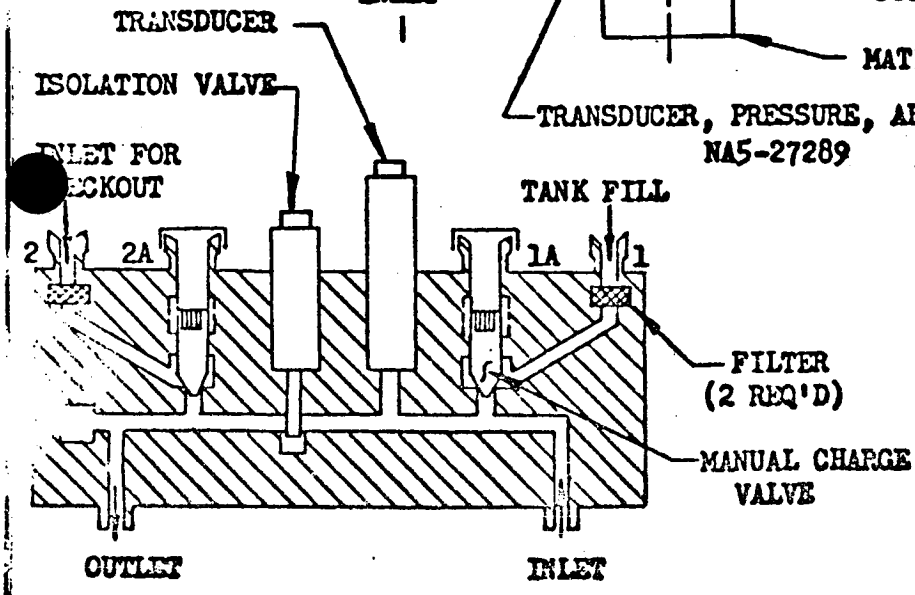

FLOW SCHEMATIC

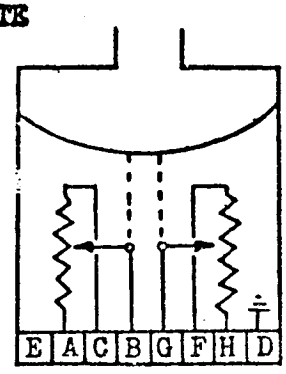

PRESSURE TRANSDUCER
ELECTRICAL SCHEMATIC

FIGURE 2

DESIGN APPROVAL TEST
ORBIT ATTITUDE AND MANEUVER SYSTEM
(SE7)

NAME OF TEST COMPONENT DESCRIPTION TEST NO. 106156-401 SHEET 343 OF 413
PART NO. 2-DAY CONFIG. {MAC / NAA} 14-DAY CONFIG. {MAC 52-52701 / NAA 99-106156}

COMPONENT ASSEMBLY, PACKAGE "B" - P/N 557305

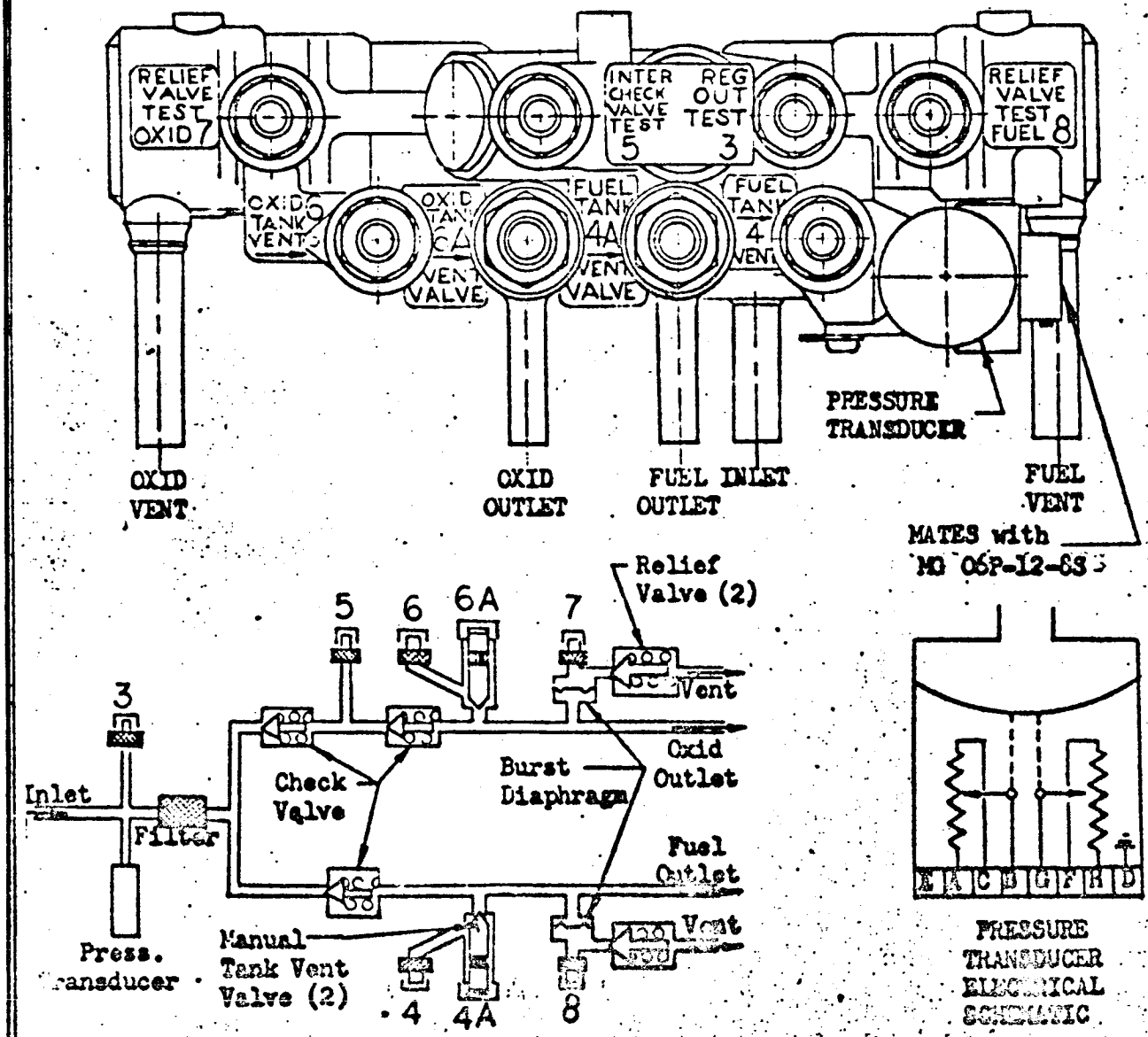

FLOW SCHEMATIC Figure B

DESIGN APPROVAL TEST
ORBIT ATTITUDE AND MANEUVER SYSTEM
(SE7)

NAME OF TEST COMPONENT DESCRIPTION TEST NO. 106156-401 SHEET 344 OF 413
PART NO. 2-DAY CONFIG. {MAC / NAA} 14-DAY CONFIG. {MAC 52-52701 / NAA 99-106156}

COMPONENT ASSEMBLY PACKAGE "C"
P/N 406886

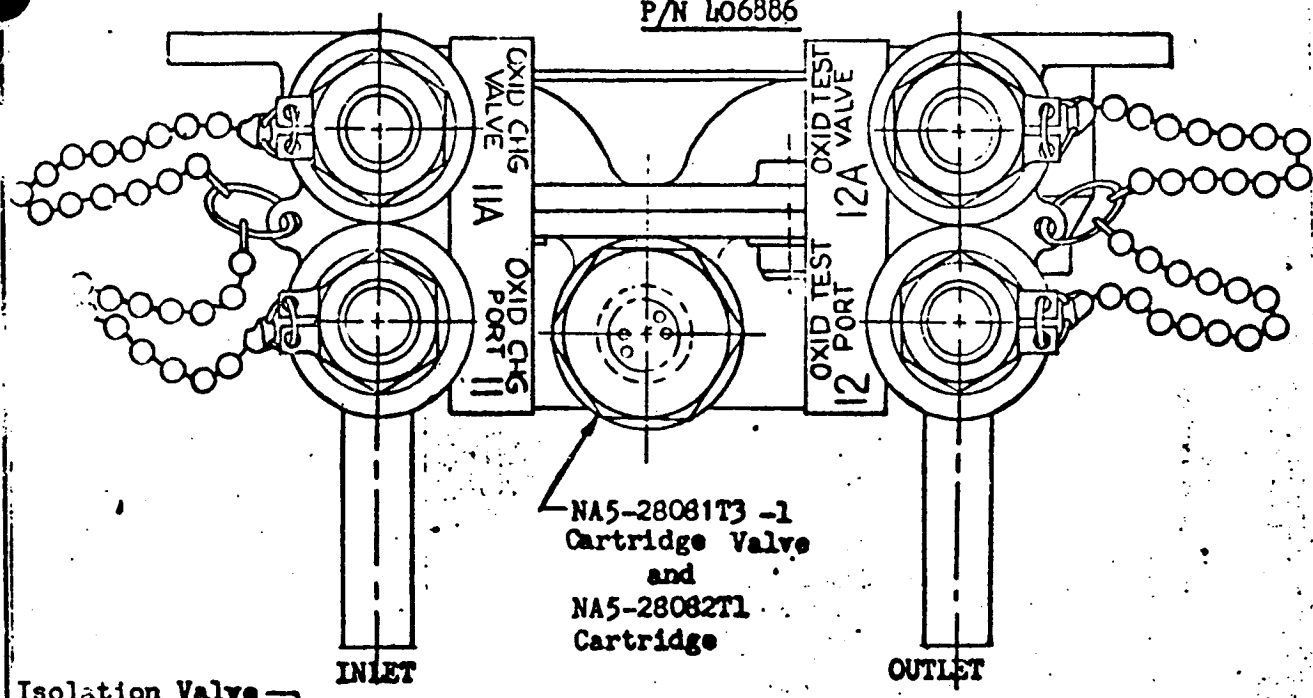

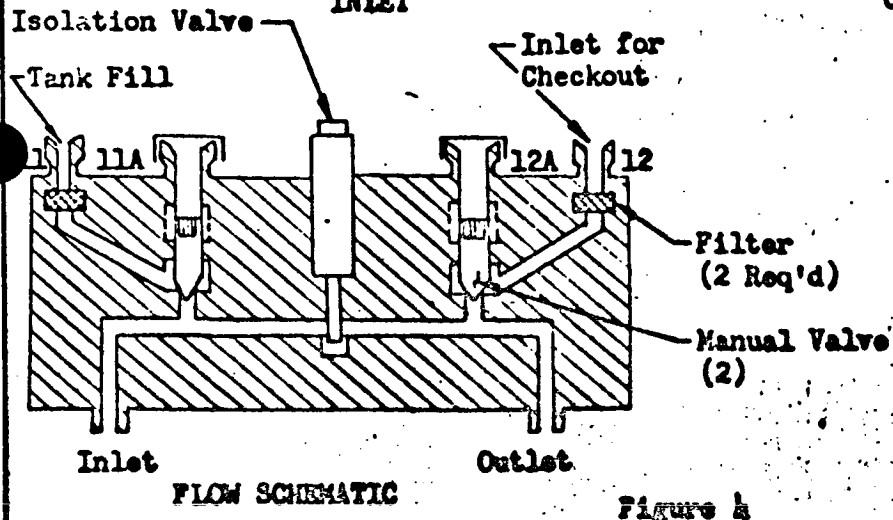

FLOW SCHEMATIC

CARTRIDGE
ELECTRICAL SCHEMATIC

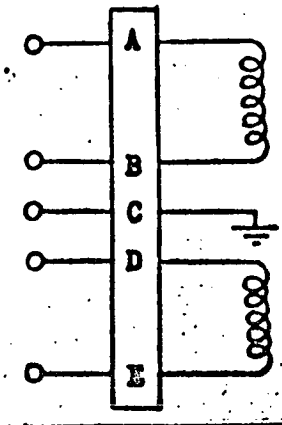

Figure 4

R-15075-1

DESIGN APPROVAL TEST
ORBIT ATTITUDE AND MANEUVER SYSTEM
(SE7)

NAME OF TEST COMPONENT DESCRIPTION TEST NO. 106156-401 SHEET 345 OF 413
PART NO. 2-DAY CONFIG. { MAC / NAA } 14-DAY CONFIG. { MAC 52-52701 / NAA 99-106156 }

COMPONENT ASSEMBLY PACKAGE "D"
P/N 406887

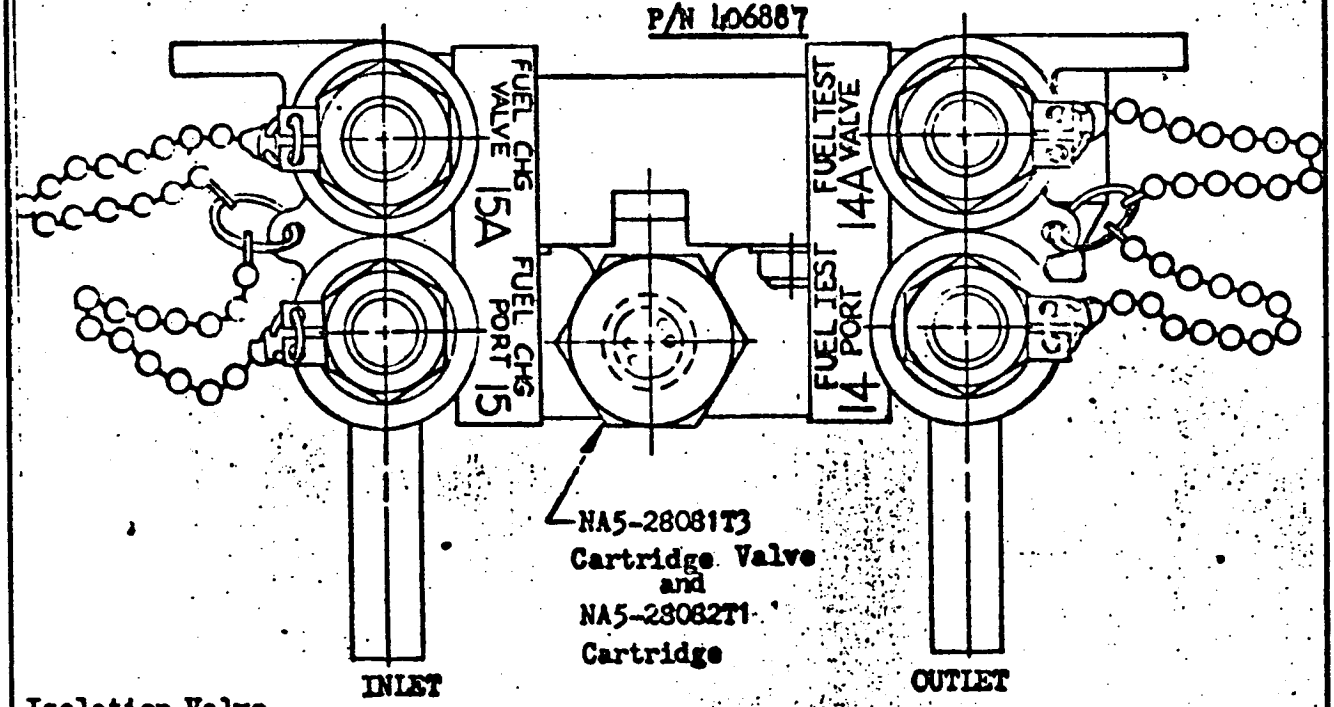

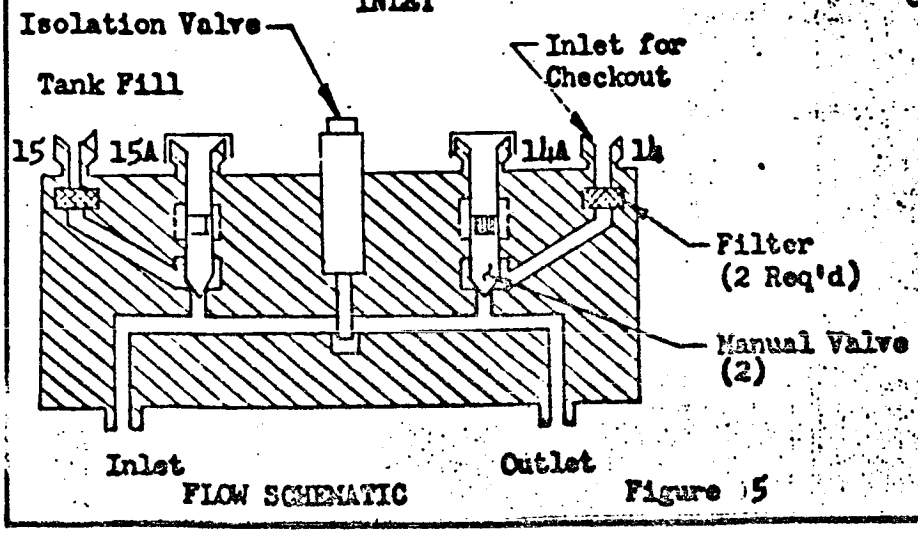

FLOW SCHEMATIC

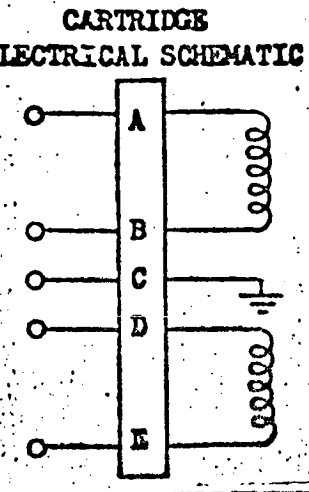

Figure 5

DESIGN APPROVAL TEST
ORBIT ATTITUDE AND MANEUVER SYSTEM
(SE7)

NAME OF TEST COMPONENT DESCRIPTION TEST NO. 106156-401 SHEET 346 OF 413

PART NO. 2-DAY CONFIG. { MAC / NAA } 14-DAY CONFIG. { MAC 52-52701 / NAA 99-106156 }

COMPONENT ASSEMBLY, PACKAGE "E" P/N 557000

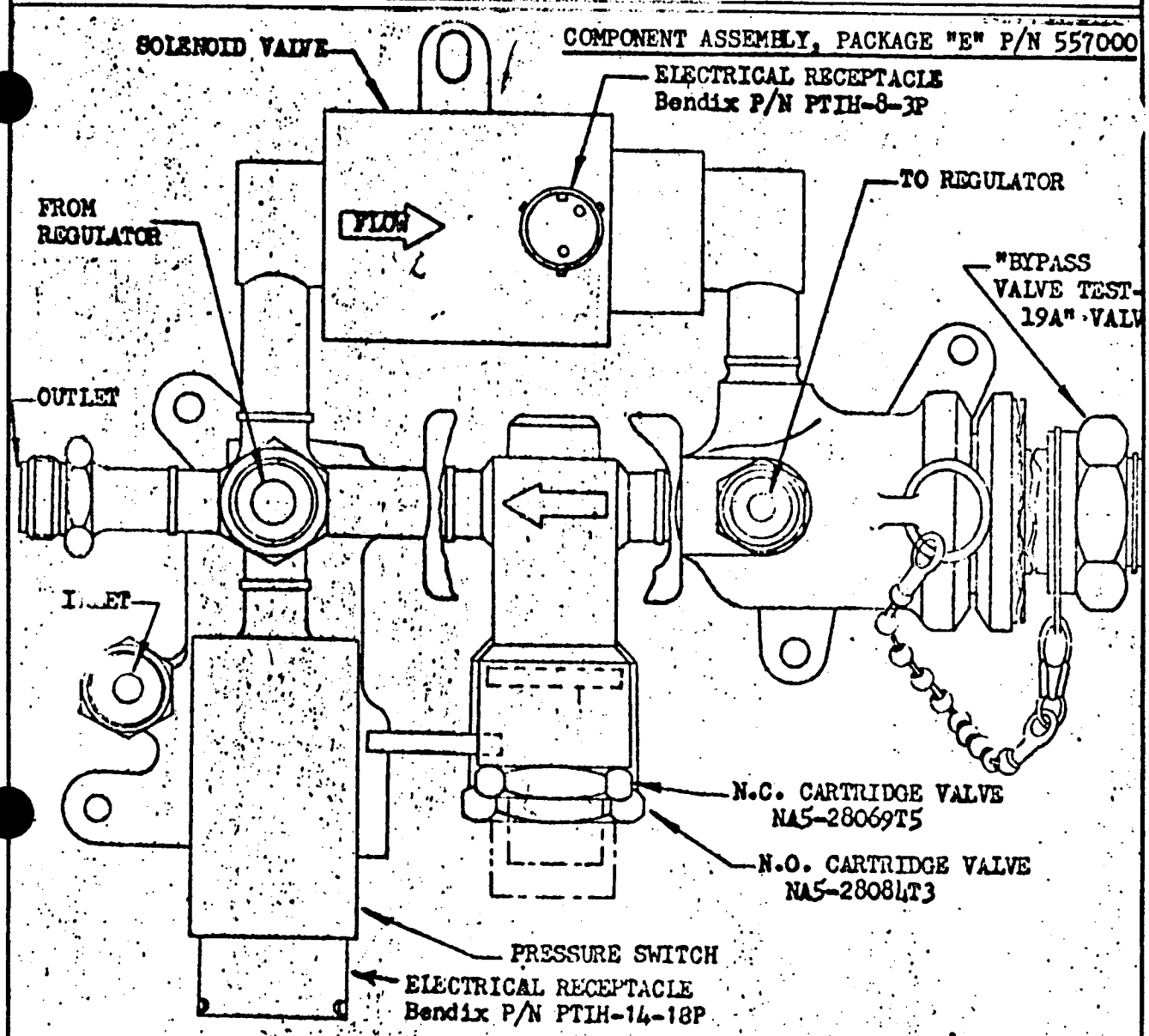

FIGURE 6

DESIGN APPROVAL TEST
ORBIT ATTITUDE AND MANEUVER SYSTEM
(SE7)

NAME OF TEST COMPONENT DESCRIPTION TEST NO. 106156-401 SHEET 347 OF 413

PART NO. 2-DAY CONFIG. { MAC / NAA } 14-DAY CONFIG. { MAC 52-52701 / NAA 99-106156 }

SCHEMATIC - COMPONENT PACKAGE "E", P/N ~~557000~~

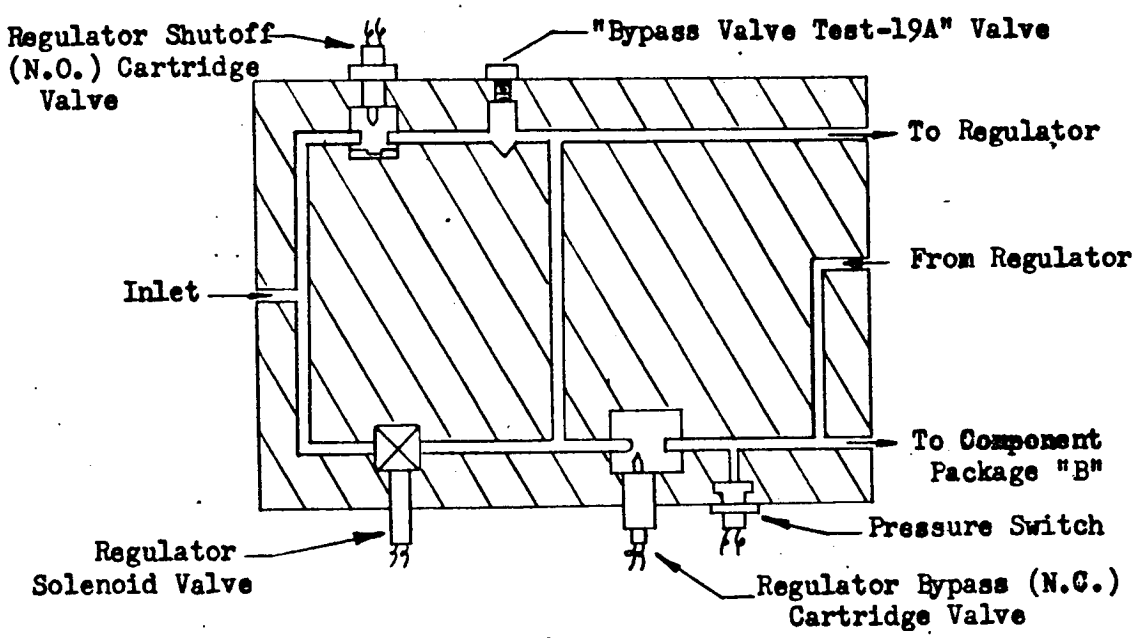

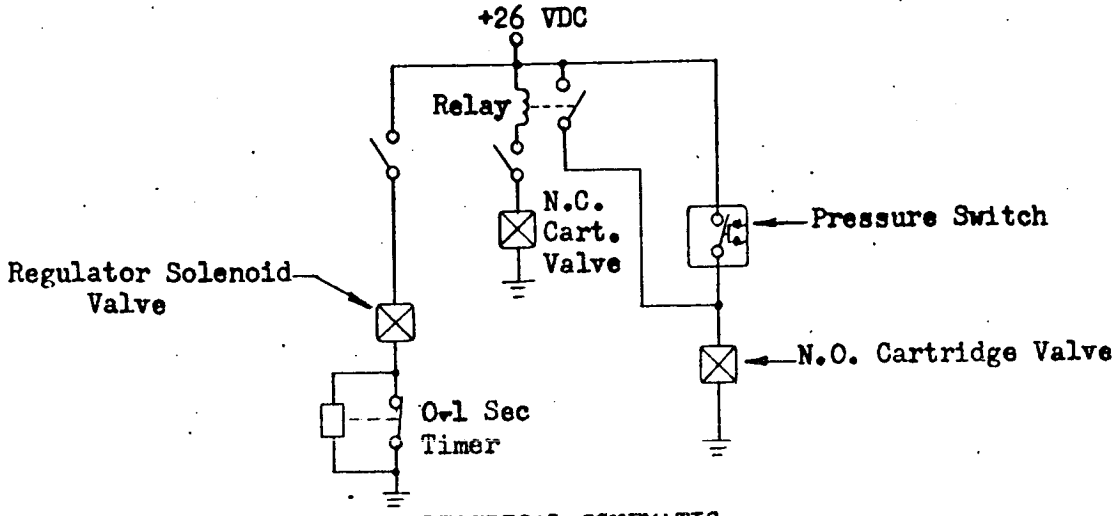

ELECTRICAL SCHEMATIC

FIGURE 7

DESIGN APPROVAL TEST
ORBIT ATTITUDE AND MANEUVER SYSTEM
(SE7)

NAME OF TEST COMPONENT DESCRIPTION TEST NO. 106156-401 SHEET 348 OF 413
PART NO. 2-DAY CONFIG. {MAC / NAA} 14-DAY CONFIG. {MAC 52-52701 / NAA 99-106156}

TANK ASSEMBLY, PRESSURANT - P/N 103654

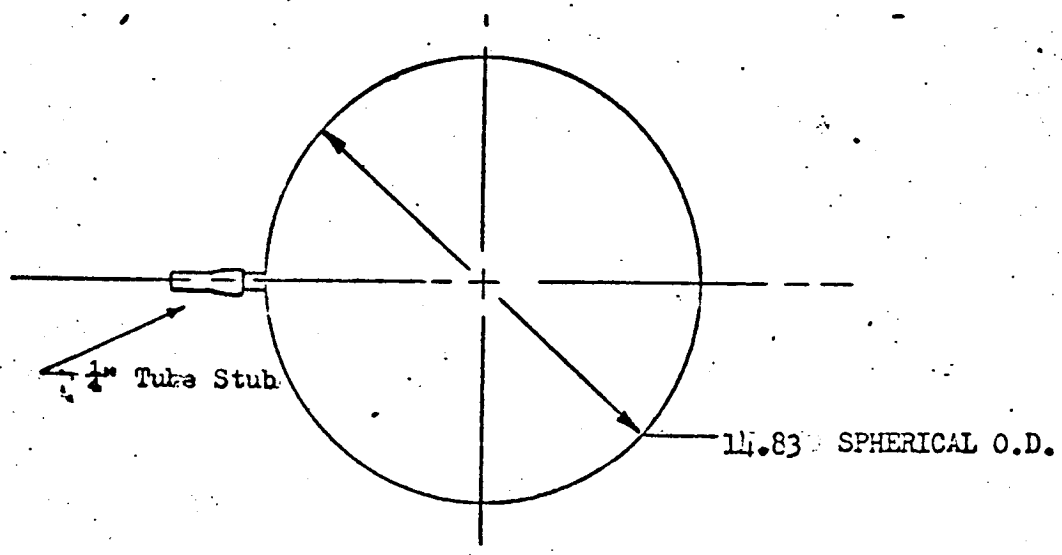

Figure 8

NAME OF TEST:	COMPONENT DES
PART NO: MAC:	52-52701
NAA:	106156
TEST NO:	106156-401

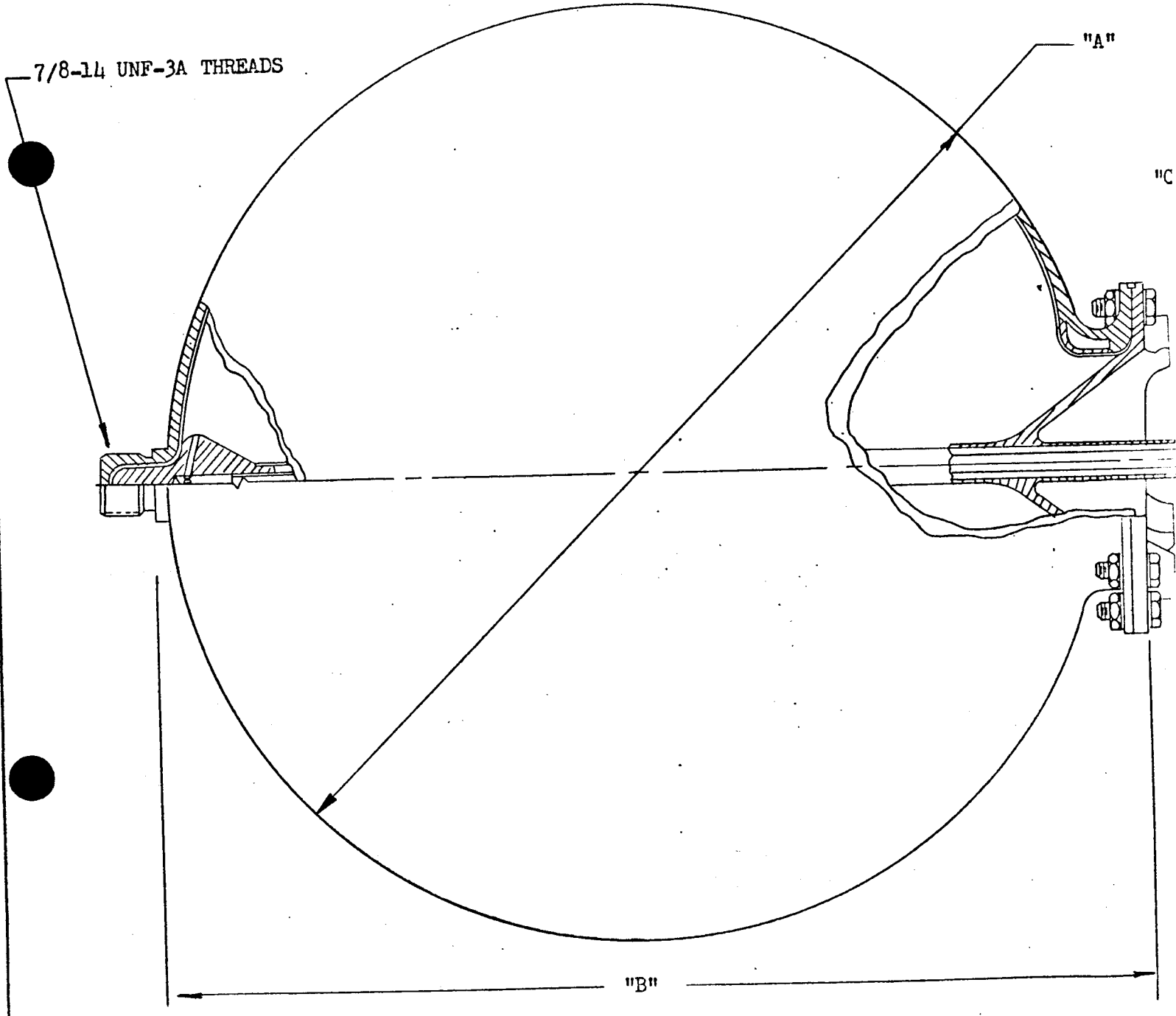

R-15075-1

T DESCRIPTION

01

PART NO.	USAGE	"A"	"B"	"C"
103655	OXID	21.96	23.26	5/16
103660	FUEL	21.96	23.26	5/16

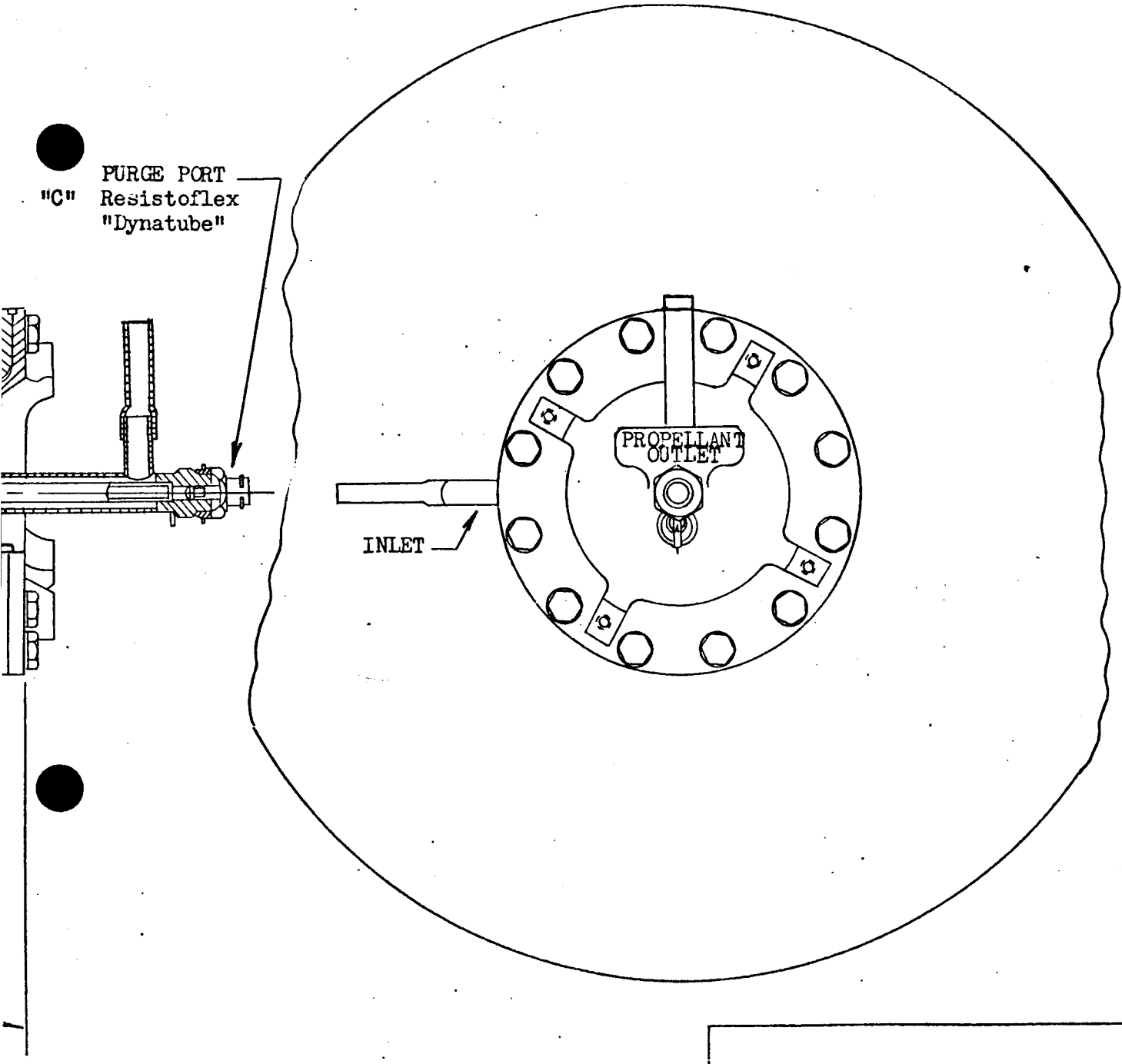

SE7 PROPELLANT TANK

FIGURE 9

DESIGN APPROVAL TEST
ORBIT ATTITUDE AND MANEUVER SYSTEM
(SE7)

NAME OF TEST COMPONENT DESCRIPTION TEST NO. 106156-401 SHEET 350 OF 413
PART NO. 2-DAY CONFIG. {MAC ____ NAA ____ 14-DAY CONFIG. {MAC 52-52701 NAA 99-106156

PRESSURE REGULATOR - P/N NA5-28070T2

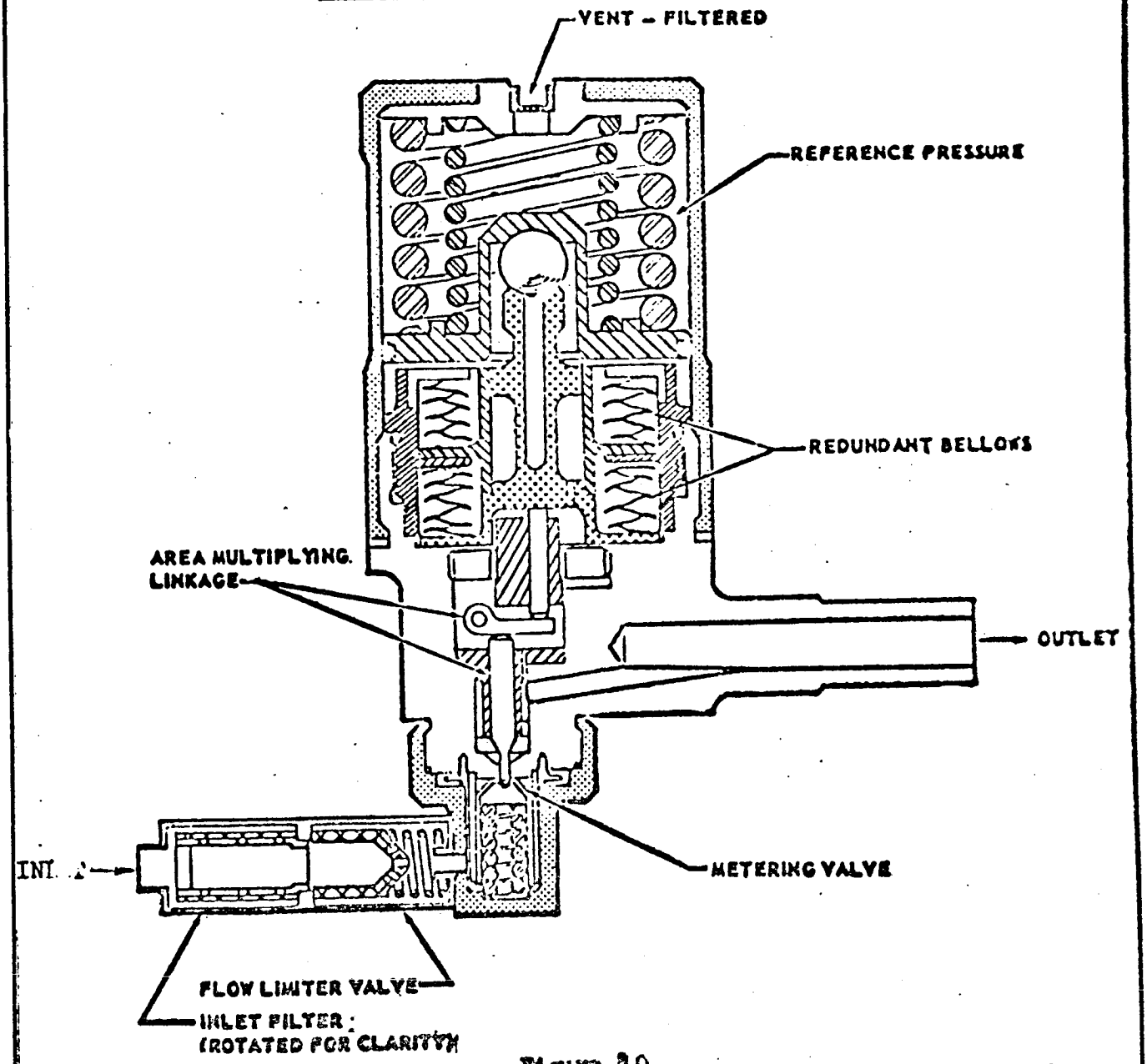

Figure 10

DESIGN APPROVAL TEST
ORBIT ATTITUDE AND MANEUVER SYSTEM
(SE7)

NAME OF TEST COMPONENT DESCRIPTION TEST NO. 106156-401 SHEET 351 OF 413
PART NO. 2-DAY CONFIG. {MAC / NAA} 14-DAY CONFIG. {MAC 52-52701 / NAA 99-106156}

CARTRIDGE - P/N NA5-28082T1 and NA5-28088T1

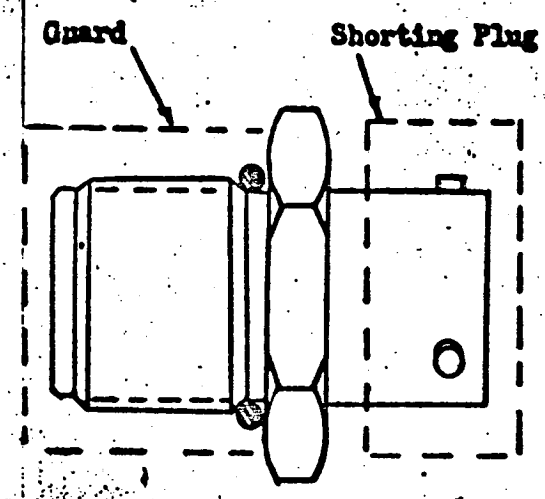

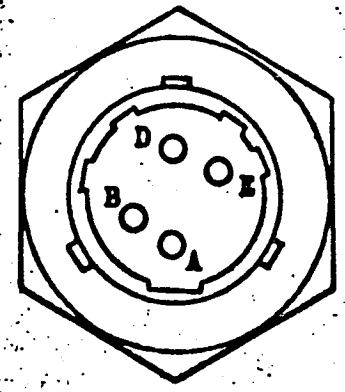

NA5-28082T1-Mates with Bendix
PT06P-10-6S Shorting Plug
MC06P-10-6S Normal Plug

NA5-28088T1-Mates with Bendix
PT06P-12-8S Shorting Plug
MC06P-12-8S Normal Plug

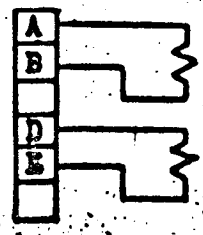

Bridgewires

ELECTRICAL SCHEMATIC

Figure 51

DESIGN APPROVAL TEST
ORBIT ATTITUDE AND MANEUVER SYSTEM
(SE7)

NAME OF TEST COMPONENT DESCRIPTION TEST NO. 106156-401 SHEET 352 OF 413

PART NO. 2-DAY CONFIG. { MAC ____ NAA ____ } 14-DAY CONFIG. { MAC 52-52701 NAA 99-106156 }

MOTOR OPERATED SHUTOFF VALVE, P/N NA5-28078T3

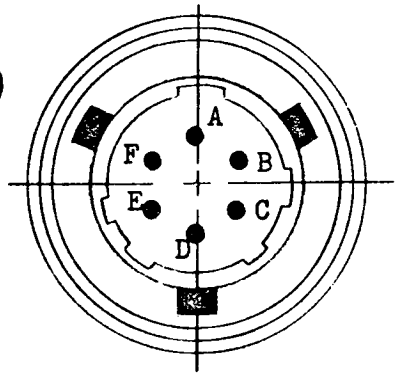

RECEPTACLE PIN IDENTIFICATION

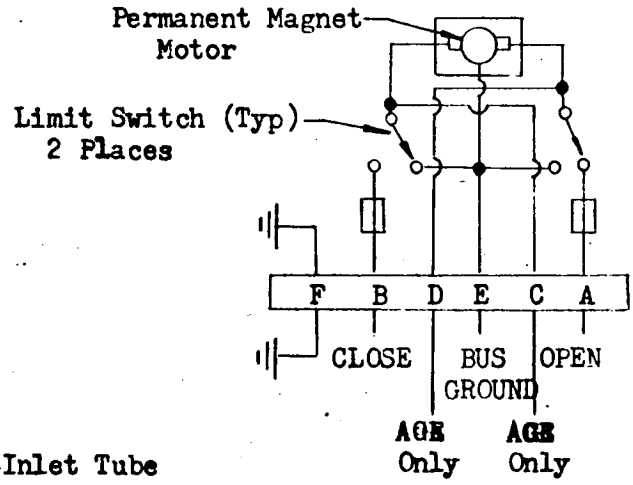

WIRING DIAGRAM

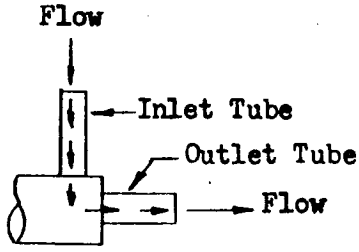

FLOW DIAGRAM
(Poppet "OPEN")

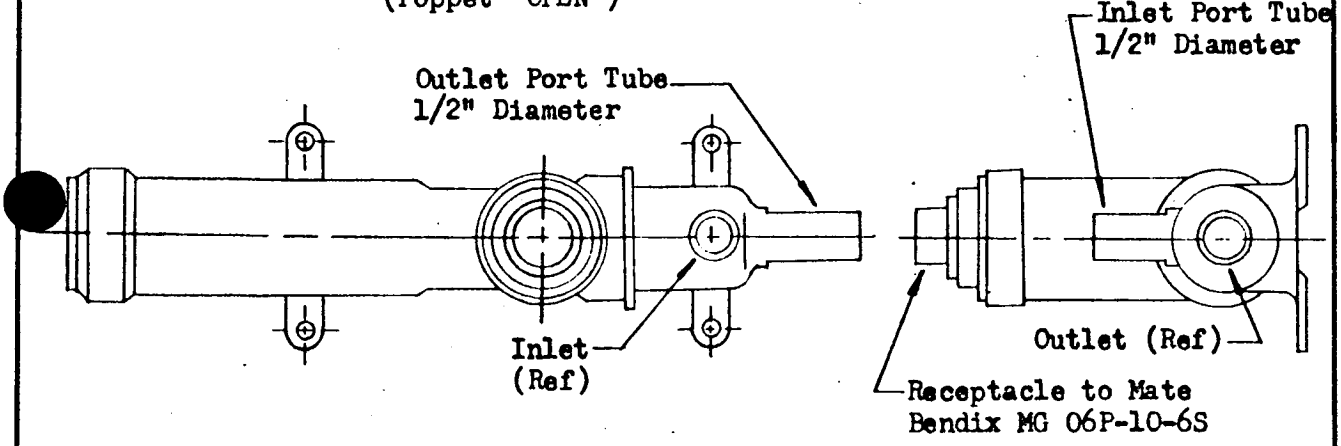

FIGURE 12

DESIGN APPROVAL TEST
ORBIT ATTITUDE AND MANEUVER SYSTEM
(SE7)

NAME OF TEST COMPONENT DESCRIPTION TEST NO. 106156-401 SHEET 353 OF 413
PART NO. 2-DAY CONFIG. { MAC / NAA } 14-DAY CONFIG. { MAC 52-52701 / NAA 99-106156 }

THRUST CHAMBER ASSEMBLY (25 LB) - P/N's 208160-21
208160-31

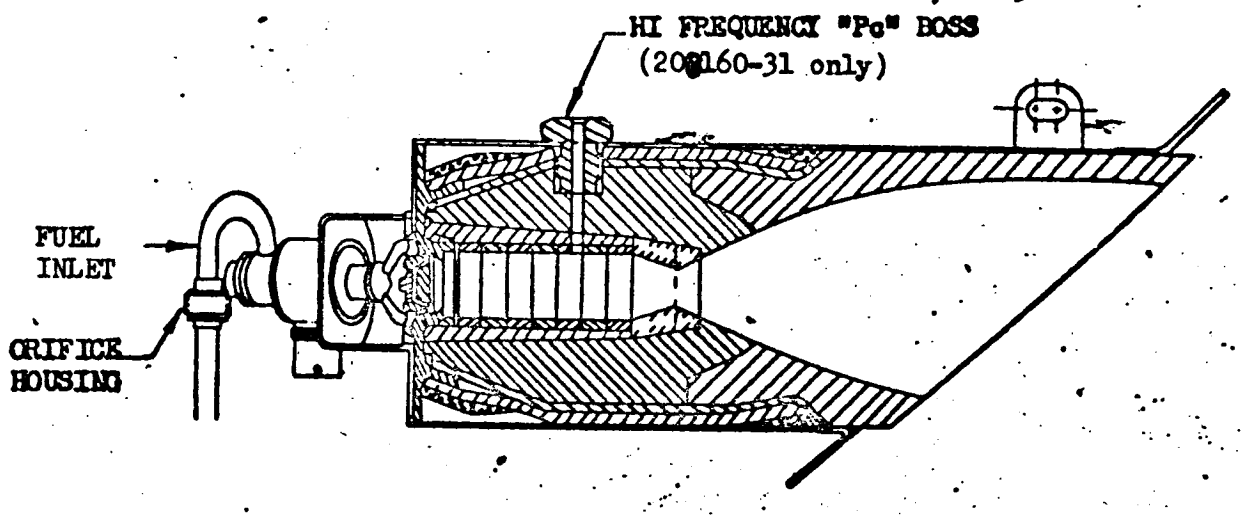

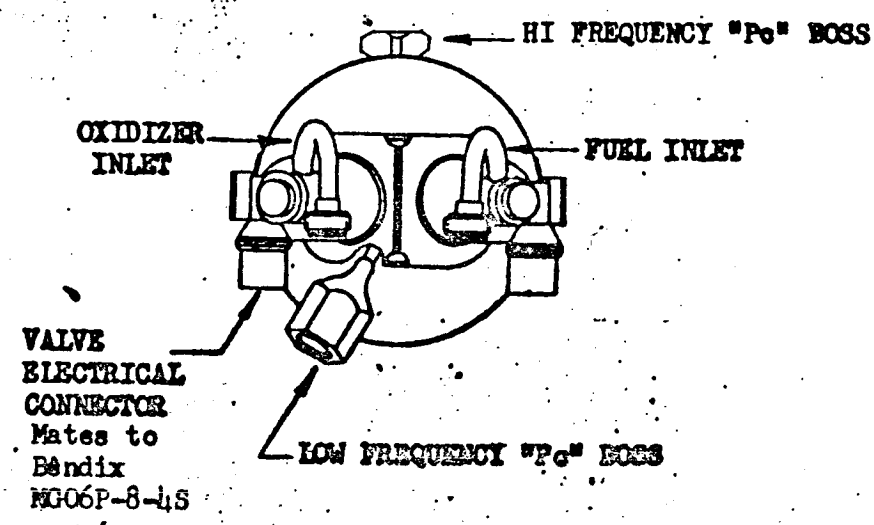

FIGURE 13

DESIGN APPROVAL TEST
ORBIT ATTITUDE AND MANEUVER SYSTEM
(SE7)

NAME OF TEST COMPONENT DESCRIPTION TEST NO. 106156-401 SHEET 354 OF 413
PART NO. 2-DAY CONFIG. { MAC / NAA } 14-DAY CONFIG. { MAC 52-52701 / NAA 99-106156 }

THRUST CHAMBER ASSEMBLY (85 LB), P/N 208510-21

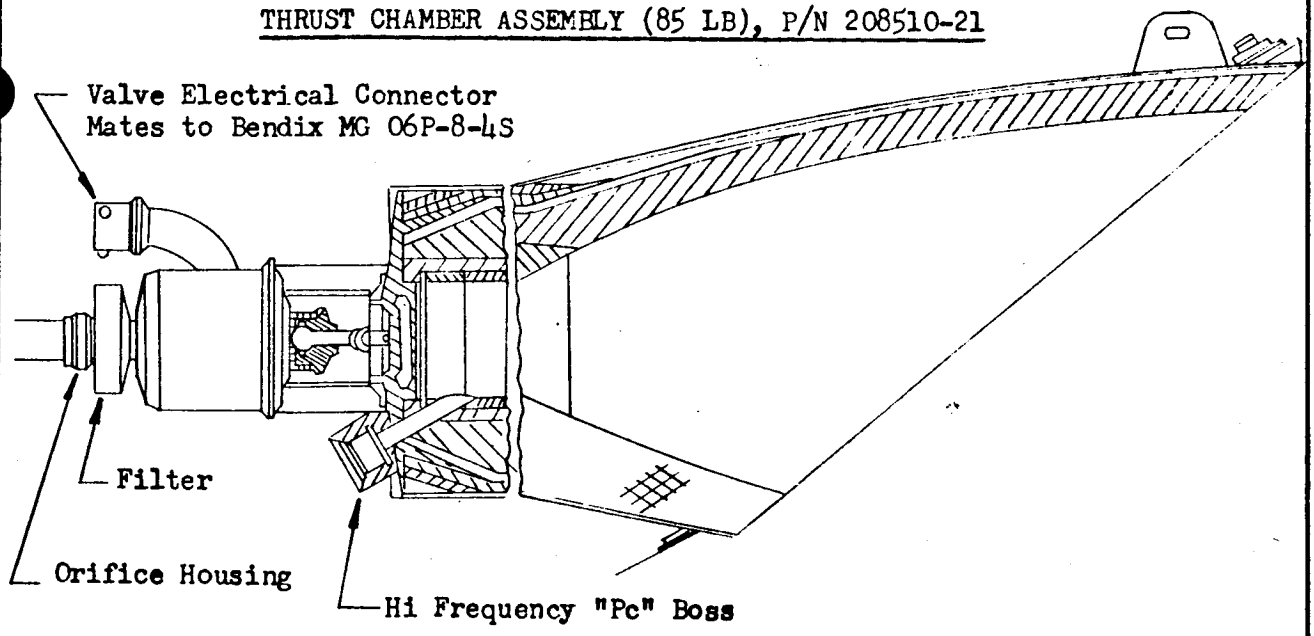

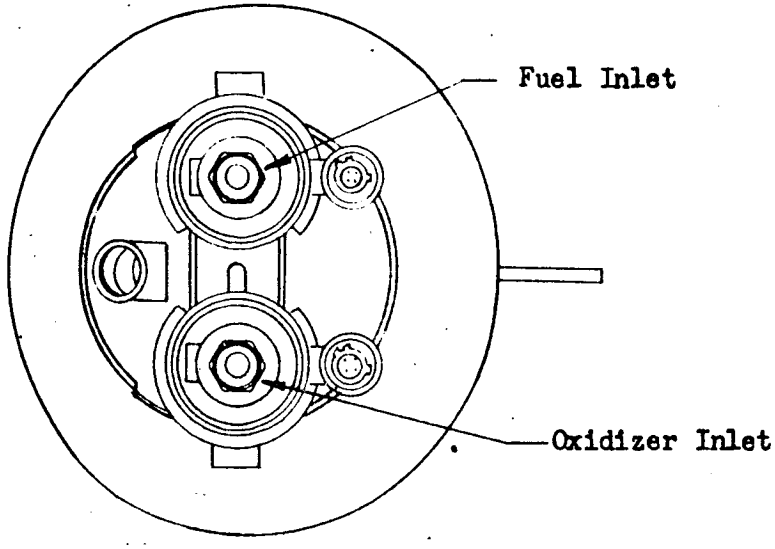

FIGURE 14

DESIGN APPROVAL TEST
ORBIT ATTITUDE AND MANEUVER SYSTEM
(SE7)

NAME OF TEST COMPONENT DESCRIPTION TEST NO. 106156-401 SHEET 355 OF 413

PART NO. 2-DAY CONFIG. { MAC ____ NAA ____ } 14-DAY CONFIG. { MAC 52-52701 NAA 99-106156 }

THRUST CHAMBER ASSEMBLY (100 LB), P/N 207540-21

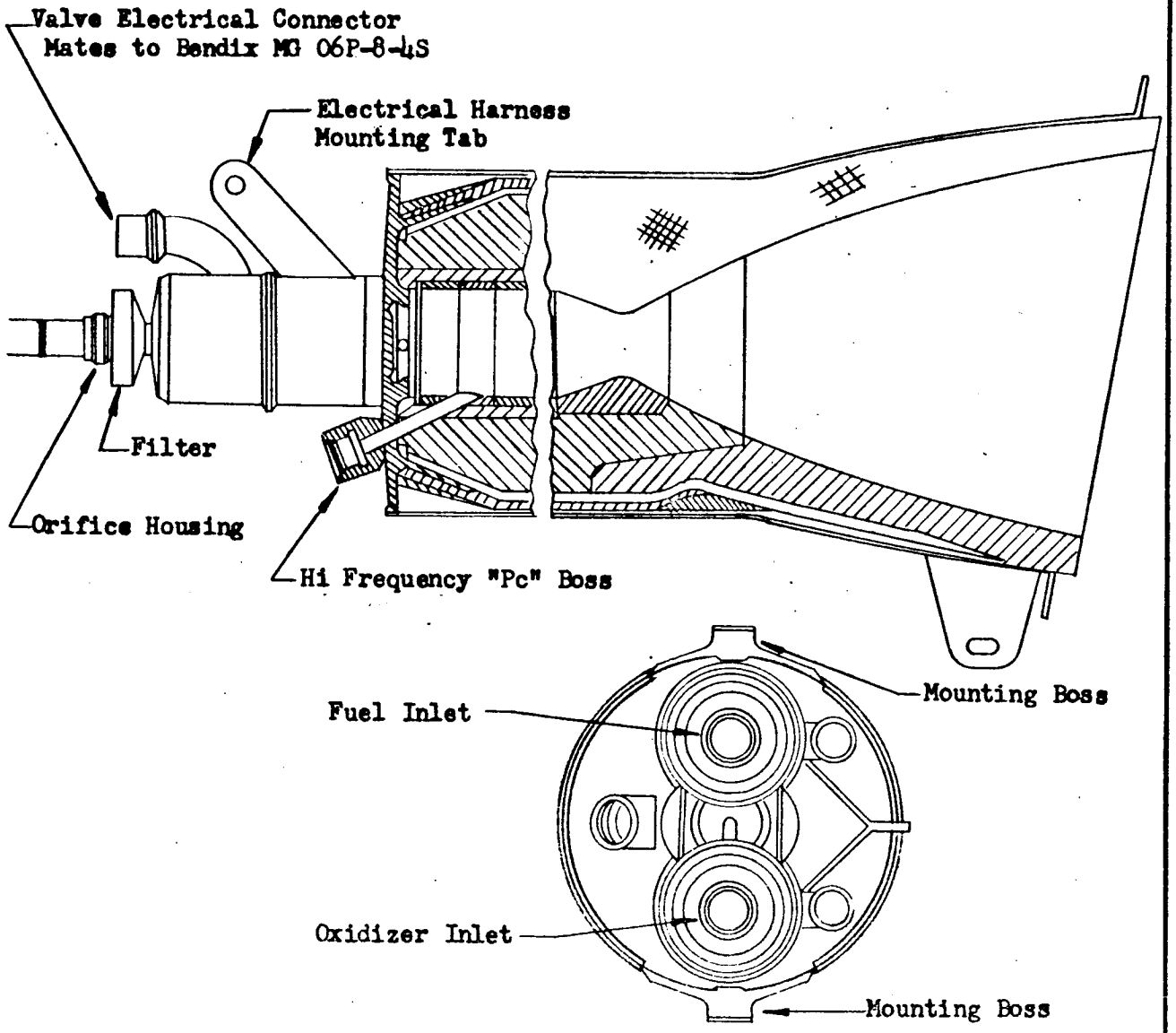

FIGURE 15

DESIGN APPROVAL TEST
ORBIT ATTITUDE AND MANEUVER SYSTEM
(SE7)

NAME OF TEST COMPONENT DESCRIPTION TEST NO. 106156-401 SHEET 356 OF 413

PART NO. 2-DAY CONFIG. {MAC ____ NAA ____ 14-DAY CONFIG. {MAC 52-52701 NAA 99-106156

TCA NUMBERING LOCATION

TCA	Position
25# TCA 208160-31	1,3,5,&7
25# TCA 208160-21	2,4,6 & 8
85# TCA 207510-21	11 & 12
100# TCA 207540-21	9,10,13,14, 15 & 16

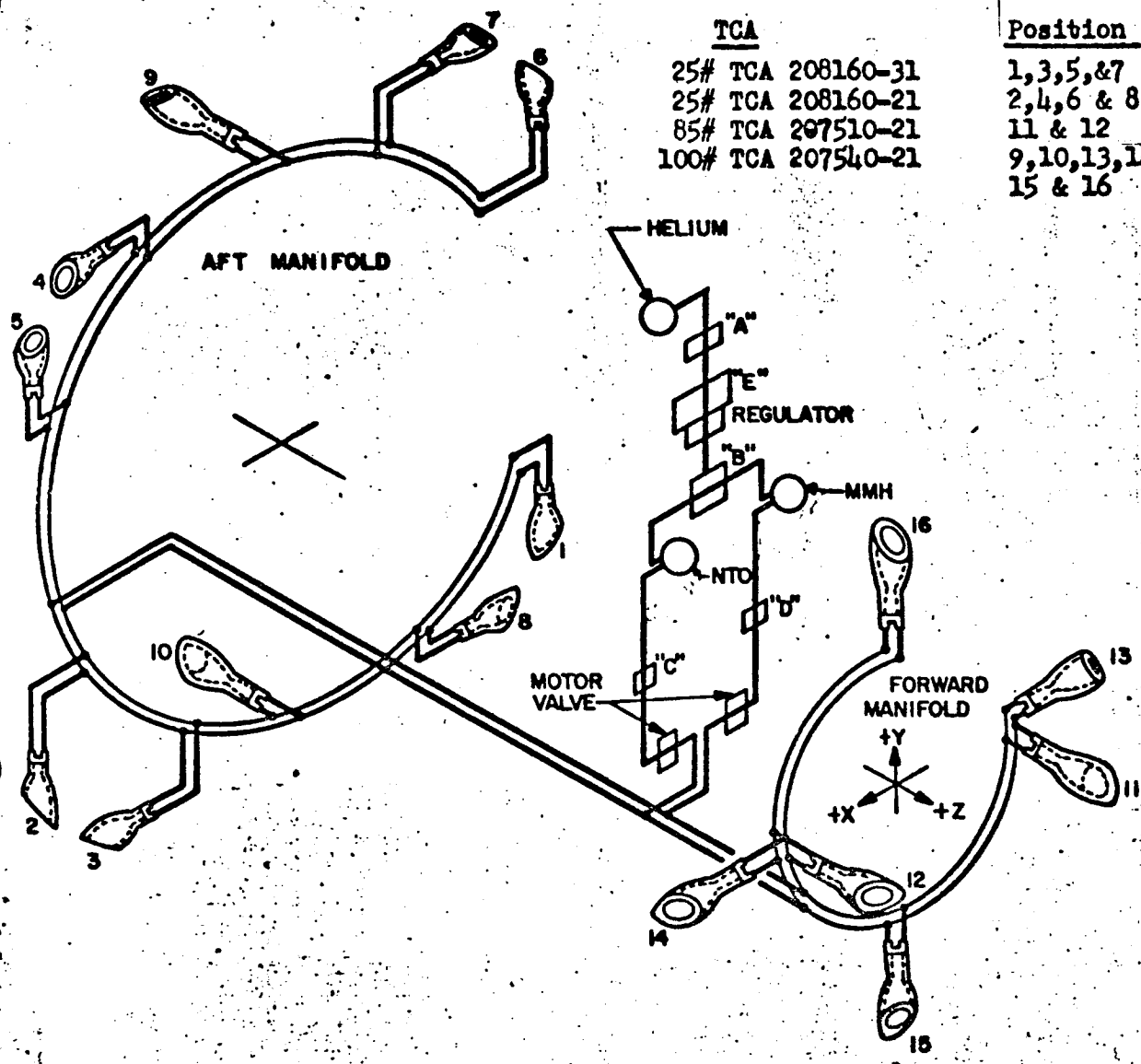

FIGURE 16

DESIGN APPROVAL TEST
ORBIT ATTITUDE AND MANEUVER SYSTEM
(SE7)

NAME OF TEST LIQUID CALIBRATION TEST NO. 106156-401 SHEET ___ OF ___
PART NO. 2-DAY CONFIG. { MAC ___ NAA ___ } 14-DAY CONFIG. { MAC 52-52701 NAA 99-106156 }

CARTRIDGE VALVE BYPASS ASSEMBLY - P/N 99-103326

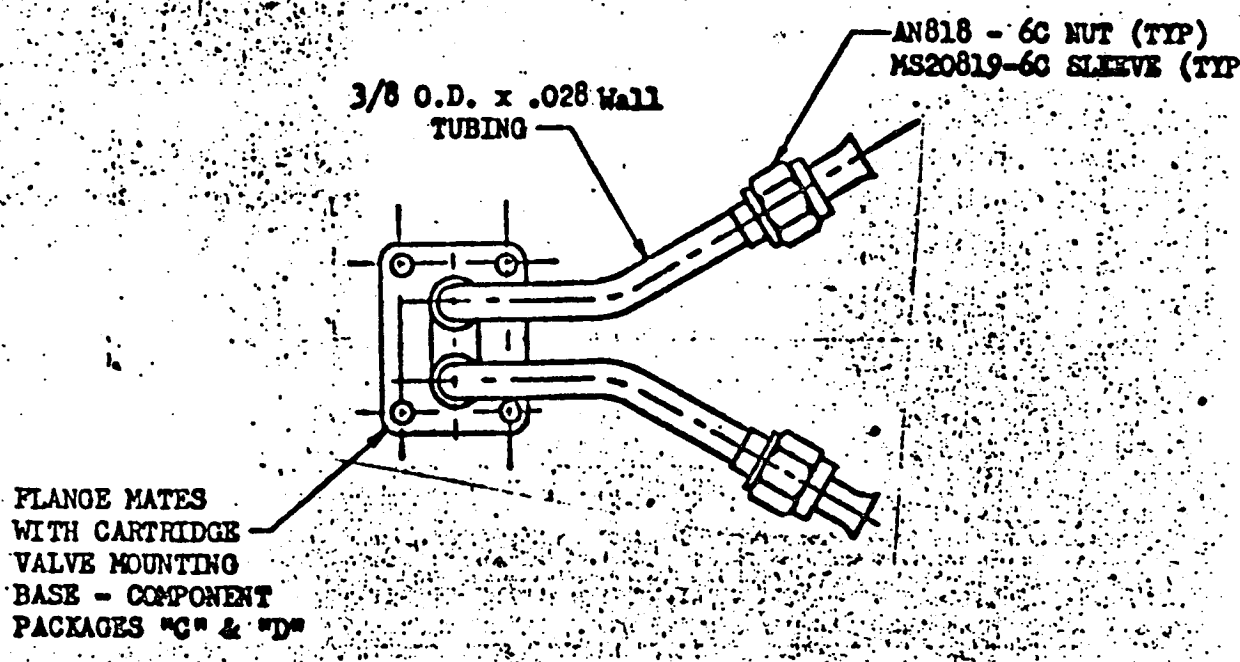

Figure 17

DESIGN APPROVAL TEST
ORBIT ATTITUDE AND MANEUVER SYSTEM
(SE7)

NAME OF TEST LOADING PROCEDURES TEST NO. 106156-401 SHEET 358 OF 413

PART NO. 2-DAY CONFIG. { MAC ____ NAA ____ } 14-DAY CONFIG. { MAC 52-52701 NAA 99-106156 }

He TANKING SERVICE CONNECTIONS

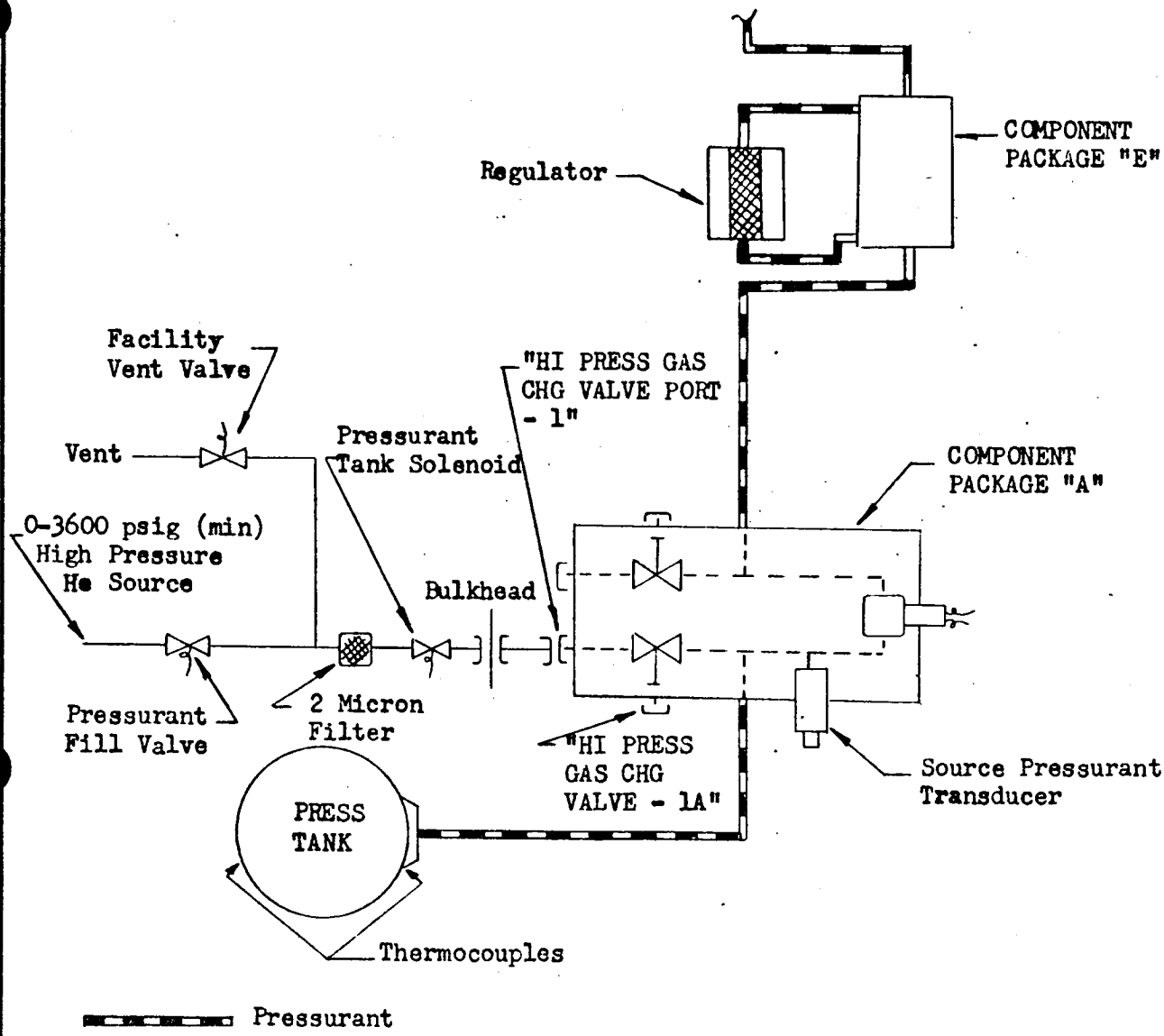

FIGURE 18

DESIGN APPROVAL TEST
ORBIT ATTITUDE AND MANEUVER SYSTEM
(SE7)

NAME OF TEST LOADING PROCEDURES TEST NO. 106156-401 SHEET ____ OF ____

PART NO. 2-DAY CONFIG. { MAC ____ / NAA ____ } 14-DAY CONFIG. { MAC 52-52701 / NAA 99-106156 }

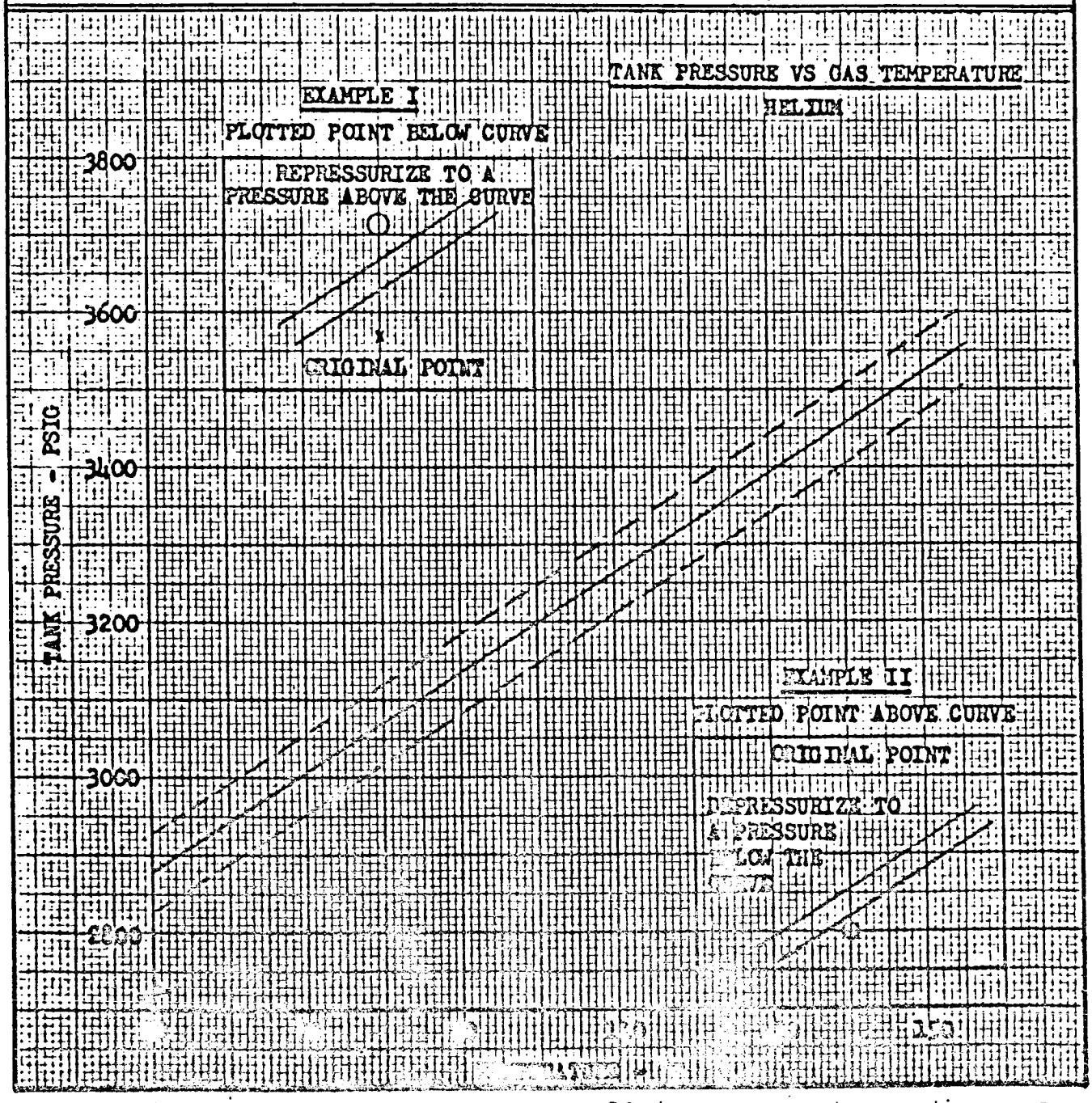

DESIGN APPROVAL TEST
ORBIT ATTITUDE AND MANEUVER SYSTEM
(SE7)

NAME OF TEST LOADING PROCEDURES TEST NO. 106156-401 SHEET 360 OF 413
PART NO. 2-DAY CONFIG. { MAC ____ NAA ____ } 14-DAY CONFIG. { MAC 52-52701 NAA 99-106156 }

Pressurant Tank Charge Pressure Determination - Cartridge Valves Fired

Nomenclature:

P_o = Density Oxidizer	lb/ft3	
P_f = Density Fuel	lb/ft^3	
V_o = Volume Oxidizer	in^3	
V_f = Volume Fuel	in^3	
U_o = Ullage, Oxidizer	in^3	
U_f = Ullage, Fuel	in^3	
U_t = Ullage, Total	in^3	
P_{He} = He Pressure	lb/in^2	
T_o = Oxidizer Temp	^oF	
T_f = Fuel Temp	^oF	
T_{He} = Average He Temp	^oF	

Initial Condition:

Loaded Oxidizer	245.8	lbs
Loaded Fuel	155.3	lbs
GN_2 Tank Volume	1695	in^3
Fuel Tank Volume	5355	in^3
Oxid Tank Volume	5355	in^3
Fuel Line Volume	70	in^3
Oxid Line Volume	83	in^3

Procedure:

(1) $P_o = 90.5 + 0.077(70 - T_o)$

(2) $P_f = 54.87 + 0.0325(70 - T_f)$

(3) $V_o = \frac{245.8}{P_o} \times 1728$

(4) $V_f = \frac{155.3}{P_f} \times 1728$

(5) $U_o = 5438 - V_o$

(6) $U_f = 5425 - V_f$

(7) $U_t = U_o + U_f$

(8) $P_{He} = 2880 + 6.4(T_{He} - 50) - 0.174\ U_t$

FIGURE 20

DESIGN APPROVAL TEST
ORBIT ATTITUDE AND MANEUVER SYSTEM
(SE7)

NAME OF TEST LOADING PROCEDURES TEST NO. 106156-401 SHEET 361 OF 413

PART NO. 2-DAY CONFIG. { MAC ____ NAA ____ } 14-DAY CONFIG. { MAC 52-52701 NAA 99-106156 }

OXIDIZER SYSTEM LOADING SERVICE CONNECTIONS

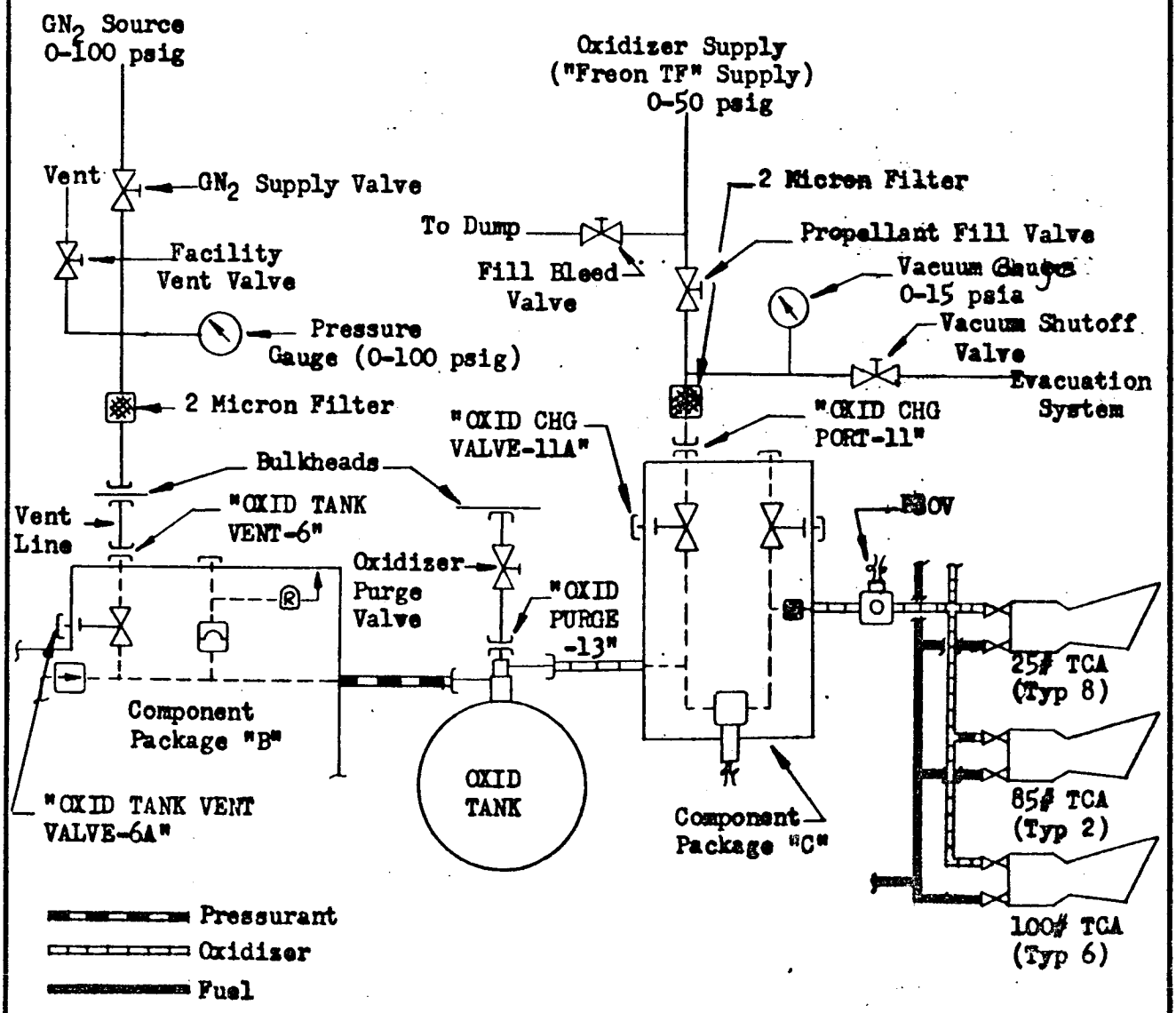

FIGURE 21

DESIGN APPROVAL TEST
ORBIT ATTITUDE AND MANEUVER SYSTEM
(SE7)

NAME OF TEST LOADING PROCEDURES TEST NO. 106156-401 SHEET 362 OF 413

PART NO. 2-DAY CONFIG. { MAC ____ NAA ____ 14-DAY CONFIG. { MAC 52-52701 NAA 99-106156

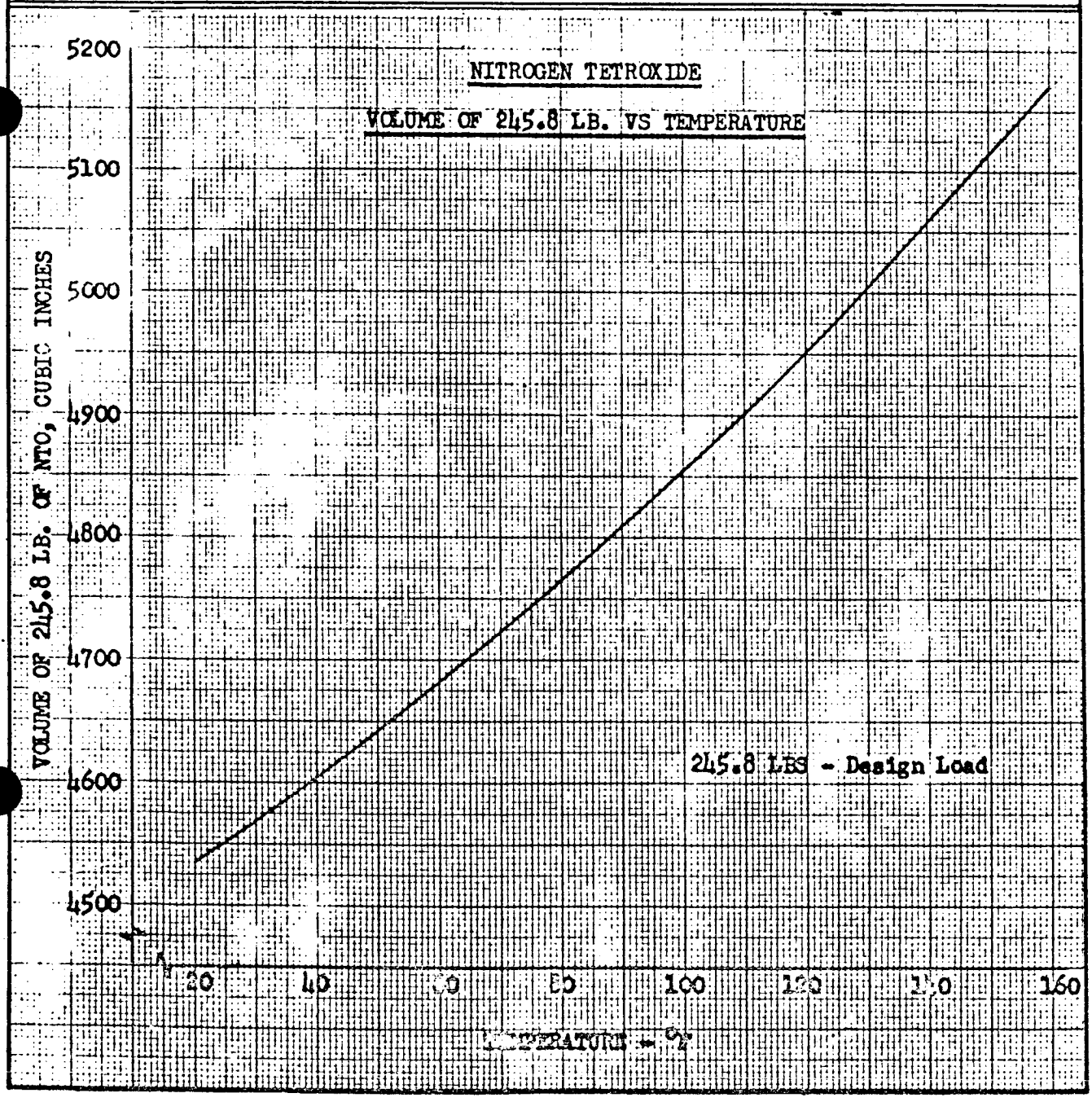

FIGURE 22

DESIGN APPROVAL TEST
ORBIT ATTITUDE AND MANEUVER SYSTEM
(SE7)

NAME OF TEST LOADING PROCEDURES TEST NO. 106156-401 SHEET 363 OF 413
PART NO. 2-DAY CONFIG. { MAC / NAA } 14-DAY CONFIG. { MAC 52-52701 / NAA 99-106156 }

FUEL SYSTEM LOADING SERVICE CONNECTIONS

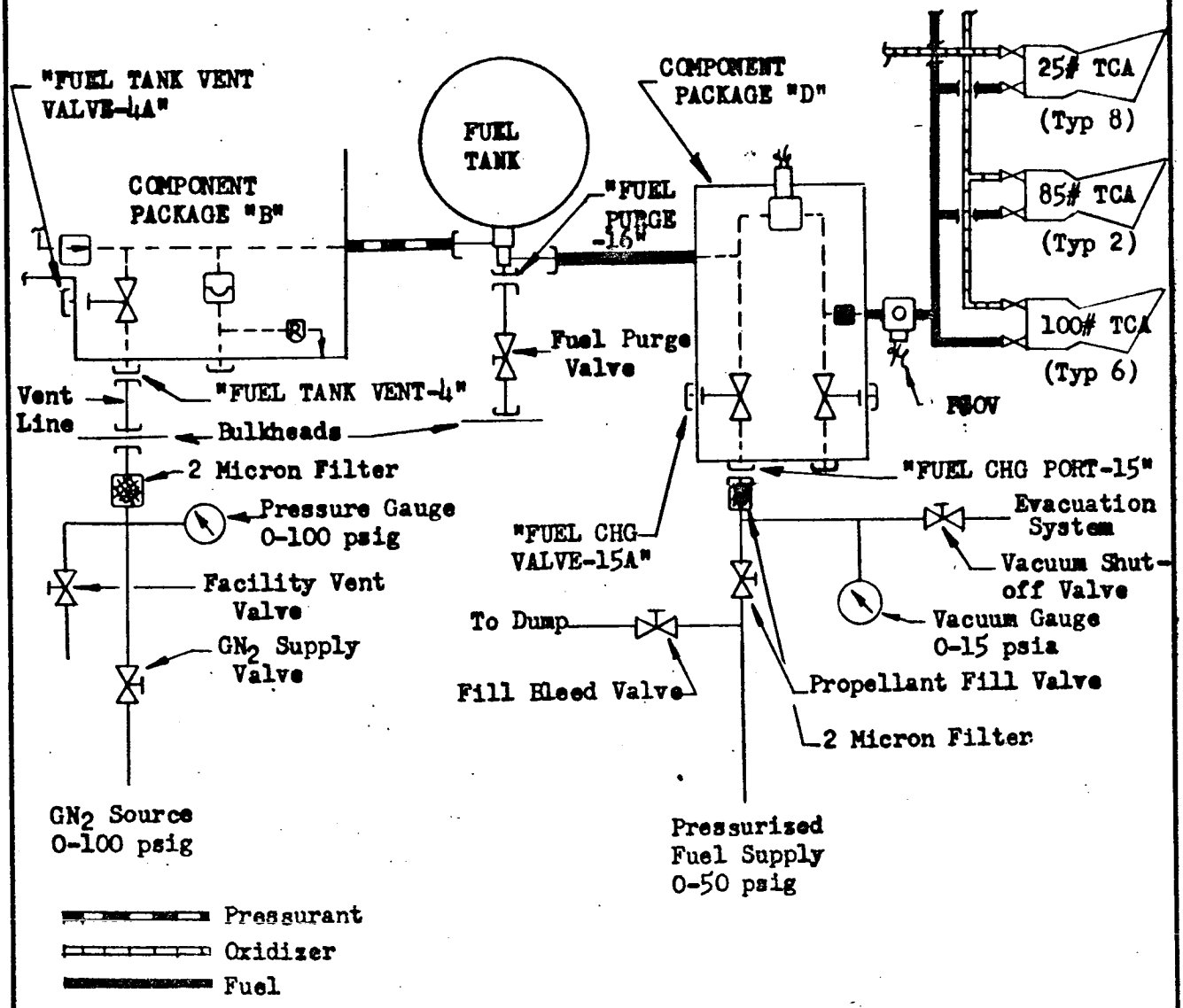

FIGURE 23

DESIGN APPROVAL TEST
ORBIT ATTITUDE AND MANEUVER SYSTEM
(SE7)

NAME OF TEST LOADING PROCEDURES TEST NO. 106156-401 SHEET 364 OF 413

PART NO. 2-DAY CONFIG. { MAC ____ NAA ____ } 14-DAY CONFIG. { MAC 52-52701 NAA 99-106156 }

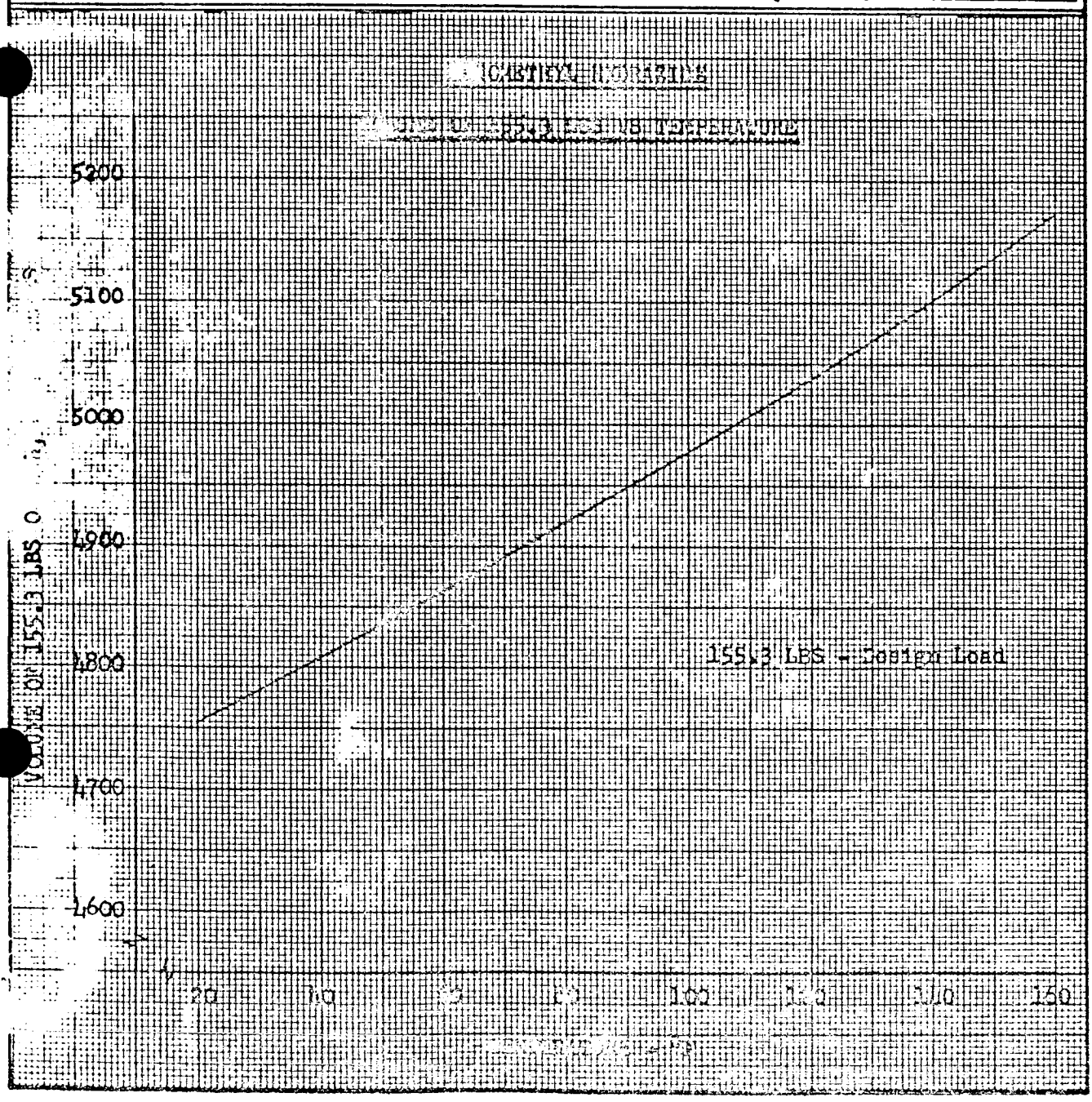

FIGURE 24

DESIGN APPROVAL TEST
ORBIT ATTITUDE AND MANEUVER SYSTEM
(SE7)

NAME OF TEST LOADING PROCEDURES TEST NO. 106156-401 SHEET 365 OF 413
PART NO. 2-DAY CONFIG. { MAC / NAA } 14-DAY CONFIG. { MAC 52-52701 / NAA 99-106156 }

OXIDIZER DETANKING AND UTILIZATION DETERMINATION

Nomenclature

To_1	= Temperature, pre-refill	°F
To_2	= Temperature, post-refill	°F
Vo_1	= Volume, pre-refill, in Supply Tank	in^3
Vo_2	= Volume, post-refill, in Supply Tank	in^3
Vg_1	= Volume from Figure 22 at $\frac{To_1 + To_2}{2}$	in^3
Vu_1	= Volume used	in^3
Vd_o	= Volume to be detanked	in^3
Usage	= Amount used	lbs

Procedure

$$Vd_o = 5438 - Vg_1$$

$$Vu_1 = (Vo_1 - Vo_2) - Vd_o$$

$$\text{Usage} = Vu_1 \left[\frac{90.5 + 0.077 \left(70 - \frac{(To_1 + To_2)}{2} \right)}{1728} \right]$$

Figure 25

Rev. C R. L. Tree Date 10-15-65

DESIGN APPROVAL TEST
ORBIT ATTITUDE AND MANEUVER SYSTEM
(SE7)

NAME OF TEST LOADING PROCEDURES TEST NO. 106156-401 SHEET 366 OF 413

PART NO. 2-DAY CONFIG. { MAC / NAA } 14-DAY CONFIG. { MAC 52-52701 / NAA 99-106156 }

FUEL DETANKING AND UTILIZATION DETERMINATION

Nomenclature

Tf_1	= Temperature, pre-refill	°F
Tf_2	= Temperature, post-refill	°F
Vf_1	= Volume, pre-refill, in Supply Tank	in^3
Vf_2	= Volume, post-refill, in Supply Tank	in^3
Vg_2	= Volume from Figure 24 at $\frac{Tf_1 + Tf_2}{2}$	in^3
Vd_f	= Volume to be detanked	in^3
Vu_2	= Volume used	in^3
Usage	= Amount used	lbs

C

Procedure

$$Vd_f = 5425 - Vg_2$$

$$Vu_2 = (Vf_1 - Vf_2) - Vd_f$$

$$\text{Usage} = Vu_2 \left[\frac{54.87 + 0.0325 \left(70 - \frac{(Tf_1 + Tf_2)}{2} \right)}{1728} \right]$$

Figure 26

Rev. C Date 10-15-65

DESIGN APPROVAL TEST
ORBIT ATTITUDE AND MANEUVER SYSTEM
(SE7)

NAME OF TEST LOADING PROCEDURES TEST NO. 106156-401 SHEET 367 OF 413
PART NO. 2-DAY CONFIG. { MAC ____ NAA ____ } 14-DAY CONFIG. { MAC 52-52701 NAA 99-106156 }

"FREON" LOADING SERVICE CONNECTIONS - (OXIDIZER SYSTEM)

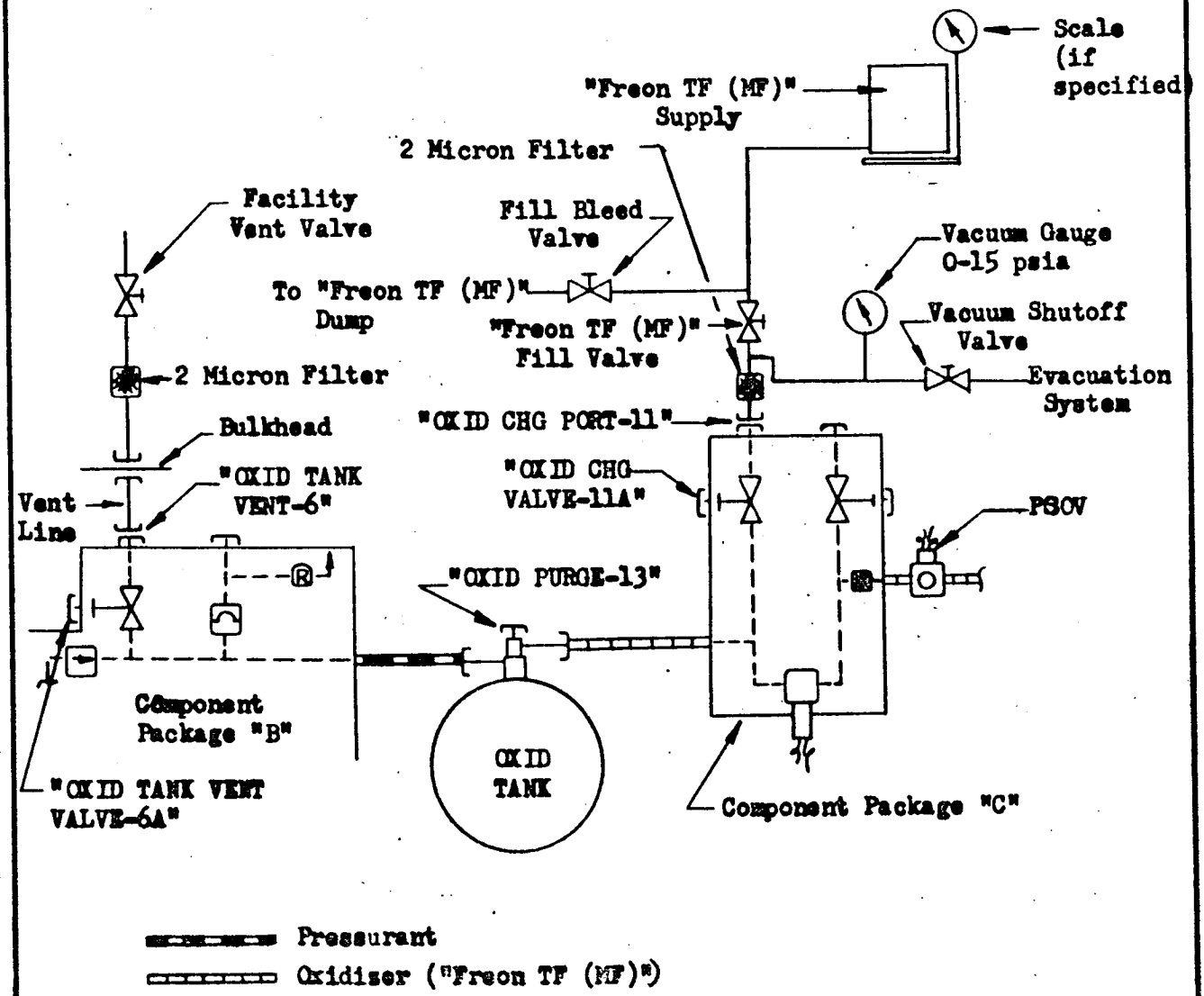

FIGURE 27

DESIGN APPROVAL TEST
ORBIT ATTITUDE AND MANEUVER SYSTEM
(SE7)

NAME OF TEST LOADING PROCEDURES TEST NO 106156-401 SHEET 368 OF 413
PART NO. 2-DAY CONFIG. { MAC / NAA } 14-DAY CONFIG. { MAC 52-52701 / NAA 88-106156 }

ALCOHOL LOADING SERVICE CONNECTIONS - (FUEL SYSTEM)

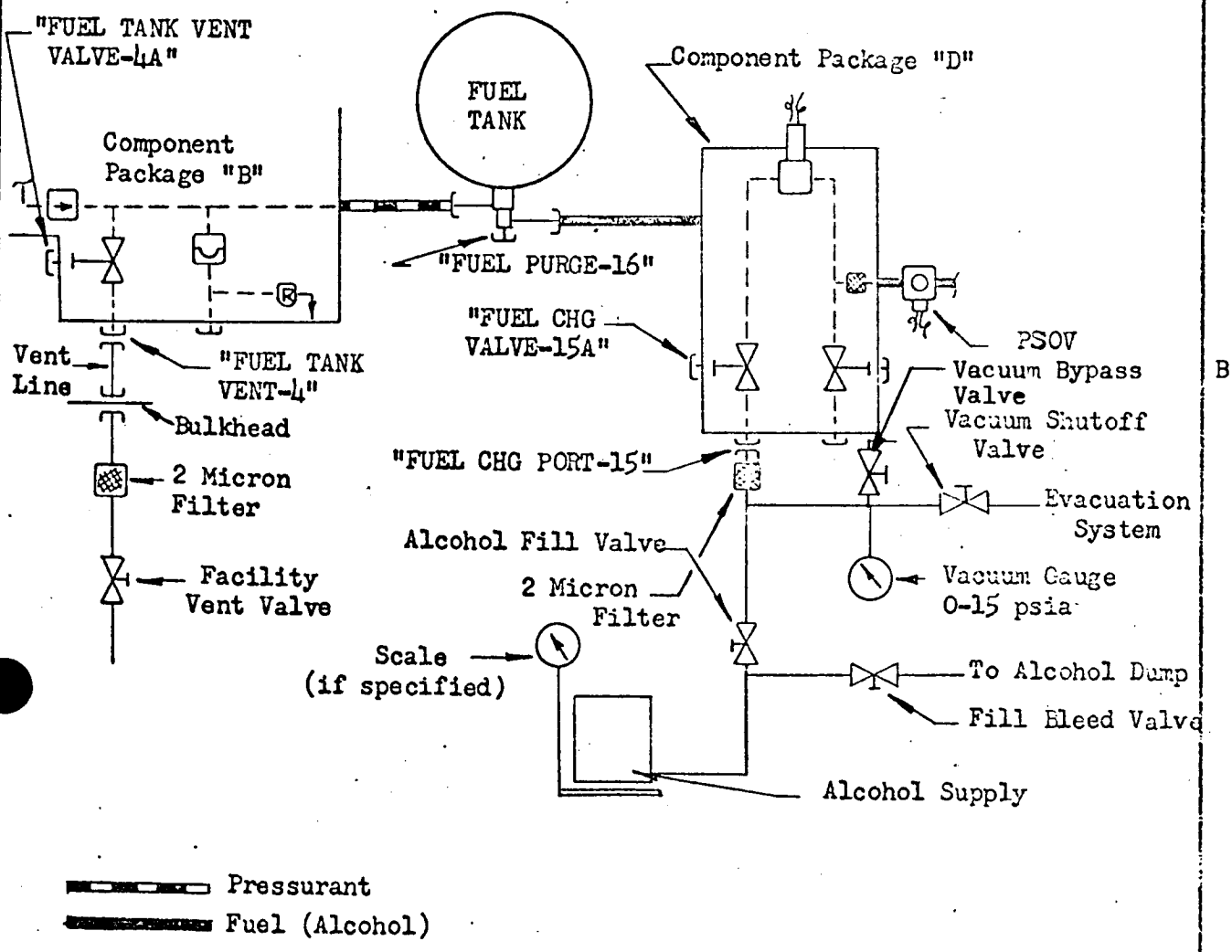

FIGURE 28

DESIGN APPROVAL TEST
ORBIT ATTITUDE AND MANEUVER SYSTEM
(SE7)

NAME OF TEST DRAIN AND CLEAN PROCEDURES TEST NO. 106156-401 SHEET 369 OF 413
PART NO. 2-DAY CONFIG. { MAC ____ NAA ____ } 14-DAY CONFIG. { MAC 52-52701 NAA 99-106156 }

OXIDIZER ("FREON") DRAIN AND CLEAN SERVICE CONNECTIONS

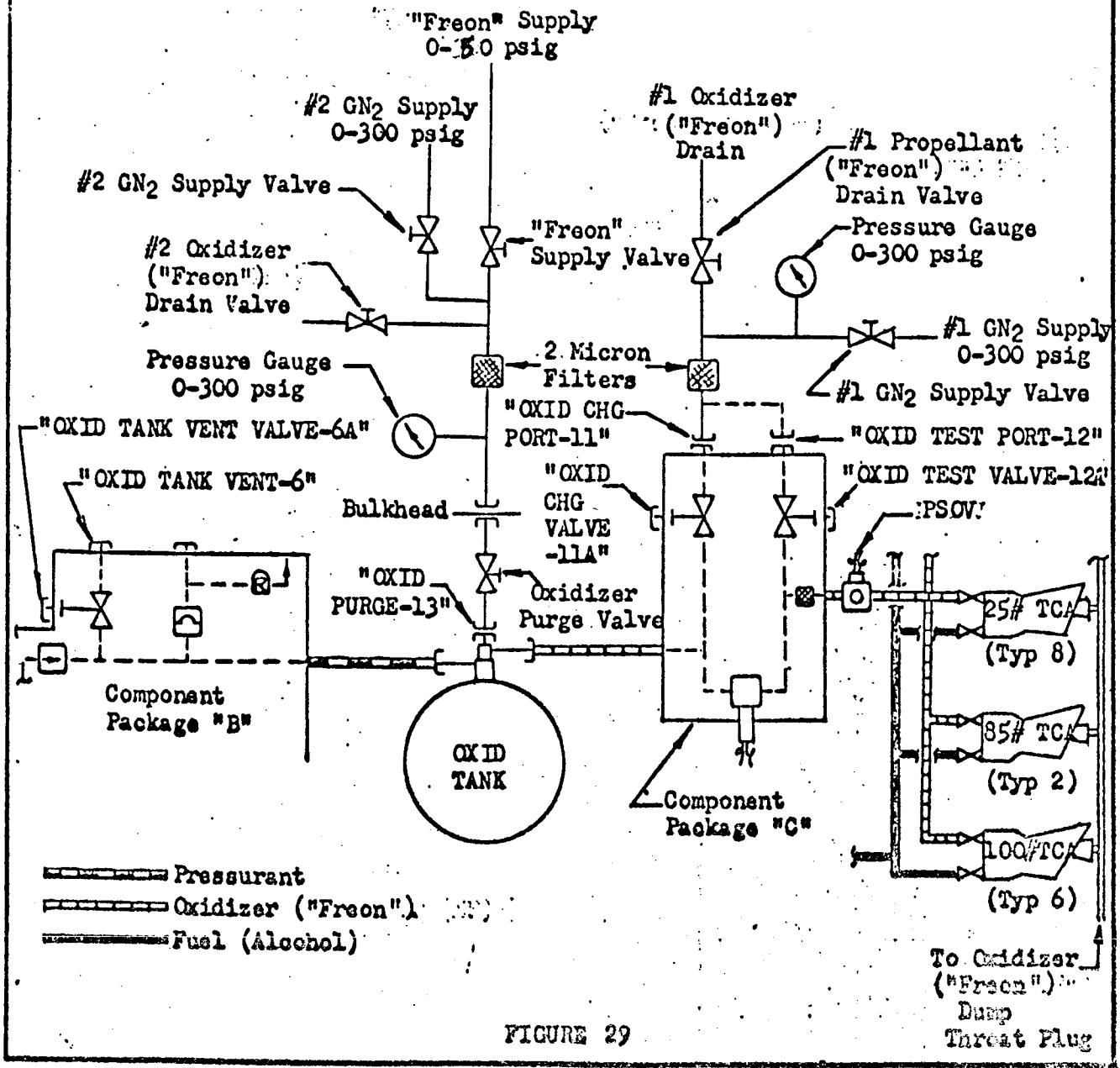

FIGURE 29

DESIGN APPROVAL TEST
ORBIT ATTITUDE AND MANEUVER SYSTEM
(SE7)

NAME OF TEST DRAIN AND CLEAN PROCEDURES TEST NO. 106156-401 SHEET 370 OF 413
PART NO. 2-DAY CONFIG. { MAC ____ NAA ____ } 14-DAY CONFIG. { MAC 52-52701 NAA 99-106156 }

FUEL (ALCOHOL) ("FREON")DRAIN AND CLEAN SERVICE CONNECTIONS

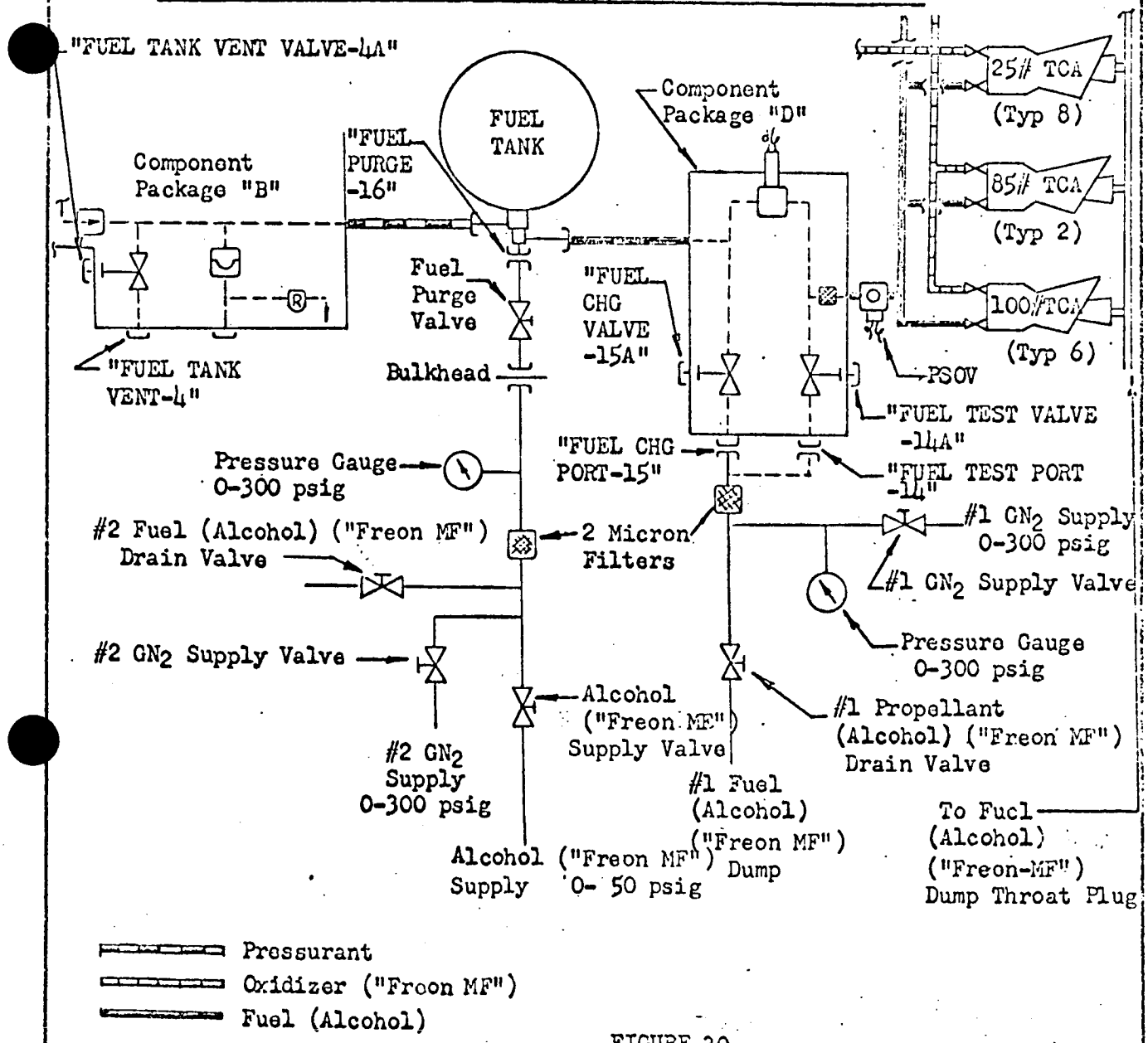

FIGURE 30

DESIGN APPROVAL TEST
ORBIT ATTITUDE AND MANEUVER SYSTEM
(SE7)

NAME OF TEST DRAIN AND CLEAN PROCEDURES TEST NO. 106156-401 SHEET 371 OF 413

PART NO. 2-DAY CONFIG. { MAC ____ NAA ____ } 14-DAY CONFIG. { MAC 52-52701 NAA 99-106156 }

OXIDIZER SYSTEM EVACUATION SCHEMATIC

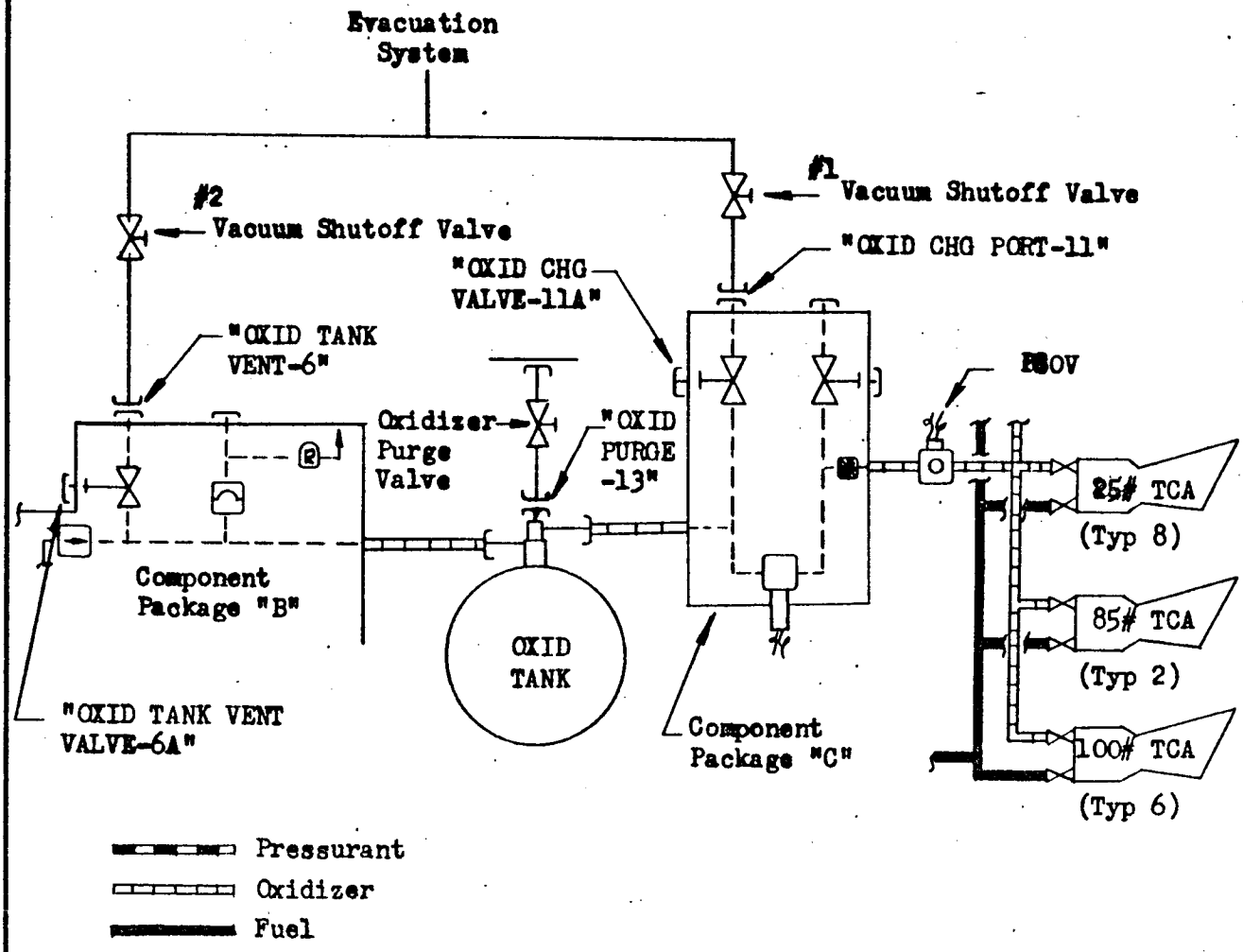

FIGURE 31

DESIGN APPROVAL TEST
ORBIT ATTITUDE AND MANEUVER SYSTEM
(SE7)

NAME OF TEST DRAIN AND CLEAN PROCEDURES TEST NO. 106156-401 SHEET 372 OF 413
PART NO. 2-DAY CONFIG. { MAC ____ NAA ____ } 14-DAY CONFIG. { MAC 52-52701 NAA 99-106156 }

FUEL SYSTEM EVACUATION SCHEMATIC

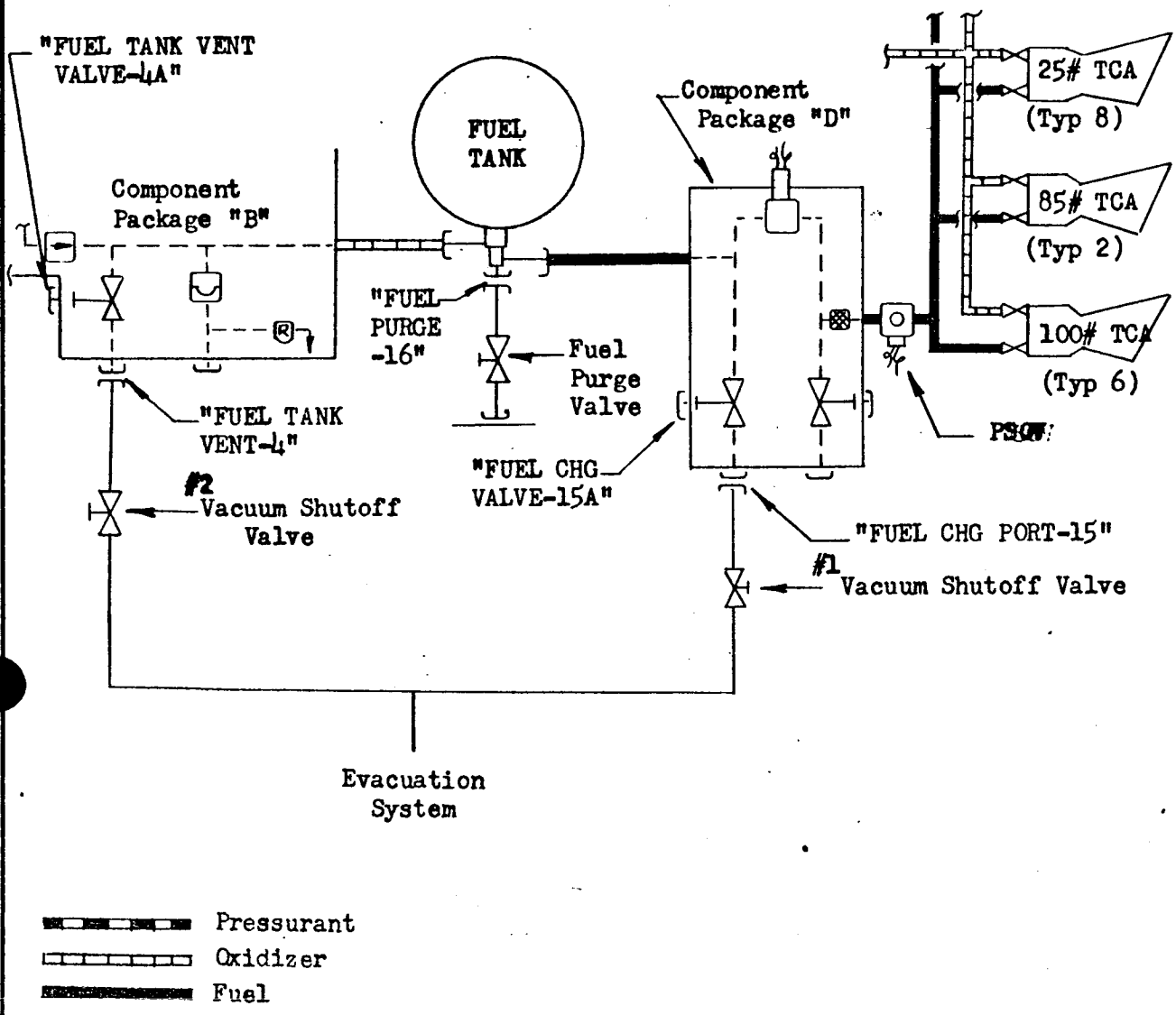

FIGURE 32

DESIGN APPROVAL TEST
ORBIT ATTITUDE AND MANEUVER SYSTEM
(OAMS)

NAME OF TEST DRAIN AND CLEAN PROCEDURES TEST NO. 105156-4.01 SHEET 373 OF 413
PART NO. 2-DAY CONFIG. {MAC ____ NAA ____ 14-DAY CONFIG. {MAC 52-52701 NAA 99-105161

"FREON MF" DRAIN AND CLEAN SERVICE CONNECTIONS (TANK MODULE)

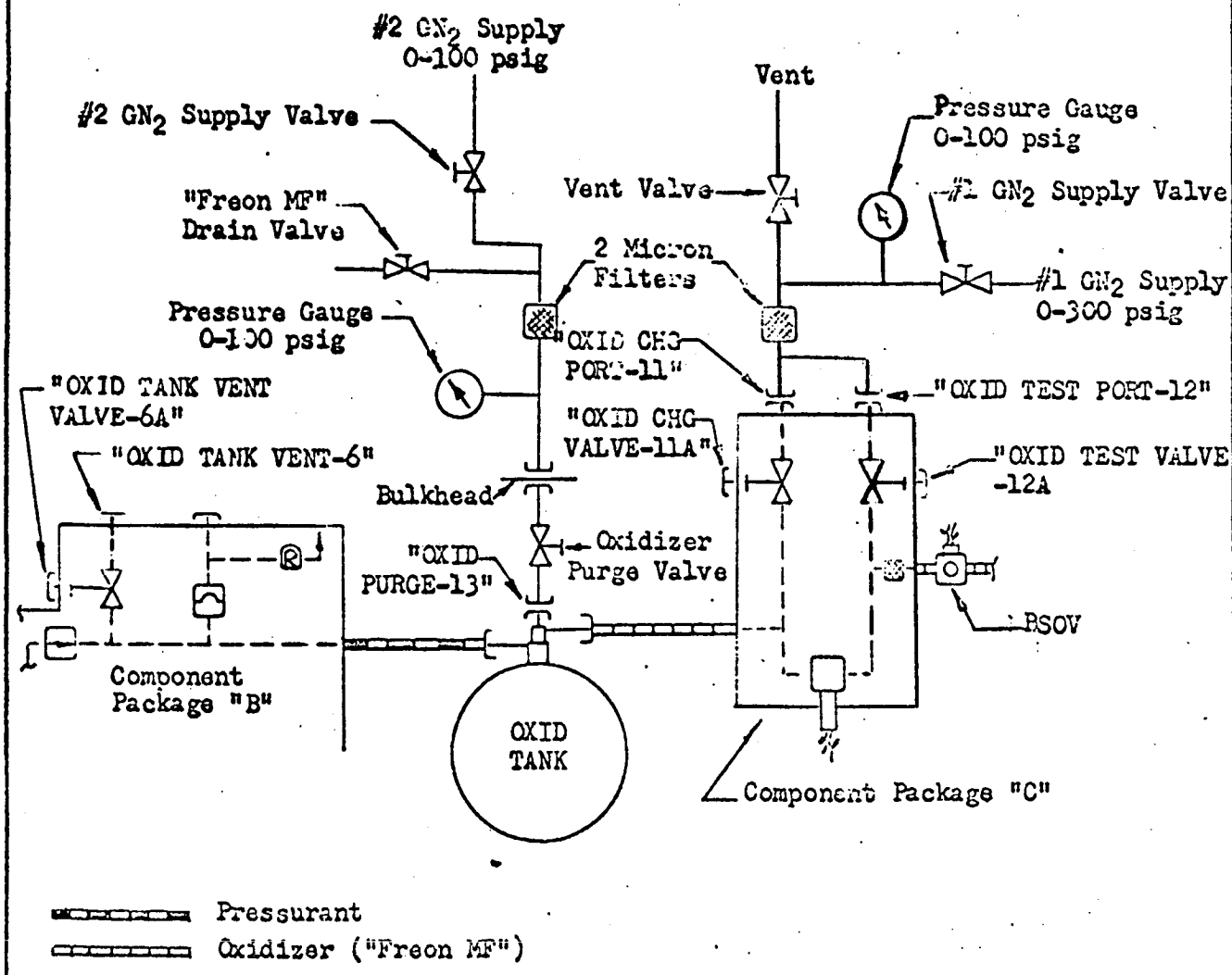

FIGURE 33

DESIGN APPROVAL TEST
ORBIT ATTITUDE AND MANEUVER SYSTEM
(SE7)

NAME OF TEST DRAIN AND CLEAN PROCEDURES TEST NO. 106156-401 SHEET 374 OF 413
PART NO. 2-DAY CONFIG. {MAC ____ NAA ____ 14-DAY CONFIG. {MAC 52-52701 NAA 99-106161

ALCOHOL DRAIN AND CLEAN SERVICE CONNECTIONS (TANK MODULE)

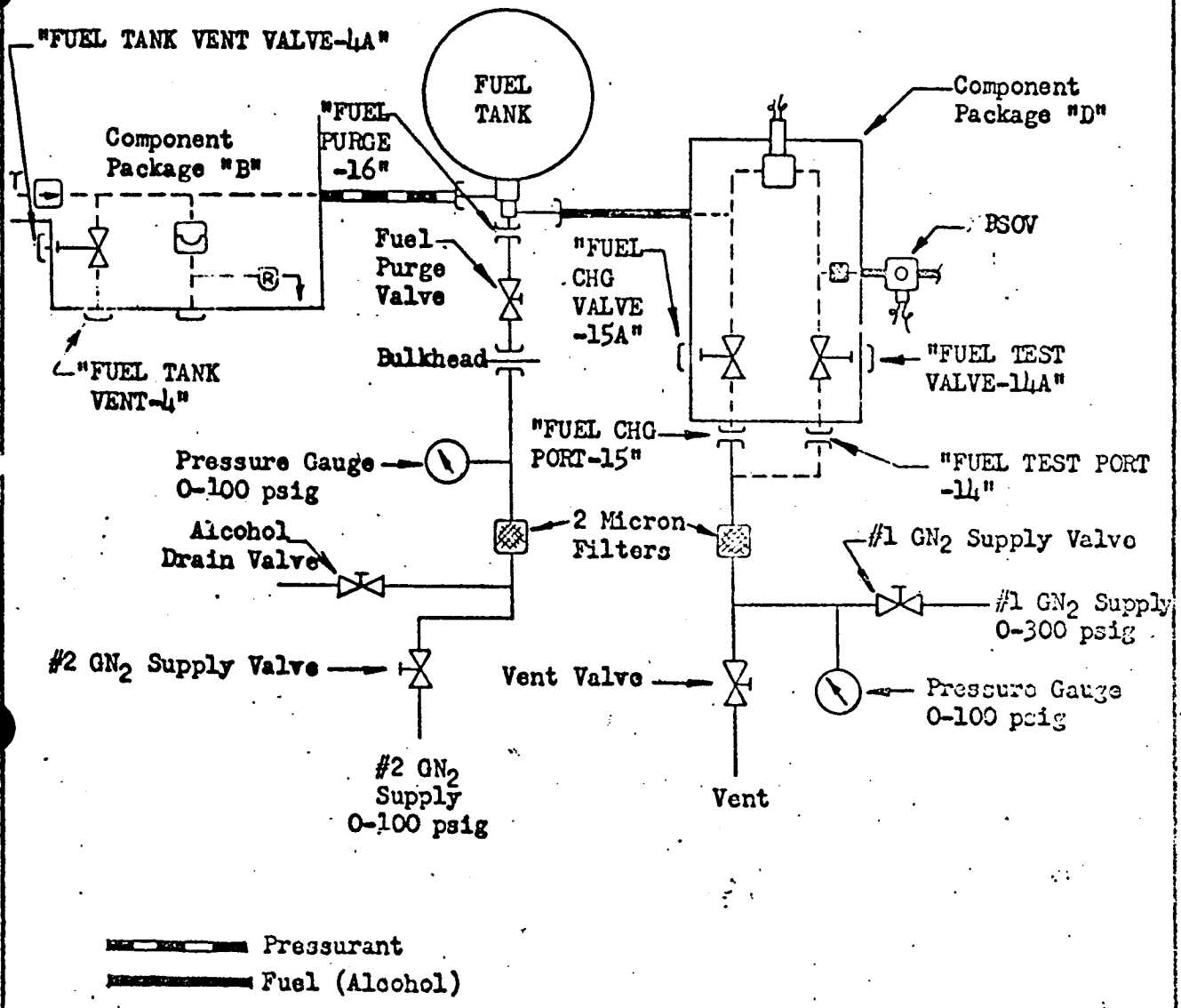

FIGURE 34

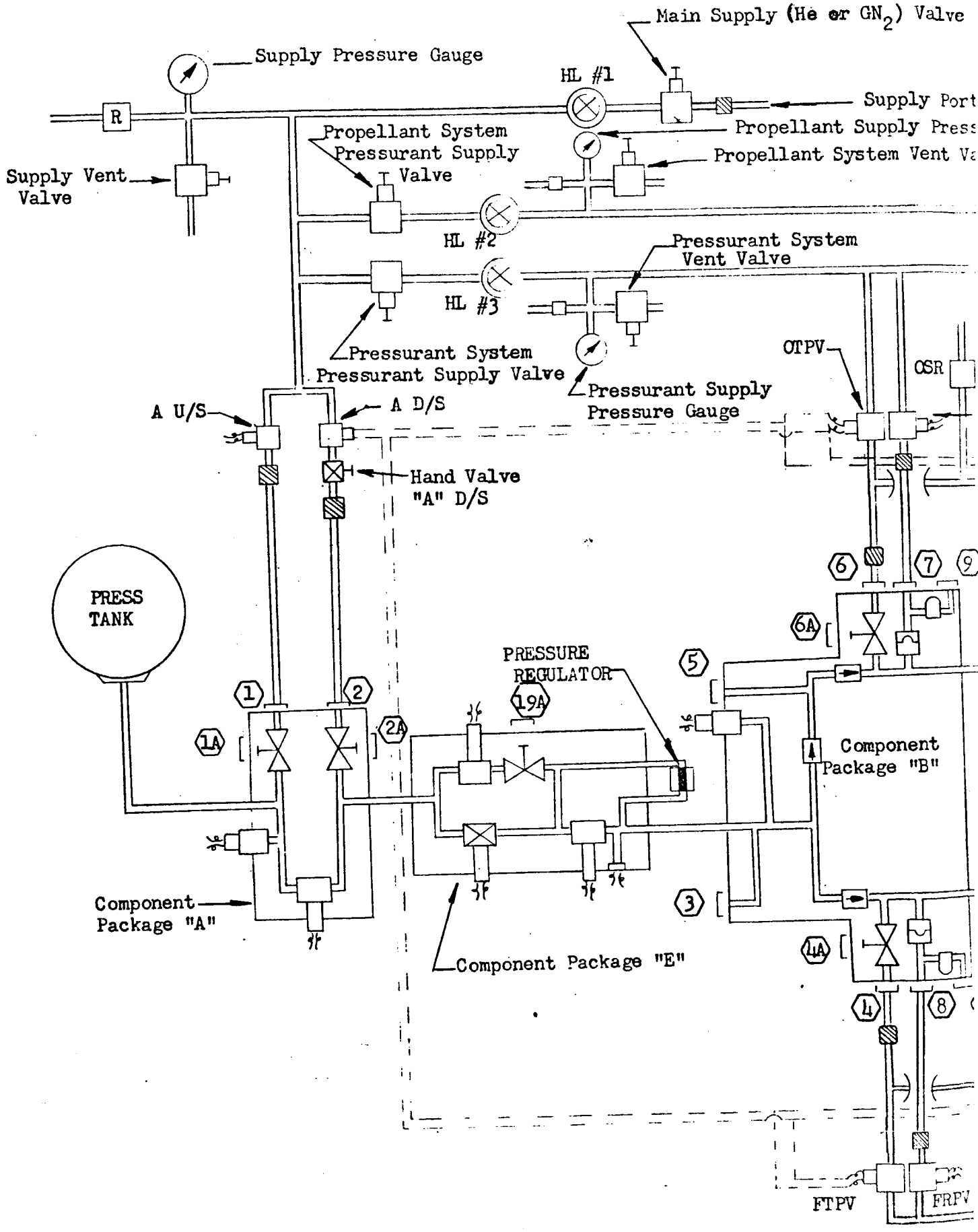
Main Supply (He or GN_2) Valve
Supply Pressure Gauge
HL #1
Supply Port
R
Propellant System Pressurant Supply Valve
Propellant Supply Press
Propellant System Vent Va
Supply Vent Valve
HL #2
Pressurant System Vent Valve
HL #3
Pressurant System Pressurant Supply Valve
OTPV
OSR
Pressurant Supply Pressure Gauge
A U/S
A D/S
Hand Valve "A" D/S
PRESS TANK
6
7
9
6A
PRESSURE REGULATOR
5
1
2
19A
2A
1A
Component Package "B"
Component Package "A"
3
4A
Component Package "E"
4
8
FTPV
FRPV

NAME OF TEST: ACCEPTANCE TEST
PART NO: MAC: 52-52701
NAA: 99-106161
TEST NO: 106161-401

rt (He or GN_2)
ssure Gauge
Valve

-ENGINE SYSTEM LEGEND:	RESISTOFLEX SIZE
1 -HI PRESS GAS CHG VALVE PORT	1/4"
1A -HI PRESS GAS CHG VALVE	3/8"
2 -HI PRESS GAS TEST PORT	1/4"
2A -HI PRESS GAS TEST VALVE	3/8"
3 -REG OUT TEST	5/16"
4 -FUEL TANK VENT PORT	5/16"
4A -FUEL TANK VENT VALVE	3/8"
5 -INTER CHECK VALVE TEST	5/16"
6 -OXID TANK VENT PORT	5/16"
6A -OXID TANK VENT VALVE	3/8"
7 -RELIEF VALVE TEST OXID	5/16"
8 -RELIEF VALVE TEST FUEL	5/16"
9 -OXID RELIEF VENT PORT	OPEN
10 -FUEL RELIEF VENT PORT	OPEN
11 -OXID CHG PORT	5/16"
11A -OXID CHG VALVE	3/8"
12 -OXID TEST PORT	5/16"
12A -OXID TEST VALVE	3/8"
13 - OXID PURGE	5/16"
14 -FUEL TEST PORT	1/4"
14A -FUEL TEST VALVE	3/8"
15 -FUEL CHG PORT	1/4"
15A -FUEL CHG VALVE	3/8"
16 -FUEL PURGE	1/4"
19 -BYPASS TEST VALVE	5/8"

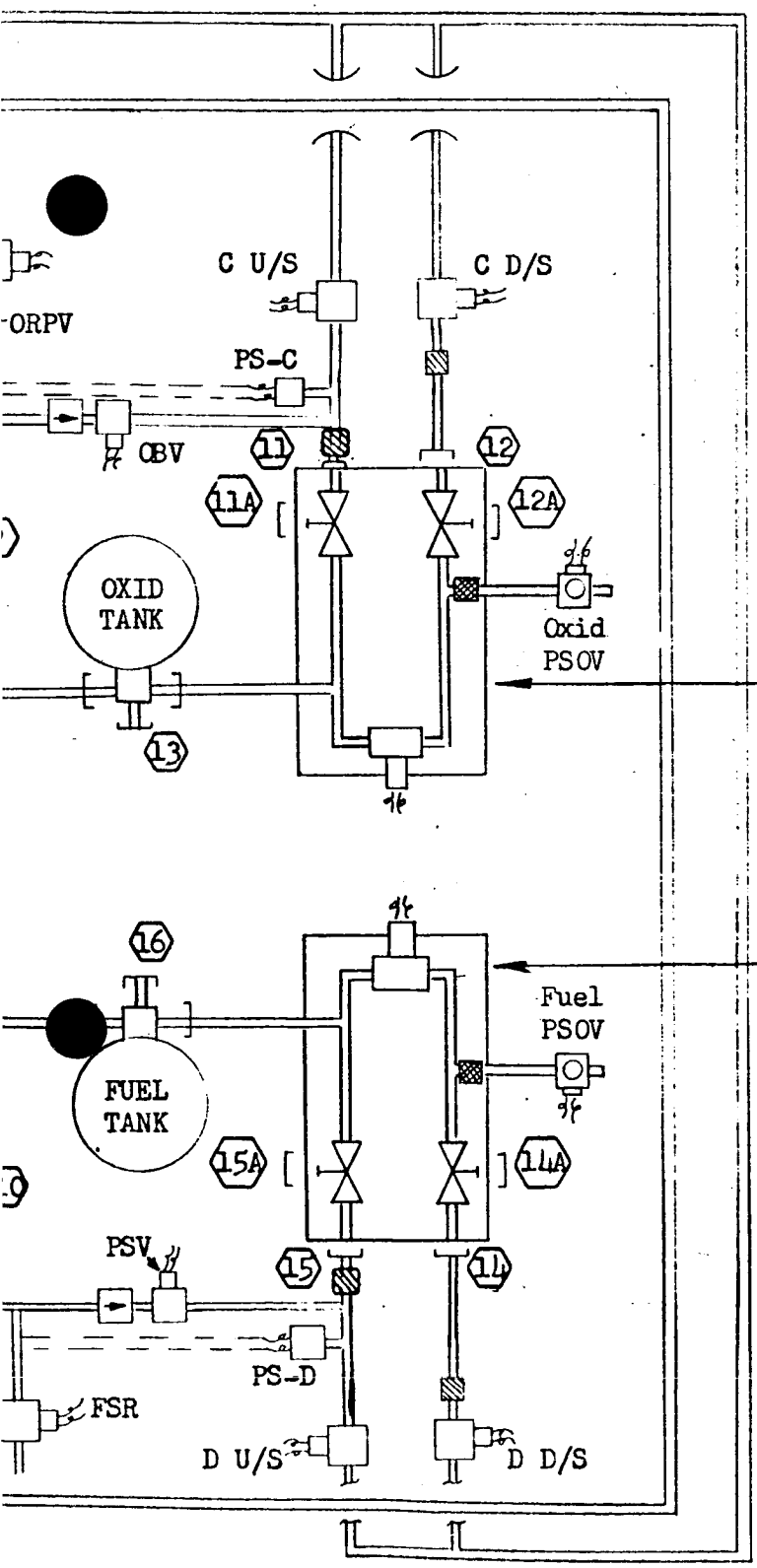

ENGINE SYSTEM TANK MODULE AND PNEUMATIC TEST CONSOLE TEST SETUP

FIGURE 35

DESIGN APPROVAL TEST
ORBIT ATTITUDE AND MANEUVER SYSTEM
(SE7)

NAME OF TEST FUNCTIONAL TEST TEST NO. 106156-401 SHEET 376 OF 413
PART NO. 2-DAY CONFIG. {MAC / NAA} 14-DAY CONFIG. {MAC 52-52701 / NAA 99-106161}

ENGINE SYSTEM GROSS EXTERNAL LEAKAGE TEST SETUP

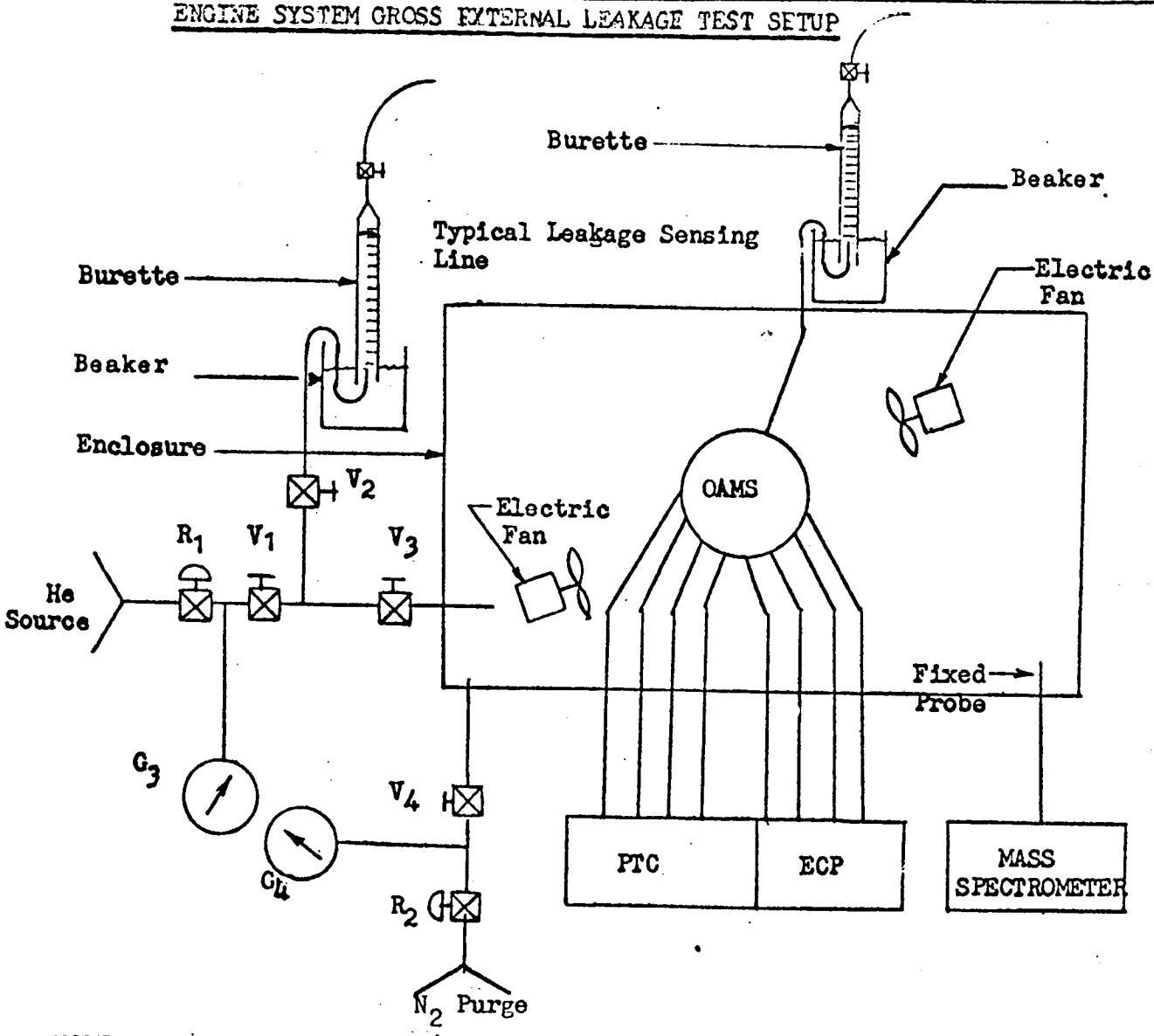

NOTE: V_2, V_3 and V_4 are 1/4" Hand Valves

Figure 36

DESIGN APPROVAL TEST
ORBIT ATTITUDE AND MANEUVER SYSTEM
(SE7)

NAME OF TEST FUNCTIONAL TEST TEST NO. 106156-401 SHEET 377 OF 413

PART NO. 2-DAY CONFIG. {MAC / NAA} 14-DAY CONFIG. {MAC 52-52701 / NAA 99-108161}

TEST SETUP - SOURCE PRESSURE

Pressure - Temperature Indicator and Flight Transducer Calibration

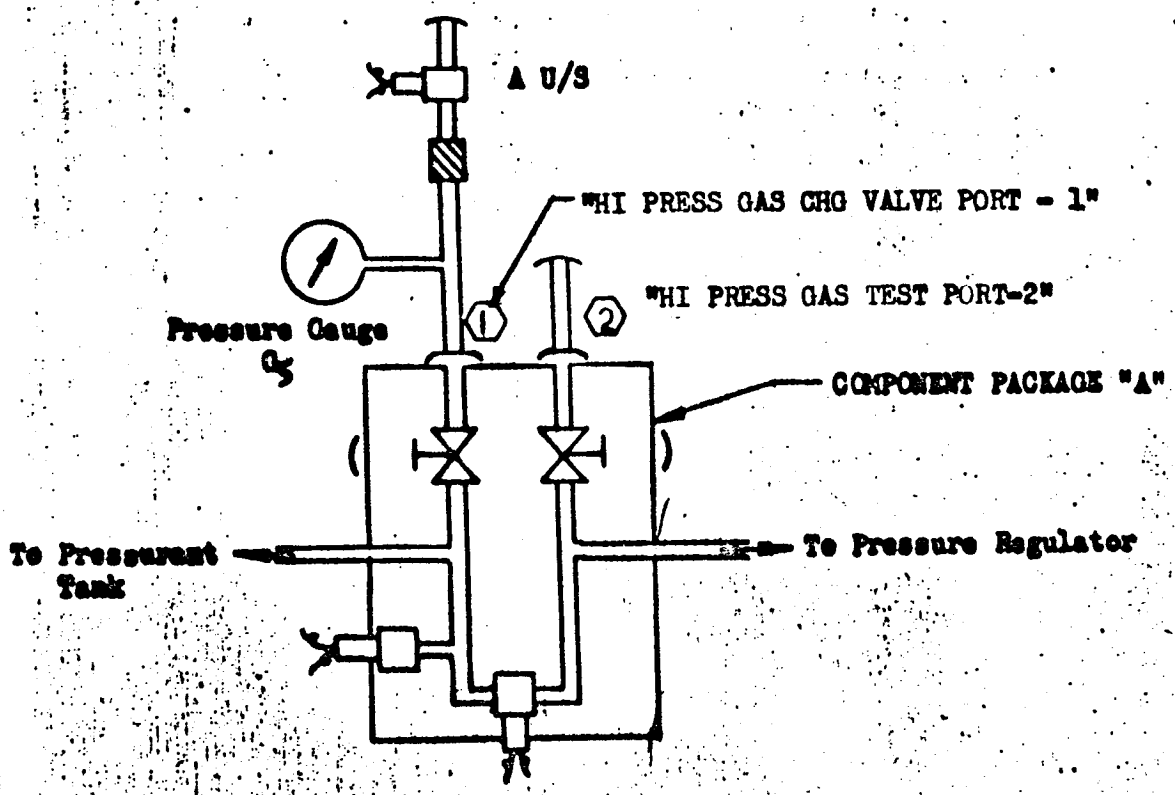

FIGURE 137

DESIGN APPROVAL TEST
ORBIT ATTITUDE AND MANEUVER SYSTEM
(SE7)

NAME OF TEST FUNCTIONAL TEST TEST NO. 106156-401 SHEET 378 OF 413
PART NO. 2-DAY CONFIG. {MAC / NAA} 14-DAY CONFIG. {MAC 52-52701 / NAA 99-106161}

AUXILARY PRESSURANT SUPPLY TEST SETUP - REGULATED PRESSURE

Pressure - Temperature Indicator
and Flight Transducer Calibration

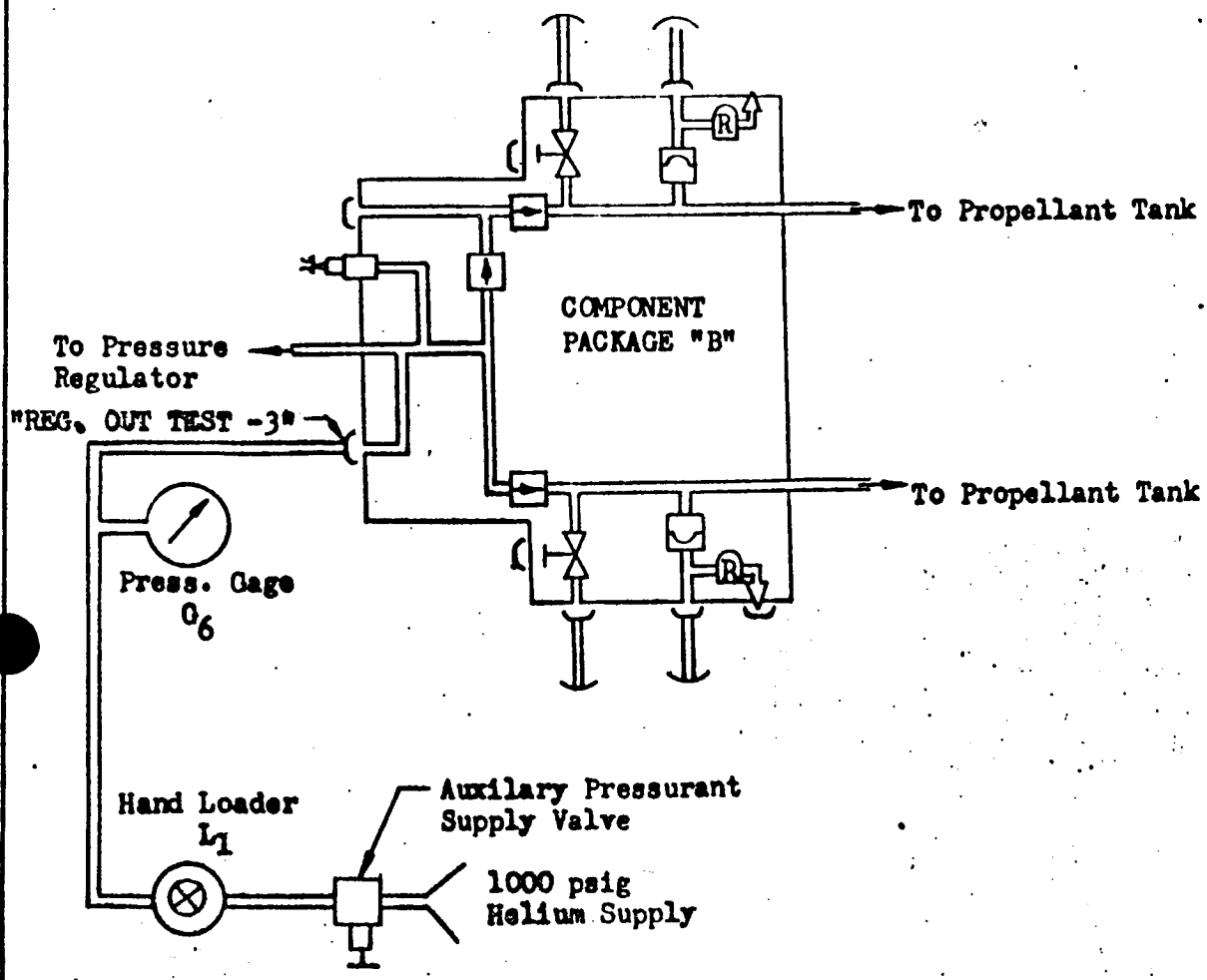

FIGURE 138

DESIGN APPROVAL TEST
ORBIT ATTITUDE AND MANEUVER SYSTEM
(SE7)

NAME OF TEST FUNCTIONAL TEST TEST NO. 106156-401 SHEET 379 OF 413
PART NO. 2-DAY CONFIG. {MAC / NAA} 14-DAY CONFIG. {MAC 52-52701 / NAA 99-106161}

VIEWING ANGLE

Pressure - Temperature Indicator
and Flight Transducer Calibration

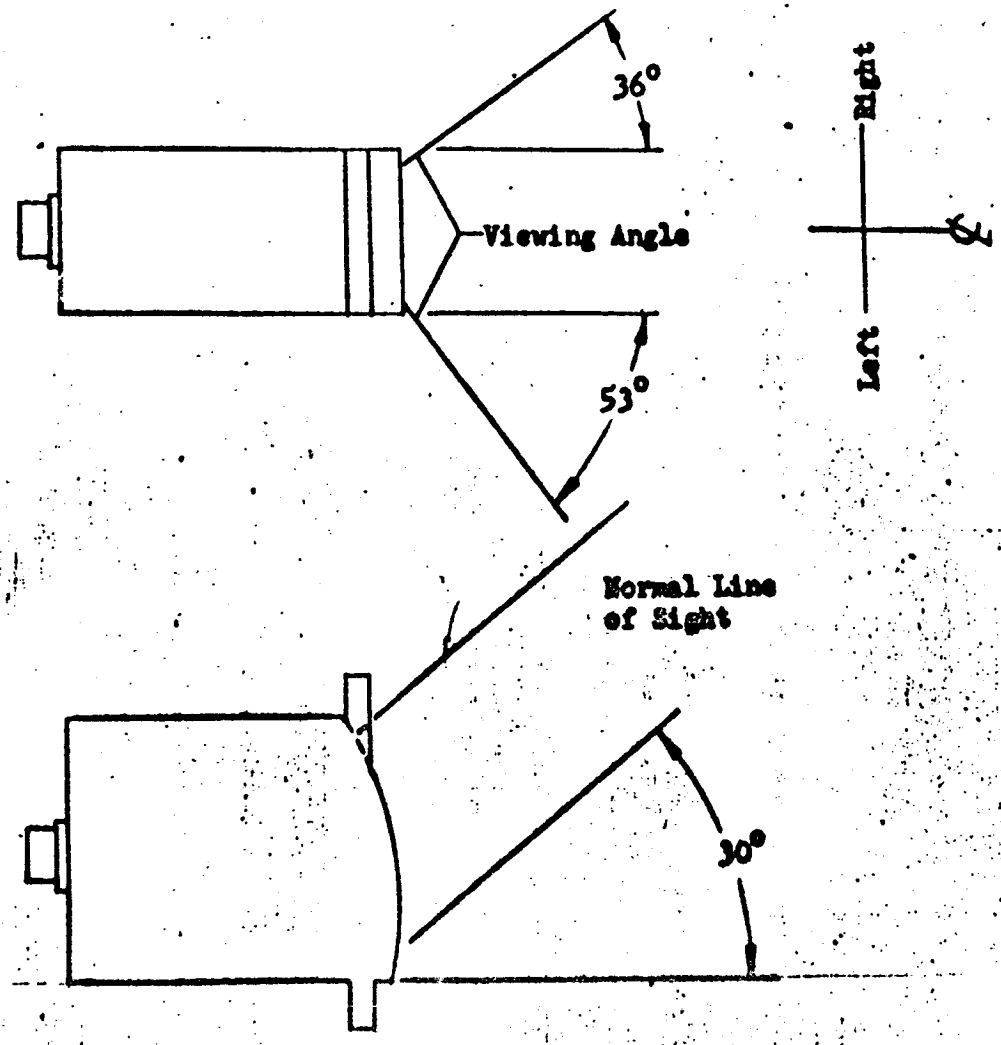

FIGURE 89

DESIGN APPROVAL TEST
ORBIT ATTITUDE AND MANEUVER SYSTEM
(SE7)

NAME OF TEST MISSION DUTY CYCLE TEST NO. 106156-401 SHEET 380 OF 413
PART NO. 2-DAY CONFIG. {MAC / NAA} 14-DAY CONFIG. {MAC 52-52701 / NAA 99-106161}

PRESSURE REGULATOR REFERENCE PRESSURE
CAVITY EVACUATION SYSTEM

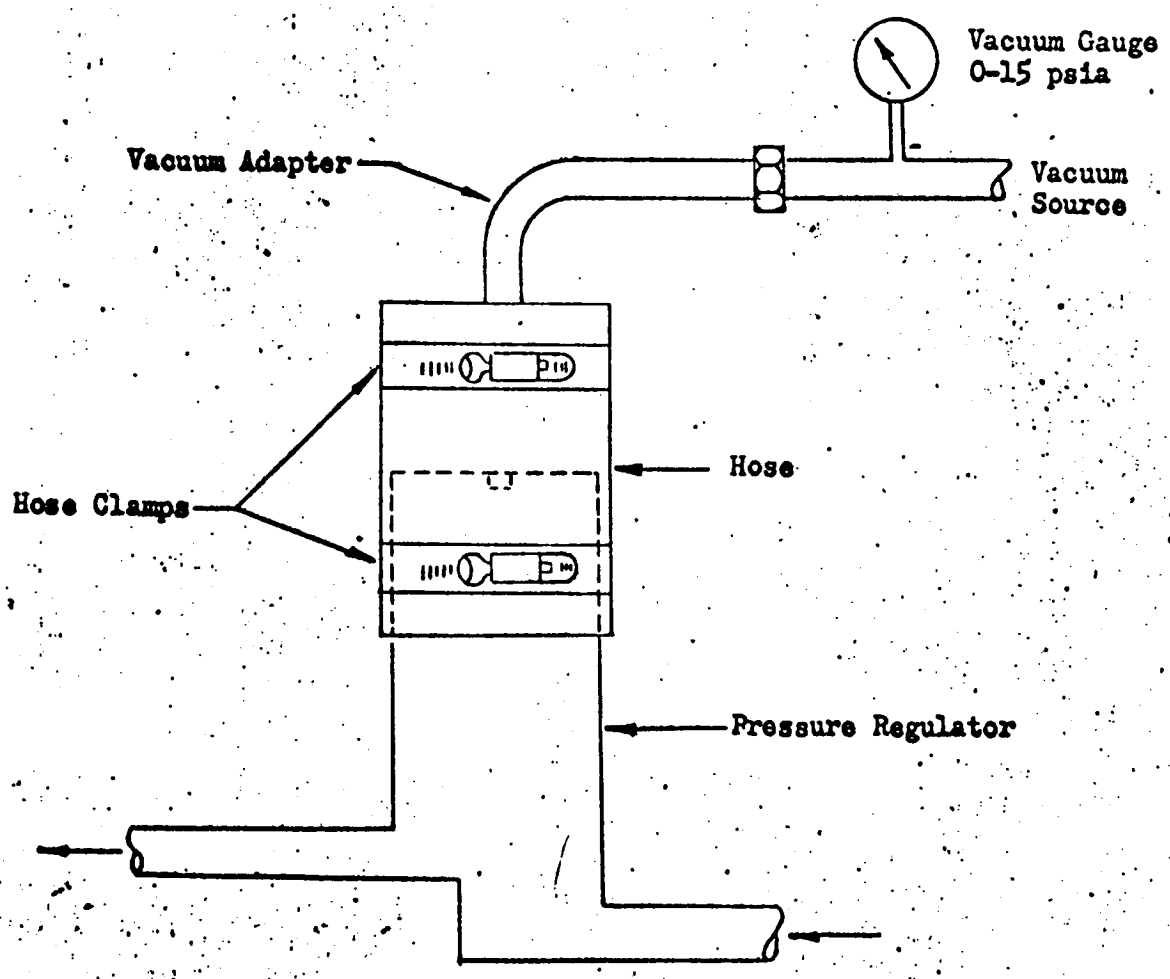

FIGURE 40.

DESIGN APPROVAL TEST
ORBIT ATTITUDE AND MANEUVER SYSTEM
(SE7)

NAME OF TEST FUNCTIONAL TEST TEST NO. 106156-401 SHEET [illegible] OF 413

PART NO. 2-DAY CONFIG. { MAC / NAA } 14-DAY CONFIG. { MAC 52-52701 / NAA 99-106161 }

PRESSURE REGULATOR FUNCTIONAL TEST SETUP

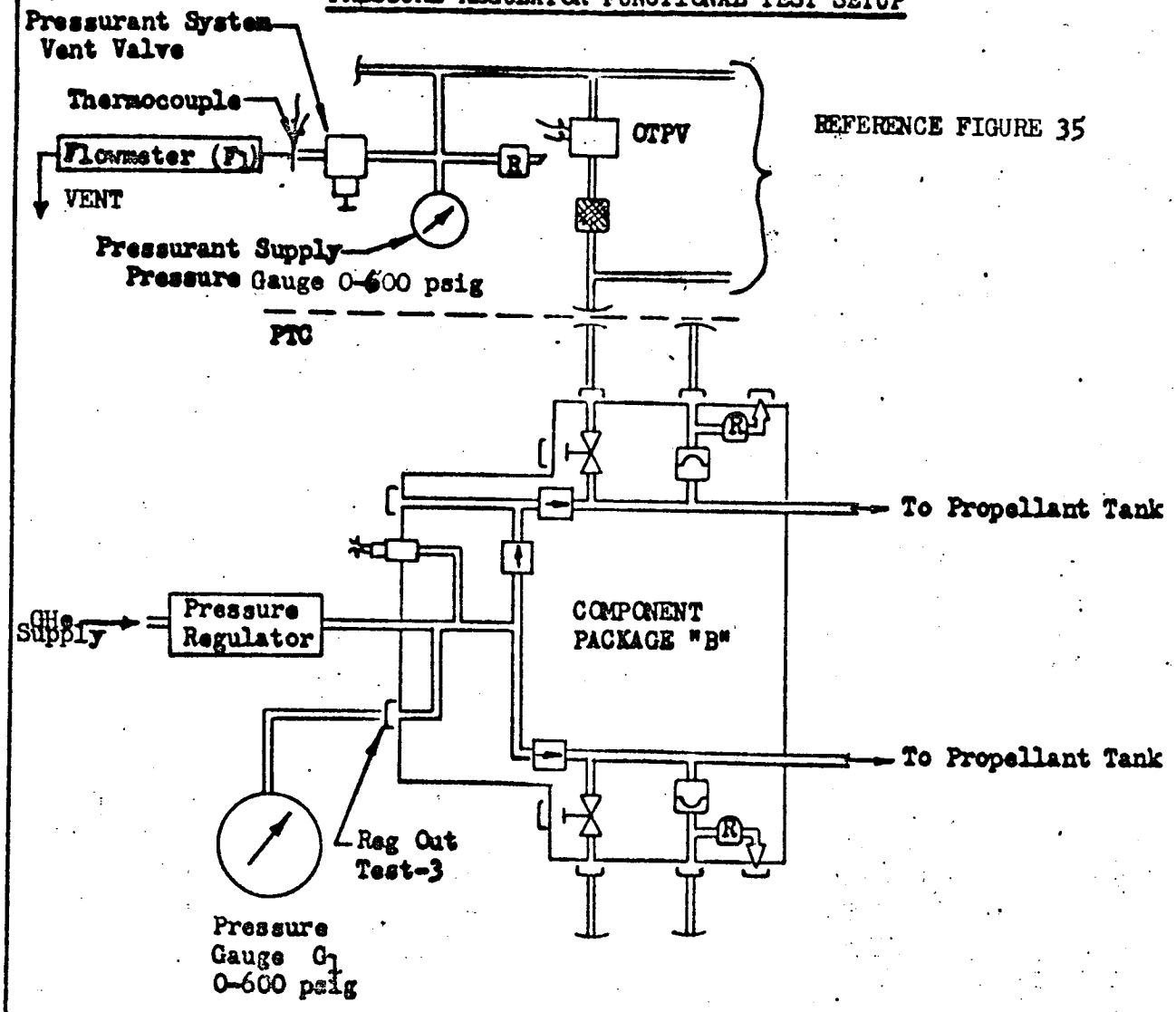

FIGURE 41

DESIGN APPROVAL TEST
ORBIT ATTITUDE AND MANEUVER SYSTEM
(SE7)

NAME OF TEST FUNCTIONAL TEST TEST NO. 106156-401 SHEET 282 OF 413
PART NO. 2-DAY CONFIG. {MAC / NAA} 14-DAY CONFIG. {MAC 52-52701 / NAA 99-106161}

COMPONENT PACKAGE "B" RELIEF VALVE FLOW TEST SETUP

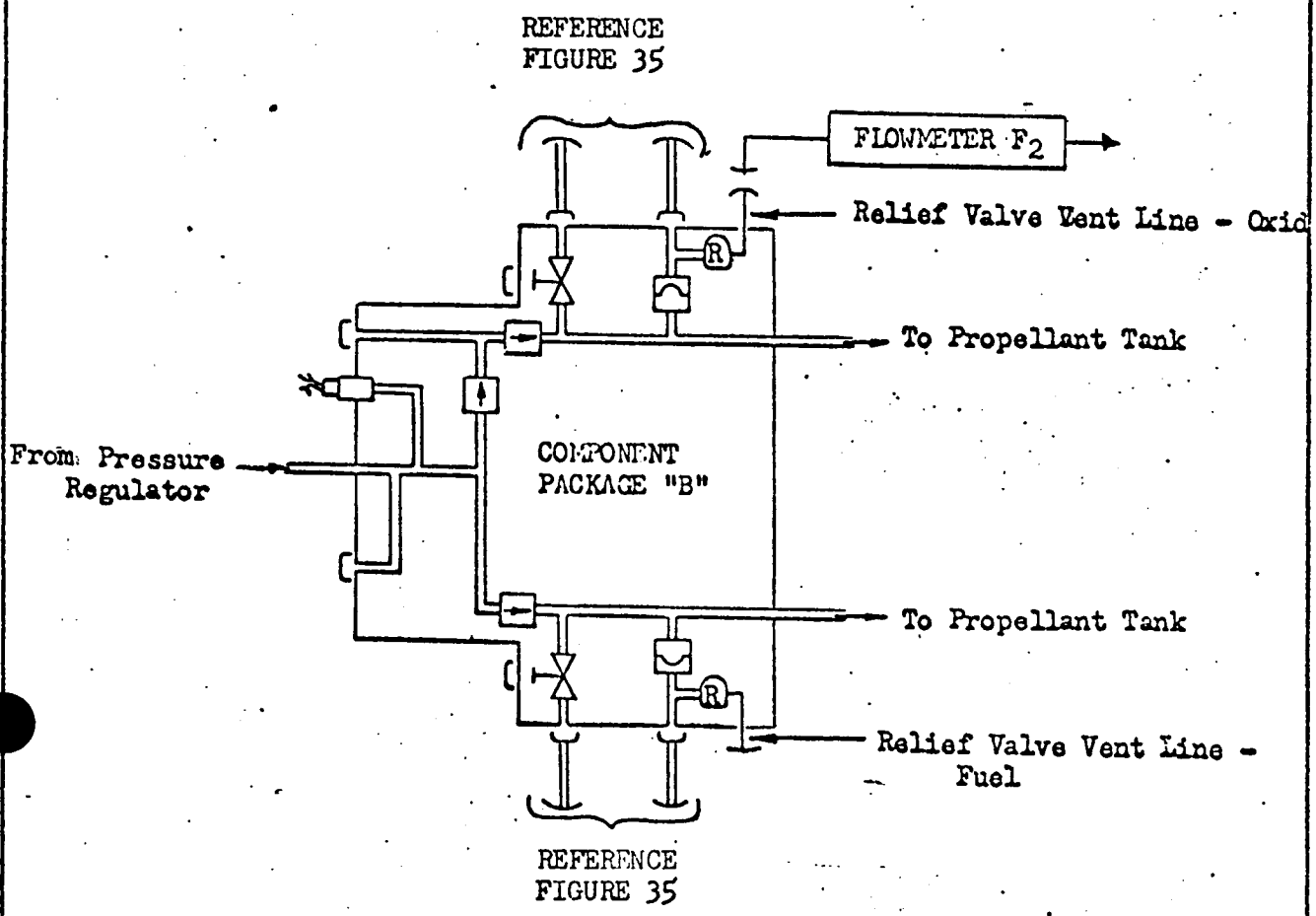

FIGURE 42

DESIGN APPROVAL TEST
ORBIT ATTITUDE AND MANEUVER SYSTEM
(SE7)

NAME OF TEST FUNCTIONAL TEST TEST NO. 106156-401 SHEET 383 OF 413
PART NO. 2-DAY CONFIG. {MAC / NAA} 14-DAY CONFIG. {MAC 52-52701 / NAA 99-106161}

COMPONENT PACKAGE "B" RELIEF VALVE LEAKAGE TEST SETUP

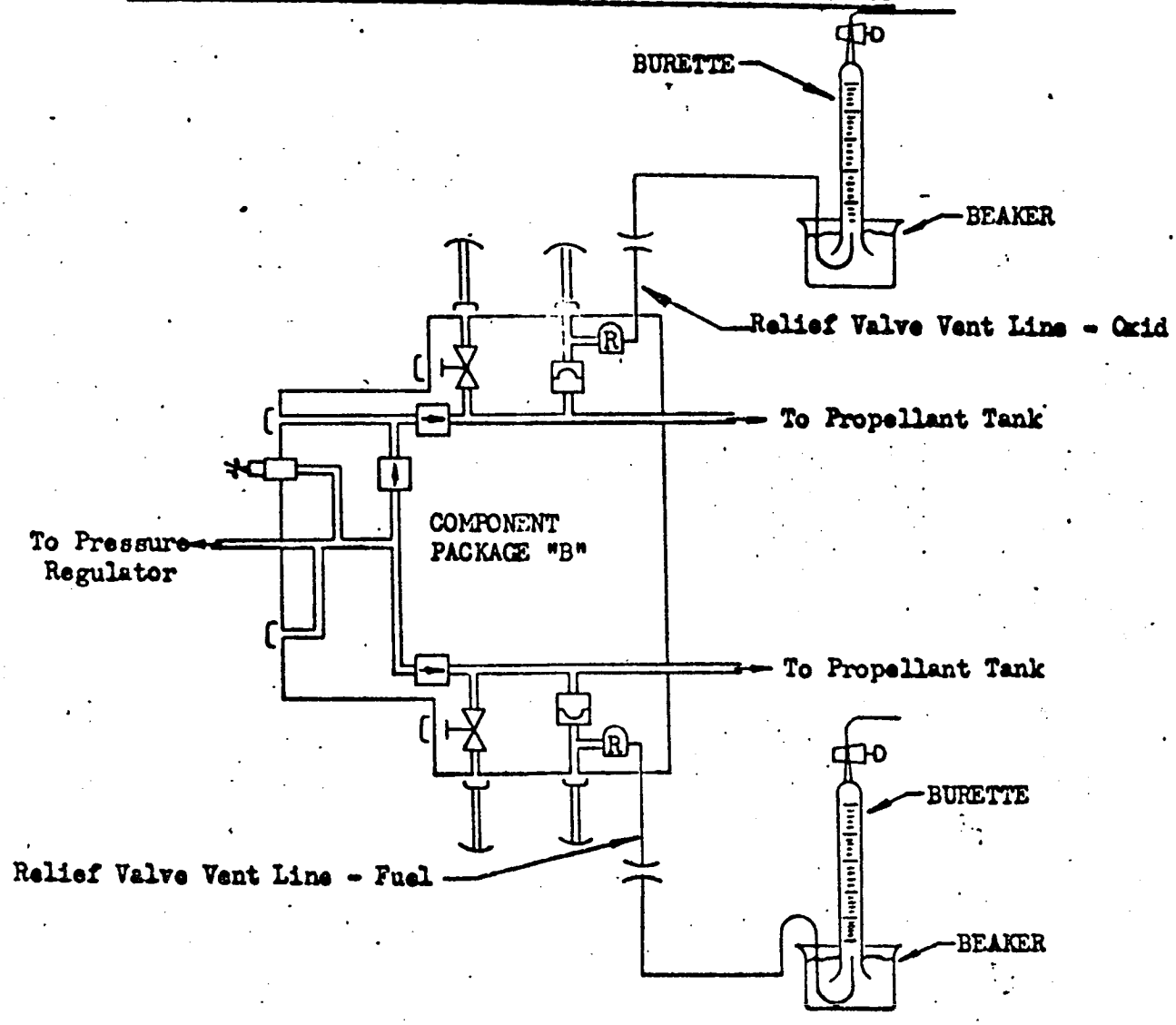

FIGURE 43

DESIGN APPROVAL TEST
ORBIT ATTITUDE AND MANEUVER SYSTEM
(SE7)

NAME OF TEST FUNCTIONAL TEST TEST NO. 106156-401 SHEET 384 OF 413
PART NO. 2-DAY CONFIG. {MAC / NAA} 14-DAY CONFIG. {MAC 52-52701 / NAA 99-106161}

COMPONENT PACKAGE "B" INTER CHECK VALVE REVERSE SEAT LEAKAGE TEST SETUP

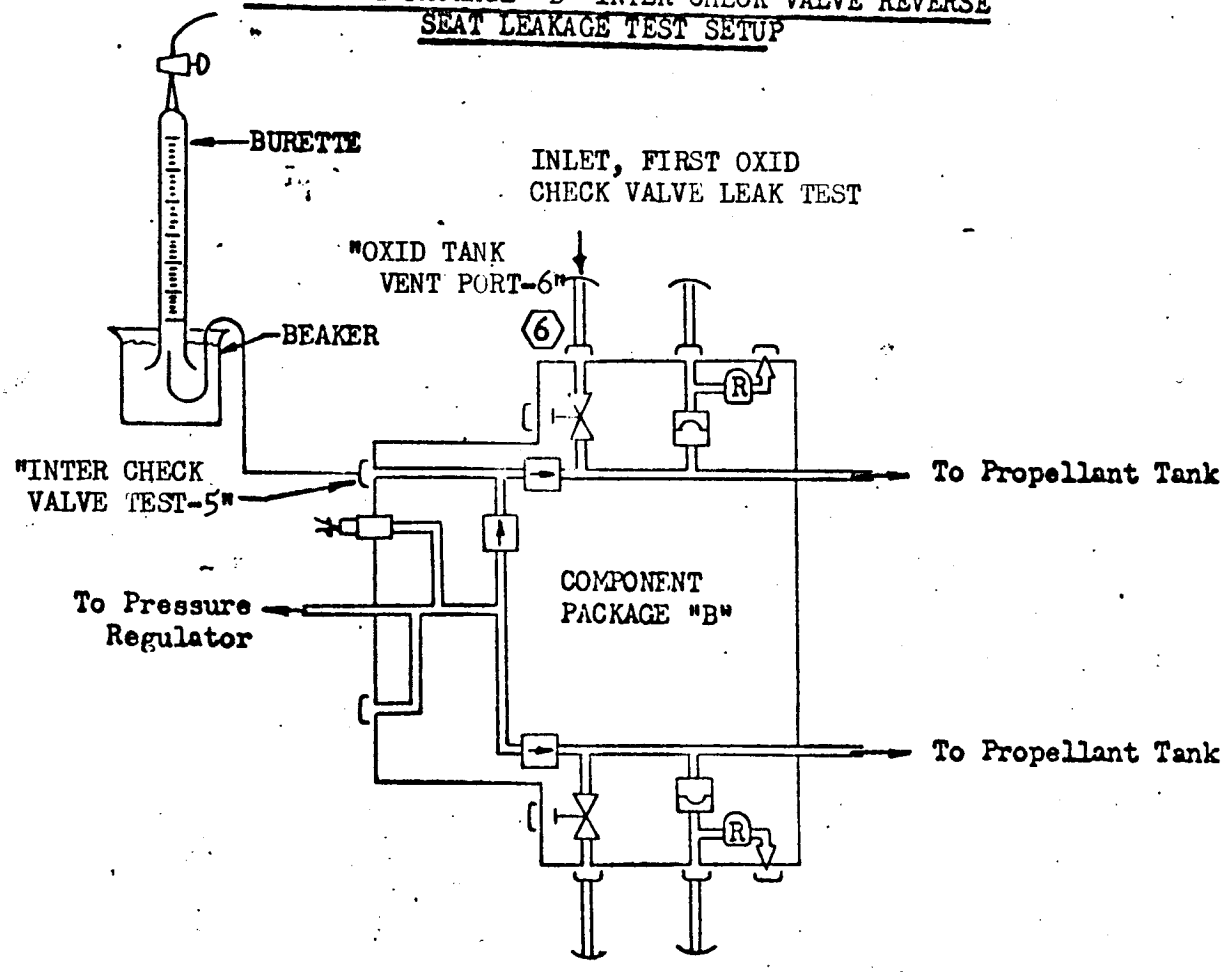

FIGURE 44

DESIGN APPROVAL TEST
ORBIT ATTITUDE AND MANEUVER SYSTEM
(SE7)

NAME OF TEST FUNCTIONAL TEST TEST NO. 106156-401 SHEET 385 OF 413
PART NO. 2-DAY CONFIG. {MAC / NAA} 14-DAY CONFIG. {MAC 52-52701 / NAA 99-106161}

COMPONENT PACKAGE "B" CHECK VALVE REVERSE SEAT LEAKAGE
(OXIDIZER AND FUEL) TEST SETUP

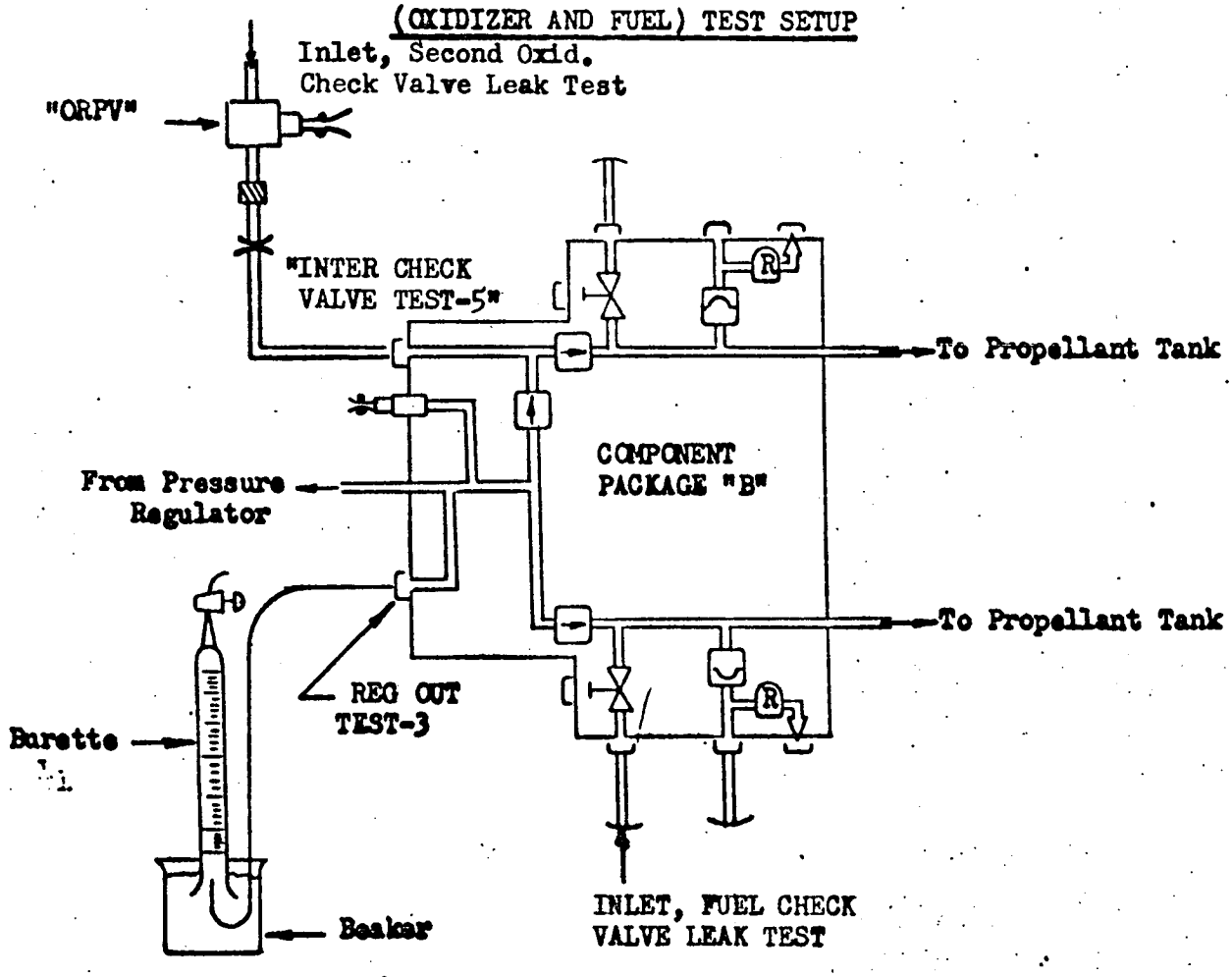

FIGURE 45

DESIGN APPROVAL TEST
ORBIT ATTITUDE AND MANEUVER SYSTEM
(SE7)

NAME OF TEST FUNCTIONAL TEST TEST NO. 106156-401 SHEET 386 OF 413
PART NO. 2-DAY CONFIG. {MAC / NAA} 14-DAY CONFIG. {MAC 52-52701 / NAA 99-106161}

COMPONENT PACKAGE "B" BURST DIAPHRAGM LEAKAGE TEST SETUP

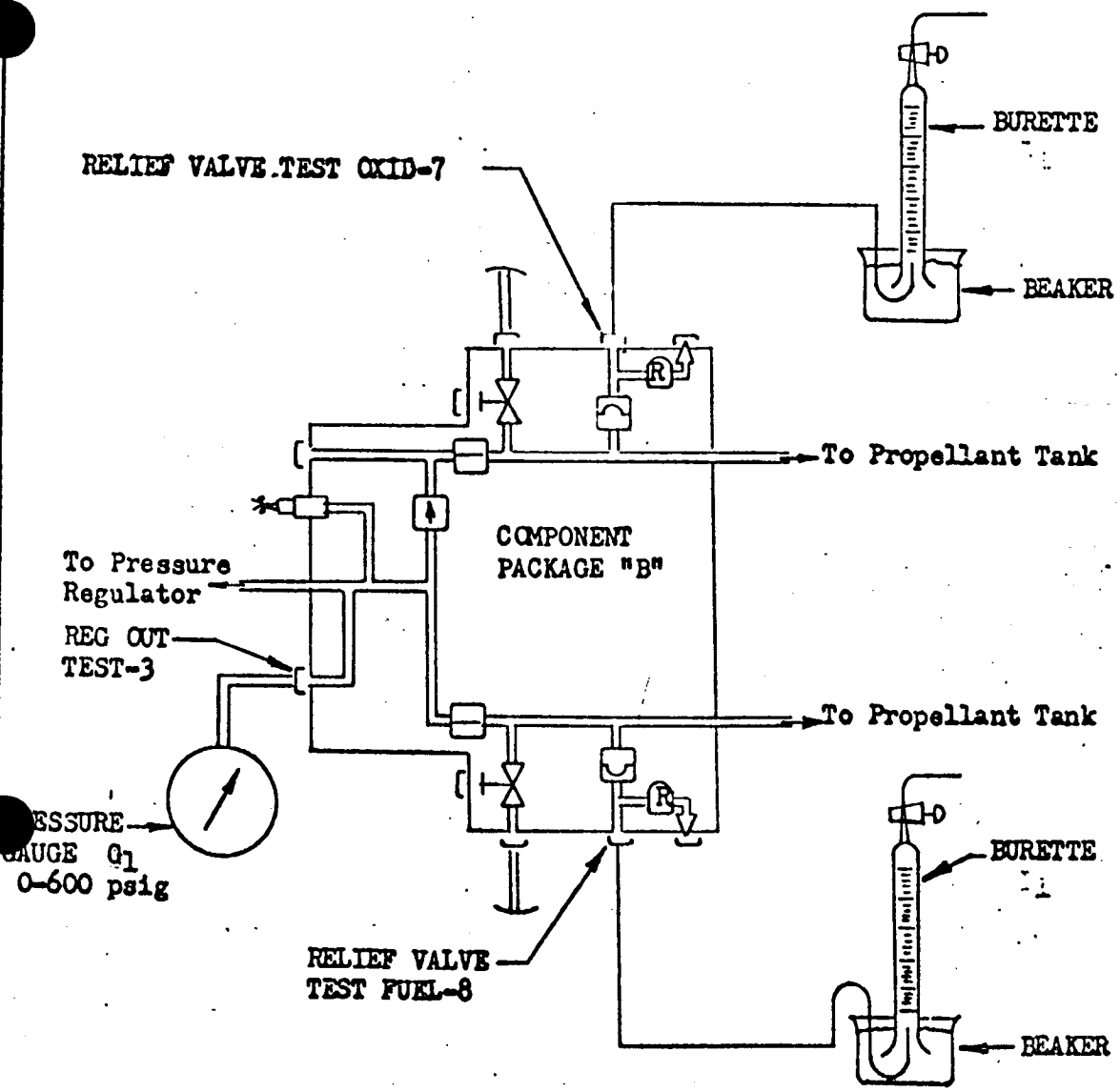

FIGURE 46

DESIGN APPROVAL TEST
ORBIT ATTITUDE AND MANEUVER SYSTEM
(SE7)

NAME OF TEST FUNCTIONAL TEST TEST NO. 106156-401 SHEET 387 OF 413
PART NO. 2-DAY CONFIG. {MAC / NAA} 14-DAY CONFIG. {MAC 52-52701 / NAA 99-106161}

PROPELLANT TANK BLADDER LEAK TEST SETUP

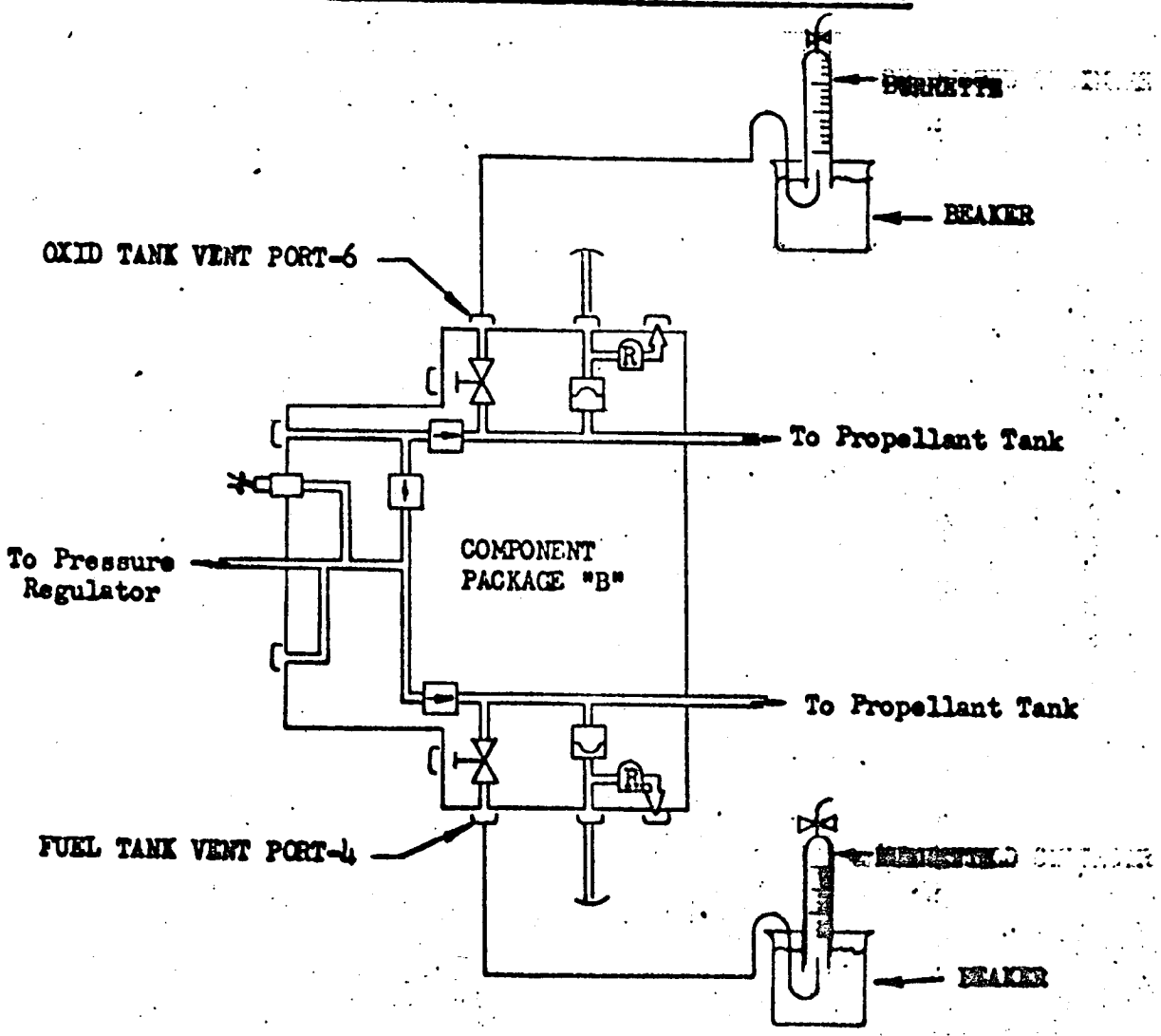

FIGURE 47

DESIGN APPROVAL TEST
ORBIT ATTITUDE AND MANEUVER SYSTEM
(SE7)

NAME OF TEST FUNCTIONAL TEST TEST NO. 106156-401 SHEET 388 OF 413
PART NO. 2-DAY CONFIG. {MAC / NAA} 14-DAY CONFIG. {MAC 52-52701 / NAA 99-106161}

SOLENOID VALVE RESPONSE

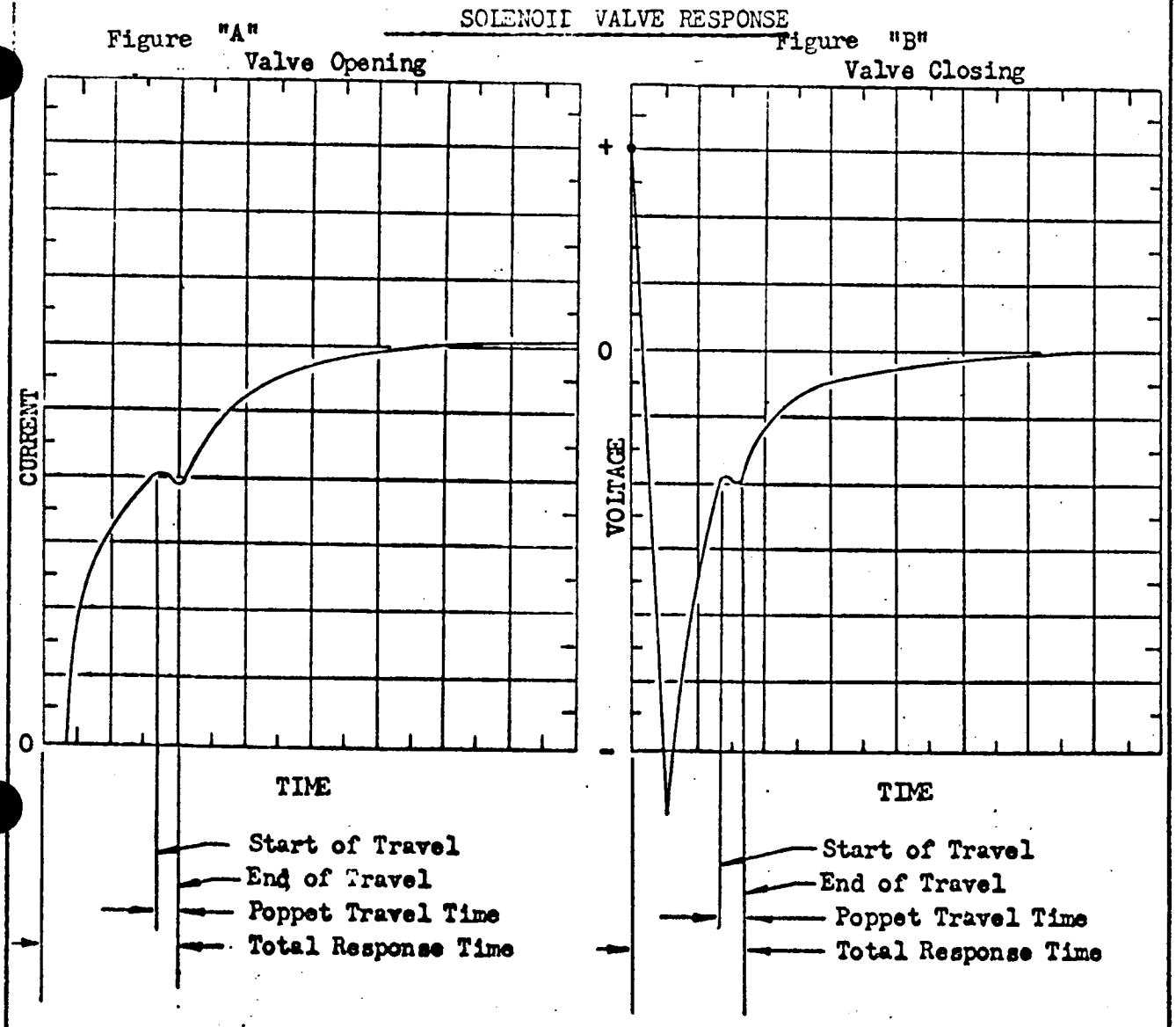

FIGURE 48

NAME OF TEST:
PART NO: MAC:
NAA:
TEST NO:

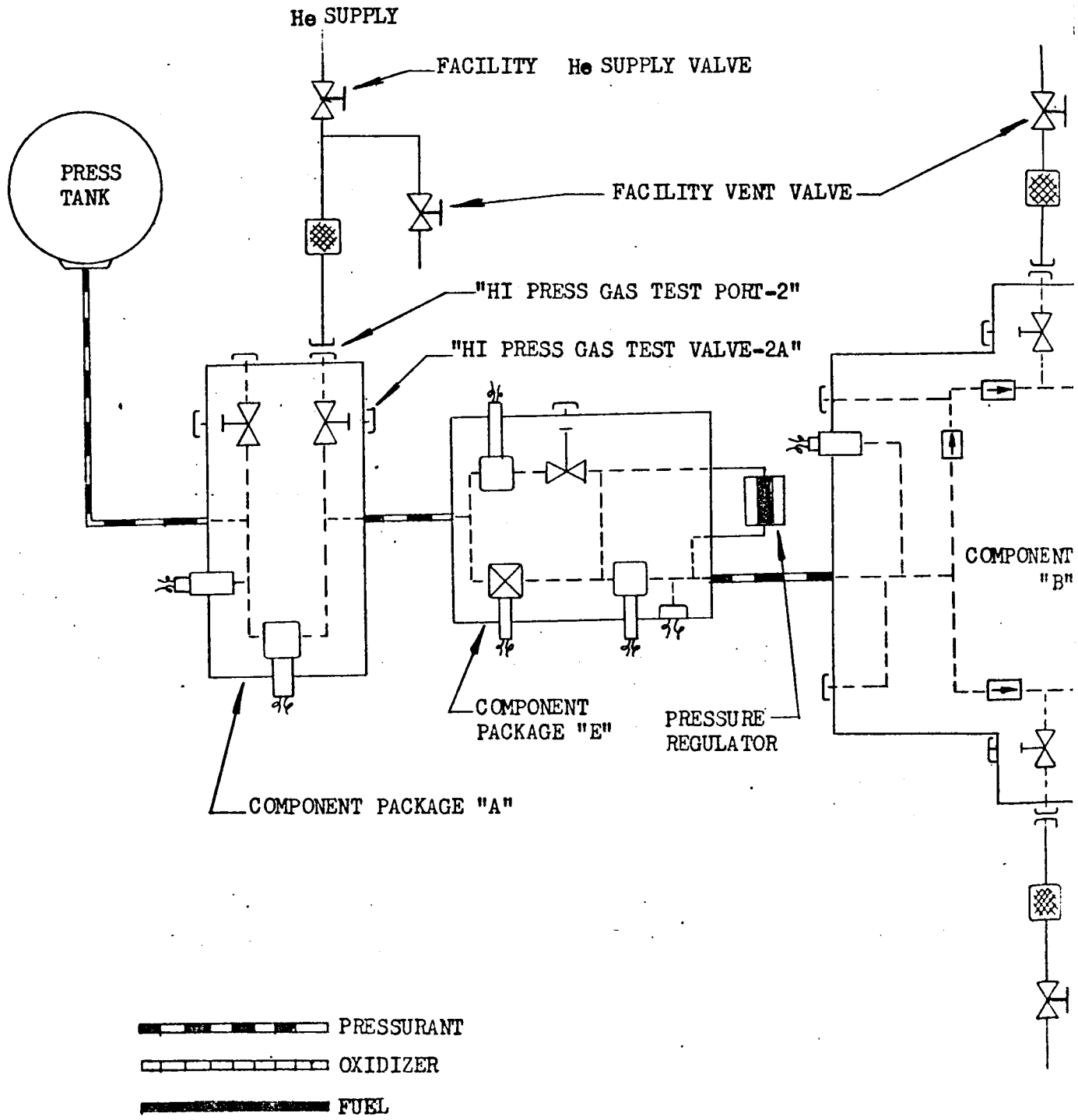

Rev.B date 3-18-65

R-15075-1

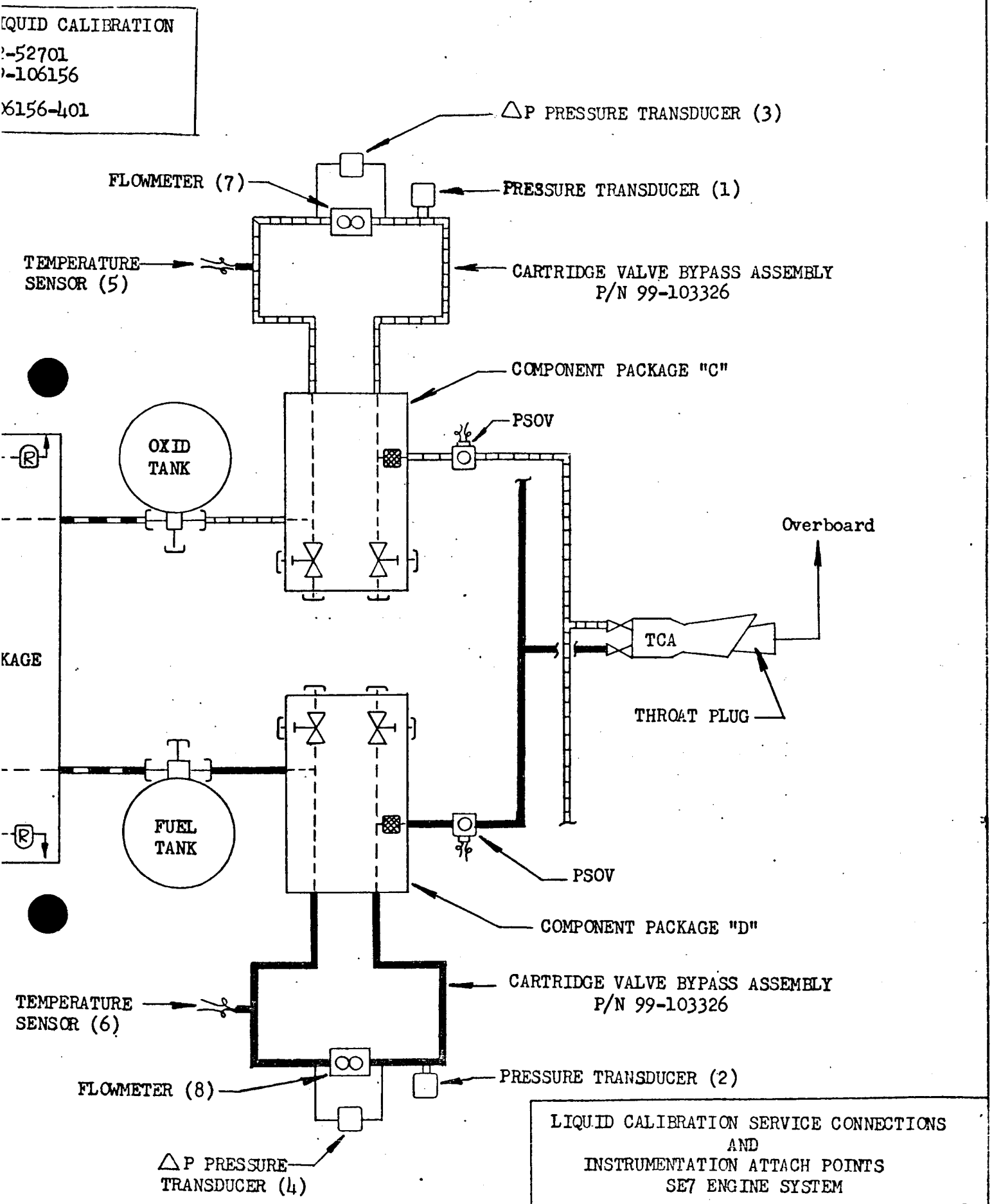

LIQUID CALIBRATION SERVICE CONNECTIONS
AND
INSTRUMENTATION ATTACH POINTS
SE7 ENGINE SYSTEM

1279

FIGURE 49

DESIGN APPROVAL TEST
ORBIT ATTITUDE AND MANEUVER SYSTEM
(SE7)

NAME OF TEST VIBRATION TEST TEST NO. 106161-401 SHEET 390 OF 413
PART NO. 2-DAY CONFIG. {MAC / NAA} 14-DAY CONFIG. {MAC 52-52701 / NAA 99-106161}

POWER SPECTRAL DENSITY vs FREQUENCY

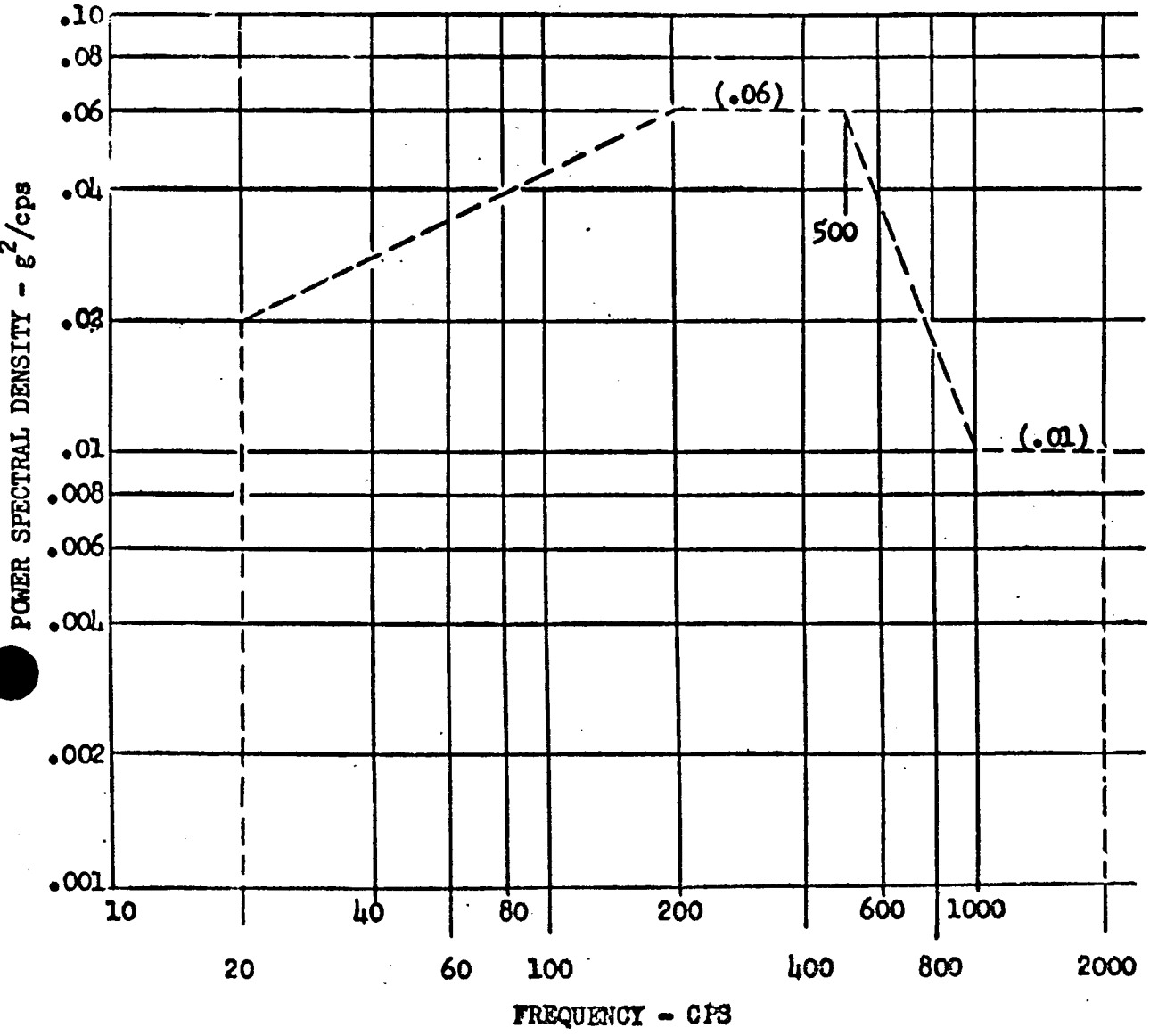

FIGURE 50

NAME OF TEST:	VIBRAT
PART NO: MAC:	52-527
NAA:	99-10
TEST NO:	106150

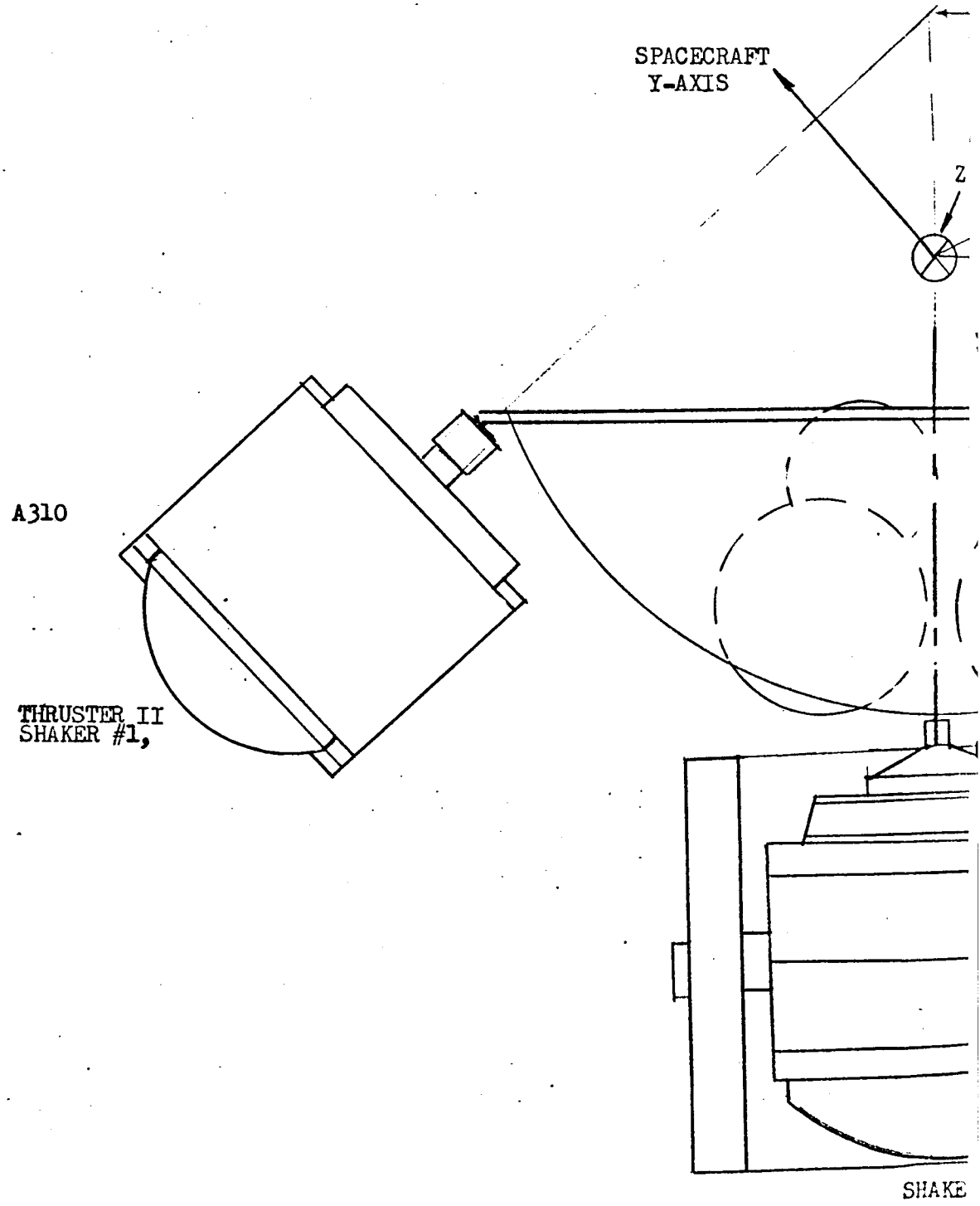

R-15075-1

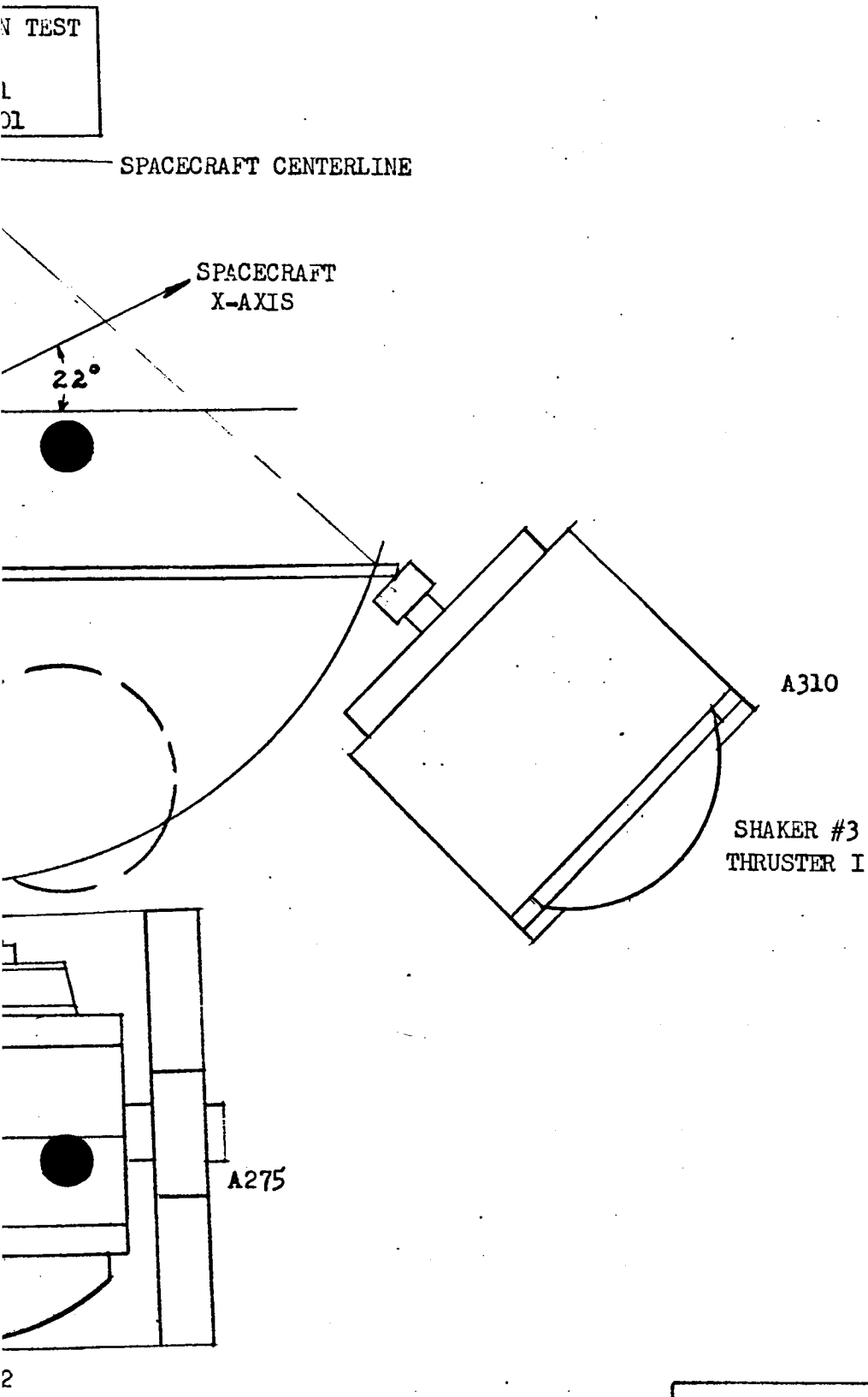

SE7 SYSTEM MODULE

AXIS ORIENTATION

R-AXIS

FIGURE 51

1281

NAME OF TEST:	VIBRATION TEST
PART NO: MAC:	52-52701
NAA:	99-106161
TEST NO:	106156-401

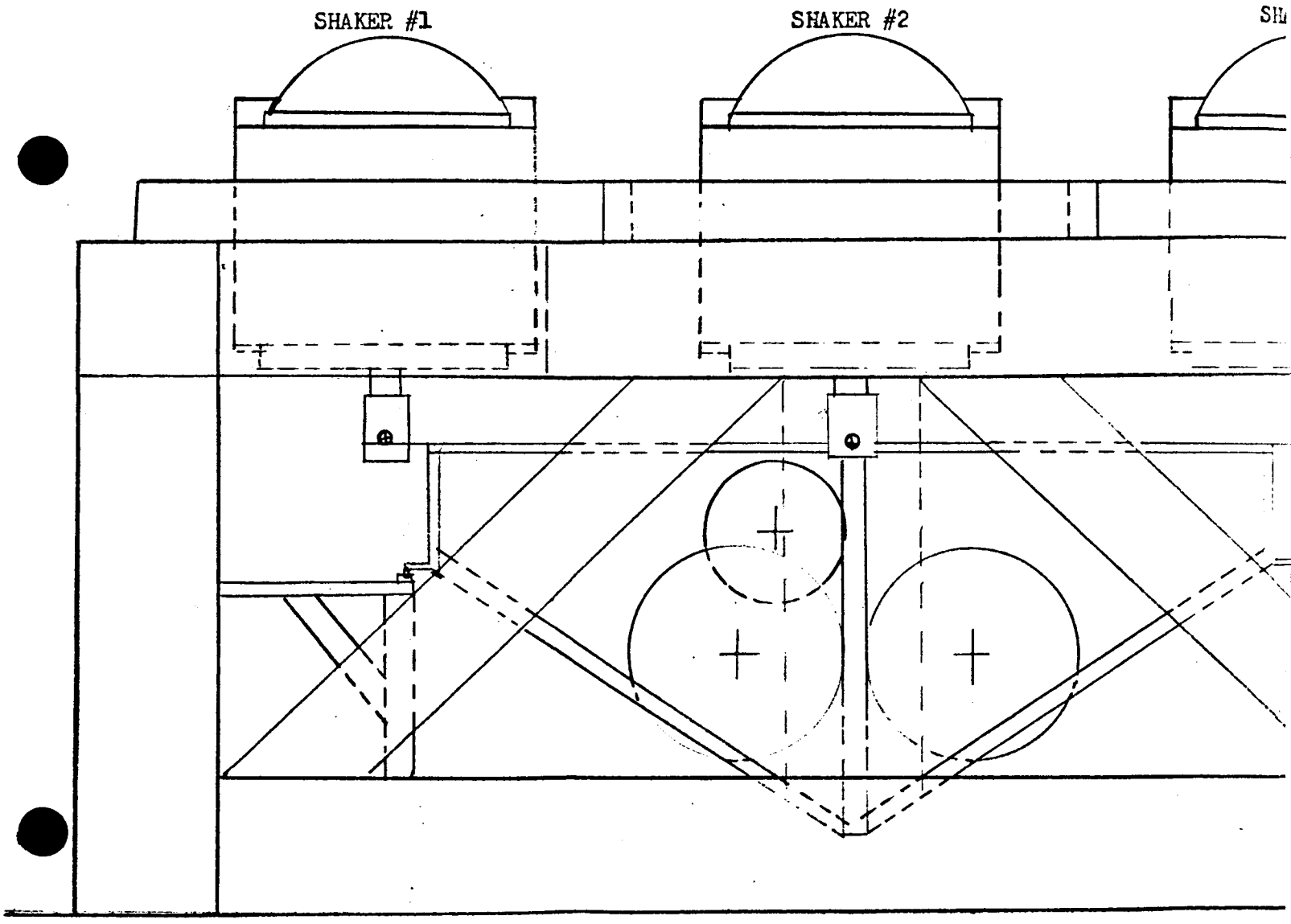

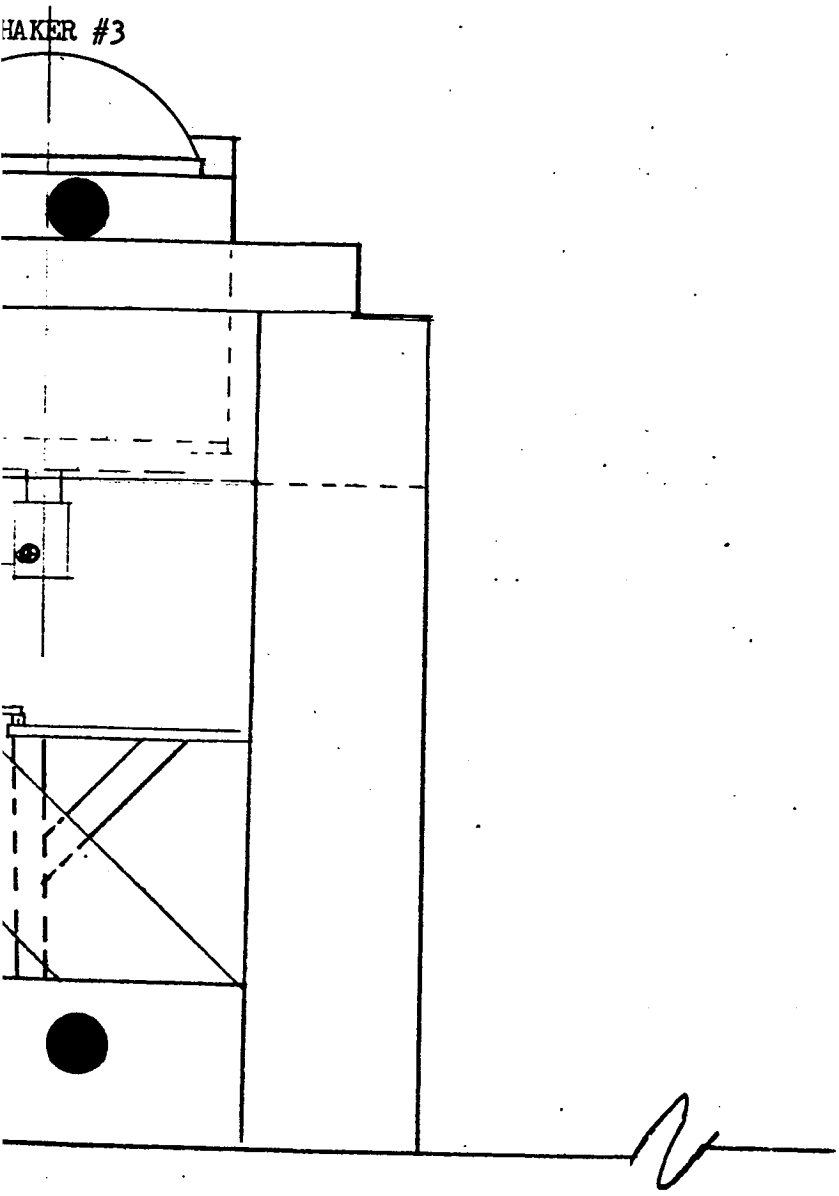

SE7 SYSTEM MODULE
AXIS ORIENTATION

Z-AXIS

FIGURE 52

R-15075-1

NAME OF TEST:	V
PART NO: MAC:	5
NAA:	9
TEST NO:	1

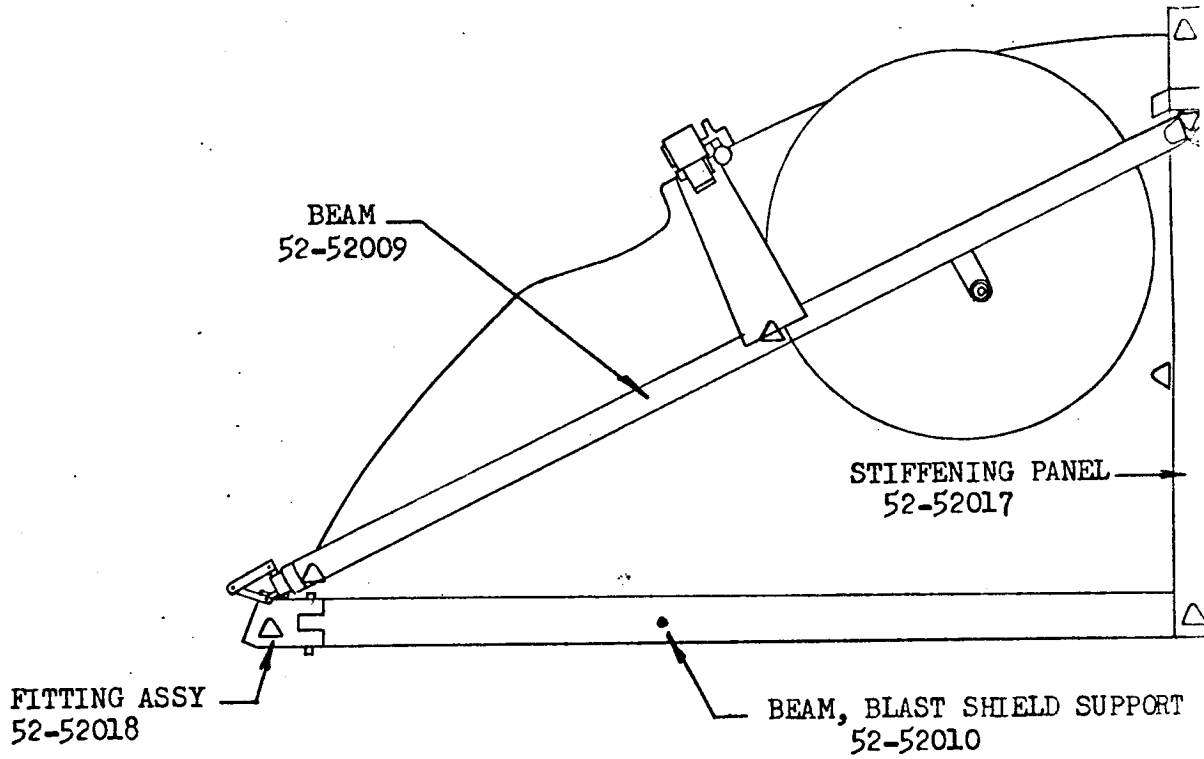

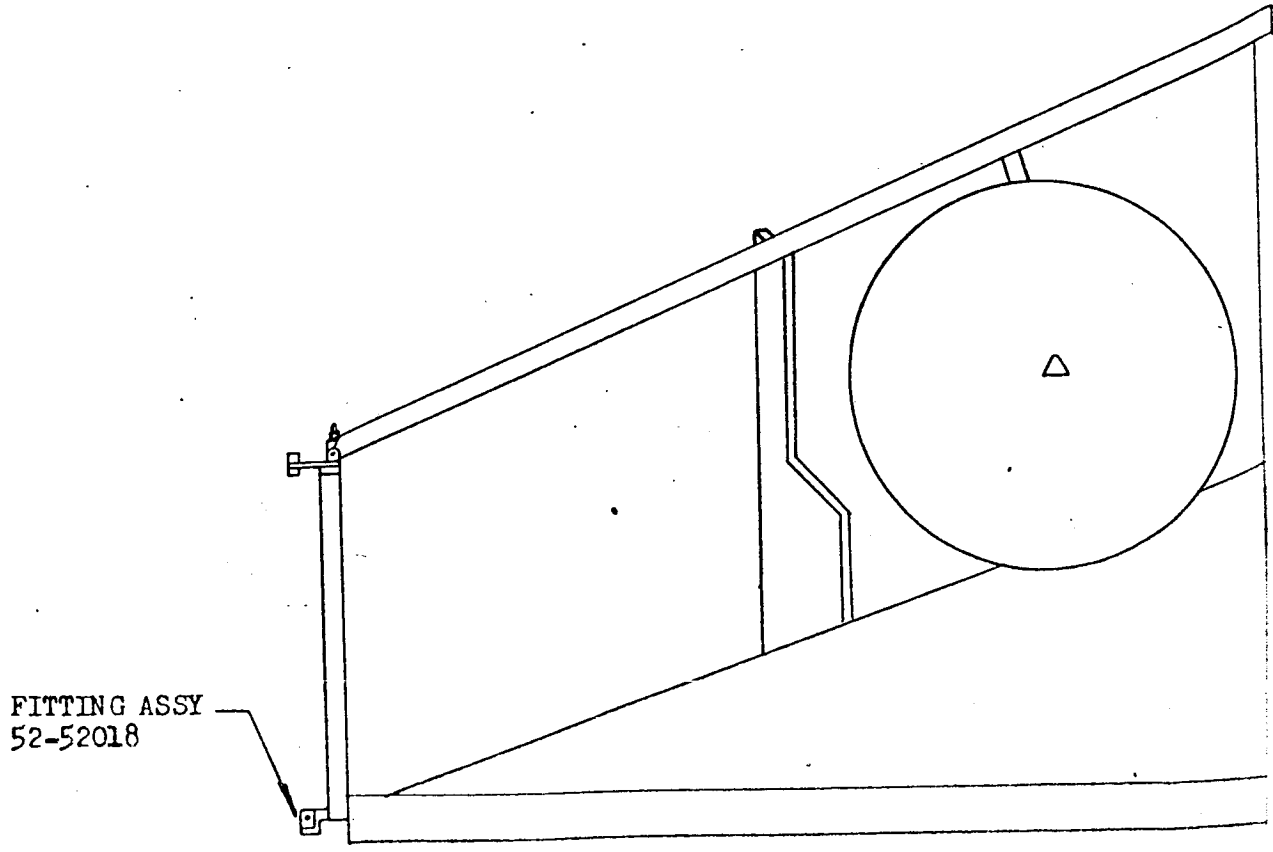

R-15075-1

ON TEST
L
51
401

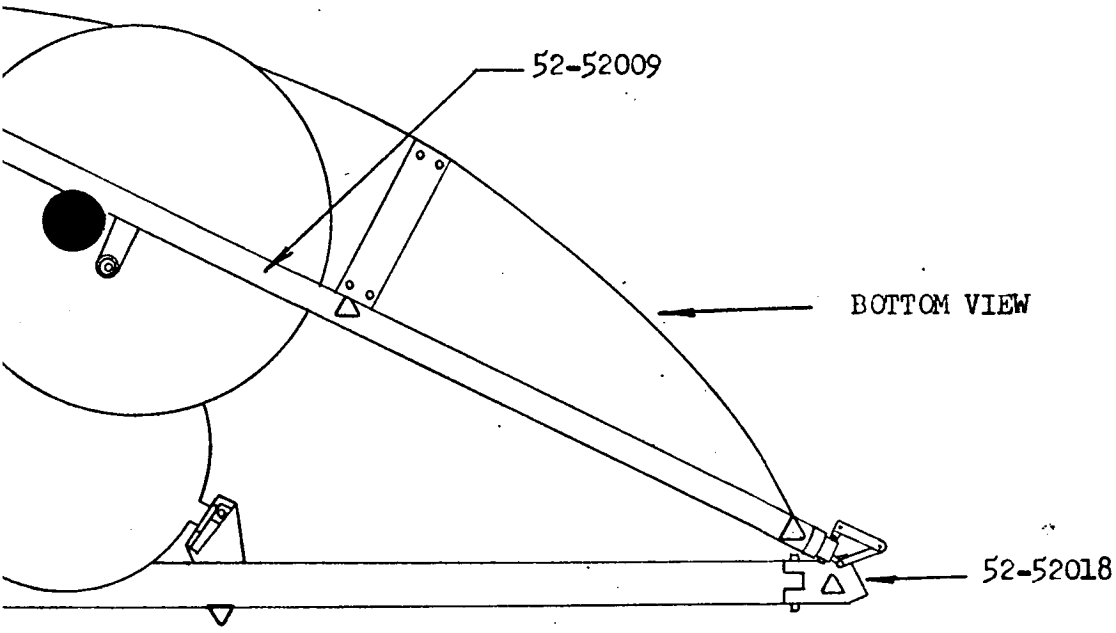

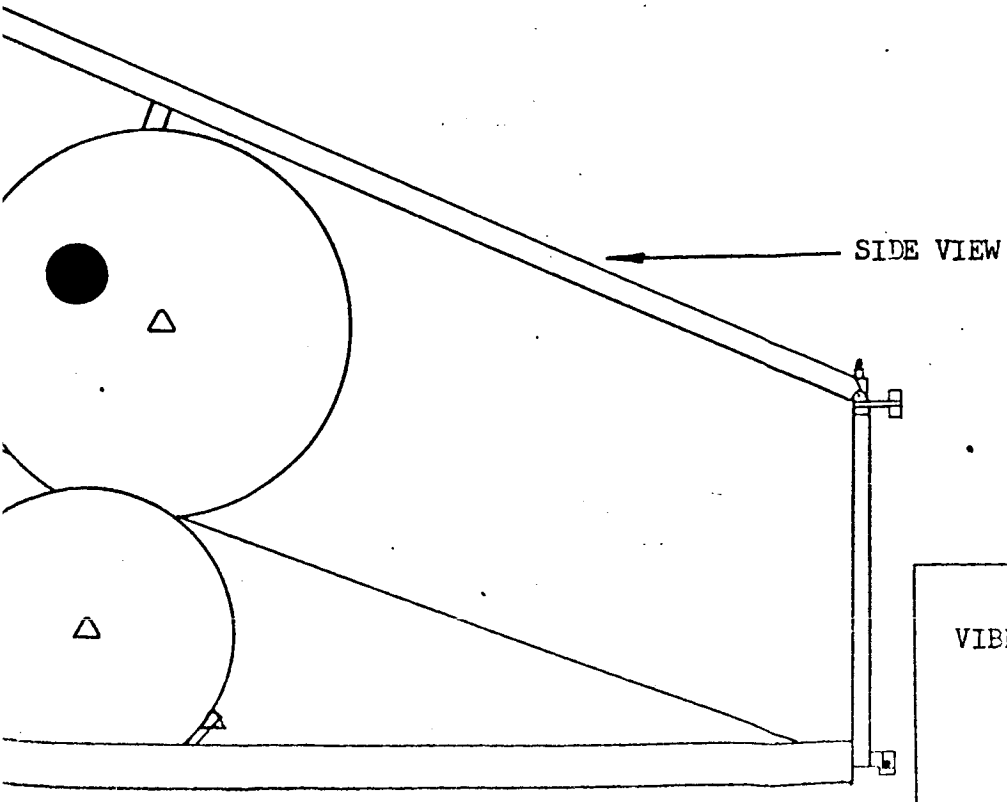

SE7 ENGINE SYSTEM
VIBRATION TEST ACCELEROMETER
LOCATIONS

FIGURE 53

NAME OF TEST:	VIBRATION TEST
PART NO: MAC:	52-52701
NAA:	99-106161
TEST NO:	106156-401

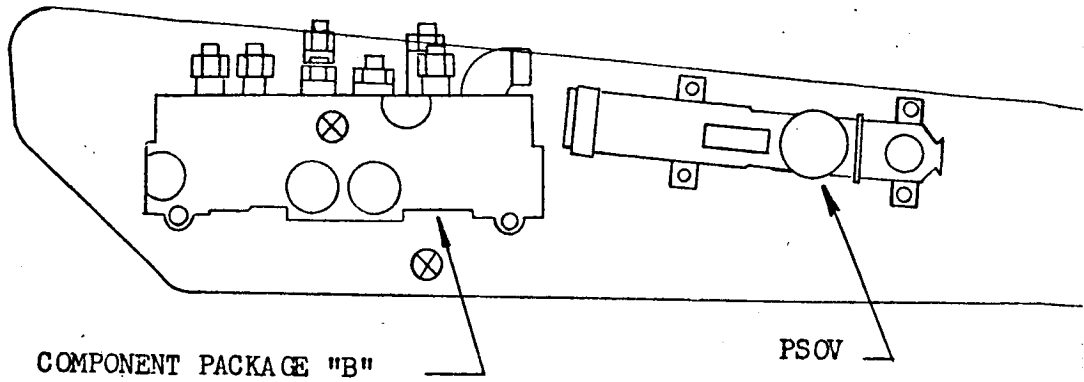

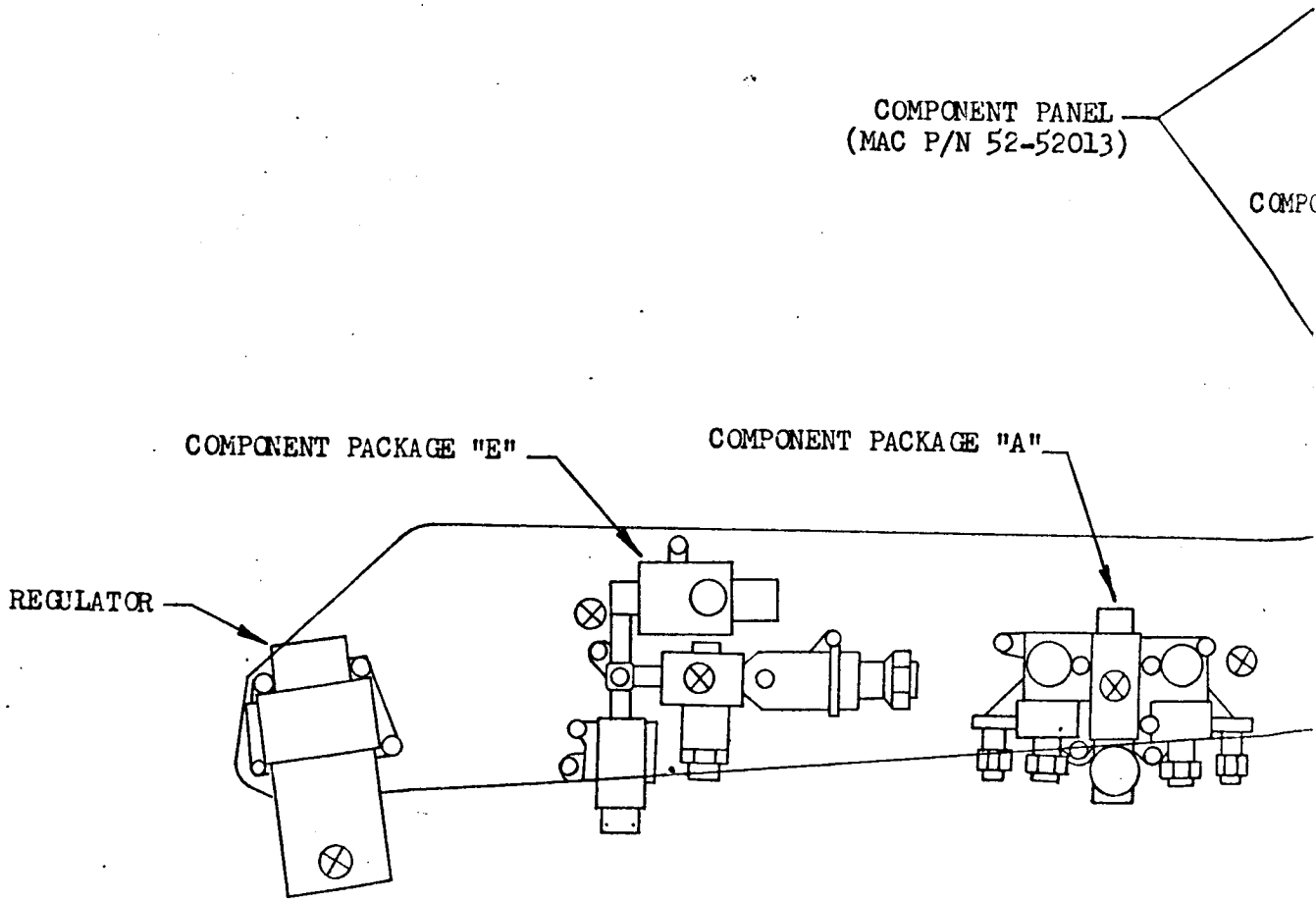

⊗ NORMAL TO THE COMPONENT SHELF OR AS SHOWN REF. Para. 7.2.1.3

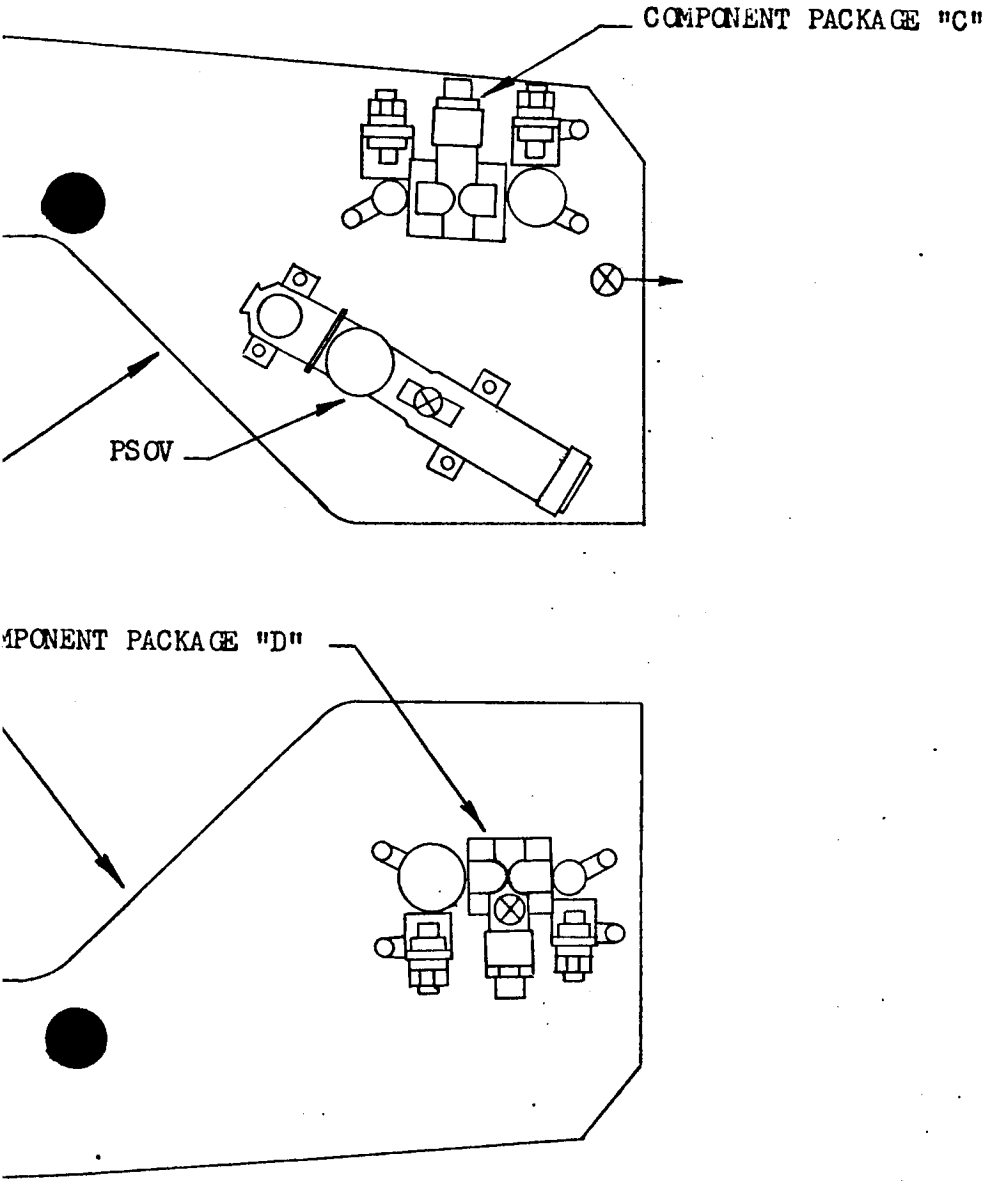

SE7 ENGINE SYSTEM

VIBRATION TEST ACCELEROMETER LOCATIONS

FIGURE 54 R-15075-1

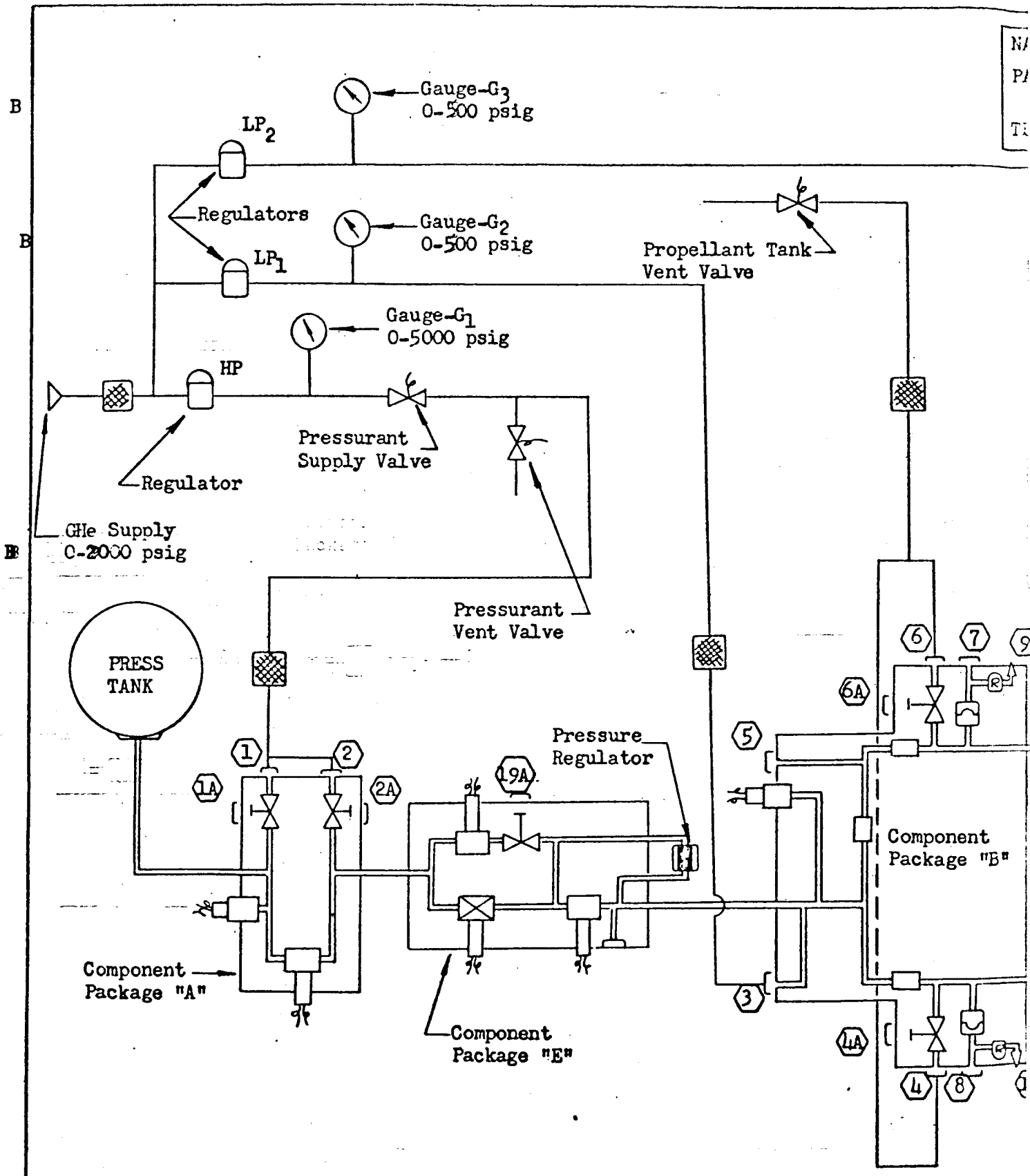
Gauge-G3
0-500 psig
LP2
Regulators
LP1
Gauge-G2
0-500 psig
Propellant Tank
Vent Valve
Gauge-G1
0-5000 psig
HP
Pressurant
Supply Valve
Regulator
GHe Supply
0-2000 psig
Pressurant
Vent Valve
PRESS
TANK
Pressure
Regulator
Component
Package "B"
Component
Package "A"
Component
Package "E"
1
1A
2
2A
19A
3
4
4A
5
6
6A
7
8
9

REVISION B

TEST: VIBRATION TEST
: MAC: 52-52701
NAA: 99-106161
: 106156-401

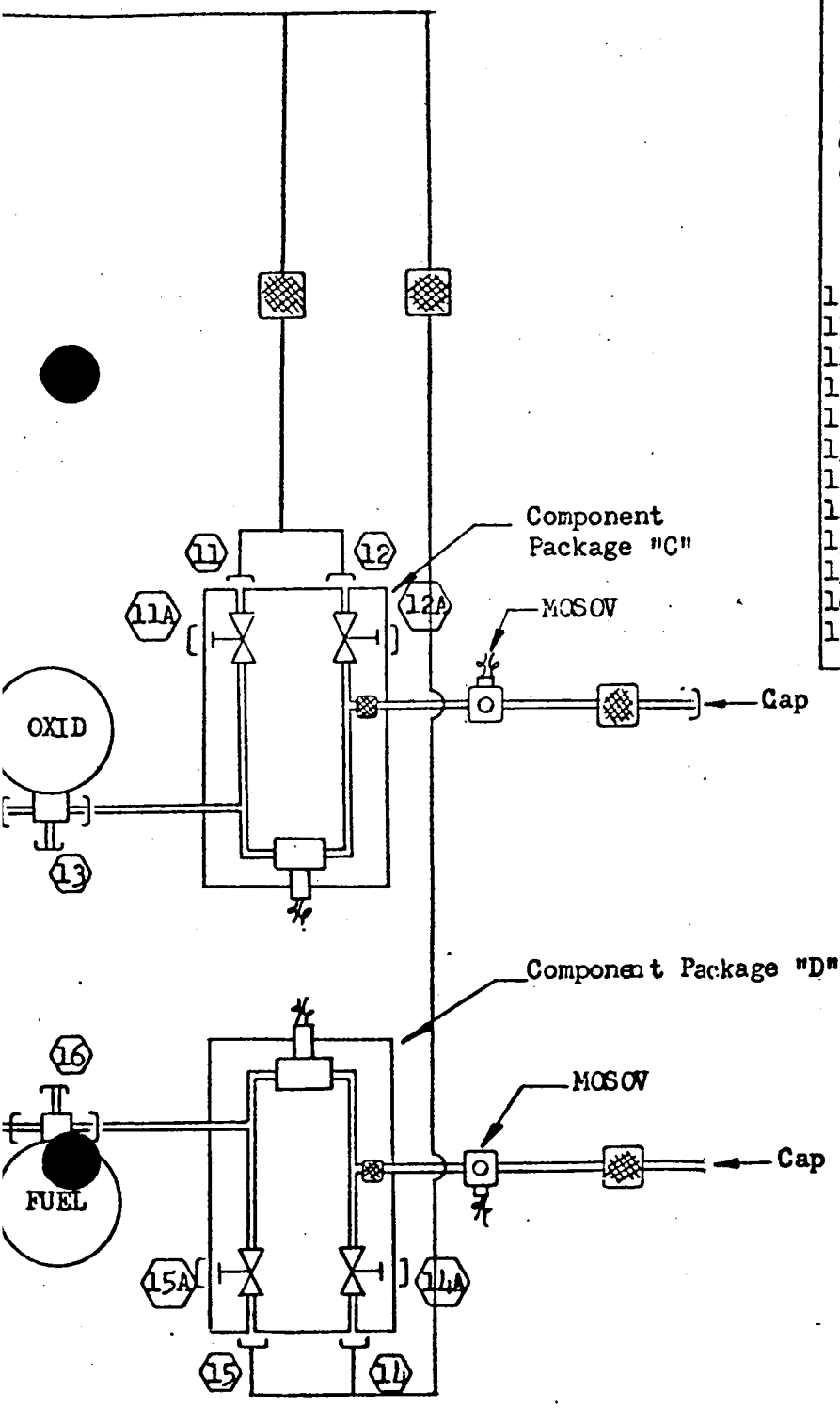

ENGINE SYSTEM LEGEND	RESISTOFLEX PORT SIZE
1 -HI PRESS GAS CHG VALVE PORT	1/4"
1A-HI PRESS GAS CHG VALVE	3/8"
2 -HI PRESS GAS TEST PORT	1/4"
2A-HI PRESS GAS TEST VALVE	3/8"
3 -REG OUT TEST	5/16"
4 -FUEL TANK VENT PORT	5/16"
4A-FUEL TANK VENT VALVE	3/8"
5 -INTER CHECK VALVE TEST	5/16"
6 -OXID TANK VENT PORT	5/16"
6A-OXID TANK VENT VALVE	3/8"
7 -RELIEF VALVE TEST OXID	5/16"
8 -RELIEF VALVE TEST FUEL	5/16"
9 -OXID RELIEF VENT PORT	OPEN
10 -FUEL RELIEF VENT PORT	OPEN
11 -OXID CHG PORT	5/16"
11A-OXID CHG VALVE	3/8"
12 -OXID TEST PORT	5/16"
12A-OXID TEST VALVE	3/8"
13 -OXID PURGE	5/16"
14 -FUEL TEST PORT	1/4"
14A-FUEL TEST VALVE	3/8"
15 -FUEL CHG PORT	1/4"
15A-FUEL CHG VALVE	3/8"
16 -FUEL PURGE	1/4"
19A-BYPASS VALVE TEST	5/8"

VIBRATION LEAK TEST - SCHEMATIC
SE7

1285

FIGURE 55

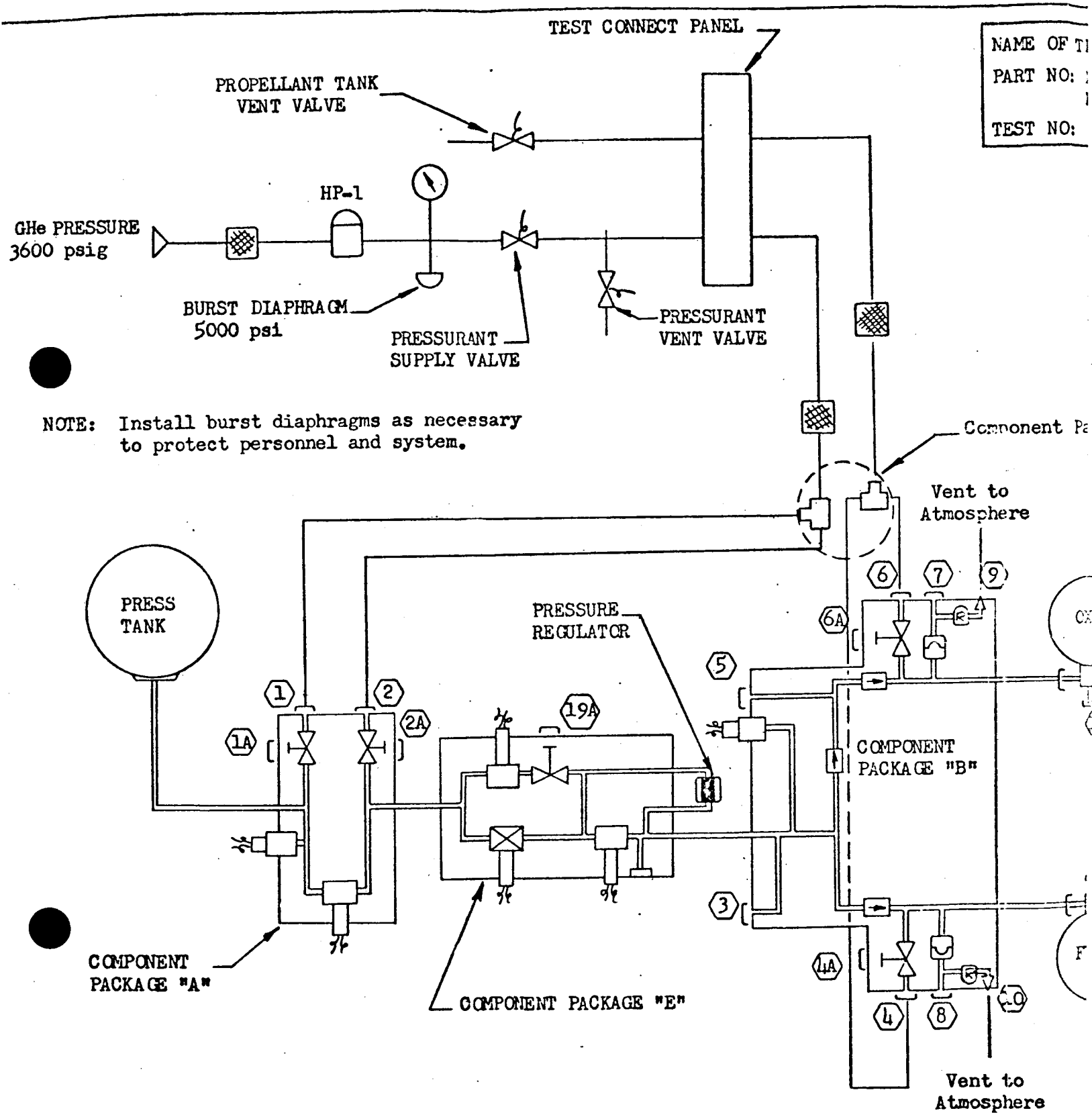
TEST CONNECT PANEL
NAME OF T
PART NO:
TEST NO:
PROPELLANT TANK VENT VALVE
HP-1
GHe PRESSURE 3600 psig
BURST DIAPHRAGM 5000 psi
PRESSURANT SUPPLY VALVE
PRESSURANT VENT VALVE
NOTE: Install burst diaphragms as necessary to protect personnel and system.
Component Pa
Vent to Atmosphere
PRESS TANK
PRESSURE REGULATOR
COMPONENT PACKAGE "B"
COMPONENT PACKAGE "A"
COMPONENT PACKAGE "E"
Vent to Atmosphere
1
1A
2
2A
19A
5
6
6A
7
9
3
4A
4
8
10

TEST: VIBRATION TEST
MAC: 52-52701
NAA: 99-106161
106156-401

ENGINE SYSTEM LEGEND	RESISTOFLEX PORT SIZE
1 -HI PRESS GAS CHG VALVE PORT	1/4"
1A-HI PRESS GAS CHG VALVE	3/8"
2 -HI PRESS GAS TEST PORT	1/4"
2A-HI PRESS GAS TEST VALVE	3/8"
3 -REG OUT TEST	5/16"
4 -FUEL TANK VENT PORT	5/16"
4A-FUEL TANK VENT VALVE	3/8"
5 -INTER CHECK VALVE TEST	5/16"
6 -OXID TANK VENT PORT	5/16"
6A-OXID TANK VENT VALVE	3/8"
7 -RELIEF VALVE TEST OXID	5/16"
8 -RELIEF VALVE TEST FUEL	5/16"
9 -OXID RELIEF VENT PORT	OPEN
10 -FUEL RELIEF VENT PORT	OPEN
11 -OXID CHG PORT	5/16"
11A-OXID CHG VALVE	3/8"
12 -OXID TEST PORT	5/16"
12A-OXID TEST VALVE	3/8"
13 -OXID PURGE	5/16"
14 -FUEL TEST PORT	1/4"
14A-FUEL TEST VALVE	3/8"
15 -FUEL CHG PORT	1/4"
15A-FUEL CHG VALVE	3/8"
16 -FUEL PURGE	1/4"
19A-BYPASS VALVE TEST	5/8"

anel on Tank Module

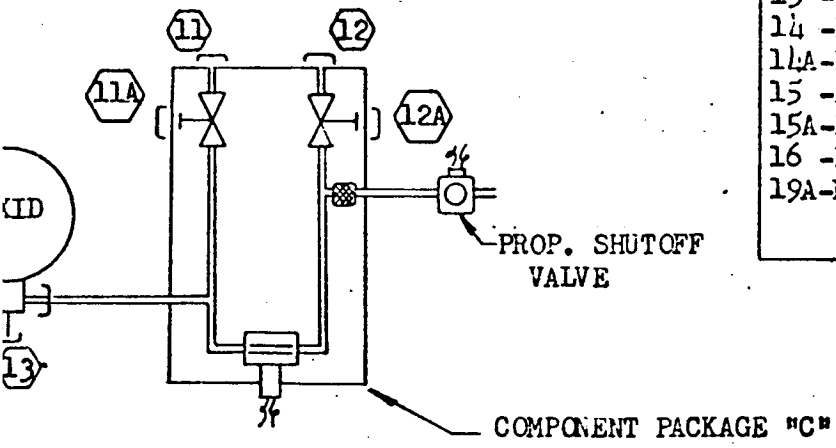

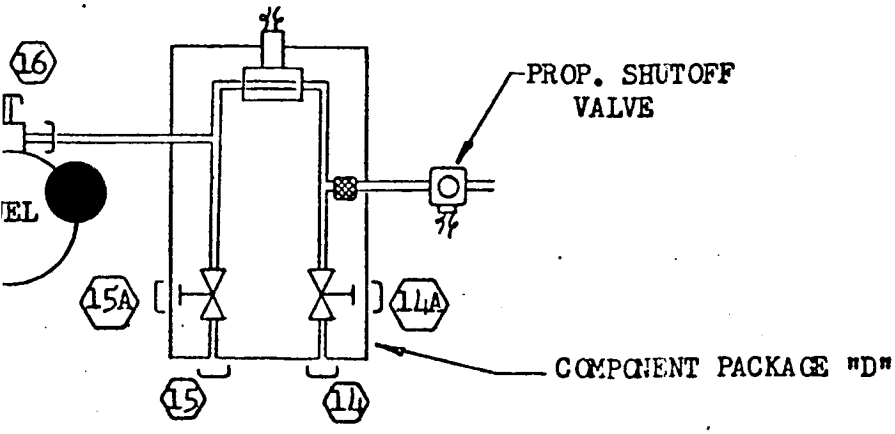

SE7 ENGINE SYSTEM
VIBRATION TEST SETUP

FIGURE 56 R-15075-1

DESIGN APPROVAL TEST
ORBIT ATTITUDE AND MANEUVER SYSTEM
(SE7)

NAME OF TEST VIBRATION TEST TEST NO. 106161-401 SHEET 397 OF 413

PART NO. 2-DAY CONFIG { MAC / NAA } 14-DAY CONFIG. { MAC SE-27OL / NAA 99-106161 }

COMPONENT PACKAGE "A" AND COMPONENT PACKAGE "B"

FLIGHT TRANSDUCERS

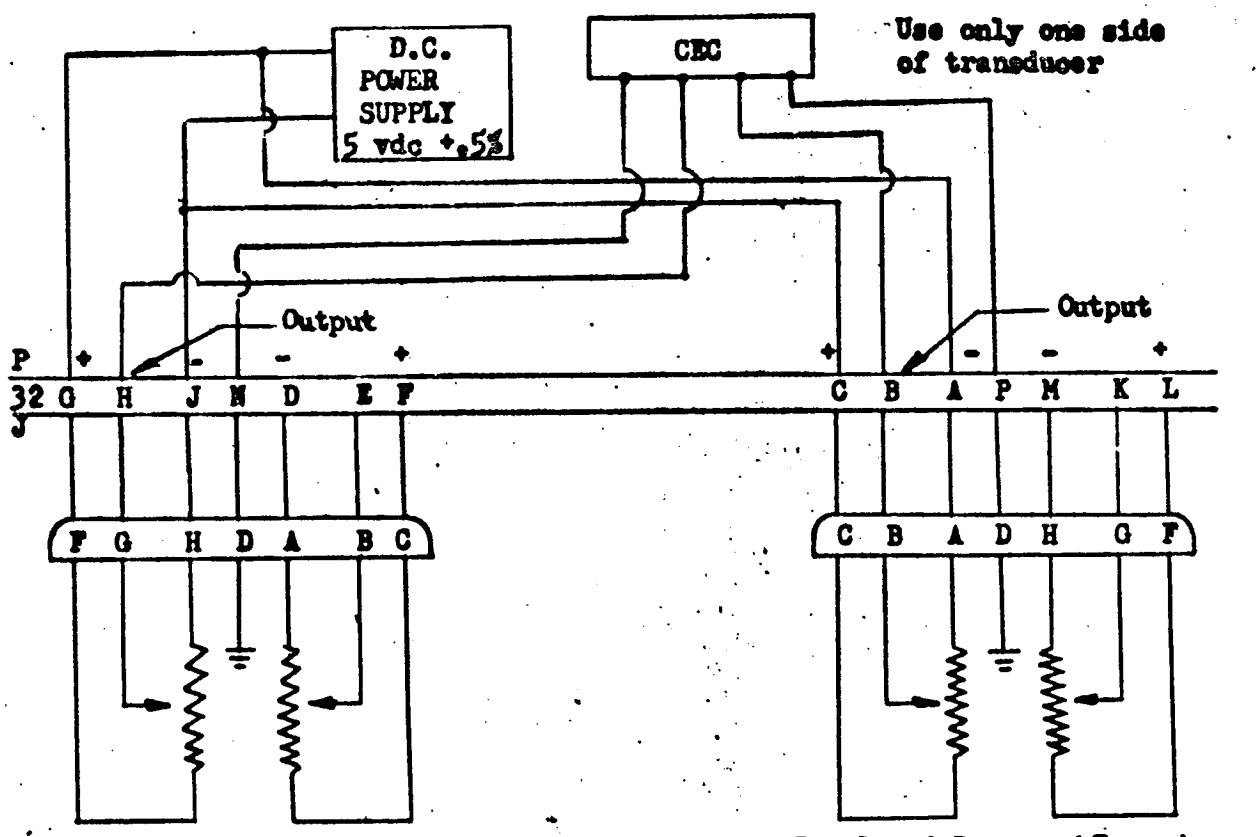

Source Pressure Transducer
Component Package "A"

Range: 0-5000 psia

Regulated Pressure Transducer
Component Package "B"

Range: 0-500 psia

NOTE: Recording System Impedance to be 10,000Ω minimum
MS3100E24-28P furnished with system, mates with
MS3106E 24-28S.

FIGURE 57

DESIGN APPROVAL TEST
ORBIT ATTITUDE AND MANEUVER SYSTEM
(SE7)

NAME OF TEST FUNCTIONAL TEST TEST NO. 106156-401 SHEET 398 OF 413

PART NO. 2-DAY CONFIG. { MAC ____ NAA ____ } 14-DAY CONFIG. { MAC 52-52701 NAA 99-106161 }

SCHEMATIC - TRANSDUCER CALIBRATION

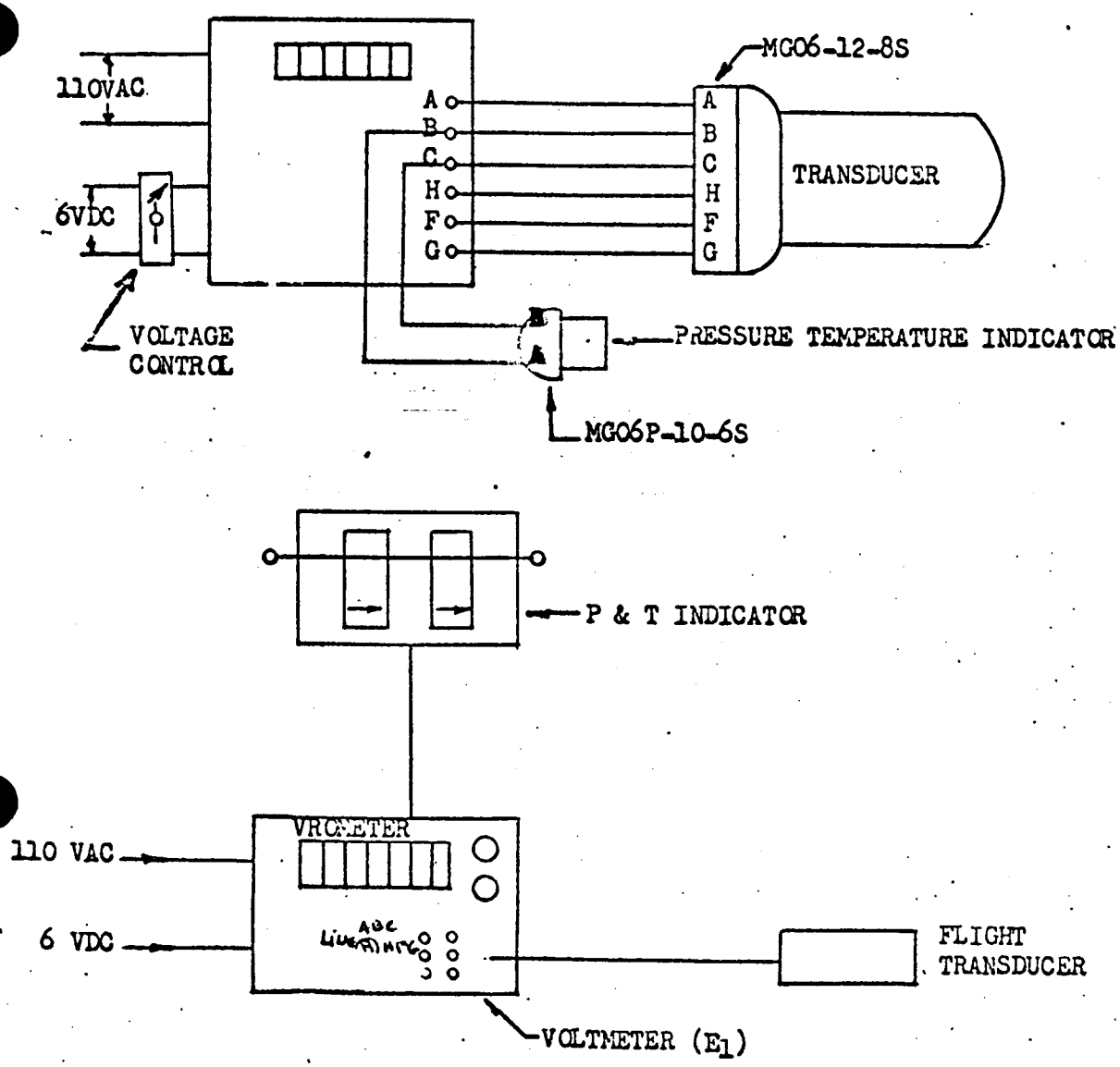

FIGURE 58

DESIGN APPROVAL TEST
ORBIT ATTITUDE AND MANEUVER SYSTEM
(SE7)

NAME OF TEST FUNCTIONAL TEST TEST NO. 106156-401 SHEET 399 OF 413

PART NO. 2-DAY CONFIG. { MAC / NAA } 14-DAY CONFIG. { MAC 52-52701 / NAA 99-106161 }

PSOV RESPONSE

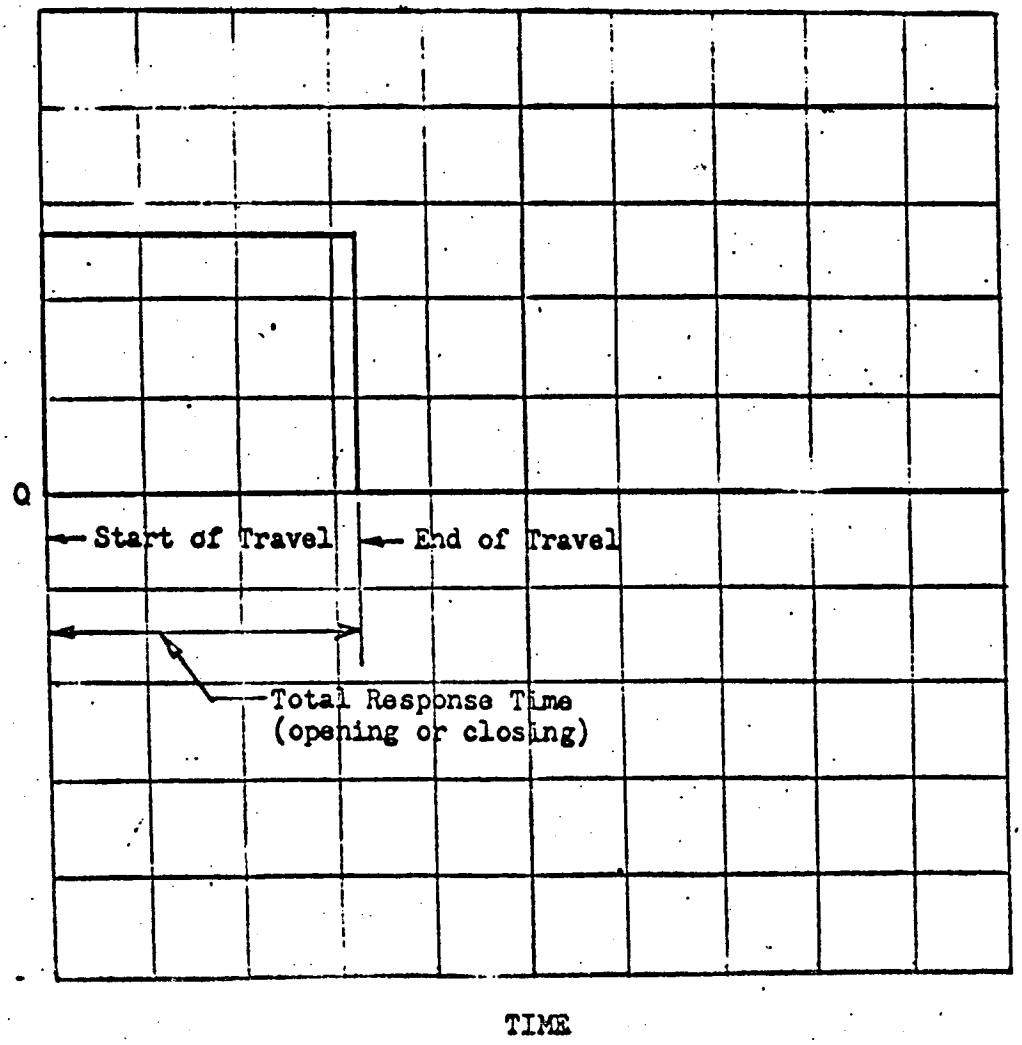

Figure 59

DESIGN APPROVAL TEST
ORBIT ATTITUDE AND MANEUVER SYSTEM
(SE7)

NAME OF TEST FUNCTIONAL TEST TEST NO. 106156-401 SHEET 400 OF 413
PART NO. 2-DAY CONFIG. {MAC / NAA} 14-DAY CONFIG. {MAC 52-52701 / NAA 99-106161}

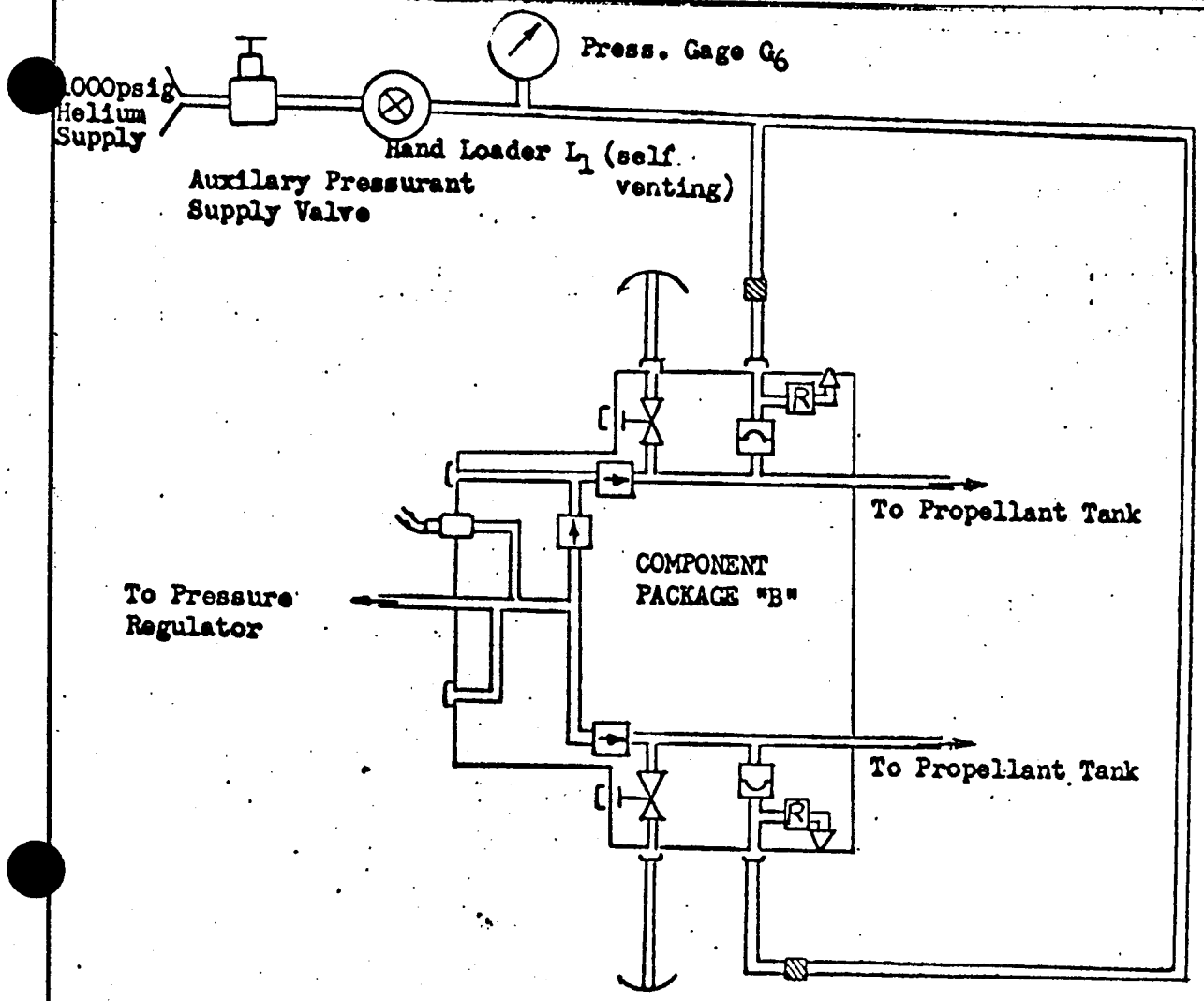

AUXILIARY PRESSURANT SUPPLY TEST SETUP

Reference Figure 35

FIGURE 60

NAME OF TEST:
PART NO: MAC:
NAA:
TEST NO:

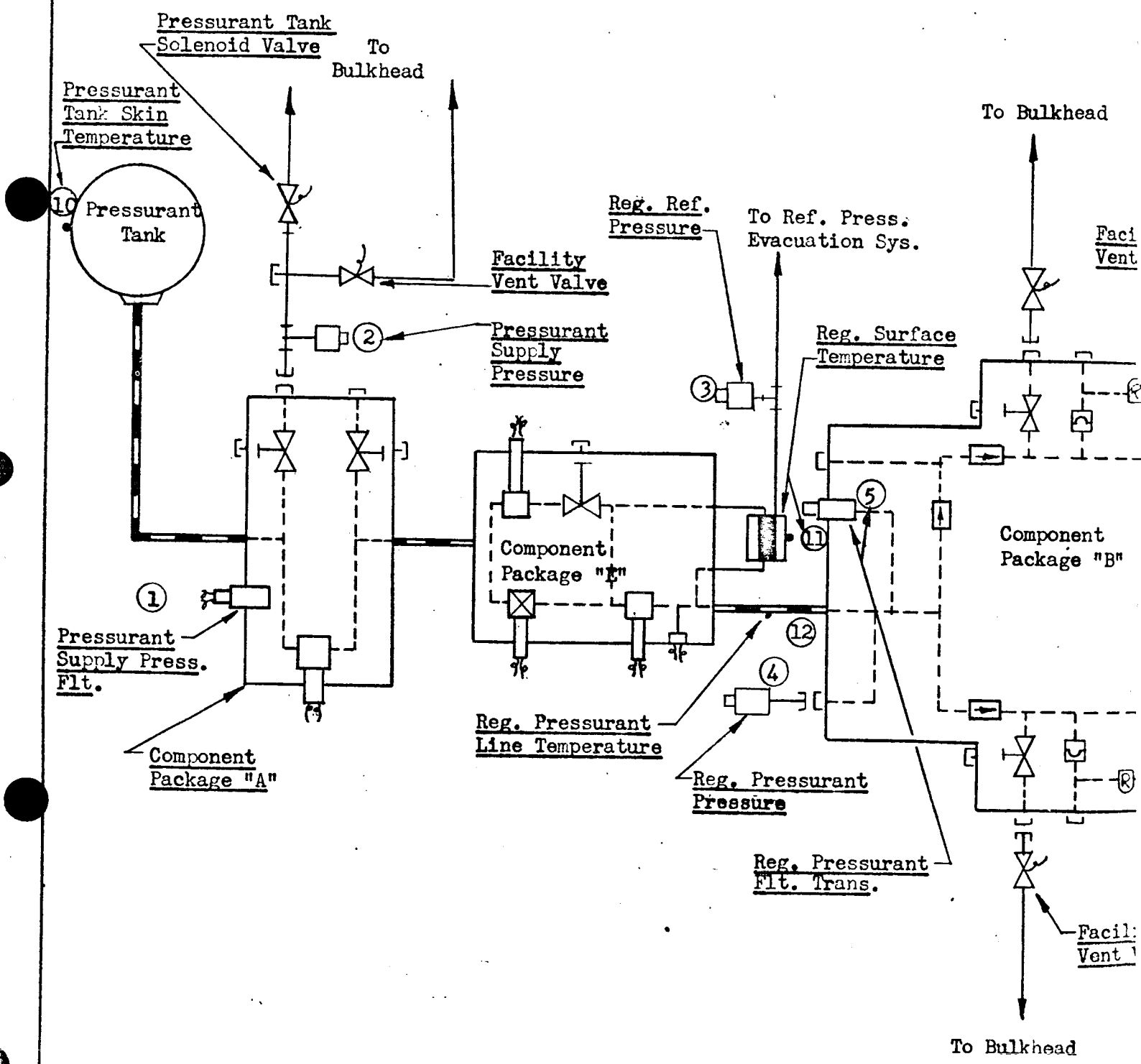

R-15075-1

HOT FIRE TESTS
52-52701
99-106156
106156-401

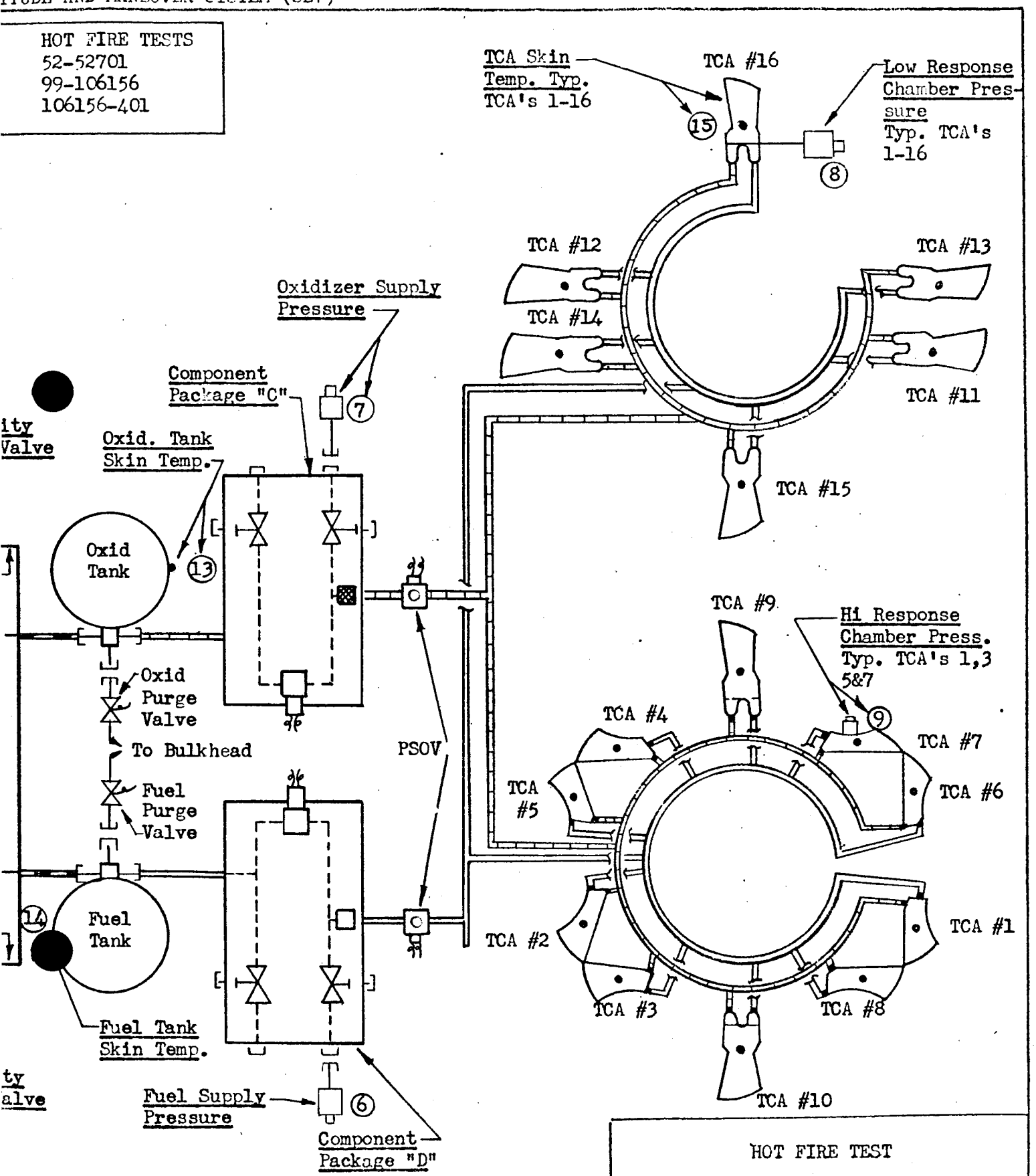

HOT FIRE TEST

Service connections and Instrumentation Attach Points

SE7 Engine System

1291

FIGURE 61

DESIGN APPROVAL TEST
ORBIT ATTITUDE AND MANEUVER SYSTEM
(SE7)

NAME OF TEST TORQUE REQUIREMENTS SERVICE CONNECTIONS TEST NO. 106156-401 SHEET 402 OF 413

PART NO. 2-DAY CONFIG. { MAC / NAA } 14-DAY CONFIG. { MAC 52-52701 / NAA 99-106156 }

TORQUE REQUIREMENTS
COMPONENT PACKAGE MANUAL VALVES RESISTOFLEX FITTINGS

Tube Size (Inches)	Torque (Inch Lbs)	Male Fittings (Inches)	Female Fittings (Inches)
3/16	20 $^{+100}_{-0}$	7/16	7/16
1/4	120 $^{+200}_{-0}$ ***	1/2	9/16
5/16	150 $^{+300}_{-0}$ ***	9/16	5/8
3/8	200 $^{+400}_{-0}$	5/8	11/16
1/2	300 $^{+400}_{-0}$	3/4	7/8
5/8	400 $^{+400}_{-0}$ *		

Manual Valves		Closing Torque (Inch Lbs)	Wrench Reqm'ts
HI PRESS GAS CHG VALVE	- 1A	60 ± 5	3/16 Allen
HI PRESS GAS TEST VALVE	- 2A	60 ± 5	3/16 Allen
FUEL TANK VENT VALVE	- 4A	35 $^{+5}_{-0}$	3/16 Thin Walled Socket
OXID TANK VENT VALVE	- 6A	35 $^{+5}_{-0}$	3/16 Thin Walled Socket
OXID CHG VALVE	- 11A	35 $^{+5}_{-0}$	3/16 Thin Walled Socket
OXID TEST VALVE	- 12A	35 $^{+5}_{-0}$	3/16 Thin Walled Socket
FUEL TEST VALVE	- 14A	35 $^{+5}_{-0}$	3/16 Thin Walled Socket
FUEL CHG VALVE	- 15A	35 $^{+5}_{-0}$	3/16 Thin Walled Socket
BYPASS VALVE TEST	- 19A**	37 ±3	3/16 Allen

NOTE: Manual Valve "Open" shall be defined as (4) turns counterclockwise from full "Closed".

*Utilize the 1 inch wrench flats as a back-up when tightening.
** Apply 57 ±3 inch-lbs of counterclockwise torque after opening.
***Torque to 150 inch lbs maximum if aluminum crush gasket is used

TABLE I

DESIGN APPROVAL TEST
ORBIT ATTITUDE AND MANEUVER SYSTEM
(SE7)

NAME OF TEST LIQUID CALIBRATION TEST TEST NO. 106156-401 SHEET 403 OF 413
PART NO. 2-DAY CONFIG. {MAC ____ NAA ____ 14-DAY CONFIG. {MAC 52-52701 NAA 99-106156

INSTRUMENTATION REQUIREMENTS

PARAMETER	LOC. (4)	DIGR or OSCILLOGRAPH Accuracy (1)	DIGR or OSCILLOGRAPH Response (3)	OSCILLOGRAPH Accuracy (1)	OSCILLOGRAPH Response (3)	CALIB Range
Oxidizer Side Flowmeter Down-Stream Pressure	1	±1	1±.25			0-300 psig
Fuel Side Flow-meter Downstream Pressure	2	±1	1±.25			0-300 psig
Oxidizer Side Flow-meter Pressure ΔP	3	±3	1±.25			0-50 psid
Fuel Side Flow-meter Pressure ΔP	4	±3	1±.25			0-50 psid
Oxidizer Side Fluid Temperature	5	±2F				0-200 F
Fuel Side Fluid Temperature	6	±2F				0-200 F
Oxidizer Side Flow	7			±.25	(2)	.6-6.0
Fuel Side Flowmeter	8			±.25	(2)	.7-7.0

(1) Accuracy is defined as per cent of full scale reading.
(2) No flow to maximum flow in 3 milliseconds.
(3) Response is defined as the time for the measurement recording system to travel from zero to full scale in seconds.
(4) See Figure 49. TABLE 2.

IL 4388-5286

INTERNAL LETTER
North American Aviation, Inc.

DATE 16 December 1964

TO Those Concerned
Address

FROM Gemini DAT-RAT Unit
Address D/896-388

SUBJECT SE7 Engine System DAT (S/C 3)

During liquid calibration per test procedure 106156-401 it was found that the test procedure was in error in specifying GN_2 as the Engine System pressurizing gas. Since the SE7 Engine System is a helium system, helium shall be used as the pressurizing gas. Also, it was noticed that the "Signal On Time" as specified in Table 3 was too short. This is to be changed to 10 ± 4 seconds.

McDonnell Aircraft Corporation and Rocketdyne have agreed with the above and that testing is to continue beginning with liquid calibration.

R. G. Eide
T. G. Kniffin for
Gemini DAT-RAT Unit

Approved: R. G. Eide
R. G. Eide
Supervisor
Gemini DAT-RAT Unit

S. Scott
S. Scott
MAC Engineering

FORM R 18-G-4

DESIGN APPROVAL TEST
ORBIT ATTITUDE AND MANEUVER SYSTEM
(SE7)

NAME OF TEST LIQUID CALIBRATION TEST NO. 106156-401 SHEET 404 OF 413 C
PART NO. 2-DAY CONFIG. {MAC ____ NAA ____} 14-DAY CONFIG. {MAC 52-52701 NAA 99-106156}

PROPELLANT VALVE ACTUATION REQUIREMENTS

Test Operation	TCA No's	Signal On Time (sec)
1	1	3±0.5
2	2	3±0.5
3	3	3±0.5
4	4	3±0.5
5	5	3±0.5
6	6	3±0.5
7	7	3±0.5
8	8	3±0.5
9	9	3±0.5
10	10	3±0.5
11	11	3±0.5
12	12	3±0.5
13	13	3±0.5
14	14	3±0.5
15	15	3±0.5
16	16	3±0.5
17	1-2	3±0.5
18	3-4	3±0.5
19	7-8	3±0.5
20	5-6	3±0.5
21	13-15	3±0.5
22	11-12	3±0.5
23	3-4-7	3±0.5
24	1-2-9-10-14	3±0.5
25	1-2-11-12	3±0.5
26	9-10-16	3±0.5
27	7-8-16	3±0.5
28	5-6-11-12	3±0.5
29	5-6-13-15	3±0.5

TABLE 3

Rev. C R. L. Fine Date 10-15-60

DESIGN APPROVAL TEST
ORBIT ATTITUDE AND MANEUVER SYSTEM
(SE7)

NAME OF TEST HOT FIRE CALIBRATION TEST TEST NO. 106156-401 SHEET 405 OF 413

PART NO. 2-DAY CONFIG. { MAC ____ NAA ____ } 14-DAY CONFIG. { MAC 52-52701 NAA 99-106156 }

HOT FIRE CALIBRATION TEST SEQUENCE

Test Operation	TCA No's	Signal On Time (sec)
1	1	3±0.5
2	2	3±0.5
3	3	3±0.5
4	4	3±0.5
5	5	3±0.5
6	6	3±0.5
7	7	3±0.5
8	8	3±0.5
9	9	3±0.5
10	10	3±0.5
11	11	3±0.5
12	12	3±0.5
13	13	3±0.5
14	14	3±0.5
15	15	3±0.5
16	16	3±0.5
17	1-2	3±0.5
18	3-4	3±0.5
19	7-8	3±0.5
20	5-6	3±0.5
21	13-15	3±0.5
22	11-12	3±0.5
23	3-4-7	3±0.5
24	1-2-9-10-14	3±0.5
25	1-2-11-12	3±0.5
26	9-10-16	3±0.5
27	7-8-16	3±0.5
28	5-6-11-12	3±0.5
29	5-6-13-15	3±0.5

TABLE 4

DESIGN APPROVAL TEST
ORBIT ATTITUDE AND MANEUVER SYSTEM
(SE7)

NAME OF TEST HOT FIRE TESTS TEST NO. 106156-401 SHEET 406 OF 413

PART NO. 2-DAY CONFIG. { MAC ____ NAA ____ 14-DAY CONFIG. { MAC 52-52701 NAA 99-106156

INSTRUMENTATION REQUIREMENTS

PARAMETER	Number Req'd	Location (4)	Oscillograph (3) Accuracy (1)	Oscillograph (3) Response (2)	Calibration Range	
Pressurant Supply Pressure (FLT)*						C
Pressurant Supply Pressure	1	2	y	.003	0-5000 psig	
Pressurant Regulated Pressure (FLT)*	1	5	y	.001	0-400 psig	
Pressurant Regulated Pressure	1	4	y	.003	0-500 psig	
Oxidizer Pressure (Comp.Pkg."C")						C
Fuel Pressure (Comp.Pkg."D")						C
Chamber Pressure(5) (High Response)	4	9	y	.001	0-300 psig	
Chamber Pressure (Low Response)	4	8	y	.010	0-200 psia	

Notes:
(1) Percent of full scale except for the "y" designation.
(y) Pre and post test electrical resistance calibrations of the recording system are required. (Reference: RA0201-050).
(2) Time required for the recorder to traverse from zero to full scale.
(3) Full scale deflection to be two (2) inches.
(4) See Figure 61.
(*) (FLT), denotes a flight transducer.
(5) Pre and post test pressure calibrations are required.
(6) 25 lb TCAs of the -21 configuration shall comply with this requirement during MDC only. C

TABLE 5

IL 5388-6069

INTERNAL LETTER
North American Aviation, Inc.

DATE 10 February 1965

TO Those Concerned
Address

FROM Gemini DAT-RAT Unit
Address D/896-388

SUBJECT SE-7 Engine System DAT - S/C-3.

REFERENCE Test Procedure 106156-401.

Pressurant Regulated Pressure (FLT) shall be deleted from the oscillograph instrumentation list of Table 5 of the above referenced test procedure.

This change is being made because of what is believed to be a facility circuit problem. Correction of this problem would cause undue delay in the test program.

However, the above information will not be lost because of redundant facility instrumentation.

T. G. Kniffin
Gemini DAT-RAT Unit

Approved:
R. G. Eide
Supervisor
Gemini DAT-RAT Unit

for
S. Scott
MAC Engineering

cc: R. W. Dinius 896-388
W. Pilipski 096-204
A. Schauer 096-204
D. Kelly NAAQC

Retyped from original

DESIGN APPROVAL TEST
ORBIT ATTITUDE AND MANEUVER SYSTEM
(SE7)

NAME OF TEST HOT FIRE TESTS TEST NO. 106156-401 SHEET 407 OF 413

PART NO. 2-DAY CONFIG. { MAC / NAA } 14-DAY CONFIG. { MAC 52-52701 / NAA 99-106156 }

INSTRUMENTATION REQUIREMENTS

PARAMETER	Number Req'd	Location (4)	Oscillograph(3) Accuracy (1)	Oscillograph(3) Response (2)	Calibration Range	
TCA Propellant Valve Voltage(5)	16		±4	.001	0-35 voltsdc	C
TCA Propellant Valve Current	16		±4	.001	0-2 amps	
Test Start & "Cut-off" (PIP)	1					
Reference Time (PIP)	1					

Notes:
(1) Percent of full scale except for the "y" designation.
(y) Pre and post test electrical resistance calibration of the recording system are required. (Reference: RA0201-050).
(2) Time required for the recorder to traverse from zero to full scale.
(3) Full scale deflection to be two (2) inches.
(4) See Figure 61.
(*) (FLT), denotes a flight transducer.
(5) 25 lb TCAs of the -21 configuration shall comply with this requirement during hot fire calibration only. C

TABLE 5

Rev. C R. L. Frue Date 10-15-65

DESIGN APPROVAL TEST
ORBIT ATTITUDE AND MANEUVER SYSTEM
(SE7)

NAME OF TEST HOT FIRE TESTS TEST NO. 106156-401 SHEET 408 OF 413

PART NO. 2-DAY CONFIG. { MAC ____ NAA ____ } 14-DAY CONFIG. { MAC 52-52701 NAA 99-106156 }

INSTRUMENTATION REQUIREMENTS

PARAMETER	Number Req'd	Location (4)	DIGR Accuracy (1)	DIGR Response (2)	Calibration Range
Pressurant Supply Pressure (FLT)*	1	1	y	1 ±.25	0-5000 psig
Pressurant Supply Pressure	1	2	±1	1 ±.25	0-5000 psig
Pressurant Regulated Pressure (FLT)*	1	5	y	1 ±.25	0-400 psig
Pressurant Regulated Pressure	1	4	±1	1 ±.25	0-500 psig
Oxidizer Pressure (Comp. Pkg."C")	1	7	±1	1 ±.25	0-500 psig
Fuel Pressure (Comp. Pkg."D")	1	6	±1	1 ±.25	0-500 psig
Chamber Pressure (Low Response)	16	8	±1	1 ±.25	0-200 psia
Pressure Regulator Reference Pressure	1	3	±1	1 ±.25	0-15 psia
Pressurant Tank Skin Temperature	1	10	±3.0		0-200 F

Notes:
(1) Percent of full scale reading except for the "y" designation.
(y) Pre and post electrical resistance calibration of the recording system are required. (Reference: RA0201-050).
(2) Time required for the recorder to traverse from zero to full scale.
(3) Full scale deflection to be two (2) inches.
(4) See Figure63.
(*) (FLT), denotes a flight transducer.
(5) 25 lb TCAs of the -21 configuration shall comply with this requirement during hot fire calibration only. C

DESIGN APPROVAL TEST
ORBIT ATTITUDE AND MANEUVER SYSTEM
(SE7)

NAME OF TEST HOT FIRE TESTS TEST NO. 106156-401 SHEET 409 OF 413

PART NO. 2-DAY CONFIG. { MAC / NAA } 14-DAY CONFIG. { MAC 52-52701 / NAA 99-106156 }

INSTRUMENTATION REQUIREMENTS

PARAMETER	Number Req'd	Location (4)	DIGR Accuracy (1)	DIGR Response (2)	Calibration Range
Oxidizer Tank Skin Temperature	1	13	±3.0		0-200 F
Fuel Tank Skin Temperature	1	14	±3.0		0-200 F
Pressure Regulator Surface Temperature	1	11	±3.0		0-200 F
Regulated Pressurant Line Temp. (Surface)	1	12	±3.0		0-200 F
Test Cell Environmental Temperature	1		±3.0		0-200 F
TCA Skin Temperature	16	15	±3.0		0-1000 F
Engine System Supply Voltage	1		±1	1±.25	0-35 volts dc
Flight Transducer Supply Voltage	1		±1	1±.25	0-10 volts dc

Notes:
(1) Percent of full scale reading except for the "y" designation.
(y) Pre and post test electrical resistance calibrations of the recording system are required. (Reference: RA0201-050).
(2) Time required for the recorder to traverse from zero to full scale.
(3) Full scale deflection to be two (2) inches.
(4) See Figure 61.
(*) (FLT), denotes a flight transducer.

TABLE 5

DESIGN APPROVAL TEST
ORBIT ATTITUDE AND MANEUVER SYSTEM
(SE7)

NAME OF TEST HOT FIRE TESTS TEST NO. 106156-401 SHEET 410 OF 413

PART NO. 2-DAY CONFIG. { MAC ____ NAA ____ } 14-DAY CONFIG. { MAC 52-52701 NAA 99-106156 }

INSTRUMENTATION REQUIREMENTS

The following parameters are to be recorded on an Esterline Angus (E.A.) recorder:

Parameter	No. Required
TCA Propellant Valve Signal (PIP)	16
Test Start & Cutoff (PIP)	1
Oscillograph "ON-OFF" Signal (PIP)	1
DIGR "ON-OFF" Signal (PIP)	1
Oscillograph Reference Timing (PIP)	1

TABLE 5

IL 5388-6033

INTERNAL LETTER
North American Aviation, Inc.

DATE 12 October 1965

TO Those Concerned
Address

FROM Gemini DAT-RAT Unit
Address D/896-388

SUBJECT SE-7 Engine System (S/C-3) DAT, Test Procedure 106155-401.

Change shall be made to subject test procedure as follows:

* 1. Paragraph 3.1.1 - The component hardware requirement for "Cartridges N/C" P/N "NA5-28082T1" shall be changed from "3" to "4" in the "Number Required" column.

2. Table 5 - In order to satisfy DIGR instrumentation requirements with regard to "Chamber Pressure (Low Response)", the signal obtained from the high response transducer of TCA #3 shall be utilized for measurement recording on the DIGR as well as the oscillograph. This is necessary because of an error in manufacturing in which the low response P_c tap was removed following acceptance testing.

* 3. Paragraph 6.1.1 - Only one thermocouple shall be used in measuring pressurant tank skin temperature. Consequently and reference to two thermocouples shall be disregarded.

* 4. Paragraphs 6.1.2.1.1.4.1, 6.1.2.1.2.4.1, 6.1.2.2.1.4.2, 6.1.2.2.2.4.2 - Change "15" to "50".

5. Paragraphs 6.1.2.1.1.4.10.3, 6.1.2.1.1.4.10.5, 6.1.2.1.1.4.12 - Change "GHe" to "GN_2".

* 6. Paragraphs 6.1.2.1.1.1, 6.1.2.1.2.1 - Delete the sentece which begins "If installed, the 3 way solenoid valve . . . "

* 7. Paragraphs 6.1.2.2.1.1, 6.1.2.2.2.1 - Delete the sentence which begins "The three (3) way Solenoid Valve . . . "

* 8. Paragraphs 6.1.2.1.1.3.2, 6.1.2.1.2.3.2, 6.1.2.2.1.4.1, 6.1.2.2.2.4.1 - Change to read: "Open the Facility Vent Valve and the three way solenoid valve connected to Component Package "B".

* 9. Paragraphs 6.1.2.1.1.4.13, 6.1.2.1.2.4.13, 6.1.2.2.1.4.17, 6.1.2.2.2.4.17 - Delete.

* 10. Paragraphs 6.1.2.1.1.4.2, 6.1.2.1.2.4.2, 6.1.2.2.1.4.3, 6.1.2.2.2.4.3 - Following performance of each of these paragraphs and prior to proceeding to the next paragraph attach the evacuation system to port 4 or 6 on Package "B" (whichever is applicable) and reduce the pressure at port 4 or 6 to 4 psia or less. Operate the vacuum pump until completion of filling.

* 11. Figure 25 - Concerning item "V_{g1}" the missing figure number if "22". Also, change "V_{d2}" to "V_{d0}".

* 12. Figure 26 - Concerning item "V_{g2}" the missing figure number if "24".

T. G. Kniffin
Gemini DAT-RAT Unit

Approved: R. G. Eide
R. G. Eide
Supervisor
Gemini DAT-RAT Unit

for S. Scott
MAC Engineering

cc:

R. Dinius	896-388
E. Charles	896-388
J. Nardi	896-388
C. Hann	096-204
G. Waite	096-212
W. Pilipski	096-204
D. Kelly	NAAQC
A. Schauer	096-204

* Incorporated in specification

Retyped from original dated 29 January 1965

FORM R 18-0-4

DESIGN APPROVAL TEST
ORBIT ATTITUDE AND MANEUVER SYSTEM
(SE7)

NAME OF TEST HOT FIRE TESTS TEST NO. 106156-401 SHEET 411 OF 413

PART NO. 2-DAY CONFIG. { MAC / NAA } 14-DAY CONFIG. { MAC 52-52701 / NAA 99-106156 }

MISSION DUTY CYCLE RECORDER DRIVE SEQUENCING AND SPEEDS

Oscillograph (1) On Time (sec)	DIGR On (2) Time (sec)	E.A. On (3) Time (sec)
-4 - 5	-1 - 32	(-1) - (+38) F
13 - 50	11031 - 11050	(+38) - (+11035) S
100 - 103	11080 - 11092	(+11035) - (+13070) F
250 - 253	11107 - 11119	
500 - 503	11180 - 11191 (4)	
750 - 753	12177 - 12197	
1000 - 1003	12237 - 12267	
1500 - 1503	12320 - 12331	
2000 - 2003	12363 - 12410	
2500 - 2503	12423 - 12433	
3000 - 3003	12438 - 12453	
3500 - 3503	12480 - 12495	
4000 - 4003	12520 - 12540	
4500 - 4503	12576 - 12586	
5000 - 5003	12596 - 12600	
5500 - 5503	12608 - 12618	
6000 - 6003	12650 - 12681	
6500 - 6503	12707 - 12717	
7000 - 7003	12724 - 12740	
7500 - 7503	12755 - 12772	
8000 - 8003	12790 - 12817 (4)	
8500 - 8503	12921 - 13002	
9000 - 9003	13060 - Cutoff	
9500 - 9503	At cutoff inch DIGRs	
10000 - 10003	manually once every five(5)	
11040 - 11046	minutes to obtain max TCA soakback temperature.	

Notes:
(1) The required oscillograph speed is 40 inches per second for the entire Mission Duty Cycle Test.
(2) The required DIGR speed is 2½ minutes per revolution for the entire Mission Duty Cycle Test.
(3) "S" denotes .750 inches per minute and "F" denotes .750 inches per second.
(4) Renew all DIGR Charts

R-15075-1 1305

TABLE 6

Rev. C R.L. Fue Date 10-15-65

DESIGN APPROVAL TEST
ORBIT ATTITUDE AND MANEUVER SYSTEM
(SE7)

NAME OF TEST HOT FIRE TESTS TEST NO. 106156-401 SHEET 412 OF 413

PART NO. 2-DAY CONFIG. { MAC ____ NAA ____ } 14-DAY CONFIG. { MAC 52-52701 NAA 99-106156 }

MISSION DUTY CYCLE RECORDER DRIVE SEQUENCING AND SPEEDS

Oscillograph (1) On Time (sec)	DIGR On (2) Time (sec)	E.A. On (3) Time (sec)
11090 - 11093		
11110 - 11113		
11190 - 11193		
11300 - 11306		
12180 - 12190		
12240 - 12251		
12258 - 12263		
12366 - 12371		
12382 - 12386		
12390 - 12393		
12426 - 12429		
12441 - 12444		
12483 - 12486		
12494 - 12500		
12579 - 12585		
12611 - 12617		
12664 - 12670		
12710 - 12716		
12734 - 12740		
12766 - 12772		
12801 - 12806		
12820 - 12825		
12843 - 12848		
12879 - 12884		
12903 - 12908		
12924 - 12939		
13000 - 13008		
13067 - Cutoff + 2 sec		

Notes:
(1) The required oscillograph speed is 40 inches per second for the entire Mission Duty Cycle Test.
(2) The required DIGR speed is $2\frac{1}{2}$ minutes per revolution for the entire Mission Duty Cycle Test
(3) "S" denotes .750 inches per minute and "F" denotes .750 inches per second.
(4) Renew all DIGR Charts.

DESIGN APPROVAL TEST
ORBIT ATTITUDE AND MANEUVER SYSTEM
(SE7)

NAME OF TEST HOT FIRE CALIBRATION TESTS TEST NO. 106156-401 SHEET 413 OF 413
PART NO. 2-DAY CONFIG. { MAC ____ NAA ____ } 14-DAY CONFIG. { MAC 52-52701 NAA 99-106156 }

HOT FIRE CALIBRATION TEST INSTRUMENTATION RECORDER "ON-OFF" SEQUENCE AND CHART SPEEDS

(a) "ON-OFF" Sequence - All recorders, oscillographs, DIGR's and E.A.'s shall be turned on prior to each 3 sec. firing and turned off immediately after each firing.

(b) Recorder Chart Speed -
DIGR's $2\frac{1}{2}$ minutes per revolution.
Oscillograph - 40 inches per sec.
E.A.'s - 3 inches per minute.

TABLE 7

This page intentionally left blank.