(NASA-CR-104186) EXTENDED-MISSION APOLLO STUDY, CONDENSED SUMMARY. ADDENDUM NUMBER 2 (North American Aviation, Inc.) 22 p

N79-76625

Unclas
00/38 11121

CLASSIFICATION CHANGE
To UNCLASSIFIED
By authority of GDS-GP-4
Classified by L. Shirley Date 12/75
Classified Document Master Control Station, NASA
Scientific and Technical Information Facility

X G [redacted] 0
(ACCESSION NUMBER) (THRU)
(PAGES) (CODE)
(NASA CR OR TMX OR AD NUMBER) (CATEGORY)
AVAIL[redacted]
AND CONTRACTORS ONLY

~~CONFIDENTIAL~~

SID 64-457-1

CONDENSED SUMMARY

ADDENDUM NUMBER 2

(U) EXTENDED-MISSION APOLLO STUDY [U]

NORTH AMERICAN AVIATION, INC. SPACE and INFORMATION SYSTEMS DIVISION

~~CONFIDENTIAL~~

~~CONFIDENTIAL~~

~~C66-6977~~

C69-2738

This document contains information affecting the national defense of the United States within the meaning of the Espionage Laws. Title 18 U.S.C. Section 793 and 794. Its transmission or revelation of its contents in any manner to an unauthorized person is prohibited by law.

Prepared for
Manned Spacecraft Center
National Aeronautics and Space Administration
Houston, Texas

Contract No. NAS9-1963

Accession No. 54586-64

Copy No. 102

SID 64-457-1

EXTENDED-MISSION APOLLO STUDY
Condensed Summary
Addendum No. 2

[U]

9 March 1964

Prepared by

Advanced Systems Department

Available from NASA to U. S. Government agencies and U. S. Government contractors only.

L. M. Tinnan, Director
Spacecraft Systems

H. P. Burns
Project Manager

NORTH AMERICAN AVIATION, INC.
SPACE and INFORMATION SYSTEMS DIVISION

[redacted]

~~CONFIDENTIAL~~

FOREWORD

This report, S&ID 64-457-1 constitutes a condensed summary of the studies conducted by the Space & Information Systems Division of North American Aviation, Inc., for the National Aeronautics and Space Administration Manned Spacecraft Center under Addendum No. 2 to Contract NAS9-1963, "An Engineering Investigation of the Modifications Required to the Apollo Spacecraft to Extend Mission Capabilities," dated 13 December 1963. A separate document, SID 64-457-2, contains a more complete description of all technical areas covered during the study program.

CONTENTS

	Page
INTRODUCTION	1
STUDY OBJECTIVES	1
METHOD OF APPROACH AND PRINCIPAL ASSUMPTIONS	2
BASIC DATA GENERATED AND SIGNIFICANT RESULTS	3
Apollo Subsystem-Life Extension	3
Concept O Evaluation	10
STUDY LIMITATIONS	14
IMPLICATIONS FOR RESEARCH	15
SUGGESTED ADDITIONAL EFFORT	16

ILLUSTRATIONS

Figure		Page
1	Fuel Cell Life/Efficiency	4
2	Fuel Cell Operation	4
3	Power System Weight	5
4	Service Module Reaction Control System Requirements	6
5	Orbit Degradation	7
6	LiOH Canister Comparison	8
7	Environmental Control System Life Extension	9
8	Systems Test Schedule	10
9	Command Module Work Space	11
10	Weight Variation	11
11	Service Module Experimental Volume	12
12	Concept O Arrangement (90-Day Mission)	13
13	Concept O Arrangement (45-Day Mission)	13

TABLES

Table		Page
1	Apollo Mission Reliability	2
2	Subsystem Reliability Objectives	3
3	Deboost Propulsion Alternatives	7
4	Earth Landing System Initiation Conditions	9
5	Communication and Data Subsystem	10
6	Command Module Weight	12
7	Service Module and Total Weight	12

INTRODUCTION

Although the subsystems developed for existing NASA spacecraft—Mercury, Gemini, and Apollo—were selected with respect to particular mission requirements, it is probable that some of these subsystems could be utilized in the development of new space vehicles to reduce vehicle cost and development schedules. The Apollo program is based upon subsystems that must support a 14-day lunar mission operation for the spacecraft and crew. Although some of these subsystems may not be suitable for all applications, it is desirable to examine the feasibility of utilizing these subsystems for certain alternate mission applications.

Studies performed by S&ID under the initial portion of Contract NAS9-1963 were concerned with the Apollo modifications required to provide a 120-day Earth orbital biomedical and human factors experimental laboratory. Although availability and cost criteria were heavily emphasized, the importance of other technical factors resulted in the selection of several new subsystem concepts for the 120-day mission vehicles. As a result of this study, however, it became evident that a shorter-mission requirement might permit application of all current Apollo subsystems concepts, thereby reducing development costs and permitting earlier vehicle availability.

After briefly examining the suitability of Apollo subsystems for application to large volume vehicle operations under the first contract extension (Addendum 1), it became evident that subsystems operation and life extension methods, rather than vehicle size, were the critical considerations. The remaining funds of Addendum 1 were then applied toward a redirected study (Addendum 2) that was concerned with determining the life limitations of the current Apollo subsystems and techniques for extending subsystem life. The Addendum 2 analyses also included an investigation of the design characteristics of an Extended-Mission Apollo Concept O—a configuration that consists of the Apollo command and service modules with minimum modifications to existing Apollo subsystem concepts.

This report contains only the results of the studies conducted by the Space & Information Systems Division of North American Aviation, Inc., under Addendum Number 2 to Contract NAS9-1963. For data prepared in the initial studies under this contract or in Addendum No. 1, reference should be made to SID 63-1370, Volumes 1 through 12, and to SID 63-1516, respectively.

STUDY OBJECTIVES

The primary objective of the study was to define the techniques required to significantly extend the life of the Apollo subsystems. This overall objective was composed of a number of secondary objectives including: determination of the maximum mission duration of the current Apollo, and identification of a preliminary study and test plan that would substantiate these modifications and additions as well as verify where new subsystems concepts should be employed. The accomplishment of these objectives was to be facilitated by performing subsystems cost, weight, and life tradeoffs. The additions and modifications required were to be established in sufficient detail

that added spares and systems modifications required for extended life would be readily evident. An additional objective of the study was the investigation of the characteristics of a Concept O Apollo command and service module that would remain in orbit for periods of less than 120 days. By definition, this vehicle was to utilize only the Apollo subsystems; no consideration was given to new subsystem concepts. The limiting orbital life of this configuration would then be determined by either the payload limit of the Saturn IB launch vehicle or volume limitations of the command and service modules.

METHOD OF APPROACH AND PRINCIPAL ASSUMPTIONS

Prior to a determination of subsystem life extension techniques, criteria must be developed to evaluate resulting extended subsystem life. Several criteria can be employed in this evaluation; however, the most common is reliability, through which tradeoff analyses can be conducted to determine when subsystem performance falls below a required reliability objective. At an early stage of total system development, reliability objectives are rather nebulous, since a rigorous subsystem reliability apportionment cannot be made. For example, the overall mission success goal can easily be determined, and it will not vary appreciably throughout the development phase unless a serious subsystem problem occurs. However, the apportionment of subsystem reliability objectives within this overall goal cannot be employed on an absolute basis until the development program is well along. Subsystem reliability apportionments are based on particular operating modes of the subsystem during the mission as well as on the probability that the subsystem operating exhibits the mode conditions for a given period of operation.

Of particular importance is the subsystem component philosophy employed to provide reasonable assurance that the crew will have a safe abort capability during all mission phases. As shown in Table 1, during the Apollo lunar mission, only two of the three fuel cells can be allowed to fail before the mission is aborted. However, if the same Apollo vehicle were employed as an Earth orbital system, all three fuel cells could fail before abort of the crew would be necessary. Therefore, it can be seen that mission life could be extended in an earth orbital mission simply due to the change in subsystem criteria applied for crew abort.

Table 1. Apollo Mission Reliability

SYS	COMPONENT	LUNAR MISSION	ORB. MISSION
ECS	SUIT CIRCUIT	1 OF 2	2 OF 2
	WATER GLYCOL PUMP	1 OF 2	2 OF 2
EPS	FUEL CELLS	2 OF 3	3 OF 3
	DC BUS	1 OF 2	2 OF 2
	AC BUS	1 OF 2	2 OF 2
	CHARGERS	——	3 OF 3
RCS (SM)	ENGINES (QUADS)	2 OF 4	4 OF 4

For the purpose of this study, reliability apportionments were made for all subsystems for various hypothetical mission cases as shown in Table 2. As pointed out earlier, the absoluteness of such apportioning at this early stage is highly questionable; therefore, these apportionments

~~CONFIDENTIAL~~

Table 2. Subsystem Reliability Objectives

SUBSYSTEM	CONCEPT O < 120 DAY EARTH ORBIT	420 DAY EARTH ORBIT	420 DAY LUNAR ORBIT	420 DAY MARS
STRUCTURE & MECH	0.99646	0.99561	0.99350	0.99310
LAUNCH ESCAPE	0.99998	0.99999	0.99999	0.99999
ELECTRICAL POWER	0.99646	0.99500	0.99570	0.99800
EARTH LANDING	0.99929	0.99999	0.99999	0.99999
CRYO STORAGE	0.99646	0.99600	0.99600	0.99600
SM RCS	0.99947	0.99999	0.99999	0.99999
CM RCS	0.99947	0.99999	0.99999	0.99999
ECS	0.99121	0.97790	0.98050	0.99161
SPS	0.99999	0.99994	0.99993	0.99991
RETRO PAC	0.99996	0.99999	0.99999	0.99999
SCS	0.99415	0.99910	0.99700	0.99651
G & N	0.99812	0.99910	0.99700	0.99651
COMM & DATA	0.99121	0.99531	0.99495	0.99150
INSTRUMENTATION	0.99297	0.99211	0.99196	0.98800
CSM MISSION SUCCESS	0.95	0.95	0.95	0.95

were used in the study only to evaluate, on a gross basis, extended duration performances attributed to subsystem modifications and spares provisioning.

Studies of Concept O were based upon the application of the extended life Apollo subsystems concepts which were generated early in the Addendum 2 study. The Concept O study assumed the basic constraints that were applied to the initial basic contract studies of Concept I; i. e., the use of the Saturn IB launch vehicle with no external change to the launch vehicle/CSM geometry, launch into a 200-nautical-mile, 29.5-degree inclination orbit, and two crewmen in the command module who would perform the "Concept I Maximum" biomedical and human factors experimental program defined earlier.

BASIC DATA GENERATED AND SIGNIFICANT RESULTS

This section discusses two areas of technical study, Apollo Subsystems Life Extension and Concept O Evaluation. The analyses presented under the first generally describe the techniques and methods employed for extending the life of the current Apollo subsystems, including the significant results and a brief summary of subsystem problem areas. The Concept O portion describes possible configurations that would result if these extended life subsystems were integrated into the Apollo command and service modules.

APOLLO SUBSYSTEM-LIFE EXTENSION

Power

Life extension of the power system is concerned primarily with techniques that could be applied to the fuel cell modules, since they are the primary life-limiting component. In the present Apollo LOR mission, the fuel cells are activated prior to launch and operate throughout the mission phase until failure. The fuel cells have a specification life of about 400 hours, which requires a waiver of the normal Apollo equipment specification life of 1200 hours. As shown in Figure 1, the current Apollo fuel cell test program is steadily approaching its 400-hour qualification. However, even assuming that the longest scheduled Apollo module test of 25 days is met, this life would fall far short of any requirement resulting from a significantly extended mission. With such a life limitation, it appears that the only method for increasing power system life would be to operate the fuel cells in a

~~CONFIDENTIAL~~

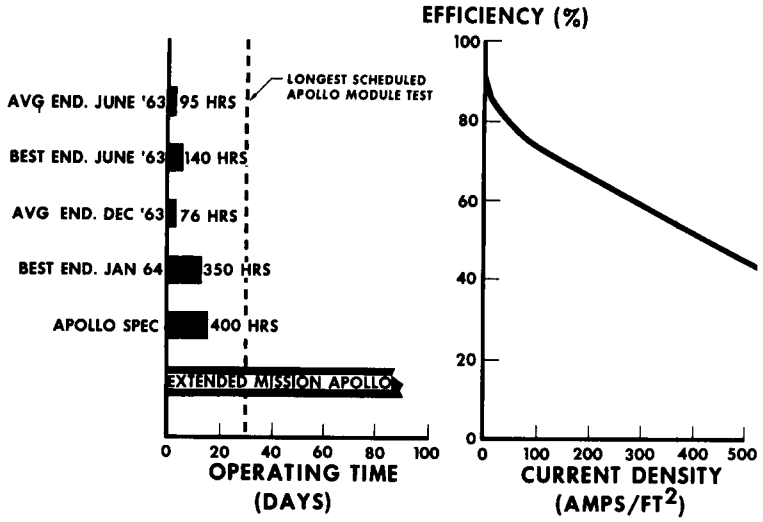

Figure 1. Fuel Cell Life/Efficiency

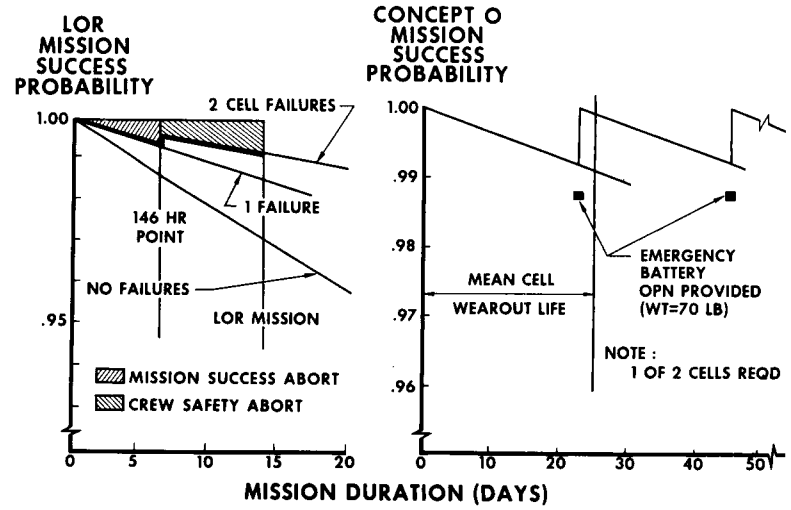

Figure 2. Fuel Cell Operation

series fashion, switching to a redundant bank at a time which would be near the life limit of the operating cells. The performance characteristics of the fuel cell (Figure 1) indicate that higher power loadings on the cell lower the efficiency. This efficiency degradation at higher power loadings (such as for one-cell operation) would result in significantly increased fuel requirements when operating over a long period of time. At least two fuel cells operating simultaneously are required to minimize fuel (hydrogen and oxygen) weight.

The current Apollo mission has two critical points in relation to operation of the fuel cells, as shown in Figure 2. If one fuel cell fails within the first 146 hours of the mission, abort is initiated. This type of an abort is called a mission success abort since the probability that the remainder of the mission could be accomplished successfully falls below acceptable levels. After the first 146 hours of the mission, however, two fuel cells can be allowed to fail before abort is required. This abort is initiated for crew safety reasons, since the remaining fuel cell is needed for return to Earth.

Once the development problems have been solved, the Apollo fuel cell will have a mean cell wear-out life of approximately 600 hours. Assuming series operation of the fuel cells, switch-over to a new bank of cells would be required approximately every 22 1/2 days (Figure 2). The critical point in operating the fuel cell system in this manner arises near the switch-over point where start-up of a new bank is required. Fuel cell start-up procedures will require that 300 F temperature be maintained in the new bank for a period of not less than 7 hours. During this start-up period, if one or both of the

[redacted]

initial cells fail, a serious power problem could exist aboard the vehicle. To preclude this possibility, an emergency rechargeable battery is provided which can be operated at these critical times in case of cell failure. There is also a possibility of a start-up failure occurring; to allow for this failure, one extra fuel cell would also be provided. For Concept O, in which extended power system life is achieved by addition of extra fuel cells, the fuel cell weight is a large percentage of the power system weight, as shown in Figure 3. If the additional fuel cells were not required, the power system weight would be reduced to about 4500 pounds for a 90-day mission, as shown by the dashed line in the figure. Significantly, the fuel cell dry weight comprises approximately 45 percent of the total power system weight.

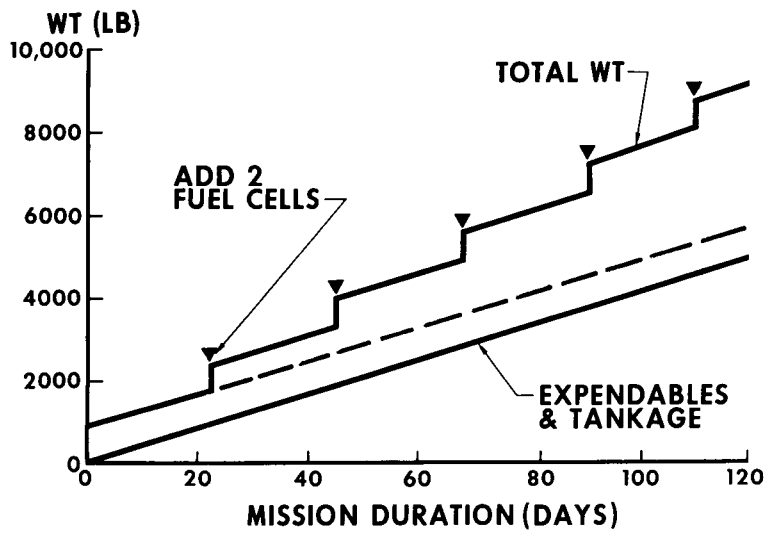

Figure 3. Power System Weight

The major identifiable problem areas associated with life extension of the power system concern development of in-space start capability for the fuel cell, and examination of secondary power system components such as the power conversion and distribution system. The development of in-space start capability is considered to be a relatively minor program, since it just involves heating the inactive bank of fuel cells.

Stabilization and Control

There are eight basic modes of operation possible for the stabilization and control system. For a prolonged mission ($\leq$420 days), four basic modes, which represent the extremes in operating complexity of the stabilization and control system, were considered. The monitor mode is the least complex mode of operation, and the G&N ΔV mode has the highest level of operating complexity.

The monitor mode is used in the Apollo LOR mission to monitor the launch trajectory. The use of this mode in an Earth-orbital application results in a free tumbling condition about any random axis of the spacecraft. However, the mode does provide a rate-limited operation that limits the tumbling rate to two revolutions per hour, which is well within the threshold of human angular velocity detection tolerance. For relatively short Earth-orbital missions of less than 120 days, the basic stabilization mode assumed was the monitor since there appears to be no reason to maintain a particular orientation for a Concept O biomedical experimental laboratory.

The two primary life-limiting components in the stabilization and control system are the Flight director attitude indicator (FDAI) and the pilot

[redacted]

controller. The FDAI is an integrated panel display which presents rate and attitude information to the astronaut. This component is presently limited to about 14 days of continuous operation. Depending upon the mission, requirements for a spare FDAI can be eliminated by deactivating the existing FDAI with an on-off switch when its operation is not required. Due to the life limitation of the pilot controller, it is recommended that this component also be deactivated by means of an on-off switch. This would permit reactivating the pilot controller at times when the spacecraft attitude has to be maintained. With the existing manual controller operating continuously, a mission duration of approximately 60 days, and with intermittent operation, prolonged missions of up to 420 days, can be achieved. One of the significant relationships associated with the monitor mode operation is that spares requirements appear insensitive to prolonged mission durations.

Reliability analyses indicate that the mission duration can be extended from 140 days to well over 450 days (without degrading the reliability objective) with the addition of only four pounds of spares. This relationship indicates that other factors such as the choice of operational mode are more significant in establishing the spares requirement. A comparison of the sensitivity between a 40-day and a 60-day mission time for either the local vertical or monitor modes results in only minor increases (about 5 percent) in spares requirements. However, when comparing the two modes, it was found that the local vertical mode requires almost twice the number of spares as the monitor mode for the same operating time. Thus, particular attention should be given in subsequent studies to the establishment of the operating mode when extending the life of the stabilization and control system is considered.

Propulsion and Reaction Controls

As a result of selection of the SCS monitor mode of operation, requirements on the reaction control system are greatly reduced. Concepts I, II, and III previously studied indicated the need for further development of the reaction control system to provide for extended life operation. Specifically, increased capability was required in the number of engine restarts (pulses), total burn time, and propellant tankage. In Concept O, if Earth orientation is not required, the existing Apollo reaction control system is adequate to provide for at least 110 days of Earth-orbital operation, as shown in Figure 4, before the engine limit (10,000 restarts) is reached.

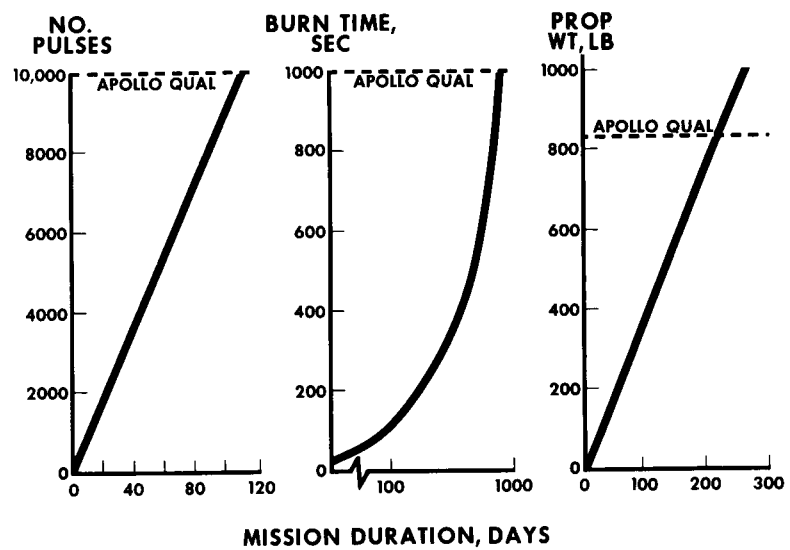

Figure 4. Service Module Reaction Control System Requirements

~~CONFIDENTIAL~~

Orbital altitude maintenance was required in Concepts I, II, and III due to the drag associated with the large panels of the solar power system. In Concept O, however, where the Apollo fuel cell system is retained, orbit degradation does not become significant for periods of 120 days operation, as shown in Figure 5, thereby eliminating propulsion requirements for station altitude maintenance.

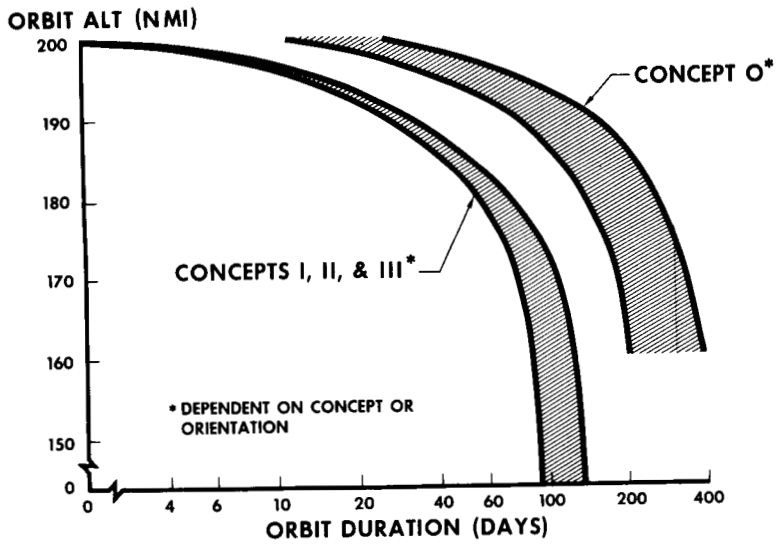

Figure 5. Orbit Degradation

In Concepts I, II, and III, a solid retro-pack was attached to the heat shield of the command module, thereby requiring some structural changes in the upper bays of the service module. In maintaining the minimum change philosophy in Concept O, back-up of the service propulsion system for deboost is obtained by the addition of three Hercules X248-85 solid engines on the service module. Table 3 illustrates that three possible alternates are available for deboost at the beginning of the mission. At end-of-mission weights, four possible means of deboost are available to the crew.

Table 3. Deboost Propulsion Alternatives

SYSTEM	START OF MISSION			END OF MISSION		
	ΔV (FPS)	RANGE DISPERSION (N MI/FPS)	ENTRY ANGLE (DEG)	ΔV (FPS)	RANGE DISPERSION (N MI/FPS)	ENTRY ANGLE (DEG)
SPS	550*	7	- 2	950*	2	- 3.0
THREE SOLID MOTORS	355	10	- 1.5	545*	7	- 2.0
RCS	265	30	- 1	238	35	- 0.2
RCS PLUS 3 SOLID MOTORS	620*	5	-2.5	800*	2.8	- 2.6
RCS PLUS 2 SOLID MOTORS	500*	8	-2.1	615*	5	- 2.5

* WILL PROVIDE REQUIRED DEBOOST OF AT LEAST 500 FT./SEC FOR MIN RANGE DISPERSION

The life-limiting components of the propulsion system are the RCS tank expulsion bladder and the engines. This bladder is presently made of teflon, which is a permeable material and would be limited to less than one-year operation. For extensions beyond this time, other types—metallic bellows, aluminum diaphragms, etc. —should be considered. The RCS engine is presently limited by fragmentation and burn-through. When these problems are resolved in the Apollo program, further life extensions will be possible through the addition of coatings.

~~CONFIDENTIAL~~

[redacted]

Guidance and Navigation

The G&N subsystem is made up of three basic functional parts—inertial, optical, and computer units. The Apollo G&N currently contains spares in the form of a redundant wired-in computer. Spares are not carried for the optical or inertial subsystems since they are rigidly mounted to the CM structure. The addition of five extra sets of Apollo spares for the lunar and Mars missions can only extend the mission time from 2 weeks to about seven weeks; additional spares would not increase this time significantly. Major life extension could be attained by providing a number of completely redundant systems; however, this approach results in an exceptionally high weight penalty and appears to be a brute-force method for extending system life. For the Earth orbital mission, it is doubtful whether a guidance and navigation system is even required, particularly in applications similar to the biomedical and human factors type of experimental mission. It is recommended that for both extended duration lunar and planetary missions, new guidance and navigation systems, designed specifically to the mission requirement, be considered.

Environmental Control and Life Support

The environmental control system is based on the arbitrary use of a two-gas atmosphere for all missions over 14 days. For the short-term Earth-orbital missions, the primary change to the Apollo ECS was the addition of lithium hydroxide canisters for CO_2 removal in the service module. Addition of a significant supply of lithium hydroxide in the command module is not possible because of volumetric limitations; consequently, the LiOH is stored in the service module. Figure 6 indicates

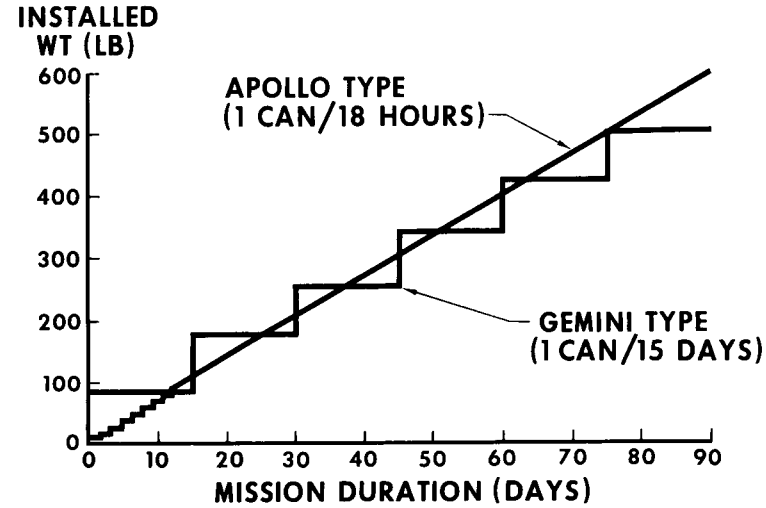

Figure 6. LiOH Canister Comparison

that the Apollo canister (36-man-hour capacity) would require a large number of remote switching functions in the service module to provide a significant life extension. For example, a mission duration of 90 days would require 120 switching operations. The Gemini type of LiOH canister has a 30-man-day capacity and would require only five switching operations for a 90-day Concept O mission. It is believed that further study is required to resolve the significance of the number of remote switching functions before final selection of a lithium hydroxide canister for extended missions can be made.

For mission durations much beyond a 45- to 90-day range, it appears that a molecular sieve would be required for CO_2 removal to minimize weight. Either supercritical or subcritical gas storage may be used, depending upon the criticality of weight and development costs. For

[redacted]

system-life extension beyond 140 days, a fully regenerative environmental control system appears to be required.

Reliability and mission time tradeoffs were also made of the ECS dynamic system components; i.e., the cabin blowers and compressors. Figure 7 shows that a mission time of 45 days can be achieved through moderate sparing levels of these components.

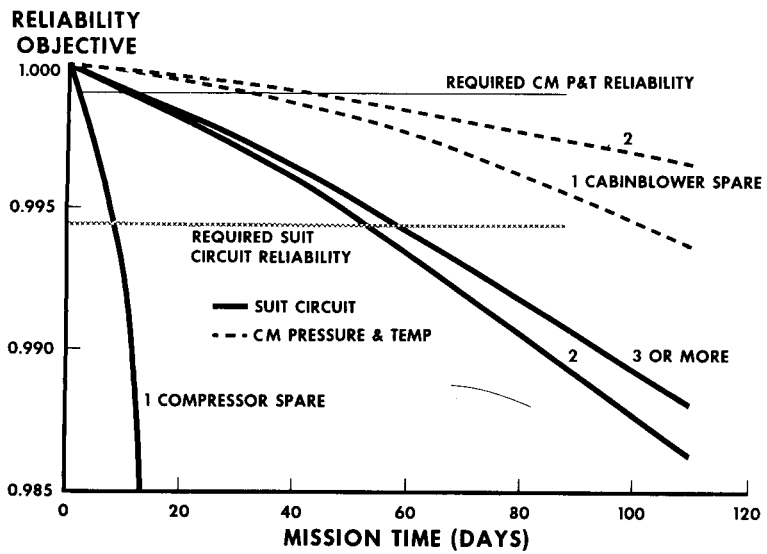

Figure 7. Environmental Control System Life Extension

The only change in the life support system of the Apollo is the use of high density food for greatly extended periods.

Earth Landing System

Studies of the earth landing system indicate that vacuum and radiation effects on textiles and pyrotechnics are of primary consideration. Prolonged-packing effects could also be detrimental to textiles because of their cohesive bonding properties. The extent of the ELS storage problem can be defined only after experimental data have been derived from long-term vacuum-and-radiation environment testing of textiles and pyrotechnics. Although some degradation of the existing Apollo parachute system will occur in prolonged storage, some strength margin exists since the launch abort conditions which design the parachutes incur 20- to 30-percent higher q levels than those associated with the normal reentry, as shown in Table 4.

Table 4. Earth Landing System Initiation Conditions

CASE	RECOVERY MODE	ALTITUDE/OSCILLATION	COMMENTS
1	NORMAL RE-ENTRY q=82 PSF h= 25,000 FT γ= -73°	HEAT SHIELD FORWARD α = 165° ± 5°	
2	OFF PAD ABORT (MAX q CONDITION) q = 70 PSF h = 3400 FT γ = – 34°	APEX FORWARD 0 <α<50°	MAX –γ/LOW ALT CONDITION
3	OFF PAD ABORT (LOW q CONDITION) q = 22 PSF h = 5600 FT γ = – 14°	APEX FORWARD 0<α< 50°	MIN q CONDITION
4	OFF PAD BOOSTER TIP OVER ABORT q = 100 PSF h = 3000 FT γ = – 30°	APEX FORWARD 0<α< 50°	MIN ALTITUDE
5	MODE① ABORT (MAX q ALT CONDITION) q = 105 PSF h = 60,000 FT γ = + 34°	APEX FORWARD 0<α<50°	MAX ALT CONDITION AT TOWER JETTISON CRITICAL FOR MAIN CHUTES
6	MODE② ABORT q = 130 PSF h = 25,000 FT γ = – 80°	HEAT SHIELD FORWARD 120<α<235°	MAX –γ/HIGH ALT CONDITION MAX q CONDITION CRITICAL FOR DROGUE CHUTES

Communications and Data

The communications and data subsystem is made up of components which have relatively low

failure rates. As shown in Table 5, two components—the PCM telemetry and C-band transponder—have failure rates that are an order of magnitude higher than the other components of the system. By providing only one spare component for both the PCM telemetry and C-band transponder, a mission duration of approximately 45 days can be achieved. Primary improvement of the communication and data subsystem can be obtained through redesign of system components to permit replacement of only failed elements rather than entire units. To facilitate this type of operation, some repackaging of equipment will be required to make the more vulnerable elements accessible.

Table 5. Communication and Data Subsystem

EQUIPMENT	ESTIMATED FAILURE RATE (NO./10^6 HOURS)	APOLLO			CONCEPT O (45 DAYS)	
		OPERATING TIME (HR)	ESTIMATED RELIABILITY	RELIABILITY OBJECTIVES	RELIABILITY NO SPARE	RELIABILITY ONE SPARE
HF TRANSCEIVER	1.386	72	0.999918	0.999720	0.9999	0.9999
VHF RECOVERY BEACON	1.2064	72	0.999913	0.999810	0.9999	0.9999
VHF/FM TRANSMITTER	1.7127	10	0.999982	0.999960	0.9981	0.9999
VHF/AM TRANSCEIVER	5.0359	30	0.999848	0.999000	0.9965	0.9999
AUDIO CENTER	1.4280	408	0.999417	0.996900	0.9984	0.9999
DATA STORAGE	9.1459	87	0.992004	0.993000	0.9950	0.9999
PREMODULATION PROCESSOR	1.8661	336	0.999372	0.996700	0.9990	0.9999
SIGNAL CONDITIONER	9.2785	336	0.996882	0.998000	0.9945	0.9999
PCM TELEMETRY	111.3390	336	0.963280	0.963000	0.9473	0.999
C-BAND TRANSPONDER	90.0000	10	0.999100	0.999500	0.9537	0.999

Subsystem Qualification Test Planning

Schedules of tests to verify the validity of the analytically derived life extensions were preliminarily established for every major subsystem. The schedule requirements of each subsystem test phase indicate that subsystem qualification can be achieved prior to a first manned operational launch date of October 1, 1967. Figure 8 shows that in two of the subsystem areas (ECS and SCS), some overlapping (one to two months) of the life extension testing with the current Apollo test phases will be required. Since a major portion of the final phases of the Apollo test program is devoted to data reduction and analysis, it appears that Apollo test equipment will be available for additional life extension testing in these two cases.

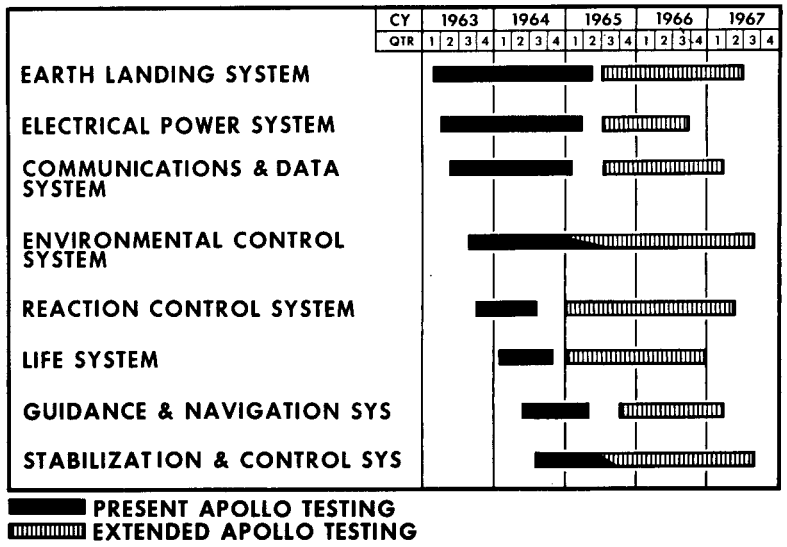

Figure 8. Systems Test Schedule

CONCEPT O EVALUATION

The command module for Concept O is shown in Figure 9. The command module will contain two crewmen plus food and the basic biomedical

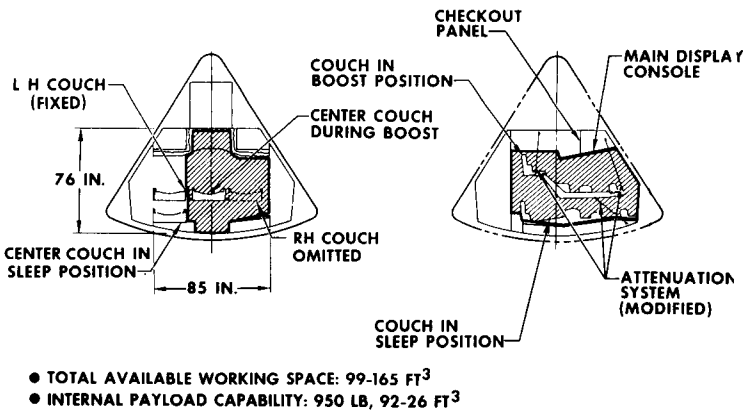

Figure 9. Command Module Work Space

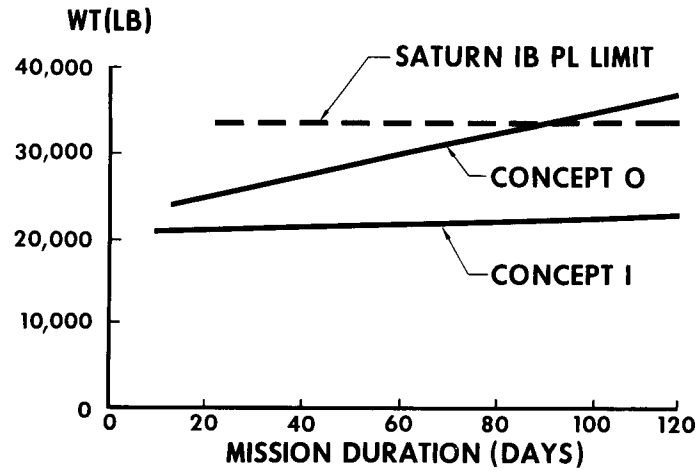

Figure 10. Weight Variation

and behavioral experiments package; the right hand couch has been omitted. Once in orbit, the center couch is stowed beneath the left hand couch (pilot position) in the sleeping position now used on the Apollo LOR mission. This makes available a total volume of 191 cubic feet which can be used for either storage or experimental work space. If the portion of the volume available from omission of the right hand couch is used for storage space, approximately 99 cubic feet will be available as work space with an additional total of 92 cubic feet for storage of food, experimental equipment, etc.

Figure 10 presents a weight tradeoff of both Concept I and Concept O for various mission durations. Concept I, which has a capability for greater than 120 days in orbit, has a significant payload margin available for other experimental equipment. However, this weight availability is a result of the selection of more advanced (and accordingly, more costly) subsystems concepts in the environmental control and power systems areas. Concept O, which adheres to the use of existing Apollo subsystems, becomes weight limited at approximately 90 days. Since this mission duration represents a very significant extension over the current Apollo and Gemini programs, a shorter mission duration for Concept O—45 days—might be more appropriate as the next step in mission-life extension. Subsystem studies have also indicated that a much higher level of confidence would exist for the shorter 45-day period.

Concept I has a volume of 1200 cubic feet available in the service module for added experiments. The Concept O configuration has about 1,050 cubic feet of volume (representing 6500 pounds of experimental equipment) for other experiments at 45 days duration as shown in Figure 11. It has been projected that the SM volume limit would be reached at approximately 180 days mission duration.

~~CONFIDENTIAL~~

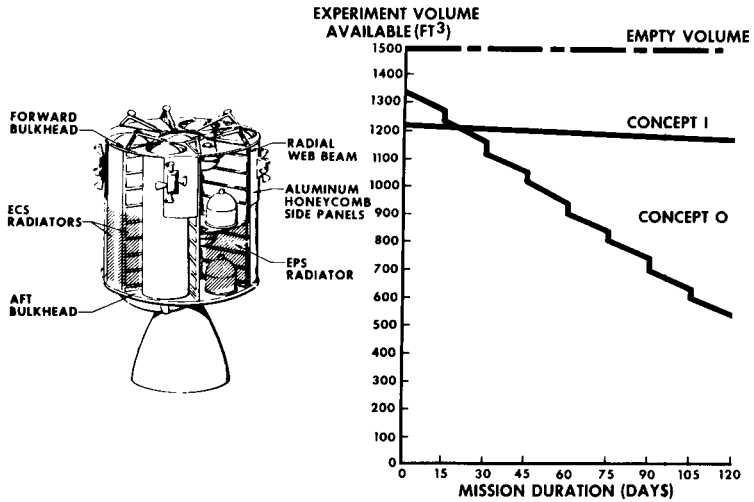

Figure 11. Service Module Experimental Volume

The weight breakdown for Concept O is presented in Tables 6 and 7. For reference purposes, the corresponding weights of both the Apollo and Concept I are also shown. The variation in the command module structural weight is due to the addition of a docking system in Concept I which was not included in the Concept O mission. Differences in the useful load in the command module are attributed to variations in food requirements. Also, the Concept O vehicle does not require a water reclamation system, which is installed in the Concept I command module. Significant differences between the Concept O and Concept I service modules are due primarily to the high requirement for expendables storage (such as the large amount of oxygen required for the fuel cell system and the environmental control system) in Concept O. Of secondary importance are the addition of deboost rockets in the Concept O

Table 6. Command Module Weight

	APOLLO	CONCEPT O		CONCEPT I
		45 DAY	90 DAY	120 DAY
CM WT EMPTY	(8056)	(8018)	(8018)	(8495)
STRUCTURE	4567	4567	4567	4766
CREW SYSTEMS	331	235	235	375
COMMUNICATIONS	368	323	323	368
INSTRUMENTATIONS	193	193	193	193
CONTROLS & DISPLAYS	286	286	286	286
GUIDANCE & NAVIGATION	425	475	475	475
STABILIZATION & CONTROL	237	251	251	251
REACTION CONTROL	328	328	328	328
ELECTRICAL POWER SYSTEM	431	470	470	470
ENVIRONMENTAL CONTROL SYS	292	292	292	385
EARTH LANDING SYSTEM	598	598	598	598
CM USEFUL LOAD	(1594)	(1807)	(2102)	(2226)
CREW SYSTEMS	911	717	877	979
REACTION CONTROL PROP	270	270	270	270
ENVIRONMENTAL CONTROL	163	45	45	67
EXPERIMENTAL EQUIPMENT	250	675	675	675
SPARE PARTS	—	100	235	235
RE-ENTRY ROCKETS	—	—	—	1030
COMMAND MODULE GROSS WT	9650	9825	10,120	11,751

Table 7. Service Module and Total Weight

	APOLLO	CONCEPT O		CONCEPT I
		45 DAY	90 DAY	120 DAY
SM WT EMPTY	(7450)	(6765)	(8985)	(6102)
STRUCTURE	2265	2285	2285	2410
ELECTRONICS	177	—	—	177
REACTION CONTROL	580	580	580	681
ELECTRICAL POWER SYSTEM	1319	2471	4494	1290
ENVIRONMENTAL CONTROL SYS	87	356	553	444
PROPULSION GROUP	3022	1073	1073	1100
SM USEFUL LOAD	(2230)	(5840)	(8710)	(1946)
REACTION CONTROL	838	838	838	1137
ENVIRONMENTAL CONTROL	208	699	1336	754
ELECTRICAL POWER	503	1830	3663	—
PROPULSION RESIDUALS & PRESSURANT	681	273	273	55
MAIN PROPELLANT	37,125	2200	2600	480
RE-ENTRY ROCKETS	—	(1690)	(1690)	—
SERVICE MODULE GROSS WT	46,805	14,295	19,385	8528
LEM ADAPTER	3400	3400	3400	3400
TOTAL INJECTED GROSS WT	—	27,520	32,905	23,679

~~CONFIDENTIAL~~

~~CONFIDENTIAL~~

service module. These are larger than the Concept I retro rockets, since the entire command and service module unit is deboosted rather than just the command module as in Concept I.

A comparison of the Concept O configurations for both 45- and 90-day missions is shown in Figures 12 and 13. The primary differences are the numbers of fuel cells and environmental control system CO_2 absorbers required. The CO_2 canisters shown in both figures are the Gemini type, each of which provides for CO_2 removal for two men for 15 days. The consideration of Apollo LiOH canisters for an identical mission duration would entail considerably more volume as well as additional plumbing and switching requirements. The figures indicate that even with the Gemini type of lithium hydroxide canisters, a significant

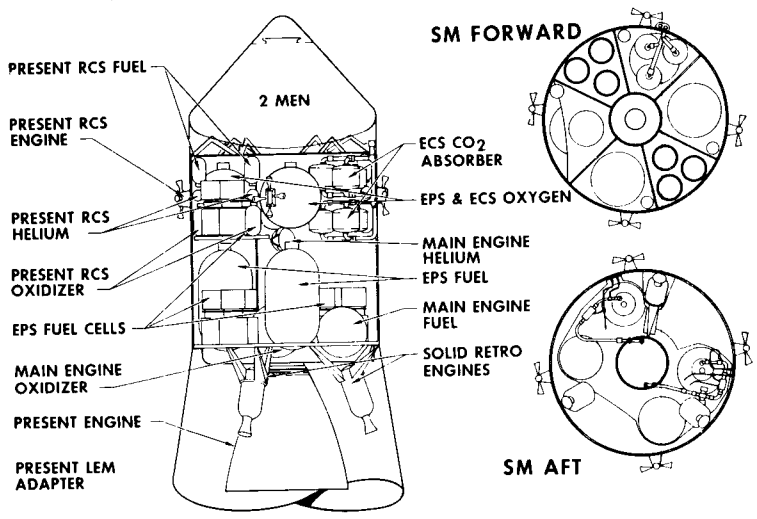

Figure 12. Concept O Arrangement (90-Day Mission)

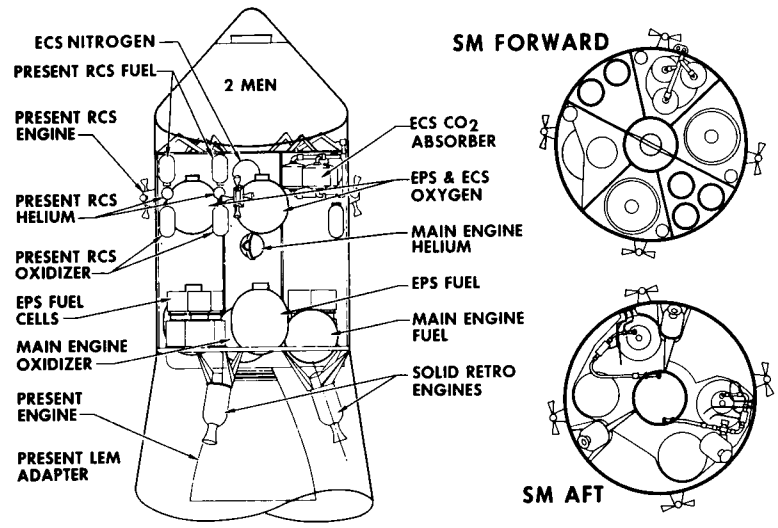

Figure 13. Concept O Arrangement (45-Day Mission)

amount (or complexity) of plumbing is also required. The Apollo concept of providing two pairs of fuel and oxidizer tanks, each plumbed in series to avoid a switching function, is not required in either the 45-day or the 90-day configuration because of the reduction in main-engine fuel and oxidizer quantities.

~~CONFIDENTIAL~~

STUDY LIMITATIONS

At the beginning of the subsystem-life extension studies, a method had to be devised that would measure the effect of subsystem changes on operating life. The only apparent criteria that could be applied for such an evaluation, within the scope of the study, were estimated reliability subsystem apportionments.

Although reliability apportionments can be used analytically to determine effects of modifications or subsystem life extension, the accuracy of reliability apportionments in a preliminary study is somewhat questionable. Highly accurate reliability apportionments are only possible after a system development program is well underway, and are only fully accurate when the development program has been completed and a number of operational missions have occurred. Therefore, in the subsystem-life extension studies, reliability apportionments were used only to provide a gross indication of subsystem life resulting from system modifications, additions, or spare provisions.

After study initiation, it also became apparent that certain subsystems were mission-oriented while others could be considered independent of specific mission application. The mission-oriented subsystems were those in which the subsystem operation had various degrees of capability and could be used in a number of different ways, depending upon mission requirements. The guidance and navigation and the stabilization and control systems are typical of those which are mission-oriented. The subsystems which were not mission-oriented were those that operated either continuously (such as the ECS) or would be required to operate only once (such as the Earth landing system). To facilitate the evaluation of the effect of system improvements on life extension, a primary mode of operation had to be assumed for the mission-oriented subsystems. This assumption is reasonably valid if, infact, the mission consists of only operation in the given mode; however, it imposed a major limitation in the study.

IMPLICATIONS FOR RESEARCH

The study revealed several areas in which general research (i.e., research not solely applicable to the Extended-Mission Apollo) should be initiated at this time. An insufficient amount of knowledge appears to exist concerning space environmental effects on textiles and pyrotechnics used in the Earth-landing system. In particular, vacuum and radiation effects could seriously degrade the textile strength and the performance of pyrotechnic devices such as the parachute mortars. It is felt that this type of experimental data could be acquired at nominal cost and would be important and applicable to a significant spectrum of future NASA space programs.

Additional research could be achieved at this time in evaluating various types of expulsion bladder materials for the reaction control propellant system. The current Apollo expulsion bladder is made of teflon which is permeable and would likely not be suitable for more than about one year's operation. A research program should be performed at this time to evaluate various materials and bladder designs.

In the power systems area, the only apparent research requirement would be associated with the development of in-space start capability for the current Apollo fuel cells. Although this type of development would not require a lengthy or expensive program, a number of techniques should be evaluated prior to selection of the optimum in-space start method.

Another fundamental area warranting research—and one which is completely independent of mission or configuration—relates to the use of high-density food. Though the use of such food is extremely important in volume-limited situations, as represented by Concepts O and I, the suitability (and palatability) of such food has not been resolved. Experimental studies could now be initiated to determine whether mission operations would be affected or curtailed because of high-density food characteristics.

SUGGESTED ADDITIONAL EFFORT

One of the significant areas of analysis for a follow-on study would be a more rigorous determination of subsystem-failure/life-extension criteria. Studies to date have emphasized reliability in the classical sense. However, an extreme reliance upon a reliability apportionment early in system development is not believed to be the most realistic approach. Other significant factors that should be considered include the abort criteria to be applied for extension of mission life. As pointed out earlier, for example, in the case of the Apollo lunar mission, failure of two out of three identical subsystem components would result in abort of the mission. In an Earth-orbital mission, it appears that all three components could be allowed to fail before the mission is terminated; this would result in a corresponding increase in mission life without any change in the system design.

Another area that has been only briefly examined is the mission environment to be encountered during extended orbital periods. Not only the external space environment should be analyzed, but also the internal environment, including crew coordination and response to various mission situations and physical compatibility of subsystems within the command and service modules.

Further analyses are required of subsystem life extension techniques, including studies of secondary subsystem components not yet considered. Studies to date have been necessarily limited to subsystem primary components. It is believed that the next step in significant extensions of subsystem life would result from an examination of these secondary components. Further studies should also be made of subsystem compatability with experiments other than the biomedical and behavioral experiment package defined in the basic contract. Current studies have indicated that the orbital mode of operation influences subsystem operating requirements quite severely in certain cases. For example, the stabilization and control subsystem, operating in the monitor mode, can be extended with relatively insignificant spares weight. However, a solar or earth-oriented mode could impose significantly greater spares-provisioning requirements upon this subsystem. In order to substantiate the techniques and schemes for extending Apollo subsystems life, detailed subsystem test plans also should be established and integrated into overall development requirements.

One of the problem areas in the basic study was that of development planning. The development plan established for Concepts I, II, and III was based upon an assumed go-ahead of 1 July 1964 and a target of an initial operational flight in 1967. Other schedule variations which would indicate, for example, a minimum cost development program which might result from a relaxed schedule requirement should be derived. Also, development planning factors should be studied to examine schedules which would not require contractor or NASA facilities additions.

Studies performed to date on Concept O have established the command module volumetric

requirements for extended orbital periods. At this time, a command module mock-up evaluation of the work space, console arrangements, and layouts for a two-man command module should be performed. With this mock-up, mission simulations could be performed and the compatibility of a two-man crew with various internal equipment and storage arrangements could be evaluated.