[redacted]

[redacted]

SINGLE COPY ONLY

Accession No. 26258

Copy No. [redacted]

SID 62-557-6

QUARTERLY RELIABILITY STATUS REPORT

(U)

NAS9-150

31 July 1963

EXHIBIT I; PARAGRAPH 7.3

CLASSIFICATION CHANGE

To UNCLASSIFIED

By authority of GDS-EO 11652 Date 12/31/72

Changed by R. Shirley

Classified Document Master Control Station, NASA

Scientific and Technical Information Facility

~~AVAILABLE TO NASA HEADQUARTERS ONLY~~

This document contains information affecting the national defense of the United States within the meaning of the Espionage Laws, Title 18 U.S.C. Section 793 and 794. Its transmission or revelation of its contents in any manner to an unauthorized person is prohibited by law.

NORTH AMERICAN AVIATION, INC.

SPACE and INFORMATION SYSTEMS DIVISION

[redacted]

~~CONFIDENTIAL~~

[redacted]

FOREWORD

The Quarterly Reliability Status Report is submitted in accordance with the Apollo documentation requirements delineated in NASA Contract NAS9-150, Paragraph 4.5.4.7, of "Project Apollo Spacecraft Development Statement of Work," Part 4, dated 18 December 1961, and MIL-R-27542, Paragraph 5.4.3. The information contained herein covers the period from 16 March through 15 June 1963.

[redacted]

[redacted]

CONTENTS

Section		Page
I	SPACECRAFT ANALYSIS	1-1
	APOLLO SPACECRAFT CREW SAFETY RELIABILITY ANALYSIS	1-1
	Summary	1-1
	Crew Safety System Program Plan	1-2
	Specific Program	1-8
	Conclusions	1-10
	LEM INTEGRATION	1-11
	Problem Areas	1-14
	Conclusions	1-14
	Planned Activities	1-15
II	MECHANICAL SUBSYSTEM ANALYSIS	2-1
	COMMAND MODULE REACTION CONTROL	2-1
	Summary	2-1
	Analysis	2-2
	Problem Areas	2-6
	Test Program	2-12
	Subcontractor Management	2-13
	Planned Activities	2-14
	COMMAND MODULE HEAT SHIELD	2-25
	Summary	2-25
	Analysis	2-25
	Test Program	2-26
	Subcontractor Management	2-30
	Planned Activities	2-31
	CREW PROVISIONS	2-37
	Summary	2-37
	Analysis	2-37
	Special Studies	2-40
	Test Program	2-40
	Planned Activities	2-43
	CRYOGENIC STORAGE	2-49
	Summary	2-49
	Analysis	2-49
	Reliability/Crew Safety Design Reviews	2-49
	Special Studies	2-51

[redacted]

~~CONFIDENTIAL~~

Section | Page

Test Program 2-57
Subcontractor Management 2-58
EARTH LANDING SYSTEM 2-69
Summary 2-69
Earth Landing System Study I 2-69
Earth Landing System Study II 2-72
Test Program 2-74
Subcontractor Management 2-76
Planned Activities 2-76
ELECTRICAL POWER 2-77
Summary 2-77
Analysis 2-78
Reliability/Crew Safety Design Reviews . . . 2-86
Special Studies 2-100
Problem Areas 2-107
Test Program 2-108
Subcontractor Management 2-109
Planned Activities 2-110
ENVIRONMENTAL CONTROL SYSTEM 2-149
Summary 2-149
Analysis 2-149
Reliability/Crew Safety Design Reviews . . . 2-151
Special Studies 2-159
Test Program 2-159
Subcontractor Management 2-163
Planned Activities 2-177
LAUNCH ESCAPE SYSTEM 2-191
Summary 2-191
Analysis 2-191
Test Program 2-200
Subcontractor Management 2-201
Planned Activities 2-201
SEPARATION SYSTEM 2-203
Summary 2-203
Test Program 2-203
Planned Activities 2-203
SERVICE MODULE REACTION CONTROL . . . 2-211
Summary 2-211
Analysis 2-211
Test Program 2-212
Problem Areas 2-214
Subcontractor Management 2-214
Planned Activities 2-215

[redacted]

Section		Page
	SERVICE PROPULSION	2-225
	Summary	2-225
	Analysis	2-225
	Problem Areas	2-226
	Test Program	2-227
	Subcontractor Management	2-228
	Planned Activities	2-229
III	ELECTRONIC SUBSYSTEM ANALYSIS	3-1
	SUMMARY	3-1
	ANALYSIS	3-2
	In-Flight Spares	3-81
	COMMUNICATIONS AND DATA	3-91
	Summary	3-91
	Analysis	3-91
	Test Program	3-95
	Subcontractor Management	3-95
	Planned Activities	3-108
	GUIDANCE AND NAVIGATION	3-153
	Summary	3-153
	Analysis	3-153
	Test Program	3-165
	Subcontractor Management	3-165
	Planned Activities	3-170
	INSTRUMENTATION	3-185
	Summary	3-185
	Analysis	3-185
	Reliability/Crew Safety Design Reviews	3-193
	Test Program	3-202
	Planned Activities	3-204
	STABILIZATION AND CONTROL	3-229
	Summary	3-229
	Analysis	3-229
	Special Studies	3-231
	Test Program	3-233
	Subcontractor Management	3-234
	Planned Activities	3-241
IV	GROUND SUPPORT EQUIPMENT ANALYSIS	4-1
	SUMMARY	4-1
	ANALYSIS	4-3
	Methods	4-3
	Failure Mode and Effect Analysis Program	4-3

[redacted]

~~CONFIDENTIAL~~

Section | Page

PYROTECHNIC SUBSTITUTE UNIT (A14-003) . . 4-7
Failure Effects Analysis 4-7
Functional Description 4-7
Conclusions and Recommendations . . . 4-7
WATER-GLYCOL SERVICE UNIT (S14-054) . . 4-17
Failure Effects Analysis 4-17
Functional Description 4-17
Recommendations and Conclusions . . . 4-18
FUEL TRANSFER UNIT (S14-002) AND
OXIDIZER TRANSFER UNIT (S14-008) . . . 4-35
Failure Effects Analysis 4-35
Functional Description 4-36
Intended Usage 4-36
Conclusions 4-36
Critical Failure Effects 4-39
Recommendations 4-39
WATER TRANSFER UNIT (S14-005) 4-57
Failure Effects Analysis 4-57
Functional Description 4-57
Conclusions 4-58
Critical Failure Effects 4-58
Recommendations 4-61
MODULE LEAK TEST UNIT (S14-001) . . . 4-69
Failure Effects Analysis 4-69
Functional Description 4-69
Conclusions and Recommendations . . . 4-70
COMPUTER-MANDEX D-C ANALYSIS . . . 4-81
MANDEX WORST-CASE (D-C ANALYSIS) OF THE
TEST CONDUCTOR CONSOLE (C14-019) . . . 4-83
Summary 4-83
Analysis 4-83
Functional Description 4-92
Probability of Failure-Subcircuit Parts
Analysis 4-93
Subsystem Analysis 4-93
Conclusions and Recommendations . . . 4-93
PRELIMINARY RELIABILITY PREDICTIONS . . 4-109
Water-Glycol Servicing Unit (S14-054) . . . 4-109
LH_2 and LO_2 Transfer Units (S14-026 and
S14-032). 4-112
Cooling Unit (S14-052) 4-117
Pressurizing Contamination Unit (S14-007) . . 4-118

~~CONFIDENTIAL~~

Section		Page
	SPECIAL STUDIES	4-125
	Computer Programs	4-125
	Parts Recommendations	4-125
	GSE TEST ACCOMPLISHMENTS	4-127
	GSE SUBCONTRACTOR ACTIVITIES	4-129
	PLANNED ACTIVITIES	4-131
V	SUPPORT OPERATIONS	5-1
	DATA MANAGEMENT	5-1
	Nonconformance Reporting System	5-1
	Scrap Report	5-1
	Subcontractor Data Activities	5-1
	Total Records Access Control (TRAC) System	5-2
	Performance Analysis and Test Histories (PATH) System	5-3
	Operating-Time Data System	5-3
	Traceability and Configuration (TAC) Data System	5-4
	Supplier Quality History (SQH) Data System	5-4
	Interservice Data Exchange Program (IDEP)	5-6
	TRAINING AND EDUCATION	5-7
	Summary	5-7
	Planned Activities	5-7
	COMPONENT TECHNOLOGY	5-9
	Summary	5-9
	Planned Activities	5-10
	SUPPLIER SURVEILLANCE	5-11
	APPENDIXES	
	A. SPECIFICATION CONTROL DRAWINGS	A-1
	B. PROCUREMENT SPECIFICATIONS	B-1
	C. DESIGN CONTROL DOCUMENTS (TO S&ID, TULSA)	C-1
	D. SUBCONTRACTOR DOCUMENTS REVIEWED	D-1

~~CONFIDENTIAL~~

[redacted]

ILLUSTRATIONS

Figure		Page
1-1	Electrical Power System—Fuel Cell Sensor Ranking Calculation	1-5
1-2	Booster Sensor Ranking Calculation	1-6
1-3	Impact Attenuation System Concept	1-16
2-1	Command Module Failure Mode Logic Network	2-27
2-2	Waste Management System Logic Diagram	2-38
2-3	Waste Management System Crew Safety Logic Diagram	2-39
2-4	Cryogenic Storage - Mission Success Logic Diagram	2-53
2-5	Cryogenic Storage - Crew Safety Logic Diagram	2-55
2-6	Battery Charger Reliability Math Model	2-82
2-7	Environmental Factors and Random Vibration Period Interrelationship	2-104
2-8	Pressure Suit Circuit	2-167
2-9	Water Glycol Circuit	2-169
2-10	Oxygen Supply System	2-171
2-11	Water Supply System	2-173
2-12	Command Module Pressure and Temperature Control System	2-175
2-13	Major Components in Launch Escape Sequencer Logic Diagram	2-193
2-14	Reliability Analysis of Time Delay Relay Configuration	2-194
2-15	Arm-Disarm Relay Configuration	2-195
2-16	Reliability Analysis of Arm-Disarm Relay Configuration	2-196
2-17	Time Delay Relay Module Configuration (15.5 Second)	2-199
3-1	100,000-Feet-to-Earth Orbit	3-3
3-2	S-IV-B Separation	3-5
3-3	Abort Attitude Maneuver	3-6
3-4	Platform Erection, Cisearth	3-7
3-5	Navigational Sighting, Cisearth	3-11
3-6	Translunar Injection	3-13
3-7	Dwell and Coast Earth Orbit	3-17
3-8	Dwell and Coast, Deep Space	3-19
3-9	Platform Erection, Deep Space	3-21
3-10	Navigational Sighting, Deep Space	3-23
3-11	Navigational Sighting, Antelunar	3-27
3-12	Thrust Vector Alignment	3-29

[redacted]

~~CONFIDENTIAL~~

Figure		Page
3-13	Δ V Firing	3-31
3-14	SM Separation	3-33
3-15	Orientation for Earth Entry	3-35
3-16	Entry	3-37
3-17	Drogue Chute Deployment to Landing	3-39
3-18	Postlanding	3-40
3-19	Cisearth Monitor	3-41
3-20	Ultralunar Monitor	3-43
3-21	Antelunar, and Transearth	3-45
3-22	Audio Center - Receiver (ACRC), Audio Center - Transmitter (ACTM)	3-47
3-23	Apollo Guidance Computer (AGC)	3-48
3-24	VHF/AM Transmitter-Receiver (AMX)	3-49
3-25	Accelerometer Package (APK)	3-50
3-26	Body-Mounted Attitude Gyro (BMG)	3-51
3-27	C-Band Transponder (CBX)	3-52
3-28	Manual Control - CDUM (CDCM)	3-53
3-29	Manual Control - CDUO (CDCO)	3-54
3-30	Coupling Display Unit (CDUM)	3-55
3-31	Coupling Display Unit (CDUO)	3-56
3-32	Central Timing Equipment (CTEK 512-KC Generator)	3-57
3-33	Delta Velocity Display (DVD)	3-58
3-34	Electronic Control Assembly - Roll (ECAR)	3-59
3-35	Electronic Control Assembly - Pitch Yaw (ECPY)	3-60
3-36	Electronic Control Assembly Integration	3-61
3-37	Electronic Control Assembly - Thrust Vector (ETPY)	3-62
3-38	VHF/FM Transmitter (FMX)	3-63
3-39	Flight Director Attitude Indicator (FDAI)	3-64
3-40	Flight Director Rate Indicator (FDRI)	3-65
3-41	Attitude Gyro Coupling Unit (GCU)	3-66
3-42	Gimbal Position Indicator (GPI)	3-67
3-43	Inertial Measuring Unit (IMU)	3-68
3-44	PCM Telemetry (PCM)	3-69
3-45	Premodulation Processor Near-Earth Data (PND)	3-70
3-46	Rate Gyro Package (RGP)	3-71
3-47	Reaction Jet Drivers - Service Module (RJDS-SM)	3-72
3-48	Reaction Jet Drivers - Command Module (RJDS-CM)	3-73
3-49	Reaction Jet Drivers - Service Module (RJDS-SM)	3-74
3-50	SCS Control Panel (SCPA)	3-75
3-51	Signal Conditioners (SCR)	3-76
3-52	Scanning Telescope (SCT)	3-77
3-53	S-Band Power Amplifier (SPA)	3-78

[redacted]

Figure		Page
3-54	Space Sextant (SXT)	3-79
3-55	Unified S-Band Equipment (USB)	3-80
3-56	Dynamic Program Study	3-90
3-57	Signal Flow Logic Configuration (512 KC) Present Form	3-96
3-58	Signal Flow Logic Configuration (512 KC) Proposed Form	3-97
3-59	Delta Velocity Firing Present Configuration	3-157
3-60	Delta Velocity Firing Thrust Command Failure In Guidance and Navigation	3-158
3-61	Delta Velocity Firing Attitude Failure In Guidance and Navigation	3-159
3-62	Delta Velocity Firing Proposed Configuration	3-160
3-63	Inertial Measurement Unit Present Configuration - No Coolant Bypass	3-162
3-64	Inertial Measurement Unit Recommended Configuration - Using Bypass and Electrically Controlled Valve	3-163
3-65	Inertial Measurement Unit Configuration - Using Bypass and Manually Controlled Valves	3-164
3-66	Boilerplate No. 6-Attitudes and Aerodynamic Data	3-186
3-67	Boilerplate No. 6-Temperatures	3-187
3-68	Boilerplate No. 6-Vibration	3-188
3-69	Boilerplate No. 6-All Data	3-189
4-1	Squib Simulator	4-9
4-2	Electric Bridge Wire Simulator Block Diagram	4-10
4-3	Water-Glycol Service Unit	4-19
4-4	Fuel and Oxidizer Transfer Unit	4-37
4-5	Water Transfer Unit (S14-005) Schematic	4-59
4-6	Hydraulic Module Leak Test Unit Schematic	4-71
4-7	Voltage Comparator T-172 and Equivalent Circuit	4-84
4-8	Inverter T-138 and Equivalent Circuit	4-85
4-9	NOR Gate T-437 and Equivalent Circuit	4-86
4-10	Relay and Lamp Driver T-171 and Equivalent Circuit	4-87
4-11	Emitter Follower T-116 and Equivalent Circuit	4-88
4-12	LH_2 Transfer Unit, Mechanical Schematic	4-110
4-13	LO_2 Transfer Unit, Mechanical Schematic	4-113
4-14	LH_2 and LO_2 Transfer Unit, Electrical Schematic	4-114
4-15	Suggested Water-Glycol Unit S14-052 and Interfaces	4-119
4-16	Pressurizing Contamination Prevention Unit S14-007	4-121

[redacted]

C[redacted]

TABLES

Table		Page
1-1	Command Module Conical System Design Improvement Evaluation	1-12
1-2	Reliability Assessment-Command and Device Module/Lunar Excursion Module Docking Concept Study	1-13
2-1	Command Module Reaction Control System Failure Effects Analysis	2-16
2-2	Instrumentation Component Failure Modes	2-4
2-3	Heat Shield Failure Effects Analysis	2-32
2-4	Structural Development Tests	2-28
2-5	Thermal, Optical, and Ablation Tests	2-28
2-6	Mechanical Property Tests	2-29
2-7	Waste Management, Crew Provisions Failure Effects Analysis	2-44
2-8	Waste Management System Reliability Summary	2-40
2-9	Waste Management System Apportioned and Predicted Reliability Values and Failure Rates	2-41
2-10	Couches, Crew Provisions Failure Effects Analysis	2-46
2-11	Cryogenic Storage System Failure Effects Analysis	2-61
2-12	Failure Rate and Reliability Data	2-50
2-13	Engine Failures	2-71
2-14	Fuel Cell, Electrical Power Failure Effects Analysis	2-112
2-15	Distribution Subsystem, Electrical Power Failure Effects Analysis	2-115
2-16	Single Inverter Component Reliability Values	2-79
2-17	Battery Charger Component Reliability Values	2-80
2-18	Battery Charger Weight Trade-Off Results	2-81
2-19	Electrical Power Distribution Subsystem Design Review Board Action	2-87
2-20	Fuel Cells Electrical Power Design Review Board Action	2-91
2-21	Apollo Component Reliability Data (14-Day Mission)	2-101
2-22	Environmental Factor Tabulation of Contributing Constants	2-103
2-23	Summary of Termination Techniques	2-106
2-24	Environmental Control System Failure Effects Analysis	2-178

~~CONFIDENTIAL~~

~~CONFIDENTIAL~~

Table		Page
2-25	Environmental Control System Waste Management Design Review Board Action	2-152
2-26	Pitch Control and Tower Jettison Motors, Launch Escape System Failure Effects Analysis	2-202
2-27	Possible Configurations and Sequencer Reliabilities of Proposed Design Changes	2-198
2-28	Adapter Separation System Failure Effects Analysis, Configuration "A"	2-205
2-29	Adapter Separation System Failure Effects Analysis, Configuration "B"	2-206
2-30	Development Tests (S&ID)	2-207
2-31	Development Test Results	2-209
2-32	Pyrotechnic Devices: Development and Qualification Tests, Number of Specimens Fired	2-210
2-33	Service Module Reaction Control System Failure Effects Analysis	2-217
2-34	Typical Failure Modes for Typical Instrumentation Components	2-213
2-35	Service Propulsion System Failure Effects Analysis	2-231
3-1	Critical Component Spares	3-82
3-2	In-Flight Spares Weight Allocations	3-83
3-3	In-Flight Spares Study	3-84
3-4	Audio Center Failure Effects Analysis	3-110
3-5	VHF/AM Transmitter-Receiver Failure Effects Analysis	3-112
3-6	C-Band Transponder Failure Effects Analysis	3-114
3-7	Unified S-Band Transponder Failure Effects Analysis	3-120
3-8	S-Band Power Amplifier Failure Effects Analysis	3-121
3-9	VHF/FM Transmitter Failure Effects Analysis	3-122
3-10	VHF Recovery Beacon Failure Effects Analysis	3-124
3-11	Signal Conditioners Failure Effects Analysis	3-127
3-12	Data Storage Failure Effects Analysis	3-129
3-13	Premodulation Processor Failure Effects Analysis	3-131
3-14	HF Transceiver/Receiver Module Failure Effects Analysis	3-136
3-15	PCM Telemetry Failure Effects Analysis	3-150
3-16	Reliability Improvements in the Signal Conditioning Equipment	3-93
3-17	Communications and Data Equipment Reliability Estimates	3-103
3-18	Guidance and Navigation Failure Effects Analysis	3-172
3-19	Comparative Failure Rates of Inertial Measurement Unit (IMU) Electronics Module (x 10^{-6} hr)	3-155

~~CONFIDENTIAL~~

[redacted]

Table		Page
3-20	Delta Velocity Mode Configuration Reliability	3-156
3-21	Aerospace Ground Equipment (AGE) Qualification Test Schedule	3-169
3-22	Boilerplate No. 6 Failure Effects Analysis	3-206
3-23	High-Gain Antenna Failure Effects Analysis	3-209
3-24	Directional Subsystem, Proton Failure Effects Analysis	3-212
3-25	In-Flight Test System Failure Effects Analysis	3-214
3-26	Alert Subsystem, Solar-Radio Noise Failure Effects Analysis	3-216
3-27	Television Camera Subsystem Failure Effects Analysis	3-218
3-28	Central Timing Equipment Failure Effects Analysis	3-220
3-29	Critical Apollo Electronic Components	3-191
3-30	In-Flight Test System and In-Flight Maintenance Concept Design Review Board Action	3-194
3-31	Stabilization and Control Subsystem Failure Effects Analysis	3-242
3-32	LEM Transposition Study	3-230
3-33	Thrust Vector Control Circuit Configurations	3-230
3-34	Critical Apollo Stabilization and Control Subsystem Electronic Components	3-232
4-1	Preliminary Reliability Prediction	4-1
4-2	Failure Mode and Effect Analysis—GSE Criticality, Corrective Action, and Failure Mode Classification	4-5
4-3	Failure Mode Effect Analysis Summary Squib and Explosive Bridge Wire Initiator Simulators	4-8
4-4	Squib Simulator, Ground Support Equipment Failure Effects Analysis	4-12
4-5	Water-Glycol Service Unit (S14-054) Failure Mode Effect Analysis Summary	4-20
4-6	Water-Glycol Service Unit, Ground Support Equipment Failure Effects Analysis	4-21
4-7	Propellant Transfer and Conditioning Unit Failure Mode Effect Analysis Summary	4-38
4-8	Propellant Transfer and Conditioning Unit, Ground Support Equipment Failure Effects Analysis	4-40
4-9	Water Transfer Unit (S14-005) Failure Mode Effect Analysis Summary	4-60
4-10	Water Transfer Unit, Ground Support Equipment Failure Effects Analysis	4-62
4-11	Module Leak Test Unit (S14-001) Failure Mode Effect Analysis Summary	4-72

[redacted]

~~CONFIDENTIAL~~

Table		Page
4-12	Module Leak Test Unit, Ground Support Equipment Failure Effects Analysis	4-73
4-13	Mandex Worst-Case Output Results	4-89
4-14	Probability Analysis—Failure Rate Percent/10^3 Hours	4-94
4-15	Test Conductor Console Circuit Module Failure Rates	4-99
4-16	Subsystems Failure-Rate Analysis	4-100
4-17	Probability Analysis—Stress Ratio	4-104
4-18	Water-Glycol Service Unit System Prediction by Components	4-111
4-19	LH_2 and LO_2 Transfer Units (S14-026 and S14-032) Prediction of MTBF	4-115
4-20	Prediction of Water-Glycol (S14-052) MTBF	4-120
4-21	Pressurizing Contamination Unit System Prediction by Components	4-123
5-1	Reliability Courses	5-7
5-2	Supplier Surveys	5-12

~~CONFIDENTIAL~~

[redacted]

I. SPACECRAFT ANALYSIS

APOLLO SPACECRAFT CREW SAFETY RELIABILITY ANALYSIS

SUMMARY

The first run of the crew safety reliability simulation model analysis has been completed, and the results are now being analyzed. This analysis is based on the 14-day design maximum mission, utilizing aborts for all phases prior to the final transearth midcourse correction. At this point all systems are considered to be in crew safety mode, as an abort beyond this point in the mission would not improve the crew safety reliability.

As stated in SID 62-557-5, this analysis will determine the spacecraft crew safety and mission success reliability requirements, as well as aid in establishing the redundancy and on-board spares necessary to meet these requirements. Because of the relationship between crew safety reliability (R_{cs}), mission success reliability (R_{ms}), and the probability of safe abort (P_{sa}), — $R_{cs} = R_{ms} + Q_{ms} \times P_{sa}$ — it is necessary to analyze the 8-day nominal mission upon which the Apollo mission success reliability requirement is based, simultaneously with the 14-day mission.

The method used to optimize the over-all system with respect to the constraints, i.e., crew safety and mission success reliability, weight, and performance, is based on the relationship given above (R_{cs} 14 day = Q_{ms} 14 day $\times P_{sa}$), and the fact that the mission success reliability is a function of both the system reliability and the abort criteria.

Since the crew safety reliability requirement of 0.999 is based on a 14-day design maximum mission, whereas the mission success requirement of 0.90 is based on an 8-day nominal mission, the crew safety requirement is more stringent. Because of this, the procedure being used is to add spares and redundancy as necessary to achieve the crew safety requirement while simultaneously making the abort criteria more stringent, thus aborting with a more reliable system. Since the addition of spares and redundancy will enhance both mission success reliability and the probability of safe abort, it is possible to adjust the abort criteria without degrading the mission success reliability below the requirement of 0.90. This increases the probability of safe abort and subsequently the crew safety reliability without the addition of weight accrued when adding spares and redundancy.

[redacted]

[redacted]

While this analysis procedure is complex, it does assure the optimization of the spacecraft reliability within the weight constraints.

CREW SAFETY SYSTEM PROGRAM PLAN

Summary

The crew safety system for the Apollo spacecraft is designed to assure the achievement of the specified crew safety reliability requirement of 0.999 for the Apollo mission.

This requirement is accomplished by the following steps:

1. Designing systems with high inherent reliability

2. Providing built-in redundancy or on-board spares in areas where critical failures can occur

3. Providing on-board instrumentation to supply the crew with (a) failure detection and display capability in those instances where specific crew action is required to reduce crew hazards, and (b) both failure detection and isolation capability so that in-flight maintenance can be accomplished

4. Providing an emergency detection system (EDS) that will augment the instrumentation display to the crew of emergency conditions that require immediate action by the crew to reduce hazards that might otherwise exist

In general, both the instrumentation and the EDS provide information that allows the crew to modify the flight plan to avoid crew safety hazards, and can be defined as crew safety system (CSS) equipments.

General Requirements

After designing inherent high reliability into the system, which is described in the Reliability Program Plan SID 62-203, the components of the system are quantitatively ranked as to their criticality to identify those components that would most seriously compromise crew safety. This criticality is used to define areas where addition of redundancy and on-board spares will result in the greatest gains in crew safety reliability. Mathematically, criticality is the product of the components probability of failure

or unrealiability (Q_{comp}) and the rate of change of the systems crew safety reliability with respect to the components reliability $\left(\frac{\partial R_{SC}}{\partial R_{comp}}\right)$

$$\text{component criticality} = -\frac{\partial R_{SC}}{\partial R_{comp}} \times Q_{comp}.$$

Hence, criticality takes into consideration the failure rate of all components and back up modes available for an abort. It is originally assumed that failures will be detected so that redundancy can be utilized, and abort action can be taken as required. These criticalities have been utilized to guide the addition of spares and redundancy. Where necessary, these criticalities will be modified as instrumentation design becomes firm. Further definition of criticality may be found in the previous reliability report, SID 62-557-4.

After the redundancy has been established, the next step is to design an adequate monitoring system to permit utilization of all assumed redundancy, allow for the initiation of abort as required, and allow for correction of those catastrophic failures that would endanger safe abort.

To design the monitoring system described above, a means of measuring the effectivity of sensing devices must be developed that will optimize their application. The need for such a measure is apparent when the possible trade offs are considered, such as between electronic spares and CSS sensing.

Since the primary purpose of the CSS is to help achieve the required crew safety reliability, the obvious choice for a parameter to be used in measuring a sensors effectivity is the effect of the sensor on crew safety reliability. This quantity, equal to the gain in crew safety reliability due to sensing and taking corrective action upon a component's failure, is herein referred to as the component's "sensor ranking." Mathematically, it is defined:

$$\text{sensor ranking} = \Delta R_{CS} = R_{CS}\ (\text{with sensing}) - R_{CS}\ (\text{without sensing})$$

To illustrate the application of sensor ranking, two basic types of equipment configurations found in the Apollo spacecraft are illustrated below: The first case is that of a full-time redundant equipment. An example of this type of equipment is the electrical power system (EPS) fuel cells (FC). The EPS contains three FC's, each capable of furnishing

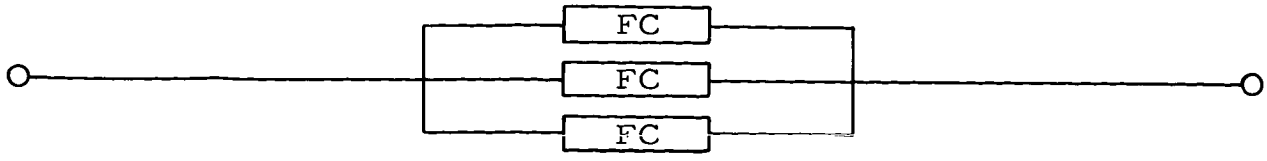

the required spacecraft electrical power as is illustrated. Each FC has a failure rate of 72.5×10^{-6} failures per hour. Present abort criterion dictates that an abort will be initiated upon failure of two of the three FC's. In the 336-hour design maximum mission, the abort criterion applies up to transearth inject (Phase I), after which an abort is coincidental with mission completion. The period from transearth inject to touchdown, a period of 65 hours (336 - 271), is herein referred to as Phase II.

1. If all three FC's were adequately sensed to allow for failure detection, the crew safety reliability of this combination could be computed:

   R_{CS} = P (zero failures in Phase I) x P (at least one operates in Phase II) +
   P (only one fails in Phase I) x P (at least one operates in Phase II) +
   P (two fail in Phase I) x P (one operates during abort).

2. If no sensing were available on the FC's (assume no failures are obvious)

   R_{CS} = P (zero failures in Phase I) x P (at least one operates in Phase II) +
   P (only one fails in Phase I) x P (at least one operates in Phase II) +
   P (two fail in Phase I) x P (at least one operates in Phase II)

Expected results, summarized in Figure 1-1, show the gain in R_{CS}, achieved by adequately sensing the FC, is equal to 6.8 crew losses per million missions. This is accomplished by aborting, thus reducing the exposure time on the remaining FC in those cases where two FC's would fail prior to transearth inject.

An example of the application of sensor ranking to a standby redundant configuration is the calculation of the total increase in crew safety reliability that can be achieved through the sensing of launch vehicle failures. The gain in R_{CS} or sensor ranking of the booster is shown in Figure 1-2.

The probability of safely aborting without a booster EDS is zero, since obvious failures have not been considered at this point. Therefore, ΔR_{CS} represents the maximum gain in R_{CS} that can be achieved by utilizing a booster EDS.

As was stated in the Quarterly Reliability Status Report, NAA S&ID, SID 62-557-4, dated 31 January 1963, the component criticality defined above

[redacted]

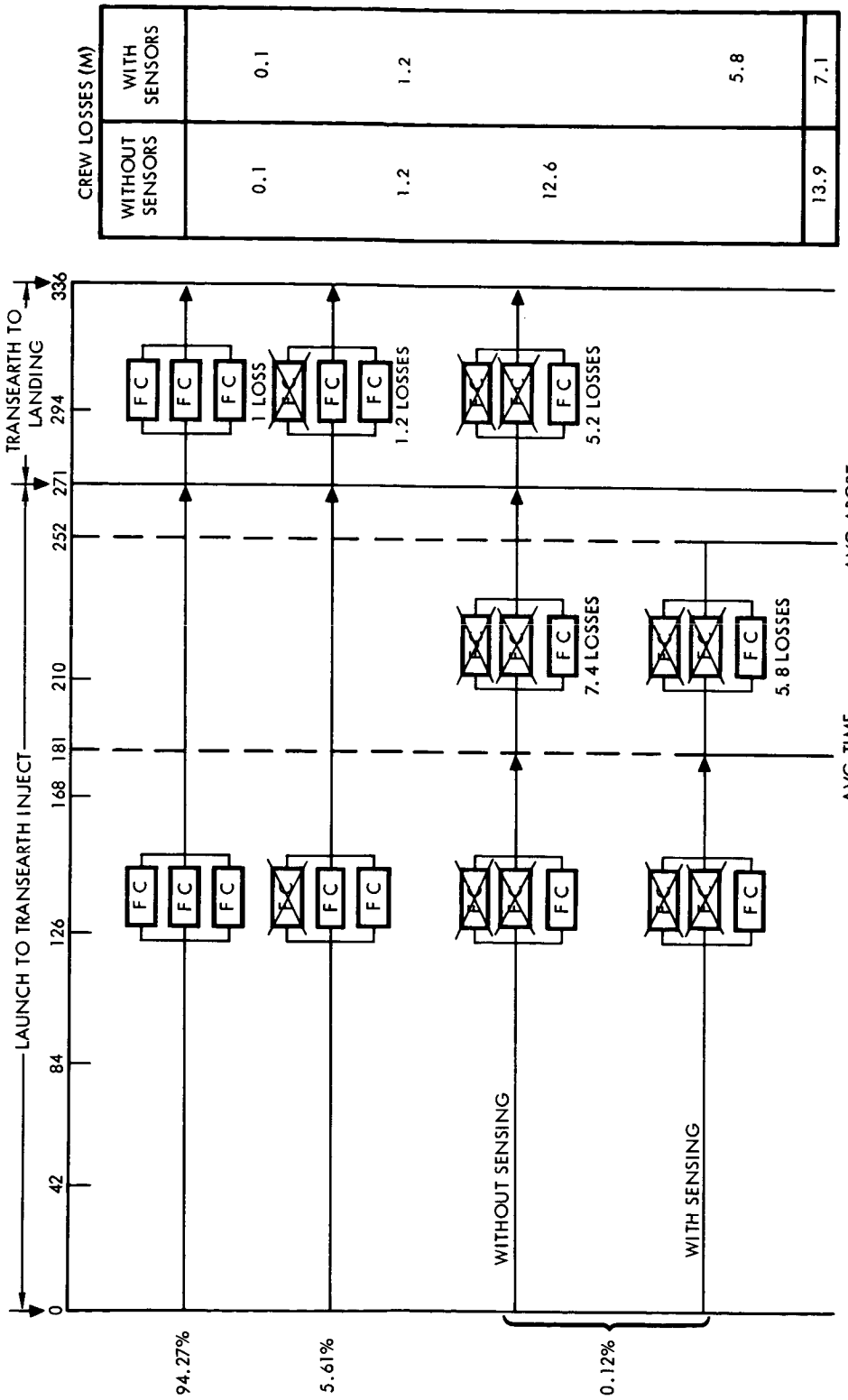

SENSOR RANKING = $\Delta R_{CS} = (13.9 \times 10^{-6}) - (7.1 \times 10^{-6}) = 6.8 \times 10^{-6}$

Figure 1-1. Electrical Power System—Fuel Cell Sensor Ranking Calculation

[redacted]

~~CONFIDENTIAL~~

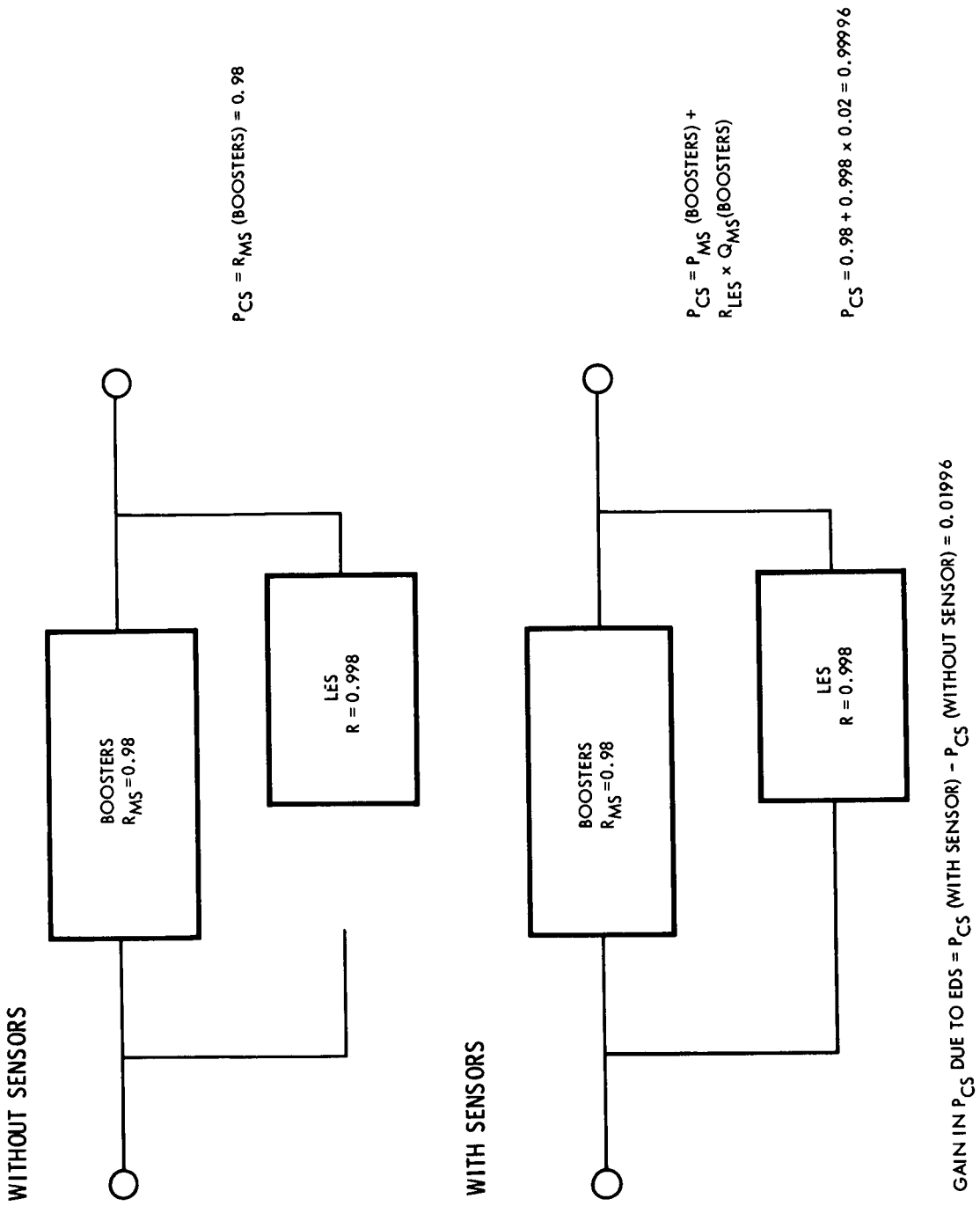

Figure 1-2. Booster Sensor Ranking Calculation

~~CONFIDENTIAL~~

has been considered in defining the need for instrumentation as well as for its primary purpose, which is to establish those points in the system that will provide the greatest increase in reliability through design improvement or addition of redundancy. Its use in establishing sensing requirements has the following restrictions.

1. Component criticality does not differentiate between the probability of crew loss due to component failure and the actual improvement achieved through sensing such failures and taking appropriate corrective action.

2. Component criticality is of necessity based on a configuration that assumes sensing of component failures in those cases where components are in a standby configuration.

3. Component criticality is not sensitive to the abort criteria.

These inadequacies can be illustrated by calculating the component criticality of the EPS FC's and the booster EDS for which sensor rankings were previously computed herein.

Treating the case of the EPS FC's first:

1. The expression for the reliability of three full-time redundant components with equal failure rates, one of which must operate, is R (combination) = $R^3 - 3R^2 + 3R$

2. The definition of component criticality as given above is

$$\frac{\partial R_{SC}}{\partial R_{comp}} \times Q_{comp}.$$

3. The crew safety reliability of the spacecraft (R_{SC}) is equal to $R_{(FC)} \times R$ (all other SC systems).

4. Using 0.999 as the reliability of all other SC systems

$$R_{SC} = R_{FC} \times 0.999$$

5. The component criticality of the fuel cells is then

$$\frac{\partial R_{SC}}{\partial R_{FC}} \times Q_{FC} = \partial \left[\frac{\left(R_{FC}^3 - 3R_{FC}^2 + 3R_{FC}\right) \left(R_{\text{other SC systems}}\right)}{\partial R_{FC}} \right]$$

$$\times Q_{FC} = \left(3R_{FC}^2 - 6R_{FC} + 3\right) (0.999) \times Q_{FC}$$

~~CONFIDENTIAL~~

For $\lambda = 72.5 \times 10^{-6}$, R_{FC} (336 hours) = 0.975934

$\therefore$ FC design criticality = 41.7×10^{-6}

By definition, this quantity is a measure of the probability of losing the spacecraft due to the loss of the FC's; it does not, however, tell how much this probability can be reduced by sensing and taking corrective action. This potential reduction in crew loss is a function of the abort criterion that in turn fixes the probability of safely completing an abort.

As shown in Figure 1-2, the crew safety reliability (R_{CS}) of the booster-LES combination must be based on an assumed booster EDS in order to utilize the LES.

The booster component criticality can be computed as follows:

1. R_{SC} = R (booster - LES combination) x R (other SC systems)

   Assume R (other SC systems) = 0.999

2. $R_{SC} = \left\{ R\text{ (booster)} + R\text{ (LES)} - \left[R\text{ (booster)} \times R\text{ (LES)} \right] \right\} \times 0.999$

3. $\dfrac{\partial R_{SC}}{\partial R_{booster}} = \left(1 - R_{(LES)}\right) \times 0.999$

4. Booster design criticality = $\dfrac{\partial R_{SC}}{\partial R_{booster}} \times Q_{booster} = 40.0 \times 10^{-6}$

As shown above, the boosters and the FC's have approximately the same criticality with respect to design considerations, but, as shown by their sensor rankings, the improvement in crew safety reliability that can be achieved through sensing booster failures is much greater than can be achieved by sensing FC failures.

SPECIFIC PROGRAM

Over-all CSS requirements, as outlined in the previous section, will be accomplished by the completion of the following specific tasks.

1. Develop preliminary failure effect analyses (FEA's) and subsystem operating logic

2. Compute the design criticality of each component

3. Recommend redundant equipments to reduce the probability of crew loss due to critical components

4. Revise FEA's and subsystem logic to reflect equipment changes resulting from step 3 above

5. Apportion subsystem reliability and establish abort criteria adequate to meet the overall system mission success and crew safety reliability requirements

6. Conduct contingency analysis to point out possible catastrophic events that can occur as the result of higher order failures

7. Develop sensor rankings based on abort criteria and revised subsystem logic. Sensor rankings are to be developed for each mode of failure on all components.

8. Determine time to catastrophic failure and required correction time for each mode of failure. The time to failure and correction time as developed here should reflect the "worst case" condition.

9. Analyze potential instrumentation to determine the total number of component failure modes that can be sensed by each type of instrumentation

10. Establish sensor and/or switching feasibility. The weight and reliability of currently available devices must be determined to establish the gain in R_{cs} that can be achieved per pound of instrumentation in each case.

11. Establish preliminary sensing and/or switching requirements based on:

    a. Time to catastrophic failure versus required correction time

    b. Current sensing and/or switching capability based on the in-flight test system, telemetry, operational controls and displays, and obvious failures

    c. Gain in R_{cs} per pound of sensing and/or switching

    d. Alternate means of achieving crew safety reliability (i.e., electrical spares, in-flight maintenance, etc.)

12. Develop a preliminary CSS design (i.e., choose sensors, displays, and switching equipment to be used)

13. Revise subsystem logic to reflect additional sensing and/or switching, as per item 11, including sensor-switching unreliability

14. Compute R_{cs} and R_{ms} for over-all system, utilizing revised subsystem logic

15. Add sensors and/or switching as required based on sensor rankings and repeat items 10, 11, and 12 until R_{cs} and R_{ms} requirements are achieved

16. Coordinate design and installation of CSS and establish GOSS requirements

CONCLUSIONS

In view of the primary objective of the crew safety system, i.e., to ensure the achievement of the over-all crew safety reliability requirement, it was determined that the sensor ranking as outlined in the General Requirements section should be utilized in the selection of components to be sensed by the spacecraft crew safety system.

The program plan as outlined in the Specific Program section is being pursued in that it emphasizes the primary crew safety system objective in the selection of components to be sensed, incorporates current sensing capability into the crew safety system, and allows for integration of the crew safety system into the overall Apollo configuration for the purpose of reliability assessment.

C[redacted]

LEM INTEGRATION

S&ID has recently conducted a qualitative reliability study to evaluate design concepts for CSM/LEM docking. This study has been concerned primarily with the problems of capture and impact attenuation, latching, and sealing. Of the three, capture and impact attenuation served as the focal point of the study; latching received lesser attention; and sealing was accorded relatively minor treatment at this time. After selection of the docking concept, sealing would require a separate study.

Results of this evaluation rank the CM conical system with expanding cone as the first-choice configuration; however, the recommended design improvements must be incorporated before this configuration can be deemed to meet reliability requirements. The study results are shown in Table 1-1.

Docking concepts were compared for the 14 design objectives illustrated in Table 1-2. Each concept was given a weighted rating for each objective (e.g., superior, good, fair, poor, or very poor) depending upon how the concept met requirements for the objectives. A rating system for design objectives was devised in conjunction with the rating of concepts. Based on a comparison, ratings for each concept were totalled; from these totals, the concepts were ranked. The highest-ranking concept was considered to be that which best satisfied design needs and which inherently offered the highest level of reliability. It is felt that the stub-tower approach offers a great deal, and that this concept can be improved considerably by redesign (refer to Conclusion).

Essentially, all of the concepts studied are those employing the same operational sequence for docking. After "contact conditions" are achieved, both vehicles (the active and the passive) drive together under RCS power; inherent self-aligning capabilities designed into the concepts are employed to assist in the docking maneuver. Primary latching occurs when the required degree of proximity and alignment is attained. This step is followed by hard latching and pull-down for sealing.

[redacted]

~~CONFIDENTIAL~~

Table 1-1. Command Module Conical System Design Improvement Evaluation

Class	Concept	Drawing No.	Rank
I	Center Probe and Drogue		
	1. Mark I		
	a. Orthographic	V16-956011	2
	b. Perspective	V16-956012	
	2. Mark II		
	a. Orthographic	V16-956013	
	b. Perspective	V16-956014	
II	CM Conical System		
	1. Mark I Hard Structures		
	a. Orthographic	V16-956015	5
	b. Perspective	V16-956016	
	2. Mark II Double Cone		
	a. Orthographic	V16-956017	6
	b. Perspective	V16-956018	
	3. Mark III Soft Structures		
	a. Orthographic	V16-956019	
	b. Perspective	V16-956020	
	4. Expanding Cone		
	a. Orthographic	V16-956021	
	b. Perspective	V16-956022	1
III	Stub Tower		
	a. Orthographic	V16-956023	3-4
	b. Perspective	V16-956024	
IV	Trapeze		
	a. Orthographic	V16-956025	3-4
	b. Perspective	V16-956026	

[redacted]

Table 1-2. Reliability Assessment-Command and Device Module/Lunar Excursion Module Docking Concept Study

Concepts	Objectives														
	System Simplicity	Compatibility with Environment	Assurance of Capture	Single, Final Positioning System	Adequate Energy Absorption	Min. Dia. Passage	Rigid Docking	Transfer Simplicity	Seal Protection	CSM Ablation Protection	ELS Added Complex	30-Min. Docking Probability	Adaptability to Sealing	Adaptability to Latching	Rating
I. Central Probe and Drogue															
1. Mark I	Poor	Fair	Poor	Poor	Good	Good	Good	Poor	Poor	Poor	Poor	Fair	Fair	Good	2
2. Mark II															
II. CSM Conical System															
1. Mark I	Poor	Fair	Poor	Fair	Poor	Fair	Fair	Poor	Fair	Poor	Poor	Fair	Fair	Fair	5
2. Mark II Double Cone	Very Poor	Fair	Poor	Fair	Poor	Poor	Fair	Very Poor	Fair	Poor	Very Poor	Fair	Fair	Good	6
3. Mark III Soft Structure															
4. Expanding Cone	Good	Good	Fair	Good	Poor	Fair	Good	Good	Good	Fair	Fair	Good	Good	Fair	1
III. Stub Tower	Good	Very Poor	Poor	Poor	Poor	Superior	Poor	Good	Poor	Good	Good	Poor	Poor	Poor	3-4
IV. Trapeze	Fair	Very Poor	Very Poor	Good	Fair	Superior	Very Poor	Good	Fair	Poor	Good	Very Poor	Fair	Poor	3-4

[redacted]

The reliability apportionments (i.e., mission success) are as follows:

Mode	Apportionment
Translunar transposition and docking	0.9991
Lunar rendezvous docking	0.9989
Shock attenuation	0.999972
Latching system	0.999995*

*Note: Combined apportionments for translunar transposition and docking, and lunar rendezvous docking

When a firm configuration is established, a quantitative study of the shock attenuation system and of latching system reliabilities will be conducted. The present study is restricted to a qualitative comparison of the system reliabilities of docking concepts.

PROBLEM AREAS

There are four immediate problem areas.

1. Assurance of capture - Every docking concept studied appeared to be deficient in assuring capture; it is most important that capture (if not normal docking) be achieved when "contact conditions" exist.

2. Probability of docking within 30 minutes - This is questionable due to the lack of assurance of capture.

3. Crew transfer in emergency modes

4. Operation of hydraulic equipment in space environment - This problem could be avoided by alternate mechanical modes.

CONCLUSIONS

It appears that the top-ranked docking concept, the expanding cone, can reflect reasonable reliability provided that the problem of assurance of capture is resolved and that mechanical friction-rate dampers are used. The stub-tower concept, if redesigned as outlined below, would provide by far the simplest design, and probably, the design with the greatest inherent reliability.

Although the stub-tower concept may impose a weight penalty, because structure is needed to support midcourse-correction loads, this penalty may be reduced by jettisoning the structure (on LEM, forward of the access hatch cover) after CSM/LEM separation and before lunar descent.

The primary design objectives of simplicity and high reliability could be met by a redesign that would (1) integrate a simple mechanical docking system into the stub tower concept, and (2) retain the forward cover on the CSM, hinged, as in the trapeze concept, to permit adequate sealing and latching. Both of these redesign recommendations are presented in Figure 1-3.

PLANNED ACTIVITIES

Further studies will be conducted to produce the optimum docking mode. Specifically, these studies will be designed to (1) reduce crew-task requirements incident to docking, (2) raise the reliability level by simplifying current docking concepts, (3) reduce docking-mechanism weight to upgrade reliability, and (4) to continue to examine new approaches toward solving the problem of docking.

[redacted]

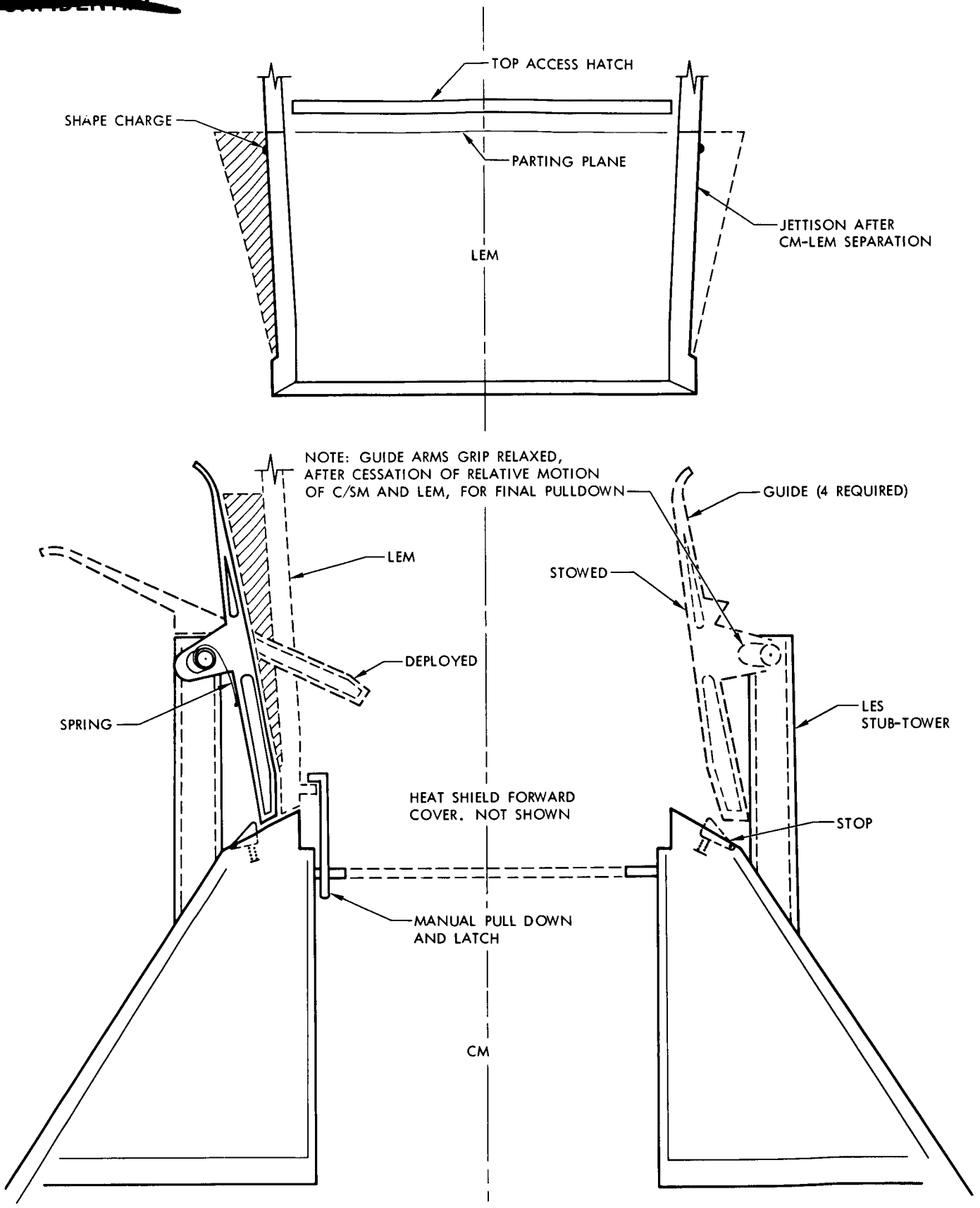

Figure 1-3. Impact Attenuation System Concept

II. MECHANICAL SUBSYSTEM ANALYSIS

COMMAND MODULE REACTION CONTROL

SUMMARY

A critical problem area in the command module reaction control system (CM RCS) was introduced in the last Quarterly Reliability Status Report, SID 62-557-5, as follows:

"...as a consequence of present reliability design and operating requirements, a condition exists which would jeopardize the survival of the Apollo crew upon landing. These requirements are as follows:

1. A 100-percent reserve of reaction control propellants (reliability redundancy)

2. A 360-degree peripheral distribution of hypergolic propellants and the removal of impact attenuation (design requirements)

3. An earth impact with the crew in the spacecraft and remaining there during a subsequent cooling period (operating criteria)

The resulting danger to the crew is the probable occurrence at impact of a catastrophic fire or an explosion and/or the release of extremely hazardous toxic fumes."

It was also noted in the report that several supporting analyses had been initiated. In this current report, a description of some of those analyses and tests is presented. Revised failure effects analysis and instrumentation analyses are reported, as well as subcontractor management and testing.

The critical problem area noted above has not been completely solved. That the CM RCS is still hazardous to crew safety, and that the reliability deficiency is still great has been concluded from the following considerations:

1. Engine redundancy is lost by engine valve failure modes leading to engine explosions or ablator ignition.

2. The requirement for helium tank depressurization before impact voids the pressurizing squib valve redundancy for helium jettison, but not for attitude control operation.

3. The parachutes are susceptible to damage throughout the 2-week mission by vapor leaking from the RCS propellant tanks and/or interconnects.

The following recommendations in each of the problem areas were made:

1. Design changes and product improvement to solve the dump-burning deficiency are ineffective, and ground rule changes are undesirable, therefore investigation of an alternate or supplementary solution to the problem has been recommended. In addition, several reservations regarding the adequacy of dump-burning have led to a recommendation for analysis and test verification.

2. The potential loss of engine redundancy has led to a recommendation that adequate detection capability be provided with provisions for timely activation of isolation valves (perhaps automatic).

3. The loss of squib valve redundancy for the fail-closed mode can be easily solved. It was recommended that dual initiator squib valves, redundant valves, or valve interconnects be incorporated.

4. To eliminate parachute damage from vapor leakage, a sealed parachute compartment was recommended.

ANALYSIS

Failure Effects Analysis Revision

The CM RCS failure effects analysis was revised during the past quarter. (See Table 2-1 at the end of this section.) Several changes from the former analysis are described in the following paragraphs.

The three columns listing the effect of the failure type on portions of the system were revised because the words "component," "subsystem," and "Apollo," in the column headings, have been redefined. Formerly, "component" was defined as a major section of a module having an operational identity or entity (e.g., pressurization or propellant supply).

"Subsystem" was defined as equivalent to a module, or one division of a multiple system (e.g., one-half of a dual system) independently capable of performing functional requirements (e.g., attitude control). The effect on the Apollo was directly reflected by the effect on the entire CM RCS.

For the revised failure effects analysis, these headings were redefined so that (1) "component" was equivalent to item, hence, the common effect of a failure type is "render inoperative;" (2) "subsystem" was equivalent to CM RCS, hence, the common effect of a failure of this type is "loss of redundancy;" and (3) the common effect on Apollo became either none or the same as could have been noted for the whole CM RCS (e.g., explosion or fire).

An analysis of detection capability also was included in this revision although, as yet, it is lacking in certain desirable details, because of design fluctuations of the CM RCS instrumentation provisions. Because of this detection capability analysis, there are also many instances, in the crew action column, of adding an abort function.

The purging, dumping, and interconnect provisions which resulted from the system design changes noted in SID 62-557-5 have been included in this revised failure effects analysis.

Design Benefits

The effect of design changes prompted by failure effects analysis has been beneficial to CM RCS reliability. System redundancy was restored in critical failure modes for each of the following design changes: (1) incorporating caps in series with fill and vent valves, (2) replacing single helium isolation valves with parallel valves, (3) replacing tandem pressure regulators with quad regulators, (4) replacing tandem and parallel check valves with quad check valves, (5) incorporating burst disks in series with pressure relief valves, (6) moving helium interconnects below existing check valves, (7) moving propellant interconnects above burst disks, (8) adding a pressurization squib interconnect, and (9) incorporating check valves above propellant interconnects. In addition, it was pointed out in the failure effects analysis that potential catastrophic hazards to the Apollo were removed as a result of the last four changes.

Instrumentation

The associated instrumentation (i.e., controls, displays, and detector circuits) of this system could not be included in this revision, because there is a lack of definitive design information and requirements concerning the composition and configurations of the various command and monitoring controls and instruments which will be used in connection with the operation

of this system. As this information is unavailable, it is impossible to determine the effect of the various failure modes of the associated instrumentation upon the subsystem performance and the Apollo. However, a list of typical failure modes for typical instrumentation components is shown in Table 2-2. Additional information on components and failure modes will be forthcoming as it is available. In Table 2-2, a "shorted contact set" failure refers to a closed circuit failure (i.e., shorted across the contact set or circuit), while an "open contact set" failure refers to an open circuit failure (i.e., short to ground or break in the circuit).

Table 2-2. Instrumentation Component Failure Modes

Component	Electrical	Mechanical
Manual Lever Micro Switch	1. Shorted contact set 2. Open contact set	1. Freeze 2. Fail to make contact 3. Fail to remain seated
Module Separation Switch Mechanism	1. Shorted contact set 2. Open contact set	1. Fail to make contact
Hand Controller	1. Shorted contact set 2. Open contact set 3. Crossed (or jumped) signal	1. Freeze 2. Fail to make contact 3. Improper alignment
DC Motor Relay (switch)	1. Shorted contact set 2. Open contact set 3. Crossed signal	1. Freeze 2. Fail to make contact 3. Improper alignment 4. Fail to maintain contact
Terminal/Origin Contacts	1. Open contact circuit 2. Restricted current 3. Partial contact	
Automatic Timer	1. Open 2. Short 3. Inaccurate operation	

Table 2-2. Instrumentation Component Failure Modes (Cont.)

Component	Electrical	Mechanical
Rotary Selector Switch	1. Shorted contact set 2. Open contact set 3. Crossed signal	1. Freeze 2. Fail to make contact 3. Improper alignment
Linear Scale Indicator	1. Open 2. Short 3. Inaccurate current	1. Freeze 2. Break mechanism 3. Inaccurate response 4. Misalign
Mechanical Position Indicator	1. Open 2. Short 3. Inaccurate current	1. Freeze 2. Break mechanism 3. Binding
Off-Limit Light	1. Open 2. Short	

Automatic Propellant Jettison Sequencer

An existing crew safety requirement necessitates the removal of the N_2O_4 prior to forward heat shield jettison during a pad abort sequence. The restricted time during which this must take place requires automatic initiation of the oxidizer dump with the abort signal. If the vehicle is aborted above 15,000 feet, however, the RCS is required for attitude control, and therefore the automatic oxidizer dump system must be deactivated at that altitude.

A reliability study was undertaken to evaluate and compare a single manual switch deactivation circuit with an automatic tandem timer deactivation circuit. A failure effects analysis demonstrated the inadequacy of both these circuits, and a single timer automatic deactivation circuit with a manual back-up was recommended. The resultant sequencer circuit provided automatic jettison at abort with a manual back-up and automatic deactivation at 15,000 feet with manual back-up.

Interconnect Valve Firing Sequence

As a direct consequence of the two basic functional requirements (attitude control and dry impact) of the CM RCS, its operation can be divided into two standard procedures: (1) abort below 15,000 feet, and (2) normal reentry. Time is a critical factor for abort below 15,000 feet necessitating propellant jettisoning. Conversely, the hot ablator and parachute susceptibility is a critical factor for normal reentry, precluding propellant jettisoning. With this background, and desiring a minimum of controls, a three-switch dump-burn panel was proposed—one for abort jettison, one for reentry propellant burning, and one for purge. The abort control (to pressurize and dump oxidizer) would be actuated only for abort below 15,000 feet, the reentry control (to override engine valves and open interconnects) would be used only after parachute deployment, and the purge control would be used only after tanks were emptied in either of the above two operations.

By not actuating the interconnects with the abort control, as well as with the reentry control, loss of the crew could result from a single system failure. If any one of four squib valves failed to operate when actuated, or if an external helium leak occurred anywhere in either system, the oxidizer and fuel would be dumped simultaneously from a parachute-suspended command module, violating two crew safety ground rules. Independent, optional control of the interconnects were recommended as well as a requirement that the interconnects be actuated at abort.

PROBLEM AREAS

Impact Hazard/Dump-Burning Problems

Before Impact Attenuation System Removal

The required crew safety reliability for the CM RCS is 0.999960, or 40 failures per million missions. In October 1962, a dual module configuration of the CM RCS, without interconnects and with a minimum of crew control requirements, was selected from seven proposed designs. Redundant systems with redundant propellants were provided in this configuration. Reliability analysis of the configuration indicated that the state-of-the-art reliability was 0.9934, and the procurement specification or apportioned reliability was 0.999969 (using a single module reliability of approximately 0.99).

However, the effect of rocket engine explosion on engine bank redundancy had not yet been taken into consideration in those analyses, as may be noted in the following extract.

> "Not (included) in the present study analyses, but under consideration, is the possibility of total loss of the spacecraft due to an uncontrolled burning or nozzle explosion of one of an engine pair in close proximity. This could result in the disabling of the entire reaction control system by a single failure."

Also excluded from those analyses was the requirement, then unknown, that landing with a pressurized helium tank be considered an unacceptable crew hazard. Before the degrading effect of these two considerations could be included in the reliability analysis, an even more critical problem area became evident.

Impact Safety Problem

With the removal of the impact attenuation provisions, it was estimated that the force of earth impact using two parachutes could be 78 g's. This force was later raised to 100 g's for bracketed system components. Several extensive studies were undertaken to evaluate the effects of such an impact with toxic hypergolic RCS reactants and the crew on board. The results of these studies, detailed in four supplementary reports, emphasized the more severe crew hazards and proposed numerous recommendations and limitations.

Because of the impracticality of designing to withstand the expected impact forces, a proposed means of removing reactants prior to earth impact using the reaction control systems themselves was investigated further. The dual system reliability, using specification apportioned values for components, was 0.999969, using parallel logic (with single system apportionment only 0.994). But, if both modules of the noninter-connected dual system must operate successfully in series logic (to remove reactants prior to impact) assuming purging capability, then the reliability using specification apportioned values for components, would be 0.98. The required crew safety reliability would still be 0.999960. In addition to these reliability disadvantages, the hazardous effects of the reactants on parachute material and hot ablator material were reported in five basic reports.

In these reports, the inherent difficulty of the reactant disposal method was pointed out, and some problems in this approach were indicated. Faced with these obstacles, but desiring the alternatives even less (e.g., crew bailout, water landing, tank and plumbing separation

from the spacecraft during descent, encapsulated ejection of reactants, jel of reactants, or some combination of these and others), disposal of the reactants by a combination jettisoning-burning method will be incorporated in the system.

Effect of RCS Redesign

The CM RCS was redesigned, incorporating crew control, interconnect, and abort-dump provisions. These requirements and design changes reduced the apportioned reliability from 0.99996 to 0.99956, as described in the Quarterly Reliability Status Report, SID 62-557-5. (It should be noted again that these reliability values still do not include the degrading effects of either (1) those modes of failures causing loss of rocket engine bank redundancy, or (2) the requirement prohibiting landing with a pressurized helium tank.) The effect of this reliability reduction is more evident when expressed in failure probability. With a crew safety requirement of no more than 40 failures per million missions, a system reliability of 0.99956 would be equivalent to 440 failures per million missions, but the entire service module-command module combination is permitted no more than 420 crew safety failures per million missions.

As described in the last Quarterly Reliability Status Report, there are four normal steps in removing this deficiency: (1) improve the design, (2) increase component development, (3) revise the ground rules, or (4) seek an alternate solution. First, redesign is ineffective (for the dump-burning approach), because either adding or removing redundancy reduces the reliability; second, additional component improvement is impractical, because current improvement factor requirements are already 10 to 50 times state-of-the-art; third, revising the ground rules would entail either spacecraft reapportionment (requiring other systems to achieve a higher reliability), or permitting the loss of more than one crew per thousand; and fourth, examples of alternate solutions were presented in the last Quarterly Reliability Status Report (SID 62-557-5).

In addition to the reliability deficiency, several reservations concerning the effectiveness of this solution have been advanced.

Dump-Burning Reservations

Analysis and testing will be required to assure that the hazards associated with the three basic dump-burning reservations will not prevent safe crew return.

The first of those reservations was the potential effect on the parachutes and risers of the plume pattern associated with rocket engine firing. The dump-burning method was adopted on the assumption that there would be no dangerous effect from engine firing. However, prior to that adoption, Apollo Reliability pointed out that the diagram of the plume pattern presented would be comparable to a stationary command module and did not take into consideration the effect of its descent through the atmosphere. Not only would this relative motion cause a shearing effect on the plume pattern, but any swaying motion imparted to the command module could endanger the nylon risers. A two-parachute descent would increase the shearing effect on the plume pattern even more. To these considerations should be added the normal dynamic heating of the risers, which would contribute to an overall temperature profile causing concern. Also, should any of the 10 burning engines experience incomplete combustion, the weakening effect of the combination of high heat and corrosive vapors could be intolerable.

The second reservation is concern over the effect on the hot ablator and parachutes of the remaining quantity of unburned reactant which passes through the engine after the first reactant has been depleted.

The third reservation concerns the fire and/or toxic hazard associated with the residual reactants remaining in the plumbing after successful purging. It should be noted that (1) the space suit environmental control circuit is not being designed to operate after impact, (2) the structural integrity of the crew compartment is not expected to remain intact after impact, and (3) the RCS plumbing will sever at impact. Using the emergency limit concentrations, as noted in a laboratory analysis, and the fact that there will be less than 1000 grams of air/oxygen mixture in the command module at impact, the amount of distributed N_2O_4 or MMH must be kept below 0.05 grams or 0.003 grams, respectively, for a 10-minute exposure. Using the limiting dose which kills 50-percent of a group of test animals, the amount of released N_2O_4 must be kept below 0.1 gram for a 30-minute exposure, and the amount of released MMH must be kept below 0.07 grams for a 4-hour exposure (no shorter duration data is available). Finally, it has been determined that after a normal reentry and successful purging operation there will be approximately 1400 grams of N_2O_4 and 700 grams of MMH remaining in the systems at impact.

Engine, Tanks and Parachute Problems

There are three additional critical problem areas affecting the reliability of the CM RCS which require consideration for analysis, test verification, and solution. Two of these, the possible loss of rocket engine bank redundancy due to a single failure and the requirement for

nonpressurized helium tanks at impact, have been noted earlier. The third is the susceptibility of the stored parachutes to reactant vapors.

Loss of Engine Redundancy

For the purposes of this discussion, engine explosion failures which affect spacecraft redundancy, as well as fail the engine, are explosions within or about the engine nozzle, thrust chamber, injector, or inlet tubing of sufficient force to damage the neighboring engine, distribution tubing, parachutes, other essential equipment, or structural integrity. These may be caused by overheating of the fuel lines or improper mixing of the hypergolic propellants through leaks or injector valve failures.

It has been estimated that a fuel leak or partially open fuel injector valve will result in an explosion nearly 100 percent of the time when the oxidizer comes in contact with the fuel vapors. When these conditions are reversed, (i.e., fuel on oxidizer vapor) an explosion occurs approximately 20-percent of the time; hence, a single valve-open failure has about a 60-percent probability of explosion. Also, as noted earlier, the hot ablator material is subject to a self-sustaining ignition if either reactant comes in contact with it, although this would probably be most severe in the case of the oxidizer.

For these reasons, the particular failure modes of the injector valves with which we are concerned here are (1) fail open, (2) fail closed, (3) fail at an intermediate position, or (4) leak. If either valve fails closed, the other valve, upon receiving a thrust signal, dumps one of the reactants on the hot ablator, probably causing a fire. If either valve fails open, leaks, or fails at an intermediate position, an explosion is possible when the automatic signal opens the other valve. Below parachute deployment altitude, of course, both fire and reactant vapors are a hazard to the parachutes as well. An injector fuel line temperature rise of 150 F will probably cause an engine explosion failure.

Rocketdyne has provided detailed estimates which permit an evaluation of the probability of the loss of engine bank redundancy as described above. Using conservatively low estimates of valve failure mode probabilities, the effect on the CM RCS (and therefore spacecraft) is to add another 840 failures per million missions to the 440 noted earlier.

Helium Tank Series Logic

The second additional problem area was the loss of redundancy of the helium pressurization squib valves by the crew safety requirement that both 4500 psia helium tanks be depressurized at impact to prevent a fragmentation rupture. Estimates of the probability of the failure-to-open

mode for these squib valves have been 460 failures per valve per million missions, or another 920 failures for the spacecraft. However, it is hoped that the development of these valves can be stressed to reduce this total to less than 20 failures per million missions. Adopting the dual-injector squib valves as used in the earth landing systems would accomplish this stringent requirement. The problem could also be eliminated by having redundant squib valves for both tanks, or a squib valve interconnect. The pressurization squib valve problem, although potentially very degrading for reliability, appears to lend itself to simple, acceptable solutions.

Stored Parachute Susceptibility

The third additional problem area, the susceptibility of the stored parachutes to deterioration from leaking CM RCS propellant vapors during the two-week mission, has been investigated.

The parachute compartment and RCS compartments are joined, having a common atmosphere which is about 80 cubic feet of free volume. Development tests have shown that the parachute material suffers a strength reduction of 37 percent after only a 20-minute exposure to a 2-percent concentration of oxidizer vapor. Corresponding strength reductions were given for smaller concentrations to 0.25 percent, but, unfortunately, the test exposure time was kept at only 20 minutes. The actual time could be as long as 2 weeks. Though tests have indicated no noticeable effect on parachute material caused by exposure to MMH for periods of less than 1 hour, there is doubt that this would hold true for an exposure to sufficiently large concentrations for several days.

For these reasons, the probability of leakage of every component and fitting having an interface with either reactant in both systems were considered when evaluating the effect of this problem on system reliability. The effect was estimated to be approximately 220 serious leakage failures per million missions.

The concensus of those participating in the review of this problem was a strong recommendation for sealing the parachute compartment, and this was reported along with recommendations to accomplish the sealing. The sealing recommendation was not adopted, however, on the reasoning that sealing the parachute compartment does not solve the RCS leakage problem.

Burn-Through and Cracking Problems

Engine burn-through at the combustion chamber-to-nozzle joint area has been encountered. A decision to eliminate this joint has been recommended as a solution to this problem.

Cracking of the throat insert has been experienced. A development program has been initiated to test two new design configurations.

TEST PROGRAM

Overall Test Program Status

Revisions were made to Volume III (Ground Qualification Tests) and Volume IV (Acceptance Tests) of the General Test Plan, SID 62-109. The data include a definition of the systems test program, a system logic diagram, a presentation of system criticality versus hardware requirements, and a qualification test schedule with test specimen utilization.

Component development testing programs have been initiated by approximately 20 percent of the component suppliers. The development test program on the reaction control engine is approximately 50-percent complete.

Significant Test Results

Results of the CM RCS breadboard circuit tests have indicated a need for improved tank bladder insertion methods and personnel handling techniques.

Several configurations of hard line brazed unions have demonstrated satisfactory performance during preliminary vibration evaluation tests.

Rocketdyne

Evaluation tests for engine ablative materials and char-rate performance have resulted in a change from a macerated to a 45-degree oriented form of ablative. Development evaluation of the engine propellant valves has been completed, and the prototype evaluation test phase of these valves is being prepared. The two-coil solenoid configuration is incorporated in these valves.

Tests Completed and Tests in Progress

S&ID

Tests simulating possible flex-hose seal damage have been satisfactorily completed. Dissimilar material compatibility tests are being formulated in order to finalize flex-hose materials. Further environmental

tests on brazed unions are scheduled for June and July. Positive expulsion tank cycling is in progress on the breadboard circuit.

Rocketdyne

Further evaluation tests on engine ablative materials are being conducted under various firing durations, altitude conditions, temperature extremes, off-nominal fuel-oxidizer mixture ratios, and low supply pressures. Tests are being conducted to evaluate different throat insert designs. Thrust chamber billet fabrication techniques are being formulated to assure consistent billet quality.

Flexible Tubing Tests

In the last Quarterly Reliability Status Report, and need for Teflon-lined flexible tubing testing was explained, and favorable preliminary results were reported. After a carefully controlled testing process was conducted, however, an unacceptable permeation rate of the Teflon by the N_2O_4 was found to exist. This rate, although small, was hazardous to the parachutes stored in the same compartment. As a result of this testing, metal flexible tubing without Teflon liners was adopted. The loss of purging efficiency did not justify the parachute hazard.

SUBCONTRACTOR MANAGEMENT

All available applicable Rocketdyne documentation, including the Reliability Program Plan, the General Test Plan, and Procurement Specification MC 901-0065 B (latest revision) have been comprehensively reviewed with pertinent comments. Previously prepared changes and revisions to the Reliability Program Plan have been transmitted to the subcontractor.

In the interest of ensuring the maintenance of high engine reliability at minimum cost, S&ID should obtain Rocketdyne concurrence and approval on an S&ID prepared Standard Procedures Manual in order to cover delivered engines by the subcontractor's warranty.

A Reliability Program meeting was attended on 23 May 1963, and on 13 June 1963 NASA conducted a subcontractor reliability audit to determine documentation adequacy and conformance with requirements of MIL-R-27542. The results of the audit were satisfactory.

Current problems include failure of the bond between the chamber and the nozzle ablative segments in hot firing. Remedial action calls for greater quality control emphasis on bonding during engine assembly and introduction of a compressive load to hold the segments together against thermal elongation.

The Rocketdyne Rapid Data System is not presently capable of providing performance data on qualification firings to the degree requested by S&ID. This will be negotiated.

PLANNED ACTIVITIES

Analysis Group

The instrumentation requirements and provisions (i.e., controls, displays, and detector circuits) for the CM RCS are still being defined. For this reason, the reliability requirements for these components have not been taken into consideration in the foregoing analyses. Their effect will be to add to the preponderance of crew safety failures already accumulated by those analyses.

When the instrumentation requirements have been defined, a mission success capability will have been given to the CM RCS. As yet, it has not been apportioned a mission success requirement; therefore, its mission success apportionment is equivalent to 1.000000. When the system mission success capability has been determined, other systems' apportionment requirements will be adjusted.

Test Group

During the next reporting period, development tests on the engine will be continued in order to evaluate ablative material performance and engine performance, using various combinations of fuel-oxidizer ratios and combined environments such as vibration-temperature, altitude-temperature, and pulse mode and/or steady-state firing. Qualification testing on prototype engine configurations is scheduled to begin in October.

Design verification tests will commence on prototype propellant valves. The primary objective of these tests is to verify the structural and operational integrity of the valve designs when operating at mission environment temperature, pressure, vibration, acceleration, and shock.

Development tests will begin on each of the system components in the next quarter. In addition, approximately 15 percent of the component qualification tests will be initiated.

Table 2-1. Command Module Reaction Control System Failure Effects Analysis

TABLE DESCRIPTION

Note A. The specific item responsible for this failure type cannot be identified; however, this detection deficiency can be isolated to the number of items in parentheses.

Note B. This detection is only possible after display console system selection.

CODE: BP If failure occurs before system pressurization

AP If failure occurs after system pressurization

DCHTPG Display Console Helium Tank Pressure Gauge

DCPSPG Display Console Propellant Supply Pressure Gauge

Table 2-1. Command Module Reaction Control System Failure Effects Analysis

Item	Drawing Number	Function	Failure Type	Mission Phase	Single Failure Effect On Item Performance	Single Failure Effect On RCS Performance	Single Failure Effect On Apollo	Detection Capability	Possible Crew Action
(1) Helium storage tank		Store pressurization gas	1. Rupture	1. All	1. Render inoperative	1. Loss of redundancy	1. Possible structural damage to systems or spacecraft	1. DCHTPG, Note A (12 items) Note B	1. Abort
			2. Leak	2. 1 to 59	2. Render inoperative	2. Eventual loss of redundancy	2. None	2. BP same as 1. AP none	2. Abort
			3. Support failure	3. 1 to 59	3. Possibly render inoperative	3. Probable loss of redundancy	3. None	3. None	3. Abort
(2) Helium fill valve with cap		In-flight. Maintain high pressure seal Ground. Provide GSE access	1. Rupture	1. 1 to 59	1. Render inoperative	1. Loss of redundancy	1. None	1. DCHTPG, Note A (12 items) Note B	1. Abort
			2. Leak	2. 1 to 59	2. Render inoperative	2. Eventual loss of redundancy	2. None	2. BP same as 1 AP none	2. Abort
(3) Pressurization squib valve		Isolate high pressure until desired	1. Failure to operate when energized	1. 56 to 59	1. Render inoperative	1. Loss of redundancy	1. Probable crew injury at impact	1. DCHTPG, Note B	1. None
			2. External Leak	2. 1 to 59	2. Render inoperative	2. Eventual loss of redundancy	2. None	2. BP same as 1 AP none	2. Abort
			3. Internal leak	3. 1 to 56	3. Render inoperative	3. Degradation of redundancy	3. None	3. DCPSPG, DCHTPG, Note B	3. Operate isolation solenoid valves and abort
			4. Premature operation	4. 1 to 56	4. Render inoperative	4. Degradation of redundancy	4. None	4. Same as 3.	4. Same as 3
(4) Helium filter		Trap foreign particles from squib or gas	1. Failure to trap particles	1. 56 to 59	1. Render inoperative	1. Possible loss of redundancy	1. None	1. None	1. Operate solenoid valve of unregulated path
			2. Clogged filter	2. 56 to 59	2. Render inoperative	2. Same as 1	2. None	2. None	2. Same as 1
			3. External leak	3. 1 to 59	3. None	3. Loss of redundancy	3. None	3. None	3. (a) Same as 1 (b) Abort
(5) Helium solenoid valve		Isolate unregulated path and reduce pressure seepage	1. Failure to operate when energized	1. 56 to 59	1. Render inoperative	1. None	1. None	1. Display console valve "talkback," Note B.	1. None
			2. Premature operation	2. 56 to 59	2. None	2. None	2. None	2. Same as 1.	2. Attempt to reopen

[redacted]

Table 2-1. Command Module Reaction Control System Failure Effects Analysis (Cont)

Item	Drawing Number	Function	Failure Type	Mission Phase	Single Failure Effect On Item Performance	Single Failure Effect On RCS Performance	Single Failure Effect On Apollo	Detection Capability	Possible Crew Action
			3. External leak	3. 1 to 59	3. Render inoperative	3. Eventual loss of redundancy	3. None	3. None	3. Cycle valve if ineffective, abort
			4. Internal leak (precludes operation)	4. 56 to 59	4. Render inoperative	4. Loss of redundancy	4. None	4. Depends on cause for operation: (a) If for external leak, none (b) If for open regulators, DCPSPG, Note B	4. Same as 3
(6) Helium pressure regulator		Reduce to and maintain operative pressure	1. Improper regulation	1. 56 to 59	1. Render inoperative	1. None	1. None	1. None	1. Operate isolating solenoid valve
			2. Fail closed	2. 56 to 59	2. Render inoperative	2. None	2. None	2. None	2. None
			3. Fail open	3. 56 to 59	3. Render inoperative	3. None	3. None	3. None	3. Operate isolating solenoid valve
			4. External leak	4. 1 to 59	4. None	4. Loss of redundancy	4. None	4. None	4. Same as 3; if ineffective, abort
			5. Internal leak	5. 56 to 59	5. Render inoperative	5. Possible loss of redundancy	5. None	5. None	5. Same as 4
(7) Helium fittings		Provide connections and maintain pressure seal	External leak or rupture	1 to 59	Render inoperative	Loss of redundancy	None	Depends on location: (a) Below check valves and above squib valve BP DCPSPG and DCHTPG, Note B AP None (unless abrupt) (b) Between squib valve and check valves, none	Isolate system and abort
(8) Helium tubing		Distribute, confine, and retain pressurizing gas	1. Rupture or leak	1. 1 to 59	1. Render inoperative	1. Loss of redundancy	1. None	1. Same as (7) above	1. Isolate system and abort
			2. Restricted flow from pinch or bend	2. 56 to 59	2. Render inoperative	2. Up to loss of redundancy	2. None	2. Depends on location: (a) If below propellant supply pressure transducer, none	2. None

[redacted]

CONFIDENTIAL

Table 2-1. Command Module Reaction Control System Failure Effects Analysis (Cont)

Item	Drawing Number	Function	Failure Type	Mission Phase	Single Failure Effect On Item Performance	Single Failure Effect On RCS Performance	Single Failure Effect On Apollo	Detection Capability	Possible Crew Action
								(b) If above propellant supply pressure transducer, DCPSPG, Note A, (14 items), Note B	
(9) Helium check valve		Maintain one-way flow of pressurizing gas and separation of leaking or permeating reactant vapors	1. Fail closed	1. 56 to 59	1. Render inoperative	1. None	1. None	1. None	1. None
			2. Fail open	2. All	2. Render inoperative	2. None	2. None	2. None	2. None
			3. External leak	3. All	3. Render inoperative	3. Loss of redundancy	3. None	3. BP for upstream 4, None; for downstream 4, DCPSPG, Note A; (50 items), Note B. AP none	3. Isolate system and abort
			4. Internal leak	4. All	4. Render inoperative	4. None	4. None	4. None	4. None
(10) Helium vent valve with cap		In-flight. Maintain a pressure seal Ground. Provide GSE pressure equalization	External leak or rupture	All	Render inoperative	Loss of redundancy	None	BP DCPSPG, Note A (50 items), Note B, AP None	Isolate system and abort
(11) Helium burst disk		Maintain pressure seal and relieve excess pressure	1. Burst above designed pressure (i.e., fail burst)	1. 56 to 59	1. Render inoperative	1. Loss of redundancy	1. (a) Corrosive action (b) Probable fire (c) Possible parachute loss	1. DCPSPG, Note B	1. (a) Operate helium interconnect (b) Abort
			2. Burst below designed pressure	2. All	2. Render inoperative	2. Loss of redundancy	2. None	2. None	2. Same as 1
			3. Internal leak	3. All	3. Render inoperative	3. None	3. None	3. None	3. None
			4. External leak	4. All	4. Render inoperative	4. Loss of redundancy	4. None	4. BP DCPSPG, Note A (50 items), Note B, AP None	4. (a) Operate isolation valves (b) Abort
(12) Helium burst disk filter		Trap foreign particles from burst disk or gas	1. Failure to trap particles*	1. 56 to 59	1. Render inoperative*	1. Possible loss of redundancy*	1. None	1. None	1. None

*All failures preclude burst disk operation

CONFIDENTIAL

~~CONFIDENTIAL~~

Table 2-1. Command Module Reaction Control System Failure Effects Analysis (Cont)

Item	Drawing Number	Function	Failure Type	Mission Phase	Single Failure Effect On Item Performance	Single Failure Effect On RCS Performance	Single Failure Effect On Apollo	Detection Capability	Possible Crew Action
			2. Clogged filter*	2. 56 to 59	2. Render inoperative*	2. Same as 1*	2. None	2. None	2. None
			3. External leak*	3. All	3. None	3. Loss of redundancy*	3. None	3. None	3. None
(13) Helium relief valve		Backup to burst disk (i.e., maintain seal and relieve excess pressure)	1. Fail closed*	1. 56 to 59	1. Render inoperative*	1. Possible loss of redundancy*	1. (a) Corrosive action (b) Probable fire (c) Possible parachute loss	1. None	1. (a) Operate helium interconnect (b) Abort
			2. Fail open*	2. All	2. Render inoperative*	2. Loss of redundancy*	2. None	2. DCPSPG, Note A (50 items), Note B	2. (a) Operate isolation solenoid valves (b) Abort
			3. External leak*	3. All	3. None	3. Same as 2*	3. None	3. None	3. Same as 2
(14) Helium purge squib valve		Permit helium bypass of bladder to purge plumbing of reactants on demand; maintain a pressure/liquid seal at all other times	1. Failure to operate when energized	1. 58	1. Render inoperative	1. (a) Possible explosion (b) Probable fire and toxic hazard	1. (a) Possible explosion (b) Probable fire and toxic hazard	1. DCPSPG, Note B.	1. Operate propellant interconnect
			2. Premature operation	2. 1 to 59	2. Render inoperative	2. Loss of redundancy	2. None	2. None	2. (a) Operate isolation solenoid valves (b) Abort
			3. External leak	3. All	3. Render inoperative	3. (a) Same as 2 (b) Possible fire and toxic hazard	3. Possible fire and toxic hazard	3. BP DCPSPG, Note A (50 items), Note B AP None	3. Same as 2
			4. Internal leak	4. 1 to 59	4. Render inoperative	4. Same as 2	4. None	4. None	4. None

*All failures preclude burst disk operation

~~CONFIDENTIAL~~

Table 2-1. Command Module Reaction Control System Failure Effects Analysis (Cont)

Item	Drawing Number	Function	Failure Type	Mission Phase	Single Failure Effect On Item Performance	Single Failure Effect On RCS Performance	Single Failure Effect On Apollo	Detection Capability	Possible Crew Action
(15) Helium interconnect squib valve		Permit one pressurization subsystem to pressurize both propellant supply subsystems on demand; maintain a pressure seal at all other times	1. Failure to operate when energized	1. 56 to 59	1. Render inoperative	1. None	1. None	1. DCPSPG, Note B.	1. None
			2. Premature operation	2. All	2. Same as 1	2. None	2. None	2. None	2. None
			3. External leak	3. All	3. Same as 1	3. Loss of redundancy	3. None	3. BP DCPSPG, Note A (50 items), Note B AP None	3. (a) Operate isolation solenoid valves (b) Abort
			4. Internal leak	4. All	4. Same as 1	4. None	4. None	4. None	4. None
(16) Positive expulsion tank with bladder		Provide propellant on demand in any attitude and from zero to maximum g loads	1. Rupture	1. All	1. Render inoperative	1. (a) Loss of redundancy (b) Probable fire and toxic hazard	1. Probable fire and toxic hazard	1. BP DCPSPG, Note A (50 items), Note B AP DCHTPG, Note A (all items), Note B	1. (a) Operate isolation solenoid valves (b) Abort (water landing if possible)
			2. External leak	2. All	2. Same as 1	2. Same as 1	3. Same as 1	2. Same as 1. BP. AP. None	2. Same as 1
			3. Support failure	3. 1 to 59	3. Same as 1	3. Possibly same as 1	3. Same as 1	3. None	3. Same as 1
			4. Leak or excessive permeation of positive expulsion device (bladder)	4. All	4. Same as 1	4. Same as 3	4. Same as 1	4. None	4. Same as 1
			5. Expulsion failure of positive expulsion device	5. 56 to 58	5. Same as 1	5. Same as 1(a)	5. None	5. None	5. None
(17) Propellant fill valve with cap		In-flight. Maintain pressure seal Ground. Provide GSE access	1. Rupture	1. All	1. Render inoperative	1. (a) Loss of redundancy (b) Possible fire and toxic hazard	1. Possible fire and toxic hazard	1. BP DCPSPG, Note A (50 items) Note B AP DCHTPG, Note A (All items) Note B	1. (a) Operate isolation solenoid valves (b) Abort
			2. Leak	2. All	2. Same as 1	2. Same as 1	2. Same as 1	2. BP same as 1 BP AP None	2. Same as 1

Table 2-1. Command Module Reaction Control System Failure Effects Analysis (Cont)

Item	Drawing Number	Function	Failure Type	Mission Phase	Single Failure Effect On Item Performance	Single Failure Effect On RCS Performance	Single Failure Effect On Apollo	Detection Capability	Possible Crew Action
(18) Propellant burst disk		Isolate propellant until desired	1. Burst above designed pressure (e.g., failure to burst)	1. 56 to 59	1. Render inoperative	1. Loss of redundancy	1. None	1. None	1. Operate propellant interconnect
			2. Burst below designed pressure (or internal leak)	2. 1 to 59	2. Same as 1	2. Redundancy degradation	2. None	2. DCPSPG, Note A (50 items) Note B	2. Operate isolation solenoid valves
			3. External leak	3. All	3. Same as 1	3. (a) Same as 1 (b) Corrosive action and probable fire and toxic hazard	3. Corrosive action and probable fire and toxic hazard	3. BP same as 2 AP None	3. (a) Same as 2 (b) Abort
(19) Propellant burst disk filter		Trap foreign particles from burst disk or propellant	1. Failure to trap particles	1. 56 to 59	1. Render inoperative	1. Possible loss of redundancy	1. None	1. None	1. Operate isolation valves if necessary
			2. Clogged filter	2. 56 to 59	2. Same as 1	2. Same as 1	2. None	2. None	2. Same as 1
			3. External leak	3. 56, 57, 58, 59	3. None	3. (a) Loss of redundancy (b) Corrosive action and probable fire and toxic hazard	3. Corrosive action and probable fire and toxic hazard	3. None	3. (a) Same as 1 (b) Abort
(20) Propellant fittings		Provide connections and maintain a seal	External leak or rupture	All	Render inoperative	(a) Loss of redundancy (b) Corrosive action and probable fire and toxic hazard	Corrosive action and probable fire and toxic hazard	Depends on location: (a) Below burst disk, none (b) Above burst disk, BP DCPSPG, Note A (50 items) Note B AP None	(a) Operate isolation valves (b) Abort

Table 2-1. Command Module Reaction Control System Failure Effects Analysis (Cont)

Item	Drawing Number	Function	Failure Type	Mission Phase	Single Failure Effect On Item Performance	Single Failure Effect On RCS Performance	Single Failure Effect On Apollo	Detection Capability	Possible Crew Action
(21) Propellant tubing		Distribute, confine, and retain propellant	1. Rupture or leak	1. All	1. Render inoperative	1. (a) Loss of redundancy (b) Corrosive action and probable fire and toxic hazard	1. Corrosive action and probable fire and toxic hazard	1. Depends on location: (a) Below burst disk, none (b) Above burst disk, BP DCPSPG, Note A (50 items) Note B AP None	1. (a) Operate isolation valves (b) Abort
			2. Restricted flow from pinch or bend	2. 56 to 59	2. Same as 1	2. Possible loss of redundancy	2. None	2. None	2. Operate interconnect valve
(22) Propellant interconnect squib		Permit either propellant supply subsystem to discharge reactants as required; maintain a seal otherwise	1. Failure to operate when energized	1. 56 to 59	1. Render inoperative	1. None	1. None	1. None	1. None
			2. Premature operation	2. 56 to 59	2. Same as 1	2. None	2. None	2. None	2. None
			3. External leak	3. All	3. Same as 1	3. (a) Loss of redundancy (b) Corrosive action and probable fire and toxic hazard	3. Corrosive action and probable fire and toxic hazard	3. BP DCPSPG, Note A (50 items), Note B, AP None	3. (a) Operate isolation solenoid valves (b) Abort
			4. Internal leak	4. All	4. Same as 1	4. None	4. None	4. None	4. None
(23) Oxidizer dump squib		Permit dumping of oxidizer during "cold ablator" abort; maintain a seal at all other times	1. Failure to operate when energized	1. Pad abort	1. Render inoperative	1. Loss of redundancy	1. Possible loss of parachutes	1. DCHTPG Note B	1. Operate propellant interconnect valves

[redacted]

Table 2-1. Command Module Reaction Control System Failure Effects Analysis (Cont)

Item	Drawing Number	Function	Failure Type	Mission Phase	Single Failure Effect On Item Performance	Single Failure Effect On RCS Performance	Single Failure Effect On Apollo	Detection Capability	Possible Crew Action
			2. Premature operation	2. All	2. Same as 1	2. Same as 1	2. Depends upon phase ranges from none to catastrophic	2. BP DCPSPG, Note A (50 items), Note B, AP none	2. (a) Close oxidizer solenoid isolation valve (b) Abort
			3. External leak	3. All	3. Same as 1	3. (a) Same as 1 (b) Possible fire and toxic hazard	3. Possible fire and toxic hazard	3. Same as 2	3. (a) Operate isolation valves (b) Abort
(24) Propellant isolation solenoid valve		Isolate abnormally operating engine bank when required	1. Failure to operate when energized	1. 56 to 59	1. Render inoperative	1. (a) Possible explosion or uncontrolled burning of engine (b) Probable loss or redundancy	1. (a) Possible explosion or uncontrolled burning (b) Probable ignition of hot ablator	1. Display console "Talkback." Note B	1. Operate helium isolation valves
			2. Premature operation	2. 56 to 59	2. Depends on cause; possibly render imperative, otherwise none	2. Same as 1	2. Same as 1	2. Same as 1	2. (a) Cycle valves (b) Operate system isolation valves (c) Operate interconnect valves (d) Abort
			3. External leak	3. 56, 57, 58, 59	3. None	3. (a) Loss of redundancy (b) Probable fire and toxic hazard	3. Probable fire and toxic hazard	3. None	3. (a) Cycle valve (b) Operate system isolation valves (c) Abort
			4. Internal leak (precludes valve operation)	4. 56, 57, 58, 59	4. Same as 1	4. Same as 1	4. Same as 1	4. None	4. (a) Cycle valve (b) Operate system isolation valves

[redacted]

Table 2-1. Command Module Reaction Control System Failure Effects Analysis (Cont)

Iter	Drawing Number	Function	Failure Type	Mission Phase	Single Failure Effect On Item Performance	Single Failure Effect On RCS Performance	Single Failure Effect On Apollo	Detection Capability	Possible Crew Action
(25) Rocket engines		Provide proper thrust about the control axes, and expend reserve reactants; maintain a seal otherwise	1. Explosion	1. 56 to 59	1. Render inoperative	1. (a) Loss of redundancy (b) Probable loss of RCS	1. Probable loss of Apollo	1. Direct sense or none	1. (a) Operate isolation solenoid valves (b) Operate interconnect valves
			2. Uncontrolled burning, fire	2. 56 to 59	2. Same as 1	2. Same as 1	2. Same as 1	2. None	2. Same as 1
			3. Excessive ablation of throat or nozzle	3. 56 to 59	3. Probably render inoperative	3. (a) Same as 1 (a) (b) Possible loss of RCS	3. (a) Possible equipment, structure, ablator, or parachute damage (b) Possible loss of Apollo	3. None	3. Same as 1
			4. Failure to start	4. 56 to 59	4. Same as 1	4. Loss of redundancy	4. None	4. None	4. Same as 1
			5. Improper reactant ratio	5. 56 to 59	5. Same as 1	5. Same as 4	5. None	5. None	5. Same as 1
			6. External leak	6. 56 to 59	6. Same as 1	6. (a) Same as 4 (b) Probable fire and toxic hazard	6. Probable fire and toxic hazard	6. None	6. Same as 1

~~CONFIDENTIAL~~

COMMAND MODULE HEAT SHIELD

SUMMARY

Reliability effort has been directed toward developing analytical techniques for reliability assessment and preparing revised qualification test procedures.

A quantitative reliability assessment will not be possible until the subcontractor's (AVCO-RAD) test program develops heat shield back-face temperature data from testing samples exposed to critical environmental conditions. Samples will be representative of the current filled honeycomb material. According to current estimates, the heat shield ablative panels will attain the reliability goal of 0.99995.

ANALYSIS

A reliability study was initiated to evaluate the influences of environmental and material parameters on ablator back-face temperature. This study forms a part of the over-all reliability analysis of the ablator thermal design.

An equation for predicting heat shield back-face temperature as a function of material properties and environmental variables, using development test data, is being investigated. A selective regression routine, which assesses the significance of each material property on the back-face temperature, is being applied in this program. Additional studies and data are necessary to establish the definitive relationships among the model coefficients and the variables and to substantiate the validity of the present approximations.

Effort is being directed towards expressing the model in a canonical form whereby the reference axes are translated and/or rotated from those existing initially. The advantage of the canonical form is that it more clearly identifies the effect of each variable on the back-face temperature by reducing or eliminating the number of cross-products in the equation.

A computer program is being written to analyze back-face temperature. The purpose is to develop a data reduction routine for the heat shield reliability. The first goal is to determine the critical variables which affect reliability. These variables will then be used to set up a reliability model. The initial data will indicate other tests that will be required.

~~CONFIDENTIAL~~

Data Collection, Storage, and Analysis

Information sources have been established, and the mechanics necessary to interpret the data have been developed. The data consists of mechanical, thermal, chemical, and physical properties of materials related to the development of the Apollo heat shield. The more significant and pertinent data related to the ablative and honeycomb materials will be immediately investigated and analyzed.

Additional data pertaining to the effects of atmospheric and space environments on materials and components have been collected through continuous research of reference sources and literature, and these data have been arranged and abstracted for dissemination and utilization.

The development of mechanized storage methods for the accumulation of reliability data is continuing. The actual scope of effort has been greater than previously anticipated; however, the mechanization will permit more efficient data handling.

Failure, Cause, and Effects Analysis

The failure mode logic network presented in Figure 2-1 delineates an orderly approach for determining and analyzing the potential failure types and their effect on the Apollo heat shield. This approach ensures that all important items or design areas of the ablative (Avcoat 5029-39) filled, fiberglass honeycomb bonded to the substructure have been analyzed and the results recorded in the failure effects analysis shown in Table 2-3 at the end of this section. The back-face temperature (T_{bf}) is the criterion for determining a heat shield failure, as specified in NAA/S&ID Procurement Specification, MC 364-0001.

TEST PROGRAM

General Test Program Status

During this reporting period the qualification test section of the Apollo General Test Plan, SID 62-109, was revised to include detailed test schedules and test specimen utilization plans.

The development test program status is summarized in Tables 2-4, 2-5, and 2-6. No qualification tests were initiated during this reporting period.

~~CONFIDENTIAL~~

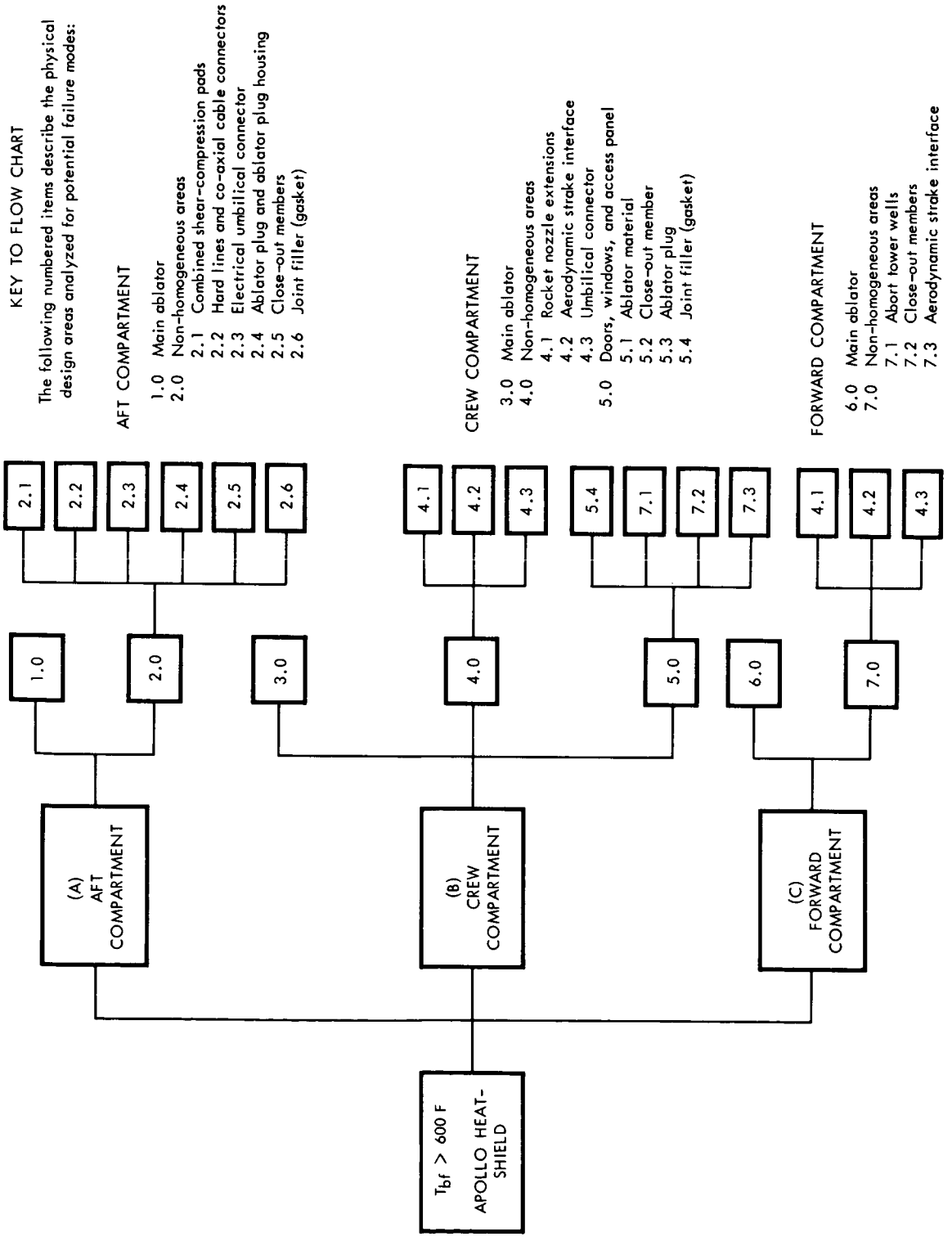

Figure 2-1. Command Module Failure Mode Logic Network

~~CONFIDENTIAL~~

Table 2-4. Structural Development Tests

Type of Test	Number of Specimens Planned	Number of Specimens Tested	Percent Completed
Cold soak evaluation	37	49	132
Flat panel reentry	16	8	50
Temperature gradient	21	18	86
Beams	8	2	25
Stress concentration	32	13	41
Curved panel reentry	16	2	12
Panel sequential & cyclic	68	45	66
Special design prob	9	3	33
Dynamic test	4	2	50
Repair evaluation	9	0	0
Total	220	142	65

Table 2-5. Thermal, Optical, and Ablation Tests

Type of Test	Number of Tests Planned	Number of Tests Completed	Completed
Thermal conductivity	367	126	34
Specific heat	137	47	34
Heat of degradation	35	4	11
Optical properties	279	50	18
Solar simulation	100	41	41

Table 2-5. Thermal, Optical and Ablation Tests (Cont.)

Type of Test	Number of Tests Planned	Number of Tests Completed	Percent Completed
Model 500 arc (Q* and ascent)	700	268	38
Overs stagnation heating	894	537	60
Overs two-dimensional	371	84	23
10-MW arc turbulent pipes	337	87	26
Sequential ablation	81	0	0
Total	3301	1244	38

Table 2-6. Mechanical Property Tests

Test	Number of Tests Planned	Number of Tests Completed	Percent Completed
Tensile	2660	1344	51
Compressive	1176	434	37
Shear	332	145	44
Thermal & moisture expansion	1024	329	32
Bond	1570	1361	87
Total	6762	3613	53

~~CONFIDENTIAL~~

Specific Development Tests

The cold-soak flat panel tests are representative of development tests. A series of cold-soak tests was conducted to evaluate adhesives for bonding the fiberglas honeycomb core to the stainless steel substructure. All of the bonds evaluated were epoxy-base, with the exception of one bond which was composed of a silicone rubber-orlon felt conposite. The epoxy bonds consisted of paste adhesives and a tape adhesive.

All of these tests were conducted on 18 x 18 inch panels consisting of ablator material bonded on both sides of a steel plate. In all cases, the panels were fabricated by first bonding 3/8-inch-cell fiberglass honeycomb core to both sides of the plate, followed by an oven cure of the bond. Avcoat 5026-39 material was then tamped into the cells of the fiberglas cores, followed by a cure and post cure of the entire panel. The ablator surfaces were then machined to various thicknesses, representing all those being used on the vehicle, to determine the effect of the thickness on the bond.

The tests showed that the epoxy paste adhesives did not survive the -260 F environment when used with the thicker ablator but did survive the test when used with the thinnest ablator (0.33 inches). The tape adhesive survived the -260 F environment for all panels tested, representing all of the ablator thickness variations from 0.33 to 1.80 inches. The silicone rubber-felt composite adhesive was tested only on the thickest ablator and survived the test.

Data Handling

Development test data are being organized to permit the best estimate of reliability related to the properties of heat shield materials. The preparation of development test data for electronic processing is continuing.

A series of IBM 1620 computer programs has been written to enable automatic statistical analysis of Apollo data.

SUBCONTRACTOR MANAGEMENT

Statistical methods were employed in the development of the Apollo adhesive-material system test program and associated design specification. The test data statistical design to determine an optimum test specimen for evaluating honeycomb materials was completed and will be reported when available.

~~CONFIDENTIAL~~

Statistical support effort is presently being expended to establish satisfactory pilot plant process control. Designed experiments are being used to establish process tolerances for the basic reference design materials so that design objectives are not compromised in the manufacturing effort. Pilot plant process techniques and operating equipment will be identical with those used by manufacturing, permitting a relatively smooth transition with minimum perturbations on the inherent quality and reliability of the heat shield.

PLANNED ACTIVITIES

Tests

Some significant tests to be accomplished during the next reporting period are:

1. Two flat panel specimens with removable door simulations
2. Five cold-soak evaluation specimens with edge closure members and with proposed honeycomb splice joints
3. Six beam specimens with 1-inch thick ablator on 1/2-inch stainless steel sandwich substructure
4. Three curved panels for hot soak, cold soak, and reentry
5. Abort tower well mock-up with ablator
6. One bolt plug panel specimen with two designs of bolt plugs

Studies

Rocket nozzle extensions and the aerodynamic strake interface are being studied for a later analysis.

Table 2-3. Heat Shield Failure Effects Analysis

Item	Drawing Number	Function	Failure Type	Cause	Mission Phase	Failure Effect On Heat Shield Performance	Failure Effect On Sub-Systems Performance	Failure Effect On Apollo	Possible Crew Action
Aft Compartment 1.0 Main ablator	LA-4583 LA-4939	In-plane tension	1.0.1 Discontinuous separations between honeycomb and ablator pencils	Thermal protection; honeycomb provides structural rigidity to ablator	(a) Lift off, boost, earth orbit, trans-lunar, lunar orbit, trans-earth	(a) Minor	(a) Minor	(a) Minor	If known, external in-flight repair of toroidal zone only; an abort mode from or after a return to an earth orbit; or no action
					(b) Atmospheric entry	(b) Local heat penetration; intensity depending on time in entry phase	(b) Minor to severe, depending on temperature extent and location	(b) Minor to catastrophic	
		In-plane tension	1.0.2 Discontinuous separation between honeycomb ribbons at node location		Same as 1.0.1 (a), (b)	Same as 1.0.1	Same as 1.0.1	Same as 1.0.1	Same as 1.0.1
		In-plane tension	1.0.3 Discontinuous separation of ablative material within cell		Same as 1.0.1 (a), (b)	Same as 1.0.1	Same as 1.0.1	Same as 1.0.1	Same as 1.0.1
		In-plane tension compression and cyclic loading	1.0.4 Continuous bond separation along cell perimeter		Same as 1.0.1 (a), (b)	Same as 1.0.1	Same as 1.0.1	Same as 1.0.1	Same as 1.0.1
		In-plane tension	1.0.5 Continuous separation encompassing several cells		Same as 1.0.1 (a), (b)	(a) Same as 1.0.1 (a) (b) General area heat penetration, intensity depending on time in entry phase	Same as 1.0.1	Same as 1.0.1	Same as 1.0.1
		In-plane compression	1.0.6 Ablator spalling		Same as 1.0.1 (a), (b)	(a) Same as 1.0.1 (a) (b) Excessive ablation rate; loss of thermal protection, rate, and degree depending on number of cells and time in entry phase	Same as 1.0.1	Same as 1.0.1	Same as 1.0.1

Table 2-3. Heat Shield Failure Effects Analysis (Cont)

Item	Drawing Number	Function	Failure Type	Cause	Mission Phase	Failure Effect On Heat Shield Performance	Failure Effect On Sub-Systems Performance	Failure Effect On Apollo	Possible Crew Action
		In-plane compression	1.0.7 Plastic yielding of ablator		Same as 1.0.1	Could be helpful by relaxing loads on the structure, but may cause separation failures	Same as 1.0.1	Same as 1.0.1	Same as 1.0.1
		Collision with LET at separation (toroidal zone)	1.0.8 Local damage due to outside sources with loss of ablator segments or types of 1.0.1 through 1.0.6		(a) Earth orbit	Depending on extent of damage, local to comprehensive loss of thermal protection capability	Minor to critical	None to catastrophic	(a) None, external repair or abort
		Collision, during LEM, CM transposition or rendezvous docking (toroidal zone)			(b) Trans-lunar, lunar orbit				(b) Same as 1.0.1
		Collision with SM at separation			(c) Trans-earth				(c) None
		Meteoroid impact (toroidal zone)			(d) Earth orbit, trans-lunar, lunar orbit, trans-earth				(c) Same as 1.0.7 (b)
		Normal tension	1.0.9 Honeycomb to sub-structure bond fails		Same as 1.0.1 (a), (b)	Minor if area is very limited, but ablator sections may fall away if unbonded areas are large or along panel edges; loss of thermal protection	(a) None to severe (b) None to critical	(a) None to severe (b) None to catastrophic	Same as 1.0.1
2.0 Nonhomo-geneous areas									
2.1 Combined shear compression pad	LA-4583 ACP-001-III	Excessive or improper preloading	2.1.1 Bearing failure of ablator pad at SM loading pad	Provide thermal protection for CM and SM attachment point	Lift off, boost	Loss of shear load resistance capability between SM and CM, reduced ablator thickness resulting in local overheating-this failure cannot be tolerated	Critical, also loss of local thermal protection during earth atmospheric entry	Catastrophic	Abort
		Normal compression	2.1.2 Ablator crushing at substructure interface		Lift off, boost	Loss of shear load resistance capability between SM and CM; local overheating—this failure cannot be tolerated	Same as 2.1.1	Catastrophic, ablator crushing at compression-loaded areas (no actual pad in these three areas) with possible tipping of SM	Abort

Table 2-3. Heat Shield Failure Effects Analysis (Cont)

Item	Drawing Number	Function	Failure Type	Cause	Mission Phase	Failure Effect On Heat Shield Performance	Failure Effect On Sub-Systems Performance	Failure Effect On Apollo	Possible Crew Action
		Excessive preload failure or cyclic loading	2.1.3 Separation of pad material from fiberglass ring		Lift off, boost	Loss of shear load resistance capability—this failure cannot be tolerated	Critical	Catastrophic	Abort
		Excessive preload, cyclic loading, excessive shear loads	2.1.4 Fiberglass locking ring separates or fractures		Lift off, boost	Loss of shear load resistance capability—this failure cannot be tolerated	Critical	Catastrophic	Abort
2.2 Hard lines and coaxial cable connectors	LA-4590	Improper removal of lines or cables during detachment of SM from CM	2.2.1 Tearing, fracture, and chipping of ablator about connection points	To provide entry points into CM for survival liquids and gases from SM storage areas	Transearth at earth atmospheric entry	Local heat penetration with progressive loss of ablator material	Minor to critical overheating	Minor to catastrophic	None
		Excessive tension or compression of ablator due to severe two-dimensional thermal stress and entry effects	2.2.2 Separation or separations in ablator		Transearth, earth atmospheric entry	Local heat penetration	Minor to critical overheating	Minor to catastrophic	None
		Leakage at connection areas	2.2.3 Corrosion or chemical reaction of line gases and/or liquids with ablator material		Lift off, boost, earth orbit, translunar, lunar orbit, transearth	Depending on what and how much leakage takes place, the damage can range from local overheating to severe loss of ablator material and excessive overheating during entry conditions.	Minor to critical	Minor to catastrophic	None
2.3 Electrical umbilical connector	LA-4583 LA-4590	Improper removal of connector; shear loading during removal; corroded pins	2.3.1 Ablator separation between pins	To provide physical connect-disconnect point for electrical circuit between CM and SM	Transearth at earth atmospheric entry	Local heat penetration	Minor to critical	Minor to catastrophic	None
		Normal tension; separation loads	2.3.2 Bond separation between ablator and connector framework		All	Serious heat penetration	Minor to critical	Minor to catastrophic	None
		Male connector is allowed to swing freely and collide with ablator material	2.3.3 Tearing, fracture, and chipping of ablator in or about connector		Transearth at earth atmospheric entry	Local heat penetration	Minor to critical	Minor to catastrophic	None
2.4 Ablator plug and ablator plug housing	LA-4592	Excessive preload	2.4.1 Fracture or separation of housing or plug	To provide thermal protection and access to aft compartment bolts	Lift off, boost, earth atmospheric entry	Local heat penetration	Minor to critical	Minor to catastrophic	None

Table 2-3. Heat Shield Failure Effects Analysis (Cont)

Item	Drawing Number	Function	Failure Type	Cause	Mission Phase	Failure Effect On Heat Shield Performance	Failure Effect On Sub-Systems Performance	Failure Effect On Apollo	Possible Crew Action
2.5 Close-out members	LA-4374 LA-4377 LA-4379 LA-4381 LA-4386 LA-4574 LA-4577 LA-4579 LA-4582 LA-4584	Loss of bond; thermal loading	2.5.1 Separation of honeycomb from outstanding leg	To provide a smooth edge to honeycomb filled ablator free edges	All	Gap may result between honeycomb and closure members, which may cause local heat penetration during reentry	Minor to critical	Minor to catastrophic	None
		Loss of bond; thermal loading	2.5.2 Separation of honeycomb from substructure leg		All	Complete separation of ablator from substructure may occur	Minor to critical	Minor to catastrophic	None
		Local expansion of ablator with respect to substructure at a free edge	2.5.3 Separation of gusset from closure member		All	As long as substructure bond holds, no over-all failure of ablator occurs	Minor to critical	Minor to catastrophic	None
		Thermal loading; loss of bond	2.5.4 Separation of substructure leg from substructure		All	Complete separation of ablator from substructure may occur	Minor to critical	Minor to catastrophic	None
2.6 Joint filler (gasket)	LA-4386	Mechanical and thermal loading	2.6.1 Permanent deformation	Thermal protection of compartment and panel interface gaps	All	Local overheating; erosion of ablator	Minor to critical	Minor to catastrophic	None
		Difference in ablator performances, i.e., filler material and RAD 5026-39 ablate at different rates	2.6.2 Erosion of ablator at interface edge		Earth atmospheric entry	Local overheating; char spalling	Minor to critical	Minor to catastrophic	None
		Thermal contraction produces large gaps	2.6.3 Gap between compartments filled with foreign particles including ablative material		Translunar, lunar orbit, transearth, earth atmospheric entry	Shear loading on close-out members and ablator during entry; local overheating	Minor to critical	Minor to catastrophic	None
3.0 Main ablator	LA-4386 LA-4589 LA-4944	Same as item 1.0	Same as item 1.0	Thermal protection	Same as item 1.0	Same as item 1.0	Same as item 1.0	Same as item 1.0	Same as item 1.0 except possible repairs over entire exposed area
4.0 Nonhomogeneous areas									
4.1 Rocket nozzle extension interface	ACP-001-I		Presently under study	Interface areas between AVCO ablator and NAA rocket extension					

Table 2-3. Heat Shield Failure Effects Analysis (Cont)

Item	Drawing Number	Function	Failure Type	Cause	Mission Phase	Failure Effect On Performance	Failure Effect On Sub-Systems Performance	Failure Effect On Apollo	Possible Crew Action
4.2 Aerodynamic strake interface	ACP-001-V		Presently under study	Interface areas between AVCO ablator and NAA aerodynamic strake					
4.3 Umbilical connector interface	ACP-001-IV		Not completely defined	Interface between AVCO ablator and NAA umbilical connector					
5.0 Doors, windows, and access panels	LA-4374 LA-4377 LA-4379 LA-4381 LA-4377 LA-4579 LA-4582 LA-4584								
5.1 Ablator material	Same as 5.0		Same as 1.0	Thermal protection	Same as 1.0	Same as 1.0	Same as 1.0	Same as 1.0	Same as 3.0
5.2 Close-out members	Same as 5.0	Same as 2.5	Same as 2.5	Same as 2.5	Same as 2.5	Same as 2.5	Same as 2.5	Same as 2.5	Same as 3.0
5.3 Ablator plug	LA-4573	Abusive handling during prelaunch checkout; thermal loading; bond degradation	5.3.1 Fracture, cracking, and separation of ablator plug or plugs	Thermal protection of fastener areas; provide means of gaining access to internal portion of CM	All	Local heat penetration	Minor to critical	Minor to catastrophic	If known, none with possible repair or abort from earth orbit
5.4 Joint filler (gasket)	Same as 2.6	Same as 2.6	Same as 2.6	Same as 2.6	Same as 2.6	Same as 2.6	Same as 2.6	Same as 2.6	Same as 2.6
Forward Compartment 6.0 Main ablator	LA-4946 LA-4380	Same as 1.0	Same as 1.0	Thermal protection	Same as 1.0	Same as 1.0	Same as 1.0	Same as 1.0	Same as 3.0
7.0 Nonhomogeneous areas									
7.1 Abort tower wells	ACP-001-VIIIa ACP-001-VIIIb	Thermal loading; heat shield collision with abort tower	7.1.1 Cracking of ablator material	Thermal protection of abort tower and CM interface areas	All	Local heat penetration	Same as 1.0	Same as 1.0	Same as 3.0
		Thermal loading, or mechanical load due to forward compartment separation during abort; abort tower collision with heat shield	7.1.2 Separation of ablator from substructure (bond failure)		All	This failure cannot be tolerated. Large areas of heat penetration during earth entry may occur.	Severe	Critical	None or abort
7.2 Close-out members	Same as item 2.5	Same as 2.5	Same as 2.5	Same as 2.5	Same as 2.5	Same as 2.5	Same as 2.5	Same as 2.5	Same as 3.0
7.3 Aero-dynamic strake interface	ACP-001-V		Presently under study	Same as 4.2					

CREW PROVISIONS

SUMMARY

During the last quarter, several significant changes were made in the waste management system. A backup valve between the control unit and space vacuum was added to improve reliability, and a check valve in the waste management blower exhaust line, downstream of the compartment vent system inlet, was included to meet the crew safety requirement. The resulting revised logic diagram (Figures 2-2 and 2-3) and failure effects analysis (Table 2-7 shown at the end of this section) were completed.

ANALYSIS

Subsequent to cabin depressurization, only the storage ventilating circuit check valve prevented loss of the environmental control system (ECS) suit circuit pressure to space. Consequently, this check valve, considering reliability logic for crew safety, was in series with the ECS suit circuit. An analysis indicated that the apportioned crew safety requirement of 0.999931 for the ECS suit circuit could not be achieved with the single ventilating check valve configuration. The reliability of check valves of the type considered, using state-of-the-art failure rates, was 0.99966. It was suggested to Engineering that another check valve of the same type be added in functional series with the first. This resulted in an analytically parallel arrangement for reliability calculations and a reliability of 0.999999 for the primary failure mode of fail open. The design group agreed to add a similar check valve in the waste management blower exhaust line, downstream of the compartment vent system inlet.

The current reliability summary is shown in Table 2-8; the apportioned and predicted reliability values and failure rates are shown in Table 2-9.

The failure effects analysis indicates that any first order system component failure would not lead to a mission abort, although it could necessitate storing urine onboard. In the event of cabin depressurization, failure of the added ECS check valve plus failure of either the ventilating circuit check valve or the waste management system control unit must occur before the crew is endangered by loss of suit pressure through the waste management system or the compartment ventilating system.

~~CONFIDENTIAL~~

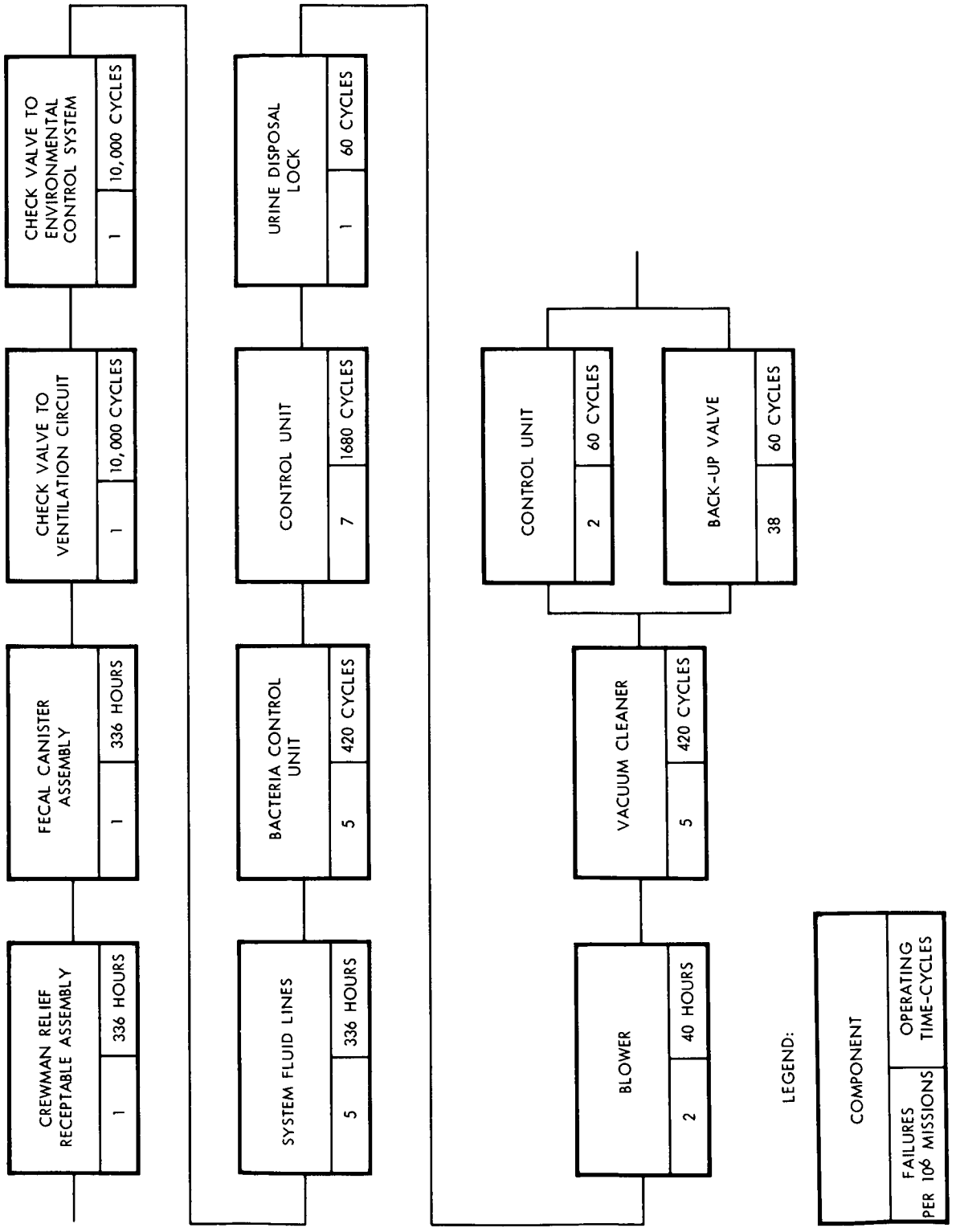

Figure 2-2. Waste Management System Logic Diagram

~~CONFIDENTIAL~~

~~CONFIDENTIAL~~

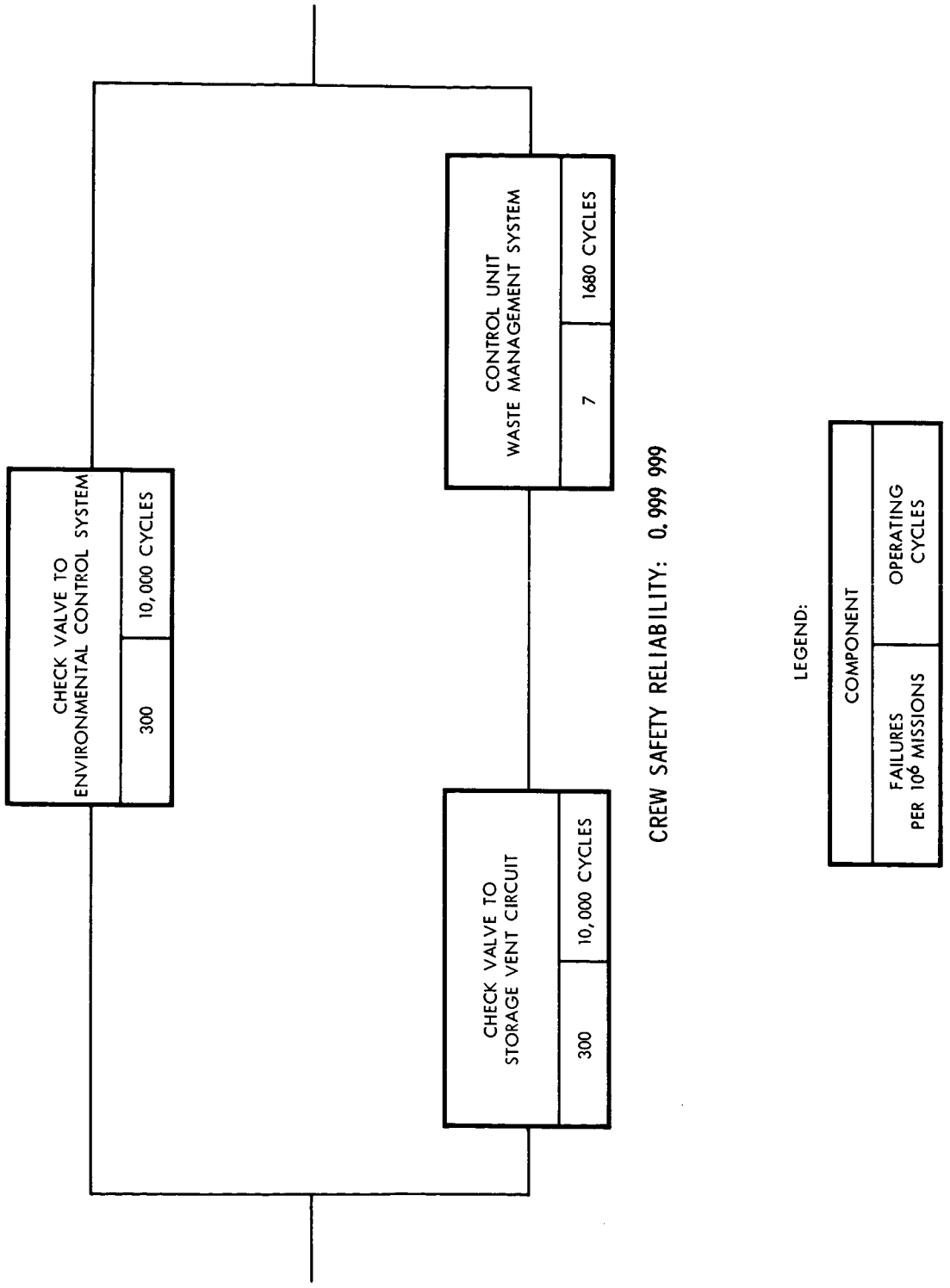

Figure 2-3. Waste Management System Crew Safety Logic Diagram

~~CONFIDENTIAL~~

Table 2-8. Waste Management System Reliability Summary

Reliability	Mission Success	Crew Safety
Required	0.999965	0.999998
State-of-the-art	0.9987	0.999999
Predicted through development	0.99997	0.999999

SPECIAL STUDIES

A failure effects analysis was made for the spacecraft crew couches. This analysis revealed the necessity for successful operation of the crewman's restraint harness and the center couch support pins. If either device cannot be removed, a lunar mission is not possible. Therefore, it is essential that these devices function properly to ensure mission success. A complete description of the crew couch and attenuation failure effects analysis is shown in Table 2-10 at the end of this section.

As detail design of the crew couches progresses, analyses will be made to assure a high probability of successful operation. Upon completion of the design, a failure effects analysis to the component level will be made.

TEST PROGRAM

General Test Program Status

The qualification test section of the Apollo General Test Plan, SID 62-109, was revised during this report period. Revisions included detailed test schedules and test specimen utilization plans.

The development test program is estimated to be 15-percent complete. Qualification tests have not been initiated in any area.

Table 2-9. Waste Management System Apportioned and Predicted Reliability Values and Failure Rates

Component	Unreliability (apportioned)	Reliability (apportioned)	Failure Rate x 10^{-6} Apportioned	Unreliability (Predicted)	Reliability (Predicted)	Failure Rate x 10^{-6} (Predicted)
Bacteria Control Unit	0.000 005	0.999 995	0.012 F/cycles	0.000 060	0.999 94	0.18 F/hours
Ventilating Check Valve (Vent System)	0.000 3	0.999 7	0.03 F/cycles	0.000 772	0.999 228	2.3 F/hours
Ventilating Check Valve (ECS)	0.000 3	0.999 7	0.03 F/cycles	0.000 772	0.999 228	2.3 F/hours
Urine Disposal Lock	0.000 001	0.999 999	0.017 F/cycles	0.000 060	0.999 94	0.18 F/hours
Control Unit	0.000 023	0.999 977	0.023 F/cycles	0.000 370	0.999 63	1.1 F/hours
Backup Valve	0.000 038	0.999 962	0.63 F/cycles	0.000 038	0.999 962	0.112 F/hours
Vacuum Cleaner	0.000 005	0.999 995	0.012 F/cycles	0.000 005	0.999 995	0.012 F/cycles
Blower	0.000 01	0.999 99	0.03 F/hours	0.000 096	0.999 904	2.4 F/hours
Fluid Lines	0.000 005	0.999 995	0.015 F/hours	0.000 680	0.999 32	2.02 F/hours
Crewman Relief Receptable Assembly	0.000 001	0.999 999	0.003 F/hours	0.000 001	0.999 999	0.003 F/hours
Fecal Canister Assembly	0.000 001	0.999 999	0.003 F/hours	0.000 001	0.999 999	0.003 F/hours
Fecal-Emesis Bag (Set)						
Crewman Relief Receptable Assembly Liner						

Specific Development Tests

1. Waste Drinking Water Evaluation Test
2. LES Boilerplate 6 Simulator—Human Engineering Test
3. Controls and Display Operational Evaluation
4. Pressure Suit with Subject Versus Crew Couch Seat Pan Operation
5. Pressure Suit With Subject Versus Fixed Crew Couch Feasibility
6. Pyrotechnic Initiator Simulator Set for Boilerplate 6—Human Engineering Test
7. Handling and Auxiliary GSE for Boilerplate 6—Human Engineering Test
8. CM Hatch Removal and Crew Egress, Post Landing—Human Engineering Test
9. Lower Equipment Bay Electronic Modules, In-Flight Maintenance and Replacement—Human Engineering Test
10. Fuel Handlers Protective Suit Evaluation Test
11. Space and Time Requirements Test for Donning Pressure Suits
12. Transposition and Docking Simulation Effects
13. Handhold Configuration Evaluation for Access To and From Crew Couch

Details of some significant tests conducted during this report period follow.

Waste Drinking Water Evaluation Test

An evaluation test of waste water for drinking purposes was conducted on 5 April 1963. A test subject, wearing a Mark IV pressure suit, was used for the collection of waste water (evaporated and filtered perspiration). The pressure suit was vented with compressed air at a flow rate of about 6 ft^3 per minute. The air flow coming out of the suit passed through a lithium hydroxide (Li OH)-activated charcoal filter and into an acetone and dry ice cold trap. Approximately 250 ml of frozen-out evaporated perspiration was

[redacted]

collected. Bacteriological and chemical analyses of collected waste materials are being performed.

CM Hatch Removal and Egress Test

A test was conducted to determine the requirements and procedures for hatch removal and crew egress through the normal access hatch of the command module (boilerplate No. 2) during postlanding operations. A test subject, fitted in an unpressurized ILC pressure suit, was required to remove and stow the inner door of the access hatch and simulate opening of the outer door. These procedures were conducted with the command module in the vertical and capsized positions. Results indicated that although the inner hatch could be removed and stowed by one crewman, the weight (52 pounds) and limited clearances imposed excessive stress on the crewman. Photographic and motion picture coverage were provided. Test results are available.

Handhold, Side Arm Controller and Arm Rest Tests

A test to evaluate comparative "handhold" configurations for assisting access to and from the crew couch was conducted on 27 May 1963. Four different handholds in two different combinations, designated HC-1 and HC-2, were investigated. The HC-1 configuration proved superior and is recommended for further investigation. A memo report of the test is available.

A test to demonstrate problems associated with side-arm controller location and arm-rest design was conducted on 28 May 1963. The demonstration was conducted within the framework of the new fixed couch configuration as mocked-up in the Life Systems work-space analyzer.

The results showed major difficulties in manipulating the control with the subject wearing a pressurized garment (pressurized to 3.5 psid). Further study and redesign are indicated. Test results are available.

PLANNED ACTIVITIES

It is anticipated that the many unresolved problem areas of the waste management system will necessitate revision and/or replacement of effected configuration and components. As these considerations develop the necessary reliability analysis and backup studies will be performed.

[redacted]

Table 2-7. Waste Management, Crew Provisions Failure Effects Analysis

Item	Specification Number	Elect. Reference Desig.	Failure Detection	Function	Failure Type	Mission Phase	Failure Effect On Component Performance	Failure Effect On Sub-Systems Performance	Failure Effect On Apollo	Possible Crew Action
Bacteria control unit	MC901-0027			Storage container for germicidal agent, meters germicidal agent	Germicidal agent not entering urine stream at all or entering at a rate that prematurely depletes the supply	Flight phases	Degraded component performance	Untreated urine could be discharged to space. At present there is no method of determining if the urine is being treated.	None	None
					Case or joint leaks	Flight phases	Degraded component performance		None	None
Urine disposal lock	MC901-0029			Collects and retains urine from the urine nozzle, separates the gases from the liquid	Inoperative (plugging)	Flight phases	Inoperative	Would not allow urine collection for disposal to space	None	Would necessitate storing urine on board
					Case or joint leaks	Flight phases	Degraded component performance perhaps to an inoperative condition	Would not allow urine collection for disposal to space	None	Would necessitate storing urine on board
Blower	MC901-0030			Supplies the airflow requirements for the waste management system	Failure of control unit switch or blower motor	All	Inoperative	Cannot move fluids through waste management system on urine-feces control unit position. Cannot operate vacuum cleaner. Odors would disperse throughout the CM.	None	Would necessitate storing urine on board
Ventilating check valves (one in storage compartment ventilation circuit, one in waste management blower exhaust line)	MC284-0050			To preclude loss of suit pressure through the vent or waste management systems during cabin decompression	Fail open	All	Cannot control flow through the valve	None (provided redundant check valve does not fail)	None (provided redundant check valve does not fail)	None
					Fail closed	All	Cannot control flow through the valve	Cannot vent storage facilities	None	Crew could don spacesuits if odor became excessive.
Control unit (selector valve plus switching)	MC901-0025			Actuates the blower and permits the required fluid and airflow through the selector valve. A urine overboard position initiates urine ejection	Switch failure	Flight phases	Cannot operate blower	Cannot operate blower for vacuum cleaner or urine-feces control valve positions	None, general housekeeping not possible	Would necessitate storing urine on board

Table 2-7. Waste Management, Crew Provisions Failure Effects Analysis (Cont)

Item	Specification Number	Elect. Reference. Desig.	Failure Detection	Function	Failure Type	Mission Phase	Failure Effect On Component Performance	Failure Effect On Sub-Systems Performance	Failure Effect On Apollo	Possible Crew Action
					Selector valve failure	Flight phases	Inoperative	Inability to perform some or all of waste management system functions	None	Would necessitate storing urine on board
Backup valve	MC901-0068			Serves as redundant to the selector valve on the urine overboard line	Fail open	Flight phases	Cannot control flow through the valve	None (provided control unit does not fail)	None (provided control unit does not fail)	None
					Fail closed	Flight phases	Cannot control flow through the valve	Cannot eject urine overboard	None	Would necessitate storing urine on board
Vacuum cleaner	MC901-0024			Collects, filters, and retains debris from within the command module	Plugging	Flight phases	Inoperative	Could not collect debris from CM	None	None
Fecal cannister assembly				Feces collection	Structural	Flight phases	Could render component inoperative	Fecal odor could permeate cabin.	None	None
Crewman relief receptacle assembly (includes valve for use during urination)				Urine collection	Valve fails open	Flight phases	Valve control function is lost.	Air flow through urine line during use of fecal cannister could deplete germicidal agent.	None	Crew could plug the relief nozzle by other means.
					Valve fails close	Flight phases	Valve control function is lost.	Would necessitate storing urine on board	None	Would necessitate storing urine on board

Table 2-10. Couches, Crew Provisions Failure Effects Analysis

Item	Specification Number	Cause	Function	Failure Type	Mission Phase	Failure Effect On Component Performance	Failure Effect On Sub-Systems Performance	Failure Effect On Apollo	Possible Crew Action
Couch strut		Severe landing shock	Attenuation	Bottoms out	Earth landing	No further attenuation	Couch loads exceed 20 g's.	Possible injury to one or more crewmen	None
Strut piston		Cylinder damaged from accidental blow and ruptured by internal forces	Transfers couch loads to honeycomb	Binds or sticks in cylinder	Earth landing	Piston remains locked until sticking force is exceeded by landing g loads.	Couch will experience loads exceeding 20 g's for small time increment.	Possible injury to one or more crewmen	None
Piston rod strut cylinder and associated strut, CM-couch connections		Severe or unusual landing condition or structural flaw	Maintains link between couch, CM structure, and strut	Fails in tension	Earth landing	No further attenuation	Couch loses attenuation; unsymmetrical loading imposed	Possible injury to one or more crewmen	None
Foot and leg rest		Severe landing	Provides support for legs and feet	Hits instrument panel	Earth landing	Leg rest pivots and allows crewman's legs to move into a fetal position.	Couch integrity not affected by folding leg rest.	Crewman's legs absorb shock, resulting in possible injury to feet and lower legs.	None
		Severe landing		Hits instrument panel and does not pivot	Earth landing	Leg rest remains in a fixed position.	Couch transmits shock to crewman's body.	Chance of injury to crewman's internal organs as well as feet and legs	None
Lockout mechanism (one on each X-X strut)		Accidentally tripped	Locks out X-X struts to preserve honeycomb for earth landing	Releases lockout roller before main chutes open (a) One strut released	Any phase	Couch is retained by three rigid struts.	No attenuation lost	No effect	None, mechanism cannot be reset.
				(b) 2, 3, or all 4 struts released	Any phase	Struts will not stroke until a force of 20 g's is applied. G loads from liftoff (7 g's) and opening of main chutes (8 to 15 g's) should have no effect. Abort and reentry may impose loads as high as 20 g's; hence there is a chance of slight attenuation loss for these conditions.	Little, if any, loss of attenuation	Should not affect normal landing	None - mechanism cannot be reset
		Jammed		Fails to release one or more struts.	After main chutes have dereefed	Struts automatically tripped by 25 g load.	Negligible time delay and onset rate increase	No noticeable affect on crewmen.	Release by working lever or striking mechanism
		Blackout injury		Crew unable to manually release lockouts.	After main chutes have dereefed	Struts automatically tripped by 25 g load.	Negligible time delay and onset rate increase	No noticeable affect on crewmen.	None

Table 2-10. Couches, Crew Provisions Failure Effects Analysis (Cont)

Item	Specification Number	Cause	Function	Failure Type	Mission Phase	Failure Effect On Component Performance	Failure Effect On Sub-Systems Performance	Failure Effect On Apollo	Possible Crew Action
Center couch pins (8)		Binding caused by deformation.	Ties couch to frame; allows removal and replacement of center couch	Pin cannot be removed.	Earth orbit and trans-lunar	Pin remains wedged in locked position.	Crew unable to perform guidance and navigation measurements or in-flight maintenance (removal of electronic modules in lower equipment bay).	Mission failure abort necessary	Pry or force pin loose
		Damage to pin surface, misalignment of holes caused by damage to couch.		Pin cannot be replaced.	Before reentry		Couch support weakened slightly by loss.	Loss of one pin should not affect structural integrity for a normal landing	None unless there is a spare or substitute part
		Severe landing loads that exceed shear strength of pins.		Shear during attenuation (a) 4 pins on one side (b) 4 pins on one end (c) all 8 pins	Earth landing		Couch no longer joined to frame will strike floor of CM.	Fatal injury to center crewman is almost certain.	None
Chest-shoulder strap release		Latch failure	Locks and releases retraint harness for upper half of body	Premature release	Boost	Straps disengage from central release device.	Loss of restraint for upper half of body	No effect for normal boost	Refasten straps if g loads and functions permit
		Latch failure		Premature release	Pad or low altitude abort	Straps disengage from central release device.	Loss of restraint for upper half of body	Chance of serious injury to crewman from g loads encountered during abort and landing phases.	Probably none; aborts from pad or low altitude do not allow time for refastening straps.
		Latch failure		Fails to release restraint harness	Prior to earth landing	Straps disengage from central release device.	Loss of restraint for upper half of body	Chance of serious injury to crewman from landing g loads.	Refasten straps if time permits
					Earth orbit or trans-lunar	Harness remains secured to latch.	Crewman is unable to unstrap himself from couch.	Reduces mission time to a maximum of 2 days or less. Extended earth orbit or lunar missions not possible.	None
		Latch failure		Fails to release restraint harness	Post-landing	Harness remains secured to latch.	Crewman is unable to unstrap himself from couch.	No effect	Straps can be cut loose.

Table 2-10. Couches, Crew Provisions Failure Effects Analysis (Cont)

Item	Specification Number	Cause	Function	Failure Type	Mission Phase	Failure Effect On Component Performance	Failure Effect On Sub-Systems Performance	Failure Effect On Apollo	Possible Crew Action
Shoulder strap, chest strap, hip strap		Severe g load imposed by crewman, strap weakened by accidental cut.	Retain crewman in couch	Fabric fails in tension (any one strap) or strap-end retainer is ripped out of common release.	Earth landing	Loss of restraint due to broken strap	Remaining straps will absorb and distribute load on crewman.	Provided maximum g-load limits are not exceeded, fatal injury to crewman is unlikely as long as the remaining straps hold.	None
Leg strap		Severe g load imposed by crewman, strap weakened by accidental cut	Restraint for legs	Fabric fails in tension (any one strap) or strap-end retainer is ripped out of common release.	Earth landing	Loss of restraint due to broken strap	Couch foot brace prevents legs from losing restraint.	Injury to legs is not likely.	None

[redacted]

CRYOGENIC STORAGE

SUMMARY

Reliability studies of various design changes have been performed during the past quarter to determine the effects of these changes on the cryogenic storage system (CSS) reliability. In addition, the CSS failure-effects and reliability analyses have been revised. Description of these revised analyses is presented herein with accompanying logic diagrams. Also presented is a summary of two special reliability studies, one performed to determine the effect on system reliability when motor switches are used in the heater control circuit, and another performed to determine the effect of heater design change on system reliability. Pertinent subcontractor documents received are listed at the end of this report.

ANALYSIS

The failure effects analysis was improved during the reporting period to include the CSS failure-detection system (Table 2-11 at the end of this section). The failure-detection column shown in the failure effects analysis report (FEA) aids in determining the adequacy of the instrumentation system.

Failure detection is directly related to failure mode and abort criteria determination. It is not possible to make a decision on a failure unless the failure is detected. Therefore, the addition of failure detection to the analysis has improved the FEA considerably.

RELIABILITY/CREW SAFETY DESIGN REVIEWS

A design review board convened during the reporting period. Several agenda items were discussed at the meeting; the following were referred for further action:

1. The present methods of weld inspection are considered inadequate. Difficulty was encountered in taking good X-ray photographs because of the equipment installed in the vessel. Dye-penetrant inspection is prohibited as it forms an explosive mixture with oxygen. Further investigation of the inspection methods will be performed.

   ACTION - The study was cancelled because the heater configuration is being redesigned, and 100-percent visual and X-ray inspection will be possible.

~~CONFIDENTIAL~~

Table 2-12. Failure Rate and Reliability Data (Based on AVCO failure rates adjusted to the critical failure mode of each component)

Component	Symbol	Failure Rate x 10^{-6} (hr or cs)
Check valve	CV	0.0001
Tank	T	0.08
Solenoid valve	SV	0.0003
Relief valve	RV	0.96
Disconnect	D	0.01
Lines	L	0.0017
Fittings	F	0.00077
Pressure transducer	PT	35.0
Indicator gage	I	4.0
Signal conditioner	SC	3.11
Density probe	DP	2.63
Temperature probe	TP	3.3
Heater element	H	0.05
Pressure switch	PS	0.14/cs
Motor switch	MS	0.19/cs
Manual switch	S	0.06/cs
Heater fan	HF	0.359
CS - Contact Set		

2. A hazard exists if the crew members are out of their suits when an emergency flow occurs. Extremely cold gas may burn crew members under these circumstances. A surge tank installation is being considered to solve the problem.

   ACTION - The design was revised to include a surge tank. In the event of an emergency flow situation, the gas from the surge tank floods the CM and the cold gas remains in the cryogenic storage vessels.

3. Relief valves do not indicate overboard venting of gas.

   ACTION - No position indicators are necessary. The present system provides two visual means for the crew to detect a rise in pressure before the relief valve opens. The quantity gage indicates any excessive use of H_2 or O_2.

4. Stratification of the fluid in the storage vessel causes inaccuracies in the quantity indicating system.

   ACTION - The heater design was revised to assure a flow of homogeneous fluid over the quantity sensors.

Following are the crew safety and mission success reliability results based on the logic diagrams and failure-rate data given in Table 2-12 and Figures 2-4 and 2-5.

Crew Safety - 0.999999

Mission Success - 0.999627

SPECIAL STUDIES

Utilization of Motor Switches in the Heater Control Circuit (O_2 Only)

The installation of two motor switches in the heater control circuit to facilitate the use of No. 20 wire and avoid the use of No. 12 wire in the CM/SM umbilical was prepared. A reliability analysis was performed to determine the effect of the change on system reliability. Results indicated

that a negligible reliability degradation of two failures per million missions would accompany the change.

Revised Heater Configuration - Cryogenic Storage System

A reliability analysis was performed on a proposed replacement of the electroplated spherical heaters with a cal-rod heating element and two electric-motor-driven circulating fans.

The revised heating unit contains the following components and is subject to the following ground rules:

1. Components

   a. Nichrome wire heating element installed in an aluminum casing packed with insulating material. Outside diameter of the casing is 1/8 inch. Length of the rod is approximately equal to the inside diameter of the tank.

   b. Two electric-motor-driven fans installed at one end of the heating element direct the flow over the length of the element.

2. Ground Rules

   a. Failure of both fans in one vessel results in mission abort.

   b. The heating element is operated and controlled by the automatic and manual circuits presently used to control the electroplated spherical heaters. The heating element and fans operate at the same time, since they are wired in parallel in the same control circuit. The fans and heating element operate independently by manual control; for example, the crew operates the fans while the heater is off in order to mix the fluid and to ensure accurate quantity and temperature readings.

   c. Stratification of the fluid may cause inaccurate quantity and temperature readouts.

The results of the reliability analysis indicate slight degradation of system reliability as a result of the proposed change. The degradation (0.000024), however, did not decrease system reliability below the reliability objectives. Several advantages to be gained by using the proposed

~~CONFIDENTIAL~~

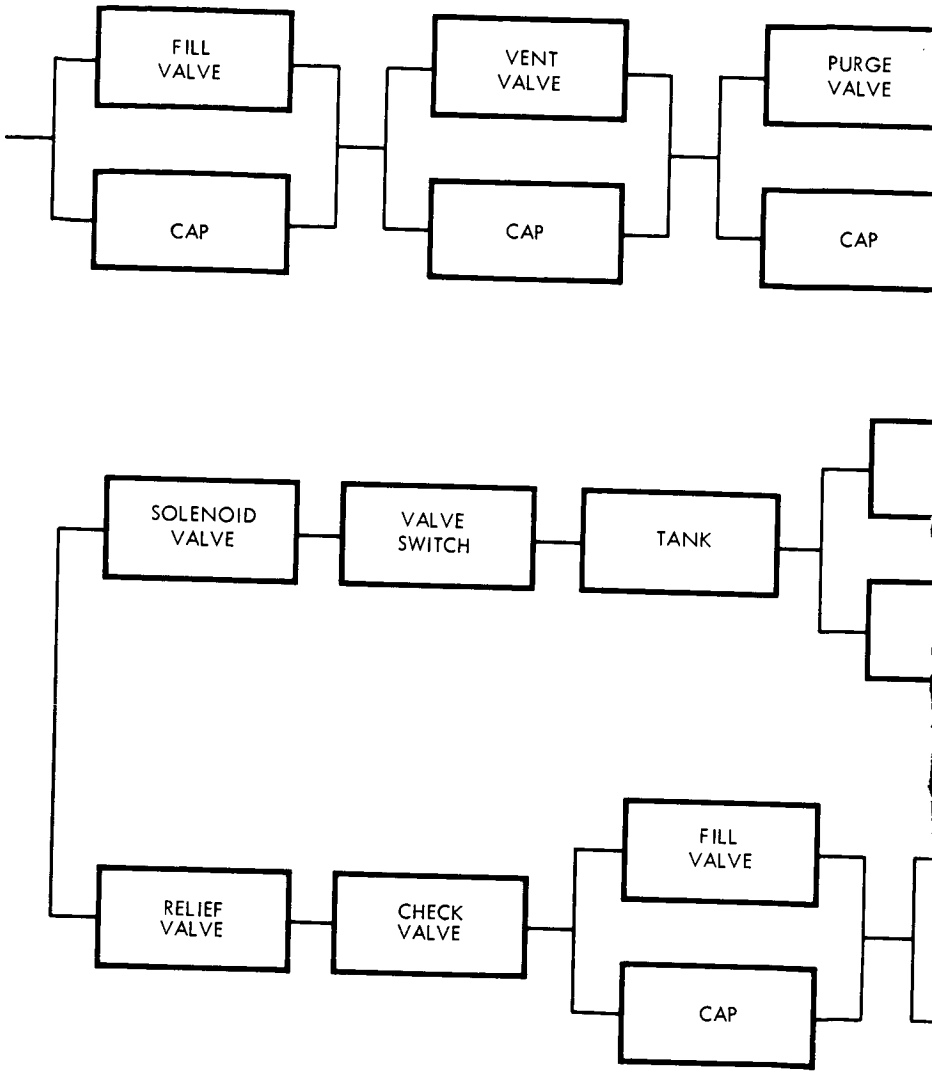

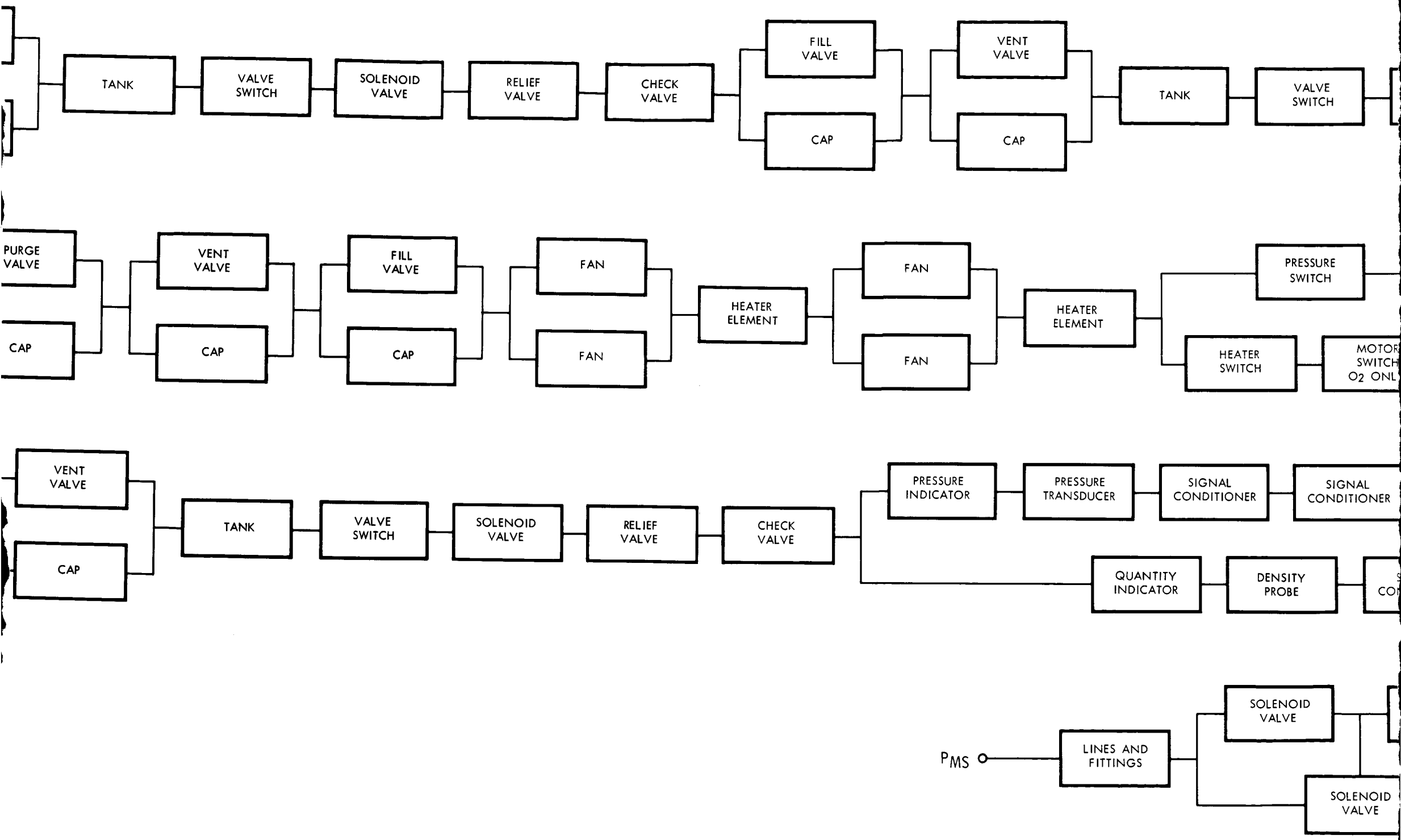
TANK
VALVE SWITCH
SOLENOID VALVE
RELIEF VALVE
CHECK VALVE
FILL VALVE
CAP
VENT VALVE
CAP
TANK
VALVE SWITCH
PURGE VALVE
CAP
VENT VALVE
CAP
FILL VALVE
CAP
FAN
FAN
HEATER ELEMENT
FAN
FAN
HEATER ELEMENT
PRESSURE SWITCH
HEATER SWITCH
MOTOR SWITCH O2 ONL
VENT VALVE
CAP
TANK
VALVE SWITCH
SOLENOID VALVE
RELIEF VALVE
CHECK VALVE
PRESSURE INDICATOR
PRESSURE TRANSDUCER
SIGNAL CONDITIONER
SIGNAL CONDITIONER
QUANTITY INDICATOR
DENSITY PROBE
PMS
LINES AND FITTINGS
SOLENOID VALVE
SOLENOID VALVE

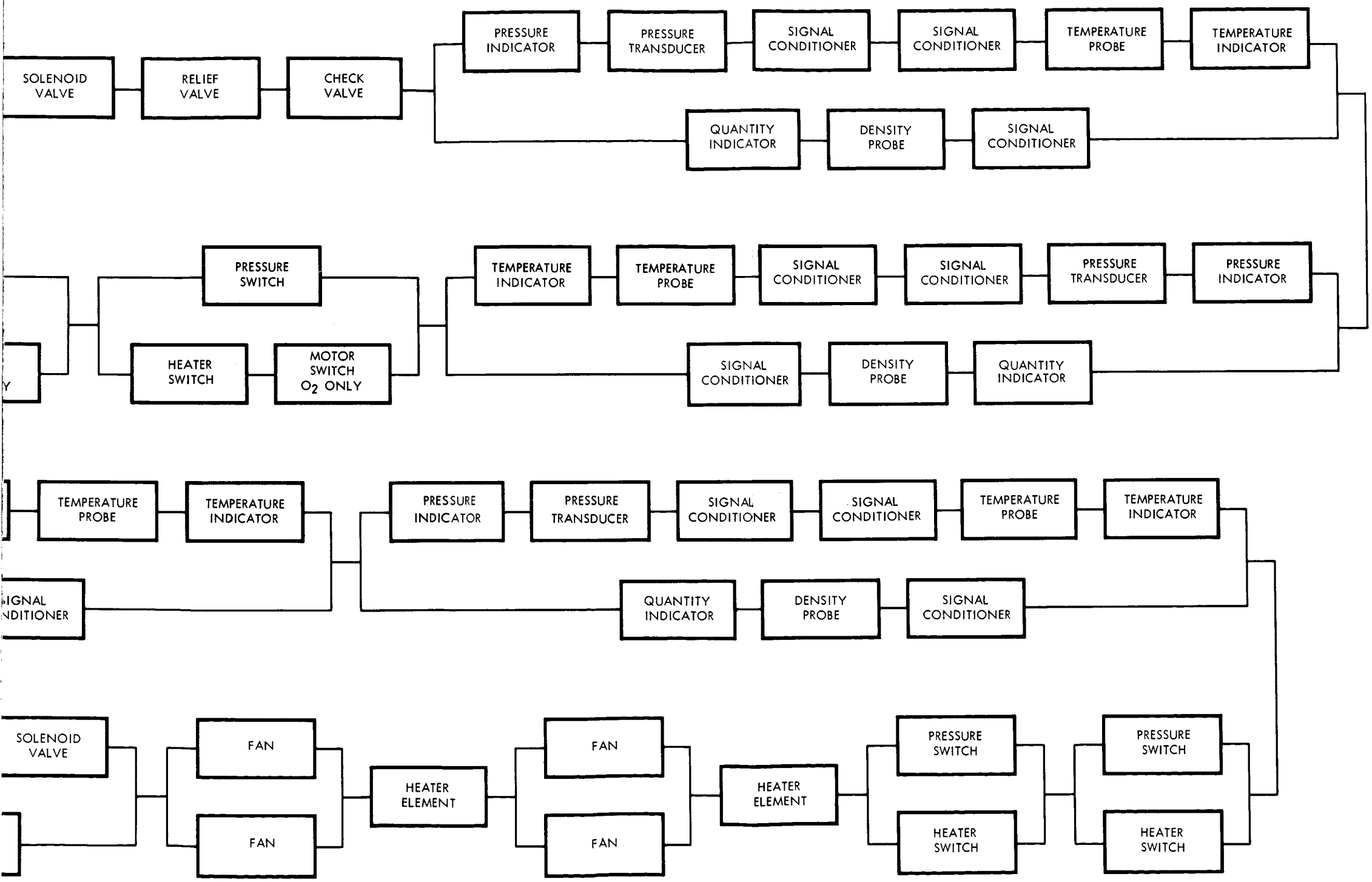

Figure 2-4. Cryogenic Storage - Mission Success Logic Diagram

~~CONFIDENTIAL~~

~~CONFIDENTIAL~~

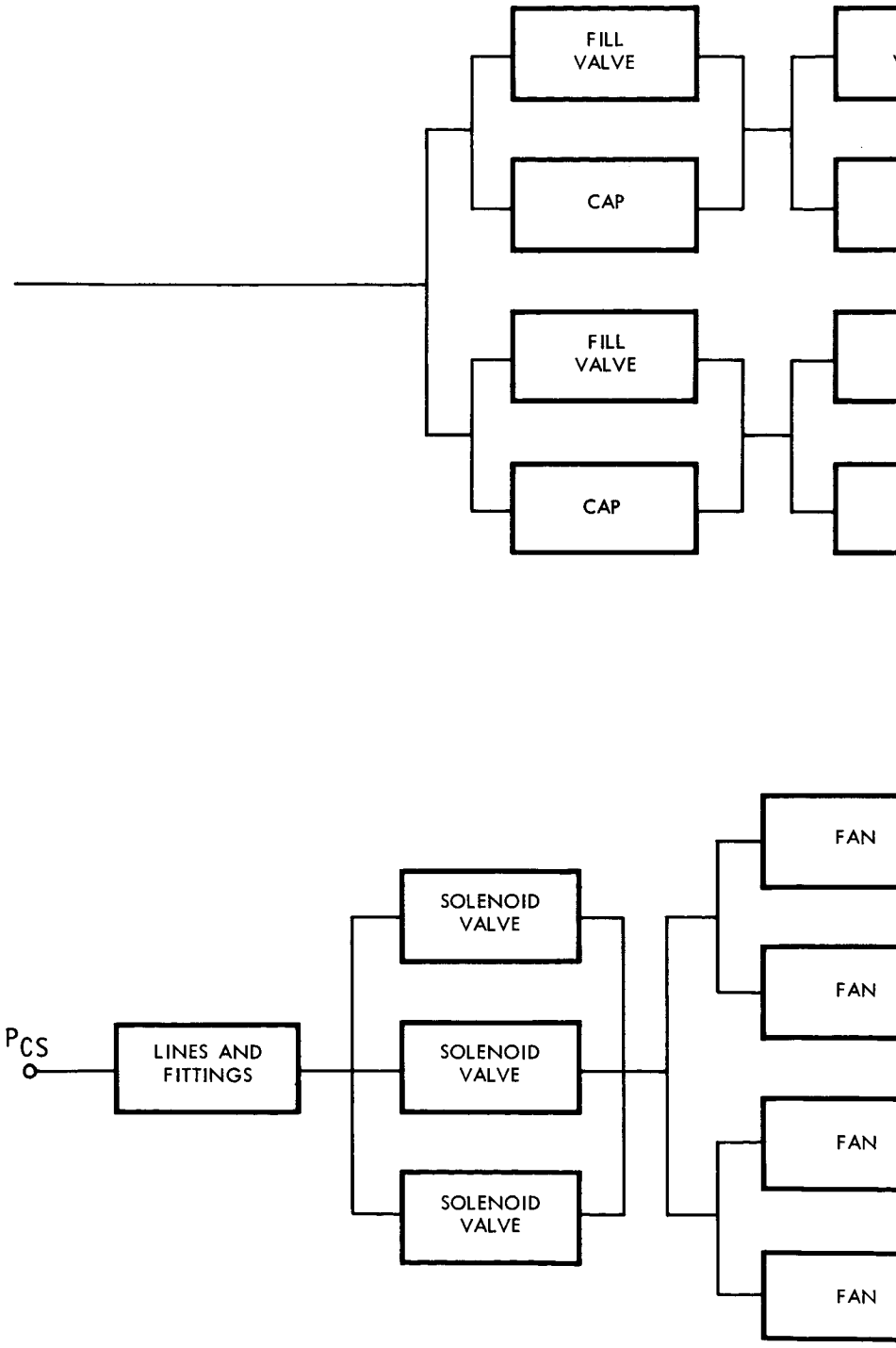

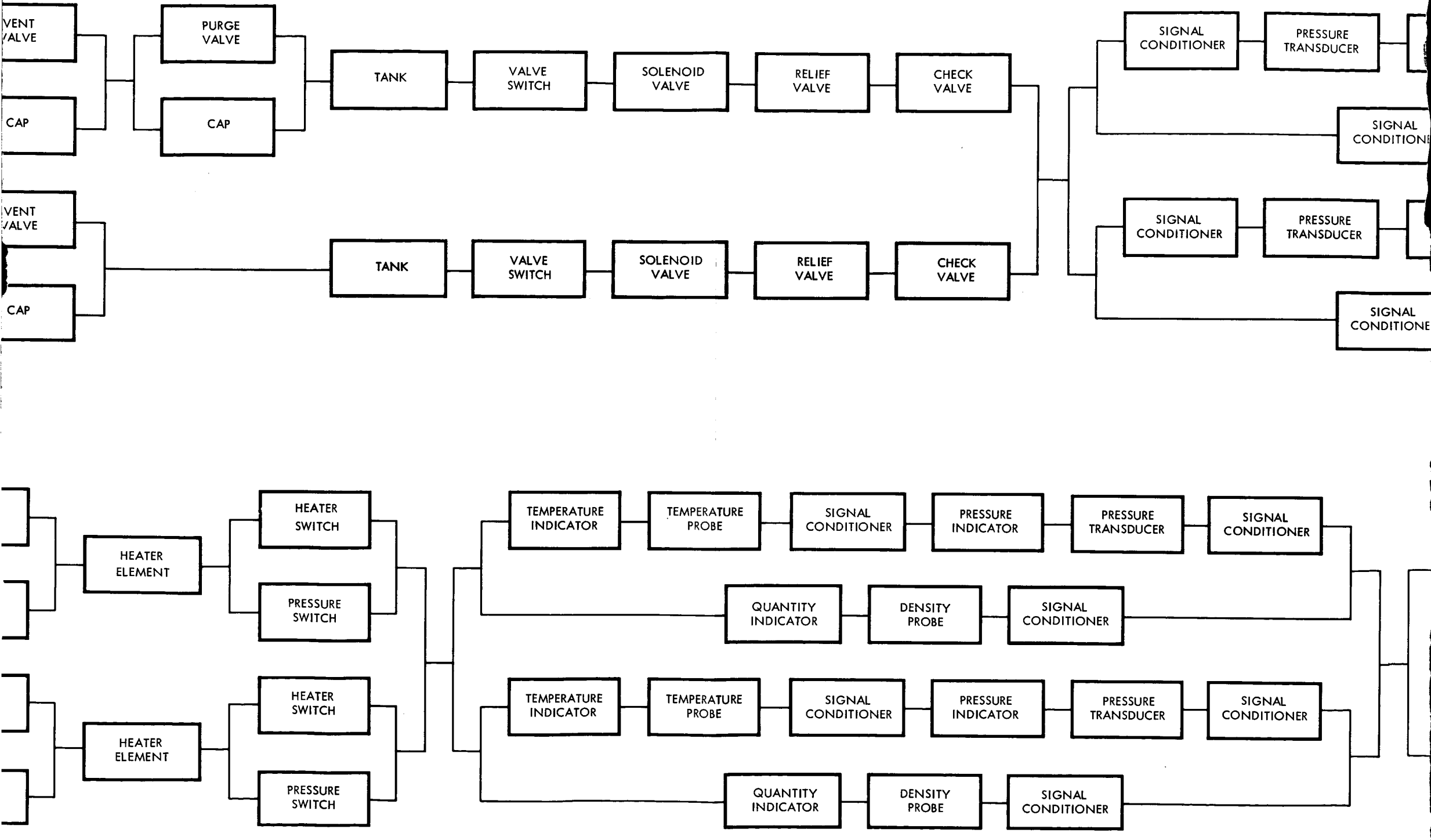
VENT VALVE
CAP
PURGE VALVE
CAP
TANK
VALVE SWITCH
SOLENOID VALVE
RELIEF VALVE
CHECK VALVE
SIGNAL CONDITIONER
PRESSURE TRANSDUCER
SIGNAL CONDITIONE
VENT VALVE
CAP
TANK
VALVE SWITCH
SOLENOID VALVE
RELIEF VALVE
CHECK VALVE
SIGNAL CONDITIONER
PRESSURE TRANSDUCER
SIGNAL CONDITIONE
HEATER ELEMENT
HEATER SWITCH
PRESSURE SWITCH
HEATER ELEMENT
HEATER SWITCH
PRESSURE SWITCH
TEMPERATURE INDICATOR
TEMPERATURE PROBE
SIGNAL CONDITIONER
PRESSURE INDICATOR
PRESSURE TRANSDUCER
SIGNAL CONDITIONER
QUANTITY INDICATOR
DENSITY PROBE
SIGNAL CONDITIONER
TEMPERATURE INDICATOR
TEMPERATURE PROBE
SIGNAL CONDITIONER
PRESSURE INDICATOR
PRESSURE TRANSDUCER
SIGNAL CONDITIONER
QUANTITY INDICATOR
DENSITY PROBE
SIGNAL CONDITIONER

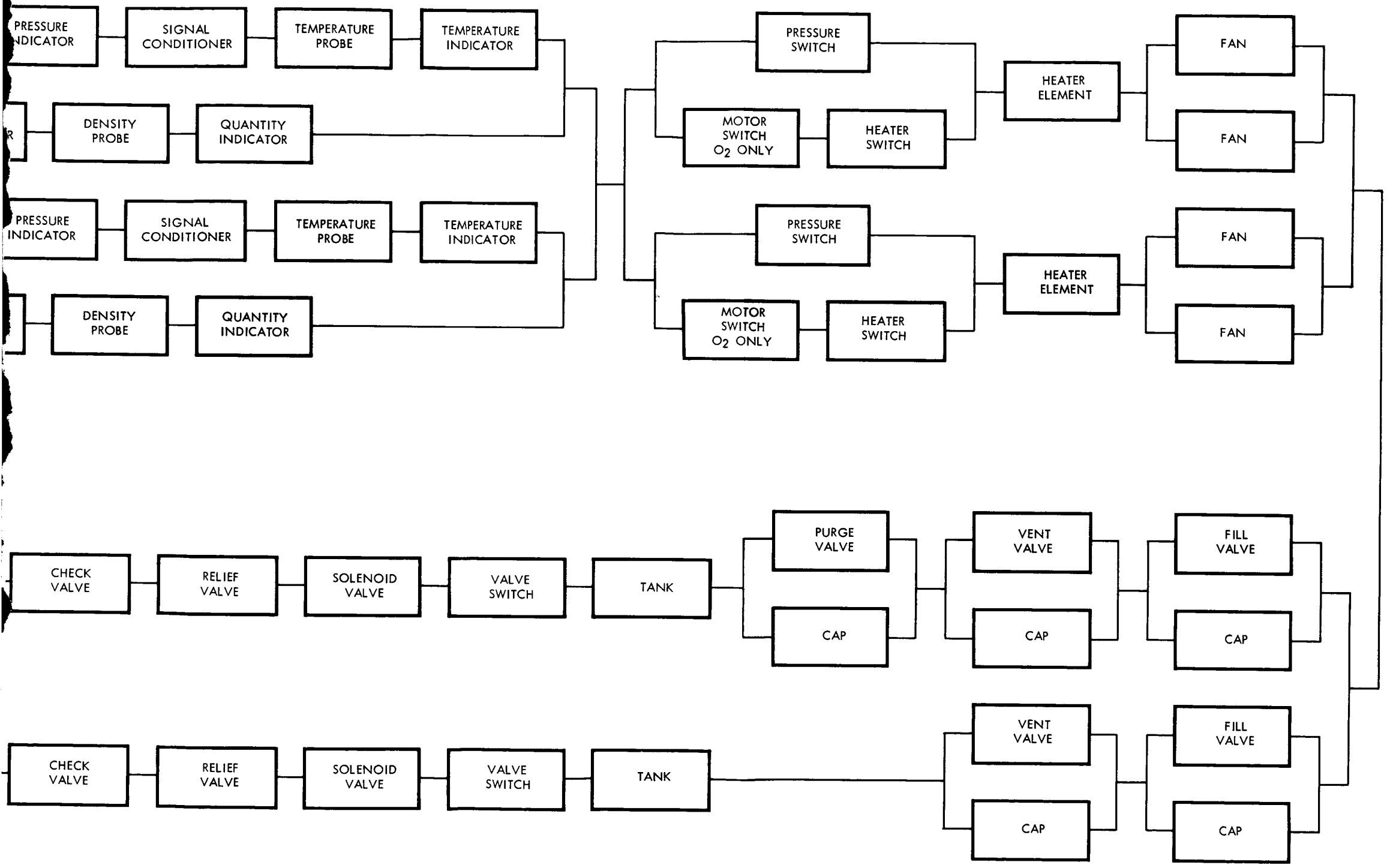

Figure 2-5. Cryogenic Storage - Crew Safety Logic Diagram

design should off-set the slight degradation of reliability. Improvements in the fabrication and operation of the system resulting from the proposed change are as follows:

1. The use of cal-rod and fans will permit heat treatment of the vessel after welding. The present vessel design is not compatible with heat treatment, because the electroplated heater spheres must be installed prior to welding. Heat treating the vessel with the spheres installed would damage the heater spheres.

2. The cleaning operation will be much more complete and efficient. In the present design the heaters obstruct the cleaning process.

3. The proposed change will permit 100-percent visual inspection of the weld seam. The present configuration renders inspection difficult, because the heaters obstruct a clear view of the inside of the vessel.

4. A significant improvement in the accuracy of the temperature and quantity readout will be realized if the proposed design is used.

The proposed change was approved on the basis of the foregoing considerations.

TEST PROGRAM

Program Status

Revisions were made to the qualification test section of the Apollo General Test Plan, SID 62-109, to incorporate detailed test schedules and descriptions of test hardware utilization.

Development testing is scheduled for completion during the latter portion of July, 1963. Qualification testing should commence during September.

Significant Test Results

1. The vibration test system is undergoing checkout and the high-vacuum chamber installation is nearing completion.

2. The following tests have been completed:

   a. The pulser distratification test has been completed satisfactorily, and the data has been submitted for engineering evaluation.

b. The proof and burst test on Vessel S/N 004 has been satisfactorily completed ahead of schedule. The final report is being prepared.

3. Fill and vent coil tests have been completed on two oxygen specimens, and a third is being tested. Hydrogen specimens are scheduled for testing soon.

4. Development testing of the quick disconnect couplings (supplied by Fairchild Stratos) is approximately 95-percent complete.

SUBCONTRACTOR MANAGEMENT

Qualification Status List

Components and parts are not being qualified at present. However, detailed test plans for qualification of components and parts as well as the system are being written into the revision of The General Test Plan, Beech Report, BR 13705-1 and -2.

Problem Summary

The following problem areas were reported:

1. Securing an adequate inspection procedure for the weld process and completed weld of the inner pressure vessel

2. Heater thermoswitch integrity in cryogenic fluids

3. Excessive valve module leakage

4. Questionable density sensor readout for stratified system

5. Heater vibration failures.

Discussion of progress in resolution of the foregoing problems follows:

1. An extensive weld specimen program for both Inconel 718 and 5 AL-2.5 Ti materials is in progress. This program includes tensile pulls of specimens at room and cryogenic temperatures, deliberate misalignment of the welding beam and butt joint, establishment of porosity control as well as rework techniques, porosity X-ray examination techniques, weld speeds, power settings, "fit-up" methods, allowable tolerances, and

inspection procedures. The objective is to develop a controlled weld process which will produce a qualified weld joint. This program is progressing satisfactorily and procedures for welding and weld inspection have progressed to the point where welding of the first test vessels is about to start. This program is being documented and coordinated with S&ID.

2. Effort is continuing on the heater thermo-switch problem. Switches from Texas Instrument for development testing have been received. Remote thermo control of the heaters is being investigated along with the approach of eliminating the switch from the heater design.

3. Excessive valve module leakage does not appear to be a problem with the new valve module vendor (Parker). Preliminary tests indicate leakage is well within the specified limits.

4. Investigation of quantity measurement methods with 10 degrees or more of stratification is continuing. The equilibration approach has reached the test stage with development testing now in progress.

5. Initial heater assembly vibration tests produced failures (cracking) around the neck of the outer heater hemisphere. This problem was resolved by (a) eliminating the rivets in the neck collar of the outer hemisphere which permitted flexure of the outer hemisphere and consequently relieved vibration loading at this point, and (b) minor modification of the hemisphere spinning tool to permit a smoother transition from the hemispherical radius into the neck collar. Since making these changes a new light-weight heater assembly has been fabricated and successfully vibration tested.

Design and Review Status

Formal design review of the valve modules and the heater assembly were held.

Apportionments, Assessments, and Predictions

Current estimates of component failure rates based upon vendor experience and state-of-the-art of the various components were submitted in BR 13804, Revision "A," along with the first approximations of system reliability.

Component "criticality" has been determined which indicates the range of component failure rates that can be tolerated. Each component

within the system was included in this analysis and the results are included in the "A" Revision of BR 13804.

Summary of Development and Qualification Tests and Test Results

The following development tests have been completed:

1. Vibration tests of heater assembly
2. Spherical calorimeter thermal conductivity evaluation
3. Burst tests of vacuum pressure rupture discs
4. Determination of dynamic loads due to vibratory inputs
5. Vibration tests of tubing connectors

~~CONFIDENTIAL~~

Table 2-11. Cryogenic Storage System Failure Effects Analysis

Item	Drawing Number	Elect. Reference. Desig.	Failure Detection	Function	Failure Type	Mission Phase	Failure Effect On Component Performance	Failure Effect On Sub-Systems Performance	Failure Effect On Apollo	Possible Crew Action
Oxygen storage tank			Pressure gage shows sudden loss of system pressure.	Stores oxygen at cryogenic temperature and above O_2 critical pressure—temperature ranges from -297 F to 70 F and pressure ranges from 1018 psia to 50 psia	Rupture, puncture, or any failure that results in a rapid depletion of the stored medium	Launch to SM disconnect	Complete failure of component	A single tank rupture results in the complete loss of half the oxygen storage subsystem.	Mission must be aborted.	Once a rupture is detected, the failed system solenoid shut-off valve must be set in the closed position. Abort procedures must be initiated immediately.
			More frequent and longer heat input intervals or constant degradation of pressure in one subsystem. Light indicates that heaters are on, and pressure gage indicates a pressure loss.		Leakage—slow or moderate loss of the stored medium				Mission must be aborted.	When leakage is detected, the good half of the system must be shut down until the failed system is near depletion. Once the failed system is depleted, the abort can be completed on the good system.
Hydrogen storage tank			Pressure gage shows sudden loss of system pressure.	Stores hydrogen at cryogenic temperature and above critical H_2 pressure—temperature ranges from -423 F to 70 F and pressure ranges from 300 psia to 50 psia	Rupture, puncture, or any failure that results in a rapid depletion of the stored medium	Launch to SM disconnect	Complete failure of component	A single tank rupture results in the loss of half of the hydrogen subsystem.	Aborts mission	Initiate abort procedure; close down failed system by actuation of system shut-off valve.
			Pressure gage indicates slow loss or heater light is on longer and at more frequent on intervals.		Leakage—slow or moderate loss of the stored medium				Mission must be aborted the moment any leakage is detected.	Shut down good half of system and use failed system until near depletion. Complete abort on good system.
Tank shut-off solenoid valve (consider for both H_2 and O_2 systems)			Light indicates closed and switch in closed position	Isolates tanks during fill, purge, and checkout; isolates tank in the event of a system failure	Inadvertant actuation to closed position; fails closed.	Launch to SM disconnect	None	Only one storage vessel will supply oxygen to crew and fuel cell.	None if valve can be re-opened; abort if valve cannot be re-opened	Return actuation switch to open position.

~~CONFIDENTIAL~~

Table 2-11. Cryogenic Storage System Failure Effects Analysis (Cont)

Item	Drawing Number	Elect. Reference. Desig.	Failure Detection	Function	Failure Type	Mission Phase	Failure Effect On Component Performance	Failure Effect On Sub-Systems Performance	Failure Effect On Apollo	Possible Crew Action
			Light does not indicate closed. Can be checked by closing other shut-off valve		Fails to operate when needed to isolate tank; fails open		Complete failure	Failed system will be open to the system check valve which must hold pressure as long as the shut-off valve will not close.	Mission will be in abort phase prior to this failure — complicates abort.	Place valve control switch in open position, then return switch to close position. System check valves will isolate the failed system if valve will not close.
Relief valve (consider for both H_2 and O_2 systems)			Over-pressure light and gage indicate pressure is continuing to rise beyond vent pressure	Vents gas overboard in the event of system over-pressure	Fails to open when overpressure condition occurs.	Launch to SM disconnect	Complete failure	Overpressure condition will subject the system to over-stress and leakage may occur.	Mission must be aborted if regulator relief mechanisms do not relieve pressure.	Bring over-pressurized system under control by manual operation of heaters, and dump fluid if pressure exceeds maximum limits; manually operate failed system.
			Excess quantity usage indicated on quantity gage.		Fails to reseat; leakage	Launch to SM disconnect	Complete failure	Loss of gas from affected subsystem in amounts exceeding safe usage limit	Abort mission when leakage is detected	Use failed system until near depletion; complete abort on good system
Fill disconnect Vent disconnect Purge disconnect (consider any disconnect at SM skin — design is identical for all)			Passage of fluid into storage system ceases. GSE overpressure condition indicated on gage.	Allows passage of fluid during fill and purge operations; prevents leakage	Fails closed during fill and purge operation	Prelaunch	Complete failure	Fill or purge operation ceases	Delay launch until repairs or replacements are made	None
			Excess quantity usage indicated on quantity gage.		Fails open; leakage includes leakage failure of manual cap	Launch to SM disconnect	Complete failure	Loss of gas from affected subsystem in amounts exceeding safe usage limit	Abort mission when leakage is detected	Use failed system until near depletion; complete abort on good system
			None		Fails open; manual cap operates satisfactory			None	None	None

Table 2-11. Cryogenic Storage System Failure Effects Analysis (Cont)

Item	Drawing Number	Elect. Reference. Desig.	Failure Detection	Function	Failure Type	Mission Phase	Failure Effect On Component Performance	Failure Effect On Sub-Systems Performance	Failure Effect On Apollo	Possible Crew Action
Lines and fittings			Excess quantity usage indicated on quantity gage, pressure loss is indicated on pressure gage.	Transmits fluid	Leakage	Launch to SM disconnect	Failed to the degree of rupture	Loss of gas from affected subsystems in amounts exceeding safe usage limit.	Abort mission when leakage is detected	Use failed system until near depletion; complete abort on good system
Pressure switch			Pressure gage indicates loss of pressure; heater circuit light is off	Controls tank pressure by turning the heating elements in the tanks on and off	Switch fails open	Launch to SM disconnect	Complete failure	Loss of automatic control of tank pressure; system pressure will decay.	Tank pressure must be controlled manually; complicates crew schedule.	Allow pressure to decay to just above critical pressure to take load off of switch; if switch does not close and re-entergize heaters, take over control with manual circuit.
			Heating interval changes		Fails closed			No effect; 2nd switch in series will control the heaters.	None	No action
			New pressure variation on gages.					Heaters will remain on and system pressure will rise until relief pressure is reached if manual control is not used.	Some gas may be vented overboard if relief pressure is reached.	Activate manual circuit; maintain manual control and surveillance
			Heater circuit light stays on as pressure indicator continues to rise to the relief warning pressure.		Both switches fail closed					
Heater element			Heater light stays on longer to indicate extended heating intervals.	Controls system pressure by the addition of heat to the stored medium	Break or open circuit in one element; failure of one element in each tank, failure of two elements in each tank, or a failure of a combination of one and two elements in each tank	Launch to SM disconnect	Failed in proportion to the number of elements in operation	Longer powered interval is necessary to maintain system	None	None
			Heater circuit light on continuously; pressure continues to drop		All heating elements failed		Complete failure	Constant on condition of heater circuit	Abort mission	Switch off failed heater circuit; complete abort on good system

Table 2-11. Cryogenic Storage System Failure Effects Analysis (Cont)

Item	Drawing Number	Elect. Reference Desig.	Failure Detection	Function	Failure Type	Mission Phase	Failure Effect On Component Performance	Failure Effect On Sub-Systems Performance	Failure Effect On Apollo	Possible Crew Action
Quantity readout system			Quantity gage gives an erratic reading or shows a sudden drop to 0 or peg out (slight fluctuations should not be considered).	Indicates the quantity of fluid remaining in storage vessel	Gage malfunction	Launch to SM disconnect	Complete failure	Quantity readout system becomes inoperative.	None	If tapping the gage does not reactivate the instrument, mission will have to be completed by using the temperature and pressure readouts only. Since all temperature information is telemetered to earth, verbal temperature readings will have to be sent to the astronauts.
					Sensing probe malfunction					
					Signal conditioner malfunction					
Temperature readout system			Erratic temperature readout to earth or a drop to 0 or peg out (slight fluctuations not to be considered).	Indicates the temperature of the fluid remaining in the storage vessel; automatically shuts off heaters if elements heat up to 70 F	Loss of readout telemetry contact; does not assume general telemetry failure, only failure of the temperature readout system	Launch to SM disconnect	Complete failure	None	None	If tapping the gage does not reactivate the instrument, mission will have to be completed by use of the pressure and quantity readouts only.
					Thermocouple malfunction			Results in erroneous readout and loss of the emergency automatic shut-off feature		
					D-C amplifier					
Pressure readout system			Pressure gage gives an erratic reading or shows a sudden drop to 0 or peg out (slight fluctuations should not be considered)	Indicates the pressure in the storage vessel	Gage failure	Launch to SM disconnect	Complete failure	None	None	If tapping the gage does not reactivate the instrument, the mission will have to be completed by use of the quantity and temperature readouts only. Since all temperature information is telemetered to earth, verbal temperature readings will have to be sent to the astronauts.

Table 2-11. Cryogenic Storage System Failure Effects Analysis (Cont)

Item	Drawing Number	Elect. Reference Desig.	Failure Detection	Function	Failure Type	Mission Phase	Failure Effect On Component Performance	Failure Effect On Sub-Systems Performance	Failure Effect On Apollo	Possible Crew Action
					Transducer malfunction					
					D-C amplifier malfunction					
Failure of two readout systems in any one storage subsystem; e.g., quantity and temperature readout failure on tank A of the oxygen storage subsystem			Reference combination of readouts shown on previous page		(a) Failure of temperature and quantity readout systems	Launch to SM disconnect	Complete failure	None	Marginal — abort may be indicated	Monitor tank pressure, and ECS and RPS flow meters
					(b) Failure of temperature and pressure readout systems				None	Monitor quantity readout; abort if quantity readout fails
					(c) Failure of pressure and quantity readout				Abort	Temperature readout will be broadcast from earth; monitor temperature throughout abort
Control circuit manual switch			Switch in ON or AUTO position; pressure gage indicates constant loss with no light indicating heater activation	Manual operation of heater elements for checkout and in the event of failure of the automatic system	Open	Launch to SM disconnect	Complete failure	Loss of heater control; heaters will be off and tank pressure will decay to below minimum.	Results in the loss of half of the affected subsystem; abort mission	Cycle switch; if pressure continues to decay, leave switch in auto position and abort mission
			Heater light on switch off		Short			Heaters will turn on and remain on until overpressurization results.	Gas will be vented overboard; abort mission	Cycle switch; if pressure continues to rise, use circuit breaker as an alternate switch
			See failure type		Continued operation of the automatic system when switch is in OFF or MANUAL position			Loss of manual mode of operation	No effect unless automatic system fails	Cycle switch — if automatic continues to operate system, maintain surveillance throughout completion of mission

Table 2-11. Cryogenic Storage System Failure Effects Analysis (Cont)

Item	Drawing Number	Elect. Reference. Desig.	Failure Detection	Function	Failure Type	Mission Phase	Failure Effect On Component Performance	Failure Effect On Sub-Systems Performance	Failure Effect On Apollo	Possible Crew Action
Manual switch - solenoid valve control			Solenoid closed, light on	Operates solenoid valve during checkout and in the event of a system failure	Shorts in closed position	Launch to SM disconnect	Complete failure	Isolates half of the affected supply sub-system	Abort if valve cannot be re-opened	Cycle switch - abort mission if valve stays closed
			Not detectable unless switch is placed in closed position and no light indication is given.		Shorts in open position or open failure			Overpressure condition will subject the system to overstress and leakage may occur.	Mission must be aborted if regulator relief mechanisms do not relieve pressure.	Bring overpressurized system under control by manual operation of heaters, and dump fluid if pressure exceeds maximum limits; manually operate failed system.
Manual closure - (cap)			Excessive quantity loss if disconnect is also failed; otherwise, there is none.	Positive seal at disconnect points	Leakage	Launch to SM disconnect	Partial failure	None is disconnect poppet provides seal	None is disconnect poppet provides seal	None
Shut-off valve position light			Press to test	Indicate the position of the solenoid valves	Open	Launch to SM disconnect	Complete failure	None	None	Replace bulb, monitor temperature quantity and pressure gage.
Heater circuit position light			Press to test	Indicates when circuit heaters are on	Open	Launch to SM disconnect	Complete failure	None	None	Replace bulb, monitor temperature quantity and pressure gages.
Circuit breaker: (a) Auto control system			Circuit breakers on CM bus will indicate in crew compartment.	Opens the circuit in the event of an overload	Open	Launch to SM disconnect	Complete failure	Automatic system inoperative	None	Reset - if this fails to activate circuit, use manual mode of operation
(b) CM bus			Blown fuses on the SM bus sever the affected system. Complete loss of power to the affected circuit is indicated by loss of pressure.					Loss of manual circuit	None	Reset

Table 2-11. Cryogenic Storage System Failure Effects Analysis (Cont)

Item	Drawing Number	Elect. Reference. Desig.	Failure Detection	Function	Failure Type	Mission Phase	Failure Effect On Component Performance	Failure Effect On Sub-Systems Performance	Failure Effect On Apollo	Possible Crew Action
(c) Solenoid								Loss of solenoid control; valve goes to full open	None if valve is not required to close.	Reset if detected
Circuit breaker: (a) Auto control system					Closed			None unless overload occurs. If overload occurs, a complete system failure may result if circuit breaker is not opened.	None unless overload occurs. Catastrophic failure may result from overload if circuit breaker is not opened.	
(b) CM bus										Open manually if overload is shown on ampmeters.
(c) Solenoid										
Check valves			Pressure and quantity gages indicate constant equal pressure in both tanks.	Prevents loss of entire system due to a failure in one-half of the system	Open	Launch to SM disconnect	Complete failure	Allows fluid to move from opposite system into system with failed valve.	None	None unless a leak is in the failed system. Then, cycling the tank shut-off valve may jar the check valve into action.
			Pressure and quantity gages indicate quantity loss from the good system and pressure rise in the failed system		Closed			Depletion of supply from one tank; loss of half of supply	Abort	Activate heaters in failed half of system, and close shut-off valve in failed system. When relief warming pressure is reached, open shut-off valve in an attempt to shock the check valve open.

[redacted]

EARTH LANDING SYSTEM

SUMMARY

Two studies were made of the earth landing system which presently consists of two thruster systems for forward heat shield jettison, a single drogue chute, and three main chutes with a pilot chute for each main.

The first study was made to determine the probability of unsatisfactory apex cover jettison resulting from dynamic conditions. This was found to be 37 per million missions, unacceptable since it accounts for more than half of the 60 allowable failures of the earth landing system.

The second study, which takes into account the first, is the result of a problem uncovered by a failure effects analysis of the earth landing system. The problem is that during a high-q abort the crew could be lost through failure of a single drogue chute. This study was made to determine the necessary increase of drogue reliability considering: (1) the earth landing system reliability requirement of 0.99994, and (2) the probability of being apex-forward at high-q. The study revealed that the drogue reliability would have to increase from 0.998 to 0.9997, which is beyond the present state of the art. Three methods for eliminating the critical drogue failure problem, all of which require design changes, are suggested in the study. At present, the best method appears to be the addition of another drogue for redundancy.

EARTH LANDING SYSTEM STUDY I

A study of unsatisfactory apex cover jettison resulting from dynamic conditions showed that the probability of unsatisfactory jettison is 37 per million missions. This is unacceptable since it accounts for more than half of the 60 allowable failures of the entire earth landing system.

There are three dynamic conditions critical for apex cover jettison. They are:

1. Pressure differential too great for one thruster system to overcome following reentry subsequent to a normal mission. This results because of failure of the venting system and one of the two thruster systems. Because of the passive heat-sink arrangement of the venting system, the probability of a critical pressure differential is negligible.

[redacted]

2. Transient apex-forward attitude at cover jettison. This is caused by tumbling of the launch escape vehicle, which continues after tower jettison, following an abort between the pad and 60,000 feet. The probability of this is about 17 per million missions.

3. Command module in apex-forward trim condition at cover jettison following a nontumbling abort from 15,000 to 50,000 feet (high dynamic pressure). The probability of this is about 20 per million missions.

The probability of events resulting in critical dynamic conditions at forward heat shield cover jettison are discussed in the following paragraphs.

Cover Jettison Following Reentry Subsequent to Normal Mission

After reentry subsequent to a normal mission, there is a vacuum inside the parachute compartment as opposed to a positive pressure during boost. If the venting system malfunctions and one thruster system fails, the combined effort of the vacuum and solid bolts results in a resistance too great for one of the two thruster systems to overcome. This is approximately 33,000 pounds of force. Preliminary estimates for a single system blocked-shut firing indicates that it will provide 13,300 pounds total thrust. The venting system is a passive heat sink arrangement located in the aft heat shield. Since a design of this type is highly reliable, a malfunction of the venting system and failure of one thruster system both occurring is assumed to be negligible.

Tumbling Abort From Pad to 60,000 Feet

Probability of abort occurring between the pad and 60,000 feet is estimated at 1 in 30.

For aborts above approximately 60,000 feet, the stabilization and control system will damp out the command module tumbling and the strakes will help orient the command module in a forward heat shield attitude.

Probability of the launch escape vehicle tumbling is estimated at 1 in 100. Certain classes of booster malfunction (i.e., guidance or control system runaways) will tend to induce tumbling.

Probability of being within a solid angle of plus 10 degrees of the apex-forward attitude at cover jettison is estimated at 1 in 200.

Nontumbling Abort Resulting in Apex-Forward Trim Condition at Cover Jettison

Probability of an abort between 15,000 and 50,000 feet (high dynamic pressure) is estimated at 1 in 40.

Probability of stabilizing out in the apex forward condition is estimated at 1 in 2.5.

Probability of one thruster system failure at cover jettison is estimated at 1 in 500.

At the present time, it is assumed that both thruster systems are necessary for cover jettison. Further studies may indicate that only one is sufficient.

The probability of an abort stated in each of the foregoing conditions is based on a 0.95 reliability for each of the S1-C, SII, and SIV-B*. As stated by Rocketdyne, 78 percent of engine failures occur at ignition and 10 percent at engine shutdown. Using these values as a basis, it is assumed that approximately 70 percent of booster failures will occur at ignition and 5 percent will occur at shutdown. A conservative estimate of the percentage of failures which do not cause Launch Escape System aborts below 60,000 feet is given in Table 2-13. The total percentage is estimated for S1-C, SII, and SIV-B.

Table 2-13. Engine Failures

Type	Failures (percent)		
	S1-C	SII	SIV-B
1. Ignition **(3 seconds before tie downs are released)	35**	70	70
2. Shutdown	5	5	5
3. Failures which enable high altitude aborts or those above 60,000 feet	10	5	-
4. Failures which do not occur during S1-C boost (excluding 1, 2, and 3 type failures)	-	10	20
Total	50	90	95

*Based on data received from MSC

~~CONFIDENTIAL~~

From Table 2-13 it is seen that the failures which are contributed by S1-C, SII, and SIV-B are: 50 percent by S1C, 10 percent by SII and 5 percent by SIV-B.

Using a failure rate of 5 per 100 for each booster, the total failures occurring which cause an abort below 60,000 feet are:

$$\frac{\text{Total}}{100} = 50\% \ (0.05) + 10\% \ (0.05) + 5\% \ (0.05) = 1/30$$

$$P_{0 - 60{,}000 \text{ feet}} = 1/30$$

Since 15,000 to 50,000 feet is the region of high dynamic pressure, it is assumed that 75 percent of aborts, between launch and 60,000 feet, will occur in this region.

$$P_{15{,}000 \text{ to } 50{,}000 \text{ feet}} = 0.75 \ (1/30) = 1/40$$

Using the values obtained from the above method with the remaining values listed in the discussion, the probability of unsatisfactory apex cover jettison resulting from critical dynamic conditions is:

$$P = (P_{\text{abort}} \times P_{\text{tumbling}} \times P_{\text{apex forward}})_{\text{launch to } 60{,}000 \text{ feet}}$$

$$(P_{\text{abort}} \times P_{\text{apex forward}} \times$$

$$P_{\text{one thruster system failed}})_{15{,}000 \text{ to } 50{,}000 \text{ feet}}$$

$$P = \frac{1}{60{,}000} + \frac{1}{50{,}000} = \frac{37}{1{,}000{,}000}$$

EARTH LANDING SYSTEM STUDY II

Failure effects analysis indicates that during a high-q abort, the crew could be lost through a single failure. This is failure of the drogue in the earth landing system, which can occur when the command module is apex-forward at high-q.

The following study was made to determine how much the present drogue reliability would have to increase to compensate for the number of times the command module is apex-forward at high-q during drogue deployment. The study was based on these assumptions:

1. Probability of tumbling after tower jettison is negligible.

2. Command module will stabilize aft heat shield forward for a normal earth entry.

3. Crew is lost if drogue fails when command module is apex-forward at high-q.

4. For aborts in high dynamic region there is a 50-50 chance of deploying drogue in an apex-forward attitude.

Nomenclature:

*0.0017 percent = percent of time the launch escape vehicle tumbles, which continues after tower jettison, following an abort between the pad and 60,000 feet.

*0.0020 percent = percent of time the command module is apex-forward with one thruster system failed, following a nontumbling abort from 15,000 to 50,000 feet.

$100\left[\left(\frac{1}{40} \times \frac{1}{2}\right) - 0.00002\right]\% = 1.248$ percent = percent of time the command module is apex-forward at drogue deployment.

where:

$P_{\text{abort between 15,000-50,000 feet}} = \frac{1}{40}$

$P_{\text{stabilize apex forward}} = \frac{1}{2}$

$100\left[1 - (0.00002 + 0.01248 + 0.000017)\right] = 98.7483$ percent = percent of time CM aft heat shield forward at drogue deployment.

---

* These values are taken from the previous study which determined the probability of unsatisfactory apex cover jettison.

~~CONFIDENTIAL~~

$$0.987483 \left\{ R_D \left[R_M^3 + 3R_M^2 (1 - R_M) \right]_{@64q} + (1 - R_D) \left[R_M^3 + 3R_M^2 (1 - R_M) \right]_{@90q} \right\} + 0.01248 \left\{ R_D \left[R_M^3 + 3R_M^2 (1 - R_M) \right]_{@64q} + (1 - R_D) \left[0 \right] \right\} + 0.000037 \left\{ 0 \right\} = R_{ELS} +$$

where

R_D = Drogue Reliability

R_M = Main Chute Reliability

@64q $R_M = 0.998$

@90q $R_M = 0.99$

$R_{ELS} = 0.99994$ = Earth Landing System Reliability

$R_D = 0.99976$

The study shows that an increase in drogue reliability from 0.998 to 0.9997 is required to meet a system reliability of 0.99994.

A drogue reliability of 0.9997 is above the present state of the art. Therefore, a different approach is recommended to eliminate the critical drogue failure problem.

Three methods of eliminating a critical drogue failure are being considered: (1) add another drogue for redundancy, (2) use aerodynamic fixes to remove the apex-forward trim point, or (3) deploy mains sooner or beef up mains to take 180 q at 15,000 feet. The first method appears to be the best solution; the second and third methods require an unacceptable addition of weight.

TEST PROGRAM

General Test Program Status

During this reporting period the qualification test section of the Apollo General Test Plan, SID 62-109, was revised to include schedules of tests and detailed descriptions of the utilization of qualification hardware. The development tests were approximately 50-percent complete, as of June 1963.

~~CONFIDENTIAL~~

Significant Development Test Results

Sequence Controller

Testing of the second interim sequence controller was completed at Northrup, and the unit was submitted to S&ID. Testing of other fabricated units is being held pending design change inputs from S&ID.

Drop Tests

The following significant drop tests were performed at El Centro during this reporting period:

Test No.	Type of Test	Comments
S-3	Confirmation of structural integrity of a single 82.5-foot diameter solid triconical chute deployed at 1.5 times design dynamic pressure	Bomb separated successfully from aircraft; however, pilot chute failed to deploy. Failure attributed to static line which is normally attached to aircraft to perform deploying function
31	Verification of structural integrity of the drogue parachute when deployed at 1.5 times design dynamic pressure	Successful test
32	Evaluation of performance of drogue parachute system at low dynamic pressure representative of expected pad abort for BP No. 6	Successful test
33	Evaluation of performance of a three-chute ringsail cluster deployed at a dynamic pressure and altitude approximating pad abort conditions	Successful test
35	Evaluation of performance of a single PDS 2072 (half-ringsail/half-solid) chute at design dynamic pressure using a 1/2 CM weight	Four failed suspension lines, otherwise successful test

~~CONFIDENTIAL~~

Test No.	Type of Test	Comments
37	Same as test No. 35, except using reefing line length reduced from 9.4 percent diameter to 7.5 percent diameter for purpose of reducing reefed open load encountered on test No. 35.	Successful test, reefed open load reduced 50 percent
BP 3	In support of BP No. 6 pad abort test. Conditions approximated those predicted for a half-degree misalignment of the LES thrust vector (high dynamic pressure case)	Successful test

SUBCONTRACTOR MANAGEMENT

During the past quarter, several coordination meetings were held. Subjects discussed included the potential reliability of the single drogue configuration of the parachute recovery system, changes in sequencer design and their effects on system reliability, and the participation of Northrup/Ventura reliability in the development and qualification test programs.

PLANNED ACTIVITIES

Test Group

The following significant activities are scheduled for the next reporting period:

1. Component qualification tests are scheduled to start in July.

2. The redesigned sequence controller and inertia switch are scheduled for testing.

Analysis Group

Further studies will be made as design changes are received. A complete failure effects analysis for the earth landing system is being completed. All studies and failure effects analysis are made after coordinating with the appropriate groups.

ELECTRICAL POWER

SUMMARY

During this report period, primary effort has been directed toward program review and evaluation. Major effort on all subsystems has been involved in updating failure effect analyses to incorporate and evaluate the latest design changes; results of these analyses are presented on the fuel cell and distribution subsystems in Tables 2-14 and 2-15, respectively, at the end of this section.

All EPS subsystems are now in the development phase of their respective programs and are proceeding on schedule. Recently the fuel cell has successfully completed approximately 190 hours of continuous operating time; a list of preferred parts has been approved for use in the inverter; and a list of nonstandard parts, recommended for use in the battery charger by IT&T, is presently being reviewed. Additionally, changes are being incorporated in the distribution system to effect increases in overall reliability. Planned activity includes: (1) detailed failure effects analyses on the inverter and the battery charger by Westinghouse and IT&T, respectively, and (2) continued development of the fuel cell, which includes incorporating the results of the failure effects analyses in the test program for investigation of specific failure modes.

Primary effort during this report period was devoted to review and analysis of development test data as related to reliability assessment. Weibull plots of 6-cell, 31-cell, and fuel-cell powerplant test data were prepared for early analysis of PC3A-1 cell life characteristics. Data used to date were obtained from development tests completed in the last quarter of 1962 and the first quarter of 1963. Results have shown that failure and success data, plotted as a result of a Weibull analysis, delineate progress toward apportioned reliability objectives.

Data for component development testing were prepared. These data will be used to guide endurance test planning to ensure a standard based on specific Apollo mission conditions. Schedule and performance curves will be compiled during the next quarter and submitted in a subsequent report.

Considerable effort was devoted to updating the fuel cell failure effect analysis. This updated analysis, shown in Table 2-14 at the end of this

section, includes all the recent component changes and additions provided by the subcontractor in monthly progress reports (PWA-2214) and Quarterly Reliability Status reports (PWA-2208).

A special consideration has been given to the checkout instrumentation aboard the Apollo vehicle designed to monitor the fuel cell performance in flight. Instrumentation included in the analysis follows:

1. Absolute pressure transducers (P_3, P_4 and P_5)

2. Surface temperature sensor (ST_1)

3. Condenser, exit temperature sensor (T_5)

4. ph Meter

Not included in the failure analysis is the mass flow meter, designed to measure flow rate of reactants, coming from the cryogenic storage tanks. Two different types of flow-meters are presently being evaluated—one utilizing the temperature and pressure differential principle and the other the pressure differential only. Both types must be subjected to a series of qualification tests prior to acceptance for the necessary function.

ANALYSIS

Inverter Subsystem

The latest reliability prediction for the inverter is estimated to be 0.9628 for 336 hours (Table 2-16). This is a considerable decrease over the previous estimated reliability of 0.9699 and is primarily due to additional components which were incorporated to enhance the design. The reliability goal set for the inverter is 0.9786 for 336 hours mission time. Table 2-16 is a breakdown of components and failure rates used in the current inverter circuitry. This table also indicates the percentage of unreliability contributed by various types of components, thus indicating areas for primary reliability effort.

Battery Subsystem

The development phase of the reentry and postlanding battery program is progressing on schedule. Development test data are being analyzed and reviewed to determine validity for reliability assessment. These data are primarily from tests on 5 and 20-cell battery packs and are indicative of electrical performance capabilities. During the next report period, these

Table 2-16. Single Inverter Component Reliability Values

Components	Quantity	Total Failure Rate (λc) percent per 1000 hr.	Percent Total Failure Rate $\frac{\lambda c}{11.275}$
Transistors	55	1.856	16.46
Diodes	127	4.723	41.88
Resistors	99	0.9627	8.53
Capacitors	35	0.9033	8.04
Inductors	6	0.355	3.14
Transformers	26	2.345	20.80
Terminals	13	0.13	1.15
Total		11.275	100.0

$$\text{MTBF} = \int_0^\infty R\,dt = \int_0^\infty e^{-\lambda t}\,dt = \frac{1}{\lambda} = \frac{1}{11.275 \times 10^{-5}} = 8{,}869$$

$$R = e^{-\lambda t} = e^{-(11.275 \times 10^{-5})(336)}$$

$$R = 0.9628$$

data and additional test results will be incorporated into reliability math models to evaluate reliability growth. These results will be presented in a subsequent report.

Battery Charger

The latest reliability prediction for the battery charger is estimated to be 0.9943 for 200 hours, which is only slightly below the apportioned value of 0.9950. The apportioned value may be attained by incorporation of high-reliability components.

A list of battery charger nonstandard components has been submitted to S&ID for approval by the supplier, and a study is in progress to determine

if the nonstandard components are adequate for the Apollo program. Table 2-17 is a breakdown of components and failure rates used in the present battery charger circuitry.

Table 2-17. Battery Charger Component Reliability Values

Components	Quantity	Total Failure Rate (λc) percent per 1000 hr.	Percent Total Failure Rate $\frac{\lambda c}{2.869}$
Transistors	8	0.054	1.88
Diodes	19	0.096	3.35
Resistors	24	0.346	12.05
Capacitors	14	0.825	28.75
Inductors	8	0.720	25.09
Transformers	3	0.468	16.38
Connector	1	0.360	12.05
Total		2.869	100.00

$$\text{MTBF} = \int_0^\infty = R\,dt = \int_0^\infty e^{-\lambda t}\,dt = \frac{1}{\lambda} = \frac{1}{2.869\text{x}10^{-5}} = 34{,}855$$

$$R = e^{-\lambda t} = e^{-(2.869\text{x}10^{-5})\,(200)}$$

$$R = 0.9943$$

An evaluation of the merits of fixed versus variable resistors used in the battery charger was performed. The results, shown in Table 2-18, indicate that fixed resistors are inherently more reliable than potentiometers and should be used whenever possible. The weight of the components was taken into consideration in this study and no penalties resulted. The results of this evaluation were submitted and are under consideration by IT&T Design Engineering.

Table 2-18. Battery Charger Weight Trade-Off Results

Component	Quantity	Total Weight (oz)	ΔWt (oz)	Failure Rate	Δ Failure Rate
Potentiometer	3	0.42	-0.33	3.0 percent per 1000 hr	-2.955 percent per 1000 hr
Fixed resistor	3	0.09		0.045 percent per 1000 hr	
Net change		-0.33			-2.955 percent per 1000 hr

Mathematical Model

A mathematical model for reliability is shown in Figure 2-6.

The overall failure rate of the battery charger, based upon a worst-case analysis and a series arrangement, is 2869 bits (0.00002869), or a failure rate of 2869 failures per million hours. The failure rates for the three subgroups comprising the charger are:

1. Radio noise suppressor = 890 bits

2. Chassis = 786 bits

3. Printed circuit boards = 1193 bits.

These failure rates are broken down further (Figure 2-6) into part failure rates.

The part failure rates were derived by using stress analysis data, predicted temperature rise, and an operational mode factor of 1.5. The source of the generic failure rates was the Martin-Denver report, Reliability and Analysis Guide, MI-60-54.

~~CONFIDENTIAL~~

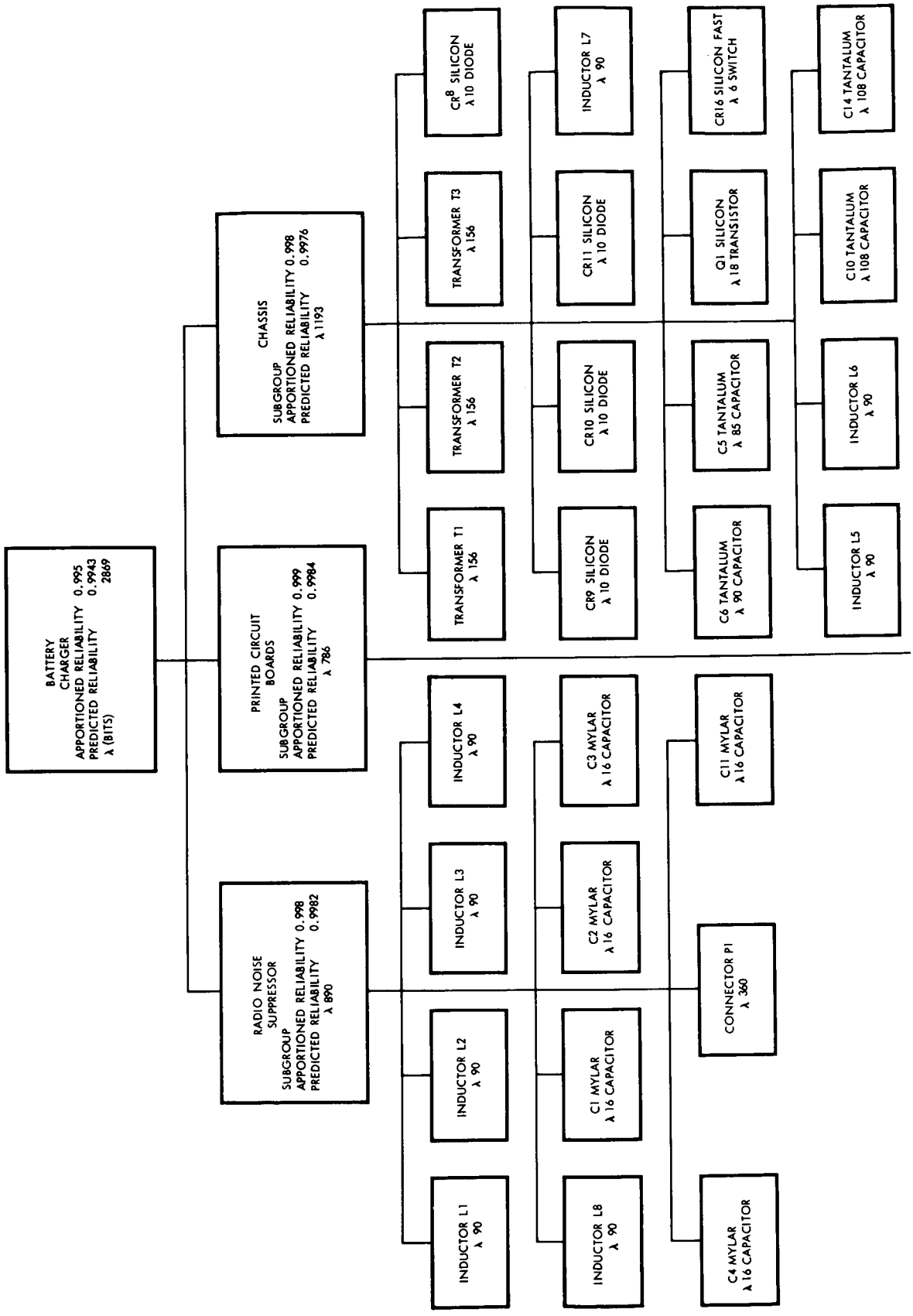

Figure 2-6. Battery Charger Reliability Math Model (Sheet 1 of 2)

~~CONFIDENTIAL~~

~~CONFIDENTIAL~~

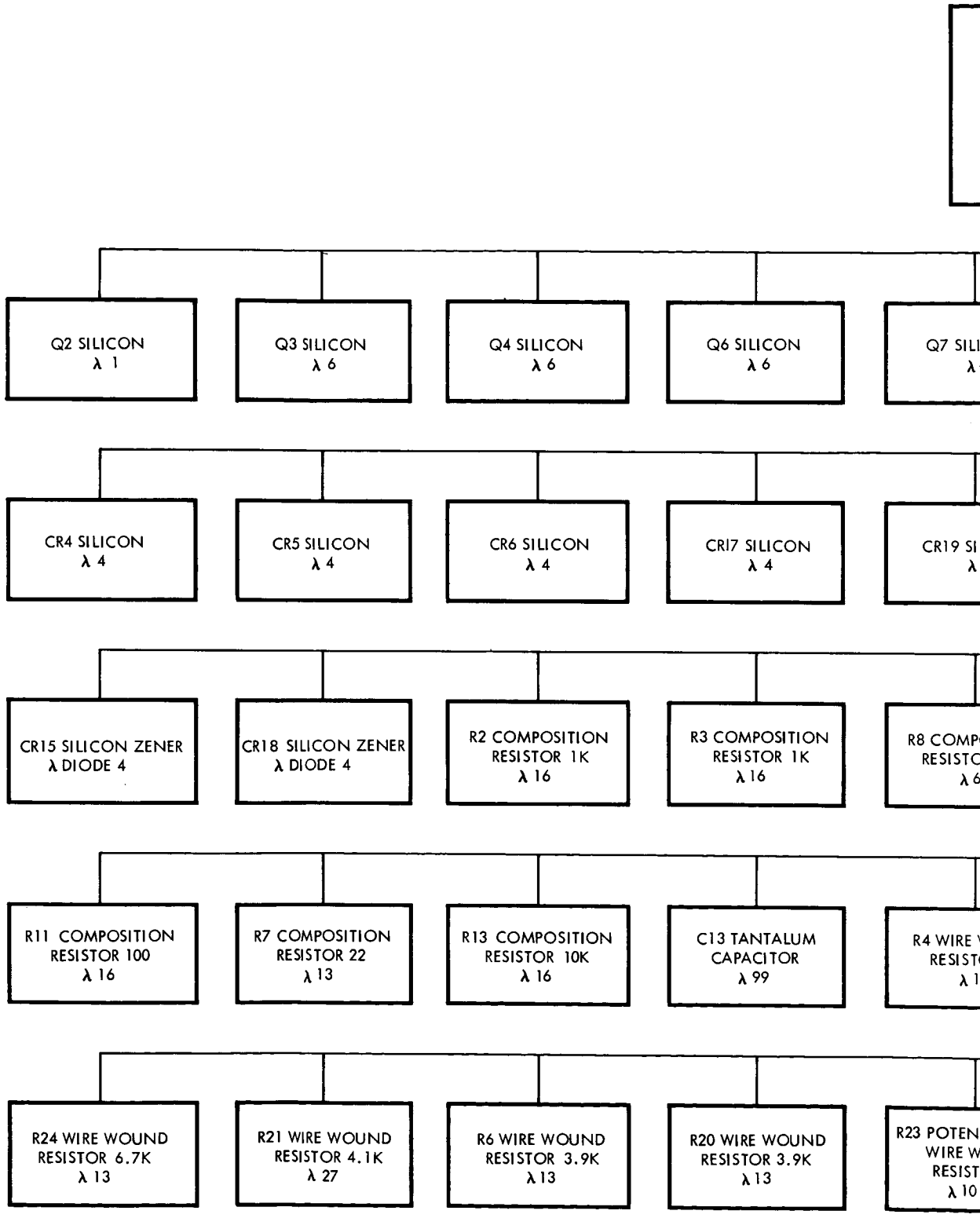

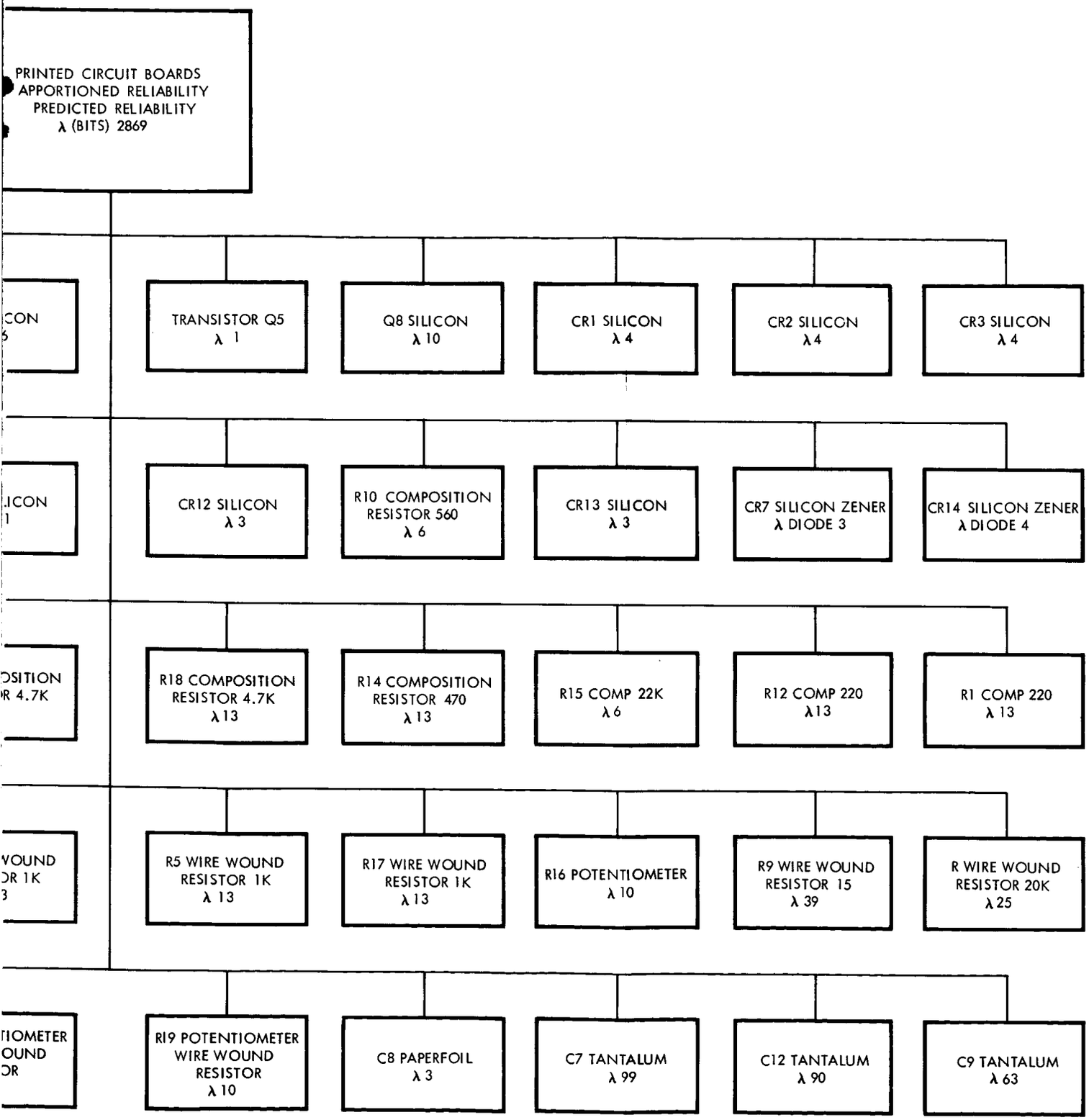

Figure 2-6. Battery Charger Reliability Math Model (Sheet 2 of 2)

Power Distribution

A reliability analysis for the Reliability/Crew Safety Design Review was performed for the electrical power system distribution, command and service modules. The distribution of power and its utilization was investigated for optimum continuity. Importance of equipment for crew safety and system functioning was given primary consideration. Alternate mode capability and parallel paths were determined by the need for added reliability at critical areas.

Recommendations were made from an objective viewpoint in the selection of an optimized system. The analysis aided in choosing the system configuration determined by design parameter tradeoffs. Corrective action on the portion of the system being scrutinized was made as required.

Subsystem Modifications

Electrical power system, command and service module schematic Diagram V14-945105 (Revision A), was updated with those changes as decided upon per the above requirements being incorporated into V14-945105 (Revision B). The following results of the investigation were further incorporated within the failure effects analysis of the EPS.

Change 1

Essential telecommunications and nonessential telecommunications received power from the same bus through a common switch. It was decided that essential and nonessential functions should be separated. Another switch would provide separate power sources.

Fix 1

Essential and nonessential telecommunications were separated by the use of an additional switch so that each function could be switched separately as required.

Change 2

Power from a-c bus No. 1 and 2 for the stability and control system was first sent through a switch and then to a circuit breaker. The primary purpose of a circuit breaker is to provide isolation and overload protection between the electrical power source and the equipment using this source. If a short should occur at the switch, this protection would not be afforded to the circuit. Therefore, a circuit breaker from each bus could serve as an alternative.

~~CONFIDENTIAL~~

Fix 2

Circuit breakers were extended from a-c bus No. 1 and a-c bus No. 2 such that isolation and overload protection is given to the stability and control system.

Change 3

Ground power is first applied to d-c main bus "A" or "B." Sensing and control was affected through power from the main relay bus connected directly to d-c main bus "A" and "B." Not knowing the type of power at the bus could produce an undesirable condition if a fault was present.

Fix 3

Sensing and control is now affected through power from the battery relay bus. D-c main bus "A" and "B" are not connected directly to the battery relay bus.

Change 4

The inverters operate on a standby basis; that is, an inverter failure will result in manually switching one of the remaining inverters onto the line. Since there may be a slight delay until switching (a possible condition requiring pressure suits), and the crew already has a multitude of other switching functions, it is felt more expeditious to have an automatic mode of inverter switching with manual override.

Fix 4

A study to determine the times involved is being made of the equipment. Also, NASA's criteria for equipment failure versus crew capability will be implemented. The need for an automatic sensing and switching feature with automatic override is undergoing evaluation.

RELIABILITY/CREW SAFETY DESIGN REVIEWS

A reliability design review meeting was held on the electrical distribution system. Primary agenda items and board conclusions are shown in Tables 2-19 and 2-20.

A design review of the fuel cell system was held on 13 June 1963. There were 14 items on the agenda, 11 of which were determined to be action items. Table 2-20 lists all the action items and their present status.

Table 2-19. Electrical Power Distribution Subsystem Design Review Board Action

Action Item	Description of Task	Action By	Status
1. The three primary fuel cells each have a combination motor circulator and motor separator in the SM. There is only one neutral return to the CM and it is from fuel cell No. 1. Loss of the No. 1 fuel cell neutral return would leave the other two connected fuel cells, and hence the noted motors, without a neutral return. Should these motors have an individual neutral return?	Plans are being made to verify, by testing, whether individual neutral return is required.	Design group	Redesign if tests so indicate.
2. Essential telecommunications and nonessential telecommunications receive power from the same bus through a common switch. Should essential and nonessential functions be separated? Should another switch be added to provide separate power sources?	Essential and nonessential functions should be separated by addition of separate switches.	Design group	Investigate and determine necessary redesign action.

Table 2-19. Electrical Power Distribution Subsystem Design Review Board Action (Cont)

Action Item	Description of Task	Action By	Status
3. In some instances equipment is attached to both the A and B buses through a common double throw switch. This switch is placed between the buses and the circuit breaker. In these instances the buses have no protection if the switch should short to ground. Should separate circuit breakers be used and placed between the switch and the respective bus?	Limited space and weight influenced the decision for the present design. The need for a study to determine the probability of a short to ground occurring in the switch was expressed.	Reliability	A study will be prepared. Item will be taken up at next review if results so indicate.
4. There are three inverters, but only one operates at a time. Either of the other two may be manually switched on in event the first inverter fails. A failure in the inverter must be observed by the crew; then, manual switching must be accomplished. During this interval, there is no power on the a-c busses. To prevent this loss of power should an automatic sensing and switching feature with manual override be substituted for the manual switch? During the interval noted above the suit compressors could be inoperative. Would this be critical to the crew?	The need for a study to determine the times involved was generally agreed upon. Also needed is a review of NASA's criterion for equipment failure versus crew capability. The need for an automatic sensing and switching feature with automatic override is to be studied.	Reliability, Life Sciences, and Design group	A study of NASA's criteria will be prepared. A time-line study and investigation will be made to determine necessary redesign action if both studies so indicate.

Table 2-19. Electrical Power Distribution Subsystem Design Review Board Action (Cont)

Action Item	Description of Task	Action By	Status
5. An undesirable feature of the bus distribution to inverter No. 1 and 2 is that loss of bus "A" to inverter No. 1 or loss of bus "B" to inverter No. 2 causes total loss of power to the respective inverter. Inverter No. 3 may be switched to either bus. Should inverter No. 1 and No. 2 have the same switching capabilities as No. 3?	The probability of losing two inverters or either the A or B bus is remote. A study to determine the probability of the event should be made, and redesign undertaken if indicated.	Reliability and Design group	A study will be performed. An investigation will be made to determine the necessary redesign action if study so indicates.
6. According to electronic interfaces, all toggle switches will be the hermetically-sealed type. An environment-sealed type switch is smaller as well as lighter. Insofar as the problem of arcing is concerned, it is understood the environment-sealed switch will adequately contain any arc caused by breaking contacts even in a 100-percent oxygen environment. Has a trade-off study been made to compare the above switch with an environment-sealed type switch?	The environment-sealed switch is under study, but a trade-off versus the hermetically-sealed type has not been made. A trade-off study should be made.	Design group Reliability, and Component Technology	Under investigation.

Table 2-19. Electrical Power Distribution Subsystem Design Review Board Action (Cont)

Action Item	Description of Task	Action By	Status
7. An indicator light is illuminated when any fuel cell is disconnected from a bus. Under normal conditions, the lights will be out because all three fuel cells will be connected to the main buses. When a fuel cell malfunctions, it is permanently turned off and disconnected from the main buses. However, in this case, the off indicator will be continuously illuminated throughout the balance of the mission. Should a manual override be provided?	Pulling the circuit breaker would have the same effect as a manual override switch in this instance. This will be included in the Flight Crew Operations Manual.	Logistics	Under investigation
8. When the cutter severs the wire bundles between the CM and SM during separation, are the lines in the bundle shorted out? What provisions are made for protecting the battery circuits if this occurs?	A manual switching feature is incorporated in the CM to protect the battery circuits. A study of the desirability of making this feature automatic with a manual override is to be made. This feature will be reviewed and redesigned if required.	Reliability and Design group	A study will be prepared. An investigation will be made to determine necessary redesign action.

Table 2-20. Fuel Cells Electrical Power Design Review Board Action

Action Item	Description of Task	Action By	Status
1. Procurement Specification MC464-0015A Paragraph 3.4.14 requires a fuel cell storage life of 2 years with allowable service. Has P&W proposed an acceptable storage plan to meet this requirement?	Storage life was added to the specification 6 weeks ago. Up to the present P&W has not proposed a plan for meeting this requirement; however, they have accepted the requirement as part of the contract. An answer will be coordinated with P&W relative to storage life of 2 years.	Reliability and Fuel Cell Design	Under investigation.
2. Many failures have resulted from KOH flooding. a. What is being done to prevent KOH from getting into the water? b. What is the crew action to be if the pH in the water of one cell rises sharply? If the action is to be cell shutoff, would it be possible to provide an overboard valve instead, so that all possible power could be utilized from the cell before shutoff?	Only two instances of KOH flooding has been officially documented. Several instances of electrical shorting has been documented. P&W has just initiated a redesign of the fuel cell diaphragm to correct this condition. They agreed to re-examine this area at the next review on this system.	Not assigned	Hold for next review.

Table 2-20. Fuel Cells Electrical Power Design Review Board Action (Cont)

Action Item	Description of Task	Action By	Status
3. The collective pH meter has been removed. If a high pH is noticed on one cell and the flow is halted or diverted, how do the astronauts know the pH of the drinking water tank?	The collective pH meter served no useful purpose; i.e., it could not identify the faulty cell. Rather than delete this meter, it should be relocated at the potable water tank. This would enable the crew to determine positively if the pH level was approaching the upper allowable limit of 10.6. This will be coordinated with NASA.	Life Systems and Fuel Cell Design	Under investigation.
4. Access Panel P/N V17-324040 (approximate size 5 feet high x 5-1/2 feet wide) provides accessibility to the fuel cells. The overall height of each fuel cell is approximately 40 inches. The fuel cells are tied together by a stabilized shear web mounting installation. If the maintenance concept is removal of a complete fuel cell package due to a component malfunction, the removal and replacement	A study is required to determine if normal cool-down time is compatible with down-time requirements. If the results of the study are negative, then the alternative is emergency replacement with inherent exhorbitant costs. If this cannot be tolerated, then installation redesign is indicated.	Logistics and Fuel Cell Design	Under investigation.

Table 2-20. Fuel Cells Electrical Power Design Review Board Action (Cont)

Action Item	Description of Task	Action By	Status
of cell No. 2 may be difficult. That is, it would require removal of No. 1 or No. 3 fuel cell to provide clearance. This would entail additional individual fuel cell verification prior to installation. Should the need arise to remove and replace fuel cell No. 2 after attaining the required operating temperature, can the system be cooled down and replacement accomplished within the confines of system down-time requirement?			
5. The present routing of the water-glycol drain line for fuel cell No. 3 in the vicinity of the O_2 shut-off valves may present a chafing problem with the O_2 feed line for fuel cell No. 2. Is it possible to provide greater clearance and a more adequate support?	The routing will be investigated and redesigned if required.	Fuel Cell Design	Under investigation.
6. The location of the fuel cell solenoid-operated H_2 and O_2 shut-off valves may present a serious service or replacement problem due to limited accessibility. These valves are located aft and at the bottom of compartment.	Shut-off valve location to provide greater accessibility will be studied to determine if relocation is possible without affecting structure and increasing weight.	Fuel Cell Design and Logistics	Under investigation.

Table 2-20. Fuel Cells Electrical Power Design Review Board Action (Cont)

Action Item	Description of Task	Action By	Status
No. 4. Is it possible to relocate these valves to provide greater accessibility?			
7. When venting during lift-off and at established intervals throughout the mission (every 4 hours), the flow of hydrogen from the cryogenic storage tanks will increase significantly. This presents the possibility of the water vapor being purged overboard with the hydrogen and freezing under the following circumstances: If the regulator should vent during the purge operations, cold H_2 coming in contact with the water vapor could produce rapid icing and partially or completely seal off the vent line. The probability of this condition occurring is increased since development tests indicate a tendency to inadvertent venting during vibration. Also, icing may occur at the exit to space due to fast evaporation. What corretive action is being considered?	Tests are being run which are intended to provide data on the basis of which remedial design action can be taken.	Hold for next review.	Under investigation.

Table 2-20. Fuel Cells Electrical Power Design Review Board Action (Cont)

Action Item	Description of Task	Action By	Status
8. It is the purpose of the failure effects analyses to expose areas in the design which are likely to cause malfunctions. This allows for timely redesign. The types of failures informally recorded to date by P&W in their test program and the number of these failures indicates that P&W did not utilize the failure effects analyses as a tool for designing around failures. a. What does S&ID intend to do to correct this situation? b. What plans does S&ID have to utilize the failure effects analysis as an assist in managing this equipment procurement program?	These questions will be presented at the next monthly coordination meeting with P&W.	Reliability	Under investigation
9. It is a contractual requirement that each subcontractor implement a formal failure reporting system. It is further required that all failures be reported. To date, S&ID has not received	These questions will be presented at the next monthly coordination meeting with P&W.	Reliability	Under investigation

Table 2-20. Fuel Cells Electrical Power Design Review Board Action (Cont)

Action Item	Description of Task	Action By	Status
summaries of formal failure reports. a. What evidence does S&ID have that P&W has implemented a formal failure reporting system? b. If P&W has implemented this system, is it a closed loop? That is, does it require (1) that a formal report be prepared on each failure, (2) that the report be analyzed to determine remedial action, (3) that the implementation of the remedial action be automatically required, and (4) that a summary report of all failures be sent on a regular periodic basis to S&ID? c. How significant has the formal failure reporting system been in S&ID's management of the fuel cell system development?			
10. Reliability goals have been set up for each subsystem. To	An audit will be prepared covering the above questions.	Fuel Cell Design, Reliability,	Under investigation.

Table 2-20. Fuel Cells Electrical Power Design Review Board Action (Cont)

Action Item	Description of Task	Action By	Status
date, S&ID has not received satisfactory evidence that these goals will be met. (971 vs 891). a. Does S&ID feel that P&W will achieve the required reliability level? b. What are S&ID plans for accelerating P&W's efforts to meet the reliability goals? The contract between S&ID and P&W requires that P&W conduct a full scale reliability program. Specifically, (1) that P&W apportion their reliability allotment among the fuel cell components, (2) that periodic reliability analyses be made to determine if the rate of reliability improvement is sufficient to indicate that the apportioned goals will be met by scheduled delivery time, and (3) that regularly scheduled formal design reviews are held. There does not appear to be evidence that the above is being implemented.		and Purchasing.	

Table 2-20. Fuel Cells Electrical Power Design Review Board Action (Cont)

Action Item	Description of Task	Action By	Status
a. As P&W receives its periodic allotment of dollars, do they claim to have performed these tasks? If so, what evidence do they present? b. Can S&ID hold up payment until satisfactory proof of performance is furnished? The contract between S&ID and P&W requires that P&W deliver on schedule a fully qualified fuel cell subsystem. The number and types of failures informally recorded by P&W strongly indicate that P&W will not meet its commitment. a. How can S&ID meet its schedule with NASA on AFRM 009 and 011 if a fully qualified fuel cell subsystem is not received on schedule from P&W?			

Table 2-20. Fuel Cells Electrical Power Design Review Board Action (Cont)

Action Item	Description of Task	Action By	Status
b. What steps can be taken by S&ID in the management of the subsystem so that confidence in P&W's meeting its schedule can be gained?			

~~CONFIDENTIAL~~

Following is a summary of some of the more significant action items:

1. The present routing of the water-glycol drain line for fuel cell No. 3 in the vicinity of the O_2 shut-off valves may present a chaffing problem with the O_2 feed line for fuel cell No. 2. Is it possible to provide greater clearance and a more adequate support?

2. The location of the fuel cell solenoid-operated H_2 and O_2 shut-off valves may present a serious service or replacement problem due to limited accessibility. These valves are located aft and at the bottom of compartment No. 4. Is it possible to relocate these valves to provide greater accessibility?

3. The collective pH meter has been removed. If a high pH is noticed in one fuel cell and the flow is halted or diverted, how do the astronauts know the pH of the drinking water tank?

SPECIAL STUDIES

Effect of Environmental and Performance Modifiers on Generic Failure Rates

Extensive study has been conducted to standardize and improve the predicted reliability figure (Table 2-21) presently in use. Past experience has indicated conflicting reliability values predicted by the S&ID and P&W. The study revealed that the resulting differences are attributed to inconsistencies of selecting generic failure-rate sources and improper use of, or failure to use, correction factors which reflect the operational environment and functional ratings of individual components constituting the fuel-cell subsystem.

In determining the generic failure rate modifiers, S&ID arrived at a constant value of 6.34, which represents the functional elements based on the numerous environments and operating stresses encountered during the entire spectrum of the Apollo mission.

The component parts that make up the correction constant, $C_e = 6.34$, include:

1. Operating environment (K_e)[1].

2. Functional time, expressed in percent of the total mission time (t_Δ).

[1] Data supplied by the "Apollo Environmental Criteria."

~~CONFIDENTIAL~~

~~CONFIDENTIAL~~

Table 2-21. Apollo Component Reliability Data (14-Day Mission)

Component Nomenclature	Source of Data	No. of Components per Assembly	Generic Failure Rate Data -6 Fr/10	Correction Constant CE	Operating Cycle (hr) (t_o)	Failure Rate Data $xt_oxK_{\Delta}xn$	Predicted Reliability Numeric
Cell Stack	PWA	31	3.741	1.00	400	46,388.4	0.953610
Regulator, nitrogen	AVCO	1	3.550	6.34	400	9,003	0.990990
Regulator, oxygen	AVCO	1	3.550	6.34	400	9,003	0.990990
Regulator, hydrogen	AVCO	1	3.550	6.34	400	9,003	0.990990
Motor-pump-separator hydrogen assembly	AVCO	1	*6.180	6.34	400	15,672	0.984328
Valve, discharge, water	AVCO	1	0.224	6.34	400	568	0.999432
Motor-pump-glycol assembly	AVCO	1	3.370	6.34	400	8,596	0.991450
Valve, by-pass, regenerator H_2	AVCO	1	5.600	6.34	400	14,202	0.985798
Accumulator	AVCO	1	0.350	6.34	400	888	0.999110
Valve, by-pass, glycol regenerator	AVCO	1	2.240	6.34	400	5,681	0.994320
Condenser	AVCO	1	2.210	6.34	400	5,605	0.994390
Regenerator, primary	AVCO	1	2.210	6.34	400	5,605	0.994390
Regenerator, secondary	AVCO	1	2.210	6.34	400	5,605	0.994390
Preheaters, O_2 and H_2	AVCO	2	1.100	6.34	400	5,579	0.994420
Tank, nitrogen	AVCO	1	0.044	6.34	400	112	0.999880
Valve, purge H_2 and O_2 (solenoid valves)	AVCO	2	2.270	6.34	3*	98	0.999900
Sensor, temperature	AVCO	2	1.500	6.34	400	7,608	0.992390
Sensor, pressure	AVCO	3	1.700	6.34	400	12,934	0.987070
Valve, fill, tank N_2	AVCO	1	0.112	6.34	3*	2	0.999990
Mounts shock	AVCO	3	0.200	6.34	400	1,522	0.998488
Tubing and mechanical connectors	AVCO	-	0.050	6.34	400	127	0.999870
Terminals, and wiring, electrical	AVCO	-	0.390	6.34	400	989	0.999010
Radiator, space (heat exchange)	ESTIM.	1	2.210	6.34	400	5,605	0.994390
Meter, flow mass	ESTIM.	1	0.283	6.34	400	718	0.999282
Meter, pH	PWA	1	0.123	1.00	400	49	0.999950
Valve, control (glycol)	AVCO	1	0.240	6.34	400	609	0.999390
Valve, control (N_2)	AVCO	1	0.240	6.34	400	609	0.999390

Total System Reliability Number R_s = 0.8559245

*Cycles

~~CONFIDENTIAL~~

3. Application factor (K_a), based on actual/rated performance values.

The eight major mission phases included in the calculation (Table 2-22) of the correction constant are:

1. Liftoff and boost
2. Earth orbit
3. Translunar injection and coast
4. Lunar orbit
5. Transearth injection and coast
6. Earth entry
7. Earth landing
8. Postlanding period

Since the fuel-cell power plant is located in the service module of the Apollo vehicle, environmental stresses established[2] for various phases of the mission are directly applicable to the fuel cell components.

The environmental factors assigned to particular mission phases correspond to the random-vibration periods as shown in Figure 2-7.

The application factor (K_a) mentioned previously, has been taken as unity, because of the law of pertinent data available at this stage of the development program.

Summarizing the analytical approach used in arriving at the adjusted failure rate figure, we can write the following equation:

$$AF_r = GF_r \times N \times (\Sigma K_{e_o}) \text{ (Table 2-22)} \times K_a;$$

[2] D. R. Earles & M. F. Eddins (April 1962), AVCO Reliability Manual. pp. 27, 28, & 29.

[redacted]

Table 2-22. Environmental Factor Tabulation of Contributing Constants (Based on a 14-Day Mission with a Total Fuel Cell Operating Time of 400 Hours)

Phase	Phase Time (hr)	Operational Mode Valve K_o	Phase-Time-Period with Respect to Mission Time (Percent)	Environmental Factor K_{e_o}
I. Liftoff and boost	0.200	60	0.05	0.030
II. Earth orbit	4.500	1	1.125	0.0113
III. Translunar injection and coast period	77.080	3.6	19.27	0.6937
IV. Lunar orbit	149.935	1.0	37.4	0.374
IVa. Lunar navigation and docking	18.285	40.0	4.5	1.800
V. Transearth injection and coast	84.35	16.3	21.08	3.436
VI. Earth entry	0.333	*0	0.075	0.0
VII. Earth landing	0.137	*0	0.034	0.0
VIII. Postlanding period	66.064	*0	16.516	0.0

$K_e = \Sigma K_{e_o} = 6.345$

*Fuel cell system is in operation during the VI, VII and VIII phases.

~~CONFIDENTIAL~~

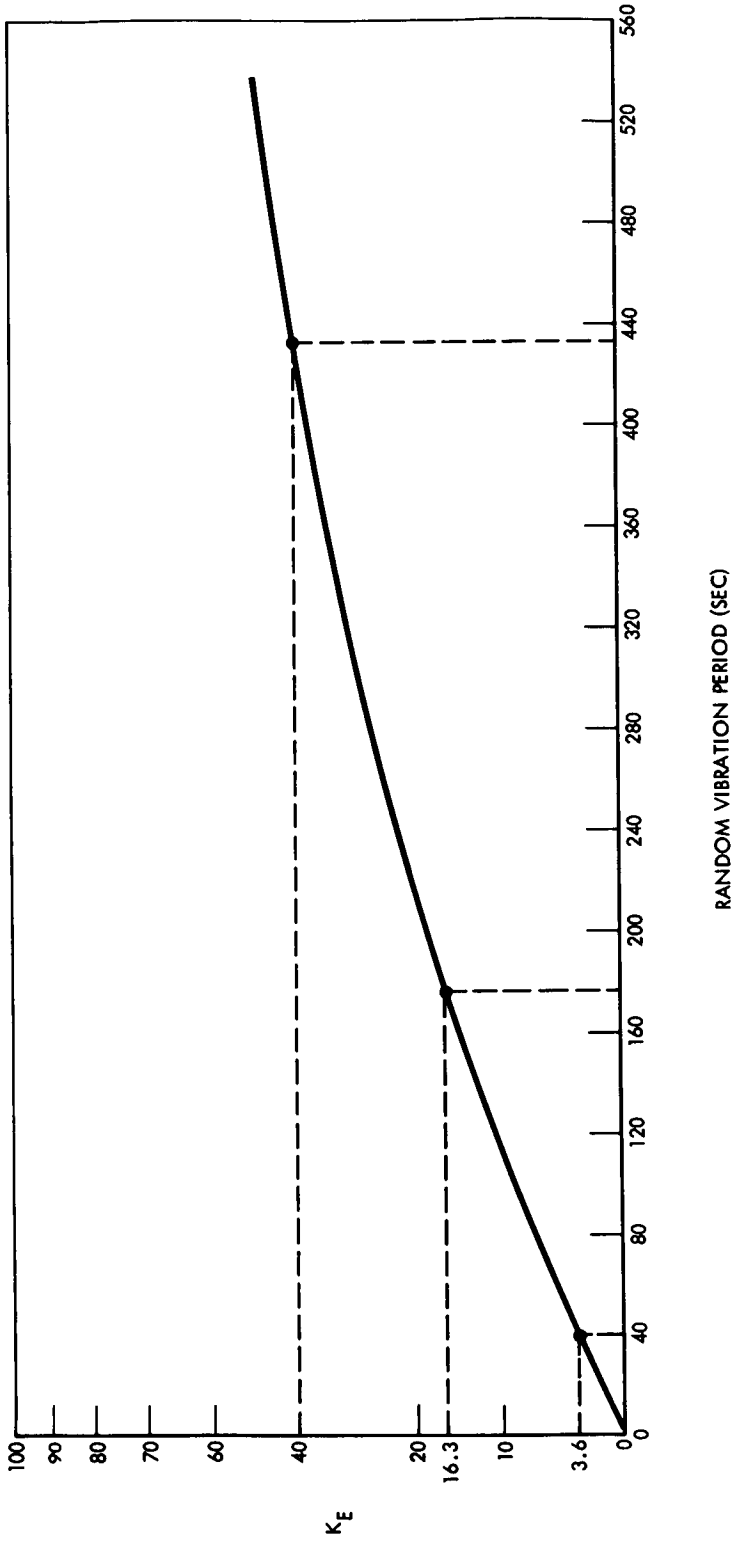

Figure 2-7. Environmental Factors and Random Vibration Period Interrelationship

~~CONFIDENTIAL~~

where

AF_r - adjusted failure rate

N - number of components per assembly

ΣK_{e_o} - constant - correction constant for AVCO failure rate data

K_a - constant - application factor - 1.

Wire Terminations

An evaluation of various wire-terminating procedures in common use for space vehicle applications was prepared. The methods of termination analyzed included solder, crimp, stud and nut, welding, wire wrap, lock in place, screw type, and taper pin and socket. Comments related to each type of termination were analyzed, providing information pertaining to primary mode of failure, cause of failure, failure rate, and suggested application.

All methods analyzed exhibited a relatively low failure rate. Due to space limitations and the large number of specific applications, criteria other than failure data determines termination type used. The findings were presented to be used as a guide for selecting the optimum termination type for each application. Table 2-23 presents a summary of termination techniques analyzed and indicates primary mode of failure and prevalent application of each type.

In conjunction with the general wire termination evaluation, an evaluation of terminal block versus splice termination was made to compare the two forms of wire junction. Both methods of termination under investigation would utilize crimping.

Results of the study proved that the orderly use of splices in selected applications does deserve consideration within aerospace utilization. For the practical application of splicing is enhanced by simplicity, ruggedness, and capability to provide functional operation under severe environments. Measures should be taken to prevent the indiscriminate practice of splicing without strict documentation control.

Further proof of splicing was evidenced at an S&ID meeting with NASA held on 2 May 1963. A demonstration was given to illustrate crimped splices. The samples were subjected to a wire pull test. The failure point in pounds

~~CONFIDENTIAL~~

Table 2-23. Summary of Termination Techniques

Termination Method	Failure Rate Failures/10^6 Joint Hr	Prevalent Application	Primary Mode of Failure
Solder	0.20	Electrical bridging	Embrittlement Cracking Loss of insulation
Stud and nut	0.18	Rigid connection meters	Shock transfer Vibration transfer
Crimping	0.18	Small stranded wire No. 16, 18, 20, 22	Loss of tension and flexing ability
Welding	0.48	High temperatures and high-strength application	Burnt terminal Embedment material
Wire wrap	0.32	Firm grip	Weaken from re-use and aging
Lock-in-place	0.18	Common point of conductors	Deformation from lock-in
Screw type	NA*	Easy removal	Shock and vibration effects
Taper pin and socket	NA*	Test equipment	Loss of retent on force wear

*Denotes that failure data is not available at this time.

for a tensile strength was approximately 30 percent above the required minimum force. In no case did failure occur at a crimped splice; rather, failure was caused by wire breakage. A continuing study effort is being expended on all wire termination techniques and applications.

NASA has recently instructed S&ID not to use splicing except for the collection of "shield ground wires." This decision has resulted in replacement of splices by terminal blocks for the aforementioned wire junction termination. A request for re-evaluation of the no-splice decision is felt justified and NASA has been asked for the following three applications:

1. Fixed components
2. Areas where there is a branch connection
3. Shield ground wires

S&ID is presently awaiting additional direction from NASA on this problem. A final decision on this matter is considered mandatory, as terminations and interconnections play an essential part in equipment functioning to obtain maximum reliability.

PROBLEM AREAS

Analysis

Reliability analysis of the battery charger circuitry indicated that the three potentiometers should not be used. The potentiometers in question are used for final circuit adjustment only. At the completion of this adjustment, the potentiometers are locked to a fixed value and are not utilized again. Since the potentiometers will not be used for continuous adjustment, they should be replaced with fixed resistors which are more reliable and weigh less. Table 2-18 indicates the advantages of this trade-off.

Test

The vibration spectrum is still a major problem to the cells. Failures have occurred during off-limit testing in the form of fracture at the diaphragm edge. Several fixes are under consideration, including a diaphragmless cell and increased shock attenuation through the shockmounts.

TEST PROGRAM

Program Status

All components are now in development testing and many are approaching final configuration. Development testing is scheduled to phase out by 30 March 1964, the release date for the Qualification Bill of Materials. Qualification testing is scheduled to commence on 1 August 1963 and end by 1 December 1964.

Significant Development Test Results

A fuel cell powerplant, built to the A2 Bill of Materials, completed 190 hours on load with no failures. This represents a significant change in the development program.

Tests Completed and In Progress

Independent Module

As of May 1963, 797 hours of test time had been accumulated on power plants, including 76 hours on load and 501 hours of operation with simulated power sections. Seven power plants are now in the development program, including the first two PC3A-2 units. Start-up and shut-down procedures are currently being evaluated.

31-Cell Stacks

Several 31-cell stack rigs are active and running. A variety of mechanical and operational characteristics, unique to the complete power section, are being studied. These include performance, effects of sustained operation on load, start-up procedures, and cell seal characteristics.

Six-Cell Stack

Several six-cell rigs are being tested for start-up, running, and shut-down procedures. In addition, these tests are utilized to evaluate new seal and electrode configurations, and to conduct studies of performance and endurance characteristics of multicell stacks.

Single Cell

Many thousands of hours have been accumulated on single cells during this quarter. One special designed experiment is being conducted with ten single cells, for a Weibull analysis of cell failure rates. Other studies

include purge techniques, sustained operation, design variations, and effects of input variations. One hydrogen electrode was refurbished after 500 hours of operation and returned to test to accumulate 783 hours.

Seals

Extensive testing is being conducted on one-piece, molded, prestressed "L" shaped teflon seals for the electrode assembly. Shelf life and performance are being studied. Other seal materials are also being investigated.

Pumps

Mechanical failures continue to appear in the pump testing. Fixes are being incorporated, and testing will continue.

Heat Exchangers

Heat transfer characteristics of the primary regenerator as a function of flow and position are being studied. Condenser tests are being conducted with saturated hydrogen and glycol. Tests with the condenser and separator in series are being made.

Various temperatures are being applied to the two incoming glycol lines of the secondary regenerator to determine heat transfer characteristics.

Two preheaters will be tested next quarter. Previous tests were conducted to study flow rates.

Controls and Other Components

Evaluation tests are continuing on the pressure regulators, sampling valves, primary and secondary bypass control valves, purge valves, and shock mounts.

SUBCONTRACTOR MANAGEMENT

Westinghouse

A list of inverter nonstandard components submitted to S&ID by the supplier has been tentatively approved. Based on the nonstandard part information received from the supplier, it was found that the part selection was satisfactory; however, the procurement documents were found to be unsatisfactory. The procurement documents for semiconductors, resistors, capacitors, and fuses were very vague with respect to failure

rate requirements, electrical tests, and qualification tests. In addition, some tests called out in the procurement documents were extremely excessive and considered by S&ID to be detrimental to the part.

To alleviate these problems, a meeting was held with the supplier. As a result of this meeting, the supplier agreed to change the procurement documents to reflect more realistic requirements.

PLANNED ACTIVITIES

Analysis

Fuel Cell

During the next report period, primary effort will be devoted toward review of P&WA development test data to determine applicability to reliability assessment. A concentrated effort will be made to determine reliability growth to date. Recent redirection in the area of documentation will provide adequate information concerning cell development failures, which, when reviewed, will provide additional insight into inherent fuel cell reliability.

It is anticipated that current studies by P&WA concerning cell life characteristics, electrode composition, and KOH bubble pressure will begin to provide usable data. If and when this reliability data becomes available, S&ID will review and evaluate results in conjunction with P&WA.

All results of planned activities will be reported in subsequent reports. Exact details of test and study criteria, results, and conclusions will be presented as required.

Inverter and Battery Charger

During the next report period, major reliability effort will be directed toward establishing a failure effects analysis. Logic diagrams and math models will be utilized to predict significant changes in state-of-the-art reliability levels as design improvement and test data are analyzed. Also, parts will be reviewed to ensure that only high-reliability components are selected.

Test

During the next quarter, development testing will shift into another phase. Most testing to date has been the performance type at room

ambient conditions. Environmental stresses will be applied while the components are operating. Also, emphasis is shifting from materials and parts to assemblies and complete modules and A2 design in place of A1 (early concept) design.

Table 2-14. Fuel Cell, Electrical Power Failure Effects Analysis

Item	Drawing Number	Elect. Reference. Desig.	Failure Detection	Function	Failure Type	Mission Phase	Failure Effect On Component Performance	Failure Effect On Sub-Systems Performance	Failure Effect On Apollo	Possible Crew Action
Secondary regenerator by-pass valve				Divides the flow of glycol between by-pass and regenerator to maintain constant temp of H_2 prior to entering H_2 pump.	Loss of temperature control	1-56	Loss of temperature calibration	Reduction of power output to a constant power level	No effect	None
Water discharge valve				Allows H_2O to enter the manifold	Stops water flow, leaks H_2 into water system	1-56	H_2 in water storage tank	Gradual reduction from rated power to zero power output	Catastrophic; contamination of crew's compartment with H_2	Pilot shuts down module
H_2 and O_2 purge valves				Provided to purge the reactant passages	Leak, will not open or close	1-56	Loss of reactants overboard; leak	Gradual reduction from rated power to zero power output	Loss of O_2 for crew's consumption	Pilot shuts down module
N_2 tank				Contains the N_2 supply	Loss of N_2	1-56	Leaks N_2	Gradual reduction from rated power to zero power output	Ruptured tank will cause a catastrophic failure	Pilot shuts down module
N_2 regulator				Maintains given gas blanket pressure. Provides back-up pressure for glycol accumulator	Incorrectly senses pressure (e.g., no indication of high or low pressure)	1-56	Failure of one bellows causes no effect because of redundancy	Gradual reduction from rated power to zero power output	No effect	Pilot shuts down module
O_2 and H_2 regulators				Maintains a constant pressure differential between reactants and NOH electrolyte	Incorrectly senses pressure (e.g., no indication, of high or low pressure), leakage	1-56	Failure of one bellows causes no effect because of redundancy; loss of reactants through N_2 system overboard bleed	Gradual reduction from rated power to zero power output	Loss of O_2 for crew's consumption	Pilot shuts down module
Module jacket				Encases electrode assembly module and is charged with inert gas	Loss of N_2	1-56	Loss of bubble pressure; KOH leak into H_2O system	Gradual reduction from rated power to zero power output	Contamination of H_2O with KOH; catastrophic if jacket ruptures	Pilot shuts down module
Circulating fluid pump assembly				Provides sufficient head to overcome secondary glycol cooling loop losses	Pump stops; leak	1-56	Module overheats	Gradual reduction from rated power to zero power output	No effect	Pilot shuts down module
Secondary fluid pump motor, 400 cps				Drives gear pump for circulation of glycol-H_2O mixture in cooling loop	Pump stops; leak	1-56	Module overheats	Gradual reduction from rated power to zero power output	No effect	Pilot shuts down module
Torsion rod assembly				Holds assembly of required number of electrode pairs in compression	Structural fatigue	1-56	Loss of KOH	Gradual reduction from rated power to zero power output	No effect	Pilot shuts down module
Fuel cell element				Consumes H_2 and O_2 and produces electric power and water	Loss of KOH or reactants	1-56	Power output reduced; KOH leaks into H_2 system	Reduction of power output to a constant power level	Contamination of H_2O with KOH	None

[redacted]

Table 2-14. Fuel Cell, Electrical Power Failure Effects Analysis (Cont)

Item	Drawing Number	Elect. Reference. Desig.	Failure Detection	Function	Failure Type	Mission Phase	Failure Effect On Component Performance	Failure Effect On Sub-Systems Performance	Failure Effect On Apollo	Possible Crew Action
Module heaters				Used to melt electrolyte and bring the system up to operating temperature prior to launch	Short in insulation of two end pieces	-T to Phase 1 4 hrs.	No effect	No effect	No effect	Failure will be indicated prior to launch.
Heater harness					Short in insulation between remote heater foils	1-56	Shorts out a portion of the module between failures	Reduction of power output to a constant power level	No effect	None
Segmented manifold (module)				Conducts reactants from cryogenic storage to fuel cell	Loss of H_2 and O_2	1-56	Loss of reactants	Gradual reduction from rated power to zero power output	No effect	None
Preheaters (reactants)				Conditions the H_2 and O_2 prior to pressure regulation and consumption by the cell module	Loss of glycol	1-56	Partial loss of reactant	Partial reduction of rated power	No effect	None
Condenser				Transfers waste heat to secondary fluid and condenses water vapor from the cell	Broken H_2 or glycol connections	1-56	Loss of glycol or H_2	Gradual reduction from rated power to zero power output	Contamination of H_2O with secondary fluid	None
Primary regenerator				Maintains the fuel cell in thermal equilibrium	Broken H_2 or H_2O connections	1-56	Loss of H_2 and/or H_2O	Gradual reduction from rated power to zero power output	No effect	Pilot shuts down module
Secondary loop regenerator				Provides flexibility in the control of the heat rejection rate	Leak; temperature tolerance not maintained; no temperature	1-56	Loss of coolant	Gradual reduction from rated power to zero power output	No effect	Pilot shuts down module
Pump and separator assembly				Removes potable H_2O from recirculating hydrogen steam and propels the water to a storage tank	Stops pumping H_2 and H_2O; leaks H_2	1-56	Loss of water pressure to tank	Gradual reduction from rated power to zero power output	No effect	Pilot shuts down module
Fluid pump motor, 400 cps				Drives the H_2O separator and vane pump to circulate moist H_2	Shorted out motor winding; mechanical fatigue	1-56	Module overheats	Gradual reduction from rated power to zero power output	No effect	Pilot shuts down module
Accumulator glycol				Provides a reference pressure on the glycol loop	Leaks N_2, loss of glycol	1-56	Passage of N_2 to glycol, lower efficiency	Reduction of power output to a constant power level	No effect	None
Pump and condenser assembly manifolds				Conducts H_2, H_2O and glycol	Leaks H_2, H_2O, and glycol	1-56	Loss of H_2, H_2O and glycol	Gradual reduction from rated power to zero power output	No effect	None
Bimetal, primary regenerator by-pass valve				Senses Temperature and Actuates a flow divider at the inlet to the regenerator	Torsional fatigue, leakage	1-56	Loss of control, leaks reactant	Loss of power, reduced module life	No effect	None

[redacted]

~~CONFIDENTIAL~~

Table 2-14. Fuel Cell, Electrical Power Failure Effects Analysis (Cont)

Item	Drawing Number	Elect. Reference. Desig.	Failure Detection	Function	Failure Type	Mission Phase	Failure Effect On Component Performance	Failure Effect On Sub-Systems Performance	Failure Effect On Apollo	Possible Crew Action
Fuel cell module, assembly				31 single cells, electrically connected in series, consume H_2 and O_2 and produce d-c power	Loss of reactant and N_2	1-56	Leaks reactant to N_2 blanket or leaks N_2 to ambient atmosphere	Gradual reduction from rated power to zero power output		Defective module is shut down.
O_2, N_2, and H_2 downstream absolute pressure transducers (P_3, P_4 and P_5)				Provides pressure level readouts of H_2, O_2/N_2	Low reading, high reading; no pressure indication; leak reactions	1-56	Erroneous reading; stops indicating pressure; loss of reactants	No effect; a reactant leakage will cause gradual reduction from rated power to zero power output	No effect	For high reading, module is shut down.
Surface temperature sensor instrumentation (ST_1)				Monitors surface temperature of the cell stock	False or no reading	1-56	Erroneous reading; stops indicating temperature	No effect	No effect	None
Condenser, exit-temperature Sensor, (T_6)				Measures temperatures of H_2 and H_2O entering the separator	Leaks H_2 or O_2; false or no reading	1-56	Erroneous reading; stops indicating temperature	No effect	No effect	For high reading, up-stream H_2 purge valve is activated.
PH meter				Monitors PH factor of water produced by the fuel cell	False reading; KOH leak into water supply	1-56	Contamination of water	No effect	No effect	None

~~CONFIDENTIAL~~

Table 2-15. Distribution Subsystem, Electrical Power Failure Effects Analysis

Item	Drawing Number	Elect. Reference Desig.	Failure Detection	Function	Failure Type	Mission Phase	Failure Effect On Component Performance	Failure Effect On Sub-Systems Performance	Failure Effect On Apollo	Possible Crew Action
					Fail closed		Circuit breaker inoperative	No short-circuit protection for navigation and guidance (computer)	None	D-c main bus A can be switched in if a short occurs
Circuit breaker	V14-945101	CB7		D-c main bus A or B to H_2 or O_2 purge control FC 1	Fail open		Circuit breaker inoperative	No d-c power available to H_2-O_2 purge control from main bus A or B	None	None
					Fail closed		Circuit breaker inoperative	No short-circuit protection for H_2-O_2 purge control	None	None
Circuit breaker	V14-945101	CB8		D-c main bus A or B to H_2 or O_2 purge control FC 2	Fail open		Circuit breaker inoperative	No d-c power available to H_2-O_2 purge control from main bus A or B	None	None
					Fail closed		Circuit breaker inoperative	No short-circuit protection for H_2-O_2 purge control	None	None
Circuit breaker	V14-945101 dated 4/25/63	CB9		D-c main bus A or B to H_2 or O_2 purge control FC 3	Fail open		Circuit breaker inoperative	No d-c power available to H_2-O_2 purge control from main bus A or B	None	None
					Fail closed		Circuit breaker inoperative	No short-circuit protection for H_2-O_2 purge control	None	None
Circuit breaker	V14-945101	CB10		Battery relay bus to a-c bus 2 over voltage, under voltage, and overlook sensing	Fail open		Circuit breaker inoperative	No d-c power available to a-c/over voltage, under voltage, and overlook sensing	None	Bus No. 1 can be switched in.
					Fail closed		Circuit breaker inoperative	No short-circuit protection for a-c/over voltage, under voltage, and overlook sensing	None	Bus No. 1 can be switched in if a short occurs.
Circuit breaker	V14-945101	CB11		Battery relay bus to d-c main bus A under voltage sensing	Fail open		Circuit breaker inoperative	No d-c power available to d-c/under voltage sensing	None	D-c main bus B can be switched in.
					Fail closed		Circuit breaker inoperative	No short-circuit protection for d-c/under voltage sensing	None	D-c main bus B can be switched in is a short occurs.

Table 2-15. Distribution Subsystem, Electrical Power Failure Effects Analysis (Cont)

Item	Drawing Number	Elect. Reference Desig.	Failure Detection	Function	Failure Type	Mission Phase	Failure Effect On Component Performance	Failure Effect On Sub-Systems Performance	Failure Effect On Apollo	Possible Crew Action
Relay		K6		Inverter No. 2 to bus No. 2 relay	Fail open		Loss of relay	No a-c power available at bus No. 2 while inverter No. 2 is on	None	Loads can be switched to bus No. 1 or inverter No. 1 or 3 can be switched in
					Fail short		Loss of relay	No effect	None	In the event of a short on bus No. 2, circuit breakers on bus No. 2 can be opened and power can be switched to bus No. 1.
Relay	V14-945101 dated 4/25/63	K17		Battery bus A to d-c main bus A relay	Fails open		Relay inoperative	No d-c power available to d-c main bus A or d-c main bus B from battery bus A	None	Battery bus B can be switched in
					Fails short		Relay inoperative	No short-circuit protection for battery bus A from d-c main bus B	None	Battery bus B can be switched in if a short occurs
Relay	V14-945101 dated 4/25/63	K18		Battery charger a-c and d-c input relay	Fails open		Relay inoperative	No a-c or d-c power available to battery charger from d-c main bus A or B or no a-c power available from bus No. 1 or bus No. 2	None	None
					Fails short		Relay inoperative	Constant voltage feature keeps short-circuit current within safe limits	None	None
Circuit breaker	V14-945101 dated 4/25/63	CB1		D-c main bus A to navigation and guidance computer	Fail open		Circuit breaker inoperative	No d-c power available to navigation and guidance (computer) from main bus A	None	D-c main bus B can be switched in
					Fail closed		Circuit breaker inoperative	No short-circuit protection for navigation and guidance (optics)	None	D-c main bus B can be switched in if a short occurs
Circuit breaker	V14-945101	CB2		D-c main bus B to navigation and guidance (computer)	Fail open		Circuit breaker inoperative	No d-c power available to navigation and guidance (computer) from main bus B	None	D-c main bus A can be switched in

Table 2-15. Distribution Subsystem, Electrical Power Failure Effects Analysis (Cont)

Item	Drawing Number	Elect. Reference. Desig.	Failure Detection	Function	Failure Type	Mission Phase	Failure Effect On Component Performance	Failure Effect On Sub-Systems Performance	Failure Effect On Apollo	Possible Crew Action
Relay	V14-945101 dated 10/25/62	K1		D-c input power relay to inverter No. 1	Fails open		Relay inoperative	Inverter No. 1 would not be available.	None	Inverter No. 2 or 3 can be switched in to restore power
					Fails short		Relay inoperative	No effect	None	In the event of a short, inverter No. 1 can be shut off and inverter No. 2 or 3 can be switched in
Relay	V14-945101 dated 10/25/62	K2		D-c input power relay to inverter No. 2	Fails open		Relay inoperative	Inverter No. 2 would not be available.		Inverter No. 1 or 3 can be switched in to restore power
					Fails short		Relay inoperative	No effect		In the event of a short, inverter No. 2 can be shut off and inverter No. 1 or 3 can be switched in
Relay	V14-945101 dated 10/25/62	K3		D-c input power relay to inverter No. 3	Fails open		Relay inoperative	Inverter No. 3 would not be available.	None	Inverter No. 1 or 2 can be switched in to restore power
					Fails short		Relay inoperative	No effect	None	In the event of a short, inverter No. 3 can be shut off and inverter No. 1 or 2 can be switched in
Relay	V14-945101 dated 10/25/62	K7		Inverter No. 2 to bus No. 1 relay	Fail open		Loss of relay	No a-c power available at bus No. 1 while inverter No. 2 is on	None	Loads can be switched to bus No. 2 or inverter No. 1 or 3 can be switched in
					Fail short		Loss of relay	No effect	None	In the event of a short on bus No. 1, circuit breakers on bus No. 1 can be switched to bus No. 2
Relay		K9		Inverter No. 3 to bus No. 1 relay	Fail open		Loss of relay	No a-c power available at bus No. 1 while inverter No. 3 is on	None	Loads can be switched to bus No. 2 or inverter No. 1 or 2 can be switched in
					Fail short		Loss of relay	No effect	None	In the event of a short on bus No. 1, circuit breakers on bus No. 1 can be opened and power can be switched to bus No. 2

~~CONFIDENTIAL~~

Table 2-15. Distribution Subsystem, Electrical Power Failure Effects Analysis (Cont)

Item	Drawing Number	Elect. Reference. Desig.	Failure Detection	Function	Failure Type	Mission Phase	Failure Effect On Component Performance	Failure Effect On Sub-Systems Performance	Failure Effect On Apollo	Possible Crew Action
					Fails closed, position No. 2		Loss of switch	No d-c power available to inverter No. 3 from d-c main bus A	None	D-c main bus B can be switched in or inverter No. 1 or 2 can be switched in.
Circuit breaker	V14-945101 dated 4/25/63	CB17		D-c main bus A to d-c sensing and voltmeter selector switch	Fail open		Circuit breaker inoperative	No d-c power available to d-c sensing from main bus A	None	D-c main bus B can be switched in.
					Fail closed		Circuit breaker inoperative	No short-circuit for d-c sensing	None	D-c main bus B can be switched on.
Circuit breaker	V14-945101	CB18		D-c main bus B to d-c sensing and voltmeter selector switch	Fail open		Circuit breaker inoperative	No d-c power available to d-c sensing from main bus B	None	D-c main bus A can be switched in.
					Fail closed		Circuit breaker inoperative	No short-circuit protection for d-c sensing	None	D-c main bus A can be switched in if a short occurs.
Circuit breaker	V14-945101	CB21		D-c main bus A to navigation and guidance (optics)	Fail open		Circuit breaker inoperative	No d-c power available to navigation and guidance (optics) from main bus A	None	D-c main bus B can be switched in.
					Fail closed		Circuit breaker inoperative	No short-circuit protection for navigation and guidance (optics)	None	D-c main bus B can be switched in if a short occurs.
Circuit breaker	V14-945101	CB25		D-c main bus A to master timing	Fail open		Circuit breaker inoperative	No d-c power available to master timing from main bus A	None	D-c main bus B can be switched in.
					Fail closed		Circuit breaker inoperative	No short-circuit protection for master timing	None	D-c main bus B can be switched in if a short occurs.
Circuit breaker	V14-945101	CB26		D-c main bus B to master timing	Fail open		Circuit breaker inoperative	No d-c power available to master timing from main bus B	None	D-c main bus A can be switched in.
					Fail closed		Circuit breaker inoperative	No short-circuit protection for master timing	None	D-c main bus B can be switched in if a short occurs.

~~CONFIDENTIAL~~

Table 2-15. Distribution Subsystem, Electrical Power Failure Effects Analysis (Cont)

Item	Drawing Number	Elect. Reference. Desig.	Failure Detection	Function	Failure Type	Mission Phase	Failure Effect On Component Performance	Failure Effect On Sub-Systems Performance	Failure Effect On Apollo	Possible Crew Action
Circuit breaker	V14-945101	CB12		Battery relay bus to d-c main bus B under voltage sensing	Fail open		Circuit breaker	No d-c power available to d-c/ under voltage sensing	None	D-c main bus A can be switched in.
					Fail closed		Circuit breaker	No short-circuit protection for d-c/under voltage sensing	None	D-c main bus A can be switched in if a short occurs.
D-c main bus A	V14-945101			Distributes power	Fail open		Loss of bus	No d-c power available at d-c main bus A	None	D-c main bus B can be switched in.
					Fail closed		Loss of bus	No d-c power available at d-c main bus A	None	D-c main bus B can be switched in if a short occurs.
D-c main bus B	V14-945101 dated 10/25/62			Distributes power	Fails open		Loss of bus	No d-c power available at d-c main bus B	None	D-c main bus A can be switched in.
					Fails short		Loss of bus	No d-c power available at d-c main bus B	None	D-c main bus A can be switched in if a short occurs.
Circuit breaker	V14-945101 dated 10/25/62	CB15		D-c main bus A to inverter No. 3 circuit breaker	Fails open		Loss of circuit breaker	No d-c power available to inverter No. 3	None	Inverter No. 1 or 2 can be switched in.
					Fails short		Loss of circuit breaker	No short-circuit protection for inverter No. 3 from d-c main bus A	None	Inverter No. 1 or 2 can be switched in if a short occurs.
Circuit breaker	V14-945101 dated 10/25/62	CB14		D-c main bus B to inverter No. 2 circuit breaker	Fails open		Loss of circuit breaker	No d-c power available to inverter No. 2	None	Inverter No. 1 or 3 can be switched in.
					Fails short		Loss of circuit breaker	No short-circuit protection for inverter No. 2 from d-c main bus B	None	Inverter No. 1 or 3 can be switched in if a short occurs.
Switch	V14-945101 dated 10/25/62	S19		On-off switch for inverter No. 3 d-c power input	Fails open		Loss of switch	No d-c power available to inverter No. 3	None	Inverter No. 1 or 2 can be switched in.
					Fails closed, position No. 1		Loss of switch	No d-c power available to inverter No. 3 from d-c main bus B	None	D-c main bus A can be switched in or inverter No. 1 or 2 can be switched in.

~~CONFIDENTIAL~~

Table 2-15. Distribution Subsystem, Electrical Power Failure Effects Analysis (Cont)

Item	Drawing Number	Elect. Reference Desig.	Failure Detection	Function	Failure Type	Mission Phase	Failure Effect On Component Performance	Failure Effect On Sub-Systems Performance	Failure Effect On Apollo	Possible Crew Action
Circuit breaker	V14-945101 dated 10/25/62	CB4		D-c main bus B to post-landing bus circuit breaker	Fails open		Circuit breaker inoperative	No power available to post-landing bus from d-c main bus B	None	D-c main bus A can be switched in.
					Fails short		Circuit breaker inoperative	No short-circuit protection for d-c main bus B from post-landing bus	None	D-c main bus A can be switched in if a short occurs.
Diode	V14-945101 dated 10/25/62	CR14		Provides path for current flow from d-c main bus B to post-landing bus, also isolates post-landing bus from d-c line bus B	Fails open		Diode inoperative	No power available from d-c main bus B to post-landing bus	None	D-c main bus A can be switched in.
					Fails short		Diode inoperative	No isolation between post-landing bus and d-c main bus B	None	D-c main bus A can be switched in.
Circuit breaker	V14-945101 dated 10/25/62	CB23		D-c main bus A to navigation and guidance circuit breaker	Fails open		Loss of circuit breaker	No d-c power available to navigation and guidance from d-c main bus A	None	D-c main bus B can be switched in.
					Fails short		Loss of circuit breaker	No short-circuit protection for d-c main bus A from navigation and guidance	None	D-c main bus B can be switched in if a short occurs.
Circuit breaker	V14-945101 dated 10/25/62	CB24		D-c main bus B to navigation and guidance circuit breaker	Fails open		Loss of circuit	No d-c power available to navigation and guidance from d-c main bus B	None	D-c main bus A can be switched in.
					Fails short		Loss of circuit	No short-circuit protection for d-c main bus B from navigation and guidance	None	D-c main bus A can be switched in if a short occurs.
Circuit breaker	V14-945101 dated 10/25/62	CB27		D-c main bus A to stabilization and control circuit breaker	Fails open		Loss of circuit breaker	No d-c power available to stabilization and control from d-c main bus A	None	D-c main bus B can be switched in.
					Fails short		Loss of circuit breaker	No short-circuit protection for d-c main bus A from stabilization and control	None	D-c main bus B can be switched in if a short occurs.

~~CONFIDENTIAL~~

Table 2-15. Distribution Subsystem, Electrical Power Failure Effects Analysis (Cont)

Item	Drawing Number	Elect. Reference. Desig.	Failure Detection	Function	Failure Type	Mission Phase	Failure Effect On Component Performance	Failure Effect On Sub-Systems Performance	Failure Effect On Apollo	Possible Crew Action
Circuit breaker	V14-945101 dated 10/25/62	CB28		D-c main bus B to stabilization and control circuit breaker	Fails open		Loss of circuit breaker	No d-c power available to stabilization and control from d-c main bus B	None	D-c main bus A can be switched in.
					Fails short		Loss of circuit breaker	No short-circuit protection for d-c main bus B from stabilization and control	None	D-c main bus A can be switched in if a short occurs.
Circuit breaker	V14-945101 dated 10/25/62	CB29		D-c main bus A to reaction control circuit breaker	Fails open		Loss of circuit breaker	No d-c power available to reaction control from d-c main bus A	None	D-c main bus B can be switched in.
					Fails short		Loss of circuit breaker	No short-circuit protection for d-c main bus A from reaction control	None	D-c main bus B can be switched in if a short occurs.
Switch	V14-945101 dated 10/25/62	S1		Inverter No. 1 on-off switch	Fails closed, on position		Loss of switch	Inverter No. 1 cannot be turned off with switch S1.	None	Circuit breaker CB61 can be opened in event inverter No. 1 has to be shut off.
					Fails closed, off position		Loss of switch	Inverter No. 1 cannot be turned on.	None	Inverter No. 2 or 3 can be switched in.
Switch	V14-945101 dated 10/25/62	S2		Inverter No. 2 on-off switch	Fails closed, on position		Loss of switch	Inverter No. 2 cannot be turned off with switch S2.	None	Circuit breaker CB62 can be opened in event inverter No. 2 has to be shut off.
					Fails closed, off position		Loss of switch	Inverter No. 2 cannot be turned on.	None	Inverter No. 1 or 3 can be switched in.
Switch	V14-945101 dated 10/25/62	S3		Inverter No. 3 on-off switch	Fails closed, on position		Loss of switch	Inverter No. 3 cannot be turned off with switch S3.	None	Circuit breaker CB63 can be opened in event inverter No. 3 has to be shut off.
					Fails closed, off position		Loss of switch	Inverter No. 3 cannot be turned on.	None	Inverter No. 1 or 2 can be switched in.

Table 2-15. Distribution Subsystem, Electrical Power Failure Effects Analysis (Cont)

Item	Drawing Number	Elect. Reference. Desig.	Failure Detection	Function	Failure Type	Mission Phase	Failure Effect On Component Performance	Failure Effect On Sub-Systems Performance	Failure Effect On Apollo	Possible Crew Action
Switch	V14-945101 dated 10/25/62	S4		Inverter No. 1 to bus No. 2 on-off switch	Fails closed, on position		Loss of switch	With inverter No. 1 on a-c power cannot be removed from bus No. 2 by switch S4.	None	In the event of a short circuit, inverter No. 2 or 3 can be switched in.
					Fails closed, off position		Loss of switch	No a-c power is available to bus No. 2 while inverter No. 1 is on.	None	Inverter No. 2 or 3 can be switched in.
Circuit breaker	V14-945101 dated 10/25/62	CB34		Battery bus B to d-c main bus A circuit breaker	Fails open		Circuit breaker inoperative	No d-c power available to d-c main bus A from battery bus B	None	D-c main bus B can be switched in.
					Fails short		Circuit breaker inoperative	No short-circuit protection for battery bus B from d-c main bus A	None	D-c main bus B can be switched in if a short occurs.
Relay	V14-945101	K16		Battery bus B to d-c main bus A relay	Fails open		Relay inoperative	No d-c power available to d-c main bus A or d-c main bus B from battery bus B	None	Battery bus A can be switched in.
					Fails short		Relay inoperative	No short-circuit protection for battery bus B from d-c main bus A	None	Battery bus A can be switched in if a short occurs.
Diode	V14-945101	CR9		Provides path for current flow from battery bus B to d-c main bus A; also isolates battery bus B from d-c main bus A	Fails open		Diode inoperative	No d-c power available to d-c main bus A from battery bus B	None	Battery bus A can be switched in or d-c main bus B can be switched in.
					Fails short		Diode inoperative	No isolation between battery bus B and d-c main bus A	None	Circuit breaker CB34 can be opened.
Circuit breaker	V14-945101	CB36		Battery bus B to d-c main bus B circuit breaker	Fails open		Circuit breaker inoperative	No d-c power available from battery bus B to d-c main bus B	None	D-c main bus A can be switched in.
					Fails short		Circuit breaker inoperative	No short-circuit protection for battery bus B from d-c main bus B	None	D-c main bus A can be switched in if a short occurs.

Table 2-15. Distribution Subsystem, Electrical Power Failure Effects Analysis (Cont)

Item	Drawing Number	Elect. Reference. Desig.	Failure Detection	Function	Failure Type	Mission Phase	Failure Effect On Component Performance	Failure Effect On Sub-Systems Performance	Failure Effect On Apollo	Possible Crew Action
Circuit breaker	V14-945101 dated 10/25/62	CB30		D-c main bus B to reaction control circuit breaker	Fails open		Loss of circuit breaker	No d-c power available to reaction control from d-c main bus B	None	D-c main bus A can be switched in.
					Fails short		Loss of circuit breaker	No short-circuit protection for d-c main bus B from reaction control	None	D-c main bus A can be switched in if a short occurs.
Diode	V14-945101 dated 10/25/62	CR10		Provides path for current flow from battery bus B to d-c main bus B; also isolates battery bus B from d-c main bus B	Fails open		Diode inoperative	No d-c power available to d-c main bus B from battery bus B	None	Battery bus A can be switched in, or d-c main bus A can be switched in.
					Fails short		Diode inoperative	No isolation between battery bus B and d-c main bus B	None	Circuit breaker CB36 can be opened.
Circuit breaker	V14-945101 dated 10/25/62	CB35		Battery bus A to d-c main bus B circuit breaker	Fails open		Circuit breaker inoperative	No d-c power available from battery bus A to d-c main bus B	None	D-c main bus A can be switched in.
					Fails short		Circuit breaker inoperative	No short-circuit protection for battery bus A from d-c main bus B	None	D-c main bus A can be switched in if a short occurs.
Circuit breaker	V14-945101 dated 10/25/62	CB43		Battery bus A to post-landing bus circuit breaker	Fails open		Circuit breaker inoperative	No d-c power available to post-landing bus from battery bus A	None	Battery bus B can be switched in.
					Fails short		Circuit breaker inoperative	No short-circuit protection for battery bus A	None	Battery bus B can be switched in if a short occurs.
Circuit breaker	V14-945101 dated 10/25/62	CB39		Battery bus A to battery relay bus circuit breaker	Fails open		Circuit breaker inoperative	No d-c power available to battery relay bus from battery bus A	None	Battery bus B can be switched in.
					Fails short		Circuit breaker inoperative	No short-circuit protection for battery bus A from battery relay bus	None	Battery bus B can be switched in if a short occurs.

~~CONFIDENTIAL~~

Table 2-15. Distribution Subsystem, Electrical Power Failure Effects Analysis (Cont)

Item	Drawing Number	Elect. Reference Desig.	Failure Detection	Function	Failure Type	Mission Phase	Failure Effect On Component Performance	Failure Effect On Sub-Systems Performance	Failure Effect On Apollo	Possible Crew Action
Diode	V14-945101 dated 10/25/62	CR15		Provides path for current flow from battery bus A to battery relay bus; also isolates battery bus A from battery relay bus	Fails open		Diode inoperative	No d-c power available from battery bus A to battery relay bus	None	Battery bus B can be switched in.
					Fails short		Diode inoperative	No isolation between bus A and battery relay bus	None	Battery bus B can be switched in.
Circuit breaker	V14-945101 dated 10/25/62	CB44		Battery bus B to post-landing bus circuit breaker	Fails open		Circuit breaker inoperative	No d-c power available in post-landing bus from battery bus B	None	Battery bus A can be switched in.
					Fails short		Circuit breaker inoperative	No short-circuit protection for battery bus B from post-landing bus	None	Battery bus A can be switched in if a short occurs.
Circuit breaker	V14-945101 dated 10/25/62	CB40		Battery bus B to battery relay bus circuit breaker	Fails open		Circuit breaker inoperative	No d-c power available to battery relay bus from battery bus B	None	Battery bus A can be switched in.
					Fails short		Circuit breaker inoperative	No short-circuit protection for battery bus B from battery relay bus	None	Battery bus A can be switched in if a short occurs.
Diode	V14-945101 dated 10/25/62	CR16		Provides path for current flow from battery bus B to battery relay bus; also isolates battery bus B from battery relay bus	Fails open		Diode inoperative	No d-c power available from battery bus B to battery relay bus	None	Battery bus A can be switched in.
					Fails short		Diode inoperative	No isolation between battery bus B and battery relay bus	None	Battery bus A can be switched in.
Diode	V14-945101 dated 10/25/62	CR7		Provides path for current flow from battery bus A to d-c main bus A; also isolates battery bus A from d-c main bus A	Fails open		Diode inoperative	No d-c power available to d-c main bus A from battery bus A	None	Battery bus B can be switched in.
					Fails short		Diode inoperative	No isolation between battery bus A and d-c main bus A	None	Battery bus B can be switched in.

~~CONFIDENTIAL~~

Table 2-15. Distribution Subsystem, Electrical Power Failure Effects Analysis (Cont)

Item	Drawing Number	Elect. Reference Desig.	Failure Detection	Function	Failure Type	Mission Phase	Failure Effect On Component Performance	Failure Effect On Sub-Systems Performance	Failure Effect On Apollo	Possible Crew Action
Circuit breaker	V14-945101	CB37		D-c main bus A to navigation and guidance (IMU-heater)	Fail open		Circuit breaker inoperative	No d-c power available to navigation and guidance (IMU-heater) from main bus A	None	D-c main bus B can be switched in.
					Fail closed		Circuit breaker inoperative	No short-circuit protection for navigation and guidance (IMU-heater)	None	D-c main bus B can be switched in if a short occurs.
Circuit breaker	V14-945101	CB38		D-c main bus B to navigation and guidance (IMU-heater)	Fail open		Circuit breaker inoperative	No d-c power available to navigation and guidance (IMU-heater) from main bus B	None	D-c main bus A can be switched in.
					Fail closed		Circuit breaker inoperative	No short-circuit protection for navigation and guidance (IMU-heater)	None	D-c main bus A can be switched in if a short occurs.
Circuit breaker	V14-945101	CB55		Battery relay bus to fuel cell, bus A or B selection and bus A or B off light	Fail open		Circuit breaker inoperative	No d-c power available to bus A or B off light	None	None
					Fail closed		Circuit breaker inoperative	No short-circuit protection for bus A or B selection and bus A or B off light	None	None
Circuit breaker	V14-945101	CB56		Battery relay bus to fuel cell 2 bus A or B selection and bus A or B off light	Fail open		Circuit breaker inoperative	No d-c power available to bus A or B off light	None	None
					Fail closed		Circuit breaker inoperative	No short-circuit protection for bus A or B selection and bus A or B off light	None	None
Circuit breaker		CB45		Battery A to battery bus A circuit breaker	Fails open		Circuit breaker inoperative	No d-c power available to battery bus A	None	Battery B or C can be switched in.
					Fails short		Circuit breaker inoperative	No short-circuit protection for battery A	None	Battery B or C can be switched in if battery A is shorted out.

Table 2-15. Distribution Subsystem, Electrical Power Failure Effects Analysis (Cont)

Item	Drawing Number	Elect. Reference Desig.	Failure Detection	Function	Failure Type	Mission Phase	Failure Effect On Component Performance	Failure Effect On Sub-Systems Performance	Failure Effect On Apollo	Possible Crew Action
Circuit breaker	V14-945101 dated 4/25/63	CB57		Battery relay bus to fuel cell 3 bus A or B selection and bus A or B off light	Fail open		Circuit breaker inoperative	No d-c power available to bus A or B selection and bus A or B off light	None	None
					Fail closed		Circuit breaker inoperative	No short-circuit protection for bus A or B selection and bus A or B off light	None	None
Circuit breaker	V14-945101	CB58		Battery relay bus to fuel cell 1 shut-off solenoid valves	Fail open		Circuit breaker inoperative	No d-c power available to fuel cell 1 shut-off solenoid valves	None	None
					Fail closed		Circuit breaker inoperative	No short-circuit protection for fuel cell shut-off solenoid valves	None	None
Circuit breaker	V14-945101	CB59		Battery relay bus to fuel cell 2 shut-off solenoid valves	Fail open		Circuit breaker inoperative	No d-c power available to fuel cell 2 shut-off solenoid valves	None	None
					Fail closed		Circuit breaker inoperative	No short-circuit protection for fuel cell shut-off solenoid valves	None	None
Circuit breaker	V14-945101	CB60		Battery relay bus to fuel cell 3 shut-off solenoid valves	Fail open		Circuit breaker inoperative	No d-c power available to fuel cell 2 shut-off solenoid valves	None	None
					Fail closed		Circuit breaker inoperative	No short-circuit protection for fuel cell shut-off solenoid valves	None	None
Circuit breaker	V14-945101 dated 10/25/62	CB61		Battery relay bus to inverter No. 1 on-off switch circuit breaker	Fails open		Loss of circuit breaker	No d-c power available to inverter No. 1	None	Inverter No. 2 or No. 3 can be switched in.
					Fails short		Loss of circuit breaker	No short-circuit protection for battery relay bus from inverter No. 1	None	Inverter No. 2 or No. 3 can be switched in if a short occurs.

Table 2-15. Distribution Subsystem, Electrical Power Failure Effects Analysis (Cont)

Item	Drawing Number	Elect. Reference Desig.	Failure Detection	Function	Failure Type	Mission Phase	Failure Effect On Component Performance	Failure Effect On Sub-Systems Performance	Failure Effect On Apollo	Possible Crew Action
Circuit breaker	V14-945101 dated 10/25/62	CB62		Battery relay bus to inverter No. 2 on-off switch circuit breaker	Fails open		Loss of circuit breaker	No d-c power available to inverter No. 2	None	Inverter No. 1 or No. 3 can be switched in.
					Fails short		Loss of circuit breaker	No short-circuit protection for battery relay bus from inverter No. 2	None	Inverter No. 1 or No. 3 can be switched in if a short occurs.
Circuit breaker	V14-945101 dated 10/25/62	CB63		Battery relay bus to inverter No. 3 on-off switch circuit breaker	Fails open		Loss of circuit breaker	No d-c power available to inverter No. 3	None	Inverter No. 1 or No. 2 can be switched in.
					Fails short		Loss of circuit breaker	No short-circuit protection for battery relay bus from inverter No. 3	None	Inverter No. 1 or No. 2 can be switched in if a short occurs.
Circuit breaker	V14-945101	CB66		A-c bus to nonessential telecommunications circuit breaker (FM transmitter, C-band transponder, television camera, data storage)	Fail open		Loss of circuit breaker	No a-c power available to nonessential telecommunications	None	None
					Fail closed		Loss of circuit breaker	No short-circuit protection for nonessential telecommunications	None	None
Circuit breaker	V14-945101	CB67		A-c bus to essential telecommunications circuit breaker (signal conditioning, S-band power amplifier)	Fail open		Loss of circuit breaker	No a-c power available to essential telecommunications	None	None
					Fail closed		Loss of circuit breaker	No short-circuit protection for essential telecommunications	None	None
Circuit breaker	V14-945101	CB68		A-c bus to essential telecommunications circuit breaker (unified S-band, premodulator processor)	Fail open		Loss of circuit breaker	No a-c power available to essential telecommunications	None	None
					Fail closed		Loss of circuit breaker	No short-circuit protection for essential telecommunications	None	None

Table 2-15. Distribution Subsystem, Electrical Power Failure Effects Analysis (Cont)

Item	Drawing Number	Elect. Reference Desig.	Failure Detection	Function	Failure Type	Mission Phase	Failure Effect On Component Performance	Failure Effect On Sub-Systems Performance	Failure Effect On Apollo	Possible Crew Action
Circuit breaker	V14-945101	CB69		A-c bus to nonessential telecommunications (fuel quantity amplifier, PCM telemetry)	Fail open		Loss of circuit breaker	No a-c power available to nonessential telecommunications	None	None
					Fail closed		Loss of circuit breaker	No short-circuit protection for nonessential telecommunications	None	None
A-c bus φC bus No. 1	V14-945101 dated 10/25/62			Distributes power	Fail open		Loss of bus	No a-c power available at φC bus No. 1	None	Loads can be switched to bus No. 2.
					Fail short		Loss of bus	No a-c power available at φC bus No. 1	None	Loads can be switched to bus No. 2.
A-c bus φA bus No. 2				Distributes power	Fail open		Loss of bus	No a-c power available at φA bus No. 2	None	Loads can be switched to bus No. 1.
					Fail short		Loss of bus	No a-c power available at φA bus No. 2	None	Loads can be switched to bus No. 1.
A-c bus φB bus No. 2				Distributes power	Fail open		Loss of bus	No a-c power available at φB bus No. 2	None	Loads can be switched to bus No. 1.
					Fail short		Loss of bus	No a-c power available at φB bus No. 2	None	Loads can be switched to bus No. 1.
A-c bus φC bus No. 2				Distributes power	Fail open		Loss of bus	No a-c power available at φC bus No. 2	None	Loads can be switched to bus No. 1.
					Fail short		Loss of bus	No a-c power available at φC bus No. 2	None	Loads can be switched to bus No. 1.
Circuit breaker		CB71		A-c bus to fuel cell No. 1 circuit breaker	Fail open		Loss of circuit breaker	No a-c power available to fuel cell No. 1	None	None
					Fail short		Loss of circuit breaker	No short-circuit protection for FC No. 1 motors	None	None

~~CONFIDENTIAL~~

Table 2-15. Distribution Subsystem, Electrical Power Failure Effects Analysis (Cont)

Item	Drawing Number	Elect. Reference. Desig.	Failure Detection	Function	Failure Type	Mission Phase	Failure Effect On Component Performance	Failure Effect On Sub-Systems Performance	Failure Effect On Apollo	Possible Crew Action
Circuit breaker		CB72		A-c bus to fuel cell No. 2 circuit breaker	Fail open		Loss of circuit breaker	No a-c power available to fuel cell No. 2	None	None
					Fail short		Loss of circuit breaker	No short-circuit protection for FC No. 2 motors	None	None
Circuit breaker		CB73		A-c bus to fuel cell No. 3 circuit breaker	Fail open		Loss of circuit breaker	No a-c power available to fuel cell No. 3	None	None
					Fail short		Loss of circuit breaker	No short-circuit protection for FC No. 3 motors	None	None
Switch	V14-945101	S31		A-c bus to stabilization and control switch	Fails closed on bus No. 1 position		Single position operation	Stabilization and control power cannot be removed from a-c bus No. 1	None	None
					Fails closed on bus No. 2 position		Single position operation	Stabilization and control power cannot be removed from a-c bus No. 2	None	None
					Fails closed, off position		Loss of switch	No a-c power is available to stabilization and control	None	None
Circuit breaker	V14-945101	CB74		A-c bus No. 1 to stabilization and control circuit breaker	Fail open		Loss of circuit breaker	No a-c power is available to stabilization and control from a-c bus No. 1	None	A-c bus No. 2 can be switched on.
					Fail short		Loss of circuit breaker	No short-circuit protection for a-c bus No. 1 from stabilization and control	None	A-c bus No. 2 can be switched on.
Circuit breaker	V14-945101	CB131		A-c bus No. 2 to stabilization and control circuit breaker	Fail open		Loss of circuit breaker	No a-c power is available to stabilization and control from a-c bus No. 2	None	A-c bus No. 1 can be switched on.
					Fail short		Loss of circuit breaker	No short-circuit protection for a-c bus No. 1 from stabilization and control	None	A-c bus No. 2 can be switched on.

~~CONFIDENTIAL~~

Table 2-15. Distribution Subsystem, Electrical Power Failure Effects Analysis (Cont)

Item	Drawing Number	Elect. Reference Desig.	Failure Detection	Function	Failure Type	Mission Phase	Failure Effect On Component Performance	Failure Effect On Sub-Systems Performance	Failure Effect On Apollo	Possible Crew Action
Circuit breaker	V14-945101 dated 4/25/63	CB70		A-c bus to battery charger circuit breaker	Fail open		Loss of circuit breaker	No a-c power available to battery charger	None	None
					Fail closed		Loss of circuit breaker	No short-circuit protection for battery charger	None	None
Circuit breaker	V14-945101	CB81		D-c main bus A to potable water heater crew support circuit breaker	Fail open		Circuit breaker inoperative	No d-c power available to water heater from d-c main bus A	None	Main bus B can be switched in.
					Fail closed		Circuit breaker inoperative	No short-circuit protection for water heater	None	Main bus B can be switched in if a short occurs.
Circuit breaker	V14-945101	CB82		D-c main bus B to potable water heater crew support circuit breaker	Fail open		Circuit breaker inoperative	No d-c power available to water heater from d-c main bus B	None	Main bus B can be switched in.
					Fail closed		Circuit breaker inoperative	No short-circuit protection for water heater	None	Main bus B can be switched in.
Circuit breaker	V14-945101	CB87		D-c main bus A to interior floodlighting circuit breaker	Fail open		Circuit breaker inoperative	No d-c power available to interior flood-lighting from d-c main bus A	None	Main bus B can be switched in.
					Fail closed		Circuit breaker inoperative	No short-circuit protection for interior flood-lighting	None	Main bus B can be switched in if a short occurs.
Circuit breaker	V14-945101 dated 4/25/63	CB88		D-c main bus B to interior floodlighting circuit breaker	Fail open		Circuit breaker inoperative	No d-c power available to interior flood-lighting from d-c main bus B	None	Main bus A can be switched in.
					Fail closed		Circuit breaker inoperative	No short-circuit protection for interior flood-lighting	None	Main bus A can be switched in if a short occurs.
Circuit breaker	V14-945101	CB89		D-c main bus A to IFTS circuit breaker	Fail open		Circuit breaker inoperative	No d-c power available to IFTS from d-c main bus A	None	Main bus B can be switched in.
					Fail closed		Circuit breaker inoperative	No short-circuit protection for IFTS	None	Main bus B can be switched in if a short occurs.

Table 2-15. Distribution Subsystem, Electrical Power Failure Effects Analysis (Cont)

Item	Drawing Number	Elect. Reference Desig.	Failure Detection	Function	Failure Type	Mission Phase	Failure Effect On Component Performance	Failure Effect On Sub-Systems Performance	Failure Effect On Apollo	Possible Crew Action
Circuit breaker	V14-945101	CB90		D-c main bus B to IFTS circuit breaker	Fail open		Circuit breaker	No d-c power available to IFTS from d-c main bus B	None	Main bus A can be switched in.
					Fail closed		Circuit breaker	No short-circuit protection for IFTS	None	Main bus A can be switched in if a short occurs.
Circuit breaker	V14-945101	CB91		D-c main bus A to H_2 and O_2 tank shut-off indicators	Fail open		Circuit breaker inoperative	No d-c power available to H_2 and O_2 tank shut-off indicators from d-c main bus A	None	Main bus B can be switched in.
					Fail closed		Circuit breaker inoperative	No short-circuit protection for H_2 and O_2 tank shut-off indicator	None	Main bus B can be switched in if a short occurs.
Circuit breaker	V14-945101 dated 4/25/63	CB92		D-c main bus B to H_2 and O_2 tank shut-off indicators circuit breakers	Fail open		Circuit breaker inoperative	No d-c power available to H_2 and O_2 tank shut-off indicators from d-c main bus B	None	Main bus A can be switched in.
					Fail closed		Circuit breaker inoperative	No short-circuit protection for H_2 and O_2 tank shut-off indicators	None	Main bus B can be switched in if a short occurs.
Circuit breaker	V14-945101	CB95		Battery bus A to ELS pilot control circuit breaker	Fail open		Circuit breaker inoperative	No d-c power available to ELS pilot control from d-c battery bus A	None	Battery bus B can be switched in.
					Fail closed		Circuit breaker inoperative	No short-circuit protection for ELS pilot control	None	Battery bus B can be switched in if a short occurs.
Circuit breaker	V14-945101	CB96		Battery bus B to ELS circuit breaker	Fail open		Circuit breaker inoperative	No d-c power available to ELS pilot control from d-c battery bus B	None	Battery bus A can be switched in.
					Fail closed		Circuit breaker inoperative	No short-circuit protection for ELS pilot control	None	Battery bus A can be switched in if a short occurs.

Table 2-15. Distribution Subsystem, Electrical Power Failure Effects Analysis (Cont)

Item	Drawing Number	Elect. Reference Desig.	Failure Detection	Function	Failure Type	Mission Phase	Failure Effect On Component Performance	Failure Effect On Sub-Systems Performance	Failure Effect On Apollo	Possible Crew Action
Circuit breaker	V14-945101	CB97		Battery bus A to ELS logic A circuit breaker	Fail open		Circuit breaker inoperative	No d-c power available to ELS logic A from d-c battery bus A	None	Battery bus B can be switched in.
					Fail closed		Circuit breaker inoperative	No short-circuit protection for ELS logic A	None	Battery bus B can be switched in if a short occurs.
Circuit breaker	V14-945101 dated 4/25/63	CB98		Battery bus B to ELS logic B circuit breaker	Fail open		Circuit breaker inoperative	No d-c power available to ELS logic B from d-c battery bus B	None	Battery bus A can be switched in.
					Fail closed		Circuit breaker inoperative	No short-circuit protection for ELS logic B	None	Battery bus A can be switched in if a short occurs.
Circuit breaker	V14-945101	CB99		Battery bus A to arm mission sequence A circuit breaker	Fail open		Circuit breaker inoperative	No d-c power available to arm mission sequence A from d-c battery bus A	None	Main bus B can be switched in.
					Fail closed		Circuit breaker inoperative	No short-circuit protection for arm mission sequence A	None	Main bus B can be switched in if a short occurs.
Circuit breaker	V14-945101	CB100		Battery bus B to arm mission sequence B circuit breaker	Fail open		Circuit breaker inoperative	No d-c power available to arm mission sequence B from battery bus B	None	Main bus A can be switched in.
					Fail closed		Circuit breaker inoperative	No short-circuit protection for arm mission sequence B	None	Main bus A can be switched in if a short occurs.
Circuit breaker	V14-945101	CB101		Battery bus A to logic mission sequence A circuit breaker	Fail open		Circuit breaker inoperative	No d-c power available to logic sequence mission A from d-c battery bus A	None	Main bus B can be switched in.
					Fail closed		Circuit breaker inoperative	No short circuit	None	Main bus B can be switched in if a short occurs.

Table 2-15. Distribution Subsystem, Electrical Power Failure Effects Analysis (Cont)

Item	Drawing Number	Elect. Reference Desig.	Failure Detection	Function	Failure Type	Mission Phase	Failure Effect On Component Performance	Failure Effect On Sub-Systems Performance	Failure Effect On Apollo	Possible Crew Action
Circuit breaker	V14-945101 dated 4/25/63	CB102		Battery bus B to logic mission sequence B circuit breaker	Fail open		Circuit breaker inoperative	No d-c power available to logic sequence mission B from d-c battery bus B	None	Main bus A can be switched in.
					Fail closed		Circuit breaker inoperative	No short-circuit protection for logic sequence mission A	None	Main bus A can be switched in if a short occurs.
Circuit breaker	V14-945101	CB103		Pyro battery A to sequence A	Fail open		Circuit breaker inoperative	No d-c power available to sequence A	None	None
					Fail closed		Circuit breaker inoperative	No short-circuit protection for sequence A	None	None
Circuit breaker	V14-945101	CB104		Pyro battery B to sequence B	Fail open		Circuit breaker inoperative	No d-c power available to sequence B	None	None
					Fail closed		Circuit breaker inoperative	No short-circuit protection for sequence B	None	None
Circuit breaker	V14-945101	CB106		Pyro battery B to HF antenna deploy	Fail open		Circuit breaker inoperative	No d-c power available to HF antenna deploy	None	None
					Fail closed		Circuit breaker inoperative	No short-circuit protection for HF antenna deploy	None	None
Circuit breaker	V14-945101	CB107		Pyro battery A to RCS fuel dump	Fail open		Circuit breaker inoperative	No d-c power available to RCS fuel dump	None	None
					Fail closed		Circuit breaker inoperative	No short-circuit protection for RCS fuel dump	None	None
Circuit breaker	V14-945101 dated 4/25/63	CB108		Pyro battery B to RCS fuel dump	Fail open		Circuit breaker inoperative	No d-c power available to RCS fuel dump	None	None
					Fail closed		Circuit breaker inoperative	No short-circuit protection for RCS fuel dump	None	None

Table 2-15. Distribution Subsystem, Electrical Power Failure Effects Analysis (Cont)

Item	Drawing Number	Elect. Reference Desig.	Failure Detection	Function	Failure Type	Mission Phase	Failure Effect On Component Performance	Failure Effect On Sub-Systems Performance	Failure Effect On Apollo	Possible Crew Action
Circuit breaker	V14-945101	CB128		D-c main bus B to navigation and guidance (optics)	Fail open		Circuit breaker inoperative	No d-c power available to navigation and guidance (optics) from main bus B	None	D-c main bus A can be switched in.
					Fail closed		Circuit breaker inoperative	No short-circuit protection for navigation and guidance (optics)	None	D-c main bus A can be switched in if a short occurs.
Switch	V14-945101 dated 10/25/62	S5		Inverter No. 1 to bus No. 1 on-off switch	Fails closed, on position		Loss of switch	With inverter No. 1 on, a-c power cannot be removed from bus No. 1 by switch S5	None	In the event of a short circuit, inverter No. 2 or 3 can be switched in.
					Fails closed, off position		Loss of switch	No a-c power is available to bus No. 1 while inverter No. 1 is on.	None	Inverter No. 2 or 3 can be switched in.
Switch	V14-945101 dated 10/25/62	S6		Inverter No. 2 to bus No. 2 on-off switch	Fails closed, on position		Loss of switch	With inverter No. 2 on, a-c power cannot be removed from bus No. 2 by switch S6.	None	In the event of a short circuit, inverter No. 1 or 3 can be switched in.
					Fails closed, off position		Loss of switch	No a-c power is available to bus No. 2 while inverter No. 2 is on.	None	Inverter No. 1 or 3 can be switched in.
Switch	V14-945101 dated 10/25/62	S7		Inverter No. 2 to bus No. 1 on-off switch	Fails closed, on position		Loss of switch	With inverter No. 2 on, a-c power cannot be removed from bus No. 1 by switch S7.	None	In the event of a short circuit, inverter No. 1 or 3 can be switched in.
					Fails closed, off position		Loss of switch	No a-c power is available to bus No. 1 while inverter No. 2 is on.	None	Inverter No. 1 or 3 can be switched in.
Switch	V14-945101 dated 10/25/62	S8		Inverter No. 3 to bus No. 2 on-off switch	Fails closed, on position		Loss of switch	With inverter No. 3 on, a-c power cannot be removed from bus No. 2 by switch S8.	None	In the event of a short circuit, inverter No. 1 or 2 can be switched in.

Table 2-15. Distribution Subsystem, Electrical Power Failure Effects Analysis (Cont)

Item	Drawing Number	Elect. Reference Desig.	Failure Detection	Function	Failure Type	Mission Phase	Failure Effect On Component Performance	Failure Effect On Sub-Systems Performance	Failure Effect On Apollo	Possible Crew Action
					Fails closed, off position		Loss of switch	No a-c power is available to bus No. 2 while inverter No. 3 is on.	None	Inverter No. 1 or 2 can be switched in.
Switch	V14-945101 dated 10/25/62	S9		Inverter No. 3 to bus No. 1 on-off switch	Fails closed, on position		Loss of switch	With inverter No. 3 on, a-c power cannot be removed from bus No. 1 by switch S9.	None	In the event of a short-circuit. inverter No. 1 or 2 can be switched in.
					Fails closed, off position		Loss of switch	No a-c power is available to bus No. 1 while inverter No. 3 is on.	None	Inverter No. 1 or 2 can be switched in.
Switch	V14-945101 dated 10/25/62	S11		Fuel cell No. 1 to main bus A on-off switch	Fails closed, on position		Loss of switch	Fuel cell No. 1 d-c power cannot be removed from d-c main bus A by switch S11.	None	None
					Fails closed, off position		Loss of switch	No d-c power is available to d-c main bus A from fuel cell No. 1.	None	Switch to bus B
Switch	V14-945101 dated 10/25/62	S10		Fuel cell No. 1 to main bus B on-off switch	Fails closed, on position		Loss of switch	Fuel cell No. 1 d-c power cannot be removed from d-c main bus B by switch S10.	None	None
					Fails closed, off position		Loss of switch	No d-c power is available to d-c main bus B from fuel cell No. 1.	None	Switch to bus A
Switch	V14-945101 dated 10/25/62	S13		Fuel cell No. 2 to main bus A on-off switch	Fails closed, on position		Loss of switch	Fuel cell No. 2 d-c power cannot be removed from d-c main bus A.	None	None
					Fails closed, off position		Loss of switch	No d-c power is available to d-c main bus A from fuel cell.	None	Switch to bus B

Table 2-15. Distribution Subsystem, Electrical Power Failure Effects Analysis (Cont)

Item	Drawing Number	Elect. Reference. Desig.	Failure Detection	Function	Failure Type	Mission Phase	Failure Effect On Component Performance	Failure Effect On Sub-Systems Performance	Failure Effect On Apollo	Possible Crew Action
Switch	V14-945101 dated 10/25/62	S12		Fuel cell No. 2 to main bus B on-off switch	Fails closed, on position		Loss of switch	Fuel cell No. 2 d-c power cannot be removed from d-c main bus B.	None	None
					Fails closed, off position		Loss of switch	No d-c power is available to d-c main bus B from fuel cell No. 2.	None	Switch to bus A
Switch	V14-945101 dated 10/25/62	S15		Fuel cell No. 3 to main bus A on-off switch	Fails closed, on position		Loss of switch	Fuel cell No. 3 d-c power cannot be removed from d-c main bus A.	None	None
					Fails closed, off position		Loss of switch	No d-c power is available to d-c main bus A from fuel cell No. 3.	None	Switch to bus B
Switch	V14-945101 dated 10/25/62	S14		Fuel cell No. 3 to main bus B on-off switch	Fails closed, on position		Loss of switch	Fuel cell No. 3 d-c power cannot be removed from d-c main bus B.	None	None
					Fails closed, off position		Loss of switch	No d-c power is available to d-c main bus B from fuel cell No. 3.	None	Switch to bus A
Switch	V14-945101	S16		Battery bus B tie on-off switch	Fails closed, on position		Loss of switch	Battery bus B tie cannot be turned off with switch S16.	None	Circuit breaker CB42 can be opened in event battery B is on.
					Fails closed, off position		Loss of switch	Battery bus B tie cannot be turned on.	None	Battery bus A tie can be switched in.
Switch	V14-945101	S17		Battery bus A tie on-off switch	Fails closed, on position		Loss of switch	Battery bus A tie cannot be turned off with switch S17.	None	Circuit breaker CB41 can be opened in event battery A is on.
					Fails closed, off position		Loss of switch	Battery bus A tie cannot be turned on.	None	Battery bus B tie can be switched in.

Table 2-15. Distribution Subsystem, Electrical Power Failure Effects Analysis (Cont)

Item	Drawing Number	Elect. Reference Desig.	Failure Detection	Function	Failure Type	Mission Phase	Failure Effect On Component Performance	Failure Effect On Sub-Systems Performance	Failure Effect On Apollo	Possible Crew Action
Switch	V14-945101	S18		Battery charger selector switch (battery A, battery B, post-landing battery, suit pack battery)	Fails closed, on position 2, 3, 4, 5		Loss of switch	Input charge power selection cannot be turned off.	None	CB5 and/or 6 can be opened.
					Fails closed, off position 1		Loss of switch	Input charge power cannot be turned on.	None	None
Switch	V14-945101	S19		Main bus A or B select to nonessential bus switch	Fails closed, on position to d-c main bus A		Loss of switch	D-c main bus A power input cannot be turned off.	None	None
					Fails closed, on position to d-c main bus B		Loss of switch	D-c main bus A power input cannot be turned off.	None	None
Switch	V14-945101	S21		Fuel cell No. 1 H_2-O_2 purge control switch	Fails closed on H_2 purge position		Loss of switch	Fuel cell No. 1 H_2 purge cannot be turned off.	None	None
					Fails closed on O_2 purge position		Loss of switch	Fuel cell No. 1 O_2 purge cannot be turned off.	None	None
					Fails closed, off position		Loss of switch	Fuel cell No. 1 H_2-O_2 purge control cannot be turned on.	None	None
Switch	V14-945101	S24		Fuel cell No. 2 H_2-O_2 purge control switch	Fails closed on H_2 purge position		Loss of switch	Fuel cell No. 2 H_2 purge cannot be turned off.	None	None
					Fails closed on O_2 purge position		Loss of switch	Fuel cell No. 2 O_2 purge cannot be turned off.	None	None
					Fails closed, off position		Loss of switch	Fuel cell No. 2 H_2-O_2 purge control cannot be turned on.	None	None
Switch	V14-945101	S25		Fuel cell No. 3 H_2-O_2 purge control switch	Fails closed on H_2 position		Loss of switch	Fuel cell No. 3 H_2 purge cannot be turned off.	None	None
					Fails closed on O_2 purge position		Loss of switch	Fuel cell No. 3 O_2 purge cannot be turned off.	None	None
					Fails closed, off position		Loss of switch	Fuel cell No. 3 H_2-O_2 purge control cannot be turned off.	None	None

Table 2-15. Distribution Subsystem, Electrical Power Failure Effects Analysis (Cont)

Item	Drawing Number	Elect. Reference. Desig.	Failure Detection	Function	Failure Type	Mission Phase	Failure Effect On Component Performance	Failure Effect On Sub-Systems Performance	Failure Effect On Apollo	Possible Crew Action
Switch	V14-945101	S27		Fuel cell No. 1 a-c motors switch	Fails closed on bus No. 1 position		Single position operation	Fuel cell No. 1 a-c power.	None	None
					Fails closed on bus No. 2 position		Single position operation	Fuel cell No. 1 a-c power cannot be removed from a-c bus No. 2.	None	None
					Fails closed, off position		Loss of switch	No a-c power is available to fuel cell No. 1 motors.	None	None
Switch	V14-945101	S28		Fuel cell No. 2 a-c motors switch	Fails closed on bus No. 1 position		Single position operation	Fuel cell No. 2 on a-c power cannot be removed from bus No. 1.	None	None
					Fails closed on bus No. 2 position		Single position operation	Fuel cell No. 2 a-c power cannot be removed from a-c bus No. 2.	None	None
					Fails closed, off position		Loss of switch	No a-c power is available to fuel cell No. 2 motors.	None	None
Switch	V14-945101	S29		Fuel cell No. 3 a-c motors switch	Fails closed on bus No. 1 position		Single position operation	Fuel cell No. 3 a-c power cannot be removed from a-c bus No. 1.	None	None
					Fails closed on bus No. 2 position		Single position operation	Fuel cell No. 3 a-c power cannot be removed from a-c bus No. 2.	None	None
					Fails closed, off position		Loss of switch	No a-c power is available to fuel cell No. 3 motors.	None	None
Switch	V14-945101	S30		A-c bus to battery charger input switch	Fails closed on bus No. 1 position		Single position operation	A-c battery charger input cannot be removed from a-c bus No. 1.	None	None
					Fails closed on bus No. 2 position		Single position operation	A-c battery charger input cannot be removed from a-c bus No. 2.	None	None

Table 2-15. Distribution Subsystem, Electrical Power Failure Effects Analysis (Cont)

Item	Drawing Number	Elect. Reference Desig.	Failure Detection	Function	Failure Type	Mission Phase	Failure Effect On Component Performance	Failure Effect On Sub-Systems Performance	Failure Effect On Apollo	Possible Crew Action
							Loss of switch	No a-c power is available to battery charger.	None	None
Switch	V14-945101	S32, S33 (φC)		A-c bus to nonessential telecommunications switch	Fails closed on bus No. 1 position		Single position operation	Nonessential telecommunications power cannot be removed from a-c bus No. 1.	None	None
					Fails closed on bus No. 2 position		Single position operation	Nonessential telecommunications power cannot be removed from a-c bus No. 2.	None	None
					Fails closed, off position		Loss of switch	No a-c power is available to nonessential telecommunications.	None	None
Switch	V14-945101	S34		D-c main bus B undervoltage sense on-off-reset switch	Fails closed, on position		Loss of switch	Undervoltage sense to main bus B cannot be removed nor reset.	None	D-c main bus A sense can be switched in.
					Fails closed, off position		Loss of switch	Undervoltage sense to main bus B cannot be monitored.	None	D-c main bus A sense can be switched in.
Switch	V14-945101	S35		A-c bus No. 1 overvoltage, undervoltage, and overlook sense on-off-reset switch	Fails closed, on position		Loss of switch	Overvoltage, undervoltage and overlook sense to a-c bus No. 1 cannot be removed nor reset.	None	A-c bus No. 2 sense can be switched in.
					Fails closed, off position		Loss of switch	Overvoltage, undervoltage, and overlook sense to a-c bus No. 1 cannot be monitored.	None	A-c bus No. 2 sense can be switched in.
Switch	V14-945101	S36		A-c bus No. 2 overvoltage, undervoltage, and overlook sense on-off-reset switch	Fails closed, on position		Loss of switch	Overvoltage, undervoltage and overlook sense to a-c bus No. 2 cannot be removed nor reset.	None	A-c bus No. 1 sense can be switched in.

Table 2-15. Distribution Subsystem, Electrical Power Failure Effects Analysis (Cont)

Item	Drawing Number	Elect. Reference Desig.	Failure Detection	Function	Failure Type	Mission Phase	Failure Effect On Component Performance	Failure Effect On Sub-Systems Performance	Failure Effect On Apollo	Possible Crew Action
					Fails closed, off position		Loss of switch	Overvoltage, undervoltage and overlook sense to a-c bus No. 2 cannot be monitored.	None	A-c bus No. 1 sense can be switched in.
Switch	V14-945101	S39		D-c main bus A undervoltage sense on-off-reset switch	Fails closed, on position		Loss of switch	Undervoltage sense to main bus A cannot be removed nor reset.	None	D-c main bus B sense can be switched in.
								Undervoltage sense to main bus A cannot be monitored.	None	D-c main bus B sense can be switched in.
Switch	V14-945101 dated 4/25/63	S41A		Voltage selector switch to main bus A or B, battery bus A or B, pyro bus A or B, battery charger, battery C	Fails closed, off position		Loss of switch	No voltage indication to d-c buses.	None	None
					Fails closed, on positions 4, 5, 6, 7, 8, 9, 10, 11		Loss of switch	No possible voltage indication except reading in failed position.	None	None
		S41B		Ammeter selector switch for d-c buses	Fails closed, off position		Loss of switch	No amperage indication to d-c buses.	None	None
					Fails closed, on position 1, 2, 3, 6, 7, 8, 9		Loss of switch	No possible amperage indication except reading in failed position.	None	None
		S41C		Shunt ground leads to ammeter for d-c buses	Fails closed, off position		Loss of switch	No possible grounding lead for ammeter reading.	None	None
					Fails closed, on positions 1, 2, 3, 6, 7, 8, 9		Loss of switch	No grounding lead except for failed position lead.	None	None
Switch	V14-945101 dated 4/25/63	S42		A-c voltage and frequency phase selector reading for bus No. 1 or 2 switch	Fails closed, on position 1 or 4 for ϕA bus No. 1 or 2		Loss of switch	No possible reading except in failed position.	None	None
					Fails closed, on position 2 or 4 for ϕB bus 1 or 2		Loss of switch	No possible reading except in failed position.	None	None
					Fails closed, on position 3 or 6 for ϕC bus 1 or 2		Loss of switch	No possible reading except in failed position.	None	None

~~CONFIDENTIAL~~

Table 2-15. Distribution Subsystem, Electrical Power Failure Effects Analysis (Cont)

Item	Drawing Number	Elect. Reference Desig.	Failure Detection	Function	Failure Type	Mission Phase	Failure Effect On Component Performance	Failure Effect On Sub-Systems Performance	Failure Effect On Apollo	Possible Crew Action
Switch	V14-945101 dated 4/25/63	S43		Inverter temperature switch	Fails closed, on position 1 to inverter No. 1		Loss of switch	No possible reading except in failed position.	None	None
					Fails closed, on position 2 to inverter No. 2		Loss of switch	No possible reading except in failed position.	None	None
					Fails closed, on position 3 to inverter No. 3		Loss of switch	No possible reading except in failed position.	None	None
Switch	V14-945101 dated 4/25/63	S44		A-c bus No. 1 to essential telecommunications switch	Fails closed, off bus No. 1 position		Loss of switch	A-c bus No. 1 to essential telecommunications cannot be turned off.	None	None
					Fails closed, off bus No. 2 position		Loss of switch	A-c bus No. 2 to essential telecommunications cannot be turned off.	None	None
Switch	V14-945101 dated 4/25/63	S45		Battery relay bus to fuel cell 1 shut-off solenoid valve switch	Fails closed, open position		Loss of switch	Fuel cell No. 1 shut-off solenoid valve cannot be closed.	None	None
					Fails closed, close position		Loss of switch	Fuel cell No. 1 shut-off solenoid valve cannot be opened.	None	None
Switch	V14-945101	S46		Battery relay bus to fuel cell 2 shut-off solenoid valve switch	Fails closed, open position		Loss of switch	Fuel cell No. 2 solenoid valve cannot be turned off.	None	None
					Fails closed, close position		Loss of switch	Fuel cell No. 2 shut-off solenoid valve cannot be opened.	None	None
Switch	V14-945101	S47		Battery relay bus to fuel cell 3 shut-off solenoid valve switch	Fails closed, open position		Loss of switch	Fuel cell No. 3 shut-off solenoid valve cannot be turned off.	None	None
					Fails closed, close position		Loss of switch	Fuel cell No. 3 shut-off solenoid valve cannot be opened.	None	None

~~CONFIDENTIAL~~

Table 2-15. Distribution Subsystem, Electrical Power Failure Effects Analysis (Cont)

Item	Drawing Number	Elect. Reference Desig.	Failure Detection	Function	Failure Type	Mission Phase	Failure Effect On Component Performance	Failure Effect On Sub-Systems Performance	Failure Effect On Apollo	Possible Crew Action
Relay	V14-945101	K5		Inverter No. 1 to bus No. 1 relay	Fails open		Relay inoperative	No a-c power available at bus No. 1 while inverter No. 1 is on.	None	Loads can be switched to bus No. 2 or No. 3 can be switched in.
					Fails short		Relay inoperative	No effect	None	A-c circuit breakers on bus No. 1 can be opened and loads switched to bus No. 2 or inverter No. 2 or bus No. 3 switched in.
Relay		K4		Inverter No. 1 to bus No. 2 relay	Fails open		Relay inoperative	No a-c power available at bus No. 2 while inverter 1 is on.	None	Loads can be switched to bus No. 1 or inverter No. 2 or 3.
					Fails short		Relay inoperative	No effect	None	A-c circuit breakers on bus No. 2 can be opened and loads switched to bus No. 1 or inverter No. 2 or 3 switched in.
Diode	V14-945101 dated 10/25/62	CR8		Provides path for current flow from battery bus A to d-c main bus B and also isolates battery bus A from d-c main bus B	Fails open		Diode inoperative	No d-c power available to d-c main bus B from battery bus A	None	Battery bus B can be switched in.
					Fails short		Diode inoperative	No isolation between battery bus A and d-c main bus B	None	Battery bus B can be switched in.
Circuit breaker	V14-945101 dated 10/25/62	CB3		D-c main bus A to post-landing bus circuit breaker	Fails open		Relay inoperative	No d-c power available to post-landing bus from d-c main bus A	None	D-c main bus B can be switched in.
					Fails short		Relay inoperative	No short-circuit protection for d-c main bus A from post-landing bus	None	D-c main bus B can be switched in if a short occurs.

Table 2-15. Distribution Subsystem, Electrical Power Failure Effects Analysis (Cont)

Item	Drawing Number	Elect. Reference. Desig.	Failure Detection	Function	Failure Type	Mission Phase	Failure Effect On Component Performance	Failure Effect On Sub-Systems Performance	Failure Effect On Apollo	Possible Crew Action
Diode	V14-945101 dated 10/25/62	CR13		Provides path for current flow from d-c main bus A to post-landing bus and also isolates post-landing bus from d-c main bus A	Fails open		Diode inoperative	No d-c power available to post-landing bus from d-c main bus A	None	D-c main bus B can be switched in.
					Fails short		Diode inoperative	No isolation between post-landing bus and d-c main bus A	None	D-c main bus B can be switched in.
Diode	V14-945101 dated 10/25/62	CR17		Provides path for current flow d-c main bus A to battery charger and also isolates d-c main bus A from d-c main bus B	Fails open		Diode inoperative	No d-c power available to battery charger from d-c main bus A	None	D-c main bus B can be switched in to provide input power to battery charger.
					Fails short		Diode inoperative	No isolation between d-c main bus A and d-c main bus B	None	Circuit breaker CB5 can be opened.
Diode	V14-945101 dated 10/25/62	CR18		Provides path for current flow from d-c main bus B to battery charger and also isolates d-c main bus B from d-c main bus A	Fails open		Diode inoperative	No d-c power available to battery charger from d-c main bus B	None	D-c main bus A can be switched in to provide input power to battery charger.
					Fails short		Diode inoperative	No isolation between d-c main bus B and d-c main bus A	None	Circuit breaker CB6 can be opened.
Circuit breaker	V14-945101 dated 10/25/62	CB5		D-c main bus A to battery charger circuit breaker	Fails open		Circuit breaker inoperative	No d-c power available to battery charger from d-c main bus A	None	Power can be switched to d-c main bus B.
					Fails short		Circuit breaker inoperative	No short-circuit protection to battery charger from d-c main bus A	None	Power can be switched to d-c main bus B if a short occurs.
Circuit breaker	V14-945101 dated 10/25/62	CB6		D-c main bus B to battery charger circuit breaker	Fails open		Circuit breaker inoperative	No d-c power available to battery charger from d-c main bus B	None	Power can be switched to d-c main bus A
					Fails short		Circuit breaker inoperative	No short-circuit protection to battery charger from d-c main bus B	None	Power can be switched to d-c main bus B if a short occurs.

Table 2-15. Distribution Subsystem, Electrical Power Failure Effects Analysis (Cont)

Item	Drawing Number	Elect. Reference Desig.	Failure Detection	Function	Failure Type	Mission Phase	Failure Effect On Component Performance	Failure Effect On Sub-Systems Performance	Failure Effect On Apollo	Possible Crew Action
Diode	V14-945101 dated 4/25/63	CR19		Provides path for current flow from main bus A to H_2-O_2 purge control valves and also isolates main bus A from main bus B	Fails open		Diode inoperative	No d-c power available to H_2-O_2 purge control valves from main bus B	None	Main bus B can be switched in.
					Fails short		Diode inoperative	No isolation between main bus A and main bus B	None	Main bus B can be switched in.
Diode	V14-945101 dated 4/25/63	CR20		Provides path for current flow from main bus B to H_2-O_2 purge control valves and also isolates main bus A from main bus B	Fails open		Diode inoperative	No d-c power available to H_2-O_2 purge control valves from main bus B	None	Main bus A can be switched in.
					Fails short		Diode inoperative	No isolation between main bus A and main bus B	None	Main bus A can be switched in.
Diode	V14-945101 dated 4/25/63	CR21		Provides path for current flow from main bus A to H_2-O_2 purge control valves and also isolates main bus A from main bus B	Fails open		Diode inoperative	No d-c power available to H_2-O_2 purge control valves from main bus A	None	Main bus B can be switched in.
					Fails short		Diode inoperative	No isolation between main bus A and main bus B	None	Main bus B can be switched in.
Diode	V14-945101 dated 4/25/63	CR22		Provides path for current flow from main bus B to H_2-O_2 purge control valves and also isolates main bus A from main bus B	Fails open		Diode inoperative	No d-c power available to H_2-O_2 purge control valves from main bus B	None	Main bus A can be switched in.
					Fails short		Diode inoperative	No isolation between main bus A and main bus B	None	Main bus A can be switched in.
Diode	V14-945101 dated 4/25/63	CR23		Provides path for current flow from main bus A to H_2-O_2 purge control valves and also isolates main bus A from main bus B	Fails open		Diode inoperative	No d-c power available to H_2-O_2 purge control valves from main bus A	None	Main bus B can be switched in.
					Fails short		Diode inoperative	No isolation between main bus A and main bus B	None	Main bus B can be switched in.

~~CONFIDENTIAL~~

Table 2-15. Distribution Subsystem, Electrical Power Failure Effects Analysis (Cont)

Item	Drawing Number	Elect. Reference Desig.	Failure Detection	Function	Failure Type	Mission Phase	Failure Effect On Component Performance	Failure Effect On Sub-Systems Performance	Failure Effect On Apollo	Possible Crew Action
Diode	V14-945101 dated 4/25/63	CR24		Provides path for current flow from main bus B to H_2-O_2 purge control valves and also isolates main bus A from main bus B	Fails open		Diode inoperative	No d-c power available to H_2-O_2 purge control valves from main bus B	None	Main bus A can be switched in.
					Fails short		Diode inoperative	No isolation between main bus A and main bus B	None	Main bus A can be switched in.
Relay	V14-949101 dated 10/25/62	K8		Inverter No. 3 to bus No. 2 relay	Fail open		Loss of relay	No a-c power available at bus No. 2 while inverter No. 3 is on	None	Loads can be switched to bus No. 1, or inverter No. 1 or 2 can be switched in.
					Fail short		Loss of relay	No effect	None	In the event of a short on bus No. 2 circuit breakers, power can be switched to bus No. 1.
A-c bus, φA bus No. 1				Distributes power	Fail open		Loss of bus	No a-c power available at φA bus No. 1	None	Loads can be switched to bus No. 2.
					Fail short		Loss of bus	No a-c power available at φA bus No. 1	None	Loads can be switched to bus No. 2.
A-c bus, φB bus No. 1				Distributes power	Fail open		Loss of bus	No a-c power available at φB bus No. 1.	None	Loads can be switched to bus No. 2.
					Fail short		Loss of bus	No a-c power available at φB bus No. 1.	None	Loads can be switched to bus No. 2.
A-c bus, φC bus No. 1	V14-945101 dated 10/25/62			Distributes power	Fail open		Loss of bus	No a-c power available at φC bus No. 1	None	Loads can be switched to bus No. 2.
					Fail short		Loss of bus	No a-c power available at φC bus No. 1	None	Loads can be switched to bus No. 2.
A-c bus, φA bus No. 2				Distributes power	Fail open		Loss of bus	No a-c power available at φA bus No. 2	None	Loads can be switched to bus No. 1.
					Fail short		Loss of bus	No a-c power available at φA bus No. 2	None	Loads can be switched to bus No. 1.

~~CONFIDENTIAL~~

Table 2-15. Distribution Subsystem, Electrical Power Failure Effects Analysis (Cont)

Item	Drawing Number	Elect. Reference Desig.	Failure Detection	Function	Failure Type	Mission Phase	Failure Effect On Component Performance	Failure Effect On Sub-Systems Performance	Failure Effect On Apollo	Possible Crew Action
A-c bus, ϕB bus No. 2				Distributes power	Fail open		Loss of bus	No a-c power available at ϕB bus No. 2	None	Loads can be switched to bus No. 1.
					Fail short		Loss of bus	No a-c power available at ϕB bus No. 2	None	Loads can be switched to bus No. 1.
A-c bus, ϕC bus No. 2				Distributes power	Fail open		Loss of bus	No a-c power available at ϕC bus No. 2	None	Loads can be switched to bus No. 1.
					Fail short		Loss of bus	No a-c power available at ϕC bus No. 2	None	Loads can be switched to bus No. 1.
Circuit breaker		CB83		A-c bus to fuel cell No. 1 circuit breaker	Fail open		Loss of circuit breaker	No a-c power available to fuel cell No. 1	None	Fuel cell No. 2 or 3 can be switched in.
					Fail short		Loss of circuit breaker	No short-circuit protection for fuel cell No. 1 motors	None	Fuel cell No. 2 or 3 can be switched in.
Circuit breaker		CB84		A-c bus to fuel cell No. 2 circuit breaker	Fail open		Loss of circuit breaker	No a-c power available to fuel cell No. 2	None	Fuel cell No. 1 or 3 can be switched in.
					Fail short		Loss of circuit breaker	No short-circuit protection for fuel cell No. 2 motors	None	Fuel cell No. 1 or 3 can be switched in.
Circuit breaker		CB85		A-c bus to fuel cell No. 3 circuit breaker	Fail open		Loss of circuit breaker	No a-c power available to fuel cell No. 3	None	Fuel cell No. 1 or 2 can be switched in.
					Fail short		Loss of circuit breaker	No short-circuit protection for fuel cell No. 3 motors	None	Fuel cell No. 1 or 2 can be switched in.
Inverter No. 1	V14-945101 dated 10/25/62			Supplies a-c power	No power output	Flight	Loss of inverter	No a-c power available to bus A or B	None	Switch standby inverter on.
Inverter No. 2	V14-945101 dated 10/25/62			Supplies a-c power	No power output	Flight	Loss of inverter	No a-c power available to bus A or B	None	Switch standby inverter on.
Inverter No. 3	V14-945101 dated 10/25/62			Supplies a-c power	No power output	Flight	Loss of inverter	No a-c power available to bus A or B	None	Switch standby inverter on.

~~CONFIDENTIAL~~

Table 2-15. Distribution Subsystem, Electrical Power Failure Effects Analysis (Cont)

Item	Drawing Number	Elect. Reference. Desig.	Failure Detection	Function	Failure Type	Mission Phase	Failure Effect On Component Performance	Failure Effect On Sub-Systems Performance	Failure Effect On Apollo	Possible Crew Action
Circuit breaker		CB47		Post-landing battery C to flight and post-landing bus circuit breaker	Fails open		Loss of circuit breaker	No d-c power to flight and post-landing bus from battery C	None	Battery A or B can be switched in.
					Fails short		Loss of circuit breaker	No short-circuit protection for battery C	None	Battery A or B can be switched in if battery C is shorted out.
Flight and post-landing battery C				Supplies d-c power to flight and post-landing bus	No power output		Loss of battery C	No d-c power available to post-landing bus	None	Battery A or B can be switched in.
Battery A				Supplies d-c power to battery bus A	No power output		Loss of battery A	No d-c power available to battery bus A	None	Battery B or C can be switched in.
Battery B				Supplies d-c power to battery bus B	No power output		Loss of battery B	No d-c power available to battery bus B	None	Battery A or C can be switched in.
Circuit breaker	V14-945101 dated 10/25/62	CB46		Battery B to bus B circuit breaker	Fails open		Circuit breaker inoperative	No d-c power available to battery bus B	None	Battery A or C can be switched in.
					Fails short		Circuit breaker inoperative	No short-circuit protection for battery B	None	Battery A or C can be switched in if battery B is shorted out.
Battery bus A				Distributes power	Fails open		Loss of bus	No d-c power at battery bus A	None	Power can be switched to battery bus B or post-landing bus.
					Fails short		Loss of bus	No d-c power at battery bus A	None	Power can be switched to battery bus B or post-landing bus.
Battery bus B				Distributes power	Fails open		Loss of bus	No d-c power at battery bus B	None	Power can be switched to battery bus A or post-landing bus.
					Fails short		Loss of bus	No d-c power at battery bus B	None	Power can be switched to battery bus A or post-landing bus.

~~CONFIDENTIAL~~

Table 2-15. Distribution Subsystem, Electrical Power Failure Effects Analysis (Cont)

Item	Drawing Number	Elect. Reference Desig.	Failure Detection	Function	Failure Type	Mission Phase	Failure Effect On Component Performance	Failure Effect On Sub-Systems Performance	Failure Effect On Apollo	Possible Crew Action
Circuit breaker		CB13		D-c main bus A to inverter No. 1 circuit breaker	Fails open		Circuit breaker inoperative	No d-c power available to inverter No. 1	None	Inverter No. 2 or 3 can be switched in.
					Fails short		Circuit breaker inoperative	No short-circuit protection for inverter No. 1 input from d-c main bus A	None	Inverter No. 2 or 3 can be switched in if inverter No. 1 is shorted out.
Suit pack battery	V14-945101 dated 10/25/62	BT4		Provides d-c power to suit pack	No power output		Loss of suit pack	No d-c power is available to suit pack	None	None
Suit pack charge control	V14-945101 dated 10/25/62	CC1		Controls proper amount of charge to suit pack battery	No charge control		Loss of charge control	Incorrect d-c charge input cannot be properly utilized.	None	None
Pyro battery A	V14-945101 dated 10/25/62	BT5		Supplies d-c power to RCS fuel dump and sequencer A	No power output		Loss of pyro battery A	No d-c power is available to RCS fuel dump and sequencer A	None	None
Pyro battery B	V14-945101 dated 10/25/62	BT6		Supplies d-c power to RCS fuel dump, sequencer B, and HF antenna deploy	No power output		Loss of pyro battery B	No d-c power is available to RCS fuel dump, sequencer B, and HF antenna deploy	None	None

ENVIRONMENTAL CONTROL SYSTEM (ECS)

SUMMARY

Analyses and special studies of proposed design changes were performed and design changes recommended for the attainment of reliability goals.

Logic diagrams reflecting the latest design changes have been generated and are included in this report.

The failure effects analysis (FEA) was improved to reflect instrumentation that will detect the various failure modes. The FEA's included in the ECS section do not reflect the latest ECS configuration (i.e., the F change); these will be completed and reported in the next issue of this report.

ANALYSIS

The FEA (Table 2-24 at the end of this section) reflects the E design configuration. This analysis was improved during the reporting period to show the adequacy of the ECS instrumentation in relation to the failure modes.

FEA's have been used to focus attention on critical problem areas resulting in special analyses. These analyses, reported under Special Studies have not all resulted in design changes. One design change, the inclusion of isolation valves in the water-glycol circuit, was accomplished. This change reduces the effect of a critical problem. The valves will permit isolation of the glycol-to-suit heat exchanger in the event of a glycol leak to suit gas.

After the FEA's are updated to represent the F configuration, new studies will be initiated, with the aid of the logic diagrams where indications exist that mission success or crew safety may be in jeopardy.

Water Separator Accumulator—Manual Backup

As indicated by the FEA shown in Table 2-24, an abort condition could result from the loss of H_2O and O_2 from the water separator accumulator assemblies. A study was conducted to determine design changes that would improve the probability of mission success and crew safety. The results of the study follow.

~~CONFIDENTIAL~~

Analyses performed on the water separator accumulators showed that the probability of mission success afforded by the standby redundant configuration is commensurate with the system objective of 0.9935. However, subsequent analysis has shown that the probability of the accumulators adversely affecting crew safety is marginal with respect to the system objective of 0.0003. This marginal situation exists for the following reasons:

1. The occurrence of a leak in the bellofram could result in the loss of H_2O and O_2 in quantities sufficient to endanger the crew, due to the functional characteristics of the O_2 demand valve and the lack of instrumentation.

2. The loss of one accumulator prior to and during lunar operations may be considered reason for mission abort, due to the relatively high failure rate of the accumulator.

The following discussion presents proposed reliability design improvements in the method of water separator accumulation to overcome the problem and to improve the reliability and crew safety expected from these changes.

The changes proposed for the present water separator accumulator configuration, in order to ensure adequate reliability and crew safety for this function, are as follows:

1. Elimination of the present method of automatic O_2 supply control (i.e., the demand valve) and replacement of it with an electrically or pneumatically timed valve external to each accumulator. (O_2 would be fed to the accumulator for approximately 15 seconds in order to expel the water. This method of controlling the O_2 supply would prevent the loss of critical amounts of H_2O and O_2 as the result of a leak in the bellofram.)

2. Instrumentation of each accumulator with a transducer and indicator, which would enable the crew to monitor accumulator performance and would provide the crew with a positive indication of an accumulator failure (with the present lack of instrumentation, the crew would become aware of the need for employing the standby accumulator only through the physical discomfort generated by such a failure).

3. Provision of a third accumulator which would be completely manual in operation. This additional backup would primarily enhance crew safety rather than the probability of mission success. It is expected that loss of the automatic accumulators

~~CONFIDENTIAL~~

prior to and during lunar operations would necessitate mission abort, since the frequency of manual operations would interfere with the performance of other tasks essential to successful operations. The manual accumulator is envisioned as a device which could be stored on board and attached to the system when required. The accumulator would consist of a bellows or piston chamber which could be manually actuated by a lever or lead-screw device. The addition of this backup would remove the need for aborting the mission upon the loss of a single accumulator.

The proposed changes affect mission success and crew safety water-separator functions as follows:

	Proposed Design	Present Design
Mission success	0.999933	0.992
Crew safety	0.999998	0.99966

ECS Reliability Improvement Study—Critical Component Backup

As a result of the FEA, a study was conducted to determine alternative methods of improving ECS reliability of the components that contribute to abort conditions in the event of a failure. The critical components are the suit compressors, the glycol pumps, and the water-separator pump assembly.

Two solutions to the criticality condition of abort for the suit compressors appear feasible. One is to use the LEM ECS suit compressor as a spare; the other is to use the waste-management blower as a stand-by. Each of these solutions would require some redesign at both component and system levels. The solution to the glycol pump criticality would be to add a third pump or to abort after the two present pumps fail. The addition of a manually-operated water separator was considered in the previous study.

The effect of these backup components improves the mission success and crew safety reliability values to 0.9941 and 0.9999 from 0.987 and 0.9996. The results of this study were presented to the ECS design group by Apollo Reliability.

RELIABILITY/CREW SAFETY DESIGN REVIEWS

A Reliability/Crew Safety Design Review Meeting was held to discuss the problems concerning the ECS waste management. Results of this meeting are presented in Table 2-25.

Table 2-25. Environmental Control System Waste Management Design Review Board Action

Action Item	Description of Task	Action By	Status
1. The waste management system blower has no backup for urine or gas removal in the event the blower fails. a. Can the redundant ECS blower be used as a backup? b. If so, how will this effect the present design?	The feasibility of using the ECS blower as a backup will be studied. Redesign will be made if the study so indicates.	ECS Design and Reliability	It is possible with modification to the ECS suit loop manual override valve to use the ECS blower as a backup. Still under study.
2. The urine separator control unit backup valve and interconnecting lines will be exposed to both urine and a hard vacuum when the control valve is in the urine overboard position. Due to the small line size is it possible for urine to freeze and impair the system's operation?	Various possible solutions including the feasibility of including an electric heater installation are being studied. (See Item 6.)	ECS Design	Testing still in progress.

Table 2-25. Environmental Control System Waste Management Design Review Board Action (Cont)

Action Item	Description of Task	Action By	Status
3. The present control valve configuration has a position between the vacuum cleaner and the urine-feces position where the blower motor is not required. Would it be practical to arrange the three valve positions in sequence, and eliminate this dead band, thereby reducing the number of blower start-stop cycles?	A study will be performed to determine feasibility of redesign.	ECS Design	Presently being studied by supplier. Possibly by redesigning the valve, the switch could be used to cut out blower during dump phase.
4. The present concept does not call for mission abort in event of waste management failure. What means of urine and fecal evacuation and storage are being considered in the event of depressurized mode?	A study to determine the feasibility of providing storage will be undertaken. Spacesuit interfaces require definition and resolution to establish a design with operational capabilities with the CM depressurized.	Life Science and ECS Design	System being designed for depressurized operation per L/S request.

Table 2-25. Environmental Control System Waste Management Design Review Board Action (Cont)

Action Item	Description of Task	Action By	Status
5. When the vacuum cleaner is in use, the following problem areas are present: a. How does the crew detect when the refuse collector bag is full? b. How does overfilling of the bag effect the nozzle check valve? c. How can an overfilled bag be effectively sealed?	a. No problem b. To be investigated and redesign accomplished if so indicated. c. No problem	ECS Design	a. Airflow stops b. Bag does not fill completely c. Bag cannot be over-filled.
6. Urine is expelled overboard by the ΔP between space and the air trapped between the expulsion bladder and urine collector wall. Volume and pressure of trapped air is small and can conceivably decay to zero before expulsion is complete. Remaining urine then would boil off, and the solids would remain in the separator and lines. Would it improve the urine expulsion if a vent were incorporated in the separator wall and a cabin pressure of 5 psi were to be used for expulsion?	The vent in separator wall is to be studied to determine remedial design action (see also Item 2).	ECS Design and Reliability.	Still under study.

Table 2-25. Environmental Control System Waste Management Design Review Board Action (Cont)

Action Item	Description of Task	Action By	Status
7. In a depressurized spacecraft, the pressure differential from inside to outside is zero. The spacesuit is pressurized to maintain life of the crew, so there is a pressure differential from spacesuit to spacecraft. If a waste disposal problem should exist, has a method been considered to drain the urine in the suit and to dispose of the feces? NOTE: A fabric environmental cell into which man may enter has been proposed.	A study is required to determine remedial action. However, this study cannot be made until information is secured from NASA and Hamilton Standard on the space suit waste management provisions. Therefore, this item will be placed on the agenda for the next review.	Life Science and ECS Design Life Sciences and ECS Design are to make the study when the data are available.	Awaiting information from Hamilton Standard. Hold for next review.
8. If any one of the five sub-assemblies of the waste management system failed, it would be necessary to store urine onboard the CM. What provisions have been made for on-board urine storage?	A study will be made for on-board storage of urine to determine design action (see Items 4 and 7).	ECS and Life Science	Under investigation.

Table 2-25. Environmental Control System Waste Management Design Review Board Action (Cont)

Action Item	Description of Task	Action By	Status
9. The overboard urine disposal line is a 3/8-inch OD line several feet in length. After treatment, the urine is discharged every six hours through this line. This line will be full of urine after each overboard dumping and will start to boil or sublimate from the outlet back to the overboard valve. The solids of the urine will be deposited in the line, reducing or plugging the line in a short time. a. What will be the procedure for preventing line clogging? b. Will the line be flushed with water or blown with gas to keep the overboard line clear?	Tests indicate that this is a problem area. A study will be performed to determine remedial action.	ECS Design	Still under study

Table 2-25. Environmental Control System Waste Management Design Review Board Action (Cont)

Action Item	Description of Task	Action By	Status
10. When any of the following pieces of equipment are inoperative or malfunctioning, on-board storage of urine is required: Urine disposal lock, blower, control unit selector, backup valve, crewman relief receptacle. Weight of the stored urine could amount to 134 pounds per mission. However, no provision for this storage has been made. a. Should on board storage provisions be supplied? b. Will this present a cg problem? c. Could this become a secondary projectile problem on landing?	a. A study is to be made to determine design action. b. A weight study is to be prepared. c. A study will be performed to determine means of retention in the event it is decided to provide on-board storage of urine.	a. ECS Design b. Weights c. ECS Design	Under investigation

Table 2-25. Environmental Control System Waste Management Design Review Board Action (Cont)

Action Item	Description of Task	Action By	Status
11. Process Specifications MA0306-0003 and MA0306-0001 call for checkout of top assemblies but not for specific subassemblies. Manufacturing feels that in many cases this will allow faulty subassemblies to be included and the faults to go undetected until the checkout of the top assembly. Shouldn't these specifications be changed to call for checkout of specific subassemblies?	A study will be made on adequacy of process specifications. If inadequacies are present, the specifications will be modified.	ECS Design and Quality Engineering	Still under study
12. In case of fire within the CM, a need for complete isolation of the suit circuit from all external sources is required. Can a manual shut-off valve be placed in the storage vent line to accomplish this?	A study will be prepared on the basis of possible design change if required or feasible.	ECS-Life Systems and Integration	Still under study

SPECIAL STUDIES

Oxygen Surge Tank Versus Reentry O_2 Supply

This study was conducted to determine the effects on ECS reliability of adding a surge tank to the ECS oxygen supply system. The functions of the surge tank would be as follows:

1. To provide emergency oxygen flow in the event of Command Module puncture

2. To prevent stratification and loss of pressure in cryogenic storage system tanks at high flow demand

3. To provide a source of oxygen during reentry (this would allow deletion of present reentry oxygen-supply system.)

The analysis indicated that the ECS would be degraded from 0.9935 to 0.9931 if a single surge tank were used and the present redundant reentry supply were deleted. It was assumed that all other components in the ECS would meet their apportioned reliability values. Since the single tank did not meet the reliability goal, the backpack O_2 supply will be used for redundant supply to the surge tank during reentry.

TEST PROGRAM

Qualification Test Program

The ground qualification test section of the General Test Plan (SID 62-109) was revised to include a definition of the ECS test program, a system logic diagram, a presentation of system criticality versus hardware requirements, and a qualification test schedule with test specimen utilization.

General Test Plan Status

Development Testing

Development testing on all levels of hardware assembly (component, subsystem, and system) will continue until November 1963.

Qualification Testing

1. Component testing, begun in October 1963, is scheduled to continue until March 1964.

2. Off-limit testing is scheduled from October 1963 to June 1965.

3. System testing will be conducted between January 1964 and June 1965.

Component Design and Development

Detail design has been completed on 67 of the 71 ECS components. Of these, all are in fabrication, and 98 percent are in development testing. Fifty-one of the 71 components are in final development configuration.

Breadboard ECS (S&ID, Downey)

The breadboard ECS will be used to verify the performance, ground checkout procedures, and crew safety of the Apollo ECS. The first hardware items for this system are scheduled for delivery in August 1963. Integrated systems testing will incorporate the environmental control, waste management, spare radiators, cold plates, and cryogenic storage systems. The system will be run through complete simulated space missions. A special test capsule has been built for the breadboard ECS.

Significant Development Test Results

Space Radiators

A number of tests have been run on single-passage space radiators to check the pressure drop, flow rate, and temperature characteristics. These single-passage radiators were uncoated and insulated. Due to instrumentation difficulties, none of the data were usable.

Presently, pressure drop, flow rate, and temperature profile characteristics are being run on a roll-bonded single passage (with two 90-degree bends in the passageway) space radiator.

Thermal coating studies have been run and will continue to find a coating with an α/ϵ ratio of 0.15/0.95 after 300 sun exposure hours. Some proposed coating material has been screened, and testing is continuing on two coatings. An optical properties check will be run on these coatings after 300 sun exposure hours.

Valves and Pressure Vessels

1. Suit-Hose Connector Package. The latest configuration has been submitted for NAA approval.

2. Cabin Pressure Regulator Valve. Ninety percent of the scheduled development testing of the first unit has successfully been completed.

3. Oxygen Pressure Regulator Assembly. A prototype assembly has completed 100,000 cycles of operation without a failure.

4. Space Radiation Isolation and Vent Valve. A developmental unit has undergone 80 percent of the scheduled development tests.

5. Water-Glycol Manual Shut-Off Valve. A prototype valve has met the design verification test parameters.

6. Components undergoing development environmental testing are:

   a. Demand pressure regulator

   b. Water pressure relief valve.

7. Components which have completed development environmental testing are:

   a. Space radiator check valve

   b. Glycol pressure relief valve

   c. Glycol check valve

   d. Water check valve

   e. Water pressure relief valve.

Heat Transfer Equipment

The glycol evaporation is currently being tested with associated controls, including a prototype exhaust duct. The results show a definite need to reduce the water retention of the wick material to improve the start and transient operation of the evaporator.

A development wick-type water separator was delivered to S&ID on 10 May 1963 for transmittal to NASA.

The solids trap was tested for pressure drop and was considered acceptable from a system standpoint.

Turbomachinery

1. Suit Compressor. Two out of four units have failed due to a single-phase stall, attributed to laboratory equipment breakdown resulting in overheating. This caused the epoxy in the stator to swell with the resultant seizure of the rotor. The units will be cleaned of epoxy and the endurance run will be continued with the same bearings. The other two compressors each have completed over 2100 hours of endurance testing.

2. Cabin Air Circulating Blowers. Two units have each successfully completed over 1900 hours of the endurance test. One unit was subjected to a shock test with successful results.

3. Glycol Pumps. Two units have passed the 1500-hour mark of the endurance test without lubricity additives, utilizing production bearings. Two more pumps will be subjected to endurance testing. All lubricity additive testing has been terminated because of the success of the present pump design without the additives.

Temperature Control Equipment

1. Pre-qualification tests have begun on two temperature controls.

   a. Electromagnetic Interference Test. These tests show that the controls require additional filtering and shielded leads between electrical interfaces.

   b. Vibration Test. A vibration sine wave of 5 to 2000 cycles-per-second frequency, and resonant frequency dwells for 30 minutes in each axis, was performed on the controls with no mechanical or electrical failures during or after each phase.

   c. Dielectric Strength Test. Voltages of 500, 1000, and 1500 volts at 60 cycles were applied between connector pins and the control case for one-minute durations. During the 1500 volt test, there was a voltage breakdown in one temperature control between the head of a holddown screw and the printed circuitry. There is a need for minor redesign of the control. Three temperature controls have passed this dielectric strength test.

   d. Acceleration, shock, and pressure tests are yet to be performed.

System Development Testing

Evaluation testing of the ground support equipment to prevent air contamination of the water glycol circuity is in progress.

Glycol Evaporator/Temperature Control Assembly

Compatibility Test. Results showed that the water retention in the evaporator acts as a distance velocity lag of a magnitude which prohibits temperature control by the water flow quantity; also, the wicking in the evaporator produces freeze resistance to a high degree. The unit was frozen, but only with difficulty. The test run included the prototype outlet ducting.

SUBCONTRACTOR MANAGEMENT

Subcontractor Coordination Meeting

A reliability coordination meeting was held on 17 May 1963, with reliability personnel from AiResearch. Items discussed were:

1. Status of overall test plan
2. AiResearch reliability inputs to monthly progress reports
3. Status of design reviews
4. Failure reports
5. Submittal of reliability analysis and failure effects analysis.

The need for more comprehensive reporting by AiResearch on the tasks outlined in the ECS reliability program plan was expressed. This compliance was evident in the latest monthly progress report from AiResearch.

Subcontractor Activities

Evaluation of Test Results

No formal evaluations of test results have been performed. Reliability requirements in this area will be confined to qualification tests only; up to the present time, no qualification testing has been initiated. All testing presently in progress is of a development nature.

~~CONFIDENTIAL~~

Reliability Analysis and Failure Mode-and-Effect Analysis

The status, problems, and planned future effort concerning the reliability analysis of the Apollo ECS and associated GSE are presented as follows:

Preliminary reliability logic diagrams of the ECS were completed and informally transmitted to S&ID. Basically, the subject logic diagrams encompass the derivation of the ECS probability of mission success from the estimated failure rates of the ECS components and/or the component failure modes. The logic diagrams are constructed for each of the five ECS subsystems and illustrate: (1) the combinations of component modes of operation which constitute subsystem mission success, (2) the applicable failure rate or probability of success for each component and/or mode of component and/or mode of component operation, and (3) the equations which mathematically represent the conditions for subsystem success. These subsystem logic diagrams were derived for each of the four generalized mission phases listed below.

Mission Phase	Time (Hours)
Launch (L)	0.2
Orbit (0)	322.0
Rendezvous (R)	9.6
Reentry (E)	0.6

The base failure rates utilized in the construction of these logic diagrams were derived from published failure rate data and from AiResearch experience. A multipiler or "k factor" was employed to bias the base rate in accordance with the effect of environmental conditions.

At present, AiResearch Reliability is revising the ECS logic diagrams to provide a single logic diagram for each ECS subsystem which represents the entire mission, and to include the derivation of the probability of crew safety. Completion of the revised diagrams is scheduled during the next reporting period. However, S&ID Reliability has indicated that a mathmodel for calculating crew safety is forthcoming, and the actual completion date of the revised diagrams will be dependent upon receipt of this model.

The subject ECS logic diagrams represent a generalized failure mode-and-effect analysis; however, AiResearch Reliability plans to complete a detailed failure mode-and-effect analysis, similar to that performed for 51175B ECS, by the second week of July 1963.

Design Review Status

All critical design reviews, as defined in Appendix A to AiResearch Reliability Program Plan SS-1003-R, Revision 3, have been completed. Summary reviews are being initiated as needed; there were no action items during the reporting period.

Procurement and Engineering Specifications

ECS component procurement specifications are being revised, and reliability numerics have been provided for both components and subsystems. GSE procurement specifications were completed for mission-essential equipment and reviewed by AiResearch GSE Reliability engineering.

Surveillance of Tests

Inasmuch as no qualification testing is in progress, there is no requirement for an official test surveillance. Development testing is being monitored by the project reliability "in-line" function.

Trouble Reporting System

Trouble reports, although of a preliminary nature, are being initiated through normal channels; transmittal of these reports to S&ID is still being negotiated in the current contract negotiations.

Human Engineering

Human engineering concepts are being considered during the design review meetings; also, compliance to accepted practices, as discussed in Military Standard MIL-STD-803, are being required in the pertinent procurement and engineering specifications.

Vendor Selection and Control

During the reporting period, no action was initiated pertaining to vendor selection. Normal inherent vendor control is a continuing activity which automatically functions during the life of each subcontract.

~~CONFIDENTIAL~~

Logic Diagrams

During the reporting period, the ECS reliability logic diagrams were updated and presented in a more comprehensive manner than those in the Fourth Quarterly Progress Report.

The logic diagrams are constructed for each of the five ECS subsystems (Figures 2-8 through 2-12) and depict; (1) the combinations of component modes of operation which constitute subsystem mission success and crew safety, and (2) the applicable mission success and crew safety failure rate for each component and/or mode of component operation. Mission success and crew safety failure rates are denoted by λ and λ^1 respectively in the diagrams presented in Figure 2-8.

The logic diagrams represent the "F" design configuration with the following changes from the "E" configuration:

Suit Circuit Changes

Relocation and redesign of suit circuit air check valve assembly.

Oxygen Supply Circuit Changes

1. Relocation and redesign of demand pressure regulator and relief valve.

2. Added check valves in lines from oxygen storage system.

3. Added manual selector valves to oxygen pressure regulator assembly and emergency oxygen inflow control valve assembly, and deleted manual override features on each regulator.

Water Glycol Circuit Changes

1. Added freon cooling tank and valves.

2. Added isolation valves in line to suit-to-glycol heat exchanger.

3. Relocation and redesign of glycol pressure relief valve assembly.

Water Supply Circuit Changes

1. Potable water supply assembly redesign to use manual selector valve.

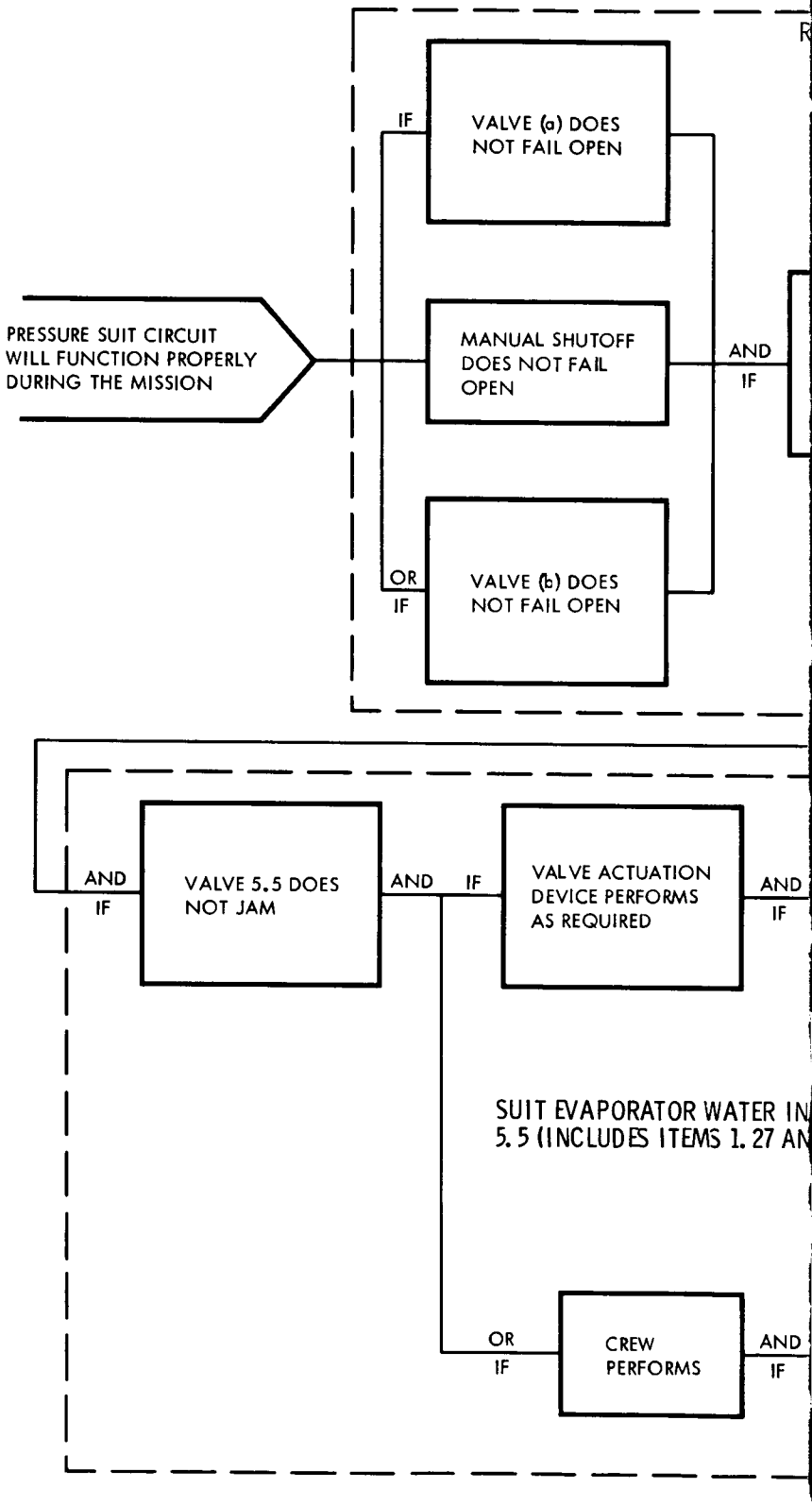
R
IF
VALVE (a) DOES NOT FAIL OPEN
PRESSURE SUIT CIRCUIT WILL FUNCTION PROPERLY DURING THE MISSION
MANUAL SHUTOFF DOES NOT FAIL OPEN
AND
IF
OR
IF
VALVE (b) DOES NOT FAIL OPEN
AND
IF
VALVE 5.5 DOES NOT JAM
AND
IF
VALVE ACTUATION DEVICE PERFORMS AS REQUIRED
AND
IF
SUIT EVAPORATOR WATER IN
5.5 (INCLUDES ITEMS 1.27 AN
OR
IF
CREW PERFORMS
AND
IF

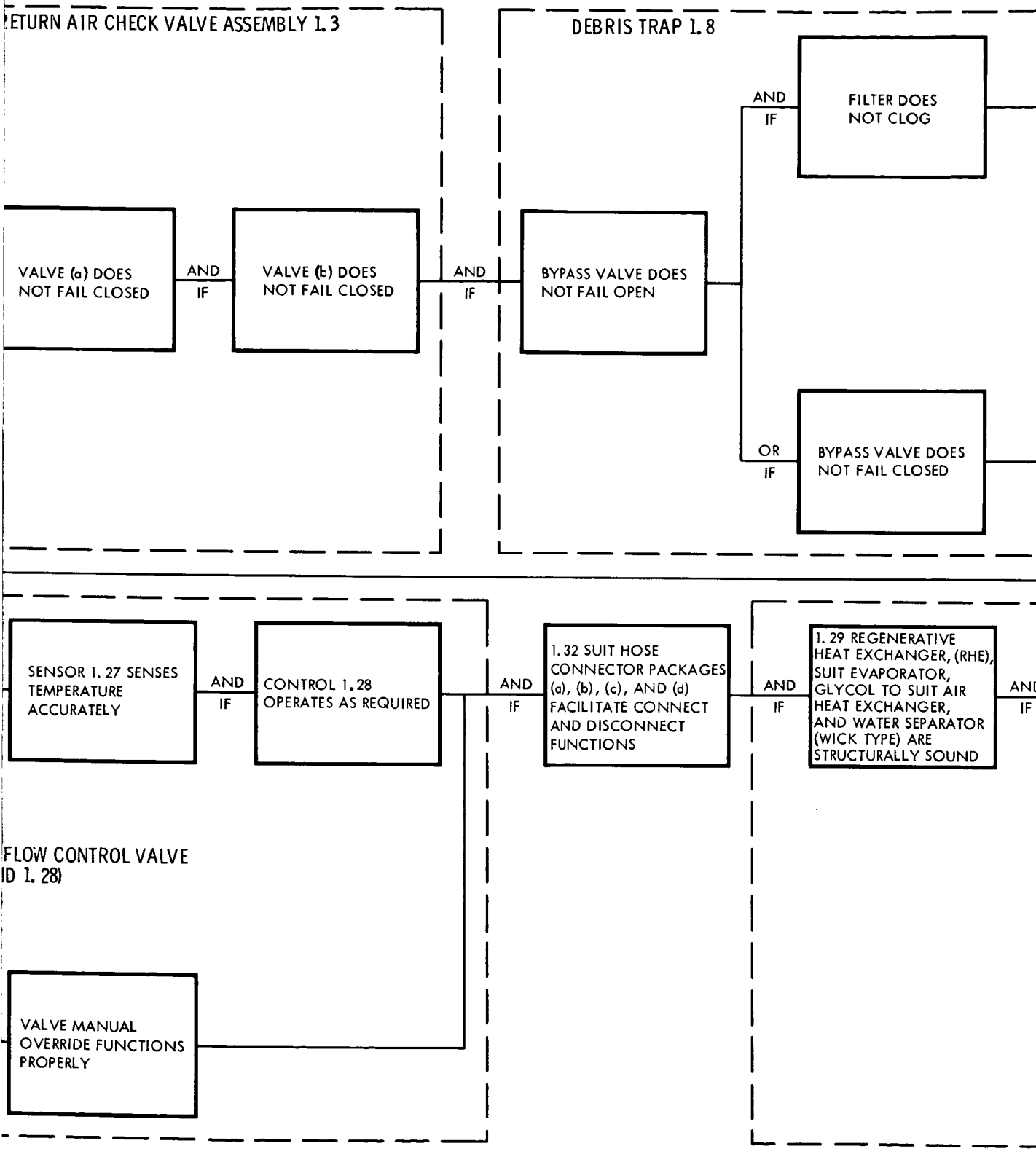
ETURN AIR CHECK VALVE ASSEMBLY 1.3
VALVE (a) DOES NOT FAIL CLOSED
AND IF
VALVE (b) DOES NOT FAIL CLOSED
AND IF
DEBRIS TRAP 1.8
BYPASS VALVE DOES NOT FAIL OPEN
AND IF
FILTER DOES NOT CLOG
OR IF
BYPASS VALVE DOES NOT FAIL CLOSED
SENSOR 1.27 SENSES TEMPERATURE ACCURATELY
AND IF
CONTROL 1.28 OPERATES AS REQUIRED
FLOW CONTROL VALVE
ID 1.28)
VALVE MANUAL OVERRIDE FUNCTIONS PROPERLY
AND IF
1.32 SUIT HOSE CONNECTOR PACKAGES (a), (b), (c), AND (d) FACILITATE CONNECT AND DISCONNECT FUNCTIONS
AND IF
1.29 REGENERATIVE HEAT EXCHANGER, (RHE), SUIT EVAPORATOR, GLYCOL TO SUIT AIR HEAT EXCHANGER, AND WATER SEPARATOR (WICK TYPE) ARE STRUCTURALLY SOUND
AND IF

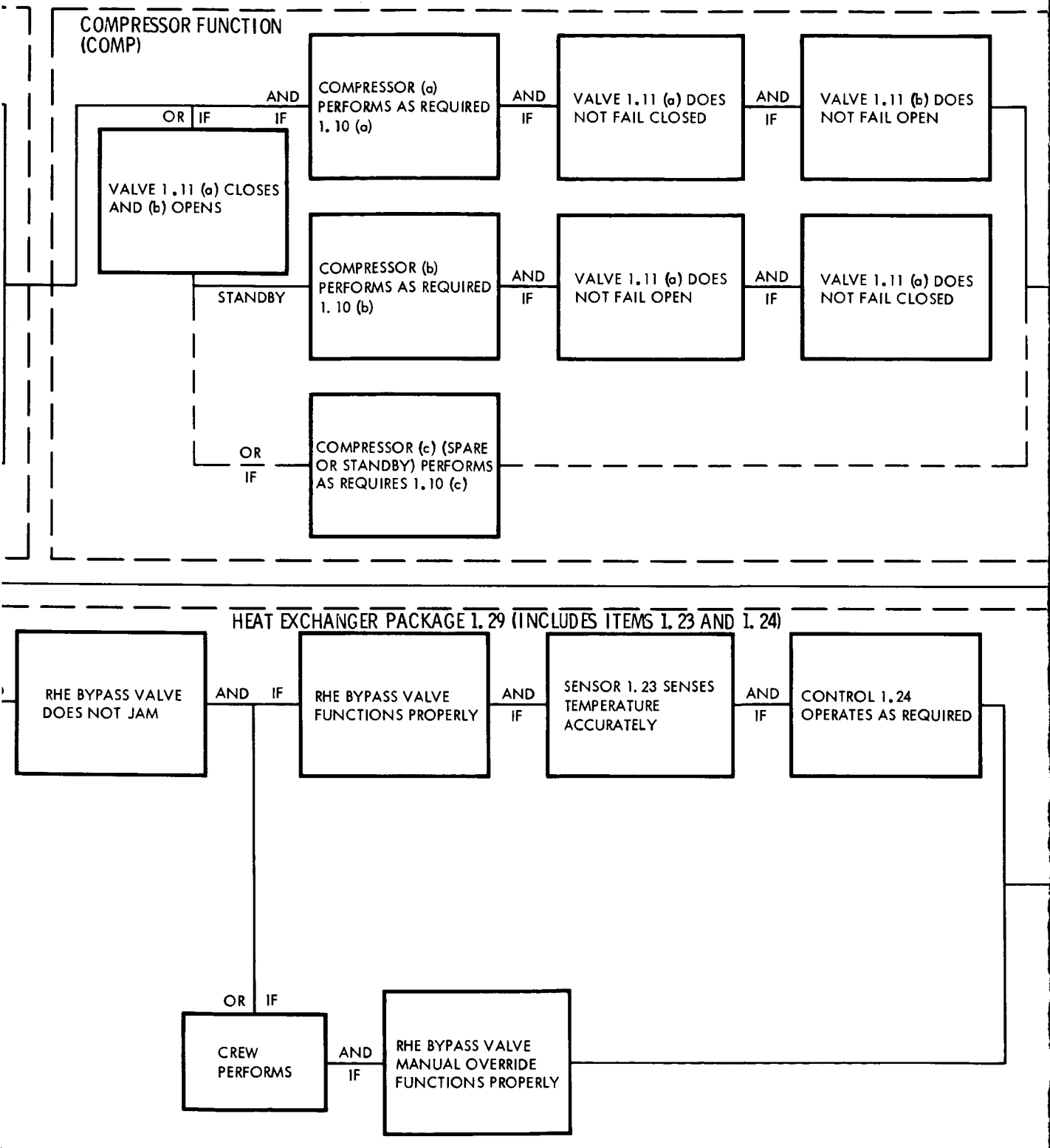
COMPRESSOR FUNCTION (COMP)
VALVE 1.11 (a) CLOSES AND (b) OPENS
OR IF
AND IF
COMPRESSOR (a) PERFORMS AS REQUIRED 1.10 (a)
AND IF
VALVE 1.11 (a) DOES NOT FAIL CLOSED
AND IF
VALVE 1.11 (b) DOES NOT FAIL OPEN
STANDBY
COMPRESSOR (b) PERFORMS AS REQUIRED 1.10 (b)
AND IF
VALVE 1.11 (a) DOES NOT FAIL OPEN
AND IF
VALVE 1.11 (a) DOES NOT FAIL CLOSED
OR IF
COMPRESSOR (c) (SPARE OR STANDBY) PERFORMS AS REQUIRES 1.10 (c)
HEAT EXCHANGER PACKAGE 1.29 (INCLUDES ITEMS 1.23 AND 1.24)
RHE BYPASS VALVE DOES NOT JAM
AND IF
RHE BYPASS VALVE FUNCTIONS PROPERLY
AND IF
SENSOR 1.23 SENSES TEMPERATURE ACCURATELY
AND IF
CONTROL 1.24 OPERATES AS REQUIRED
OR IF
CREW PERFORMS
AND IF
RHE BYPASS VALVE MANUAL OVERRIDE FUNCTIONS PROPERLY

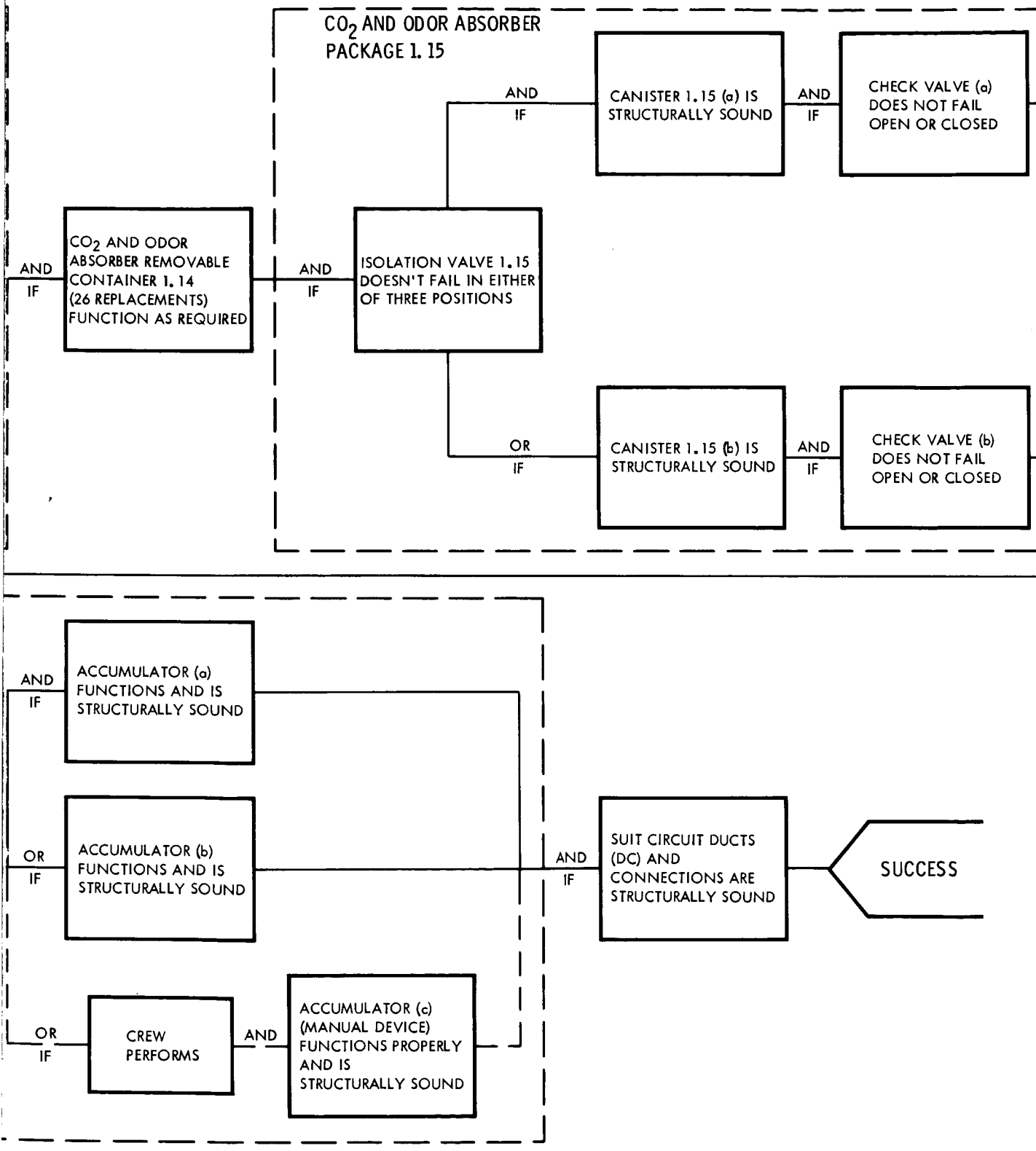
CO_2 AND ODOR ABSORBER PACKAGE 1.15
AND IF
CO_2 AND ODOR ABSORBER REMOVABLE CONTAINER 1.14 (26 REPLACEMENTS) FUNCTION AS REQUIRED
AND IF
ISOLATION VALVE 1.15 DOESN'T FAIL IN EITHER OF THREE POSITIONS
AND IF
CANISTER 1.15 (a) IS STRUCTURALLY SOUND
AND IF
CHECK VALVE (a) DOES NOT FAIL OPEN OR CLOSED
OR IF
CANISTER 1.15 (b) IS STRUCTURALLY SOUND
AND IF
CHECK VALVE (b) DOES NOT FAIL OPEN OR CLOSED
AND IF
ACCUMULATOR (a) FUNCTIONS AND IS STRUCTURALLY SOUND
OR IF
ACCUMULATOR (b) FUNCTIONS AND IS STRUCTURALLY SOUND
OR IF
CREW PERFORMS
AND
ACCUMULATOR (c) (MANUAL DEVICE) FUNCTIONS PROPERLY AND IS STRUCTURALLY SOUND
AND IF
SUIT CIRCUIT DUCTS (DC) AND CONNECTIONS ARE STRUCTURALLY SOUND
SUCCESS

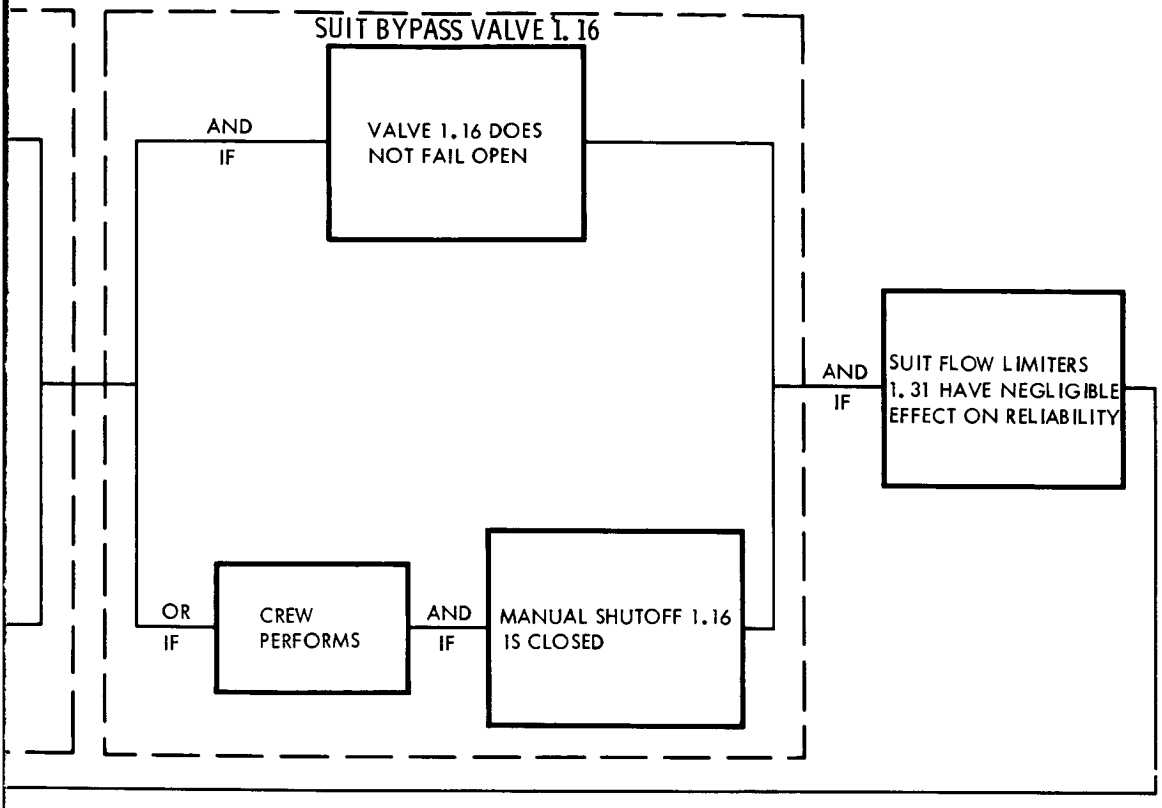

Figure 2-8. Pressure Suit Circuit

~~CONFIDENTIAL~~

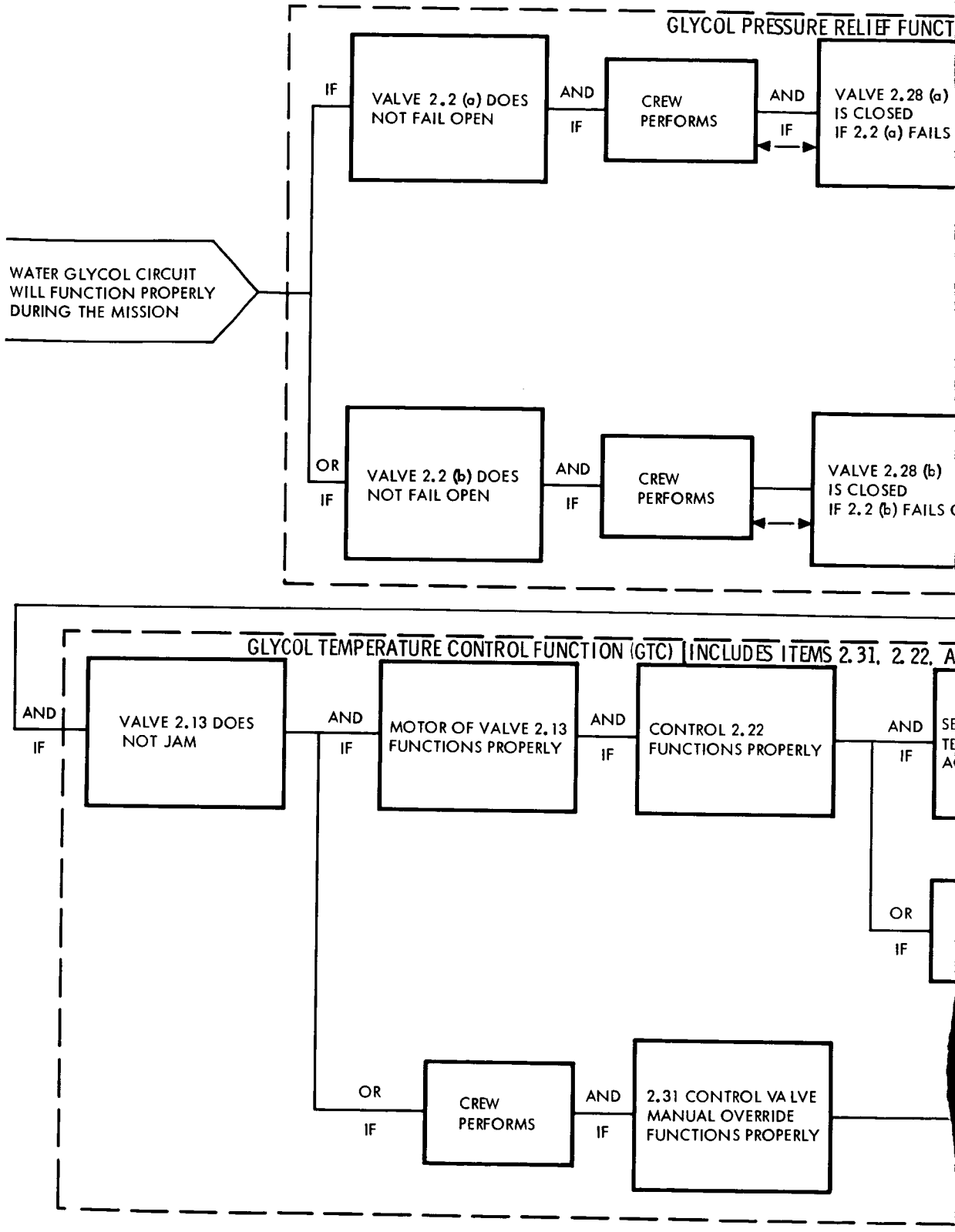

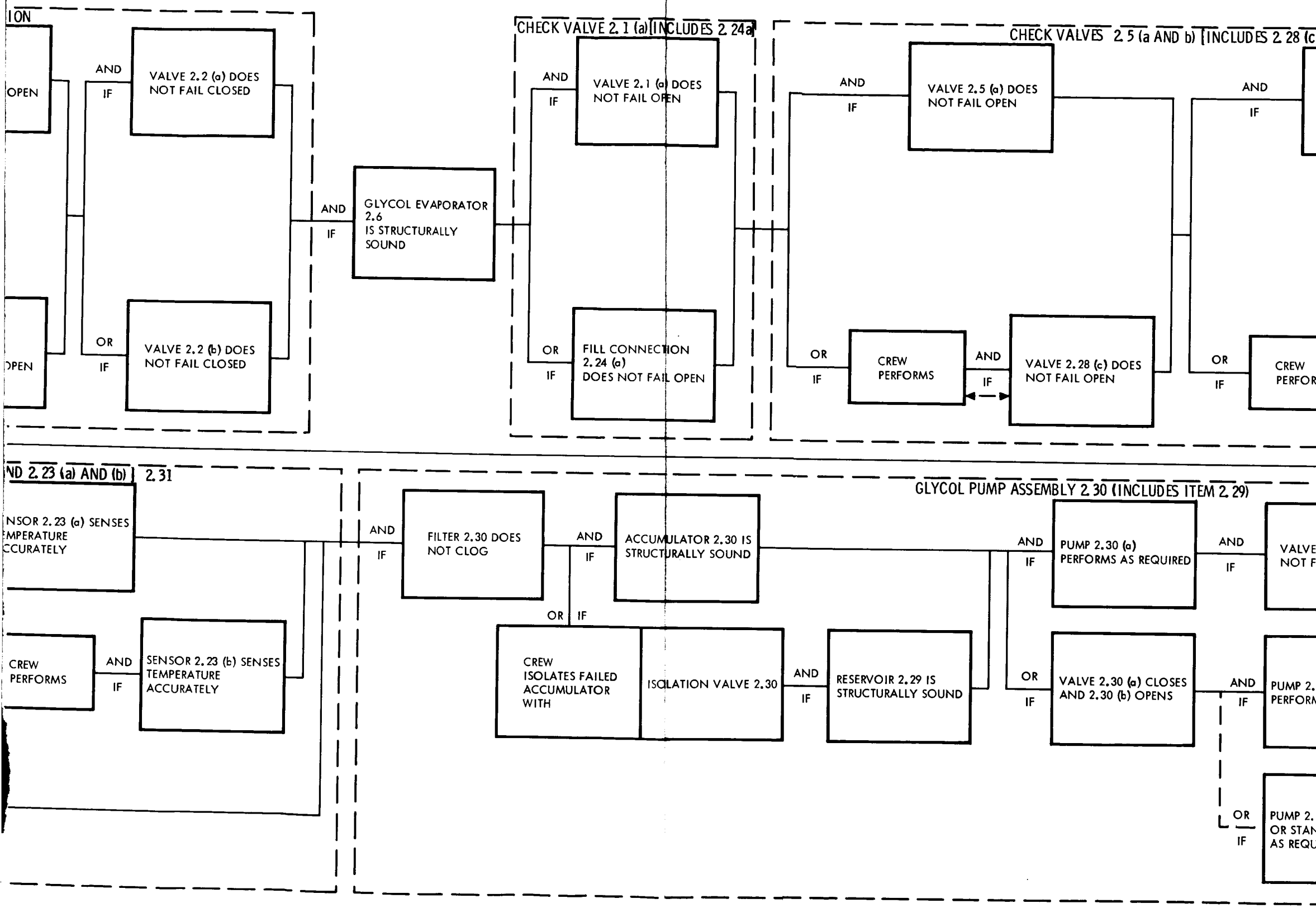
ION
OPEN
OPEN
AND
IF
OR
IF
VALVE 2.2 (a) DOES NOT FAIL CLOSED
VALVE 2.2 (b) DOES NOT FAIL CLOSED
AND
IF
GLYCOL EVAPORATOR 2.6 IS STRUCTURALLY SOUND
CHECK VALVE 2.1 (a) [INCLUDES 2.24a]
AND
IF
VALVE 2.1 (a) DOES NOT FAIL OPEN
OR
IF
FILL CONNECTION 2.24 (a) DOES NOT FAIL OPEN
CHECK VALVES 2.5 (a AND b) [INCLUDES 2.28 (c
AND
IF
VALVE 2.5 (a) DOES NOT FAIL OPEN
OR
IF
CREW PERFORMS
AND
IF
VALVE 2.28 (c) DOES NOT FAIL OPEN
AND
IF
OR
IF
CREW PERFOR
ND 2.23 (a) AND (b)] 2.31
NSOR 2.23 (a) SENSES MPERATURE CCURATELY
CREW PERFORMS
AND
IF
SENSOR 2.23 (b) SENSES TEMPERATURE ACCURATELY
AND
IF
FILTER 2.30 DOES NOT CLOG
AND
IF
ACCUMULATOR 2.30 IS STRUCTURALLY SOUND
OR
IF
CREW ISOLATES FAILED ACCUMULATOR WITH
ISOLATION VALVE 2.30
AND
IF
RESERVOIR 2.29 IS STRUCTURALLY SOUND
GLYCOL PUMP ASSEMBLY 2.30 (INCLUDES ITEM 2.29)
AND
IF
PUMP 2.30 (a) PERFORMS AS REQUIRED
AND
IF
VALVE
NOT F
OR
IF
VALVE 2.30 (a) CLOSES AND 2.30 (b) OPENS
AND
IF
PUMP 2.
PERFORM
OR
IF
PUMP 2.
OR STAN
AS REQU

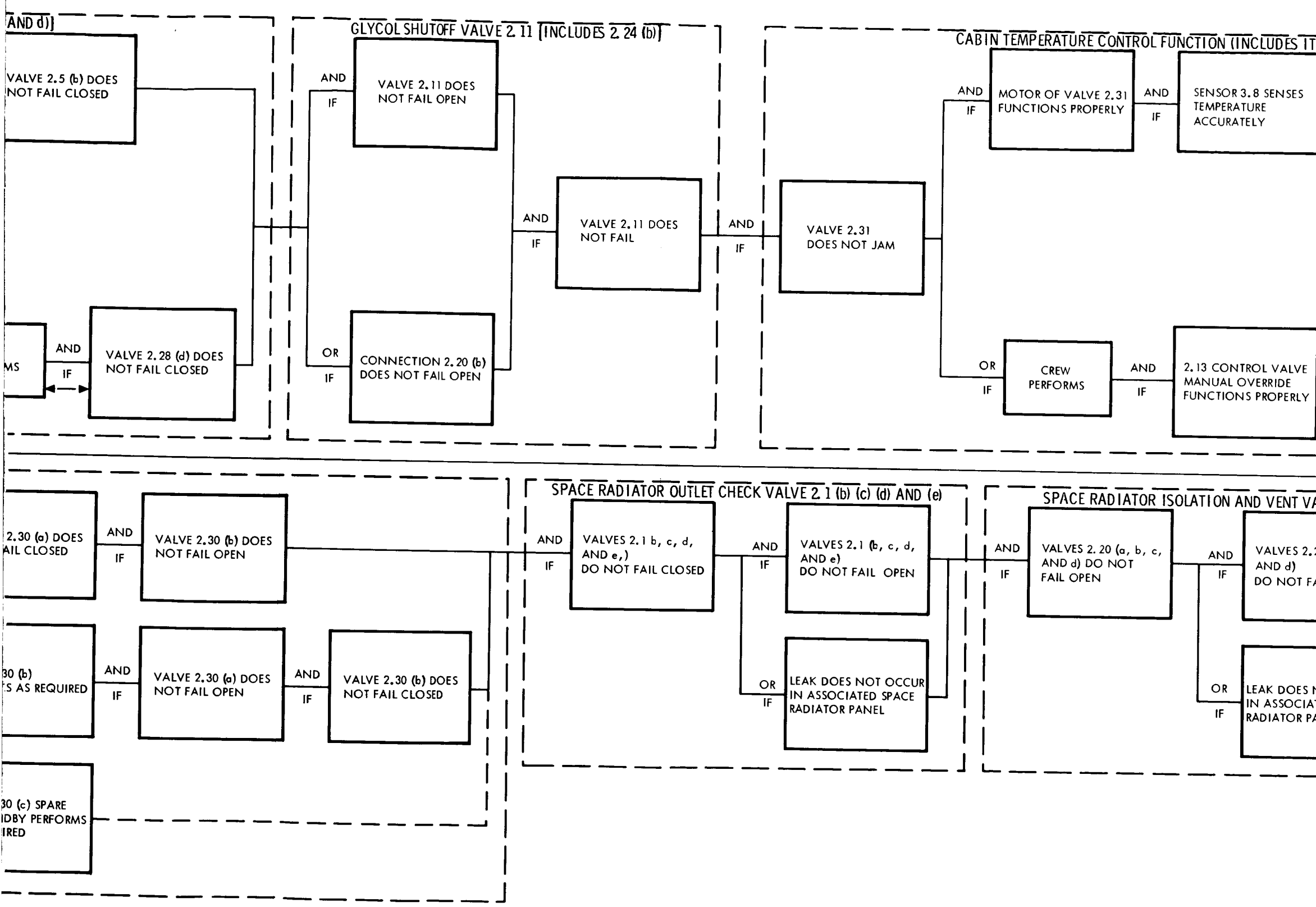
AND d))
VALVE 2.5 (b) DOES NOT FAIL CLOSED
MS
AND
IF
VALVE 2.28 (d) DOES NOT FAIL CLOSED
GLYCOL SHUTOFF VALVE 2.11 (INCLUDES 2.24 (b))
AND
IF
VALVE 2.11 DOES NOT FAIL OPEN
OR
IF
CONNECTION 2.20 (b) DOES NOT FAIL OPEN
AND
IF
VALVE 2.11 DOES NOT FAIL
AND
IF
VALVE 2.31 DOES NOT JAM
CABIN TEMPERATURE CONTROL FUNCTION (INCLUDES IT
AND
IF
MOTOR OF VALVE 2.31 FUNCTIONS PROPERLY
AND
IF
SENSOR 3.8 SENSES TEMPERATURE ACCURATELY
OR
IF
CREW PERFORMS
AND
IF
2.13 CONTROL VALVE MANUAL OVERRIDE FUNCTIONS PROPERLY
2.30 (a) DOES AIL CLOSED
AND
IF
VALVE 2.30 (b) DOES NOT FAIL OPEN
30 (b) S AS REQUIRED
AND
IF
VALVE 2.30 (a) DOES NOT FAIL OPEN
AND
IF
VALVE 2.30 (b) DOES NOT FAIL CLOSED
30 (c) SPARE IDBY PERFORMS IRED
SPACE RADIATOR OUTLET CHECK VALVE 2.1 (b) (c) (d) AND (e)
AND
IF
VALVES 2.1 b, c, d, AND e,) DO NOT FAIL CLOSED
AND
IF
VALVES 2.1 (b, c, d, AND e) DO NOT FAIL OPEN
OR
IF
LEAK DOES NOT OCCUR IN ASSOCIATED SPACE RADIATOR PANEL
SPACE RADIATOR ISOLATION AND VENT VA
AND
IF
VALVES 2.20 (a, b, c, AND d) DO NOT FAIL OPEN
AND
IF
VALVES 2. AND d) DO NOT FA
OR
IF
LEAK DOES N IN ASSOCIAT RADIATOR PA

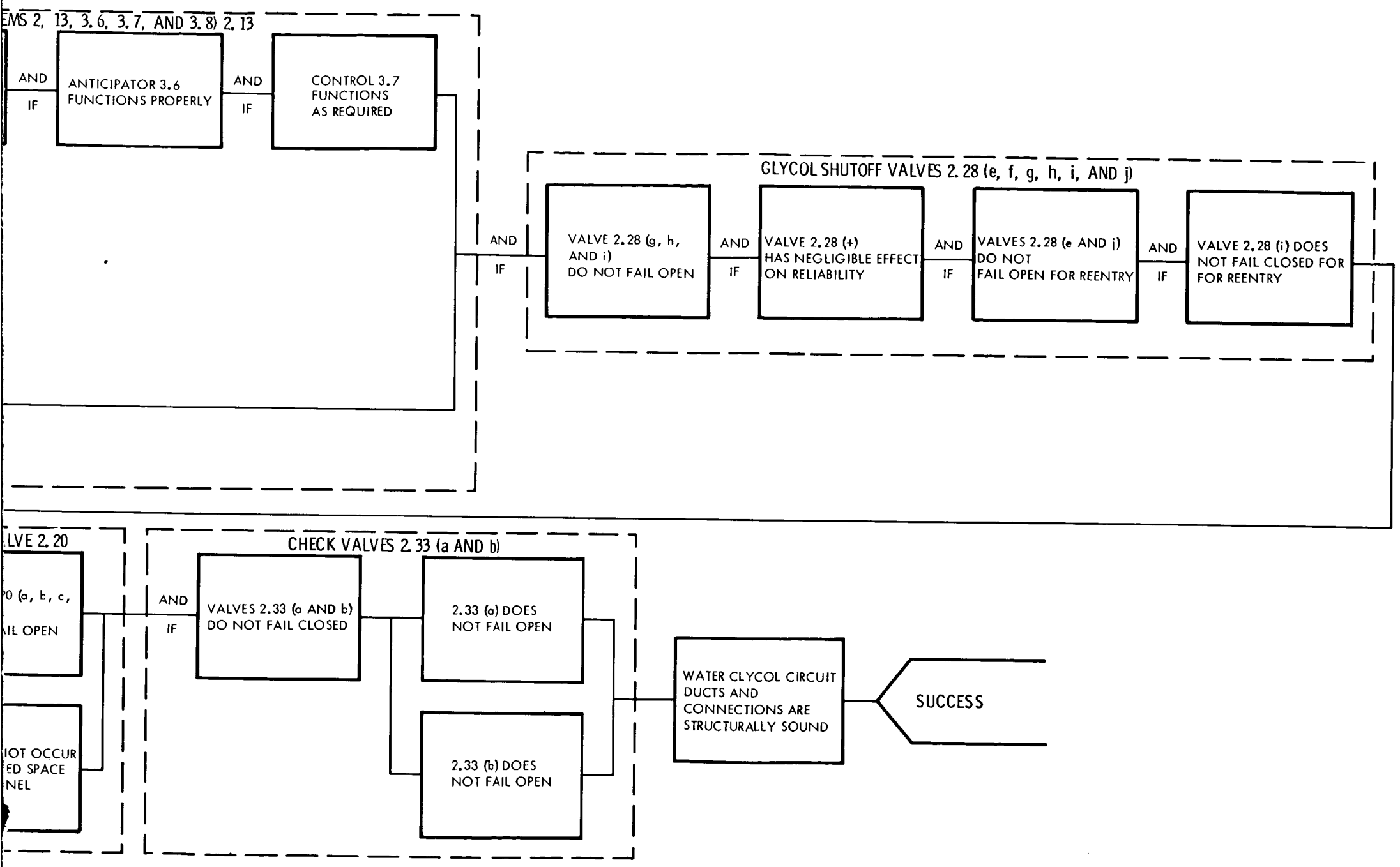

Figure 2-9. Water Glycol Circuit

~~CONFIDENTIAL~~

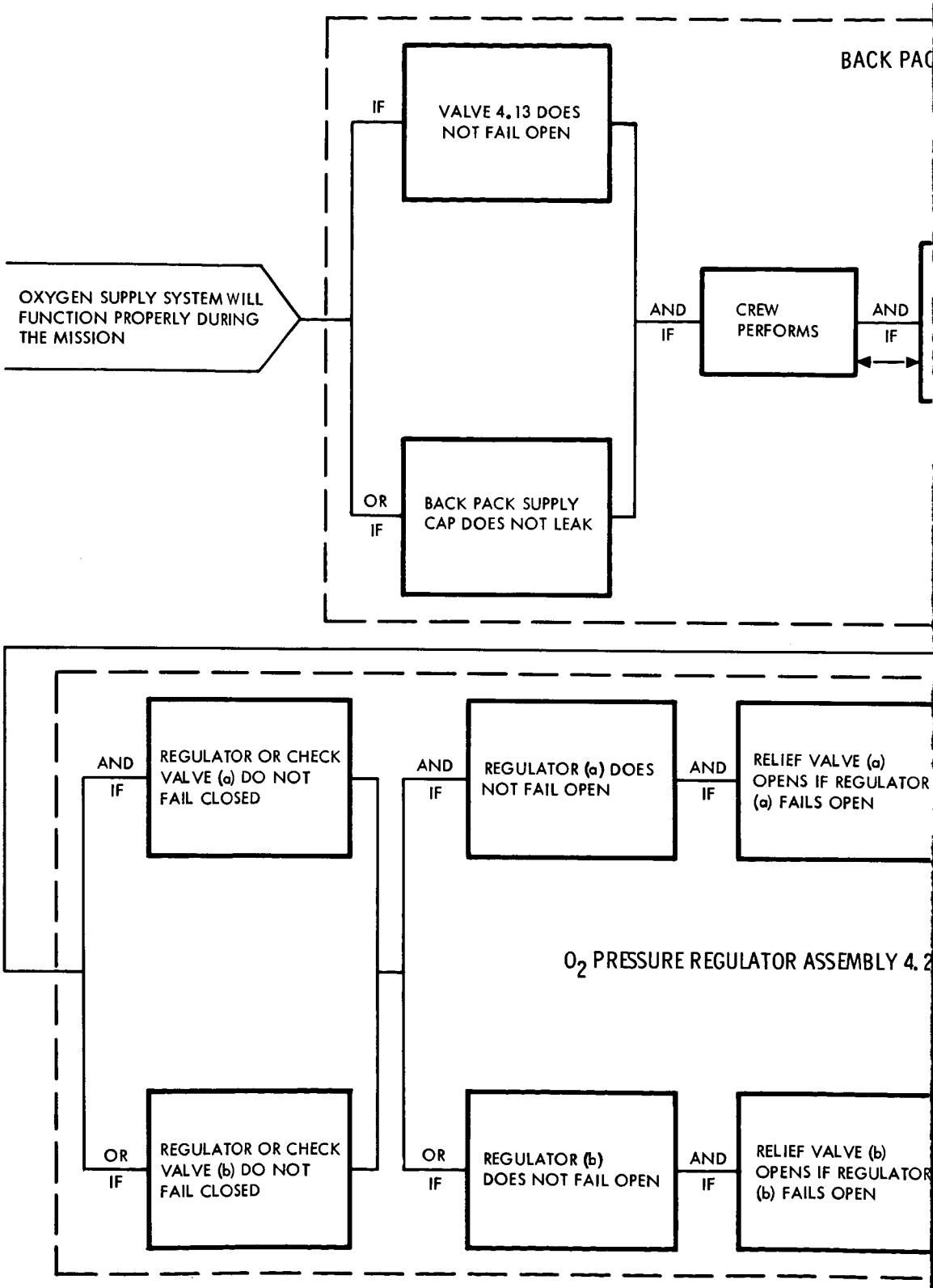

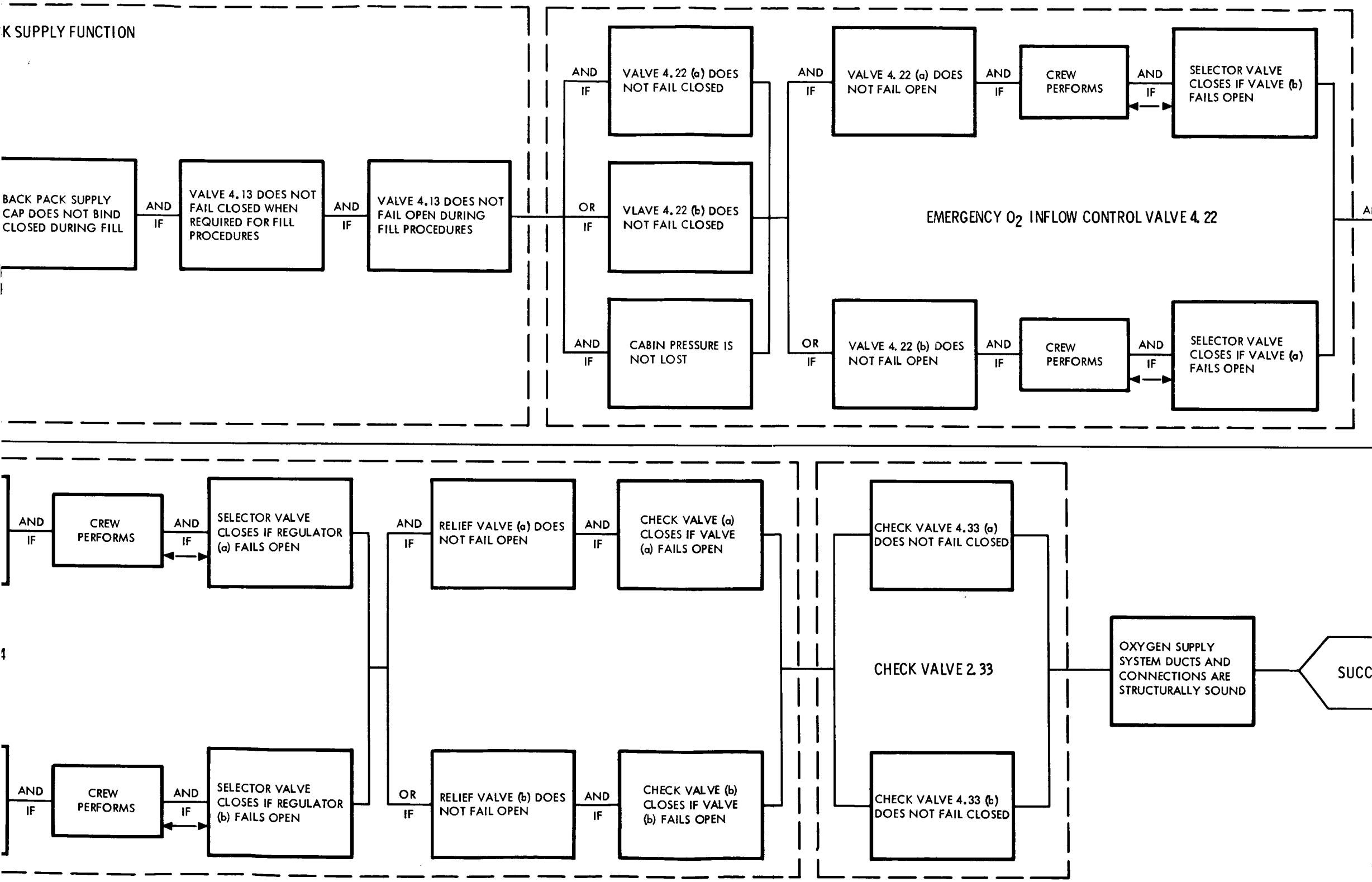
K SUPPLY FUNCTION
BACK PACK SUPPLY CAP DOES NOT BIND CLOSED DURING FILL
AND IF
VALVE 4.13 DOES NOT FAIL CLOSED WHEN REQUIRED FOR FILL PROCEDURES
AND IF
VALVE 4.13 DOES NOT FAIL OPEN DURING FILL PROCEDURES
AND IF
VALVE 4.22 (a) DOES NOT FAIL CLOSED
OR IF
VLAVE 4.22 (b) DOES NOT FAIL CLOSED
AND IF
CABIN PRESSURE IS NOT LOST
AND IF
VALVE 4.22 (a) DOES NOT FAIL OPEN
AND IF
CREW PERFORMS
AND IF
SELECTOR VALVE CLOSES IF VALVE (b) FAILS OPEN
EMERGENCY O_2 INFLOW CONTROL VALVE 4.22
OR IF
VALVE 4.22 (b) DOES NOT FAIL OPEN
AND IF
CREW PERFORMS
AND IF
SELECTOR VALVE CLOSES IF VALVE (a) FAILS OPEN
AND IF
CREW PERFORMS
AND IF
SELECTOR VALVE CLOSES IF REGULATOR (a) FAILS OPEN
AND IF
CREW PERFORMS
AND IF
SELECTOR VALVE CLOSES IF REGULATOR (b) FAILS OPEN
AND IF
RELIEF VALVE (a) DOES NOT FAIL OPEN
AND IF
CHECK VALVE (a) CLOSES IF VALVE (a) FAILS OPEN
OR IF
RELIEF VALVE (b) DOES NOT FAIL OPEN
AND IF
CHECK VALVE (b) CLOSES IF VALVE (b) FAILS OPEN
CHECK VALVE 4.33 (a) DOES NOT FAIL CLOSED
CHECK VALVE 2.33
CHECK VALVE 4.33 (b) DOES NOT FAIL CLOSED
OXYGEN SUPPLY SYSTEM DUCTS AND CONNECTIONS ARE STRUCTURALLY SOUND

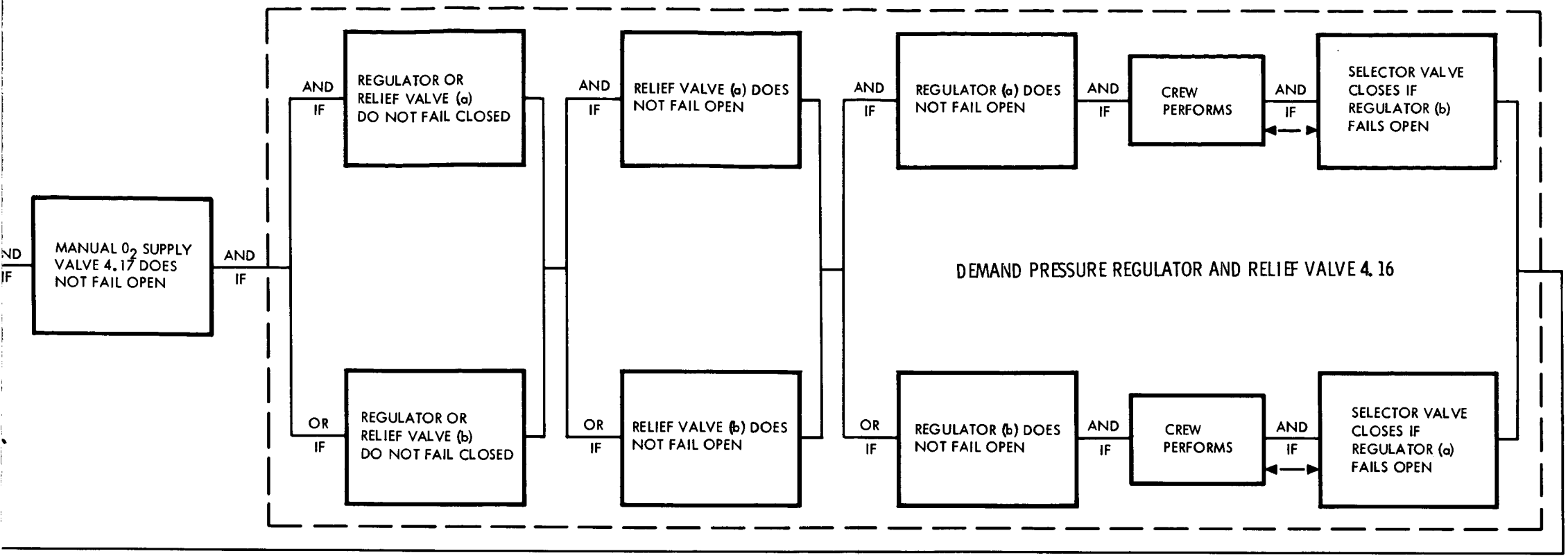

Figure 2-10. Oxygen Supply System

~~CONFIDENTIAL~~

~~CONFIDENTIAL~~

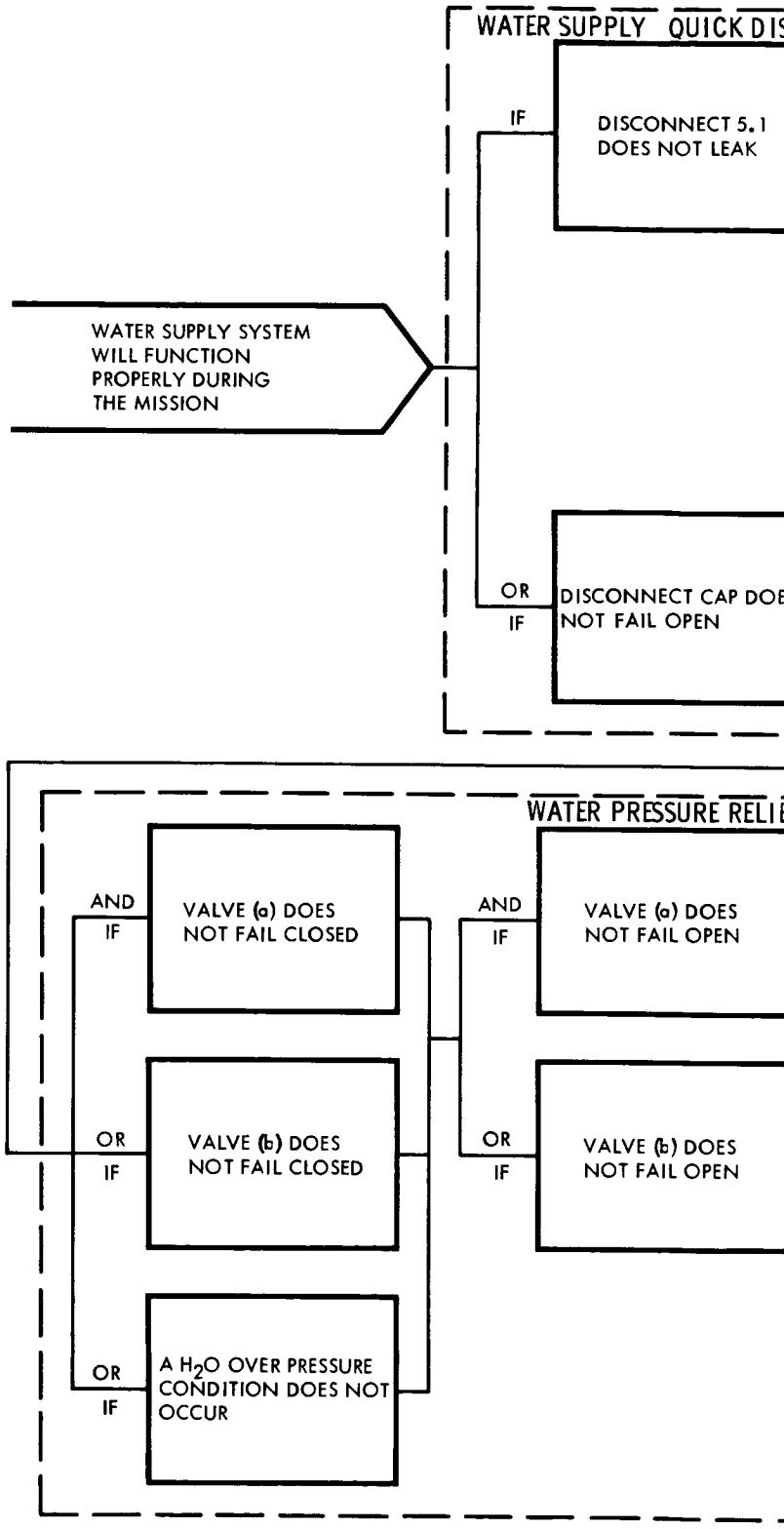

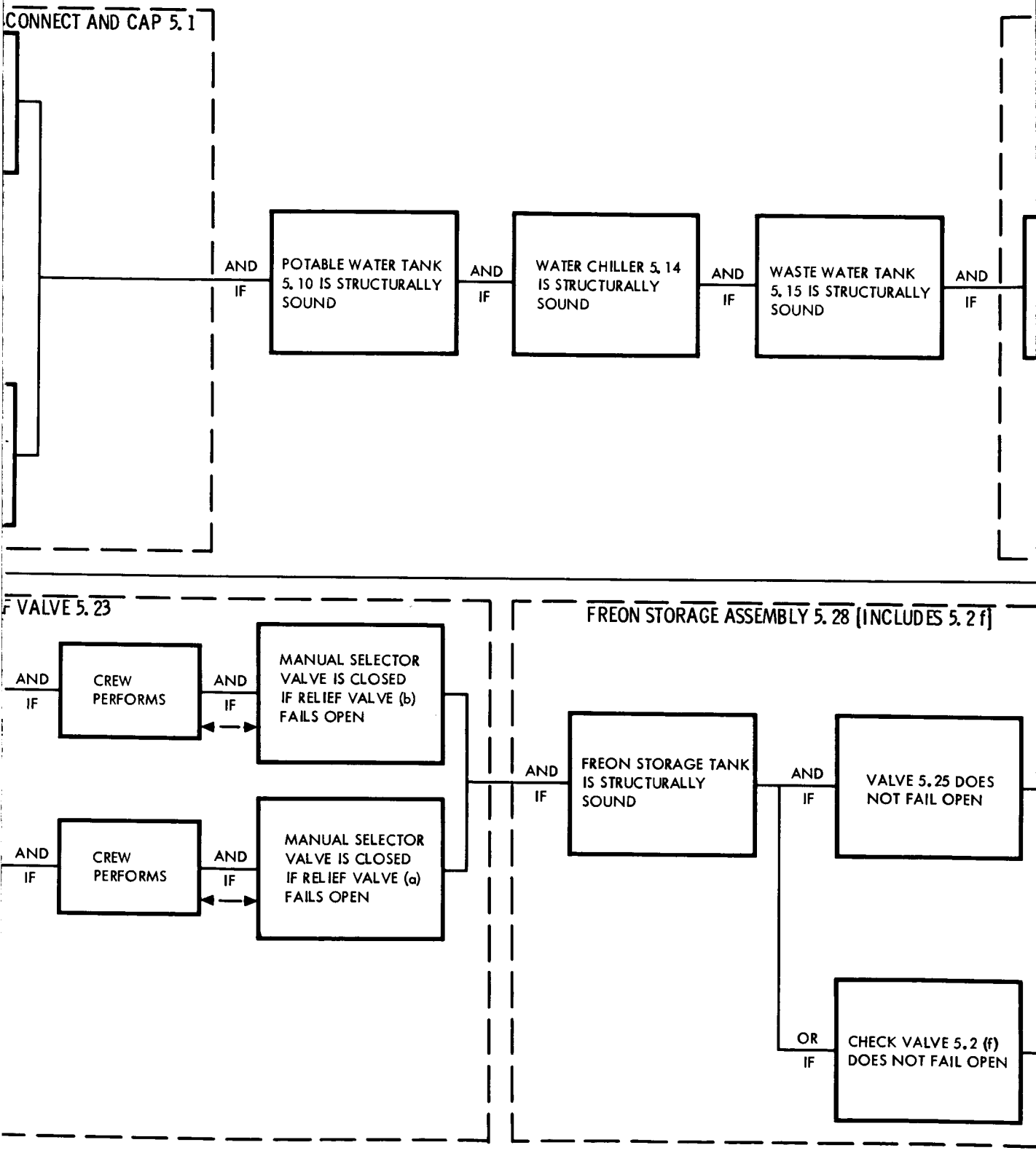
CONNECT AND CAP 5.1
AND
IF
POTABLE WATER TANK 5.10 IS STRUCTURALLY SOUND
AND
IF
WATER CHILLER 5.14 IS STRUCTURALLY SOUND
AND
IF
WASTE WATER TANK 5.15 IS STRUCTURALLY SOUND
AND
IF
F VALVE 5.23
AND
IF
CREW PERFORMS
AND
IF
MANUAL SELECTOR VALVE IS CLOSED IF RELIEF VALVE (b) FAILS OPEN
AND
IF
CREW PERFORMS
AND
IF
MANUAL SELECTOR VALVE IS CLOSED IF RELIEF VALVE (a) FAILS OPEN
FREON STORAGE ASSEMBLY 5.28 (INCLUDES 5.2 f)
AND
IF
FREON STORAGE TANK IS STRUCTURALLY SOUND
AND
IF
VALVE 5.25 DOES NOT FAIL OPEN
OR
IF
CHECK VALVE 5.2 (f) DOES NOT FAIL OPEN

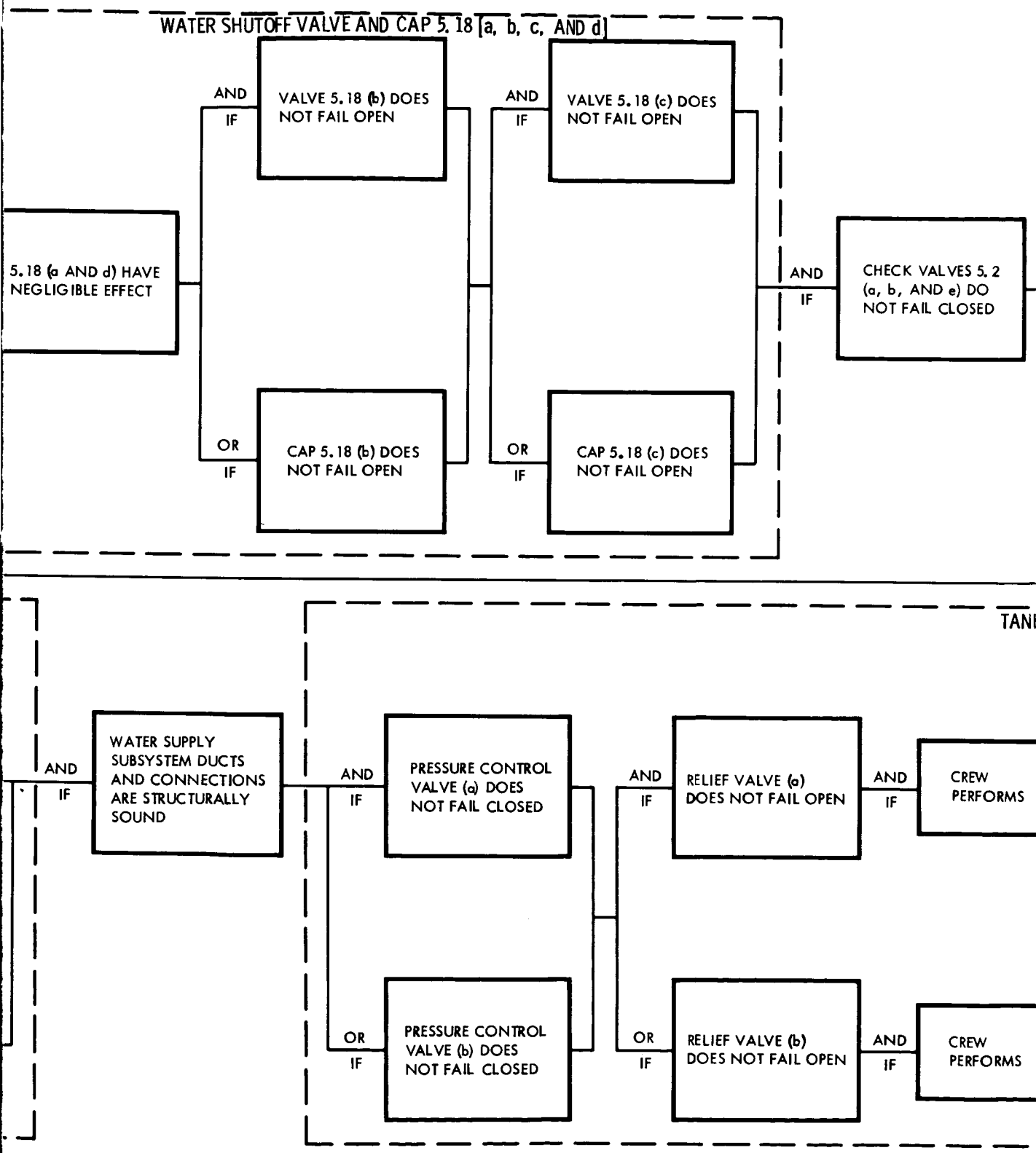
WATER SHUTOFF VALVE AND CAP 5.18 [a, b, c, AND d]
5.18 (a AND d) HAVE NEGLIGIBLE EFFECT
AND IF
VALVE 5.18 (b) DOES NOT FAIL OPEN
OR IF
CAP 5.18 (b) DOES NOT FAIL OPEN
AND IF
VALVE 5.18 (c) DOES NOT FAIL OPEN
OR IF
CAP 5.18 (c) DOES NOT FAIL OPEN
AND IF
CHECK VALVES 5.2 (a, b, AND e) DO NOT FAIL CLOSED
TANK
AND IF
WATER SUPPLY SUBSYSTEM DUCTS AND CONNECTIONS ARE STRUCTURALLY SOUND
AND IF
PRESSURE CONTROL VALVE (a) DOES NOT FAIL CLOSED
OR IF
PRESSURE CONTROL VALVE (b) DOES NOT FAIL CLOSED
AND IF
RELIEF VALVE (a) DOES NOT FAIL OPEN
OR IF
RELIEF VALVE (b) DOES NOT FAIL OPEN
AND IF
CREW PERFORMS
AND IF
CREW PERFORMS

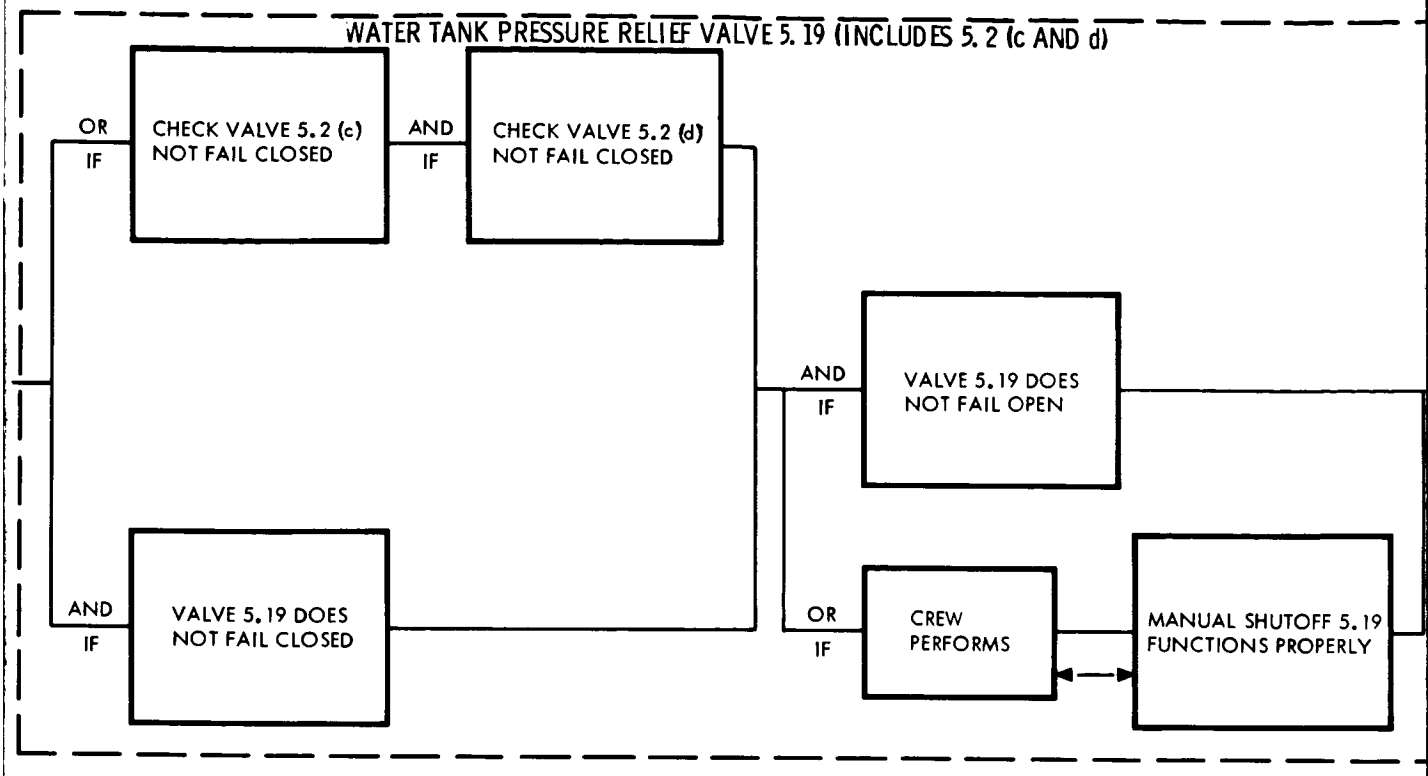
WATER TANK PRESSURE RELIEF VALVE 5.19 (INCLUDES 5.2 (c AND d)
OR
IF
CHECK VALVE 5.2 (c) NOT FAIL CLOSED
AND
IF
CHECK VALVE 5.2 (d) NOT FAIL CLOSED
AND
IF
VALVE 5.19 DOES NOT FAIL OPEN
AND
IF
VALVE 5.19 DOES NOT FAIL CLOSED
OR
IF
CREW PERFORMS
MANUAL SHUTOFF 5.19 FUNCTIONS PROPERLY

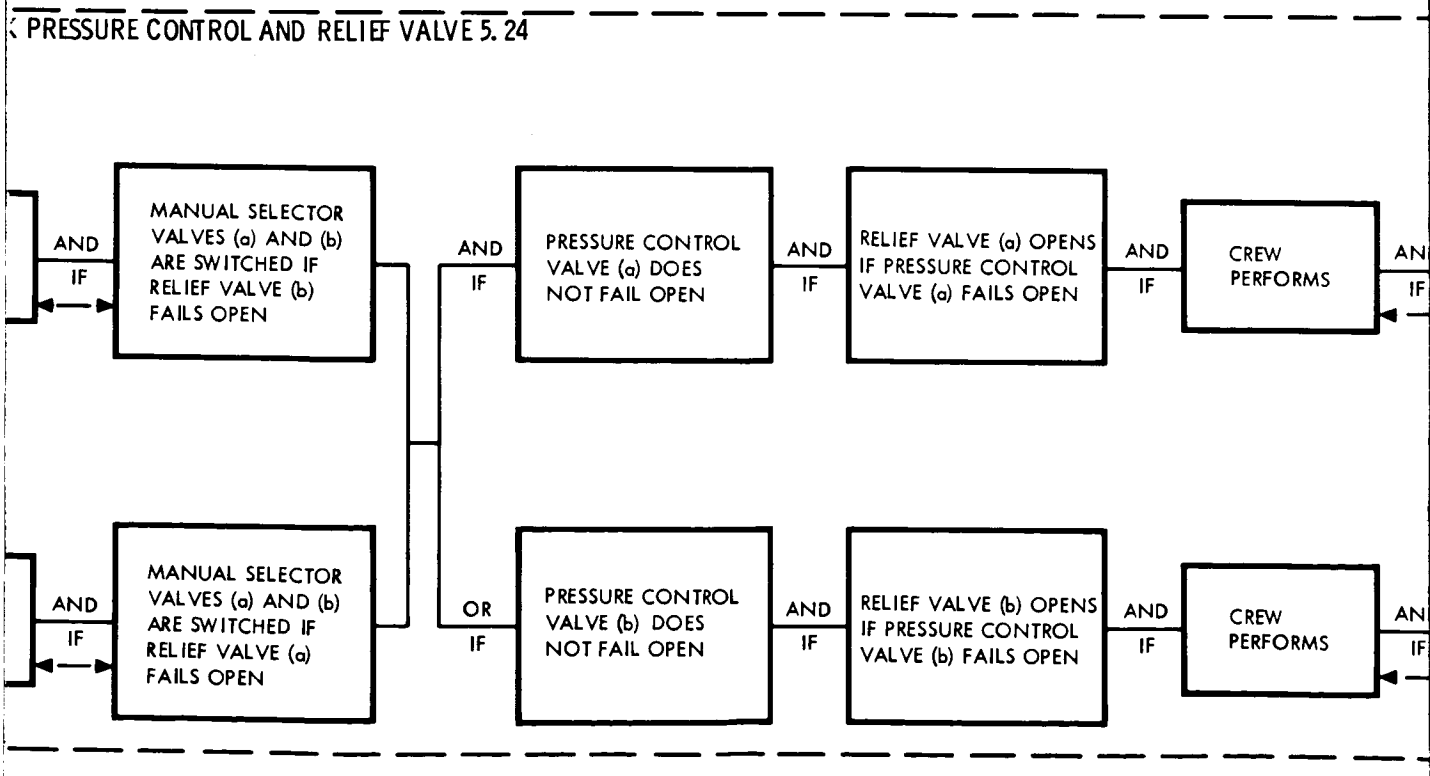
K PRESSURE CONTROL AND RELIEF VALVE 5.24
AND
IF
MANUAL SELECTOR VALVES (a) AND (b) ARE SWITCHED IF RELIEF VALVE (b) FAILS OPEN
AND
IF
PRESSURE CONTROL VALVE (a) DOES NOT FAIL OPEN
AND
IF
RELIEF VALVE (a) OPENS IF PRESSURE CONTROL VALVE (a) FAILS OPEN
AND
IF
CREW PERFORMS
AND
IF
MANUAL SELECTOR VALVES (a) AND (b) ARE SWITCHED IF RELIEF VALVE (a) FAILS OPEN
OR
IF
PRESSURE CONTROL VALVE (b) DOES NOT FAIL OPEN
AND
IF
RELIEF VALVE (b) OPENS IF PRESSURE CONTROL VALVE (b) FAILS OPEN
AND
IF
CREW PERFORMS

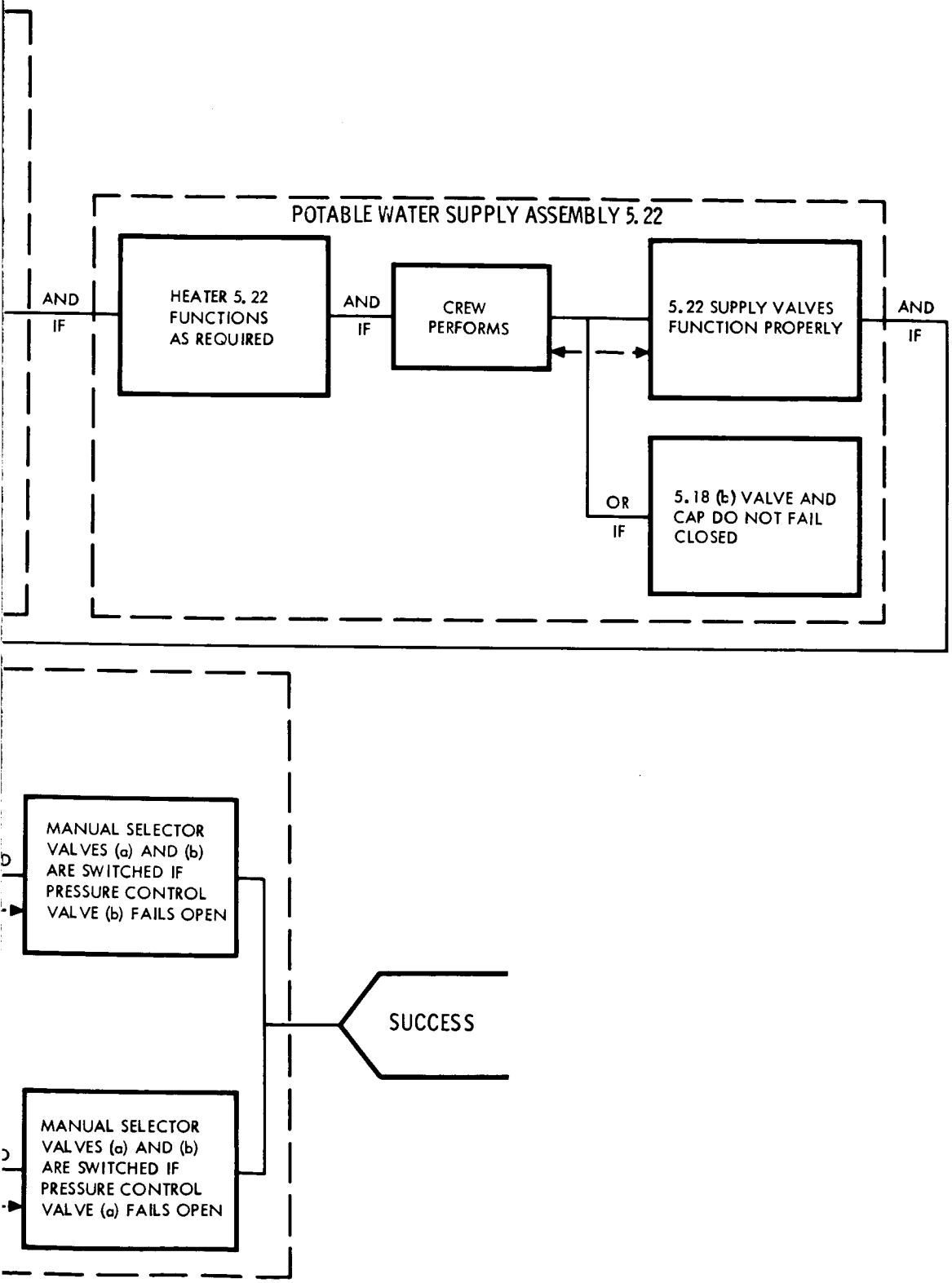

Figure 2-11. Water Supply System

~~CONFIDENTIAL~~

[redacted]

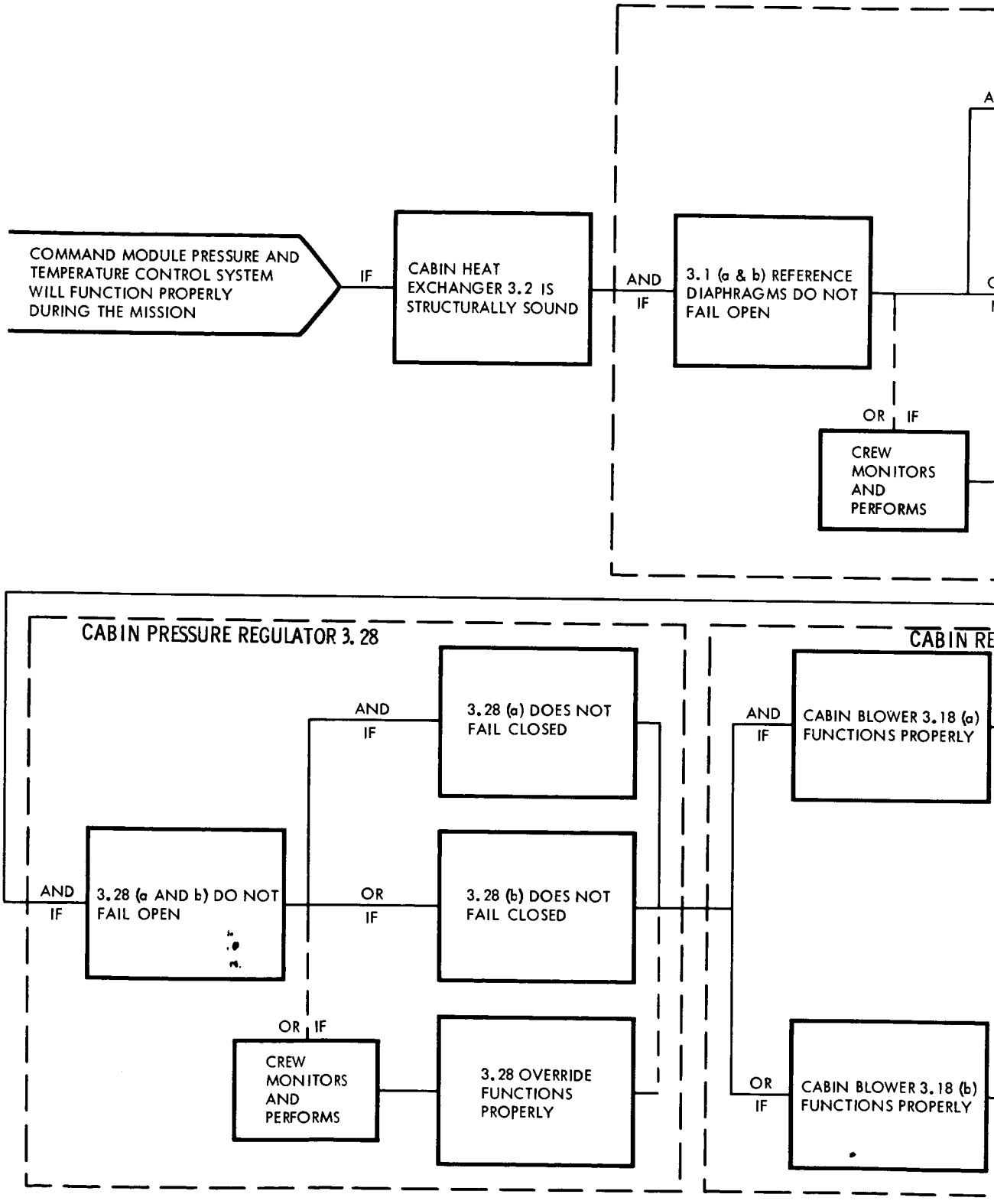
COMMAND MODULE PRESSURE AND TEMPERATURE CONTROL SYSTEM WILL FUNCTION PROPERLY DURING THE MISSION
IF
CABIN HEAT EXCHANGER 3.2 IS STRUCTURALLY SOUND
AND
IF
3.1 (a & b) REFERENCE DIAPHRAGMS DO NOT FAIL OPEN
OR
IF
CREW MONITORS AND PERFORMS
CABIN PRESSURE REGULATOR 3.28
AND
IF
3.28 (a) DOES NOT FAIL CLOSED
AND
IF
3.28 (a AND b) DO NOT FAIL OPEN
OR
IF
3.28 (b) DOES NOT FAIL CLOSED
OR
IF
CREW MONITORS AND PERFORMS
3.28 OVERRIDE FUNCTIONS PROPERLY
AND
IF
CABIN BLOWER 3.18 (a) FUNCTIONS PROPERLY
OR
IF
CABIN BLOWER 3.18 (b) FUNCTIONS PROPERLY

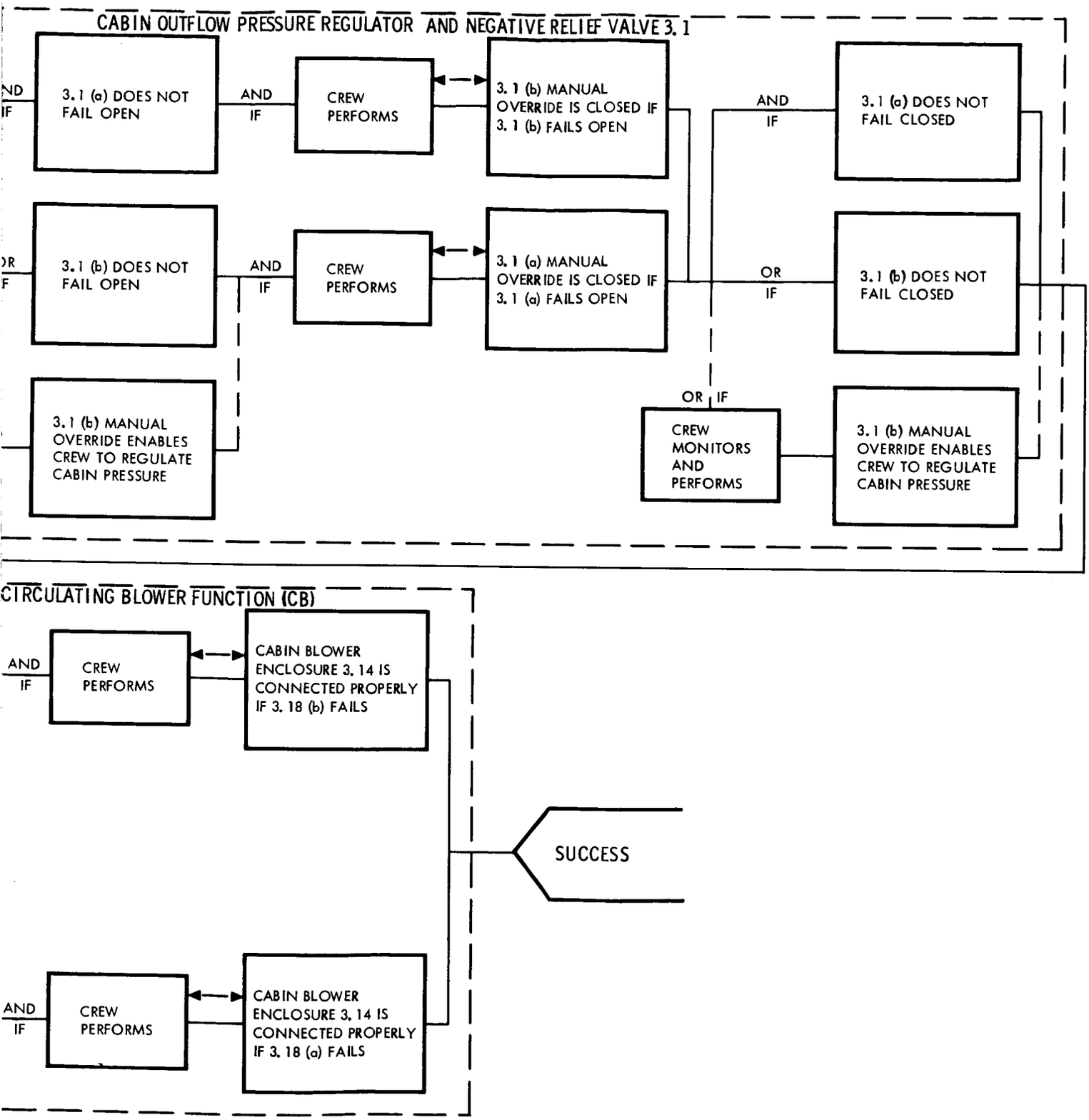

Figure 2-12. Command Module Pressure and Temperature Control System

~~CONFIDENTIAL~~

2. Added manual fill shutoff valves to waste and potable water tanks.

3. Added selector valve to water pressure relief valve assembly and deleted manual override feature.

The cabin temperature and pressure control circuit remained essentially unchanged.

The diagrams depict each component of each ECS circuit by the symbolic logic of the ECS design for mission success and crew safety. The diagrams also include the actions of the crew in performing the necessary functions for crew safety in the event of a failure.

PLANNED ACTIVITIES

Analysis

Effort during the next three months will be expended on (1) the development of math models for the new logic diagrams (Figures 2-8 through 2-12), (2) updating the FEA to reflect the latest ECS configuration, and (3) monitoring and directing the activities of the subcontractor.

Test

Component qualification tests are scheduled to begin in September 1963. These will consist of performance verification during exposure to sequentially applied mission environments. All development tests on components are planned to be complete by October 1963.

~~CONFIDENTIAL~~

Table 2-24. Environmental Control System Failure Effects Analysis

Item	Drawing Number	Elect. Reference Desig.	Failure Detection	Function	Failure Type	Mission Phase	Failure Effect On Component Performance	Failure Effect On Sub-Systems Performance	Failure Effect On Apollo	Possible Crew Action
1.3 Valve, suit circuit return	850026-1			Cabin gas to suit circuit	Fail open (cabin pressure > suit pressure)	All	None	(A) (C)* None	None	None (not detectable)
					Fail open (cabin pressure < suit pressure)	All	None, in series with another check valve	(B)* None	None	None (not detectable)
					Fail closed	All	None	(A) (B)* None (C)* loss of O_2 makeup	None, abort	None, don suits and connect suit circuit
1.8 Trap, debris	811100-1			Remove solid contaminates from suit circuit	Main passage blocked	All	None, bypass will function	(A) (B) (C)* No debris removal	None	Clean or replace element (not detectable unless bypass plugs)
					** Bypass plugged	All	Loss of function	(A) (B) (C)* Loss of conditioned flow	Abort if unable to clean and repair	(Not detectable unless primary failure occurs)
1.10 Compressor, suit	826000-1			Suit circuit pressurization and circulatio..	Inoperative	All	None	(A) (B) (C)* Loss of gas flow	Abort	Use alternate compressor (detected by gage 7.12)
					Operating speed low	All	None	(A) (B) (C)* Reduced gas flow and pressure	Abort	Use alternate compressor (detected by gage 7.12)
					Burst	All	Loss of unit	(A) (B) (C)* No effect unless fragments cause other system damage	Abort	Use alternate compressor (detected by gage 7.12)
1.11 Valve, suit compressor check	850000-1			Prevents reverse flow in compressor circuits	Fail open (associated compressor operating)	All	None	(A) (B) (C)* No effect	None	None (not detectable)
					Fail open (associated compressor failed)	All	Gas recirculates through failed compressor	(A) (B) (C)** Loss of gas to cabin or suits	Abort	None (detected by gage 7.12)
					Fail closed	All	None	(A) (B) (C)** Loss, associated compressor may overheat, also loss of gas to cabin or suits	Abort	Use alternate compressor (detected by gage 7.12)
Part of 1.15 valve CO_2 and odor absorber check	811400-1			Prevents reverse flow during canister change	Fail open	All	None	(A) (B) (C)* No effect	None, abort if leakage	None
								(B)** Loss of gas to suits if a previous leak failure occurred to absorber	Cannot be repaired	

* Primary failure ** Secondary failure (A) In suits, cabin pressurized (B) In suits, cabin unpressurized (C) Shirtsleeves

~~CONFIDENTIAL~~

Table 2-24. Environmental Control System Failure Effects Analysis (Cont)

Item	Drawing Number	Elect. Reference. Desig	Failure Detection	Function	Failure Type	Mission Phase	Failure Effect On Component Performance	Failure Effect On Sub-Systems Performance	Failure Effect On Apollo	Possible Crew Action
					Fail closed	All	None	(A) (B) (C) Loss of CO_2 and odor removal capacity	None, redundant function	More frequent canister replacement in alternate system
1.15 Absorber, CO_2 and odor	811400-1			Remove CO_2 and odors from suit circuit gas	Leakage to ambient	All	Loss of redundant absorber	(A) (B) (C)* No effect	None	Use alternate absorber, repair leak, replace canister (detectable by gages 7.12, 7.6, and 10.5)
								(B)** Loss of gas to suits if a fail open condition occurred to valve 1.13	Abort if leakage condition is not repairable	
					Failure to remove CO_2	All	Increased CO_2 level in suit circuit	(A) (B) (C)* None, redundant absorber	None	Replace canister (detected by gas analyzed, CO_2 partial press)
Part of 1.15 CO_2 and odor absorber package valve, CO_2 and odor absorber isolation	811400-1			Isolates a canister for element replacement and non-use	Jamming in any position	All	None	(A) (B) (C) No effect	None, abort if leakage	None
								(B)** Loss of gas to suits if a previous leakage failure occurred to absorber	Condition cannot be repaired	
1.16 Valve, suit bypass control	810500-1			Bypass excess flow from suit circuit	Fail open	All	None	(A) (B) (C)* Reduction in suit flow	None	Use manual override (detectable by gage 7.6)
					Fail closed	All	None	(A) (B) (C)* Crew comfort slightly affected	None	Use manual override (detectable by gage 7.6)
1.17 Switch, suit compressor selector	820210-1			Selects compressor for desired operation	Inoperative	All	None, redundant switch provided	(A) (B) (C) None, redundant switch provided	None	Use alternate switch (detectable by gage 7.12 and ammeter)
1.27 Sensor, suit evaporator temperature	820050			Provides signal to controller for supplementary cooling by water boiling in suit heat exchanger	Sensor open or short circuited	All	If water valve 5.5 opened, loss of H_2O If 5.5 closed, loss of cooling capacity and H_2O removal	None, if detected	Abort if excessive H_2O is lost prior to detection	Manually operate water valve 5.5 (detected by gage 7.3 and 5.5 position indicator)

* Primary failure ** Secondary failure (A) In suits, cabin pressurized (B) In suits, cabin unpressurized (C) Shirtsleeves

Table 2-24. Environmental Control System Failure Effects Analysis (Cont)

Item	Drawing Number	Elect. Reference Desig.	Failure Detection	Function	Failure Type	Mission Phase	Failure Effect On Component Performance	Failure Effect On Sub-Systems Performance	Failure Effect On Apollo	Possible Crew Action
1.28 Control, suit evaporator air temperature	820010-1			Amplifies signal from 1.27 sensor to electrically actuated water valve	(A) (B) (C)* Control totally inoperative or operates erratically	All	For a totally inoperative control, failure effects are the same as for the 1.27 sensor above; for erratic operation, water valve 5.5 will oscillate resulting in premature wearout loss of cooling capacity and H_2O removal.	None, if detected	Abort if excessive H_2O is lost prior to detection	Manually operate water valve 5.5 (detected by gage 7.3 and 5.5 position indicator)
Evaporator, suit (part of 1.29 heat exchanger package)				Provide supplement cooling of suit circuit gas by boiling H_2O	Leakage of suit gas to vacuum or cabin ambient	All	Loss of conditioned suit circuit gas	Depletion of O_2 supply	Abort	Detectable by gage 9.2 (O_2 flow)
Glycol to suit heat exchanger (part of 1.29 heat exchanger package)				Provides primary cooling of suit circuit gas	Leakage of glycol to suit gas or to ambient	All	Loss of cooling capacity and contamination of atmosphere	Loss of water-glycol and equipment cooling capacity	Abort	Open glycol bypass valve (detectable by gage 8.16, quantity and gas)
					Leakage of suit gas to ambient	All	Loss of O_2	Depletion of O_2 supply	Abort	Analyze, detectable by gage 9.2 (O_2 flow)
Water separator (part of 1.29 heat exchanger package)				Remove water from suit circuit gas	Failure to remove H_2O	All	Humidity increase to intolerable levels	Humidity increase to intolerable levels	Abort	
					Leakage to ambient	All	Loss of O_2	Depletion of O_2 supply	Abort	Detectable by gage 9.2 (O_2 flow)
Water separator pump assembly (part of heat exchanger package)				Pump water from separator to waste water tank	Failure of pump to operate, H_2O leak to ambient, or O_2 leak to ambient	All	Increase in humidity and/or loss of O_2 supply	None	Abort if two systems fail	Use alternate system
Valve, suit flow shutoff and limiting (part of 1.30 suit flow limiter)	810100-1			Gas pressure to cabin and suits	Fail open	All	None	(A) (C)* None	None, no effect, abort if two or more valves fail	Repair, if detectable
								(B)* Loss of gas to suit		
					Fail closed	All	None	(A) (B)* Loss of gas to suit	No effect, abort if two or more valves fail	Connect suit hose to alternate valve
								(C)* No effect	None	None
Connector, suit flow return (part of 1.30 suit connector package)	810100-1			Gas from suit to suit circuit	Mechanical damage	All	Connector useless	(A) (B) (C)* None	None	Use alternate connector

* Primary failure ** Secondary failure (A) In suits, cabin pressurized (B) In suits, cabin unpressurized (C) Shirtsleeves

[redacted]

Table 2-24. Environmental Control System Failure Effects Analysis (Cont)

Item	Drawing Number	Elect. Reference. Desig.	Failure Detection	Function	Failure Type	Mission Phase	Failure Effect On Component Performance	Failure Effect On Sub-Systems Performance	Failure Effect On Apollo	Possible Crew Action
Connection, suit flow supply (part of 1.30 suit connector package)	810100-1			Suit pressure and flow	Mechanical damage	All	Connection useless for suit supply	(A) (B) (C)* None	None	Use alternate connector
Valve. suit manifold return check (part of 1.30 suit connector package)	810100-1			Suit circuit manifold return check	Fail open	All	None	(A) (C)* None	None	None
								(B)* Loss of gas to suits	None, unless two valves fail	Connect suit hose to failed-open connection
					Fail closed	All	Loss of function	(A) (B)* Loss of gas flow to suit	None, unless two valves fail	Connect suit hose to alternate connection
								(C)* None	None	None
2.1 Valve. space radiator outlet check	827030-1			Prevents reverse coolant flow	Fail open	Space flight	None	No effect unless previous leakage has occurred in radiator	Abort	None (not detectable)
					Fail closed	Space flight	Loss of heat rejection capacity	Insufficient cooling for lunar orbit	Abort	Reorient spacecraft for minimum heat load (detected by gage 8.20, temperature)
2.2 Valve, glycol pressure relief	827530-1			Protects against overpressurization in glycol circuit	Fail closed	Space flight	None, redundant valve and shut-off provided	Possible pressure buildup and rupture of radiator	Abort	Use alternate valve (not detectable)
					Fail open	Space flight	None, redundant valve and shut-off provided	Loss of heat rejection	None	Use alternate valve (detected by 8.20 gage, temperature)
2.5 Valve, glycol check (valve downstream of cabin heat exchanger)	827030-1			Prevents reverse coolant flow	Fail open	All	None	Loss of heating capacity	Abort if not able to control manually	Manually operate valve 2.28 (detected by 9.9, temperature)
					Fail closed	All	Loss of cooling capacity and/or heating capacity	During maximum heating or cooling, effectiveness is reduced	Abort if not able to control manually	Manually operate valve 2.28 (detected by 9.9, temperature)
Valve, upstream of cabin heat exchanger	827030-1				Fail open	All	Loss of cooling capacity	During maximum cooling, effectiveness is reduced	Abort if not able to control manually	Manually operate valve 2.28
					Fail closed	All	Loss of heating capacity	During maximum heating demand, system flow is blocked	Abort if not able to control manually	Manually operate valve 2.13 (detected by 9.9, temperature)

*Primary failure **Secondary failure (A) In suits, cabin pressurized (B) In suits, cabin unpressurized (C) Shirtsleeves

[redacted]

~~CONFIDENTIAL~~

Table 2-24. Environmental Control System Failure Effects Analysis (Cont)

Item	Drawing Number	Elect. Reference Desig.	Failure Detection	Function	Failure Type	Mission Phase	Failure Effect On Component Performance	Failure Effect On Sub-Systems Performance	Failure Effect On Apollo	Possible Crew Action
2.6 Evaporator, glycol	812000-1			Cools glycol by water evaporation	Leakage, glycol to steam	Space flight	None	Loss of coolant	Abort	None (detected by 8.5, temperature; 8.17, pressure; and 8.1, pressure)
					Leakage, glycol to cabin ambient	Space flight	None	Loss of coolant	Abort	None (detected by gas analyzer and 8.16, quantity)
					Leakage, cabin ambient to vacuum	Space flight	None	Loss of oxygen	Abort	Detected by gages 10.5 and 9.2
2.11 Valve, glycol shut-off	827570-1			Shuts off flow to radiators	Fail open	All	None	Redundant back-up valve provided	None	None (detected by 8.20, temperature)
					Fail closed	All	None	Loss of cooling capacity	Abort	None (detected by 8.20, temperature)
2.13 Valve, cabin temperature control	850006-1			Shuts off flow to cabin heat exchanger	Jamming in any position	All	None, manual over-ride provided	Loss of cabin temperature control	Abort if not able to control temperature manually	Use suits (detected by 9.9, temperature)
2.16 Switch, glycol pump selector	820210-1			Selects operation of glycol pumps	Inoperative	All	None	None, redundant switch provided	Abort	Use alternate switch
2.17 Valve, glycol shut-off	827580-1			Allows space radiators to be bypassed by water-glycol	Fail open	Space flight	Diversion of coolant flow to radiator	Loss of cooling capacity	Abort if heat load too high	Switch off unnecessary heat generating equipment
					Fail closed	Space flight	None	Redundant back-up valve provided	None	Use redundant valve (detected by 8.20, temperature)
2.20 Valve, space radiator isolation and vent	820220-1			Controls flow to sections of space radiator	Fail open	Space flight	None	None	None	None (detected by 8.20, temperature)
					Fail closed	Space flight	Loss of one section of radiator	Loss of cooling capacity	Abort if heat load too high	Switch off unnecessary heat generating equipment (detected by 8.20, temperature)
					Vent section fails open	Space flight	Loss of glycol	Loss of cooling capacity	Abort	Isolate radiator system (detected by 8.16, quantity)
					Vent section fails closed	Space flight	Unable to drain radiator when not in use	Possibility of frozen glycol mixture and rupture	Abort	Use remaining sections of radiator (not detectable)
2.22 Control, glycol temperature	820010-1			Automatic control of glycol temperature	Inoperative or erratic operation	All	None, manually operated valve	Loss of automatic glycol temperature control	None	Use manual control (detected by 8.6, temperature)

* Primary failure ** Secondary failure (A) In suits, cabin pressurized (B) In suits, cabin unpressurized (C) Shirtsleeves

~~CONFIDENTIAL~~

~~CONFIDENTIAL~~

Table 2-24. Environmental Control System Failure Effects Analysis (Cont)

Item	Drawing Number	Elect. Reference Desig.	Failure Detection	Function	Failure Type	Mission Phase	Failure Effect On Component Performance	Failure Effect On Sub-Systems Performance	Failure Effect On Apollo	Possible Crew Action
2.23 Sensor, glycol temperature	820080-1			Glycol temperature sensing for automatic	Inoperative or erratic operation	All	None	None, alternate sensor provided	None	Switch to alternate sensor (detected by 8.6, temperature)
2.24 Connection, glycol fill and vent	827060-1			Ground servicing of glycol system	Fail open	Ground servicing	None	None, back-up check valves provided possible ground repair	None	None
					Fail closed	Ground servicing	None	None, detectable on ground during servicing	None	None
2.27 Valve, manual shut-off	827600-1			Glycol system shutoff to SM	Fail closed	Space flight	None	Loss of heat rejection by radiator	Abort	Use suits (detected by 8.20 and 8.6 temperatures)
					Fail open	Space flight	None	No manual shut-off for glycol	None	None (detected by 8.20 and 8.6 temperatures)
2.28 Valve, glycol shut-off	827050-1			Backup valves in glycol system	Fail closed	All	Loss of cooling capacity (cabin)	Loss of cabin cooling or heating	Abort	Use suits
					Fail open	All	None	None	None	None
2.29 Reservoir, glycol	812800-1			Provides for glycol makeup	Bag rupture	All	Loss of function	No glycol make-up available	Abort	Use suits
					Glycol leakage	All	Loss of glycol	No glycol make-up available	Abort	Use suits
2.30 Pump, assembly glycol	850010-1-1 850024-1					All				
Accumulator				Provides for glycol makeup	Leakage	All		Loss of glycol for makeup	Abort	Use reservoir glycol (detected by 8.16)
					Spring fails	All		Loss of glycol for makeup	Abort	Use reservoir glycol (detected by 8.1)
Valve, isolation				Closes accumulator outlet	Fail open	Space flight	None	None	None	None
					Fail closed	Space flight	Loss of function	Loss of glycol for makeup	Abort	Use reservoir glycol
Pump					Inoperative or erratic operation	All	Loss of glycol flow and pressure	None, use alternate pump	Abort	Use alternate pump (detected by 8.1 and ammeter)

* Primary failure ** Secondary failure (A) In suits, cabin pressurized (B) In suits, cabin unpressurized (C) Shirtsleeves

~~CONFIDENTIAL~~

~~CONFIDENTIAL~~

Table 2-24. Environmental Control System Failure Effects Analysis (Cont)

Item	Drawing Number	Elect. Reference Desig.	Failure Detection	Function	Failure Type	Mission Phase	Failure Effect On Component Performance	Failure Effect On Sub-Systems Performance	Failure Effect On Apollo	Possible Crew Action
Valve, check				Prevents reverse glycol flow	Fail open	All	None	None, unless associated pump fails	Abort if associated pump fails	None
					Fail closed	All	Associated pump cannot be used	Loss of alternate pump	Abort	None (detected by 8.1)
Filter				Filters glycol prior to entering pumps	Filter clogs	All	Reduced flow, high pressure drop	Loss of cooling capacity	Abort	None (Detected by 8.1)
2.31 Valve, glycol temperature control	827390-1			Controls glycol flow for automatic temperature	Fail open	All	None	Loss of temperature controlled glycol to exchanger	None	Use manual override (detected by 8.6)
					Fail closed	All	None	Loss of temperature controlled glycol to exchanger	None	Use manual override or alternate valve (detected by 8.6)
3.1 Valve, cabin out-flow pressure regulator and negative relief	810400-1			Regulates pressure differential between cabin and exterior ambient	Fail open	All	Temporary drop in cabin pressure	None	None	Use manual override (detected by 10.5)
					Fail closed	All	Alternate valve operates	None	None	None required unless both valves fail, then use manual override (detected by 10.5)
3.2 Exchanger, cabin heat	812100-1			Temperature conditions cabin gas	Glycol leak to ambient	All	Loss of conditioned gas	Loss of coolant and contamination of atmosphere	Abort	Override 2.13 temperature control valves to bypass heat exchanger and don suits if contamination severe (detected by gas analyzer and 8.16)
3.5 Selector, cabin temperature	820020-1			Provides capability to select desired cabin temperature	Inoperative or erratic operation	All	Loss of automatic cabin temperature regulation	None	None	Manually operate 2.13 glycol temperature control valves (detected by 9.9)
3.6 Anticipator, cabin temperature	820110-1			Provides signal of heat exchanger outlet gas temperature to 3.7 temperature control to eliminate hunting of 2.13 glycol control valves	Inoperative or erratic operation	All	Loss of automatic cabin temperature regulation	None	None	Manually operate 2.13 glycol temperature control valves (detected by 9.9)
3.7 Control, cabin temperature	820010-1			Amplifies differential signal from 3.8 temperature sensor and 3.7 temperature anticipator to 2.13 glycol control valves	Inoperative or erratic operation	All	Loss of automatic cabin temperature regulation	None	None	Manually operate 2.13 glycol temperature control valves (detected by 9.9)

* Primary failure **Secondary failure (A) In suits, cabin pressurized (B) In suits, cabin unpressuried (C) Shirtsleeves

~~CONFIDENTIAL~~

~~CONFIDENTIAL~~

Table 2-24. Environmental Control System Failure Effects Analysis (Cont)

Item	Drawing Number	Elect. Reference Desig	Failure Detection	Function	Failure Type	Mission Phase	Failure Effect On Component Performance	Failure Effect On Sub-Systems Performance	Failure Effect On Apollo	Possible Crew Action
3.8 Sensor, cabin temperature	820100-1			Senses cabin temperature and transmits signal to 3.7 temperature controller	Inoperative or erratic operation	All	Loss of automatic cabin temperature regulation	None	None	Use manual override on glycol control valve 2.13 (detected by 9.9)
3.14 Valve, cabin recirculating blower selector	848010-1			Prevents back flow of gas through standby cabin blower	Jamming in any position	All	Inability to select alternate blower in event of blower failure	If blower also fails, loss of capability to circulate cabin gas control system degraded	Abort	Don suits and use suit circuit
3.17 Switch, cabin recirculating blower selector	820210-1			Allows selection of desired cabin circulation blower	Contact broken or fused together	All	Loss of standby switch capability	None, control system degraded	None	Use alternate switch (detect by ammeter)
3.18 Blower, cabin recirculating	826010-1			Circulates cabin gas	Inoperative or erratic operation	All	Loss of standby blower capability	None, control system degraded	Abort	Use alternate blower. Don suits if both blowers fail (detect by ammeter)
3.27 Valve, cabin vent	850014-1			Provides ventilation during post-landing phase	Leak to space	After earth landing	Loss of O_2	Depletion of O_2 supply	Abort	Don suits and use suit circuit (detect by 10.5)
					Fail closed	After earth landing	None	None	None	Open hatch
3.28 Regulator, cabin pressure	810200-1			Provides regulated pressure within cabin	Fail open or closed, or erratic operation	All	None	None	None	Use manual override to readjust or shut-off regulator and use alternate (detect by 10.5)
4.13 Valve, backpack supply shut-off and pressure relief	827140-1			Controls oxygen supply for backpack charging	Fail open (relief or shutoff)	All	None	Loss of O_2 from storage if relief fails open	Abort	Use reentry O_2 supply (not detectable)
					Fail closed (relief)	All	Possible overpressurization by backpacks	None	None	Use valve to lower pressure to packs (not detectable)
					Fail closed (shutoff)	All	Loss of ability to charge backpacks	None	Abort	None
4.14 Cap, backpack supply	827140-1			Protects and seals connection for O_2 backpack supply	Jammed on	All	Loss of ability to charge backpacks	None	Abort	None
					Damaged and will not secure	All	None	None	None	None

*Primary failure **Secondary failure (A) In suits, cabin pressurized (B) In suits, cabin unpressurized (C) Shirtsleeves

~~CONFIDENTIAL~~

Table 2-24. Environmental Control System Failure Effects Analysis (Cont)

Item	Drawing Number	Elect. Reference Desig.	Failure Detection	Function	Failure Type	Mission Phase	Failure Effect On Component Performance	Failure Effect On Sub-Systems Performance	Failure Effect On Apollo	Possible Crew Action
4.16 Valve, demand pressure regulator and relief	827300-1			Maintains constant O_2 pressure in suit circuit	Fail open (regulator or relief)	All	Low suit circuit pressure	Loss of O_2	None, alternative valve provided	Use alternate valve (detected by gages 9.8 and 7.6)
					Fail closed (regulator or relief)	All	None	None, alternative valve provided	None unless two valves fail, then abort	Use alternate valve (detected by gages 9.8 and 7.6)
4.17 Valve, manual O_2 supply	827310-1			Manual control of O_2 supply to suit circuit (backup for 4.16)	Fail open	All	High suit circuit pressure	Loss of O_2 supply by flooding system	Abort	Override with shut-off valves in 4.24 O_2 pressure regulator assembly (detected by gages 7.6 and 9.2)
					Fail closed	All	None	None	None	None
4.22 Valve emergency O_2 inflow control	827550-1			Provides method for flooding CM if high leakage from CM should occur	Fail open	All	High CM pressure	Loss of O_2 supply	Abort if unable to shut off	Use manual override in 4.24 O_2 pressure regulator assembly shut-off valves (detected by gage 10.5)
					Fail closed	All	None	None	Alternative valve provided	Use alternative valve
4.23 Reentry oxygen supply system	827240-1			Supplies oxygen to suits during reentry		Reentry				
Tank, oxygen				Oxygen storage for reentry	Leakage		Loss of reentry oxygen	None, alternate tank provided	Crew safety degraded	Use alternative tank (detect by pressure gage)
Port, O_2 fill				Ground servicing of O_2 tanks	Leakage		Loss of reentry oxygen	None, alternate tank provided	Crew safety degraded	Use alternate tank (detect by pressure gage)
Valve, assembly				Oxygen tank shutoff	Fail open		Loss of reentry oxygen	None, alternate tank provided	Crew safety degraded	Use alternate tank (detect by pressure gage)
					Fail closed		Loss of reentry oxygen	None, alternate tank provided	Crew safety degraded	Use alternate tank
Regulator, pressure				Maintains regulated pressure to suits	Fail open		None	High pressure to suits	None	Use alternate tank (detect by pressure gage)
					Fail closed		Loss of available reentry oxygen	None, alternate tank provided	Crew safety degraded	Use alternate tank
Valve, relief				Protects reentry O_2 supply system from overpressurization	Fail open		Loss of reentry oxygen to suits	None, alternate tank provided	Crew safety degraded	Use alternate tank (detect by pressure gage)
					Fail closed		None	High pressure to suits possible	None	Use alternate tank (detect by pressure gage)

* Primary failure ** Secondary failure (A) In suits, cabin pressurized (B) In suits, cabin unpressurized (C) Shirtsleeves

Table 2-24. Environmental Control System Failure Effects Analysis (Cont)

Item	Drawing Number	Elect. Reference Desig.	Failure Detection	Function	Failure Type	Mission Phase	Failure Effect On Component Performance	Failure Effect On Sub-Systems Performance	Failure Effect On Apollo	Possible Crew Action
Valve, check				Prevents flow of O_2 to depleted O_2 storage tank	Fail open		None	Possible loss of O_2 to depleted tank	None	Close depleted storage tank shut-off valve
					Fail closed		Loss of available reentry oxygen	None, alternate tank provided	Crew safety degraded	Use alternate tank
4.24 Oxygen pressure regulator assembly	827330-1			Supplies suit circuit, water-glycol circuit, and water supply circuit with regulated O_2		All				
Valve, shut-off				Shuts off O_2 from SM (in parallel lines)	Fail open		None	None	None	None (detected by 9.2)
					Fail closed		None	Loss of alternate O_2 supply source	Abort	
Valve, pressure regulator and relief				Regulates O_2 from SM (in parallel lines)	Fail open (regulator or relief)		Low O_2 pressure to ECS	Loss of O_2	Abort	Use alternate valve (detected by 9.2 and 9.8)
					Fail closed (regulator or relief)		High O_2 pressure to ECS	Possible damage to downstream components	Abort	Use alternate valve (detected by 9.8)
Valve, check				Prevents reverse flow in parallel supply lines and during reentry	Fail open		None	Loss of O_2 if another component fails in same line	None, if no other component in same line fails	None (not instrumented)
					Fail closed		Loss of alternate supply of O_2	None	Abort if failure occurs in good line	(Detected by 9.2)
5.1 Disconnect, water supply quick (self-sealing)	827520-1			Connection for ground servicing of water supply system	Leakage or fail open	All	None	None, system has check valve to prevent loss	None	None (not instrumented)
5.2 Valve, water check	827360-1			Serves as backup for self-sealing quick disconnect to prevent loss of water	Fail open	All	None	None, loss of water would require disconnect to leak	None	None (not instrumented)
					Fail closed	All	None	None	None	None (not instrumented)
				Prevents waste water from entering potable water system	Fail open	All	None	None	None	Shut valve 5.19 (not instrumented)
					Fail closed	All	Loss of ability to replenish waste water supply from fuel cells	Reduced cooling capacity during maximum demand	Crew safety degraded	Reduce thermal loads on ECS (detected by 8.17 and 8.5)

* Primary failure ** Secondary failure (A) In suits, cabin pressurized (B) In suits, cabin unpressurized (C) Shirtsleeves

[redacted]

Table 2-24. Environmental Control System Failure Effects Analysis (Cont)

Item	Drawing Number	Elect. Reference Desig.	Failure Detection	Function	Failure Type	Mission Phase	Failure Effect On Component Performance	Failure Effect On Sub-Systems Performance	Failure Effect On Apollo	Possible Crew Action
				Serves as backup for freon self-sealing quick disconnect to prevent loss of waste water	Fail open	All	None	None, loss of water would require disconnect to leak	None	None (not instrumented)
					Fail closed	All	None	None	None	None (not instrumented)
5.5 Valve, suit evaporator	827010-1			Controls flow of water for evaporation to provide additional cooling of suit circuit gas	Fail open	All	Depletion of H_2O	Improper cooling at suit evaporator	None	Use manual override (detected by 11.2, 8.5 and 8.17)
					Fail closed	All	Loss of cooling capacity	Loss of automatic cooling control during maximum demand	Degraded, valve has manual override	Control valve manually during maximum cooling demand (detected by 8.5 and 8.17)
5.10 Tank, potable water	812300-1			Stores metabolic and hygienic water for crew use	Bag rupture	All	Inability to expel water from tank	Loss of cooling capacity	Abort	Use emergency water supply (not instrumented)
					Leakage	All	Loss of water	Loss of cooling capacity	Abort	Use emergency water supply (not instrumented)
5.12 Disconnect, freon quick self-sealing	827520-1			Connection for freon to cool CM during prelaunch activities	Fail open	All	None, system has check valve as back-up to prevent loss of water after launch	None	None	None (not instrumented)
5.14 Chiller, water	812400-1			Cools potable water with glycol for crew use	Leakage, water to ambient	All	Loss of potable water	None	Abort	Use emergency water supply (not instrumented)
					Leakage, glycol to water	All	Contaminates potable water. Loss of glycol		Abort	Use emergency water supply (not instrumented)
5.15 Tank, waste water	812200-1			Supplies evaporators with water for extra cooling capacity during maximum damand	Bag rupture	All	Inability to expel water from tank	Loss of extra cooling capacity during maximum heat loads	Abort	None (detected by 11.2)
					Water leakage	All	Loss of water	Loss of cooling capacity	Abort	None (detected by 11.2)
5.18 Valve, water shut-off	827410-1			(a) Shuts off water flow to water tanks during ground servicing and during fuel cell operation	Fail open	All	None	None	None	None
					Fail closed	All	Unable to fill potable tank or waste tank during mission	Loss of extra cooling capacity and potable water aft tanks are dry	Abort	Use emergency drinking water supply (detected by 11.2)

* Primary failure **Secondary failure (A) In suits, cabin pressurized (B) In suits, cabin unpressurized (C) Shirtsleeves

[redacted]

Table 2-24. Environmental Control System Failure Effects Analysis (Cont)

Item	Drawing Number	Elect. Reference Desig.	Failure Detection	Function	Failure Type	Mission Phase	Failure Effect On Component Performance	Failure Effect On Sub-Systems Performance	Failure Effect On Apollo	Possible Crew Action
				(b) Controls flow at waste water tank	Fail open	All	None	None	None	None (detected by 11.2)
					Fail closed	All	Loss of available waste water for cooling	Loss of cooling capacity	Abort	None (detected by 11.2)
5.19 Valve, water tank pressure relief	827820-1			Priority valve allows potable water tank to be filled before waste water tank	Fail open	All	Loss of potable water to waste water system	None, manual override on valve	None	Close valve manually (detected by 11.2)
					Fail closed	All	Possible damage to potable water tank	None, manual override on valve	None	Open valve manually (detected by 11.2)
5.25 Valve, freon flow	827840-1			Controls flow of freon flow cooling during prelaunch activities	Fail open	All	Loss of cooling water to glycol evaporator	Excessive glycol cooling	None, manual override on valve	Close valve manually (detected by 8.17 and 8.5)
					Fail closed		No cooling during prelaunch	Unable to cool glycol during prelaunch	None, manual override on valve	Manually operate valve (detected by 8.17 and 8.5)
5.22 Potable water supply assembly valve, supply	812900-1			Provides crew with metabolic and hygienic water		All				
				Cold water supply	Fail open		Loss of potable water	Loss of cooling capacity during emergency or maximum demand	Abort	Use emergency supply (not instrumented)
					Fail closed		Unavailable cold drinking water	None	None	Use hot water or emergency supply
				Hot water supply	Fail open		Loss of potable water	Loss of cooling capacity during emergency or maximum demand	Abort	Use emergency supply (not instrumented)
					Fail closed		Unavailable hot water	None	None	Use cold water
Heater				Heats water for crew use	Inoperative		Unable to provide hot water	None	None	Use cold water
5.23 Valve, water pressure relief	827830-1			Water evaporator systems pressure relief	Fail open	All	Loss of cooling water	None, alternate valve provided	None, unless two valves fail this abort	Use alternate valve (detected by 8.5 and 8.17)
					Fail closed		Possible overpressurization of evaporator systems	None, alternate valve provided	None, unless two valves fail this abort	Use alternate valve (not instrumented)

* Primary failure ** Secondary failure (A) In suits, cabin pressurized (B) In suits, cabin unpressurized (C) Shirtsleeves

Table 2-24. Environmental Control System Failure Effects Analysis (Cont)

Item	Drawing Number	Elect. Reference Desig.	Failure Detection	Function	Failure Type	Mission Phase	Failure Effect On Component Performance	Failure Effect On Sub-Systems Performance	Failure Effect On Apollo	Possible Crew Action
5.24 Tank, pressure control and relief valve	810300-1			Controls oxygen pressure for expelling water and glycol from tanks	Fail open (pressure control)	All	High pressure to water or glycol systems	None, alternate valve provided	None, unless two valves fail; then abort	Use alternate valve (not instrumented)
					Fail closed (pressure control)	All	No O_2 pressure to water or glycol systems	None, alternate valve provided	None, unless two valves fail; then abort	Use alternate valve (detected by 8.5, 8.17 and 11.2)
					Fail open (relief valve)		Loss of O_2	None, alternate valve provided	None, unless two valves fail; then abort	Use alternate valve (detected by 9.2)
					Fail closed (relief valve)		High pressure to water and glycol system	None, alternate valve provided	None, unless two valves fail; then abort	Use alternate valve (not instrumented)

* Primary failure ** Secondary failure (A) In suits, cabin pressurized (B) In suits, cabin unpressurized (C) Shirtsleeves

~~CONFIDENTIAL~~

LAUNCH ESCAPE SYSTEM

SUMMARY

During the period covered by this report, major effort was directed toward the completion of the development testing phase of the program. Data from these development tests are being reduced and will be used where applicable to assess current reliability levels.

Failure effects analyses and failure modes have been updated to reflect the components of the Launch Escape System which will be used in boiler-plate tests and AFRM flights. These analyses are shown in Table 2-26 at the end of this section.

Logic diagrams and mathematical models for the normal and abort modes of operation remain unchanged from those presented in the previous Quarterly Reliability Report, SID 62-557-5.

ANALYSIS

Launch Escape Sequencer

A failure effects analysis was performed on the proposed design of the launch escape sequencer for use in BP No. 6. In addition, a preliminary reliability analysis was performed on a suggested design utilizing parallel arm-disarm relays, parallel 15.5-seconds time delay relays, and the elimination of two of the three normally closed contacts of relays C18K26 and C18K25. A summary of results of these analyses follows:

Design	Reliability	Failures/10^6 (cycles)
Proposed	0.999809	191
Suggested	0.999945	55

Subsystem Description

The LES sequencer directs the timing order of the electrically initialed steps in the abort sequence. Power from GSE is applied to the arm-disarm relay which closes a contact that allows power from the pyro battery to be

supplied to the pyro bus. This instantaneously provides power to arm the EBW units of the launch escape motor (LEM), pitch control motor (PCM), and tower jettison motor (TJM). Simultaneously with abort signal initiation, ignition of the LEM and PCM and initiation of a 15.5-second time delay relay for the TJM takes place. Upon completion of 15.5 seconds, this TD relay closes contacts which simultaneously fire the explosive bolts, ignites the TJM, and initiates a 3-second TD relay for the earth landing system. Complete redundancy of the entire sequencing network is provided for reliability and protects against all single modes of failure except the fail-to-zero failure mode (Figure 2-13). Should a fail-to-zero failure mode occur in a TD relay, redundancy in the alternate channel (i.e., system A or system B) will be lost. In a system employing redundant TD relays in both channels, catastrophic single fail-to-zero failure modes would be greatly reduced in probability of occurrence (Figure 2-14). If TD relay No. 1 fails to zero, its corresponding contacts will close accordingly, but redundant TD relay No. 2 will serve as a backup to TD relay No. 1 and must complete its time cycle for its contacts to close, thus allowing a completion of the sequence of events.

Proposed Changes

Investigations resulted in the following possible design changes that would increase the reliability of the sequencer system:

1. Incorporate redundancy by paralleling the arm-disarm relay. Since this is the only means of arming systems A and B of the sequencer, it is felt that redundancy should be provided. Although this relay is initiated by GSE power, if the contacts of the one relay of the present design "fail open," due to shock, vibration, or acceleration, power from the pyro batteries to the pyro busses would not be available (Figure 2-15). The use of redundancy on this item would greatly reduce the probability of such a power loss, the results of which are shown in Figure 2-16.

2. Incorporate redundancy by paralleling the 15.5-second time delay relay. This item presents a critical problem area. Historical test data show that these relays tend to "fail low." Should either TD relay in the launch escape sequencer (i.e., in system A or system B) fail to zero, redundancy of the alternate channel will be lost and result in a catastrophic failure. By incorporating redundancy for both relays (i.e., in system A and system B), the probability of a catastrophic failure occurring will be greatly reduced as shown by the values in Figure 2-14. The effect of this increased reliability of the TD relay configuration does not appreciably increase the total sequencer reliability due to the location of the relay in a stream of series items (logic-wise) in

~~CONFIDENTIAL~~

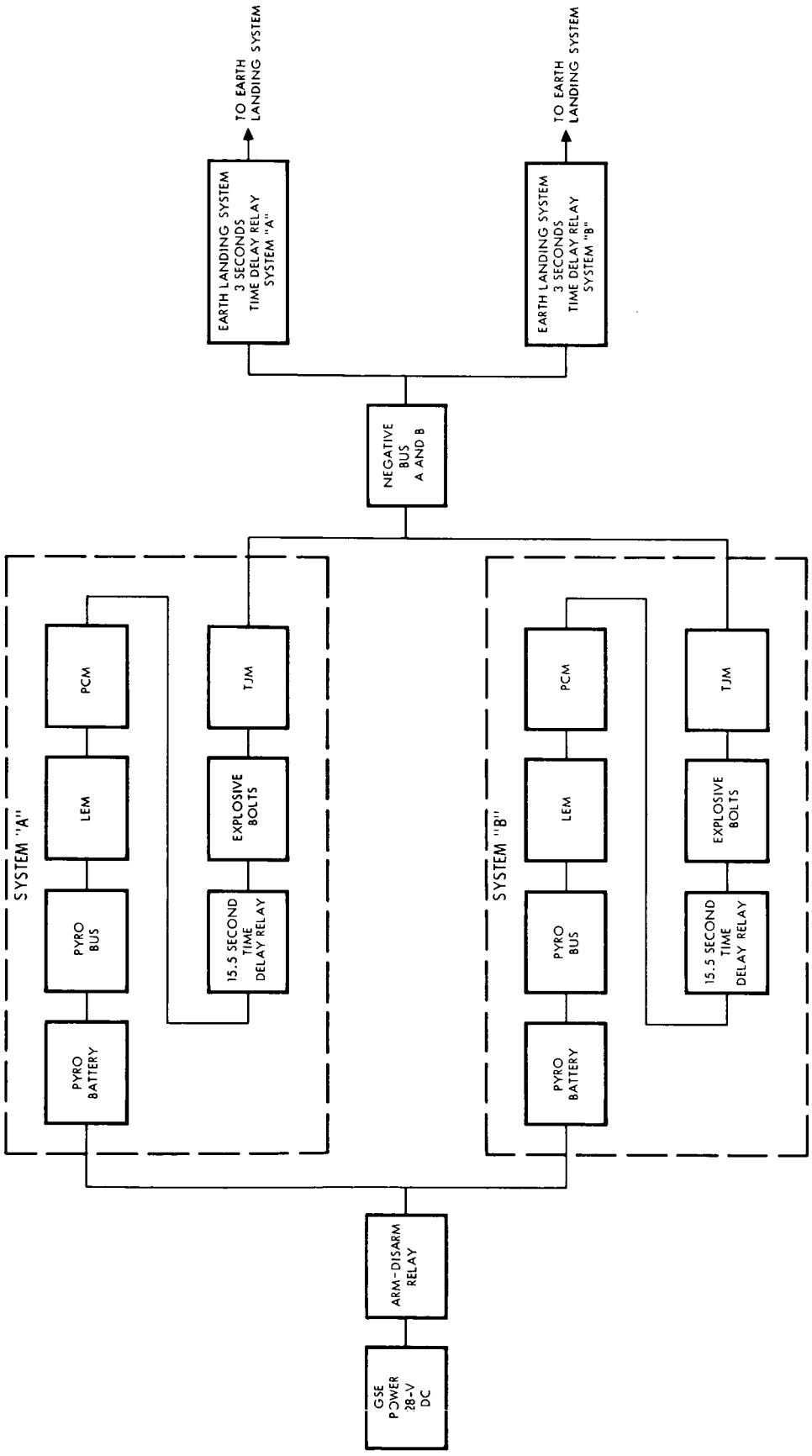

Figure 2-13. Major Components in Launch Escape Sequencer Logic Diagram

~~CONFIDENTIAL~~

~~CONFIDENTIAL~~

PROPOSED DESIGN

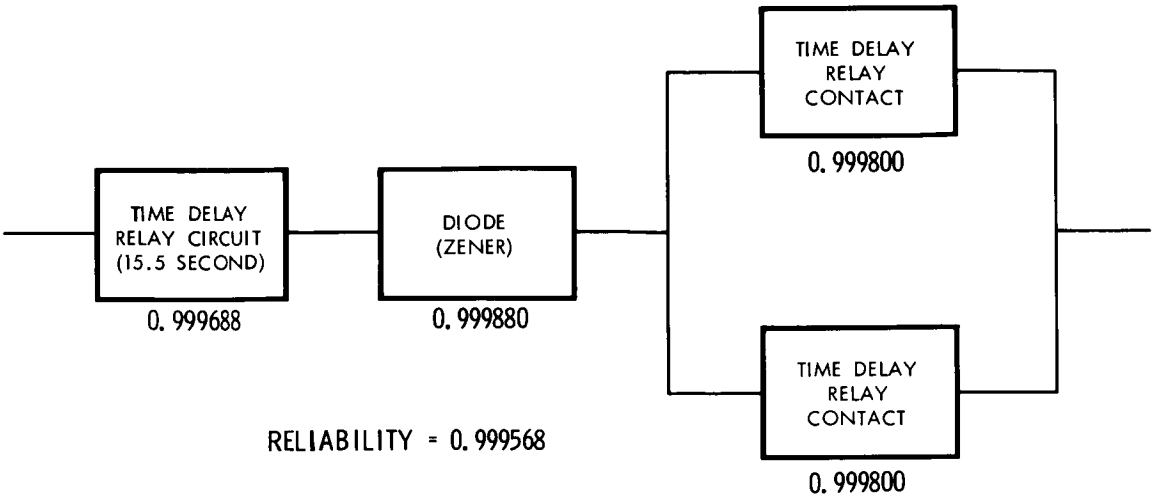

RELIABILITY = 0.999568

SUGGESTED MODIFIED

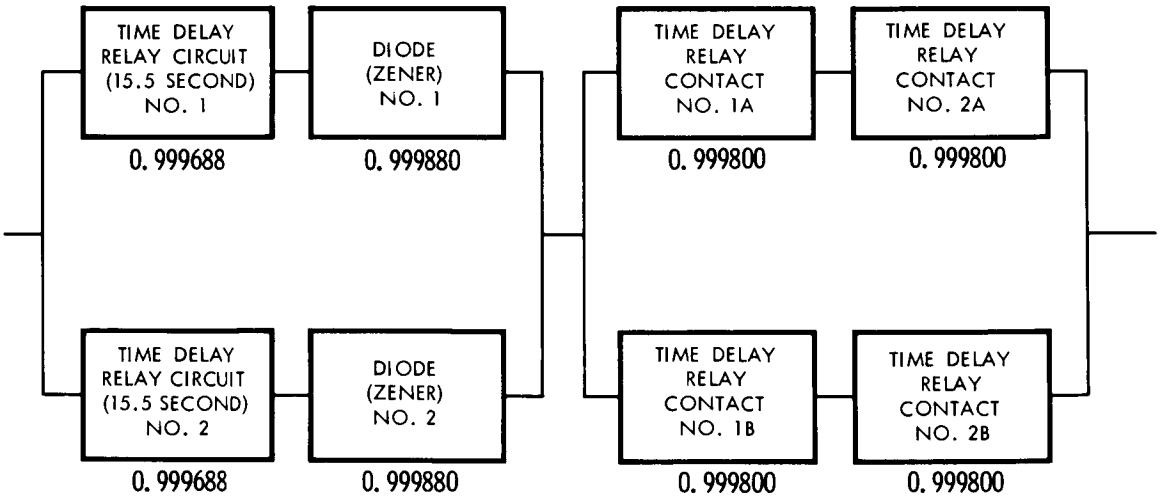

RELIABILITY = 0.999999

Figure 2-14. Reliability Analysis of Time Delay Relay Configuration

~~CONFIDENTIAL~~

~~CONFIDENTIAL~~

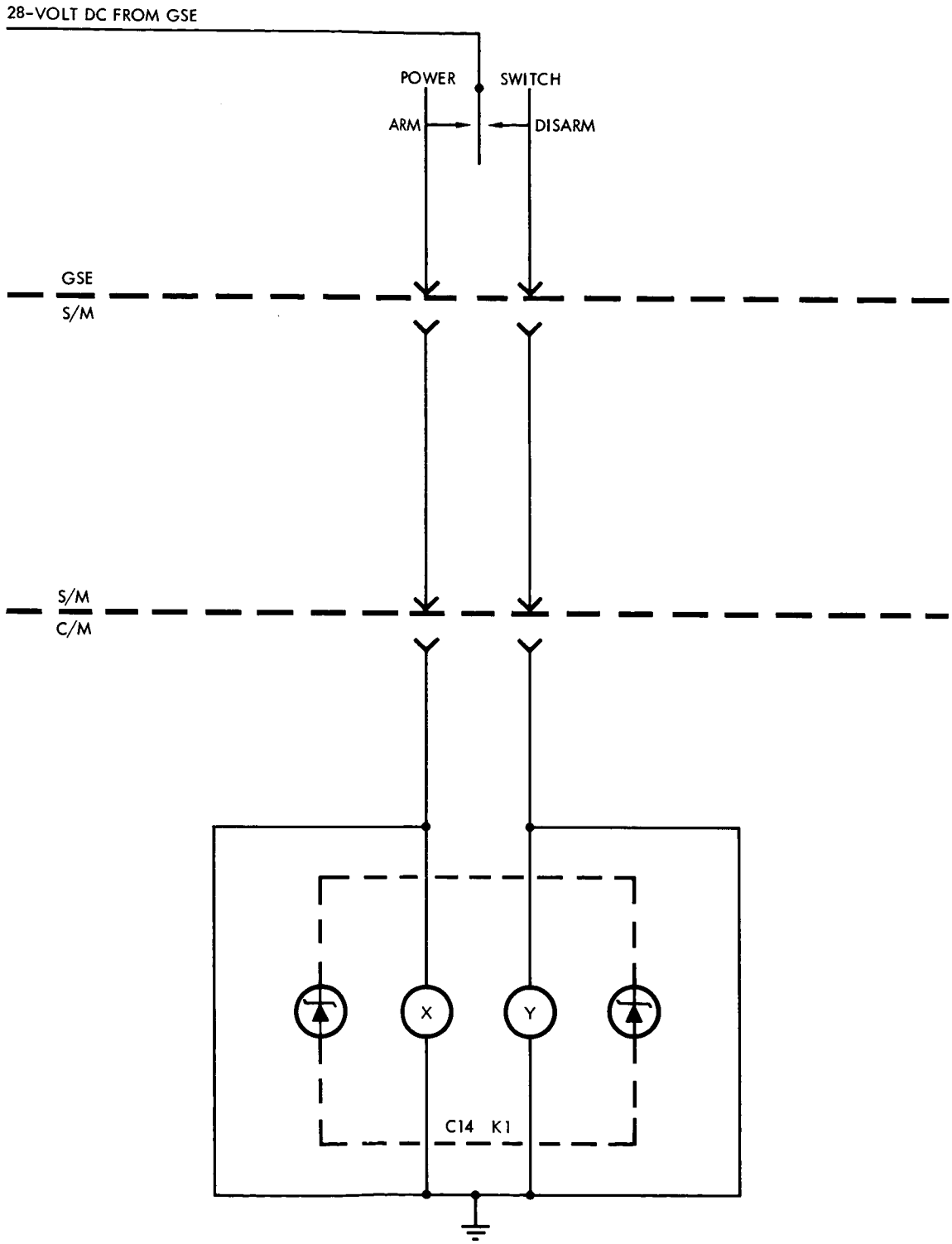

Figure 2-15. Arm-Disarm Relay Configuration

~~CONFIDENTIAL~~

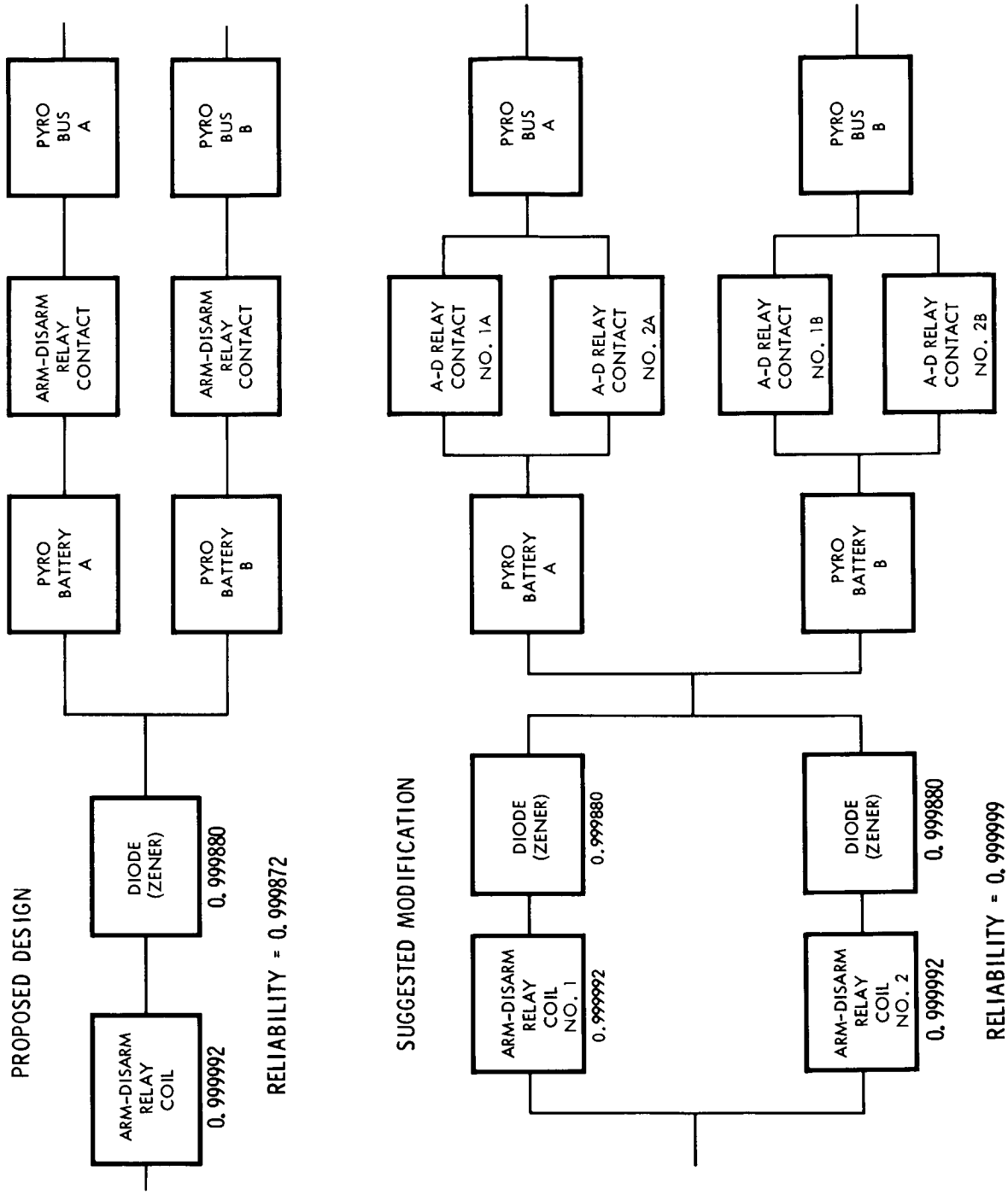

Figure 2-16. Reliability Analysis of Arm-Disarm Relay Configuration

~~CONFIDENTIAL~~

both system A and B, but the criticality of this one item must be considered in isolation of other components of the system.

3. Elimination of two of the three normally closed contacts of relays C18K26 and C18K25 in systems A and B. These three normally closed contacts merely serve as a short to the negative bus until power is applied to initiate the explosive bolts of the escape tower separation system. If any one of these contacts fails to open, power would still be diverted to the negative bus and would not allow the explosive bolts to fire. Therefore, it is believed that only one normally closed contact in each channel will be sufficient to accomplish the required shorting prior to firing explosive bolts. This change will not appreciably increase reliability due to the redundancy of channels A and B, but it will reduce the possibility of a critical failure.

Assumptions

In performing the subject analysis, all possible component failures were evaluated to determine the effect of each on the overall system. The determination of the success probability of the sequencer was attained by the probability method of calculation.

The numerical failure rates assigned to each component in the system reflect the current estimates of the component success probabilities and were determined by utilizing AVCO generic failure rates and application factors. One additional assumption was made: that the fail-to-zero failure mode was the prevalent one.

Results and Recommendations

Based on the above mentioned design changes, a reliability analysis was performed on this modified sequencer system. This analysis indicated increased reliability from 0.999809 (191 failures per 10^6 cycles) to 0.999945 (55 failures per 10^6 cycles).

Table 2-27 shows the estimated sequencer reliability for each of the above mentioned design changes and the possible combinations thereof. It was recommended that these changes be considered and implemented if possible.

One additional comment concerning the reaction of the subject circuit to transients: The probability that a transient will affect the operation of flight-article systems is extremely slight since power for operation of the 15.5-second TD relays originates from the 28-volt d-c pyro battery power supply. Furthermore, the possibility of transients being generated within

CONFIDENTIAL

the relay module itself are taken into consideration by the implemention of zener diode capability to absorb transient dissipation of the relay module (Figure 2-17).

An additional safety feature to be considered would include a zener diode across relay coil, HS-402 (Figure 2-17). Transients will build up after a switching operation of the silicon controlled switch, 3N58. Testing of the 15.5-second TD relay module will determine whether capacitor W1-103 will have the capability to absorb these transients.

Table 2-27. Possible Configurations and Sequencer Reliabilities of Proposed Design Changes

Configuration	Reliability	Failures per 10^6 (cycles)
Proposed	0.999809	191
Eliminate 2 of 3 N/C contacts, C18K26 and C18K25	0.999813	187
Parallel time delay relay	0.999814	186
Parallel time delay relay, and eliminate 2 of 3 N/C contacts, C18K26 and C18K25	0.999818	182
Parallel arm-disarm relay	0.999936	64
Parallel arm-disarm relay and parallel time delay relay	0.999941	59
Parallel arm-disarm relay, parallel time delay relay, and eliminate 2 of 3 N/C contacts, C18K26 and C18K25	0.999945	55

CONFIDENTIAL

~~CONFIDENTIAL~~

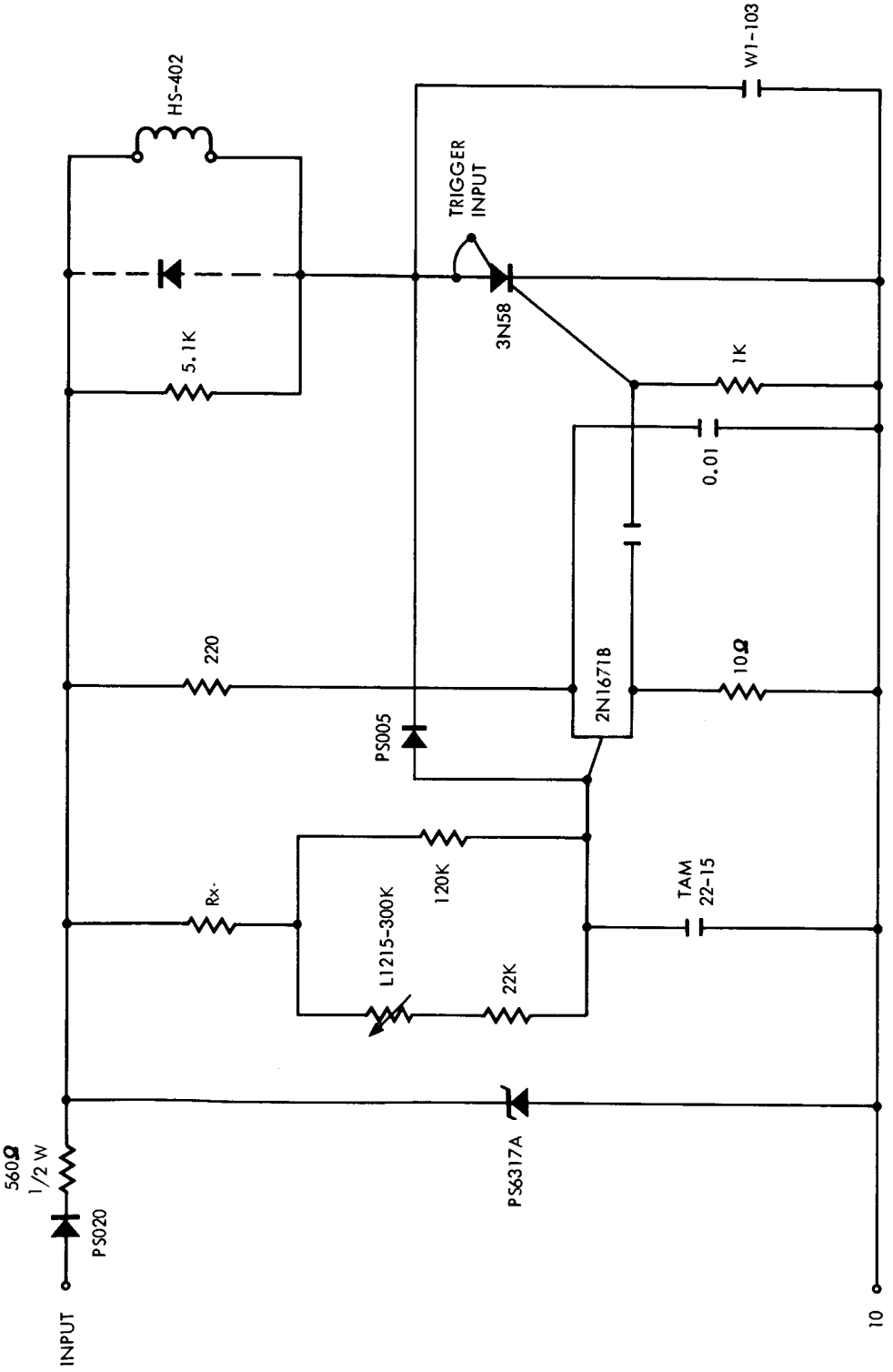

Figure 2-17. Time Delay Relay Module Configuration (15.5 Second)

~~CONFIDENTIAL~~

~~CONFIDENTIAL~~

TEST PROGRAM

Program Status

Tests

A total of 8 launch escape, 18 pitch control, and 17 tower jettison development motor firings have occurred. These firings comprise approximately 62 percent of the development test program. The development vibration phase for the tower jettison motor (consisting of sinusoidal vibration) has been completed, and all but one of the motors subjected to vibration testing has been successfully fired to date. The first successful firings of development hotwire cartridges were completed. The tower tie-down test was successfully completed, with significant vibration, temperature, and structure data being obtained.

Program Requirements

The revised Thiokol Apollo Tower Jettison General Test Program Plan was reviewed and changes were requested in the vibration test area. The qualification and acceptance test sections of the Apollo General Test Plan (SID 62-109) were updated.

Significant Test Results

Tower Jettison Motor

A failure occurred during the firing of tower jettison motor number AD-6. The failure was attributed to a faulty nozzle closure design. This resulted in improper shearing of the nozzle closure and breaking away of the carbon throat insert. The nozzle has subsequently been redesigned to include a styrofoam closure and added bearing surface for the insert. Four static firings have been successfully completed since the redesign.

During a vibration test of tower jettison motor AD-15, the cellulose acetate tape cover on the pellet basket tore, and boron pellets were found in the initiator cavity after the test. The pellet basket has been redesigned to prevent reoccurrence of this problem.

Pitch Control Motor

Two test failures occurred during development acceleration tests of the pitch control motor. These failures were attributed to test error. In one case, the pressure transducer failed and, as a result, test measurements were not obtained. In the other case, a low impulse nozzle was

installed on a motor of high impulse, and, as a result, the aft closure blew off during firing of the motor. Measures have been taken to prevent reoccurrence of these failures.

SUBCONTRACTOR MANAGEMENT

On 14 March 1963, motor AD-6 failed (Thiokol Failure Report No. 1258) during development testing. The carbon insert of one nozzle fractured and was ejected from the motor at approximately 0.4 seconds after motor ignition. Although there was no representation at a meeting held at Thiokol. S&ID was cognizant of the problem that existed. Reviews were made of failure investigations performed and the resulting design modifications proposed by Thiokol. Continued surveillance of effort was maintained until satisfactory redesign had been accomplished.

On 6 June 1963, motor PC-26 and PC-28 failed during development tests in which the motors were subjected to 20 g's acceleration. It should be noted that neither failure was attributed to the motor design. Post-firing examination of PC-26 revealed that a nozzle with a surface area equivalent to a 1700-pound-per-second motor had been mated to a 3200-pound-per-second motor. Post-firing examination of PC-28 revealed that the tubing leading to the pressure transducers failed because the tubing was not filled with any oil or grease.

PLANNED ACTIVITIES

During the next quarter, development testing on all three launch escape system motors is scheduled to be completed. These remaining development firings will include motors utilizing hotwire initiators. Qualification testing on the launch escape system motors is scheduled to commence within the next quarter. A major milestone to be completed in the launch escape system motor program will be the BP No. 6 pad abort test.

Table 2-26. Pitch Control and Tower Jettison Motors, Launch Escape System Failure Effects Analysis

Item	Drawing Number	Elect. Reference Desig	Failure Detection	Function	Failure Type	Mission Phase	Failure Effect On Component Performance	Failure Effect On Sub-Systems Performance	Failure Effect On Apollo	Possible Crew Action
Hot wire initiator				Provides ignition of B-KNO_3 pellets	Open bridge wire	See Note 1	Failure to perform required function.	None, redundant initiator	None	None
B-KNO_3 pellets				Provides ignition of pyrogen or igniter	Pellets fail to ignite due to chemical decomposition.	See Note 1	Motor ignition will not occur.	See Note 2	See Note 3	None
Pyrogen or igniter				Provides ignition of propellant	Failure to ignite due to resin-rich surfaces or surface leaching	See Note 1	Motor ignition will not occur.	See Note 2	See Note 3	None
					Over-ignition pyrogen or igniter provides too much gas.	See Note 1	Cracks, fissures, or break-up	See Note 2	See Note 3	None
Propellant				Provides motor thrust	Cracks, pits, or voids	See Note 1	Uneven burning non-reproducible burn time	See Note 4	See Note 3	None
					Bond failures (thermal elongation grain-liner bond)	See Note 1	Poor ballistic reproducibility	See Note 4	See Note 3	None
Motor case				Contains propellant and becomes pressure vessel after ignition	Maximum normal pressure case rupture	See Note 1	Catastrophic	See Note 2	See Note 3	None
Forward closure (launch escape motor only)				Provides forward containment of pressure vessel	Ruptures or blows off	See Note 1	Catastrophic	See Note 2	See Note 3	None
Aft closure and nozzle assembly				Provides aft containment of pressure vessel	Ruptures, cracks, or blows off	See Note 1	Catastrophic	See Note 2	See Note 3	None
Nozzle (a) Insert				Liner to protect metal from high temperature	Cracks, excessive errosion	See Note 1	Thrust vector will change	Negligible	See Note 5	None
(b) Closure				Protects motor interior from major contamination	Pressure leaks	See Note 1	Negligible	None	None	None
(c) Expansion cone				Provides thrust effect	Cracks or chips	See Note 1	Thrust vector will change.	Negligible	See Note 5	None

NOTES:

1. All motor firings will occur during mission phases 1, 2, and 3.
2. Should boost failure occur, launch escape and tower jettison motors must function for crew safety and mission success. For a normal mission, the launch escape motor is redundant to the tower jettison motor.
3. Should boost failure occur, mission success and crew safety are both lost if the tower jettison motor fails after the launch escape motor has fired.
4. Providing premature burn-out does not occur, sufficient thrust will be furnished to provide mission success and crew safety.
5. A minor change in trajectory will not affect normal operation.
6. All motors are of comparable design, thus failures are of the same order and type.

SEPARATION SYSTEM

SUMMARY

A failure effects analysis was made for the adapter separation system. This analysis revealed that failure of any one separation would seriously affect the mission, and, in some cases, would constitute loss of the crew.

As a result of this analysis, it was decided that a completely redundant system be used for all adapter separations. A complete description of the adapter separation system failure effects analysis can be found in Tables 2-28 and 2-29.

TEST PROGRAM

Overall Test Program Status

The in-house development tests completed or in progress during the period under review are shown in Table 2-30. No qualification tests were completed during this period, either in-house or by suppliers.

Specific Development and Qualification Test Results

Development test results are given in Table 2-31 for separation systems, land impact tests, and tower structural tests. A summary of tests results for pyrotechnic devices is given in Table 2-32.

PLANNED ACTIVITIES

Analyses

When the detail design of the adapter separation system is completed, a failure effects analysis to the component level will be performed, along with a finalized reliability analysis.

Tests

Qualification tests of the following components will be completed during the next reporting period:

Hot wire initiator

Pressure cartridge, forward heat shield separation system

Explosive bolt, launch escape tower separation system

Detonator, CM to SM separation system and adapter separation.

~~CONFIDENTIAL~~

Table 2-28. Adapter Separation System Failure Effects Analysis, Configuration "A"

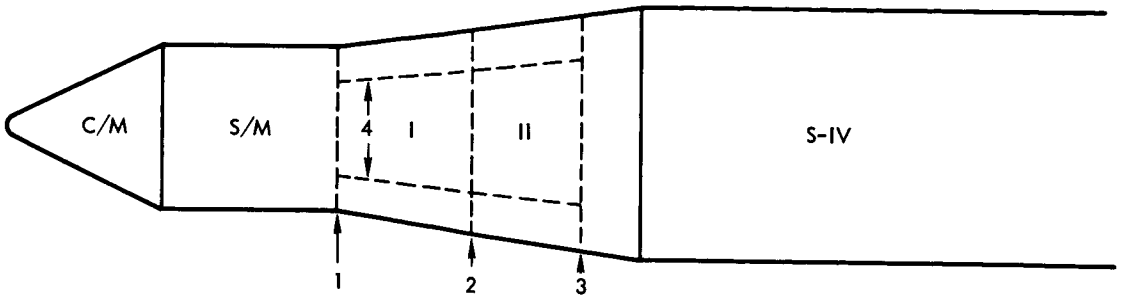

Configuration "A"

For the configuration shown above, the LEM adapter is simultaneously cut circumferentially at sections 1, 2 and 3. At the same time, four longitudinal splices at 4 are cut; thus the adapter section from 1 to 3 is fragmented into eight panels. In the failure effects analysis below, it is assumed that all separation failures are caused by an ignition failure or discontinuities in the shaped charge.

Successful Separation	No Separation	Effect on System	Effect on Mission
1 and 3	2 and 4	Adapter Sections I and II remain joined at plane 2. LEM docking not possible unless this structure is removed. Removal not feasible because of difficulties involved and probability of damage to LEM. Since panels of Section I are not blown away, damage to SPS engine nozzle could result when spacecraft pulls away from the adapter.	Lunar landing phase omitted. Mission limited to lunar orbit. If SPS nozzle is damaged, a crew safety hazard exists.
1, 3 and 4	2		
2, 3 and 4	1	Half of adapter remains joined to the SM.	Added mass of adapter requires more fuel for maneuvers. This may seriously affect fuel reserve and hence mission. Firing and gimballing of SPS engine could still be accomplished, although shrouding effect of adapter may cause nozzle overheating.
3 and 4	1 and 2	Entire adapter remains joined to SM. Damage to LEM could result when spacecraft pulls away from S-IV.	
1 and 2	3 and 4	LEM trapped in Section II. Removal not feasible. Since panels of Section I are not blown away, damage to SPS engine nozzle could result when spacecraft pulls away from the adapter.	Lunar landing phase omitted. Mission limited to lunar orbit. If SPS engine nozzle is damaged a crew safety hazard exists.
1, 2 and 4	3	LEM trapped in Section II. Removal not feasible.	Lunar landing phase omitted. Mission limited to lunar orbit.
None or 4	1, 2 and 3	Spacecraft not separated from S-IV booster.	Loss of crew and mission.
1, 2 and 3	4 (one or more splices)	Force of shaped charge detonation may not be sufficient to move joined adapter panels away from the S-IV.	LEM docking may be obstructed; damage to LEM or CM could result.

~~CONFIDENTIAL~~

Table 2-29. Adapter Separation System Failure Effects Analysis, Configuration "B"

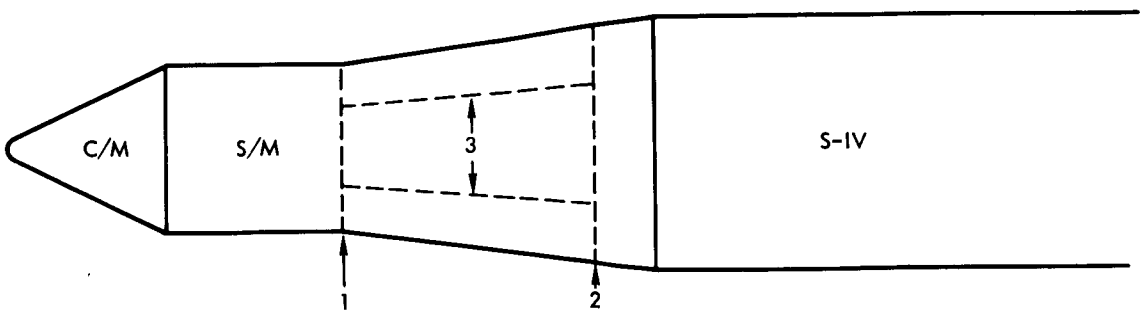

Configuration "B"

For the configuration shown above, the LEM adapter is simultaneously cut circumferentially at sections 1 and 2. At the same time, four longitudinal splices at 3 are cut; thus, the adapter section from 1 to 2 is fragmented into four large panels. In the failure effects analysis below, it is assumed that all separation failures are caused by an ignition failure or discontinuities in the shaped charge.

Successful Separation	No Separation	Effect on System	Effect on Mission
1	2 and 3	LEM trapped in adapter shell. Removal not possible. Since adapter panels are not blown away, damage to SPS engine nozzle could result when spacecraft pulls away from adapter.	Lunar landing phase omitted. Mission limited to lunar orbit. If SPS engine nozzle is damaged, a crew safety hazard exists.
1 and 3	2		
2	1 and 3	Adapter sections remain attached to the SM. Damage to LEM could result when SC pulls away from S-IV.	Added mass of adapter requires more fuel for maneuvers. This may seriously affect fuel reserve and hence mission. SPS engine can be fired and gimballed although shrouding effect of adapter may cause nozzle overheating.
2 and 3	1		
None or 3	1 and 2	Spacecraft not separated from S-IV booster.	Loss of crew and mission.
1 and 2	4 (one or more splices)	Force of shaped charge detonation may not be sufficient to move joined adapter panels away from the vicinity of S-IV.	LEM docking maneuvers may be obstructed; damage to LEM or CM could result.

~~CONFIDENTIAL~~

Table 2-30. Development Tests (S&ID)

Atr No.	Spacecraft Location	Title of Test	Start Date	Completion Date
100A	Mechanical Devices	Separation System: CM from SM	March 63	July 63
101		Separation System: SM from S-IV Adapter	April 63	May 63
102A		Separation System: Launch Escape Tower from CM	March 63	Aug 63
105-1		Impact Attenuation Component Tests Honeycomb Core Strut Assembly	Nov 62	July 63
105-3		Impact Attenuation System Component Tests Strut Return Snubber Mechanism	Jan 63	June 63
105-4		Impact Attenuator Return Motion Snubber - Friction	March 63	June 63
107-5		Chain and Sprockets - Window Cover Mechanism	June 63	July 63
108A		Forward Compartment Heat Shield Release System	Nov 62	June 63
201	Command Module	Landing Impact and Stability, Land and Water	Nov 62	Aug 63
203A		Model Test, Landing Impact and Stability	Nov 62	July 63
205		Vibration and Acoustic Tests of Typical CM Panels	Jan 63	Sept 63
209-1 & 2		CM Aft Compartment Heat Shield Tests	April 63	Oct 63
210-1 & 2		CM Sidewall Structural Tests	May 63	Nov 63
211-1 & 2		CM Apex Structural Tests	Apr 63	Dec 63
211-3		Sealing of Airlock Components	June 63	Aug 63

~~CONFIDENTIAL~~

Table 2-30. Development Tests (S&ID) (Cont)

Atr No.	Spacecraft Location	Title of Test	Start Date	Completion Date
213	Command Module	CM Meteoroid Shielding	May 63	Nov 63
214-2B		General Instability of Sandwich Cylinders Subjected to Pure Axial Compression and Pure Bending	June 63	Aug 63
214-3A		Evaluation of Mechanical Properties of Some Rigid Foams	April 63	May 63
216-1.1		CM Reentry Heat Shield Components Test (Alternate H/S Program), Strain Capability Tests	April 63	June 63
216-1.2		CM Reentry Heat Shield Components Test (Alternate H/S Program) Thermal Cycle Test	April 63	June 63
206-1	Service Module	Vibration and Acoustic Tests of Typical SM Panel Sections	Dec 62	Sept 63
301-1		Outer Shell Structural Honeycomb Test Panel	March 63	May 63
301-3		Simulated Aft Bulkhead Test	Feb 63	May 63
206-2	Adapter	Vibration and Acoustic Tests of Typical Adapter Panel Sections	Jan 63	Sept 63
500	Launch Escape Tower	Static Structural Tests	April 63	Aug 63
610	Combined Module	Dynamic Effects of Mass Loading Tests	Nov 62	March 63

Table 2-31. Development Test Results

Atr No.	Title of Test	Development Tests Completed	Development Test Results
102A	Separation system, launch escape tower from CM	One firing, 100-foot-pound preload per bolt	Simultaneous separation of 4 bolts in 2 milliseconds
		Three firings, pretorqued bolts, +33,000-pound tension applied to tower	All three successful
		Two firings, pretorqued bolts, +212,000-pound tension applied to tower.	Both firings successful
201	Landing impact and stability, land and water	4 impacts on land 24 impacts on water	
301-1	Service module outer shell panel test	Limit load test (combined axial load and radial pressure)	Panel failure: longitudinal buckle along center splice
108	Forward compartment heat shield separation system	21 test firings	
301-3	SM aft bulkhead static test	Ultimate load test	Failure at 126 percent of limit load (84 percent of ultimate)
301-5	SM radial shear web	Limit and ultimate static load test	Failure at 109 percent of ultimate load

Table 2-32. Pyrotechnic Devices: Development and Qualification Tests, Number of Specimens Fired

Pyrotechnic Device	Supplier	Development		Qualification		Lot Acceptance	
		Fired	Failed	Fired	Failed	Fired	Failed
Hot wire initiator	Space Ordnance Systems	230	4	0	0	0	0
Hot wire initiator	Hi-Shear Corp.	16	0	0	0	47	0
Pressure cartridge (forward heat shield separation system)	Space Ordnance Systems	0	0	0	0	0	0
Explosive bolt Tower separation system	Space Ordnance Systems	24	0	0	0	24	0
Explosive bolt Tower separation system	Talley	0	0	0	0	0	0
Detonator CM to SM separation system	Space Ordnance Systems (prototype only)	8	0	24	1	13	0

~~CONFIDENTIAL~~

SERVICE MODULE REACTION CONTROL

SUMMARY

Activity for the past quarter included updating the failure effects analysis for the service module reaction control system (SM RCS) to reflect the effects of system and component changes. In the failure effects analysis, all components in one of the SM RCS modules were analyzed. Individual components were analyzed for various modes of failure, as well as resulting effects upon the component, subsystem, and Apollo spacecraft. In addition, information obtained in the failure effects analysis was used to determine possible detection capabilities for various failure modes. Failure modes also were investigated to determine crew actions which might obviate or correct undesirable conditions. The failure effects analysis with a detection capability SM RCS is presented in Table 2-33 at the end of this section.

ANALYSIS

Failure effects analysis—formal covering the complete system and informal dealing with special function components—has been utilized throughout the development of the SM RCS. The reliability analysis of proposed system designs took advantage of failure effects analysis, resulting in pronounced effects upon the appearance of the final design. In two cases, failure effects analysis resulted in a design change, even though the original configuration would meet reliability requirements. In one case, the configuration of the check valve assembly was modified. The original configuration consisted of two check valves in parallel, considered to be adequate since a redundant means of preventing intermixture of the propellant was provided by positive expulsion bladders. However, after a failure effects analysis revealed that all possible bladder materials were permeable to propellant vapors, it was decided to modify the assembly to a series-parallel arrangement of four check valves. This check valve arrangement will prevent back flow of propellant vapors in a redundant manner, i.e., one failure does not change system operation or safety. The same approach and reasoning was used in reliability analysis of the regulators. Initial system calculations indicated that regulator redundancy was not required. However, the weight penalty to provide regulator redundancy was considered justified when failure effects analysis showed that a single regulator failure would result in loss of an entire module. The risk of losing all module propellants, up to 170 pounds, was considered greater than the penalty of an additional 9 pounds of regulators.

Results of failure effects analysis contributed to design improvements in many areas other than the two cases cited (e.g., the addition of caps to all fill and vent valves). Failure effect analysis of this system, including associated instrumentation, could not be completed at present due to lack of definitive design information and requirements on the composition and configuration of various command and monitoring controls and instruments for operation of this system. It was impossible to determine the effect of various failure modes of associated instrumentation upon subsystem performance and the Apollo. However, a list of typical failure modes for typical instrumentation components is presented in Table 2-34.

Selection of suitable subcontractors and vendors for various system components was aided by failure effects analysis. Competitive proposals submitted by various firms were evaluated, using many reliability parameters, including failure effects analysis. Proposed designs were subjected to a failure effects analysis to determine the following information:

1. Possible failure modes for the component, e.g., in the case of a valve, the possible number of leak paths

2. The possibility of preventing or protecting the component from critical failure modes, either by redesign or the addition of redundancy

3. The feasibility of adding redundancy, considering the resultant design complexity and possible weight and package penalties

Failure effects analysis offered a practical, logical means to evaluate and select the most desirable design. One instance in which this approach was beneficial was final selection of the propellant gaging system. The majority of proposed designs were eliminated after subjecting them to failure effects analysis, since it was required that a failure in the gaging system would neither halt nor degrade the performance of the positive expulsion tanks. Because the particular system required was not a state-of-the-art item, it was also necessary to consider redundancy and the resulting penalties. Selection of the final design was based on the ease with which the required redundancy could be added and its ability to meet weight and package requirements.

TEST PROGRAM

Overall Test Program Status

Revisions were made to Vol. III (ground qualification tests) and Vol. IV (acceptance tests) of the General Test Plan (SID 62-109). Data includes a definition of the system test program, a system logic diagram,

~~CONFIDENTIAL~~

Table 2-34. Typical Failure Modes for Typical Instrumentation Components

Component	Failure Modes	
	Electrical	Mechanical
1. Manual lever micro switch	1) Shorted contact set* 2) Open contact set**	1) Freeze 2) Fail to make contact 3) Fail to remain seated
2. Module separation switch mechanism	1) Shorted contact set 2) Open contact set	1) Fail to make contact
3. Hand controller	1) Shorted contact set 2) Open contact set 3) Crossed (or jumped signal)	1) Freeze 2) Fail to make contact 3) Improper alignment
4. D-C motor relay (switch)	1) Shorted contact set 2) Open contact set 3) Crossed signal	1) Freeze 2) Fail to make contact 3) Improper alignment 4) Fail to maintain contact
5. Terminal/origin contacts	1) Open contact circuit 2) Restricted current (partial contact)	
6. Automatic timer	a) Open b) Short c) Inaccurate operation	
7. Rotary selector switch	1) Shorted contact set 2) Open contact set 3) Crossed signal	1) Freeze 2) Fail to make contact 3) Improper alignment
8. Linear scale indicator	1) Open 2) Short 3) Inaccurate current	1) Freeze 2) Break mechanism 3) Inaccurate response 4) Misalign
9. Mechanical position indicator	1) Open 2) Short 3) Inaccurate current	1) Freeze 2) Break mechanism 3) Binding
10. Off-limit light	a) Open b) Short	

Note: The following preliminary analysis of typical instrumentation failure modes is not intended to be all inclusive. They are distributed as an aid in system failure mode and effects analyses. Additional components and failure modes will be forthcoming as the information is available.

* Shorted contact set - a closed circuit failure (i.e., shorted across the contact set or circuit)

** Open contact set - an open circuit failure (i.e., short to ground or break in the circuit)

presentation of system criticality versus hardware requirements, and a qualification test schedule with test specimen utilization. Component development testing programs have been initiated by approximately 16 percent of the component suppliers. Development testing on the SM reaction control engine is approximately 65-percent complete.

Significant Test Results

S&ID

Expulsion efficiency and water capacity tests were conducted utilizing the SM RCS breadboard. Results indicated a 99+ percent expulsion efficiency.

Marquardt

Evaluation tests using monomethyl-hydrazine indicated this propellant gives higher performance and lower engine temperature. Various chamber configurations were tested in an effort to prevent vapor formation in the oxidizer valve. This test program is continuing. A two-coil solenoid propellant valve configuration has been incorporated in the engine configuration.

PROBLEM AREAS

Tests incorporating a fuel-cooled injector resulted in shattering of the thrust chamber during steady-state firing. A second chamber with the same injector shattered during a pulse mode firing. Cause of these failures is being investigated. Heat "soak-back" to the oxidizer valve, causing vaporization, has been experienced. Attempts are continuing to resolve this condition.

SUBCONTRACTOR MANAGEMENT

Marquardt, SM RCS Motor

Three monthly reliability coordination and progress meetings were held between S&ID and Marquardt. In these meetings Marquardt's reliability efforts were reviewed to determine adequacy and status.

Marquardt completed two formal design reviews, one dealing with the injector head assembly and the other with the prototype solenoid valve.

The reliability program plan submitted by Marquardt was reviewed; comments relative to the plan were forwarded, and a revision incorporating the comments was requested by 25 July 1963.

Giannini, SM RCS Propellant Gaging System

Reliability requirements of the propellant gaging system were reviewed with Giannini. The additional requirement for continuous telementry has changed the operating time for system components. Continuous operation of the gaging system increases the number of system failures above the maximum limit. The current requirement of 336 hours is 30 times more severe than considered for intermittent operation.

An analysis was performed considering the new operating time of the gaging system and its relationship with the RCS. This analysis resulted in the following reliability apportionments for the gaging system:

1. The failure probability for the sensor portion of the system shall be no greater than 3562×10^{-6} failures for each of the individual quads (modules or quadrants).

2. The failure probability for the flow comparator and associated computer network shall be no greater than 1000×10^{-6} failures.

3. The failure probability for the digital display and associated computer network shall be no greater than 3500×10^{-6} failures.

4. The reliable operating life for the components shall be 336 hours.

PLANNED ACTIVITIES

Studies

The following analyses and activities are planned for the service module reaction control system, and results will be presented in the next progress report:

1. Evaluation of crew safety reliability of the system, utilizing a new sequential analytical method

2. Evaluation and possible reapportionment of system reliability to incorporate the change from a 14-day to an 8-day mission profile

3. Continuous supplier surveillance to determine the adequacy and status of the reliability programs.

~~CONFIDENTIAL~~

Tests

S&ID

Vibration testing of the tin-plated seal and the SR 634-70 O-ring seal in flight hardware will continue, as well as continued testing to determine flow rates of positive expulsion cycling and efficiencies.

Marquardt

Investigation will be continued on the "soak-back" temperature effects. Development tests on the engine will continue, and prototype engine configurations are scheduled to begin qualification tests in October.

Design verification tests will commence on prototype propellant valves. The primary objective of these tests is to verify the structural and operational integrity of the valve designs when operating at mission environments of temperature, pressure, vibration, acceleration and shock.

Development tests will begin on each of the system components in the next quarter. In addition, approximately 15 percent of the component qualification tests will be initiated.

~~CONFIDENTIAL~~

Table 2-33. Service Module Reaction Control System Failure Effects Analysis

Item	Function	Failure Type	Mission Phase	Failure Effect On Component Performance	Failure Effect On Sub-Systems Performance	Failure Effect On Apollo	Failure Detection	Possible Crew Action
Helium tank	Stores pressurization gas	1. Rupture 2. Leak at connection (a) Excessive vibration	1 through 56	Loss of helium pressurization gas	Rendered inoperative	Loss of redundancy	Loss of pressurization gas can be detected by use of the pressure gage located on the display console.	None
Helium solenoid valve (crew operated normally open)	Emergency shutoff of pressure to propellant supply in case of regulator failure	1. Failure to close (a) Short or broken solenoid coil wire (b) Binding of armature	1 through 56	Loss of pressurization (but precludes two regulator failures)	Renders RCS module inoperative (but precludes two regulator failures)	Loss of redundancy	Failure No. 1 can be detected since "talkback" information concerning the position of the valve is provided on the display console.	None
		2. Leak (a) Damaged seat	1 through 56	Eventual loss of pressurization gas	Eventually rendered inoperative	Loss of redundancy	Detection of the failure mode represented by failure No. 2 is possible thru the use of the pressure gage located on the display panel. The exact component however, cannot be identified.	Valve cycling
		3. Premature operation	1 through 56	None	None	None	Failure No. 3 can be detected since "talkback" information concerning the position of the valve is provided on the display console	Reopen valve

~~CONFIDENTIAL~~

Table 2-33. Service Module Reaction Control System Failure Effects Analysis (Cont)

Item	Function	Failure Type	Mission Phase	Failure Effect On Component Performance	Failure Effect On Sub-Systems Performance	Failure Effect On Apollo	Failure Detection	Possible Crew Action
Helium fill and drain valve with cap	Ground: Provides access for GSE Inflight: Maintains pressure seal	1. Leak (mechanical) (a) Excessive vibration (flight)	1 through 56	Loss of helium pressurization gas	Rendered inoperative	Loss of redundancy	The loss of pressurization gas can be detected by use of the pressure gage located on the display console. The exact component, however, cannot be identified.	None
Regulator	Regulates propellant feed pressure	1. Failure to open (a) Binding (b) Broken spring	1 through 56	Loss of redundancy	Minor mission degradation	None	No single failure detection capability is available.	Actuation of helium solenoid shutoff valve
		2. Failure to close (a) Binding (b) Contamination	1 through 56	Loss of redundancy	Minor mission degradation	None		Actuation of helium solenoid shutoff valve
		3. "Lock up" (a) Damaged seat (b) Contamination	1 through 56	Loss of redundancy	Minor mission degradation	None		Actuation of helium solenoid shutoff valve
Helium check valve	Prevents mixing of fuel and oxidizer vapors in case of positive expulsion device failure	1. Failure to open (a) Binding	1 through 56	Loss of redundancy	Minor degradation	None	No detection capability available.	None
		2. Failure to close (a) Broken spring (b) Contamination (c) Damaged seat	1 through 56	None if one or two in parallel fail; possible explosion if two or more in series fail	Possible damage to service module major degradation	Possible loss of spacecraft; necessitates abort		None

~~CONFIDENTIAL~~

Table 2-33. Service Module Reaction Control System Failure Effects Analysis (Cont)

Item	Function	Failure Type	Mission Phase	Failure Effect On Component Performance	Failure Effect On Sub-Systems Performance	Failure Effect On Apollo	Failure Detection	Possible Crew Action
Relief valve assembly (relief valve, filter, and burst)	Provides pressure relief in the event of overpressure conditions	1. Failure to open (a) Binding	1 through 56	Possible rupture of lines; loss of propellant pressure	Possibly rendered inoperative	Possible loss of redundancy	Failure No. 1 can be detected and identified by use of the pressure gage located on the display console.	None
		2. Failure to close (a) Broken spring (b) Contamination (c) Binding	1 through 56	Loss of pressurization	Rendered inoperative	Loss of redundancy	Detection of the failure mode represented by failure No. 2 is possible thru the use of the pressure gage located on the display panel. The exact component however, cannot be identified.	None
Helium tubing	Distributes and confines pressurization gas	1. Rupture	1 through 56	Loss of pressurization	Rendered inoperative	Loss of redundancy	Failure No. 1 can be detected by use of the pressure gage located on the display console, but identification location cannot be accomplished.	None
		2. Restricted flow (a) Contamination (b) "Pinch"	1 through 56	Reduction in flow pressure	Reduced performance	Possible loss of redundancy	Failure No. 2 can be detected by use of the pressure gage and the propellant gaging system, but no identification capabilities exist.	None

~~CONFIDENTIAL~~

Table 2-33. Service Module Reaction Control System Failure Effects Analysis (Cont)

Item	Function	Failure Type	Mission Phase	Failure Effect On Component Performance	Failure Effect On Sub-Systems Performance	Failure Effect On Apollo	Failure Detection	Possible Crew Action
Helium fittings	Provides connections and maintains seal	1. Rupture	1 through 56	Loss of pressurization	Rendered inoperative	Loss of redundancy	Loss of pressurization gas can be detected by use of the pressure gage located on the display console. Identification of the location, however, cannot be accomplished.	None
Positive explusion tank	Contains propellant in usable condition	1. Tank rupture	1 through 56	Loss of pressure	Rendered inoperative	Loss of redundancy	Loss of pressurization gas can be detected by use of the pressure gage located on the display console. Identification of the location, however, cannot be accomplished.	Actuation of helium shutoff valves
		2. Tank leak at connection	1 through 56	Eventual loss of pressure	Eventually rendered inoperative	Loss of redundancy		Actuation of helium shutoff valves
		3. Failure of positive expulsion device	1 through 56	Reduced flow pressure and possible loss of engine start capability	Rendered inoperative	Loss of redundancy and possible explosion which would necessitate an abort	Detection of the resulting condition is possible through the use of the propellant gaging system.	Actuation of helium shutoff valves
Propellant fill and drain valve with cap	Ground: provides access for GSE Inflight: maintains pressure seal	1. Leak (a) Excessive vibration	1 through 56	Loss of propellant	Rendered inoperative	Loss of redundancy	Detection of the resulting condition is possible through the use of the propellant gaging system, but identification capabilities in regards to location and cause do not exist.	None

~~CONFIDENTIAL~~

Table 2-33. Service Module Reaction Control System Failure Effects Analysis (Cont)

Item	Function	Failure Type	Mission Phase	Failure Effect On Component Performance	Failure Effect On Sub-Systems Performance	Failure Effect On Apollo	Failure Detection	Possible Crew Action
Propellant fittings	Provides connections and maintains seal	1. Rupture	1 through 56	Loss of propellant	Rendered inoperative	Loss of redundancy	Detection of the resulting condition is possible through the use of the propellant gaging system, but identification capabilities in regards to location and cause do not exist.	None
Propellant tubing	Distributes and contains propellant	1. Rupture	1 through 56	Reduction in flow pressure	Reduced performance	Possible loss of redundancy	Detection of the resulting condition is possible through the use of the propellant gaging system, but identification capabilities in regards to location and cause do not exist.	None
		2. Restricted flow (a) Contamination (b) "Pinch"	1 through 56	Reduction in flow pressure	Reduced performance	Possible loss of redundancy		None
Propellant solenoid valve (crew operated, normally open)	Emergency shutoff of propellant to engines in the event of an engine valve open failure	1. Failure to close	1 through 56	Loss of propellant and possible explosion	Possible explosion	Loss of redundancy and possible explosion	Detection is possible since "talk-back" information concerning the position of the valve is provided on the display console.	Valve cycling

~~CONFIDENTIAL~~

Table 2-33. Service Module Reaction Control System Failure Effects Analysis (Cont)

Item	Function	Failure Type	Mission Phase	Failure Effect On Component Performance	Failure Effect On Sub-Systems Performance	Failure Effect On Apollo	Failure Detection	Possible Crew Action
		2. Leak (a) Damage seat	1 through 56	Loss of propellant and possible explosion	Possible explosion	Loss of redundancy and possible explosion	Detection of the resulting condition is possible through the use of the propellant gaging system, but identification capabilities in regards to location and cause do not exist.	None
		3. Premature operation	1 through 56	None	None	None	Detection is possible since "talkback" information concerning the position of the valve is provided on the display console.	Reopen valve
Solenoid injector valve (fuel and oxidizer)	Provides propellant to RCS engine in required amounts upon command	1. Failure of valve to open (a) Open coil (b) Excess temperature (c) Contamination	1 through 56	Engine rendered inoperative	Loss of redundancy	Loss of redundancy	No detection capability available.	Utilize manual operation
		2. Leak or failure of valve to close (a) Weak spring (b) Excess vibration (c) Residual magnetism (d) Wear of poppet (e) Contamination	1 through 56	Engine rendered inoperative, possible explosion	Loss of redundancy and possible explosion	Loss of redundancy		Detect failure and actuate propellant shutoff valves

~~CONFIDENTIAL~~

Table 2-33. Service Module Reaction Control System Failure Effects Analysis (Cont)

Item	Function	Failure Type	Mission Phase	Failure Effect On Component Performance	Failure Effect On Sub-Systems Performance	Failure Effect On Apollo	Failure Detection	Possible Crew Action
		3. Frequency response rate out of tolerance (a) Shorted coil (b) Contamination	1 through 56	Performance degradation of engine	Minor degradation	Minor degradation	No detection capability available.	None
		4. Pressure drop out of tolerance (a) Cold flow of seat material	1 through 56	Performance degradation of engine	Minor degradation	Minor degradation		None
		5. Spontaneous actuation (a) RF noise	1 through 56	Excessive use of propellant	Minor degradation	None		None
Teflon seal	Ensures zero propellant leakage at interface of injector valve and head	1. Leak	1 through 56	Reduced engine thrust due to improper oxidizer-to-fuel ratio. Possible explosion if fuel and oxidizer can mix	Minor degradation, possible explosion, and loss of redundant propellant	Possible loss of redundancy	No detection capability available.	None
Injector head	Provides proper propellant flow pattern to combustion chamber	1. Leak (a) Vibration (b) Temp. cycle	1 through 56	Possible explosion and loss of engine	Possible loss of redundancy	Possible loss of redundancy	No detection capability available.	None
		2. Improper oxidizer-to-fuel ratio (a) Corrosion (b) Contamination	1 through 56	Performance degradation of engine	Minor degradation and loss of redundant propellant	Possible loss of redundancy		None
Metal seal	Prevents hot leakage at interface of injector head and combustion chamber	1. Leak (a) Deterioration	1 through 56	Engine failure due to excessive head temperature	Loss of redundancy	Minor degradation and loss of redundancy	Possible detection of the resulting condition may exist in the in-flight test system, but present status is unknown.	None

~~CONFIDENTIAL~~

Table 2-33. Service Module Reaction Control System Failure Effects Analysis (Cont)

Item	Function	Failure Type	Mission Phase	Failure Effect On Component Performance	Failure Effect On Sub-Systems Performance	Failure Effect On Apollo	Failure Detection	Possible Crew Action
Combustion chamber	Maintains shape during engine operation	1. Burn through (a) Pin point erosion due to incomplete surface coating (b) Base metal contamination	1 through 56	Engine failure	Loss of redundancy	Minor degradation and loss of redundancy	No detection capability available.	None
		2. Explosion (a) Throat restriction	1 through 56	Loss of engine and possible damage to surrounding equipment	Possible loss of RCS module due to explosion	May possibly cause abort		None
Engine clamps, stud, etc.	Holds engine assembly together and properly attached to service module	1. Structural failure (a) Fatigue (b) Assembly error (over torquing, etc.)	1 through 56	Possible loss of redundancy	Possible loss of redundancy	Possible loss of redundancy	No detection capability available.	None

SERVICE PROPULSION

SUMMARY

The current design of the service propulsion systems reflects the influence of the failure effects analysis. As a result of this analysis, the major failure modes received prime consideration in determining the type of redundancy which should be incorporated in the service propulsion system.

The failure effects analysis on the propellant utilization system was used to evaluate the type of redundancy in sensing elements which will be capable of providing the most reliable backup system for propellant utilization. The system analysis precluded identical failure modes between the primary and secondary systems.

As a result of the failure effects analysis on the pilot solenoid valve of the Aerojet-General engine subsystems, a single seal with overboard leakage potential was discovered. This valve was redesigned to incorporate dual seals, thereby eliminating a single seal leak path in the fuel system.

Dual layer bellows in the valve actuator and flex line applications were instituted as a result of the failure effects analysis which showed the major failure mode to be leakage.

ANALYSIS

As part of the reliability requirements, tentative suppliers were requested to include failure effect analysis in their proposals or to list major failure modes. During the proposal evaluation, the failure modes were analyzed to ascertain whether the major failure modes of the system components were in agreement with those listed on the S&ID failure effects analysis used as the basis for system redundancy. Specific examples are cited below whereby component or system selection was made as a result of failure mode and effects analysis conducted on alternate proposals.

Failure mode analysis assisted in the selection of sensing element design concepts for the SPS propellant utilization system. Initial efforts and recommendations were presented in the Fifth Quarterly Progress Report (SID 62-557-5). Final selection was completed during

~~CONFIDENTIAL~~

this reporting period, which disclosed the redundancy of sensing elements — precluding the types of failures described on page 3-95 of the Fifth Quarterly Report.

Alternate proposals for various components within the propulsion systems were carefully analyzed for critical failure modes. No valves, for example, were selected whose design incorporated catastrophic failure modes (overboard leaks, leaks to electrical equipment, etc.) resulting from single failures. Therefore, no components to date have been selected for the SPS which introduce failures other than to perform its prescribed function.

An updated failure effects analysis is included in this report (Table 2-35 at the end of this section) which incorporates instrumentation detection of the failure mode.

The column for instrumentation in the failure effects analysis lists transducer locations that can detect the listed failure modes. Instrumentation on the service propulsion system is not capable of detecting all component failures. Since redundancy is used extensively in the service propulsion system, several failures can result in the same performance degradation. An additional analysis is planned to establish the system interaction which can be detected by the present instrumentation.

PROBLEM AREAS

Engine

Aerojet-General is continuing to experience trouble in the injector development program. Several of the firings conducted resulted in high-frequency instability. Excessive throat erosion has been noted during firings evaluating injector-chamber compatibility. The checkout firing for the first AEDC SPS engine resulted in propellant inlet pressure fluctuations at vibration frequencies between 100 and 200 CPS.

Pressurization and Propellant Subsystems

During heat-exchanger evaluation tests, it was observed that icing occurred around the helium coils on the helium inlet side, after runs conducted with the helium at temperatures of -100 F and -150 F.

A probable problem area currently being investigated is the possibility of propellant vapor or liquid (under zero-g conditions) freezing the check valve in the closed position, following some moderately long firing, such as during lunar orbit injection.

Another potential problem area still exists in the engine propellant valves. The current state-of-the-art failure rate for the ball valve seals are such that the component will not be able to meet the apportioned value. The failure effects analysis indicates a possible improvement by addition of seals to the valve design.

Major problem areas exist in the engine subsystem. There have been six incidents of high-frequency combustion instability reported through 19 April 1963. At this stage of development, the specific impulse achieved is 313.0 seconds compared with the specification requirement of 318.7 seconds; however, some tests using noncompatible chambers have achieved required performance.

Possible solutions to this problem presented by Aerojet-General are discussed in the Subcontractor Management Section.

The injector schedule has slipped, and consequently is affecting the chamber development program.

TEST PROGRAM

Program Status

Engine Testing

The sub-scale engine test program has been completed and the full-scale engine tests are in progress at AEDC. C-star verification tests and evaluations of various injector designs are continuing at Aerojet. Gimbal actuator evaluation tests are in progress at NAA. The Aerojet development test program is about 75 percent completed.

Pressurization and Propellant Subsystem Testing

Preliminary system runs have been performed on the SPS mockup at NAA, and measurements have been taken using water as the test fluid. Development tests have started on components of the SPS pressurization and propellant subsystems. NAA is conducting design evaluation tests on the SPS heat exchanger. The component development test phase is approximately 10 percent completed.

Test Program Requirements

Revised specification inputs, using updated environmental criteria, have been submitted to design engineering for all service propulsion system components. Contract and coordination meetings are being held with component suppliers for the service propulsion system with regard to test requirements.

Qualification and acceptance test sections of the Apollo General Test Plan (SID 62-109) were revised during this reporting period. Test requirements for the service propulsion system were submitted for inclusion in the house spacecraft program. A test accounting plan was prepared for the service propulsion system to watch over the development and qualification tests.

Significant Test Results

Engine Tests

Development test firings on the SPS engine were conducted to evaluate injector-chamber and injector-valve compatibility. Five firings, using a quadlet design injector and MMH as the fuel, were stable. However, subsequent firings on the same injectors with Aerozine-50 as the fuel resulted in unstable firing in two out of three cases. During the test of one injector, conducted to evaluate baffle durability, high-frequency instability was noted. This phenomenon has occurred in other injector tests.

Ablative chamber-streak determination runs on two injectors resulted in three streaks in one chamber which were 1-1/2 inches wide. Satisfactory injector-chamber compatibility was demonstrated on a doublet injector during three firings with an ablative chamber.

Pressurization and Propellant Subsystem Tests

During NTO-rubber compatibility tests, it was discovered that samples of the same rubber which had been twice subjected to the curing cycle exhibited better post-test characteristics than rubber which had been subjected to only one curing cycle. Therefore, it was decided to specify "post-cured" rubber for use in the service propulsion system.

SUBCONTRACTOR MANAGEMENT

Aerojet-General's Reliability Program Plan and the test specification covering engine tests to be conducted at AEDC were received for study, and comments on these documents have been generated.

The Aerojet-General Quarterly Progress meeting was held at NAA. Aerojet-General presented a technical program review of the engine program with special emphasis on injector improvement, including additional film cooling, better direction of the oxidizer streams, improved fabrication techniques, and new baffled and unbaffled patterns.

The first two flight weight injectors will be tested the final week of June.

The propellant and pressurization tank test plan and monthly (Allison) progress reports for the propellant tanks have been reviewed. Significant advances in state-of-the-art welding techniques and process controls are being developed by Allison. Reliability analysis of tank failure modes attributable to material and welding failures will be initiated as data are obtained. Preliminary propellant tank stress analyses are being used to establish the structural reliability and confidence levels.

The revised Propellant Quantity Gaging and Mixture Ratio Control specification (MC 901-0008) was reviewed with Simmonds Precision Products. The scope of the NAA reliability and test program requirement was discussed, and the Simmonds implementation of the program was defined with NAA concurring.

PLANNED ACTIVITIES

Analysis Group

An investigation has been initiated to determine what increase in reliability can be achieved by utilizing higher material strength values for the SPS propellant and pressurization tanks, should sufficient data exist to demonstrate this reliability. This effort is intended to delineate SPS tank failure modes and, thus, determine if:

1. Specified SPS tank reliability can be achieved

2. Crew safety can be enhanced if the specified tank reliability is exceeded, thus reducing problem areas outlined in the previous quarterly activity report.

An analysis will be performed to establish system interactions which can be detected by the present instrumentation since, in the present system, several failures can result in the same performance degradation.

Test Group

Aerojet-General's revised Overall Test Plan is scheduled for review during the next quarter. This plan will contain descriptions of development, qualification and acceptance test programs, and will include details of the reoriented qualification program.

Development tests will continue during the next quarter on the SPS engine and system components. A major portion of the component development tests are scheduled for completion during the next reporting period.

~~CONFIDENTIAL~~

Table 2-35. Service Propulsion System Failure Effects Analysis

Item	Drawing Number	Elect Reference Desig	Failure Detection	Function	Failure Type	Mission Phase	Failure Effect On Component Performance	Failure Effect On Sub-Systems Performance	Failure Effect On Apollo	Possible Crew Action
Helium tank			Helium pressure and temperature	Stores helium to pressurize propellant tanks	Leakage or burst		Loss of helium	Failure to feed propellants to engine	Mission degradation	Abort mission
Coupling, helium fill			Helium pressure and temperature	Fills and drains helium tanks	Leakage		Loss of helium	None, redundant cap	None	None
Cap			Helium pressure and temperature	Seals the helium fill and drain valve	Leakage after failure of fill and drain valve		Loss of helium	Failure to feed propellants	Mission degradation	Abort mission
			None		Leakage, no other failure		None	None, redundant fill and drain	None	None
Solenoid valve (N_2O_4)			None	Closes helium lines in the event of a downstream failure	Open		Pressure to regulators	Failure to close line, regulators redundant	None	None
			None		Closed		No helium for pressurization	None, redundant path	None	None
			Oxidizer and fuel tank pressure		Closed — both solenoid valves		No helium for pressurization	No propellant feed	Loss of spacecraft	None
Regulators			None for single failure	Regulates helium to pressurized propellant tanks	Open		Failure to regulate	None, redundant regulator	None	None
			None for single failure		Closed		Block helium flow	None, redundant path	None	Abort mission
			Oxidizer and fuel tank pressure		Open — both regulators in series		Nonregulated helium to tanks	None, path closed by solenoid valve resulting in excessive ΔP lost through relief valve	None	Close solenoid valve, abort mission
			None	Regulates helium	Closed, both regulators in series		No helium for pressurization	None, redundant path	None	None
			None		Two open, one in each path		None, redundant regulator in series	None, redundant path still available	None	None
			Tank pressure		Two closed, one in each path		No helium flow	No thrust	Loss of spacecraft	None

~~CONFIDENTIAL~~

~~CONFIDENTIAL~~

Table 2-35. Service Propulsion System Failure Effects Analysis (Cont)

Item	Drawing Number	Elect Reference Desig	Failure Detection	Function	Failure Type	Mission Phase	Failure Effect On Component Performance	Failure Effect On Sub-Systems Performance	Failure Effect On Apollo	Possible Crew Action
Check valves			None	Separates propellant vapors	Open one valve		None, redundant valve	None	None	None
			None		Open, two series valves		Leak propellant vapors	None	None	None
			None		Closed		None, redundant path	None, lost redundant path	None	None
			Tank pressure		Closed, two parallel valves		No helium flow	No propellants to engine	Mission degradation	Abort mission
Burst disk			Tank pressure	Prevents leakage, bursts when tank pressure is excessive	Failure to rupture		Failure to relieve excessive pressure	Burst tanks	Loss	Abort mission
			None		Leakage		Leak, helium or propellants	None, redundant relief valve	None	None
Relief valve			Tank pressure	Relieves excessive propellant tank pressure	Closed		Failure to relieve excessive pressure	Burst tanks	Loss of spacecraft	Operate engine to relieve pressure
			Tank pressure		Open, leakage after disk fails or bursts		Lose propellants and helium	Degraded thrust	Mission degradation	Abort mission
Filter			Tank pressure	Prevents particles from burst disk from entering relief valve	Blockage		Failure to let relief valve open	Tank burst if excessive ΔP	Loss of spacecraft	Operate engine to relieve pressure
			Tank pressure		Failure to stop particles		Failure to filter out particles	Causes failure in relief valve	Possible loss of spacecraft	Abort mission
Vent valve			Propellant utilization system	Ground operational vent tank during fill	Leakage		None, redundant cap	None	None	None
Cap			None	Seals vent valve	Leakage, only if vent valve fails		None, redundant with vent valve	None	None	None
Propellant tank			Propellant utilization system, helium tank pressure and temperature	Stores propellant	Leak or burst		Loss of propellants or helium	Loss of total impulse	Loss of spacecraft	Abort mission
Fill and drain valve			None	Fills and drains propellant, ground operational	Leak		None, redundant cap	None	None	None
Cap			Propellant utilization system, helium tank pressure and temperature	Seals fill and drain valve	Leakage, only if fill and drain valve fails		None, redundant with fill valve	None	None	None

~~CONFIDENTIAL~~

Table 2-35. Service Propulsion System Failure Effects Analysis (Cont)

Item	Drawing Number	Elect. Reference Desig.	Failure Detection	Function	Failure Type	Mission Phase	Failure Effect On Component Performance	Failure Effect On Sub-Systems Performance	Failure Effect On Apollo	Possible Crew Action
Lines			Propellant utilization system	Transfers propellants and helium	Leak		Loss of propellant or helium	Loss of total impulse	Mission degradation	Abort mission
Flex bellows			Propellant utilization system	Flex in-lines so engine can be gimbaled	Leak		Loss of propellants	Loss of total impulse	Mission degradation	Abort mission
Propellant filter			Chamber pressure and residual propellant measurement	Prevents particles from entering downstream engine valves	Blockage		No propellant flow	No thrust	Loss of spacecraft	None
			None		Open		Allow particles to pass	Possibility of downstream failures		
			Chamber pressure		Partial blockage		Excessive ΔP	Mixture ratio error	Reduced thrust	Abort
Propellant orifice			Chamber pressure and propellant utilization system	Balances system ΔP	Blockage		Stops propellant flow	No thrust	Loss of spacecraft	None
			Chamber pressure and propellant utilization system		Blockage, partial		Excessive ΔP	Mixture ratio error	Reduced thrust	Abort mission
Heat exchanger			Chamber pressure and propellant utilization system	Heats helium before it is used to pressurize tanks	Leakage, helium		Allows helium to mix with propellants	Possible combustion instability	Performance degradation	Abort mission
Propellant gaging and display			None	Continuous propellant quantity reading	Short, sensor failure		Incorrect or no reading	None, redundant	None	None
Manual flow control			None	Corrects oxidizer-fuel unbalance	Motor		None, redundant	None	None	None
			None		Valve		None, redundant	None	None	None
			None		Position indicator		None, redundant	None	None	None
Solenoid valve (pilot)			Propellant utilization system	Engine start	Leakage		None	Loss of fuel, redundant seals to stop overboard leak	Mission degradation	Possible abort mission
			Chamber pressure		Failure to open (one or two in series)		Failure to open propellant valves	None, loss of redundant path	None	Abort mission
			None		Failure to close		None, series redundant	None	None	None

~~CONFIDENTIAL~~

Table 2-35. Service Propulsion System Failure Effects Analysis (Cont)

Item	Drawing Number	Elect. Refer-ence. Desig.	Failure Detection	Function	Failure Type	Mission Phase	Failure Effect On Component Performance	Failure Effect On Sub-Systems Performance	Failure Effect On Apollo	Possible Crew Action
			Chamber pressure		Failure to close (two in series)		Keeps ball valves open	Engine will not stop	Loss of spacecraft	None
			Chamber pressure		Failure to open (one in each path)		Failure to open ball valves	Engine will not start	Loss of spacecraft	None
Valve actuator			None	Opens ball valves	Leak		None, redundant bellows	None	None	None
			Chamber pressure and main valve position indicator		Failure to open (one or two in path)		Failure to open ball valves	None, redundant path	None	Abort mission
			Chamber pressure and main valve position indicator		Failure to open (one in each path)		Failure to open valves	Engine will not start	Loss of spacecraft	None
			Chamber pressure and main valve position indicator		Failure to close (one in line or one in each line)		Valves stay open	None, redundant actuator and valves	None	None
			Chamber pressure and main valve position indicator		Failure to close (two in series)		Valves stay open	Engine will not stop	Loss of spacecraft	None
Fuel valve			None	Controls fuel flow	Leak (two seals)		None	Errosion of engine or "hard start"	Loss of engine	None
			Chamber pressure valve position indicator		Failure to open		No propellant flow	None, redundant path	None	Abort mission
			Chamber pressure valve position indicator		Failure to open (one in each path)		No propellant flow	Engine will not start	Loss of spacecraft	None
			Propellant utilization system		Failure to close (two in series)		Will not stop flow	Loss of all fuel	Loss of spacecraft	None

~~CONFIDENTIAL~~

Table 2-35. Service Propulsion System Failure Effects Analysis (Cont)

Item	Drawing Number	Elect. Reference. Desig.	Failure Detection	Function	Failure Type	Mission Phase	Failure Effect On Component Performance	Failure Effect On Sub-Systems Performance	Failure Effect On Apollo	Possible Crew Action
			Valve position indicator		Failure to close		Will not stop flow	None, series redundant valve	None	None
Oxidizer valves (see fuel valve above)										
Check valve actuator vent			None	Relieves pressure so actuators may be closed	Leakage		None, redundant	None	None	None
			None		Open		None, redundant	None	None	None
			None		Closed		None, redundant	None	None	None
			Valve position indicator, chamber pressure		Two closed (one in each path)		Block flow overboard	Cannot shut off valves engine, continues to burn	Loss of spacecraft	None
Injector			None	Mixes propellants	Plugged orifice		None	None, low thrust	Mission degradation	None
			Chamber pressure		Burnout		Loss of injector and chamber	Loss of engine	Mission degradation	None
Chamber and nozzle			Chamber pressure	Contains burning propellants	Excessive erosion		Low chamber pressure	Reduces total impulse	Mission degradation	Abort
			Chamber pressure		Burnout		Exhaust gas leak	No thrust	Loss of spacecraft	None
Gimbal bearing			None	Allows engine to be gimbaled	Break or failure to flex		None, redundant	None	None	None
Gimbal actuator ball screw			Gimbal angle indicator	Provides thrust vector control	Stuck		Failure to gimbal	None	Loss of thrust vector control	Abort
Motor			None	Provides torque to gimbal engine	Will not run		None, redundant motor	None	None	None
Clutches			None	Transmits torque	Engage		Will not gimbal	None, redundant	None	None
			None		Disengage		Gimbal hard over	None, use redundant motor	None	Shut off motor
Gear train			Gimbal angle indicator	Operates jack screw	Jammed		Failure to gimbal	None	Loss of thrust vector control	Abort
RFI filter			None	Reduction of radio interferences (gimbal actuator)	Excessive current		Leads shorted or grounded	Introduces interfering signals	Malfunctioning of communications	None

Table 2-35. Service Propulsion System Failure Effects Analysis (Cont)

Item	Drawing Number	Elect. Reference Desig	Failure Detection	Function	Failure Type	Mission Phase	Failure Effect On Component Performance	Failure Effect On Sub-Systems Performance	Failure Effect On Apollo	Possible Crew Action
Position transducer			None	Provides voltage output proportional to actuator ram displacement (gimbal actuator)	Loss of excitation power, failure to sense		No signal output	Reports an erroneous actuator position	Switch is to redundant channel	None
Velocity generators			None	Provides voltage output proportional to actuator ram rates (gimbal actuator)	Loss of excitation power, failure to sense		No output from velocity generator	None	None	None
Electrical harness			None	Provides power to the SPS system (gimbal actuator)	Short circuit, open circuit			No electrical power	Loss of spacecraft	None

III. ELECTRONIC SUBSYSTEM ANALYSIS

SUMMARY

Detailed investigations of reliability of electronic subsystems are continuing around the framework of expanded failure effect analyses down to the subassembly level. These detailed analyses will be used as the basis for updated logic diagrams by mission phase in accordance with the NASA approved mission profile timeline for the LOR mission. They also will be used in connection with selection of the points to be sensed (for on-board displays as well as telemetered data) for monitoring system status throughout the mission.

The expanded and updated logic diagrams also are being used for optimizing the on-board spares complement for achieving highest mission reliability with minimum weight.

The logic diagrams shown in Figures 3-1 through 3-21 represent the updated Apollo electronic safe abort configurations for the respective phases of the LOR mission; these diagrams are essentially at the component level of assembly except where interplay of functions dictates the use of subassembly logic for portrayal of the physical system with the required rigor. Figures 3-22 through 3-55 show the subassembly logic diagrams for the Apollo electronic subsystems.

These revised logic diagrams and the optimized on-board spares complement within existing weight constraints were made available to the Associate Contractor, MIT, during the recent reliability coordination meeting. It is anticipated that the data will be made available to GAEC at a forthcoming coordination meeting called to implement integration activity between the LEM associate contractor and NAA.

~~CONFIDENTIAL~~

ANALYSIS

Logic diagrams shown in Figures 3-1 through 3-21 represent updated safe abort configurations for the Apollo electronics for representative phases of the LOR mission as determined by the mission profile time line and the various alternate modes available for each phase.

The dotted lines indicate that the lowest level of sparing can only be accomplished with all the cards contained within the enclosure.

Double lines indicate that these subassemblies are not separable because the physical and electrical restraints preclude the ability to spare these items.

Redundancy indicated with the use of arrows are for nonoperating items (i.e., on-board spares or standby components).

Figure 3-1 represents the equipment that monitors the launch vehicle operation from 100,000 feet to earth orbit. Between launch and 100,000 feet, the emergency detection system will initiate abort automatically if the launch vehicle departs from the trajectory by a specified rate. The monitoring function of Apollo electronics indicated in Figure 3-1 is based upon the G&N sensing and computing electronics comprised of the inertial measuring unit, coupling display unit, and Apollo guidance computer. These items provide the required information with the utilization of the stabilization and control rate sensing from the rate gyro package, or body mounted attitude gyros, and displays by the flight direction attitude indicator, and control panel. Other means of functional redundancy are provided by the communications and data C-band and unified S-band equipment, AM transmitter receiver, discone antenna, audio center receiver, transmitter, and premodulation processor (deep space voice). To assure that the monitoring equipment is functioning properly, the following equipment is utilized in conjunction with GOSS: Central timing equipment oscillator, signal conditioning, sensors, pulse code modulation telemetry, FM transmitter, and premodulation processor (near earth data).

Figure 3-2 indicates the equipment necessary to perform SIVB separation. The only subsystem utilized in this function is the stabilization and control; two modes of operation are considered, the primary being the use of either of the two hand controls and the reaction jet driver circuits, the secondary being that of direct emergency ullage for +x translation.

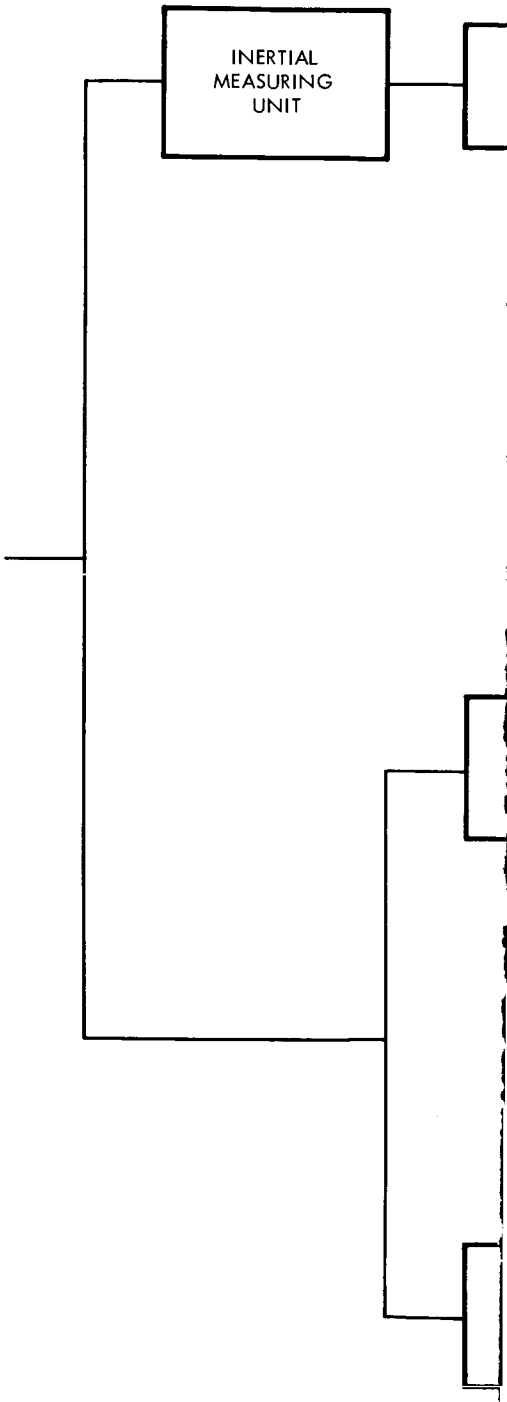
INERTIAL
MEASURING
UNIT

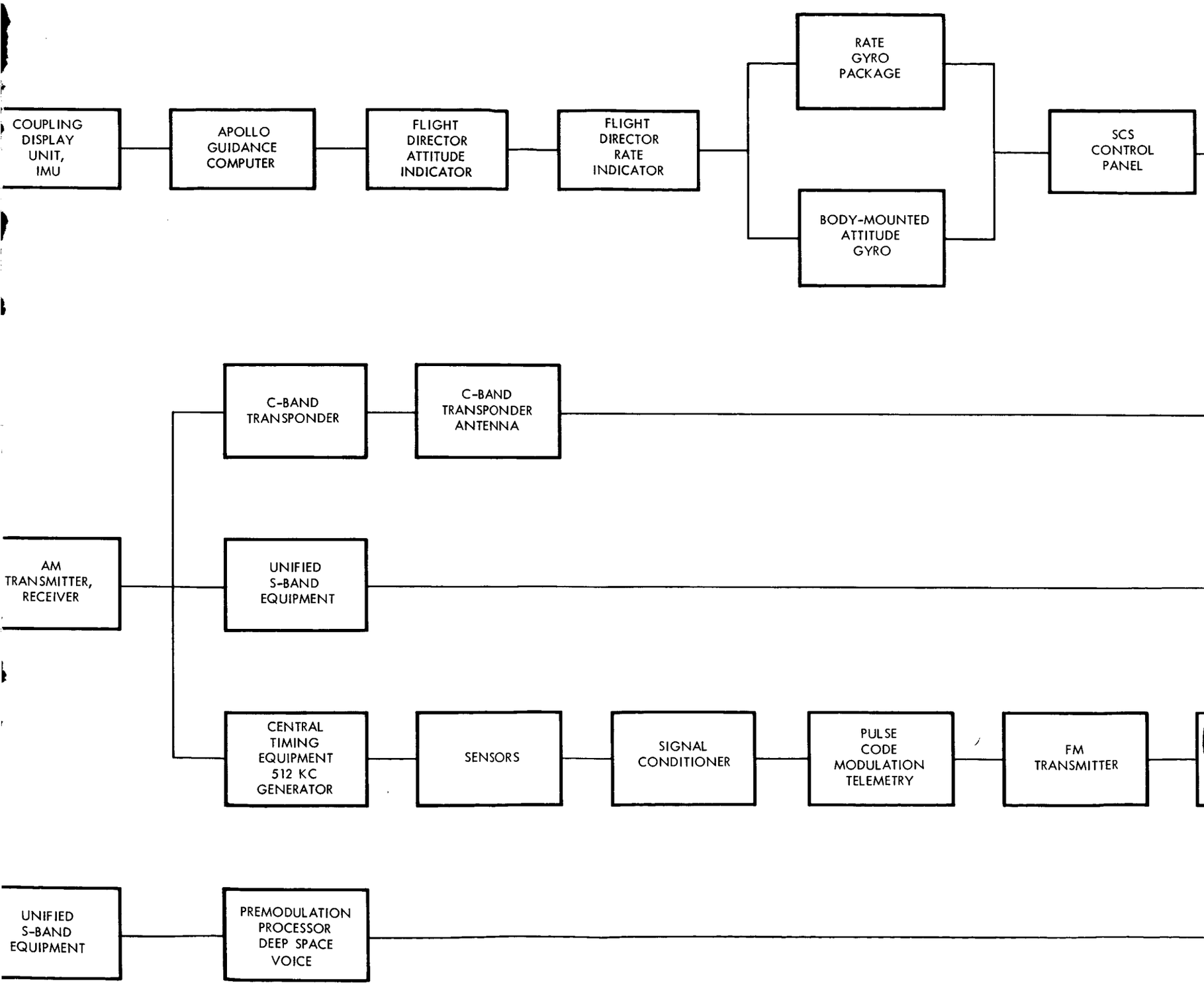
COUPLING DISPLAY UNIT, IMU
APOLLO GUIDANCE COMPUTER
FLIGHT DIRECTOR ATTITUDE INDICATOR
FLIGHT DIRECTOR RATE INDICATOR
RATE GYRO PACKAGE
BODY-MOUNTED ATTITUDE GYRO
SCS CONTROL PANEL
AM TRANSMITTER, RECEIVER
C-BAND TRANSPONDER
C-BAND TRANSPONDER ANTENNA
UNIFIED S-BAND EQUIPMENT
CENTRAL TIMING EQUIPMENT 512 KC GENERATOR
SENSORS
SIGNAL CONDITIONER
PULSE CODE MODULATION TELEMETRY
FM TRANSMITTER
UNIFIED S-BAND EQUIPMENT
PREMODULATION PROCESSOR DEEP SPACE VOICE

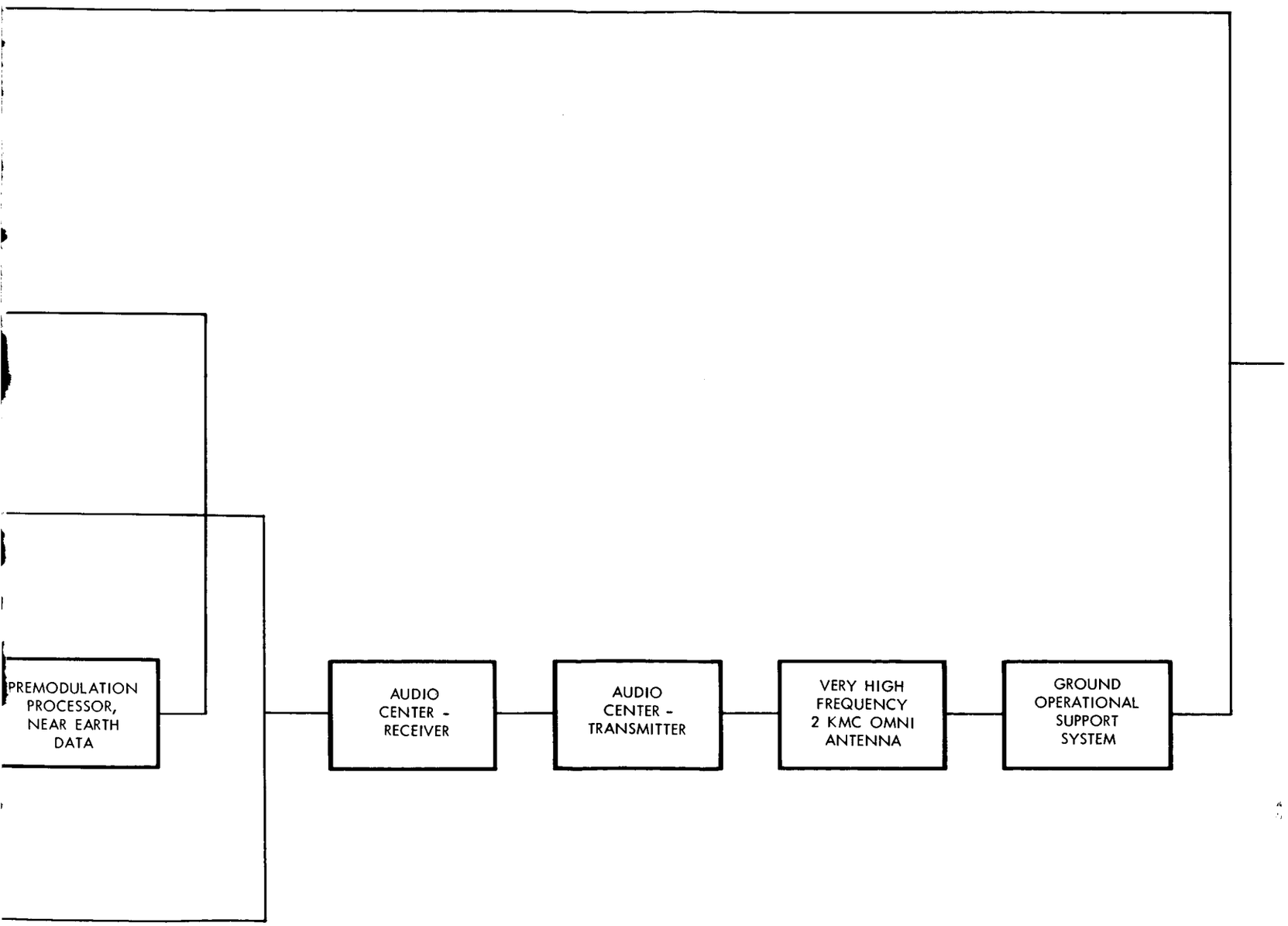

Figure 3-1. 100,000-Feet-to-Earth Orbit

~~CONFIDENTIAL~~

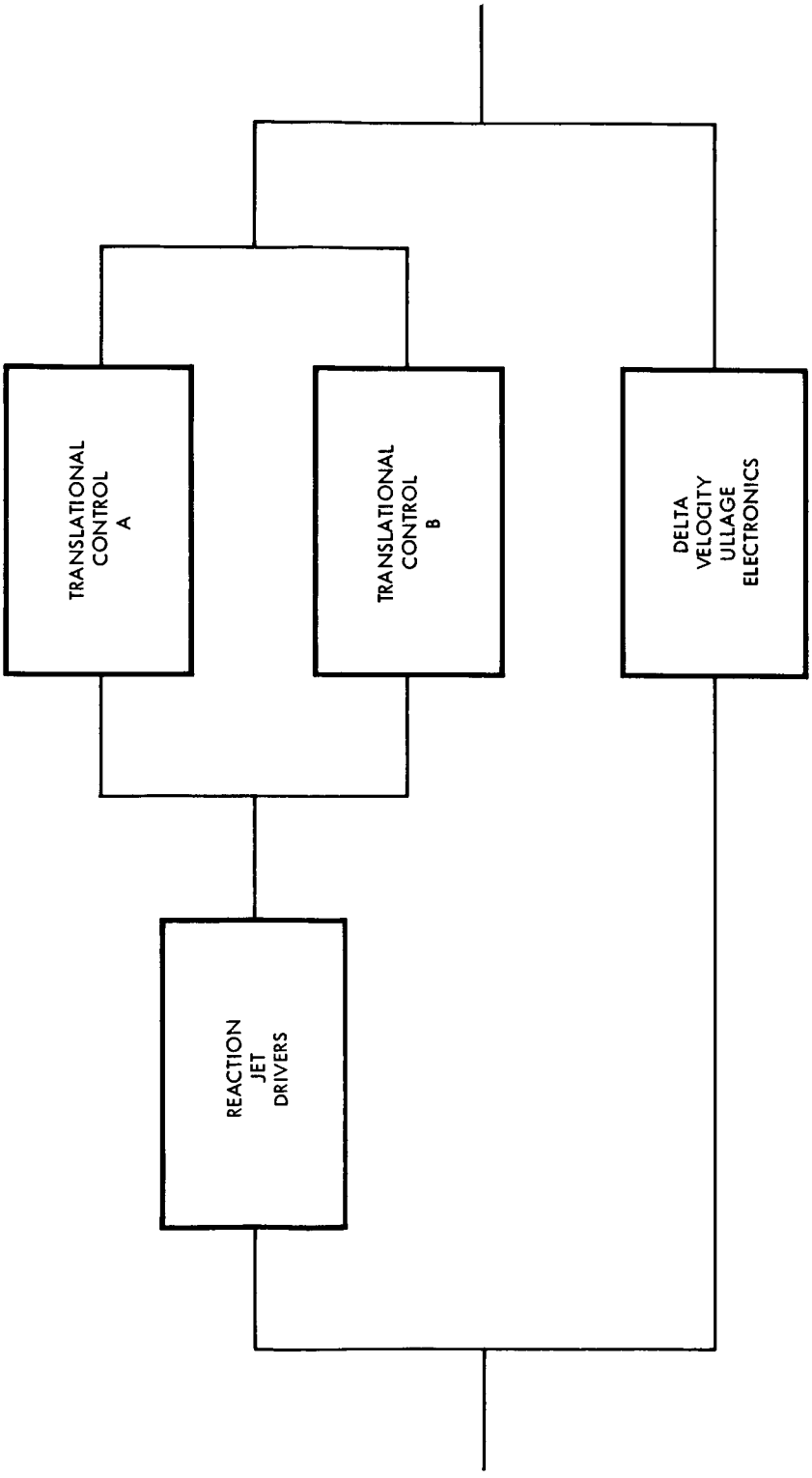

Figure 3-2. S-IV-B Separation

~~CONFIDENTIAL~~

~~CONFIDENTIAL~~

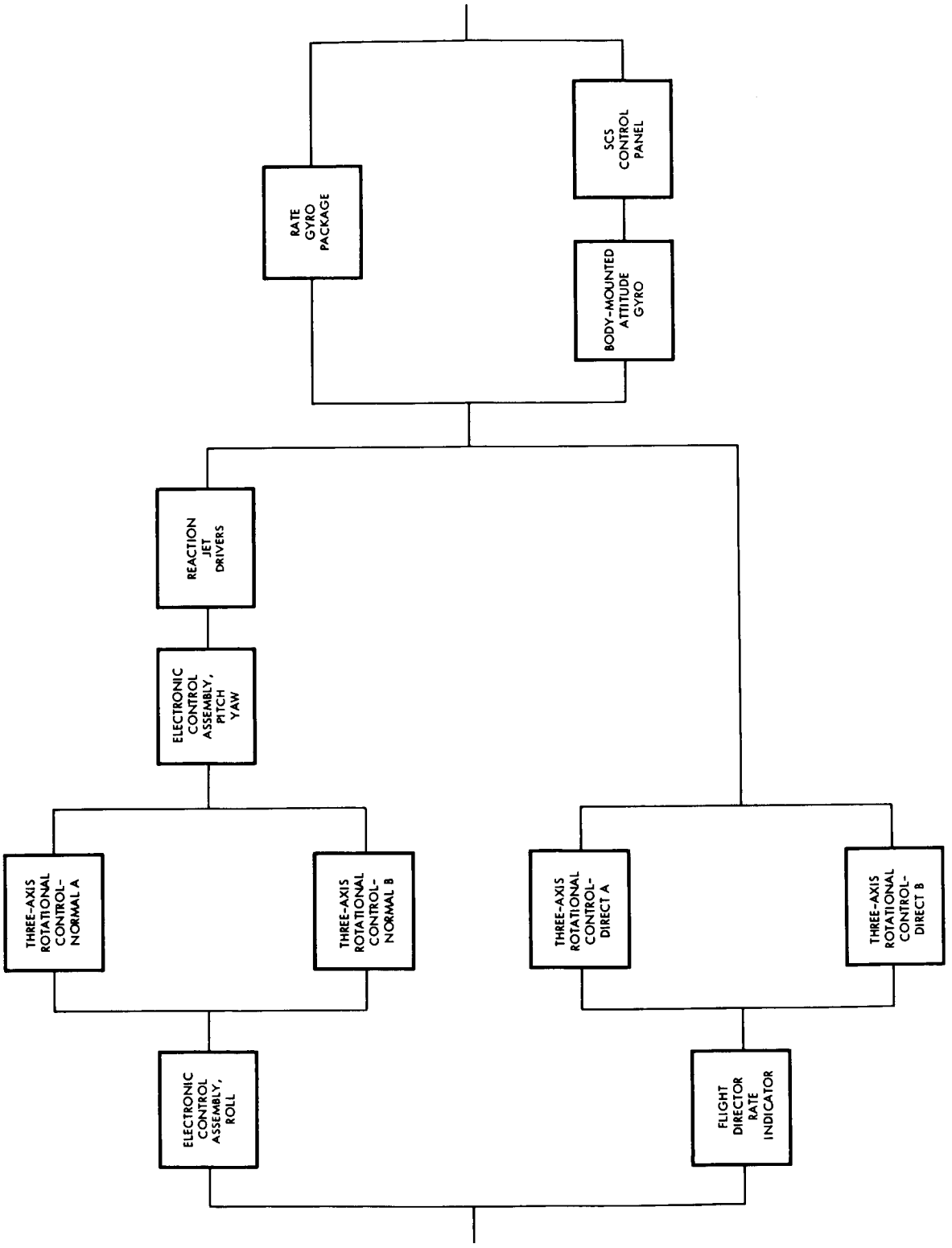

Figure 3-3. Abort Attitude Maneuver

~~CONFIDENTIAL~~

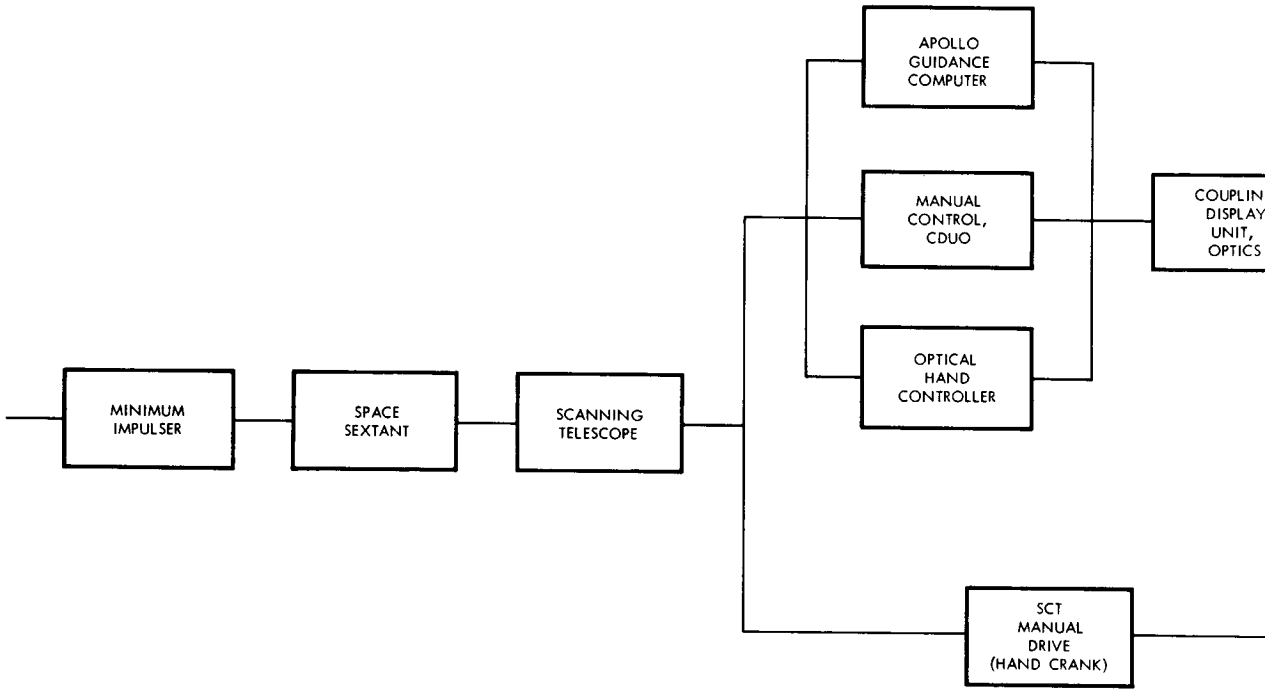

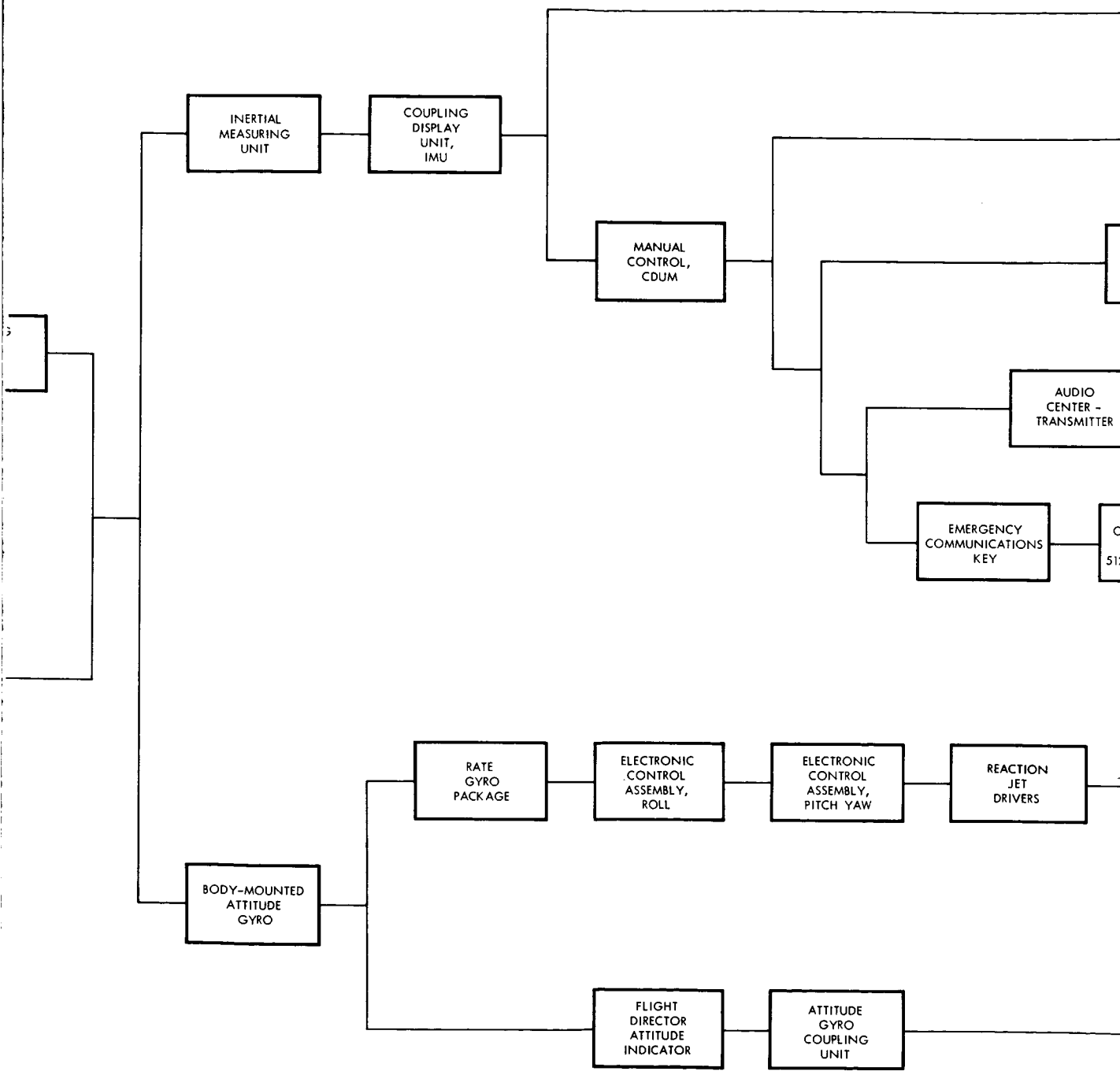
INERTIAL MEASURING UNIT
COUPLING DISPLAY UNIT, IMU
MANUAL CONTROL, CDUM
AUDIO CENTER - TRANSMITTER
EMERGENCY COMMUNICATIONS KEY
BODY-MOUNTED ATTITUDE GYRO
RATE GYRO PACKAGE
ELECTRONIC CONTROL ASSEMBLY, ROLL
ELECTRONIC CONTROL ASSEMBLY, PITCH YAW
REACTION JET DRIVERS
FLIGHT DIRECTOR ATTITUDE INDICATOR
ATTITUDE GYRO COUPLING UNIT

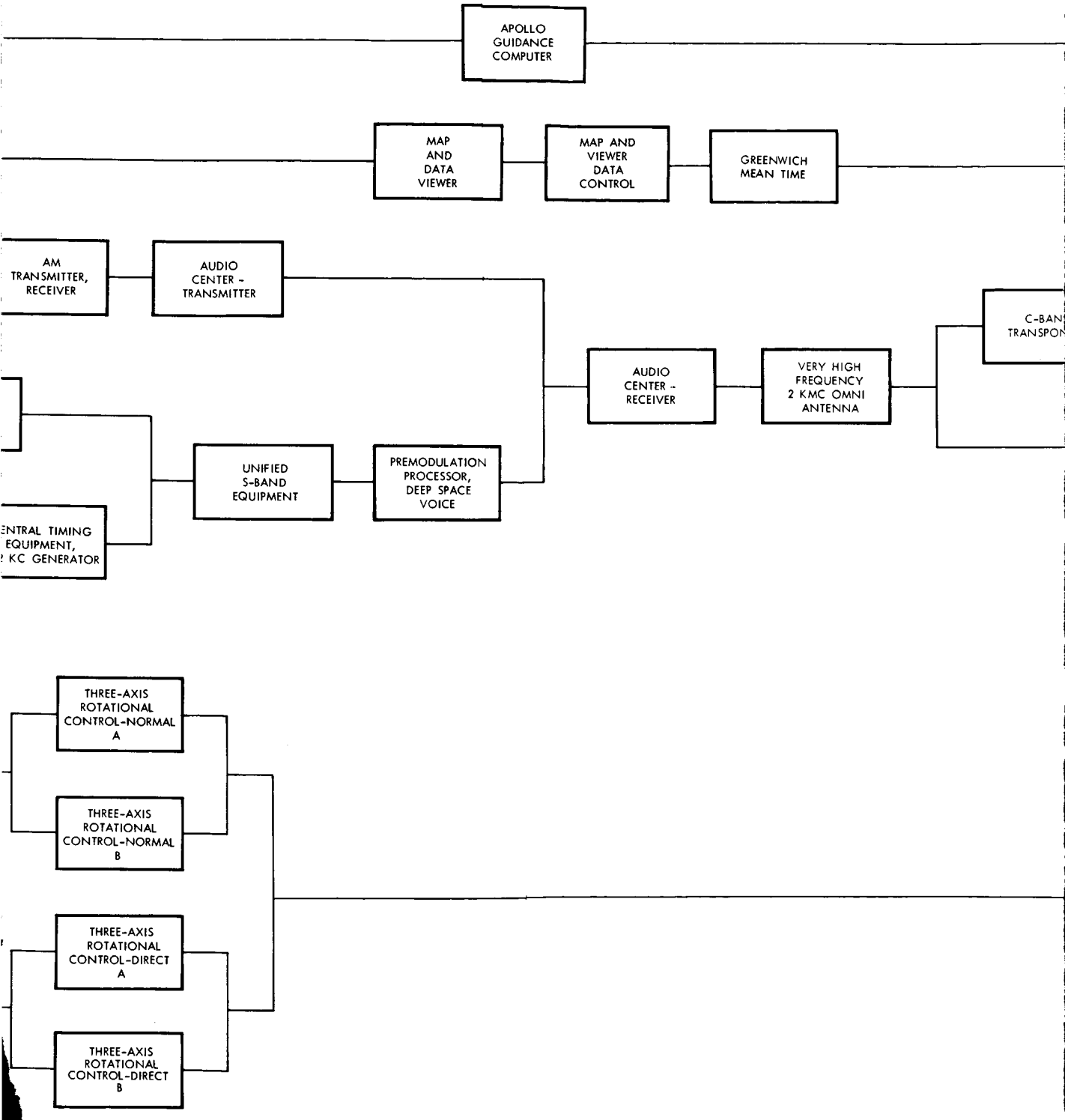
APOLLO GUIDANCE COMPUTER
MAP AND DATA VIEWER
MAP AND VIEWER DATA CONTROL
GREENWICH MEAN TIME
AM TRANSMITTER, RECEIVER
AUDIO CENTER - TRANSMITTER
AUDIO CENTER - RECEIVER
VERY HIGH FREQUENCY 2 KMC OMNI ANTENNA
UNIFIED S-BAND EQUIPMENT
PREMODULATION PROCESSOR, DEEP SPACE VOICE
THREE-AXIS ROTATIONAL CONTROL-NORMAL A
THREE-AXIS ROTATIONAL CONTROL-NORMAL B
THREE-AXIS ROTATIONAL CONTROL-DIRECT A
THREE-AXIS ROTATIONAL CONTROL-DIRECT B

NO

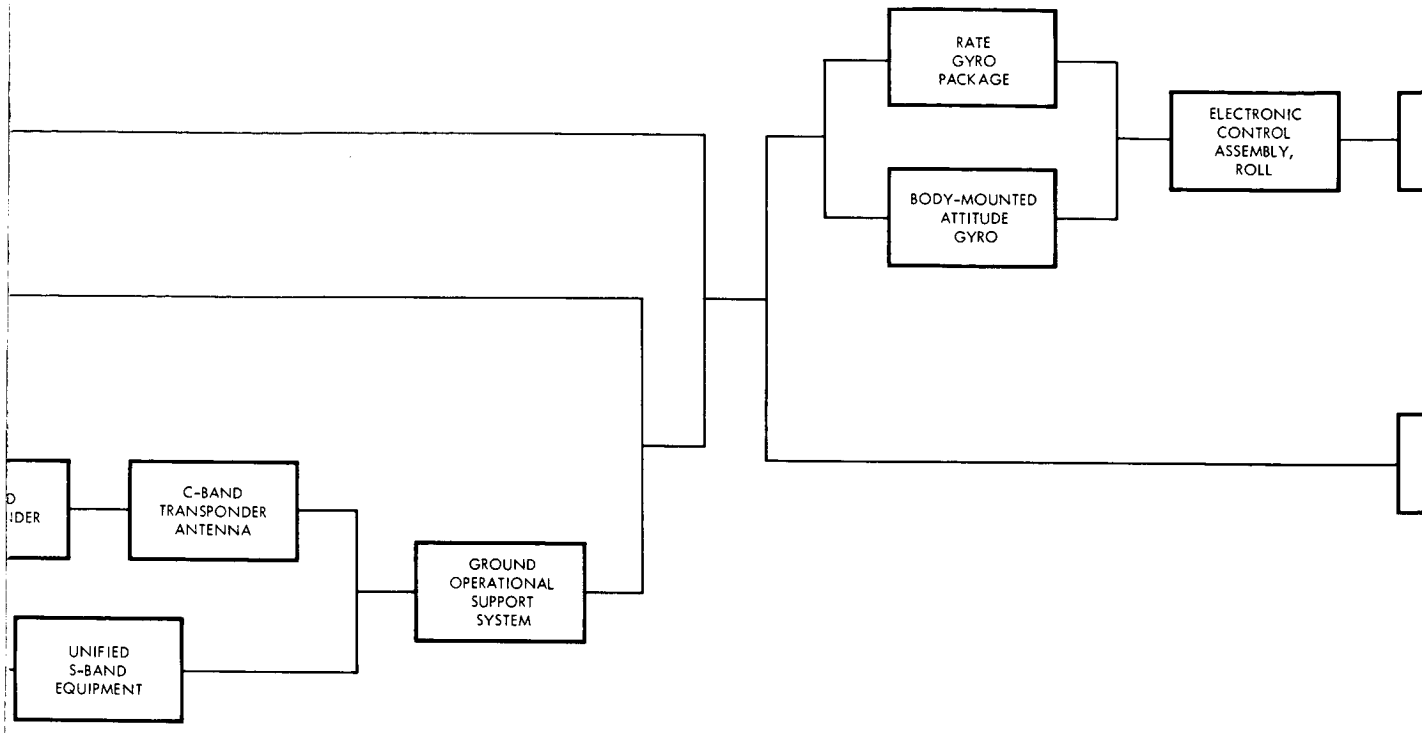
RATE
GYRO
PACKAGE
BODY-MOUNTED
ATTITUDE
GYRO
ELECTRONIC
CONTROL
ASSEMBLY,
ROLL
C-BAND
TRANSPONDER
ANTENNA
GROUND
OPERATIONAL
SUPPORT
SYSTEM
UNIFIED
S-BAND
EQUIPMENT

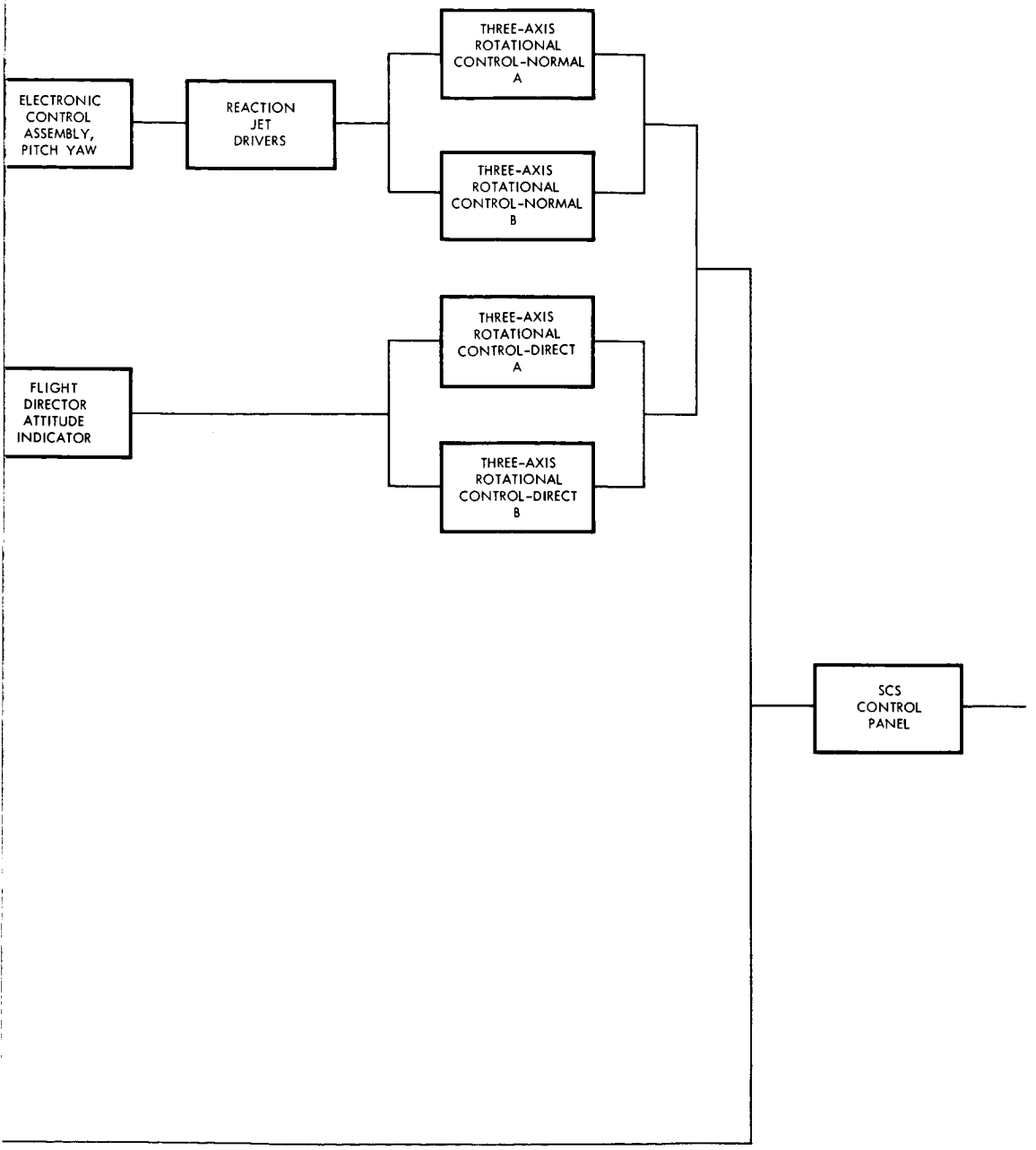

Figure 3-4. Platform Erection, Cisearth

Figure 3-3 indicates the equipment necessary for abort attitude maneuver. The primary mode in performing this function utilizes the stabilization and control electronic control assembly (roll, pitch, and yaw), either of the two three-axis rotational controls (normal) reaction jet driver circuits, rate gyro package or body-mounted attitude gyros, and the stabilization and control panel. The secondary mode can perform the function by means of either of the three-axis rotational controls (direct) and the rate indicator which is supplied with rate information by the rate gyro package or the body-mounted attitude gyros in the rate mode.

Figure 3-4 shows the equipment necessary to perform a cisearth platform erection. The sextant and the scanning telescope are used for optical sighting. The optical control function is performed by the manual control (CDUO) or the optical hand controls with the coupling display unit optics. The optical control function also can be performed by the use of the coupling display unit slew dials. The Apollo guidance counter is used in performing the computation function.

The primary mode, which is that of erecting the inertial measuring unit, consists of navigational and guidance inertial measuring unit, coupling display unit, Apollo guidance computer or the manual control-CDUM, with the following communications and data equipment acting as a secondary backup to the Apollo guidance computer: AM transmitter and receiver, C-band transponder, C-band antenna, ground operation support system, unified S-band, premodulation processor (deep space voice), emergency communications key, and central timing equipment (512KC oscillator).

The primary backup is the navigation and guidance map and data viewer with controls and the clock with the necessary central timing equipment.

To control the spacecraft during this function, the stabilization and control rate gyro package or body-mounted attitude gyros are utilized for rate damping in conjunction with electronic control assembly (roll, pitch, and yaw), three-axis rotational controls/normal, and their reaction jet driver circuits. If failure should occur in any of this equipment, the three-axis rotational controls/direct may be utilized with the flight detector attitude indicator to perform the same control function.

The secondary mode is that of erecting or aligning the body-mounted attitude gyros. Again the optics and optic controls must be utilized in addition to the rate gyro package, the body-mounted attitude gyros, electronic control assembly (roll, pitch and yaw), three-axis rotational controls/normal, and the reaction jet driver circuits. If failure should occur in any SCS equipment other than the body-mounted attitude gyros, the three-axis rotational controls/direct, the attitude gyro coupling unit, flight director attitude indicator, and the body-mounted attitude gyros may be used to perform the same function.

For any one of the foregoing modes, the stabilization control panel must function for such operations as mode select, channel disable, and dead band adjust.

Figure 3-5 indicates the equipment and modes utilized in performing a cisearth navigational sighting. Two primary modes are utilized in obtaining the needed function. The primary consists of landmark sighting utilizing a scanning telescope for landmark acquisition, coupling display unit optics, and either the optical hand controller or the manual control-CDUO.

For computation purposes, the Apollo guidance computer is used. In conjunction with land sighting, attitude reference must be utilized, obtained either by the inertial measuring unit or the body-mounted attitude gyros. Spacecraft control is handled by the stabilization and control three-axis rotational controls-normal, electronic control assembly (pitch, yaw, and roll), rate gyro package, or the body-mounted attitude gyro in the rate mode, inertial measuring unit, and reaction jet driver circuits. If a failure occurs in the automatic electronic function for control of the spacecraft, a possible backup exists by utilizing the three-axis rotational controls-direct, flight director attitude indicator in conjunction with inertial measuring unit, or the body-mounted attitude gyros and the attitude gyro coupling unit. For any onboard control of the spacecraft, the stabilization control panel must be functional.

The secondary mode for the performance of a cisearth navigational sighting utilizes the communications and data, instrumentation, and ground operational support system consisting of the following: AM transmitter, and audio center transmitter, audio center receiver, VHF 2 KMC omni antenna, C-band transponder and antenna, and GOSS. In case of a failure of the AM transmitter-receiver or audio center transmitter or both, the unified S-band premodulation processor deep-space voice, audio center transmitter (if functional) provides an alternate path. In the event of an audio center failure, the function can be performed by the emergency communications key and the central timing equipment 512 KC generator. In the event of a malfunction of the C-band transponder and antenna, the unified S-band will perform the necessary function.

Figure 3-6 shows the Apollo monitoring function during translunar injection. The diagram shows in the primary path the on-board equipment necessary to monitor trajectory and attitude by the use of the guidance and navigation inertial measuring unit with its coupling display unit, Apollo guidance computer for trajectory comparisons, and the stabilization and control subsystem rate gyro package, backed up by the body-mounted attitude gyros for rate sensing plus the rate display portion of the flight director attitude indicator and the control panel for its switching functions.

~~CONFIDENTIAL~~

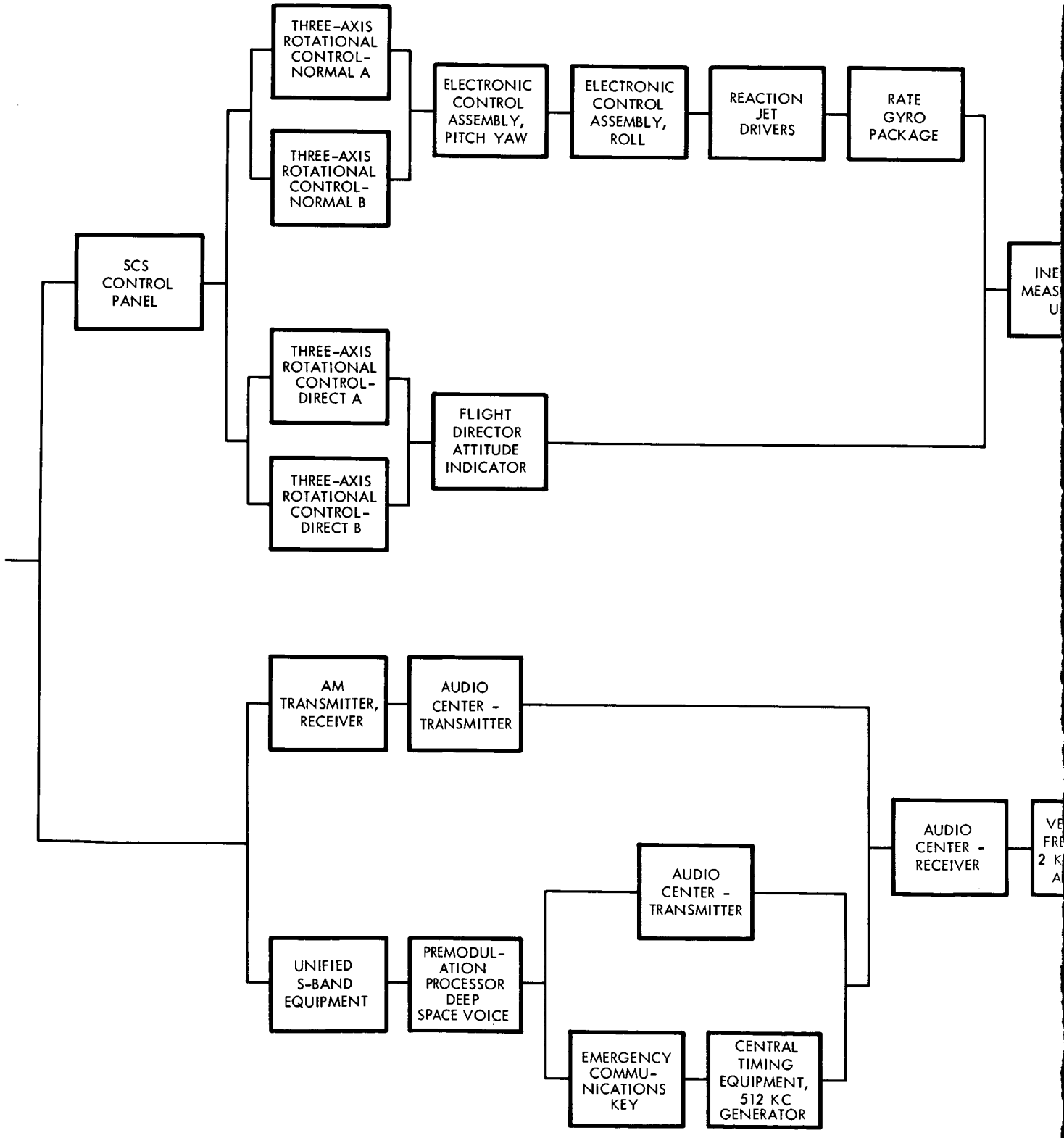

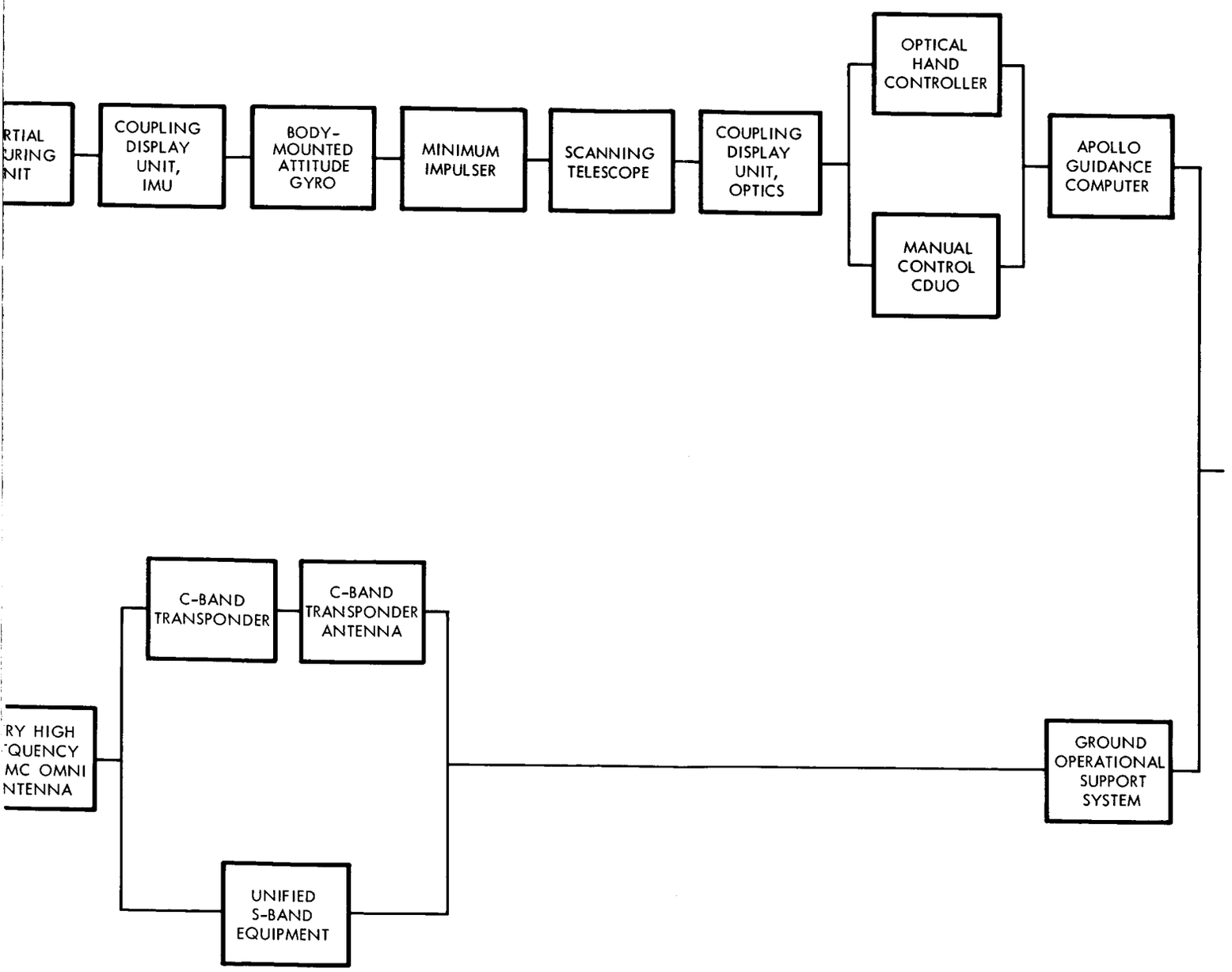

Figure 3-5. Navigational Sighting, Cisearth

~~CONFIDENTIAL~~

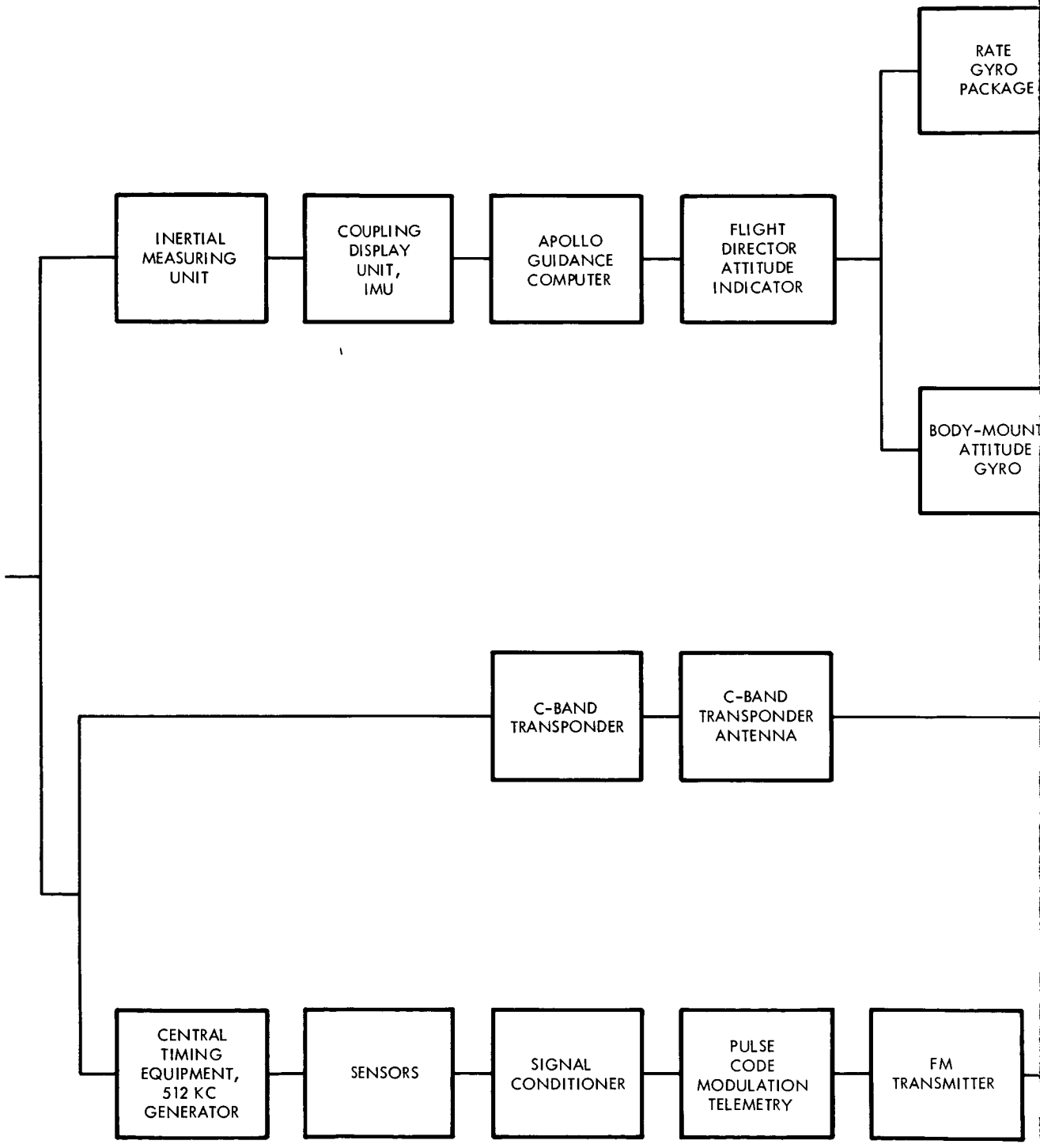

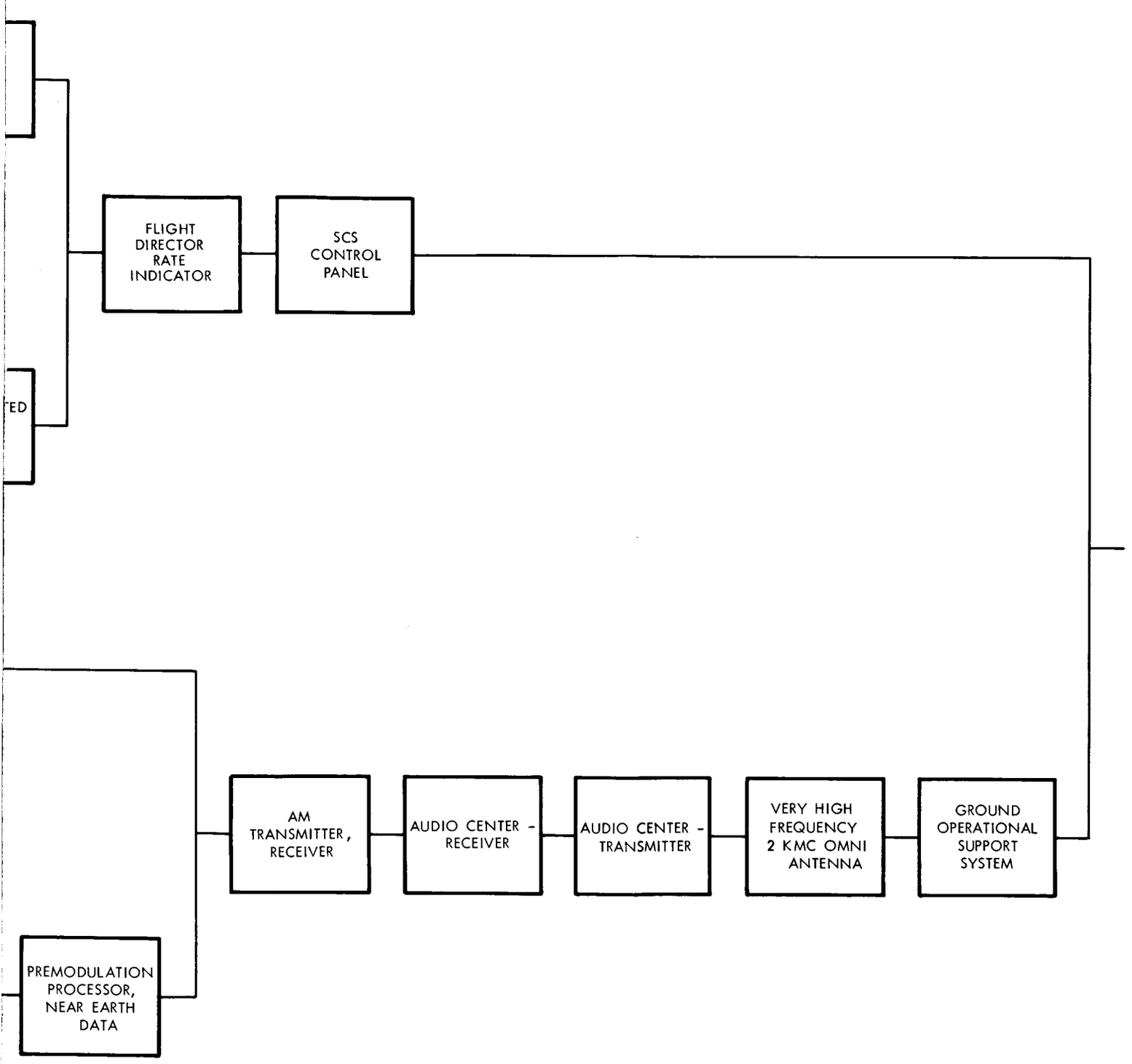

Figure 3-6. Translunar Injection

In the secondary path the C-band transponder and its antenna, plus the C&D's am transmitter and receiver, the audio center VHF/2KMC omni antenna and ground operational support equipment are utilized. The monitor function includes assurance that the onboard equipment is functioning properly. This is achieved by the central timing equipment (512 KC), oscillator, sensors, signal conditioning, pulse code modulation telemetry, F-M transmitter and the premodulation processor near earth data. All this equipment also utilizes C&D voice communications and ground operational support equipment.

Figure 3-7 shows the equipment required for a dwell and coast configuration utilized in the orbital dwell phases. The spacecraft is held with the pitch and yaw in a deadband and the roll channel free to drift. This cuts fuel consumption, since roll is the only type of maneuver necessary for aligning the craft for a navigation sighting.

Basically, two modes of operation are utilized. The first utilizes the electronic control assembly (roll, pitch, and yaw), reaction jet drivers, the navigation and guidance inertial measuring unit, coupling display unit (IMU), Apollo guidance computer backed up by the manual control of the IMU coupling display unit, and the rate gyro package backed up by the body-mounted attitude gyros. In the event of failure of the guidance and navigation equipment in this mode, the body-mounted attitude gyro package and the rate gyro package will provide the needed attitude reference and rate damping function. The secondary mode utilizes the three-axis rotational control/direct, flight director attitude indicator, and the inertial measuring unit backed up by the body-mounted attitude gyro package with the attitude gyro coupling unit. For both primary and secondary modes, the stabilization and control panel must function for such operations as mode select, channel disable, and deadband adjust.

Figure 3-8 shows the equipment necessary to perform a dwell and coast phase in deep space. There are two basic modes of operation. The first uses the stabilization and control subsystem equipment consisting of the control panel, electronic control assemblies (roll, pitch, yaw), reaction jet drivers, body-mounted gyros for attitude reference and the rate gyro package for rate damping. The body-mounted attitude gyros are backed up by the inertial measuring unit in standby for attitude reference.

The secondary mode utilizes the three-axis rotational controls-direct with the flight director attitude indicator and the body mounted attitude gyros with the inertial measuring unit in standby as an attitude reference.

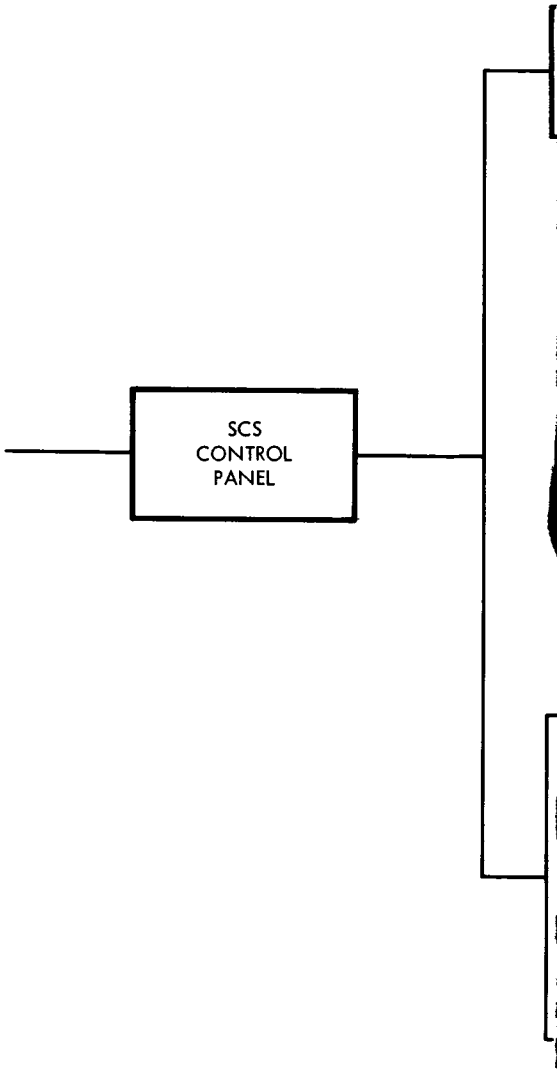
SCS
CONTROL
PANEL

NO

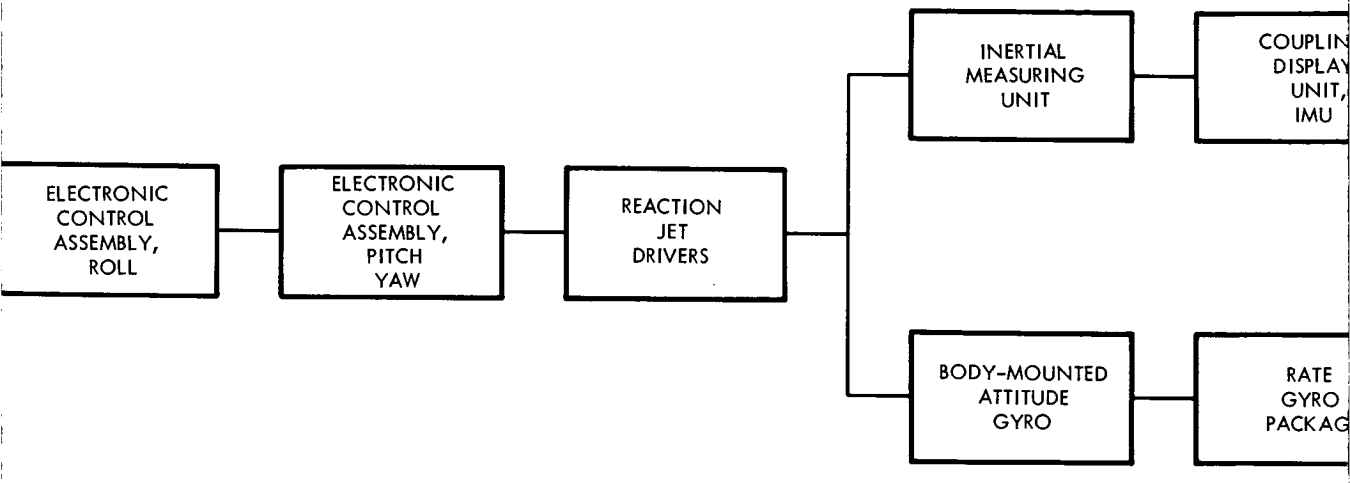
ELECTRONIC CONTROL ASSEMBLY, ROLL
ELECTRONIC CONTROL ASSEMBLY, PITCH YAW
REACTION JET DRIVERS
INERTIAL MEASURING UNIT
COUPLIN DISPLAY UNIT, IMU
BODY-MOUNTED ATTITUDE GYRO
RATE GYRO PACKAG

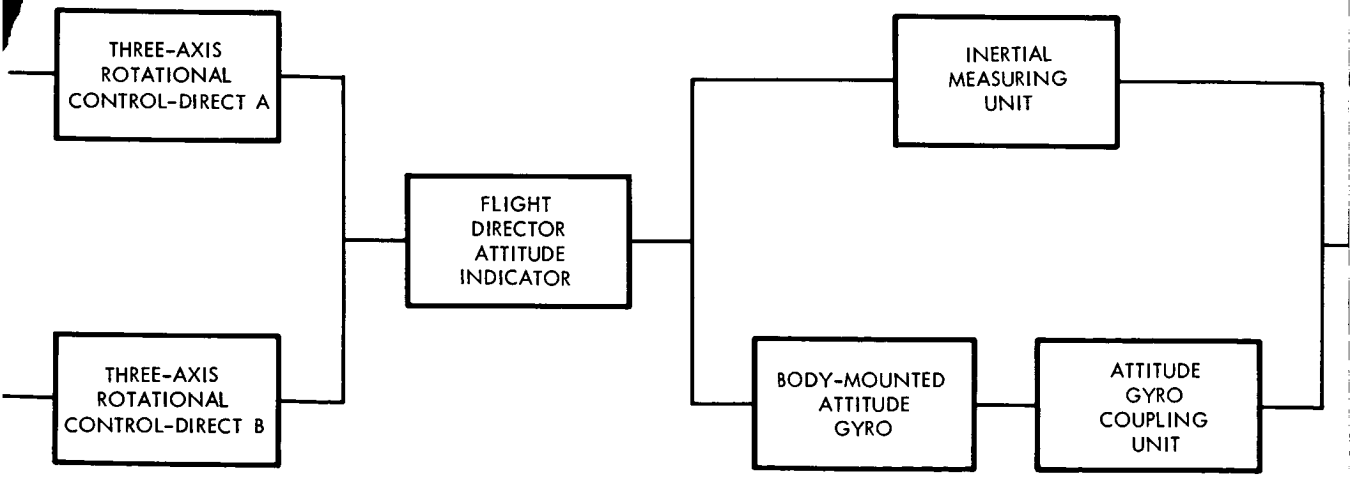
THREE-AXIS ROTATIONAL CONTROL-DIRECT A
THREE-AXIS ROTATIONAL CONTROL-DIRECT B
FLIGHT DIRECTOR ATTITUDE INDICATOR
INERTIAL MEASURING UNIT
BODY-MOUNTED ATTITUDE GYRO
ATTITUDE GYRO COUPLING UNIT

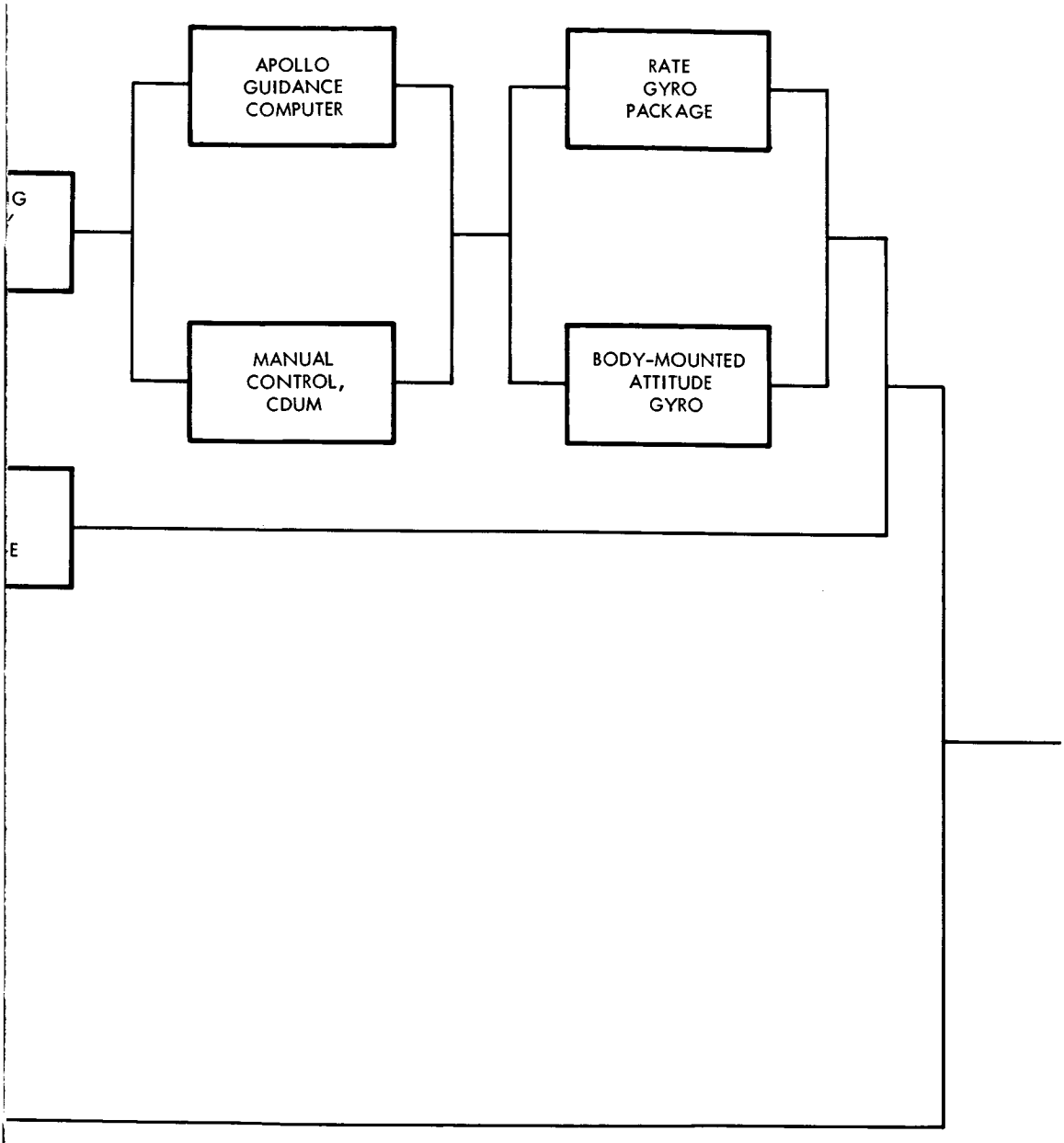

Figure 3-7. Dwell and Coast Earth Orbit

~~CONFIDENTIAL~~

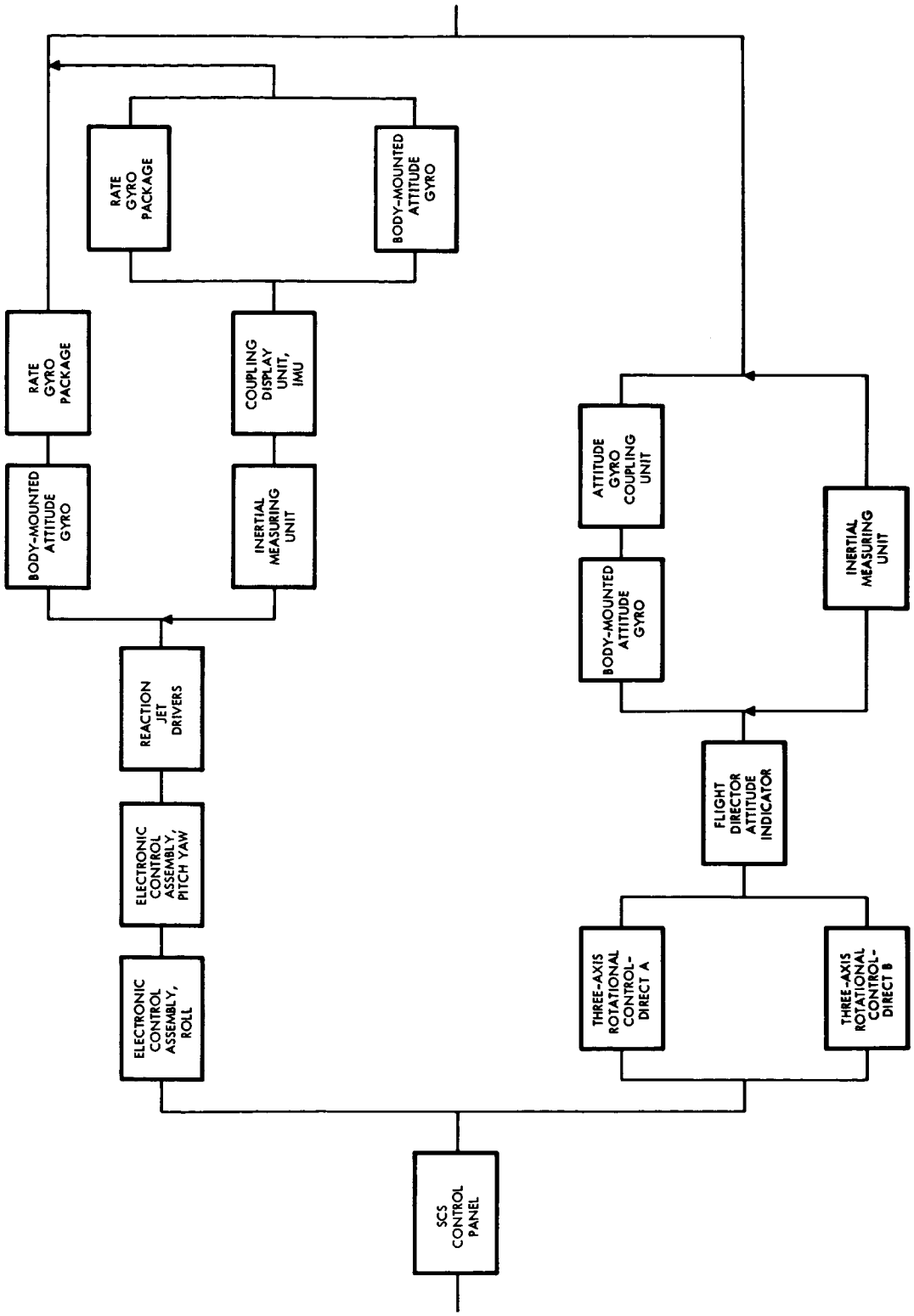

Figure 3-8. Dwell and Coast, Deep Space

~~CONFIDENTIAL~~

Figure 3-9 shows the modes and equipment utilized for performing a deep space platform erection. This function is the same as in Figure 3-4 except for the communication utilized. Because the C-band is of no use in deep space, the unified S-band and its associated equipment is utilized.

Figure 3-10 shows the modes and equipment used in navigational sightings during translunar and transearth phases of the mission. The three basic modes are as follows:

1. The stabilization and control subsystem equipment utilized for spacecraft control are the three-axis rotational controls-normal control panel, electronic control assemblies (roll, pitch, yaw), and the reaction jet drivers. The primary attitude sensing elements are the body-mounted attitude gyro and the rate gyro packages. If a failure should occur in either the body-mounted gyros or the rate gyro package, the inertial measuring unit, coupling display unit-IMU, and the body-mounted gyros in the rate mode or the rate gyro package (whichever is still functioning) can perform the function. The Apollo guidance computer, space sextant, and scanning telescope are used for computing during navigation sighting. These are utilized in conjunction with the optical control which consists of the coupling display optics and the optical hand controls.

2. If a failure occurs in the control function of the stabilization and control subsystem such as the electronic control assembly (roll, pitch, yaw), or the reaction jet drivers, the three-axes rotational controls-direct are utilized with the flight direction attitude indicator plus either the body-mounted attitude gyro with the attitude gyro coupling unit or the inertial measuring unit.

3. The tertiary mode of operation is the communication and data equipment used for tracking and voice communications plus the ground operational support equipment. For voice transmission the 2KC high gain antenna is used, backed up with the VHF/2KMC omni antenna and the power amplifier both working with the audio center transmitter. If the audio center transmitter should fail, the high-gain antenna can be utilized or the VHF/2KMC omni antenna plus the central timing equipment (512 KC oscillator) and the emergency communication key. All this equipment must have the use of the unified S-band for tracking plus the premodulation processor-deep space voice and the audio center receiver.

[redacted]

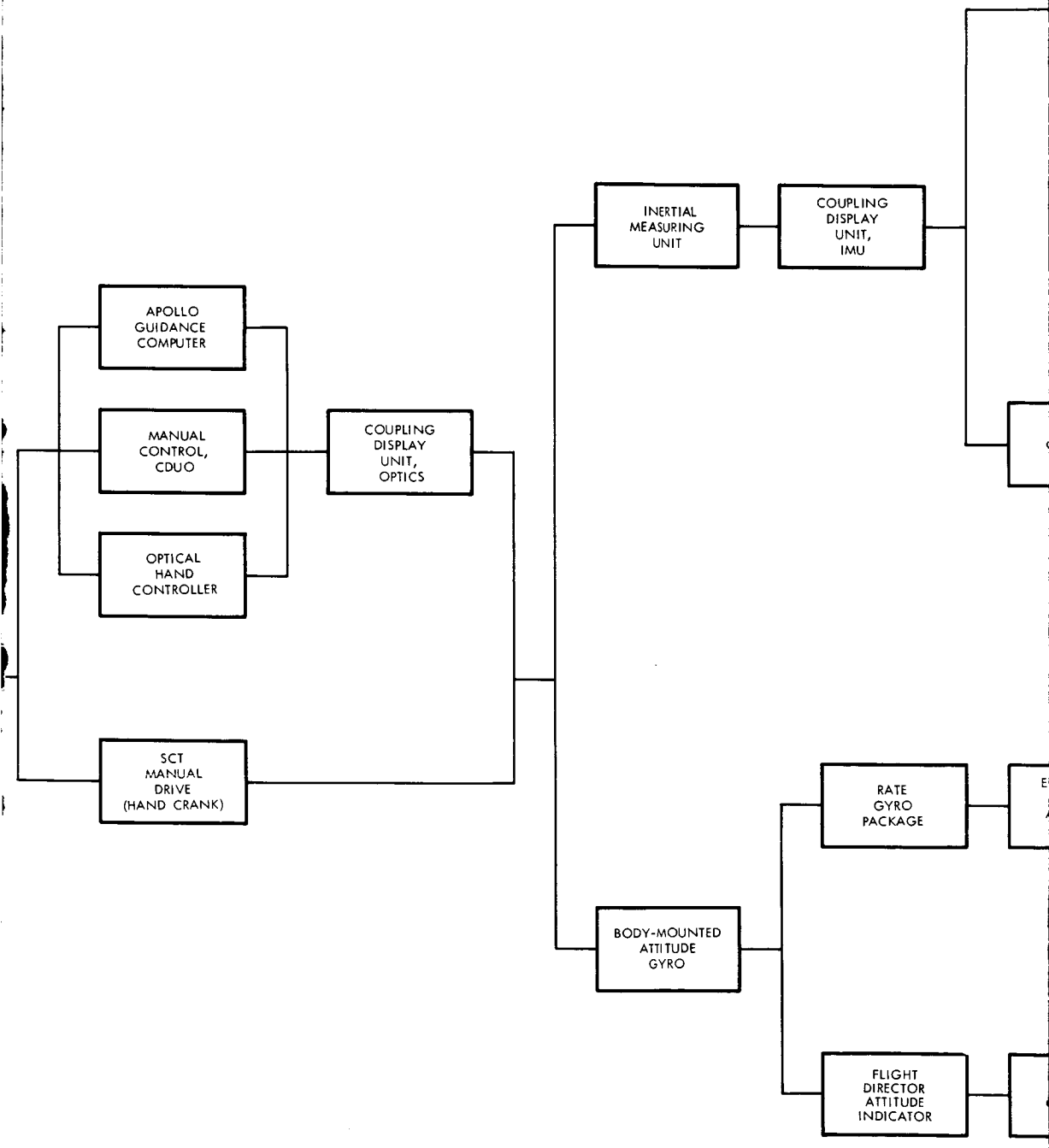
APOLLO GUIDANCE COMPUTER
MANUAL CONTROL, CDUO
OPTICAL HAND CONTROLLER
SCT MANUAL DRIVE (HAND CRANK)
COUPLING DISPLAY UNIT, OPTICS
INERTIAL MEASURING UNIT
COUPLING DISPLAY UNIT, IMU
BODY-MOUNTED ATTITUDE GYRO
RATE GYRO PACKAGE
FLIGHT DIRECTOR ATTITUDE INDICATOR

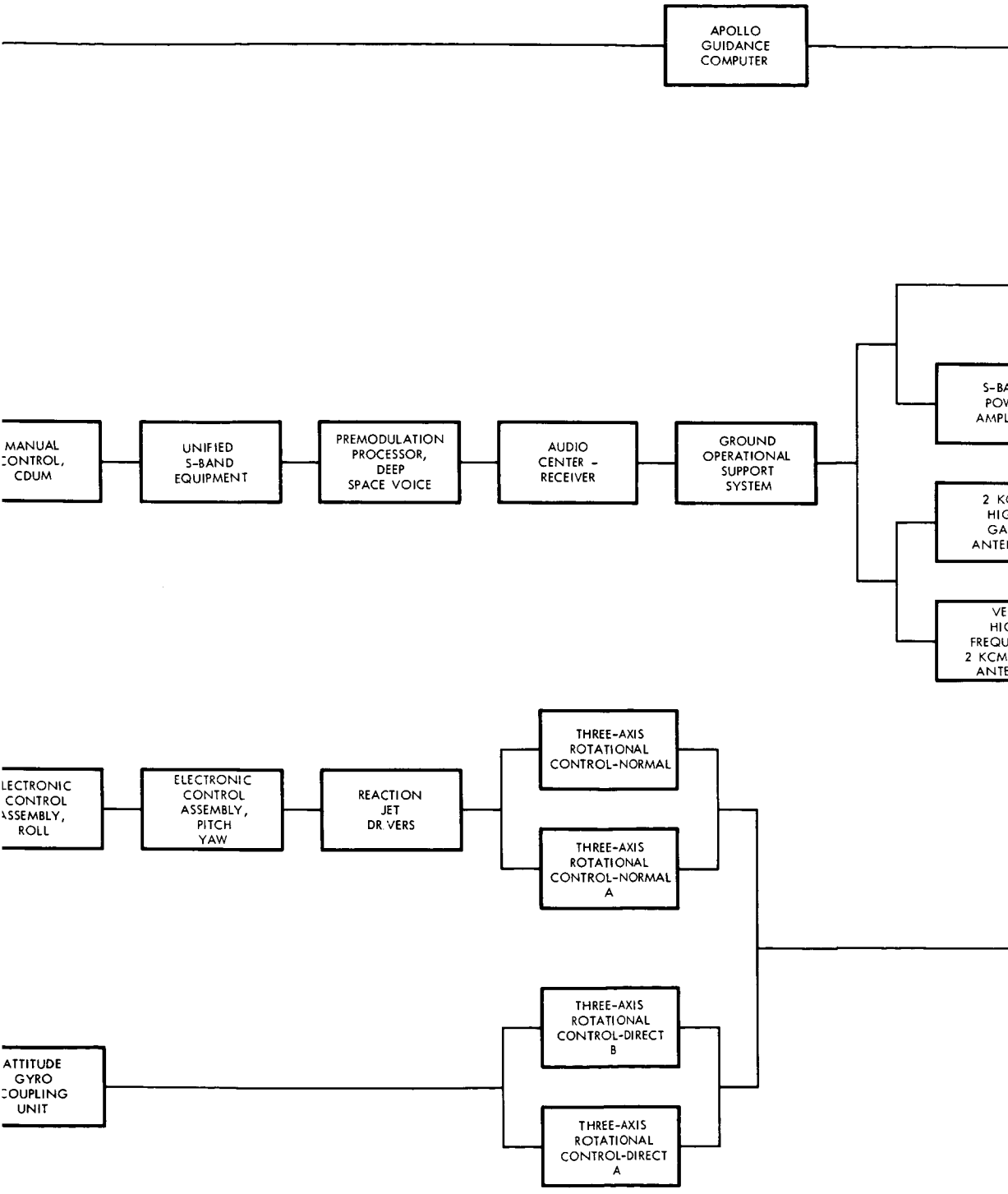
APOLLO GUIDANCE COMPUTER
MANUAL CONTROL, CDUM
UNIFIED S-BAND EQUIPMENT
PREMODULATION PROCESSOR, DEEP SPACE VOICE
AUDIO CENTER - RECEIVER
GROUND OPERATIONAL SUPPORT SYSTEM
S-BA POW AMPL
2 K HIG GA ANTE
VE HIG FREQU 2 KCM ANTE
LECTRONIC CONTROL ASSEMBLY, ROLL
ELECTRONIC CONTROL ASSEMBLY, PITCH YAW
REACTION JET DRIVERS
THREE-AXIS ROTATIONAL CONTROL-NORMAL
THREE-AXIS ROTATIONAL CONTROL-NORMAL A
THREE-AXIS ROTATIONAL CONTROL-DIRECT B
THREE-AXIS ROTATIONAL CONTROL-DIRECT A
ATTITUDE GYRO COUPLING UNIT

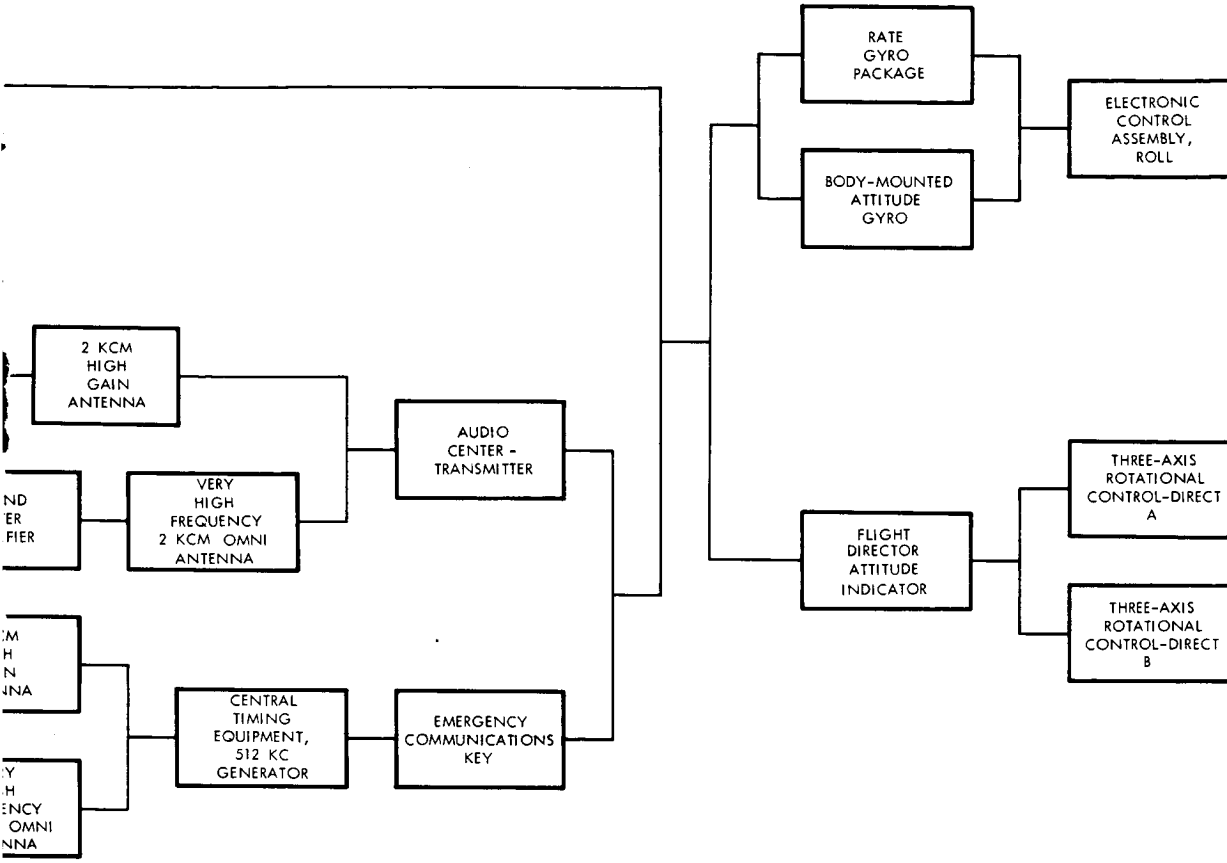
RATE GYRO PACKAGE
BODY-MOUNTED ATTITUDE GYRO
ELECTRONIC CONTROL ASSEMBLY, ROLL
2 KCM HIGH GAIN ANTENNA
AUDIO CENTER - TRANSMITTER
VERY HIGH FREQUENCY 2 KCM OMNI ANTENNA
FLIGHT DIRECTOR ATTITUDE INDICATOR
THREE-AXIS ROTATIONAL CONTROL-DIRECT A
THREE-AXIS ROTATIONAL CONTROL-DIRECT B
CENTRAL TIMING EQUIPMENT, 512 KC GENERATOR
EMERGENCY COMMUNICATIONS KEY

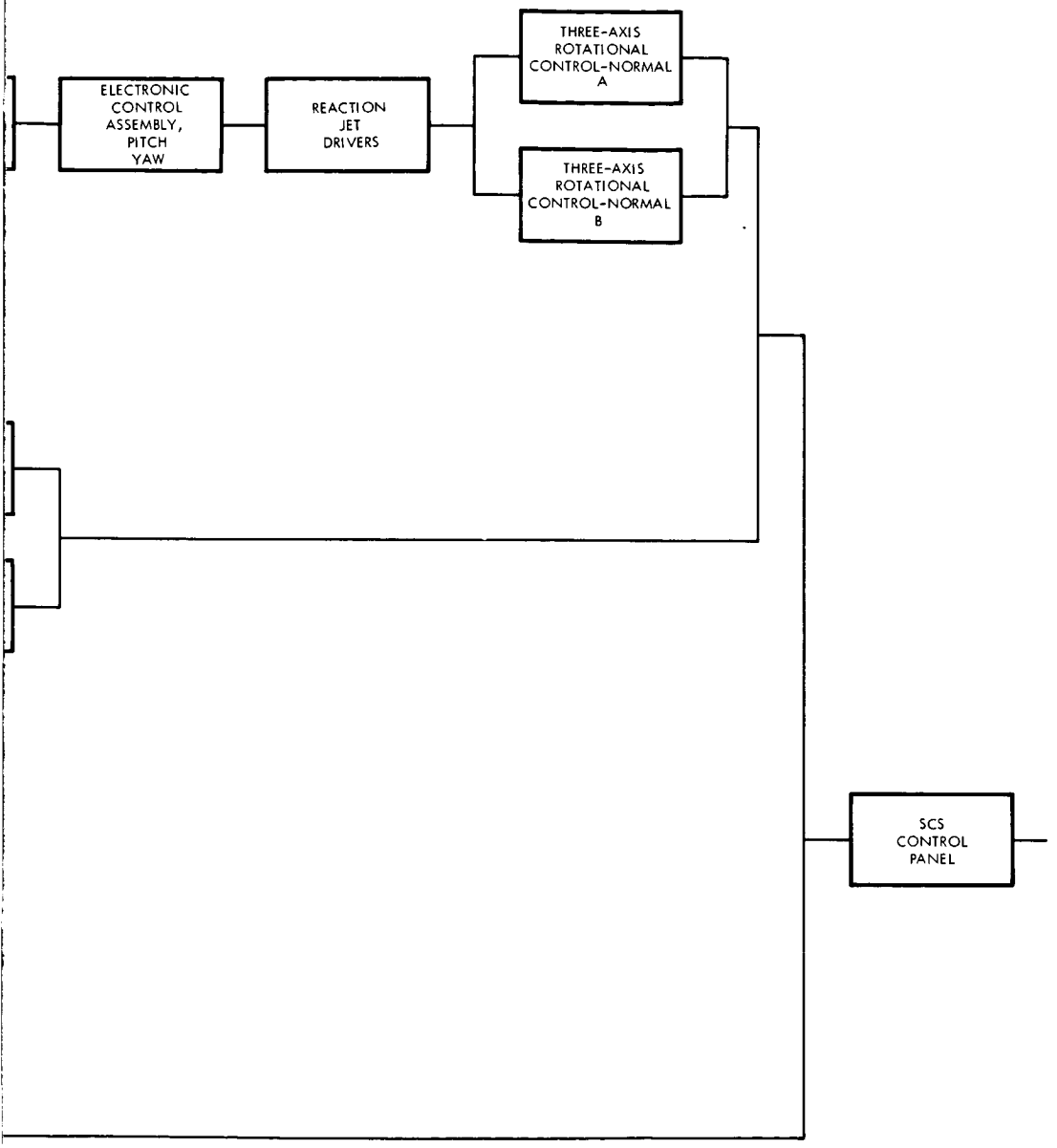

Figure 3-9. Platform Erection, Deep Space

[redacted]

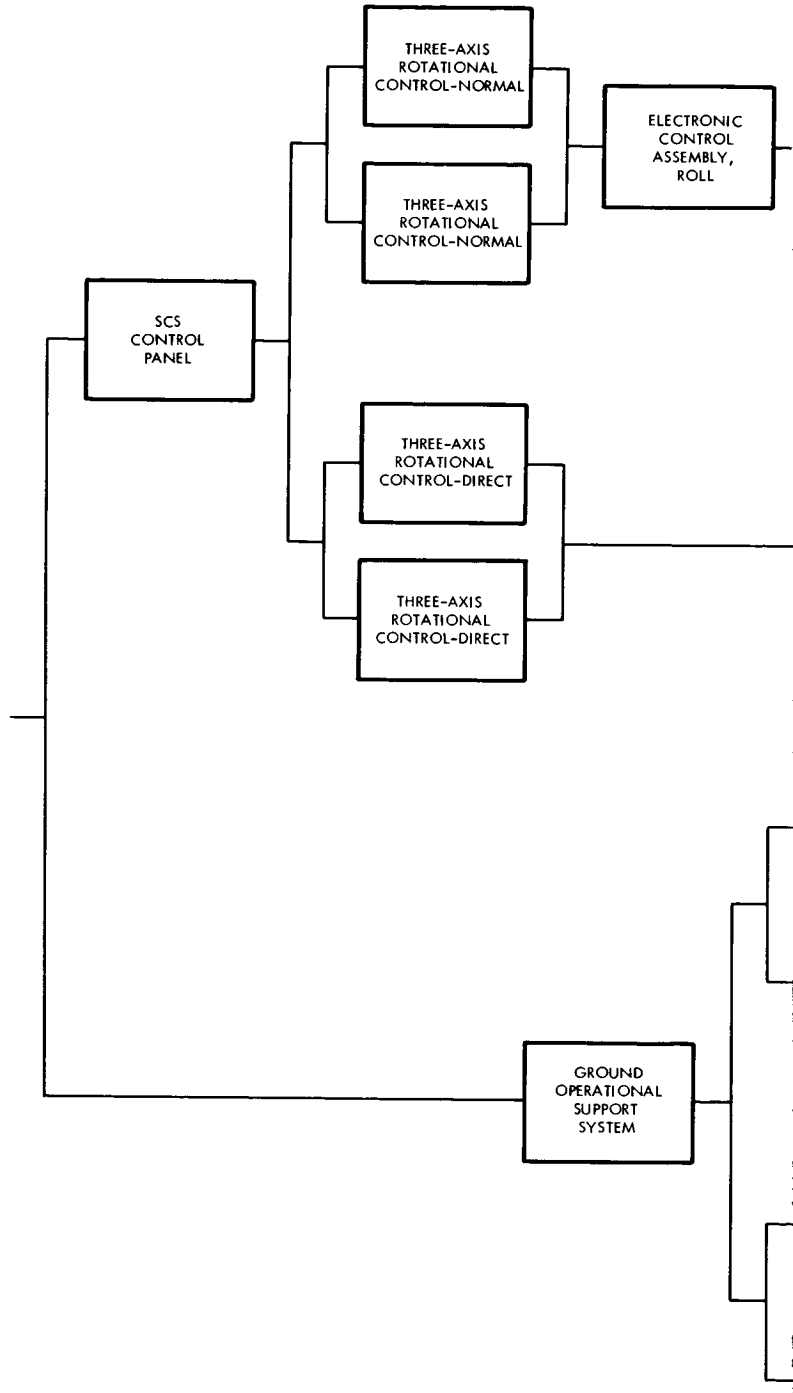
THREE-AXIS ROTATIONAL CONTROL-NORMAL
THREE-AXIS ROTATIONAL CONTROL-NORMAL
ELECTRONIC CONTROL ASSEMBLY, ROLL
SCS CONTROL PANEL
THREE-AXIS ROTATIONAL CONTROL-DIRECT
THREE-AXIS ROTATIONAL CONTROL-DIRECT
GROUND OPERATIONAL SUPPORT SYSTEM

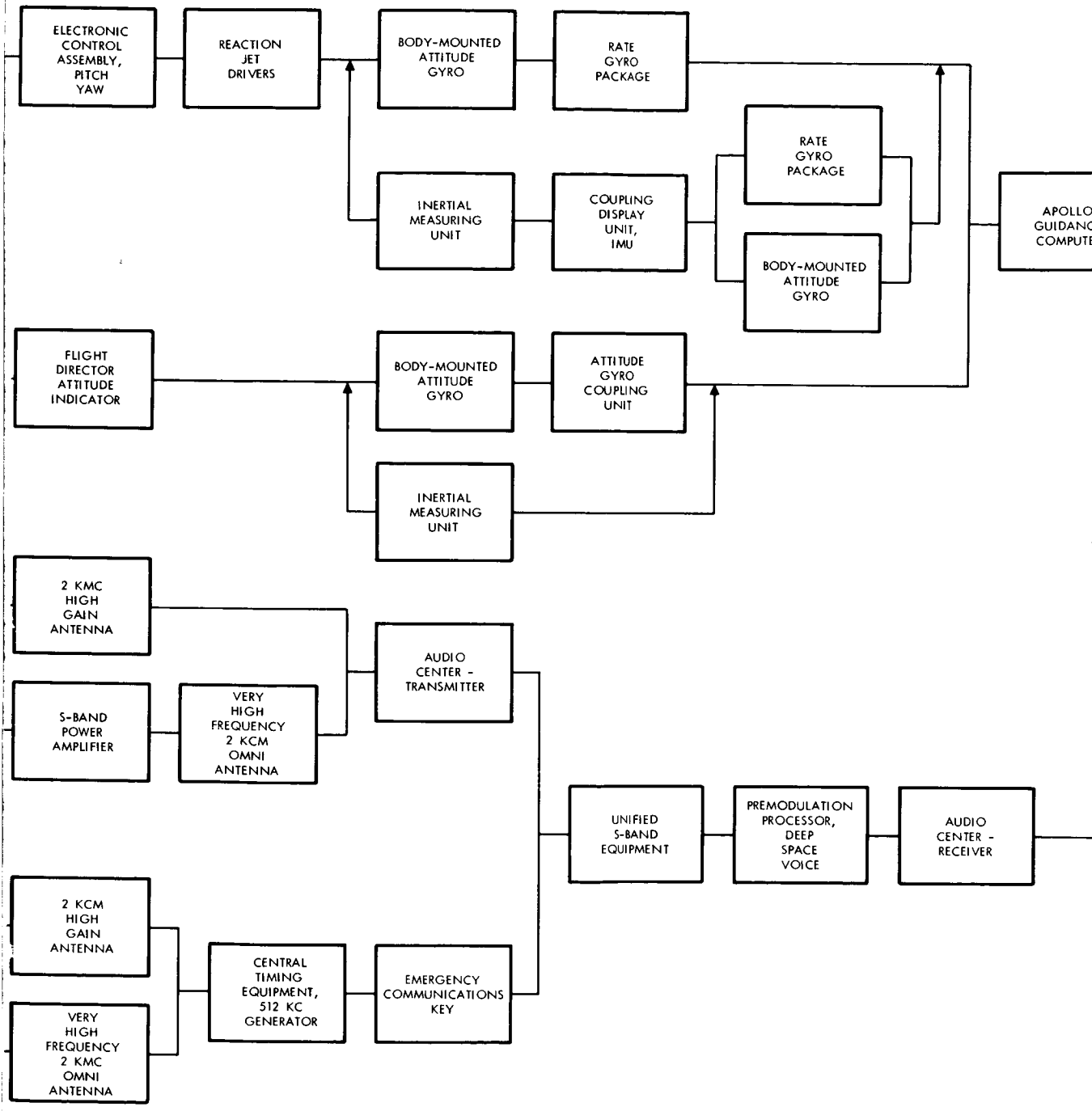
ELECTRONIC CONTROL ASSEMBLY, PITCH YAW
REACTION JET DRIVERS
BODY-MOUNTED ATTITUDE GYRO
RATE GYRO PACKAGE
RATE GYRO PACKAGE
INERTIAL MEASURING UNIT
COUPLING DISPLAY UNIT, IMU
BODY-MOUNTED ATTITUDE GYRO
APOLLO GUIDANC COMPUTE
FLIGHT DIRECTOR ATTITUDE INDICATOR
BODY-MOUNTED ATTITUDE GYRO
ATTITUDE GYRO COUPLING UNIT
INERTIAL MEASURING UNIT
2 KMC HIGH GAIN ANTENNA
AUDIO CENTER - TRANSMITTER
S-BAND POWER AMPLIFIER
VERY HIGH FREQUENCY 2 KCM OMNI ANTENNA
UNIFIED S-BAND EQUIPMENT
PREMODULATION PROCESSOR, DEEP SPACE VOICE
AUDIO CENTER - RECEIVER
2 KCM HIGH GAIN ANTENNA
CENTRAL TIMING EQUIPMENT, 512 KC GENERATOR
EMERGENCY COMMUNICATIONS KEY
VERY HIGH FREQUENCY 2 KMC OMNI ANTENNA

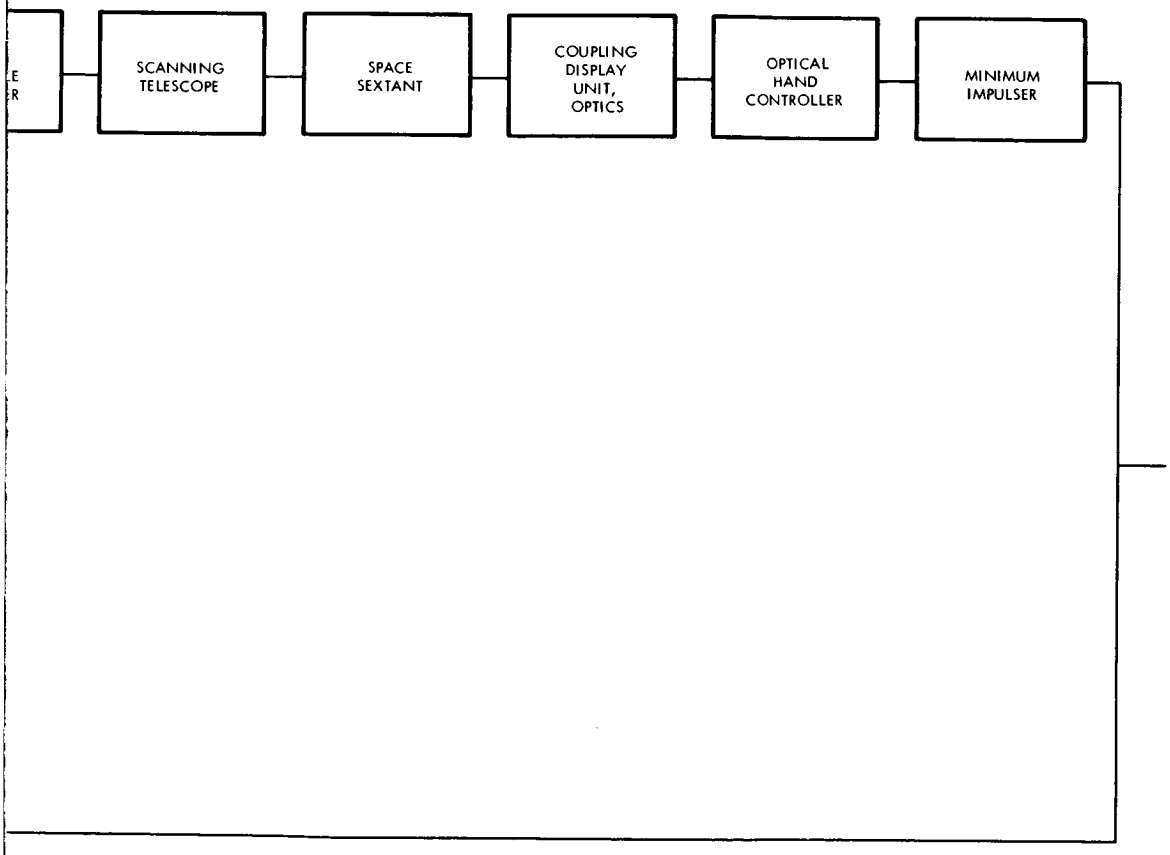

Figure 3-10. Navigational Sighting, Deep Space

[redacted]

Figure 3-11 concerns an antelunar navigational sighting. The primary modes are the same for a cisearth navigational sighting. In this phase the following communication equipment is utilized for tracking, computing and voice: ground operational support equipment, unified S-band, pre-modulation process-deep space voice, audio center receiver, either the audio center transmitter and the high gain antenna or the power amplifier and the discone antenna. If a failure should occur in either the audio center transmitter or the power amplifier the emergency communications key, central timing equipment (512 KC oscillator) and the high gain or VHF/2KC omni antenna can be used.

Figure 3-12 shows the modes and equipment necessary for a thrust vector alignment. The primary mode consists of the navigation and guidance inertial measuring unit, coupling display unit - IMU for sensing, Apollo guidance computer for computation and the stabilization and control subsystem electronic control assemblies (roll, pitch, yaw), reaction jet drivers for reaction control, rate gyro package or body-mounted gyros in the rate mode for rate damping. If a failure occurs in any of the navigation and guidance equipment, a switch is made to the stabilization and control mode using the body-mounted attitude gyros for sensing, rate gyro package for rate damping, electronic control assembly (roll, pitch, yaw), reaction jet drivers for reaction control and the three-axis rotational controls-normal for rotational control. If a failure occurs in any of the electronic control assemblies, reaction jet drivers, rate gyro package or the three-axis rotational controls-normal a change is made to the rotational controls-direct and the flight director attitude indicator, attitude gyro coupling unit. This equipment works in series with the thrust vector control circuits, the gimbal position display and the SCS control panel which are used for service module propulsion engine gimbal alignment and mode selection.

Figure 3-13 shows the modes and equipment used in a delta velocity firing. The first action is an ullage manuever for settling the main engine fuel. This is accomplished by utilizing the stabilization and control subsystem translation controllers with the reaction jet drivers or the emergency ullage switch on the delta velocity display. Then the main engine is fired. The primary mode is the navigational and guidance delta velocity mode utilizing the inertial measuring unit and its coupling display unit for attitude and acceleration sensing, Apollo guidance computer for computing and engine on-off control, stabilization and control subsystem rate gyro package or the body-mounted attitude gyros in the rate mode for rate damping. The second mode is the stabilization and control delta velocity mode utilizing the single-axis accelerometer for acceleration sensing, body-mounted attitude gyro for attitude sensing, the delta velocity display, delta velocity display on-off switch for engine firing control, and the rate gyro package for rate damping. All these modes work in series with the SCS

CONFIDENTIAL

control panel for mode select, channel disable, deadband select, rate backup, engine thrust circuits for engine on-off control and the thrust vector control circuits for engine gimballing.

Figure 3-14 outlines the equipment utilized in service module separation. The reaction jet drivers with the translation controls are used for X-axis translation for the separation.

Figure 3-15 indicates the modes and equipment necessary for an orientation for entry. The primary mode is the navigation and guidance inertial measuring unit and its coupling display unit, Apollo guidance computer for computation, stabilization and control electronic control assemblies (roll, pitch, yaw), reaction jet drivers for reaction control, rate gyro package, body-mounted attitude gyros in the rate mode for rate damping, SCS control panel for mode selection, deadband select, channel disable, rate backup, either the accelerometer package and the level detector or the entry monitor display and the back-up entry switch for switching to entry configuration at .05 g's.

The next mode of operation is accomplished by the following stabilization and control subsystem equipment: body-mounted attitude gyro for attitude sensing, three-axis rotational controls-normal, for control, rate gyro package for rate damping, electronic control assemblies (roll, pitch, yaw), reaction jet drivers for reaction control, and the control panel, accelerometer package level detector or the entry monitor display and backup entry switch performing the same function as in the previous mode.

The last possible mode is the three-axis rotational controls-direct with the flight director attitude indicator, attitude gyro coupling unit for conversion of body attitude gyro output into total attitude information.

Figure 3-16 outlines the modes and equipment necessary to perform earth entry. The primary mode consists of the navigation and guidance inertial-measuring unit and its coupling display unit for attitude and acceleration sensing, the Apollo guidance computer for computation, the rate gyro package or the body-mounted attitude gyros in the rate mode for rate damping, electronic control assemblies (roll, pitch, yaw), reaction jet drivers for attitude control and the control panel for mode select, deadband select, channel disable, rate backup. If a failure occurs in any of the navigation and guidance equipment, a change is made to manual controls using the entry monitor display, three-axis rotational controls-normal, along with the other stabilization and control equipment. The last possible mode consists of the entry monitor display and the three-axis rotational controls-direct.

CONFIDENTIAL

~~CONFIDENTIAL~~

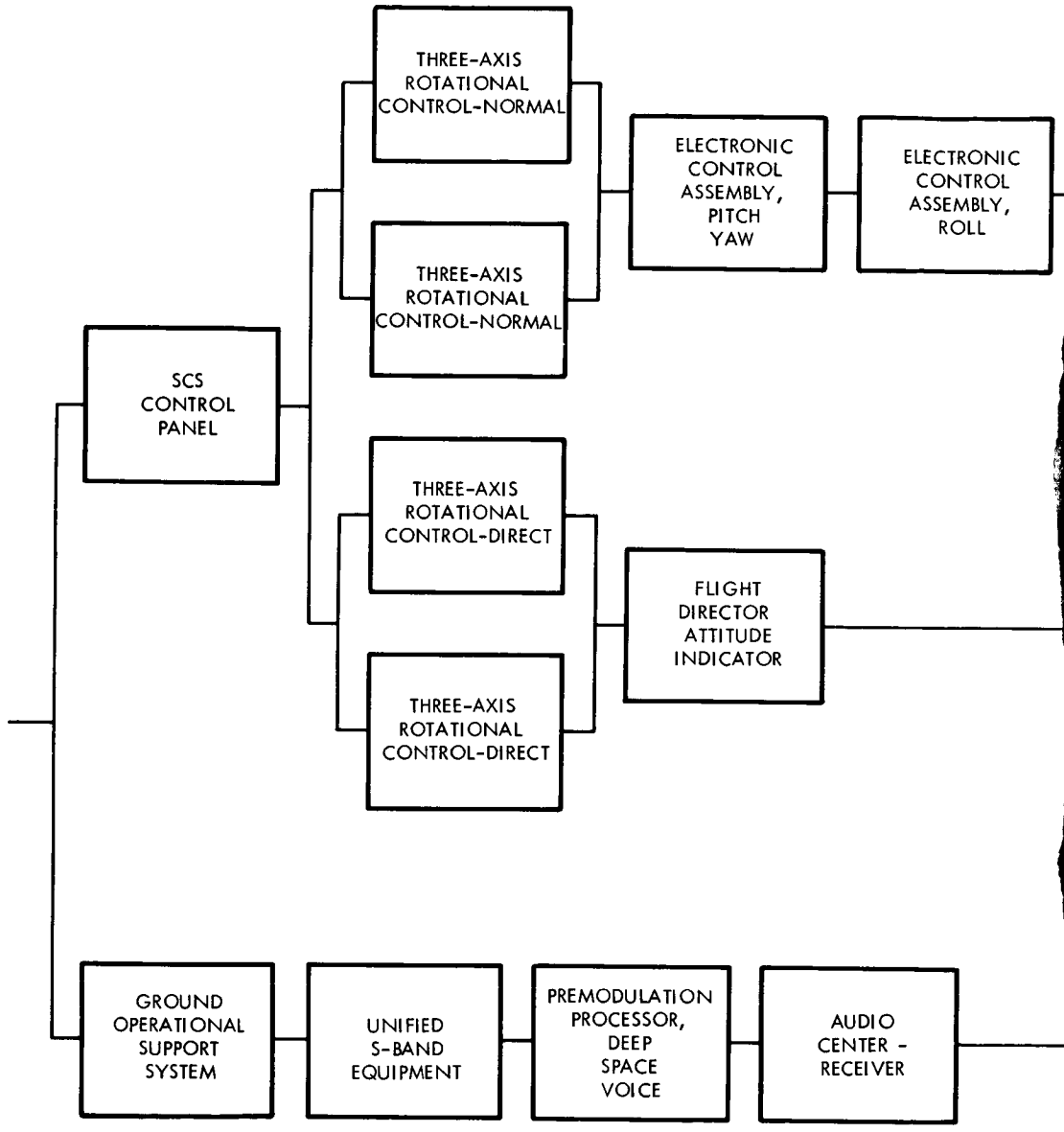

NO

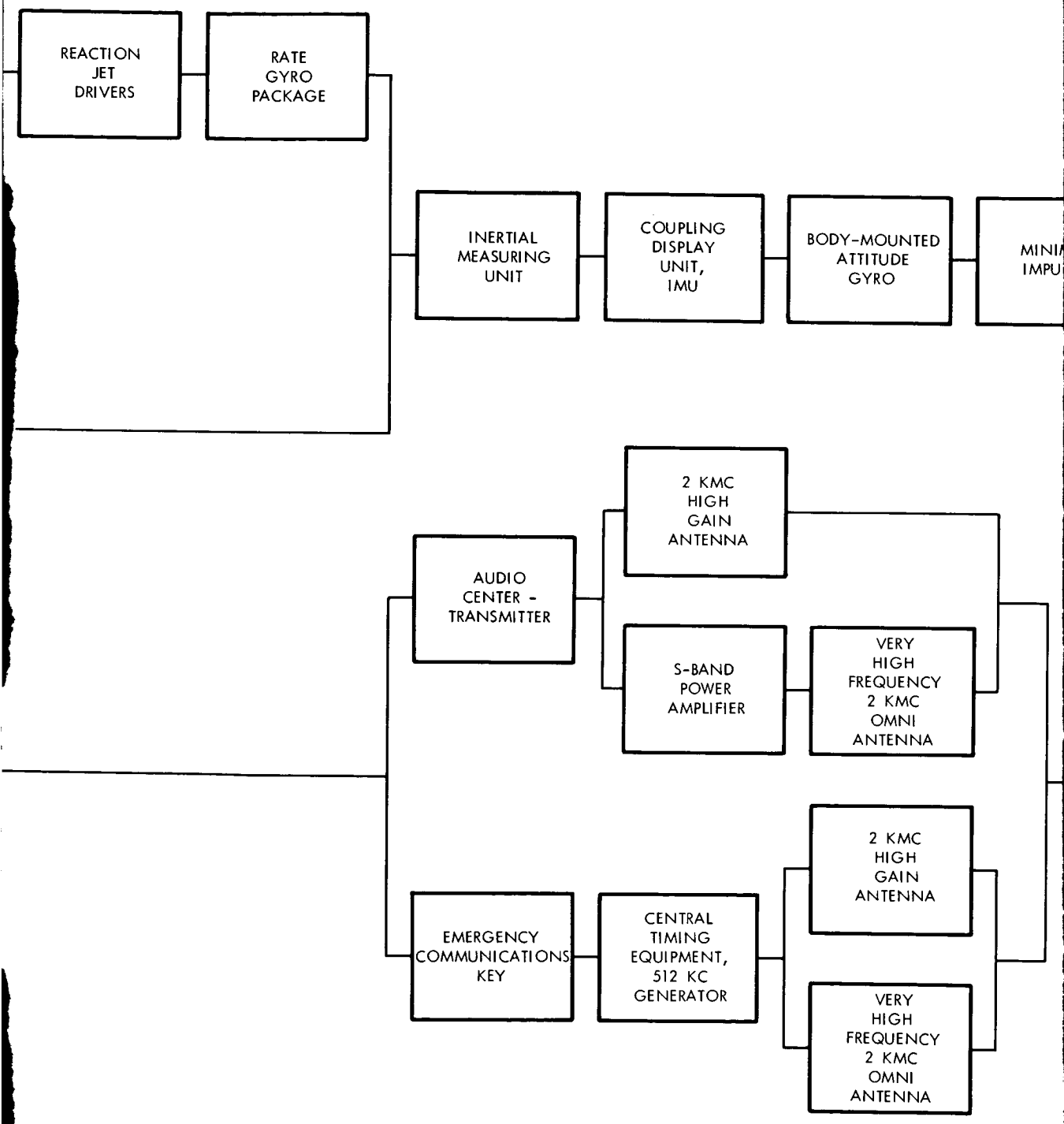
REACTION JET DRIVERS
RATE GYRO PACKAGE
INERTIAL MEASURING UNIT
COUPLING DISPLAY UNIT, IMU
BODY-MOUNTED ATTITUDE GYRO
MINI IMPU
AUDIO CENTER - TRANSMITTER
2 KMC HIGH GAIN ANTENNA
S-BAND POWER AMPLIFIER
VERY HIGH FREQUENCY 2 KMC OMNI ANTENNA
EMERGENCY COMMUNICATIONS KEY
CENTRAL TIMING EQUIPMENT, 512 KC GENERATOR
2 KMC HIGH GAIN ANTENNA
VERY HIGH FREQUENCY 2 KMC OMNI ANTENNA

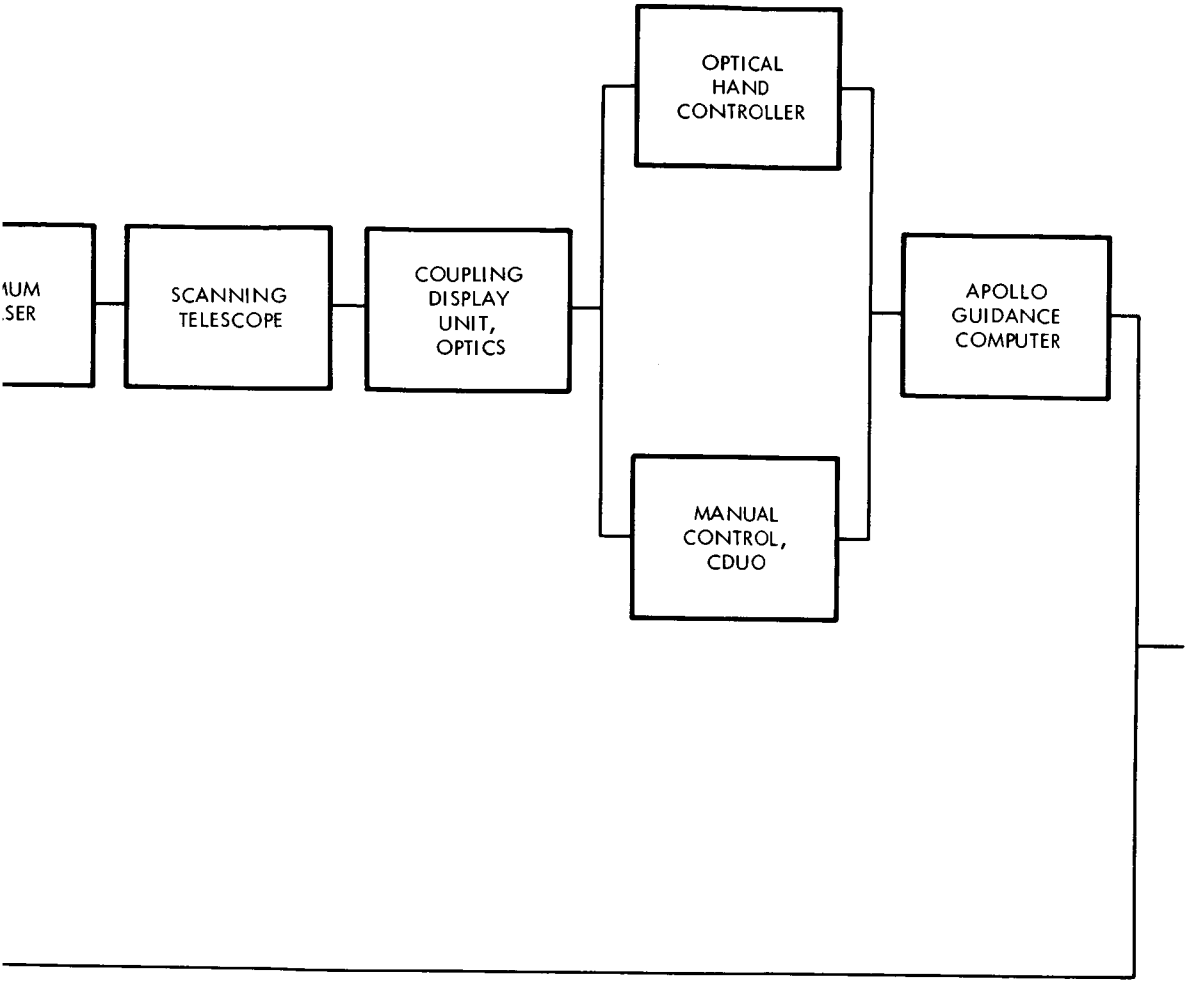

Figure 3-11. Navigational Sighting, Antelunar

~~CONFIDENTIAL~~

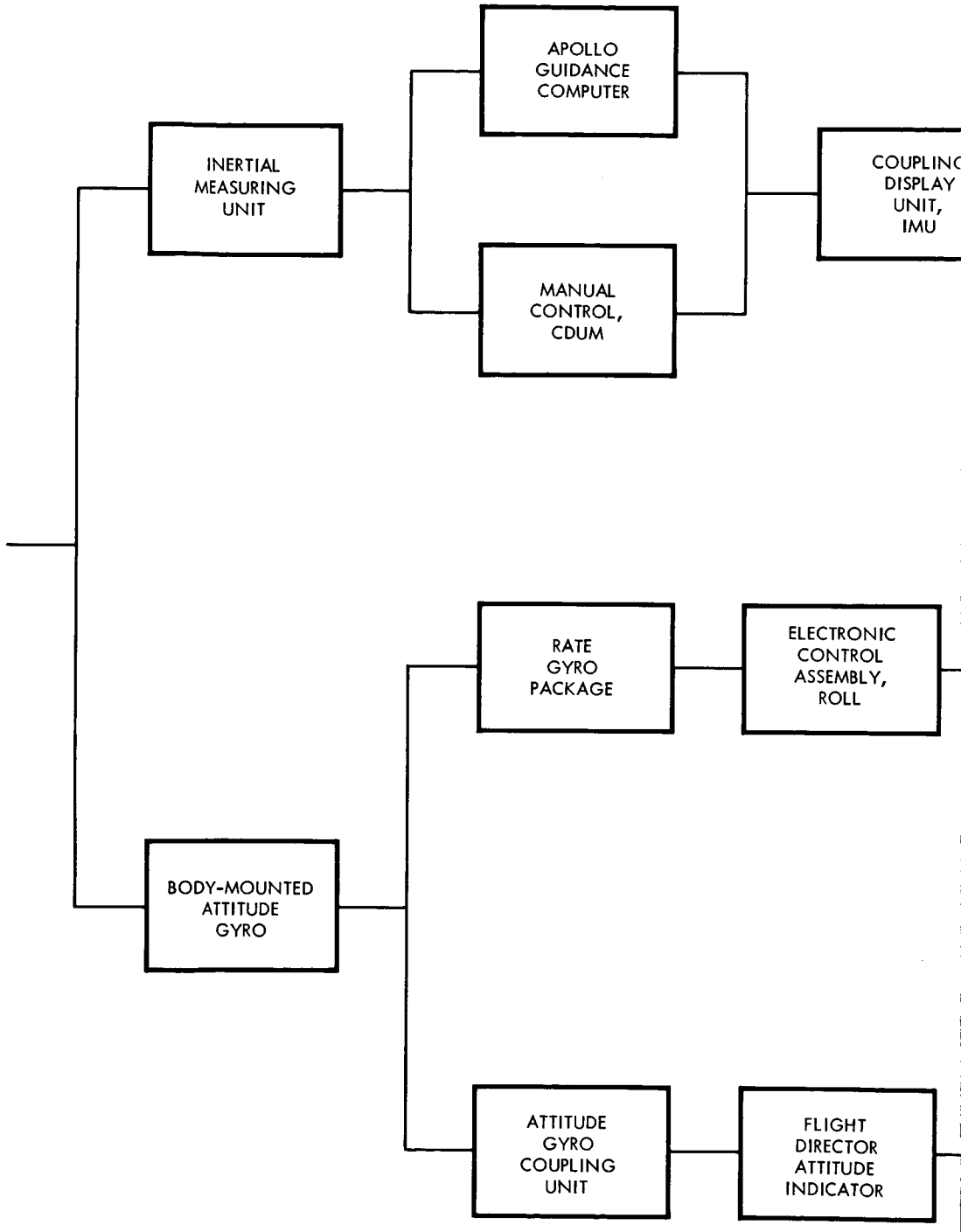

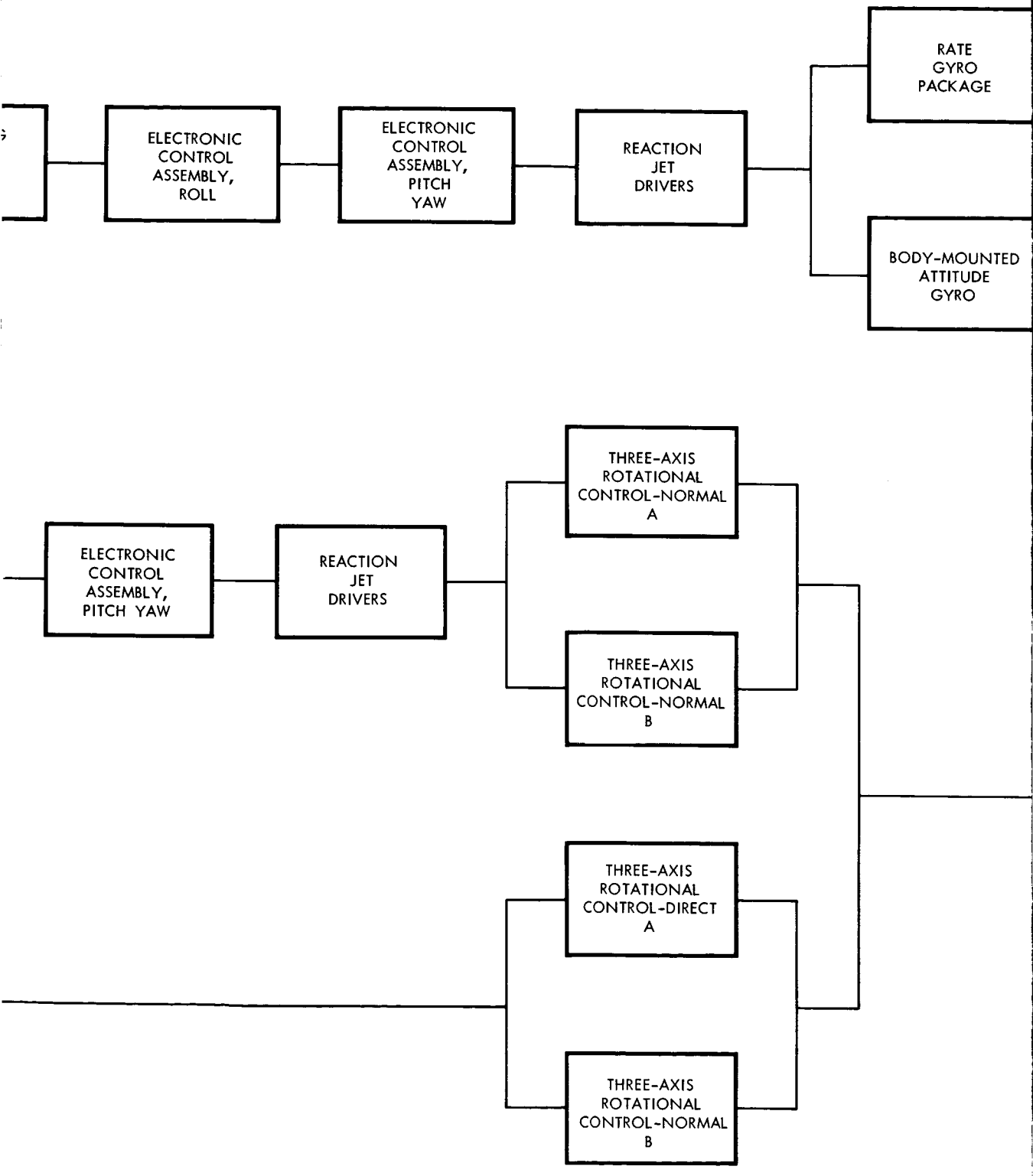
ELECTRONIC CONTROL ASSEMBLY, ROLL
ELECTRONIC CONTROL ASSEMBLY, PITCH YAW
REACTION JET DRIVERS
RATE GYRO PACKAGE
BODY-MOUNTED ATTITUDE GYRO
ELECTRONIC CONTROL ASSEMBLY, PITCH YAW
REACTION JET DRIVERS
THREE-AXIS ROTATIONAL CONTROL-NORMAL A
THREE-AXIS ROTATIONAL CONTROL-NORMAL B
THREE-AXIS ROTATIONAL CONTROL-DIRECT A
THREE-AXIS ROTATIONAL CONTROL-NORMAL B

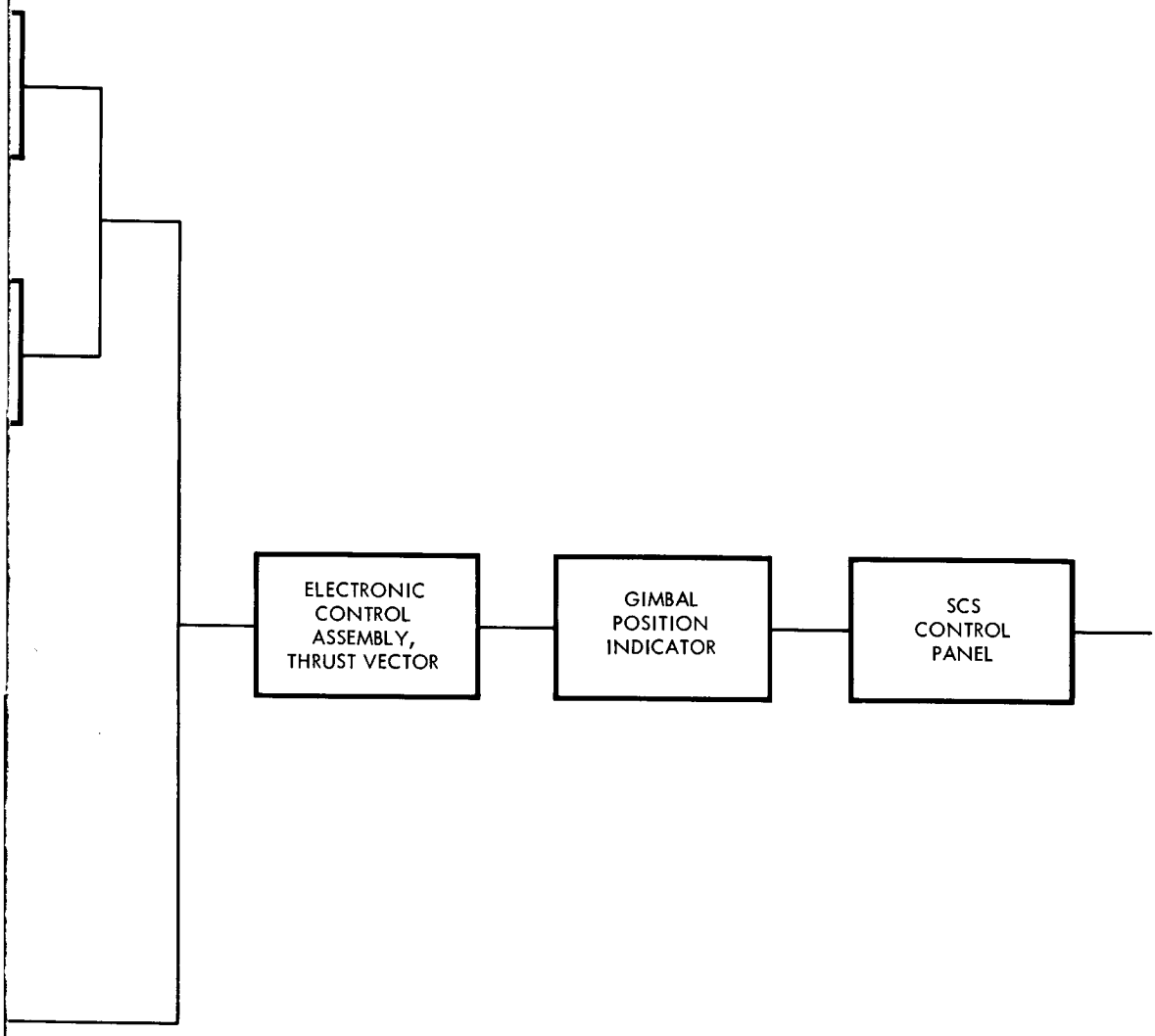

Figure 3-12. Thrust Vector Alignment

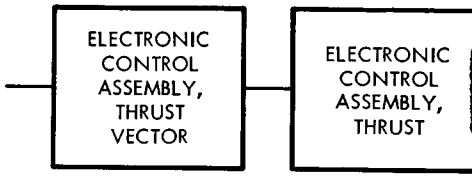
ELECTRONIC CONTROL ASSEMBLY, THRUST VECTOR
ELECTRONIC CONTROL ASSEMBLY, THRUST

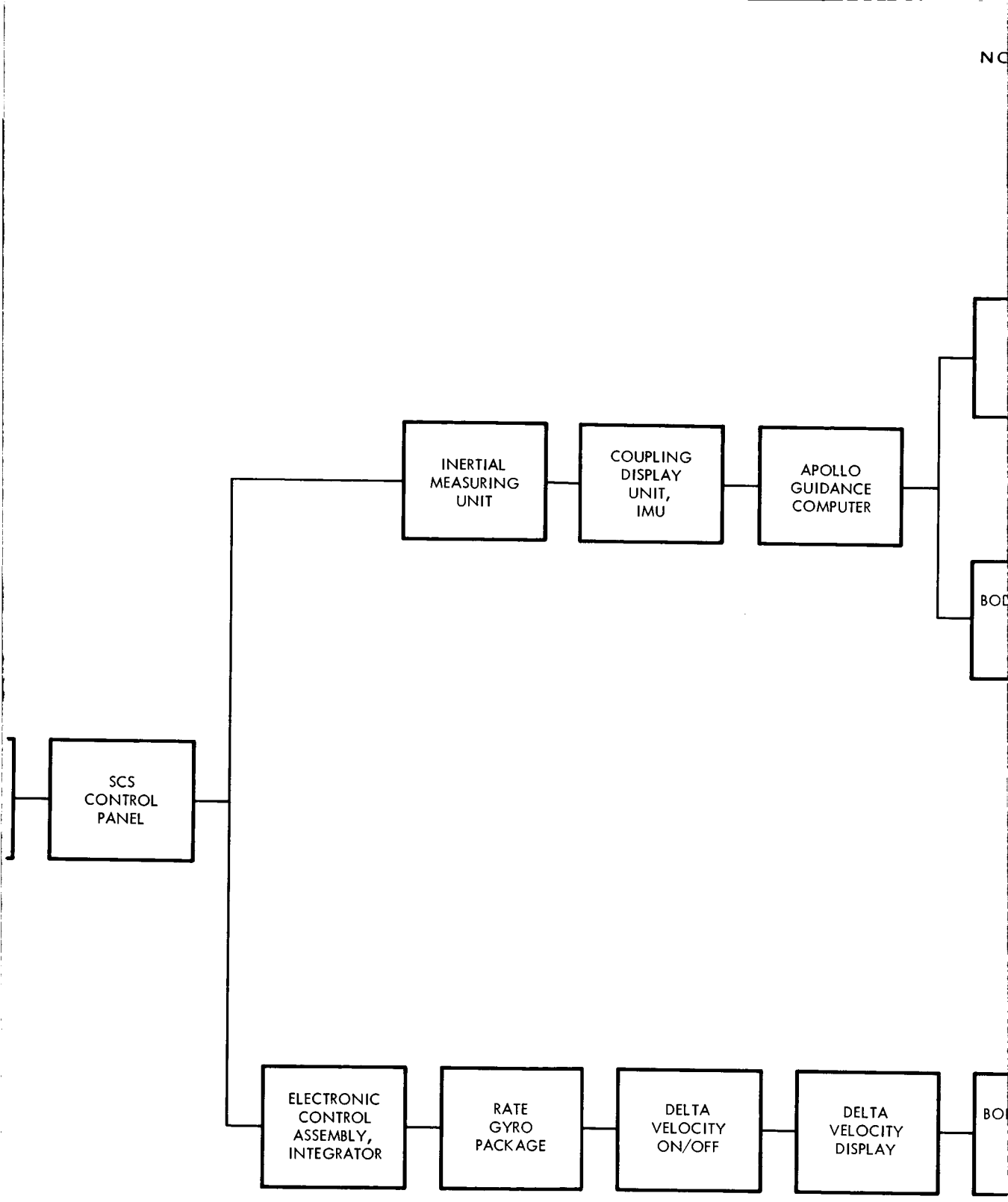
NC
INERTIAL MEASURING UNIT
COUPLING DISPLAY UNIT, IMU
APOLLO GUIDANCE COMPUTER
BOD
SCS CONTROL PANEL
ELECTRONIC CONTROL ASSEMBLY, INTEGRATOR
RATE GYRO PACKAGE
DELTA VELOCITY ON/OFF
DELTA VELOCITY DISPLAY
BO

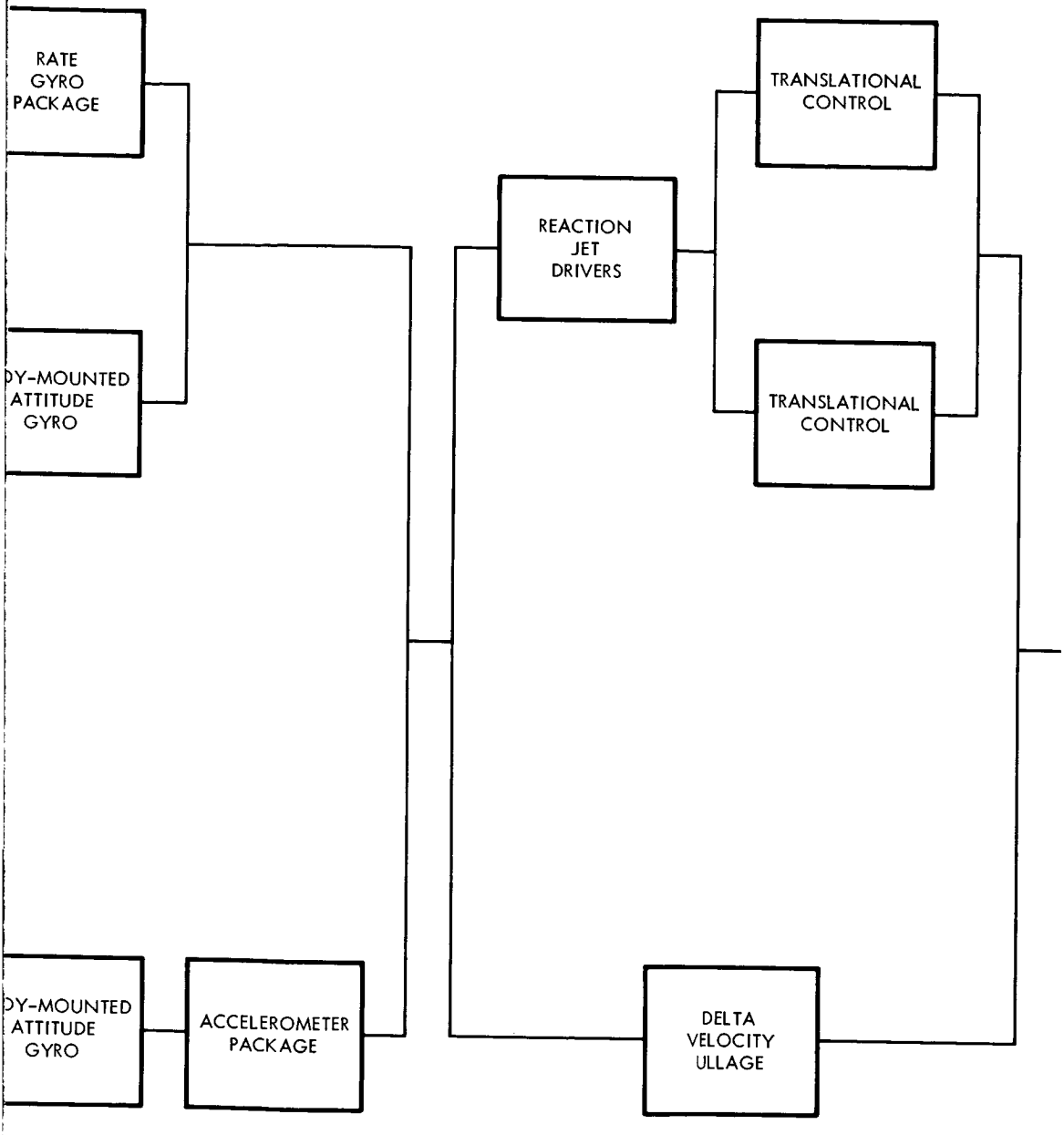

Figure 3-13. ΔV Firing

~~CONFIDENTIAL~~

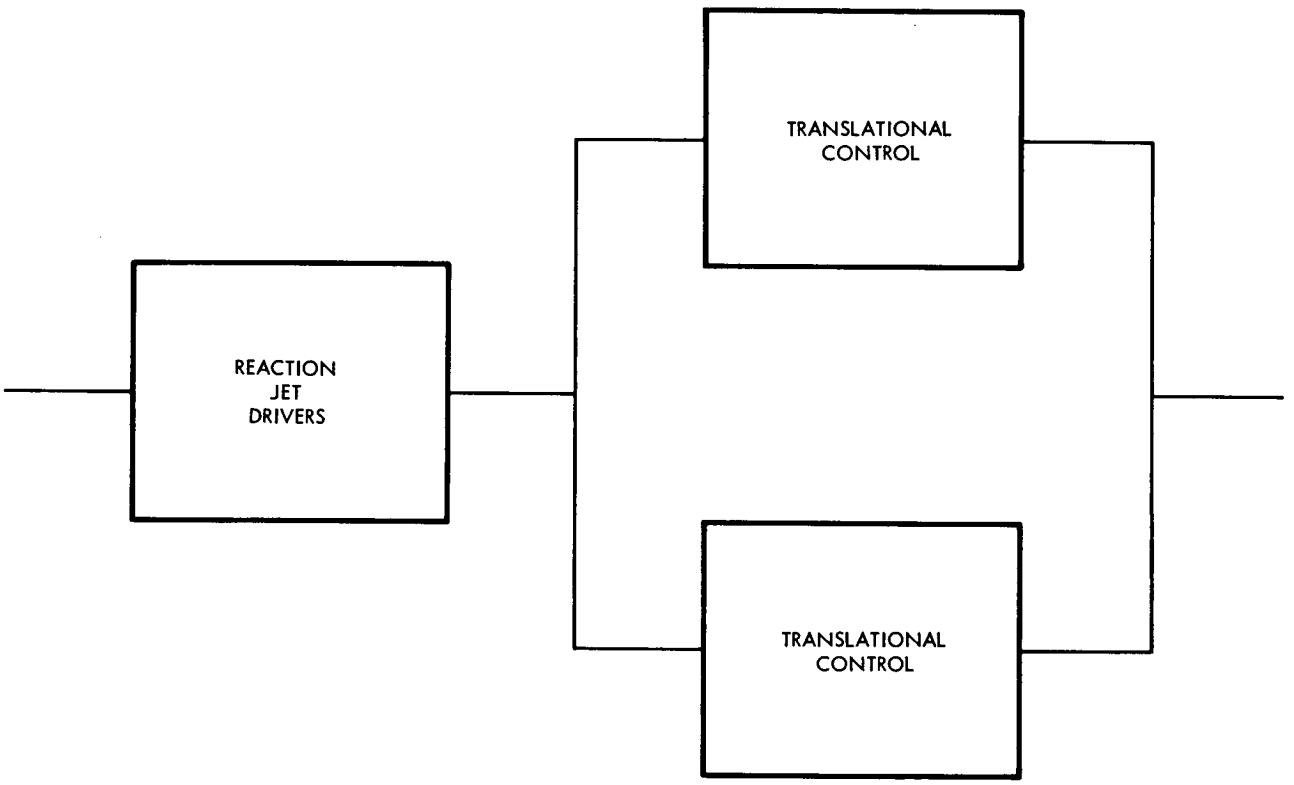

Figure 3-14. SM Separation

~~CONFIDENTIAL~~

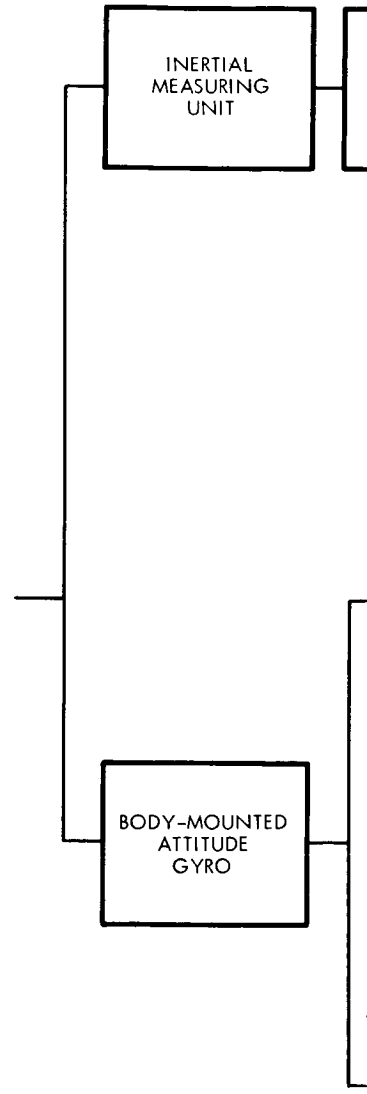
INERTIAL MEASURING UNIT
BODY-MOUNTED ATTITUDE GYRO

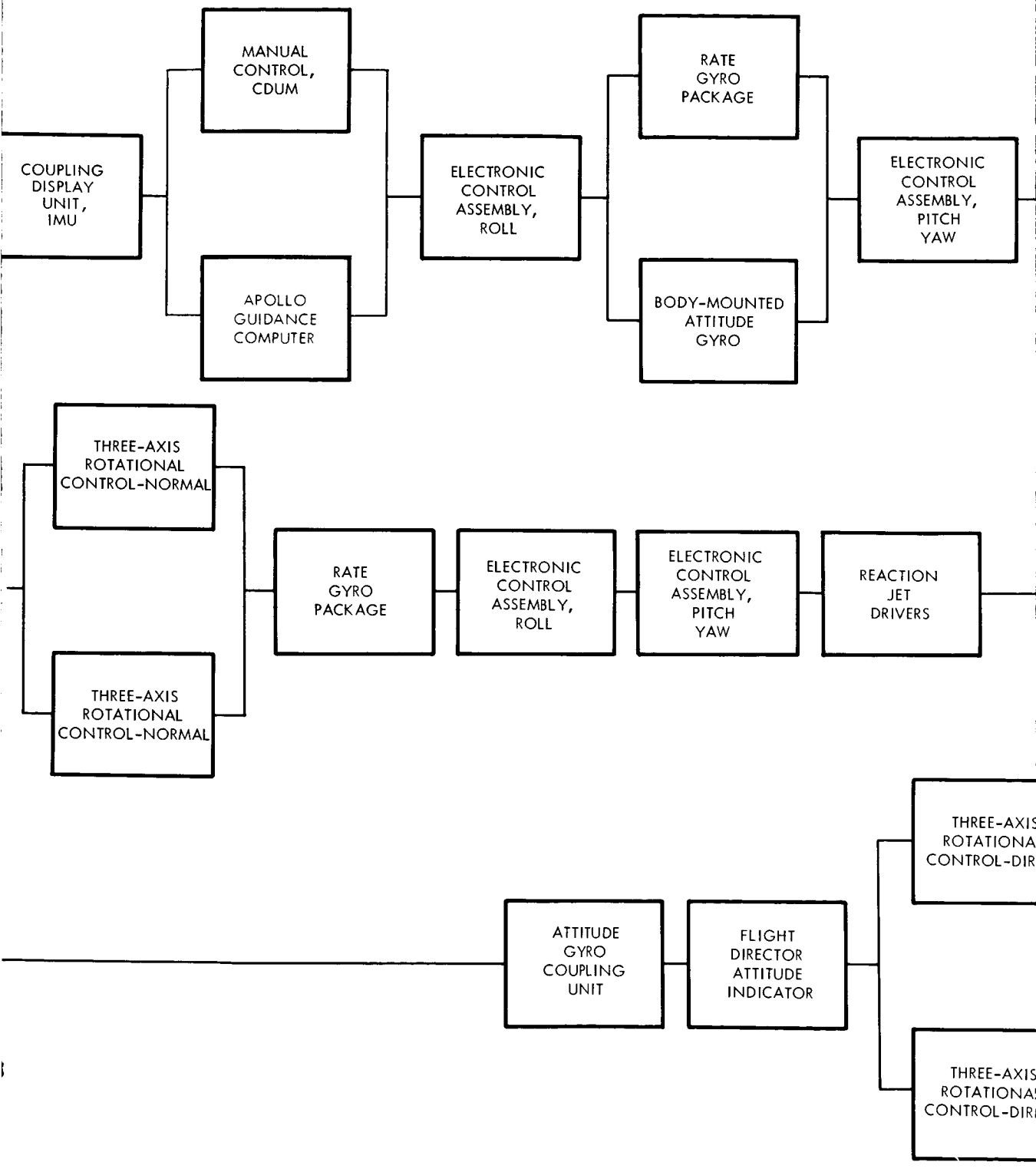
COUPLING DISPLAY UNIT, IMU
MANUAL CONTROL, CDUM
APOLLO GUIDANCE COMPUTER
ELECTRONIC CONTROL ASSEMBLY, ROLL
RATE GYRO PACKAGE
BODY-MOUNTED ATTITUDE GYRO
ELECTRONIC CONTROL ASSEMBLY, PITCH YAW
THREE-AXIS ROTATIONAL CONTROL-NORMAL
THREE-AXIS ROTATIONAL CONTROL-NORMAL
RATE GYRO PACKAGE
ELECTRONIC CONTROL ASSEMBLY, ROLL
ELECTRONIC CONTROL ASSEMBLY, PITCH YAW
REACTION JET DRIVERS
ATTITUDE GYRO COUPLING UNIT
FLIGHT DIRECTOR ATTITUDE INDICATOR
THREE-AXIS ROTATIONA CONTROL-DIR
THREE-AXIS ROTATIONA CONTROL-DIR

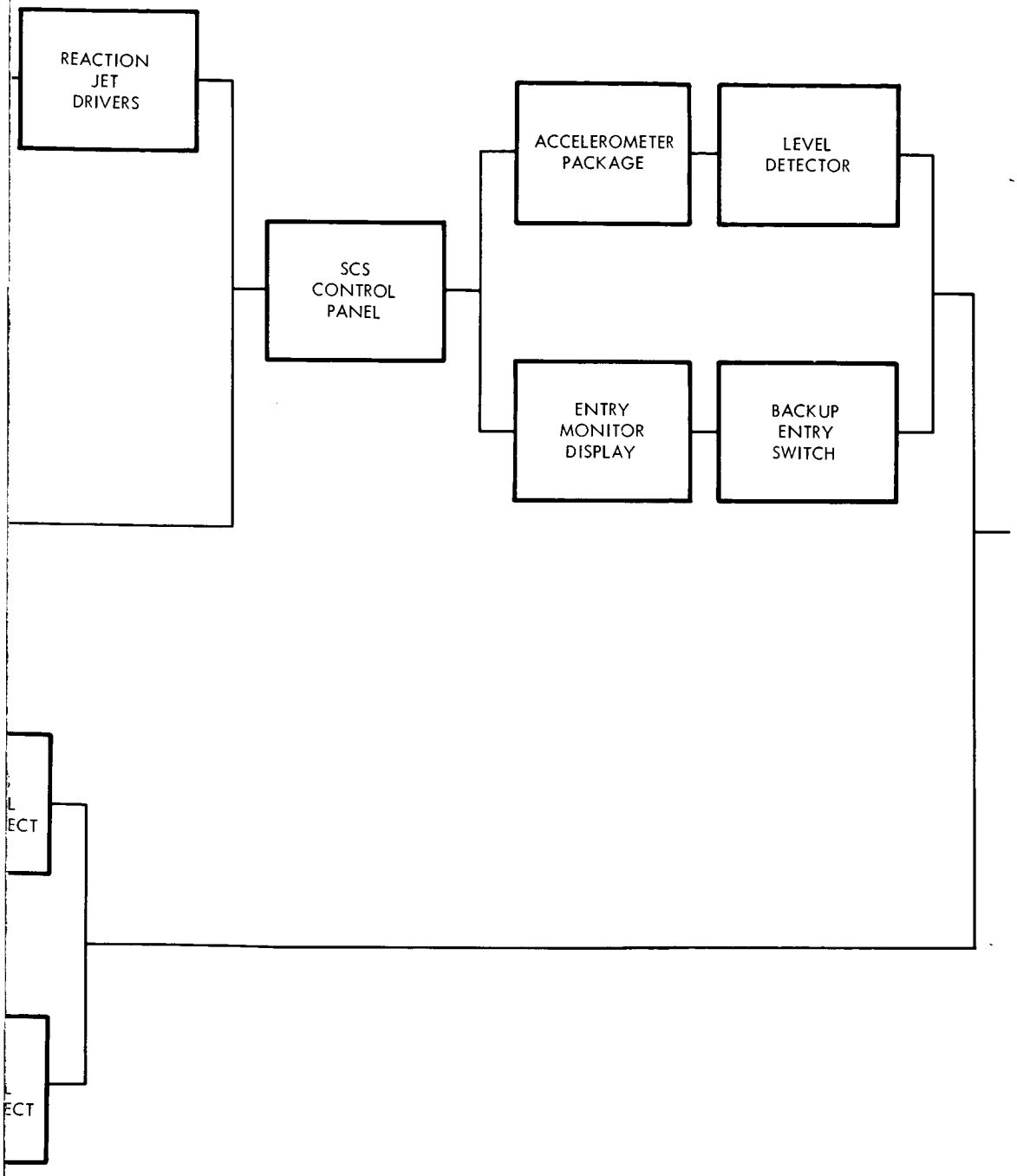

Figure 3-15. Orientation for Earth Entry

~~CONFIDENTIAL~~

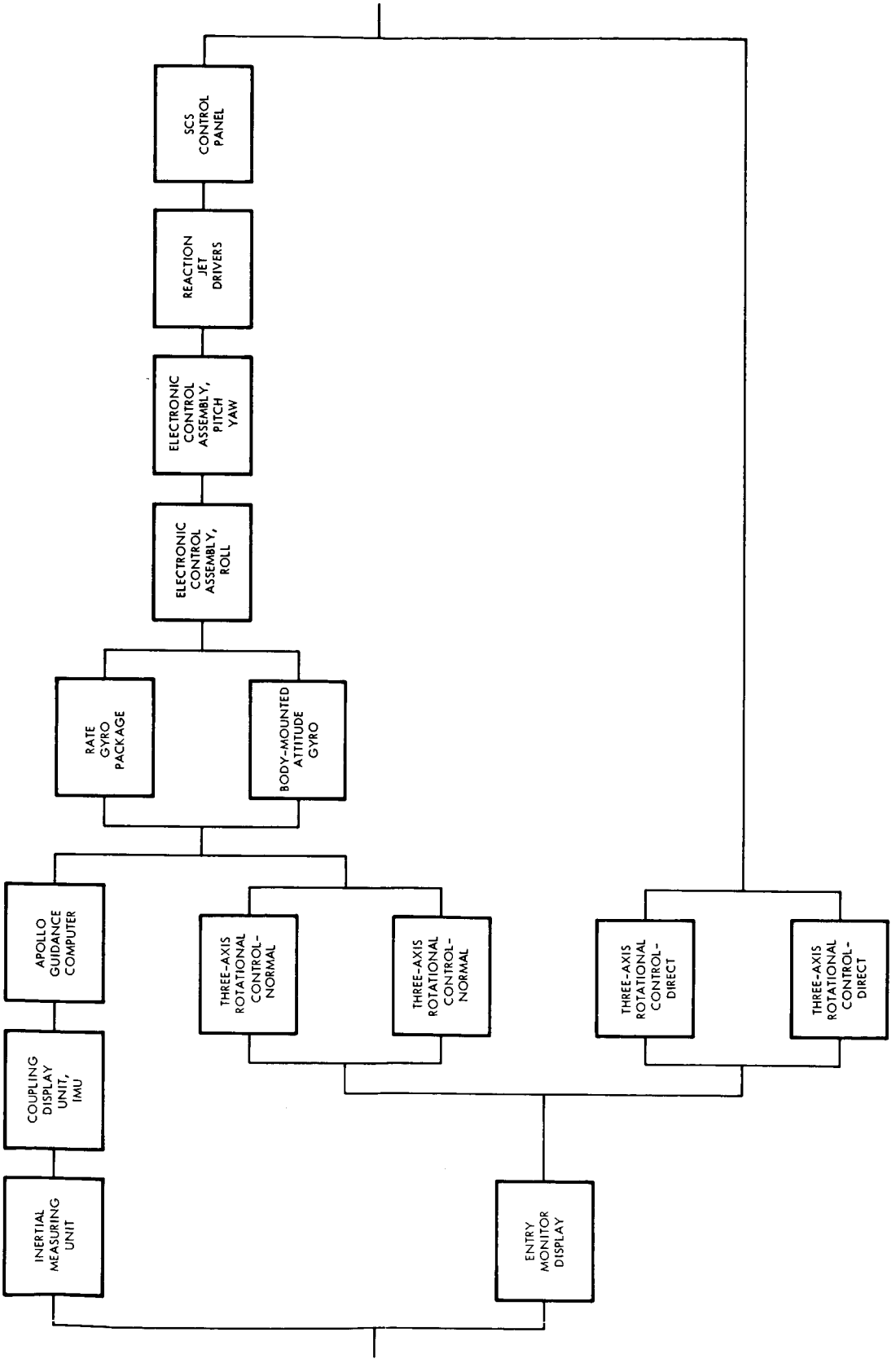

Figure 3-16. Entry

~~CONFIDENTIAL~~

Figure 3-17 indicates the equipment necessary to perform the communications function for locating the spacecraft from drogue chute deployment to landing.

The three series elements utilized are the very high frequency recovery beacon and its antenna for transmitting a line-of-sight signal. The signal is received by ground operational support system, and used in line-of-sight direction finding for locating the spacecraft.

Figure 3-18 shows the modes and equipment necessary to locate the spacecraft after it lands. The primary mode utilizes the communications and data and instrumentations audio center receiver, audio center transmitting or the emergency communications key and the high frequency transmitter with the antenna for direction finding. The secondary mode utilizes the very high frequency recovery beacon with the AM transmitter in standby redundancy, recovery beacon antenna with the auxiliary recovery antenna in standby redundancy. This mode and the primary mode both require operation of the ground operational support system for the complete function of locating and recovering the vehicle and crew.

Figure 3-19 shows the monitoring logic for sparing during cisearth operations. The primary mode utilizes the many sensing points located throughout the systems. The output of the device flows through signal conditioning equipment and the premodulation processer-near earth data. It is then transmitted by the pulse code modulation telemetry, which utilizes the central timing equipment 512 KC oscillator, frequency modulation transmitter and the VHF/2KMC omni antenna. Ground operation support system receives the information and can detect and locate malfunction of the spacecraft equipment. This information is then sent to the spacecraft via the AM transmitter-receiver and the VHF/2KMC omni antenna plus the audio center transmitter and receiver. The secondary mode, in a standby condition, utilizes the in-flight test system and all its displays for detecting and locating failures.

Figure 3-20 shows the monitoring logic for sparing during ultralunar operation. Because there is no communication capability between the spacecraft and GOSS, only the sensors, inflight test system and the displays are utilized for detecting and locating failures.

Figure 3-21 shows the monitoring logic for sparing during translunar, antilunar and transearth phases. The operation is basically the same as the cisearth operation except the deep space communication and data and instrumentation equipments are utilized.

~~CONFIDENTIAL~~

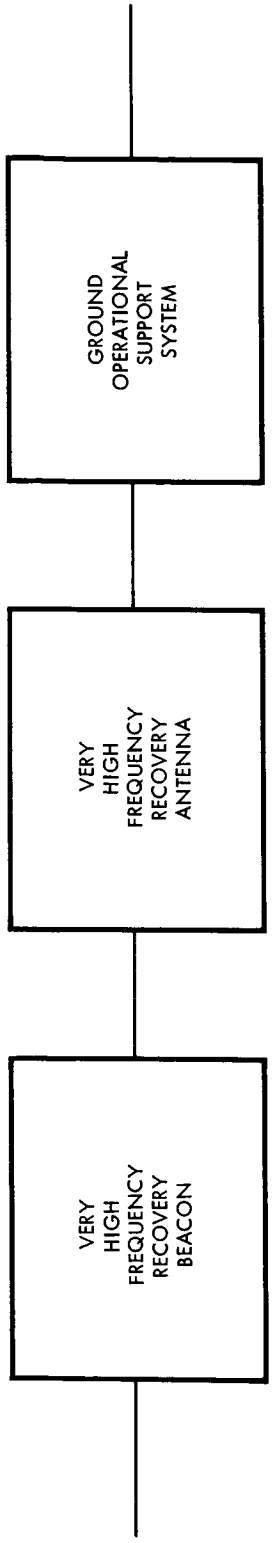

Figure 3-17. Drogue Chute Deployment to Landing

~~CONFIDENTIAL~~

~~CONFIDENTIAL~~

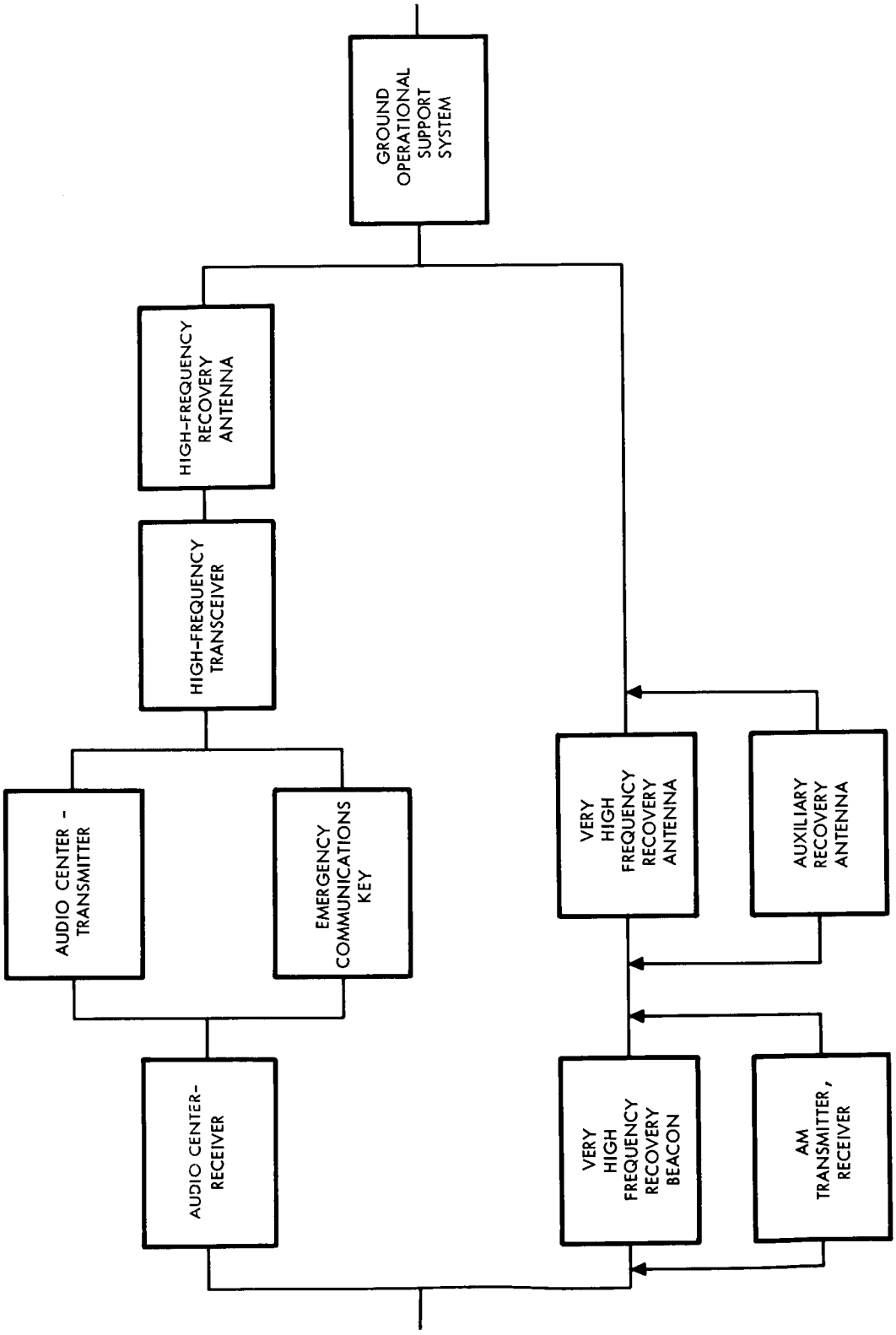

Figure 3-18. Postlanding

[redacted]

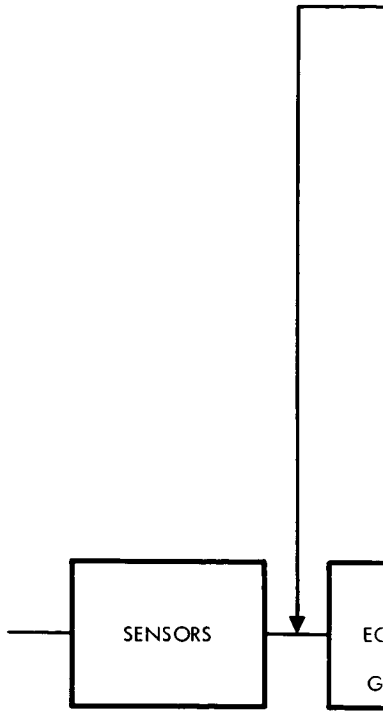

NO

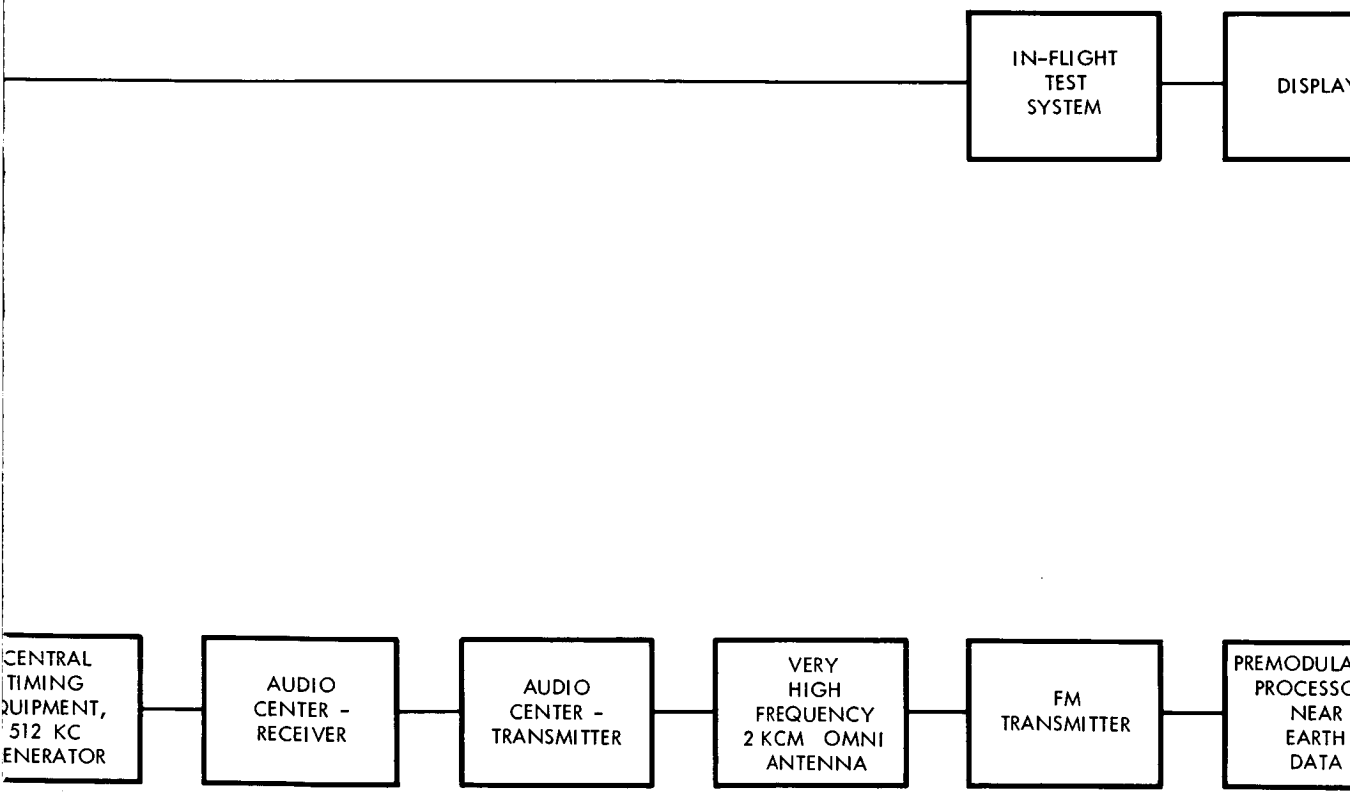
IN-FLIGHT TEST SYSTEM
DISPLAY
CENTRAL TIMING QUIPMENT, 512 KC ENERATOR
AUDIO CENTER - RECEIVER
AUDIO CENTER - TRANSMITTER
VERY HIGH FREQUENCY 2 KCM OMNI ANTENNA
FM TRANSMITTER
PREMODULA PROCESSO NEAR EARTH DATA

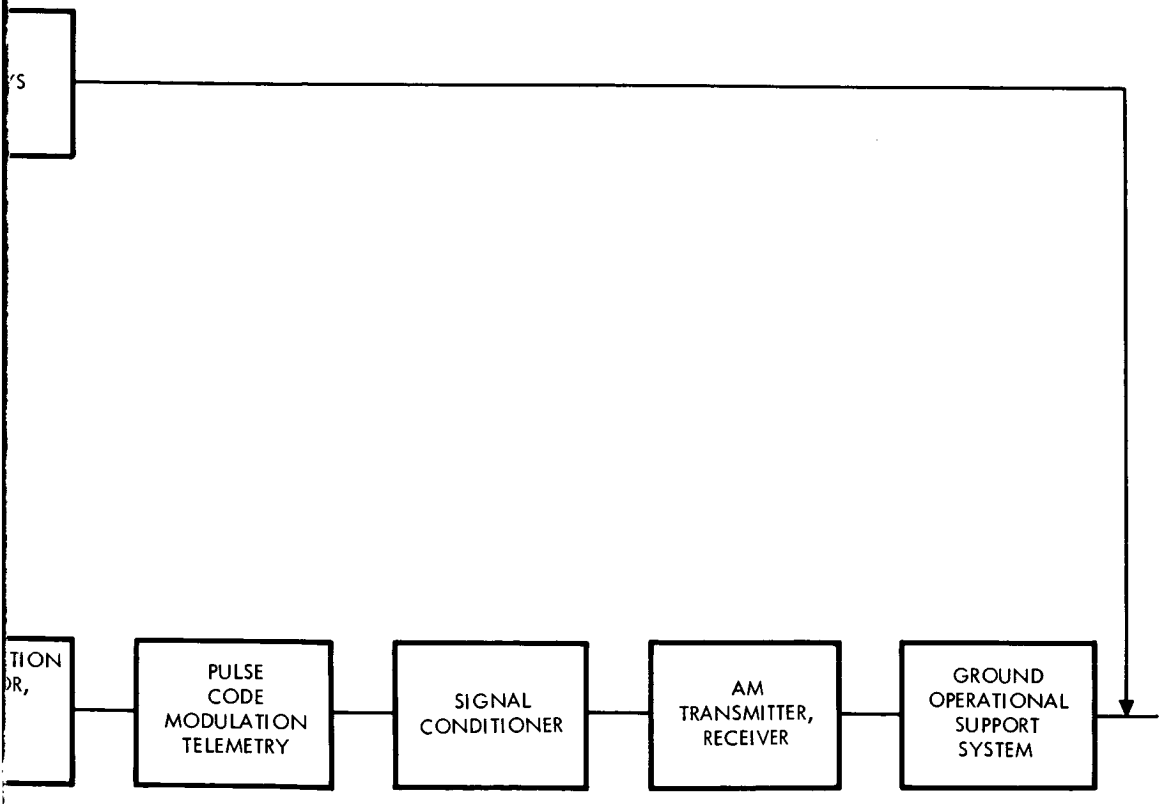

Figure 3-19. Cisearth Monitor

~~CONFIDENTIAL~~

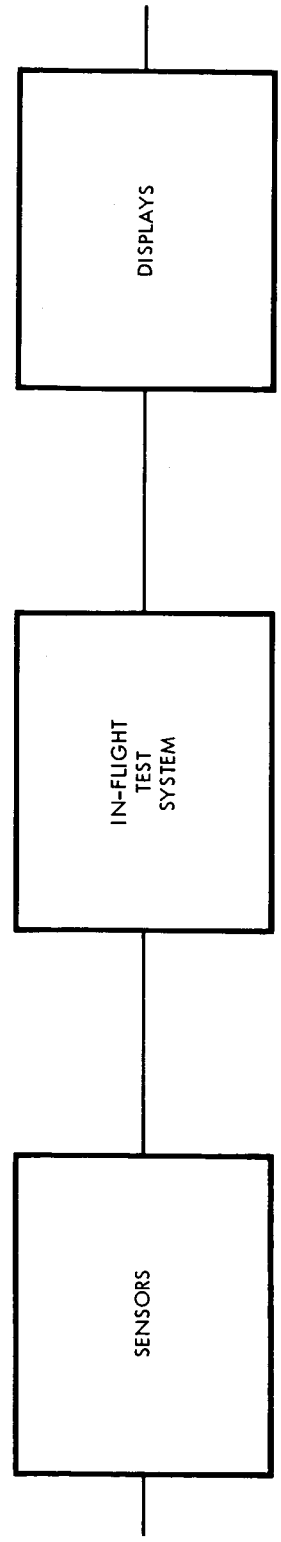

Figure 3-20. Ultralunar Monitor

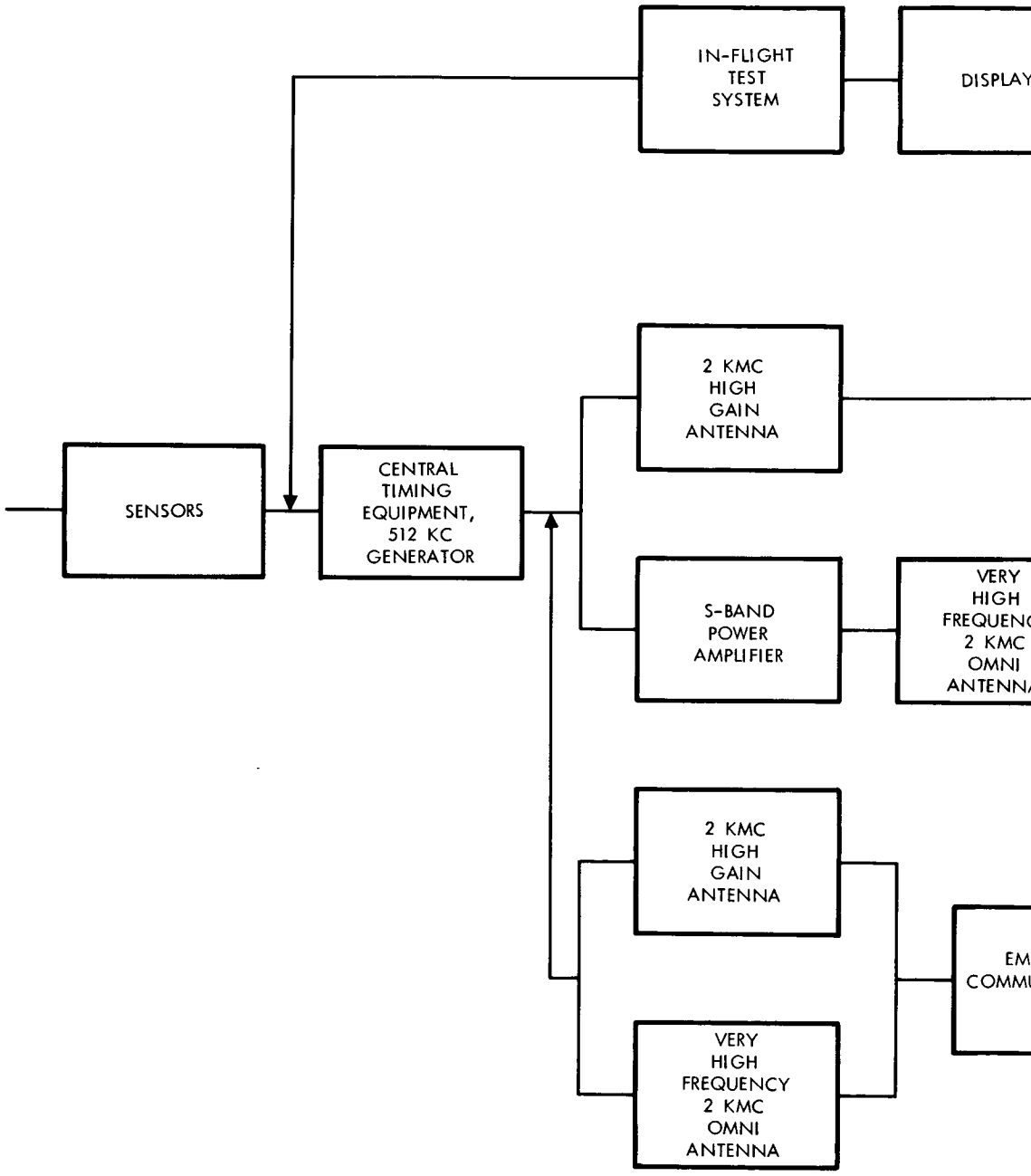
IN-FLIGHT TEST SYSTEM
DISPLAY
2 KMC HIGH GAIN ANTENNA
SENSORS
CENTRAL TIMING EQUIPMENT, 512 KC GENERATOR
S-BAND POWER AMPLIFIER
VERY HIGH FREQUENC 2 KMC OMNI ANTENNA
2 KMC HIGH GAIN ANTENNA
EM COMMU
VERY HIGH FREQUENCY 2 KMC OMNI ANTENNA

NO

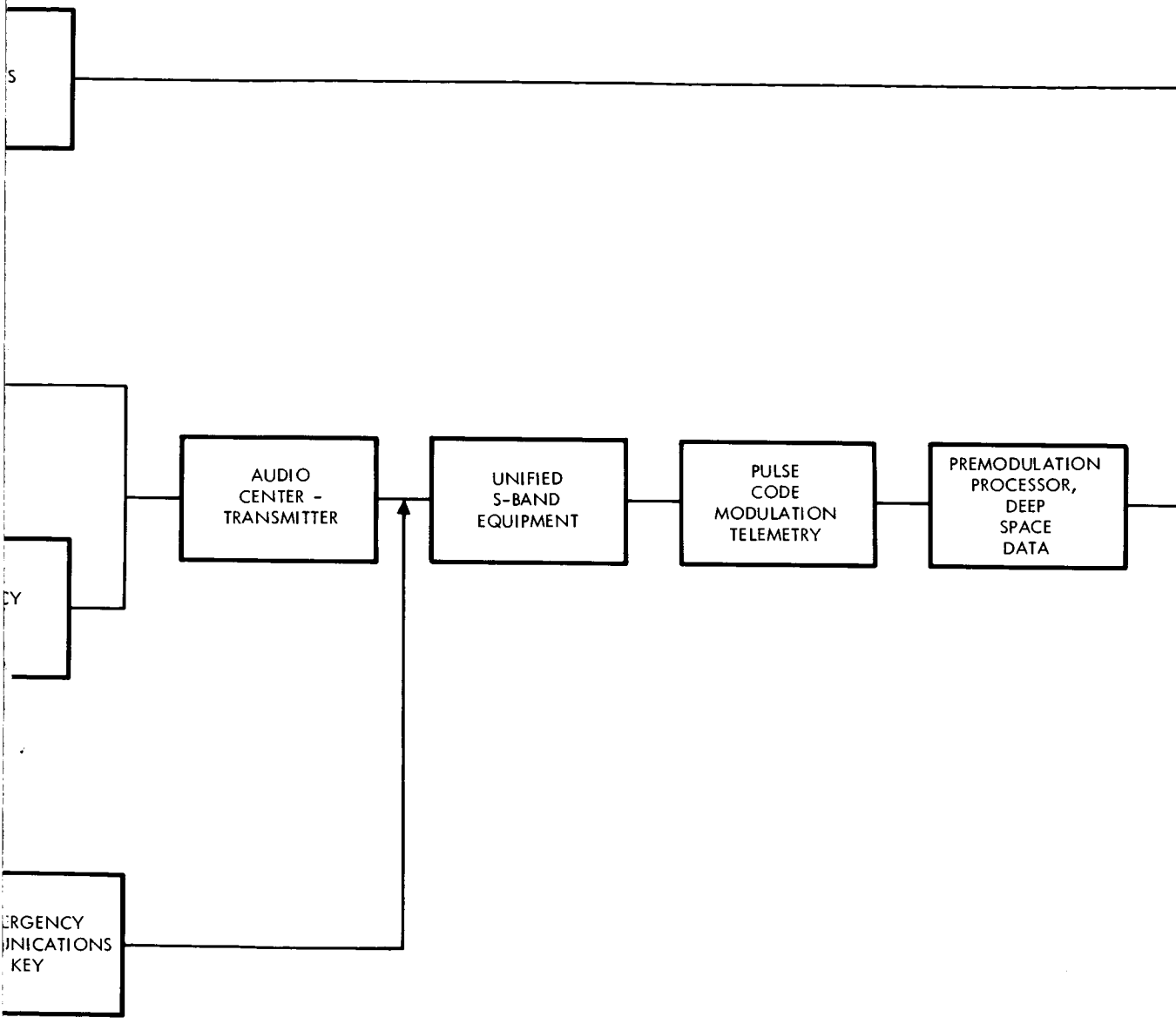
S
CY
RGENCY
NICATIONS
KEY
AUDIO
CENTER -
TRANSMITTER
UNIFIED
S-BAND
EQUIPMENT
PULSE
CODE
MODULATION
TELEMETRY
PREMODULATION
PROCESSOR,
DEEP
SPACE
DATA

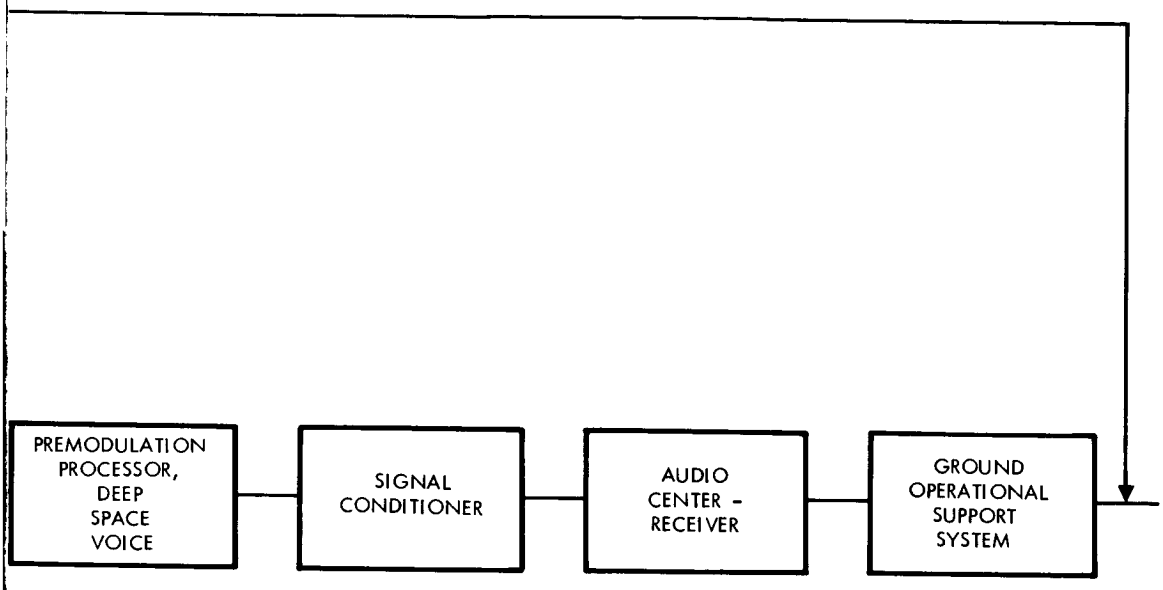

Figure 3-21. Translunar, Antelunar, and Transearth

~~CONFIDENTIAL~~

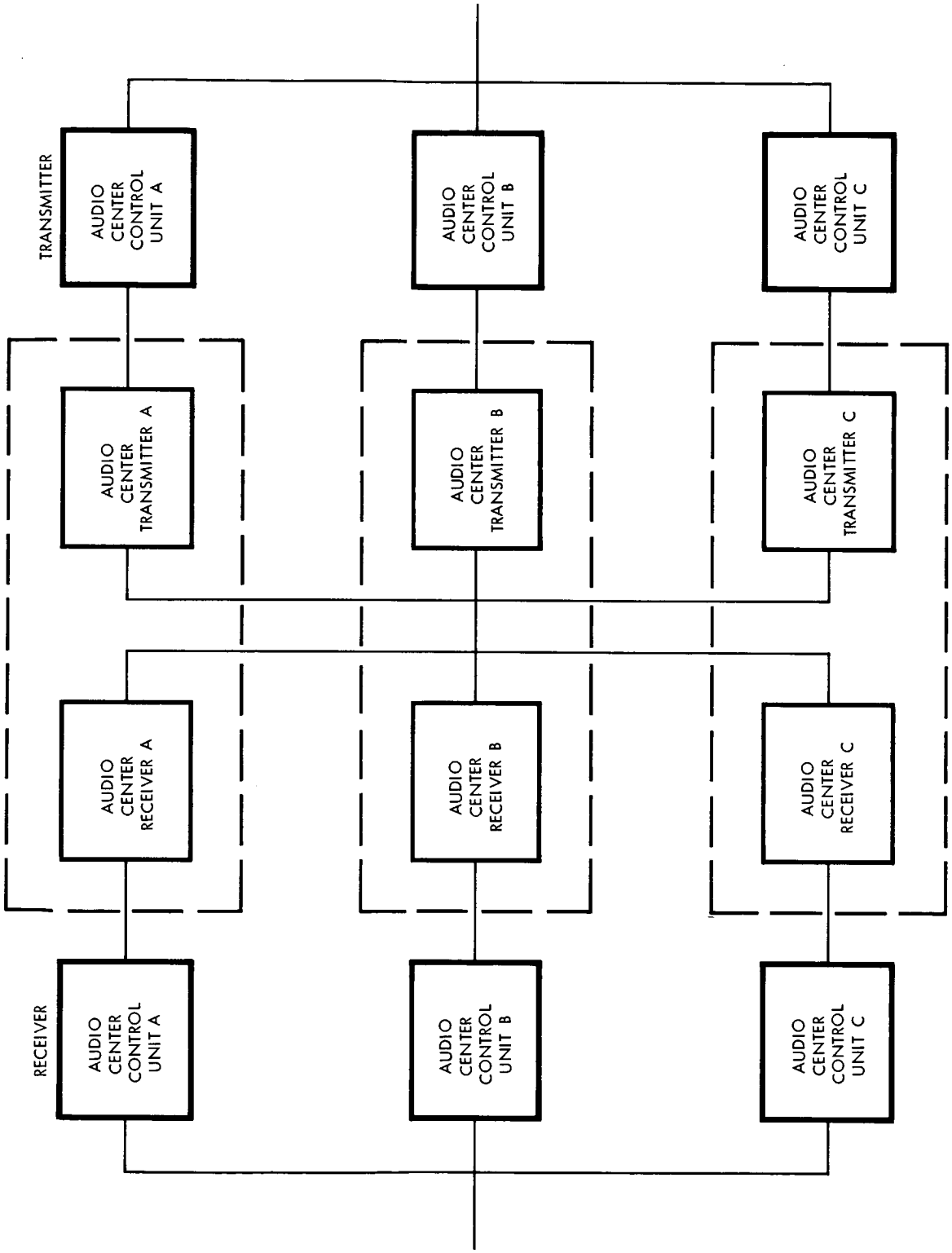

Figure 3-22. Audio Center - Receiver (ACRC), Audio Center - Transmitter (ACTM)

~~CONFIDENTIAL~~

~~CONFIDENTIAL~~

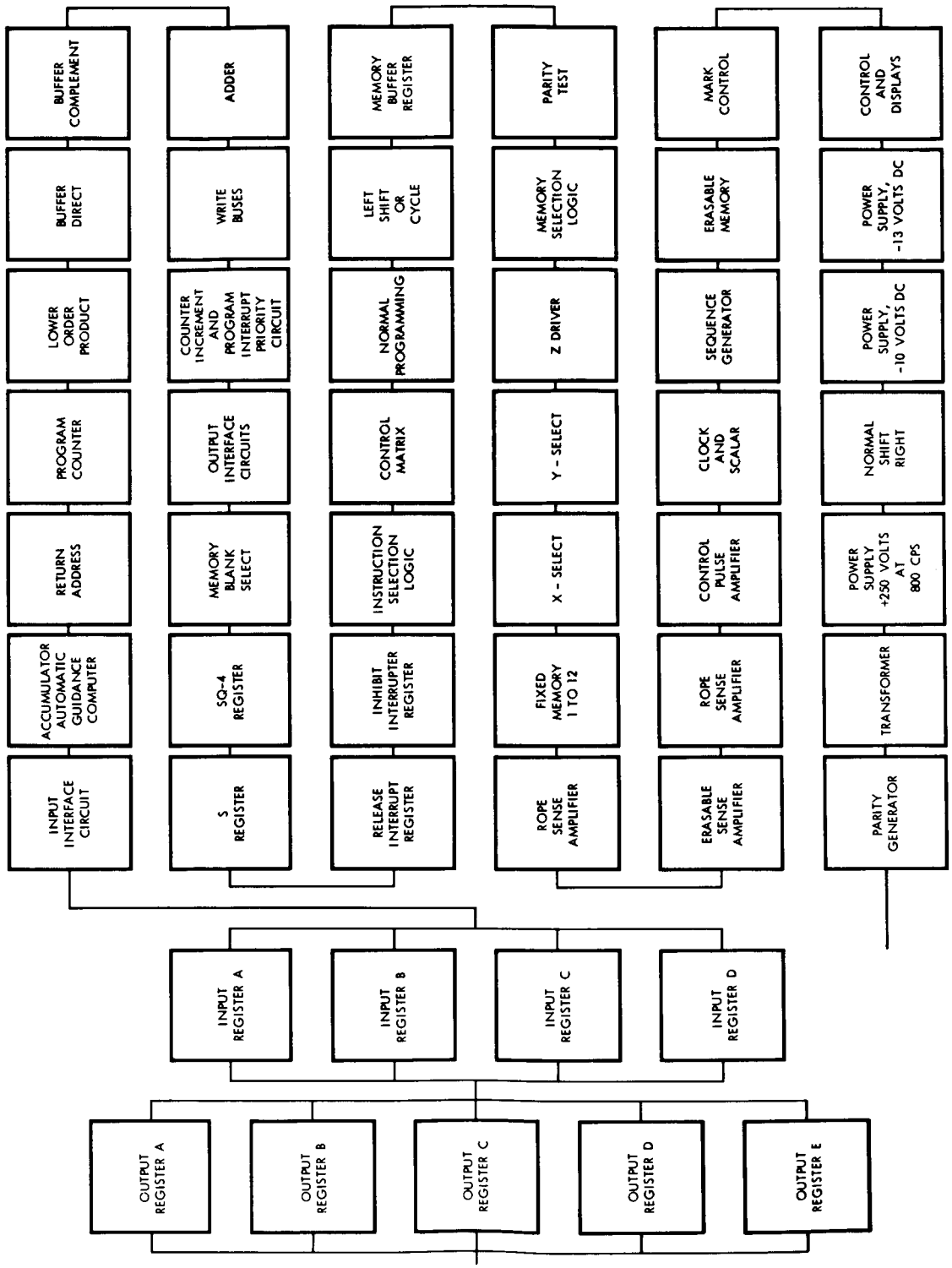

Figure 3-23. Apollo Guidance Computer (AGC)

~~CONFIDENTIAL~~

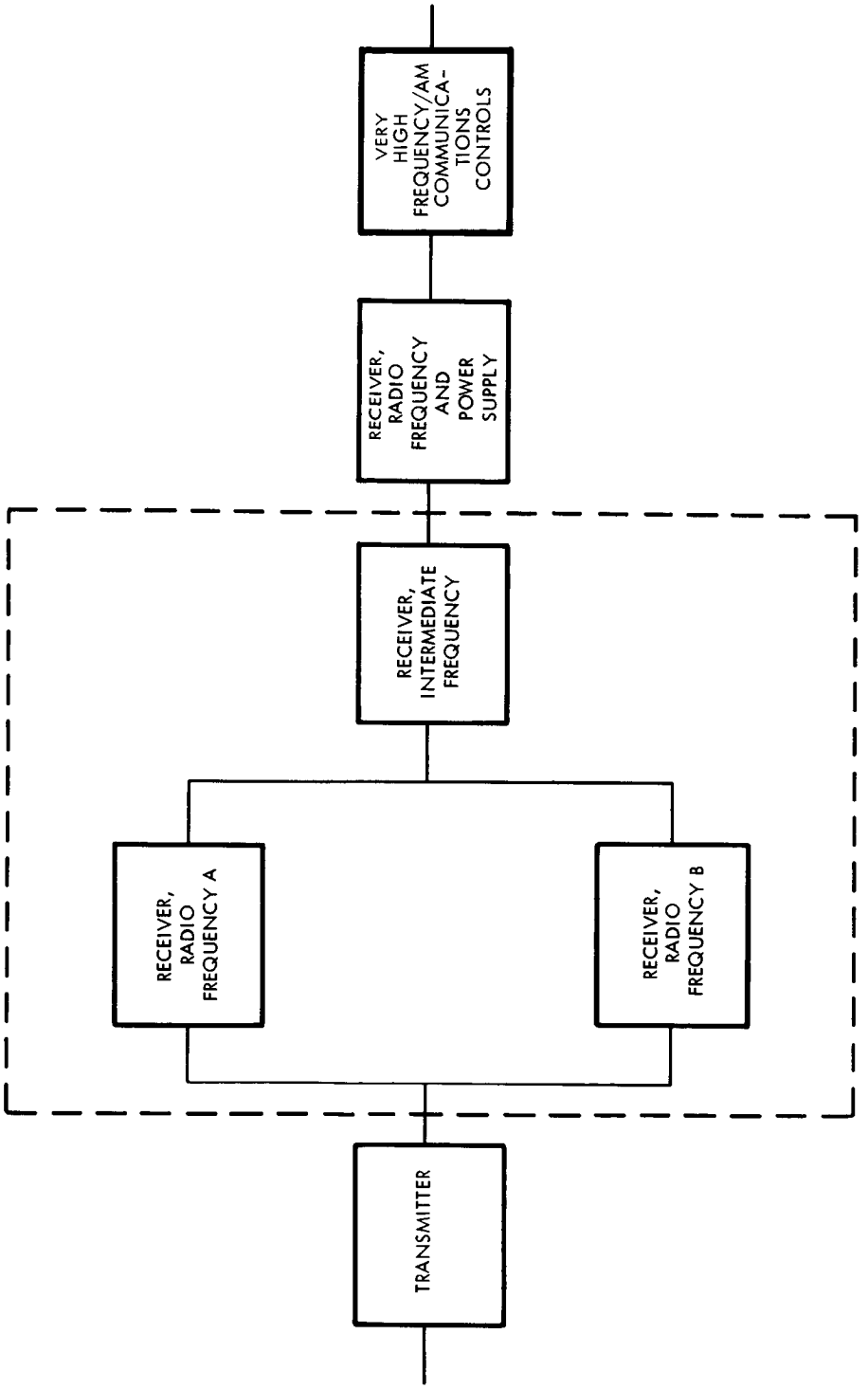

Figure 3-24. VHF/AM Transmitter-Receiver (AMX)

~~CONFIDENTIAL~~

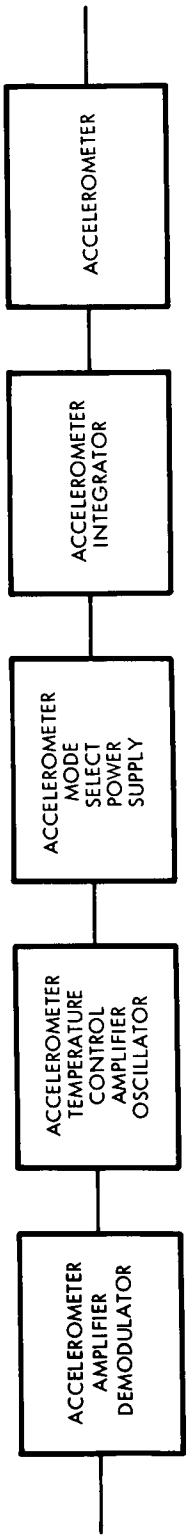

Figure 3-25. Accelerometer Package (APK)

~~CONFIDENTIAL~~

[redacted]

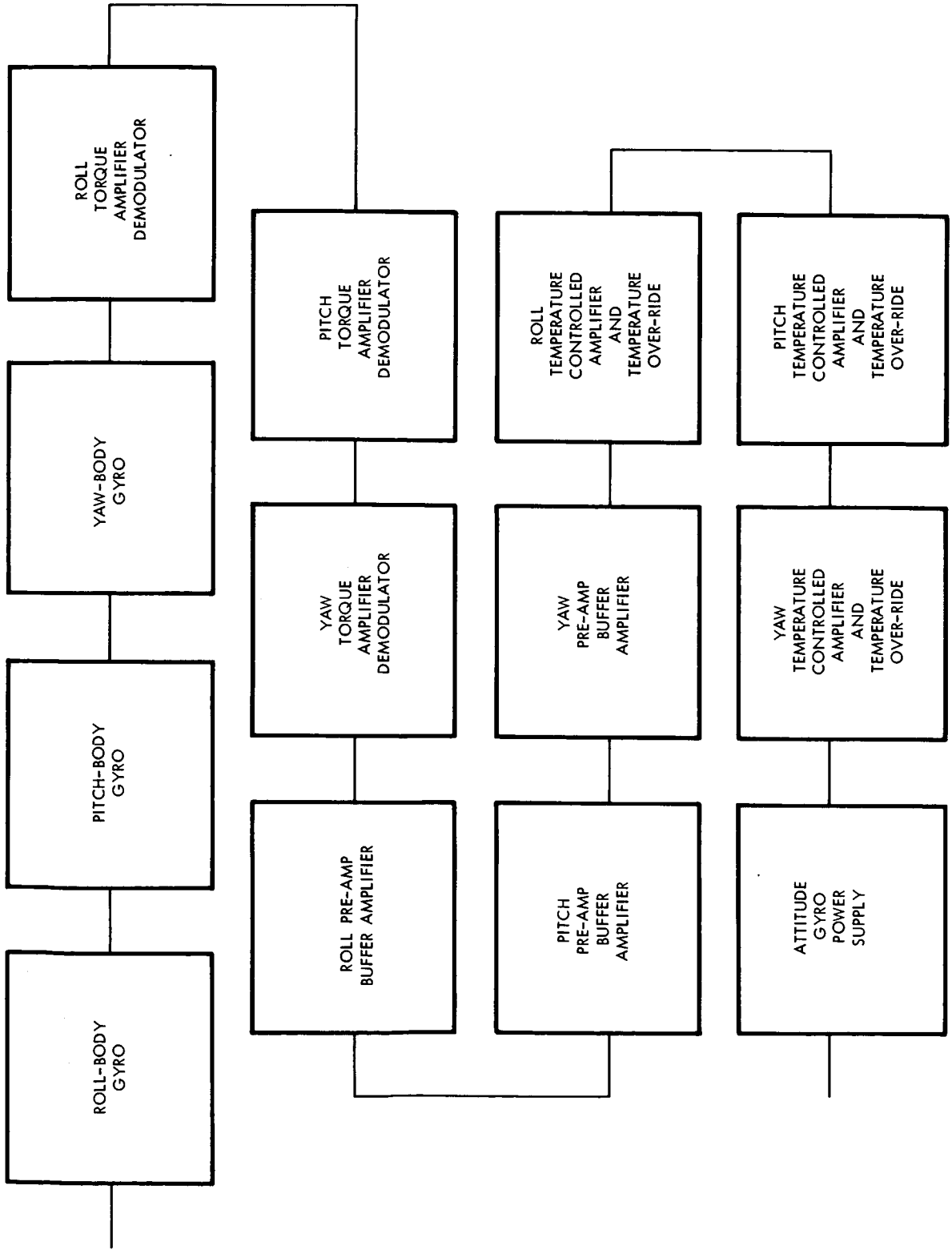

Figure 3-26. Body-Mounted Attitude Gyro (BMG)

[redacted]

~~CONFIDENTIAL~~

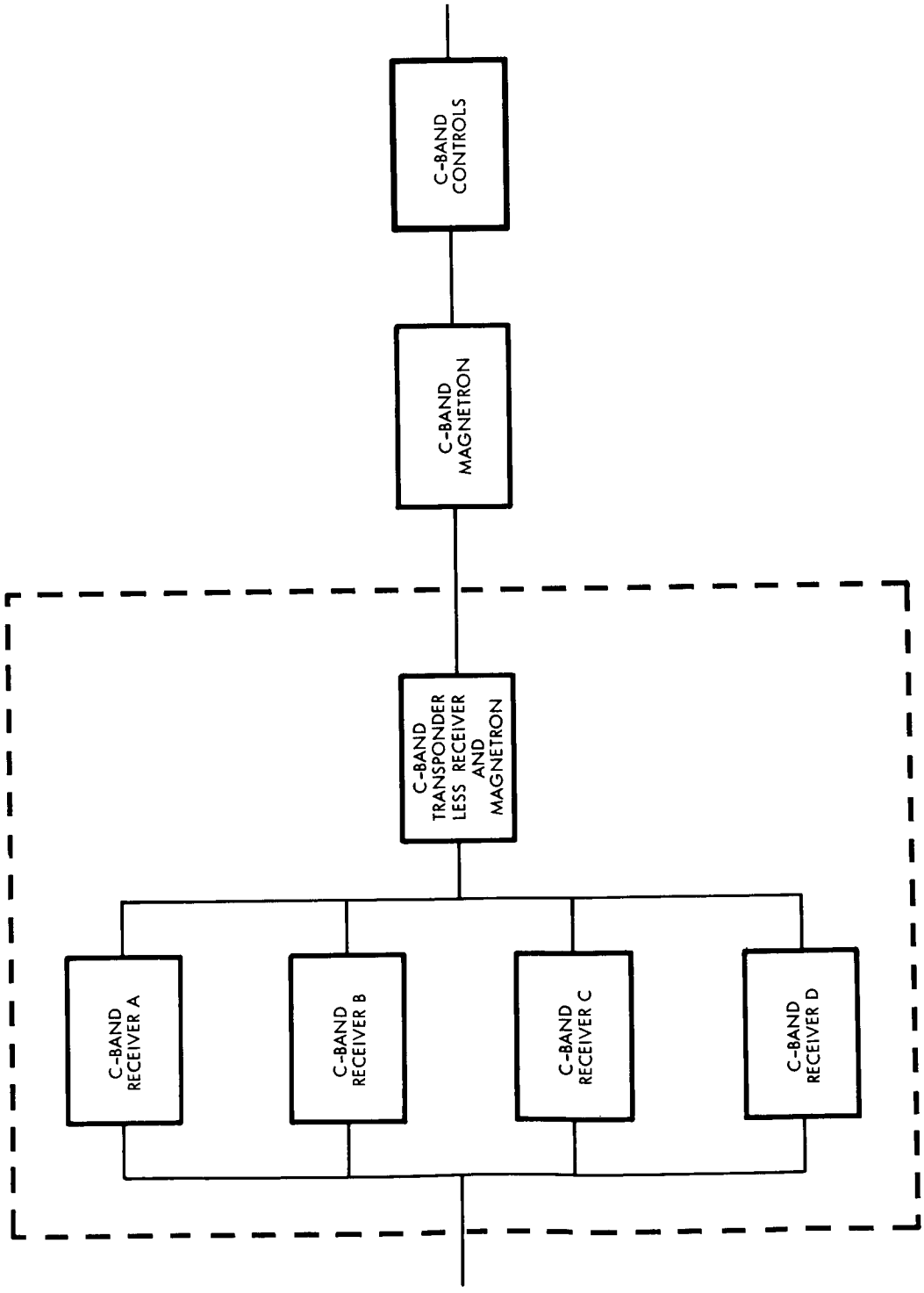

Figure 3-27. C-Band Transponder (CBX)

~~CONFIDENTIAL~~

[redacted]

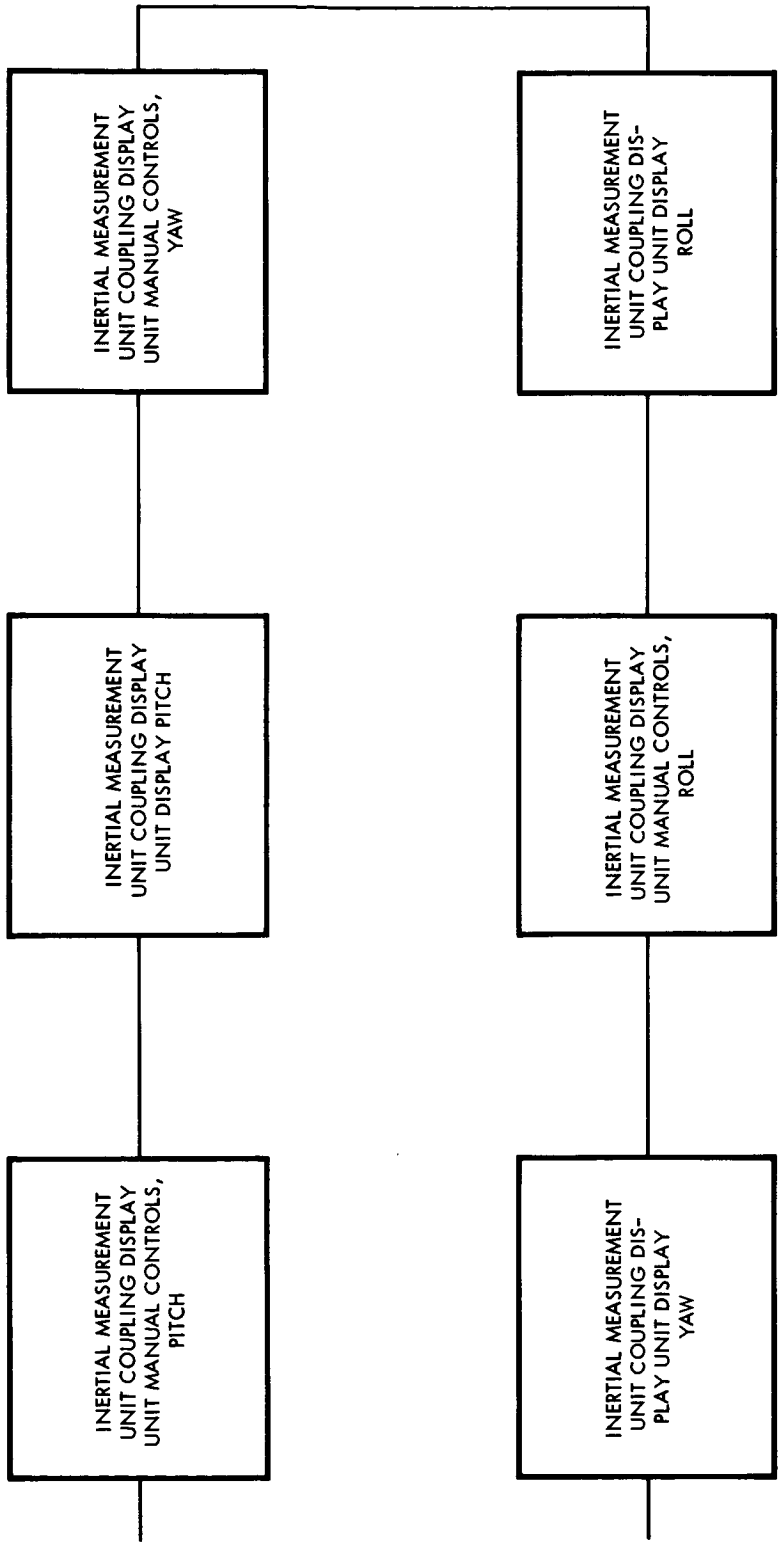

Figure 3-28. Manual Control - CDUM (CDCM)

[redacted]

~~CONFIDENTIAL~~

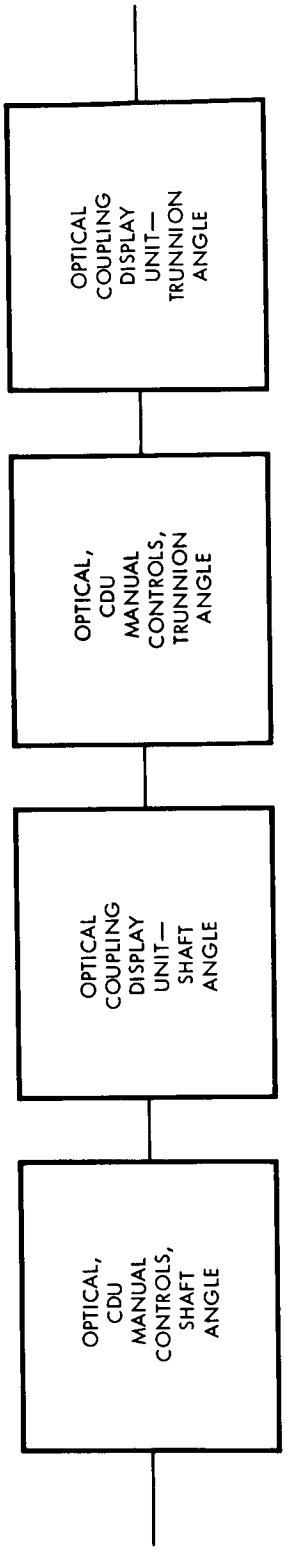

Figure 3-29. Manual Control - CDUO (CDCO)

~~CONFIDENTIAL~~

~~CONFIDENTIAL~~

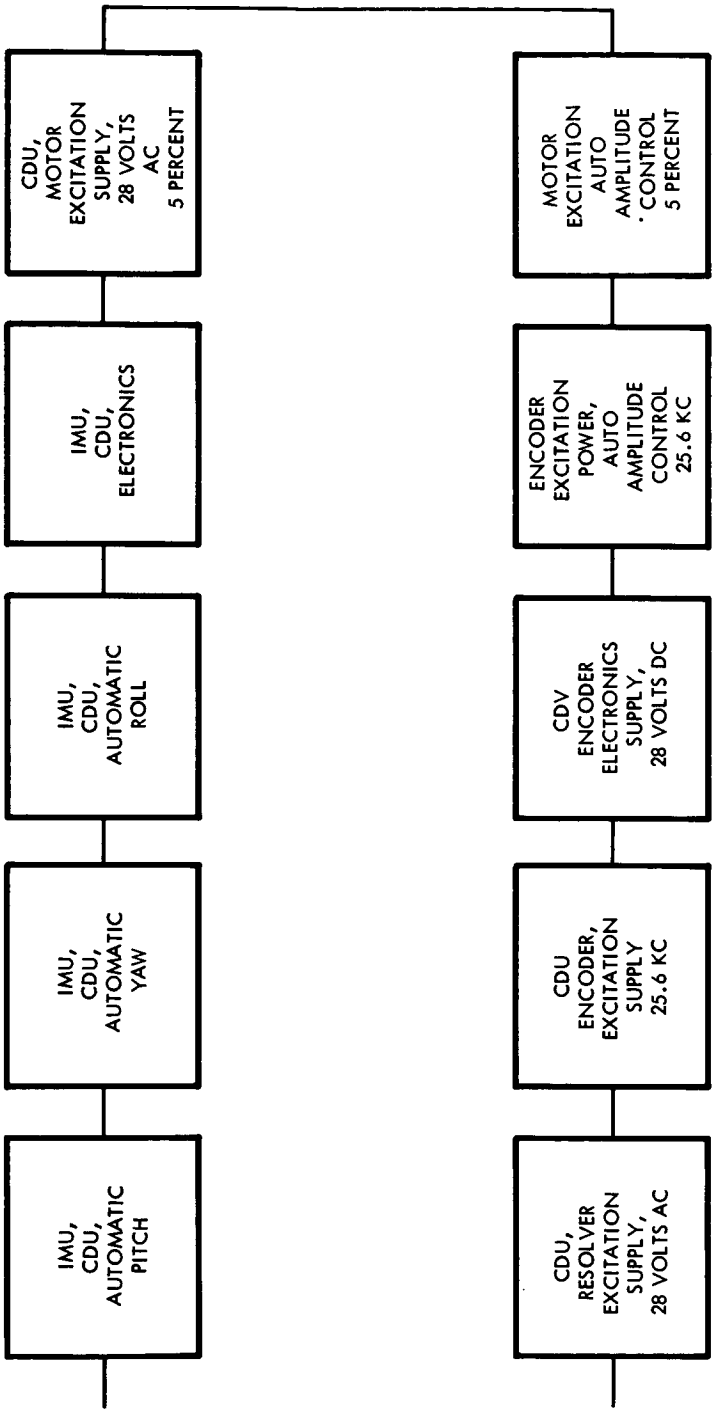

Figure 3-30. Coupling Display Unit (CDUM)

~~CONFIDENTIAL~~

~~CONFIDENTIAL~~

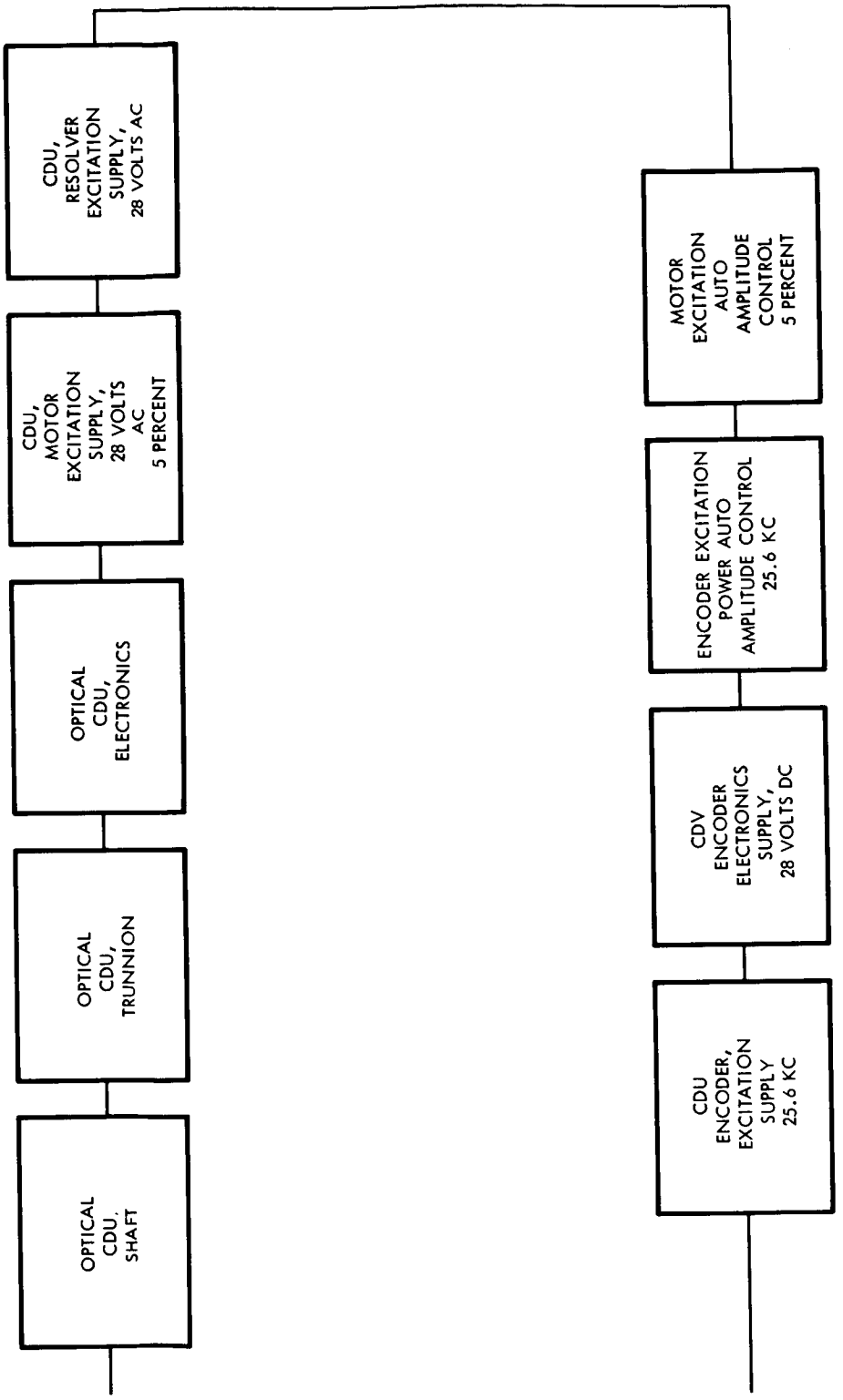

Figure 3-31. Coupling Display Unit (CDUO)

~~CONFIDENTIAL~~

~~CONFIDENTIAL~~

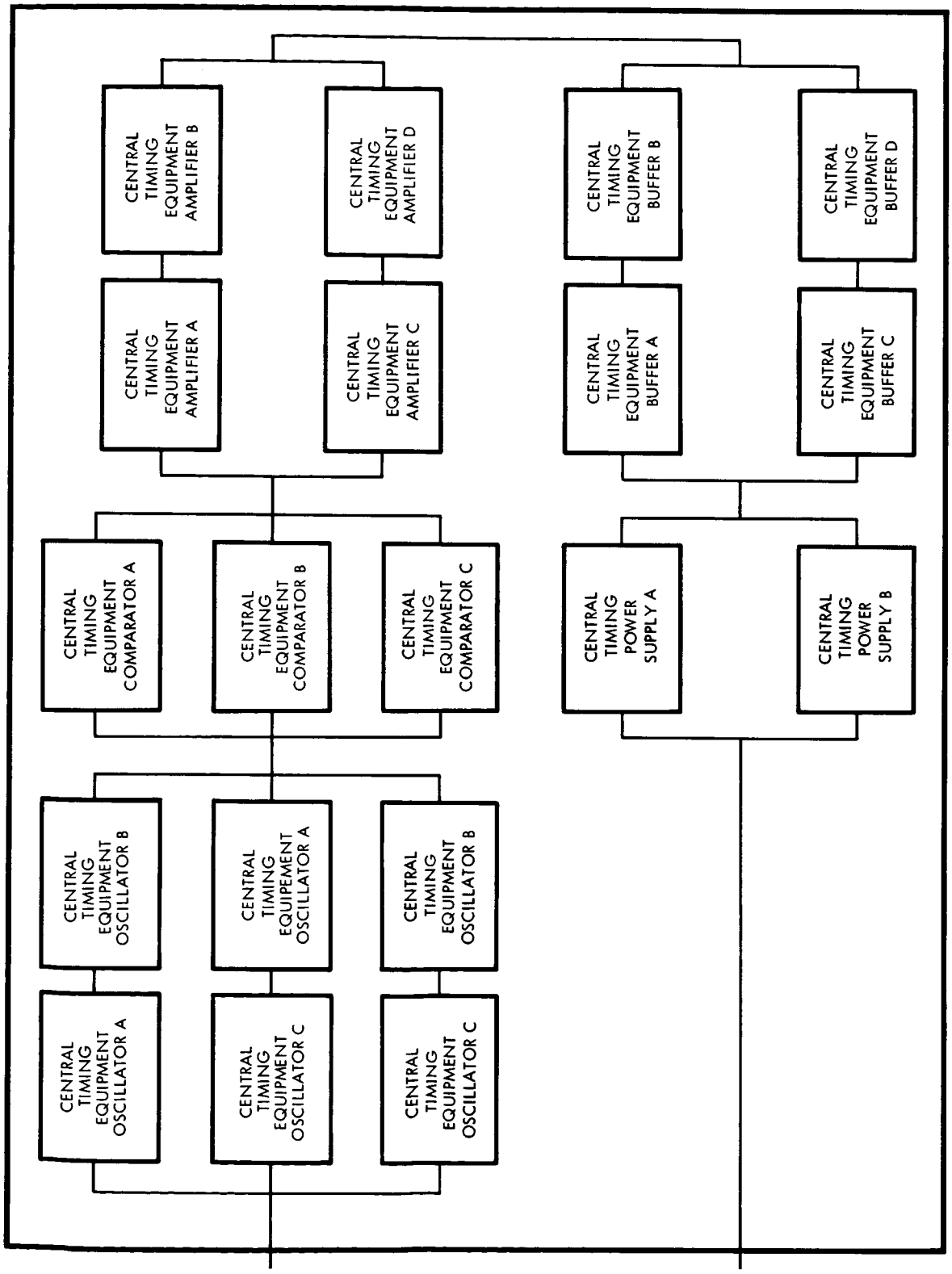

Figure 3-32. Central Timing Equipment (CTEK 512 KC Generator)

~~CONFIDENTIAL~~

~~CONFIDENTIAL~~

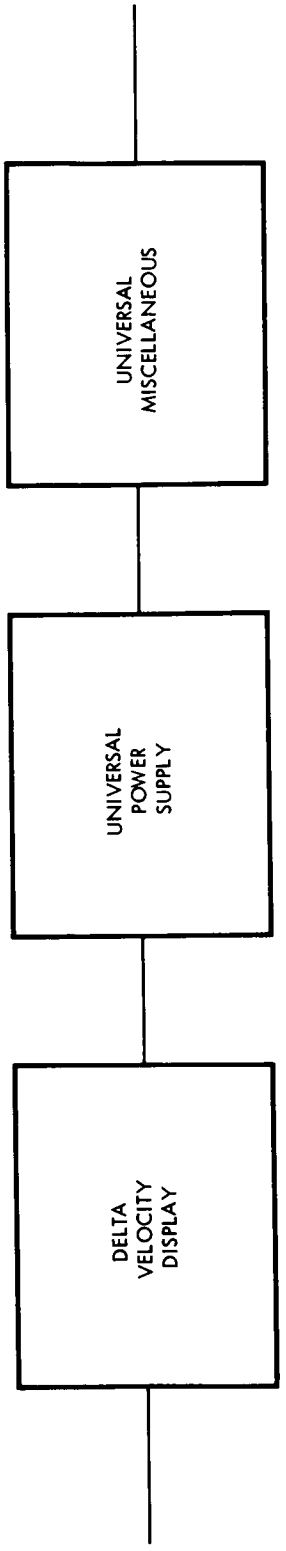

Figure 3-33. Delta Velocity Display (DVD)

~~CONFIDENTIAL~~

~~CONFIDENTIAL~~

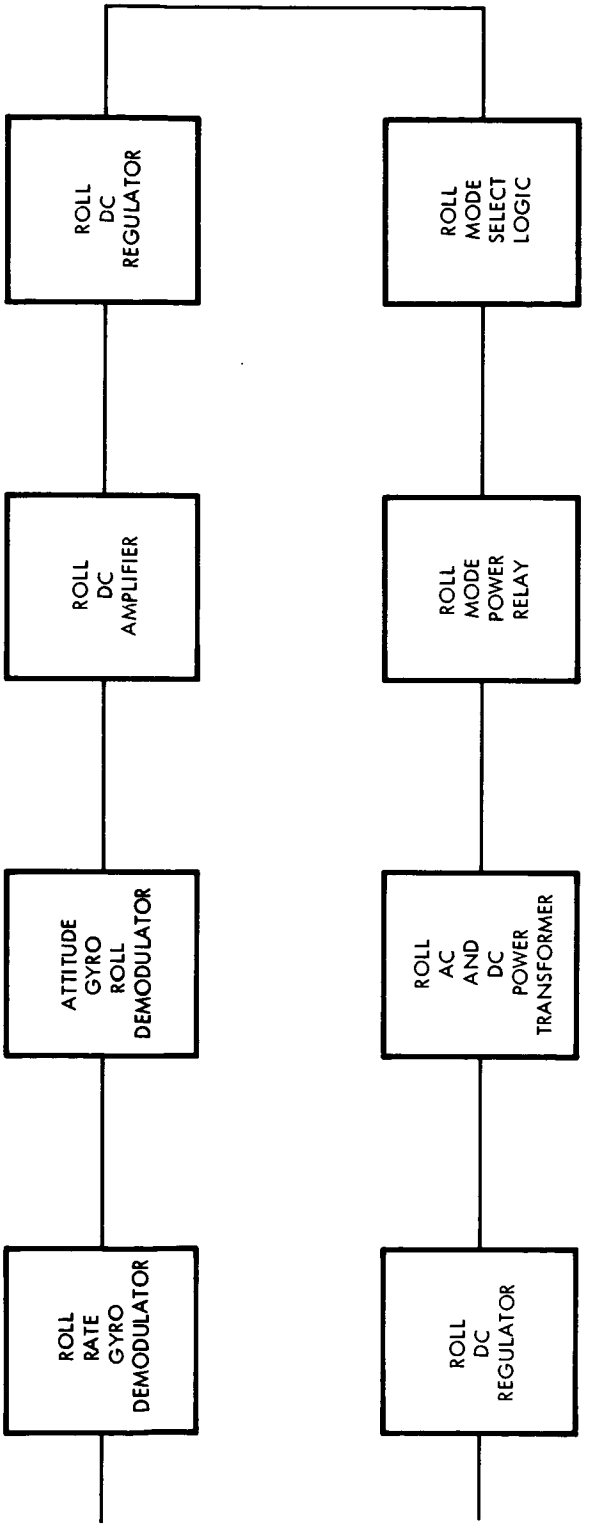

Figure 3-34. Electronic Control Assembly - Roll (ECAR)

~~CONFIDENTIAL~~

~~CONFIDENTIAL~~

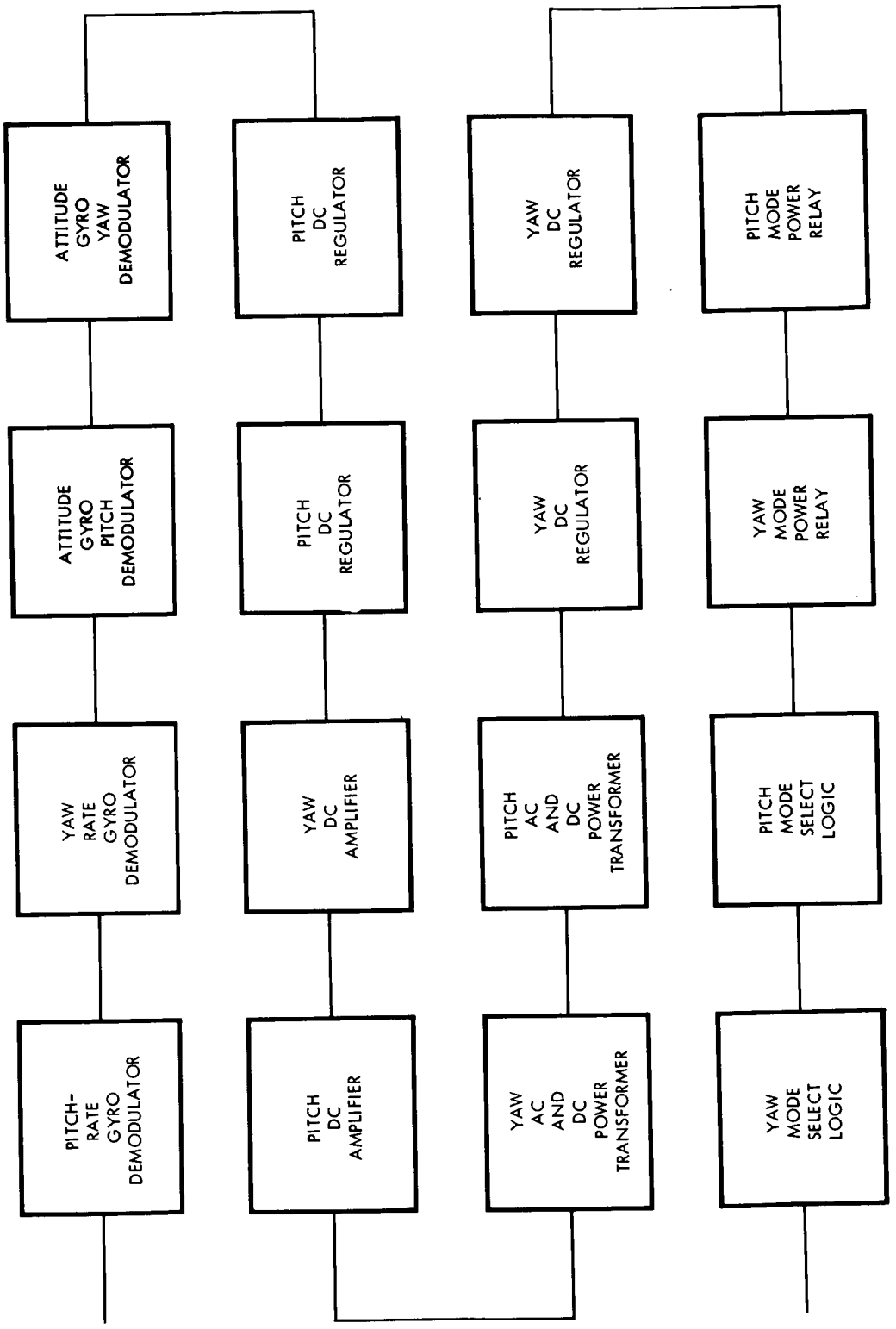

Figure 3-35. Electronic Control Assembly - Pitch Yaw (ECPY)

~~CONFIDENTIAL~~

~~CONFIDENTIAL~~

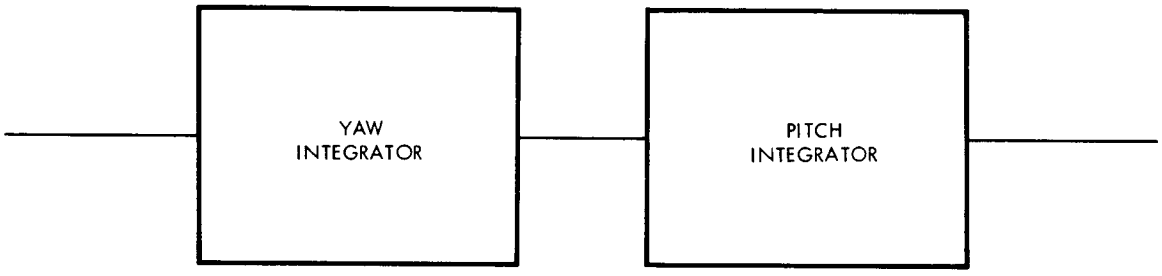

Figure 3-36. Electronic Control Assembly Integration

~~CONFIDENTIAL~~

~~CONFIDENTIAL~~

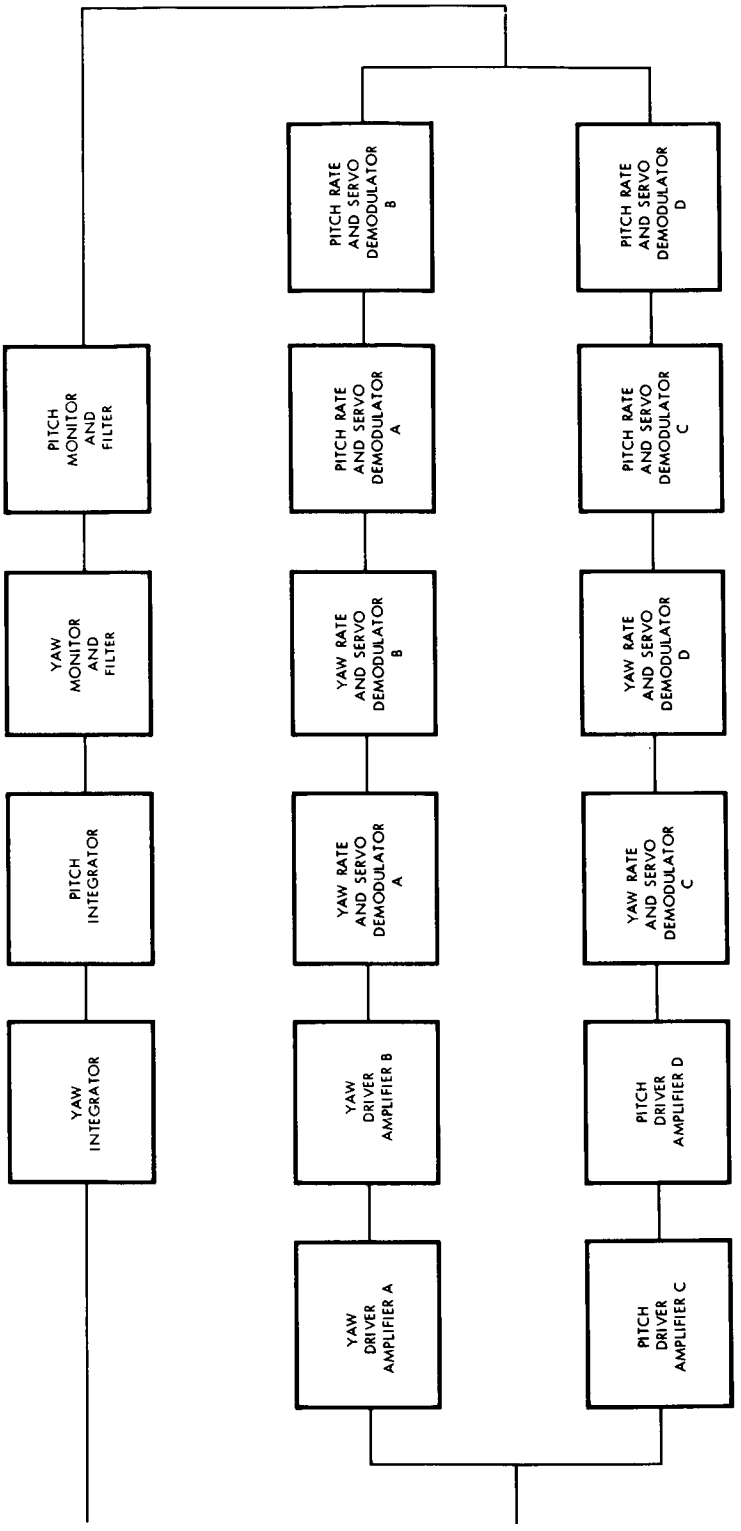

Figure 3-37. Electronic Control Assembly - Thrust Vector (ETPY)

~~CONFIDENTIAL~~

~~CONFIDENTIAL~~

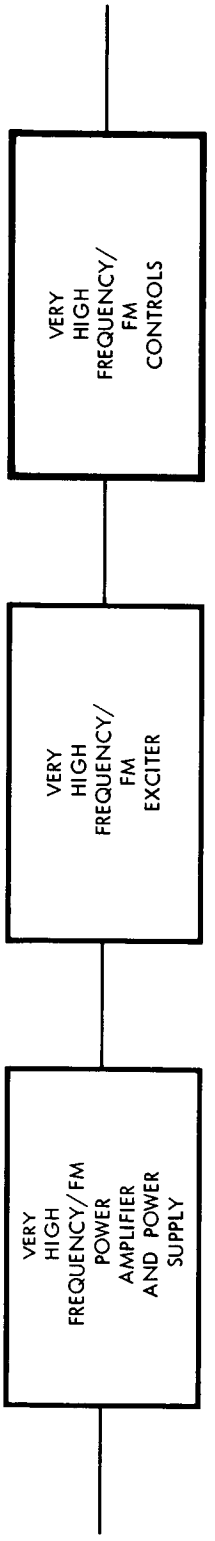

Figure 3-38. VHF/FM Transmitter (FMX)

~~CONFIDENTIAL~~

~~CONFIDENTIAL~~

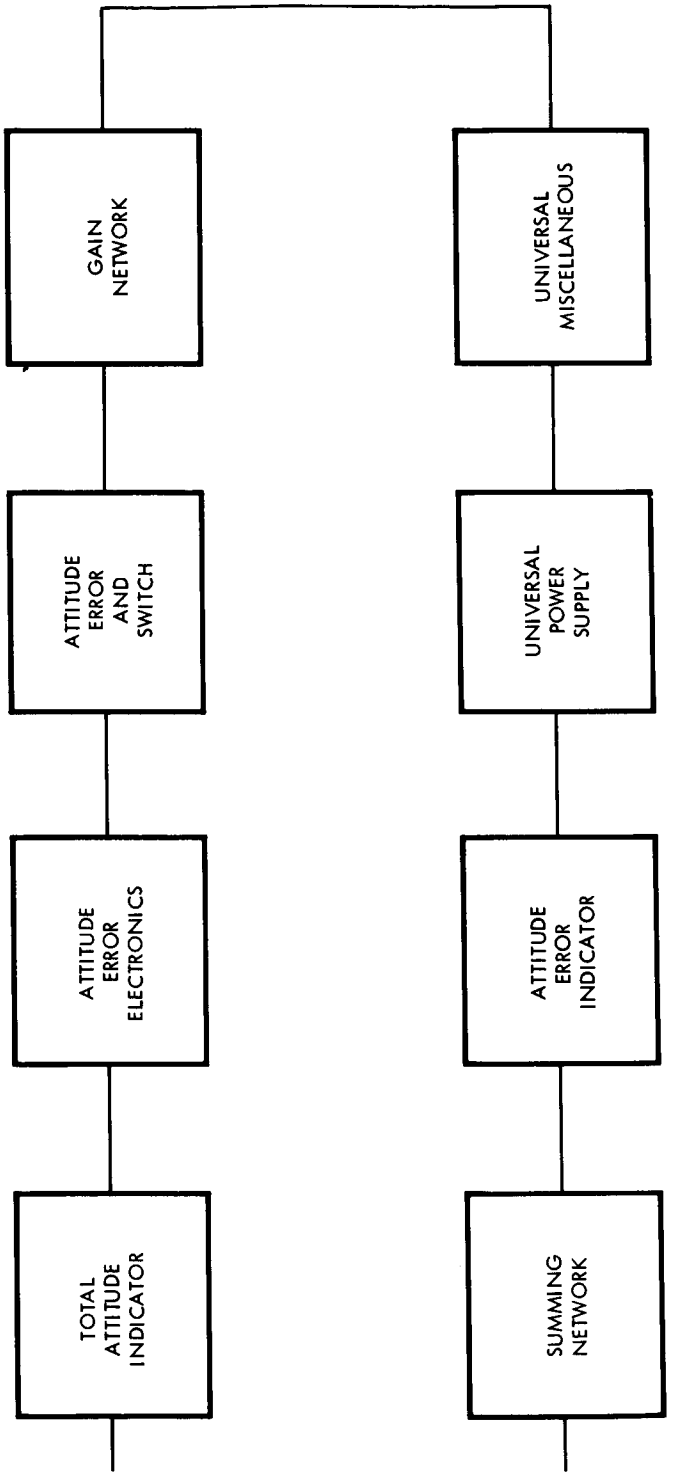

Figure 3-39. Flight Director Attitude Indicator (FDAI)

~~CONFIDENTIAL~~

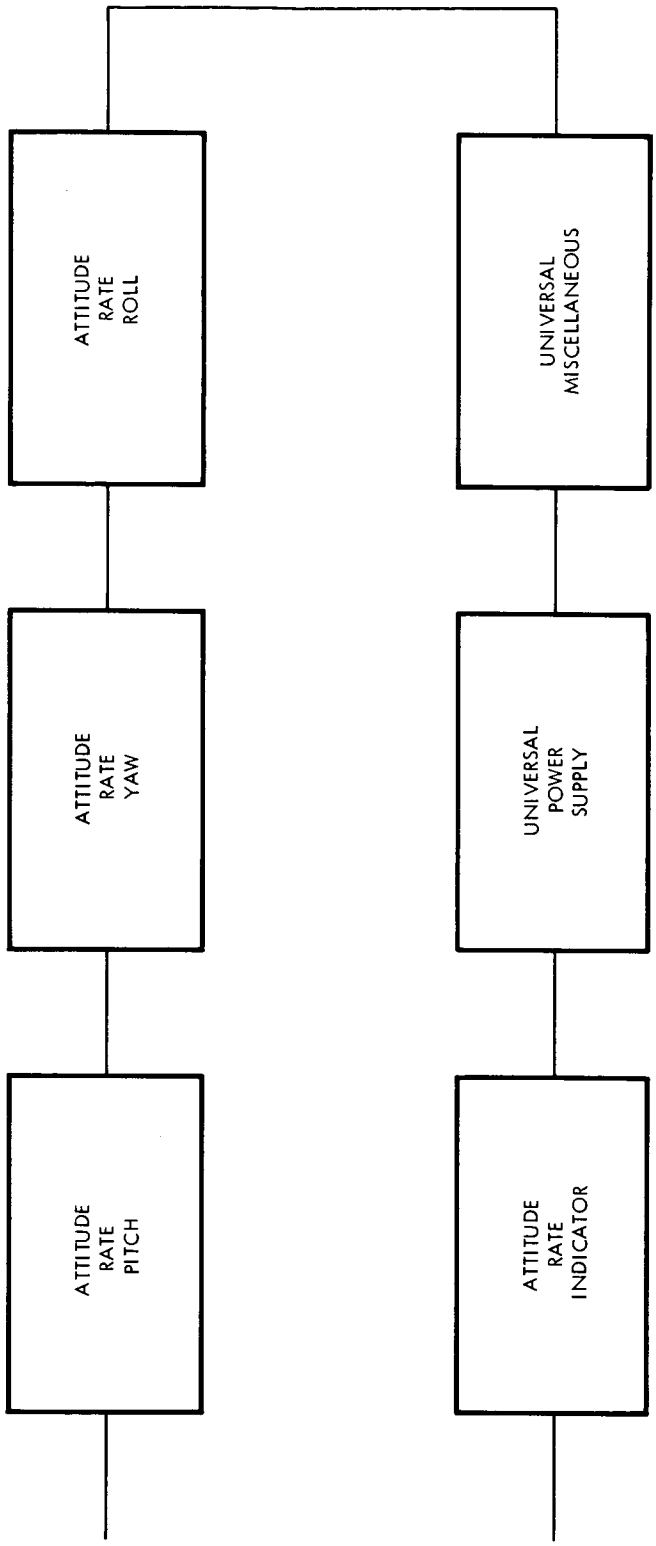

Figure 3-40. Flight Director Rate Indicator (FDRI)

~~CONFIDENTIAL~~

~~CONFIDENTIAL~~

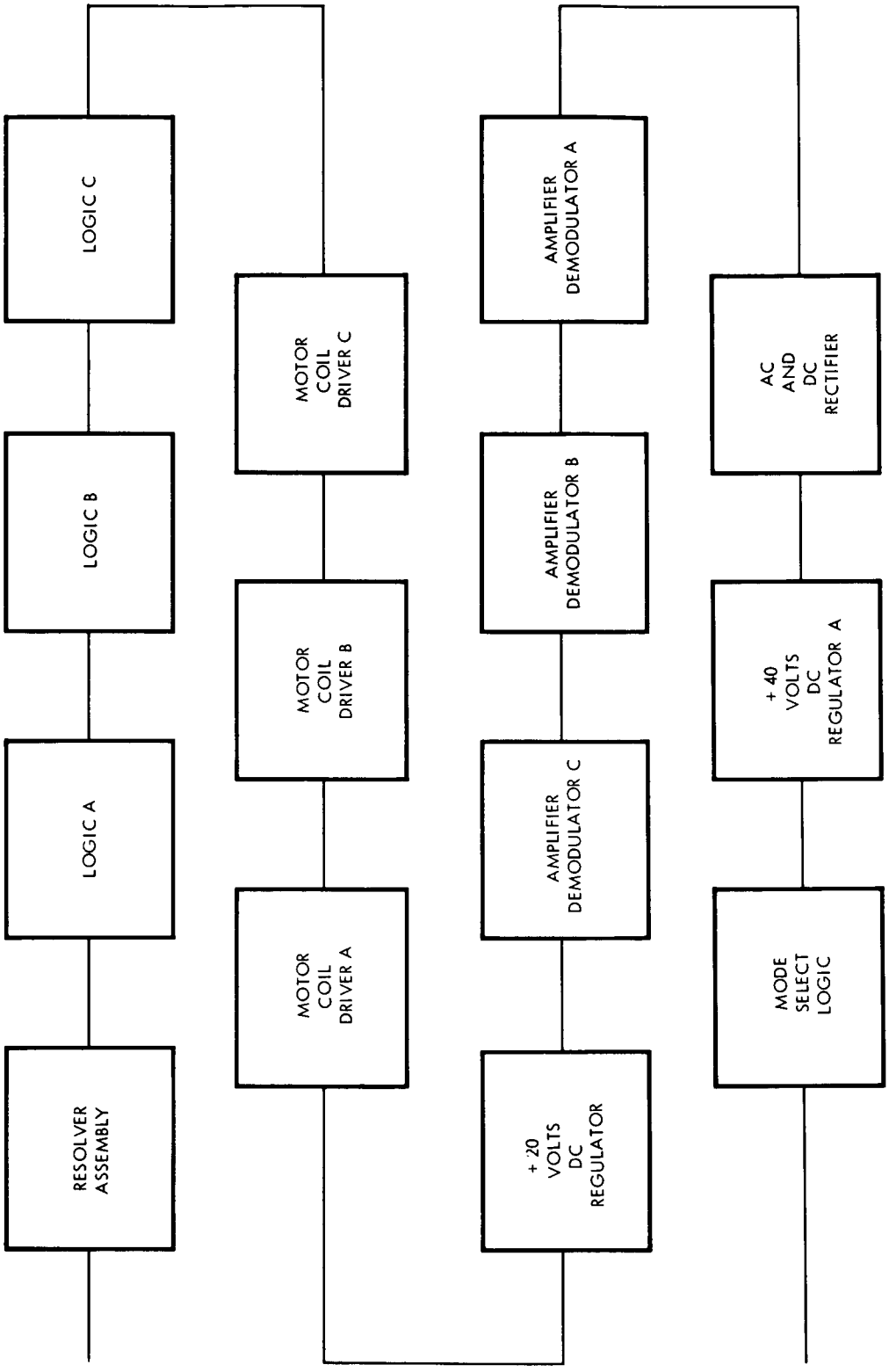

Figure 3-41. Attitude Gyro Coupling Unit (GCU)

~~CONFIDENTIAL~~

~~CONFIDENTIAL~~

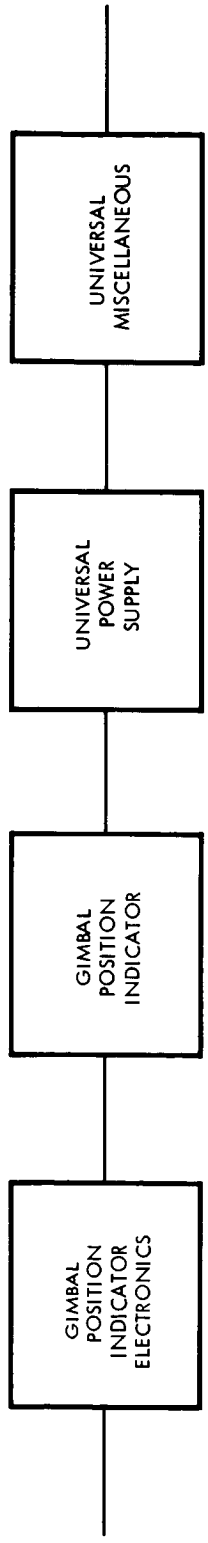

Figure 3-42. Gimbal Position Indicator (GPI)

~~CONFIDENTIAL~~

~~CONFIDENTIAL~~

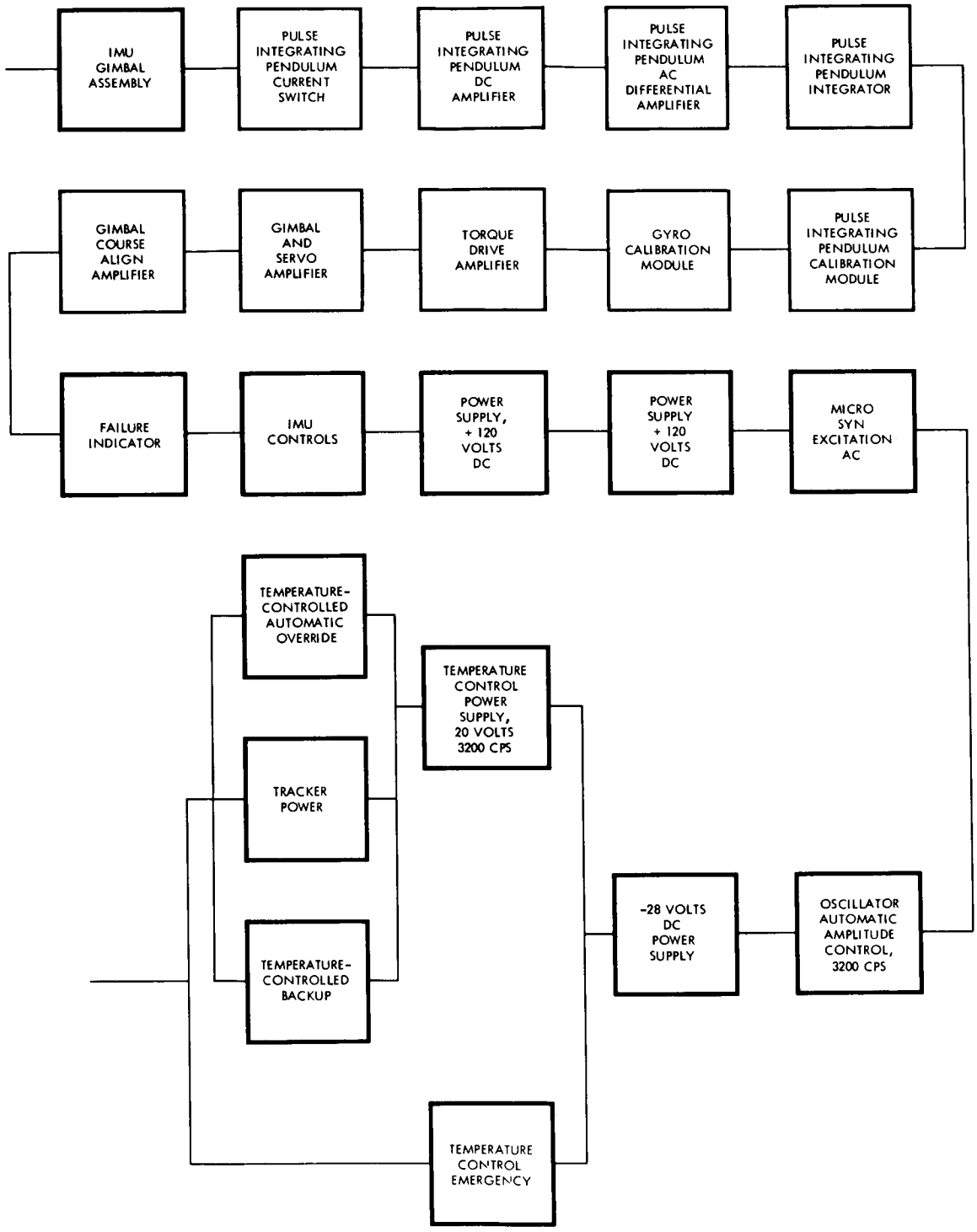

Figure 3-43. Inertial Measuring Unit (IMU)

~~CONFIDENTIAL~~

[redacted]

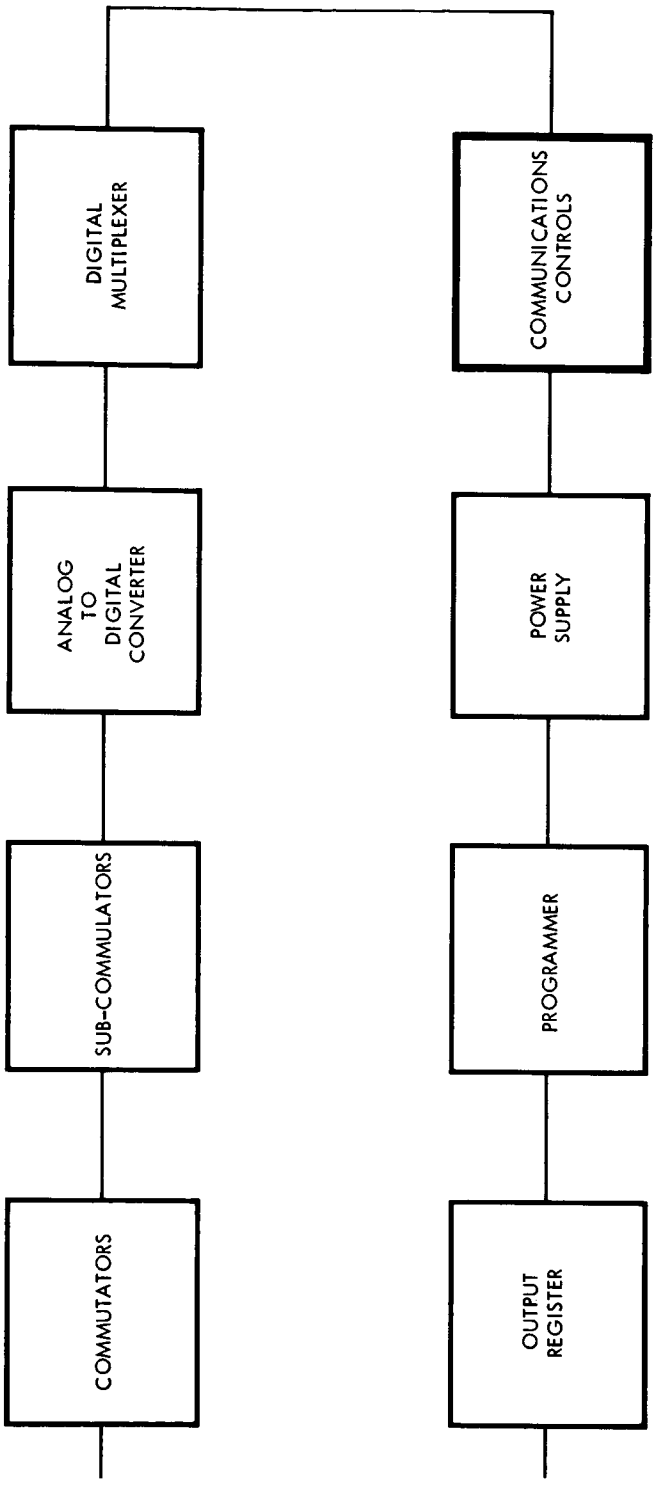

Figure 3-44. PCM Telemetry (PCM)

~~CONFIDENTIAL~~

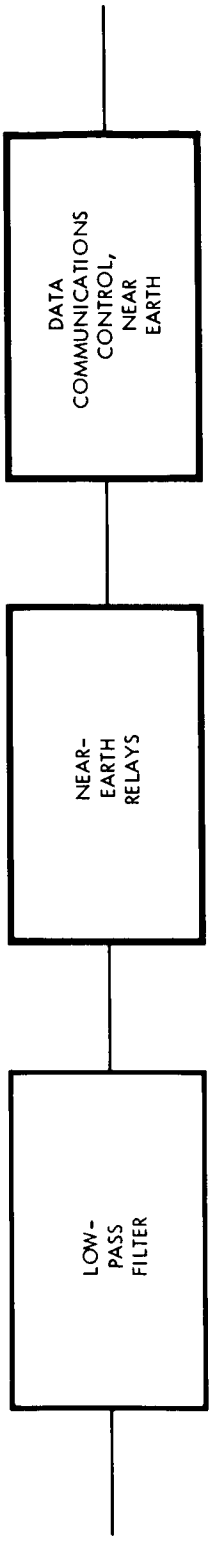

Figure 3-45. Premodulation Processor Near-Earth Data (PND)

~~CONFIDENTIAL~~

~~CONFIDENTIAL~~

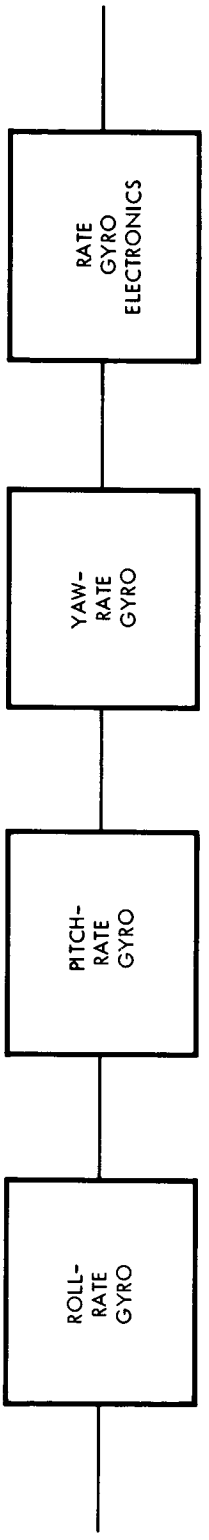

Figure 3-46. Rate Gyro Package (RGP)

~~CONFIDENTIAL~~

~~CONFIDENTIAL~~

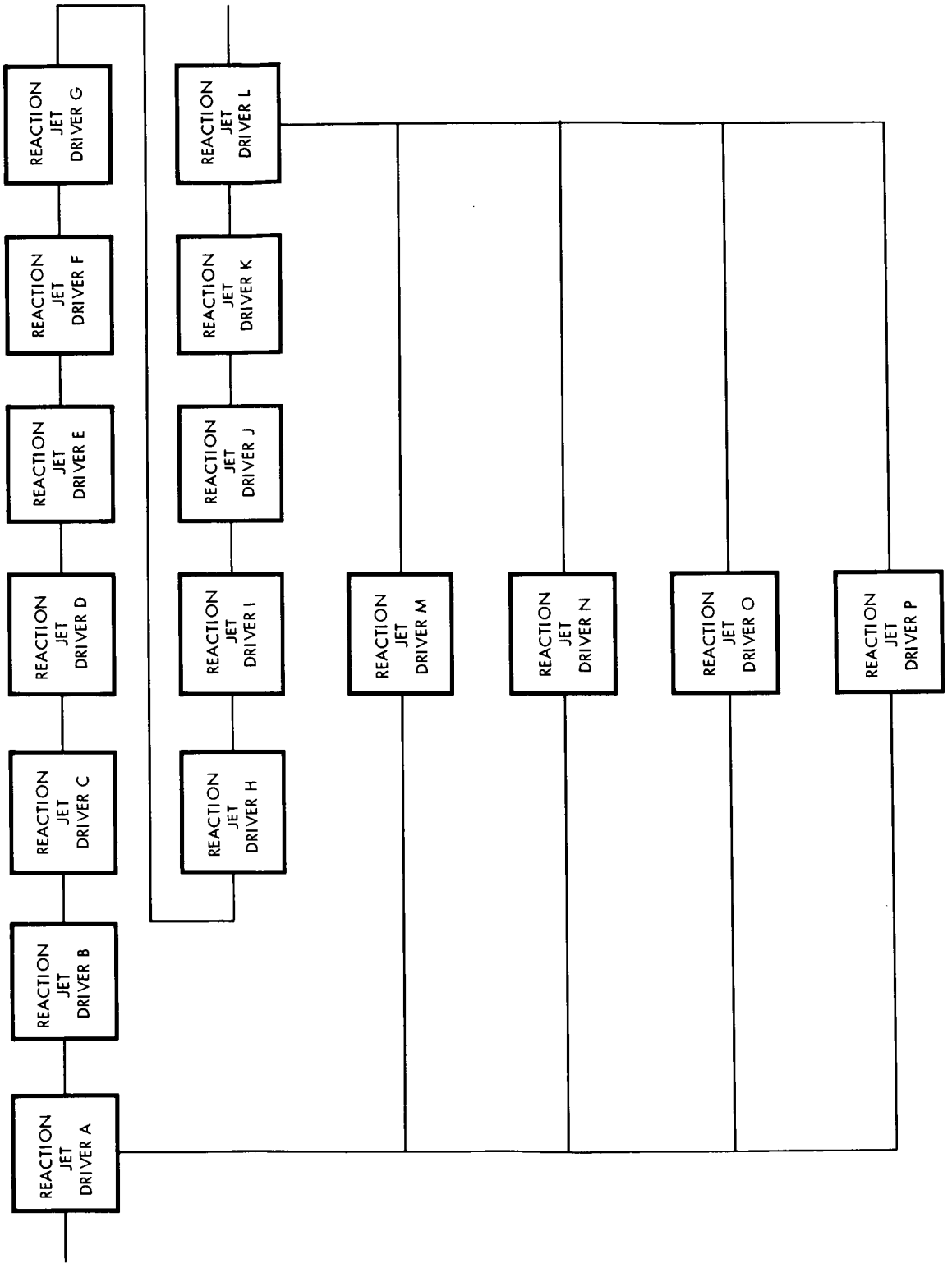

Figure 3-47. Reaction Jet Drivers - Service Module (RJDS-SM)

~~CONFIDENTIAL~~

[redacted]

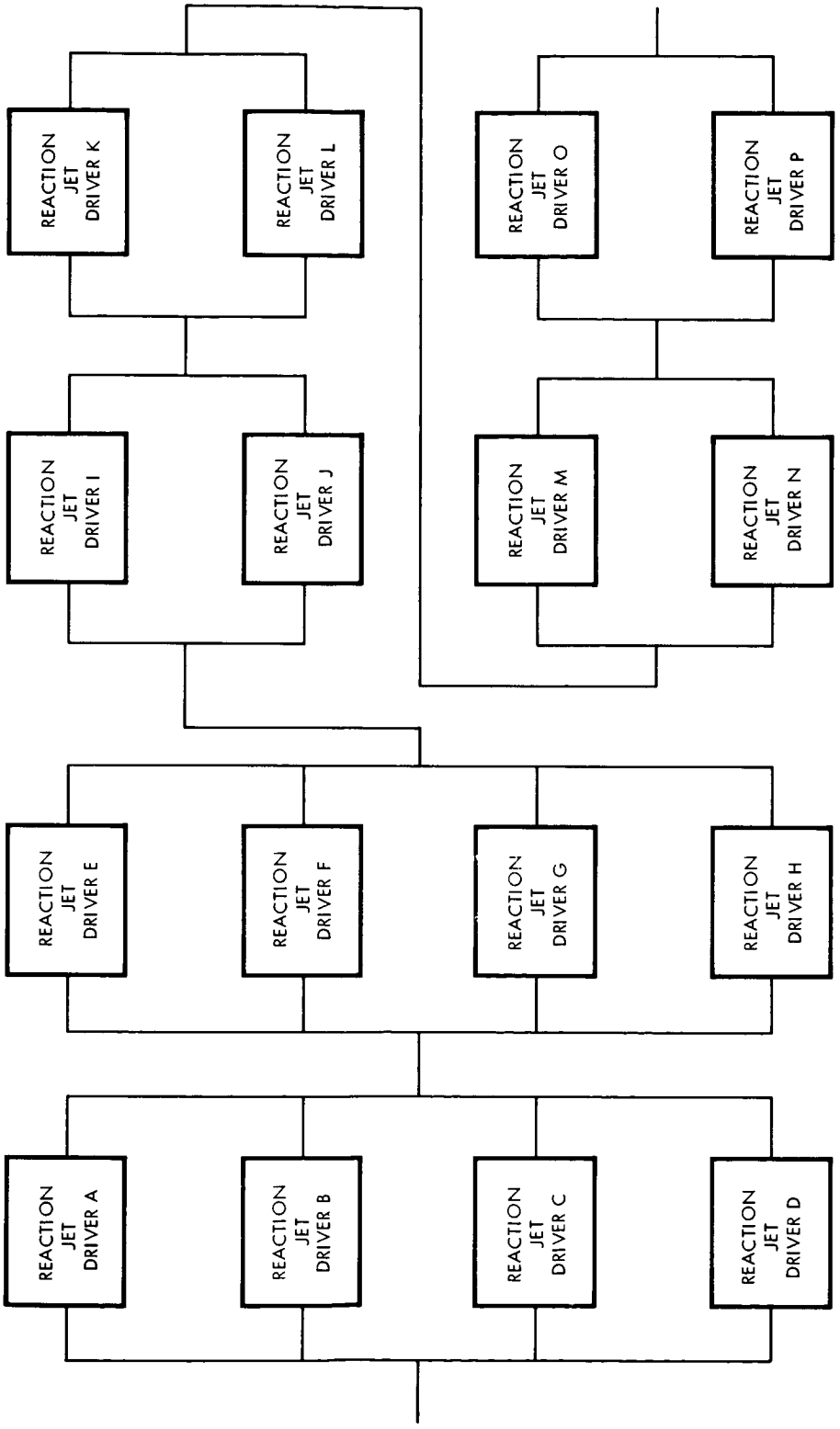

Figure 3-48. Reaction Jet Drivers - Command Module (RJDS-CM)

[redacted]

~~CONFIDENTIAL~~

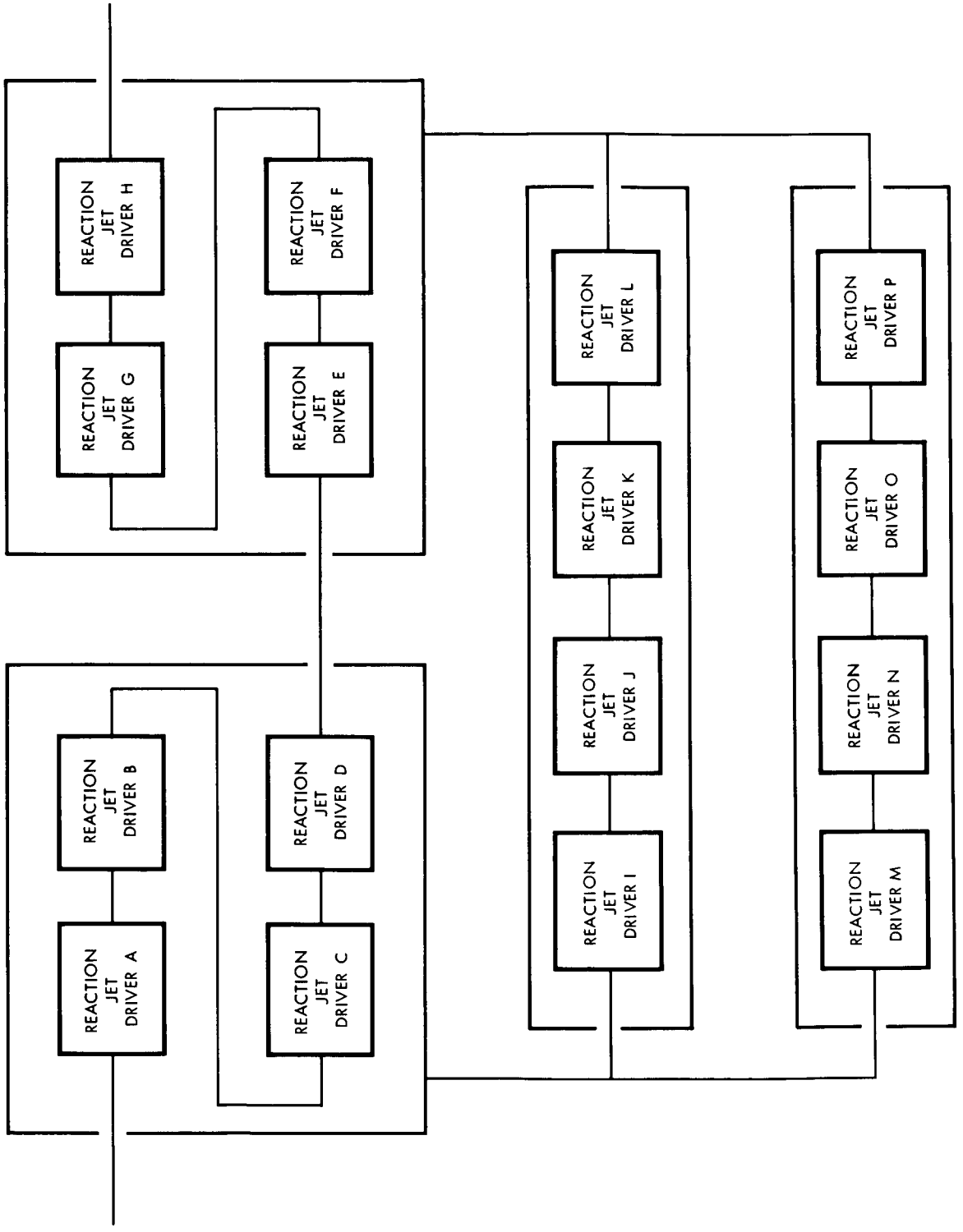

Figure 3-49. Reaction Jet Drivers - Service Module (RJDS-SM)

~~CONFIDENTIAL~~

~~CONFIDENTIAL~~

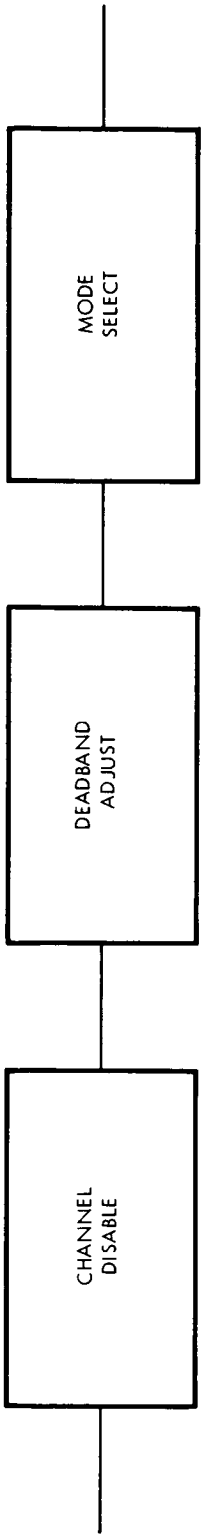

Figure 3-50. SCS Control Panel (SCPA)

~~CONFIDENTIAL~~

~~CONFIDENTIAL~~

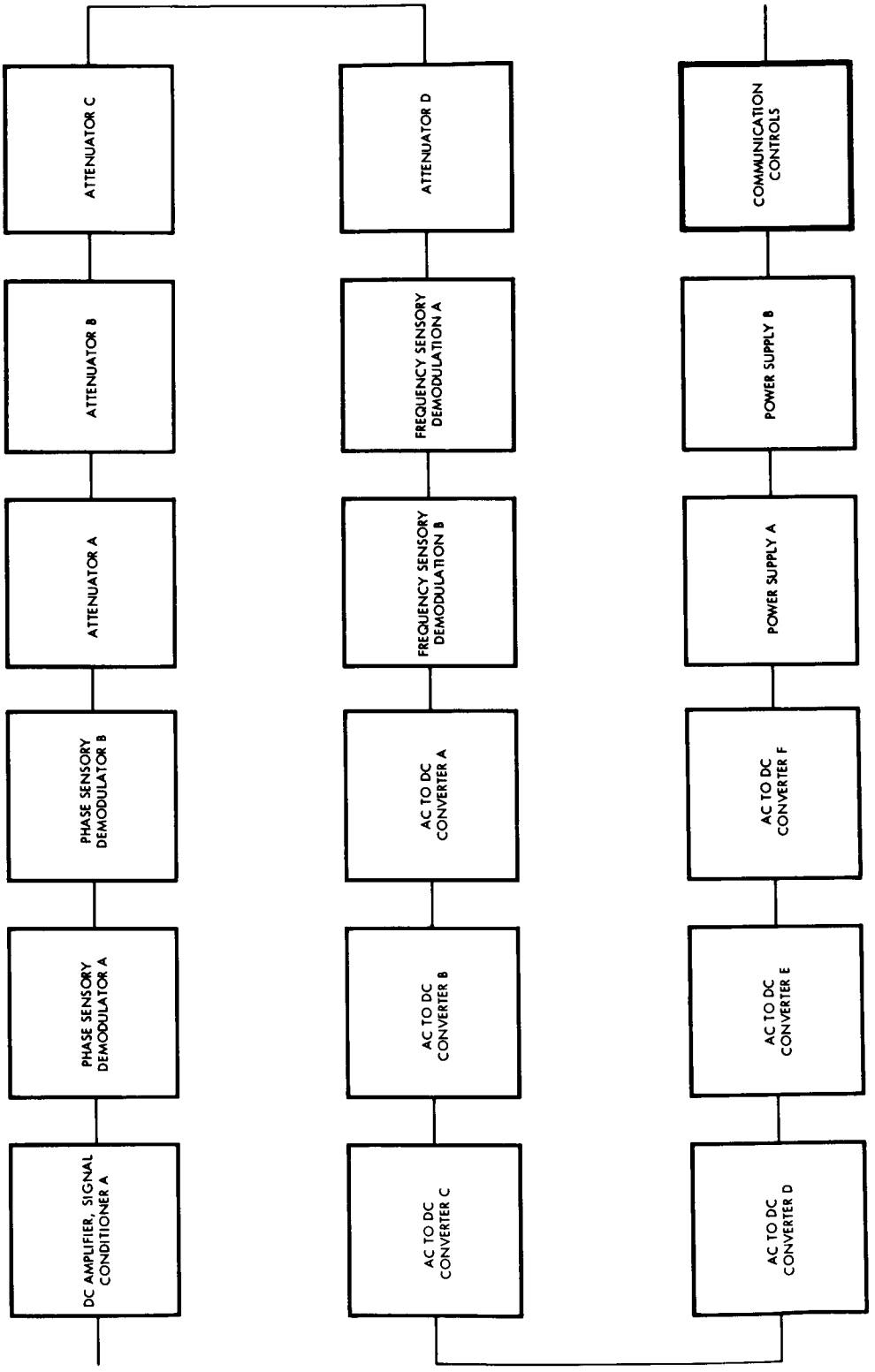

Figure 3-51. Signal Conditioners (SCR)

~~CONFIDENTIAL~~

~~CONFIDENTIAL~~

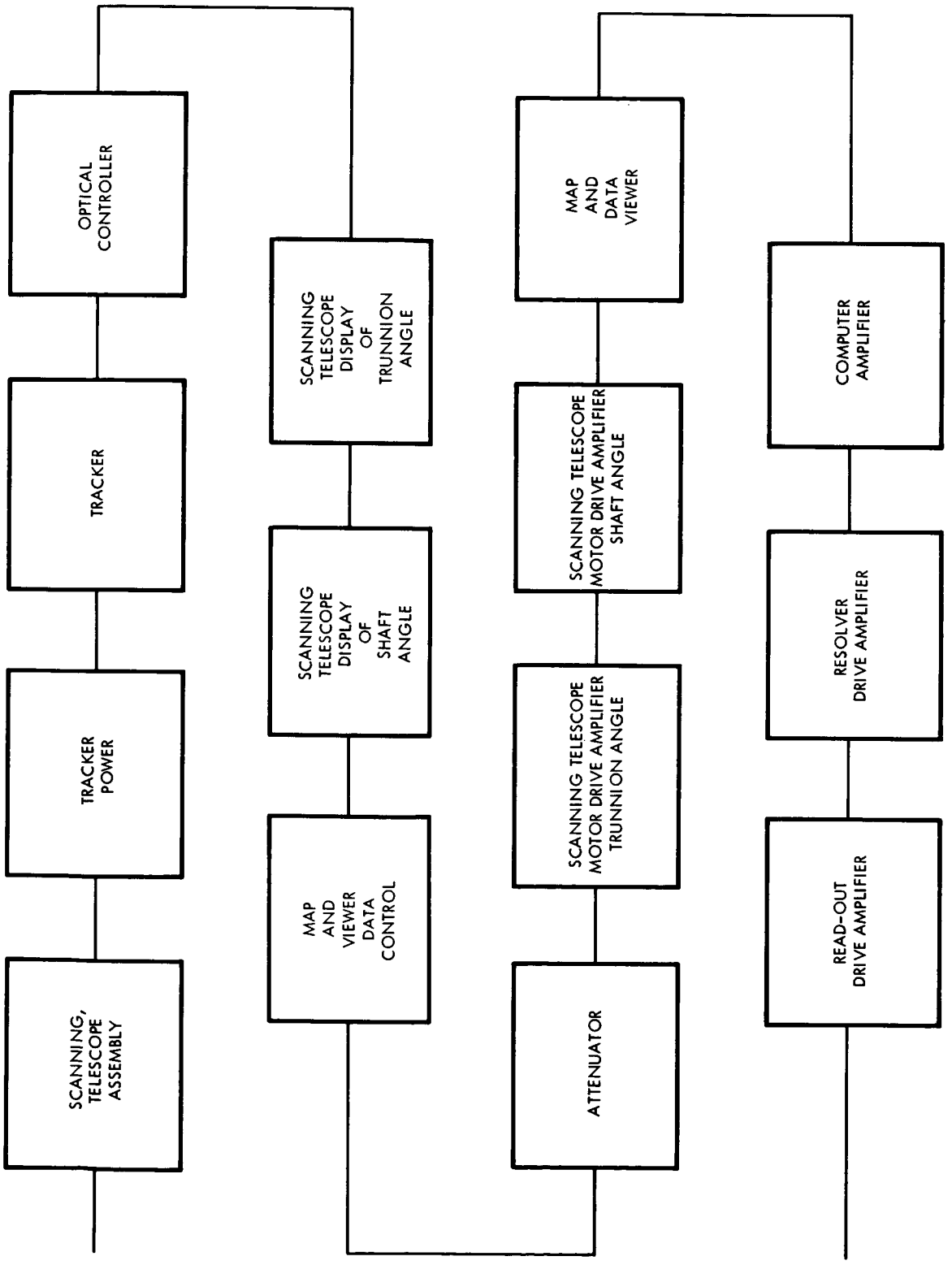

Figure 3-52. Scanning Telescope (SCT)

~~CONFIDENTIAL~~

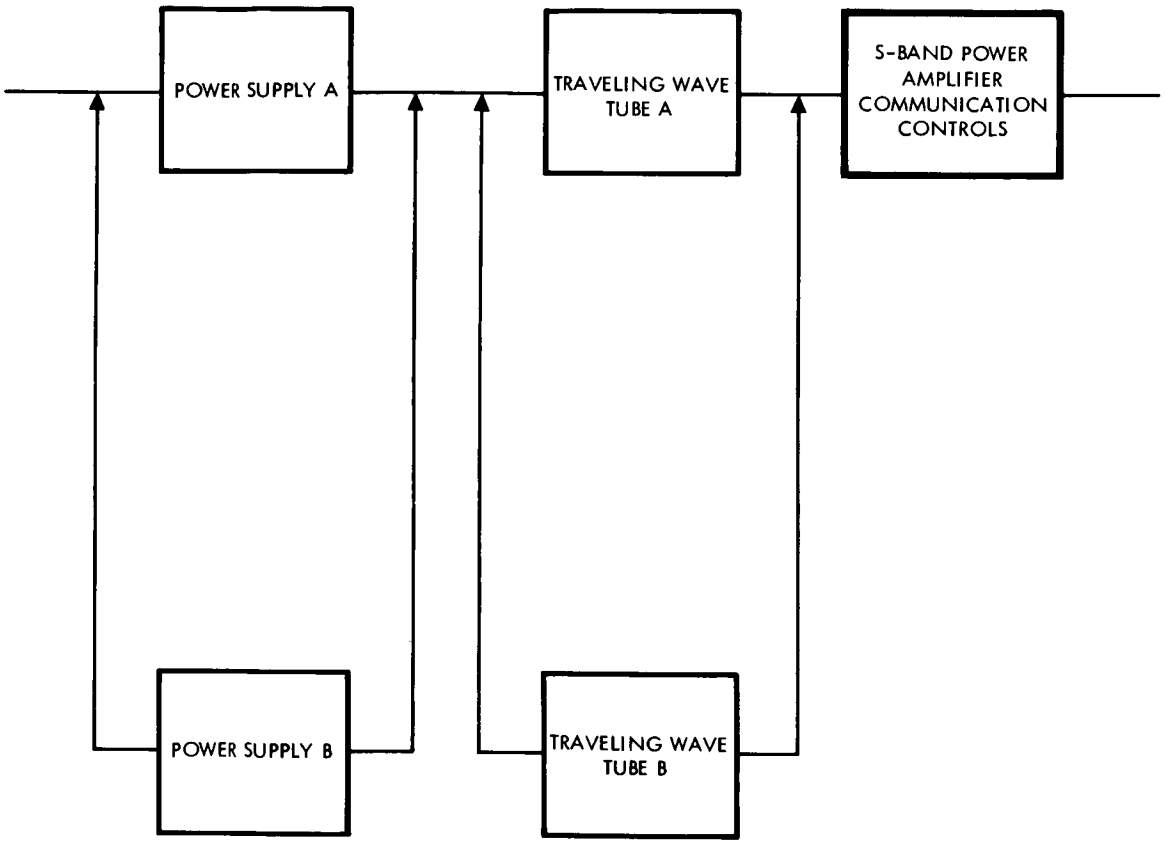

Figure 3-53. S-Band Power Amplifier (SPA)

~~CONFIDENTIAL~~

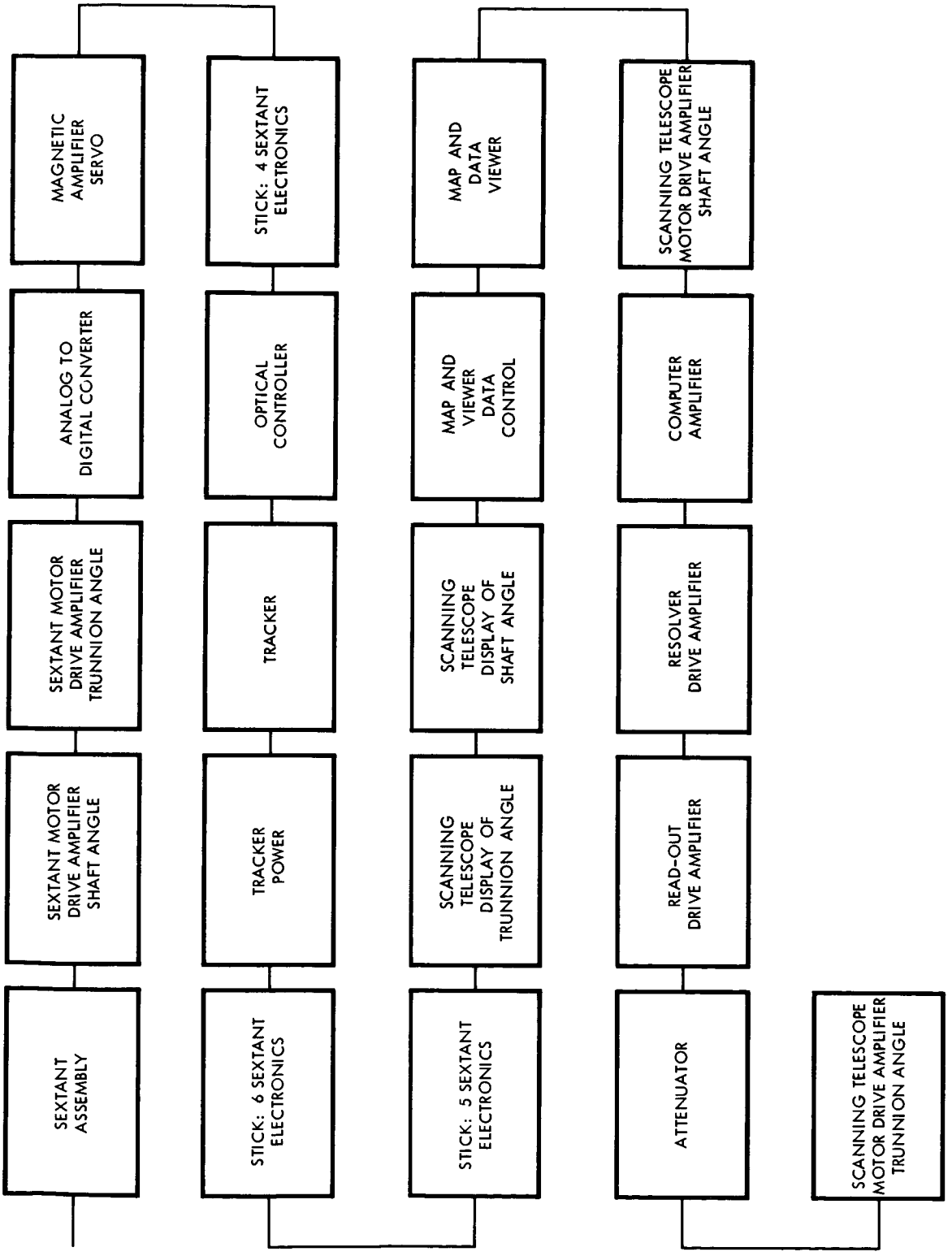

Figure 3-54. Space Sextant (SXT)

~~CONFIDENTIAL~~

~~CONFIDENTIAL~~

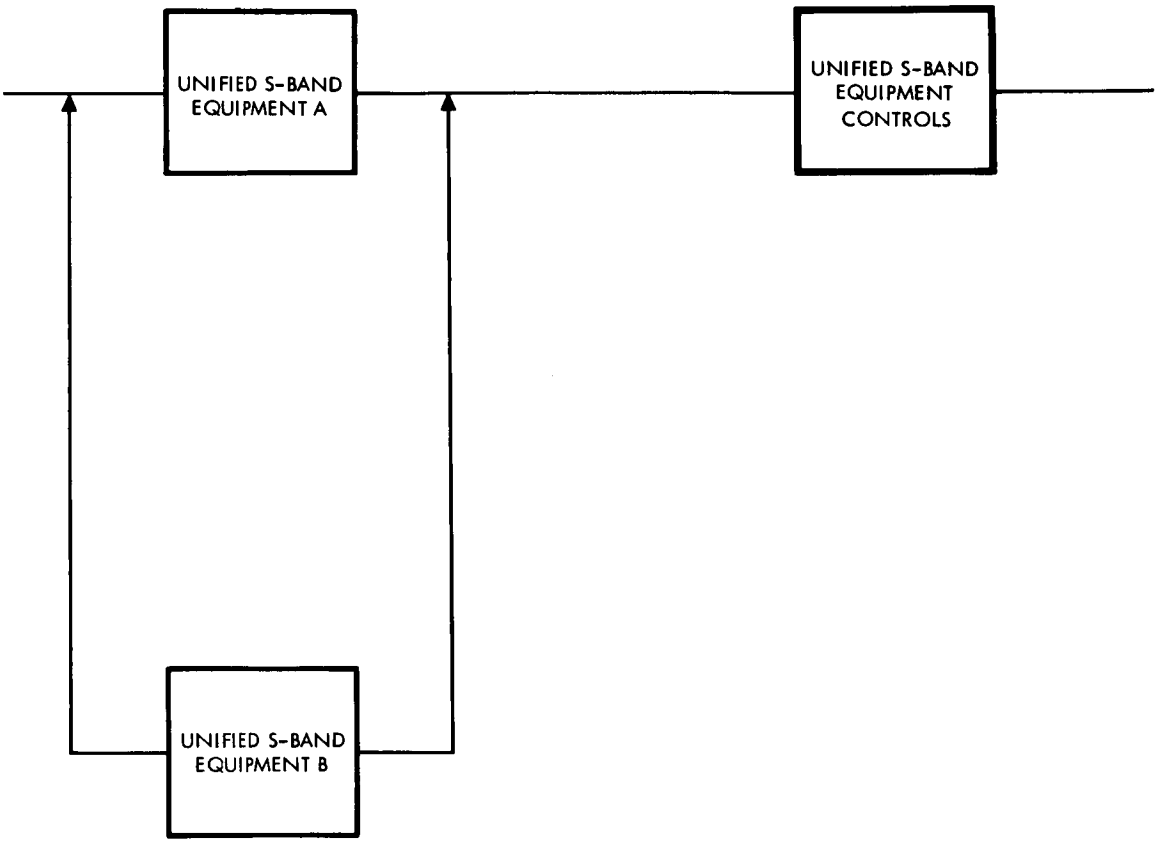

Figure 3-55. Unified S-Band Equipment (USB)

IN-FLIGHT SPARES

The in-flight spares study has been completed, based upon the greatest gain in mission success reliability for the least weight. The present weight constraint for Apollo electronics spares is 86 pounds, as the G&N spares allocation has been increased from 40 to 52 pounds per NASA directive. The list of spares in rank order of $\Delta R/\Delta$ weight is shown in Table 3-1.

Figure 3-56 shows the results of the in-flight spares dynamic programming study prepared for presentation at the (rescheduled) DRB for 7 June 1963. The present allocations of 15, 19, and 52 pounds for the SCS, C&D, and G&N subsystems, respectively (Table 3-2), indicate an electronics reliability of 0.775. By judicious selection of spares, this value may be raised to 0.975 within the same total weight constraint (86 pounds). However, 116 pounds will be required to meet the electronics reliability requirement of 0.984. The recommended spares allocations by subsystem are shown in Tables 3-1 and 3-3.

Table 3-1. Critical Component Spares

Component	Spare	Weight (lb)	Accumulative Weight (lb)
Electronic Control Assembly, Thrust	Engine Thrust Electronics	0.6	0.6
Electronic Control Assembly, Thrust Vector	Pitch Integrator	0.6	1.2
Electronic Control Assembly, Thrust Vector	Pitch Monitor and Filter	0.6	1.8
SCS Control Panel	Channel Disable	1.95	3.75
SCS Control Panel	Deadband Adjust	1.95	5.7
SCS Control Panel	Mode Select	1.95	7.65
Gimbal Position Indicator	Gimbal Position Indicator Electronics	0.625	8.275
Gimbal Position Indicator	Gimbal Position Indicator	2.000	10.275
Universal Power Supply	Universal Miscellaneous	0.942	11.217
Universal Power Supply	Universal Power Supply	1.125	12.342

Table 3-2. In-Flight Spares Weight Allocations

Subsystem	Weight (lb)		
	Existing Allocation	Subcontractor Recommendations	Apollo Reliability Engineering Recommendations
SCS	15	60	45.0
C&D	19	46	0.500
G&N	52	52	70.0
Total	86	158	116.0

Table 3-3. In-Flight Spares Study

Component	Spare	Δ Reliability Δ Weight (lb)	Weight (lb)	Accumulative Weight (lb)
Rate Gyro Package	Roll, Pitch, Yaw, Rate Gyro	0.16047	0.62	0.62
Attitude Gyro Coupling Unit	Resolver Assembly	0.1364	0.6	1.22
Body-Mounted Attitude Gyro	Roll, Pitch, Yaw, Body Gyro	0.08292	1.2	2.42
Flight Director Attitude Indicator	Total Attitude Indicator	0.04006	3.5	5.92
Electronic Control Assembly, Pitch Yaw Electronic Control Assembly, Roll		0.027839	0.6	6.52
Electronic Control Assembly, Pitch Yaw Electronic Control Assembly, Roll	Roll, Pitch, Yaw, Mode Power Relay	0.024714	0.6	7.12
Electronic Control Assembly, Pitch Yaw Electronic Control Assembly, Roll	Roll, Pitch, Yaw, Rate Gyro Demodulator	0.020976	0.6	7.72
Electronic Control Assembly, Pitch Yaw Electronic Control Assembly, Roll	Attitude Gyro, Roll, Pitch, Yaw Demodulator	0.01944	0.6	8.32
Apollo Guidance Computer	Fixed Memory 1 to 12	0.01657	1.262	9.582
Space Sextant	Analog to Digital Converter	0.0161	0.494	10.067
Apollo Guidance Computer	Erasable Memory	0.01219	1.262	11.338
Electronic Control Assembly, Pitch Yaw Electronic Control Assembly, Roll	Roll, Pitch, Yaw DC Amplifier	0.011504	0.6	11.938
Flight Director Attitude Indicator	Attitude Error and Switch	0.01111	0.75	12.688
Space Sextant	Magnetic Amplifier Servo	0.009984	0.494	13.182
Flight Director Attitude Indicator	Universal Miscellaneous	0.008594	0.942	14.124
	Channel Disable	0.008369	1.95	16.074
Apollo Guidance Computer	Memory Selection Logic	0.008361	0.494	16.568
Apollo Guidance Computer	SQ-4 Register	0.008089	1.262	17.83
Space Sextant	Stick: 4 Sextant Electronics	0.006355	0.494	18.324
Attitude Gyro Coupling Unit	Mode Select Logic	0.006222	0.6	18.924
Flight Director Attitude Indicator	Attitude Error Electronics	0.005359	0.875	19.799

Table 3-3. In-Flight Spares Study (Cont)

Component	Spare	Δ Reliability Δ Weight (lb)	Weight (lb)	Accumulative Weight (lb)
Electronic Control Assembly, Pitch Yaw Electronic Control Assembly, Roll	Roll, Pitch, Yaw AC and DC Power Transformer	0.004685	0.6	20.399
Apollo Guidance Computer		0.004553	1.262	21.662
SCS Control Panel	DC Amplifier, Signal Conditioner A, B, C	0.004151	1.95	23.611
Flight Director Attitude Indicator	Attitude Error Indicator	0.004065	3.5	27.111
Coupling Display Unit, Optics	Optical CDU, Electronics	0.003567	0.375	27.486
Apollo Guidance Computer	Write Buses	0.003273	1.262	28.748
Apollo Guidance Computer	Counter Increment and Program Interrupt Priority Circuit	0.003273	1.262	30.01
Apollo Guidance Computer	Parity Test	0.003273	1.262	31.272
Apollo Guidance Computer	Memory Buffer Register	0.003273	1.262	32.534
Apollo Guidance Computer	Left Shift or Cycle	0.003273	1.262	33.796
Apollo Guidance Computer	Normal Programming	0.003273	1.262	35.058
Apollo Guidance Computer	S Register	0.003273	1.262	36.320
Apollo Guidance Computer	Instruction Selection Logic	0.003273	1.262	37.582
Apollo Guidance Computer	Control Matrix	0.003273	1.262	38.844
Apollo Guidance Computer	Control Pulse Amplifier	0.003273	1.262	40.106
Apollo Guidance Computer	Sequence Generator	0.003273	1.262	41.368
Apollo Guidance Computer	Parity Generator	0.003273	1.262	42.630
Apollo Guidance Computer	Normal Shift Right	0.003273	1.262	43.892
Body-Mounted Attitude Gyro	Roll, Pitch, Yaw Temperature Controlled Amplifier and Temperature Override	0.003063	0.75	44.642
Attitude Gyro Coupling Unit	Amplifier Demodulator A, B, C	0.003042	0.6	45.242
Scanning Telescope	Resolver Drive Amplifier	0.003004	0.494	45.736
Electronic Control Assembly, Pitch Yaw	Roll, Pitch, Yaw DC Regulator	0.002924	0.6	46.336

Table 3-3. In-Flight Spares Study (Cont)

Component	Spare	Δ Reliability Δ Weight (lb)	Weight (lb)	Accumulative Weight (lb)
Apollo Guidance Computer	Accumulator Automatic Guidance Computer	0.002833	1.262	47.598
Apollo Guidance Computer	Return Address	0.002833	1.262	48.860
Apollo Guidance Computer	Program Counter	0.002833	1.262	50.122
Apollo Guidance Computer	Buffer Direct	0.002833	1.262	51.384
Apollo Guidance Computer	Buffer Complement	0.002833	1.262	52.646
Apollo Guidance Computer	Adder	0.002833	1.262	53.908
Apollo Guidance Computer	Mark Control	0.002833	1.262	55.170
Apollo Guidance Computer	Release Interrupt Register	0.002833	1.262	56.432
Apollo Guidance Computer	Inhibit Interrupter Register	0.002833	1.262	57.694
Apollo Guidance Computer		0.002833	1.262	58.956
Scanning Telescope	Tracker	0.002311	0.494	59.450
Body-Mounted Attitude Gyro	Roll, Pitch, Yaw Torque Amplifier Demodulator	0.002255	0.75	60.200
SCS Control Panel	Mode Select	0.002243	1.95	62.150
Apollo Guidance Computer	Output Interface Circuits	0.002135	1.262	63.412
Apollo Guidance Computer	Input Interface Circuit	0.002135	1.262	64.674
Body-Mounted Attitude Gyro	Roll, Pitch, Yaw Pre-Amp Buffer Amplifier	0.002085	0.75	65.4242
Attitude Gyro Coupling Unit		0.001910	0.6	66.024
Scanning Telescope	Optical Controller	0.001779	0.494	66.518
Inertial Measuring Unit	Pulse Integrating Pendulum Current Switch	0.001777	0.494	67.012
Optical Hand Controller	Optical-Hand Controller	0.001621	0.494	67.506
Attitude Gyro Coupling Unit	Logic A, B, C	0.001527	0.6	68.106
Apollo Guidance Computer	Rope Sense Amplifier	0.001518	1.262	69.368

Table 3-3. In-Flight Spares Study (Cont)

Component	Spare	Δ Reliability Δ Weight (lb)	Weight (lb)	Accumulative Weight (lb)
Electronic Control Assembly, Roll	Roll, Pitch, Yaw DC Regulator	0.001460	0.6	71.230
Space Sextant	Stick: 6 Sextant Electronics	0.001362	0.494	71.724
Coupling Display Unit, Optics	CDU, Motor Excitation Supply, 28 Volts AC, 5 Percent	0.001236	0.494	72.218
Coupling Display Unit, Optics	CDU, Resolver Excitation Supply, 28 Volts AC	0.001236	0.494	72.712
Space Sextant	Stick: 5 Sextant Electronics	0.000999	0.494	73.206
Coupling Display Unit, Optics	CDV Encoder Electronics Supply, 28 Volts DC	0.000936	0.494	73.700
Scanning Telescope	Tracker Power	0.000883	0.494	74.194
Apollo Guidance Computer	Clock and Scalar	0.000854	1.262	75.456
Coupling Display Unit, IMU	IMU, CDU, Electronics	0.000800	0.75	76.206
Apollo Guidance Computer	X - Select	0.000759	1.262	77.468
Apollo Guidance Computer	Y - Select	0.000759	1.262	78.730
Apollo Guidance Computer		0.000759	1.262	79.992
Inertial Measuring Unit	Pulse Integrating Pendulum Integrator	0.000636	0.494	80.486
Inertial Measuring Unit	Pulse Integrating Pendulum DC Amplifier	0.000636	0.494	80.980
Scanning Telescope	Read-Out Drive Amplifier	0.000617	0.494	81.474
Scanning Telescope	Computer Amplifier	0.000617	0.494	81.968
	Encoder Excitation Power, Auto Amplitude Control 25.6 KC	0.000570	0.494	82.462
		0.000570	0.494	82.996
Apollo Guidance Computer		0.000565	0.494	83.000

Table 3-3. In-Flight Spares Study (Cont)

Component	Spare	Δ Reliability Δ Weight (lb)	Weight (lb)	Accumulative Weight (lb)
Apollo Guidance Computer		0.000565	0.494	83.944
Apollo Guidance Computer	Power Supply, -13 Volts DC	0.000565	0.494	84.438
Scanning Telescope	Attenuator	0.000554	0.494	84.932
Attitude Gyro Coupling Unit	+20 Volts DC Regulator	0.000490	0.6	85.532
Inertial Measuring Unit	Pulse Integrating Pendulum AC Differential Amplifier	0.000440	0.494	86.026
Scanning Telescope	Scanning Telescope Display of Trunnion Angle	0.000429	0.494	86.520
Scanning Telescope	Scanning Telescope Display of Shaft Angle	0.000429	0.494	87.014
Scanning Telescope	Scanning Telescope Motor Drive Amplifier Shaft Angle	0.000429	0.494	87.508
Scanning Telescope	Scanning Telescope Motor Drive Amplifier Trunnion Angle	0.000429	0.494	88.002
Space Sextant	Sextant Motor Drive Amplifier Shaft Angle	0.000421	0.494	88.496
Space Sextant	Sextant Motor Drive Amplifier Trunnion Angle	0.000421	0.494	88.990
Scanning Telescope	Map and Viewer Data Control	0.000419	1.500	90.490
Inertial Measuring Unit	Gimbal Course Align Amplifier	0.000368	0.494	90.984
Electronic Control Assembly, Thrust Vector	Yaw, Pitch Integrator	0.000352	0.600	91.584
Coupling Display Unit, Optics	Optical CDU, Shaft	0.000319	2.000	93.584
Coupling Display Unit, Optics	Optical CDU, Trunnion	0.000319	2.000	95.584
Minimum Impulser	Minimum Impulser	0.000315	2.000	97.584
Attitude Gyro Coupling Unit	AC and DC Rectifier	0.000309	0.6	98.184
Inertial Measuring Unit	Gimbal and Servo Amplifier	0.000308	0.494	98.678
Attitude Gyro Coupling Unit	+40 Volts DC Regulator A	0.000269	0.6	99.278

Table 3-3. In-Flight Spares Study (Cont)

Component	Spare	Δ Reliability Δ Weight (lb)	Weight (lb)	Accumulative Weight (lb)
Apollo Guidance Computer	Right Shift in Cycle	0.000239	1.262	100.540
Premodulation Processor, Deep Space Voice	Up-Voice Discriminator	0.000227	0.5	101.040
Gimbal Position Indicator	Gimbal Position Indicator Electronics	0.000225	0.625	101.665
Rate Gyro Package	Rate Gyro Electronics	0.000215	1.000	102.665
Inertial Measuring Unit	Torque Drive Amplifier	0.000214	0.494	103.159
Inertial Measuring Unit	Gyro Calibration Module	0.000197	0.494	103.653
Inertial Measuring Unit	Pulse Integrating Pendulum Calibration Module	0.000186	0.494	104.147
Electronic Control Assembly, Thrust Vector	Yaw, Pitch Monitor and Filter	0.000184	0.600	104.747
Flight Director Attitude Indicator	Universal Power Supply	0.000174	1.125	105.872
Coupling Display Unit, IMU	CDV Encoder Electronics Supply, 28 Volts DC	0.000147	0.494	106.366
Gimbal Position Indicator	Universal Miscellaneous	0.000141	0.942	107.308
Coupling Display Unit, IMU	CDU Encoder, Excitation Supply, 25.6 KC	0.000097	0.494	107.802
Scanning Telescope	Map and Data Viewer	0.000090	7.000	114.802
Coupling Display Unit, IMU	Encoder Excitation Power, Auto Amplitude Control, 25.6 KC	0.000089	0.494	115.296
Coupling Display Unit, IMU	Motor Excitation Auto Amplitude Control, 5 Percent	0.000089	0.494	115.790
Gimbal Position Indicator	Gimbal Position Indicator	0.000087	2.000	117.790
Flight Director Attitude Indicator	Summing Network	0.000072	0.500	118.290
Flight Director Attitude Indicator	Gain Network	0.000048	0.75	119.040
SCT Manual Drive (Hand Crank)	Scanning Telescope Hand Crank	0.000037	0.494	119.534
Accelerometer Package	Accelerometer	0.000028	0.62	120.154

~~CONFIDENTIAL~~

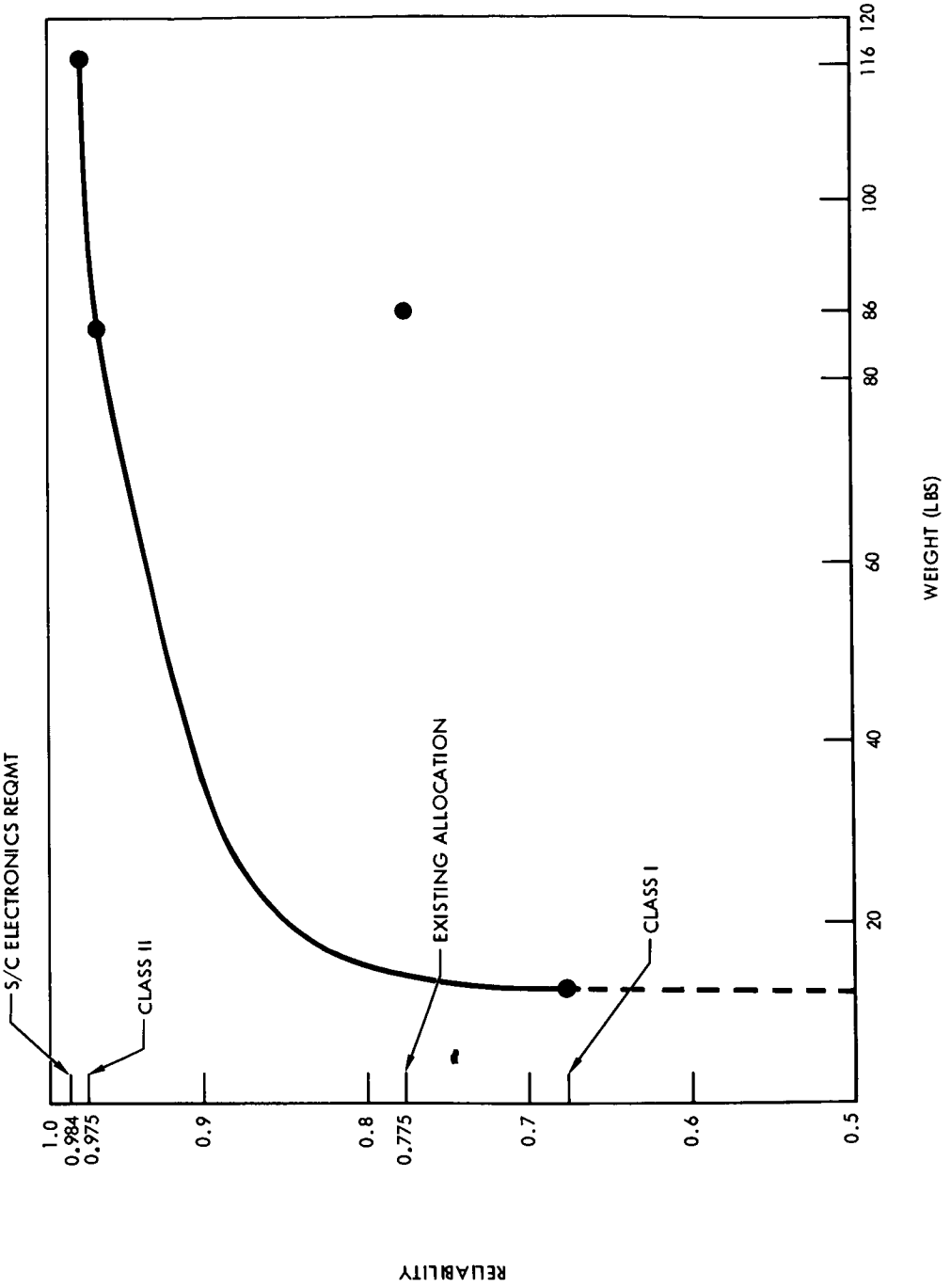

Figure 3-56. Dynamic Program Study

~~CONFIDENTIAL~~

COMMUNICATIONS AND DATA

SUMMARY

The major activities on the communications and data (C&D) subsystem have been concerned with establishment of traceability requirements, and trade-off studies to determine optimal use of high reliability parts in the PCM telemetry equipment. Coordination activities with the subcontractor have been intensified to establish adherence to S&ID preferred parts usage and to minimize slippage of schedules.

ANALYSIS

Failure Effects Analysis

The results of a failure effects analysis at the subassembly level on the C&D subsystem are given in Tables 3-4 through 3-15 at the end of this section.

Reliability Requirements

The numerical reliability requirements for equipment of the communications and data subsystem have been updated, using revised logic diagrams for the LOR mission and latest equipment configurations and parts information. The resultant apportionment is shown in the following list.

Equipment	Reliability Requirement
Unified S-band equipment	0.9954 (each)
S-band power amplifier	0.9969
PCM telemetry	0.963
Premodulation processor	0.9967
Audio center	0.9969
HF transceiver	0.99972

[redacted]

Equipment	Reliability Requirement
VHF recovery beacon	0.99981
Data storage	0.993
Controls and displays	0.9990
C-band transponder	0.9995
Signal conditioning	0.988
VHF/FM transmitter	0.99996
VHF/AM transmitter-receiver	0.9990

Signal Condition Equipment

The results of a reliability analysis of the signal conditioning equipment are included in Table 3-16. The present design configuration yields 0.959 probability of mission success, while the procurement specification requires 0.988 reliability. The LOR mission was used for this study. The difference between the present configuration and the procurement specification is in the use of other than Minuteman or high reliability parts. Interim improvement could be achieved by using fixed resistors in lieu of potentiometers in this configuration. It has previously been recommended that the subcontractor, Collins Radio, utilize Minuteman and other high reliability parts.

Reliability of Soldering versus Welding

A study was performed of the ramifications on communications and data subsystem reliability through the use of welding instead of soldering. The results have been forwarded to the subsystems Program Manager.

The rationale for this study included failure rates of $0.0001/10^6$ hours and $0.001/10^6$ hours (as given by Collins Ratio and verified by S&ID) for welded and soldered joints respectively and use of the mission success reliability logic diagrams. Deep space phases have the most significant effect on mission success, as far as communications are concerned, and therefore were utilized in the analysis. The only Collins-furnished equipments significant during this time, when considering welding versus soldering, are the unified S-band equipment (USB) and the deep space

[redacted]

[redacted]

Table 3-16. Reliability Improvements in the Signal Conditioning Equipment

Subassembly	A	B
DC amplifier	0.99883	0.99936
DC attenuator	0.99797	0.99932
Phase demodulator	0.99920	0.99976
Frequency demodulator	0.99958	0.99975
AC converter	0.99924	0.99958
Power supply	0.99906	0.99940
+20 VDC output	0.99959	0.99967
-20 VDC output	0.99959	0.99967
+10 VDC output	0.99959	0.99967
+5 VDC output	0.99959	0.99967
Signal conditioning equipment	0.959	0.9794

A = Probability of success, operating 336 hours, with potentiometers and Minuteman or equivalent parts.

B = Probability of success operating 336 hours, by eliminating potentiometers and using Minuteman or equivalent fixed resistors

voice portion of the premodulation processor (PDV). The latest available information indicated the following combined probabilities of failure for the USB and PDV:

With soldering = 0.004388

With welding = 0.004165

The change due to welding was then given by:

$$\Delta \text{ failures} = \frac{0.004388 - 0.004165}{0.004388} = 5.08 \text{ percent}$$

~~CONFIDENTIAL~~

It should be noted that this change is due only to the reliability of the connections; data indicates soldered components may have failure rates up to 100 times that of welded components due to thermal damage. Drawbacks of welding relative to reliability include the following:

1. Copper wire welded to nickel ribbon is less reliable than nickel to nickel. There is less failure information available on nickel alloy lead components.

2. Nickel lead resistors are less reliable than copper lead resistors.

3. There is no effective nondestructive test method to ensure quality of weld.

Reliability analysis indicated that the use of welding techniques (or any other specific techniques) to achieve the reliability requirement does not in itself constitute sufficient justification for additional cost and would not be an acceptable basis for a change of program scope.

PCM Telemetry

During cost negotiations with Collins Radio Company, representatives of the subcontractor questioned the total use of high reliability parts in the PCM telemetry equipment. They pointed out that the use of high reliability parts in lieu of Mil-Std parts will increase the Phase I project cost by approximately 1.2 million dollars. Based upon the available design data and the functions which the equipment performs, i.e., telemetering of sensory data for mission analysis and for detection of failures of spacecraft equipment utilizing the ground complex in conjunction with the voice link, a reliability requirement of 0.963 had been specified. Reliability analysis indicates that the use of Mil-Std parts would reduce this reliability to 0.069. CRC indicates that the reliability would be 0.316. Since such a reliability would produce approximately seven failures per ten missions, it was recommended that the use of high reliability parts in the PCM equipment be mandatory since the redundancy and spares weight necessary for achievement of mission success reliability goals with equipment of such low reliability would be prohibitive.

A reliability evaluation was performed on the signal flow logic configurations of the PCM telemetry equipment. In the present configuration (Figure 3-57), the 512KC signal originating in the Apollo guidance computer (AGC) is relayed from the central timing equipment (CTE) through the PCM telemetry equipment to the premodulation processor (PMP). In the proposed configuration (Figure 3-58), a free-running oscillator would be installed in the PCM telemetry equipment. In the event of a CTE failure, the proposed oscillator would continue to feed 512KC timing pulses to the PMP. In the event of a failure of the proposed oscillator, the 512KC signal input would be lost. The successful operation of the data flow portion of the PMP is dependent upon a 512KC input.

The following results were obtained:

Configuration	Reliability
Present (Figure 3-57)	0.93117
Proposed (Figure 3-58)	0.93033

The addition of the proposed PCM oscillator, from a logical viewpoint, effectively replaces the CTE oscillator. This change was not recommended because of the degradation of reliability.

TEST PROGRAM

Materials Testing

The materials evaluation testing program is progressing to determine the stability and compatibility throughout the specified environmental conditions. Majority of the testing is being conducted at independent testing laboratories. Tests to be conducted will include: Vacuum by-products analysis (emergency conditions), weight loss under vacuum conditions, flame tests (flash ignition temperature, self-ignition temperature, burn time), and salt spray. It is estimated that the materials evaluation program is approximately 80-percent complete.

Parts Approval Testing

The program is under review as discussed in the section on subcontractor activities.

C&D Subsystem Test Program

The system is in the initial R&D stages of breadboarding and parts selections.

SUBCONTRACTOR MANAGEMENT

Subcontractor Coordination

Several cost negotiation meetings were attended with Collins Radio Company in an effort to definitize a contract for the communication and data subsystem. As a base for negotiation purposes, a date of 1 December 1962 was established, with revisions to contractual documents handled in separate negotiations as changes. An agreement has been reached, and final documentation is being prepared.

~~CONFIDENTIAL~~

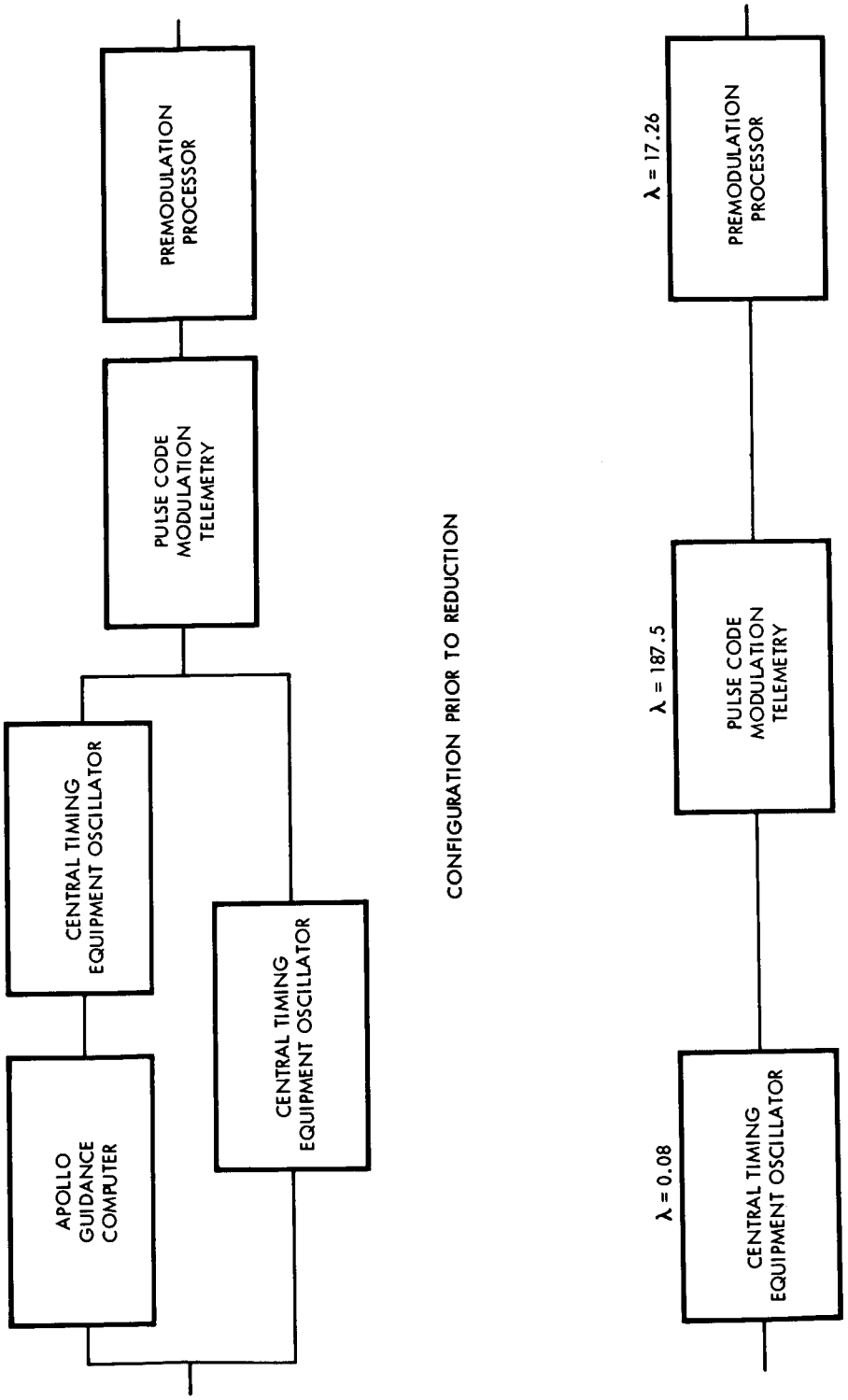

Figure 3-57. Signal Flow Logic Configuration (512 KC) Present Form

~~CONFIDENTIAL~~

~~CONFIDENTIAL~~

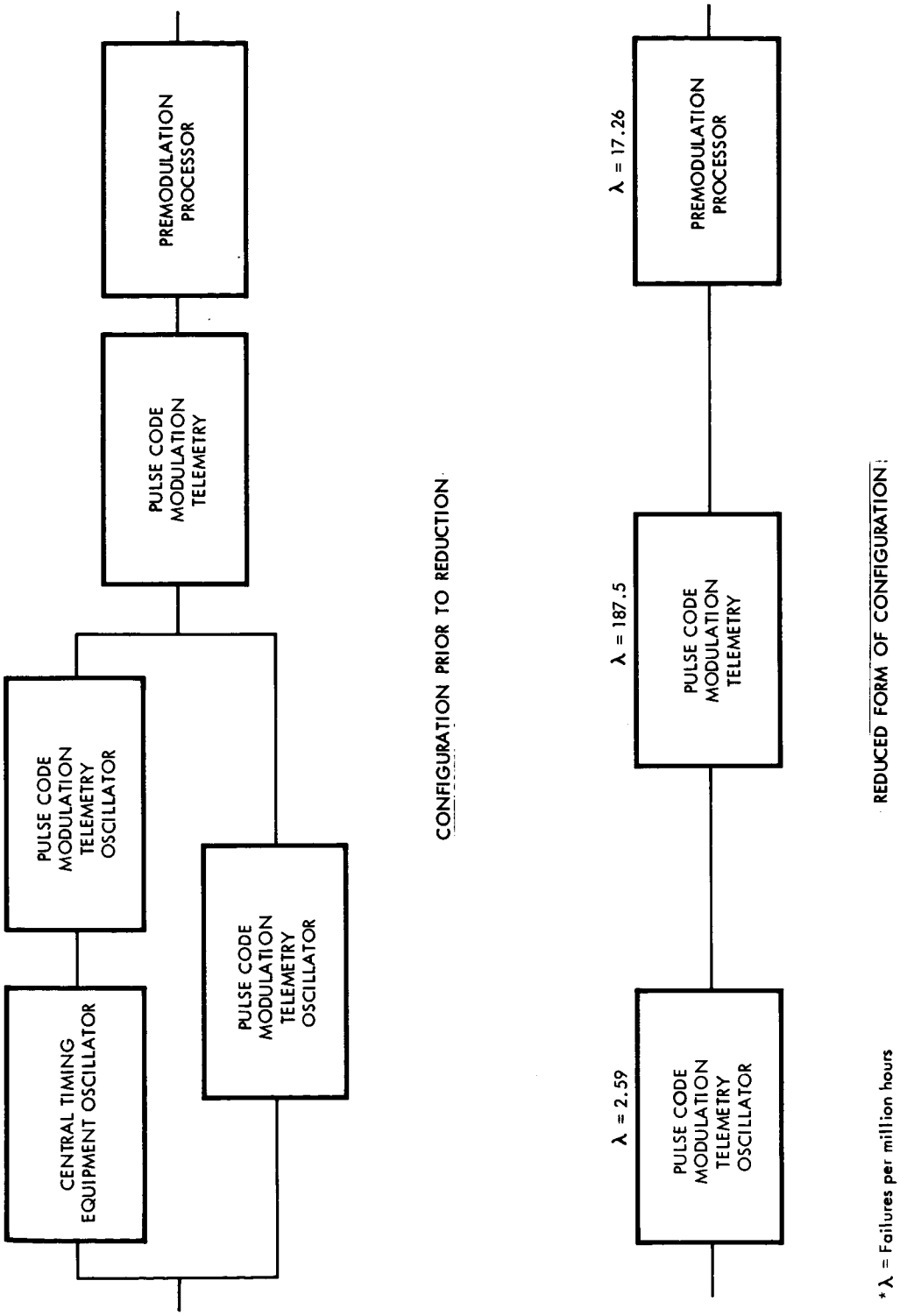

Figure 3-58. Signal Flow Logic Configuration (512 KC) Proposed Form

~~CONFIDENTIAL~~

A meeting to discuss reliability effort at the C&D subsystem was held on 11 April 1963 with Collins Radio Company (CRC).

The first session of the meeting dealt with the status of the analysis effort. CRC plans to perform a failure effects analysis at the part level on all equipment except the PCM telemetry equipment which will be completed at the circuit level. Since many circuits in the PCM telemetry equipment are identical, it was suggested by S&ID that a failure effects analysis be performed at the part level on representative circuits only. Failure effects analyses have been completed on the audio center, VHF/AM transmitter-receiver equipment, and on the S-band power amplifier equipment.

It is planned to perform parameter variation analyses on approximately 20 percent of the circuits in the communications and data subsystem. The number of circuits to be analyzed is limited mainly by the lack of rigor in defining the equivalent circuits at high frequencies. CRC plans to vary each part parameter in discrete steps from the minimum to the maximum expected value, determining the effect on the output parameters (i.e., one-at-a-time parameter variations). CRC does not plan to determine the effect of a worst case situation. Since it is a simple, straight-forward procedure to obtain this worst case solution, this type of parameter variation analysis would be deemed satisfactory as a design aid. Parameter variation analyses have been completed on portions of the audio center equipment and have been started on the H. F. transceiver equipment.

S&ID introduced the Reliability Parts Manual. CRC felt that in most cases the S&ID specifications (under CRC part numbers) could be utilized. This effort will allow savings as a result of the reduction in duplication of lot acceptance testing and ease of part approval.

Reliability estimates have been received for approximately 50 percent of the C&D subsystem equipment. CRC is to check the status of the estimates on the remaining equipment and supply additional information on estimates of the PCM telemetry, signal conditioning, and C-band transponder.

Meetings Attended

A reliability status meeting was held between S&ID and Collins Radio Company (CRC) on 23 and 24 May 1963. The following subjects were discussed.

Identification and Traceability (I&T)

CRC requested definition of guidelines for determining the identification and traceability requirements for the parts, subassemblies, and

components of the C&D subsystem. CRC also questioned the applicability of the S&ID specification MQ0503-002, Identification and Traceability Requirements for Suppliers, to the C&D subsystem. An advance copy of this document had been received by CRC by letter informing them that it probably would become applicable to the subsystem. S&ID stated that the specification probably would become part of the contract, but that it would be revised prior to this time. CRC requested that S&ID clarify several paragraphs. S&ID agreed to obtain this clarification and transmit it to CRC. CRC requested that they be allowed to list the parts they felt I&T requirements should be imposed on and submit this list for approval. S&ID stated that S&ID must submit an exemption list to NASA for approval and therefore would rather have the information in that form. When questioned about the method of formal approval of the I&T status of each part, S&ID stated that CRC should submit a bill of materials for each equipment indicating the level of I&T recommended for each part, subassembly, or component. S&ID then would approve or disapprove the recommendations. Any CRC recommended changes in these requirements after S&ID approval has been granted would be submitted in the form of a deviation for each part. S&ID transmitted the following guidelines.

Identification and Traceability Guidelines. The basic identification and traceability requirements for Apollo spacecraft specify that parts, subassemblies, and components in applications or where functions may be considered mission-essential, affect crew safety, be life sustaining, have limited life replacement, require cyclic maintenance, or are part of a critical matching set of hardware, shall be identified by lot or serial numbers and shall be traceable.

The application of these guidelines to the C&D subsystem allows only the data storage equipment to be generally exempt from these requirements. The following guidelines apply to the parts of the remaining equipment:

The identification and traceability requirements are determined on each individual part for each application. Formal requests for exemptions from I&T requirements are made to S&ID accompanied by sufficient justification for each request. When it is determined that a part is subject to I&T requirements, every part in the same manufactured lot will receive the same requirements.

All electrical parts will be subjected to lot control. Parts that require limited life replacement, cyclic maintenance, or are part of a critically matching set, will receive part serialization. Parts that are manufactured individually, as opposed to lot manufacture, will receive part serialization.

[redacted]

Standard AN, AND, NAS, MS type mechanical parts whose characteristics are well known and well controlled are normally considered exempt from scientific and traceability requirements. Each individual mechanical part will be evaluated through design and design review procedures with regard to each application. Parts normally exempted from traceability requirements may require identification because of a particular application. When such is the case, all items of the same part number will be controlled by lot or serial number designation.

An identification and traceability meeting between S&ID and CRC was held on 19 June 1963.

S&ID presented a set of general guidelines for determining the extent to which I&T requirements should apply to the communications and data subsystem. CRC questioned the reference to the statement that the data storage equipment is generally exempt from I&T requirements. S&ID stated that the data storage function is not considered mission-essential and, therefore, all parts affecting only the data storage function should be exempt, but that each item in this equipment must be reviewed by CRC and proposed exemptions formally requested.

The extent to which each item should be traceable was discussed. S&ID stated that an item deemed to require I&T shall be traceable to the manufacturing level that is deemed necessary to accomplish the I&T objectives, and that lot control of electrical parts is generally adequate; part serialization should be utilized where individual records are deemed necessary by CRC.

An example of a set of justification data for exemption informally submitted by CRD earlier on the exciter module of the VHF/FM transmitter was reviewed. S&ID stated that this type of information would be adequate for determination of S&ID approval.

The extent of traceability was discussed for special items. The following guidelines were given to CRC:

1. Any Material Review Board (MRB) item must be traceable regardless of I&T status.

2. GSE - An exempt list will be submitted by CRC on the lowest functional subassembly level. The exempt list will be submitted on the equipment level for standard test equipment.

3. E models - An exempt list will be submitted by CRC on the lowest functional subassembly level.

4. Usage materials will be traceable to point of usage from point of certification of chemical content by the vendor.

5. Exempt mechanical part types must have receiving records indicating, as a minimum, the manufacturer.

CRC had specific questions concerning MQ 0503-002, Identification and Traceability Requirements for Suppliers. CRC questioned whether this document should be imposed on their suppliers. S&ID stated that the term "buyer" in MQ 0503-202 should be interpreted as any level of buyer, and that "seller" should be interpreted as any level of supplier with the exception of paragraph 3.1. It was further stated that the 12-digit serial number referred to in paragraph 3.1 applies only to those end items and spares procured by S&ID.

S&ID informed CRC that MQ 0503-002 was being revised and that subsequently a process specification was being generated for subcontractor use to be released in July, 1963. This process specification is to clarify the detailed I&T requirements for Apollo subcontractors. As a result of this meeting, CRC agreed to submit a schedule by 24 June 1963, of requests for exemptions from I&T requirements which will be formally submitted for each end-item of the C&D subsystem.

GSE

CRC questioned the application of I&T requirements to GSE. S&ID stated that since none of the C&D GSE is considered mission-essential there are no I&T requirements on C&D GSE at this time. Clarification of the MTBF requirement imposed upon the C&D GSE was also requested. A requirement for C&D GSE, which would not cause a failure in the spacecraft equipment more often than the MTBF, was specified by S&ID.

Equipment Status

The CRC reliability estimate with the ability to spare was received for each equipment. S&ID informed CRC that the numerical requirement would be changed in the "B" revision of the equipment specifications due to amended systems logic.

S&ID requested information concerning the choice of vacuum tubes in lieu of solid-state devices for portions of the VHF/AM transmitter-receiver and VHF/FM transmitter. CRC stated that the performance requirements could not be met with the former solid state version.

~~CONFIDENTIAL~~

The failure rates used by CRC for the vacuum tubes are 0.3 percent per 1000 hours for the driver and 0.5 percent per 1000 hours for the power amplifier. Failure rates for the VHF/AM transmitter-receiver are shown in Table 3-16.

S&ID informed CRC that the operating time for the VHF/AM transmitter-receiver would be changed to 27 hours in the transmit mode of operation and 100 hours in the receive mode, but for CRC to use the present operating time for reliability assessments until this change appears in the general specification (MC-999-0023).

Reliability estimates for the Communications and Data Subsystem equipment are shown in Table 3-17.

A schematic of the Signal Conditioning Equipment power supply was received. Part redundancy is being utilized for the power rectifier diodes since it was found that they contributed a major portion of the power supply failures. The following list gives a reliability estimate for the latest power supply configuration:

Circuit	Reliability
Power Rectifier	0.999497
Regulator	0.998521

It was found that there has been an increase of approximately 15 percent in the complexity of the data storage equipment since the last estimate.

CRC stated that they have been plagued with a lack of information on PCM telemetry equipment. All of the reliability data available on this equipment was forwarded. The radiation reliability estimate for this equipment is 0.9675. This estimate was based on the 32K-bit configuration. CRC stated that every effort will be expended to obtain more detailed data.

An HF transceiver estimate of 0.99949 was based on transistor junction temperature of 75 C. The operating time used was 72 hours. S&ID informed CRC that reliability calculations should be performed with an operating time of 19.7 hours of operation in the transmit mode and 52.3 hours in the receive mode.

CRC stated that the two 8185 vacuum tubes used in the VHF recovery beacon were assigned a failure rate of 0.5 percent per 1000 hours.

~~CONFIDENTIAL~~

~~CONFIDENTIAL~~

Table 3-17. Communications and Data Equipment Reliability Estimates

Equipment	Module	Failure Rate (Percent per 1000 hours)	Reliability
VHF/AM transmitter-receiver	Transmitter	2.1554	0.999353
	Receiver, RF and IF	0.5149	0.999837
	Receiver, AF and PS	0.1785	0.999946
		2.8748	0.999138
VHF/FM transmitter	Exciter	0.2310	0.999977
	Power amplifier and PS	1.5238	0.999848
		1.7548	0.999825
Premodulation processor	FM modulator	0.2449	0.999177
	Data modulation filter	0.1885	0.999367
	FM detector	0.0629	0.999789
	Oscillator assembly		
	Module No. 1	0.2212	0.999257
	Module No. 2	0.2212	0.999257
	Module No. 3	0.2301	0.999227
	Power supply	0.3320	0.998884
		1.5008	0.994957
Audio-center	Three audio center modules		
	No. 1	0.33	0.998654
	No. 2	0.33	0.998654
	No. 3	0.33	0.998654
		0.99	0.995961

~~CONFIDENTIAL~~

~~CONFIDENTIAL~~

Table 3-17. Communications and Data Equipment Reliability Estimates (Cont)

Signal Conditioner Type	No. Circuits (per module)	No. Circuits (per equipment)	Failure Rate (Percent per 1000 hr per equipment)
DC amplifier 01	2	17	0.9419
DC amplifier 02	2	3	0.2721
DC amplifier 04	2	23	2.1275
DC attenuator 40	10	54	1.6632
AC convertor 10	2	6	0.4692
DC exp. scale Attenuator 21	2	2	0.0942
Frequency sensing demodulator 60	2	2	0.1212
Phase sensing demodulator 30	2	1	0.0700
Phase sensing demodulator 31	2	1	0.0700
AC exp. scale converter 12	2	6	0.5652
Power supply	1	1	0.6050
Module connectors	1	40	0.3400
Equipment connectors		4	0.2460
			7.5855
Total reliability estimate, R = 0.9746			

[redacted]

Table 3-17. Communications and Data Equipment Reliability Estimates (Cont)

Equipment	Module	Failure Rate (Percent per 1000 hours)	Reliability
Data storage	Tape transport	4.53	0.9961
	Electronics	4.05	0.9965
		8.58	0.9925
HF transceiver	Power amplifier	0.2105	0.99985
	Oscillator	0.1146	0.99991
	Receiver	0.1773	0.99988
	Exciter	0.2058	0.99986
		0.7082	0.99949
VHF recovery beacon		2.2974	0.99835
S-band power amplifier		5.7283	0.99324
Unified S-band	Receiver	1.9008	0.99491
	Power supply	0.2996	0.9992
	Transmitter	1.6081	0.99697
		3.8095	0.9898
C-band transponder		12.88	0.998712
Controls and displays	Communications control panel	0.255	0.998960
	Audio control panel		
	No. 1	0.215	0.999123
	No. 2	0.215	0.999123
	No. 3	0.215	0.999123
		0.900	0.996328

The major contribution to the failure rate of the S-band power amplifier is the traveling wave tube with an expected failure rate of five percent per 1000 hours. CRC informed S&ID that the equipment is being packaged so that the traveling wave tube and its power supply may be spared separately.

Spares are not contemplated for the coaxial switches, filter, diplexer, and attenuator. S&ID requested a copy of the traveling wave tube procurement specification as soon as it is available. S&ID questioned the use of a thermal time delay relay in lieu of an electronic one. CRC said the thermal type has proven more reliable for this particular application.

CRC said the unified S-band equipment is packaged as one module with a spare housed in the same SEP package. The reliability estimate shown in Table 3-17 does not include the spare. Studies indicate that it could take 45 minutes to replace the operational module with a spare.

CRC said the C-band transponder is not being packaged so that the magnatron will be in-flight replaceable. The magnatron is the only item in the C&D subsystem that is considered to have a limited life.

Failure Effects Analysis (FEA)

The need for a FEA of the C&D subsystem on the subassembly level by 3 June 1963, was reiterated by S&ID. CRC informed S&ID that FEA's on the VHF/FM transmitter, S-band power amplifier, and the audio center had been transmitted. FEA's on the VHF/AM transmitter-receiver and premodulation processor were received. The format and level of detail was discussed and agreed upon for the remaining equipment. The following list depicts the optimum order of completion desired by S&ID:

Equipment	Order
C-Band Transponder	1
Unified S-Band Equipment	2
Premodulation Processor	3
Signal Conditioning	4
PCM Telemetry	4
HF Transceiver	5
VHF Recovery Beacon	5
Data Storage	6

CRC stated that this schedule could be met at a slight sacrifice of detail.

Failure effects analyses and updated parts information have been received by S&ID. These data have been technically oriented to conform to S&ID studies. S&ID is in receipt of the subcontractors' latest estimates of the weights, volumes, and MTBF's of subassemblies on the communications and data subsystem. These data will be utilized for various optimization and trade-off studies.

Parameter Variation Analysis

In the previous reliability meeting, 11 April 1963, CRC said it plans to perform a computer analysis which varies each part parameter in discrete steps from the minimum to the maximum expected value and determines the effect on output parameters for circuits so that rigorous equivalent circuits can be constructed (i.e., one-at-a-time-parameter variations). At that time it was recommended that the program be modified to yield a worst case solution also. Since it was found that nothing had been done in this area, S&ID reiterated the ease with which this solution could be obtained and the benefits that could be gained. CRC felt that the worst case solution for a circuit would be unrealistic since the probability of producing a circuit with each part parameter at its worst case value is quite small. S&ID agreed that the probability is small, but pointed out that this type of analysis gives the designer an idea of where the circuits' weaknesses due to tolerance buildup are located. S&ID also pointed out that a circuit that fails under worst case conditions may require only slight modification to enable it to operate within tolerance limits, giving higher confidence in the ability of the circuit to perform as specified. S&ID further stated that sample Mandex worst case analyses (AC and DC) were being performed on a portion of the audio center equipment and that the results would be made available to CRC. CRC is considering the use of the Monte Carlo technique to randomly synthesize circuits giving the effect of probable tolerance conditions.

Worst Case Stress Analysis

Presently CRC is supplementing data obtained from part application tests with worst case analytical calculations where the calculations are simple. The validity of this approach over a straight paper worst case stress analysis was questioned by S&ID, because worst case stresses are not determined on some of the more important active elements. S&ID recommended that the proposed computer worst case analysis data (ref. Parameter Variation Analysis) be utilized to determine these stresses. In fact, a subroutine could be added giving the stresses as outputs. S&ID stated that it would be impossible for CRC to implement their derating practices if worst case stresses were not known, and therefore, impossible to justify the electrical and thermal derating to S&ID.

Parts Approval

S&ID requested that CRC send a formal request for S&ID approval of the parts that CRC intends to use. It was agreed that approval should be in the form of approval of the part specification. CRC agreed to transmit an approval request covering the 105 part specifications recently transmitted to S&ID.

Spares

CRC requested clarification on spare modules required for in-flight maintenance. They need this information to order the necessary piece parts. S&ID will inform CRC when this information will be available. S&ID requested a weight breakdown to the module level to facilitate studies on this subject. CRC stated that this data would be available in approximately 12 weeks and would be transmitted as part of the monthly weight and balance report.

Detailed Failure Rate Data

S&ID requested scheduling for the determination of failure rate data for each part in each application. CRC stated that this information will be available in approximately 3 to 4 months.

Qualification Program

A meeting was conducted 20 through 24 May 1963 to evaluate the CRC parts qualification program. CRC agreed to use parts which are included in the S&ID preferred parts program, where possible. It was agreed that any qualification program planned for these parts would be discontinued. The rest of the parts qualification program was reviewed, and changes were recommended.

The elimination of tests on parts included in the S&ID preferred parts list and changes in the test programs for the remaining parts will result in further negotiations with CRC.

PLANNED ACTIVITIES

Cost negotiations will be resumed with CRC to incorporate the changes in the procurement document and statement of work into the communication and data subsystem contract.

Considerable effort will be expended to reduce cost in the area of parts utilized in the C&D subsystem. This effort will be expended in providing the specifications and approved source lists associated with the implementation

of the Preferred Parts Manual. The entire parts approval program will be closely monitored to avoid duplication of test effort.

In conjunction with the refinement of spares requirements and in support of specific reliability analyses, refined reliability logic diagrams to the part level for each equipment received from the subcontractor will be integrated into the overall spacecraft logic.

Failure effects analyses on the part level will continue to be generated for each equipment in coordination with the subcontractor.

Requests for exemptions from identification and traceability requirements received from the subcontractor will be reviewed for approval.

Reliability configuration analyses will be performed and/or reviewed on each equipment prior to the forthcoming design-freeze.

The formal approval status of parts to be utilized in the communication and data subsystem will be determined, with recommended action where necessary.

Table 3-4. Audio Center Failure Effects Analysis

Item	Drawing Number	Elect. Reference. Desig.	Failure Detection	Function	Failure Type	Mission Phase	Failure Effect On Component Performance	Failure Effect On Sub-Systems Performance	Failure Effect On Apollo	Possible Crew Action
Audio center (3)				Provides audio amplification of voice for transmission and reception and voice operated transmit (VOX) for each crew member		All phases		One and two audio link failures, degradation of voice capability; three audio link failures, loss of voice communications	Degradation to or loss of alternate mode of performing navigational sighting and failure monitoring functions	One or two failures, no action; three failures, abort (use key in conjunction with S-band equipment and central timing equipment for transmission only) any crew member may share his individual audio center with one other crew member
Head set amplifier (3)				To amplify AF output of various equipments for reception by crew member	Loss of output		Loss of one receive mode			
					Degraded output		Weak or undetectable voice reception on affected audio center			
Mike amplifier (3)				To amplify AF output of crew member for transmission to GOSS by various equipments	Loss of output		Loss of one transmit mode			
					Degraded output		Weak or undetectable voice transmission on affected audio center			
VOX (3)				The VOX circuitry automatically chooses the transmit or receive mode of operation	Loss of output		Loss of one audio link			
					Degraded output		Loss or fluttering (off to on) of VOX for affected audio center			
Isolation pads and 7 diode switches				Provides individual or several modes selection and isolation	Loss of output		Loss of one transmit mode			
					Degraded output		Weak or undetectable transmission on affected audio center			

Table 3-4. Audio Center Failure Effects Analysis (Cont)

Item	Drawing Number	Elect. Reference. Desig.	Failure Detection	Function	Failure Type	Mission Phase	Failure Effect On Component Performance	Failure Effect On Sub-Systems Performance	Failure Effect On Apollo	Possible Crew Action
Controls				To select: transmit/receive, off/receive for HF, S-band, VHF/AM and intercomm; push-to-talk; requiring depression of couch button to transmit/VOX; power: on/off; earphone volume control; VOX sensitivity	Failure of switch in one closed position	All phases	Loss of affected mode			
					Open switch		Loss of affected mode			
					Open control		Loss of VOX and/or receive mode			

~~CONFIDENTIAL~~

Table 3-5. VHF/AM Transmitter-Receiver Failure Effects Analysis

Item	Drawing Number	Elect. Reference. Desig.	Failure Detection	Function	Failure Type	Mission Phase	Failure Effect On Component Performance	Failure Effect On Sub-Systems Performance	Failure Effect On Apollo	Possible Crew Action
VHF/AM transmitter receiver				Provides the primary mode of voice communications with GOSS		All phases			Loss of primary voice link	Use S-band equipment in conjunction with compatible antenna equipment
Transmitter				Converts the incoming AF signals from the audio center to the necessary RF level for output to the selected antenna	Loss of output		Loss of transmit signal	Loss of primary mode of voice transmission		
					Reduced or distorted output		Reduced or distorted transmit signal	Reduced or distorted signal to ground station; possible loss of transmit signal		
					Output frequency oscillates		Transmit signal oscillates	Loss of transmit data		
D-c to d-c converter				Converts a d-c line voltage to those voltages required to power transmitter	Loss of output		Loss of transmit signal	Loss of 150 v, 300 v, PA grid -26 v, and IFTS test signals		
					Reduced output		Reduced power to transmitter	Degraded transmit signal; possible loss of transmit signal		
					Ripple present at output		Distorted transmit signal	Distorted signal to ground station		
RF amplifier (receiver) (2)				Detects and mixes each RF signal (through separate RF amplifiers) from the multiplexer such that IF signals are produced	Loss of output		Loss of up-signal	Loss of voice from ground station		
					Reduced output		Reduced up-signal	Reduced voice from ground station; possible loss of voice		
					Local oscillator (LO) at wrong frequency		Loss of up-signal	Loss of voice from ground station		
IF amplifier (receiver)				Accepts IF signals from the RF amplifier, amplifies them, and converts them to AF signals	Loss of output		Loss of up-signal	Loss of voice from ground station		
					Reduced output		Reduced up-signal	Reduced voice from ground station; possible loss of voice		
					Distorted output		Distorted up-signal	Distorted voice from ground station; possible loss of voice		

~~CONFIDENTIAL~~

Table 3-5. VHF/AM Transmitter-Receiver Failure Effects Analysis (Cont)

Item	Drawing Number	Elect. Refer-ence. Desig.	Failure Detection	Function	Failure Type	Mission Phase	Failure Effect On Component Performance	Failure Effect On Sub-Systems Performance	Failure Effect On Apollo	Possible Crew Action
AF amplifier (receiver)				To amplify the AF signal from the IF amplifier for reception at the audio center	Loss of output		Loss of up-signal	Loss of voice from ground station		
					Reduced output		Reduced up-signal	Reduced voice from ground station		
					Distorted output		Distorted up-signal	Distorted voice from ground station		
Power supply				Develops the necessary volt-ages for the receiver	Loss of output		Loss of up-signal	Loss of voice from ground station		
					Reduced output		Reduced up-signal	Reduced voice from ground station; possible loss of voice		
					Ripple present output		Distorted up-signal	Distorted voice from ground station		
Controls				To select: power; on/off switch; receive switch I/II.	Fail off		Loss of up-signal	Loss of voice from ground station		
					Fail on or in one mode		Receiver on at all times; only one of two signals could be received	Loss of one up-signal		

~~CONFIDENTIAL~~

Table 3-6. C-Band Transponder Failure Effects Analysis

Item	Drawing Number	Elect. Reference. Desig.	Failure Detection	Function	Failure Type	Mission Phase	Failure Effect On Component Performance	Failure Effect On Sub-Systems Performance	Failure Effect On Apollo	Possible Crew Action
C-band transponder				Primary means of providing response to interrogations from complementary ground radars for the purpose of enhancing and extending the ground tracking and ranging capability		All phases except recovery		Loss of primary ground tracking mode	Loss of secondary mode for obtaining a navigational sighting	Use unified S-band equipment in conjunction with necessary antenna equipment
Circulator (antenna)				Provides isolation between transmitter and receiver	Loss of output		Loss of signal to corresponding receiver; transmitter will operate into incorrect antenna	Loss of C-band transponder capability		
					Reduced output		Reduced input to corresponding receiver	Reduced signal to ground station; possible loss of C-band transponder capability		
					Loss of isolation		Destruction of appropriate receiver when transmitter operates; loss of transponder on corresponding antenna	Loss of C-band omnidirectional capability		
					Reduced output		Reduced signal to corresponding receiver	Loss of omni-directional capability		
Preselector				Provides rejection of image frequencies	Loss of output		Loss of signal to corresponding receiver	Loss of omni-directional capability		
					Reduced output		Reduced signal to corresponding receiver	Reduced signal to ground station		
					Reduced rejection		Distorted signal to corresponding receiver	Reduced signal to ground station		
Local oscillator circulator				Isolation between LO and antenna	Loss of output		Loss of appropriate receiver signal	Loss of omni-directional capability		
					Reduced output		Reduced signal from appropriate receiver	Reduced signal to ground station		
					Loss of isolation		Reduced LO signal to appropriate receiver; LO frequency radiated by antenna	Reduced signal to ground station		

~~CONFIDENTIAL~~

Table 3-6. C-Band Transponder Failure Effects Analysis (Cont)

Item	Drawing Number	Elect. Reference. Desig.	Failure Detection	Function	Failure Type	Mission Phase	Failure Effect On Component Performance	Failure Effect On Sub-Systems Performance	Failure Effect On Apollo	Possible Crew Action
Mixer				Mixes received and LO signals to provide IF	Loss of output	All phases except recovery	Loss of appropriate receive signal	Loss of omni-directional capability		
					Reduced output		Reduced signal from appropriate receiver	Reduced signal to ground station		
					Incorrect output frequency		Extremely reduced signal from appropriate receiver	Probable loss of omnidirectional capability		
					Distorted output		Distorted signal from appropriate receiver	Reduced signal to ground station		
IF amplifier (not including detector)				Amplifies IF and supplies input to log-linear amplifier	Loss of output		Loss of signal from appropriate receiver	Loss of omni-directional capability		
					Reduced output		Reduced signal from appropriate receiver	Reduced signal to ground station		
					Amplifier oscillates		Loss of signal from appropriate receiver	Loss of omni-directional capability		
					Distorted output		Distorted signal from appropriate receiver	Reduced signal to ground station		
					Supply voltage present on output		Distorted output signal	Reduced signal to ground station		
Detector				Detects information bearing signal	Loss of output		Loss of signal from appropriate receiver	Loss of omni-directional capability		
					Distorted output		Distorted signal from appropriate receiver	Reduced signal to ground station		
					Supply voltage present at output		Loss of appropriate receiver signal	Reduced signal to ground station		
Log-linear amplifier				Provides output to the comparator that is a function of signal power input and provides a linear output to the combiner	Amplifier oscillates		Loss of linear signal to comparator and combiner for appropriate channel	Reduced signal to ground station		
					Supply voltage present at output		Combiner becomes inoperative	Loss of C-band transponder capability		

Table 3-6. C-Band Transponder Failure Effects Analysis (Cont)

Item	Drawing Number	Elect. Reference. Desig.	Failure Detection	Function	Failure Type	Mission Phase	Failure Effect On Component Performance	Failure Effect On Sub-Systems Performance	Failure Effect On Apollo	Possible Crew Action
Combiner shaper				Provides pulse of constant width and amplitude to decoder	Loss of output	All phases except recovery	Loss of signal to comparator and transmitter	Loss of C-band transponder capability		
					Reduced output		Loss of triggering signal	Loss of C-band transponder capability		
					Distorted output		Modulator trigger will be incorrectly activated	Improperly timed C-band transponder signal to ground station		
					Amplifier oscillates		Transmitter triggered at all times	Loss of C-band transponder capability		
					Supply voltage present at output		Loss of triggering signal	Loss of C-band transponder capability		
Decoder system delay				Provides desired trigger signal to comparator and transmitter with appropriate delay to allow selection of the correct antenna and observance by earth of both the skin-track reply and transponder reply	Loss of output		Loss of transmit function and antenna selection	Loss of C-band transponder capability		
					Reduced output		Loss of transmit function and antenna selection	Loss of C-band transponder capability		
					Distorted output		Delayed transmitter pulse	Improperly timed C-band transponder signal to ground station		
					Decoder oscillato		Transmitter continuously triggered	Loss of C-band transponder capability		
					Supply voltage present at output		Loss of transmit function and antenna selection	Loss of C-band transponder capability		
Compilator (1 channel)				Provides signal to appropriate driver for antenna	Loss of output		Loss of transmit capability on appropriate antenna	Loss of omni-directional capability		
					Reduced output		Loss of antenna selection	Loss of omni-directional capability		
					Distorted output		Incorrect switching of antenna	Loss of omni-directional capability		

[redacted]

Table 3-6. C-Band Transponder Failure Effects Analysis (Cont)

Item	Drawing Number	Elect. Reference. Desig.	Failure Detection	Function	Failure Type	Mission Phase	Failure Effect On Component Performance	Failure Effect On Sub-Systems Performance	Failure Effect On Apollo	Possible Crew Action
					Oscillation on output	All phases except recovery	Incorrect operation of antenna select switch; transmitter will operate into incorrect antenna	Loss of omni-directional capability		
					Supply voltage present at output		Incorrect operation of antenna select switch; transmitter will operate into incorrect antenna switch	Loss of omni-directional capability		
Driver (channel)				Provides signal to antenna select switch	Loss of output		Loss of ability to switch to appropriate antenna; transmitter will operate into incorrect antenna	Loss of omni-directional capability		
					Reduced output		Loss of ability to switch to appropriate antenna; transmitter will operate into incorrect antenna	Loss of omni-directional capability		
					Distorted output		Switching of antenna delayed	Return signal to ground will be delayed or distorted		
					Oscillation present at output		Incorrect switching of appropriate antenna; transmitter will operate into incorrect antenna	Reduced signal to ground station		
					Supply voltage present at output		Incorrect operation of antenna select switch; transmitter will operate into incorrect antenna	Reduced signal to ground station		
Modulator enable				Provides trigger to modulator	Loss of output		Loss of transmit capability	Loss of C-band transponder capability		
					Reduced output		Loss of transmit capability	Loss of C-band transponder capability		
					Distorted output		Delayed and distorted transmit signal	Delayed and distorted signal to ground station		

[redacted]

Table 3-6. C-Band Transponder Failure Effects Analysis (Cont)

Item	Drawing Number	Elect. Reference. Desig.	Failure Detection	Function	Failure Type	Mission Phase	Failure Effect On Component Performance	Failure Effect On Sub-Systems Performance	Failure Effect On Apollo	Possible Crew Action
Modulator				Provides signal to transmitter	Loss of output	All phases except recovery	Loss of transmit capability	Loss of C-band transponder capability		
					Reduced output		Loss of transmit capability	Loss of C-band transponder capability		
					Distorted output		Distorted transmit signal	Distorted signal to ground station		
					Oscillations present at output		Continuous transmit signal	Loss of C-band transponder capability		
Transmitter				Amplifies the transmit signal and provides it as input to ferrite circulator	Loss of output		Loss of transmit capability	Loss of C-band transponder capability		
					Reduced output		Reduced output signal	Reduced signal to ground station		
					Loss of isolation		Probable loss of transmitter	Loss of C-band transponder capability		
					Spurious oscillations at output		Probable loss of transmitter	Loss of C-band transponder capability		
Directions, coupler and detector				Couples transponder to antenna and provides an analog voltage as a function of the output power of the transmitter to facilitate failure detection and inflight maintenance	Loss of output (detector)		Loss of test voltage	No noticeable effect		
					Loss of output (antenna)		Loss of output signal	Loss of C-band transponder capability		
					Reduced output (detector)		Reduced Test voltage	No noticeable effect		
					Reduced output (antenna)		Reduced output signal	Reduced signal to ground station		
					Distorted output (both points)		Distorted test voltage; distorted output signal	Distorted signal to ground station		
Antenna selector switch S1				Switches most effective antenna to transmitter	Switch locked on one position		Transmit capability on one antenna only	Reduced signal to ground station		

Table 3-6. C-Band Transponder Failure Effects Analysis (Cont)

Item	Drawing Number	Elect. Reference. Desig.	Failure Detection	Function	Failure Type	Mission Phase	Failure Effect On Component Performance	Failure Effect On Sub-Systems Performance	Failure Effect On Apollo	Possible Crew Action
					Switch open (any positions)	All phases except recovery	Loss of transmit capability on appropriate antennas	Reduced signal to ground station; loss of signal to ground station should all contacts open		
Power supply				Supplies electrical power to C-band transponder	Loss of output		C-band transponder becomes inoperative	Loss of C-band transponder capability		
					Reduced output		Reduced signal level - transmit and receive	Reduced signal level to ground station		
					Ripple present at output		Distorted signal; transmit and receive	Distorted reduced signal to ground station		
					Loss of regulation		Decreased efficiency slightly reduced output signal	Slightly reduced signal to ground station		
Local oscillator				Provides heterodyne signal to provide intermediate frequency	Loss of output		Loss of receive capability	Loss of C-band transponder capability		
					Reduced output		Reduced receive signal	No noticeable effect		
					Oscillation at incorrect frequency		Loss of receive capability	Loss of C-band transponder capability		
					Distorted output		Reduced and distorted output	Loss of C-band transponder capability		
					Supply voltage present at output		Slightly distorted receive signal	No noticeable effect		

CONFIDENTIAL

Table 3-7. Unified S-Band Transponder Failure Effects Analysis

Item	Drawing Number	Elect. Reference Desig.	Failure Detection	Function	Failure Type	Mission Phase	Failure Effect On Component Performance	Failure Effect On Sub-Systems Performance	Failure Effect On Apollo	Possible Crew Action
Unified S-band transponder (2)				Provides a secondary mode of voice communication, transmission of telemetry data, TV, and tracking and ranging information		All phases through earth entry			Loss of real-time transmission data	One failure, utilize spare; two failures use emergency voice mode
Transmitter				Provides FM, and PM as a means of transmitting the following information: voice, emergency voice and key, PCM, TV, range, analog, and biomedical data; the analog and biomedical data may be transmitted in real-time or on tape playback	Loss of output		Loss of transmit signal	Loss of data		
					Reduced output		Reduced transmit signal	Reduced signal to ground stations; possible loss of data		
					Distorted output		Distorted transmit signal	Distorted transmit data; possible loss of data		
					Output frequency oscillates		Transmit signal oscillates	Loss of transmit data		
Receiver				Provides for reception of FM/PM voice and range data	Loss of output		Loss of up-signal	Loss of up-data		
					Reduced or distorted output		Reduced or distorted up-signal	Reduced or distorted up-data; possible loss of up-data		
					Incorrect LO frequency		Loss of up-signal	Loss of up-data		
Power supply				Provides regulated d-c power from a 115-volt, 3-phase source to the transmitter and receiver	Loss of output		Loss of ability to transmit and receive	Loss of transmit data and up-data		
					Reduced output		Reduced transmit and receive signal	Reduced transmit and receive data; possible loss of data		
					Ripple present at output		Distorted transmit and receive signal	Distorted transmit data and up-data		
					Loss of regulation		Slightly reduced transmit and receive signal	Slightly reduced up-data and transmit data		
Controls				Provides for on/off control, VCO/auxiliary crystal control, ranging control, and FM/PM control	Fail open		Loss of ability to transmit or receive	Loss of transmit data and up-data		
					Fail on or in one position		Loss of ability to switch modes or turn unit off	Unit is on at all times with loss of one or more modes		

Table 3-8. S-Band Power Amplifier Failure Effects Analysis

Item	Drawing Number	Elect. Reference. Desig.	Failure Detection	Function	Failure Type	Mission Phase	Failure Effect On Component Performance	Failure Effect On Sub-Systems Performance	Failure Effect On Apollo	Possible Crew Action
S-band power amplifier				Provides the power necessary for the primary S-band mode of transmission		All phases through earth entry			Degraded transmission of data and loss of ability to transmit TV	Utilize narrow band telemetry and voice mode with high-gain antenna
Power supply				Converts normal bus voltage to those necessary for the traveling wave tube (TWT)	Loss of output		Loss of function	Loss of primary mode of transmission		
					Reduced output		Decreased transmit signal	Reduced signal to ground station		
					Ripple present at output		Distorted transmit signal	Distorted signal to ground station		
Traveling wave tube				Amplifies the 2.3 KMC transponder output to increase the output of 0.2 to 0.4 watts to 20 watts	Loss of output		Loss of 20-watt capability	Loss of primary mode of transmission		
					Reduced output		Decreased transmit signal	Reduced signal to ground station		
Attenuator				Attenuates the signal from the transponder to a level that is in the operating range of the TWT	Loss of output		Loss of function	Loss of primary mode of transmission		
					Reduced output		Reduced transmit signal	Reduced signal to ground station		
					Increased output		Increased transmit signal; possible loss of TWT	Increased transmit signal to ground station; possible distorted signal to ground station		
Diplexer				Provides isolation between the signals being received and transmitted so that one antenna can be used for both transmission and reception	Loss of output		Loss of either/both the transmit signal and the up-signal	Loss of either/both function(s)		
					Reduced output		Reduced either/both the transmit signal and the up-signal	Possible loss of either/both functions		
					Loss of isolation		Transmitter would destroy the receiver	Loss of both functions		

Table 3-9. VHF/FM Transmitter Failure Effects Analysis

Item	Drawing Number	Elect. Reference. Desig.	Failure Detection	Function	Failure Type	Mission Phase	Failure Effect On Component Performance	Failure Effect On Sub-Systems Performance	Failure Effect On Apollo	Possible Crew Action
VHF/FM transmitter				Provides transmission of telemetry information (data and TV)		All phases except recovery			Partial loss of telemetry and real-time undisplayed data	Use secondary mode utilizing S-band equipment
Power amplifier				Provides amplification of the FM signal to be transmitted	Loss of output		Loss of ability to transmit	Loss of VHF/FM transmitter function		
					Reduced output		Decreased transmit signal	decreased VHF/FM transmit signal; possible loss of function		
					Distorted output		Distorted transmit signal	Distorted VHF/FM transmit signal; possible loss of function		
					Amplifier oscillates		Loss of ability to transmit	Loss of VHF/FM transmit signal		
Power supply				Provides the necessary power to the unit	Loss of output		Loss of ability to transmit	Loss of VHF/FM transmit signal		
					Reduced output		Reduced transmit signal	Reduced VHF/FM transmit signal; possible loss of function		
					Ripple present at output		Distorted transmit signal	Distorted VHF/FM transmit signal		
					Loss of regulation		Slightly reduced transmit signal	Slightly reduced VHF/FM transmit signal		
Exciter				Excepts PCM and biomedical data from the premodulation processor and transmits them by FM either individually or simultaneously	Loss of output		Loss of transmit signal	Loss of data		
					Reduced output		Reduced transmit signal	Reduced VHF/FM transmit signal; possible loss of data		
					Distorted output		Distorted transmit signal	Distorted VHF/FM data; possible loss of data		
					Output frequency varies		Loss of transmit signal	Loss of VHF/FM data		

Table 3-9. VHF/FM Transmitter Failure Effects Analysis (Cont)

Item	Drawing Number	Elect. Reference. Desig.	Failure Detection	Function	Failure Type	Mission Phase	Failure Effect On Component Performance	Failure Effect On Sub-Systems Performance	Failure Effect On Apollo	Possible Crew Action
Controls				Provides on/off switch for power supply	Failed open	All phases except recovery	Loss of transmit signal	Loss of VHF/FM data		
					Failed closed		Loss of ability to turn off power supply	VHF/FM transmitter is on at all times		

~~CONFIDENTIAL~~

Table 3-10. VHF Recovery Beacon Failure Effects Analysis

Item	Drawing Number	Elect. Reference. Desig.	Failure Detection	Function	Failure Type	Mission Phase	Failure Effect On Component Performance	Failure Effect On Sub-Systems Performance	Failure Effect On Apollo	Possible Crew Action
VHF recovery beacon equipment				The VHF recovery beacon (interrupted) tone modulated CW provides line-of-sight direction finding capabilities during the earth landing and recovery phases to aid in locating the spacecraft		Earth landing and recovery phases			Loss of primary means of providing on-board direction finding aid during earth landing and recovery	Use HF transceiver or VHF/AM transmitter-receiver
Oscillator				Provides carrier signal	Loss of output		Loss of output signal	Loss of VHF recovery beacon capability		
					Distorted output		Distorted output signal	Reduced VHF recovery beacon signal on CW; possible loss of CW mode; no noticeable effect on pulse mode		
					Reduced output		Reduced output signal	Slightly reduced VHF recovery beacon signal; possible loss of function		
					Incorrect oscillation sequency (7±0.005)		Reduced signal output	Reduced signal output of recovery beacon on CW		
					Supply voltage present on output		Extremely distorted carrier signal	Noisy VHF recovery beacon signal		
Preamplifier				Voltage amplification prior to power amplifier	Loss of output		Loss of carrier signal	Loss of VHF recovery beacon capability		
					Distorted output		Distorted output signal	Reduced VHF recovery beacon signal on CW; possible loss of CW mode; no noticeable effect on pulse mode		
					Reduced output		Reduced output signal	Reduced VHF recovery beacon signal; possible loss of function		
					Amplifier oscillates		Loss of output signal	Loss of VHF recovery beacon capability		

~~CONFIDENTIAL~~

Table 3-10. VHF Recovery Beacon Failure Effects Analysis (Cont)

Item	Drawing Number	Elect. Reference. Desig.	Failure Detection	Function	Failure Type	Mission Phase	Failure Effect On Component Performance	Failure Effect On Sub-Systems Performance	Failure Effect On Apollo	Possible Crew Action
					Supply voltage present at output	Earth landing and recovery	Distorted carrier signal	Distorted and reduced VHF recovery beacon signal; possible loss of function		
Power amplifier (3 stage)				Final amplification of signal to be fed to antenna	Loss of output		Loss of output signal	Loss of VHF recovery beacon capability		
					Distorted output		Distorted output signal	Distorted pulse modulation signal; distorted reduced CW signal; possible loss of function		
					Reduced output		Reduced output signal	Reduced VHF recovery beacon signal; possible loss of function		
					Amplifier oscillates		Loss of desired output signal	Loss of VHF recovery beacon capability		
					Supply voltage present at output		Beacon becomes inoperative	Loss of VHF recovery beacon capability		
Pulse modulator				Provides pulse modulation signal to PA	Loss of output		Loss of pulse modulation	Loss of pulse modulation capability of VHF recovery beacon		
					Distorted output		Distorted pulse modulated signal	Distorted pulse modulated receiver signal; possible loss of pulse mode		
					Reduced output		Reduced output signal on pulse modulated mode	Reduced signal level on pulse modulation mode; possible loss of pulse mode		
					Supply voltage present at output		Loss of output signal	Loss of VHF recovery beacon capability		
					Pulse modulator becomes free running		Continuous pulse output, subsequent loss of output	Loss of VHF recovery beacon capabilities		

[redacted]

Table 3-10. VHF Recovery Beacon Failure Effects Analysis (Cont)

Item	Drawing Number	Elect. Reference. Desig.	Failure Detection	Function	Failure Type	Mission Phase	Failure Effect On Component Performance	Failure Effect On Sub-Systems Performance	Failure Effect On Apollo	Possible Crew Action
Power supply				Provides power to VHF recovery beacon	Loss of output	Earth landing and recovery	Recovery beacon inoperative	Loss of VHF recovery beacon capability		
					Ripple present at output		Noisy output signal	Noisy VHF recovery beacon signal; possible loss of function		
					Decreased output		Decreased output signal	Decreased VHF recovery beacon signal level; possible loss of function		
					Loss of regulation		Decreased efficiency; reduced pulse output	Reduced VHF recovery beacon signal in pulse mode; possible loss of pulse mode		

[redacted]

Table 3-11. Signal Conditioners Failure Effects Analysis

Item	Drawing Number	Elect. Reference. Desig.	Failure Detection	Function	Failure Type	Mission Phase	Failure Effect On Component Performance	Failure Effect On Sub-Systems Performance	Failure Effect On Apollo	Possible Crew Action
Signal conditioning equipment				The signal conditioning equipment provides normalization for all sensory data prior to input to the pcm telemetry equipment, GSE, displays, and IFTS		All phases except recovery			Incorrect information or complete loss of information from affected channel(s)	None
D-c amplifier	512-3041 512-3042			To provide amplification of an individual sensor such that the normal range necessary for transmission and/or display will be achieved	Loss of output		Loss of one data channel	Loss of data handled by circuit involved		
					Decreased output		Erroneous signal level on one channel	Erroneous data reading from involved channel		
					Distorted output		Erroneous signal on one channel	Erroneous data reading from involved channel		
					Oscillation		Loss of one data channel	Loss of data handled by circuit involved		
D-c attenuator	512-3044 512-3045			To decrease the range of an individual sensor such that the normal range necessary for transmission and/or display will be achieved	Loss of output		Loss of one data channel	Loss of data handled by circuit involved		
					Increased output		Erroneous signal level on one channel	Erroneous data reading from involved channel		
					Distorted output		Erroneous signal on one channel	Erroneous data reading from involved channel		
					Oscillation		Loss of one data channel	Loss of data handled by circuit involved		
A-c to d-c converter	512-3047 512-3048			To convert a-c sensor signals to the normal d-c range necessary for transmission and/or display	Loss of output		Loss of one data channel	Loss of data handled by circuit involved		
					Decreased output		Erroneous signal level on one channel	Erroneous data reading from involved channel		
					Increased output		Erroneous signal level on one channel	Erroneous data reading from involved channel		
					Distorted output		Erroneous signal on one channel	Erroneous data reading from involved channel		

Table 3-11. Signal Conditioners Failure Effects Analysis (Cont)

Item	Drawing Number	Elect. Reference. Desig.	Failure Detection	Function	Failure Type	Mission Phase	Failure Effect On Component Performance	Failure Effect On Sub-Systems Performance	Failure Effect On Apollo	Possible Crew Action
Phase sensor demodulator	512-3126			To demodulate the phase characteristics of an individual sensor signal to the normal d-c range necessary for transmission and/or display	Loss of output	All phases except recovery	Loss of one data channel	Loss of data handled by circuit involved		
					Decreased output		Erroneous signal level on one channel	Erroneous data reading from involved channel		
					Distorted output		Erroneous signal on one channel	Erroneous data reading from involved channel		
Frequency sensor demodulator	512-3125			To demodulate the frequency characteristics of an individual sensor signal to the normal d-c range necessary for transmission and/or display	Loss of output		Loss of one data channel	Loss of data handled by circuit involved		
					Decreased output		Erroneous signal level on one channel	Erroneous data reading from involved channel		
					Distorted output		Erroneous signal on one channel	Erroneous data reading from involved channel		
					Off frequency		Erroneous signal on one channel	Erroneous data reading from involved channel		
Power supply	512-3124			To provide power to the signal conditioners and excitation voltage to the sensors	Loss of output		Loss of all conditioner outputs	Loss of all signal conditioners		
					Decreased output		Degraded conditioner performance	Possible loss of data and/or erroneous data from signal conditioners		
					Distorted output		Erroneous output from conditioners	Erroneous data readings from conditioners		
					Oscillation		Loss of all conditioner outputs	Loss of all signal conditioners		
					Loss of regulation		Erroneous output from conditioners	Erroneous data readings from conditioners		

~~CONFIDENTIAL~~

Table 3-12. Data Storage Failure Effects Analysis

Item	Drawing Number	Elect. Reference. Desig.	Failure Detection	Function	Failure Type	Mission Phase	Failure Effect On Component Performance	Failure Effect On Sub-Systems Performance	Failure Effect On Apollo	Possible Crew Action
Data storage equipment				Provides on-board telemetry data storage during critical periods and when real-time data transmission is not possible; provides playback for delayed time data		Powered phases and earth entry			Loss of on-board data storage and playback capabilities	Voice relay of delayed time data from visual displays (limited data)
Analog record amplifier (9)	512-2781			Amplify analog signals for recording on tape	Loss of output		Loss of affected analog channel	Loss of data from affected analog channel		
Analog reproduce amplifier (9)	512-2785			Amplify analog signals reproduced from tape	Loss of output		Loss of ability to reproduce data on affected analog channel	Loss of immediate use of data from affected analog channel; data remains recorded on tape		
Digital record amplifier (4)	512-2783			Amplify digital signals for recording on tape	Loss of output		Loss of affected digital channel	Loss of data from affected digital channel		
Digital record amplifier (clock pulse)					Loss of clock output		Loss of all digital channels	Loss of data from all digital channels		
Digital reproduce amplifier (4)	512-2787			Amplify digital signals reproduced from tape	Loss of output		Loss of ability to reproduce data from affected digital channel	Loss of immediate use of data from affected digital channel; data remains recorded on tape		
Digital reproduce amplifier (clock pulse)					Loss of clock output		Loss of ability to reproduce usable data from any digital channel	Loss of immediate use of data from any digital channel; data remains recorded on tape		
Serial to parallel converter	512-2793			Convert serial digital input to parallel form	Loss of output		Loss of all digital channels	Loss of data from all digital channels		
Parallel to serial converter				Convert parallel digital output to serial form	Loss of output		Loss of all digital output from data storage recorder	Loss of immediate use of all digital data; data remains recorded on tape in parallel form		

~~CONFIDENTIAL~~

Table 3-12. Data Storage Failure Effects Analysis (Cont)

Item	Drawing Number	Elect. Reference. Desig.	Failure Detection	Function	Failure Type	Mission Phase	Failure Effect On Component Performance	Failure Effect On Sub-Systems Performance	Failure Effect On Apollo	Possible Crew Action
A-c to d-c converter	512-2795			Convert a-c power to d-c	Loss of output	Powered phases and earth entry	Loss of all data storage functions	Loss of data storage recorder		
					Decreased output		Degradation of data storage recorder performance	Possible loss of all data from data storage recorder		
D-c voltage regulator	512-2799			Provide regulation of d-c power	Loss of output		Loss of all data storage functions	Loss of data storage recorder		
					Decreased output		Degradation of data storage recorder performance	Possible loss of all data from data storage recorder		
					Increased output		Degradation of data storage recorder performance	Possible loss of all data from data storage recorder		
					Loss of regulation		Probable loss of usable data storage recorder output	Probable loss of usable data from storage recorder		
Bias oscillator	512-2789			Provide a-c bias to analog record amplifier and erase amplifier	Loss of output		Loss of all data storage output	Loss of data storage recorder		
Control logic	512-2797			Provide selection of data storage operation modes: Forward-reverse Fast-slow Record-playback On-off	Loss of output		Loss of all data storage functions	Loss of data storage recorder		
Erase amplifier	512-2791			Provide signal to erase heads	Loss of output		Loss of ability to reuse any one tape	Amount of data handled by data storage recorder limited		
Tape transport	512-2760			To move tape over heads at constant (record-playback or fast) speeds	Loss of transport functioning		Loss of all data recording	Loss of data storage recorder		

Table 3-13. Premodulation Processor Failure Effects Analysis

Item	Drawing Number	Elect. Reference. Desig.	Failure Detection	Function	Failure Type	Mission Phase	Failure Effect On Component Performance	Failure Effect On Sub-Systems Performance	Failure Effect On Apollo	Possible Crew Action
Premodulation processor				The premodulation processor equipment provides the interface connections between the spacecraft data gathering equipments and the RF transmission equipments; it performs the switching, gating, and mixing necessary to obtain the various modes of information transmission and reception with the exception of the VHF/AM transmitter-receiver and the recovery equipments		All phases through earth entry			Loss of or degradation to all modes of data transmission and all modes of S-band voice transmission and reception	Select alternate available modes of information, transmission, and reception
Low pass filter				Accepts information from the PCM, eliminates high-frequency noise, attenuates a 0-6-volt input to a 0-3-volt output for VHF/FM transmitter	Loss of signal		Loss of VHF/FM transmitter input	Loss of VHF/FM telemetry S-band; provides redundancy		
					Decreased signal		Decreased VHF/FM transmitter input	VHF/FM output slightly decreased		
					Distorted signal		Distorted VHF/FM transmitter input	VHF/FM output slightly distorted		
					+28 v dc on output		Distorted VHF/FM transmitter input	VHF/FM output distorted		
Frequency doubler	513-2333-005	960C-1		Doubles the 512-KC signal and feeds it to the "module two" and "and" gate to be used as a subcarrier	Decreased signal		Decreased PCM output	Degradation PCM telemetry function		
					Distorted signal		Distorted PCM output	Degradation PCM telemetry function		
					Multi oscillates		Loss of PCM output	Loss of PCM telemetry function		
					+28 v dc on output		No noticeable effect	No noticeable effect		
					Loss of signal		Loss of PCM output	Loss of PCM telemetry function		
Band pass filter		960C-1		Two filters: one accepts PCM-NRZ information from the module two; the other accepts information from an "and" gate. They both eliminate noise and both outputs are fed to the PM mixing network	Loss of signal		Loss of 1.024 MC PCM signal	Reduced PCM/PM telemetry/tracking and FM telemetry (reduced number of channels); VHF/FM and S-band provide redundancy		

~~CONFIDENTIAL~~

Table 3-13. Premodulation Processor Failure Effects Analysis (Cont)

Item	Drawing Number	Elect. Reference Desig.	Failure Detection	Function	Failure Type	Mission Phase	Failure Effect On Component Performance	Failure Effect On Sub-Systems Performance	Failure Effect On Apollo	Possible Crew Action
					Distorted signal	All phases through earth entry	Distorted 1.024 MC PCM signal	Distorted PCM/PM output		
					Decreased signal		Decreased 1.024 MC PCM signal	Decreased PCM/PM output		
					Mixer oscillates		Loss of 1.024 MC PCM or analog voice signal	Reduced PCM/PM telemetry/tracking capability; S-band (TV mode) and FM provide redundancy		
					Input supply on output		Distorted 1.024 MC PCM and analog voice signal	Distorted PCM/PM and PM/analog voice communication		
1.25 MC VCO	513-2322-005	960C-1		Accepts an analog voice from the audio center and applies it to a 1.25 MC subcarrier, which is fed to the PM mixing network, or the FM mixing network	Loss of signal		Loss of voice output	Loss of all voice communication except emergency voice HF and VHF/AM modes		
					Decreased signal		Decreased voice output	Degraded S-band voice communications		
					Distorted signal		Distorted voice output	Distorted S-band voice communications		
					Shifted circuit frequency		Distorted voice output	Distorted S-band voice communications		
					+28 v dc on output		No noticeable effect	No noticeable effect		
FM mixing network		960C-1		Accepts PCM-NRZ, key, TV, analog voice and 9 analog channels, mixes them, and feeds them to the unified S-band equipment	Loss of signal		Loss of PCM, voice, VCO, TV and telemetry signals	Loss of FM/telemetry, FM/analog voice, FM/tape playback, and TV modes. PM/PCM provide all redundancy except for TV		
					Decreased signal		Decreased PCM, voice, VCO, TV and telemetry signals	Decreased FM/telemetry, FM/analog voice, FM/tape playback, and TV signals		

~~CONFIDENTIAL~~

~~CONFIDENTIAL~~

Table 3-13. Premodulation Processor Failure Effects Analysis (Cont)

Item	Drawing Number	Elect. Reference. Desig.	Failure Detection	Function	Failure Type	Mission Phase	Failure Effect On Component Performance	Failure Effect On Sub-Systems Performance	Failure Effect On Apollo	Possible Crew Action
					Distorted signal	All phases through earth entry	Distorted PCM, voice, VCO, TV and telemetry signals	Distorted FM/telemetry, FM/analog voice, FM/tape playback, and TV signals		
					Mixer oscillates		Loss of PCM, voice, VCO, TV and telemetry signals	Loss of FM/telemetry, FM/analog voice, FM/tape playback, and TV modes. PM/PCM provide all redundancy except TV		
					Input supply on output		Distorted PCM, voice, VCO, TV, and telemetry signals	Distorted FM/telemetry, FM/analog voice, FM/tape playback, and TV signals		
SCO mixing network		960C-1		Accepts analog inputs, mixes them, and feeds them to the FM mixing network	Loss of signal		Loss of DSE analog telemetry signals	Loss of data storage capabilities from unified S-band equipment (USBE)		
					Decreased signal		Decreased DSE analog telemetry signals	Decreased data storage signals from USBE		
					Distorted signal		Distorted DSE analog telemetry signals	Distorted data storage signals from unified S-band equipment		
					Mixer oscillates		Loss of DSE analog telemetry signals	Loss of data storage capability from unified S-band equipment		
					Input supply on output		Distorted DSE analog telemetry signals	Distorted data storage capabilities from unified S-band equipment		

~~CONFIDENTIAL~~

~~CONFIDENTIAL~~

Table 3-13. Premodulation Processor Failure Effects Analysis (Cont)

Item	Drawing Number	Elect. Reference. Desig.	Failure Detection	Function	Failure Type	Mission Phase	Failure Effect On Component Performance	Failure Effect On Sub-Systems Performance	Failure Effect On Apollo	Possible Crew Action
Module two	513-2333-005	960C-1		Accepts information from PCM and PCM-NRZ, synchronizes the data and feeds it through a bi-phase modulator where bi-phase modulation is accomplished	Loss of signal	All phases through earth entry	Loss of PCM output	Loss of PCM telemetry		
					Decreased signal		Decreased PCM output	Possible loss of PCM telemetry		
					Distorted signal		Distorted PCM output	Possible loss of PCM telemetry		
					Circuit oscillates		Loss of PCM output	Loss of PCM telemetry		
					+28 v dc on output		Loss of PCM output	Loss of PCM telemetry		
PM mixing network		960C-1		Accepts information from the module two or key and analog voice from 1.25 MC SCO, mixes the inputs and feeds them to S-band equipment	Loss of signal		Loss of 1.024 MC PCM or analog voice signal	Reduced PCM/PM, telemetry/tracking capacity. S-band (TV mode) and FM provide redundancy		
					Distorted signal		Distorted 1.024 MC PCM and analog voice signal	Distorted PCM/PM and PM/analog voice communication		
					Decreased signal		Decreased 1.024 MC PCM and analog voice signal	Decreased PCM/PM and PM/analog voice communication		
Up-voice discriminator		960C-1		Accepts signal from the USBE, demodulates the voice carrier, and feeds the analog voice to the intercom system	Loss of signal		Loss of signal to audio center	Loss of ground to spacecraft voice communications		
					Distorted signal		Distorted signal to audio center	Distorted ground to spacecraft communications		
					Decreased signal		Decreased signal to audio center	Decreased ground to spacecraft communications		
					Shift of center frequency		Distorted signal to audio center	Distorted ground to spacecraft communications		
					Input supply on output		Distorted signal to audio center	Distorted ground to spacecraft communications		

~~CONFIDENTIAL~~

~~CONFIDENTIAL~~

Table 3-13. Premodulation Processor Failure Effects Analysis (Cont)

Item	Drawing Number	Elect. Reference. Desig.	Failure Detection	Function	Failure Type	Mission Phase	Failure Effect On Component Performance	Failure Effect On Sub-Systems Performance	Failure Effect On Apollo	Possible Crew Action
Up-data discriminator				Accepts data from the USBE, demodulates the data carriers, and feeds the information to the receiver-decoder package	Loss of signal	All phases through earth entry	Loss of signal to receiver-decoder	Loss of data		
					Distorted signal		Distorted signal to receiver-decoder	Possible loss of data		
					Decreased signal		Decreased signal to receiver-decoder	Possible loss of data		
					Shift of center frequency		Distorted signal to receiver-decoder	Possible loss of data		
					Input supply on output		Distorted signal to receiver-decoder	Possible loss of data		
Power supply	513-1137-005	960C-1		Provides 6 v dc to the emergency key and 28 v dc to the PMP	Loss of signal		Loss of premodulation processor capabilities	Loss of all data and voice transmission modes except VHF/AM, HF, and emergency voice		
					Ripple present on output		Possible loss of premodulation processor capabilities	Possible degrading of all data and voice transmission modes except VHF/AM, HF, and emergency voice		
					Decreased output (50 percent)		Loss of premodulation processor capabilities	Loss of all data and voice transmission modes except VHF/AM, HF, and emergency voice		
					Loss of regulation		Reduced efficiency	Possible degrading of all data and voice transmission modes except VHF/AM, HF, and emergency voice		

~~CONFIDENTIAL~~

~~CONFIDENTIAL~~

Table 3-14. HF Transceiver/Receiver Module Failure Effects Analysis

Item	Drawing Number	Elect. Reference Desig.	Failure Detection	Function	Failure Type	Mission Phase	Failure Effect On Component Performance	Failure Effect On Sub-Systems Performance	Failure Effect On Apollo	Possible Crew Action
HF transceiver equipment				The HF transceiver equipment provides line-of-sight and beyond line-of-sight direction finding and communication capabilities to aid in locating the spacecraft during the recovery phase		Recovery			Loss of primary means of communications and alternate means of direction finding during recovery phase	Utilize other NF transceiver mode or VHF/AM transmitter-receiver for line-of-sight communications, as specified under "failure effect on subsystems performance"; utilize VHF recovery beacon or VHF/AM transmitter-receiver for direction finding
Audio amplifier	513-2426-006	718H-1E		Amplify audio output signal	Loss of signal		Loss of HF receiver signal	Loss of HF voice receive mode beyond line of sight. Line-of-sight redundancy provided by VHF/AM and HF/SSB		
					Decreased signal		Decreased HF receive signal	Decreased HF receiver capability; possible loss of function		
					Distorted signal		Distorted HF receive signal	Distorted HF receive signal; possible loss of function		
					Amplifier oscillates		Loss of HF receive signal	Loss of HF voice receive mode beyond line of sight; line-of-sight redundancy provided by VHF/AM and HF/SSB		
					B+ on output		Instability in HF receiver operation	Instability in HF receiver operation; possible loss of function		
AM detecter	513-2426-006	718H-1E		Recovering modulation from signal	Loss of signal		Loss of HF/AM receive signal	Loss of HF/AM receive mode; VHF/AM provides redundancy		

~~CONFIDENTIAL~~

[redacted]

Table 3-14. HF Transceiver/Receiver Module Failure Effects Analysis (Cont)

Item	Drawing Number	Elect. Reference. Desig.	Failure Detection	Function	Failure Type	Mission Phase	Failure Effect On Component Performance	Failure Effect On Sub-Systems Performance	Failure Effect On Apollo	Possible Crew Action
					Decreased signal	Recovery	Decreased HF/AM receive signal	Decreased HF/AM receive capability; possible loss of HF/AM mode		
					Distorted signal		Distorted HF/AM receive signal	Distorted HF/AM receive capability; possible loss of HF/AM mode		
					Reduced sensitivity		Decreased and distorted HF/AM receive signal	Decreased and distorted HF/AM receive capability; possible loss of HF/AM mode		
					B+ on output		Loss of HF receive signal	Loss of HF voice receive mode beyond line of sight; line-of-sight redundancy provided by VHF/AM		
SSB detector	513-2426-006	718H-1E		Provide upper SB operation	Loss of signal		Loss of HF/SSB signal	Loss of HF voice receive mode beyond line of sight; line-of-sight redundancy provided by UHF/AM and HF/AM		
					Decreased signal		Decreased HF/SSB Signal	Decreased HF/SSB receive signal. Possible loss of HF/SSB mode		
					Distorted signal		Distorted HF/SSB signal	Distorted HF/SSB receive signal. Possible loss of HF/SSB mode		
					Reduced sensitivity		Decreased and distorted HF/SSB receive signal	Decreased and distorted HF/SSB receive signal; possible loss of HF/SSB mode		

[redacted]

Table 3-14. HF Transceiver/Receiver Module Failure Effects Analysis (Cont)

Item	Drawing Number	Elect. Reference. Desig.	Failure Detection	Function	Failure Type	Mission Phase	Failure Effect On Component Performance	Failure Effect On Sub-Systems Performance	Failure Effect On Apollo	Possible Crew Action
					B+ on output	Recovery	Loss of HF receive signal	Loss of HF voice receive mode beyond line of sight; line-of-sight redundancy provided by UHF/AM		
AGC detector	513-2426-006	718H-1E		Provide necessary feedback for stabilization	Loss of signal		Unstable RF amplifier test point signal; loss of feedback signal	HF receiver becomes unstable; possible loss of function		
					Distorted signal		Distorted feedback signal	HF receiver output is distorted; possible loss of function		
					Decreased signal		Decreased feedback signal	Degradation of function (decreased regulation of HF receiver)		
					Detector oscillates		Unstable RF amplifier test point signal; loss of feedback signal	HF receiver becomes unstable; possible loss of function		
					Reduced sensitivity		Decreased feedback signal	Degradation of function (decreased regulation of HF receiver)		
					B+ on output		Receive signal slightly distorted	Degradation of function (slightly distorted HF receiver output)		
IF amplifier (receive)	513-2426-006	718H-1E		Amplify intermediate frequency	Loss of signal		Loss of IF test signal; loss of HF receive signal	Loss of HF voice receive mode beyond line of sight; line-of-sight redundancy provided by VHF/AM		
					Decreased signal		Decreased HF receive signal	Decreased HF receiver output; possible loss of function		

Table 3-14. HF Transceiver/Receiver Module Failure Effects Analysis (Cont)

Item	Drawing Number	Elect. Reference. Desig.	Failure Detection	Function	Failure Type	Mission Phase	Failure Effect On Component Performance	Failure Effect On Sub-Systems Performance	Failure Effect On Apollo	Possible Crew Action
					Distorted signal	Recovery	Distorted HF receive signal	Distorted HF receiver output; possible loss of function		
					Amplifier oscillates		Loss of IF test signal; loss of HF receive signal	Loss of HF voice receive mode beyond line of sight; line-of-sight redundancy provided by VHF/AM		
					B+ on output		Loss of IF test signal; loss of HF receive signal	Loss of HF voice receive mode beyond line of sight; line-of-sight redundancy provided by UHF/AM		
RF amplifier (receive)	513-2426-006	718H-1E		Amplify intermediate frequency	Loss of signal		Loss of IF test signal; loss of HF receive signal	Loss of HF voice received mode beyond line of sight; line-of-sight redundancy provided by VHF/AM		
					Decreased signal		Decreased HF receive signal	Decreased HF receiver output; possible loss of function		
					Distorted signal		Slightly distorted HF receive signal	Slightly distorted HF receiver output		
					Amplifier oscillates		Loss of IF test signal; loss of HF receive signal	Loss of HF voice receive mode beyond line of sight; line-of-sight redundancy provided by VHF/AM		
					B+ on output		Loss of IF test voice signal; loss of HF receive signal	Loss of HF voice receive mode beyond line of sight; line-of-sight redundancy provided by VHF/AM		

~~CONFIDENTIAL~~

Table 3-14. HF Transceiver/Receiver Module Failure Effects Analysis (Cont)

Item	Drawing Number	Elect. Reference. Desig.	Failure Detection	Function	Failure Type	Mission Phase	Failure Effect On Component Performance	Failure Effect On Sub-Systems Performance	Failure Effect On Apollo	Possible Crew Action
AGC attenuation	513-2426-006	718H-1E		Stabilization of AGC circuit	Loss of signal	Recovery	Loss of IF test signal; loss of HF receive signal	Loss of HF voice receive mode beyond line of sight; line-of-sight redundancy provided by VHF/AM		
					Increased signal		Distorted HF receive signal	Distorted HF receiver output; possible loss of function		
					Distorted signal		Distorted HF receive signal	Distorted HF receiver output; possible loss of function		
Mixer	513-2426-006	718H-1E		Shift RF to IF frequency	Loss of signal		Loss of IF test signal; loss of receive signal	Loss of HF voice receive mode beyond line of sight; line-of-sight redundancy provided by S/B VHF/AM		
					Distorted signal		Distorted transmitter signal	Distorted HF transmitter output; possible loss of function		
					Decreased signal		Slightly decreased transmitter signal	Slightly decreased transmitter output		
					Amplifier oscillates		Loss of RF and PA test point signals; loss of transmitter signal	Loss of HF voice transmitter mode beyond line of sight; line-of-sight redundancy provided by VHF/AM		
					B+ on output		Slightly distorted transmitter signal	Slightly distorted HF transmitter output		
Driver	513-2424-005	718H-1E		Amplify signal provided to PA	Loss of signal		Loss of PA test point signals; loss of transmitter signal	Loss of HF voice transmitter mode beyond line of sight; line-of-sight redundancy provided by VHF/AM		

~~CONFIDENTIAL~~

Table 3-14. HF Transceiver/Receiver Module Failure Effects Analysis (Cont)

Item	Drawing Number	Elect. Reference Desig.	Failure Detection	Function	Failure Type	Mission Phase	Failure Effect On Component Performance	Failure Effect On Sub-Systems Performance	Failure Effect On Apollo	Possible Crew Action
					Distorted signal	Recovery	Distorted transmitter signal	Distorted HF transmitter output; possible loss of function		
					Decreased signal		Decreased PA test point signal; greatly decreased transmitter signal	Greatly decreased HF transmitter output; possible loss of function		
					Distorted signal		Distorted HF receive signal	Distorted HF receiver output; possible loss of function		
					Decreased signal		Decreased HF receive signal	Decreased HF receiver output; possible loss of function		
					Mixer oscillates		Loss of IF test signal; loss of receive signal	Loss of HF voice receive mode beyond line of sight; line-of-sight redundancy provided by VHF/AM		
					B+ on output		Loss of IF test signal; loss of receive signal	Loss of HF voice receive mode beyond line of sight; line-of-sight redundancy provided by VHF/AM		
RF amplifier	513-2424-005	718H-1E		Amplify RF signal	Loss of signal		Loss of RF and PA test point signals; loss of transmitter signal	Loss of HF voice transmitter mode beyond line of sight; line-of-sight redundancy provided by VHF/AM		
					Driver oscillates		Loss of PA test point signal; loss of transmitter signal	Loss of HF voice transmitter mode beyond line of sight; line-of-sight redundancy provided by VHF/AM		

Table 3-14. HF Transceiver/Receiver Module Failure Effects Analysis (Cont)

Item	Drawing Number	Elect. Reference. Desig.	Failure Detection	Function	Failure Type	Mission Phase	Failure Effect On Component Performance	Failure Effect On Sub-Systems Performance	Failure Effect On Apollo	Possible Crew Action
Power amplifier	513-2424-005	718H-1E		Amplify transmitting signal	Loss of signal	Recovery	Loss of PA test point signal; loss of transmitter signal	Loss of HF voice transmitter mode beyond line of sight; line-of-sight redundancy provided by VHF/AM		
					Distorted signal		Distorted PA test point signal; greatly distorted signal	Greatly distorted HF transmitter output; possible loss of function		
					Decreased signal		Decreased PA test point signal; greatly decreased signal	Greatly decreased HF transmitter output; possible loss of function		
					Amplifier oscillates		Loss of PA test point signal; loss of transmitter signal	Loss of HF voice transmitter mode beyond line of sight; line-of-sight redundancy provided by VHF/AM		
ALC detector	513-2424-005	718H-1E		Provide stability in transmitter mode selection	Loss of signal		Loss of transmitter regulation	Degradation of function (loss of transmitter mode regulation)		
					Decreased signal		Decreased transmitter regulation	Degradation of function. (decreased transmitter regulation, either mode)		
					ALC checkout oscillates		Loss of transmitter regulation	Degradation of function (loss of transmitter mode regulation)		
					Distorted signal		Distorted transmitter signal	Degradation of function (distorted transmitter output, either mode		

Table 3-14. HF Transceiver/Receiver Module Failure Effects Analysis (Cont)

Item	Drawing Number	Elect. Reference. Desig.	Failure Detection	Function	Failure Type	Mission Phase	Failure Effect On Component Performance	Failure Effect On Sub-Systems Performance	Failure Effect On Apollo	Possible Crew Action
Receive buffer	513-2425-005	718H-1E		Isolate undesirable frequency	Loss of signal	Recovery	Loss of IFTS signals, PA test signal; loss of HF receive signal	Loss of HF voice receive mode beyond line of sight; line-of-sight redundancy provided by VHF/AM		
					Decreased signal		Slightly decreased HF receive signal	Slightly decreased HF receive capability		
					Distorted signal		Slightly distorted HF receive signal	Slightly distorted HF receive signal		
					Buffer oscillates		Loss of PA test signal, IFTS signal; loss of HF receive signal	Loss of HF voice receive mode beyond line of sight; line-of-sight redundancy provided by VHF/AM		
					B+ on output		Loss of PA test signal; loss of HF receive signal	Loss of HF voice receive mode beyond line of sight; line-of-sight redundancy provided by VHF/AM		
HF oscillator	513-2425-005	718H-1E		Provide HF carrier frequency	Loss of signal		Loss of HF oscillator, receive buffer IFTS and PA test signals; loss of HF carrier signal	Loss of HF capability beyond line of sight; UHF/AM provides line-of-sight redundancy		
					Decreased signal		Decreased HF carrier signal	Decreased HF transmitter output		
					Distorted signal		Slightly distorted HF carrier frequency	Degradation of function (slightly distorted HF transmitter and excursion output)		

Table 3-14. HF Transceiver/Receiver Module Failure Effects Analysis (Cont)

Item	Drawing Number	Elect. Reference. Desig.	Failure Detection	Function	Failure Type	Mission Phase	Failure Effect On Component Performance	Failure Effect On Sub-Systems Performance	Failure Effect On Apollo	Possible Crew Action
Transmit buffer	513-2425-005	718H-1E		Isolate undesirable frequency	Loss of signal	Recovery	Loss of IFTS signal, HF oscillator and RF output signals; loss of HF transmit signal	Loss of HF voice transmit mode beyond line of sight; line-of-sight redundancy provided by VHF/AM		
					Decreased signal		Slightly decreased HF transmit signal	Degradation of function (slightly decreased HF transmitter output)		
					Distorted signal		Slightly distorted HF transmit signal	Degradation of function (slightly distorted HF transmitter signal)		
					Buffer oscillates		Loss of IFTS signal, HF oscillator and RF output signals; loss of HF transmit signal	Loss of HF voice transmit mode beyond line of sight; line-of-sight redundancy provided by VHF/AM		
455-KC oscillator	513-2425-005	718H-1E		Provide IF frequency	Loss of signal		Loss of 455-KC test signals; loss of SSB signal	Loss of HF voice mode beyond line of sight; line-of-sight redundancy provided by HF/AM VHF/AM		

[redacted]

Table 3-14. HF Transceiver/Receiver Module Failure Effects Analysis (Cont)

Item	Drawing Number	Elect. Reference. Desig.	Failure Detection	Function	Failure Type	Mission Phase	Failure Effect On Component Performance	Failure Effect On Sub-Systems Performance	Failure Effect On Apollo	Possible Crew Action
					Decreased signal	Recovery	Slightly decreased HF/SSB signal	Degradation of function (slightly decreased beyond line-of-sight capability)		
					Distorted signal		Slightly distorted HF/SSB signal	Degradation of function (slightly distorted HF/SSB signal)		
					Shift oscillator frequency		Decreased and distorted HF/SSB signal	Decreased and distorted HF/SSB signal; possible loss of function		
Balanced modulator	513-2427-006	718H-1E		Modulate audio signal with IF carrier	Loss of signal		Loss of IF clipper test signal; loss of HF transmit signal	Loss of HF voice transmit mode beyond line of sight; line-of-sight redundancy provided by VHF/FM		
					Decreased signal		Decreased HF transmit signal	Decreased HF transmitter capability; possible loss of function		
					Distorted signal		Distorted HF transmit signal	Distorted HF transmitter output; possible loss of function		
Mechanical filter	513-2429-006	718H-1E		Filter undesirable frequency	Loss of signal		Loss of IF clipper test signal; loss of transmit signal	Loss of HF voice transmit mode beyond line of sight; line-of-sight redundancy provided by VHF/AM		
					Decreased signal		Decreased HF transmit signal	Decreased HF transmitter capability; possible loss of function		
					Distorted signal		Slightly distorted HF transmitter signal	Degradation of function (slightly distorted HF transmitter signal)		

[redacted]

Table 3-14. HF Transceiver/Receiver Module Failure Effects Analysis (Cont)

Item	Drawing Number	Elect. Reference. Desig.	Failure Detection	Function	Failure Type	Mission Phase	Failure Effect On Component Performance	Failure Effect On Sub-Systems Performance	Failure Effect On Apollo	Possible Crew Action
Carrier re-insert control	513-2427-006	718H-1E		Amplify IF signal	Loss of signal	Recovery	Loss of HF/SSB signal	Loss of HF voice transmit mode beyond line of sight; line-of-sight redundancy provided by VHF/AM		
					Decreased signal		Decreased HF/SSB signal	Decreased HF/SSB output; possible loss of HF/SSB mode		
					Distorted signal		Distorted HF/SSB signal	Distorted HF/SSB output; possible loss of HF/SSB mode		
					B+ on output		Loss of HF/SSB signal	Loss of HF voice transmit mode beyond line of sight; line-of-sight redundancy provided by VHF/AM		
IF amplifier	513-2427-006	718H-1E		Amplify IF signal	Loss of signal		Loss of IF clipper test signal; loss of HF transmit signal	Loss of HF voice transmit mode beyond line of sight; line-of-sight redundancy provided by VHF/AM		
					Decreased signal		Decreased HF transmit signal	Decreased HF transmit signal; possible loss of function		
					Distorted signal		Distorted HF transmit signal	Distorted HF transmit signal; possible loss of function		
					Amplifier oscillates		Loss of HF transmit signal	Loss of HF voice transmit mode beyond line of sight; line-of-sight redundancy provided by VHF/AM		

Table 3-14. HF Transceiver/Receiver Module Failure Effects Analysis (Cont)

Item	Drawing Number	Elect. Reference. Desig.	Failure Detection	Function	Failure Type	Mission Phase	Failure Effect On Component Performance	Failure Effect On Sub-Systems Performance	Failure Effect On Apollo	Possible Crew Action
					B+ on output	Recovery	Loss of IF clipper test signal; loss of HF transmit signal	Loss of HF voice transmit mode beyond line of sight; line-of-sight redundancy provided by VHF/AM		
Crystal filter	513-2427-006	718H-1E		Filter RF signal	Loss of signal		Loss of RF output test signal; loss of HF transmitter signal	Loss of HF voice transmit mode beyond line of sight; line-of-sight redundancy provided by VHF/AM		
					Decreased signal		Decreased HF transmiter signal	Decreased HF transmitter capability; possible loss of function		
					Distorted signal		Distorted HF transmiter signal	Distorted HF transmitter capability; possible loss of function		
Clipper	513-2427-006	718H-1E		Increase modulation power	Loss of signal		Loss of RF output; IF clipper test signals; loss of HF transmit signal	Loss of HF voice transmit mode beyond line of sight; line-of-sight redundancy provided by VHF/AM		
					Decreased signal		Slightly decreased HF transmit signal	Decreased HF transmitter output		
					Distorted signal		Slightly distorted HF transmit signal	Distorted HF transmit signal		
					Clipper oscillates		Loss of RF output; IF clipper test signals; loss of HF transmit signal	Loss of HF voice transmit mode beyond line of sight; line-of-sight redundancy provided by VHF/AM		

~~CONFIDENTIAL~~

Table 3-14. HF Transceiver/Receiver Module Failure Effects Analysis (Cont)

Item	Drawing Number	Elect. Reference. Desig.	Failure Detection	Function	Failure Type	Mission Phase	Failure Effect On Component Performance	Failure Effect On Sub-Systems Performance	Failure Effect On Apollo	Possible Crew Action
					B+ on output	Recovery	Loss of RF output test signals; loss of HF transmit signal	Loss of HF voice transmit mode beyond line of sight; line-of-sight redundancy provided by VHF/AM		
Mixer	513-2427-006	718H-1E		Shift and mix IF to RF frequency	Loss of signal		Loss of RF output test signal; loss of HF transmit signal	Loss of HF voice transmit mode beyond line of sight; line-of-sight redundancy provided by VHF/AM		
					Decreased signal		Decreased HF transmit signal	Decreased HF transmitter output; possible loss of function		
					Distorted signal		Distorted HF transmitter signal	Distorted HF transmitter output; possible loss of function		
					Mixer oscillates		Loss of RF output test signal and PA test signal; loss of HF transmit signal	Loss of HF voice transmit mode beyond line of sight; line-of-sight redundancy provided by VHF/AM		
RF amplifier	513-2427-006	718H-1E		Amplify RF signal	Loss of signal		Loss of RF output test signal and PA test signal; loss of HF transmit signal	Loss of HF voice transmit mode beyond line of sight; line-of-sight redundancy provided by VHF/AM		
					Decreased signal		Decreased HF transmit signal	Decreased HF transmitter output; possible loss of function		
					Distorted signal		Distorted HF transmit signal	Distorted HF transmitter output; possible loss of function		

~~CONFIDENTIAL~~

~~CONFIDENTIAL~~

Table 3-14. HF Transceiver/Receiver Module Failure Effects Analysis (Cont)

Item	Drawing Number	Elect. Reference Desig.	Failure Detection	Function	Failure Type	Mission Phase	Failure Effect On Component Performance	Failure Effect On Sub-Systems Performance	Failure Effect On Apollo	Possible Crew Action
					Amplifier oscillates	Recovery	Loss of RF and amplifier output test signals; loss of HF transmit signal	Loss of HF voice transmit mode beyond line of sight; line-of-sight redundancy provided by VHF/AM		
					B+ on output		Loss of PA test signal; loss of HF transmit signal	Loss of HF voice transmit mode beyond line of sight; line-of-sight redundancy provided by VHF/AM		
Relay latching (PA module)	513-2424-005	718H-1E		T/R switching	Contact failure (sticking)		Loss of either transmitter or transceiver mode	Loss of either HF transmitter or transceiver voice beyond line of sight; line-of-sight redundancy provided by VHF/AM		
					Coil failure		Loss of transmit operation	Loss of HF voice transmit mode beyond line of sight; line-of-sight redundancy provided by VHF/AM		

~~CONFIDENTIAL~~

Table 3-15. PCM Telemetry Failure Effects Analysis

Item	Drawing Number	Elect. Reference. Desig.	Failure Detection	Function	Failure Type	Mission Phase	Failure Effect On Component Performance	Failure Effect On Sub-Systems Performance	Failure Effect On Apollo	Possible Crew Action
PCM telemetry equipment				The PCM telemetry equipment pulse code modulates all data prior to transmission to earth		All phases except recovery		Loss or degradation of ability to digitize analog data or process digital data prior to transmission to earth	Loss of all or part of data	Limited transmission of data by voice, TV link and the visual displays; use of data storage equipment or logs to record and store data
High-level analog gates (13)				Multiplexes 0-5 v d-c data from transducers and signal conditioners	Open or short output circuit		Loss of a portion of the high-level analog data	Same	Loss of or degradation to alternate means of detecting critical failures in the spacecraft	
Low-level analog gates (5)				Multiplex 0-40 mv data from transducers	Open or short output circuit		Loss of a portion of the low-level analog data.	Same		
Clamped amplifier				Amplifies the multiplexed low-level analog data	No output, improper gain		Loss of degradation of all low-level data	Same		
High-speed gates				Multiplexes high-level analog data and amplified low-level analog data	Open or short output circuit		Loss of all or part of the analog data	Same		
Row and column drivers (2)				Drives high-speed gates and analog matrix cores according to format selected manually or automatically	No output, low gain		Causes loss or degradation of all analog data	Same		
Analog/digital coder				Digitizes all multiplexed analog sensory data	Open or short output circuit		Causes loss or inaccuracy of all analog data	Same		
Digital multiplexer				Multiplexes digital data and analog/digital coded data	Open or short output circuit		Causes loss of all or part of data	Same		
Programmer counters (2)				Supplies synchronization of commands to the analog and digital multiplexers, the analog/digital coder, and the shift register	Open or short circuit		Loss or degradation of all data	Same		
Programmer matrix (3)				Provides synchronization of commands with automatic and manual format changes	Open or short output circuit		Loss of degradation of all data	Same		

~~CONFIDENTIAL~~

Table 3-15. PCM Telemetry Failure Effects Analysis (Cont)

Item	Drawing Number	Elect. Reference. Desig.	Failure Detection	Function	Failure Type	Mission Phase	Failure Effect On Component Performance	Failure Effect On Sub-Systems Performance	Failure Effect On Apollo	Possible Crew Action
Programmer miscellaneous				Provides additional "and" gates, "or" gates, and control circuits needed to synchronize and control commands.	Open or short output circuit	All phases except recovery	Loss or degradation of all data	Loss or degradation of ability to digitize analog data or process digital data prior to transmission to earth	Loss of all or part of data	Limited transmission of data by voice, TV link and the visual displays; use of data storage equipment or logs to record and store data
Calibration generator				Provides continuous calibration and fault isolation of analog channels	Open, short, or improper output		Causes inaccuracy of high-level and/or low-level analog data or inability to isolate defective module			
Power supply				Provides conversion of 3-phase, 400 cycles/second to the required d-c supply voltage	No output, improper output		Causes loss or degradation of all data			
Output shift register				Provides two identical NRZ serial data output channels and a split-phase output channel	Open or short output circuit		Causes loss or degradation of data			

~~CONFIDENTIAL~~

~~CONFIDENTIAL~~

GUIDANCE AND NAVIGATION

SUMMARY

The logic diagrams of the Guidance and Navigation (G&N) systems have been expanded to the replaceable module level. Information has been acquired from MIT relating to module failure rates, weights, volumes, and operational times used to determine reliability estimates. Activities have been accelerated to assure the exchange of reliability information between S&ID and MIT in the area of coordinating mission profile time lines, evaluations of the functional operations of respective equipments, and determining interfaces with other spacecraft equipments. Work has been done toward securing necessary background for evaluating parameters associated with command and service module functions as related to LEM operations. Studies have been performed of several recommended configurations of LEM landing and rendezvous methods to determine the particular method which offers highest reliability, with consideration being made of command and service module backup capability.

ANALYSIS

Failure Effects Analysis

The failure effects analysis for the G&N subsystems at the subassembly level is shown in Table 3-18 at the end of this section.

Reliability Predictions of Inertial Measurement Unit (IMU) Circuitry

S&ID performed an analysis to determine the reliability ramifications on failure rate differences of nine modules of the IMU electronics circuitry which are located in the power and servo assembly. The analysis was conducted to determine a priority listing of modules, as a means of evaluating test points to be recommended for the design of the in-flight test system. The results indicate that priority be given to modules in the order named: ternary current switch, interrogator, gimbal course align amplifier, -28 volt d-c power supply, a-c differential amplifier, d-c differential amplifier, gimbal servo amplifier, pulse integrating pendulum accelerometer calibration module, and gyro calibration module.

In Table 3-19, column 1 lists the names of the modules evaluated; column 2 lists the module failure rates published by MIT in;

Apollo Guidance and Navigation System, Reliability Apportionments, and Initial Analysis, R-395; column 3 lists the module failure rates determined by S&ID based upon parts count estimates with the use of module circuit diagrams and part failure rates as indicated by MIT; column 4 lists the difference between MIT and S&ID values; and column 5 lists the predicted failure rates, with the use of S&ID preferred parts.

Reliability ramifications from this study related to the failure rate differences which varied from +1.059 to -0.316 shown in column 4, indicated that additional coordination between MIT and S&ID is needed to determine possible constraints used by MIT to arrive at their published values. Column 5, which lists the module failure rates based on the parts count using S&ID preferred parts, shows these failure rates to be lower than those published by MIT by more than a factor of 2 (one exception is the gimbal course align amplifier).

However, the major cause of the exception was traced to the use of a relay in the design of this amplifier. Due to the high failure rates exhibited by relays under anticipated spacecraft environments, it was recommended that devices such as relays and potentiometers be eliminated wherever feasible from Apollo Spacecraft equipment.

Priority for the determination of in-flight test points was based on the failure rate listing shown in column 3 of Table 3-19. The list of modules in order of descending failure rates is as follows:

Module	Failure Rate ($\times 10^{-6}$ hr)
1. Ternary current switch	7.385
2. Interrogator	5.440
3. Gimbal course align amplifier	4.250
4. Minus 28 volts d-c power supply	3.545
5. A-c differential amplifier	3.365
6. D-c differential amplifier	2.775
7. Gimbal servo amplifier	2.625
8. PIP calibration module	1.800
9. Gyro calibration module	1.700

~~CONFIDENTIAL~~

Table 3-19. Comparative Failure Rates of Inertial Measurement Unit (IMU) Electronics Module (x 10^{-6} hr)

1	2	3	4	5
Module	MIT Listed Module Failure Rate	Parts Count Failure Rate	Difference Between Listed Module and Parts Count Failure Rate	S&ID Preferred Parts Generic Failure Rate
Ternary current switch	7.701	7.385	-0.316	1.379
Interrogator	5.516	5.440	-0.076	0.848
-28 volts d-c power supply	3.820	3.545	-0.265	0.476
A-c differential amplifier	3.811	3.365	-0.446	0.734
Gimbal course alignment amplifier	3.191	4.250	+1.059	3.009
D-c differential amplifier	2.756	2.775	+0.019	1.344
Gimbal servo amplifier	2.571	2.625	-0.046	0.462
Gyro calibration module	1.716	1.700	-0.016	0.760
PIP calibration module	1.616	1.800	+0.184	0.800
TOTALS	32.798	32.885		9.812

~~CONFIDENTIAL~~

~~CONFIDENTIAL~~

SCS Hybrid Modes for Delta Velocity Firing

A study was completed on the Delta velocity firing modes utilized in the 14-day LOR mission. The study was performed in support of the reliability meeting held between S&ID and MIT 11 and 12 June 1963 at MIT. Results indicated that certain modes utilizing a combination of SCS and G&N equipment can be mechanized to provide increased reliability to this phase of the mission.

The four configurations shown in Figures 3-59 through 3-62 were utilized in determining the crew safety reliabilities. Figure 3-59 indicates the modes mechanized which are presently performing the Delta velocity firing functions. The configuration contains two modes of operation, the primary being that of G&N equipment for sensing and computing with the SCS rate gyro package or the body-mounted gyros for rate damping with SCS backup. Figure 3-60 indicates a new configuration with the added backup for a G&N thrust command failure. Figure 3-61 describes the equipment and modes utilized during a Delta velocity firing with the added capability of body-mounted attitude gyros as the backup attitude reference if a failure should occur in the G&N attitude reference. Figure 3-62 is a composite configuration utilizing both backup capabilities. This configuration provides four possible modes to perform the Delta velocity firing function. The primary mode consists of the G&N for thrust and thrust vector control with the rate gyro package or the body-mounted attitude gyros for rate damping. The secondary mode utilizes the G&N thrust capability with the SCS body mounted attitude gyro for attitude reference and the rate gyro package for rate damping. The tertiary mode utilizes the manual SCS thrust and rate damping with the G&N thrust vector control and attitude. The quarternary mode consists of the present SCS manual mode which again is independent of the G&N. Table 3-20 indicates the computed reliabilities of the various configurations studied. Reliability analysis recommended that the mode shown in Figure 3-60 be mechanized if feasible.

Table 3-20. Delta Velocity Mode Configuration Reliability

Delta Velocity Mode	Crew Safety Reliability	Crew Losses Per Billion Missions
Present configuration	0.9999999697	30
Hybrid - G&N thrust command failure	0.9999999898	10
Hybrid - G&N attitude failure	0.999999984	16
Hybrid - combined	0.999999990	10

~~CONFIDENTIAL~~

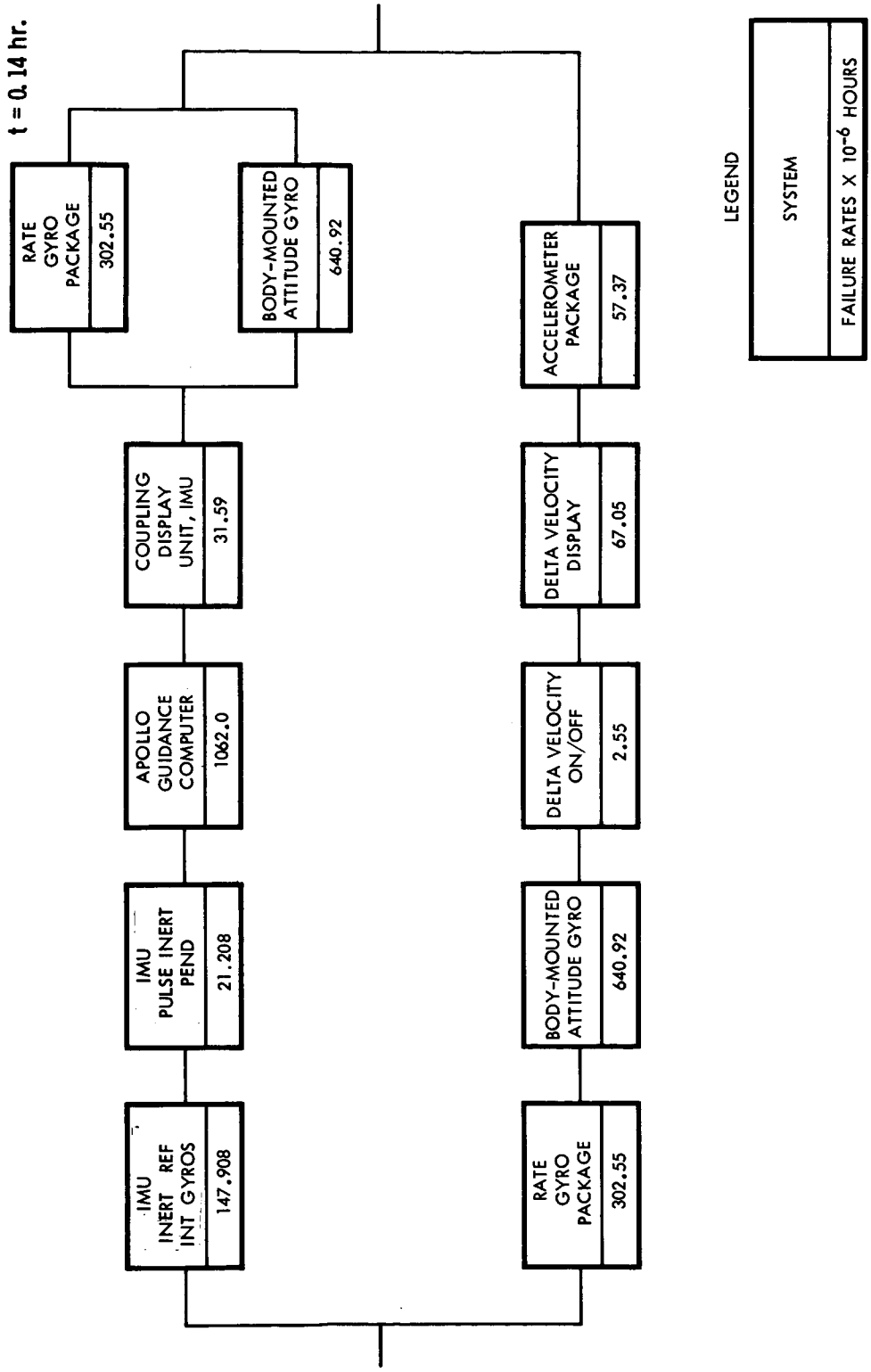

Figure 3-59. Delta Velocity Firing Present Configuration

~~CONFIDENTIAL~~

~~CONFIDENTIAL~~

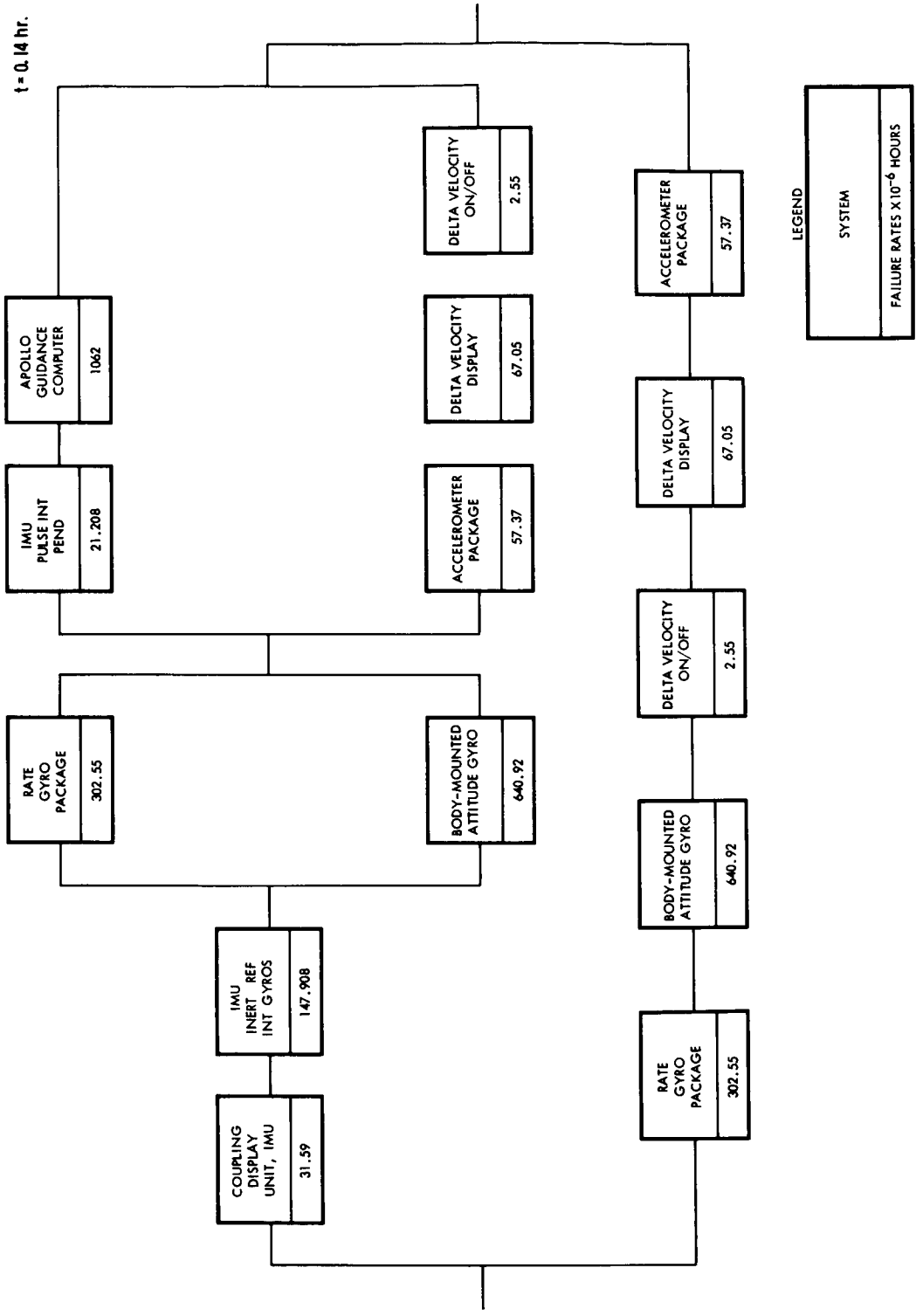

Figure 3-60. Delta Velocity Firing Thrust Command Failure in Guidance and Navigation

~~CONFIDENTIAL~~

~~CONFIDENTIAL~~

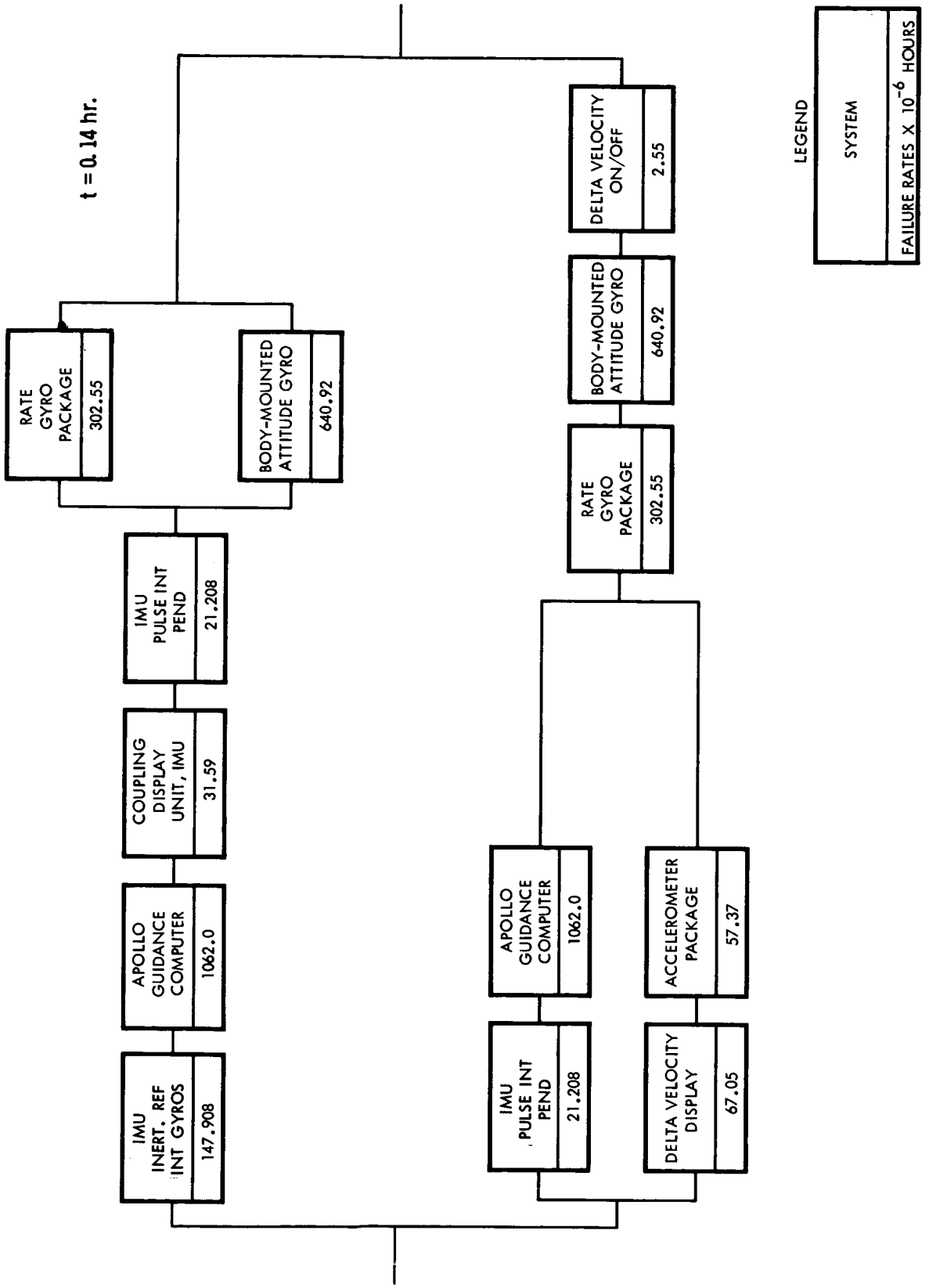

Figure 3-61. Delta Velocity Firing Attitude Failure in Guidance and Navigation

~~CONFIDENTIAL~~

~~CONFIDENTIAL~~

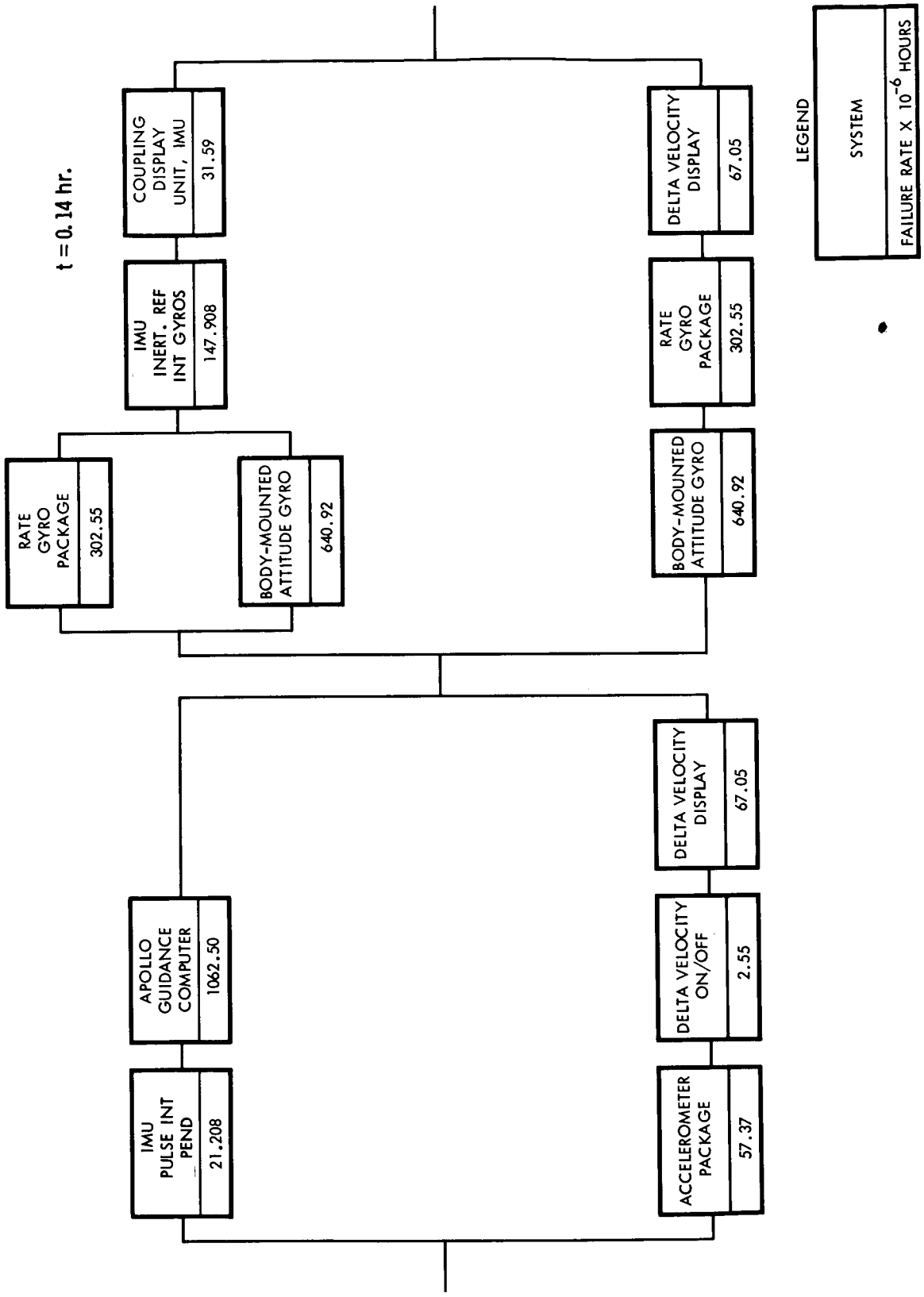

Figure 3-62. Delta Velocity Firing Proposed Configuration

~~CONFIDENTIAL~~

Inertial Measurement Unit (IMU) Coolant Bypass Analysis

S&ID performed an analysis to determine the reliability ramifications of a proposed IMU coolant bypass circuit. The study included an analysis of the circuitry for control of the IMU temperature. The analysis indicated that the addition of the coolant bypass would result in a significant savings in power with negligible change in reliability.

Figure 3-63 indicates the logic of the present configuration involving the IMU gimbal assembly, the IMU electronics, and the IMU temperature control circuitry with no coolant bypass used for the IMU. Power is supplied to the temperature control circuitry from the IMU electronics including the 3200 cps 20 volt square wave temperature control power supply and the 28 volt d-c main power for emergency use. Controls are obtained by the redundant automatic temperature override, the proportional control, and the backup control. The emergency control which is supplied by the 28 volt d-c main power supply is redundant to these controls and their associated supplies.

Failure rates of the temperature control circuit components were determined by parts count estimates with the use of parts failure rates indicated by MIT in R-395. These failure rates were incorporated in the logic diagrams shown in Figures 3-63 through 3-65.

The predicted reliability of the temperature controller was determined to be 0.99662. This value was based upon operating times of 69 hours for the IMU gimbal assembly, 336 hours for the IMU electronics, and 336 hours for the temperature controller according to the Apollo 14-day LOR Mission.

The predicted reliability for the present configuration shown in Figure 3-63 is 0.93144 based upon the hours of operation already indicated; this operating time was applied to the other configurations.

Figure 3-64 shows the reliability of the configuration which included the IMU gimbal assembly, the IMU electronics, the temperature controller, and the electrically controlled coolant bypass valve to be 0.92801.

Figure 3-65 shows the reliability of the configuration which included the IMU gimbal assembly, the IMU electronics, the temperature controller, and the manually controlled coolant bypass valve to be 0.93110.

~~CONFIDENTIAL~~

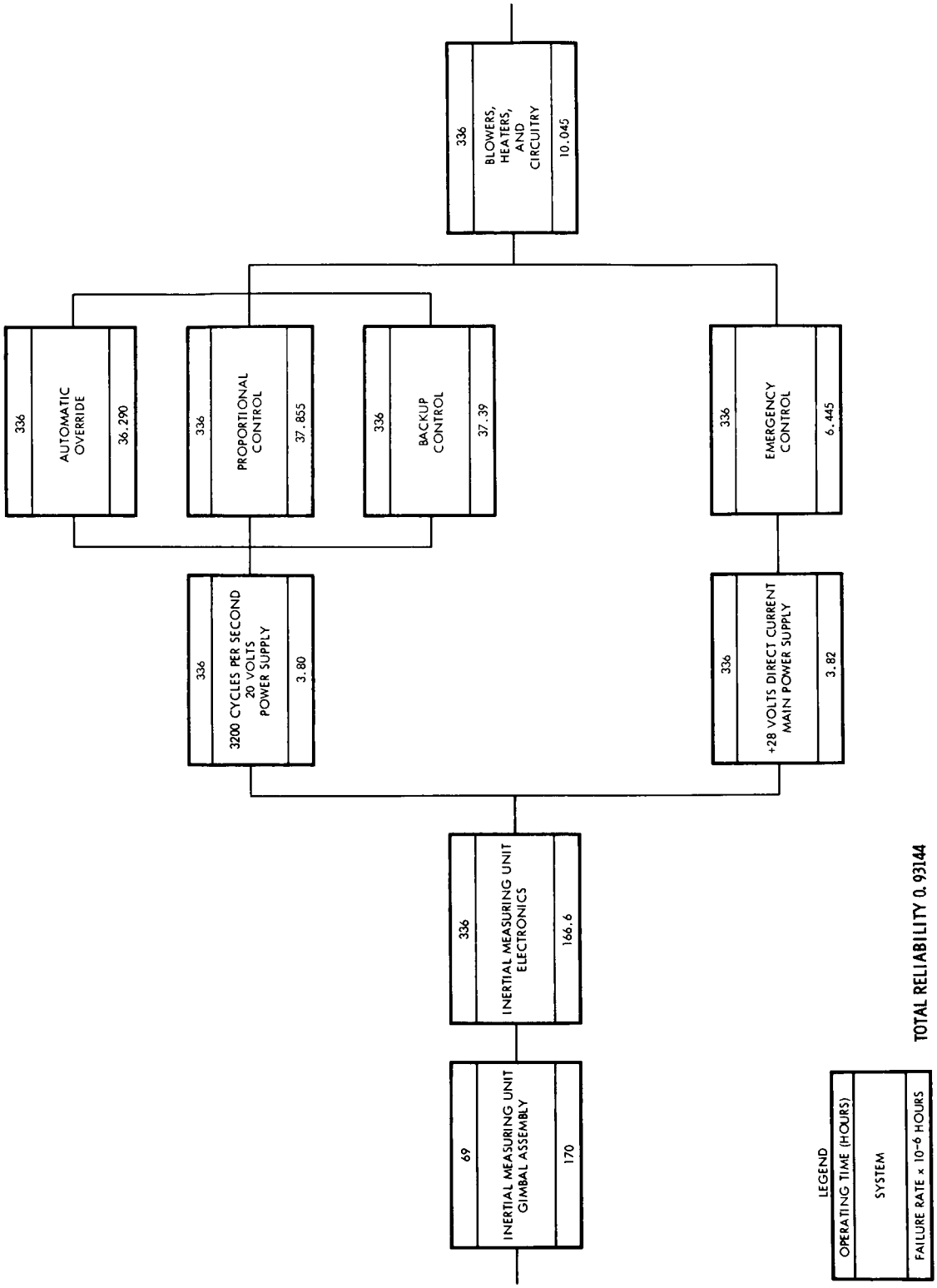

Figure 3-63. Inertial Measurement Unit Present Configuration - No Coolant Bypass

~~CONFIDENTIAL~~

[redacted]

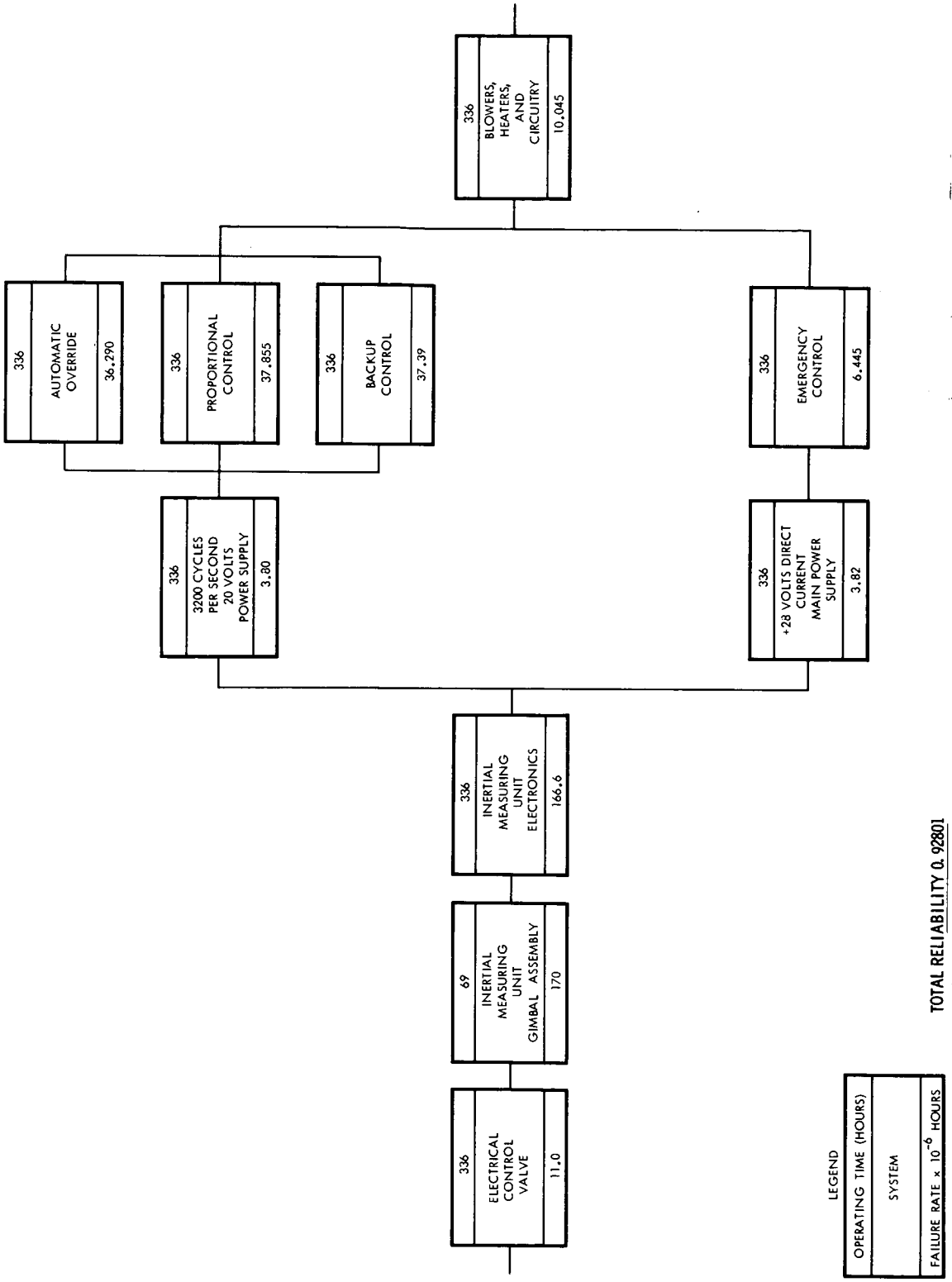

TOTAL RELIABILITY 0.92801

Figure 3-64. Inertial Measurement Unit Recommended Configuration - Using Bypass and Electrically Controlled Valve

[redacted]

~~CONFIDENTIAL~~

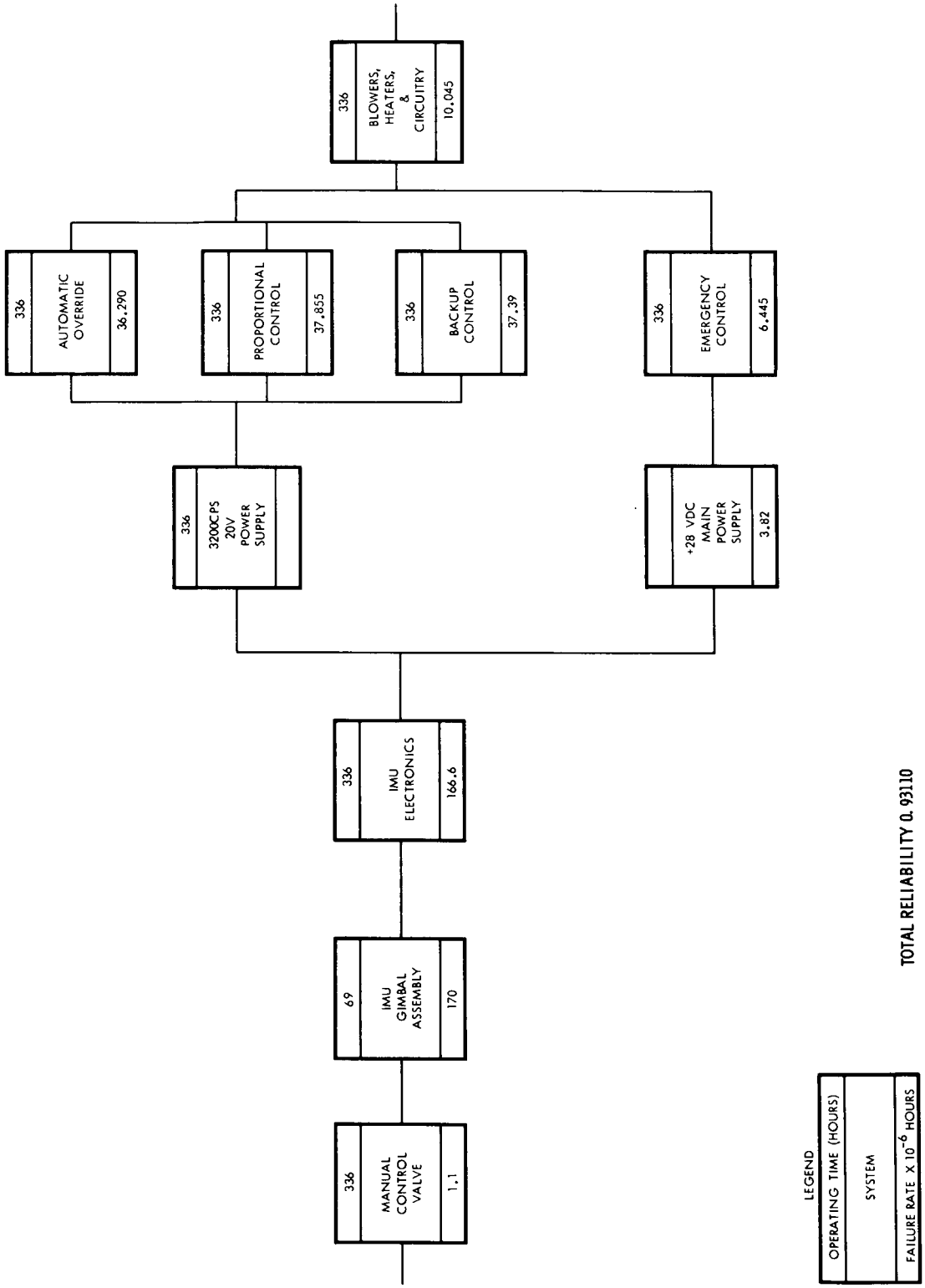

Figure 3-65. Inertial Measurement Unit Configuration—Using Bypass and Manually Controlled Valves

~~CONFIDENTIAL~~

Reliabilities of the configurations using the coolant bypass valve as shown in Figures 3-64 and 3-65 indicated a difference of only 3.09 failures per 1000 missions. The use of the electrically controlled valve was recommended since its incorporation would relieve the crew of additional tasks.

The item of major interest in this study encompassed a trade-off between reliability and temperature control power. With the use of the bypass, the saving in electrical power for 336 hours of operation was approximately 5.34 kilowatt hours. This considerable saving therefore justified the configuration indicated in Figure 3-64 since the reliability degradation from 0.93144 to 0.92801, or 3.62 failures per 1000 missions, represented an acceptable trade-off. It was recommended that the electrically controlled bypass coolant circuit be incorporated as a design change for the spacecraft.

TEST PROGRAM

Activities in the G&N test group have been centered around acquisition of information from MIT to determine compatibility of the MIT qualification tests to spacecraft requirements. Documents received to date from MIT include: R-389, Requirements of and Index to Design Evaluation, Qualification, and Reliability Test Program; NASA Apollo G&N Specifications, ND-1002048; Qualification Specification Integrated Components; Apollo Guidance and Navigation Integrated Test Program; Design Evaluation Test Summary Reports; Documentation Status Reports; and a Biweekly Qualification Status Report.

Schedules with completion dates of G&N systems qualification were ascertained and are recorded in the Apollo General Test Plan, SID 62-109-3.

Coordination with MIT was established as referenced in the report on the 58th S&ID/MIT Reliability Technical meeting. Information was received for G&N requirements for AFRM006 and 008 tests in support of ground qualification and flight data requirements.

SUBCONTRACTOR MANAGEMENT

A Reliability coordination meeting between S&ID and MIT was held on 11 and 12 June 1963 at MIT. The agenda for the meeting was as follows:

1. S&ID presented current G&N system reliability logic diagrams and form 965-F for purposes of updating.

    a. Diagrams based on mission phases

    b. S&ID presented logic from basic equipment to module level.

2. MIT presented total parts list and reliability data relative to logic diagram details

3. S&ID presented relationship between G&N spares and reliability apportionment

4. S&ID/MIT discussed failure effects analysis

5. S&ID/MIT discussed G&N system qualification requirements

S&ID distributed the following data to MIT: Apollo electronics mission success diagrams, Apollo electronics safe abort diagrams, and the key to the abbreviations used.

The networks covering each phase of the mission or abort situations were described by S&ID. MIT commented on the application and use of the elements of the G&N in each mode of operation and phase, resulting in considerations for updating certain aspects of the networks.

MIT indicated that the G&N subsystem is capable of monitoring the primary guidance and control during the lift-off and ascent phases and taking control if required. MIT said it has recommended to NASA that a separate sensor be provided in the booster guidance for mechanization of this function.

MIT indicated it would prefer to use the service module propulsion in some circumstances for entry aborts above 100,000 feet in order to reduce the recovery area.

MIT presented the following specific comments on the logic diagrams for safe abort which S&ID presented:

1. Information required to align the command module for deboost from earth orbit will be available from the map and data viewer (MADV); since the communications serves as a backup to the MADV and onboard clock for this function, the communications line is a tertiary mode to the Apollo guidance computer (AGC) for determination of deboost attitude and time and landing site.

2. A single alignment of the inertial measurement unit (IMU) will be appropriate for any deboost time other than for establishing the inner gimbal angle.

3. The SCS body-mounted attitude gyros (BMG) are not adequate for providing attitude information in conjunction with the scanning telescope (SCT) for orbital navigation sightings.

[redacted]

4. The IMU will be operational continuously from lift-off through the first midcourse correction.

5. The SIVB guidance system will have control of attitude up to transposition and docking, except that provision will be made for roll control over-ride in earth orbit. In the event of SIVB attitude control failure, the spacecraft will be separated from the SIVB and the Apollo G&N equipment will provide primary attitude reference.

6. The optics hand crank is not suitable for driving the optics during navigational sightings but is adequate for IMU alignment.

7. The minimum impulse control (MIN) is mandatory for navigational sightings with the SCT; in all cases, the space sextant (SXT) cannot be utilized effectively without the SCT.

8. The optics coupling display unit (CDU) slow switch is not operable with, and cannot be utilized for, driving the optics at any time.

9. The CDU is not required for display of attitude information from the IMU on the SCS flight director attitude indicator (FDAI).

10. The IMU is not available for spacecraft attitude control functions when utilized for orbital landmark navigation sightings.

11. It is not necessary to utilize the AGC during a G&N attitude control mode, since manual attitude commands may be inserted through the CDU; this is applicable to safe abort modes for dwell and coast (other than in earth orbit), thrust vector alignment, and orientation for earth entry.

S&ID requested that a corrected set of safe abort logic diagrams incorporating any suggested changes not cited at the meeting be returned by MIT to S&ID through the resident S&ID representative by 26 June 1963. MIT agreed to comply with this request.

Apollo mission time profiles approved by the NASA planning panel were discussed. These consist of the 14-day maximum design limit and 194-hour nominal design model missions. MIT and S&ID agreed on the need for consistent mission models for reliability and failure effects analysis. S&ID agreed to prepare a detailed model of both NASA recommended 14- and 8-day missions for consideration to be adopted as mutually acceptable mission models for design and analysis purposes.

MIT presented examples of the tabulation sheets and forms used for failure effects analysis (FEA). The method of placing information into a

[redacted]

computer for analysis was described. MIT indicated that a preliminary analysis of the subsystem with the exception of the AGC has been completed, and that the current scheduling provides for a completed FEA at the replaceable module level by 1 September 1963. MIT representatives said that further modifications to this analysis will incorporate more detailed breakdowns of operating modes in accordance with the S&ID request, and that the analysis will be at least to the replaceable module level and to those functional portions of the subsystem which are necessary to define the various modes of operation.

MIT distributed its listing of replaceable modules with their associated failure rates, weights, and volumes. This listing had been previously transmitted informally by MIT to S&ID in January 1963, during the S&ID/GAC coordination meeting at S&ID. S&ID indicated that the MIT system parts lists could not be related to the listing of modules and presented S&ID Form 965-F for execution. MIT replied that a document was available from the MIT resident representative at S&ID from which S&ID could determine parts counts by module in conjunction with circuit schematics. S&ID showed MIT its reliability logic diagrams of the G&N equipment at the subassembly level and indicated that these diagrams were constructed mainly from the MIT documents which S&ID reviewed and were being utilized by S&ID in their machine programming studies. S&ID requested that MIT review the logic for those pieces of G&N equipment which were not simple series; S&ID concurred that receipt of this logic together with the listing of replaceable modules, the system parts count, and circuit schematics would suffice for the integration studies performed by S&ID.

S&ID presented the results of recent studies on optimization of in-flight spares for maximum spacecraft reliability with minimum weight. The rationale for the dynamic program method was discussed; tabulations of the spares candidates with their associated weights and the weight derivatives of spacecraft reliability were transmitted to MIT. S&ID emphasized that the spares allocations were predicated upon the attainment of equipment performance and reliability objectives within the basic subsystems weight constraints, and that the spares lists are tentative and are not intended to represent firm recommendations for in-flight spares requirements. MIT concurred on the systematic approach being utilized for optimum sparing at the spacecraft level and indicated that they desired to be kept informed on the progress of these studies so that they may conduct assessments of the G&N subsystem reliability as related to the specific G&N spares candidates.

MIT supplied S&ID with the schedule of AGE qualification testing shown in Table 3-21.

Table 3-21. Aerospace Ground Equipment (AGE) Qualification Test Schedule

G&N System	Use	Test Start	Purpose
AGE 6	AFRM 006	May 1964	Acoustic and vibration spacecraft
AGE 8	AFRM 008	July 1964	Environmental proof spacecraft
AGE 11	Participating contractor	July 1964	Qualification test system
AGE 10	AC Spark Plug	August 1964	Reliability test
AGE 18	MIT	October 1964	System test
LEM 20	MIT	January 1965	Reliability test
LEM 21	Participating contractor	February 1965	Qualification

MIT was requested to provide its impressions relevent to the interim qualification requirements for the G&N system if it was to be included in early manned or unmanned suborbital, superorbital, or orbital flights.

MIT said that all qualification testing planned for AGE-11 should be completed prior to any flight and that two to three simulated cycles on AGE-10 should be completed prior to any orbital flight. A cycle was defined as 200 hours. MIT was requested to provide G&N requirements for AFRM 006 and 008 tests in support of ground qualification and flight data requirements. MIT cited Apollo Memorandum No. 547, subject: "AFRM 008 Environment Proof Test Preliminary G&N Test Requirements," dated 14 May 1963, as supplying the flight data requirements. S&ID asked what tests MIT has to be conducted at S&ID on the integrated systems level on other than No. 006 or No. 008, such as the House Spacecraft and EMI tests. MIT stated that "compatibility testing" would satisfy any additional ground qualification requirement. MIT requested the qualification test criteria. S&ID presented these and referred MIT to the General Test Plan SID 62-109-3 for additional information MIT agreed to provide S&ID with their test requirements on AFRM 006; they were referred to SID 62-109-5 for the objectives.

S&ID conducted discussions with MIT relating to mechanization of the Delta velocity modes to which reference was made in the analysis sections. They are summarized as follows:

1. IMU failure — This mode requires that the vehicle attitude, thrust duration, and thrust start time be inserted manually into the system. If this information is to be obtained from the AGC, the attitude information may not be in the correct units and coordinate system. Aside from this limitation, all the necessary information can be made available to the crew. Assuming that this limitation will be overcome by conversion to proper units and coordinated either by the AGC or by the crew, this mode can be considered compatible with the present capabilities of the G&N subsystem.

2. Attitude Control Failure in G&N — The ability to perform this mode is related to the specific failure that results in the loss of attitude control. In some cases, it will not be possible to orient the accelerometers to a known attitude with respect to the vehicle. It is necessary to be able to control and sense the IMU gimbal angles in order to orient effectively the stable member. Failures which do not affect this capability may make this mode desirable. Because of the dependence of operation in this mode upon the type of failure, further study will be required before it can be considered part of the present configuration.

3. Thrust Command Failure in G&N — It will be necessary in this mode for the outputs from the AGC to the CDU and SCS to be disabled. This will be possible by either commanding the AGC program to bypass these outputs or by removing power from the AGC. This mode requires that the vehicle attitude thrust period and thrust time be inserted into the system. If the AGC is operating, the attitude information will be inserted automatically into the CDU. The other information can be displayed by the AGC. If the AGC is not operating, all of the information will be obtained from GOSS. This mode can be considered compatible with the present capabilities of the G&N subsystem.

PLANNED ACTIVITIES

Studies will be conducted on obtaining further information from MIT as related particularly to the AGC. Special information will be requested to determine the reliability of the integrated electronic circuitry as incorporated in the new AGC-4. Studies will be conducted to determine effects on reliability of G&N equipments as related to power density distribution as given by MIT for cold plate temperature requirements. Evaluations will be made of the accuracy of LEM rendezvous trajectory to establish the

requirements related to reliability for optimization of miss distances for the terminal rendezvous maneuvers in the abort as well as in the normal mode of operations. Evaluations will be made of LEM guidance backup requirements, particularly as related to the backup that can be given to the LEM from the command and service modules. Determinations will be made of the interfaces between G&N equipments and other LEM subsystems to assess the integration of respective equipment functions in terms of compatibility, performance, accuracy, and reliability.

Test activities planned for the next quarter will include providing MIT with approved parts list and part specifications released to date. In addition, firm test requirements will be established for the G&N system for AFRM 006 with respect to qualification test criteria and specific test objectives. Interim qualification requirements will be established for the G&N system should it be included in early flights of spacecraft. These requirements will be established for test objectives of suborbital, orbital, and superorbital, either manned or unmanned flights.

A meeting of Grumman and S&ID personnel developed joint plans to coordinate and support qualification test activity between the two associate contractors. Satisfying relationships were established to exchange information of benefit to both programs.

~~CONFIDENTIAL~~

Table 3-18. Guidance and Navigation Failure Effects Analysis

Item	Drawing Number	Elect. Reference. Desig.	Failure Detection	Function	Failure Type	Mission Phase	Failure Effect On Component Performance	Failure Effect On Sub-Systems Performance	Failure Effect On Apollo	Possible Crew Action
Ternary current switch (PSA) (3) (A) Pulse integrating pendulous accelerometer (PIPA)				(A) (1) Directs ΔV information to the AGC (2) Directs torquing signal to PIPA	Output: (a) Open (b) Shorted (c) Degraded	All	(A) (1) (a) and (b) AGC receives no ΔV information (c) AGC receives erroneous ΔV information (2) PIPA receives erroneous or no torquing signals	(A) Loss of linear acceleration parameters	(A) Loss of primary (guidance and navigation) mode	(A) Isolate and repair by replacement; switch to SCS mode
(B) Inertial reference integrating gyroscope (IRIG) (3)				(B) Directs torquing signal to the IRIG			(B) IRIG receives erroneous or no torquing signals	(B) Loss of torquing signals and corresponding loss of attitude reference	(B) Loss of primary (guidance and navigation) mode	(B) Isolate and repair by replacement; switch to SCS mode
D-c differential amplifier (PSA) (3) (A) Coupling display unit				(A) Accepts demodulated CDU resolver signal and provides an input to the torque drive amplifier during course align mode	Output: (a) Open (b) Shorted (c) Degraded	(A) Course IMU alignment	(A) Loss of automatic course alignment signal	(A) Inability to perform automatic course alignment	(A) Additional crew task	(A) Isolate and repair if possible; use manual alignment. Switch to SCS mode
(B) Inertial measurement unit				(B) Accepts angular differentiating accelerometer signals and provides an input to the torque drive amplifier		(B) All inertial measurement unit operational phases	(B) Loss of inertial measurement unit error signal	(B) Loss of inertial measurement unit attitude reference	(B) Loss of primary (guidance and navigation) mode	(B) Isolate and repair if possible; switch to SCS attitude mode
A-c differential amplifier (PSA) (3)				Amplifies the coupling display unit 1X resolver signal for 800 demodulator	Output: (a) Open (b) Shorted (c) Degraded	Course inertial measurement unit alignment	Loss of automatic course align signal	Inability to perform automatic course alignment	Additional crew task	Isolate and repair if possible; switch to SCS mode

~~CONFIDENTIAL~~

Table 3-18. Guidance and Navigation Failure Effects Analysis (Cont)

Item	Drawing Number	Elect. Reference Desig.	Failure Detection	Function	Failure Type	Mission Phase	Failure Effect On Component Performance	Failure Effect On Sub-Systems Performance	Failure Effect On Apollo	Possible Crew Action
Interrogator (PSA) (A) PIPA (3) (B) IRIG (3)				(A) Reshapes the PIPA output wave form to an approximate square wave and detects its phase and magnitude (B)	Output: (a) Open (b) Shorted (c) Degraded	All	(A) Loss of or erroneous (1) ΔV information (2) PIPA torquing signals (B)	(A) Loss of linear acceleration parameters (B)	(A) Loss of primary (guidance and navigation) mode (B)	(A) Isolate and repair if possible; switch to SCS mode (B)
PIPA calibration module (PSA) (3)				Provides a torquing feedback signal from the pulse torquing electronics to the PIPA	Output: (a) Open (b) Shorted (c) Degraded	All internal measurement unit operational phases	Loss of torquing signal to PIPA assembly	Erroneous accelerometer signals	Loss of primary (guidance and navigation) mode	Isolate and repair if possible; switch to SCS mode
Gyro calibration module (PSA) (3)				Provides a feedback signal from the gyro pulse torquing electronics to the IRIG assembly	Output: (a) Open (b) Shorted (c) Degraded	All internal measurement unit operational phases	Loss of torquing signal to IRIG assembly	Erroneous attitude reference signals	Loss of primary (guidance and navigation) mode	Isolate and repair if possible; switch to SCS mode
Torque drive amplifier (PSA) (3) (gimbal servo amplifier)				Provides excitation for the internal measurement unit gimbal motors	Output: (a) Open (b) Shorted (c) Degraded	All internal measurement unit operational phases	Loss of excitation to the inertial measurement unit gimbal drive motors	Erroneous error signal from inertial measurement unit resolvers resulting in loss of inertial measurement unit attitude reference	Loss of primary (guidance and navigation) mode	Isolate and repair if possible; switch to SCS mode
Motor drive amplifier (PSA) (3)				Provides power to coupling display unit shaft drive motor	Output: (a) Open (b) Shorted (c) Degraded	All coupling display unit operational phase	Loss of excitation to the coupling display unit shaft motors	Erroneous coupling display unit tachometer resolver and encoder information	Loss of primary (guidance and navigation) mode	Isolate and repair if possible; use thumb wheel; switch to SCS mode
Gimbal course alignment amplifier (PSA) (3)				Provides alignment signal to inertial measurement unit gimbal torque motors in course alignment mode	Output: (a) Open (b) Shorted (c) Degraded	Course alignment	Loss of or erroneous course alignment signal to inertial measurement unit torque drive amplifiers	Loss of or erroneous inertial measurement unit gimbal drive during course alignment mode	Loss of the course alignment portion of the primary (guidance and navigation) mode. Additional crew task	Isolate and repair if possible; use manual align. Switch to SCS
Power supply (PSA) 800 cps 1% (A) Optics (B) Inertial measurement unit				(A) Provides excitation for: (1) Resolvers (2) Tachometers (3) Hand control (B) (1) Resolvers (2) Tachometers (3) Demodulator reference (4) Autopilot reference (SCS)	Output: (a) Open (b) Shorted (c) Degraded	All guidance and navigation operational phases	(A) Loss of excitation to optics 1, 2, and 3 (B) Loss of excitation to IMU 1, 2, 3, and 4	(A) Erroneous or loss of optics information (B) Erroneous or loss of inertial measurement unit, coupling display unit, and autopilot information	Loss of primary (guidance and navigation) mode	Isolate and repair if possible; switch to SCS

CONFIDENTIAL

~~CONFIDENTIAL~~

Table 3-18. Guidance and Navigation Failure Effects Analysis (Cont)

Item	Drawing Number	Elect. Reference. Desig.	Failure Detection	Function	Failure Type	Mission Phase	Failure Effect On Component Performance	Failure Effect On Sub-Systems Performance	Failure Effect On Apollo	Possible Crew Action
Power supply (PSA) 800 cps 5% (2) (A) Optics				Provides excitation to: 1. Servo amplifiers 2. Servo motors	Output: (a) Open (b) Shorted (c) Degraded	All guidance and navigation operational phases	Loss of or incorrect excitation to 1 and 2	Erroneous or no control of optics equipment	Loss of optical reference	Isolate and repair if possible; use trunnion and shaft hand crank; switch to SCS
(B) Inertial measurement unit				1. Gyro wheels 2. Blowers			Loss of or incorrect excitation to 1 and 2	1. Erroneous or loss of attitude control 2. Inability to automatically control inertial measurement unit temperature	Loss of primary (guidance and navigation) mode	
(C) Coupling display unit				1. Motors			Loss of or incorrect excitation to 1	Erroneous or loss of guidance and navigation attitude reference		
Automatic (PSA) amplitude control, 800 cps 28 1% (2)										
Power supply,(PSA) pickoff 3.2 kc 1% 2 volts (1) (sinewave)				Provides excitation for: (A) PIPA pickoff (B) IRIG pickoff	Output: (a) Open (b) Shorted (c) Degraded	All IMU operational phases	Loss of or erroneous excitation to A and B	Loss of or erroneous pickoff signal from A and B	Loss of primary (guidance and navigation) mode	Isolate and repair if possible; switch to SCS
Power supply (PSA) temperature controller 3.2 kc 20 volts square wave (1)				Provides excitation for: temperature controller	Output: (a) Open (b) Shorted (c) Degraded	All	Loss of or incorrect signal to temperature controller magnetic amplifier	Erroneous or loss of temperature control for inertial measurement unit	Loss of primary (guidance and navigation) mode	Isolate and repair if possible; use emergency temperature control; switch to SCS
Automatic (PSA) amplitude control 3.2 kc 2 volts, 1% (1)										
Power supply (PSA) 25.6 kc 1% (2) (A) Optics (B) Inertial measuring unit				Provides excitation for: (A) Optics encoders (B) Inertial measurement unit encoder 3	Output: (a) Open (b) Shorted (c) Degraded	All optics and inertial measurement unit operational phases	A and B loss of or incorrect excitation to encoders	Erroneous or loss of reference signal from: (A) Optics to Apollo guidance computer (B) Coupling display unit to Apollo guidance computer	A and B loss of primary (guidance and navigation) mode	Isolate and repair if possible; switch to SCS

~~CONFIDENTIAL~~

Table 3-18. Guidance and Navigation Failure Effects Analysis (Cont)

Item	Drawing Number	Elect. Reference. Desig.	Failure Detection	Function	Failure Type	Mission Phase	Failure Effect On Component Performance	Failure Effect On Sub-Systems Performance	Failure Effect On Apollo	Possible Crew Action
Automatic (PSA) amplitude control 25.6 kc 28 volts 1% (2)										
Failure indicator module (PSA) (3)				To show failure of: (A) Inertial measurement unit (B) Coupling display unit (C) PIPA	Output: (a) Open (b) Shorted (c) Degraded	All A, B, and C operational phases	Erroneous or loss of component operation to Apollo guidance computer	Erroneous or loss of component failure display on viewer panel	None	Repair and replace if possible
Power supply (PSA) +120 volts dc -12 volts dc (2)				Supplies power to: (A) PIPA pulse torquing electronics (B) IRIG, pulse torquing electronics	Output: (a) Open (b) Shorted (c) Degraded	All inertial measurement unit operational phases	(A) (B) Erroneous or loss of torquing signal	(A) Erroneous or loss of linear acceleration (B) Erroneous or loss of attitude output information	Loss of primary (G&N) mode	Isolate and repair if possible; switch to SCS mode
Temperature (PSA) controller (1)				Provides necessary electronics for regulating heaters on: (A) PIPA (B) IRIG	Output: (a) Open (b) Shorted (c) Degraded	All	(A) (B) Loss of temperature command	(A) (B) Erroneous or loss of: 1. Linear acceleration parameters 2. Attitude and attitude error parameters 3. Both 1 and 2	Loss of primary (G&N) mode	Isolate and repair if possible; use emergency temperature control mode; switch to SCS mode
Power supply (PSA) -28 volts dc (1)				Supplies power to: (A) Inertial measurement unit gimbal servos (B) ADA pre-amplifier (C) PIPA pulse torquing electronics	Output: (a) Open (b) Shorted (c) Degraded	All IMU operational modes	Erroneous or loss of: (A) Inertial measurement unit gimbal servo signal (B) ADA pre-amplifier signal (C) PIPA pulse torquing signal	Erroneous or loss of: (A) (B) Attitude reference and attitude error (C) Linear acceleration output information	Loss of primary (G&N) mode	Isolate and repair if possible; switch to SCS

Table 3-18. Guidance and Navigation Failure Effects Analysis (Cont)

Item	Drawing Number	Elect. Reference. Desig.	Failure Detection	Function	Failure Type	Mission Phase	Failure Effect On Component Performance	Failure Effect On Sub-Systems Performance	Failure Effect On Apollo	Possible Crew Action
Encoder electronics module (PSA) (3)				Shapes and regulates each encoder output from: (A) Inner gimbal encoder (B) Middle gimbal encoder (C) Outer gimbal encoder	Output: (a) Open (b) Shorted (c) Degraded	All IMU operational phases	Erroneous or loss of: (A) Inner gimbal encoder signal	(A) (B) (C) Erroneous or loss of respective computer commands to the coupling display unit	Loss of primary (guidance and navigation) mode	Isolate and repair if possible; switch to SCS
Motor drive amplifier select module (PSA) (3)				Selects the desired CDU resolver error output signal to be applied to the CDU MDA. (A) Inner gimbal (B) Middle gimbal (C) Outer gimbal	Output: (a) Open (b) Shorted (c) Degraded	IMU fine alignment and CDU zero encode phase	Erroneous or loss of MDA select module output signal to: (A) Inner gimbal motor drive amplifier (B) Middle gimbal motor drive amplifier (C) Outer gimbal motor drive amplifier	Erroneous or loss of automatic: 1. Fine alignment 2. Zero encode	Degradation of primary (guidance and navigation) mode accuracy; additional crew task	Isolate and repair if possible; use manual slew and thumb wheel; switch to SCS mode
CDU zero module (PSA) (1)				Indicates to Apollo guidance computer when the coupling display unit shafts are in zero position by clearing the coupling display unit registers	Output: (a) Open (b) Shorted (c) Degraded	Zero encode phase	Erroneous or loss of coupling display unit zero bit used by Apollo guidance computer to clear coupling display unit registers	Erroneous or loss of automatic coupling display unit display clearance	Degradation of primary (guidance and navigation) mode; additional crew task	Isolate and repair if possible; use manual slew and thumb wheel; switch to SCS mode
IMU load compensation (PSA) (1)										
CDU motor drive amplifier (PSA) (2) (A) Trunnion (B) Shaft				Provides power to drive: (A) Coupling display unit trunnion motor generator (B) Coupling display unit shaft motor generator	Output: (a) Open (b) Shorted (c) Degraded	All optics operational phases	Erroneous or loss of: (A) Coupling display unit trunnion gear train drive (B) Coupling display unit shaft gear train drive	Erroneous or loss of the slaving and following functions of the coupling display unit optics gear trains	Loss of the optical portion of the primary (guidance and navigation) mode; additional crew task	Repair and replace if possible; use manual inputs to optics; switch to SCS mode
CDU motor drive pre-amplifier (PSA) (2) (A) Trunnion (B) Shaft				Provides a usable signal to: (A) Coupling display unit trunnion motor drive amplifier (B) Coupling display unit shaft motor drive amplifier	Output: (a) Open (b) Shorted (c) Degraded	All optics operational phases	Erroneous or loss of coupling display unit gear train rotation for the: (A) Trunnion (B) Shaft	Erroneous or loss of slaving and following functions of the coupling display unit optics gear trains	Loss of the optical portion of the primary (guidance and navigation) mode; additional crew task	Repair and replace if possible; use manual inputs to optics; switch to SCS mode

Table 3-18. Guidance and Navigation Failure Effects Analysis (Cont)

Item	Drawing Number	Elect. Reference. Desig.	Failure Detection	Function	Failure Type	Mission Phase	Failure Effect On Component Performance	Failure Effect On Sub-Systems Performance	Failure Effect On Apollo	Possible Crew Action
Motor drive (PSA) amplifier (4) (A) Sextant 1. Trunnion 2. Shaft (B) Scanning telescope 1. Trunnion 2. Shaft				Provides driving power to the motors of: (A) 1 and 2 (B) 1 and 2	Output: (a) Open (b) Shorted (c) Degraded	All optics operational phases	Erroneous or loss of optics gear train rotation for the following: (A) 1 and 2 (B) 1 and 2	Erroneous or loss of automatic functions of: (A) 1 and 2 (B) 1 and 2	Loss of the optical portion of the primary (G&N) mode; additional crew task	Repair and replace if possible; use manual inputs to optics; switch to SCS mode
Motor drive (PSA) pre-amplifier (4) (A) Sextant 1. Trunnion 2. Shaft (B) Scanning telescope 1. Trunnion 2. Shaft				Provides usable signal to the motor drive amplifiers of: (A) 1 and 2 (B) 1 and 2	Output: (a) Open (b) Shorted (c) Degraded	All optics operational phases	Erroneous or loss of optics gear train rotation for: (A) 1 and 2 (B) 1 and 2	Erroneous or loss of automatic functions of: (A) 1 and 2 (B) 1 and 2	Loss of the optical portion of the primary (G&N) mode; additional crew task	Repair and replace if possible; use manual inputs to optics; switch to SCS mode
Two-speed (PSA) switch (4) (A) Optics (B) Coupling display unit				Selects the correct resolver signal which will drive the corresponding motor generator to a null position	Output: (a) Open (b) Shorted (c) Degraded	All optics operational phases	Erroneous or loss of null signal to the motor drive amplifier	Erroneous or loss of automatic zeroing functions of shaft and trunnion axis of A and B	Loss of optical portion of the primary (G&N) mode	Repair and replace if possible; use manual inputs to optics; switch to SCS
Encoder (PSA) electronics (2) (A) Trunnion (B) Shaft				Completes the translation of the encoder output signal into a usable digital input for the computer	Output: (a) Open (b) Shorted (c) Degraded	All optics operational phases	Erroneous or loss of digital information to the Apollo guidance computer	Erroneous or loss of Apollo guidance computer optical commands	Loss of the automatic function of the optics - additional crew task	Repair and replace if possible; use manual inputs; switch to SCS mode
Cose-cant (PSA) generator (1)				Provides the signal to offset the trunnion axis (25°) of the scanning telescope	Output: (a) Open (b) Shorted (c) Degraded	All optics operational phases	Erroneous or loss of 25-degree offset signal to coupling display unit shaft motor drive	Erroneous or loss of 25-degree offset position of the trunnion axis of the scanning telescope with respect to the 0-degree position	Partial loss of optical portion of primary (G&N) mode	Repair and replace if possible; use manual inputs

Table 3-18. Guidance and Navigation Failure Effects Analysis (Cont)

Item	Drawing Number	Elect. Reference. Desig.	Failure Detection	Function	Failure Type	Mission Phase	Failure Effect On Component Performance	Failure Effect On Sub-Systems Performance	Failure Effect On Apollo	Possible Crew Action
Resolver (PSA) drive amplifier (1)				Provides excitation signal for the coupling display unit shaft 1X resolver	Output: (a) Open (b) Shorted (c) Degraded	Resolved mode of optics operational phase	Erroneous or loss of 1X coupling display unit resolver excitation	Erroneous or loss of CDU trunnion drive and 25-degree offset during optics resolved mode	Loss of optics during resolved mode	Repair and replace if possible; switch to optics direct mode
Transformer (PSA) module (1)				Provides 800 cps isolated voltage needed for the following optics operations: (A) Zero optics (B) 25-degree Offset (C) 0-degree Offset	Output: (a) Open (b) Shorted (c) Degraded	Optics zero mode slave telescope and star line	Erroneous or loss of isolated 28 volts, 800 cps to (A), (B) and (C)	Degraded or loss of capability to provide zero optics reference, 25-degree optics offset, and 0-degree offset	Partial loss of optics; additional crew task	Repair and replace if possible; switch to manual optics control
Zero relay (PSA) module				Provides the switching mechanism necessary to zero the coupling display unit shaft gear train upon command	Output: (a) Open (b) Shorted (c) Intermittent	Optics zero	Loss of or intermittent ability to position coupling display unit shaft gear train during zero	Degraded or loss of automatic function of optics	Partial loss of optics; additional crew task	Repair and replace if possible; switch to manual optics control
25-degree (PSA) relay (1)				Provides the switching mechanism necessary to position the SCT trunnion axis to a 25-degree offset position relative to the SCT 0-degree trunnion position	Output: (a) Open (b) Shorted (c) Intermittent	Optics 25-degree offset position	Loss of or intermittent ability to position the SCT trunnion axis to a 25-degree offset position relative to the SCT 0-degree trunnion position	Degraded or loss of automatic function of optics	Partial loss of optics; additional crew task	Repair and replace if possible; switch to manual optics control
Scanning telescope (SCT) (1)				Used to perform field acquisition and low orbit landmark tracking functions and to determine the orbit of the spacecraft	Loss of or impaired field of vision, loss of or degraded mechanical motion	All optical operational phases	Loss of or impaired visual tracking	Loss of primary means of orbit determination; loss of secondary means platform erection	Partial loss of optical mode; additional crew task	Use sextant or GOSS information; switch to SCS
Sextant (SXT) (1)				Provides primary celestial angle data and orientation of the inertial platform	Loss of or impaired field of vision, loss of or degraded mechanical motion	IMU alignment	Loss of or erroneous: (A) Celestial angle data (B) Orientation of inertial platform	Loss of or erroneous: (A) Orbit determination (B) Inertial platform erection	Loss of primary (G&N) mode	Use scanning telescope

[redacted]

Table 3-18. Guidance and Navigation Failure Effects Analysis (Cont)

Item	Drawing Number	Elect. Reference. Desig.	Failure Detection	Function	Failure Type	Mission Phase	Failure Effect On Component Performance	Failure Effect On Sub-Systems Performance	Failure Effect On Apollo	Possible Crew Action
CDU shaft drive (1) assembly				Provides a means for (A) Electrically slaving the SCT and SXT shaft axis (B) Changes the analog shaft information into digital signals to be used by the computer	Outputs: (a) Open (b) Shorted (c) Degraded	All optics operational phases	Erroneous or loss of shaft angle signal	Loss of optical reference data	Loss of primary (G&N) mode additional crew task	Use manual mode; switch to C & D mode
CDU trunnion (1) drive assembly				Provides a means for (A) Electrically slaving the SCT and SXT trunnion axis (B) Changes the analog trunnion information into digital signals to be used by the computer	Outputs: (a) Open (b) Shorted (c) Degraded	All optics operational phases	Erroneous or loss of trunnion angle signal	Loss of optical reference data	Loss of primary (G&N) mode; additional crew task	Use manual mode; switch to C & D mode
Optics indicator (1) G&N control panel				Provides (A) Switching functions for optical electronics (B) Visual displays	Outputs: (a) Open (b) Degraded (c) Intermittent	All optics operational phases	Loss of any or all of switching functions within control panel	Loss of the automatic functions of the optical assembly	Loss of primary (G&N) mode; additional crew task	Use manual mode; switch to C & D mode
CDU gimbal drive assemblies				Provides IMU gimbal angle reference and attitude control command signals	Outputs (electrical or mechanical) open, shorted, degraded	All IMU operational phases	Erroneous or loss of: (A) IMU gimbal angle reference (B) Attitude control command signals	Erroneous or loss of: (A) Automatic IMU alignment (B) CDU attitude information for SCS during attitude control	Loss of primary (G&N) mode; additional crew task	Use manual mode; switch to C & D or SCS mode
Inertial reference integrating gyroscopes (IRIG) (3)	(IMU)			(A) Provides a space stabilized reference platform	Output: (a) Open (b) Shorted (c) Degraded	All IMU operational phases	Erroneous or loss of IMU platform orientation information	Loss of IMU	Loss of primary (G&N) mode	Switch to C & D mode
Pulse integrating pendulous accelerometer (PIPA) (3)	(IMU)			Senses linear velocity increments in respective coordinate frame defined by the stable member and provides increment signal to computer	Output: (a) Open (b) Shorted (c) Degraded	All IMU operational phases	Erroneous or loss of platform acceleration information	Erroneous or loss of: (A) Incremental velocity information to computer (B) ΔV correction mode	Loss of primary (G&N) mode	Switch to C & D or SCS mode

[redacted]

Table 3-18. Guidance and Navigation Failure Effects Analysis (Cont)

Item	Drawing Number	Elect. Reference Desig.	Failure Detection	Function	Failure Type	Mission Phase	Failure Effect On Component Performance	Failure Effect On Sub-Systems Performance	Failure Effect On Apollo	Possible Crew Action
Angular differential accelerometer (IMU)				Senses tangential velocity increments signals corresponding to gimbal rotations	Output: (a) Open (b) Shorted (c) Degraded	All IMU operational phases	Erroneous or loss of angular acceleration output signals from IMU	Erroneous or loss of attitude reference	Loss of primary (G&N) mode	Switch to C & D or SCS mode
Gimbals (IMU)				(A) Allows 3 degrees of freedom of the spacecraft with respect to the stabilized inertial platform	Output: (a) Open (b) Shorted (c) Degraded	All IMU operational phases	(A) Erroneous or loss of 3 degrees freedom of inertial platform of the IMU (B) Erroneous angular acceleration output signal from gimbal-mounted accelerometers	Loss of IMU	Loss of primary (G&N) mode	Switch to C & D or SCS mode
Output registers				Route signals from the scaler for numerical computer displays, telemetry interfaces, commands to other spacecraft systems and pulse rate generation	Output: (a) Open (b) Shorted (c) Degraded	All	Loss of (A) Controlled pulse rates (B) Uncontrolled pulse rates (C) Levels to computer display and keyboard contacts	(A) Failure (B) Limited operations (C) Degraded operations	(A) Possible loss of spacecraft (B) Degraded performance	1. Isolate and repair failure if time permits 2. Use GOSS data for updating system 3. Set up back-up guidance to complete mission or control abort
Input registers				Receive composites of input bits for processing, and direct signals to request counter increments or program interrupts		All	Loss of (A) Discrete signals or (inbits) under program control (B) Loss of incremental signals (C) Loss of power connections			
Input interface circuit				Directs input functions through AGC transformer		All	Inoperative input functions			
Accumulator, automatic guidance computer				Stores operands for instructions related to vector operations, addition, subtraction, division, and multiplication		All	Loss of computer instructions			

Table 3-18. Guidance and Navigation Failure Effects Analysis (Cont)

Item	Drawing Number	Elect. Reference. Desig.	Failure Detection	Function	Failure Type	Mission Phase	Failure Effect On Component Performance	Failure Effect On Sub-Systems Performance	Failure Effect On Apollo	Possible Crew Action
Return address				Provides storage of uncorrected sign and acts to transfer control to subroutine call		All	Loss of computer iteration capability			
Program counter				Performs analog to digital conversion, time and output pulse recording, and telemetry link functions		All	Loss of conversion and recording functions			
Lower order product				Serves with the accumulator and right shift gates to form double length accumulation for multiplication		All	Loss of multiplying capability			
Buffer, direct				Provides temporary storage in the central register		All	Loss of backup temporary storage for iterative functions of central register			
Buffer, complements				Serves as the complement of the buffer direct register		All	Loss of backup temporary storage complement in central register			
Adder				Provides flip-flop storage for two operand words x and y		All	Incapable of performing arithmetic functions			
Write busses				Communicate among the g, central, input and output registers, and the arithmetic unit		All	Loss of intercommunications within the computer			
Counter, increment priority, and program interrupt				Receives trains of pulses from priority chain for transmission to counter address generation network		All	Loss of positive increment, minus increment, and shifting increment sequences			
Output interface circuit				Directs output functions through AGC computer		All	Inoperative output functions			
Parity test				Ensures that numbers stored in erasable memory and fixed memory are read correctly for transfer of data from fixed or erasable memory to arithmetic unit		All	Loss of confidence in computer outputs			
Memory buffer register				Communicates with the write busses in normal fashion for reading out, and in one of five modes for reading in		All	Loss of normal communication or of mode select for editing transformation of words being written in for storage in erasable memory			

~~CONFIDENTIAL~~

Table 3-18. Guidance and Navigation Failure Effects Analysis (Cont)

Item	Drawing Number	Elect. Reference. Desig.	Failure Detection	Function	Failure Type	Mission Phase	Failure Effect On Component Performance	Failure Effect On Sub-Systems Performance	Failure Effect On Apollo	Possible Crew Action
Left shift				Determines appropriate extracode instructions from CYL and SL signals stored in memory address register		All	Incapable of effecting desired editing transformation on words for storage in erasable memory			
Normal programming				Governs eleven instructions in the normal order code of the computer		All	Unable to perform basic machine language computational functions			
Right shift				Determines appropriate extracode instructions from CYR and SR signals stored in memory address register		All	Incapable of effecting desired editing transformation on words for storage in erasable memory			
Erasable sense amplifier				Provides amplification of erasable memory sense signals for transmission to memory buffer register		All	Loss of erasable memory sense signals to write busses			
Rope sense amplifier				Provides amplification of fixed memory sense signals for transmission to memory buffer register		All	Loss of fixed memory sense signals to write busses			
Rope fixed memory 1 through 12				Provides permanent storage of instructions and constants		All	Loss of specific primary computer functions related to program information			
X select				Directs signals in X current steering network for coincident selection of words from memory		All	Incorrect word selection from memory			
Y select				Directs signals in the Y current steering network for coincident selection of words from memory		All	Incorrect word selection from memory			
Z drivers				Governs the writing of I's and O's of the drive line sets for word selection in erasable memory		All	Erroneous or loss of writing of I's and O's by write busess			
Memory selection logic				Serves in generation of gating pulses for addressable registers		All	Loss of intercommunications within the computer			

~~CONFIDENTIAL~~

~~CONFIDENTIAL~~

Table 3-18. Guidance and Navigation Failure Effects Analysis (Cont)

Item	Drawing Number	Elect. Reference. Desig.	Failure Detection	Function	Failure Type	Mission Phase	Failure Effect On Component Performance	Failure Effect On Sub-Systems Performance	Failure Effect On Apollo	Possible Crew Action
Memory bank select				Chooses one of ten groups of 1024 words of fixed memory to be the fourth of four addressable 1024 word segments of memory		All	Loss of addressing capability			
SQ4 register				Uniquely selects with the stage counter, subinstruction memory cycles		All	Loss of operation codes throughout execution of instructions			
S register				Effects memory addressing for memory bank selection		All	Loss of addressing capability			
Release interrupt register				Releases interruptions for return to normal sequence of instructions		All	Inability to return to normal program			
Inhibit interrupt register				Inhibits interrupt signals until further notice		All	Inability to interrupt the normal sequence of instructions to transfer to specified program			
Instruction select logic				Governs logic to the accumulator in the central register to orient computer functions		All	Failure to specify which of the eleven instructions are needed for performance of specific functions			
Control matrix				Generates control pulses at matrix crosspoint between the time pulse generator and the SQ register and stage counter		All	Loss of proper functions from the sequence generator			
Control pulse amplifier				Forms gating pulses for reading out of and writing into the central registers		All	Loss of reading and writing capability			
Clock				Establishes frequency standard for all Apollo guidance and spacecraft systems		All	Loss of computer clock signals			
Scaler				Provides timing signals for the operation and synchronization of sequential control processes		All	Loss of basic signal and its subharmonics used for computer control			
Sequence generator				Governs the generation of control pulses at time pulse 12 which is reserved for instruction selection		All	Loss of ordered computer instruction capability			
Parity generator				Generates and tests parity bits from a pyramid circuit for P-15 and I-15 indications		All	Loss of confidence in computer outputs			

~~CONFIDENTIAL~~

Table 3-18. Guidance and Navigation Failure Effects Analysis (Cont)

Item	Drawing Number	Elect. Reference. Desig.	Failure Detection	Function	Failure Type	Mission Phase	Failure Effect On Component Performance	Failure Effect On Sub-Systems Performance	Failure Effect On Apollo	Possible Crew Action
Transformer				Directs input and output interface signals to and from the computer		All	Loss of input and output interface relations			
Power supply 250 volts 800 cps				Supplies power for electro-luminescent lighting panels		All	Loss of normal operation of the lighting panels			
Power supply +3 volts (A) dc				Supplies power for computer timing functions for computer standby allowed operations		All	Loss of computer timing functions			
Normal shift right				Serves with the A and the LP register to form double length shifting accumulator for multiplication		All	Loss of multiplication capability			
Power supply +3 volts (B) dc				Provides 22 amp power for computer operations on power-on operations		All	Loss of computer functions in full power mode			
Power supply +13 volts dc				Provides 2.5 amp power for computer operations		All	Computer inoperative			
Controls and displays				Controls and displays for computer operations		All	Loss of confidence in outputs and inability to perform manually controlled functions			
Mark control				Provides for simultaneous recording of platform and sextant angles		All	Loss of capability to perform IMU platform erection and navigational sighting functions			
Erasable memory				Provides temporary storage of intermediate results, modified instructions, and input data		All	Loss of specific auxiliary computer functions related to program information			

[redacted]

INSTRUMENTATION

SUMMARY

The studies covered in this section relate to configuration analyses on Boiler Plate No. 6 (BP 6) and the contribution of the in-flight test system to crew safety reliability.

ANALYSIS

Failure Effects Analysis

The failure effects analyses on the instrumentation subsystems at the subassembly level are shown in Tables 3-22 through 3-28 at the end of this section.

Configuration Analysis - BP No. 6

Logic diagrams and failure effects analyses have been completed for BP No. 6, encompassing the instrumentation necessary for the mission objectives. The logic diagrams shown in Figures 3-66 through 3-69 indicate the equipment needed for acquisition of attitude, aerodynamic, temperature, and vibration data. The parenthetical notation refers to the number of specific items indicated. Figure 3-69 is the diagram showing the equipment required for acquisition of all data. All information during the flight will be telemetered to the ground except for vibration which will be recorded on board. This is reflected on the diagrams for "vibration" and "all data" wherein the earth-landing system is required for acquisition of vibration data. Table 3-22 depicts the failure effects analysis on which the logic diagrams were based. The following list shows the predicted reliabilities for acquisition of data in BP No. 6. The mission time utilized for this analysis was 204 seconds.

Logic Diagram	Probability for Successful Acquisition
Attitudes and Aerodynamics	0.96165
Temperatures	0.99074
Vibration	0.99324
All Data	0.96918

~~CONFIDENTIAL~~

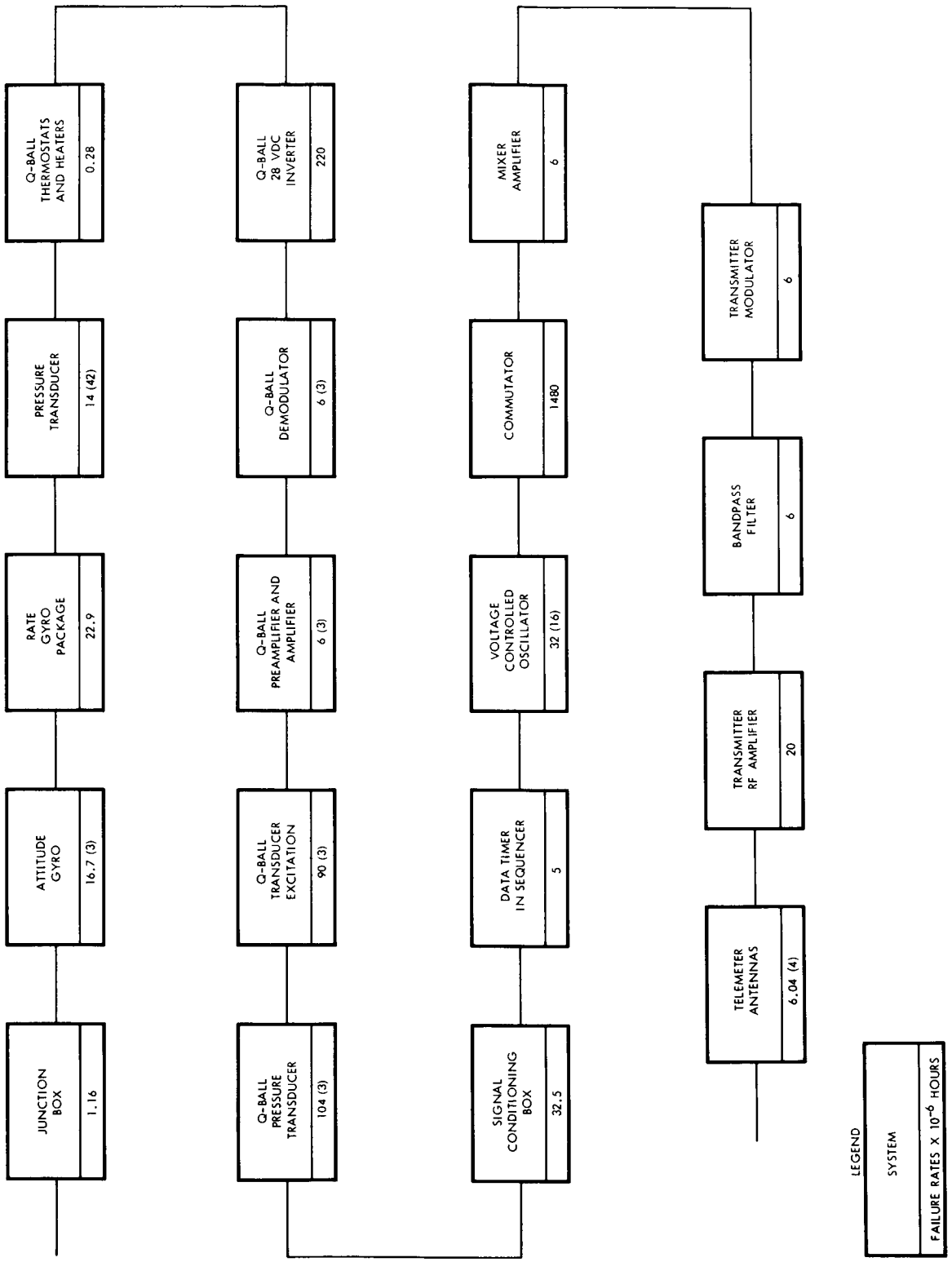

Figure 3-66. Boilerplate No. 6 - Attitudes and Aerodynamic Data

~~CONFIDENTIAL~~

C[redacted]

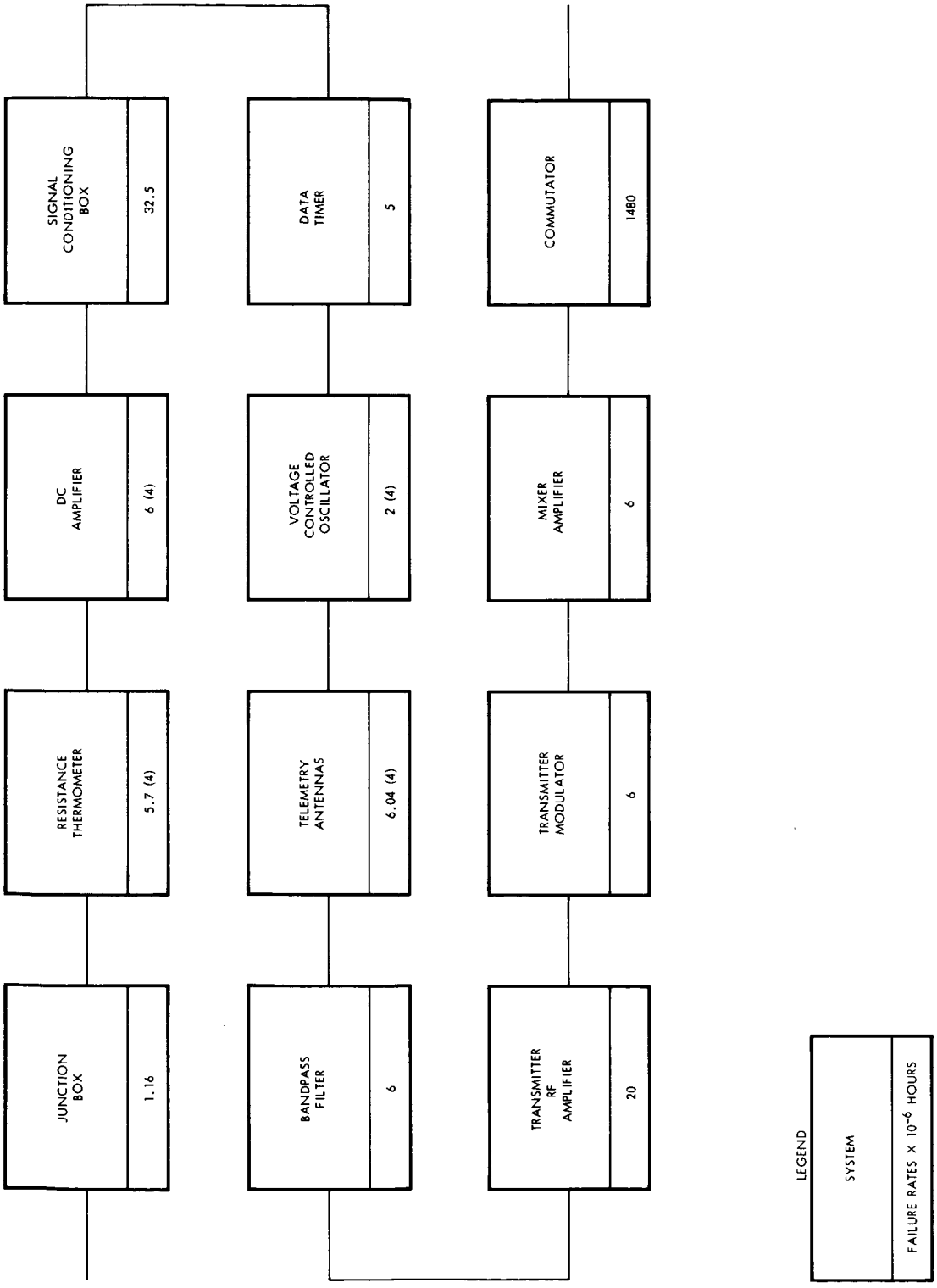

Figure 3-67. Boilerplate No. 6 - Temperatures

[redacted]

~~CONFIDENTIAL~~

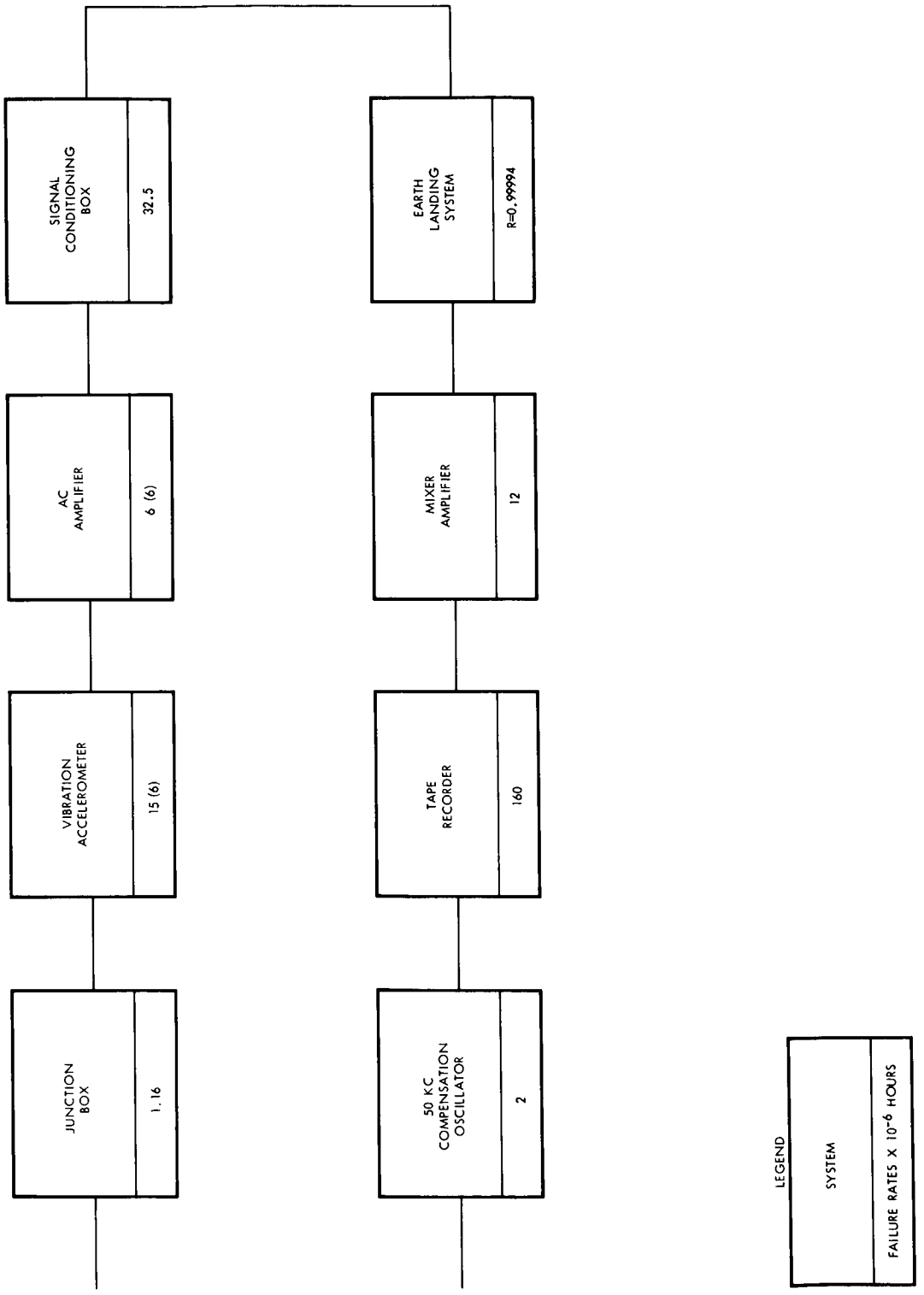

Figure 3-68. Boilerplate No. 6 - Vibration

~~CONFIDENTIAL~~

~~CONFIDENTIAL~~

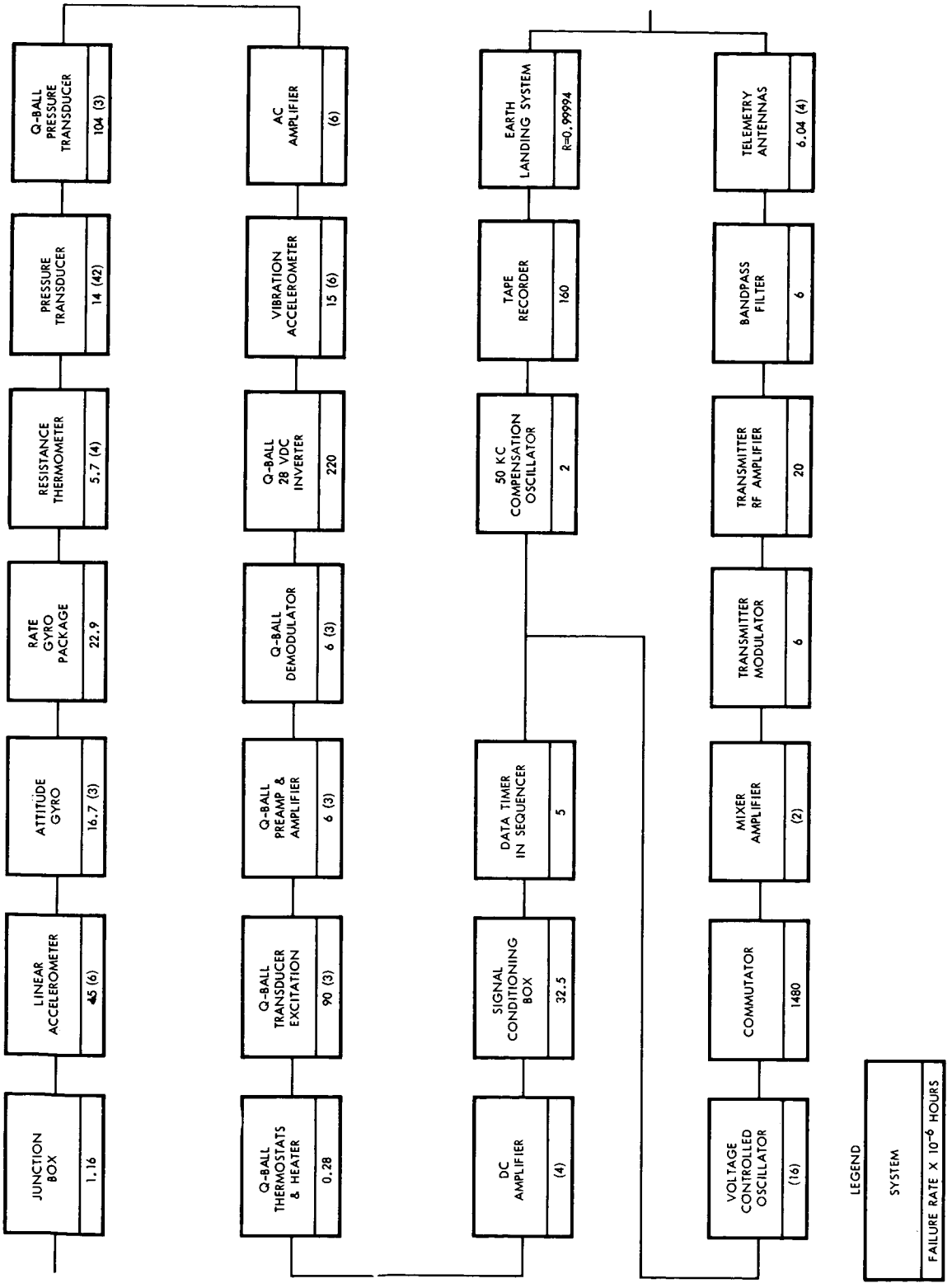

Figure 3-69. Boilerplate No. 6 - All Data

~~CONFIDENTIAL~~

Contribution of IFTS to Crew Safety Reliability

S&ID has conducted a preliminary study to determine the contribution of the IFTS to crew safety reliability. This study utilized the spacecraft electronics reliability logic diagrams shown in the introduction section.

Based upon the anticipated inability of the crew to maintain certain critical equipment without an IFTS and the predicted reliabilities of the equipment, the deletion of the IFTS from the spacecraft may be expected to cause additional crew losses of 5087 per million missions, or a 509-percent increase in crew losses over the apportioned value of 1000 losses per million missions from all causes in the launch vehicle-spacecraft complex.

The rationale for this study was that failures occurring in certain critical items in the spacecraft electronics would have to be isolated before adequate maintenance action could be taken. The critical items and their predicted mission reliabilities in the spacecraft electronics (all of which are in the stabilization and control subsystem) for which no redundancy or alternate modes exist are shown in Table 3-29. It may be assumed that observation of spacecraft performance and/or displays would provide sufficient information so that effective corrective action could be taken in the event of failures in the SCS control panel, power supply, and gimbal position indicator. In the event of a failure in the SCS thrust vector control circuits, however, the number of individual subassemblies would appear to prohibit effective fault isolation without an IFTS.

The total reliability of the thrust vector control is 0.999697 without sparing. With the recommended on-board spares, this reliability is 0.9999999748. The failure differential per million missions therefore is 303.

The latest available data indicates that in shirtsleeve environment, typical maintenance action time is 10 minutes (with the assumption that fault isolation means are available). The deletion of the IFTS unquestionably would result in such a significant increase in this time that a failure in critical equipment, for example the SCS thrust vector control circuits, conceivably could preclude a safe abort. The 303 failure differential per million missions in the SCS thrust vector control circuits thus represents a like incremental change in the number of crew losses attributable to lack of provision for fault isolation.

An additional consideration is the occurrence of multiple failures. Without an IFTS, any sparing presumably would be "wholesale," i.e., after fault detection and location to the equipment level, all available spare cards

Table 3-29. Critical Apollo Electronic Components

Component	Subassembly	Predicted Reliabilities	
		Without Spares	With Spares
Engine thrust	Engine thrust	0.999999863401	0.9999999999
	Subtotal	0.999999863401	0.9999999999
Electronic control assembly-thrust vector control	Monitor and filter - pitch channel	0.9999482253	0.9999999973
	Monitor and filter - yaw channel	0.9999482253	0.9999999973
	Integrator - pitch channel	0.999900260896	0.9999999901
	Integrator yaw channel	0.999900260896	0.9999999901
	Subtotal	0.9996970057	0.9999999748
Control panel	Channel disable	0.98407026	0.9999993194
	Deadband adjust	0.9920684	0.9999999175
	Mode select	0.9957068	0.9999999869
	Subtotal	0.9720737	0.9999992238
Display power source indicator	Universal miscellaneous	0.992091126	0.9999999182
	Universal power supply	0.9998078608	0.9999999631
	Subtotal	0.991900506	0.9999998813
Gimbal position indicator	Gimbal position indicator electronics	0.999735127	0.9999999298
	Gimbal position indicator	0.999703711	0.999999892
	Subtotal	0.999438916	0.999999822
	Total	0.96333522	0.999998902

or subassemblies for that equipment would be utilized, since no effective means of fault isolation to the sparable level of assembly would be available. In this event, a second failure in the same equipment would in effect fail the equipment for the remainder of the mission, since a second sparing action would have to include the spare item which previously had failed.

The ramifications of these multiple failures on crew safety reliability where sparing is performed wholesale have not been investigated in detail to date. However, it can be shown that the incremental change in crew losses expected from the "wholesale" sparing method would be given by the probability of two failures occurring in the critical electronic components. This may be approximated by the product of the probability of two failures occurring in the Apollo electronics and the ratio of the unreliability of the critical electronics components to the unreliability of the Apollo electronics:

$$\Delta Qcs = \left[\frac{(0.33)^2 \; e^{-0.33}}{2!}\right] \left[\frac{1-0.963335}{1-0.70}\right] = 4784 \times 10^{-6}$$

or 4784 crew losses per million missions.

The overall effect on crew safety reliability is shown by the total of crew losses due to deletion of the IFTS:

Due to thrust vector control circuit failures	= 303/million missions
Due to multiple failures in any SCS critical equipment	= 4784/million missions
Total -	5087/million missions

It is conceptually feasible to revise the abort criteria to maintain the crew safety requirement of 0.999; however, the mission success reliability would be severely degraded. Since the expected change in crew safety reliability represents a 509-percent increase in crew losses as derived from the apportioned value of crew safety reliability (0.999) for the total launch vehicle-spacecraft complex, S&ID feels that no acceptable trade-off may be conducted as a justification for deletion of the IFTS from the spacecraft.

Up Data Link

An apportioned reliability goal for the up-data link has been determined to be 0.985 probability of performing under specified environmental conditions for the 14-day LOR mission.

RELIABILITY/CREW SAFETY DESIGN REVIEWS

A Reliability/Crew Safety Design Review meeting was conducted 19 June 1963 to discuss the problems and questions concerning crew maintenance as related to the IFTS. Comments on the problems and questions discussed in the meeting are shown in Table 3-30.

The question of replacing the IFTS with additional on-board spares, redundancy and alternate modes is being investigated by the Rand Coporation. It was pointed out that the design and installation constraints limit the amount of redundancy achievable. No additional action was recommended.

A previous study had shown a 15-pound weight reduction obtained by reducing the number of test points from 225 to 150. It was pointed out that 150 test points were all that were originally required. However, for AFRM 025 the total 225 test points were required. This item will be considered at a future Design Review Meeting.

A weights study shows that by eliminating the cold plate cooling presently required by the IFTS, a seven-pound saving could be achieved. The study further pointed out that the IFTS is a low power consumption unit. Deletion of this cold plate, however, could result in generation of enough heat to overload the environmental control system. The differential temperature will be determined and supplied for further review.

The problem of storing and/or identifying failed modules and cards so that intermixing of failed items with unfailed items does not occur is to be considered at the next Design Review Meeting.

There are complex in-flight maintenance procedures where detailed maintenance data will have to be made available to the crew. Various methods of obtaining the information are being studied. A task analysis is being conducted, but the spares must be selected before complete analyses can be achieved.

Table 3-30. In-Flight Test System and In-Flight Maintenance Concept Design Review Board Action

Action Item	Description of Task	Action By	Status
1. A study has shown that a weight saving of 15 pounds can be achieved if the number of test points is reduced from 225 to 150. This reduction in test points is suggested as a possibility by the weights group. Can the change be accomplished without compromizing the IFTS concept?	NASA stipulated that 225 test points be provided to allow enough for contingencies. It appears that all will be used. If at a later date this is not the case, this question will be reconsidered.	Not assigned.	Hold for next review.
2. A weights study has shown that if cold plate cooling could be eliminated from the IFTS a weight saving of 7 pounds could be achieved. This appears feasible because of the low power consumption (20 watts nominal, 30 watts emergency) and the intermittent usage. Should the cold plate be eliminated?	This problem is being studied. Cold plate deletion means that the heat dissipated by the IFTS will be dumped into the crew quarters. The amount is not considered to present a problem. To ensure that the heat rise within the IFTS black box is not significant, a study should be implemented. If this study shows the heat rise is not critical, a change to the specification will be indicated.	Thermal Analyses, Reliability, IFT, and Design	Under investigation.

~~CONFIDENTIAL~~

Table 3-30. In-Flight Test System and In-Flight Maintenance Concept Design Review Board Action (Cont)

Action Item	Description of Task	Action By	Status
3. Hamilton Standard has requested that a voltmeter and ammeter be supplied for checking the PLSS (Portable Life Support System) battery in flight. A voltmeter only is supplied at present. Should an ammeter-voltmeter unit be supplied in lieu of the voltmeter to satisfy this requirement?	Present spacecraft equipment appears to be adequate to check the PLSS battery; however, a special adapter to be supplied by S&ID is necessary. This adapter could be deleted if Hamilton Standard, the Associate Subcontractor, would use the standard (Hughes) connector. It appears there are sufficient advantages to this change to warrant a feasibility study. This study should be made in conjunction with S&ID's Associate Subcontractor Administration. The results of the study are to be submitted to management as a basis for possible redirection.	Life Systems and Associate Subcontractor Administration	Under investigation.

~~CONFIDENTIAL~~

Table 3-30. In-Flight Test System and In-Flight Maintenance Concept Design Review Board Action (Cont)

Action Item	Description of Task	Action By	Status
4. A method must be devised for storing and/or identifying failed modules and cards to eliminate the possibility that they could become intermixed with unfailed items. Has the optimum method for this been devised?	At present, storage space is not available for failed items. This indicates that identification must be implemented. However, no positive method has been selected to date, but a number are under study.	Not assigned.	Hold for next review.

[redacted]

Table 3-30. In-Flight Test System and In-Flight Maintenance Concept Design Review Board Action (Cont)

Action Item	Description of Task	Action By	Status
5. A numerical statement of crew capability is required. Also required is a detailed definition of the in-flight maintenance tasks associated with the IFTS concept. a. If each of the in-flight maintenance tasks are not defined in precise detail (time and motion study), how can it be determined whether the crew has the capability of performing them? b. If the above is done, will it be possible to put a numerical value on crew capabilities?	a) Time and motion studies are being prepared which, when completed, should provide sufficient data for analysis. These studies reveal that the arrangement of the lower equipment bay is such that unrealistic penalties are put upon the crew in performing in-flight maintenance activities. The need for a study was established to list specific discrepant areas. This study is to be presented to management as a basis for redirection if the results so indicate. b) This is unfeasible.	Reliability, Electronic Installations, and Life Systems	Under investigation.

[redacted]

Table 3-30. In-Flight Test System and In-Flight Maintenance Concept Design Review Board Action (Cont)

Action Item	Description of Task	Action By	Status
6. Certain complex in-flight maintenance procedures will require that the crew have detailed maintenance data available. The present method may not be able to handle all of the data required. Have methods other than film cartridge and G&N viewer been studied?	Other methods have been studied. One of these, designed by the National Cash Register Co., appears feasible and its possible procurement should be studied. However, since Associate Subcontractor MIT is involved, this study should be made in conjunction with S&ID's Associate Subcontractor Administration. Results of this study are to be submitted to management for possible redirection.	Reliability, Life Systems, and the Associate Subcontractor Manager	Under investigation.

Table 3-30. In-Flight Test System and In-Flight Maintenance Concept Design Review Board Action (Cont)

Action Item	Description of Task	Action By	Status
7. No handholds nor restraint systems have been provided for the crewmember when he has to remove and replace LEB TELCOM packages (which are close to the right-hand equipment bay). Can handholds and/or restraint systems be implemented to provide the crewmember with body stabilization when he is performing package removal and replacement activities?	A study should be made of possible methods of body stabilization. The findings could provide a basis on which design action could be taken.	Reliability GSE Analysis, Life Systems, and Structures	Under investigation.
8. Due to the present placement of the LiOH canister retaining structure in front of the LEB (Lower Equipment Bay), there is a space between this structure and the LEB into which tools or other small objects can become lodged and difficult to remove. Can a redesign be initiated to resolve this problem?	Removal of sharp corners, edges, etc., would increase crew safety and would be weight saving as well.	CM Structural Design	Under investigation.

Table 3-30. In-Flight Test System and In-Flight Maintenance Concept Design Review Board Action (Cont)

Action Item	Description of Task	Action By	Status
9. There is some tendency for a crewmember under weightless conditions to overshoot when aiming or positioning objects. This overshooting may occur when the crewmember attempts to position the multipurpose tool in the wedge-clamp and center screw lock connector apertures on each LEB SCS and TELCOM package. Can each aperture be redesigned to facilitate the positioning of the multipurpose tool during inflight maintenance tasks?	The feasibility of redesign is to be studied, and remedial action will be implemented if indicated.	Electronic Installation	Under investigation.
10. The present placement of the fecal canister creates an obstacle to the body movement of a crewmember in a spacesuit when he is removing and replacing LEB TELCOM packages. How can this problem be resolved?	A redesign study should be made.	CM Structural Design and Life Systems	Under investigation.

Table 3-30. In-Flight Test System and In-Flight Maintenance Concept Design Review Board Action (Cont)

Action Item	Description of Task	Action By	Status
11. Considerable wear on the spacesuit gloves was noticed at the end of a three-to-four hour simulation (related to LEB electronic module removal and replacement). This wear, on the underside of the left and right spacesuit gloves was caused by using the mockup tools. How will the gloves be protected from wear caused by using hand tools?	This problem should be brought to the attention of Associate Subcontractor, Hamilton Standard.	Life Systems and Associate Subcontractor Administration	Under investigation.

~~CONFIDENTIAL~~

It has been noted that no handholds or restraint systems have been provided for the crewmember when maintenance is being performed under zero-g loading. A task analyses for zero-g conditions will be performed.

The present method of loosening and tightening the wedge clamp on the lower equipment bay (LEB) SCS and C&D packages requires the crewmember to perform a blind adjustment. The use of such a clamp was dictated by weight considerations.

To loosent the wedge clamps and screw lock connectors, it is necessary to rotate some clockwise and others counter-clockwise. This statement is believed to be erroneous; however, if this condition does exist, the multi-purpose tool is equipped with a ratchet, thus, the direction of rotation is not significant.

The work table in the LEB is used for the preparation of food, biomedical uses, and as a work bench for repairing electronic packages. The basic design of the table is virtually frozen, but means of securing packages to the table are being studied.

Due to the present placement of the LiOH canister retaining structure in front of the LEB, there is a space between this structure and the LEB into which tools or other small objects could become lodged and difficult to remove. This problem is presently under study.

Crewmembers tend to overshoot in the positioning of the multi-purpose tool during zero-g conditions while using it on the wedge clamp and center screw lock connector apertures. A facility for aiding in the positioning of the tool would be desirable, but it is not considered an essential item and would result in a weight penalty.

The placement of the fecal canister creates an obstacle to the body movements of a space-suited crewmember when he is removing and replacing the LEB and C&D packages. This problem is being studied at the present time.

TEST PROGRAM

IFTS

A specification for the procurement of an IFTS has been drawn. Bid proposals have been received and evaluated. NASA approval of a selected subcontractor is expected any day. Meantime, a tentative qualification test

schedule has been established calling for qualification of the system to be completed 8 months after receipt of the order. The first design review will occur 3 months after receipt of order.

Control Panel

Procurement specifications have been generated for securing bids for the meters, switches, rheostats, and barometric indicators which will be used in the assembly of the control panel.

Antennas

VHF/2 KMC Scimitar Antenna

Pattern tests were continued on the 2-KMC scimitar antennas. Test effort applicable to the VHF scimitar antennas consisted of experimental work to improve the impedance characteristics and to develop a suitable matching device.

The dielectric constant and loss tangent of two ablator materials were measured at 450 mc and 2.2 KMC in the uncharred condition at ambient room temperature and at 300 F.

R&D Telemetry Antenna

The qualification test program on the R & D telemetry antenna equipment was successfully completed by Transco Products, Inc. on 30 April 1963. During the qualification tests, the antenna failed during the temperature vacuum test. The teflon spacers could not take the stress that resulted from the differential pressure of 15 psi applied to the sides of the antenna. The screws that attached the spacers to the walls pulled out of the teflon. After a few attempts by Transco to correct this deficiency, S&ID suggested the installation of a pressure relief port that would allow the pressure to equalize, yet would protect the interior from the effects of weather. The final configuration passed all tests, and the necessary rework was performed on all delivered items.

VHF/2-KMC R&D Antenna and Radome

The qualification test program was initiated during this quarter with the humidity tests.

HF Recovery Whip Antenna

The recovery whip antenna became entangled in the parachute shroud lines in four out of six tests. The problem is being investigated, and corrective action will be initiated.

Recovery Antenna Equipment

The recovery antenna equipment is undergoing development testing.

R&D VHF Multiplexer

The qualification test program was completed on the R&D VHF multiplexer equipment. The unit was supplied by Rantec Corp., for Collins Radio, with testing subcontracted to Wyle Test Laboratories. The qualification test report has been received and reviewed. Test environments to which the test units were subjected included vibration, high temperature, mechanical shock, altitude, low temperature, and off-limit vibration. The electrical functional tests included channel isolation, VSWR, bandwidth and insertion loss, and high-power operational tests.

The acceptance test data sheets have been reviewed and approved for the deliverable R&D VHF Multiplexer.

R&D VHF Omni Antenna

The acceptance test data sheets have been received, reviewed, and approved for the deliverable R&D VHF omni-antenna equipment. The acceptance was comprised of low amplitude vibration, VSWR measurements, and visual inspection for workmanship, weight, finish, etc.

PLANNED ACTIVITIES

Reliability apportionments will be made for approximately 300 channels which provide sensory data for on-board display and/or telemetry. This apportionment will be made to determine if the various combinations of transducers, signal conditioners, and display equipment exhibit the requisite high reliability. Matrices have been constructed with the various mission phases of the LOR mission and the various sensory channels as coordinates. These matrices will be transmitted to the cognizant S&ID design engineering group for execution. The matrices will be used to determine consequence of neutral and spurious failures in the sensory channels according to mission phase so that ramifications of these failures on crew safety reliability can be determined.

During the coming quarter, it is anticipated that a contract will be negotiated for procurement of an IFTS and that simultaneously engineering development of such a system will be complete.

Since the control panel assembly will be fabricated by S&ID from parts qualified by various suppliers to Apollo standards, a modified qualification test plan will be developed for the panel assembly that will eliminate duplication of qualification testing but nevertheless will assure a qualified integral assembly.

Development tests will continue through August 1963 on the VHF/2 KMC scimitar antenna and through July 1963 on the recovery antenna equipment.

The qualification tests will be completed during the next quarter on the UHF/2-KMC R&D antenna and radome.

Table 3-22. Boilerplate No. 6 Failure Effects Analysis

Item	Quantity	Elect. Reference. Desig.	Failure Detection	Function	Failure Type	Mission Phase	Failure Effect On Component Performance	Failure Effect On Sub-Systems Performance	Failure Effect On Apollo	Possible Crew Action
Power and control box, 20-cell battery 60-amp hours 1.1.1.2.0	1 each	1.5.1.1.0 SD510,051		28-v d-c power and distribution	Battery plates or terminals failure		No power output		Lose all data	
Junction box	1 each	1.8.1.1.0 SD510,056		Distribution of power; umbilical connection	Open or short		No power output		Lose all data	
Accelerometer, linear	6 each	2.8.1.1.1, 5 and 7 (4310) (4 of 15)		Acceleration measurements	Open, short, wrong range		No output or bad signal		No acceleration information	
Accelerometer, vibration	6 each	2.19.1.2.1 (Endevco 28153)		Vibration measurements	Open, short, wrong range		No output or bad signal		No vibration information	
Gyro, attitude	3 each	2.4.1.2.1 (S 3416 DVC-07)		CM attitude data	Open, short, wrong range		No output or bad signal		No attitude data	
Gyro package, rate	1 each	2.3.1.1.1 (16128) (VA-3-10)		CM rate of rotation data	Open, short, wrong range		No output or bad signal		No rates	
Thermometer, resistance	4 each	2.24.2.2.1 (T40802C-B) 2.18.2.2.2 Includes 2.24.2.1.2 and 2.11.1.2.2 2.18.2.2.1 Includes 2.24.2.1.1 and 2.11.1.2.1 2.18.2.2.1 Includes 2.24.2.3.1 and 2.11.1.2.1		Nose temperatures; one other temperature	Open, short, wrong range		No output or bad signal		No temperatures	
Transducer, pressure	42 each	2.7.1.5.4 (36 each) (Wianco P2-3236-3) 2.7.1.5.2 (4 each) (Wianco same) 2.7.1.2.1 (2 each)		Pressure measurements	Open, short, wrong range		No output or bad signal		No pressures	

[redacted]

Table 3-22. Boilerplate No. 6 Failure Effects Analysis (Cont)

Item	Quantity	Elect. Reference. Desig.	Failure Detection	Function	Failure Type	Mission Phase	Failure Effect On Component Performance	Failure Effect On Sub-Systems Performance	Failure Effect On Apollo	Possible Crew Action
Q-ball thermostats and heaters		ME901-0014 (Nortronics F16A) (Complete Q-ball)		Angle of attack, angle of sideslip, dynamic ram pressure measurements	Open, short, wrong temperature		Q-ball stops putting out a signal		No aerodynamic data	
Q-ball pressure transducer	3 each				Open, short, blocked orifice		Same		Same	
Q-ball transducer excitation	3 each				Open, short, power failure		No excitation		Same	
Q-ball preamplifier and amplifier	3 each				Open, short, bad transistor		No signal output		Same	
Q-ball demodulator	3 each				Open, short		No signal output		Same	
28-v d-c inverter (for Q-ball)	1 each				Open, short		No power output		Same	
A-c amplifier for vibration transducers	6 each			Vibration measurements	Open, short, bad transistor		No signal, noisy signal		No vibration data	
D-c amplifier for temperature transducers	4 each	2.11.1.1.0 (EM 2000D-1)		Temperature measurements	Open, short, bad transistor		No signal, noisy signal		No temperature data	
D-c amplifier	1 each	2.11.1.1.0 (EM 2000D-1) 2.11.1.1.1		Current measurements	Open, short, bad transistor		No signal, noisy signal		No current information	
Signal conditioning box	1 each	2.12.1.1.0 (CH 150)		Convert signals to 0-5 v dc	Open or short		No output		No telemeter; get vibration on tape	
Sequencer	1 each			Events data to VCO's	Open, short		No output		No data on sequencing of events	
Data timer (clock)	1 each	5.2.1.1.0		Timing pulses	Open, short		No output; weak output		Data not timed, still can be used	
5-volt reference	1 each			Standard for signal conversion	Open, short, voltage change		Signal not converted to proper range		Data lost or degraded	
Voltage controlled oscillator (PAM)	16 each	3.8.1.1.0 Subcarrier assembly		Modulate signals onto carriers	Open, short		No signal or incorrect frequency		Data lost or scrambled	
Commutator (90 channel) 900 cps DPDM out, PAM also out	1 each			Time division for pulse modulation	High-contact resistance; cycling rate off		Stops or loses some channels; maybe intermittent		Data lost or degraded	
Mixer-amplifier	2 each			Same	Same		Same		Same	
50-kc compensation oscillator (for tape recorder)	1 each	4.12.1.1.0 telemeter RF assembly		Time base to correct for tape speed	Open, short, or frequency determining if elements change values		No output or improper frequency		Data not timed on tape; maybe telemeter OK	

[redacted]

Table 3-22. Boilerplate No. 6 Failure Effects Analysis (Cont)

Item	Quantity	Elect. Reference. Desig.	Failure Detection	Function	Failure Type	Mission Phase	Failure Effect On Component Performance	Failure Effect On Sub-Systems Performance	Failure Effect On Apollo	Possible Crew Action
Transmitter modulator (solid state)	1 each	2.8.1.1.0 (TATP 316)		RF transmitter first section	Open, short, or weak tube		No signal or poorly modulated signal		No telemeter or partial only	
RF exciter, 2-watt 1 vacuum tube, ceramic tetrode	1 each	2.12.1.1.0 (TATP 316)		Second section	Same		Same		Same	
RF amplifier, 10-watt 1 vacuum tube, glass	1 each	Same		Final	Same		Same		Same	
Bandpass filter	1 each			Output cleanup	Open, short, or components change value		No signal or attenuated signal		No telemeter or degraded telemeter	
Power divider	3 each	MD481-0001-0003		Split RF power to antennas	Open or short		Same		Same	
Coaxial cable	4 each	ME481-0001-0002		Carries RF power	Same		Same		Same	
Antenna	4 each	MD481-0001-0001		For 360-degree coverage	Lose antenna		Not 360-degree coverage		No telemeter	
Coaxial cable	2 each	MD481-0001-		Carries RF power	Open or short		No signal or attenuated		No telemeter or degraded telemeter	
Airborne tape recorder	1 each	5.1.1.1.0 B16-754000		To record vibration, all telemeter	Tape break; noisy head		No record or poor record		Tape data lost; no vibration data; may get other data by telemeter	

~~CONFIDENTIAL~~

Table 3-24. Directional Subsystem, Proton Failure Effects Analysis (Cont)

Item	Drawing Number	Elect. Reference. Desig.	Failure Detection	Function	Failure Type	Mission Phase	Failure Effect On Component Performance	Failure Effect On Sub-Systems Performance	Failure Effect On Apollo	Possible Crew Action
Indicator, imbalance, two in all (one for each quad)				Indicate imbalance so astronauts can reorient spacecraft to produce balance, thus interposing fuel tanks between the crew compartment and the direction from which the protons are arriving	Open, short, intermittent, failed indicating element	Translunar through transearth	Inoperative or intermittent	Inoperative	Cannot detect direction of solar protons	Use dosimeters; if one quad is still operable, it can replace the other by a 90-degree rotation of the spacecraft about its X axis
Coaxial cabling and matching connectors				Connects all packages	Open, short, intermittent	Translunar through transearth	Inoperative or intermittent	Inoperative	Cannot detect direction of solar protons	Use dosimeters; if one quad is still operable, it can replace the other by a 90-degree rotation of the spacecraft about its X axis
Internal power supply, one only				Convert 28 v dc to about 100 v dc; regulates 28 v dc	Open, short, voltage deviation	Translunar through transearth	Inoperative or intermittent	Inoperative	Cannot detect direction of solar protons	Use dosimeters
Pulse generator, one only				Provide calibration pulses to the amplifiers; not used in flight	Open, short, failed part	Translunar through transearth	Inoperative or intermittent	None	None	None required

~~CONFIDENTIAL~~

Table 3-25. In-Flight Test System Failure Effects Analysis

Item	Drawing Number	Elect. Reference Desig.	Failure Detection	Function	Failure Type	Mission Phase	Failure Effect On Component Performance	Failure Effect On Sub-Systems Performance	Failure Effect On Apollo	Possible Crew Action
In-flight test system power supply				Furnishes d-c power for the IFTS	Open or shorted	Orbit	IFTS fails unless redundant power supply available; meter may have independent power supply allowing measurements to be made manually	Loss of fault isolation capability unless meter has own power supply	None, unless loss of any of the following: (1) FM-transmitter (2) Signal conditioner (3) PCM telemetry then abort is necessary	None, unless standby power supply is provided and requires manual switching
Reference supply				Furnishes the reference voltage to the voltage comparators	Open or shorted	Orbit	Loss of IFTS capability unless redundant supply meter can still be used	Semi-automatic malfunction isolation capability lost	If no redundant supply available, see above	Switch to redundant supply if available; if not, rely on meter for malfunction diagnosis
Voltage comparator (225 individual)				Compares the checkpoint voltage with a reference voltage to determine if monitored point indicates a malfunction	Open, shorted, or in error	Orbit	Loss of single (or more) measurement	Loss of the associated equipment measurement point		Failed measurement channel discovered through self test; utilize voltmeter to determine if monitored voltage is within specified tolerance levels; possibility of employing a universal spare comparator
Voltmeter: Meter				Provides the ability to make direct readings of all test points; anticipated design allows monitoring of all GSE access points in LEB through access cable and switching matrix; allows identification of malfunction to single card	Open, shorted, or inoperative	Orbit	Loss of capability to quantitatively define a malfunction	None, unless a voltage comparator has failed (and no spares available), then loss of a measurement point; also loss of monitoring of all GSE access points	None, unless a comparator measuring either a-FM transmitter, b-PCM and signal conditioner, or sensor of associated equipment fails, then abort	None
Switching				Scale selection and GSE point selection	Open, shorted, or inoperative	Orbit	Loss of GSE point monitoring			None

[redacted]

Table 3-23. High-Gain Antenna Failure Effects Analysis

Item	Drawing Number	Elect. Reference. Desig.	Failure Detection	Function	Failure Type	Mission Phase	Failure Effect On Component Performance	Failure Effect On Sub-Systems Performance	Failure Effect On Apollo	Possible Crew Action
High-gain antenna				Fulfills the antenna requirements for Apollo S-band communications in deep space						
Antenna elements (radiators and end-fire directors)				Radiation, reflection and detection of 2-kmc RF range.	Structural breakage or degradation due to environment	From translunar coast through transearth injection	Reduces the DB gain as each element fails; loss if structural failure	Gain may be reduced to a point where the antenna would be considered failed	None, unless failure of the discone antenna or the S-band power amplifier occurs during near-earth phases, then abort	Switch to discone antenna
Antenna structure				Provides support for the antenna elements	Structural breakage	From translunar coast through transearth injection	Fails	Antenna fails	None, unless failure of the discone antenna or the S-band power amplifier occurs during near-earth phases, then abort	Switch to discone antenna
Power dividers (a) 3-way (b) 4-way (c) 5-way				Divides power as shown below during medium beam and high-gain modes. (a) Divides power to 4-way power dividers (b) Divides power to 36-inch radiators (c) Divides power to 18-inch radiators and to 5-inch radiator	Structural breakage or loss of the hermetic seal	From translunar coast through transearth injection	Reduces signal gain	Failure of additional dividers or elements on the other dividers will cause failure or loss of antenna	None, unless failure of the discone antenna or the S-band power amplifier occurs during near-earth phases, then abort	None
Beam selection switch				Provides for capability of selecting a particular beam width	Failure, closed position	From translunar coast through transearth injection	Operation is possible in the frozen beam width mode only	Operation is restricted	Restricted operation of the high-gain antenna	None
					Open	From translunar coast through transearth injection		Loss of the antenna	None, unless failure of the discone antenna or the S-band power amplifier occurs during near-earth phases, then abort	None
Gimbal and servo structure elevation shaft				Shaft required for elevating the antenna	Bends	From translunar coast through transearth injection	None	None	None	None

[redacted]

Table 3-23. High-Gain Antenna Failure Effects Analysis (Cont)

Item	Drawing Number	Elect. Reference. Desig.	Failure Detection	Function	Failure Type	Mission Phase	Failure Effect On Component Performance	Failure Effect On Sub-Systems Performance	Failure Effect On Apollo	Possible Crew Action
Gimbal and servo structure elevation shaft				Shaft required for elevating antenna	Breaks	From translunar coast through transearth injection	None	Loss of whole antenna or servo	None, unless failure of the discone antenna or the S-band power amplifier occurs during near-earth phases, then abort	None
Elevation bearing				Provides easier means of moving the antenna	Binds	From translunar coast through transearth injection	Loss of gimbal motion	Restricted operation	Refer to crew action	May require the repositioning of spacecraft for effective operation of the antenna
Elevation trunion or the azimuth structure				Provides support	Fracture	From translunar coast through transearth injection	Partial to complete loss of performance	None, unless complete loss occurs, then loss of antenna occurs	None, unless complete loss occurs, then the same effect as that described under antenna elements	
Azimuth bearing				Provides ease of gimbal movement	Binds	From translunar coast through transearth injection	Loss of gimbal movement	Restricted operation	Refer to crew action	May require the repositioning of spacecraft for effective operation of the antenna
Rotary joints and interconnecting line				Provides for electrical connection	Short	From translunar coast through transearth injection		Loss of antenna	None, unless failure of the discone antenna or the S-band power amplifier occurs during near-earth phases, then abort	None
Rotary joints and interconnecting line					Arcing	From translunar coast through transearth injection	Reduced performance, higher noise	None, unless arcing continues to a point where loss of antenna occurs	None, unless loss of antenna occurs, then the same effect as that described under antenna elements	None
Motor				Drives the gimbal and the sensor	Open or short	From translunar coast through transearth injection	Loss of one motor	None; use the standby motor	None	None

Table 3-23. High-Gain Antenna Failure Effects Analysis (Cont)

Item	Drawing Number	Elect. Reference. Desig.	Failure Detection	Function	Failure Type	Mission Phase	Failure Effect On Component Performance	Failure Effect On Sub-Systems Performance	Failure Effect On Apollo	Possible Crew Action
Slip rings				Provides electrical rotary connection	Break in brush or structure breakage	From translunar coast through transearth injection	Loss of one ring	None, use the redundant ring	None	None
Servo amplifier				Provides signal amplification	Failure of component	From translunar coast through transearth injection	Loss of one amplifier	None; use the standby amplifier	None	None
Sensors, optical				Provides automatic tracking of earth	Failure	From translunar coast through transearth injection	Loss of one sensor	None; use the redundant sensor	None	None

Table 3-24. Directional Subsystem, Proton Failure Effects Analysis

Item	Drawing Number	Elect. Reference. Desig.	Failure Detection	Function	Failure Type	Mission Phase	Failure Effect On Component Performance	Failure Effect On Sub-Systems Performance	Failure Effect On Apollo	Possible Crew Action
Detectors, radiation, solid state; four directional pairs, coupled in two quads				Produce electrical pulse when struck by particle or proton	Open, short intermittent, sensor deteriorated misaligned, or overheated	Translunar through transearth	Inoperative or intermittent	Inoperative	Cannot detect direction of solar protons	Use dosimeters, if one quad is still operable, it can replace the other by a 90-degree rotation of the spacecraft about its X axis
Amplifier, eight in all (one for each detector)				Amplify pulses from detectors	Open, short, intermittent, failed transistor	Translunar through transearth	Inoperative or intermittent	Inoperative	Cannot detect direction of solar protons	Use dosimeters; if one quad is still operable, it can replace the other by a 90-degree rotation of the spacecraft about its X axis
Discriminator, eight in all (one for each detector)				Reject wrong sized pulses, pass right sized ones	Open, short, intermittent, failed transistor	Translunar through transearth	Inoperative or intermittent	Inoperative	Cannot detect direction of solar protons	Use dosimeters; if one quad is still operable, it can replace the other by a 90-degree rotation of the spacecraft about its X axis
Coincidence circuit, four in all (one for each pair of sensors)				Pass pulses only when received from both members of a pair of sensors, so as to give directionality	Open, short, intermittent, failed transistor	Translunar through transearth	Inoperative or intermittent	Inoperative	Cannot detect direction of solar protons	Use dosimeters; if one quad is still operable, it can replace the other by a 90-degree rotation of the spacecraft about its X axis
Rate meter, four in all (one for each coincidence circuit)				Convert time rate of reception of pulses into an analog voltage	Open, short, intermittent, failed diode or capacitor	Translunar through transearth	Inoperative or intermittent	Inoperative	Cannot detect direction of solar protons	Use dosimeters; if one quad is still operable, it can replace the other by a 90-degree rotation of the spacecraft about its X axis
Analog subtractor, two in all (one for each quad)				Difference amplifiers which produce a signal proportional to the inbalance in output of two sensor pairs 180-degree apart	Open, short, intermittent, failed diode or capacitor	Translunar through transearth	Inoperative or intermittent	Inoperative	Cannot detect direction of solar protons	Use dosimeters; if one quad is still operable, it can replace the other by a 90-degree rotation of the spacecraft about its X axis

CONFIDENTIAL

Table 3-25. In-Flight Test System Failure Effects Analysis (Cont)

Item	Drawing Number	Elect. Reference. Desig.	Failure Detection	Function	Failure Type	Mission Phase	Failure Effect On Component Performance	Failure Effect On Sub-Systems Performance	Failure Effect On Apollo	Possible Crew Action
Stimulus generator				Provides the self-test ability stimuli, and timing for monitoring	Inoperative	Orbit	Loss of ability to monitor equipments not operating	None, unless loss of redundant generator fails, then loss of IFTS occurs	None, unless loss of the IFTS occurs with a failure of any one of following: FM transmitter, pulse code modulation telemetry, sensor then abort.	May require the crew to switch from one stimulus generator to the second; voltmeter can be used for diagnosis
Amplifier				Provides low-impedance output for the telemetry and the voltmeter, and high impedance for the inputs of some signals	Open or shorted	Orbit	Loss of amplifier	None, unless loss of redundant amplifier fails; if this occurs, then the telemetry and voltmeter capability will be lost	None	Upon failure of one amplifier, the voltmeter may be used for diagnosis of failed amplifier
Switching circuitry				Provides for selection of particular voltage comparators, as well as enabling the use of redundant modes	Open or shorted	Orbit	Loss of switching	Could mean loss of IFTS or the ability to select particular voltage measuring points	None, unless failure of any one of the following occurs: FM transmitter, pulse code modulation telemetry, sensors, and central timing equipment then abort	None

CONFIDENTIAL

Table 3-26. Alert Subsystem, Solar Radio Noise Failure Effects Analysis

Item	Drawing Number	Elect. Reference. Desig.	Failure Detection	Function	Failure Type	Mission Phase	Failure Effect On Component Performance	Failure Effect On Sub-Systems Performance	Failure Effect On Apollo	Possible Crew Action
Antenna				Receives solar radio noise and transmits it to the subsystem; if the subsystem is mounted in the service module, it will have its own antenna; if mounted in the command module, it will share an antenna with other equipment, with resulting degradation of signal-to-noise level	Antenna lost, damaged, grounded, or disconnected	All except boost and reentry	Inoperative or intermittent	Inoperative	No warning of solar flare; no effect on mission, because protons will not reach spacecraft in earth orbit	Depend on GOSS for flare warning
RF modulator				Has local noise source; chops antenna noise source and local source producing alternate segments at a rate far from that of internal gain fluctuations	Open, short, failed part	All except boost and reentry	Inoperative or intermittent	Inoperative	No warning of solar flare; no effect on mission because protons will not reach spacecraft in earth orbit	None; depend on GOSS for flare warning
Local oscillator, varactor multiplier				Produces a high-frequency signal	Open, short, failed part	All except boost and reentry	Inoperative or intermittent	Inoperative	No warning of solar flare; no effect on mission because protons will not reach spacecraft in earth orbit	None; depend on GOSS for flare warning
Mixer assembly				Heterodynes modulation output down to intermediate frequency	Open, short, failed part	All except boost and reentry	Inoperative or intermittent	Inoperative	No warning of solar flare; no effect on mission because protons will not reach spacecraft in earth orbit	None; depend on GOSS for flare warning
IF preamplifier				Amplifies mixer output	Open, short, failed part	All except boost and reentry	Inoperative or intermittent	Inoperative	No warning of solar flare; no effect on mission because protons will not reach spacecraft in earth orbit	None; depend on GOSS for flare warning
RF balance driver				Produces calibrated voltage	Open, short, failed part	All except boost and reentry	Inoperative or intermittent	Inoperative	No warning of solar flare; no effect on mission because protons will not reach spacecraft in earth orbit	None; depend on GOSS for flare warning

[redacted]

Table 3-26. Alert Subsystem, Solar Radio Noise Failure Effects Analysis (Cont)

Item	Drawing Number	Elect. Reference. Desig.	Failure Detection	Function	Failure Type	Mission Phase	Failure Effect On Component Performance	Failure Effect On Sub-Systems Performance	Failure Effect On Apollo	Possible Crew Action
RF balance unit				Determines range measured by fixing zero point	Open, short, failed part	All except boost and reentry	Inoperative or intermittent	Inoperative	No warning of solar flare; no effect on mission because protons will not reach spacecraft in earth orbit	None; depend on GOSS for flare warning
Video amplifier				Heterodynes balance unit output down to video frequency, amplifies it	Open, short, failed part	All except boost and reentry	Inoperative or intermittent	Inoperative	No warning of solar flare; no effect on mission because protons will not reach spacecraft in earth orbit	None; depend on GOSS for flare warning
Reference generator				Produces modulator chopping frequency	Open, short, failed part	All except boost and reentry	Inoperative or intermittent	Inoperative	No warning of solar flare; no effect on mission because protons will not reach spacecraft in earth orbit	None; depend on GOSS for flare warning
Phase detector				Separates segments of local noise from antenna noise	Open, short, failed part	All except boost and reentry	Inoperative or intermittent	Inoperative	No warning of solar flare; no effect on mission because protons will not reach spacecraft in earth orbit	None; depend on GOSS for flare warning
D-c amplifier and integrator				Amplifies signal and integrates it to produce 0-5-volt signal	Open, short, failed part	All except boost and reentry	Inoperative or intermittent	Inoperative	No warning of solar flare; no effect on mission because protons will not reach spacecraft in earth orbit	None; depend on GOSS for flare warning
Display and alarm				Displays noise level; gives alarm when level is high	Open, short, failed part	All except boost and reentry	Inoperative or intermittent	Inoperative	No warning of solar flare; no effect on mission because protons will not reach spacecraft in earth orbit	None; depend on GOSS for flare warning
Cabling and matching connectors				Connects all packages	Open, short, failed part	All except boost and reentry	Inoperative or intermittent	Inoperative	No warning of solar flare; no effect on mission because protons will not reach spacecraft in earth orbit	None; depend on GOSS for flare warning

[redacted]

Table 3-27. Television Camera Subsystem Failure Effects Analysis

Item	Drawing Number	Elect. Refer-ence. Desig.	Failure Detection	Function	Failure Type	Mission Phase	Failure Effect On Component Performance	Failure Effect On Sub-Systems Performance	Failure Effect On Apollo	Possible Crew Action
Television camera subsystem				The camera provides the capability of viewing the crew during launch and power flight, the display panels, and the earth and moon through the module window				Loss of TV will not effect any other subsystem	Loss of noted functions; no effect on mission success	
TV lens (a) Interior (wide range)				Used for viewing crew	Physical damage due to environment	All	Loss of one objec-tive		Loss of visual observation of crew	None
(b) Long range				Used for viewing the earth or the moon	Same	Orbit			Documention capability lost	Use wide-range lens; good detail not available, however
Automatic iris				Provides for the automatic control of lens opening by sensing illumination levels, thus providing for a better image pick-up ability; used only while viewing inside the CM	Same	All	Picture quality degraded		None	Vary interior lighting rheostat or manually ad-just lens opening
Vidicon				Camera tube for picking-up the visual image to be transmitted	Physical damage	All	Loss of vidicon		Loss of the monitoring and documentation capability	None
					Degradation	All	Loss of picture quality		Picture quality degraded	None
Video amplifier				Provides preamplification for initial voltage gain, peaking circuit to compensate for the high-frequency roll-off caused by the preamplifi-cation; amplifier to provide the desired gain and band width clamp to restore the d-c component level	Open or short	All	Loss of TV		Loss of TV functions	None
Power supply				Provides the power for the TV subsystem	Open or short	All	Same		Same	None
Deflection circuits				Sawtooth generator and a differential amplifier, which provide for the deflection of the electron beam	Open or short of either the vertical or the horizontal, or both	All	Same		Same	None
Sync circuits				Provides for the triggering of the retrace and blanking functions	Open or short of either the vertical or the horizontal, or both	All	Same		Same	None

[redacted]

Table 3-27. Television Camera Subsystem Failure Effects Analysis (Cont)

Item	Drawing Number	Elect. Reference. Desig.	Failure Detection	Function	Failure Type	Mission Phase	Failure Effect On Component Performance	Failure Effect On Sub-Systems Performance	Failure Effect On Apollo	Possible Crew Action
Video processing and sync insertion				Provides for the sync adding, the filtering of the signals, and the switching and gating required	Open or short	All	Loss of TV		Loss of TV functions	None
Oscillator				Provides the 3.2 kc frequency used to obtain frame and line scan	Open or short	All	Same		Same	None

[redacted]

Table 3-28. Central Timing Equipment Failure Effects Analysis

Item	Alternate Procedure	Elect. Reference. Desig.	Failure Detection	Function	Failure Type	Mission Phase	Failure Effect On Component Performance	Failure Effect On Sub-Systems Performance	Failure Effect On Apollo	Possible Crew Action
1. PMP (key)	1. Voice									
2. PCM telemetry 512 kc	2. Internal oscillator in PCM telemetry									
3. PACE	3. Mission hold									
4. A-C power inverter No. 1	4. Internal oscillator in inverter circuit									
5. A-C power inverter No. 3	5. Internal oscillator in inverter circuit									
6. A-C power inverter No. 3	6. Internal oscillator in inverter circuit									
7. Up-data link	7. AGC; voice link									
8. Display No. 1	8. None									
9. Display No. 2	9. None									
10. Display No. 3	10. None									
11. PCM telemetry 1 cps	11. Will function without external 1 cps									
12. Time code to display (GMT)	12. Clock									
13. PCM telemetry time code	13. None									
14. Photographic equipment time code	14. None									

Table 3-28. Central Timing Equipment Failure Effects Analysis (Cont)

Item	Alternate Procedure	Elect. Reference. Desig.	Failure Detection	Function	Failure Type	Mission Phase	Failure Effect On Component Performance	Failure Effect On Sub-Systems Performance	Failure Effect On Apollo	Possible Crew Action
Internal oscillator				Provides 512 kc to PMP key, PCM telemetry, PACE, and 64-kc frequency divider	Open, short, frequency drift, oscillator power supply out	All	Redundant, two internal oscillators and one external oscillator; CTE inoperative if any two of the three fail	No CTE inputs to items 1 - 14	None, must rely on alternates	None
Frequency divider, 64 kc				Frequency division: provides 64 to 32 kc and 6.4-kc frequency dividers	Open, short, no trigger, extraneous trigger	All	Redundant; no 64-kc output if any two of the three fail	No CTE inputs to items 4 - 14	None, must rely on alternates	None
Frequency divider, 32 kc				Frequency division: provides 32 to 8-kc frequency divider	Open, short, no trigger, extraneous trigger	All	Redundant; no 32-kc output if any two of the three fail	No CTE inputs to items 7 - 14	None, must rely on alternates	None
Frequency divider, 8 kc				Frequency division: provides 8 kc to up-data link and 4 kc frequency divider	Open, short, no trigger, extraneous trigger	All	Redundant; no 8-kc output if any two of the three fail	No CTE inputs to items 7 - 14	None, must rely on alternates	None

Table 3-28. Central Timing Equipment Failure Effects Analysis (Cont)

Item	Alternate Procedure	Elect. Reference. Desig.	Failure Detection	Function	Failure Type	Mission Phase	Failure Effect On Component Performance	Failure Effect On Sub-Systems Performance	Failure Effect On Apollo	Possible Crew Action
Frequency divider, 6.4 kc				Frequency division: provides 6.4 kc to a-c power inverters	Open, short, no trigger, extraneous trigger	All	Redundant; no 6.4 kc output if any two of three fail	No CTE inputs to items 4 - 6	None, must rely on alternates	None
Frequency divider, 4 kc				Frequency division: provides 4- to 1-kc frequency divider	Open, short, no trigger, extraneous trigger	All	Redundant; no 4-kc output if any two of the three fail	No CTE inputs to items 8 - 14	None, must rely on alternates	None
Frequency divider, 1 kc				Frequency division: provides 1 kc to 100 cps frequency divider	Open, short, no trigger, extraneous trigger	All	Redundant; no 1-kc output if any two of the three fail	No CTE inputs to items 8 - 14	None, must rely on alternates	None
Frequency divider, 100 cps				Frequency division: provides 100- to 10-cps frequency divider	Open, short, no trigger, extraneous trigger	All	Redundant; no 100-cps output if any two of the three fail	No CTE inputs to items 8 - 14	None, must rely on alternates	None
Frequency divider, 10 cps				Frequency division: provides 10- to 1- cps frequency divider	Open, short, no trigger, extraneous trigger	All	Redundant; no 10-cps output if any two of the three fail	No CTE inputs to items 8 - 14	None, must rely on alternates	None

~~CONFIDENTIAL~~

Table 3-28. Central Timing Equipment Failure Effects Analysis (Cont)

Item	Alternate Procedure	Elect. Reference. Desig.	Failure Detection	Function	Failure Type	Mission Phase	Failure Effect On Component Performance	Failure Effect On Sub-Systems Performance	Failure Effect On Apollo	Possible Crew Action
Frequency divider, 1 cps				Frequency division; provides 1 cps to displays, PCM telemetry and seconds time accumulator	Open, short, no trigger, extraneous trigger	All	Redundant; no 1-cps output if any two of the three fail	No CTE inputs to items 8 - 14	None, must rely on alternates	None
Power supply				Provides +6 v dc to CTE subassemblies	Open, short	All	Redundant, two power supplies in parallel; CTE inoperative if both fail	No CTE inputs to items 1 - 14	None, must rely on alternates	None
Comparator, 512 kc				Compares three 512-kc sources (one external, two internal); allows output if any two are in coincidence	Open, short	All	No 512-kc output	No CTE inputs to items 1 - 14	None, must rely on alternates	None
Comparator, 64 kc				Compares three 64-kc frequency dividers; allows output if any two are in coincidence	Open, short	All	No 64-kc output	No CTE inputs to items 4 - 14	None, must rely on alternates	None
Comparator, 32 kc				Compares three 32-kc frequency dividers; allows output if any two are in coincidence	Open, short	All	No 32-kc output	No CTE inputs to items 7 - 14	None, must rely on alternates	None
Comparator, 8 kc				Compares three 8-kc frequency dividers; allows output if any two are in coincidence	Open, short	All	No 8-kc output	No CTE inputs to items 7 - 14	None, must rely on alternates	None
Comparator, 6.4 kc				Compares three 6.4 kc frequency dividers; allows output if any two are in coincidence	Open, short	All	No 6.4-kc output	No CTE inputs to items 4 - 6	None, must rely on alternates	None
Comparator, 4 kc				Compares three 4-kc frequency dividers; allows output if any two are in coincidence	Open, short	All	No 4-kc output	No CTE inputs to items 8 - 14	None, must rely on alternates	None
Comparator, 1 kc				Compares three 1-kc frequency dividers; allows output if any two are in coincidence	Open, short	All	No 1-kc output	No CTE inputs to items 8 - 14	None, must rely on alternates	None

~~CONFIDENTIAL~~

Table 3-28. Central Timing Equipment Failure Effects Analysis (Cont)

Item	Alternate Procedure	Elect. Reference. Desig.	Failure Detection	Function	Failure Type	Mission Phase	Failure Effect On Component Performance	Failure Effect On Sub-Systems Performance	Failure Effect On Apollo	Possible Crew Action
Comparator, 100 cps				Compares three 100-cps frequency dividers; allows output if any two are in coincidence	Open, short	All	No 100-cps output	No CTE inputs to items 8 - 14	None, must rely on alternates	None
Comparator, 10 cps				Compares three 10-cps frequency dividers; allows output if any two are in coincidence	Open, short	All	No 10-cps output	No CTE inputs to items 8 - 14	None, must rely on alternates	None
Comparator, 1 cps				Compares three 1-cps frequency dividers; allows output if any two are in coincidence	Open, short	All	No 1-cps output	No CTE inputs to items 8 - 14	None, must rely on alternates	None
Amplifier, 512 kc				Signal amplification	Open, short, bad transistor	All	No 512-kc output	No CTE inputs to items 1 - 14	None, must rely on alternates	None
Amplifier, 64 kc				Signal amplification	Open, short, bad transistor	All	No 64-kc output	No CTE inputs to items 4 - 14	None, must rely on alternates	None
Amplifier, 32 kc				Signal amplification	Open, short, bad transistor	All	No 32-kc output	No CTE inputs to items 7 - 14	None, must rely on alternates	None
Amplifier, 8 kc				Signal amplification	Open, short, bad transistor	All	No 8-kc output	No CTE inputs to items 7 - 14	None, must rely on alternates	None
Amplifier, 6.4 kc				Signal amplification	Open, short, bad transistor	All	No 6.4-kc output	No CTE inputs to items 4 - 6	None, must rely on alternates	None
Amplifier, 4 kc				Signal amplification	Open, short, bad transistor	All	No 4-kc output	No CTE inputs to items 8 - 14	None, must rely on alternates	None
Amplifier, 1 kc				Signal amplification	Open, short, bad transistor	All	No 1-kc output	No CTE inputs to items 8 - 14	None, must rely on alternates	None
Amplifier, 100 cps				Signal amplification	Open, short, bad transistor	All	No 100-cps output	No CTE inputs to items 8 - 14	None, must rely on alternates	None
Amplifier, 10 cps				Signal amplification	Open, short, bad transistor	All	No 10-cps output	No CTE inputs to items 8 - 14	None, must rely on alternates	None

Table 3-28. Central Timing Equipment Failure Effects Analysis (Cont)

Item	Alternate Procedure	Elect. Reference. Desig.	Failure Detection	Function	Failure Type	Mission Phase	Failure Effect On Component Performance	Failure Effect On Sub-Systems Performance	Failure Effect On Apollo	Possible Crew Action
Amplifier, 1 cps				Signal amplification	Open, short, bad transistor	All	Partial 1-cps output	Amplifier No. 1; no CTE inputs to items 12 - 14	None, must rely on alternates	None
				Signal amplification	Open, short, bad transistor	All	Partial 1-cps output	Amplifier No. 2; no CTE inputs to items	None, must rely on alternates	None
Buffer, PMP (key)				Provides isolation between CTE and PMP (key)	Open, short, bad transistor	All	No 512 kc to PMP (key)		None, must rely on voice	None
Buffer, PCM telemetry, 512 kc				Provides isolation between CTE and PCM telemetry	Open, short, bad transistor	All	No 512 kc to PMP telemetry		None, must rely on 512-kc oscillator in PCM telemetry	None
Buffer, PACE				Provides isolation between CTE and PACE	Open, short, bad transistor	Prelaunch	No 512 kc to PACE		Mission hold	Hold
Buffer, inverter No. 1				Provides isolation between CTE and inverter No. 1	Open, short, bad transistor	All	No 6.4 kc to inverter No. 1		None, must rely on 400-cps oscillator in inverter circuit	None
Buffer, inverter No. 2	1 each			Provides isolation between CTE and inverter No. 2	Open, short, bad transistor	All	No 6.4 kc to inverter No. 2		None, must rely on 400-cps oscillator in inverter circuit	None

~~CONFIDENTIAL~~

Table 3-28. Central Timing Equipment Failure Effects Analysis (Cont)

Item	Alternate Procedure	Elect. Reference. Desig.	Failure Detection	Function	Failure Type	Mission Phase	Failure Effect On Component Performance	Failure Effect On Sub-Systems Performance	Failure Effect On Apollo	Possible Crew Action
Buffer, inverter No. 3				Provides isolation between CTE and inverter No. 3	Open, short, bad transistor	All	No 6.4 kc to inverter No. 3		None, must rely on 400-cps oscillator in inverter circuit	None
Buffer, Up-data link				Provides isolation between CTE and up-data link	Open, short, bad transistor	All	No 8 kc to up-dater link		None, must relay on GNC or voice link	None
Buffer, display No. 1				Provides isolation between CTE and display No. 1	Open, short, bad transistor	All	No 1 cps to display No. 1			None
Buffer, display No. 2				Provides isolation between CTE and display No. 2	Open, short, bad transistor	All	No 1 cps to display No. 2			None
Buffer, display No. 3				Provides isolation between CTE and display No. 3	Open, short, bad transistor	All	No 1 cps to display No. 3			None
Buffer, PCM telemetry, 1 cps				Provides isolation between CTE and PCM telemetry	Open, short, bad transistor	All	No 1 cps to PCM telemetry		None, PCM telemetry will function without the external 1 cps	None
Time accumulator, seconds				Seconds counter: provides time code and input to seconds x 10 accumulator	Open, short, no trigger, extraneous trigger	All	Redundant; no time code signal if any two of the three fail	Faulty time code to display, PCM telemetry, photographic equipment	None, must rely on alternates	None
Time accumulator, seconds x 10				Seconds x 10 counter: provides time code and input to minutes accumulator	Open, short, no trigger, extraneous trigger	All	Redundant; no time signal if any two of the three fail	Faulty time code to display, PCM telemetry photographic equipment	None, must rely on alternates	None
Time accumulator, minutes				Minutes counter: provides time code and input to minutes x 10 accumulator	Open, short, no trigger, extraneous trigger	All	Redundant; no time code signal if any two of the three fail	Faulty time code to display, PCM telemetry photographic equipment	None, must rely on alternates	None
Time accumulator, minutes x 10				Minutes x 10 counter: provides time code and input to hours accumulator	Open, short, no trigger, extraneous trigger	All	Redundant; no time code signal if any two of the three fail	Faulty time code to display, PCM telemetry photographic equipment	None, must rely on alternates	None

~~CONFIDENTIAL~~

Table 3-28. Central Timing Equipment Failure Effects Analysis (Cont)

Item	Alternate Procedure	Elect. Reference. Desig.	Failure Detection	Function	Failure Type	Mission Phase	Failure Effect On Component Performance	Failure Effect On Sub-Systems Performance	Failure Effect On Apollo	Possible Crew Action
Time accumulator, hours				Hours counter: provides time code and input to hours x 10 accumulator	Open, short, no trigger, extraneous trigger	All	Redundant; no time code signal if any two of the three fail	Faulty time code to display, PCM telemetry, photographic equipment	None, must rely on alternates	None
Time accumulator, hours x 10				Hours x 10 counter: provides time code and input to days accumulator	Open, short, no trigger, extraneous trigger	All	Redundant; no time code signal if any two of the three fail	Faulty time code to display, PCM telemetry, photographic equipment	None, must rely on alternates	None
Time accumulator, days				Days counter: provides time code and input to days x 10 accumulator	Open, short, no trigger, extraneous trigger	All	Redundant; no time code signal if any two of the three fail	Faulty time code to display, PCM telemetry, photographic equipment	None, must rely on alternates	None
Time accumulator, days x 10				Days x 10 counter; provides time code	Open, short, no trigger, extraneous trigger	All	Redundant; no time code signal if any two of the three fail	Faulty time code to display, PCM telemetry, photographic equipment	None, must rely on alternates	None
Comparator, time accumulator				Compares corresponding binaries in three time accumulator subassemblies; allows output if any two of the three are in coincidence	Open, short	All	Partial time code signal	Faulty time code to display, PCM telemetry, photographic equipment	None, must rely on alternates	None
Amplifier time accumulator				Signal amplification	Open, short, bad transistor	All	No time code signal, faulty signal	Faulty time code to display, PCM telemetry, photographic equipment	None, must rely on alternates	None
Buffer, time accumulator				Provides isolation between time accumulator and external load	Open, short, bad transistor	All	No time code signal, faulty signal	Faulty time code to display, PCM telemetry, photographic equipment	None, must rely on alternates	None

STABILIZATION AND CONTROL

SUMMARY

The delayed receipt of detailed design data on the mechanization of the stabilization and control systems (SCS) has hampered S&ID reliability activities and has resulted in acute program schedule slippage. Although the subcontractor was directed to provide S&ID with a failure effects analysis, the data were delinquent and insufficient for rigorous investigations. The delayed design activities also have resulted in slippage in S&ID parts review activities because of insufficient parts usage data from the subcontractor.

ANALYSIS

Failure Effects Analysis

The failure effects analysis on the SCS at the subassembly level, which was performed in its entirety by S&ID, is shown in Table 3-31 at the end of this section. The data will be used to establish critical functional modes encompassing SCS equipment and to provide verification of proper test point selection for on-board display and telemetering of system status.

Rendezvous and Docking Study

The reliability estimate on the stabilization and control subsystem during LEM transportation and lunar orbit rendezvous and docking is shown in Table 3-32. This estimate was performed in support of the System Integration CM-LEM Docking Study Plan of Action.

Thrust Vector Control (TVC) Circuits

A study on the thrust vector control circuits was performed. The configurations shown in Table 3-33 were considered.

Configurations 1 and 2 depict the criticality of the thrust vector control circuitry where the loss of the TVC would preclude the attainment of crew safety objectives. With crew safety and abort criteria objectives in mind, it was recommended that some form of redundancy be utilized on the subassembly level.

~~CONFIDENTIAL~~

Table 3-32. LEM Transposition Study

Component	Reliability	
	LEM Transposition (t = 0.50 hr)	Lunar Orbit Rendezvous and Docking (t = 7.70 hr)
Translational control - redundant	0.999999	0.999999
Three-axis rotational control - redundant	0.999999	0.999999
Body-mounted attitude gyro	0.999684	0.995131
Rate gyro package	0.999689	0.995356
Electronic control assembly-attitude control	0.999933	0.998975
Reaction jet drivers - SM	0.999999	0.999999
Total	0.999303	0.989493

Note: This estimate does not include previous operating times of this equipment.

Table 3-33. Thrust Vector Control Circuit Configurations

Configuration	Predicted Reliability		
	Present	Spared	Redundant
1. Safe abort, Thrust Vector Alignment (TVA)			
2. Safe abort, ΔV			
3. TVA	0.999862		
4. TVA		0.999910	
5. TVA			0.999910
6. G&N, ΔV	0.999904		
7. G&N, ΔV		0.999910	
8. SCS, ΔV	0.999888		
9. SCS, ΔV		0.999910	
10. SCS/G&N, ΔV, I			0.999907
11. SCS/G&N, ΔV, II			0.999907

~~CONFIDENTIAL~~

Configurations 3, 4, and 5 compare the alignment of the Service Module (SM) engine gimbals. Configuration 4 uses sparing to achieve redundancy, while configuration 5 portrays operational redundancy.

Configurations 6 and 7 compare the Guidance and Navigation (G&N) Delta V modes of operation.

Configurations 8 through 11 compare the SCS Delta V modes of operation, showing redundancy achieved with sparing and two configurations with operational redundancy for the SCS/G&N mode.

The constraints to be considered in achieving redundancy when comparing sparing to operational redundancy is that sparing assumes there is time available to perform in-flight maintenance, while operational redundancy considers down time against switching complexity. Operational redundancy configurations did not consider switching because of the lack of switching configuration at this time. A nominal operating time of 1 hour was used to compare the configurations.

A form of redundancy in the thrust vector control circuitry was recommended to remove any critical series elements and to conform to the abort criteria. The configurations to be considered are: 4 and 5 for thrust vector alignment and configurations 10 and 11 utilizing the aforementioned constraints. Utilizing a nominal time of 2.5 minutes for a thrusting period gives a reliability of 0.999995. This high reliability is not felt to be the controlling factor in adding redundancy, due to the catastrophic nature of a failure occurring during thrusting. The automatic mode of switching is recommended to reduce a trajectory error that increases with time following a failure. Manual switching depends on the man being able to isolate the failure prior to switching; consequently it results in a larger trajectory error when compared to automatic switching.

Critical Apollo Stabilization and Control Subsystem Electronic Component

A study was performed on the critical Apollo stabilization and control subsystem electronic components to indicate the increase in their reliability by sparing. A substantial increase was indicated, as shown in Table 3-34. Because of the time criticality of these components, further studies are in progress to ensure the ultimate gain in the safe abort requirement.

SPECIAL STUDIES

The following special studies were performed during the past quarter in support of the contract negotiations with the stabilization and control subsystem subcontractor.

Table 3-34. Critical Apollo Stabilization and Control Subsystem Electronic Components

Component	Subassembly	Predicted Reliabilities	
		Without spares	With spares
Engine thrust	Engine thrust	0.999999863401	0.9999999999
	Subtotal	0.999999863401	0.9999999999
Electronic control assembly-thrust vector control	Monitor and filter - pitch channel	0.9999482253	0.9999999973
	Monitor and filter - yaw channel	0.9999482253	0.9999999973
	Integrator - pitch channel	0.999900260896	0.9999999901
	Integrator - yaw channel	0.999900260896	0.9999999901
	Subtotal	0.9996970057	0.9999999748
Control panel	Channel disable	0.98407026	0.9999993194
	Deadband adjust	0.9920684	0.9999999175
	Mode select	0.9957068	0.9999999869
	Subtotal	0.9720737	0.9999992238
Display power source	Universal miscellaneous	0.992091126	0.9999999182
	Universal power supply	0.9998078608	0.9999999631
	Subtotal	0.991900506	0.9999998813
Gimbal position indicator	Gimbal position indicator electronics	0.999735127	0.9999999298
	Gimbal position indicator	0.999703711	0.999999892
	Subtotal	0.999438916	0.999999822
	Total	0.96333522	0.999998902

A study was performed by S&ID to determine the additional costs incurred due to utilization of high reliability electronic parts. The study, performed in support of the contract negotiations with Minneapolis-Honeywell (MH), did not support the costs that MH included in its December cost proposal. Extensive negotiations with Minneapolis-Honeywell on the cost of high-reliability parts resulted in a reduction of the Minneapolis-Honeywell December quote.

As a result of questions raised by NASA concerning possible duplication of effort in the MH cost proposal, S&ID performed an additional analysis of the seven major task groupings of the MH cost proposal. The analysis spread out the total scope of documentation, reliability training, reliability analysis, preferred parts program, design review, test integration and assessment and production coordination. The analysis supported the original S&ID evaluation of the MH cost proposal and satisfactorily answered the questions of the NASA team.

TEST PROGRAM

The following tests and test analyses have been performed and reported during the past quarter:

1. Breadboard development tests of operational amplifiers, switching amplifiers, reaction jet drivers, thrust vector control amplifiers, power supply, flip-flop circuits, and Delta V oscillators to determine stability and performance under both ambient and design modifications in some areas to achieve desired performance.

2. Life tests on components of the miniature integrating attitude gyros were continued. The spin motor rotational detector, pickoffs, and spin motors have undergone 20-weeks of testing without failure. These development tests will determine the life expectancy of the gyro.

3. Life tests on FDAI components also were continued. A slip ring assembly completed 331 hours of cycling without failure.

4. Parameter variation testing was completed on the Delta V pulsed multivibrator circuit and testing is continuing on additional circuits.

5. Checkout of the first bench maintenance test console Module DUG 1600 A1 was initiated and is approximately 25-percent complete.

6. Considerable effort was expended in receiving, installation, and checkout of the various components of the SPS engine inertia simulator at S&ID.

SUBCONTRACTOR MANAGEMENT

Subcontractor Coordination

The subcontractor performed failure effects analyses at the subassembly level. The analyses were to indicate the following: (1) subassembly name, (2) drawing number, (3) function, (4) failure types, (5) effect of each failure type on equipment's performance, and (6) effects of each type of failure on the subsystem's performance. S&ID received analyses which encompass the probable types of failures in the most critical phases of the mission.

S&ID has partially completed the review of non-standard parts and specifications submitted for approval by Minneapolis-Honeywell. S&ID requested that the subcontractor initiate the following items:

1. The connector manufactured by Lionel Corporation and covered by specifications 983862 and D983862 is not acceptable for usage in Apollo. Disapproval stems from the following considerations:

   a. Open entry sockets

   b. No provision for shrouding the pins

   c. Pin engagement allowed prior to full guide engagement

   d. Jack screws mounted directly in Dially Phthalate without reinforcement.

The Cannon Miniature D or equivalent is suggested for a suitable replacement.

2. Because of the unreliability of relays and potentiometers, justification will be required prior to approval. Until receipt of such justification and subsequent approval, no relays and potentiometers are approved for Apollo usage due to their anticipated high failure rates when subjected to spacecraft environments.

C~~ONFIDENTIAL~~

Parts and Parts Specifications

The following comments on specification requirements of the Apollo program were presented to the subcontractor.

Connectors, Electrical

The design of the failure rate verification test does not appear to represent the major application feature of electrical connectors, viz., several makes and breaks of the connector. Therefore, it would be desirable to consider the insertion of several assembly cycles prior to extensive load life testing.

Variable Resistors

Specification D951553 appears to exhibit no major problem.

Specification D955368 is completely inadequate. Not even the basic characteristics of noise and total resistance are controlled by limits or tolerances. The resolution requirement limits are not stated. This is thought to be the basic purpose of specifying the special alloy wire Sigmund Cohn Corporation Alloy No. 479.

The Bourns Model 224P-500, covered by Specification D951553, is a satisfactory choice if its usage and application can be justified.

The Waters JP/2-164 is a special model of a standard low-cost commercial item. Until the specification (as noted above) is clarified and the application is known, judgment shall be withheld. Basically, the special wire has a TC of 240 PPM versus a standard of 20 PPM. Cycle life will be shortened, and, if dithering occurs (for application or vibration frequency resonance), high noise levels will result. These wire characteristics make it imperative to know the application prior to the evaluation.

Relays

Specification 952548 lacks in requiring some basic relay characteristics, such as (1) operating time, (2) contact bounce, (3) minimum coil power pulse, etc., and also does not clearly limit some others, such as the leak rate and coil resistance measurement temperature.

Specification 944082 also lacks some clarity, especially in the reference to ". . . electrical and environmental requirements of MIL-R-5757/10, except contact bounce." Many other characteristics are deviated (coil resistance, pull-in, etc.) in other statements which makes

~~CONFIDENTIAL~~

for contradiction and confusion. It is thought that some performance checks of the relay should be conducted after the run-in (burn-in).

The limiting of contact current to 1 milliamp should be clarified to include supplier housed test. Also, the voltage should be limited. A suggested level is 15 microamps at 30 millivolts.

Specification 951739 has not been surveyed in detail, but the following has been noted:

1. 500-ohm contact resistance should be limited if contact current is dc; a 50-ohm level would be more applicable to a-c contact current. These levels are high due to the accuracy limits as the measuring equipment.

2. A minimum coil power pulse time to operate the relay should be specified.

3. Operate time and contact bounce should be added to the incoming inspection tests.

4. The contact current should be limited for all tests on relays to be supplied.

In general, the parts are thought to be satisfactory, but applications should be limited in conjunction with the mounting brackets and configuration.

1. A four-hole side plate is recommended over the two hole (example: Style 0951739).

2. A thicker bracket is recommended (example: Style A941739).

3. The Style G of 944082 is not recommended.

4. Style F of 944082 at one time caused considerable humidity and salt spray problems, but new developments may have overcome this deficiency. Further investigation is recommended.

Semiconductors

The evaluation of the transistor and diode specifications is still in progress. Two areas of question are immediately apparent:

1. Leak Testing for Semiconductor Components

   a. The 100-percent bomb test as specified is detrimental to the reliable performance of the unit.

   b. The acid bomb test should be further defined in the specifications to the test method. Comment on this will be withheld pending clarification.

   c. A helium or radiflo leak rate test is recommended. Every Hi-Rel transistor and diode should be tested to ensure conformance

2. Test Sequence

   After conducting 100-percent inspection on visual and mechanical characteristics, the same characteristics are specified in the next test sequence which is conducted on a sampling basis. This condition is not thought to be warranted or justifiable.

To support substantially the acceptance of the stabilization and control subsystem parts and components, such tasks as parameter and stress variation analysis must be performed on all circuits.

During a MH/NAA coordination meeting held on 9 and 10 April 1963, it was learned that MH was performing only one of the assigned tasks of the aforementioned analyses. The MH representative said the stress variation analysis could be performed during the presently planned parameter variation analysis. This approach was agreed upon by S&ID.

S&ID requires that all elements of the circuits utilized in the stabilization and control subsystem be subjected to both analyses for the following reasons:

1. Propagation of failure from one component to another

2. With worst-case buildup of parameter drift in all parts, the subsystem will drift out of the specified performance limits.

3. Individual parts will be operated outside of their environmental conditions and rated voltages.

The following items were discussed at the MH/S&ID coordination meeting on 9 and 10 April 1963.

1. Review of MH logic diagrams and reliability predictions

2. On-board spares recommended by MH

3. Failure effects analyses

4. Stress and parameter variation analyses

5. Qualified and preferred parts lists

6. Procurement of high-reliability parts

7. Development test program

8. Review of parts program

Areas of discussion at a subsequent MH/S&ID meeting were as follows:

1. MH approach to mission success and safe abort

2. Failure effects analysis on AFRM 011

3. Approach to be utilized in approval or disapproval of nonstandard parts and specifications. Minneapolis-Honeywell proposed discussion of: (1) Hughes connectors, (2) 427 M diode, (3) tantalum capacitors (MM failure rates, derating factors, use of 85 C), (4) lamps for push button switches, (5) welded modules, (6) air conditioned assembly area, (7) Electra resistors, and (8) out gassing.

   IDEP index for MH parts test program

4. Use of ML magnetic wire for application in Apollo.

5. Honeywell spares recommendation versus S&ID

   Dynamic programming

   Change in cold plate temperature to 127 F

[redacted]

6. Life Tests

   Environments

   (a) Conducted before design proof tests

   (b) Exceed those of design proof tests

   (c) If life test unit passes and a.p.t. unit fails at a later date. What is to be done?

   Retrofit of life test units

   (a) To be after first cycle (1400 hrs.) on each of the three life tests units

   (b) To be negotiated

   Failures

   (a) Repair to keep test going

   (b) Continue test from point of failure

   (c) Connective action to be identified

7. Review logic diagrams for specific equipment: for example, SCSDV or SCS entry.

   Reliability Models

8. Review deficiencies of the Hughes series connector in Apollo application.

   ECA Chassis Reliability

   (connectors and cables)

   Control Panel Briefing (relays)

9. Selection of mission essential circuits for NAA review.

~~CONFIDENTIAL~~

10. Review parameter and stress variation analysis approach and work completed.

11. Adequacy of parts utilized in signal conditioning equipment — micro-min

12. General Items

    SCS Standardization

    (Equipment nomenclature)

    Format of monthly reliability status report

    Micro-min relays vs. solid state switching

The acceptance and quality test philosophy was reviewed during the preceding quarter and it is expected that negotiations between MH and S&ID will be required during the next quarter to finalize these test programs.

The contract with MH for the stabilization and control subsystem was finalized during the quarter. Reliability support was furnished during the negotiations for the following areas: development, qualification and acceptance test activities; application of and costs associated with high reliability parts; and utilization of ground support equipment. Additional support will be required during the next quarter to negotiate contract changes resulting from program changes since the original December quote.

Subcontractor Activity

During the past quarter, the subcontractor has completed several studies. The following circuits have been subjected to a parameter variation analysis by the subcontractor and have been reported as meeting the performance requirements:

1. Delta V one shot driver

2. D-c amplifier

3. Modulator - servo amplifier

4. D-c Amplifier/Amplifier demodulator

5. Jet selection logic

6. Flip flop switch

7. Amplifier demodulator

8. Servo amplifier

An up-dated parts quantity at the subassembly level has been completed by the subcontractor and forwarded to S&ID for maintenance of continuous reliability assessments on the SCS. A partial parts specification package has been submitted to S&ID for review. Because of the failure of the subcontractor to meet the requirements of the spacecraft environments and reliability specifications, the package has been rejected and returned to the subcontractor for up-dating.

PLANNED ACTIVITIES

The following studies are to be initiated and completed during the next quarter:

1. Simplification of the switching complexity in the SCS subsystem

2. Review of the relay application being used in the SCS subsystem

3. Continuing of parameter and stress variation analysis of mission essential circuits.

4. Continuous review of subcontractor parts and parts specifications for compliance with Apollo requirements

5. Test activity planned for the next quarter indicates continuation of the tests reported during the quarter as well as various electronic parts application suitability and qualification tests.

6. No system or component (black box) qualification test activity has been completed to date or is planned for the following quarter.

Table 3-31. Stabilization and Control Subsystem Failure Effects Analysis

Item	Drawing Number	Elect. Reference. Desig.	Failure Detection	Function	Failure Type	Mission Phase	Failure Effect On Component Performance	Failure Effect On Sub-Systems Performance	Failure Effect On Apollo	Possible Crew Action
Reaction jet summing amplifiers or switching amplifiers (electronic control assembly - ECA)				Process signals to roll, pitch, and yaw jets	Open	Earth-orbital dwell, navigational sightings, platform erection, entry, and thrust vector alignment, ΔV, roll jets only	Loss of output signal	Automatic and normal direct signals do not reach jets.	Loss of automatic and normal rotational control	Use three-axis rotational controls direct during phases other than entry and perform in-flight maintenance
							Loss of output signal	Automatic signals do not reach jets.	Any error in pitch and yaw attitude will result in a rolling motion that will cause a change in orbit	Discontinue firing in-flight maintenance
Driver amplifiers (ECA)				Energize jet solenoids in response to SCS signals	Hardover	All phases	Continuous signal to jets	Jet fails to turn off.	No effect on performance due to deadband; excessive fuel consumption; Possible loss of crew and spacecraft if not detected.	Disable effected axis and use direct control when possible
Yaw rate gyro (rate gyro package - RGP)				Provide yaw damping	Open	Earth-orbital dwell, navigational sightings, platform erection, thrust vector alignment	Loss of output signal	Loss of yaw damping	Spacecraft becomes unstable in yaw.	Go to backup rate if in G&N mode; for other modes use manual controls and in-flight maintenance
Yaw rate gyro (RGP)				Provide yaw damping	Open	Entry	Loss of output signal	Loss of cross coupling between yaw and roll	Vehicle may exceed attitude limits. Possible loss of crew and spacecraft.	Switch to backup yaw rate or manual controls if possible
						G&N ΔV	Loss of output signal	Loss of yaw damping	Gimbal actuator oscillates between yaw stops. Vehicle goes into divergent yaw oscillations. Possible loss of crew and spacecraft.	Must switch to rate back-up within specified time period
						SCS ΔV	Loss of output signal	Loss of yaw damping	Loss of crew and spacecraft	None

~~CONFIDENTIAL~~

Table 3-31. Stabilization and Control Subsystem Failure Effects Analysis (Cont)

Item	Drawing Number	Elect. Reference. Desig.	Failure Detection	Function	Failure Type	Mission Phase	Failure Effect On Component Performance	Failure Effect On Sub-Systems Performance	Failure Effect On Apollo	Possible Crew Action
Yaw rate demodulator (ECA)				Process yaw damping signal	Open	Entry	Loss of output signal	Loss of cross coupling between yaw and roll.	Vehicle may exceed attitude limits. Possible loss of crew and spacecraft.	Direct manual control.
						ΔV	Loss of output signal	Loss of cross coupling between yaw and roll.	Vehicle may go into divergent oscillations. Loss of crew and spacecraft.	None
Yaw rate demodulator (ECA)				Provide yaw damping	Open	Earth-orbital dwell, navigational sightings, platform erection, thrust vector alignment	Loss of output signal	Loss of yaw damping	Spacecraft becomes unstable in yaw	Use manual controls and in-flight maintenance
Yaw body-mounted attitude gyro (BMAG) (attitude gyro acceleration package - AGAP)				Provide yaw displacement signals	Open	G&N entry	Loss of output signal	Loss of rate backup	Loss of rate backup	None if G&N operates properly
						SCS entry	Loss of output signal	Loss of attitude limits and displays	Vehicle may exceed attitude limits. Loss of crew and spacecraft.	Manual controls
						G & N ΔV	Loss of output signal	Loss of rate backup	Loss of rate backup	None
						SCS ΔV	Loss of output signal	Loss of attitude signal to TVC circuits	SPS engine drives hard over. Loss of crew and spacecraft.	None
						Earth-orbital dwell, navigational sighting, platform erection, thrust vector alignment	Loss of output signal	Loss of attitude signal to ECA when in SCS mode; Loss of display when in SCS mode	No hold capability in yaw	1. Use normal manual controls and in-flight maintenance 2. Use G&N internal measuring unit for reference
Pitch rate gyro (RGP)				Provide pitch damping signal	Open	Entry	Loss of output signal	Loss of primary pitch rate mode	Undamped vehicle may exceed entry pitch attitude. Possible loss of crew and spacecraft.	Switch to rate backup or manual controls.

~~CONFIDENTIAL~~

Table 3-31. Stabilization and Control Subsystem Failure Effects Analysis (Cont)

Item	Drawing Number	Elect. Reference Desig.	Failure Detection	Function	Failure Type	Mission Phase	Failure Effect On Component Performance	Failure Effect On Sub-Systems Performance	Failure Effect On Apollo	Possible Crew Action
						G&N ΔV	Loss of output signal	Loss of primary pitch rate mode	Gimbal actuator oscillates between pitch stops. Vehicle goes into divergent pitch oscillations. Possible loss of crew and spacecraft.	Must switch to rate backup within specified time.
						SCS ΔV	Loss of output signal	Loss of pitch damping	Gimbal actuator oscillates between pitch stops. Vehicle goes into divergent pitch oscillations. Possible loss of crew and spacecraft.	None
						Earth-orbital dwell, navigational sightings, platform erection, thrust vector alignment	Loss of output signal	Loss of pitch damping	Spacecraft becomes unstable in pitch.	Go to backup rate if in G&N mode, for other modes use manual controls and in-flight maintenance
Pitch rate demodulator (ECA)				Process pitch damping signal	Open	Entry	Loss of output signal	Loss of pitch damping	Undamped vehicle may exceed entry pitch attitude	Use normal manual controls to supply damping
						ΔV	Loss of output signal	Loss of pitch damping	Gimbal actuator oscillates between pitch stops. Vehicle goes into divergent pitch oscillations. Loss of crew and spacecraft.	None
						Earth-orbital dwell, navigational sighting, platform erection, thrust vector alignment	Loss of output signal	Loss of pitch damping	Spacecraft becomes unstable in pitch.	Use manual controls and in-flight maintenance

~~CONFIDENTIAL~~

Table 3-31. Stabilization and Control Subsystem Failure Effects Analysis (Cont)

Item	Drawing Number	Elect. Reference. Desig.	Failure Detection	Function	Failure Type	Mission Phase	Failure Effect On Component Performance	Failure Effect On Sub-Systems Performance	Failure Effect On Apollo	Possible Crew Action
Coupling display unit demodulators (ECA)				Process G&N signals	Open	All phases using G&N	Loss of output signal	G&N signals not supplied to jets	Loss of G&N capability	Switch to SCS backup or perform in-flight maintenance
Limiter-deadband circuits (ECA)				Limit displacement signals	Open	All phases	No output signals	G&N signals not supplied to jets	Loss of automatic and normal modes	Use direct manual controls
							No output signals	G&N signals not supplied to jets	Loss of automatic and normal modes	Use direct manual controls if possible
							No output signals	SCS signals not supplied to jets	Loss of automatic and normal modes	Use direct manual controls
							No output signals	SCS signals not supplied to jets	Loss of automatic and normal modes	Use direct manual controls if possible
Pitch BMAG (AGAP)				Provide pitch displacement signals	Open	SCS ΔV	No output signal	Pitch attitude error signals are not supplied to SCS thrust vector control circuitry (TVC).	Pitch attitude goes into divergent oscillation.	Switch to G&N mode if possible or stop SPS engine, initiate in-flight maintenance, and re-initiate ΔV if possible; Catastrophic if gimbal drives hardover and firing is not shut down immediately
Pitch BMAG (AGAP)				Provide pitch displacement signals	Open	Earth-orbital dwell, platform, erection, navigational sighting, thrust vector alignment	No output signal	No pitch attitude error signal to jets	Inability to hold spacecraft in pitch	Use G&N internal measuring unit or use manual controls and in-flight maintenance
Pitch BMAG demodulator (ECA)				Process pitch displacement signals	Open	G&N ΔV	No output signal	No backup rate in pitch	No attitude or rate backup in pitch	None if G&N is functioning properly
						SCS & ΔV	No output signal	No backup rate in pitch	No attitude or rate backup in pitch	None if G&N is functioning properly
						Earth-orbital dwell, thrust vector alignment, navigational sighting, platform erection	No output signal	No pitch attitude error signal to jets	Inability to hold spacecraft in pitch	Use G&N internal measuring unit or use manual controls and in-flight maintenance

~~CONFIDENTIAL~~

Table 3-31. Stabilization and Control Subsystem Failure Effects Analysis (Cont)

Item	Drawing Number	Elect. Reference. Desig.	Failure Detection	Function	Failure Type	Mission Phase	Failure Effect On Component Performance	Failure Effect On Sub-Systems Performance	Failure Effect On Apollo	Possible Crew Action
Yaw BMAG demodulator				Process yaw displacement signals	Open	Entry	Loss of output signal	Loss of rate backup in G&N mode and loss of attitude limit capability in SCS mode	Vehicle may exceed attitude limits; possible loss of crew and spacecraft	Use manual controls
						ΔV	Loss of output signals	Loss of rate backup in G&N mode and loss of attitude limit capability in SCS mode	SPS engine drives hard-over; tumbling; loss of crew and spacecraft	None
						Earth-orbital dwell, navigational sighting, platform erection, thrust vector alignment	Loss of output signals	Loss of rate backup in G&N mode and loss of attitude limit capability in SCS mode	Vehicle may exceed attitude limits; possible loss of crew and spacecraft	Use manual controls
Yaw and pitch thrust vector control integrator				Process yaw and pitch displacement, and gimbal position feedback signals	Open	SCS ΔV	Loss of output signals	No center of gravity uncertainty compensation	Steady-state attitude offset that varies as a function of center of gravity displacement	If time is not critical, manually shut down propulsion engine; if time is critical, continue to operate with degraded performance
Yaw and pitch thrust vector control (TVC) summing amplifier (ECA)				Process signals to yaw and pitch gimbals	Open	SCS ΔV G&N ΔV	No signal to gimbal drive	Loss of gimbal holding capability; SPS engine drives to gimbal stops	Vehicle goes hardover; tumbling; loss of crew and spacecraft	None
Yaw and pitch TVC power amplifier (ECA)				Process signals to yaw and pitch gimbals	Open	SCS ΔV G&N ΔV	No signal to gimbal drive	Loss of gimbal holding capability; SPS engine drives to gimbal stops	Vehicles goes hardover; tumbling; loss of crew and spacecraft	Must switch to redundant channel in specified time
TVC position feedback demodulator (ECA)				Process position feedback from gimbal actuator to TVC summing amplifier	Open	SCS ΔV G&N ΔV	Loss of position feedback signal	Loss of gimbal holding capability; SPS engine drives to gimbal stops	Vehicle goes hardover; tumbling; loss of crew and spacecraft	Must switch to redundant channel in specified time
TVC rate feedback demodulator (ECA)				Process rate feedback from gimbal actuator to TVC summing amplifier	Open	SCS ΔV G&N ΔV	Loss of rate feedback signal	Stable, but degraded	Negligible, provided assumed center of gravity is close to actual center of gravity. If not, oscillations may occur before actual center of gravity is obtained, resulting in trajectory error	Switch to redundant channel

~~CONFIDENTIAL~~

Table 3-31. Stabilization and Control Subsystem Failure Effects Analysis (Cont)

Item	Drawing Number	Elect. Reference. Desig.	Failure Detection	Function	Failure Type	Mission Phase	Failure Effect On Component Performance	Failure Effect On Sub-Systems Performance	Failure Effect On Apollo	Possible Crew Action
Rotational control pickoff No. 1 (one each axis) (ECA)				Provide rotational command signals in response to manual stick movement	Open	All phases	No output	Rotational signal fails to reach jets	Vehicle fails to rotate.	Pass control to No. 2 control stick
				Process rotational command signals	Open	All phases	No output	Rotational signal fails to reach jets	Vehicle fails to rotate.	Use direct manual control and perform in-flight maintenance
Roll rate gyro (RGP)				Provide roll damping signal	Open	Monitor S-IVB G&N during launch and trans-lunar inject	No output signal	No roll rate displayed on flight director attitude indicator	No roll rate display for vehicle	Switch to backup rate with use of BMAG
						Entry (G&N)	No output signal	Loss of cross coupling between roll and yaw	Prior to roll-over, slightly damped bank angle transient with 0.6 rad/sec frequency. Large over-shoot occurs at roll-over. Following roll-over, this failure does not cause transients greater than roll dead-band.	Switch to backup rate with use of BMAG
Roll rate gyro (RGP)									Roll jets fire continuously in an effort to follow roll command profile. Excessive fuel is used.	
						Entry (SCS)	No output signal	Loss of cross coupling between roll and yaw	Prior to roll-over, slightly damped bank angle transient with 0.6 rad/sec frequency. Over-shoot at roll-over prevented by pilot providing manual roll attitude control.	Switch to backup rate with use of BMAG
Roll rate gyro (RGP)				Provide roll damping signal	Open	ΔV	No output signal	Negligible pseudo rate provides required roll damping	Degraded performance	None during firing; in-flight maintenance after maneuver
						Earth-orbital dwell, navigational sighting, platform erection, thrust vector alignment	No output signal	Negligible pseudo rate provides required roll damping	Degraded performance	In-flight maintenance - use backup rate BMAG in rate mode

~~CONFIDENTIAL~~

Table 3-31. Stabilization and Control Subsystem Failure Effects Analysis (Cont)

Item	Drawing Number	Elect. Reference. Desig.	Failure Detection	Function	Failure Type	Mission Phase	Failure Effect On Component Performance	Failure Effect On Sub-Systems Performance	Failure Effect On Apollo	Possible Crew Action
Roll rate demodulator (ECA)				Process roll damping signal	Open	Monitor S-IVB, G&N during launch and trans-lunar inject	No output signal	No roll rate display on FDAI	No roll rate display for vehicle	Switch to backup rate with use of BMAG
						Entry (G&N)	No output signal	Same as for roll rate gyro in G&N entry	Same as for roll rate gyro in G&N entry	Same as for roll rate gyro in G&N entry
						Entry (SCS)	No output signal	Same as for roll rate gyro in SCS entry	Same as for roll rate gyro in SCS entry	Same as for roll rate gyro in SCS entry
						ΔV	No output signal	Same as for roll rate gyro	Same as for roll rate gyro	Same as for roll rate gyro
						Thrust vector alignment, navigational sightings, platform erection, earth-orbital dwell	No output signal	Same as for roll rate gyro	Same as for roll rate gyro	Same as for roll rate gyro
Roll BMAG (AGAP)				Provide roll displacement signal	Open	SCS entry	No output signal	Roll displacement signals are not supplied to roll jets prior to 0.05 g. After 0.05 g, the attitude mode is switched out and only the rate mode is used.	Prior to 0.05 g, vehicle does not automatically hold a manually attained roll attitude.	Provide manual roll attitude control
						G&N entry	No output signal	No attitude reference for SCS mode	No backup rate capability in roll when in G&N mode	None while G&N is functioning properly. If roll rate gyro should fail, use manual damping.
						SCS ΔV	No output signal	Roll displacement signals are not supplied to roll jets.	Vehicle does not hold correct roll attitude. Trajectory error may develop as thrust vector changes. Roll damping inhibits changes in roll attitude.	This mode is possible only if the G&N fails; therefore it could be catastrophic if manual roll attitude is not provided.
						Platform erection, earth-orbital dwell, navigational sightings, thrust vector alignment	No output signal	Roll displacement signals not supplied to jets	G&N mode — no backup rate in roll SCS mode — no automatic hold capability	G&N — none SCS — use manual control to hold and IFM

[redacted]

Table 3-31. Stabilization and Control Subsystem Failure Effects Analysis (Cont)

Item	Drawing Number	Elect. Reference. Desig.	Failure Detection	Function	Failure Type	Mission Phase	Failure Effect On Component Performance	Failure Effect On Sub-Systems Performance	Failure Effect On Apollo	Possible Crew Action
Roll BMAG demodulator (ECA-R)				Process roll displacement signal	Open	SCS ΔV	No output signal	Roll displacement signals not supplied to jets	No automatic roll hold capability	Attempt to hold roll manually
						G&N ΔV	No output signal	No SCS automatic roll capability	No roll attitude backup for G&N	None if G&N is functioning properly
						SCS entry	No output signal	Roll displacement signals are not supplied to roll jets prior to 0.05 g. After 0.05 g, the attitude mode is switched out and only the rate mode is used.	Prior to 0.05 g, vehicle does not automatically hold a manually attained roll attitude.	Provide manual roll attitude control
Roll BMAG demodulator (ECA-R)						Thrust vector alignment, earth-orbital dwell, platform erection, navigational sighting	No output signal	Roll displacement signals are not supplied to roll jets.	Vehicle will not hold attitude in roll while in SCS mode.	Use G&N mode if functional. If not, use manual controls for holding.
Gimbal position indicator (altitude set and gimbal position display—AGSPD)				Display and control of gimbal position	Open	Thrust vector alignment	No output signal	No indication of gimbal angles and no capability of nulling to center of gravity	Cannot perform gimbal alignment	In-flight maintenance
Universal power supply and universal misc. (ECA-D)				Power to displays	Open	ΔV	No output signal	SCS displays will not function.	No monitor capability of firing	None if firing is normal; use in-flight maintenance at later time
						Entry	No output signal	SCS displays will not function.	No attitude display	None
						Thrust vector alignment	No output signal	SCS displays will not function.	No attitude or rate display; cannot perform gimbal alignment	In-flight maintenance
						Navigational sightings, platform erection	No output signal	SCS displays will not function.	Only used in tertiary mode	In-flight maintenance
Flight director attitude indicator (FDAI)				Display of attitude error and attitude rate	Open	All phases	No displays	No display of SCS attitude, attitude error and rate	No monitoring of attitude, attitude error and rate	None—used only in tertiary modes

[redacted]

Table 3-31. Stabilization and Control Subsystem Failure Effects Analysis (Cont)

Item	Drawing Number	Elect. Reference. Desig.	Failure Detection	Function	Failure Type	Mission Phase	Failure Effect On Component Performance	Failure Effect On Sub-Systems Performance	Failure Effect On Apollo	Possible Crew Action
Backup entry switch (SCS CP)				Switch circuitry within ECA'S for entry configuration	Open	Entry	Loss of output signal	No change in ECA's configuration	No cross coupling between yaw and roll	Go to manual direct. If accelerometer and level detector function, the backup entry switch is not needed
Level detector (ECA-X)				Detect 0.05 g and perform same function as backup entry switch	Open	Entry	Loss of output signal	No change in ECA's configuration	No cross coupling between yaw and roll	Use backup entry switch
Accelerometer (AGAP)				Sense accelerations in X direction	Open	Entry	Loss of output signal	No change in ECA's configuration	No cross coupling between yaw and roll	Use backup entry switch
						SCS ΔV	No output signal	No X acceleration sensing	No automatic cutoff of ullage maneuver	Use translational controller to cut off ullage
Mode select (SCS CP)				Switch from G&N to SCS modes of operation	Open	All phases	Loss of output signal	No switching capability to another mode	If failure has occurred within present mode, cannot switch to backup; loss of crew and spacecraft	None

IV. GROUND SUPPORT EQUIPMENT ANALYSIS

SUMMARY

The following analyses have been performed on various units of ground support equipment (GSE) during the report period. A summary of the completed analyses follows, and a preliminary reliability prediction is shown in Table 4-1.

1. Failure mode and effect analysis

   A14-003 Pyrotechnic Substitute Unit

   S14-054 Water Glycol Service Unit

   S14-002 Fuel Transfer Unit

   S14-008 Oxidizer Transfer Unit

   S14-005 Water Transfer Unit

   S14-001 Module Leak Test Unit

2. Mandex d-c stress analysis

   Test Conductor Console C14-019

Table 4-1. Preliminary Reliability Prediction

Model	Title	Minimum MTBF Reliability Requirement	Predicted MTBF
C14-019	Test Conductor Console	600	5*
S14-007	Pressurizing Contamination Prevention Unit	600	2042
S14-026	LH_2 Transfer Unit	600	1704

~~CONFIDENTIAL~~

Table 4-1. Preliminary Reliability Prediction (Cont.)

Model	Title	Minimum MTBF Reliability Requirement	Predicted MTBF
S14-032	LO_2 Transfer Unit	600	1704
S14-052	Water Glycol Cooling Unit	600	4203
S14-054	Water Glycol Service Unit	600	2303

*Prediction analysis contained in the Mandex D-C Stress Analysis (see Page 4-81).

~~CONFIDENTIAL~~

ANALYSIS

METHODS

The following analyses are performed on electrical, electro-mechanical, and mechanical circuits to ensure proper design consideration is given to all elements contributing to mission success or crew survival.

1. Failure mode and effect analysis studies are performed on all mission essential equipment to determine critical failure modes that would result in a situation such that GSE would induce failures into the spacecraft or result in the GSE equipment failing to detect a spacecraft failure. As a result of these studies, recommendations for design change studies are made. Table 4-2, Failure Mode and Effect Analysis - GSE, defines, in general terms, criticality, corrective action and failure mode classification.

2. A computer-aided Mandex d-c analysis is performed on all electronic circuitry to determine stress conditions and failures that can occur because of poor design conditions. The stress analysis is used to calculate a predicted reliability number in terms of failure rate by applying the stress parameters obtained to derating factors and failure rate application.

3. A preliminary reliability prediction analysis is performed on all mission essential equipment. These analyses are performed during the initial design stages, and the failure rate data are presented on the system, subsystem, and component level. Failure rate data as presented within these analyses represent the latest state-of-the-art generic failure rates currently in use in the space and missile industry. The analyses, when presented to GSE design personnel, serve as a guide for reliability improvement.

FAILURE MODE AND EFFECT ANALYSIS PROGRAM

Purpose

The main purpose of the failure mode effect analysis technique is to assure that the design of the Apollo GSE is inherently reliable. Objectives of the analysis are to identify and remove all first order failures modes from the dynamic components of all GSE systems (i.e., those that could

cause personnel hazard, undetectable damage to the spacecraft, or fail to detect a spacecraft malfunction) and to increase the capability of detecting good from bad spacecraft equipment during prelaunch checkout.

These analyses will provide the following information and requirements:

1. Identification of GSE failure modes, failure interactions, and effects of these potential failures on the GSE and the spacecraft

2. Fail-safe requirements for GSE components

3. Failure mode cause analysis requirements

4. Reliability recommendations in the initial stages of design

5. Criteria for GSE and component review by the Design Review Board.

Table 4-2 defines criticality categories, failure mode orders, and corrective action classifications. The following page describes the manner in which the GSE failure mode effect analysis worksheets, found in this section, are used.

Worksheets

An explanation of the Failure Mode Effect Analysis worksheets is as follows:

Function Phase

A specific operational or time element of an overall GSE function.

Subsystem, Component or Item

Items listed include only those that are active in a particular function phase (part most likely to fail).

Failure Mode

The most likely mode of equipment malfunction or failure (e.g., "short" or "open" circuit for electrical malfunctions and "closed" or "open" for mechanical valves, etc.).

Table 4-2. Failure Mode and Effect Analysis - GSE
Criticality, Corrective Action, and Failure Mode Classification

Criticality Categories	Failure Mode Order	Corrective Action Classification
Catastrophic	1st Failure of a GSE component which results in personnel hazard or a spacecraft failure, detected or undetected	1. Unit will be out of service, and possibly removed from work area, while failed component is being replaced and cause of failure determined.
Major	2nd Failure of a GSE component which results in temporary delay of servicing or checkout function	2. Unit will be out of service while minor replacement or repairs are being made. It will not be necessary to remove unit from work area.
Minor	3rd Failure of a GSE component which results in little or no delay of servicing or checkout function	3. Minor adjustments will be made while the servicing or checkout function continues.
All others	4th Failure of a GSE component which results in no delay in servicing or checkout function	4. No corrective action required until servicing or checkout function is completed.

Failure Effect on System

The effect of a specific malfunction on the primary GSE system of which the malfunctioning unit is a part (effect of failure on system).

Failure Effect on Other Systems or Subsystems

Failure effect of a specific malfunction on other related GSE system or subsystem (effect of failure on subsystems).

Failure Effect on Function

The effect of a specific malfunction on the GSE system functional requirements, as related to the prime equipment being serviced and/or supported (effect of failure on function).

Remarks

Order of failure, summary of event leading to failure, and supplementary statements qualifying or further defining failure effect.

PYROTECHNIC SUBSTITUTE UNIT (A14-003)

FAILURE EFFECTS ANALYSIS

This section of the report presents the results of a failure mode effects analysis performed on the pyrotechnic substitute unit. The analysis was performed on the subsystems comprising the Squib Simulator and the Explosive Bridge Wire (EBW) Simulator to determine first and second order failure modes that could result in a personnel hazard, undetected spacecraft failures, and the probability of rejecting good spacecraft equipment during a prelaunch checkout. Table 4-3 illustrates the results of the analysis performed on the unit.

FUNCTIONAL DESCRIPTION

The pyrotechnics substitute unit will be used during the prelaunch checkout to simulate the pyrotechnic devices. It has the capability of checking out the firing circuitry and sequence by interfacing with the spacecraft pyrotechnic firing system, exhibiting the proper initiator impedances, measuring the system outputs, and transmitting signals indicative of the adequacy of the measurements to monitoring GSE for evaluation. Figures 4-1 and 4-2 are diagrams of the squib and EBW simulators respectively.

CONCLUSIONS AND RECOMMENDATIONS

Thirteen modes of failure were simulated in the analysis of the squib and EBW simulator systems. Table 4-4 delineates the effects induced by these failure modes. All failures will cause a delay in servicing operations while the units out of service are possibly removed from the work area for the failed component to be replaced and the cause of failure to be determined. Three failure modes would inhibit simulator operation in a manner that would cause the acceptance of bad spacecraft firing units, while one failure mode would cause the rejection of good spacecraft firing units. This would be the outcome with a circuit breaker failure in the squib simulator. A failure of this type would be readily discernible upon the manual resetting of the circuit breaker.

One undetectable failure mode might occur with the shorting of the reference element Zener diode in the EBW simulator. This would short the output of the reference element to ground level and thus allow the comparator to become "true" for any input voltage above ground level. The

Table 4-3. Failure Mode Effect Analysis Summary
Squib and Explosive Bridge Wire Initiator Simulators

	Failure Mode			Corrective Action Classification			Delay Servicing Operation	Halt Servicing Operation	May Accept Bad Spacecraft Equipment	May Reject Good Spacecraft Equipment
	1st	2nd	3rd	1	2	3				
May cause personnel hazard										
May cause undetectable failure		1		1			1		1	
May damage interface systems	4	1		5			5			
May cause detectable failure		7		7			7		2	1
Totals	4	9	0	13	0	0	13	0	3	1

[redacted]

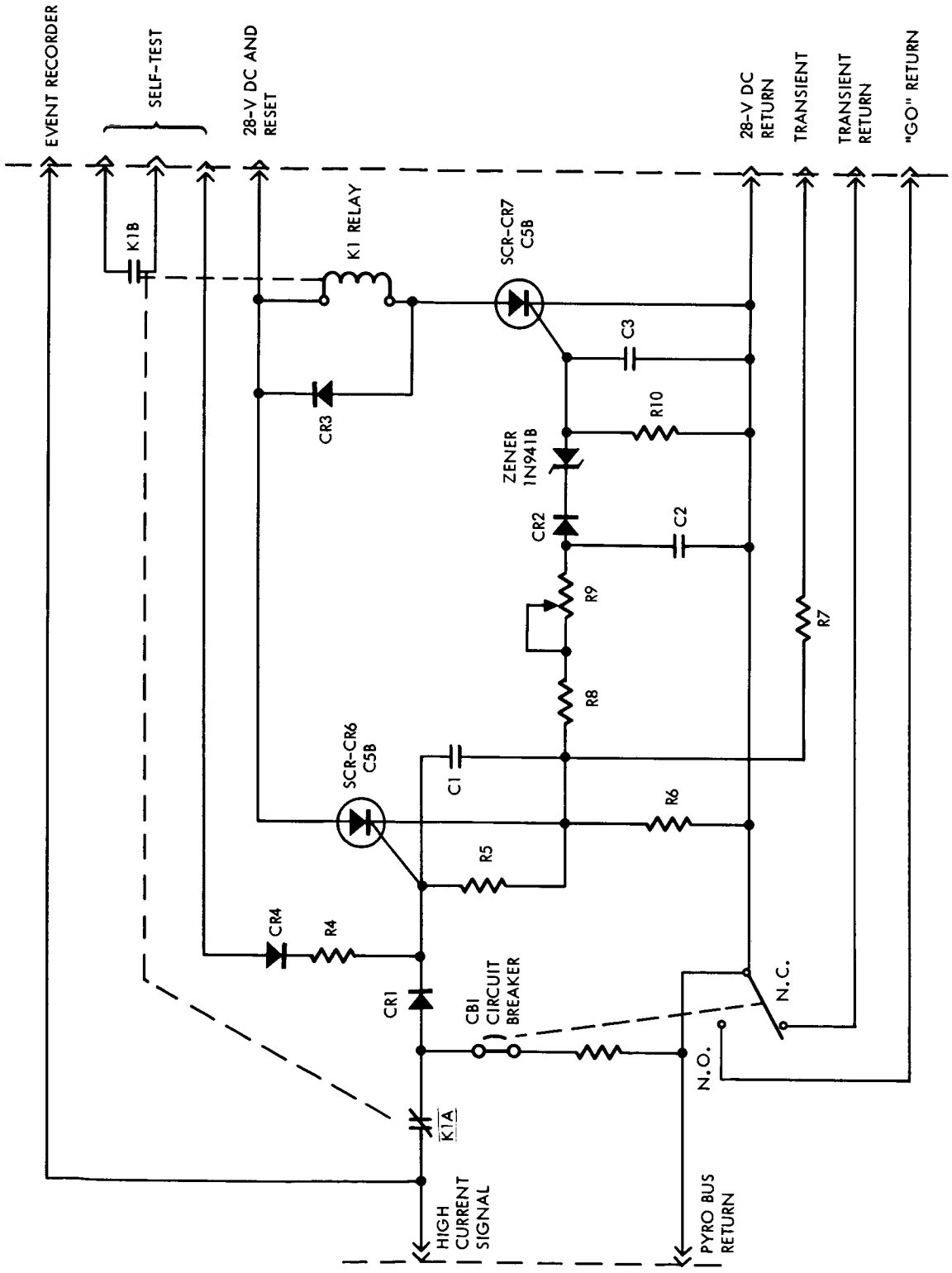

Figure 4-1. Squib Simulator

[redacted]

~~CONFIDENTIAL~~

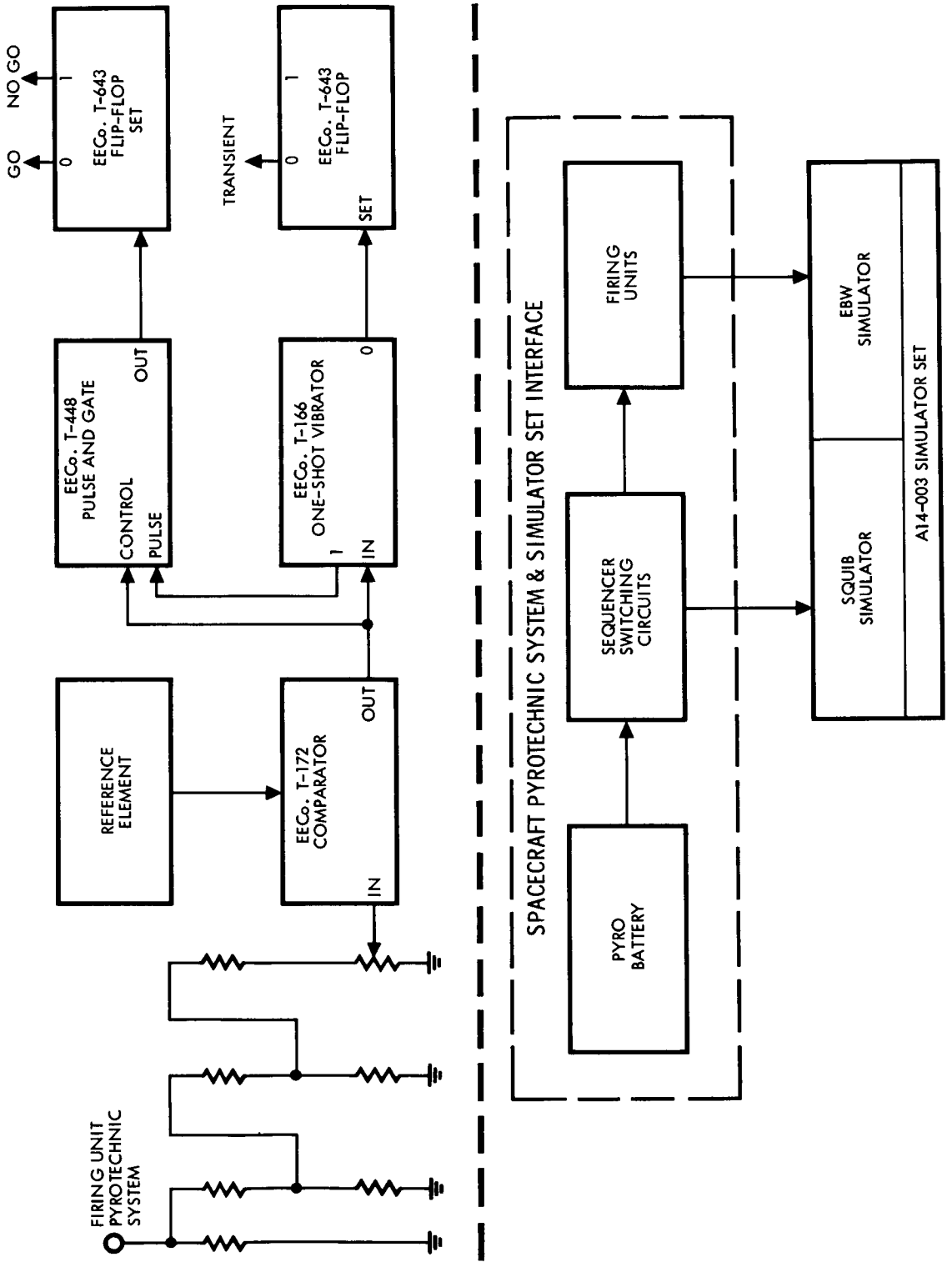

Figure 4-2. Electric Bridge Wire Simulator Block Diagram

~~CONFIDENTIAL~~

simulator could then accept firing pulses of inadequate amplitude if they were of the proper duration. Examination of the Zener's operational characteristics indicate that its worst-case operational stress of approximately 25 milliwatts is well below the maximum rated value of 750 milliwatts. This, plus the fact that the plus-12-volt line should be free from transient surges, precludes the likelihood of a failure in this component. All other failure modes are readily detectable.

Failure of relay K1 of the squib simulator circuitry to close, either through direct failure or through the failure of associated components, would allow its auxiliary contacts K1A to remain closed after the reception of a firing signal from the spacecraft pyro firing unit. This would short the pyro battery to ground for an excessive period of time through a high resistance and might drain the battery power. Relatively high relay and silicon controlled rectifier reliability, plus worst-case component operation well below maximum allowable levels, should preclude the likelihood of relay K1 failure in this circuit.

Because of the high operational reliability of the system subcircuits and components and the ease of failure detectability, should any occur, no design changes are recommended for the pyrotechnic initiator simulator units at this time.

Table 4-4. Squib Simulator, Ground Support Equipment Failure Effects Analysis

Model No. A14-003 Date 16 April 1963

Nomenclature SQUIB SIMULATOR

Function Phase	Subsystem Component or Item	Failure Mode	Failure Effect On			Remarks
			System	Other Systems or Subsystems	Function	
Firing Signal & Transient Detection	Circuit Breaker, CB1	Fails Open	Consistent transient indication no "go" signal regardless of pulse adequacy	None	Would reject good squib firing units	2nd order failure mode — CAC No. 1 (detectable)
		Fails Closed	Consistent "go" indication; no transient indication	None	Would accept bad squib firing units	2nd order failure mode — CAC No. 1 (detectable)
	Signal Conditioner CR6, Motorola C5B	Open (anode to cathode)	CR7 will not fire; relay K1 will not close, shutting off input power.	May drain spacecraft pyro battery	No transient indication	1st order failure mode — CAC No. 1 (Damage to spacecraft battery)

[redacted]

Table 4-4. Squib Simulator, Ground Support Equipment Failure Effects Analysis (Cont)

Model No. A14-003 Date 16 April 1963

Nomenclature SQUIB SIMULATOR

Function Phase	Subsystem Component or Item	Failure Mode	Failure Effect On			Remarks
			System	Other Systems or Subsystems	Function	
Firing Signal & Transient Detection	Signal Conditioner CR6, Motorola C5B	Shorted (anode to cathode)	CR7 will fire; relay K1 will close, preventing a firing signal from tripping circuit breaker. Consistent transient indication.	None	Consistent transient indication	2nd order failure mode — CAC No. 1 (detectable)
	Signal Conditioner CR7, Motorola C5B	Open (anode to cathode)	Relay K1 will not close; input power will not be cut off after signal reception.	May drain spacecraft pyro battery		1st order failure mode — CAC No. 1 (Damage to spacecraft battery)

[redacted]

Table 4-4. Squib Simulator, Ground Support Equipment Failure Effects Analysis (Cont)

Model No. A14-003 Date 16 April 1963

Nomenclature SQUIB SIMULATOR

Function Phase	Subsystem Component or Item	Failure Mode	Failure Effect On			Remarks
			System	Other Systems or Subsystems	Function	
Firing Signal & Transient Detection	Signal Conditioner CR7, Motorola C5B	Shorted (anode to cathode)	Relay K1 will close; no input signals receivable due to auxiliary contacts being open.	None	Firing unit adequacy undeterminable; no outputs received	2nd order failure mode—CAC No. 1 (detectable)
	Relay K1	Coil Open	CR7 will not fire; relay K1 will not close, shutting off input power.	May drain spacecraft pyro battery		1st order failure mode—CAC No. 1 (Damage to spacecraft battery)

Table 4-4. Squib Simulator, Ground Support Equipment Failure Effects Analysis (Cont)

Model No. A14-003 Date 16 April 1963

Nomenclature SQUIB SIMULATOR

Function Phase	Subsystem Component or Item	Failure Mode	Failure Effect On			Remarks
			System	Other Systems or Subsystems	Function	
Firing Signal & Transient Detection	Relay K1	Coil Shorted	Relay K1 may not close, shutting off power. CR7 will fire and may be ever-dissipated.	May drain spacecraft pyro battery		1st order failure mode—CAC No. 1 (Damage to spacecraft battery)
	Zener Diode CR1 - 1N301	Open	Noise spike on firing pulse might open b-c junction of transistor Q1 of comparator.	Comparator output will be "true" all the time.	Go signal is indicated regardless of adequacy of pulse.	Would accept bad firing units 2nd order failure mode—CAC No. 1 (detectable)
		Shorted		Comparator output will be "false" all the time.	No indication of reception of any firing signal whatsoever.	Adequacy of spacecraft firing units undeterminable 2nd order failure mode—CAC No. 1 (detectable)

Table 4-4. Squib Simulator, Ground Support Equipment Failure Effects Analysis (Cont)

Model No. A14-003 Date 16 April 1963

Nomenclature SQUIB SIMULATOR

Function Phase	Subsystem Component or Item	Failure Mode	Failure Effect On			Remarks
			System	Other Systems or Subsystems	Function	
Firing Signal & Transient Detection	Zener Diode (Reference Element Voltage Regulator)	Shorted	Possible over-dissipation of resistor R1	No output from reference element; comparator output "true" for any input voltage greater than 0	See Remarks	Would accept a firing pulse of inadequate amplitude if of the proper duration 2nd order failure mode — CAC No. 1 (undetectable)
	Self-test blocking diode CR4-IN3605	Open	Self-test capability eliminated			Would be unable to test operational adequacy of EBW system 2nd order failure mode — CAC No. 1 (detectable)
		Shorted	None	Transients and firing pulses will be propagated to the auxiliary GSE.	None	2nd order failure mode — CAC No. 1 (detectable - may cause failure to auxiliary GSE)

WATER-GLYCOL SERVICE UNIT (S14-054)

FAILURE EFFECTS ANALYSIS

This section of the report presents the results of a failure mode and effects analysis covering the operation of the water-glycol service unit during the evacuation and filling of the fuel cell powerplant (prior to fuel cell operation) and during the drain, purge, and dry cycles (subsequent to fuel cell operation). The analysis is based on the following assumptions:

1. The failure mode orders and corrective action classifications are based on the failure of the item in the subsystem, component, or item column only. All other components are assumed functioning properly.

2. The plumbing and components are initially free of contaminants, and foreign objects which could deteriorate system reliability or harm personnel.

3. All control valves are normally closed. The signal to open them is contingent upon receiving a "GO" signal from the sensory systems. Functional failure of the valves could cause a system failure.

4. Sensory system failures could permit transmitting erroneous information to the control panel.

5. The commercial GN_2 is free of particles smaller than 10 microns which could be harmful to the system.

6. Purge cycle provides a completely dry system.

FUNCTIONAL DESCRIPTION

The water-glycol service unit will be used to support ground checkout of the Apollo spacecraft fuel cell powerplant. To perform this function, the S14-054 will be in operation prior to and subsequent to fuel cell operation. Prior to fuel cell operation, the S14-054 performs an evacuation cycle to remove the 10-psig storage blanket of GN_2 from the fuel cell modules. It then fills each fuel cell with 1.7 pounds of water-glycol. The next operation is extraction of 10 to 13 cubic inches of the water-glycol from each module, the exact volume dependent upon ambient conditions. Upon termination of the fuel cell operation, the S14-054 is operated to drain the fuel cell, flush

it with distilled water, and purge it with GN_2 until dry. The unit will pressurize the system with GN_2 to a storage blanket pressure of 10 psig and then monitor the system for pressure decay.

The unit is operated from a local control panel on the console or from a similar panel remotely located. The unit is powered by connecting it to a 208-volt, 60-cycle, 3-phase input line. The purge operation is performed by accepting GN_2 at 3000 psi and after reduction, passing it through the system until the humidity sensor indicates a "dry" condition. The unit is constructed so that it can be checked out entirely before utilization on the spacecraft. A schematic of the unit is shown in Figure 4-3.

RECOMMENDATIONS AND CONCLUSIONS

Since any moisture left in a fuel cell module could increase the time required to obtain the specified vacuum level to limits that would endanger checkout completion within the countdown envelope, a reliable humidity sensor to detect any residual moisture in the fuel cell module after GN_2 purge is required. To solve the problem of assuring a totally dry sensor after testing the condition of the GN_2 blown through the fuel cell, an insertion or disposable liquid sensor redundancy is recommended.

Table 4-5 summarizes the 80 failure modes analyzed on worksheet, Table 4-6. The analysis reveals four undetectable first-order failure modes. Two are sensory system failures; the other two are associated with the extraction cycle of the service unit's operation. The only design restraint opposing these sensory failures would be one where these sensors did not fail in a fail-safe position. The extraction cycle failures are those associated with failure of a solenoid valve in the open (energized) position and of improper functioning of the liquid extractor which causes it to over-extract (extract an amount of water-glycol in excess of the required amount for the ambient conditions).

The next most serious failure mode is failure of any solenoid valves responsible for venting and routing the fluids and gases through the unit. These failures are all detectable. Therefore, these failures are not considered catastrophic since they result only in failure to fill the fuel cell modules. There are no apparent subsequent failures which would not allow these failures to be detected and the condition subsequently rectified. Hence, no action is required.

Table 4-6 lists 80 failure modes, 48 of which would halt or delay the count-down cycle. These failures are caused by irreparable malfunctioning of the unit's components, (i.e., rupture of a fluid reservoir, pump failure, etc.). The scope of this report will be expanded in subsequent revisions to include design restraints to failures of these types.

CO~~NFIDENTIAL~~

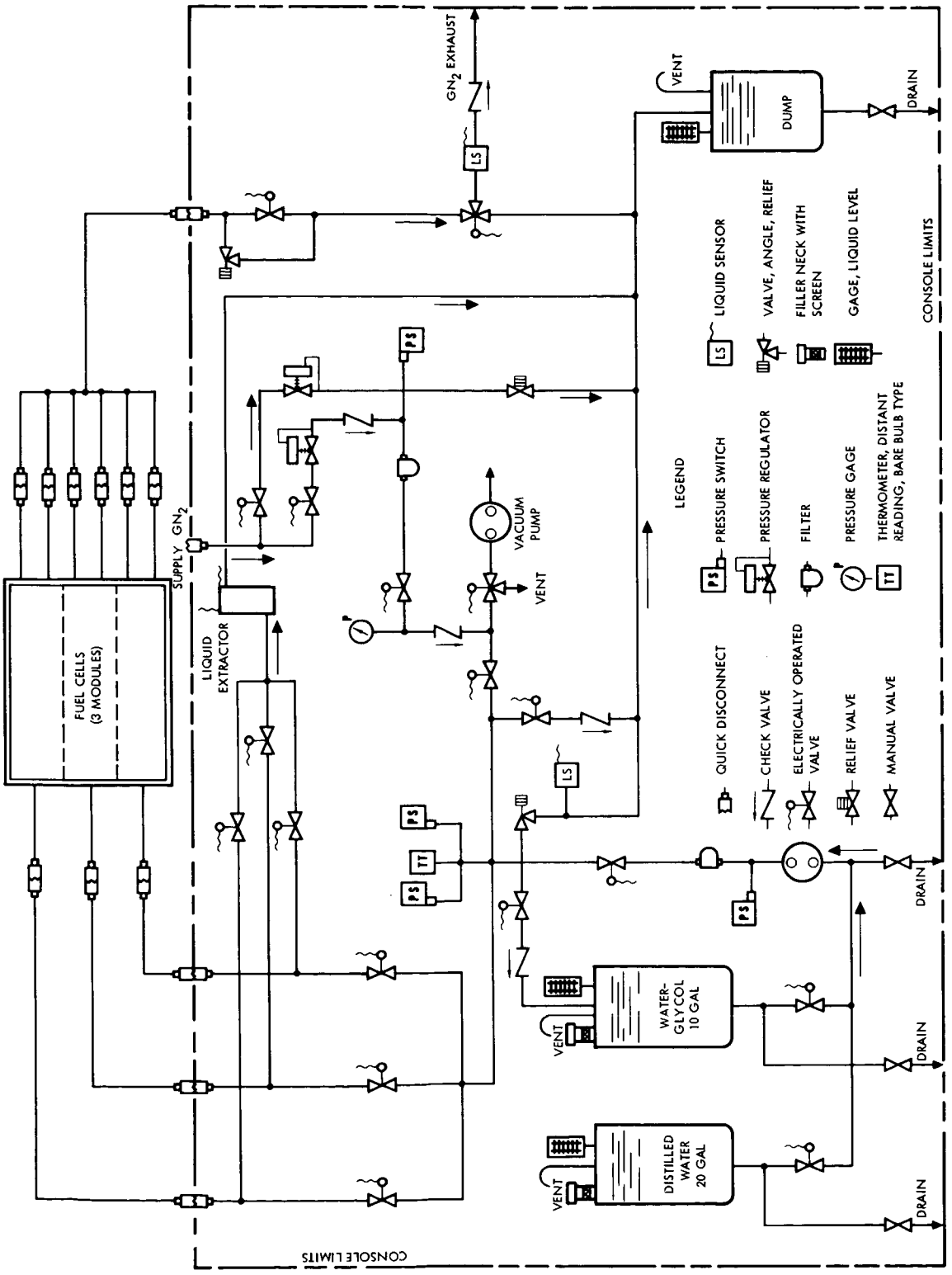

Figure 4-3. Water-Glycol Service Unit

~~CONFIDENTIAL~~

Table 4-5. Water-Glycol Service Unit (S14-054) Failure Mode Effect Analysis Summary

	Failure Order				Corrective Action Classification				Delays Servicing	Halts Service	Total Failures
	1	2	3	4	1	2	3	4			
Undetectable malfunction hazardous to GSE, and personnel											
Undetectable failure	4	1	2	16	4	2		17		2	23
Detectable failure		36	10	11	34	10	3	11	14	32	57
Totals	4	37	12	27	38	12	3	28	14	34	80

~~CONFIDENTIAL~~

Table 4-6. Water-Glycol Service Unit, Ground Support Equipment Failure Effects Analysis

Model No. S 14-054 Date 14 May 1963

Nomenclature Water-Glycol Service Unit

Function Phase	Subsystem Component or Item	Failure Mode	Failure Effect On			Remarks
			System	Other Systems or Subsystems	Function	
Vacuum Cycle	G3LV1, 2, 3 Solenoid Valve	Fails Open	None	None	None	4th order failure — CAC No. 4 (undetected)
		Fails Closed	Halts Evacuation Cycle	None	Halts Service Unit Operation	2nd order failure — CAC No. 1 (detected)
	G3PS3 Pressure Sensor	Fails to Indicate	Cannot Monitor Properly	None	Causes Delay	2nd order failure — CAC No. 2 (detectable)
		Indicates Improperly	Cannot Monitor Properly	None	Allows Improper Vacuum Level in Fuel Cell Module	3rd order failure — CAC No. 4 (undetectable - may underfill cooling system)
	G3LV7 Solenoid Valve	Fails Open	None	None	None	4th order failure — CAC No. 4 (undetectable)
		Closed	None	None	Prevents Drawing of Vacuum in Fuel Cell Modules	2nd order failure — CAC No. 1 (detectable)

~~CONFIDENTIAL~~

Table 4-6. Water-Glycol Service Unit, Ground Support Equipment Failure Effects Analysis (Cont)

Model No. S 14-054 Date 14 May 1963

Nomenclature Water-Glycol Service Unit

Function Phase	Subsystem Component or Item	Failure Mode	Failure Effect On			Remarks
			System	Other Systems or Subsystems	Function	
Vacuum Cycle	G3LV6 Solenoid Valve	Fails Open	None	None	None	4th order failure — CAC No. 4 (undetectable)
		Fails Closed	Cannot Draw Vacuum	None	Cannot Evacuate fuel cell	2nd order failure — CAC No. 1 (detectable)
	G3FL3 Filter	Clogs	Fails to Supply Air to Pump	None	Delays Servicing	3rd order failure — CAC No. 2 (detectable)
		Fails to Filter	Allows Contamination of Vacuum Pump	None	None	4th order failure — CAC No. 4 (undetectable)
	G3LP2 Vacuum Pump	Fails to Operate or Operates Improperly	Fails to Provide Vacuum	None	Halts Servicing	2nd order failure — CAC No. 1 (detectable)
	G3MD1, 2, 3 Quick Disconnects	Leaks	Depletes System Fluids	None	Delays	3rd order failure — CAC No. 2 (detectable)

[redacted]

Table 4-6. Water-Glycol Service Unit, Ground Support Equipment Failure Effects Analysis (Cont)

Model No. S 14-054 Date 14 May 1963

Nomenclature Water-Glycol Service Unit

Function Phase	Subsystem Component or Item	Failure Mode	Failure Effect On			Remarks
			System	Other Systems or Subsystems	Function	
Fill Cycle	G3MV1 Manual Valve	Fails Open	Drains Pump and Filter Lines	None	Delays Servicing	3rd order failure — CAC No. 2 (detectable)
		Fails Closed	Prevents Drain of Pump and Filter Lines as Specified	None	Delays Servicing	3rd order failure — CAC No. 2 (detectable)
	G3LV8 Solenoid Valve	Fails Open	None	None	None	4th order failure — CAC No. 4 (detectable)
		Fails Closed	Prevents Fluid from Entering System	None	Prevents Servicing	2nd order failure — CAC No. 1 (detectable)

[redacted]

~~CONFIDENTIAL~~

Table 4-6. Water-Glycol Service Unit, Ground Support Equipment Failure Effects Analysis (Cont)

Model No. S 14-054 Date 14 May 1963

Nomenclature Water-Glycol Service Unit

Function Phase	Subsystem Component or Item	Failure Mode	Failure Effect On			Remarks
			System	Other Systems or Subsystems	Function	
Fill Cycle	G3LV18 Solenoid Valve	Fails Open	Routes Fluid Into Reservoir	None	Prevents Servicing	2nd order failure — CAC No. 1 (detectable)
		Fails Closed	Prevents Recirculation to Remove Entrained gases from Pump Piping	None	Halts Servicing	2nd order failure — CAC No. 1 (detectable)
	G3SG1 Sight Gage	Leaks or Breaks	Depletes System Fluids	None	Delays Servicing	3rd order failure — CAC No. 2 (detectable)
	G3LP1 Liquid Pump	Fails to Operate	No Fluid Flow	None	Prevents Servicing	2nd order failure — CAC No. 1 (detectable)
	G3PS1 Sensor	Fails to Indicate or Indicates Improperly	Cannot Monitor Properly	None	None	4th order failure — CAC No. 4 (undetectable)

~~CONFIDENTIAL~~

~~CONFIDENTIAL~~

Table 4-6. Water-Glycol Service Unit, Ground Support Equipment Failure Effects Analysis (Cont)

Model No. S 14-054 Date 14 May 1963

Nomenclature Water-Glycol Service Unit

Function Phase	Subsystem Component or Item	Failure Mode	Failure Effect On			Remarks
			System	Other Systems or Subsystems	Function	
Fill Cycle	G3FL1 Filter	Clogs and Fails to Pass Liquid	No Fluid Flow	None	Delays Servicing	2nd order failure — CAC No. 2 (detectable)
		Fails to Filter Element, Shatters	Contaminants may enter System	None	None*	4th order failure — CAC No. 4 (undetectable) *Significant Quantity could pass into fuel cell coolant loop and clog heat exchangers.
	G3RV1 Relief Valve	Fails Open	Depletes Fluid Supply	None	Prevents Servicing	2nd order failure — CAC No. 1 (detectable)
		Fails Closed	Loss of Over-pass Relief	None	None	4th order failure — CAC No. 4 (undetectable)
	G3LS1 Liquid Sensor	Fails to Indicate	Fails to Activate LV5	None	Prevents Servicing	2nd order failure — CAC No. 1 (detectable)
		Indicates Improperly	Fails to Monitor System Properly	None	None	4th order failure — CAC No. 4 (undetectable) May permit air in system if LV5 is opened prior to completion of entrained gas purge operation

~~CONFIDENTIAL~~

Table 4-6. Water-Glycol Service Unit, Ground Support Equipment Failure Effects Analysis (Cont)

Model No. S 14-054 Date 14 May 1963

Nomenclature Water-Glycol Service Unit

Function Phase	Subsystem Component or Item	Failure Mode	Failure Effect On			Remarks
			System	Other Systems or Subsystems	Function	
Fill Cycle	G3LV1, 2, 3 Solenoid Valves	Fails Open	None	None	None	4th order failure—CAC No. 4 (detectable)
		Fails Closed	Prevent Fluid Passage to Fuel Cell Module	None	Halts Servicing	2nd order failure—CAC No. 1 (detectable)
	G3TK1 Reservoir	Breaks	Depletes Fluid Supply	None	Halts Servicing	2nd order failure—CAC No. 1 (detectable)
	G3PS2 Sensor	Fails to Indicate	Cannot Monitor System Properly	None	Causes Delay	3rd order failure—CAC No. 3 (detectable)
		Indicates Improperly	Cannot Monitor System Properly	None	Services Improperly (Spacecraft Underfills)	1st order failure—CAC No. 2 (undetectable)
Extraction	G3LV10, 11, 12 Solenoid Valve	Fails Open	Extracts Improper Volume of Fluid	None	Improperly Services Spacecraft (Over extracts)	1st order failure—CAC No. 1 (undetectable)

~~CONFIDENTIAL~~

Table 4-6. Water-Glycol Service Unit, Ground Support Equipment Failure Effects Analysis (Cont)

Model No. S 14-054 Date 14 May 1963

Nomenclature Water-Glycol Service Unit

Function Phase	Subsystem Component or Item	Failure Mode	Failure Effect On			Remarks
			System	Other Systems or Subsystems	Function	
Extraction	G3MD1, 2, 3 Quick Disconnects	Leaks or Ruptures	Depletes System Fluids	None	Delays Servicing	3rd order failure—CAC No. 2 (detectable)
	Liquid Extractor	Extracts Improperly	Extracts Improper volume of water-glycol	None	Improperly Services Spacecraft (Over extracts)	1st order failure—CAC No. 1 (undetectable)
		Fails to Extract	Cannot Extract	None	Halts Servicing	2nd order failure—CAC No. 1 (detectable)
	G3TK3 Reservoir	Breaks	Depletes Fluid Supply	None	Halts Servicing	2nd order failure—CAC No. 1 (detectable)
Drain	G3LV13 Solenoid Valve	Fails Open	None	None	None	4th order failure—CAC No. 4 (undetectable)
		Fails Closed	Prevents Draining	None	Halts Servicing	2nd order failure—CAC No. 1 (detectable)
	Plumbing	Leaks or Ruptures	Depletes Fluid Supply	None	Halts Servicing	2nd order failure—CAC No. 1 (detectable)

~~CONFIDENTIAL~~

Table 4-6. Water-Glycol Service Unit, Ground Support Equipment Failure Effects Analysis (Cont)

Model No. S 14-054 Date 14 May 1963

Nomenclature Water-Glycol Service Unit

Function Phase	Subsystem Component or Item	Failure Mode	Failure Effect On			Remarks
			System	Other Systems or Subsystems	Function	
Flush	G3TK2 Reservoir	Leaks or Ruptures	Depletes Fluid Supply	None	Halts Servicing	2nd order failure—CAC No. 1 (detectable)
	G3LV9 Solenoid Valve	Fails Open	None	None	None	4th order failure—CAC No. 4 (detectable)
		Fails Closed	Lack of Fluid Supply	None	Halts Servicing	2nd order failure—CAC No. 1 (detectable)
	G3LP1 Liquid Pump	Fails to Operate	No Fluid Flow	None	Halts Servicing	2nd order failure—CAC No. 1 (detectable)
	G3FL1 Filter	Clogs and Fails to Pass Fluid	No Fluid Flow	None	Halts Servicing	2nd order failure—CAC No. 1 (detectable)
		Fails to Filter, breaks	Contaminants enter System	None	None	4th order failure—CAC No. 4 (undetectable)
	G3LV5 Solenoid Valve	Fails Open	None	None	None	4th order failure—CAC No. 4 (detectable)
		Fails Closed	No Fluid Flow	None	Halts Servicing	2nd order failure—CAC No. 1 (detectable)

~~CONFIDENTIAL~~

Table 4-6. Water-Glycol Service Unit, Ground Support Equipment Failure Effects Analysis (Cont)

Model No. S 14-054 Date 14 May 1963

Nomenclature Water-Glycol Service Unit

Function Phase	Subsystem Component or Item	Failure Mode	Failure Effect On			Remarks
			System	Other Systems or Subsystems	Function	
Flush	G3LV1, 2, 3 Solenoid Valve	Fails Open	None	None	None	4th order failure—CAC No. 4 (detectable)
		Fails Closed	No Fluid Flow	None	Halts Servicing	2nd order failure—CAC No. 1 (detectable)
	G3LV10, 11, 12 Solenoid Valve	Fails Open	None	None	None	4th order failure—CAC No. 4 (detectable)
		Fails Closed	None	None	None	4th order failure—CAC No. 4 (detectable)
Purge	G3LV4 Solenoid Valve	Fails Open	None	None	Halts Servicing	2nd order failure—CAC No. 1 (detectable)
		Fails Closed	Prevents draining of flush cycle residue	None	Delays Servicing	2nd order failure—CAC No. 1 (detectable)
	G3LV17 & 14 Solenoid Valve	Fails Open	Prevents use of 10 psi line	None	None	2nd order failure—CAC No. 1 (detectable)
		Fails Closed	Prevents high-pressure purge	None	Halts Servicing	2nd order failure—CAC No. 1 (detectable)

~~CONFIDENTIAL~~

Table 4-6. Water-Glycol Service Unit, Ground Support Equipment Failure Effects Analysis (Cont)

Model No. S 14-054 Date 14 May 1963

Nomenclature Water-Glycol Service Unit

Function Phase	Subsystem Component or Item	Failure Mode	Failure Effect On			Remarks
			System	Other Systems or Subsystems	Function	
Purge	G3PR1 & 2 Reducer Valve	Fails to Reduce	Receives high-pressure GN_2	None	Halts Servicing	3rd order failure—CAC No. 2 (detectable)
		Fails Closed	Prevents high-pressure purge	None	Halts Servicing	2nd order failure—CAC No. 1 (undetectable)
	G3CV5 Check Valve	Fails Open	None	None	None	4th order failure—CAC No. 4 (undetectable)
	G3FL2 & G3D1 Filter	Fails to Filter	None	None	None	4th order failure—CAC No. 4 (undetectable)
		Clogs	Prevents Passage of Media	None	Halts Servicing	3rd order failure—CAC No. 2 (undetectable)
	G3LV16 Solenoid Valve	Fails Open	None	None	None	4th order failure—CAC No. 4 (undetectable)
		Fails Closed	Prevents Passage of Media	None	Halts Servicing	2nd order failure—CAC No. 1 (detectable)

~~CONFIDENTIAL~~

Table 4-6. Water-Glycol Service Unit, Ground Support Equipment Failure Effects Analysis (Cont)

Model No. S 14-054 Date 14 May 1963

Nomenclature Water-Glycol Service Unit

Function Phase	Subsystem Component or Item	Failure Mode	Failure Effect On			Remarks
			System	Other Systems or Subsystems	Function	
Purge	G3CV2 Check Valve	Fails Open	None	None	None	4th order failure—CAC No. 4 (undetectable)
		Fails Closed	Prevents Passage of Media	None	None	
	G3LV7 Solenoid Valve	Fails Open	None	None	None (Adjustment in procedure for applying storage blanket)	4th order failure—CAC No. 4 (detectable)
	G3PS2 Sensor	Fails to Indicate or Indicates Improperly	Cannot Monitor System Properly	None	Delays Servicing	3rd order failure—CAC No. 3 (detectable)
	G3LV1, 2, 3 Solenoid Valve	Fails Open	None	None	Cannot Deposit Storage Blanket	2nd order failure—CAC No. 1 (detectable)
		Fails Closed	Cannot Pass Purge Media	None	Cannot purge fuel cell	2nd order failure—CAC No. 1 (detectable)

~~CONFIDENTIAL~~

Table 4-6. Water-Glycol Service Unit, Ground Support Equipment Failure Effects Analysis (Cont)

Model No. S 14-054 Date 14 May 1963

Nomenclature Water Glycol Service Unit

Function Phase	Subsystem Component or Item	Failure Mode	Failure Effect On			Remarks
			System	Other Systems or Subsystems	Function	
Purge	G3LV10, 11, 12 Solenoid Valve	Fails Open	None	None	Cannot Deposit Storage Blanket	2nd order failure—CAC No. 1 (detectable)
		Fails Closed	Cannot Purge Extractor Line	None	None	4th order failure—CAC No. 4 (detectable)
	G3LV13 Solenoid Valve	Fails Open	None	None	None	4th order failure—CAC No. 4 (detectable)
		Fails Closed	Cannot Pass Media to Exhaust	None	Halts Purge	2nd order failure—CAC No. 1 (detectable)
	G3RV2 Relief Valve	Fails Open	Vents Off GN_2	Depletes Supply	Delays Purge	3rd order failure—CAC No. 2 (detectable)
		Fails Closed	Loss of Over-Pressure Relief	None	None	4th order failure—CAC No. 4 (undetectable)

~~CONFIDENTIAL~~

Table 4-6. Water-Glycol Service Unit, Ground Support Equipment Failure Effects Analysis (Cont)

Model No. S 14-054 Date 14 May 1963

Nomenclature Water Glycol Service Unit

Function Phase	Subsystem Component or Item	Failure Mode	Failure Effect On			Remarks
			System	Other Systems or Subsystems	Function	
Purge	G3LV15 Solenoid Valve	Fails Open	Vents Off GN_2	Depletes Supply	Delay Servicing	2nd order failure—CAC No. 1 (detectable)
		Fails Closed	Cannot Pass Media to Sensor	None	Halts Servicing	2nd order failure—CAC No. 1 (detectable)
	G3LS2 Sensor	Fails to Sense	Cannot Sense GN_2 Moisture Content Properly	None	Halts Servicing	2nd order failure—CAC No. 1 (detectable)
		Senses Improperly	Cannot Sense GN_2 Moisture Content Properly	None	Leaves Module Wet	1st order failure—CAC No. 1 (undetectable)
	G3CV4 Check Valve	Fails Open	None	None	None	4th order failure—CAC No. 4 (undetectable)
		Fails Closed, Sticks	Cannot route GN_2 to Exhaust	None	Delays Purge Cycle	4th order failure—CAC No. 3 (detectable)

~~CONFIDENTIAL~~

Table 4-6. Water-Glycol Service Unit, Ground Support Equipment Failure Effects Analysis (Cont)

Model No. S 14-054 Date 14 May 1963

Nomenclature Water Glycol Service Unit

Function Phase	Subsystem Component or Item	Failure Mode	Failure Effect On			Remarks
			System	Other Systems or Subsystems	Function	
Purge	G3MD1, 2, 3 Quick Disconnect	Leaks	Loss of GN_2	Depletes GN_2 Supply	Delays	3rd order failure—CAC No. 3 (detectable)

~~CONFIDENTIAL~~

FUEL TRANSFER UNIT (S14-002) AND OXIDIZER TRANSFER UNIT (S14-008)

FAILURE EFFECTS ANALYSIS

This section of the report presents the results of a failure mode and effects analysis covering the operations of the fuel and oxidizer transfer units during the filling of the Service Module Service Propulsion System (SM SPS) storage vessels. The analysis is based on the following assumptions.

1. The filters will remove from the fuel/oxidizer all particles 25μ in size and 98 percent of the particles 10μ in size. The pressure drop across any one filter shall be a maximum of 20 psi at 60 gallons per minute. A failure would contaminate the stored media or delay the operation.

2. Instrumentation will provide visual indications to determine the media stress status exerted on the system. The stresses sensed are pressure, temperature, acceleration and volumetric capacity. A failure would permit an inaccurate transfer and interrupt and/or delay the operation.

3. A conditioning system will heat and cool the media to maintain 70 F ± 5. A failure would permit an inaccurate transfer or interrupt the operation.

4. The unit shall be monitored from a control panel and/or a remote control panel. A failure would halt the operation or permit the operation to continue uncontrolled.

5. Leakage from any plumbing connection, joint, or flange would be a personnel hazard or GSE hazard.

6. The pumping system shall pump a minimum of 60 gallons per minute while producing a differential head of 420 feet. A failure would halt or delay the operation.

7. The valving system will open or close on command from either of the control panels. A failure would prevent throttling the liquid flow rates.

~~CONFIDENTIAL~~

FUNCTIONAL DESCRIPTION

The fuel transfer unit and the oxidizer transfer unit function separately with independent interface systems. As the fuel and oxidizer are hypergolical in the presence of each other, their operational period within the time envelope is separated. The operational period is between -6 hours and -3 hours.

The media will be circulated through an enlarged closed loop incorporating the fluid transfer line, the ready storage supply and the transfer unit. Whenever the sensing components indicate the media is conditioned for transfer into the SM SPS storage vessel systems, the operator will by remote control actuate valves to commence the fueling operation.

During the fueling operation, the valves will be throttled to control flow rate for the "topping" operation. Vessel capacity will be controlled by visually monitoring the "readout" of a mass flow meter. The ullage will be occupied by gaseous Unsymmetrical Dimethyl Hydrazine/N_2O_4 and/or any remaining purging vapor. A schematic of the unit is shown in Figure 4-4.

INTENDED USAGE

The fluid transfer unit will control the transfer of the fuel and oxidizer during the SPS fueling operation. It will also be used to condition the media, the transfer line system, and the transfer unit components in advance of the fueling operation. The unit will decontaminate the media and will control draining the SM SPS storage vessels.

CONCLUSIONS

Table 4-7 summarizes the 65 failure modes analyzed on Table 4-8 worksheets. Twenty-three of these are first-order failure modes, and the analysis indicates the most serious first-order failure mode would be an undetectable leak causing a fire or explosion. There are five in this category classified as catastrophic. The design restraint opposing this failure mode is a leak detection system operated by the stage propellant management system. Further severe process control exercised during the operational period would also be a restraint.

The next most serious failure mode appears to be contamination in the form of moisture or foreign matter entering the spacecraft vessels through a malfunction or deterioration of the filtering system. There are six category II and 9 category III failure modes of this type classified as undetectable failure modes on Table 4-7. A design restraint opposing the

~~CONFIDENTIAL~~

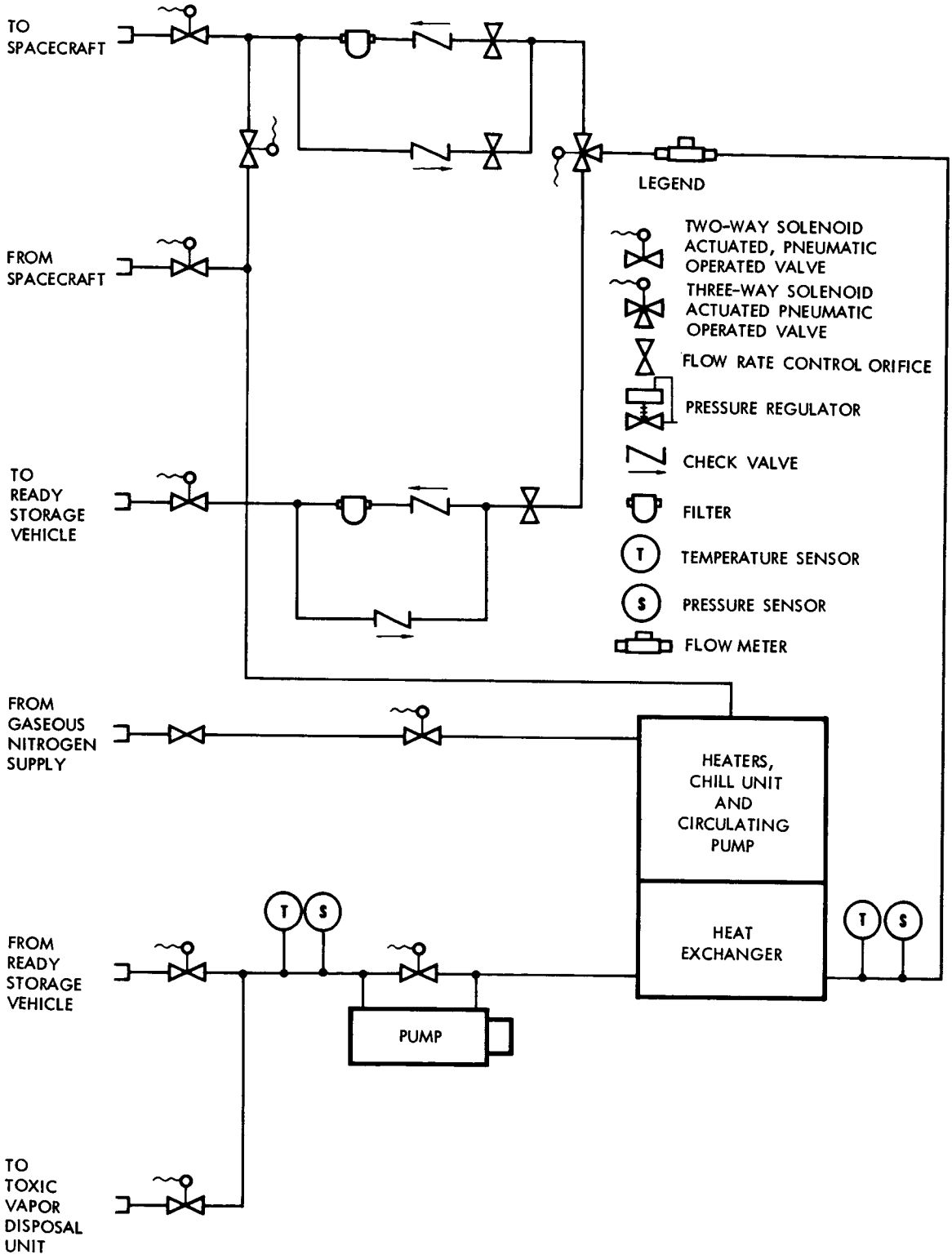

Figure 4-4. Fuel and Oxidizer Transfer Unit

Table 4-7. Propellant Transfer and Conditioning Unit Failure Mode Effect Analysis Summary

	Failure Mode*				Corrective Action Classification				Delays Operation	Halts Operation	Countdown Delay
	I	II	III	IV	1	2	3	4			
Undetectable malfunction hazardous to GSE and personnel	3				2	1				3	
May cause undetectable failure to GSE	2	6	9	5		4	10	8	15	2	5
May cause detectable failure to GSE	18	10	7	5	18	9	7	6	12	24	4
Totals	23	16	16	10	20	14	17	14	27	29	9

* Total 65

failure mode could be a detection system operating at the threshold of the spacecraft fill system. Whenever contamination in excess of specification limits is detected, the valve system would be operated by remote control to index to bypass the contaminated media through the return lines to the the RSV.

Table 4-7 lists 9 failure modes classified as halting/delaying the countdown. These failures would be caused by an unrepairable malfunction to a major component such as destruction of a pump impeller, or a refrigerator failure. The scope of this report will be enlarged at the next revision to include restraints to this type of failure mode. Table 4-8 delineates the results of the failure effects analyses performed on this unit.

CRITICAL FAILURE EFFECTS

1. Contamination of the media with moisture, solids or foreign matter

2. Monitoring system volumetric capacity of the transfer media

3. Conditioning the media to control its density and liquid state

4. The toxicity of the media in liquid form or gaseous form on personnel and equipment induced by a flange, joint, connection or plumbing failure

5. Valve seals, packing glands and contamination traps

6. Pump cavitation

RECOMMENDATIONS

1. Severe decontamination treatment of the system and interface systems

2. Instrumentation to determine increment transfer contamination (particles/moisture)

3. Remote control valve system to bypass contaminated media through a drain system

4. Avoid contamination traps in the plumbing design (minimum joints, ells, unions, etc.)

Table 4-8. Propellant Transfer and Conditioning Unit, Ground Support Equipment Failure Effects Analysis

Model No. S14-002-008 Date 29 April 1963

Nomenclature Propellant Transfer and Conditioning Unit

Function Phase	Subsystem Component or Item	Failure Mode	Failure Effect On			Remarks
			System	Other Systems or Subsystems	Function	
Loading	Valve system	Fails open	Control failure, stem fracture, seating failure	Creates hazard to spacecraft systems	Halts servicing operation	3rd order failure mode—CAC No. 2 Halts servicing operation. All units of the valve train would have to fail simultaneously. minor
		Fails closed	Control failure, seat seized		Delays transfer	3rd order failure—CAC No. 2 minor (detectable)
		Leaking: 1. Gland 2. Flange gasket 3. Other	Liquid leaks on GSE components	Fire hazard on GSE components	Personnel hazard halts operation	1st order failure mode—CAC No. 1 Halts servicing operation to repair leak and neutralize contaminated areas. catastrophic
Purge	Transfer unit	Contaminated media (GN_2)	Contamination enters spacecraft	Interface systems contaminated	Purge operation delayed	3rd order failure mode—CAC No. 2 Filters must fail and tests for media contamination must fail to allow this failure mode. (undetectable) minor

Table 4-8. Propellant Transfer and Conditioning Unit, Ground Support Equipment Failure Effects Analysis (Cont)

Model No. S14-002-008 Date 29 April 1963

Nomenclature Propellant Transfer and Conditioning Unit

Function Phase	Subsystem Component or Item	Failure Mode	Failure Effect On			Remarks
			System	Other Systems or Subsystems	Function	
Transfer unit conditioning	Transfer unit	Conditioning system failure	Media absorbs excessive heat	Pump cavitation, vapor locks line	Halts transfer preparations	2nd order failure mode—CAC No. 1 Failure of any major component of the refrigerator unit could precipitate this failure mode. Spacecraft is not affected. (detectable)
Fluid transfer line conditioning	Transfer line units and transfer unit	Conditioning system failure	Media absorbs heat	Vapor locks, pump cavitation	Halts transfer preparations	2nd order failure mode—CAC No. 1 Spacecraft is not affected. (detectable) minor
Loading	Pump unit	Partial failure of any major pump component or pump failure	Flow rate out of control	Spacecraft storage supply	Halts countdown	2nd order failure mode—CAC No. 2 Delays countdown. (detectable) major
		Impeller/case fracture	Leaks, fire, explosion	Interface systems damaged	Halts countdown	1st order failure mode—CAC No. 1 Hazardous to personnel and equipment. (detectable) catastrophic
Propellant conditioning	Relief valve, Ref. Des. G2RV1 MC284-8024	Leaks Internally	Leaks propellant to vent, slows conditioning process	None	None	4th order failure mode—CAC No. 4 (undetectable)

CONFIDENTIAL

Table 4-8. Propellant Transfer and Conditioning Unit, Ground Support Equipment Failure Effects Analysis (Cont)

Model No. S14-002-008 Date 29 April 1963

Nomenclature Propellant Transfer and Conditioning Unit

Function Phase	Subsystem Component or Item	Failure Mode	Failure Effect On			Remarks
			System	Other Systems or Subsystems	Function	
Propellant conditioning	Relief valve, Ref. Des. G2RV1 MC284-8024	Leaks externally	Liquid leaks on GSE components	Fire hazard on GSE components	Personnel hazard halts operation	1st order failure mode—CAC No. 3 (undetectable) catastrophic
		Sticks open from previous operation	Part of propellant flow is diverted thru vent back to RSV.	Propellant in RSV would be conditioned slowly	Countdown sequence would be changed to avoid delay.	3rd order failure mode—CAC No. 3. Pressure switch G2PS1 and flow meter G2FM1 must read high. (detectable) minor
		Sticks closed	Trapped propellant ruptures tubing	Fire hazard on GSE components	Personnel hazard halts operation	2nd order failure mode—CAC No. 2. Some other component must fail so that all inlets and outlets to S14-002 are closed. (detectable) major
FDS conditioning	Relief valve, Ref. Des. G2RV1 MC284-8024	Leaks internally	Leaks propellant to vent, slows conditioning process	None	None	4th order failure mode—CAC No. 4. (detectable) minor

~~CONFIDENTIAL~~

Table 4-8. Propellant Transfer and Conditioning Unit, Ground Support Equipment Failure Effects Analysis (Cont)

Model No. S14-002-008 Date 29 April 1963

Nomenclature Propellant Transfer and Conditioning Unit

Function Phase	Subsystem Component or Item	Failure Mode	Failure Effect On			Remarks
			System	Other Systems or Subsystems	Function	
Fluid distribution system (FDS) conditioning	Relief Valve, Ref Des G2RV1 MC284-8024	Leaks externally	Liquid leaks on GSE components	Fire hazard	Personnel hazard halts operation	1st order failure mode—CAC No. 2. (undetectable) catastrophic
		Fails to reset	Flow is diverted to vent	Conditioning is delayed	None	2nd order failure mode—CAC No. 3 Some other component on line must have caused overpressure. (detectable) uncritical
		Sticks closed	Trapped propellant ruptures tubing	Fire hazard on GSE components	Personnel hazard halts conditioning	2nd order failure mode—CAC No. 3. So Some other component must fail so that all inlets and outlets to S14-002 are closed. (detectable) major
Spacecraft loading	Relief Valve Ref Des G2RV1 MC284-8024	Leaks internally	Propellant leaks to outlet B	Propellant vents back to RSV	None	1st order failure mode—CAC No. 2. (detectable) uncritical
		Leaks externally	Liquid leaks on GSE components	Fire hazard	Personnel hazard halts operation	1st order failure mode—CAC No. 2. (undetectable) catastrophic

~~CONFIDENTIAL~~

Table 4-8. Propellant Transfer and Conditioning Unit, Ground Support Equipment Failure Effects Analysis (Cont)

Model No. S14-002-008 Date 29 April 1963

Nomenclature Propellant Transfer and Conditioning Unit

Function Phase	Subsystem Component or Item	Failure Mode	Failure Effect On			Remarks
			System	Other Systems or Subsystems	Function	
Spacecraft loading	Relief Valve Ref Des G2RV1 MC284-8024	Fails to reset	Part of propel-lant diverts to outlet B	Propellant flow back to RSV	Countdown delay	2nd order failure mode—CAC No. 3 Must have opened because of line over-pressure. (undetectable) minor
		Sticks closed	Trapped propel-lant ruptures tubing	Fire hazard	Personnel hazard halts loading	2nd order failure mode—CAC No. 2. Emergency closure of all inlets and outlets must exist. (detectable) major
Spacecraft unload or FDS drain		Leaks internally	Leaks propel-lant to outlet B	Leaks propel-lant to RSV	None	3rd order failure mode—CAC No. 4. (detectable) minor
		Leaks externally	Liquid leaks on GSE compo-nents	Fire hazard	Personnel hazard halts operation	1st order failure mode—CAC No. 2. (detectable) catastrophic

~~CONFIDENTIAL~~

Table 4-8. Propellant Transfer and Conditioning Unit, Ground Support Equipment Failure Effects Analysis (Cont)

Model No. S14-002-008 Date 29 April 1963

Nomenclature Propellant Transfer and Conditioning Unit

Function Phase	Subsystem Component or Item	Failure Mode	Failure Effect On			Remarks
			System	Other Systems or Subsystems	Function	
Spacecraft unload or FDS drain	Relief Valve Ref Des G2RV1 MC284-8024	Stick closed	Trapped propel-lant ruptures tubing during unload	Fire hazard	Personnel hazard halts unloading	1st order failure mode—CAC No. 1 Emergency closure of all S14-002 inter-faces must exist. (detectable) major
		Sticks closed	Over-pressure GN_2 ruptures GSE tubing, liquid leaks on GSE compo-nents	Fire hazard	Personnel hazard delays operation	1st order failure mode—Pressure regulator G4PR2 must regulate high. (detectable) major
Spacecraft purge or FDS purge	Relief Valve Ref Des G2RV1 MC284-8024	Leaks internally	Diverts part of GN_2 to vent	Purge is at lower pressure	None	2nd order failure mode—CAC No. 2. (undetectable) minor

~~CONFIDENTIAL~~

Table 4-8. Propellant Transfer and Conditioning Unit, Ground Support Equipment Failure Effects Analysis (Cont)

Model No. S14-002-008 Date 29 April 1963

Nomenclature Propellant Transfer and Conditioning Unit

Function Phase	Subsystem Component or Item	Failure Mode	Failure Effect On			Remarks
			System	Other Systems or Subsystems	Function	
Spacecraft purge or FDS purge	Relief valve Ref Des G2RV1 MC284-8024	Leaks externally	Leaks mixture of GN_2 and propellant vapors	Fire hazard	Personnel hazard	2nd order failure mode—CAC No. 3. Another component must fail to add energy or hypergolic fluid. (detectable) major
		Fails to reset	GN_2 is diverted to vent	Spacecraft or FDS not purged	Fire hazard	2nd order failure mode—CAC No. 2. Failure of other component must add energy or hypergolic fluid. (detectable) major
		Sticks closed	Over-pressure GN_2 ruptures GSE	Mixture of GN_2 and propellant vapors creates fire hazard	Personnel hazard, S14-002 requires repair	4th order failure mode—CAC No. 4. Pressure regulator G4PR1 must regulate high, relief valves G4RV1 and G4RV2 must stick, and component failure must add energy or hypergolic fluid. (detectable) minor
FDS conditioning	MC 286-8007 filter Ref Des G2FL1	Clogs	Propellant does not flow	FDS is not conditioned	Countdown delayed	3rd order failure mode—CAC No. 3. Pressure drop indicator on filter must fail. Flow meter G2FM1 must read high. minor
		Creates contamination	Contamination flows into FDS	SPS is damaged by contamination	Hazardous to mission	2nd order failure mode—CAC No. 4. Some SPS component must be damaged by contamination. (undetectable) major

Table 4-8. Propellant Transfer and Conditioning Unit, Ground Support Equipment Failure Effects Analysis (Cont)

Model No. S14-002-008 Date 29 April 1963

Nomenclature Propellant Transfer and Conditioning Unit

Function Phase	Subsystem Component or Item	Failure Mode	Failure Effect On			Remarks
			System	Other Systems or Subsystems	Function	
FDS con-dititioning	MC 286-8007 filter Ref. Des. G2FL1	Leaks Propellants	Liquid leaks on GSE compo-nents, fire hazard	Fire propagates	Personnel hazard halts operation	1st order failure mode—CAC No. 1. Halts conditioning to repair leak and neutralize contaminated areas. (undetectable) catastrophic
Loading of fuel and oxidizer for SPS from T-6 to T-3 hr	G2FL1 filter	Clogs	No pro-pellant flow	Partial load accomplished only	Countdown delayed	3rd order failure mode—CAC No. 3. Pressure drop indicator of filter must fail. Flow meter G2FM1 must read high. (detectable) minor
		Creates contamination	Contam-ination flows into fluid dist.	SPS is damaged by contamination	Hazardous to mission	2nd order failure mode—CAC No. 3. Some SPS component must be damaged by contamination. (undetectable) major
		Leaks propellant	Liquid leaks on GSE compo-nents, fire hazard	Fire propagates	Personnel hazard halts operation	1st order failure mode—CAC No. 1. Halts conditioning to repair leak and neutralize contaminated areas. (detectable) catastrophic

Table 4-8. Propellant Transfer and Conditioning Unit, Ground Support Equipment Failure Effects Analysis (Cont)

Model No. S14-002-008 Date 29 April 1963

Nomenclature Propellant Transfer and Conditioning Unit

Function Phase	Subsystem Component or Item	Failure Mode	Failure Effect On			Remarks
			System	Other Systems or Subsystems	Function	
Spacecraft loading hold	G2FL1 filter	Clogs	None	None	None	4th order failure mode—CAC No. 4 (undetectable)
		Creates contamination	Contamination flows into fluid dist. system	SPS is damaged by contamination	Hazardous to mission	2nd order failure mode—CAC No. 2. Some SPS component must be damaged by contamination. (undetectable) major
		Leaks propellant	Liquid leaks on GSE components, fire hazard	Fire propagates	Personnel hazard halts operation	1st order failure mode—CAC No. 1. Halts conditioning to repair leak and neutralize contaminated areas. (detectable) catastrophic
Spacecraft unloading or FDS draining	G2FL1 filter	Clogs	None	None	None	4th order failure mode—CAC No. 4. (undetectable)

[redacted]

Table 4-8. Propellant Transfer and Conditioning Unit, Ground Support Equipment Failure Effects Analysis (Cont)

Model No. S14-002-008 Date 29 April 1963

Nomenclature Propellant Transfer and Conditioning Unit

Function Phase	Subsystem Component or Item	Failure Mode	Failure Effect On			Remarks
			System	Other Systems or Subsystems	Function	
Spacecraft unloading or FDS draining	G2FL1 filter	Creates contamination	Contamination stays in S14-002 until future operation	Causes failure in SPS	Hazardous to mission	2nd order failure mode—CAC No. 2. (undetectable) major
		Leaks propellant	Liquid leaks on GSE components, fire hazard.	Fire propagates	Personnel hazard halts operation	1st order failure mode—CAC No. 1 Halts conditioning to repair leak and neutralize contaminated areas. (detectable) catastrophic
Purging of FDS or spacecraft	G2FL1 filter	Creates contamination	Contamination flows to interface D	Causes failure in SPS	Mission hazardous	2nd order failure mode—CAC No. 4. (undetectable) major
		Leaks mixture of GN2 and propellant vapor	Liquid leaks on GSE components, fire hazard	Fire propagates	Personnel hazard halts operation	1st order failure mode—CAC No. 1. Halts conditioning to repair leak and neutralize contaminated areas. (detectable) catastrophic

[redacted]

Table 4-8. Propellant Transfer and Conditioning Unit, Ground Support Equipment Failure Effects Analysis (Cont)

Model No. S14-002-008 Date 29 April 1963

Nomenclature Propellant Transfer and Conditioning Unit

Function Phase	Subsystem Component or Item	Failure Mode	Failure Effect On			Remarks
			System	Other Systems or Subsystems	Function	
Unit draining	G2FL1 filter	Clogs	Part of S14-002-008 does not drain, fire hazard	Interface damaged	Delays operation	1st order failure mode—CAC No. 1. (detectable)
		Creates contamination	Contamination flows to outlet E	Causes SPS failure	Mission hazardous	3rd order failure mode—CAC No. 4. Filter G2FL1 must fail open in subsequent operation. SPS component must fail. (undetectable)
		Leaks propellant	Liquid leaks on GSE components, fire hazard.	Fire propagates	Personnel hazard halts operation	1st order failure mode—CAC No. 1. Halts conditioning to repair leak and neutralize contaminated areas. (detectable) catastrophic
Propellant conditioning	MC286-8007 Filter. Ref Des G2FL2	Clogs	No flow of propellant	Propellant does not receive conditioning	Countdown delayed	3rd order failure mode—CAC No. 3. Flow meter G2FM1 must read high, high pressure drop indicator of filter must fail. Up to 8 hr of conditioning could be lost. (detectable) minor

~~CONFIDENTIAL~~

Table 4-8. Propellant Transfer and Conditioning Unit, Ground Support Equipment Failure Effects Analysis (Cont)

Model No. S14-002-008 Date 29 April 1963

Nomenclature Propellant Transfer and Conditioning Unit

Function Phase	Subsystem Component or Item	Failure Mode	Failure Effect On			Remarks
			System	Other Systems or Subsystems	Function	
Propellant conditioning	MC286-8007 Filter. Ref Des G2FL2	Creates contamination	Contamination flows into RSV	Causes SPS failure	Mission hazardous	3rd order failure mode—CAC No. 3. After contamination flows into RSV, filter G2FL1 must fail open and some SPS component must be damaged by the contamination. (undetectable) minor
		Leaks propellant	Liquid leaks on GSE components, fire hazard	Fire propagates	Personnel hazard halts operation	1st order failure mode—CAC No. 1. Halts conditioning to repair leak and neutralize contaminated areas. catastrophic
Spacecraft loading	MC286-8007 Filter. Ref Des G2FL2	Clogs	None	None	None	4th order failure mode—CAC No. 4. minor
		Creates contamination	Contamination flows into RSV in later operation	Causes SPS failure	Mission hazardous	3rd order failure mode—CAC No. 3. Filter G2FL1 must fail open during future operation. SPS component must become damaged. minor

~~CONFIDENTIAL~~

Table 4-8. Propellant Transfer and Conditioning Unit, Ground Support Equipment Failure Effects Analysis (Cont)

Model No. S14-002-008 Date 29 April 1963

Nomenclature Propellant Transfer and Conditioning Unit

Function Phase	Subsystem Component or Item	Failure Mode	Failure Effect On			Remarks
			System	Other Systems or Subsystems	Function	
Spacecraft loading	MC286-8007 Filter. Ref Des G2FL2	Leaks propellant	Liquid leaks on GSE compo-nents, fire hazard	Fire propagates	Personnel hazard halts operation	1st order failure mode—CAC No. 1. Halts conditioning to repair leak and neutralize contaminated areas. (detectable) catastrophic
		Clogs	None	None	None	4th order failure mode —CAC No. 4.
		Creates contamination	Contam-ination flows into RSV in later opera-tion	Causes SPS failure	Mission hazardous	3rd order failure mode—CAC No. 3. Filter G2FL1 must fail open during future operation. SPS component must become damaged. minor
		Leaks propellant	Liquid leaks on GSE compo-nents, fire hazard	Fire propagates	Personnel hazard halts operation	1st order failure mode—CAC No. 1. Halts conditioning to repair leak and neutralize contaminated areas. catastrophic

Table 4-8. Propellant Transfer and Conditioning Unit, Ground Support Equipment Failure Effects Analysis (Cont)

Model No. S14-002-008 Date 29 April 1963

Nomenclature Propellant Transfer and Conditioning Unit

Function Phase	Subsystem Component or Item	Failure Mode	Failure Effect On			Remarks
			System	Other Systems or Subsystems	Function	
Spacecraft unloading or FDS draining	MC286-8007 Filter. Ref Des G2FL2	Clogs	None	None	None	4th order failure mode—CAC No. 4.
		Creates contamination	Contamination flows into RSV in later operation	Causes SPS failure	Hazardous to mission	3rd order failure mode—CAC No. 3. Filter G2FL1 must fail open during future operation. SPS component must become damaged. minor
		Leaks propellant	Liquid leaks on GSE components, fire hazard.	Fire propagates	Personnel hazard halts operation	1st order failure mode—CAC No. 1. Halts conditioning to repair leak and neutralize contaminated areas. catastrophic
Spacecraft purging or FDS purging	G2FL2	Clogs	None	None	None	4th order failure mode—CAC No. 4.

CONFIDENTIAL

Table 4-8. Propellant Transfer and Conditioning Unit, Ground Support Equipment Failure Effects Analysis (Cont)

Model No. S14-002-008 Date 29 April 1963

Nomenclature Propellant Transfer and Conditioning Unit

Function Phase	Subsystem Component or Item	Failure Mode	Failure Effect On			Remarks
			System	Other Systems or Subsystems	Function	
Spacecraft purging or FDS purging	G2FL2	Creates contamination	Contamination flows into RSV in later operation	Causes SPS failure	Hazardous to mission	3rd order failure mode—CAC No. 3. Filter G2FL1 must fail open during future operation. SPS component must become damaged. (undetectable) minor
		Leaks mixture of GN_2 and propellant	Liquid leaks on GSE components, fire hazard	Fire propagates	Personnel hazard halts operation	1st order failure mode—CAC No. 1. Halts conditioning to repair leak and neutralize contaminated areas. catastrophic
Unit draining	G2FL2	Clogs	Part of S14-002 does not drain, fire hazard		Delays operation	1st order failure mode—CAC No. 1. catastrophic

~~CONFIDENTIAL~~

Table 4-8. Propellant Transfer and Conditioning Unit, Ground Support Equipment Failure Effects Analysis (Cont)

Model No. S14-002-008 Date 29 April 1963

Nomenclature Propellant Transfer and Conditioning Unit

Function Phase	Subsystem Component or Item	Failure Mode	Failure Effect On			Remarks
			System	Other Systems or Subsystems	Function	
Unit draining	G2FL2 filters	Creates contamination	Contamination flows into RSV in later operation	Causes SPS failure	Hazardous to mission	3rd order failure mode—CAC No. 3. Filter G2FL1 must fail open during future operation. SPS component must become damaged. minor
	G2FL2 filters	Leaks propellant	Liquid leaks on GSE components, fire hazard	Fire propagates	Personnel hazard halts operation	1st order failure mode—CAC No. 1. Halts conditioning to repair leak and neutralize contaminated areas. catastrophic
Unit purging	G2FL2 filters	Creates contamination	Contamination flows into RSV in later operation	Causes SPS failure	Hazardous to mission	3rd order failure mode—CAC No. 3. Filter G2FL1 must fail open during future operation. SPS component must become damaged. minor
		Leaks mixture of GN_2 and propellant vapors	Liquid leaks on GSE components, fire hazard	Fire propagates	Personnel hazard halts operation	1st order failure mode—CAC No. 1. Halts conditioning to repair leak and neutralize contaminated areas. catastrophic

~~CONFIDENTIAL~~

C[redacted]

WATER TRANSFER UNIT (S14-005)

FAILURE EFFECTS ANALYSIS

This section of the report presents the results of a failure mode and effect analysis covering the operating of the water transfer unit during the flushing, purging, and filling of the water storage system environmental control system (WSS/ECS) of the Apollo CM, evacuation of water from the CM vapor vent tube, and the purging of the units' electrical component compartment. The analysis is based on the following assumptions.

1. The failure mode orders and corrective action classifications are based on the failure of the item in the subsystem, component, or item column only. All other components are assumed functioning properly.

2. The plumbing and components are initially free of contaminants and foreign objects which could deteriorate system reliability or harm personnel.

3. All control valves are normally closed. The signal to open them is contingent upon receiving a "GO" signal from the sensory systems. Functional failure of the valves could cause a system failure.

4. Sensory system failures could permit transmitting erroneous information to the control panel.

FUNCTIONAL DESCRIPTION

The WSS/ECS provides tank storage for the water which is a product of the fuel cell reactions. These storage tanks must contain at launch time, sufficient potable water and waste water to meet any requirements that may be imposed by a pad abort or short mission. This requirement is due to the relatively short operating period of the fuel cell.

A means is therefore provided by this unit to transfer the required water from a ground source to the WSS/ECS and prior to and during transfer maintain the water in a suitable condition protected from contamination. The water is loaded into the WSS/ECS storage tanks against a constant 20-psig head provided by a bladder separator filled with GO_2. The total amount transferred is 28 to 100 pounds. A means is also provided to remove the water if prolonged launch delay is encountered. This unit is also used to

[redacted]

remove any water which has accumulated in the vapor vent tube prior to launch. This prevents the forming of ice and subsequent blockage of the tube. A schematic of the unit is shown in Figure 4-5.

CONCLUSIONS

Table 4-9 summarizes the 49 failure modes analyzed on Table 4-10 worksheets. Six of these are first-order failure modes, and the analysis indicates the most serious first-order failure mode would be those causing loss of pressure while clearing the vapor vent tube. There are two in this category (failure in the open position of solenoid valves) classified as catastrophic. The design restraint opposing this failure mode is pressure gage PG3 installed on the drain tank which indicates vacuum pressure. Further observance of water flow exercised during the operational period would also be a restraint.

The next most serious failure mode appears to be block of N_2 flow during the clearing of the vapor vent tube operation. There are three category I failure modes of this type classified as detectable failure modes on Table 4-9. The design restraint opposing this type of failure mode is the PG3 pressure gage.

Whenever contamination in excess of specification limits is allowed to enter the system during the purging operation, possible damage to spacecraft or GSE components can occur. This is classed as a fourth-order failure mode and is undetectable.

Table 4-9 lists three failure modes classified as delaying the countdown. These delays would be caused by an unrepairable malfunction to a major component such as the pump, solenoid valves, etc. The scope of this report will be enlarged at the next revision to include restraints to this type of failure mode.

Table 4-10 delineates the results of the failure effects analyses performed on this unit.

CRITICAL FAILURE EFFECTS

1. Contaminants by-passing the filters which will allow the possibility of component damage

2. Failure of pressure regulator to reduce GN_2 pressure during purge mode and thus the possibility of spacecraft component damage

~~CONFIDENTIAL~~

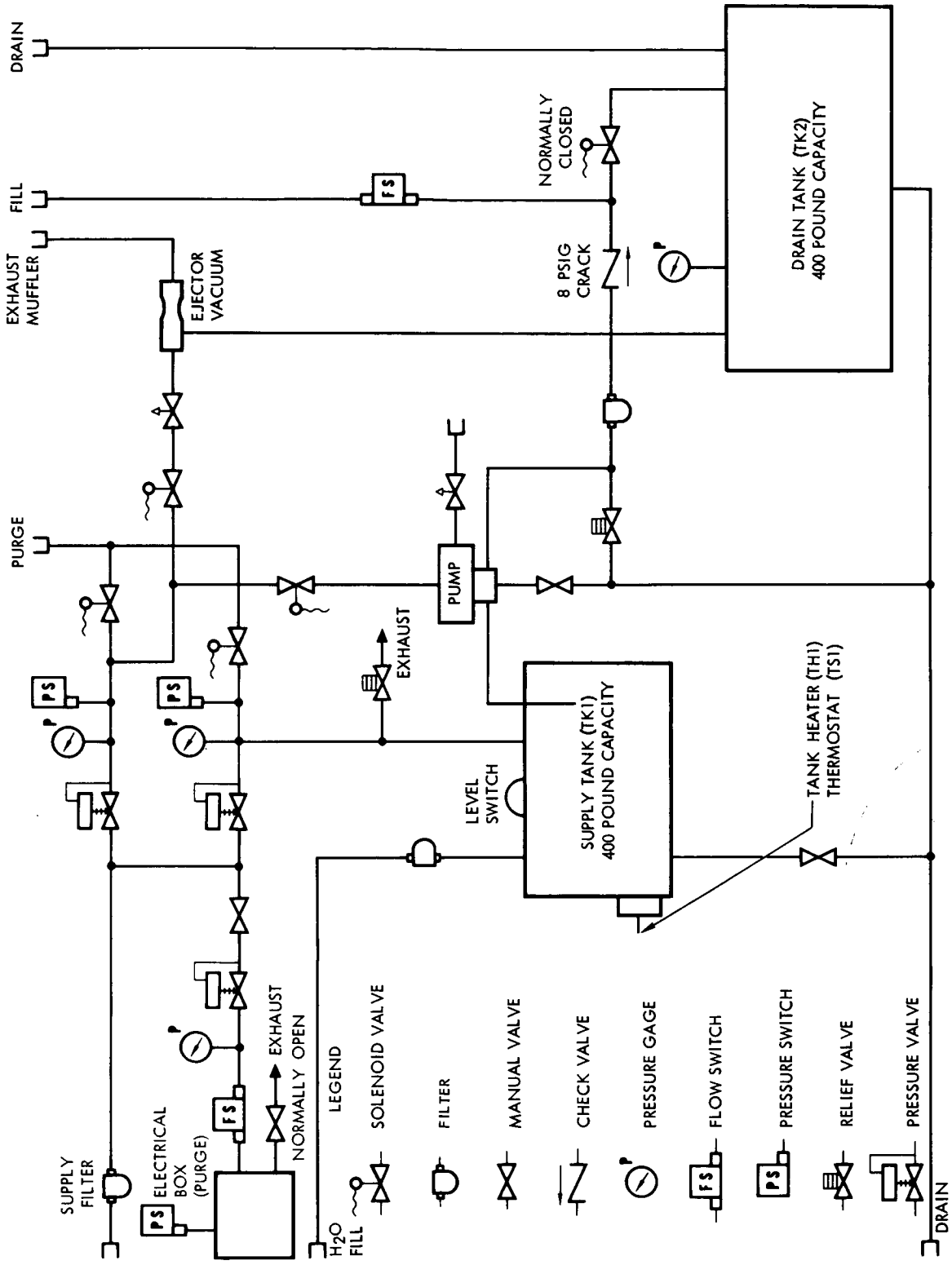

Figure 4-5. Water Transfer Unit (S14-005) Schematic

~~CONFIDENTIAL~~

Table 4-9. Water Transfer Unit (S14-005)
Failure Mode Effect Analysis Summary

	Failure Mode*				Corrective Action Classification				Delays Operation	Halts Operation	Countdown Delay
	I	II	III	IV	1	2	3	4			
Undetectable malfunction hazardous to GSE and/or personnel	4	4		1	5	3		1	1	4	4
May cause undetectable failure to GSE		2	2	4		2	2	4	2		
May cause detectable failure to GSE	2	4	2			6	2		4		
Others		12	1	11	3	10	1	10	5	6	
Totals	6	22	5	16	8	21	5	15	12	10	4

* Total 49

3. Undetectable failure of solenoid valves causing a loss of pressure through the ejector vacuum during the clearing of the vapor vent tube

4. Erroneous indication of vacuum by pressure gage PG3 which in turn indicates water being cleared from the vapor vent tube

5. Failure of level switch on the supply tank to indicate the correct amount of water being transferred to the spacecraft

RECOMMENDATIONS

1. Use filters which will not by-pass the GN_2 in the event of clogging.

2. Use a normally closed solenoid valve for valve LV3 and a normally open solenoid valve for LV5 valve. This will improve fail-safe provisions during the clearing of the vapor vent tube.

3. Use a pressure switch in the line between the ejector vacuum and the drain tank to give an indication of vacuum on the control panel.

4. Manually controlled valves such as NV1 needle valve and FR1 flow regulator should be the adjust and lock type.

Table 4-10. Water Transfer Unit, Ground Support Equipment Failure Effects Analysis

Model No. S14-005 Date _____

Nomenclature Water Transfer Unit

Function Phase	Subsystem Component or Item	Failure Mode	Failure Effect On			Remarks
			System	Other Systems or Subsystems	Function	
Purge or clear vapor vent tube	*FL1 filter	Fractures, ruptures	Permits contaminants to bypass filter			4th order failure mode—CAC No. 4 (undetectable)
Purge or clear vapor vent tube	*PR1 pressure regulator	Clogs	Blocks flow		Halts function	1st order failure mode—CAC No. 2
		Fails open	Fails to reduce pressure			2nd order failure mode—CAC No. 2
		Fails closed	Halts flow		Halts function	1st order failure mode—CAC No. 2
Purge or clear vapor vent tube	*PG1 pressure gage	Fails to indicate or indicates improperly	Cannot monitor system properly		None	3rd order failure mode—CAC No. 3
Purge or clear vapor vent tube	*PP1 pressure switch	Fails to indicate or indicates improperly	Cannot monitor system properly		None	3rd order failure mode—CAC No. 3

*Component analysis is the same for flush and fill modes

Table 4-10. Water Transfer Unit, Ground Support Equipment Failure Effects Analysis (Cont)

Model No. S14-005 Date _____

Nomenclature Water Transfer Unit

Function Phase	Subsystem Component or Item	Failure Mode	Failure Effect On			Remarks
			System	Other Systems or Subsystems	Function	
Purge	LV1 solenoid valve	Fails open	None		None	4th order failure mode — CAC No. 4 (undetectable)
		Fails closed	Halts flow		Halts purge	2nd order failure mode — CAC No. 1
Clear vapor vent tube	*LV1 solenoid valve	Fails open	De-creases vacuum		Halts function	1st order failure mode — CAC No. 1
		Fails closed	None		None	4th order failure mode — CAC No. 4 (undetectable)
Purge or clear vapor vent tube	LV3 solenoid valve	Fails open	Loss of pressure		Halts function	1st order failure mode — CAC No. 1
		Fails closed				4th order failure mode — CAC No. 4 (undetectable)
Purge	LV2 solenoid valve	Fails open	Loss of pressure		None	3rd order failure mode — CAC No. 2
		Fails closed	None		None	4th order failure mode — CAC No. 4 (undetectable)
Clear vapor vent tube	LV5 solenoid valve	Fails closed	Halts flow		Halts function	1st order failure mode — CAC No. 1
		Fails open	None		None	4th order failure mode — CAC No. 4 (undetectable)

Table 4-10. Water Transfer Unit, Ground Support Equipment Failure Effects Analysis (Cont)

Model No. S14-005 Date _____

Nomenclature Water Transfer Unit

Function Phase	Subsystem Component or Item	Failure Mode	Failure Effect On			Remarks
			System	Other Systems or Subsystems	Function	
Purge	*LV5 solenoid valve	Fails closed	None		None	4th order failure mode — CAC No. 4 (undetectable)
		Fails open	Reduction in pressure		Halts function	2nd order failure mode — CAC No. 1
Clear vapor vent tube	PG3 pressure gage	Fails to indicate	Indicates no vacuum on drain tank		Halts function	1st order failure mode — CAC No. 2
Flush or fill	LV3 solenoid valve	Fails closed	Halts flow		Halts function	2nd order failure mode — CAC No. 1
		Fails open	None		None	4th order failure mode — CAC No. 4 (undetectable)
	NP1 pump	Leaks N_2	Decreases water flow		Halts function	2nd order failure mode — CAC No. 2
	MV1 and MV3 drain valves	Fails open	Loss of water		Halts function	2nd order failure mode — CAC No. 2
	LS1 level switch	Fails to indicate or indicates improperly	Fails to monitor function		Halts function	2nd order failure mode — CAC No. 2

[redacted]

Table 4-10. Water Transfer Unit, Ground Support Equipment Failure Effects Analysis (Cont)

Model No. S14-005 Date _____

Nomenclature Water Transfer Unit

Function Phase	Subsystem Component or Item	Failure Mode	Failure Effect On			Remarks
			System	Other Systems or Subsystems	Function	
Flush or fill	RV2 relief valve	Fails open or leaks	Diverts flow to drain		Halts function	2nd order failure mode—CAC No. 2
		Fails closed	Loss of pressure relief			4th order failure mode—CAC No. 4 (undetectable)
	FL2 and FL3 filters	Fractures or ruptures	Permits contaminants to bypass filters			4th order failure mode—CAC No. 4
	LV4 solenoid valve	Clogs	Blocks flow		Halts function	2nd order failure mode—CAC No. 2
		Fails open	Diverts flow to drain		Halts function	2nd order failure mode—CAC No. 2
	FS1 flow sensor	Fails closed	None		None	4th order failure mode—CAC No. 4 (undetectable)
		Fails to indicate or indicates improperly	Unable to monitor system		Halts function	2nd order failure mode—CAC No. 2

[redacted]

Table 4-10. Water Transfer Unit, Ground Support Equipment Failure Effects Analysis (Cont)

Model No. S14-005 Date _____

Nomenclature Water Transfer Unit

Function Phase	Subsystem Component or Item	Failure Mode	Failure Effect On			Remarks
			System	Other Systems or Subsystems	Function	
Purge electrical box	FL1 filter	Fractures, ruptures, or fails to filter	Permits contaminants to bypass filter			4th order failure mode — CAC No. 4 (undetectable)
	MV1 manual valve	Fails closed	Halts flow		Halts function	2nd order failure mode — CAC No. 2
		Fails open or leaks				4th order failure mode — CAC No. 4 (undetectable)
	PR3 pressure regulator	Fails open	Fails to reduce pressure		Halts function	2nd order failure mode — CAC No. 2
		Fails closed	Halts flow		Halts function	2nd order failure mode — CAC No. 2
	PG3 pressure gage	Fails to indicate or indicates improperly	Cannot monitor system correctly			2nd order failure mode — CAC No. 2
	FS2 flow switch	Fails to monitor flow	Cannot monitor system		Halts function	2nd order failure mode — CAC No. 2

Table 4-10. Water Transfer Unit, Ground Support Equipment Failure Effects Analysis (Cont)

Model No. S14-005 Date

Nomenclature Water Transfer Unit

Function Phase	Subsystem Component or Item	Failure Mode	Failure Effect On			Remarks
			System	Other Systems or Subsystems	Function	
Purge electrical box	PP3 pressure switch	Fails to indicate pressure	Cannot monitor system		Halts function	2nd order failure mode — CAC No. 2
	LV6 solenoid valve	Fails open	None		None	4th order failure mode — CAC No. 4 (undetectable)
		Fails closed	Excessive pressure in cabinet		Halts function	2nd order failure mode — CAC No. 2

CO[redacted]

MODULE LEAK TEST UNIT (S14-001)

FAILURE EFFECTS ANALYSIS

This section of the report presents the results of a failure mode and effect analysis covering the operation of the module leak test unit during initial acceptance of commercial nitrogen gas (GN_2) at high pressure, reduction of this pressurized gas to test requirement levels, pressurization of the Apollo CM with the GN_2, and subsequent monitoring of the CM cabin leakage rate. The analysis is based on the following assumptions:

1. The failure mode orders and corrective action classifications are based on the failure of the item in the subsystem, component, or item column only. All other components are assumed functioning properly.

2. The plumbing and components are initially free of contaminants and foreign objects which could deteriorate system reliability or harm personnel.

3. All control valves are normally closed. The signal to open them is contingent upon receiving a "GO" signal from the sensory systems. Functional failure of the valves could cause a system failure.

4. Sensory system failures could permit transmitting erroneous information to the control panel.

5. The commercial GN_2 is free of particles smaller than 10 microns which could be harmful to the system.

FUNCTIONAL DESCRIPTION

The module leak test unit will be used for ground and simulated flight checking of the Apollo Command Module Pressure Leakage Rate. To perform this function the S14-001 will accept GN_2 from a commercial source and reduce the high pressure at which it receives this gas to the level required for both the altitude and sea level tests. After pressurizing the CM for the required mode, the S14-001 continues to maintain a 5-psi differential. By subsequent measuring of the flow into the CM, the internal to external leakage rate is determined.

~~CONFIDENTIAL~~

The leak test unit has a filtering system which provides both a filtering and drying function. It is capable of removing particles greater than 10 microns, nominal, and all particles 40 microns, or larger.

Incorporation of a gaseous oxygen purge system within the module leak test unit is currently being considered. This would modify the present unit considerably, but still utilize many of the same components. The major changes would be the addition of another vacuum pump and another flow transducer. An outstanding feature of this newer proposal is that it affords the opportunity to purge the CM with 100-percent GO_2 without requiring an additional unit. A schematic of this unit is shown in Figure 4-6.

CONCLUSIONS AND RECOMMENDATIONS

At the present time, the available schematics of the unit do not include the electrical circuitry. However, as the design progresses, a failure mode effect analysis of the circuitry will be made and incorporated into this report.

The summary (Table 4-11) of the analysis worksheets (Table 4-12) indicates the only failure mode potentially hazardous to crew safety is that associated with failure of electrical connections or power sources. It is felt this failure mode is sufficiently remote to preclude a design change.

Table 4-12 delineates the results of the failure effects analyses performed on this unit.

A recommendation has been made to provide the remote control station and the local control unit with an interlock circuit so that the "DEAD" station could not intercept control intentionally or unintentionally without acknowledgement from the station in control.

[redacted]

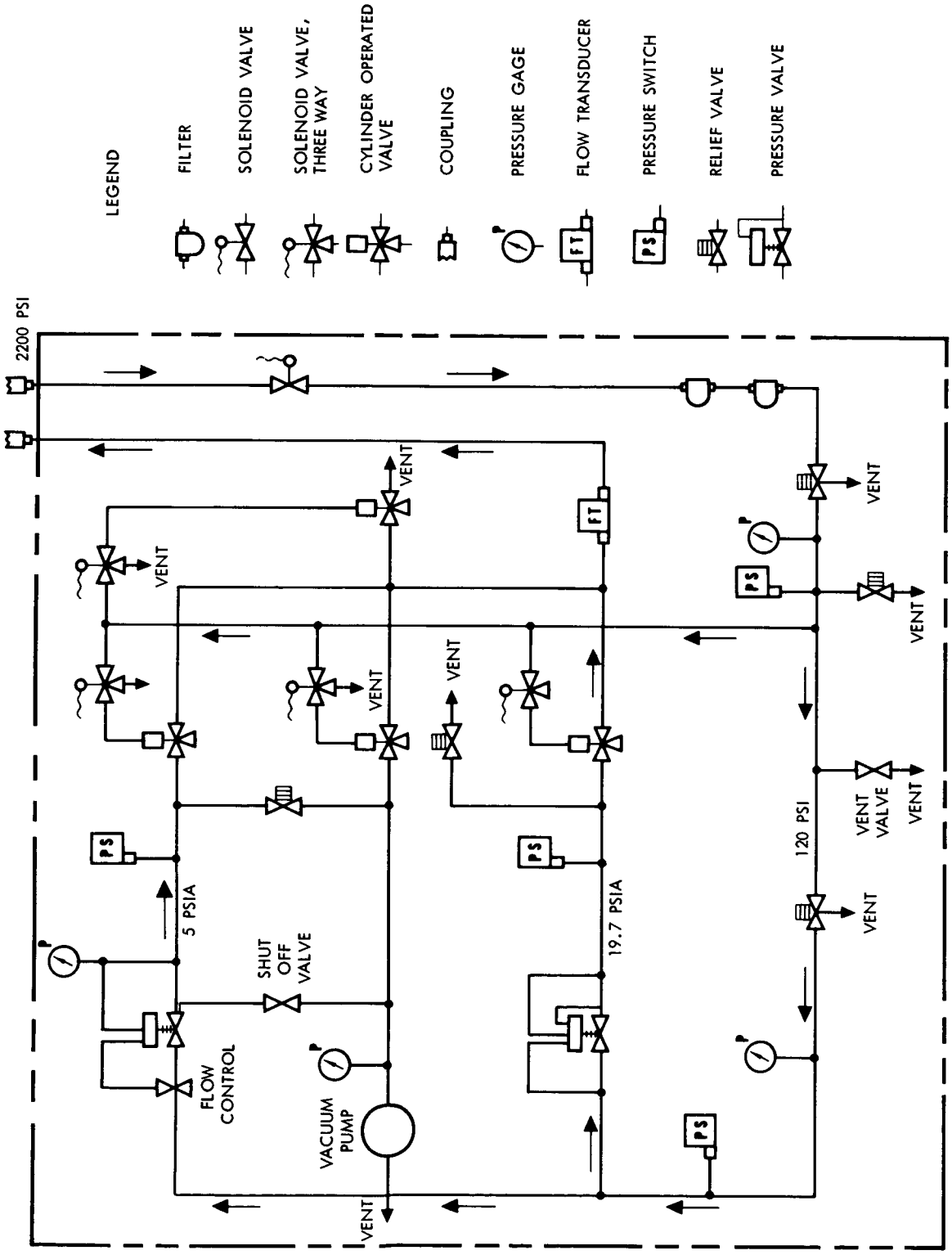

Figure 4-6. Hydraulic Module Leak Test Unit Schematic

[redacted]

Table 4-11. Module Leak Test Unit (S14-001)
Failure Mode Effect Analysis Summary

	Failure Mode*			Corrective Action Classification			Delay Test Operation	Halt Test Operation	Halt Servicing Damaged Components Personnel Hazard
	I	II	IV	1	2	4			
Undetectable malfunction during operation - GSE and personnel hazard	1			1				1	1
May cause personnel hazard	1								
May cause undetectable failure	1	18	20			15	2	16	
May damage interface systems									
May cause detectable failure	3	11	2	26	4	7	2	11	
Totals		29	22	27	4	22	4	28	1

* Total 54

Table 4-12. Module Leak Test Unit, Ground Support Equipment Failure Effects Analysis

Model No. S14-001 Date 11 April 1963

Nomenclature Module Leak Test Unit

Function Phase	Subsystem Component or Item	Failure Mode	Failure Effect On			Remarks
			System	Other Systems or Subsystems	Function	
Common mode 5 psig and 19.7 psia	G9LV5 solenoid valve	Fails open				4th order failure mode—CAC No. 4 (undetectable)
		Fails closed			Halts leak test	2nd order failure mode—CAC No. 1
	G9FL 1, 2 filter	Fractures, ruptures, or fails to filter	Permits contaminants to bypass filter			4th order failure mode—CAC No. 4 (undetectable)
		Clogs	Blocks flow		Halts test	2nd order failure mode—CAC No. 2
	G9PR 1 pressure valve	Fails open			Halts test	2nd order failure mode—CAC No. 1
		Fails closed	Halts flow		Halts test	2nd order failure mode—CAC No. 1 (undetectable)
	G9PG 1 pressure gage	Fails to indicate or indicates improperly	Cannot monitor system properly			4th order failure mode—CAC No. 4 (undetectable)
	G9PS 1 pressure switch	Fails to indicate or indicates improperly	Cannot monitor system correctly		Halts leak test	2nd order failure mode—CAC No. 1 (undetectable)

Table 4-12. Module Leak Test Unit, Ground Support Equipment Failure Effects Analysis (Cont)

Model No. S14-001 Date 11 April 1963

Nomenclature Module Leak Test Unit

Function Phase	Subsystem Component or Item	Failure Mode	Failure Effect On			Remarks
			System	Other Systems or Subsystems	Function	
Common mode	G9RV1 relief valve	Fails open or leaks	Vents GN_2		Delays test	2nd order failure mode—CAC No. 1
		Closed				4th order failure mode—CAC No. 4 (undetectable)
	G9VV1 vent valve	Fails open, fractures, or leaks	GN_2 escapes		Delays test	2nd order failure mode—CAC No. 1
		Closed				4th order failure mode—CAC No. 4 (undetectable)
	G9PR2 pressure valve	Fails open			Halts test	2nd order failure mode—CAC No. 1
		Fails closed	Blocks GN_2 flow		Halts test	2nd order failure mode—CAC No. 1 (undetectable)
	G9PG2 pressure gage	Indicates improperly or fails to indicate	Cannot monitor system correctly			4th order failure mode—CAC No. 4 (undetectable)
	G9PS2 pressure switch	Fails to indicate	Cannot monitor system		Halts test	2nd order failure mode—CAC No. 1 (undetectable)

Table 4-12. Module Leak Test Unit, Ground Support Equipment Failure Effects Analysis (Cont)

Model No. S14-001 Date 11 April 1963

Nomenclature Module Leak Test Unit

Function Phase	Subsystem Component or Item	Failure Mode	Failure Effect On			Remarks
			System	Other Systems or Subsystems	Function	
Altitude mode test	G9NV3 cylinder oper. valve	Fails open				4th order failure mode—CAC No. 4
		Fails closed	Halts flow		Halts test	2nd order failure mode—CAC No. 1
	G9LV3 solenoid valve	Fails open		Press C/M		4th order failure mode—CAC No. 4
		Fails closed		Fails to open G9NV3	Halts test	2nd order failure mode—CAC No. 1
	G9LV4 solenoid valve	Fails open				4th order failure mode—CAC No. 4
		Fails closed		Fails to open G9NV4		4th order failure mode—CAC No. 4
	G9NV4 cylinder oper. valve	Fails open				4th order failure mode—CAC No. 4
		Fails closed	Cannot vent			4th order failure mode—CAC No. 4
	G9NV2 cylinder oper. valve	Fails open		Opens G9NV2		4th order failure mode—CAC No. 4
		Fails closed	Cannot open G9NV2			4th order failure mode—CAC No. 4

Table 4-12. Module Leak Test Unit, Ground Support Equipment Failure Effects Analysis (Cont)

Model No. S14-001 Date 11 April 1963

Nomenclature Module Leak Test Unit

Function Phase	Subsystem Component or Item	Failure Mode	Failure Effect On			Remarks
			System	Other Systems or Subsystems	Function	
Altitude mode test	G9SV1 shut-off valve	Fails open			Halts test	2nd order failure mode—CAC No. 2 (undetectable)
		Fails closed	Prevents flow to vacuum pump			2nd order failure mode—CAC No. 1
	G9PG5 pressure gage	Fails to indicate or indicates improperly	Cannot monitor system properly			4th order failure mode—CAC No. 4
	G9VP1 vacuum pump	Fails to provide vacuum			Halts test	2nd order failure mode—CAC No. 1
Atmos-pheric mode	G9PR4 pressure valve	Fails open	Fails to reduce pressure		Halts test	2nd order failure mode—CAC No. 1
		Fails closed	Halts flow		Halts test	2nd order failure mode—CAC No. 1 (undetectable)
	G9PG4 pressure gage	Fails to indicate or indicates improperly	Cannot monitor system properly			4th order failure mode—CAC No. 4 (undetectable)

CONFIDENTIAL

Table 4-12. Module Leak Test Unit, Ground Support Equipment Failure Effects Analysis (Cont)

Model No. S14-001 Date 11 April 1963

Nomenclature Module Leak Test Unit

Function Phase	Subsystem Component or Item	Failure Mode	Failure Effect On			Remarks
			System	Other Systems or Subsystems	Function	
Common mode	G9FT1 flow transducer	Fails to indicate or indicates improperly	Fails to monitor GN_2 flow properly		Halts test	2nd order failure mode — CAC No. 1 (undetectable)
Plumbing attach-ments	Disconnects, joints, coupling	Leak or burst	Loss of GN_2		Halts test	2nd order failure mode — CAC No. 1 (undetectable)
Electrical units	Connections	Short or break	Loss of oper-ating control		Halts test	1st order failure mode — CAC No. 1 (undetectable)
Main power 120 volts and 28 volts dc	Relays	Fails open	Loss of main	Loss of 28 volts dc control	Halts test	1st order failure mode — CAC No. 2
		Fails closed	Loss of control		Halts test	1st order failure mode — CAC No. 2
	Vacuum pump motor	Fails to operate		Loss of altitude test	Halts test	2nd order failure mode — CAC No. 2

CONFIDENTIAL

Table 4-12. Module Leak Test Unit, Ground Support Equipment Failure Effects Analysis (Cont)

Model No. S14-001 Date 11 April 1963

Nomenclature Module Leak Test Unit

Function Phase	Subsystem Component or Item	Failure Mode	Failure Effect On			Remarks
			System	Other Systems or Subsystems	Function	
Altitude mode test	G9FC1 flow controller	Fails open				4th order failure mode — CAC No. 4 (undetectable)
		Fails closed	Halts flow		Halts test	2nd order failure mode — CAC No. 1 (undetectable)
	G9PR3 pressure valve	Fails open	Fails to regulate		Halts test	2nd order failure mode — CAC No. 1
		Fails closed	Halts flow		Halts test	2nd order failure mode — CAC No. 1 (undetectable)
	G9PG3 pressure gage	Fails to indicate or indicates improperly	Cannot monitor system properly			4th order failure mode — CAC No. 4 (undetectable)
	G9PS3 pressure switch	Fails to indicate or indicates improperly	Cannot monitor system properly		Halts test	2nd order failure mode — CAC No. 1 (undetectable)
	G9RV2 relief valve	Fails open	Vent off GN_2		Delays test	2nd order failure mode — CAC No. 1 (undetectable)
		Fails closed	Loss of over-pressure relief			4th order failure mode — CAC No. 4 (undetectable)

Table 4-12. Module Leak Test Unit, Ground Support Equipment Failure Effects Analysis (Cont)

Model No. S14-001 Date 11 April 1963

Nomenclature Module Leak Test Unit

Function Phase	Subsystem Component or Item	Failure Mode	Failure Effect On			Remarks
			System	Other Systems or Subsystems	Function	
Atmospheric mode	G9PS4 pressure switch	Fails to indicate or indicates improperly	Cannot monitor system properly		Halts test	2nd order failure mode—CAC No. 1 (undetectable)
	G9RV3 relief valve	Fails open	Vents off GN_2		Halts test	2nd order failure mode—CAC No. 1 (undetectable)
		Fails closed				4th order failure mode—CAC No. 4 (undetectable)
	G9NV1 cylinder oper. valve	Fails open				4th order failure mode—CAC No. 4 (undetectable)
		Fails closed	Halts flow		Halts test	2nd order failure mode—CAC No. 1 (undetectable)
	G9LV1 solenoid valve	Fails open	Starts GN_2 flow	Pressurized command module		4th order failure mode—CAC No. 4 (undetectable)
		Fails closed	Halts flow		Halts test	2nd order failure mode—CAC No. 1 (undetectable)

COMPUTER-MANDEX D-C ANALYSIS

This is a reliability analysis technique in which an analog of the part performance characteristic values of a subsystem (for example) is systematically varied to extremes so the effects of such variance on the subsystem performance can be analyzed. The information derived provides data for specifying limits on the permissible drift or part performance characteristics, or, if drift rates are known, a reliability estimate may be derived. The analysis will also reveal whether parts in the subsystem design are tolerant to variances.

CO[redacted]

MANDEX WORST-CASE D-C ANALYSIS OF THE TEST CONDUCTOR CONSOLE (C14-019)

SUMMARY

This portion of the report presents the results of a reliability study on the Test Conductor Console unit (C14-019). Data are presented on the system, subsystem, and part levels, including the results of the Mandex worst-case d-c computer analysis which was performed on each electronic circuit module in the console. Analyses were performed to evaluate subcircuit ability to exhibit the mandatory voltage, power, and current levels to ensure accurate simulator operation when under the influence of part and parameter tolerance variations. The Mandex analysis revealed no subcircuit failures due to worst-case voltage and power-dissipation stress levels, except for the relay driver (T-171). This report does not contain a detailed failure-mode and effects analysis of the entire unit; however, the effect on the overall probability of success due to misapplication of the relay and lamp driver is thoroughly discussed under "Conclusions" in this section.

ANALYSIS

Mandex Computer analyses were performed on all subcircuits of the system monitor panel of the test conductor console to determine whether the subcircuits were capable of providing the outputs necessary for reliable simulator operation when subjected to stresses induced by the excursion of part and parameter values to worst-case extremes.

Subcircuit operational states were determined, and the appropriate equivalent circuits were constructed. Modes were chosen throughout each circuit, and the operational matrix equations were written and programmed for computer worst-case evaluation. Subcircuit schematics and equivalent circuits appear in Figures 4-7 through 4-11, followed by Table 4-13 which shows the nominal output values along with the worst-case maximum and minimum computed values and the maximum and minimum allowable values. Differences in the allowable and worst-case computer output values have also been documented. Examination of the results indicate that all subcircuit worst-case output voltages remained well within their maximum and minimum allowable variations.

[redacted]

~~CONFIDENTIAL~~

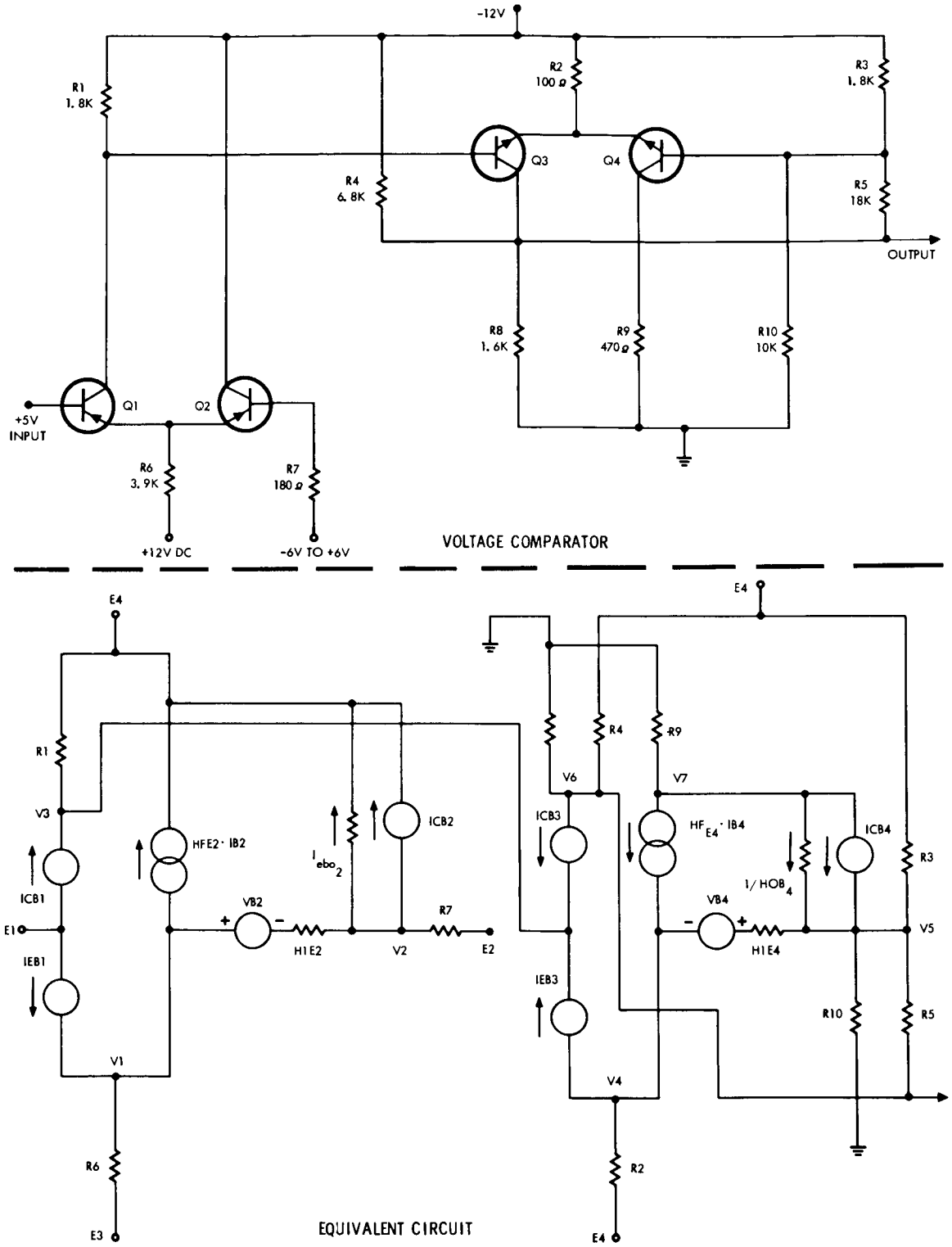

Figure 4-7. Voltage Comparator T-172 and Equivalent Circuit

~~CONFIDENTIAL~~

CO[redacted]

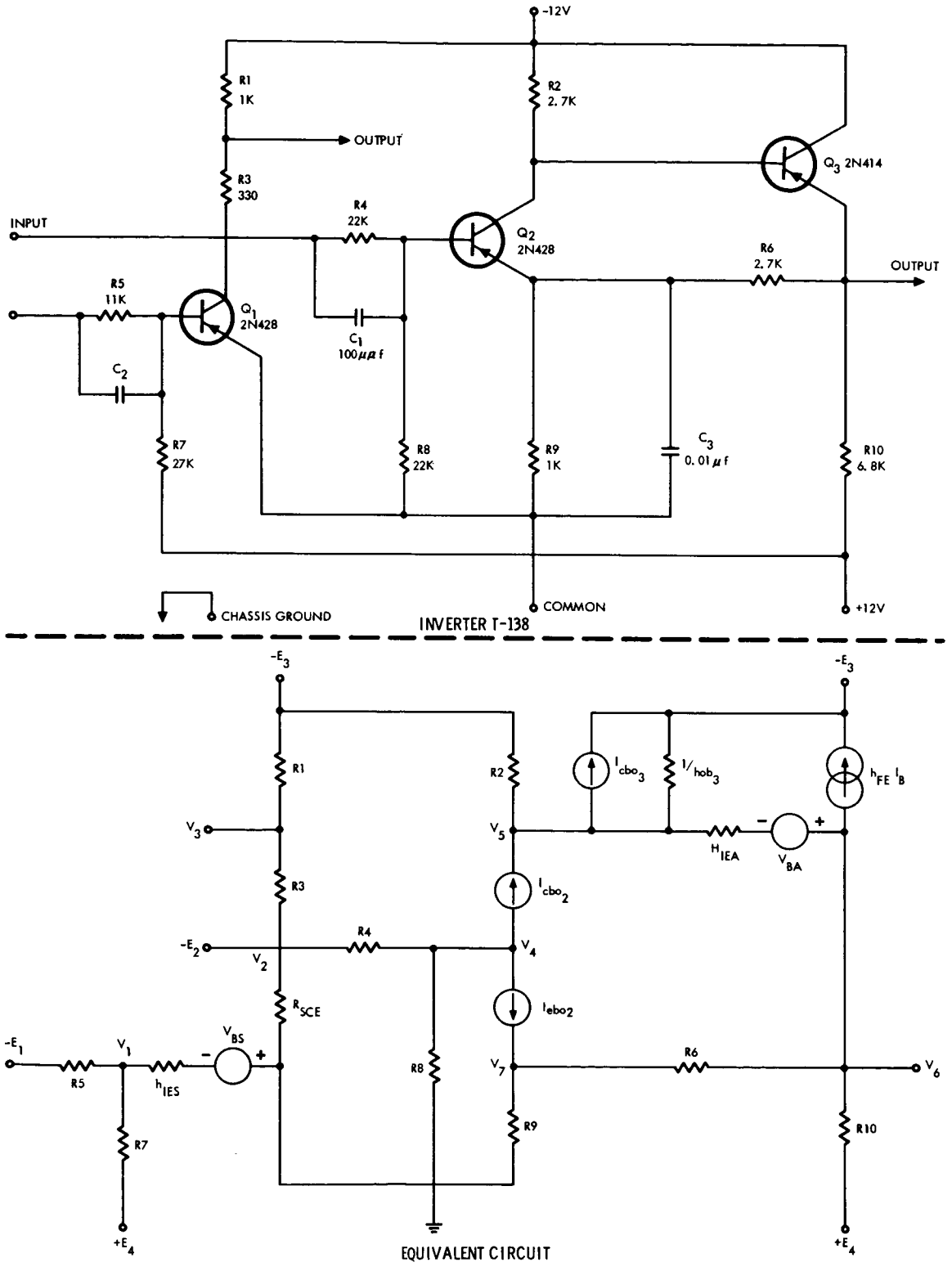

Figure 4-8. Inverter T-138 and Equivalent Circuit

[redacted]

~~CONFIDENTIAL~~

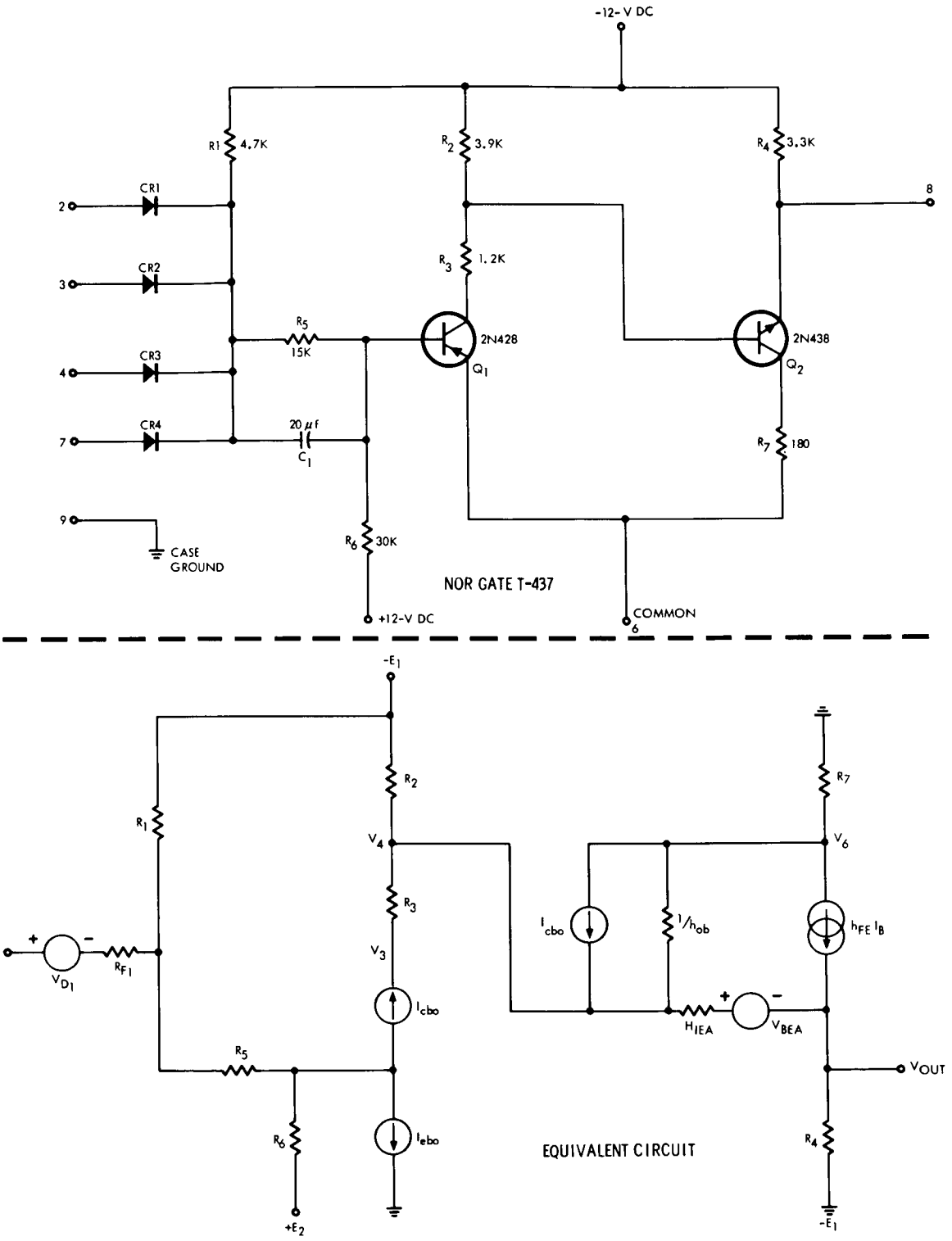

Figure 4-9. NOR Gate T-437 and Equivalent Circuit

~~CONFIDENTIAL~~

~~CONFIDENTIAL~~

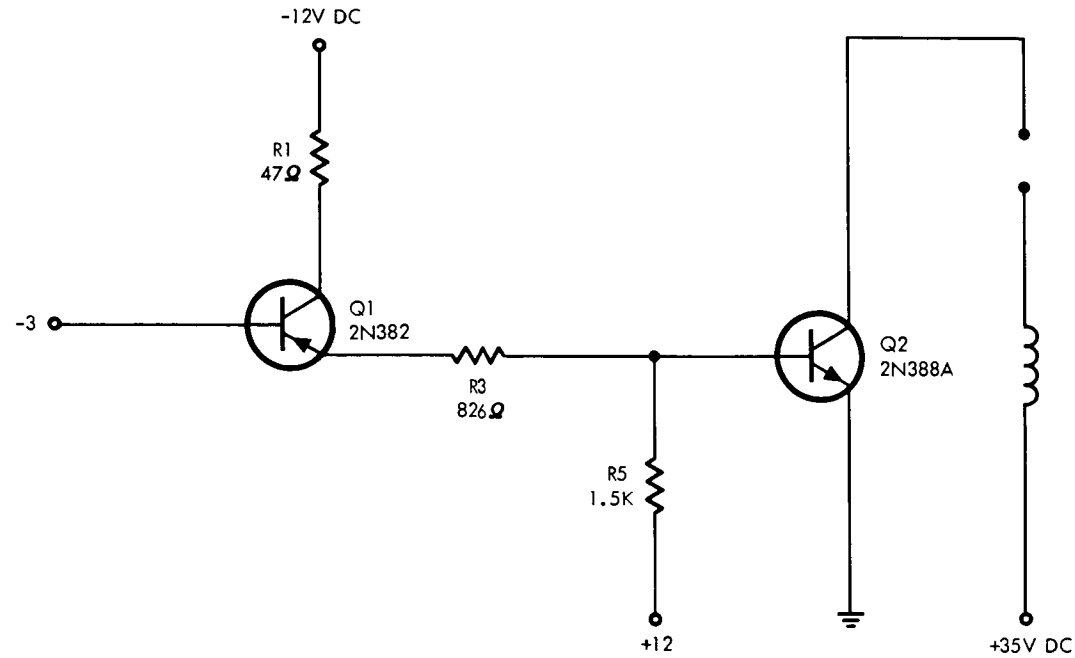

RELAY AND LAMP DRIVER T-171

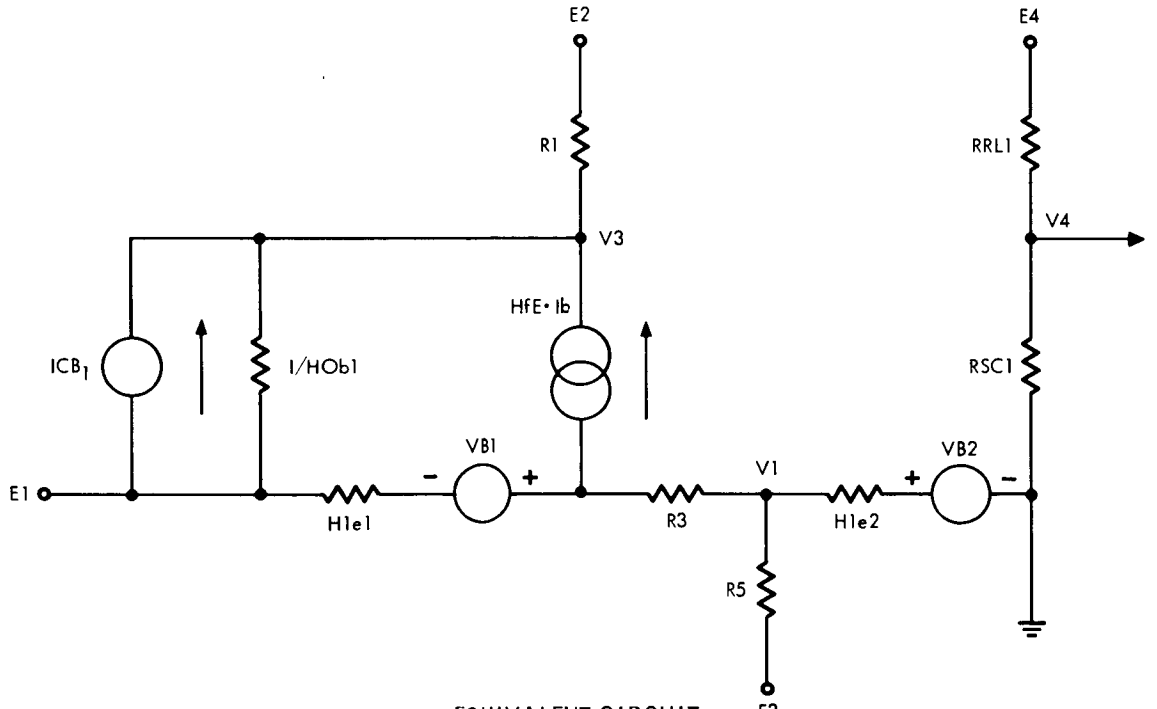

EQUIVALENT CIRCUIT

Figure 4-10. Relay and Lamp Driver T-171 and Equivalent Circuit

~~CONFIDENTIAL~~

~~CONFIDENTIAL~~

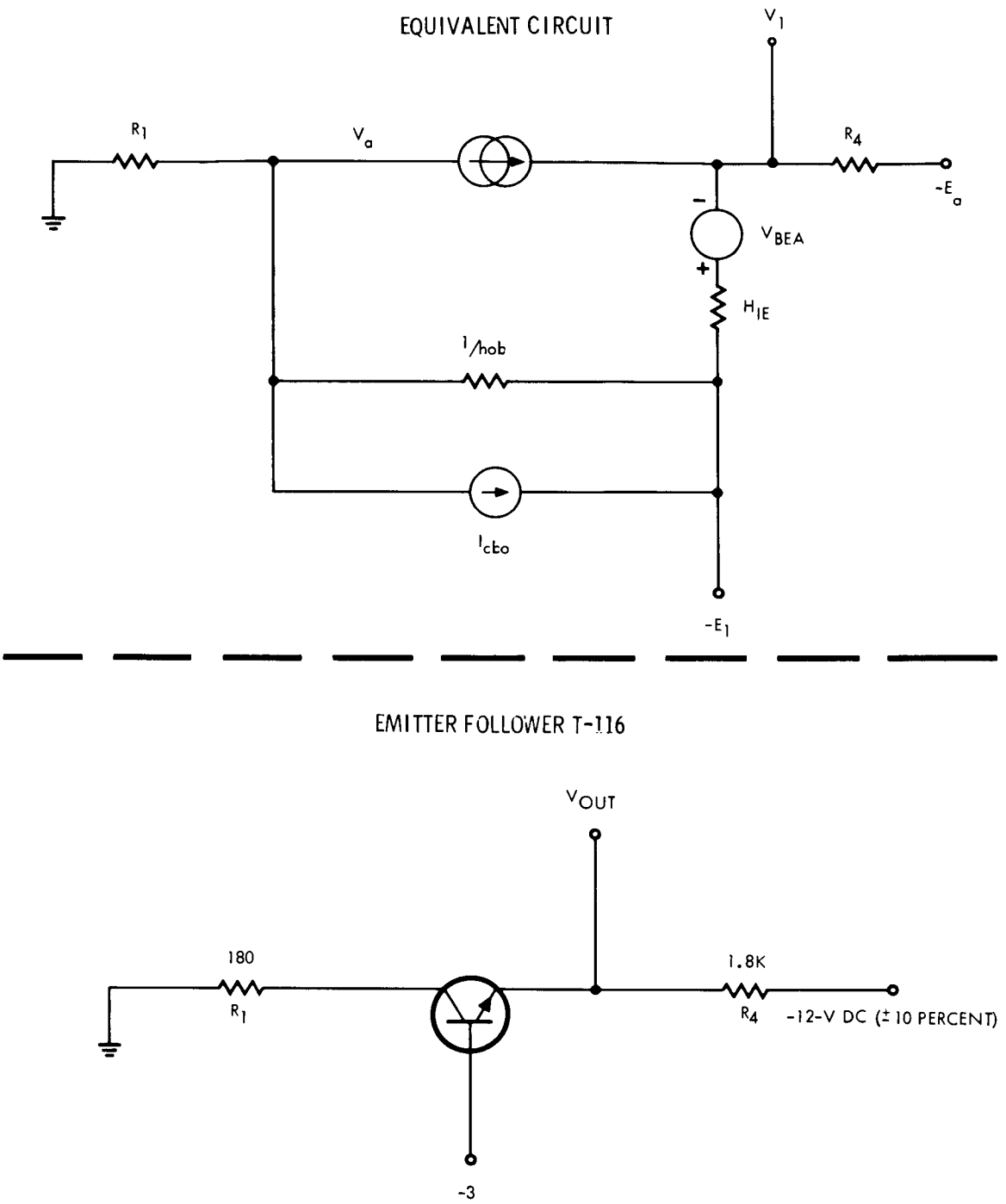

Figure 4-11. Emitter Follower T-116 and Equivalent Circuit

~~CONFIDENTIAL~~

Table 4-13. Mandex Worst-Case Output Results

Output Parameters	Nominal Solution	Worst Case Maximum	Max Allow Worst Case	Difference	Worst Case Minimum	Min Allow Worst Case	Difference
VOLTAGE COMPARATOR T-172							
V_1	3.75 v	4.27 v	4.5 v	0.22 v	3.11 v	3.00 v	0.11 v
V_2	3.75 v	4.37 v	4.75 v	0.37 v	3.49 v	3.51 v	0.02 v
V_3	-11.78 v	-10.7 v	-10.3 v	0.45 v	13.19 v	-13.50 v	0.309 v
V_4	-10.07 v	-8.71 v	-8.7 v	0.012 v	-11.47 v	-11.50 v	0.021 v
V_5	-9.38 v	-8.20 v	-7.48 v	0.22 v	-10.4 v	-10.64 v	0.24 v
V_6	-2.76 v	-2.27 v	-2.0 v	0.27 v	-3.30 v	-4.0 v	0.69 v
V_7	-5.92 v	-4.92 v	-4.50 v	0.42 v	-6.43 v	-6.7 v	0.27 v
INVERTER T-138							
V_1	-1.728 v	-1.455 v	-1.400 v	0.055 v	-2.021 v	-6.000 v	3.979 v
V_2	-0.0117 v	-0.0108 v	0	0.0108 v	-0.0126 v	-1.00 v	0.9874 v
V_3	-2.986 v	-2.724 v	-2.700 v	0.024 v	-3.264 v	-3.300 v	0.036 v
V_4	-1.544 v	-1.407 v	-1.000 v	0.407 v	-1.703 v	-4.500 v	2.797 v
V_5	-11.557 v	-10.853 v	-10.800 v	0.053 v	-12.236 v	-13.00 v	0.764 v

~~CONFIDENTIAL~~

Table 4-13. Mandex Worst-Case Output Results (Cont)

Output Parameters	Nominal Solution	Worst Case Maximum	Max Allow Worst Case	Difference	Worst Case Minimum	Min Allow Worst Case	Difference
V_6	-11.33 v	-10.660 v	-10.500 v	0.160 v	-11.986 v	-12.1 v	0.114 v
V_7	-3.06 v	-2.757 v	-1.000 v	1.757 v	-3.379 v	-6.000 v	2.621 v
V_8 I_{BA}	-0.188 ma	-0.128 ma	-0.100 ma	0.028 ma	-0.264 ma	-0.5 ma	0.236 ma
V_9 I_{BES}	-0.334 ma	-0.230 ma	-0.1 ma	0.130 ma	-0.444 ma	-0.8 ma	0.356 ma
V_{10} V_{CEA}	-0.666 v	-0.525 v	0	0.525	-0.846 v	-1.800 v	0.954 v
V_{11} V_{CES}	-0.0117 v	-0.0108 v	0	0.0108 v	-0.0126 v	-1.000 v	0.9874 v
NOR GATE T-437							
V_1	-3.118 v	-2.628 v	-1.500 v	1.128 v	-3.655 v	-4.000 v	0.345 v
V_2	1.960 v	3.084 v	3.100 v	0.016 v	0.8690 v	0.5000 v	0.3690 v
V_3	-11.666 v	-10.29 v	-9.00 v	1.29 v	-12.980 v	-13.20 v	0.220 v
V_4	-11.664 v	-10.291 v	-9.00 v	1.291 v	-12.975 v	-13.20 v	0.225 v
V_5	-11.665 v	-10.292 v	-9.00 v	1.292 v	-12.976 v	-13.20 v	0.224 v
V_6	-0.0236 v	-0.0131 v	0 v	0.0131 v	-0.0432 v	-0.05 v	0.0068 v

~~CONFIDENTIAL~~

[redacted]

Table 4-13. Mandex Worst-Case Output Results (Cont)

Output Parameters	Nominal Solution	Worst Case Maximum	Max Allow Worst Case	Difference	Worst Case Minimum	Min Allow Worst Case	Difference
RELAY AND LAMP DRIVER T-171							
V_1	2.5 v	3.91 v	4.0 v	0.09 v	1.86 v	0.7 v	1.16 v
V_2	-2.69 v	-2.14 v	-2.1 v	-0.04 v	-3.03 v	-3.4 v	-0.37 v
V_3	-11.38 v	-9.96 v	-9.8 v	-0.16 v	-12.74 v	-13.0 v	-0.26 v
V_4	3.71 v	4.66 v	5.0 v	0.34 v	2.94 v	2.0 v	0.94 v
V_5*	485 ma	589 ma	200 ma	389 ma	399 ma	0.040 ma	398.96 ma
V_6*	1.8 w	2.71 w	0.2 w	2.51 w	1.19 w	0 w	1.19 w
EMITTER FOLLOWER T-116							
V_1	-3.48 v	-3.09 v	-2.38 v	-0.71 v	-3.96 v	-4.15 v	-0.19 v
V_2	-0.84 v	-0.62 v	-0.5 v	-0.12 v	-1.09 v	-1.5 v	-0.41 v

*Failure

[redacted]

The failure-rate data presented in this report were obtained from failure-rate curves in the AVCO Reliability Handbook. An evaluation of the system and subsystem failure rates thus made is, therefore, based on the best current state-of-the-art data. Based on the predicted failure-rate data compiled from the evaluation of the console's subsystems, the reliability ($R_T = e^{-t}$) of the test conductor console is approximately zero. It is estimated that the MTBF could never be greater than 5 hours. This MTBF is representative of the console with continuous misapplication of the relay driver.

A brief discussion of the usage and functional operation of the test conductor console is presented in the following paragraphs.

FUNCTIONAL DESCRIPTION

The test conductor console will be utilized to centralize the monitoring and control of system functions exercised during prelaunch preparations and during launch count-down. This equipment will provide commands via the umbilical cable to actuate CM systems, and provide monitoring via the umbilical cable.

The test conductor console is composed of the system command panel, system monitor panel, and launch control panel. Three power supplies provided +28-volt and +12-volt power for the solid-state circuits, indicator lamps, and commands.

System Command Panel

This panel consists of momentary and holding switches, indicator lamps, and a SCR indicating circuit which initiates 28-volt commands via the umbilical cable to the system of the CM. Indicator lamps are used to show the condition to which a system has been commanded.

System Monitor Panel

This panel consists of circuitry that provides a means of monitoring critical systems in the CM during the checkout and countdown periods.

Launch Control Panel

The circuitry function of this panel provides command signals for the LES, pyro, and Bus A and B systems via the umbilical cable. It also monitors conditions of critical systems, and tests and resets all lights on the console.

PROBABILITY OF FAILURE - SUBCIRCUIT PARTS ANALYSIS

The subcircuit parts for the test conductor console were analyzed for probability of failure. The failure-rate data utilized in the probability-of-failure analysis was obtained from the AVCO Reliability Engineering failure-rate curves. Each subcircuit module has been analyzed and the findings have been presented in Table 4-14; the failure rates are summarized in Table 4-15. The tables contain stress ratios, component parts, failure rates, application factors, and the total failure rates predicted for each circuit module on the basis of these values.

Since all of the modules must function properly to assure continuous successful operation of the entire console, the console MTBF is determined by serializing the MTBF's of all the modules. Since the T-171 relay driver has failure rate (i.e., reciprocal of the MTBF) which approaches infinity, the associated MTBF of this module and, hence, the resultant MTBF for the console is very close to zero hours (qualitatively predicted to be on the order of 5 hours). This analysis was verified during laboratory tests when a failure appeared as predicted within this report. The manufacturer of the particular module was notified and acknowledged the failure based on its application. A redesign is in process which will replace the failed module.

SUBSYSTEM ANALYSIS

This portion of the C14-019 test conductor console analysis contains the compilation of the overall components and modules into applicable subsystems. The individual failure rates applied to the components and modules were derived from applying component stress levels and interpreting appropriate failure-rate curves. Tables 4-14 through 4-16 contain the subsystem failure rates.

CONCLUSIONS AND RECOMMENDATIONS

The results of the Mandex worst-case d-c analysis revealed that all subcircuits of the system monitor except the relay and lamp driver passed worst-case voltage and power stresses due to variation in component part parameter values. The degree of reliability for circuit operations predicted by the computer analysis method can be substantiated by the stress failure-rate analysis conducted on each subcircuit. The AVCO probability-of-failure analysis (Table 4-16) yielded a total failure rate of infinity for the relay and lamp drivers T-171, of the system monitor. This failure rate brought the total failure rate for the system monitor to an infinite number. The combined

Table 4-14. Probability Analysis — Failure Rate Percent/10^3 Hours

Part No. and Description	Quantity	Failure Rate Generic (Chart)	K_a Application Factor Curves	Actual Failure Rate	Total Failure Rate
VOLTAGE COMPARATOR T-172					
Q_1 - 2N 1478	1	0.090	0.96	0.0864	0.0864
Q_2 - 2N 1478	1	0.090	0.96	0.0864	0.0864
Q_3 - 2N 1304	1	0.090	0.96	0.0864	0.0864
Q_4 - 2N 1304	1	0.090	0.96	0.0864	0.0864
R_1	1	0.0004	0.2	0.0008	0.0008
R_2	1	0.0004	1.0	0.0004	0.0004
R_3	1	0.0004	0.8	0.00032	0.00032
R_4	1	0.0004	1.8	0.00072	0.00072
R_5	1	0.0004	0.5	0.00020	0.00020
R_6	1	0.0004	1.5	0.0006	0.0006
R_7	1	0.0004	0.6	0.00024	0.00024
R_8	1	0.0004	0.8	0.00032	0.00032
R_9	1	0.0004	1.7	0.00068	0.00068

Table 4-14. Probability Analysis — Failure Rate Percent/10^3 Hours (Cont)

Part No. and Description	Quantity	Failure Rate Generic (Chart)	K_a Application Factor Curves	Actual Failure Rate	Total Failure Rate
R_{10}	1	0.0004	0.9	0.00036	0.00036
Connections, Solder	32	0.0004	—	0.0004	0.0128
Connections, Electrical	5	0.0035	—	0.0035	0.0175
K_a = Application Constant R = Resistor Q = Transistor Total Failure Rate - 0.3804 percent/10^3 per circuit per Module					
INVERTER AMPLIFIER T-138					
Q_1, Q_2 2N428	2	0.084	1	0.084	0.168
Q_3 2N414	1	0.084	1	0.084	0.084
R_1	1	0.025	1	0.025	0.025
R_2	1	0.025	1	0.025	0.025
R_3	1	0.025	1	0.025	0.025
R_4	1	0.025	1	0.025	0.025
R_5	1	0.025	1	0.025	0.025

Table 4-14. Probability Analysis—Failure Rate Percent/10^3 Hours (Cont)

Part No. and Description	Quantity	Failure Rate Generic (Chart)	K_a Application Factor Curves	Actual Failure Rate	Total Failure Rate
R_6	1	0.025	1	0.025	0.025
R_7	1	0.025	1	0.025	0.025
R_8	1	0.025	1	0.025	0.025
R_9	1	0.025	1	0.025	0.025
R_{10}	1	0.025	1	0.025	0.025
C_1, C_2, C_3	3	0.075	1	0.075	0.075
Total Parts Failure Rate = 0.725 percent/10^3 hr					
NOR GATE T-437					
Q_1, 2N428	1	0.191	1	0.191	0.191
Q_2, 2N438	1	0.191	1	0.191	0.191
Diode - IN695	4	0.0678	1	0.0678	0.2712
R_1	1	0.0297	1	0.0297	0.0297
R_2	1	0.0297	1	0.0297	0.0297
R_3	1	0.0297	1	0.0297	0.0297

Table 4-14. Probability Analysis—Failure Rate Percent/10^3 Hours (Cont)

Part No. and Description	Quantity	Failure Rate Generic (Chart)	K_a Application Factor Curves	Actual Failure Rate	Total Failure Rate
R_4	1	0.0297	1	0.0297	0.0297
R_5	1	0.0297	1	0.0297	0.0297
R_6	1	0.0297	1	0.0297	0.0297
R_7	1	0.0297	1	0.0297	0.0297
Capacitor C_1	1	0.02	1	0.020	0.02
Total Failure Rate = 0.8811 percent/10^3 hr, MTBF = $1/\lambda$, MTBF = $\frac{1}{0.8811 \text{ percent}/10^3 \text{ hr}}$, MTBF = 120,000 hr					
RELAY AND LAMP DRIVER T-171					
Q_1, 2N382	1	0.140	1	0.140	0.140
Q_3, 2N388	1	0.08	∞	0.08	∞
R_1	1	0.0297	1	0.0297	0.0297
R_3	1	0.0297	1	0.0297	0.0297
R_5	1	0.0297	1	0.0297	0.0297
C_1	1	0.02	1	0.02	0.02
Total Parts Failure Rate = ∞ percent/1000 hr					

~~CONFIDENTIAL~~
~~CONFIDENTIAL~~

Table 4-14. Probability Analysis — Failure Rate Percent/10^3 Hours (Cont)

Part No. and Description	Quantity	Failure Rate Generic (Chart)	K_a Application Factor Curves	Actual Failure Rate	Total Failure Rate
EMITTER FOLLOWER T-116					
Q_1 - 2N438A	1	0.084	1	0.084	0.084
R_1	1	0.0297	1	0.0297	0.0297
R_2	1	0.0297	1	0.0297	0.0297
Total Parts Failure Rate = 0.1434 percent/10^3 hr					

Table 4-15. Test Conductor Console Circuit Module Failure Rates

No.	Module	Failure Rate (percent/10^3 hr)
T-172	Comparator	0.3804
T-138	Inverter	0.7250
T-437	NOR gate	0.8811
T-171	Relay driver	$\approx \infty$
T-116	Emitter follower	0.1434

analyses of all the subsystems yielded a failure rate approaching infinity for the test conductor console and an approximate MTBF of 5 hours. Table 4-16 presents a summation of the subsystems failure rate.

This extremely low MTBF value indicates that the test conductor console will fail in operation during this time period due to the overstressed 2N388 transistors of the relay and lamp drivers as predicted by the computer analysis results shown in Table 4-17. By comparing the maximum allowable worst-case outputs of V5 (collector current) and V6 (power dissipation) with actual maximum and minimum worst-case computed values, it can be seen that after continuous microsecond operation of these transistors in this overstressed condition, the drivers will fail. The drivers are also overstressed under nominal conditions of operation.

Table 4-17 (stress ratio) shows that the stress ratio is nine times the maximum allowable. This stress ratio of nine at the circuit operating temperature on the AVCO curves shows that the application factor approaches infinity. This figure is greater than the maximum application factor and thereby denotes circuit failure; in addition, the multiplication of this factor times the generic transistor failure rate of Table 4-16 shows why such a low MTBF value resulted for the test conductor console (C14-019).

To circumvent operational failure in the test conductor console due to misapplication of the relay and lamp driver T-171 by an overstressed condition for a few microseconds, it is suggested that another transistor along with other module circuit changes be made to reduce the current and power levels to an acceptable level. The results of this replacement will

Table 4-16. Subsystems Failure-Rate Analysis

Part Name	Quantity	Part No.	Mfr No.	Failure Rate Percent/10^3 Hr.	Total Failure Rate Percent/10^3 Hr.
Module Part No: G16-985103			Title: System Monitor		
Capacitors 10μf C_1, C_{20}	20	CS13AF100K	MIL-C-266-55	0.0235	0.4700
Diode CR_1	1	IN647	General Electric	0.323	0.3230
Resistor R_1	1	RL20AD682G	MIL-R-22684	0.0888	0.0888
Resistor R_2	1	RL20AD122G	MIL-R-22684	0.0888	0.0888
Resistor R_5-R_{14}	10	RL20AD272G	MIL-R-22684	0.0888	0.8880
Transistor Q_1, Q_2	2	2N2102	General Electric	0.144	0.2880
Comparator	20	T-172	Engineered Electronics Co.	0.4222	8.444
Inverter	10	T-138	Engineered Electronics Co.	0.723	7.230
NOR Gate	10	T-437	Engineered Electronics Co.	0.881	8.8100
Ref. Element	20	G16-851066	Engineered Electronics Co.	0.5894	11.7880
Switch - S_1, S_2 & S_3	3	2PB208-T2	Honeywell	0.114	0.342
Voltmeter	14	MCE-1 0-5V	Minn-Honey	*	*

Table 4-16. Subsystems Failure-Rate Analysis (Cont)

Part Name	Quantity	Part No.	Mfr No.	Failure Rate Percent/10^3 Hr.	Total Failure Rate Percent/10^3 Hr.
Voltmeter	4	MCE-1 0-50V	Minn-Honey	*	*
DS_1 thru DS_{30}	30	33-X-12	Master Specialties	0.8	2.400
Driver	15	T-171	Engineered Electronics Co.	∞	∞
Emitter follower	4	T-116	Engineered Electronics Co.	0.1434	0.5736
Total Failure Rate = ∞ percent/1000 hr *Unknown					
Module Part No: G16-851017			Title: System Control		
Rectifier CR_1	18	C5F	General Electric	0.16	2.86
Lamps	2	31-X-6	Master Specialties	0.80	1.60
Lamps	17	31-X-12	Master Specialties	0.80	13.60
Lamps	17	31-X-5	Master Specialties	0.80	13.60
Resistors	18	RL20AD-392	—	0.10	1.80
Resistors	18	RL20AD-821	—	0.10	1.80

Table 4-16. Subsystems Failure-Rate Analysis (Cont)

Part Name	Quantity	Part No.	Mfr No.	Failure Rate Percent/10^3 Hr.	Total Failure Rate Percent/10^3 Hr.
Switch	18	MS25126-8	Microswitch	0.114	2.05
Switch	18	2PB-208-T2	Microswitch	0.114	2.05
Total Failure Rate = 30.36 percent/10^3 hr MTFB = 2540 hr					
Module Part No: G16-985101			Title: Launch Control		
Rectifier CR1 - CR4	4	C5F	General Electric	0.16	0.64
Resistor	4	RL20AD821G	Dale Electric	0.1	0.40
Resistor	4	RL20AD392G	Dale Electric	0.1	0.40
Switch, key-operated	2	OT2E8A	Westinghouse	0.114	0.228
Switch, key-operated	2	OT2Z1M	Westinghouse	0.114	0.228
Switch, push-button	3	2PB208-T2	Microswitch	0.114	0.342
Switch, push-button	1	4PB11-T2	Microswitch	0.114	0.114
Flasher	2	26F60T	Amperite	0.8	1.600
Lamp assembly	2	31-X-5	Master Specialties	0.8	1.600

Table 4-16. Subsystems Failure-Rate Analysis (Cont)

Part Name	Quantity	Part No.	Mfr No. and λ	Failure Rate Percent/10^3 Hr.	Total Failure Rate Percent/10^3 Hr.
Lamp assembly	4	31-X-12	Master Specialties	0.8	3.200
Lamp assembly	20	310-X-12	Master Specialties	0.8	16.000
Total Failure Rate = 24.752 percent/10^3 hr MTBF = 4400 hr					
Module Part No: C14-019			Title: Test Conductor Console		
System monitor	1	G16-985103	λ_1	∞	∞
System control	1	G16-851017	λ_2	39.3600	39.3600
Launch control	1	G16-985101	λ_3	24.7520	24.7520

Total Failure Rate = ∞ percent/10^3 hr

$$R = e^{-\lambda t}$$

$$R_T = e^{-(\lambda_1 + \lambda_2 + \lambda_3)t}$$

$$R_T = e^{-(\infty + \lambda_2 + \lambda_3)t}$$

$$R_T = \frac{1}{e^{\lambda_1 t}}$$

$$\lim_{\lambda_1 \to \infty} \frac{1}{e^{\lambda_1 t}} = 0$$

$R_T = 0$ MTBF $\cong$ 5 hours

Table 4-17. Probability Analysis—Stress Ratio

Part No. and Description	Quantity	Mfr Recommended Maximum Use	Actual Maximum Use (Milliwatts)	Max Rate at 80 C	
				Ratio	Absolute (Milliwatts)
Voltage Comparator T-172					
Q_1-2N 1478	1	Power = 250 mw	0.005	0.00002	0.005
Q_2-2N 1478	1	BV_{cew} = -20 v	41.0	0.164	41.0
Q_3-2N 1304	1	Power = 150 mw	0.003	0.00002	0.003
Q_4-2N 1304	1	BV_{ceo} = 20 v	25.2	0.168	25.2
R_1	1	Power = 125 mw	0.011	0.00008	0.011
R_2	1	Power = 125 mw	36.7	0.294	36.7
R_3	1	Power = 125 mw	3.78	0.029	3.78
R_4	1	Power = 125 mw	12.6	0.101	12.6
R_5	1	Power = 125 mw	2.43	0.019	2.43
R_6	1	Power = 125 mw	17.5	0.142	17.5
R_7	1	Power = 125 mw	0.013	0.001	0.013
R_8	1	Power = 125 mw	4.76	0.038	4.76
R_9	1	Power = 125 mw	11.84	0.096	11.84
R_{10}	1	Power = 125 mw	8.79	0.070	8.79

Table 4-17. Probability Analysis—Stress Ratio (Cont)

Part No. and Description	Quantity	Mfr Recommended Maximum Use	Actual Maximum Use (Milliwatts)	Max Rate at 80 C	
				Ratio	Absolute (Milliwatts)
Inverter T-138					
Q_1, Q_2-2N428	2	Power = 150 mw BV_{ceo} = -12 v	Power = 0.1055 BV_{ceo} = 0.01172 v	0.3	45.0
Q_3-2N414	1	Power = 150 mw BV_{ceo} = -12 v	Power = 1.67 BV_{ceo} = 0.66615 v	0.3	45.0
R_1	1	Power = 0.125 w	Power = 81	0.4	50.0
R_2	1	Power = 0.125 w	Power = 0.059	0.4	50.0
R_3	1	Power = 0.125 w	Power = 27.2	0.4	50.0
R_4	1	Power = 0.125 w	Power = 0.102	0.4	50.0
R_5	1	Power = 0.125 w	Power = 7.86	0.4	50.0
R_6	1	Power = 0.125 w	Power = 25.2	0.4	50.0
R_7	1	Power = 0.125 w	Power = 6.97	0.4	50.0
R_8	1	Power = 0.125 w	Power = 0.108	0.4	50.0
R_9	1	Power = 0.125 w	Power = 9.36	0.4	50.0
R_{10}	1	Power = 0.125 w	Power = 79.8	0.4	50.0
C_1, C_2, C_3	3	-	-	0.6	-

Table 4-17. Probability Analysis—Stress Ratio (Cont)

Part No. and Description	Quantity	Mfr Recommended Maximum Use	Actual Maximum Use (Milliwatts)	Max Rate at 80 C	
				Ratio	Absolute (Milliwatts)
NOR Gate T-437					
Q_1 2N428	1	Power = 150 mw BV_{ceo} = -25 v	31.0	0.3	31
Q_2 2N438	1	Power = 150 mw	12.0	0.08	12
Diode In 695	4	*	2.0	*	2
R_1	1	Power = 125 mw	17.2	0.138	17.2
R_2	1	Power = 125 mw	0.256	0.002	0.256
R_3	1	Power = 125 mw	0.83	0.0066	0.83
R_4	1	Power = 125 mw	0.30	0.0024	0.30
R_5	1	Power = 125 mw	0.26	0.0021	0.26
R_6	1	Power = 125 mw	3.3	0.026	3.3
R_7	1	Power = 125 mw	0.55	0.0044	0.55
Capacitor C_1	1	*	*	*	0.8
Relay and Lamp Driver T-171					
Q_1 2N382	1	Power = 225 mw BV_{ceo} = 50 v	91.2	0.4	90
Q_3 2N388	1	Power = 200 mw BV_{ceo} = 40 v	1800	9.0	1800

[redacted]

Table 4-17. Probability Analysis—Stress Ratio (Cont)

Part No. and Description	Quantity	Mfr Recommended Maximum Use	Actual Maximum Use (Milliwatts)	Max Rate at 80 C	
				Ratio	Absolute (Milliwatts)
R_1	1	Power = 125 mw	21	0.168	21
R_3	1	Power = 125 mw	34	0.24	34
R_5	1	Power = 125 mw	66.5	0.53	66.5
C_1	1	*	*	*	*
Emitter Follower T-116					
Q_1 2N438A	1	Power = 150 mw BV_{ceo} = -25 v	3.2	0.021	3.2
R_1	1	Power = 125 mw	3.54	0.0273	3.54
R_4	1	Power = 125 mw	45	0.36	45.0

Q = Transistor
R = Resistor
C = Capacitor

*Unknown

[redacted]

result in an application factor of 1 for the relay driver, thereby decreasing the total circuit module failure rate to approximately 0.3291 percent per 1000 hours as compared to an infinite percent per 1000 hours shown in Table 4-14. This will decrease the probability of failure for the test conductor console to a maximum of 110.7820 percent per 1000 hours and an MTBF of 903 hours.

Irrespective of the preceding, it can be said that overall subcircuit design as evaluated by this method was found to be quite reliable; therefore, no other design changes are recommended.

~~CONFIDENTIAL~~

PRELIMINARY RELIABILITY PREDICTIONS

Reliability prediction in the predesign or system planning stages permits an early estimate of reliability feasibility and a preliminary allocation of reliability requirements at the system, subsystem, and component levels. When confronted with a design reliability objective or requirement, the designer must equate this requirement to the known design input parameters with essentially the same approach he uses when equating the performance characteristics of various components to the unit variables. The preliminary reliability prediction must pinpoint areas where engineering action can result in reliability improvement. These reports show only that the designs have a configuration which do or do not show the inherent capability of meeting the GSE specification MTBF requirements. Other analyses will have to be performed, however, before it can be determined if this unit meets all of its reliability requirements. These analyses include (1) failure mode and effects, (2) packaging, and (3) component analysis.

At the present time, failure-rate data are being used at face value, i.e., no environmental factor is being applied to the basic failure-rate values. It has been the practice to assign a factor of 1 to GSE used in the laboratory, a factor of 8 for GSE used in unsheltered areas, etc. It is the goal of the GSE reliability group to seek out and eliminate all components which tend to degrade the system under adverse environmental conditions or to include proper protection for such components in the design of the unit. Reliability analyses on final designs will include a realistic factor for any components that cannot be handled by the procedure described above.

WATER-GLYCOL SERVICING UNIT (S14-054)

A preliminary reliability prediction study of the water-glycol servicing unit is presented in this section. The results are presented in Table 4-18. Figure 4-12 is a system schematic of the components evaluated.

For the purpose of the prediction, the following were considered:

1. The water-glycol servicing unit was in constant operation.

2. System components were in series; therefore, the product exponential reliability rule applied.

~~CONFIDENTIAL~~

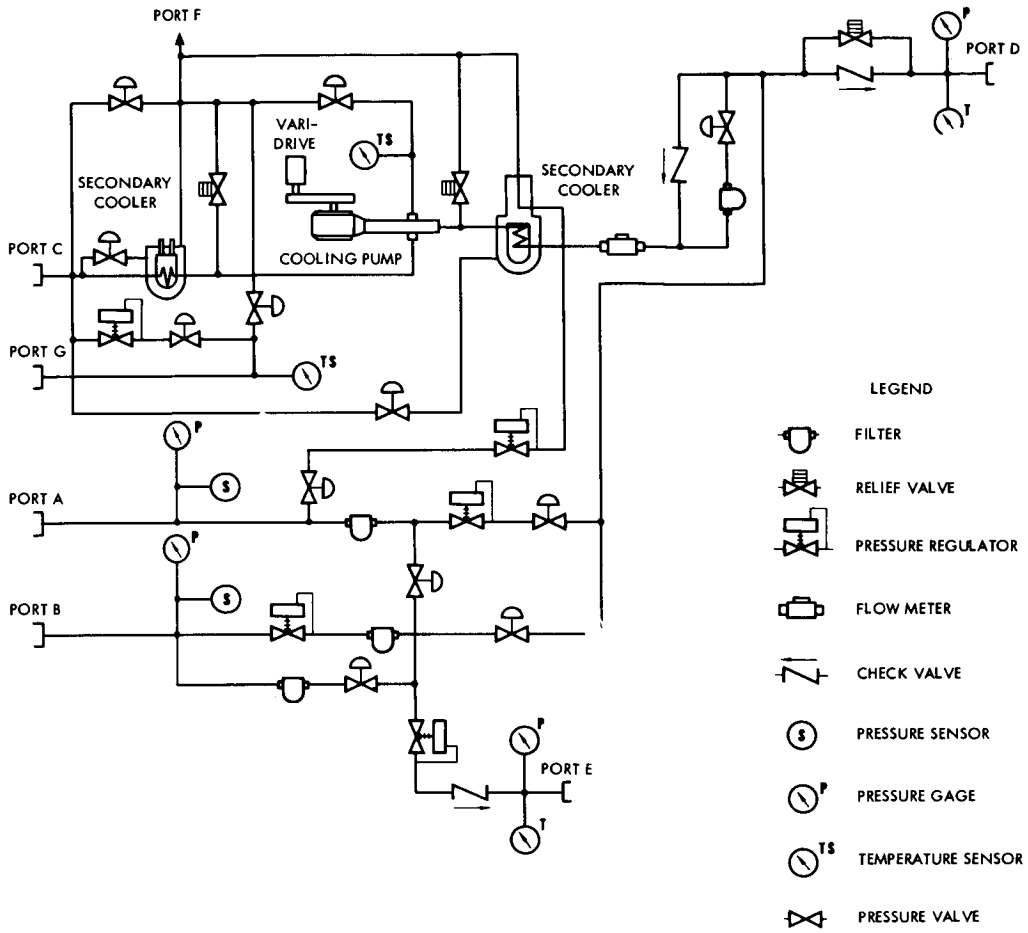

MECHANICAL MODES OF OPERATION IN SEQUENCE

SYSTEM	FUNCTION	METHOD
GN_2 SELF PURGE	PRETRANSFER PURGE	GN_2 IN PORTS C AND A, THROUGH SYSTEM, AND OUT PORT D TO SPACECRAFT
GH_2 SELF PUTGE	PRETRANSFER PURGE	GH_2 IN PORTS C AND B, THROUGH SYSTEM, AND OUT PORT D TO SPACECRAFT
VACUUM JACKETED LINES	LIQUID TRANSFER	LH_2 IN PORT C, OUT PORT D, AND RETURN HYDROGEN FLUID IN PORT G AND TO PUMP INLET (LIQUID RETURN) OR TO VENT PORT F (GAS RETURN), DEPENDING ON THE RETURN FLUID TEMPERATURE
GN_2 FOR EJECTOR SECONDARY AND PUMP COOLDOWN CIRCUIT	PRECOOLING	GN_2 FROM PORT A THROUGH PRECOOLER AND EJECTOR OUT VENT F. GN_2 FROM PUMP INLET AND OUT VENT PORT F
PRETRANSFER GN_2 PURGE WITH OR WITHOUT PORT E	POSTTRANSFER PURGE	GH_2 IN PORT A THROUGH SYSTEM AND OUT PORTS E AND D TO SPACECRAFT
GH_2 SELF PURGE	POSTTRANSFER PURGE	GH_2 TAKEN IN THROUGH PORT E, OUT PORTS A, B, C, G, OR F

Figure 4-12. LH_2 Transfer Unit, Mechanical Schematic

~~CONFIDENTIAL~~

Table 4-18. Water-Glycol Service Unit System Prediction by Components

Subsystem Component	Quantity	Failure Rate (percent/10^3 hr)	Percent of Total Failure Rate	Comments
Valves	32	27.730	63.9	
Gages	2	0.405	0.9	
Sensors	9	9.180	21.1	
Filters	4	0.120	0.2	
Reservoirs	3	0.450	1.0	
Pumps	2	2.300	5.5	
Extractor	1	3.000	6.9	
Disconnects	14	0.222	0.5	
Total failure rate 10^3 hr	67	43.407	100	
$MTBF = \frac{10^3}{FR} \frac{10^3}{0.434}$ 2303				

3. In the evaluation of this system, approximately 67 unit parts were analyzed.

Functional Description

The water-glycol servicing unit's fundamental function is to fill each fuel cell with 1.7 pounds of 30 to 70 percent water-glycol solution. The unit's operational period begins at T-6 hours, and prior to the fill operation it evacuates the GN_2 blanket from the spacecraft fuel-cell system. Following the fill operation, the unit will extract 10 to 13 cubic inches of water-glycol solution from each of the three fuel-cell modules. At approximately minus 2 hours, the spacecraft EPS will commence independent operations, and the water-glycol service unit will drain the fuel-cell system, flush it with distilled water, and purge with warm GN_2 until dry. The unit will then pressurize the fuel-cell system with a GN_2 blanket of 10 psi and monitor the system for pressure decay.

Conclusion

The predicted MTBF of 2303 hours for this unit exceeds the design objective of 600 hours. Continuous prediction analysis will be maintained as the design progresses, and as additional failure-rate data become available from the suppliers of the components being used, a more detailed functional analysis can be made, and the method of reliability calculation will be altered to obtain a more accurate value; therefore, it must be stated that the predicted MTBF is not to be considered as the final figure, and no design change is recommended at this time.

The MTBF's for the modes of operation are respectively: 11,837 hours for the vacuum, 4711 hours for the fill and extraction, 7426 hours for the drain and flush, and 4703 hours for the purge. This MTBF difference is due mainly to the quantities of components employed rather than the different types.

LH_2 AND LO_2 TRANSFER UNITS (S14-026 AND S14-032)

A preliminary reliability prediction study was performed on the LH_2 and LO_2 transfer units and is presented in this section. Data are presented on the system, subsystem, and component levels. Data presented in this report cover only the overall system prediction as presented in Table 4-19. The estimates are based on components shown in Figures 4-12, 4-13 and 4-14.

CO[redacted]

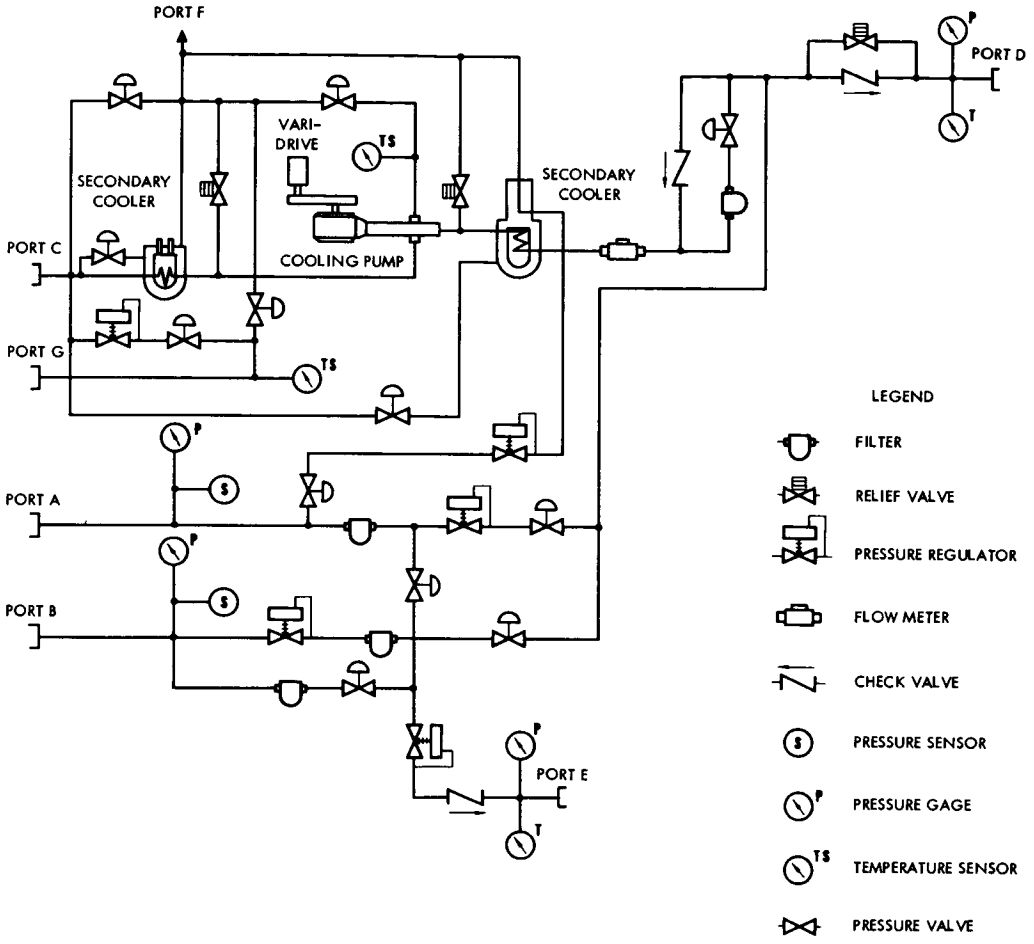

MECHANICAL MODES OF OPERATION IN SEQUENCE

SYSTEM	FUNCTION	METHOD
GN_2 SELF PURGE	PRETRANSFER PURGE	IN PORT A AND B, THROUGH SYSTEM, OUT PORT D TO SPACECRAFT
LH_2 COOLDOWN AND TRANSFER	GO_2 PRETRANSFER PURGE	IN PORT C, THROUGH COOLING SYSTEM, OUT PORT D TO SPACECRAFT
VACUUM JACKETED LINES	LO_2 TRANSFER	IN PORT C, THROUGH SYSTEM, OUT PORT D TO SPACECRAFT, RETURN THROUGH PORT E - IF NOW GO_2 BECAUSE OF TEMPERATURE CHANGE, OUT THROUGH VENT PORT F
PRETRANSFER GN_2 PURGE WITH OR WITHOUT PORT E	LO_2 POSTTRANSFER	IN PORT A, OUT PORT D TO SPACECRAFT TANKS AND OUT PORT E TO SPACECRAFT FUEL CELLS
PRETRANSFER GH_2 PURGE WITH OR WITHOUT GH_2 OUT PORT E	GO_2 OR GN_2 PURGE	WITHDRAWN THROUGH PORT E OR D AND OUT PORT G OR F

Figure 4-13. LO_2 Transfer Unit, Mechanical Schematic

[redacted]

~~CONFIDENTIAL~~

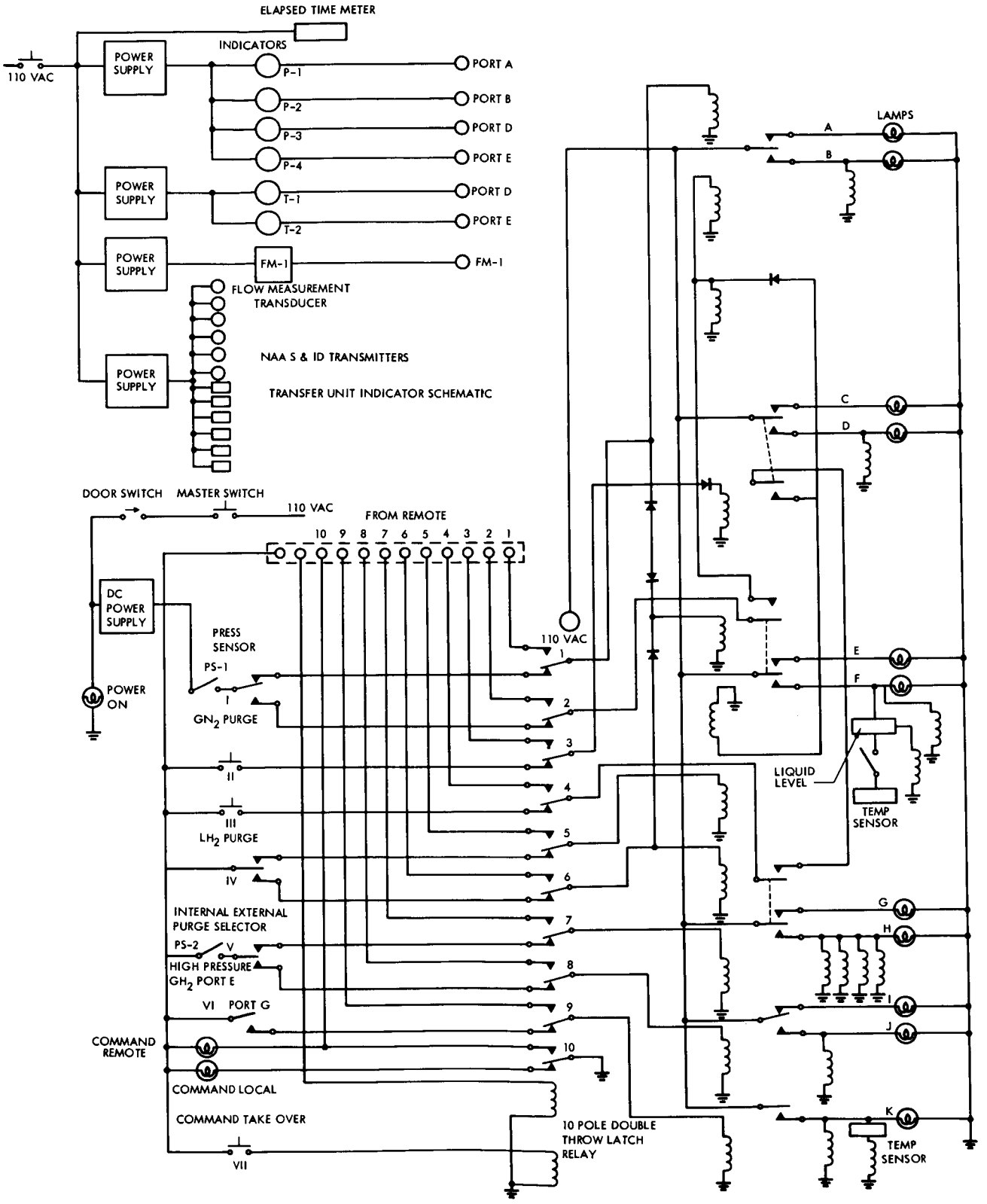

Figure 4-14. LH_2 and LO_2 Transfer Unit, Electrical Schematic

~~CONFIDENTIAL~~

~~CONFIDENTIAL~~

Table 4-19. LH_2 and LO_2 Transfer Units (S14-026 and S14-032) Prediction of MTBF

Subsystem	Total Components	Failure Rate (percent/10^3 hr)	Percent of Total Failure Rate	Comments
Valves	18	15.600	26.58	
Pressure regulator	5	2.125	3.62	
Transducers	8	22.000	37.66	
Subcoolers	2	0.334	0.57	
Pump and drive	1	1.350	2.30	
Filters	4	0.0316	0.05	
Plumbing	120	11.736	20.00	
Electrical subsystem	323	5.5039	9.22	
Total failure rate percent/10^3 hours	481	58.68	100	
$MTBF = \frac{10^3}{FR} = \frac{10^3}{0.5868} = 1704$				
MTBF - 1704 hrs				

~~CONFIDENTIAL~~

~~CONFIDENTIAL~~

Functional Phases:

Preusage

1. Purging the SS-C tanks with GN_2 to remove moisture and air from the system (S14-026 and S14-032)

2. Purging the SS-C tanks with GH_2 to remove all GN_2 from the system (S14-026), and purging the SS-C tanks with GO_2 to remove the GN_2 (S14-032)

3. Filling the SS-C storage tanks with LH_2 at 0 to 60 psig and at the temperature of the saturated liquid at 14.7 ± 2 psia (S14-026); filling the SS-C storage tanks with LO_2 at 60 psia maximum and at a temperature less than that corresponding to the vapor pressure at filling 14.7 ± 2 psig (-296.2 F to -302.0 F) (S14-032)

Postusage

1. Purging the fuel cell with GN_2 to remove moisture and air (S14-026) and supplying GO_2 or GN_2 to the fuel cell for ground operation without interfering with any other mode (S14-032)

2. Purging the fuel cell with GH_2 to remove GN_2 (S14-026)

3. Supplying GH_2 to the fuel cell for ground operations (S14-026)

Conclusions and Recommendations

As shown in Table 4-23, the predicted MTBF of 1704 hours exceeds the design objective of 600 hours. The MTBF prediction includes the electrical components of either unit. A revised analysis will be made of these units when design revisions now in progress become firm. To contribute to the improvement of reliability, continuous prediction analyses will be maintained as the design progresses.

Initial design proposals offered explosion-proof electrical components to eliminate possible hazardous conditions in the units. It is suggested that a purge system designed to purge those components (relays, motors, switches) considered hazardous, be included to give these units a higher reliability at a lower item and system cost.

COOLING UNIT (S14-052)

This section of the report presents the results of a preliminary prediction study performed on the water-glycol cooling unit (S14-052). Data presented in this report cover only the overall system prediction as presented in Table 4-20. The prediction is based on the components shown in Figure 4-15. For the purpose of this prediction, the following were considered:

1. The water glycol cooling systems were in constant operation.

2. System components are in series; therefore, the product exponential reliability rule applies.

3. In the evaluation of this system, approximately 134 unit parts were analyzed.

Functional Description

The water-glycol cooling unit is required to supply a coolant for the environmental control of the R&D instrumentation on Boilerplates No. 13, No. 15, and No. 22. It accomplishes its mission by pumping the media through NASA interface transfer lines, GSE lines, and disconnects S14-042 and A14-024 to the spacecraft water-glycol tank (EGS) (Figure 4-15). The unit will fill the ECS tank and continually circulate the media between the GSE unit and the spacecraft ECS tank until T-15 seconds.

Design disciplines have been established for the unit, including the following operational stress criteria:

1. Capability of filtering the media to 35 micron absolute

2. Cooling media to -50 F

3. Pumping 3 GPM against a 150 psig pressure

Servicing operations are grouped into the following modes:

1. Cooldown

2. Checkout and conditioning

3. Fill and circulate

4. Launch

~~CONFIDENTIAL~~

5. Drain

6. Prelaunch drain

Conclusions and Recommendations

As shown in Table 4-20, the predicted MTBF of 4203 hours exceeds the design objective of 600 hours. This value will change with the addition of the electrical components. A revised analysis will be made of this unit when that portion of the design becomes firm. Continuous prediction analyses will be maintained as the design progresses, for the purpose of improving reliability.

The mixture ratio of ethylene glycol to water will be specified at a later date. It is suggested that a corrosion-inhibitor additive such as borax with mercapto-benzo-thiazole be included with the glycol-water mixture as a restraint against contaminating the system with corrosion particles.

An additional restraint to be considered is adding blue-brilliant-oil dye (2 grams per 52 gallons) to the glycol-water mixture to impart a green color to the solution. Should the media become contaminated with fuel, vapors, or liquid, its color turns blue and could be observed through a transparent line or observation glass. The unit will be in operation, circulating water-glycol and venting during the propellant loading periods.

PRESSURIZING CONTAMINATION UNIT (S14-007)

This section of the report presents the results of the reliability study of the S14-007 pressurizing contamination unit. The minimum MTBF requirement is 600 hours.

Failure-rate data in this report were obtained from generic failure rates representing the best state-of-the-art currently practiced in the aerospace industries and are called out for components shown in Figure 4-16.

At a later date, the electrical reliability prediction of this unit will be submitted and will outline the electrical MTBF. Both mechanical and electrical portions of this unit will be combined in the analysis to provide the overall MTBF effort.

~~CONFIDENTIAL~~

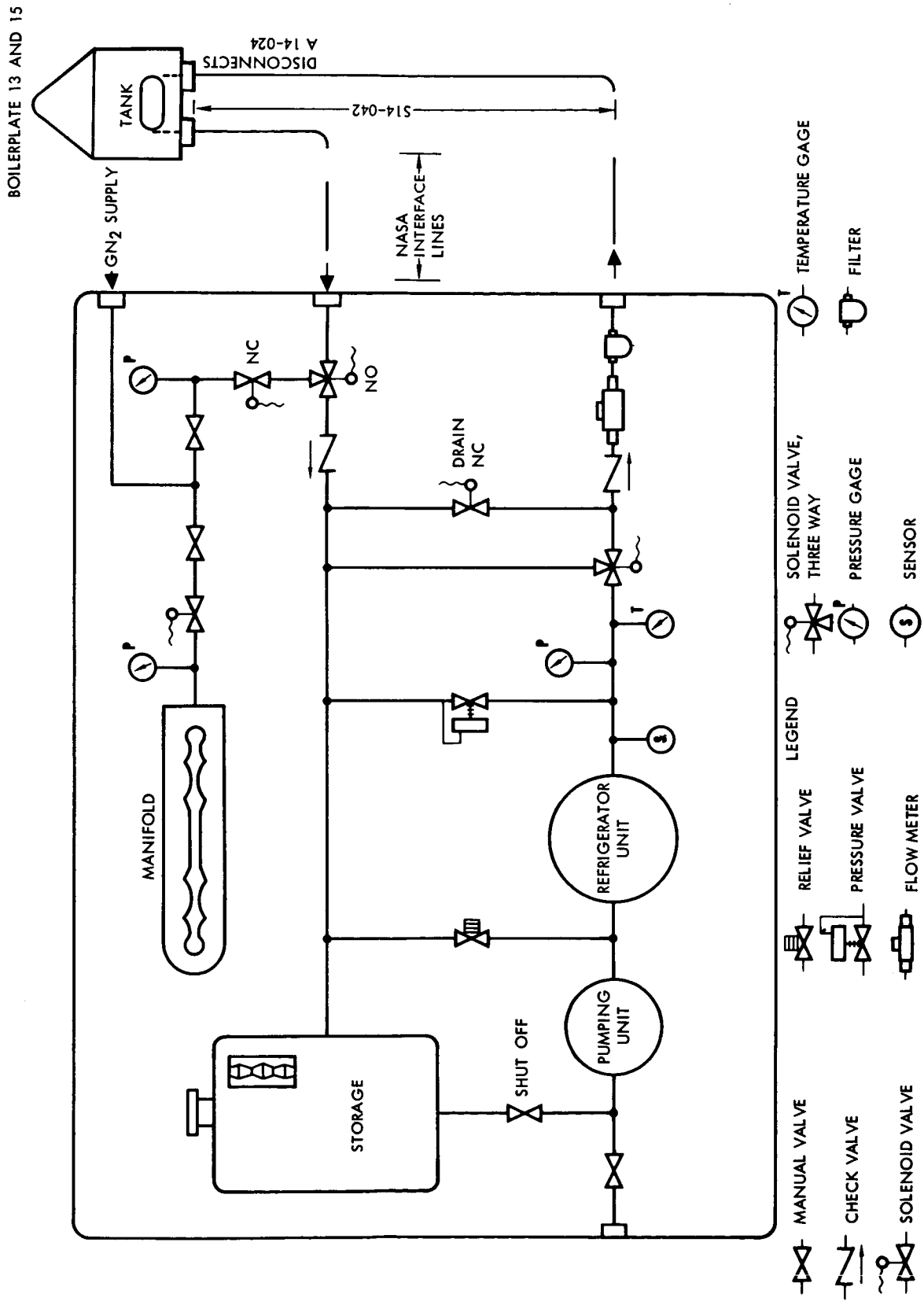

Figure 4-15. Suggested Water-Glycol Unit S14-52 and Interfaces

~~CONFIDENTIAL~~

Table 4-20. Prediction of Water-Glycol (S14-052) MTBF

Subsystem	Total Number of Components	Failure Rate (percent/10^3 hr)	Percent of Total Failure Rate	Comments
GN_2 purge and pressurization	19	1.893	7.95	The subsystem and total system predicted MTBF exceeds the design objective of 600 hours.
Conditioning	38	8.170	34.34	
Storage	24	1.720	7.23	
Pumping	33	6.600	27.74	
Plumbing	20	5.407	22.74	
Electrical	Unknown	—		
Totals	134	23.79	100.00	
$MTBF = \frac{10^3}{FR} = \frac{103}{0.2379} = 4203$				

~~CONFIDENTIAL~~

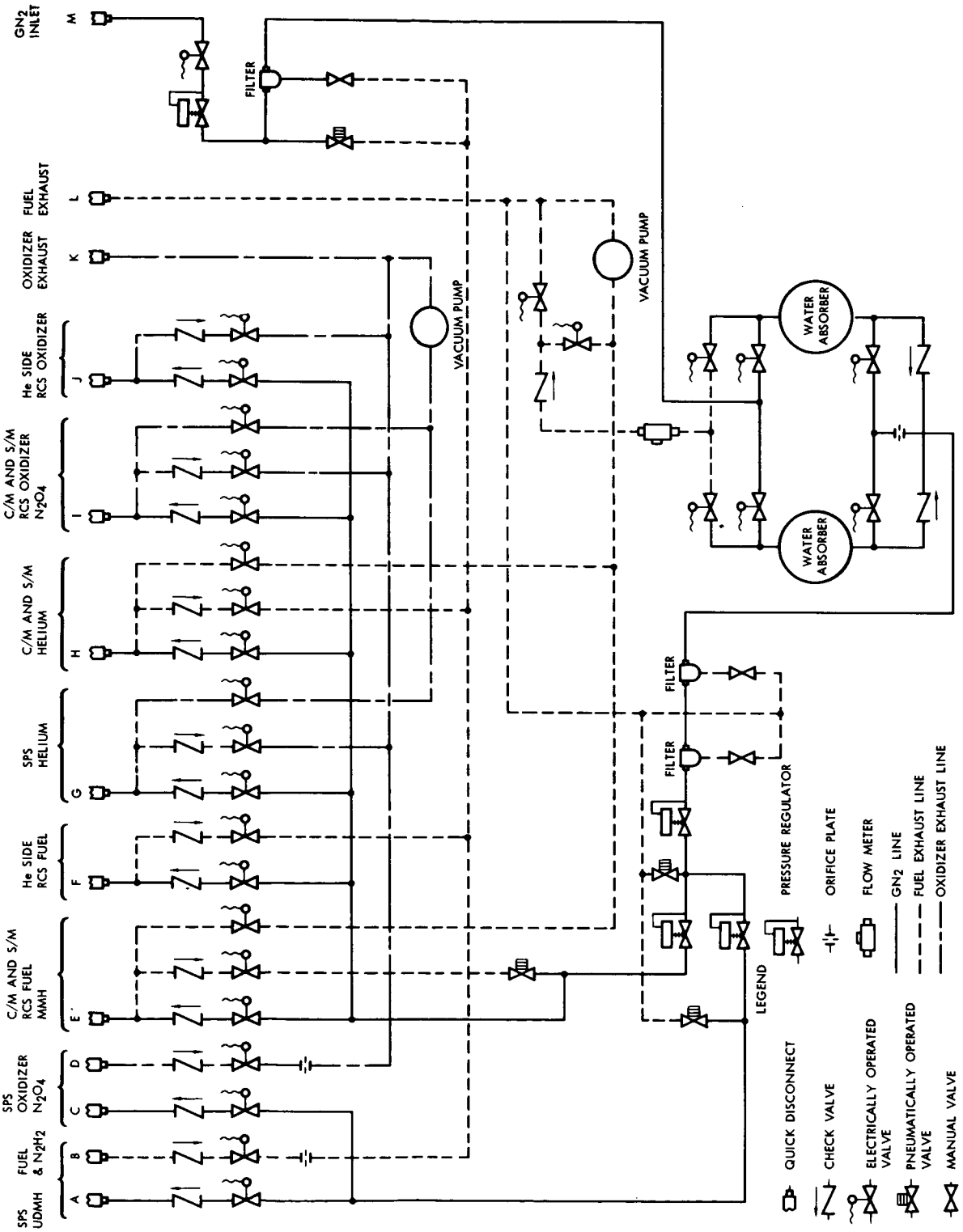

Figure 4-16. Pressurizing Contamination Prevention Unit S14-007

~~CONFIDENTIAL~~

~~CONFIDENTIAL~~

Conclusions and Recommendations

Based on the compilation of generic failure rates (Table 4-21) of the three subsystems (gaseous nitrogen fill, fuel exhaust, and oxidizer exhaust) components, the reliability prediction has an MTBF of 2042 hours and exceeds the design objective of 600 hours. A continuous prediction study will be maintained as the design becomes firm and the electrical schematic is available for analysis.

All components in the mechanical schematic are considered to be in series and the exponential reliability rule applies. Components spread throughout the system tend to disguise the accumulative effect their individual failure rates have on the total system; therefore, the report is based on the failure of the individual component when all other components in the system are functioning properly.

A more detailed functional analysis will be made, and reliability calculations will be altered to reflect a more accurate value of the system with the expectation that design will improve and depict a still higher MTBF.

~~CONFIDENTIAL~~

Table 4-21. Pressurizing Contamination Unit System Prediction by Components

Subsystem Component	Quantity	Failure Rate (percent/10^3 hr)	Percent of Total Failure Rate	Comments
Valves	55	45.180	92.4	
Quick disconnects	13	0.520	1.13	
Regulators	4	0.856	1.87	
Orifice plates	3	0.045	0.15	
Filters	3	0.090	0.30	
Water adsorbers	2	0.060	0.15	
Vacuum pumps	2	1.800	3.90	
Flow meter	1	0.400	0.10	
Total failure rate 10^3 hr				
$MTBF = \frac{10^3}{FR} = \frac{1000}{0.48951} = 2042$				
Totals	83	48.951	100	

~~CONFIDENTIAL~~

SPECIAL STUDIES

The following special studies, covering the investigation of labor-saving methods of analysis and recommendations of preferred parts for mission essential equipment, were undertaken and completed during the report period.

COMPUTER PROGRAMS

A computer program for writing the circuit matrix equation has been developed by the Autonetics Division of North American Aviation. It is known as "CEST" (circuit equation simulation techniques), and relieves the circuit analyst from the task of writing necessary circuit equations. Input information from which the equations are constructed is essentially the schematic of the circuit being analyzed. For example, information for a transistor would consist of listing the nodes to which the transistor is connected and the type and state of operation of the transistor. The circuit may include resistors, capacitors, inductors, transformers, diodes, transistors, voltage sources, and current sources.

At present, the program is workable, but until all its limitations are known, it will not be used, and investigation will continue.

PARTS RECOMMENDATIONS

An investigation was conducted to gather information for the selection of the best type of circuitry for use with the Carry-on PACE equipment. The following comparison was presented:

Advantages	Disadvantages
Standard Circuit Boards	
Availability	Size
Proven reliability	Number of solder joints
Noise rejection	Power consumption
Ease of redesign	
Temperature capability	

~~CONFIDENTIAL~~

~~CONFIDENTIAL~~

Advantages	Disadvantages
Cordwood Construction	
Availability Proven reliability Noise rejection Ease of redesign Temperature capability	Size Number of solder joints Power consumption
Pellet Circuitry	
Size Interconnections Power Consumption	Potential delivery problem Lack of usage data Noise susceptible Redesign difficult
Integrated Microminiature	
Size Interconnection Power consumption	Potential delivery problems Lack of usage data Noise susceptible Redesign difficult

Because of tight delivery schedules, Reliability recommended that proven circuit boards would be best; however, since space may require another approach, it was recommended that a "hybrid" circuit be considered for possible future use.

GSE TEST ACCOMPLISHMENTS

The primary test activity during this reporting period involved development and implementation of a plan to definitize the GSE qualification test program. Following is a summary of scheduled activities:

1. An evaluation of the intended usage of each GSE item

2. A categorization of these equipments according to their essentiality (with respect to mission success and crew safety objectives of the spacecraft)

3. An evaluation of transportation and operational environments versus the types of protection from these conditions (design, packaging or sheltering)

4. A determination of the environmental and functional tests required for each GSE item and the time and cost of performing these tests

5. Preparation of a master schedule for a qualification test program which will define the exact equipment items to be tested

The program evaluation is intended to provide improved control and visibility over GSE qualification testing. It emphasizes analysis of environmental conditions to be experienced by each GSE item and a determination of test conditions based upon an elimination process. This consists of an assessment of conditions for which protection cannot be provided and effects of these environments on each equipment item. Environmental tests will not be performed if the adequacy of the protection for equipment items can be verified. This is not an arbitrary attempt to exclude environmental tests from the GSE qualification program, but rather to point out and correct basic design, packaging, or sheltering deficiencies. This will permit incorporation of necessary corrective action as a result of analysis made during the test planning phase, instead of waiting until problems arise during testing. More emphasis can then be

placed on functional testing to simulate pad operational usage and demonstrate the failure detection capability of these GSE articles. This will result in greater knowledge for test dollars expended.

Following is a general description of the GSE qualification test program being definitized by the task force: It divides qualification into interim qualification and final qualification phases. Interim qualification includes environmental, and functional tests which simulate operating conditions for equipment on a launch pad or its destination. These tests are to be performed in S&ID laboratories at Downey and Tulsa or by Apollo subcontractors, when possible. Once interim qualification requirements are met, equipment will be delivered to Downey for final-phase qualification which will be done in such an area as house spacecraft. This last phase includes a series of tests to relate test results and failure conditions defined by Apollo Reliability Engineering as potential causes of mission success or crew safety degradation. They are called failure detection compatibility verification tests.

The proposal to utilize qualification GSE in the house spacecraft area offers several distinct advantages, namely:

1. Assurance of a full complement of GSE for house spacecraft testing.

2. A definite predefined series of qualification tests involving checkout equipment, PACE, and the spacecraft.

3. A definite set of hardware for any required requalification resulting from significant design changes.

4. Elimination of requirements for additional GSE laboratory qualification testing.

The plan to definitize the GSE qualification program was originally scheduled for completion by 19 July 1963; but problems in determining test durations, costs, and hardware availability have delayed the work approximately 3 weeks. The final task, which was to review and incorporate all necessary changes in GSE procurement specifications, will extend into the next reporting period. Additional activities to be accomplished during the next quarter include a revision to the GSE qualification section of the Apollo General Test Plan (SID 62-109) and incorporation of failure detection capability test requirements into the house spacecraft test program.

GSE SUBCONTRACTOR ACTIVITIES

AiResearch has submitted logic diagrams and a failure-rate analysis on the S14-019 water-glycol transfer unit and the S14-053 fluid trim control set. The logic diagrams depict reliability evaluation for each functional mode of operation. Instrumentation has been included in the total evaluation. A failure in the monitoring equipment could be undetectable by the ground operating crew, but this would not prevent the successful completion of an operating cycle.

Further coordination on the diagrams and analysis will resolve undefined mission time concepts, failure-rate data, method of data presentation, and reliability improvement.

Coordination and design review meetings at Applied Electronic Corp. (AEC) have dealt with a reliability program for the PCM carry on equipment. Results will define the reliability work scope and effort required in support of the GSE program.

PLANNED ACTIVITIES

1. Perform preliminary and final design analysis on equipments that are categorized as mission-essential. Studies will include reliability predictions, stress analysis (Mandex d-c computer aided), failure mode and effects, participation in design reviews, procurement specifications, specification control drawings, and design control drawings. They will also supply reliability inputs to documents.

2. Continue to develop additional computer capability to include mechanical stress studies and simplify existing Mandex computer programs to eliminate time-consuming requirements for writing matrix equations.

3. Perform surveillance and analysis of problem areas and failures reported on nonconformance reports generated in the various test and usage areas. Failures will be analyzed for causes and, if required, design changes will be recommended.

V. SUPPORT OPERATIONS

DATA MANAGEMENT

NONCONFORMANCE REPORTING SYSTEM

Phase II programming of the nonconformance reporting (NCR) system is proceeding on schedule and will be completed by 15 September 1963. This program, when completed, is expected to satisfy all requirements for the selection of the nonconformance data.

The program capabilities include selection of specific elements of data, flexible output formats, and immediate response (one-day service).

During this report period, 1250 NCR's were processed via transmittals and machine-stored for future reference. Tabulated printouts showing weekly and accumulated monthly activity have been issued regularly. Summary reports have been developed showing distribution of nonconformance conditions and nonconformances by vehicle systems. Approximately 96 percent of the nonconformances reported involved manufacturing discrepancies.

SCRAP REPORT

During this report period, 160 scrap reports, involving a quantity of 507 parts, have been tabulated. This tabulation lists obvious scrap items not included in the NCR system for subsequent submittal to NASA.

SUBCONTRACTOR DATA ACTIVITIES

Two monthly failure summaries have been prepared for submittal to NASA. Part identification, description of problems, analysis, and corrective action statements were included in the reports.

Problem reports received from subcontractors during this period included the following:

1. Aerojet-General Corp. - Thirty-one reports involving the service module propulsion system. The main problem was weld failures in an injector nozzle; corrective action was accomplished by

changing weld rod materials and welding techniques. Ten reports involved inadequate static pull-force on propellant disconnect fittings, and a new source of supply is being investigated to meet the requirements. Five reports involved high-frequency vibration failures of injectors during combustion stability checks.

2. Collins Radio Corp. - Corrective action statements were received on previously reported traveling wave tube failures. Corrective action involved test rack modifications, insulation increase, and test procedure modifications.

3. Northrop-Ventura - Eighty-eight reports involving components of the earth landing system. Problems continue to be predominantly material tears, stitching failures, and material burns. An analysis resulted in revised stitching patterns, material changes, and rigging techniques.

4. Pratt & Whitney - Twelve reports involving the fuel-cell system. Development problems on valves, regulators, insulators, and heaters have been corrected by engineering improvement changes, process modifications, and material changes.

5. Rocketdyne - One report on an ablative bonding nozzle failure. An engineering investigation is being made to determine the correlation of compressive bonding procedure and cause of failure and also to determine if elimination of bonding is feasible.

6. Thiokol - Two reports involving the jettison motor system. A nozzle closure failure ejected a carbon insert. Corrective action was accomplished by Engineering redesigning the insert retaining groove.

TOTAL RECORDS ACCESS CONTROL (TRAC) SYSTEM

All established and proposed data systems have been evaluated with respect to the number and type of programs, volume of machine records, and frequency of processing. An assessment of computer machine time has been ascertained for each data system.

A system redefinition of the operating-time data system is in progress. The redefinition will provide for the integration of operating time with failure data, to permit calculations of statistical probability data.

A specialized search capability of the TRAC system will be the retention, for correlation, of all S&ID part numbers on a master parts

library (tape) file. To date, a total of 20,000 part numbers have been recorded in the parts library file, and a total of 14,000 NASA traceability codes and 5,000 generic codes have been assigned to these part numbers. Plans have been made to also include specification numbers on this file.

PERFORMANCE ANALYSIS AND TEST HISTORIES (PATH) SYSTEM

Effort has been concentrated on developing the minimal storage, the retrieval, and reporting capability, designated as the Phase I or "Pilot" PATH system. Programming for the 7094 series computer is now in progress to implement the system. Programming support from within the Reliability organization is being utilized in this effort.

The initial system will be used to process early test results and will serve as a prototype for a more sophisticated system in later versions.

A form entitled Inspection and Test Record has been developed to serve as a recording worksheet for in-house testing and as a transmittal form for data input to the PATH system.

OPERATING-TIME DATA SYSTEM

Development of the operating-time data system is progressing on schedule. At the present time, the designed system is in the Data Processing Program group for detailed cost and time estimates.

During the report period, the following were achieved:

1. The Forms Guide procedure for the Operating Time Log (Form 917-A, Rev. 3-63) has been approved and distributed to the responsible Quality Control groups.

2. The logic for the nonconformance-report (NCR) failure extraction to support the operating-time data system has been definitized to comply with Reliability definitions for evaluations and calculations. The definitions include:

Operating time	MTBR
Failures	Failure rates
Removals	Removal rates
MTBF	

3. The input data transmittal, output formats, and the interim data processing system file have been designed and approved by the responsible cognizant managements.

The operating-time data processing system will provide accurate reports on a periodic basis. This system will be in the Data Processing Programming group during the next report period, and it is planned to implement the finalized system in September 1963.

TRACEABILITY AND CONFIGURATION (TAC) DATA SYSTEM

The complexity of this system's design required the development of a PERT network analysis to determine milestones and trouble indicators. The completed network contains 16 paths with a total of 440 events.

A data transmittal form has been designed, and a limited initial supply was distributed. Data Center personnel are currently processing completed forms for submission to Data Processing.

The six programs required for the interim reporting system have been written; one of these programs is still in checkout. It is expected that the target date of 28 June 1963 for completion of this interim system will be met.

Total implementation of the TAC system is now estimated for 6 January 1964. At the present time, all activities within the PERT network are being accomplished on schedule.

SUPPLIER QUALITY HISTORY (SQH) DATA SYSTEM

A supplier rating system has been developed and approved and is ready for computer programming. A supplier whose product class rating falls below a set minimum will appear on an exception report, providing management with notification of those suppliers needing closest surveillance.

In addition to the rating report, added emphasis has been placed on a capability for other special management reports. The SQH system is undergoing some modifications that will allow additional exception reporting. The major automated reports under development are discussed in the following paragraphs.

Worst-Case Rejection by Part Number

Items appearing in this exception report will include any part rejected for major or critical defects, any part rejected subsequent to corrective action effectivity, the highest quantity of parts rejected for minor defects, and the largest percentage of parts rejected for minor defects. This report will be used as a management tool to indicate the problem parts that need closest surveillance.

Data System Management Edit Report

The quality of printouts from a computer is dependent upon the quality of input. To maintain high-quality input, the computer performs clerical edits to assure complete, consistent, and accurate recordings of data. Any deviations from the expected high quality of input will be noted in this exception report.

Rejected Trend by Project

There will be a one-line summary indicating total quantity and lots inspected and rejected for each general order within a project. Each of these one-line entries will also indicate a distribution of the reasons for rejection.

Rejection Summary of Parts Which Had Government Source Inspection

Lots that have received Government source inspection and which are found to have defective parts must be reported to the customer on a monthly basis. This report is used as an exception notification of such deficiencies.

Qualification Status List System

An updated Qualifications Status List was issued giving the latest status of suppliers' equipment availability and test dates. New information was added to the format showing the procurement specification number, identification and traceability code, and supplier's name.

Quality History (QH) Data System

The manufacturing discrepancy and cause codes have been expanded to provide capability for specialized discrepancy reporting. The Data Processing group has completed the necessary computer programming to prepare new report formats. These new reports will provide discrepancy reporting by manufacturing area, discrepancy, cause, and disposition.

An interim QH procedure has been put into effect by S&ID Product Inspection in most S&ID manufacturing areas. The final QH systems procedure is being coordinated and should be published during the next reporting period. In compliance with contractual requirements, the revised system will provide the data necessary to prepare shop-level quality control charts. These charts will be displayed throughout the manufacturing shops as a motivational device to make the production

workers quality conscious. The final reporting system is expected to improve discrepancy reporting to facilitate corrective action at the S&ID divisional level.

INTERSERVICE DATA EXCHANGE PROGRAM (IDEP)

During the report period, approximately 575 IDEP reports were distributed, and audio-visual presentations denoting the purpose, function, and benefits of IDEP information were given to about 200 Apollo engineers. Approximately 1800 IDEP reports have been requested to date.

TRAINING AND EDUCATION

SUMMARY

Reliability educational courses presented during the report period are tabulated in Table 5-1.

Table 5-1. Reliability Courses

Course	Number of Lectures	Average Attendance	Total Hours
Fundamentals of Reliability Mathematics	10	7.9	158
Design Analysis Techniques	22	6.4	280
Computer Methods of Design Analysis	12	7.7	186
Total	44		624

Twenty-six motivation and indoctrination programs were approved for topics and transmission dates. This action is the basis for an intensive two-year program using industrial television in the area of education for S&ID employees and suppliers and was given the go-ahead by the Director of Reliability.

Two closed-circuit television (CCTV) motivational scripts were completed during the report period. The first, "100,000 Astronauts," develops the theme that all aerospace employees have a personal vested interest in the outcome of United States space efforts. The second, "Apollo/S-II Top Management," introduces the employee to members of top management and emphasizes management's concern for product reliability.

PLANNED ACTIVITIES

The CCTV script, "100,000 Astronauts," has been approved and is scheduled for production in July 1963.

The CCTV script, "Design Review," has been approved and is scheduled for production in June 1963. This is an indoctrination program and delineates S&ID policy and procedure on the conduct of design reviews.

The CCTV script, "Apollo/S-II Top Management," has been distributed to members of top management for content approval. This program is scheduled for production in June 1963.

The CCTV script, "Apollo Reliability Program Plan," has been approved and is scheduled for production in June 1963. This indoctrination program highlights the important steps for achieving reliability in the Apollo vehicle.

The CCTV script, "High Reliability Parts," has been approved and is scheduled for production in June 1963. This indoctrination program outlines the High-Reliability Parts Program and explains the need of utilizing these parts in S&ID products.

The publication, "Design of Experiments," is being prepared to support a course of instruction of the same name. This course is directed toward engineers working in various test programs. At present, the publication and course material is approximately 35 percent complete.

The publication, "Advanced Reliability Mathematics," is being prepared as course material for a follow-on course of instruction to the present course, "Fundamentals of Reliability Mathematics." The publication is directed toward reliability engineers requiring knowledge of such topics as "The Gamma and Weibull Distributions Applied to Reliability." At present, the publication and course material is estimated to be 60-percent complete.

COMPONENT TECHNOLOGY

SUMMARY

Briefings

A briefing on the S&ID preferred-parts program was presented to NASA-RASPO, NASA Headquarters ORQA, NASA-MSC, NASA Western Operations Office, G. E. Houston Support, Astro Reliability Corporation, and United Test Laboratories. The briefing program concepts were well received.

Subcontractors

The proposed Collins Apollo parts evaluation program was reviewed in detail. Methods of reducing the over-all program cost while maintaining reliability integrity were discussed. The results obtained through utilization of the following measures in no way compromise the effectiveness of the program:

1. Sixty-four items of the Collins Radio Corporation were replaced by items contained in the NAA Reliability Preferred Parts Manual, thus eliminating the necessity for duplicate testing of these items.

2. Test plans were evaluated and, where appropriate, tests were regrouped to conserve the number of test specimens required.

3. In cases where test data was in existence, additional qualification was not allowed.

4. Sample sizes and tests were reduced when it was found that proposed amounts could not be justified.

Coordination meetings are presently being held with Minneapolis-Honeywell Reliability and Quality Control to discuss the Minneapolis-Honeywell parts program. The same measures will be undertaken as were taken at Collins Radio to reduce the over-all cost of the program without a reduction in effectiveness.

Negotiations regarding deletion of in-house parts testing and the use of existing S&ID preferred-parts specifications have been undertaken.

~~CONFIDENTIAL~~

Preferred-Parts Program

Sixty-five percent of the high-reliability preferred-parts specifications have been released, and reliability surveys of all part manufacturers have been completed.

Preferred-parts specifications are being supplied to subcontractor buyers for transmittal to all Apollo subcontractors.

During the report period, major effort has been expended in component evaluation and analysis, including failure analysis and detailed research part-design application problems.

Most significant was the review, analysis, and submittal of recommendations on more than 350 separate subcontractor part selections and attendant specifications. It should be noted that in most areas where a conflict in specifications existed, resolution could be achieved by use of the S&ID preferred parts.

A high-reliability parts control program has been initiated to assure controlled storage areas, methods of receival, special handling, and transportation requirements. Parts handling specifications are currently being written and will be applicable to S&ID and its subcontractors.

The common-usage-parts evaluation test program has received approval by Reliability management and is being implemented.

PLANNED ACTIVITIES

A training program will be established to educate appropriate personnel concerning the requirements and objectives of the S&ID preferred-parts program. This training program has started with Source Inspection personnel.

Additional classes of parts are being documented and added to the preferred-parts list.

The establishment of required procedures for the handling of high-reliability parts will continue.

SUPPLIER SURVEILLANCE

During the report period, a total of 24 supplier preaward surveys, including 3 resurveys, were conducted. Table 5-2 lists the Apollo equipment to be produced, and the names and locations of the companies surveyed. A total of 176 surveys have been conducted to date.

An addendum to the 1962 summary of all supplier surveys conducted has been distributed.

Table 5-2. Supplier Surveys

Equipment	Name of Supplier	Location
Burst diaphram valves	Pyrodyne	Los Angeles, Calif.
Heat exchangers	United Aircraft Products	Dayton, Ohio
Helium and propellant disconnects	On-Mark Couplings Lear-Siegler	Los Angeles, Calif. Maple Heights, N. Y.
Helium check valves	Calmec Aerodyne Controls	Los Angeles, Calif. Farmingdale, Long Island, N.Y.
Helium shutoff solenoid valve	Futurecraft Corp	City of Industry, Calif.
In-Flight test system	Sylvania Electronics RCA ITT-Kellogg	Buffalo, N. Y. Burlington, Mass. Chicago, Ill.
Instrumentation subsystems	Hallicrafters (resurvey)	Santa Ana, Calif.
LH_2 & LO_2 transfer unit	Cosmo Dyne	Hawthorne, Calif.
Linear servo accelerometer	Flow Technology, Inc.	Tempe, Arizona
Liquid propulsion engines	Aerojet-General	Sacramento, Calif.
PCM system	Applied Electronics Corp	Metuchen, N. J.
Power transfer switch	Hartman Electrical Mfg. Kinetics (resurvey)	Columbus, Ohio Solano Beach, Calif.
Propellant gaging system	Giannini Controls	Duarte, Calif.
Umbilical connectors	Cannon Electric Cannon Electric	Phoenix, Arizona Los Angeles, Calif.
Vacuum cleaner	General American Transportation Corp	Niles, Ill.
Waste disposal valve	Accessory Products Co (resurvey)	Whittier, Calif.
Waste backup valve	Janitrol Aero	Columbus, Ohio
Windows	Astro Optics	So. El Monte, Calif.

APPENDIX A

SPECIFICATION CONTROL DRAWINGS

Number	Title
ME 148-0006A	Sling, Propulsion Engine, SM
ME 181-0029A	Chassis
ME 181-0035	Console, Electronic Equipment, RFI Shielded
ME 181-0036	Console, Electronic Equipment
ME 181-0039	Console, Electronic Equipment, RF Shielded
ME 183-0022	Truck, Hand, Two-Wheeled
ME 192-0006	Container, Fuel-Cell Power Plant
ME 193-0006	Cover, Protective, Fuel-Cell
ME 193-0007	Cover, Protective, H_2 Cryogenic Subsystem Storage Tank
ME 193-0008	Cover, Protective, O_2 Cryogenic Subsystem Storage Tank
ME 195-0004	Knob, Control, Recess Mount
ME 195-0005	Knob, Control, Standard Mount
ME 195-0006	Knob, Thumb-Wheel
ME 271-0019	Hose Assembly, Flexible, Metal, General Purpose
ME 273-0038	Coupling Assembly, Disconnect, Ground Half
ME 273-0041	Disconnect, Oxygen Overboard Relief
ME 273-0042	Disconnect, Hydrogen Overboard Relief
ME 273-0047	Coupling Assembly, Disconnect, Hydrogen, Airborne
ME 273-0048	Coupling Assembly, Disconnect, Hydrogen, GSE
ME 282-0021	Tank, Helium, Pressure, Main Propellant, B/P 14
ME 284-0053	Valve, Solenoid, Latching, Helium, 1/4 Inch
ME 284-0103	Regulator, Pressure, Gaseous Nitrogen
ME 284-0124	Valve, Pressure Relief, Gaseous Nitrogen
ME 284-0129	Valves, Gas Operated, 2-Way and 3-Way
ME 284-0134	Valve Angle, Shut-off
ME 284-0135	Regulator, Cycling, Pressure
ME 286-0019	Filter Assembly, Nitrogen, Replaceable Element
ME 289-0001	Gage, Pressure
ME 362-0004A	Heat Exchanger Assembly, Air Cooling
ME 362-0009C	Panel, Radiator
ME 413-0007A	Coaxial Isolator, Broadband
ME 413-0010	Diplexer, VHF/HF Recovery Antenna
ME 413-0011	Line, RF, Transmission, Recovery Antenna
ME 414-0095A	Connector, Plug, Shell Size 14, High-Temperature

~~CONFIDENTIAL~~

Number	Title
ME 414-0096A	Connector, Receptacle, Jam-Nut Size 14, High-Temperature
ME 414-0099A	Connector, Receptacle, Jam-Nut Size 8, High-Temperature
ME 414-0100A	Connector, Receptacle, Wall Mounting, Size 8, High-Temperature
ME 414-0102A	Connector, Plug, Shell Size 8, High-Temperature
ME 414-0103A	Connector, Receptacle, Jam-Nut, Shell Size 10, High-Temperature
ME 414-0104A	Connector, Receptacle, Wall Mounting, Shell Size 10, High-Temperature
ME 414-0105A	Connector, Receptacle, Box Mounting, Shell Size 10, High-Temperature
ME 414-0106A	Connector, Plug, Shell Size 10, High-Temperature
ME 414-0107A	Connector, Receptacle, Wall Mounting, Size 14, High-Temperature
ME 414-0108A	Connector, Receptacle, Box Mounting, Size 14, High-Temperature
ME 414-0116A	Connector, Receptacle, Jam-Nut, Shell Size 12, High-Temperature
ME 414-0117A	Connector, Receptacle, Wall Mounting, Shell Size 12, High-Temperature
ME 414-0118A	Connector, Receptacle, Box Mounting, Shell Size 12, High-Temperature
ME 414-0119A	Connector, Plug, Shell Size 12, High-Temperature
ME 414-0120A	Connector, Receptacle, Jam-Nut, Shell Size 16, High-Temperature
ME 414-0121A	Connector, Receptacle, Wall Mounting, Shell Size 16, High-Temperature
ME 414-0122A	Connector, Receptacle, Box Mounting, Shell Size 16, High-Temperature
ME 414-0123A	Connector, Plug, Shell Size 16, High-Temperature
ME 414-0124A	Connector, Receptacle, Jam-Nut, Shell Size 18, High-Temperature
ME 414-0125A	Connector, Receptacle, Wall Mounting, Shell Size 18, High-Temperature
ME 414-0126A	Connector, Receptacle, Box Mounting, Shell Size 18, High-Temperature
ME 414-0127A	Connector, Plug, Shell Size 18, High-Temperature
ME 414-0128A	Connector, Receptacle, Jam-Nut, Shell Size 20, High-Temperature

Number	Title
ME 414-0129A	Connector, Receptacle, Wall Mounting, Shell Size 20, High-Temperature
ME 414-0130A	Connector, Receptacle, Box Mounting, Shell Size 20, High-Temperature
ME 414-0131A	Connector, Plug, Shell Size 20, High-Temperature
ME 414-0132A	Connector, Receptacle, Jam-Nut, Size 22, High-Temperature
ME 414-0133A	Connector, Receptacle, Wall Mounting, Size 22, High-Temperature
ME 414-0134A	Connector, Receptacle, Box Mounting, Size 22, High-Temperature
ME 414-0135A	Connector, Plug, Size 22, High-Temperature
ME 414-0136A	Connector, Receptacle, Jam-Nut, Size 24, High-Temperature
ME 414-0137A	Connector, Receptacle, Wall Mounting, Size 24, High-Temperature
ME 414-0138A	Connector, Receptacle, Box Mounting, Size 24, High-Temperature
ME 414-0139A	Connector, Plug, Size 24, High-Temperature
ME 414-0140	Connector, Pressurized Bulkhead Feedthrough
ME 414-0141	Connector, Electrical, Rack and Panel
ME 414-0148	Connector, Receptacle, Electrical
ME 414-0149	Connector, Receptacle, Electrical
ME 414-0151	Connector, Coaxial, Male, 6 No. RG 180 Contacts
ME 414-0152	Connector, Coaxial, Male, 20 No. RG 180 Contacts
ME 414-0153	Connector, Coaxial, Female, 6 No. RG 180 Contacts
ME 414-0154	Connector, Coaxial, Female, 20 No. RG 180 Contacts
ME 414-0155	Connector, Coaxial, Male, RF Push-on <90° Hermetically Sealed
ME 414-0156	Connector, Coaxial, FR, Male, Slip-on, Hermetically Sealed
ME 414-0157	Connector, Coaxial, RF, Male, Push-on, Hermetically Sealed
ME 414-0158	Connector, Coaxial, RF, Female, Push-on
ME 414-0159	Connector, Coaxial, RF, Male, < 90°, Slip-on, Hermetically Sealed
ME 414-0160	Connector, Coaxial, RF, Female, Slip-on, < 90°
ME 414-0161	Connector, Coaxial, RF, Female, Slip-on
ME 414-0162	Connector, Coaxial, FR, Male, Slip-on
ME 414-0163	Connector, Coaxial, RF, Male, Slip-on <90°
ME 414-0167	Connector, Coaxial, RF, Female

~~CONFIDENTIAL~~

Number	Title
ME 414-0168	Connector, Coaxial, RF, Male
ME 414-0169	Connector, Coaxial, RF, Male, Right-Angle
ME 431-0027	Sensor, Fuel, Propellant Quantity, SM
ME 431-0028	Sensor, Oxidizer, Propellant Quantity, SM
ME 432-0045	Meter, Frequency, Direct Reading
ME 432-0052	Indicator, Barometric Pressure
ME 434-0019	Annunciator Assembly, Event, Lamp Type, Multiple
ME 434-0020	Annunciator Assembly, Event, Lamp Type, Master Caution and Warning
ME 434-0021	Annunciator Assembly, Event, Lamp Type, Abort
ME 434-0022	Annunciator Assembly, Event, Lamp Type, Caution
ME 434-0023	Annunciator Assembly, Event, Lamp Type, Single
ME 434-0024	Annunciator Assembly, Event, Lamp Type, Multiple
ME 447-0013	Filter, Band Pass, RF
ME 449-0028	Transducer, Pressure
ME 449-0029	Transducer, Temperature
ME 449-0030	Transducer, Temperature
ME 449-0032	Transducer, Temperature
ME 449-0034	Transducer, Temperature
ME 449-0037	Transducer, Pressure
ME 449-0038	Strain Measuring, Transducer System
ME 449-0039	Transducer, Differential Pressure
ME 449-0040	Transducer, Temperature
ME 449-0041	Transducer, Temperature
ME 452-0048	Switch, Coaxial, RF
ME 452-0054	Switch, Antenna, VHF
ME 452-0055	Switch, Power, Over-Current Relay
ME 435-0016	Recorder, Magnetic, 14-Channel
ME 454-0010	Circuit Breaker, Single-Pole, A-C
ME 454-0011	Circuit Breaker, Single-Pole, D-C
ME 454-0012	Circuit Breaker, 3-Phase, A-C
ME 454-0013	Circuit Breaker, Toggle, Single-Pole, D-C
ME 454-0014	Circuit Breaker, Push-Button, D-C, Single-Pole
ME 455-0057	Relay, Voltage, Sensitive
ME 455-0060	Relay, Magnetic Latching, DPDT
ME 455-0061	Relay, Time Delay, Adjustable, Pull-in
ME 455-0062	Relay, Time Delay, Adjustable, Pull-in
ME 456-0013	Multiplexer, VHF
ME 464-0037	Power Supply, 0-36 Volts D-C
ME 464-0039	Power Supply, Fixed, Semiregulated
ME 464-0040	Power Supply, D-C, Regulated
ME 464-0041	Power Supply, Dual, 12 Volts D-C

Number	Title
ME 467-0003F	Motor, Launch Escape
ME 467-0004J	Motor, Launch Escape, Tower Jettison
ME 470-0018	Computer, Propellant Quantity, SM
ME 470-0019	Panel Display, Propellant Quantity, SM
ME 473-0021F	Audio Center Equipment
ME 474-0012	Oscillator, Phase-Locked
ME 478-0020E	Amplifier, Power, DSIF
ME 478-0022E	HF Transceiver Equipment
ME 478-0026F	DSIF Transponder Equipment
ME 481-0002B	Antenna Equipment, Recovery
ME 481-0033	Antenna Recovery, Back-up
ME 493-0003	Gyro Accelerometer, Rate, 3-Axis
ME 901-0027C	Control Unit, Bacteria
ME 901-0029B	Urine Disposal Lock, Waste Management System
ME 901-0030C	Blower, Waste Management
ME 901-0083G	PCM Telemetry Equipment
ME 901-0108C	Nozzle Closure, Rocket Motor, SM
ME 901-0109B	Leak Test Set, Rocket Motor, SM
ME 901-0110B	Nozzle Plug, Rocket Motor, SM
ME 901-0111B	Nozzle Extension, Rocket Motor, SM, Protective Closure
ME 901-0116C	Anthropomorphic Test Dummies and Auxiliary Equipment
ME 901-0120A	Target Assembly, Grid
ME 901-0139	Marker Assembly, Location, Marine
ME 901-0140B	BME Central Timing
ME 901-0141B	Modulation System, Pulse Code, Carry-on
ME 901-0142	Dentifrice, Ingestible, Personal
ME 901-0143	Deodorant Pad, Personal
ME 901-0145	Lubricator, In-Line
ME 901-0148	Test Set, Control Amplifier, Thrust-Vector Control System
ME 901-0150	Test Set, Control Amplifier, RCS
ME 901-0160	Release Mechanism, Recovery Antenna
ME 901-0186	Marker Assembly, Location, Marine
ME 901-0187	Marker Assembly, Location, Marine
ME 901-0196	Generator, Pressure, Simulator, ELS Sequencer
ME 901-0197	Test Stand, Electrical, ELS Sequencer

APPENDIX B

PROCUREMENT SPECIFICATIONS

Number	Title
	Bag, Fecal/Emesis
	Lighter-Than-Air Balloon-Kite, Survival Kit Distress Signaling Device
	Cleansing Pad, Crewman, Personal
	Delivery Assembly, Water, Crewman
	Desalting Kit, Survival
	Electronics Communications Assembly
	Flexible Plastic Container and Potable Water, Survival
	Harness Assembly, Crewman Restraints
	Life Vests, Crewman Survival Kit
	Liner, Crewman Relief Receptacle Assembly
	A-C Over-Voltage and Overload Sensing Unit
	D-C Over-Voltage Sensing Unit
	Shoestraps, Crewman, Personal
	Special Purpose Coaxial RF Connectors
	Sunglasses, Crewman, Personal
	Switch, RF
	Umbilical, Disconnect
MC 111-0001	Bolt, Explosive, Electrically Initiated
MC 111-0004	Bolt, Assembly, Explosive, Dual Mode, Electrically Initiated
MC 127-0007	Locks, Linking, SM, Propulsion Engine
MC 145-0001	Shaft, Rotary, Flexible, Astro-Sextant Door
MC 148-0010	Screwjack, Ball, Astro-Sextant Door
MC 161-0012	Controls, Push-Pull, Rigid
MC 183-0016	Service Module Propulsion Engine Assembly and Handling Fixture
MC 183-0018	Semitrailer, Compressed Gas Cylinder
MC 192-0004	Container, Shipping, Oxygen Cryogenic Storage Subsystem Tank
MC 195-0005	Knob, Control
MC 273-0009A	Coupling, Helium Tank, Fill Disconnect
MC 273-0010A	Coupling, Helium Tank, 1/4-Inch Fill Disconnect
MC 273-0011A	Coupling, Nitrogen Tetroxide Tank, 1/4-Inch Fill Vent Disconnect

~~CONFIDENTIAL~~

Number	Title
MC 273-0012A	Coupling, Hydrazine/UDMH Tank, 1-Inch Fill Vent Disconnect
MC 273-0038	Coupling Assembly, Disconnect, Ground Half
MC 273-0039	Connector, Flexible, Propellant System, Hydrazine/UDMH
MC 273-0040	Connector, Flexible, Propellant System, Nitrogen Tetroxide
MC 282-0004B	Tank, Nitrogen Tetroxide
MC 282-0006B	Tank, Nitrogen Tetroxide
MC 282-0007B	Tank, Hydrazine/UDMH
MC 282-0008B	Tank, Hydrazine/UDMH
MC 284-0001A	Valve, Solenoid, Latching, Helium, 1/4-Inch
MC 284-0018A	Valve, Solenoid, Shut-off, Helium
MC 284-0019A	Valve, Explosive Operated, NC
MC 284-0021A	Regulator Unit, Pressure, Helium, RCS, CM
MC 284-0022A	Regulator Unit, Pressure, Helium
MC 284-0050B	Valve, Check, Ventilating, Waste Management System
MC 289-0010A	System, Quantity Gaging, RCS
MC 411-0125	Cable and Cable Assemblies Electrical, Special Purposes, GSE
MC 413-0018	Diplexer, VHF/UHF
MC 414-0061A	Electrical Connectors, Special Purpose
MC 414-0067A	Umbilical, Electrical, Launch Escape Tower
MC 414-0140	Feedthrough Connector Assembly, Coaxial, Pressurized, Bulkhead
MC 414-0148	Connector, Receptacle, Electrical
MC 414-0164	Connector Assembly, Electrical Feedthrough, Bulkhead
MC 414-0165	Connector, Video Coaxial
MC 431-0022	Sensor Assembly, Temperature, Multiple Range
MC 431-0023	Sensor Assembly, Heat Flux
MC 431-0024	Sensor Assembly, Surface Recession
MC 431-0026	Sensor, Char Layer Heat Shield
MC 432-0009	Switch, Toggle
MC 432-0010	Switch, Rotary, Selector
MC 432-0047	Meters, Indicating Electrical
MC 432-0048	Clocks, Mechanical, CM
MC 432-0054	Indicator, Event, Hermetically Sealed
MC 434-0017	Light, Portable, Battery-Operated
MC 435-0013A	Recorder, Data Storage
MC 444-0031	Rheostat, Spacecraft Lighting Control
MC 449-0005A	Transducer, Pressure Sensor
MC 449-0015B	Mass-Flow Transducer
MC 452-0036	Power Transfer Switch
MC 452-0038	Switch, Power, Overcurrent Relay, SM

~~CONFIDENTIAL~~

Number	Title
MC 452-0046	Switch, Transfer, Double-Pole, Single-Throw, Motor-Operated
MC 452-0049	Switch, Rotary, Hermetically Sealed
MC 452-0050	Switches, Toggle
MC 452-0052	Switch, Antenna, 2 KMC
MC 452-0054	Switch, Antenna, VHF
MC 453-0005B	Cartridges, Electrically Initiated
MC 453-0009B	Initiator, Electrical, Hot-Wire
MC 453-0010	Pyrotechnic Electrical Circuit Interrupter
MC 453-0011	Cartridge Assembly, Electrically Initiated, Detonator, Hot-Wire
MC 453-0014	Igniter Cartridge, Hot-Wire, Electrically Initiated
MC 456-0006B	Central Timing Equipment
MC 456-0013	Multiplexer, VHF
MC 461-0002A	Charger, Battery, Silver Oxide/Zinc
MC 461-0003A	Battery, Spacecraft, Storage, Zinc/Silver Oxide, 28-Volt, 30-Amp
MC 461-0007	Battery, Spacecraft, Storage, Pyrotechnic, Silver Oxide/Zinc
MC 467-0005C	Pitch Control Motor, Launch Escape System
MC 473-0021B	Audio Center Equipment
MC 476-0007A	Decommutator, Single Channel
MC 478-0020B	S-Band Power Amplifier
MC 478-0021B	Pre-Modulation Processor
MC 478-0022B	Transceiver, HF
MC 478-0023B	Transmitter, Recovery Beacon, VHF
MC 478-0024B	VHF/FM Transmitter Equipment
MC 478-0025B	Transmitter, VHF/AM
MC 478-0027B	Transponder, C-Band
MC 481-0002B	Antenna System, Recovery
MC 481-0005A	Operational Beacon Antenna System
MC 481-0008A	High-Gain Antenna Equipment
MC 495-0001C	Inverter, Power Static, 115/220-Volt, 3-Phase, 400-Cycle
MC 901-0002D	Motor, Launch Escape
MC 901-0024A	Vacuum Cleaner Assy, Waste Management System
MC 901-0025A	Waste Management Control Unit
MC 901-0027A	Bacteria Control Unit, Waste Management System
MC 901-0029A	Urine Disposal Lock
MC 901 0030A	Blower, Waste Management System
MC 901-0031A	Stabilization and Control System, Bench Maintenance Equipment
MC 901-0041A	Stabilization and Control System, Auxiliary GSE

~~CONFIDENTIAL~~

Number	Title
MC 901-0063B	In-Flight Test System
MC 901-0067B	Rocket Engine, Bipropellant, RCS, CM
MC 901-0068B	Back-Up Valve, Waste Management System
MC 901-0080	Acoustic Measurement System
MC 901-0081B	Signal Conditioning Equipment
MC 901-0083B	Equipment, Telemetry, PCM
MC 901-0090B	CM Television Equipment
MC 901-0094B	Environmental Control System, Low Pressure Gaseous Test Stand
MC 901-0098B	Trim Control Set, Water-Glycol, ECS
MC 901-0109A	SM Rocket Motor Leak Test Set
MC 901-0107A	Bulkhead Feedthrough, CM, Pressurized
MC 901-0108A	SM Rocket Engine Motor Nozzle Closure
MC 901-0110A	SM Rocket Engine Motor Nozzle Plug
MC 901-0111A	SM Rocket Motor Nozzle Extension GSE
MC 901-0112	Vibration Measuring System
MC 901-0113B	Leak Detection System
MC 901-0114	Stress Measuring System
MC 901-0115A	Trainer, Mission Simulator
MC 901-0135	SM Propulsion Engine Nozzle Extension Closure
MC 901-0136	Dynamic Motion Simulator
MC 901-0139	Marker Assembly, Location, Marine
MC 901-0140B	Central Timing B/M Equipment
MC 901-0141	PCM Carry-on System
MC 901-0142	Dentifrice, Ingestible, Crewman, Personal
MC 901-0143	Deodorizer Pad, Crewman, Personal
MC 901-0147	Alignment Equipment, B/M, Thrust Chamber Assembly
MC 901-0148	Test Set, Control Amplifier, Thrust Vector Control System
MC 901-0149	Test Set, Control Amplifier, Engine On-Off
MC 901-0150	Test Set, Control Amplifier, RCS
MC 901-0155	BME, Spacecraft Information Systems
MC 901-0156	Actuator, Hatch, Manual
MC 901-0159	Type IV Radio Noise Alert Subsystem
MC 901-0163	Test Stand, B/M Water, ECS
MC 901-0164	ECS, Water-Glycol, B/M Test Stand
MC 901-0175	Proton Directional Subsystem
MC 901-0177	Console, B/M, Electrical, SPS Engine
MC 901-0181	Mouthpiece, Food Reconstitution
MC 901-0195	Shaver, Crewman, Personal
MC 901-0196	Generator, Pressure, Simulator, ELS Sequencer
MC 901-0202	BME, In-Flight Test System

~~CONFIDENTIAL~~

Number	Title
ME 467-0003F	Motor, Launch Escape
ME 467-0004J	Motor, Launch Escape, Tower Jettison
ME 470-0018	Computer, Propellant Quantity, SM
ME 470-0019	Panel Display, Propellant Quantity, SM
ME 473-0021F	Audio Center Equipment
ME 474-0012	Oscillator, Phase-Locked
ME 478-0020E	Amplifier, Power, DSIF
ME 478-0022E	HF Transceiver Equipment
ME 478-0026F	DSIF Transponder Equipment
ME 481-0002B	Antenna Equipment, Recovery
ME 481-0033	Antenna Recovery, Back-up
ME 493-0003	Gyro Accelerometer, Rate, 3-Axis
ME 901-0027C	Control Unit, Bacteria
ME 901-0029B	Urine Disposal Lock, Waste Management System
ME 901-0030C	Blower, Waste Management
ME 901-0083G	PCM Telemetry Equipment
ME 901-0108C	Nozzle Closure, Rocket Motor, SM
ME 901-0109B	Leak Test Set, Rocket Motor, SM
ME 901-0110B	Nozzle Plug, Rocket Motor, SM
ME 901-0111B	Nozzle Extension, Rocket Motor, SM, Protective Closure
ME 901-0116C	Anthropomorphic Test Dummies and Auxiliary Equipment
ME 901-0120A	Target Assembly, Grid
ME 901-0139	Marker Assembly, Location, Marine
ME 901-0140B	BME Central Timing
ME 901-0141B	Modulation System, Pulse Code, Carry-on
ME 901-0142	Dentifrice, Ingestible, Personal
ME 901-0143	Deodorant Pad, Personal
ME 901-0145	Lubricator, In-Line
ME 901-0148	Test Set, Control Amplifier, Thrust-Vector Control System
ME 901-0150	Test Set, Control Amplifier, RCS
ME 901-0160	Release Mechanism, Recovery Antenna
ME 901-0186	Marker Assembly, Location, Marine
ME 901-0187	Marker Assembly, Location, Marine
ME 901-0196	Generator, Pressure, Simulator, ELS Sequencer
ME 901-0197	Test Stand, Electrical, ELS Sequencer

~~CONFIDENTIAL~~

~~CONFIDENTIAL~~

Number	Title
MC 901-0203	Ground Checkout Equipment, Quantity Gaging System, RCS
MC 999-0028	ECS, GSE General Specification
MC 999-0047	Electrical Requirements, Apollo Airborne Equipment, General Specification
MC 999-0049	Statement of Work, In-Flight Test System
MC 999-0050	General Test Requirements for Subcontractor/Supplier

~~CONFIDENTIAL~~

APPENDIX C

DESIGN CONTROL DOCUMENTS (TO S&ID, TULSA)

Number	Title
DCDA-009	Environmental Cover, Apollo Spacecraft Adapter
DCDA-010A	Environmental Cover, Apollo CM
DCDA-020	Environmental Cover, Apollo SM
DCDA-022A	Environmental Cover, Apollo LES
DCDC-009A	Crew Systems Check-out Group
DCDC-017	SPS Engine Alignment Set
DCDC-056A	Calibration Unit
DCDH-008	CM Support Base
DCDH-022	SM Sling
DCDH-031	Base Support Stand
DCDH-037	Propulsion Development Test Ground Adapter
DCDH-060	Propellant Oxidizer and Fuel Tank Sling Set
DCDH-064	Helium Tank Sling, Apollo SM
DCDH-072A	SPS Engine Support
DCDH-089	Polarity Checker
DCDH-098	Handling, and Installation Set, RCS
DCDH-105	Dolly, F-2 Test Fixture
DCDH-106	Test Fixture and Ground Adapter Sling
DCDH-107	Support Stand, F-2 Test Fixture
DCDH-115	Equipment Installation Fixture
DCDH-121	S/M Equipment Dolly
DCDS-008A	Service Propulsion Fuel Transfer and Conditioning Unit
DCDS-021A	Recovery Inerting and Safing Unit
DCDS-034	Fluid Distribution System
DCDS-036	Fluid Distribution System

APPENDIX D

SUBCONTRACTOR DOCUMENTS REVIEWED

Number	Title
AEROJET-GENERAL	
3865-4A	Simulated High Altitude Test Plan, Phase I
3865-01-7	Monthly Progress Report
	Failure Analysis Reports (8)
	Reliability Failure Reports (28)
	Failure Reports (9)
3865-01-8	Monthly Progress Report
3865-01-9	Monthly Progress Report
3865-518	Unstable Combustion Observation, Apollo Service Module Rocket Engine
3865-01-10	Monthly Progress Report
	Failure Data (9)
AiRESEARCH	
SS-1010-R Rev 4	Quality Control Plan
SS-1013-R (10)	Monthly Progress Report
SS-1013-R (11)	Monthly Progress Report
SS-1013-R (12)	Monthly Progress Report
AVCO	
RAD-SR-62-113 Rev 2	Development Test Plan
RAD-SR-62-202	Drawings, Material Process and Procurement Specification List
RAD-SR-63-67	Monthly Progress Report
RAD-SR-63-88	Monthly Progress Report
RAD-SR-63-100	Monthly Progress Report
BEECH	
13707A	Reliability Program Plan
13709B	Quality Control Plan

~~CONFIDENTIAL~~

Number	Title
BR-13905	Tube Connection Vibration Test
ER-13815	Spherical Calorimeter Thermal Conductivity Evaluation
BR-13902-2	Test Report, O_2 Heater Vibration Test
BR-13916-5	Test Report, Tensile Coupon, Misaligned Titanium Weld Joints
BR-13916-7	Test Report, Determination of Residual Stresses in Electron Beam Welded Titanium Sample
BR-13918-1	Test Report, Stainless Steel Encased Nichrome Wire Heater
BR-13916-2	Test Report, Tensile Coupon Test, Misaligned Titanium Weld Joint
BR-13916-3	Test Report, Tensile Test, Electron Beam-Butt Weld Coupon
13705A-1	Development Test Plan
13705A-2	Qualification Test Plan
13705A-3	End-Item Acceptance Test Plan
BP-13955	Qualification Test Procedure, Titanium Pressure Vessels
13714 (Feb)	Monthly Progress Report
BP-13912	Test Procedure, Proof and Burst Tests on the Titanium Airite Pressure Vessels
BP-13815	Spherical Calorimeter Thermal Conductivity Evaluation
BP-13818	Vibration Test, 9-Inch Diameter Insulation Model
BR-13916-1	Tensile Coupon Test, Airite 17-Inch Diameter Pressure Vessel
13714 (Mar)	Monthly Progress Report
13737G	Drawings, Materials, Process and Procurement Specification List
13902-1	Test Report, Ten-Inch Sample Apollo Heaters Electrofilm
13824	Test Report, Pulsating Destratification Device, Development Program
BR-13714 (Apr)	Monthly Progress Report Monthly Quality Report (May)
BR-13714 (May)	Monthly Progress Report
BS-13822	Design and Procurement Specification, Temperature Probe and Signal Conditioner
BS-13760	Design and Procurement Specification, Pressure Switches, Adjustable, Single-Throw, Single-Pole

Number	Title
BS-13756	Design and Procurement Specification, Quantity Sensing Probe and Control Package
BS-13754	Design and Procurement Specification, Check Valve Equipment
BR-13832	Program Report, Pulsating Destratification Device
BP-13918-1	Test Procedure, Nichrome Wire Heater
COLLINS	
AR-111-3	Program Plan
AR-402-1	Packaging Specification
AR-248-3	Design Proof Test Procedure for R&D VHF Antenna and Radome
AR-166-3	Special Sampling Plan
	Failure Analyses (4)
	Failure Reports (5)
AR-246-4	Acceptance Test Procedure, R&D VHF Omni Antenna and Radome (Type 437H-1)
AR-245-2	Acceptance Test Procedure, R&D Multiplexer (Type 635X-1)
AR-296-2	Electronic Equipment Requirements Test
AR-101-11	Monthly Progress Report
AR-253-2	Quarterly Summary of Quality Control Performance Audits
AR-293-2	Application of Sampling Plan
AR-443-1	Qualification Test Report, R&D VHF Multiplexer
AR-422-1	Acceptance Test Data Sheets
AR-101-13	Monthly Progress Report
00102	Failure Data
AR-102-17	Monthly Weight and Balance Report
AR-252-10	Drawing List
AR-252-11	Drawing List
AR-243-2	Acceptance Test Data Sheets
LOCKHEED	
588-M-6-3	End-Item Acceptance Test Plan
588-M-6-1	Development Test Plan
588-M-1	Reliability Program Plan
588-M-7	Program Plan
588-M-6-2	Qualification Test Plan

~~CONFIDENTIAL~~

Number	Title
588-P-10	Monthly Progress Report
588-P-11	Monthly Progress Report
588-P-12	Monthly Progress Report
MARQUARDT	
A-1033-3	End-Item Acceptance Test Plan
A-1002B	Reliability Program Plan
279	Quality Control Plan
A-1033-2	Qualification Test Plan
A-1014D	Support Plan
A-1011-7	Monthly Progress Report
A-1011-8	Monthly Progress Report
A-1011-9	Monthly Progress Report
A-1011-10	Monthly Progress Report
MINNEAPOLIS-HONEYWELL	
A62-777A16(2)	Configuration Management Plan
A63-751G(5)	Support Plan
A63-750A4(3)	Design Specification, Stabilization and Control System Manual Controls
A63-750A13(3)	Design Specification, Stabilization and Control System Display Subsystem
A63-751E4(1)	Preferred Component Part List
A63-751C(2)A	Test Plan
A63-768D(5)	Quarterly Quality Report
A63-760B38.1(1)	Apollo Command Capsule Flight Control Subsystem Design, Synthesis of Signal Processing
A63-760A14(1)	Preliminary Stabilization and Control System In-Flight Maintenance Analysis Study
A63-751E3(1)	Quarterly Reliability Report
A63-752C(14)	Monthly Progress Report
NORTHROP/VENTURA	
2523-1	Development Test Plan
2523E-3	End-Item Acceptance Test Plan
2525A	Reliability Program Plan
D-5284	Development Test, Main Chute Disconnect
2523E-2	Qualification Test Plan

~~CONFIDENTIAL~~

Number	Title
2531A Amend 1	Quality Control Plan
LL-1	Limited-Life, Non-Standard and Electronic Parts Test
	Inspection Disposition Sheets (84)
	Failure Analysis Summary Sheets (1)
	Receiving Rejection Reports (17)
	Failure Analysis Supplements (60)
NVT/63-76	Monthly Progress Report
2620-85	Monthly Failure Summary
2701	Drawings, Material Process, and Procurement Specification List
PRATT & WHITNEY AIRCRAFT	
PWA-2117B	Quality Control Plan
PWA-11	Monthly Progress Report
PWA-24-20	Drawing List
PWA-24-21	Drawing List
PWA-8	Monthly Progress Report
PWA-20-9	Monthly Quality Report
PWA-24-22	Drawing List
PWA-24-23	Drawing List
PWA-24-24	Drawing List
PWA-24-25	Drawing List
PWA-24-26	Drawing List
PWA-17-11	Monthly Failure Summary
PWA-24-27	Drawing List
PWA-24-28	Drawing List
PWA-24-29	Drawing List
PWA-22-14	Monthly Progress Report
PWA-17-12	Monthly Failure Summary
PWA-17-13	Monthly Failure Summary
PWA-24-30	Drawing List
PWA-24-31	Drawing List
ROCKETDYNE DIVISION OF NAA	
R-5083	Facilities Plan
R-5163 I & II	Development Test Plan
R-5163 III	Qualification Test Plan
R-5163 IV	End-Item Acceptance Test Plan
SERR-2394-006	Reliability Program Plan

~~CONFIDENTIAL~~

Number	Title
63RC4779	Monthly Progress Report
63RC5624	Monthly Progress Report
	Failure Report (1)
	Failure Analysis Report (1)
THIOKOL	
A-009B	Quality Control Plan
A-016-1	Development Test Plan
A-016-2	Qualification Test Plan
A-016-3	End-Item Acceptance Test Plan
SP/2469	Failure Data
SP/1258-P	Failure Data
SP/1286-P	Failure Data
A-801	Drawings, Materials, Process, and Procurement Specification List
A-207	Monthly Progress Report
ALLISON DIVISION, GENERAL MOTORS	
A5869	Development and Qualification Testing of Type II Tanks (Oxidizer and Fuel)
3260	Monthly Progress Report
3377	Monthly Progress Report
MELPAR	
	Development and Qualification Test Report
	Development and Qualification Test Data
8	Monthly Progress Report (Mar)
9	Monthly Progress Report (Apr)
10	Monthly Progress Report (May)
TRANSCO	
R-1163	Qualification Test Report
1	Monthly Progress Report
RANTEC	
31424-DATP	Design Approval (Qualification) Test Procedure, Low Pass Filter

~~CONFIDENTIAL~~

Number	Title
EAGLE-PICHER	
4	Monthly Progress Report
5	Monthly Progress Report
6	Monthly Progress Report
7	Monthly Progress Report
AIRBORNE INSTRUMENT LAB	
	Monthly Progress Report (Feb)
	Monthly Progress Report (Mar)
LINK	
515.16.4.2	Monthly Progress Report