~~CONFIDENTIAL~~

CLASSIFICATION CHANGE

To UNCLASSIFIED
By authority of ODS-Ec 1652 Date 12/3/62
Changed by L. Shirley
Classified Document Master Control Station, NASA
Scientific and Technical Information Facility

GROUP 4
~~Downgraded at 3 year intervals; declassified after 12 years~~

GRUMMAN DESIGN ~~370~~ 378

APOLLO EXTENSION SYSTEM

EARTH ORBIT MISSION STUDY

FINAL REPORT

TO

NATIONAL AERONAUTICS AND SPACE ADMINISTRATION
MANNED SPACECRAFT CENTER
ADVANCED SPACECRAFT TECHNOLOGY DIVISION
HOUSTON, TEXAS

BY

GRUMMAN AIRCRAFT ENGINEERING CORP.
BETHPAGE, NEW YORK

Vol. 2

Flight Mission and Configuration Description for

NASA Experiment Groupings (U)

CONTRACT NO. NAS 9-3681

10 MAY 1965

~~NOTICE — THIS DOCUMENT CONTAINS INFORMATION AFFECTING THE NATIONAL DEFENSE OF THE UNITED STATES WITHIN THE MEANING OF THE ESPIONAGE LAWS, TITLE 18, U.S.C., SECTIONS 793 AND 794. ITS TRANSMISSION OR THE REVELATION OF ITS CONTENTS IN ANY MANNER TO AN UNAUTHORIZED PERSON IS PROHIBITED BY LAW.~~

~~AVAILABLE TO NASA~~

(NASA-CR-117532) APOLLO EXTENSION SYSTEM EARTH ORBIT MISSION STUDY. VOLUME 2 - FLIGHT MISSION AND CONFIGURATION DESCRIPTION FOR NASA EXPERIMENT GROUPINGS FINAL REPORT (Grumman Aircraft Engineering Corp.) 545 p 00/54

N79-76665

Unclas
11380

FF No. 6

(NASA-CR-117532)

(CATEGORY)

~~AVAILABLE TO U.S. GOVERNMENT AGENCIES AND CONTRACTORS ONLY~~

~~CONFIDENTIAL~~

1. FLIGHT MISSION DESCRIPTION

Flight No. 209

Altitude, n.mi	Inclination, deg	Duration, days	Crew
200	28.5	14	3

Mission Title: SPACE OPERATIONS AND TECHNOLOGY

Objectives: This flight will assess man's viability and effectiveness in space, investigate capillary action at zero "g", evaluate advanced space suits, and develop and perfect advanced procedures for extravehicular activity.

Configuration: Block II CSM, LEM A/S, D/S

Experiment Summary:

No.	Title	Equipment Location: LEM Stage Asc	LEM Stage Desc	CM
[illegible]	Biomedical (excluding 0101 and 0102)	X		
[illegible]	Behavioral	X		
[illegible]1	Radiation Environment Monitoring	X		
[illegible]01	Capillarity Studies	X		
[illegible]	Evaluation of Space Suits		X	X
[illegible]	Manned Locomotion and Maneuvering Capability	X	X	
[illegible]3	Emergency Techniques for Rescue	X	X	

2. EXPERIMENT DESCRIPTION SUMMARY

FLIGHT - 209

EXPERIMENT: 0100-0200 - Medical/Behavioral Experiments - The Medical/Behavioral Experiments are intended to evaluate the effects of prolonged space flight on man and to enhance his operational efficiency to permit more extensive manned space flight missions. Twenty-four experimental measurement packages have been defined to analyze critical human functions and to focus on those most likely to be affected adversely by prolonged space flight. Procedures and instrumentation employed in the experimental packages are a composite of updated, standard medical/behavioral and imminent state-of-the art zero-g adapted, techniques. Thes procedures should provide: 1) an assessment of the effects of prolonged weightlessness on the psychophysiological integrity of the astronaut, 2) a determination of the mechanisms which mediate observed changes, 3) a prediction of the onset and extent of degraded functioning, and 4) a validation of preventive or countermeasures which may be necessary to support man's extended exploration of space.

Experiments 0101 and 0102 require linear and/or rotational accelerations, such as would be obtained during a firing of the SM engine or during the artificial gravity experiment, in order to achieve all of the described experiment objectives. These experiments have been excluded from missions which lack sufficient SM propulsion and/or the artifical gravity experiment.

EXPERIMENT: 0501 - Radiation Environment Monitoring - The objectives of this experiment are to record radiation received by the crew, and to furnish external radiation environment data for other experiments. Techniques for the Apollo Mission, or those employed in Tiros and OGO, will be used. Detection devices proposed for the monitoring systems are: proton-alpha and electron spectrometers, tissue equivalent ionization chambers, and film packs.

EXPERIMENT: 0601 - Capillarity Studies - The objective of this experiment is to provide knowledge of interactions of matter, at simultaneous solid/liquid vapor interfaces, through systematic study of capillary flow statics and dynamics at zero-g, and to develop a compatible theory. Static measurements of wetting angles will be made of height and diameter of spherical zones of various liquids on various test surfaces. Dynamic measurements of capillary height will be made by timing flow in tubes of different diameters and materials. A radio isotope tracking device will be used to determine interface distance-time relationships for transparent and non-transparent tubes. Motion pictures will be taken of the transparent tubes. Liquids will be stored in evacuated bladders. Capillary flow will be initiated by equalizing pressure difference between tube interior and bladder exterior.

EXPERIMENT: 1501 - Evaluation of Advanced Space Suit Assemblies - The objectives of this experiment are to validate the structural and dynamic integrity, and protective and performance characteristics of advanced space suit systems. Problem areas of suit design and development will be resolved by establishing criteria for those specifics for which earth-bound simulations cannot suffice. Following pre-flight dynamic testing, utilizing articulated dummies and simulating space

environment, manned evaluations of the suit will be made. Extravehicular tests of mobility, dexterity and lifting capability will be conducted. In addition, extended operations utilizing the AMU will be conducted. Post-flight inspection of the suit will determine the integrity/protective effectiveness of materials and fabricating techniques as used in suit assemblies.

EXPERIMENT: 1502 - Development of Manned Locomotion and Maneuvering Capability - The objectives of this experiment are to develop techniques, operations, and equipments enabling man to move and maneuver intravehicular and extravehicular by using his own physical power, or aided by special propulsion systems, and encumbered by tools, equipment, supplies or other impediments. Initial tests will be intravehicular and will include evaluation of techniques required to don and doff space suits, life support systems and propulsion systems. Emergency repair and life saving techniques will be evaluated. Extravehicular attitude control operations using "body english" movements, safety lines and the AMU will be conducted. Extravehicular locomotion operations using hand holds, cargo nets, static lines, body-powered free soaring and AMU-powered flight will be conducted. The above will be repeated using various tools or logistics loads to serve as encumberances. Cooperative maneuver techniques will be developed by using the "buddy-system" for some of the above tests.

EXPERIMENT: 1503 - Emergency Techniques, Equipment and Procedures for Rescue Operations. - The objectives of this experiment are to develop techniques, equipment and procedures for: the rescue of personnel who have been injured or require evacuation from a disabled spacecraft; failure detection and warning systems; and, rescuing extravehicular subjects. Initial tests will include the emergency repair of the space suit, PLSS systems and propulsion systems, the use of external ECS umbilicals, emergency techniques utilizing the life support bag and the evaluation of failure detection and warning systems for the rescue of extravehicular objects. Various techniques of rescue operations (buddy rescue system, safety line, net, sled, etc.) using an empty pressurized suit as a dummy will be evaluated. Subsequently, rescue operations of an astronaut simulating injuries will be conducted utilizing the techniques developed above. In addition, rescue of extravehicular objects utilizing nets, safety lines, hooks, remote controlled systems, etc. will be conducted.

TABLE 2-1 FLIGHT 209 INTEGRATED EXPERIMENT EQUIPMENT LIST

Exper. No.	Component	Weight, lb	Vol, cu ft or size*	Elec Energy or Elec Pwr	Remarks
0100 and 0200	Medicine and Behavior Experiments	321	14.5	100W cont. plus 50W during Oper.	See Flt. 211 for detailed equip. list
0501		(46.5)			
	Proton-Alpha Spectrometer	7	8 x 8 x 8		Duty Cycle - Continuous during mission.
	High Energy Electron Spectrometer	10	8 x 8 x 8		
	Low Energy Electron Spectrometer	5.5	4 x 4 x 3		
	Tissue Equiv. Ionization Chambers (3)	3	3 x 2 x 1/2	5.3W	
	T.E.I.C. Rate Meters (2)	4	4 x 3 x 3		
	Film Packs and Pen Dosimeters (21)	1.5	2 x 2 x 1/8		
	Pulse Height Analyzer	15	12 x12 x12		
	Battery Charger	0.5	1/2x1/2x1	1W	
0601		(113)			
	Bladders, Capil Tubes and Fluids	60	1		Accel 10^{-4}g
	Misc. Equip (Screen, 5 cc Syringe, Thermom.)	2	1/2		7 Experiments of 1 Hr. duration each.
	Still Cameras - 70 mm (2)	8	0.2	20W	
	Radio Active Tracer System	20	1		
	Illuminating System	1	0.5		
	16 mm Camera	15	0.28	410W	
	400 Ft. Reels of Film (7)	7	0.15	N/A	
1501 1502 1503		(1951.2)			
	Hard Space Suit Ass'y.	55.0	42 x23 x23	NA	
	Extra Vehicular Life Support-System (ELSS)(2)	82.0	17 x11 x 6	(see ELSS batt)	
	Astronaut Maneuvering Unit (AMU) (2)	340.0	32 x23 x16	(see AMU batt)	
	AMU/SMS Fuel Supply System	700.0	44 x22 x22		
	Life Saving Bag	15.0	6 diax18 l.		
	Safety Lines	10.0	12 diax4 l.		Total of 26 Excursions- Av'g. duration 2 Hrs.
	Static Lines	10.0	12 diax4 l.	NA	
	Cargo Net Modules (3)	225.0	30 x30 x45		
	Restraint Systems (3)	24.0	8 x 4 x 2		
	Platform and Rails	75.0	18 ft x 3 ft		
	Medical Kit	2.0	12 x 8 x 6		

*INCHES UNLESS OTHERWISE SPEC.

TABLE 2-1 FLIGHT 209 INTEGRATED EXPERIMENT EQUIPMENT LIST

Exper. No.	Component	Weight, lb	Vol, cu ft or size*	Elec Energy or Elec Pwr	Remarks
1501 1502 1503 (Cont)	Personnel Transfer Equipment	12.0	17 x12 x12	NA	
	ECS Station - Platform	18.0	8 x5 x4		
	Umbilicals	8.0	18x18x6		
	Task Equipment Harness (3)	36.0	10x6x4		
	Logistics Materials	10 to 60	-		
	Motion Picture Camera - Automatic	25.0	17x17-1/4x 4-1/2	5W	
	Motion Picture Camera - Manual	3.0	3 x4x7-1/2	NA	
	TV Camera	8.8	4x9 1/2x12	5W	
	PLSS Lithium Hydroxide Canisters (Stored)(6)	26.4	5.5 dia x 12	NA	8 Req'd. - 6 stored
	PLSS "BackPack" Batteries (Stored) (6)	24.0	3 x 3 x 6	30W / 0.772 KW-Hrs	8 Req'd. - 6 stored
	ELSS "Chest Pack" Batteries (Stored) (2)	8.0	3 x 3 x 6	50W / 0.200 KW-Hrs	4 Req'd. - 2 stored
	AMU Batteries (4)	184.0	3 1/4 dia x 16 1/4 l.	160W / 2.898 KW-Hrs	
	Photographic Lighting		Part of TV Camera Assy	250W / 1000W	
	Total Weight	2432			

*INCHES UNLESS OTHERWISE SPEC.

3. EXPERIMENT/SPACECRAFT INTEGRATION

3.1 Mission Definition

Flight 209 is dominated by the requirements of the extra-vehicular activity associated with 1500 Series experiments. Twenty-seven of these experiments are planned and performed at the rate of approximately two per day, scheduled such that participation is shared almost equally by all three crewmen.

Since 14-day Gemini flights will have been flown prior to this mission, bio-medical and behavioral experiments will not be investigatory in nature and are not, therefore, considered "primary" for this flight. It has, however, been possible to integrate virtually all of the 0100 and 0200 Series, at required frequencies, with the exception of the establishment of baseline data for some cardiovascular and hematology experiments. If this data were to be obtained, the first few days of this flight would have to be directed entirely to these two experiments. In this flight, the combined emphasis on extravehicular and biomedical-behavioral experiments is considered essential in that man's physiological and psychological responses to the demands of advanced spacecraft activity will be monitored continuously and thoroughly.

Capillarity studies and radiation environment monitoring occupy very little of the time allotted to the experimental program and do not present a scheduling problem.

A repetitive cycle for sleeping and principal meals was established and maintained over the fourteen-day mission, with the exception of the interruption of eating periods dictated by the complete metabolic series performed on day seven.

Subject-observer relationships exist in all experiments on this flight, with the exception of a few in the behavioral category. This condition precludes having three men on duty during all extravehicular experiments, if a reasonable duty cycle is to be maintained, since there is almost always one crewman asleep. Those experiments specifically requiring all three crewman have been accommodated. The crew schedule is summarized in Table 3-1 and detailed in Table 3-2.

Table 3-1 Flight 209 Mission Definition Summary**

Exper. No.	Occurence Day No.	Total Times Perf/ Mission	No. Men Req'd	Exper Time/Test Setup Time, min	Test Time, min	Total Exper Man-hr/ Mission Crewman 1	2	3	Total	Total Exper Time/Mission, hr Achv'd	Spec'd	Remarks
0100	All		2	Var.	Var.	80.3	80.3	80.3	241	*241	*338	**Expressed in man-hrs - Discrepancy between specified & achieved time due entirely to deletion of baseline biomedical data acquisition.
0200			1&2			Man-hrs as subject and observer equally divided.						
0501	All	14	1	N/A	13	0	3	0	3	3	3	
0601	1,3,5,7, 8,10,12	7	1	15	45	3	1	3	7	7	7	
1501	1,3,13,14	4	2	60	60	4	8	4	16	8	8	
1502	All	17	2&3	Var.	Var.	24	33	33	90	38	38	
1503	2,4,6, 10,11,12	6	2	60	80	12	9	7	28	14	14	
					Total	123.3	134.3	127.3	385			

Maximum Work Day: ~ 10.5 hrs on duty; Average Work Day: ~ 9.5 hrs on duty; Minimum Work Day: ~ 8.5 hrs on duty.

Total EVA Man Hrs: 44; 28 on PLSS, 16 on ELSS-AMU.

Notes: 26 Repressurization of LEM Lab required.

* See Tables 3-2 and 3-3 for crew schedules and experiment equipment duty cycles.

Table 3-2 **CREW SCHEDULING, FLIGHT 209, SHEET 1 OF 4**

DAY 1	ORBIT	CREWMEN ACTIVITIES 1	2	3
0000				
20		E/Hyg	E/Hyg	
40		Rest	Rest	
0100				
20			0501	
40			Rest	Rest
0200				
20				
40				
0300				
20				
40				
0400		Sleep	1502-1A,2A	1502-1A,2A
20				
40				
0500				
20			0101-S	0101-O
40				
0600				
20				
40				
0700				
20		E/Hyg	E/Hyg	E/Hyg
40				
0800		Rest	Rest	Rest
20				0201a,
40		0601		0202c,
0900				d, e
20				
40				
1000		Rest		0203c,
20				d,f,h
40				0203g
1100			Sleep	
20		0201b		0203e
40		0201e		
1200		0201d-O		0201d-S
20		0202f		
40		0202gh1		
1300				Rest
20		0203a		
40				
1400		0203b		
20		E/Hyg	E/Hyg	E/Hyg
40				
1500		Rest	Rest	Rest
20				
40				
1600		1501	1501	
20				
40				
1700				
20				
40				Sleep
1800				
20				
40		Rest	Rest	
1900				
20				
40				
2000				
20			0103-O	
40		0103-S	0108-O	
2100		0108-S		
20				
40			0104-S	E/Hyg
2200		0104-O		Rest
20		0111-O	0111-S	
40		0112-O	0112-S	
2300		0117-O	0117-S	
20		0106-S		0106-O
40		0107-S	Rest	0107-O
2400		Rest		Rest

DAY 2	ORBIT	CREWMEN ACTIVITIES 1	2	3
0000				
20		E/Hyg	E/Hyg	
40		Rest	Rest	
0100				
20			0501	
40				
0200				
20			Rest	Rest
40				
0300				
20			0113-S	0113-O
40				
0400		Sleep		
20				
40				
0500				
20			1502-1B,2B	1502-1B,2B
40				
0600				
20				
40				
0700				
20		E/Hyg	E/Hyg	E/Hyg
40				
0800		Rest	Rest	Rest
20		0101-O		
40				0101-S
0900		0109-S		
20		0110-S		
40		0202c-O		0110-O
1000		0202b-S		0202a-O
20		0201c-O		0202b-S
40				0201c-S
1100			Sleep	
20		0105-S		0105-O
40				
1200				
20				
40				
1300		Rest		Rest
20				
40				
1400				
20		E/Hyg	E/Hyg	E/Hyg
40				
1500		Rest	Rest	Rest
20				
40				
1600		1503	1503	
20				
40				
1700				
20				
40		Rest		Sleep
1800			Rest	
20				
40				
1900		0118-O	0118-S	
20		0111-O	0111-S	
40		0120-O	0120-S	
2000			Rest	
20			0202f	
40		Rest	0202gh	
2100			02021	
20			0203a	
40				E/Hyg
2200			0203b	Rest
20		0201a		
40		0202c,		
2300		e, e	Rest	
20		0203c,		
40		d,f		Rest
2400		0203h		

DAY 3	ORBIT	CREWMEN ACTIVITIES 1	2	3
0000				
20		E/Hyg	E/Hyg	
40		Rest	Rest	
0100				
20			0501	
40				
0200				
20			Rest	Rest
40				
0300				
20				
40			0103-S	0103-O
0400		Sleep	0108-S	0108-O
20				
40				
0500			0104-O	0104-S
20				
40				
0600			0111-O	0111-S
20			0112-O	0112-S
40			0117-O	0117-S
0700			0106-S	0106-O
20			0107-S	0107-O
40		E/Hyg	E/Hyg	E/Hyg
0800		Rest	Rest	Rest
20				
40				
0900		1502-2C		1502-2C
20				
40				
1000		Rest		
20		0203f		0601
40			Sleep	
1100		0203e		
20				0201b
40				0201e
1200		0201d-S		0201d-O
20				
40				
1300		Rest		Rest
20				
40				
1400				
20		E/Hyg	E/Hyg	E/Hyg
40				
1500		Rest	Rest	Rest
20			0101-O	
40		0101-S		
1600		0109-O	0109-S	
20		0110-O	0110-S	
40		0202a-O	0202a-O	
1700		0202b-O	0202b-S	
20		0202c-S	0201c-O	
40		Rest	Rest	Sleep
1800				
20				
40		1501	1501	
1900				
20				
40				
2000			Rest	
20			0202c,	
40			d, e	
2100				
20		Rest	0203c	E/Hyg
40			d,f,h	
2200				Rest
20				0202f
40				0202gh
2300			Rest	02021
20				0203a
40				0203b
2400				

DAY 4	ORBIT	CREWMEN ACTIVITIES 1	2	3
0000				
20		E/Hyg	E/Hyg	
40				
0100		Rest	Rest	
20			0501	
40				
0200				
20			Rest	Rest
40				
0300				
20				
40				
0400		Sleep		
20				
40				
0500				
20				
40				
0600				
20				
40				
0700				
20		E/Hyg	E/Hyg	E/Hyg
40				
0800		Rest	Rest	Rest
20				
40				
0900		Rest		
20				
40				0203c,
1000				d,f,h
20				
40				Rest
1100		0118-O	Sleep	
20		0119-O		
40		0120-O		0120-S
1200				
20		0202f,		
40		gh,i		Rest
1300				
20		0203a		
40				
1400		0203b		
20		E/Hyg	E/Hyg	E/Hyg
40				
1500		Rest	Rest	Rest
20				
40				
1600		1503	1503	
20				
40				
1700				
20				
40		Rest		Sleep
1800				
20				
40		0105-O	0105-S	
1900				
20				
40				
2000				
20		Rest		
40			Rest	
2100				
20				E/Hyg
40				
2200				Rest
20				
40				
2300		Rest	1502-3A,3B	1502-3A,3B
20				
40			Rest	Rest
2400				

NOTES

-S = subject

-O = observer

Spacecraft Occulted

In Sunlight

Occulted etc.

E/Hyg Eat & Personal Hygiene

Limits of Experiment Time

Limits of EVA

Table 3-2 **CREW SCHEDULING, FLIGHT 209 , SHEET 2 OF 4**

DAY 5	ORBIT	CREWMEN ACTIVITIES 1	2	3
0000				
20		E/Hyg	E/Hyg	
40				
0100		Rest	Rest	
20			0501	
40				
0200				
20				
40			Rest	Rest
0300				
20				
40				
0400		Sleep		
20			1502-3c	1502-3c
40				
0500				
20			Rest	Rest
40				
0600				
20			1502-4A	1502-4A
40				
0700				
20		E/Hyg	E/Hyg	E/Hyg
40				
0800		Rest	Rest	Rest
20		0101-0		0101-S
40				
0900		0109-S		0109-0
20		0110-S		0110-0
40		0202a-0		0202a-S
		0202b-S		0202b-0
1000				
20		0201c-0		0201c-S
40				
1100		0103-0		0103-S
20		0108-0	Sleep	0108-S
40				
1200		0106-0		0106-S
		0107-0		0107-S
20				
40				
1300		Rest		Rest
20				
40				
1400				
20		E/Hyg	E/Hyg	E/Hyg
40				
1500		Rest	Rest	Rest
20			0203g	
40		0601		
1600			0203e	
20				
40		Rest	0201b	
1700			0201e	
20		0201d-0	0201d-S	
40			0202f	
1800			0202g, h,i	Sleep
20		Rest		
40			0203a	
1900				
20			0203b	
40				
2000		0201a		
20		0202c, d,e		
40				
2100		0203c, d, f, h	Rest	
20				E/Hyg
40				
2200				Rest
20				
40		0104-S		0104-0
2300				
20				
40		0111-S		0111-0
2400		0112-S		0112-0
		0117-S		0117-0

DAY 6	ORBIT	CREWMEN ACTIVITIES 1	2	3
0000				
20		E/Hyg	E/Hyg	
40				
0100		Rest	Rest	
20			0501	02021
40				0203a
0200				
20				
40				
0300			Rest	Rest
20				
40				
0400		Sleep		
20				
40				
0500				
20				- - - -
40				
0600			1503	1503
20				
40				- - - -
0700				
20		E/Hyg	E/Hyg	E/Hyg
40				
0800		Rest	Rest	Rest
20		- - - -		
40				
0900		1502-4B		1502-4B
20				
40				
1000		- - - -		
20		Rest		
40				
1100			Sleep	
20		0105-0		0105-S
40				
1200				
20				
40				
1300		Rest		Rest
20				
40				
1400				
20		E/Hyg	E/Hyg	E/Hyg
40				
1500		Rest	Rest	Rest
20		0101-S	0101-0	
40				
1600		0107-0	0107-S	
20		0110-S	0110-0	
40		0202a-S	0202a-0	
1700		0202b-0	0202b-S	
20		0201c-S	0201c-0	
40		0113-S	0113-0	
1800				Sleep
20				
40				
1900		Rest	Rest	
20				
40				
2000				
20		E/Hyg	0201a	
40			0202c, d,e	
2100		Rest		
20			0203c, d, f, h	E/Hyg
40				
2200				Rest
20		Rest		0202f, g,h
40				
2300		0118-S	0118-0	
20		0119-S	0119-0	Rest
40		0120-S	0120-0	
2400		Rest		0203b

DAY 7	ORBIT	CREWMEN ACTIVITIES 1	2	3
0000				
20			E/Hyg	
40				
0100		Rest	Rest	Rest
20			0501	
40			Rest	
0200				
20			0113 Set up	0113 Set up
40				
0300				
20			Align	Align
40				
0400		Sleep		
20				
40				
0500			0113-0	0113-S
20				
40				
0600				
20				
40				
0700				
20				E/Hyg
40		Rest	Rest	
0800				Rest
20				
40		0113 Set up		0113 Set up
0900				
20				
40				
1000				
20				
40			Sleep	
1100		0113-S		0113-0
20				
40				
1200				
20				
40				
1300				
20		E/Hyg		
40				Rest
1400		Rest		
20				
40		0113 Set up	0113 Set up	E/Hyg
1500				Rest
20				
40				
1600				
20				
40				
1700		0113-0	0113-S	
20				
40				Sleep
1800				
20				
40				
1900		0113 Clean up	0113 Clean up	
20		E/Hyg	E/Hyg	
40		Rest	Rest	
2100				
20		0104-0		E/Hyg
40			0104-S	
2200				Rest
20				
40				0601
2300		Rest	Rest	
20				
40				Rest
2400				

DAY 8	ORBIT	CREWMEN ACTIVITIES 1	2	3
0000				
20		E/Hyg	E/Hyg	
40				
0100		Rest	Rest	
20			0501	
40				Rest
0200				
20			Rest	
40				
0300				
20			0111-S	110-0
40			0112-S	
0400		Sleep	0120-S	
20				
40			0601	
0500				
20				
40			0101-S	
0600				
20				
40				
0700				
20		E/Hyg	E/Hyg	
40				
0800		Rest	Rest	
20				
40				
0900		Rest		
20				
40				
1000				
20				
40				
1100		0105-S	Sleep	
20				
40				
1200				
20		0202f, g,h,i		
40				
1300				Rest
20		0203a		
40				
1400		0203b		
20		E/Hyg	E/Hyg	E/Hyg
40				
1500		Rest	Rest	Rest
20				
40				
1600				
20				
40		1502-4C 4D, 4F	1502-4C 4D, 4F	
1700				
20				
40				
1800				Sleep
20				
40				
1900		Rest	Rest	
20				
40				
2000		0103-S	0103-0	
20				
40		0108-S		
2100		0111-S		
20		0112-S		
		0117-S	0117-S	E/Hyg
40		0109-S	0109-0	
2200		0107-S	0107-0	Rest
20				
40				
2300		1502-5A	1502-5A	1502-5A
20				
40				
2400		Rest	Rest	Rest

NOTES

Table 3-2 CREW SCHEDULING, FLIGHT 209, SHEET 3 OF 4

DAY 9	ORBIT	CREWMEN ACTIVITIES 1	2	3
0000				
20		E/Hyg	E/Hyg	
40				
0100		Rest	Rest	
20			0501	
40				
0200				
20			Rest	Rest
40				
0300				
20				
40				
0400		Sleep	0113-S	0113-0
20				
40				
0500				
20				
40			1502-4E	1502-4E
0600				
20				
40				
0700				
20		E/Hyg	E/Hyg	E/Hyg
40				
0800		Rest	Rest	Rest
20		0101-0		0101-S
40				
0900		0109-S		0109-0
20		0110-S		0110-0
40		0202a-0		~~0202a-S~~
1000		0202b-S		~~0202b-0~~
20		0201c-0		0201c-S
40		Rest		0203g
1100			Sleep	
20		0201b		0203e
40		0201e		
1200		0201d-0		0201d-S
20				
40				
1300		Rest		Rest
20				
40				
1400				
20		E/Hyg	E/Hyg	E/Hyg
40				
1500		Rest	Rest	Rest
20			0202f, g,h,i	
40				
1600		Rest		
20			0203a	
40			0203b	
1700				
20		0201a		
40		0202c, d, e	Rest	Sleep
1800				
20		0203c, d, f, h		
40				
1900				
20				
40				
2000		1503	1503	
20				
40				
2100				
20				E/Hyg
40				
2200		Rest	Rest	Rest
20				
40		1502-5B	1502-5B	1502-5B
2300				
20				
40		Rest	Rest	Rest
2400				

DAY 10	ORBIT	CREWMEN ACTIVITIES 1	2	3
0000				
20		E/Hyg	E/Hyg	
40				
0100		Rest	Rest	
20			0501	
40				
0200				
20			Rest	Rest
40				
0300				
20				
40			0103-S	0103-0
0400		Sleep	0108-S	0108-0
20				
40				
0500			0104-0	0104-S
20				
40				
0600				0111-S
20			0111-0	~~0112-S~~
40			~~0112-S~~	~~0117-S~~
			~~0117-S~~	
			0106-S	0106-0
0700			0107-S	0107-0
20		E/Hyg	E/Hyg	E/Hyg
40				
0800		Rest	Rest	Rest
20				
40				
0900				
20		1503		1503
40				
1000				
20				
40		Rest		
1100			Sleep	Rest
20				
40		0112-0		~~0112-S~~
1200		~~0114-0~~		~~0117-S~~
20		0120-0		~~0120-S~~
40				0202f, g, h, i
1300		Rest		
20				0203a
40		0601		
1400				0203b
20		E/Hyg	E/Hyg	E/Hyg
40				
1500		Rest	Rest	Rest
20			0101-0	
40		0101-S		
1600			0109-S	
20		0109-0	0110-S	
40		0110-0	0202a-0	
		~~0202a-S~~	~~0202b-S~~	
1700		~~0202b-0~~		
20		0201c-S	0201c-0	
40				
1800				Sleep
20			Rest	
40				
1900				
20		Rest		
40				
2000			0201a	
20			0202c, d, e	
40				
2100				
20			0203c d, f, h	E/Hyg
40		Rest		Rest
2200				
20				
40		1502-5C,5D	1502-5C,5D	1502-5C,5D
2300				
20				
40		Rest	Rest	Rest
2400				

DAY 11	ORBIT	CREWMEN ACTIVITIES 1	2	3
0000				
20		E/Hyg	E/Hyg	
40				
0100		Rest	Rest	
20			0501	
40				
0200				
20				
40			Rest	Rest
0300				
20				
40				
0400		Sleep		
20			0113-0	0113-S
40			0101-S	0101-0
0500				
20				
40			0109-0	0109-S
0600			0110-0	0110-S
20			~~0202a-S~~	~~0202a-0~~
40			~~0202b-0~~	~~0202b-S~~
			0201c-S	0201c-0
0700				
20		E/Hyg	E/Hyg	E/Hyg
40				
0800		Rest	Rest	
20				Rest
40		0203g		
0900				
20		0203e		0201b
40				0201e
1000		0201d-S		0201d-0
20				
40		0202f, g,h,i		
1100		0203a	Sleep	Rest
20				
40		0203b		
1200				
20				0201a
40				0202c, d, e
1300		Rest		
20				0203c, d, f, h
40				
1400				
20		E/Hyg	E/Hyg	E/Hyg
40				
1500		Rest	Rest	Rest
20				
40				
1600		1502-7C	1502-7C	
20				
40				
1700				
20		Rest		
40		0118-S	0118-0	
1800		0119-S	0119-0	Sleep
20		0120-S	0120-0	
40				
1900		Rest		
20			Rest	
40				
2000				
20				
40		1503	1503	
2100				
20				E/Hyg
40				
2200		Rest	Rest	Rest
20				
40		1502-5F	1502-5F	1502-5F
2300				
20				
40		Rest	Rest	Rest
2400				

DAY 12	ORBIT	CREWMEN ACTIVITIES 1	2	3
0000				
20		E/Hyg	E/Hyg	
40				
0100		Rest	Rest	
20			0501	
40				
0200				
20			Rest	Rest
40				
0300				
20				
40				
0400		Sleep		
20				0601
40				
0500				
20				
40			1503	1503
0600				
20				
40				
0700				
20		E/Hyg	E/Hyg	E/Hyg
40				
0800		Rest	Rest	Rest
20		0101-0		
40				0101-S
0900		0109-S		
20		0110-S		0109-0
40		~~0202a-S~~		0110-0
1000		~~0202b-S~~		~~0202a-0~~
				~~0202b-0~~
20		0201c-0		0201c-S
40				
1100			Sleep	
20		Rest		
40				Rest
1200				
20				
40				
1300		0111-S		0111-0
20		0112-S		0112-0
40		0117-S		0117-0
1400		0106-0		0106-S
		0107-0		0107-S
20		E/Hyg	E/Hyg	E/Hyg
40				
1500		Rest	Rest	Rest
20			0202f, g,h,i	
40				
1600		Rest		
20			0203a	
40				
1700			0203b	
20				
40		0201a		
1800		0202c, d, e	Rest	Sleep
20				
40		0203c, d, f, h		
1900				
20				
40				
2000		0105-0	0105-S	
20				
40				
2100				
20		Rest		F/Hyg
40			Rest	
2200				Rest
20				
40		1502 5E	1502 5E	1502 5E
2300				
20				
40				
2400				

NOTES

[redacted]

Table 3-2 CREW SCHEDULING, FLIGHT 209, SHEET 4 OF 4

DAY 13	ORBIT	CREWMEN ACTIVITIES 1	2	3
0000				
20		E/Hyg	E/Hyg	
40				
0100		Rest	Rest	
20			0501	
40				Rest
0200			Rest	
20				
40			0105-O	0105-S
0300				
20				
40				
0400		Sleep	0203a	
20				
40			0203e	Rest
0500				
20				
40				
0600			1501	1501
20				
40				
0700				
20		E/Hyg	E/Hyg	E/Hyg
40				
0800		Rest	Rest	Rest
20		0201b		
40		0201e		
0900		0103-O		0103-S
20		0108-O		
40				0108-S
1000				
20		0104-S		
40				0104-O
1100			Sleep	
20		Rest		
40		0113-S		0113-O
1200				Rest
20				
40		Rest		0202f, g, h, i
1300				
20				0203a
40				
1400				0203b
20		E/Hyg	E/Hyg	E/Hyg
40				
1500		Rest	Rest	Rest
20			0101-O	
40		0101-S		
1600			0109-S	
20		0109-O	0110-S	
40		0110-O		
1700		0202a-S	0202a-O	
20		0202b-O	0202b-S	
40		0201c-S	0201c-O	
1800				Sleep
20		Rest	Rest	
40				
1900				
20				
40				
2000		0201d-O	0201d-S	
20			0201a	
40			0202c, d, e	
2100				
20			0203c, d, f, h	E/Hyg
40				Rest
2200				
20				
40		1502-6A	1502-6A	1502-6A
2300				
20				
40		Rest	Rest	Rest
2400				

DAY 14	ORBIT	CREWMEN ACTIVITIES 1	2	3
0000				
20				
40				
0100		1502-6B	1502-6B	1502-6B
20				
40				
0200				
20		E/Hyg	E/Hyg	Rest
40				
0300		Rest	Rest	
20			0501	
40				
0400			1502-7A, 7B	1502-7A, 7B
20				
40				
0500				
20				
40		Sleep	Rest	Rest
0600				
20				
40				
0700				
20				
40				
0800			1501	1501
20				
40				
0900				
20		E/Hyg	E/Hyg	E/Hyg
40				
1000		Rest	Rest	Rest
20				
40				
1100				
20				
40				
1200				
20				
40				
1300				
20				
40				
1400				
20				
40				
1500				
20				
40				
1600				
20				
40				
1700				
20				
40				
1800				
20				
40				
1900				
20				
40				
2000				
20				
40				
2100				
20				
40				
2200				
20				
40				
2300				
20				
40				
2400				

DAY	ORBIT	CREWMEN ACTIVITIES 1	2	3
0000				
20				
40				
0100				
20				
40				
0200				
20				
40				
0300				
20				
40				
0400				
20				
40				
0500				
20				
40				
0600				
20				
40				
0700				
20				
40				
0800				
20				
40				
0900				
20				
40				
1000				
20				
40				
1100				
20				
40				
1200				
20				
40				
1300				
20				
40				
1400				
20				
40				
1500				
20				
40				
1600				
20				
40				
1700				
20				
40				
1800				
20				
40				
1900				
20				
40				
2000				
20				
40				
2100				
20				
40				
2200				
20				
40				
2300				
20				
40				
2400				

DAY	ORBIT	CREWMEN ACTIVITIES 1	2	3
0000				
20				
40				
0100				
20				
40				
0200				
20				
40				
0300				
20				
40				
0400				
20				
40				
0500				
20				
40				
0600				
20				
40				
0700				
20				
40				
0800				
20				
40				
0900				
20				
40				
1000				
20				
40				
1100				
20				
40				
1200				
20				
40				
1300				
20				
40				
1400				
20				
40				
1500				
20				
40				
1600				
20				
40				
1700				
20				
40				
1800				
20				
40				
1900				
20				
40				
2000				
20				
40				
2100				
20				
40				
2200				
20				
40				
2300				
20				
40				
2400				

NOTES

[redacted]

The power required to perform the experimental program is profiled in Table 3-. for days 1, 2, 3 and 7. As noted, days 1, 2 and 3 are typical of days 4 thru 6, 8 thru 10 and 11 thru 13. The seventh day is devoted almost entirely to a comprehensive metabolic experiment performed on all three crewmen - its power profile is therefore presented separately.

No pointing requirements exist due to the experiments. Sufficient RCS propellant has been allotted to this flight to permit earth pointing (±5°) for the entire duration. The LEM flight control system is carried on this flight to enable experiment 1503 (Rescue Techniques) to include exercises in maneuvering a spacecraft to retrieve incapacitated EVA crewmen.

Consideration should be given to formulating a series of biomedical and behavioral experiments that are specifically oriented toward analyzing the physiological and psychological effects of the extensive extravehicular experiment program on this flight. A more cohesive integration of these experiments and more meaningful results could be achieved in this manner.

SHEETS 1&2 – DAYS 1, 2 & 3
TYPICAL OF DAYS 4, 5, 6; 8, 9, 10; 11, 12, 13

GRUMMAN AIRCRAFT ENGINEERING CORPORATION

Table 3-3 APOLLO EXTENSION SYSTEM EARTH ORBIT MISSION STUDY
FLIGHT 209 EXPERIMENT MISSION PROFILE

SHEET 1 OF 3

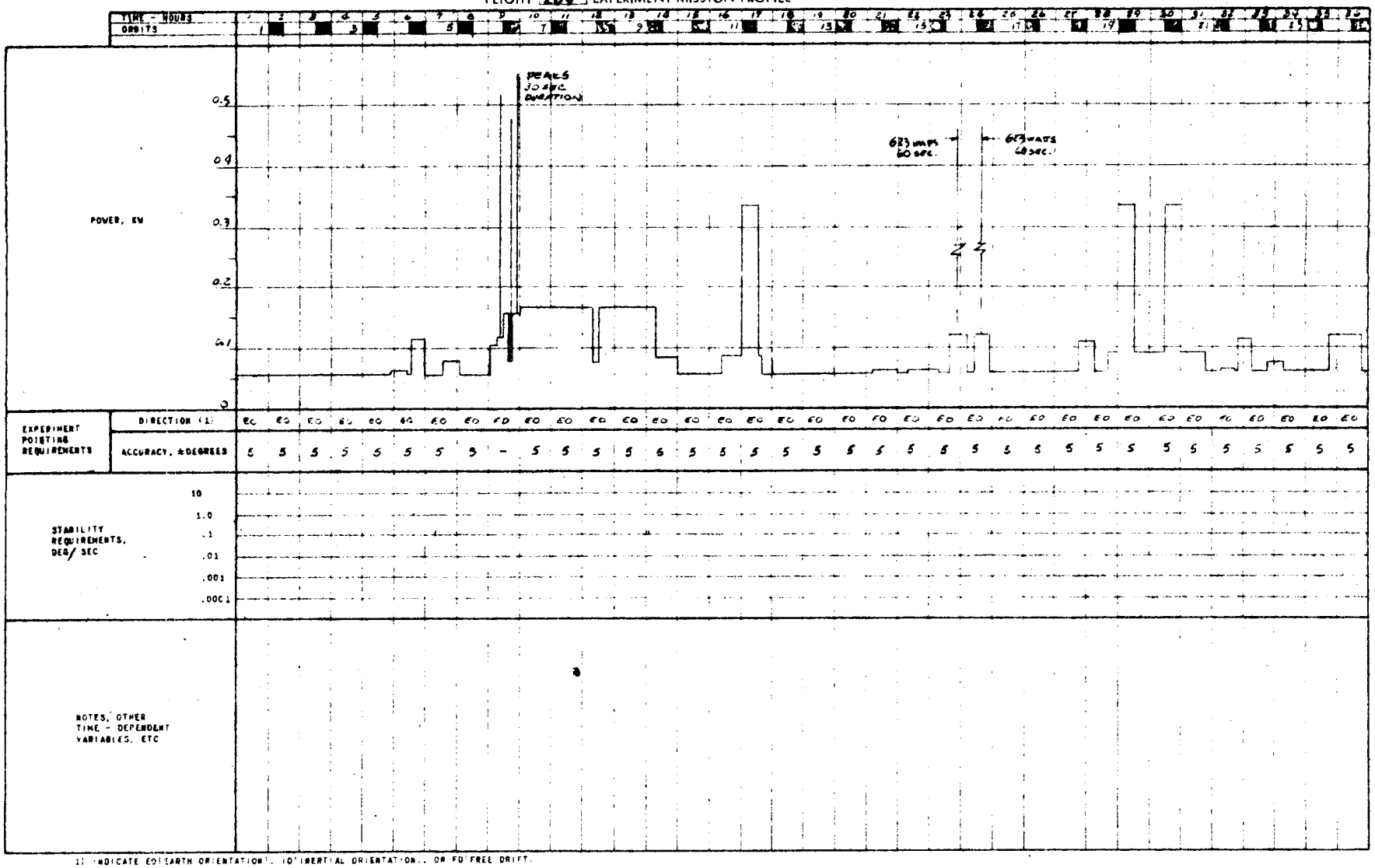

(1) INDICATE EO (EARTH ORIENTATION), IO (INERTIAL ORIENTATION), OR FD (FREE DRIFT)

GRUMMAN AIRCRAFT ENGINEERING CORPORATION

Table 3-3 APOLLO EXTENSION SYSTEM EARTH ORBIT MISSION STUDY
FLIGHT 209 EXPERIMENT MISSION PROFILE

SHEET 2 OF 3

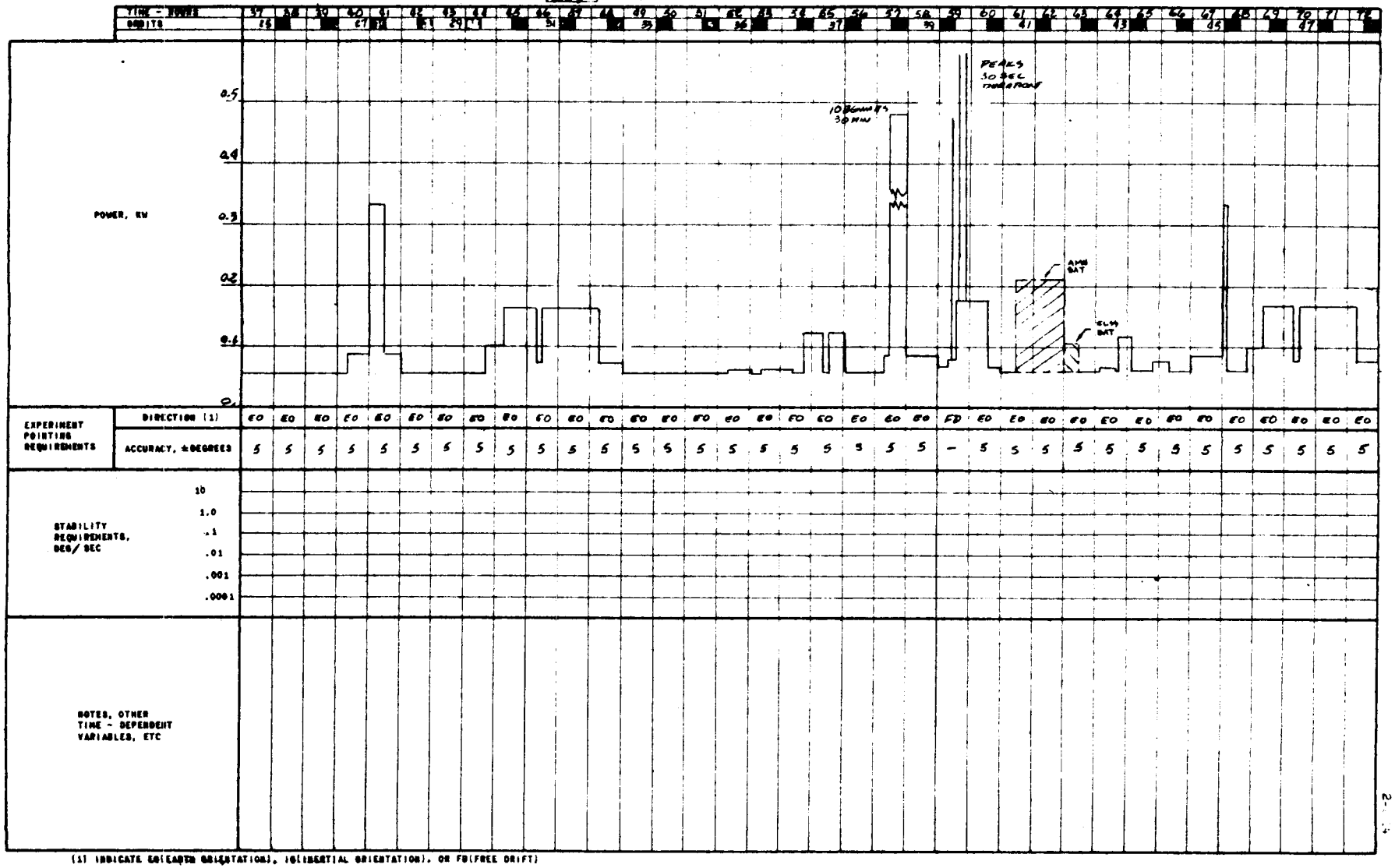

(1) INDICATE EO(EARTH ORIENTATION), IO(INERTIAL ORIENTATION), OR FD(FREE DRIFT)

DAY #7

GRUMMAN AIRCRAFT ENGINEERING CORPORATION

Table 3-3 APOLLO EXTENSION SYSTEM EARTH ORBIT MISSION STUDY
FLIGHT [209] EXPERIMENT MISSION PROFILE

SHEET 3 OF 3

TIME - HOURS	145	146	147	148	149	150	151	152	153	154	155	156	157	158	159	160	161	162	163	164	165	166	167	168	169	170	171	172	173	174	175	176	177	178	179	180
ORBITS	97			99																																

POWER, KW

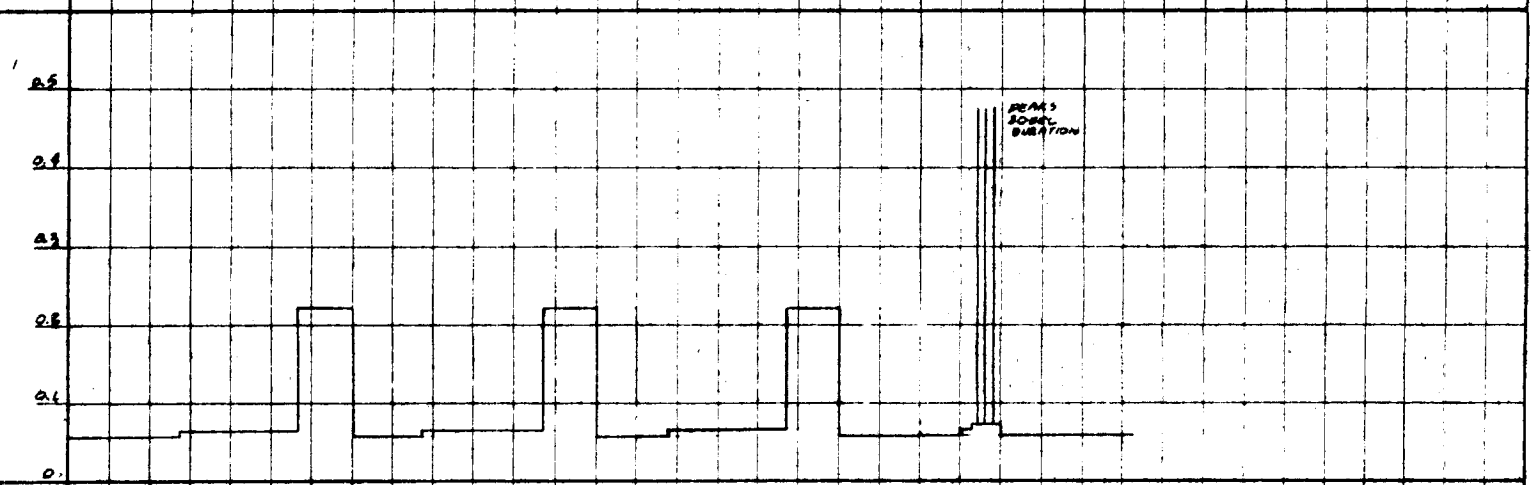

EXPERIMENT POINTING REQUIREMENTS																																				
DIRECTION (1)	EO	EO	EO	EO	EO	EO	EO	EO	EO	EO	EO	EO	EO	EO	EO	EO	EO	EO	EO	EO	EO	EO	EO	EO	EO	EO	EO	EO	EO	EO	EO	EO	EO	EO	EO	EO
ACCURACY, ±DEGREES	5	5	5	5	5	5	5	5	5	5	5	5	5	5	5	5	5	5	5	5	5	5	5	5	5	5	5	5	5	5	5	5	5	5	5	5

STABILITY REQUIREMENTS, DEG/SEC

10
1.0
.1
.01
.001
.0001

NOTES, OTHER TIME - DEPENDENT VARIABLES, ETC

(1) INDICATE EO(EARTH ORIENTATION), IO(INERTIAL ORIENTATION), OR FO(FREE DRIFT)

CONFIDENTIAL

CONFIDENTIAL

3.2 SPACECRAFT DEFINITION

Flight 209 configuration shown in Figures 3-1 and 3-2 carries experiments concerned with Radiation Environment Monitoring (0501), Solid/Liquid/Gas Behavior in Zero Gravity (0601), Manned Extra Vehicular Operations employing advanced space suit assemblies (1501), Manned Locomotive and Maneuvering Capabilities (1502), and Emergency Techniques, Equipment and Procedures for Rescue Operations (1503). Biomedical (0100), Behavioral (0200) and Radiation Monitoring (0501) experiments are common for all flights.

Although no specific pointing requirement is specified, the spacecraft attitude is assumed to be earth oriented with the spacecraft's longitudinal axis located in the orbital plane. Attitude is held within a dead band of $\pm 5^{\circ}$. Stability requirements are accommodated by the CSM within the RCS propellant capacities of the Block II CSM configuration. However, the basic LEM RCS with full propellant tanks has been included to provide a local rescue capability.

Proton-alpha, high and low energy electron spectrometers (0501) are located in the scientific equipment bay of the descent stage. The Pulse Height Analyser (0501), Tissue Equipment Ionization Chambers, film packs and Pen Dosimeters are stored within the Lab. The capillarity experiment equipment (0601) is also located internally.

Extravehicular-operations experiments (1501, 1502, 1503), AMU units, refurbishment and checkout equipments are located externally in the forward area of the descent stage to provide maximum visual surveillance and efficient motion picture coverage during EVA's. To accommodate the extensive EVA's associated with this flight, the basic AMU is modified to allow three-hour excursions with one-hour reserve. The AMU units, spare batteries, propellant and checkout equipments are located externally to avoid potential hazards associated with propellants being considered for the AMU. The hard space suit associated with the 1501 experiment is stored in the Lab during launch and in the CM during the flight. The LEM flight control station and RCS system is carried on this flight to demonstrate emergency rescue techniques.

No structural modifications of LEM A/S or D/S structure are necessary. All experiment equipment installations are additions to existing LEM A/S and D/S structure.

KEY

No.	Experiment	Name
1	0501	Proton Alpha Spectrometer
2	0501	High Energy Electron Spectrometer
3	0501	Low Energy Electron Spectrometer
4		Modular Maneuvering Unit
5		MMU Battery Spares (4)
6		MMU Fuel Supply System
7		MMU Resupply Station
8	1501,1502	Safety & Static Lines (2 Reels)
9	1503	Cargo Net Modules
10		Extravehicular Restraint Sys (2)
11		Platform & Rails
12		Personnel Transfer Equipt
13		ECS Station - Platform
14		Logistics Handling Equipt
15	1501,1502	Motion Picture Camera
16	1503	TV Camera
17	Basic LEM	ECS LiOH Spare Cannisters (8)
18		Jettisonable Shroud Supt (Prior to EVA)
19		ECS Water Storage Tank (Existing)
20		ECS GOX Tank (Existing)
21		ECS SOX Tank (29-in. dia Sphere; Added)
22		EPS Batteries (12)
23		RCS Jets
24		Potable Water Tank
25		Waste Storage Tank

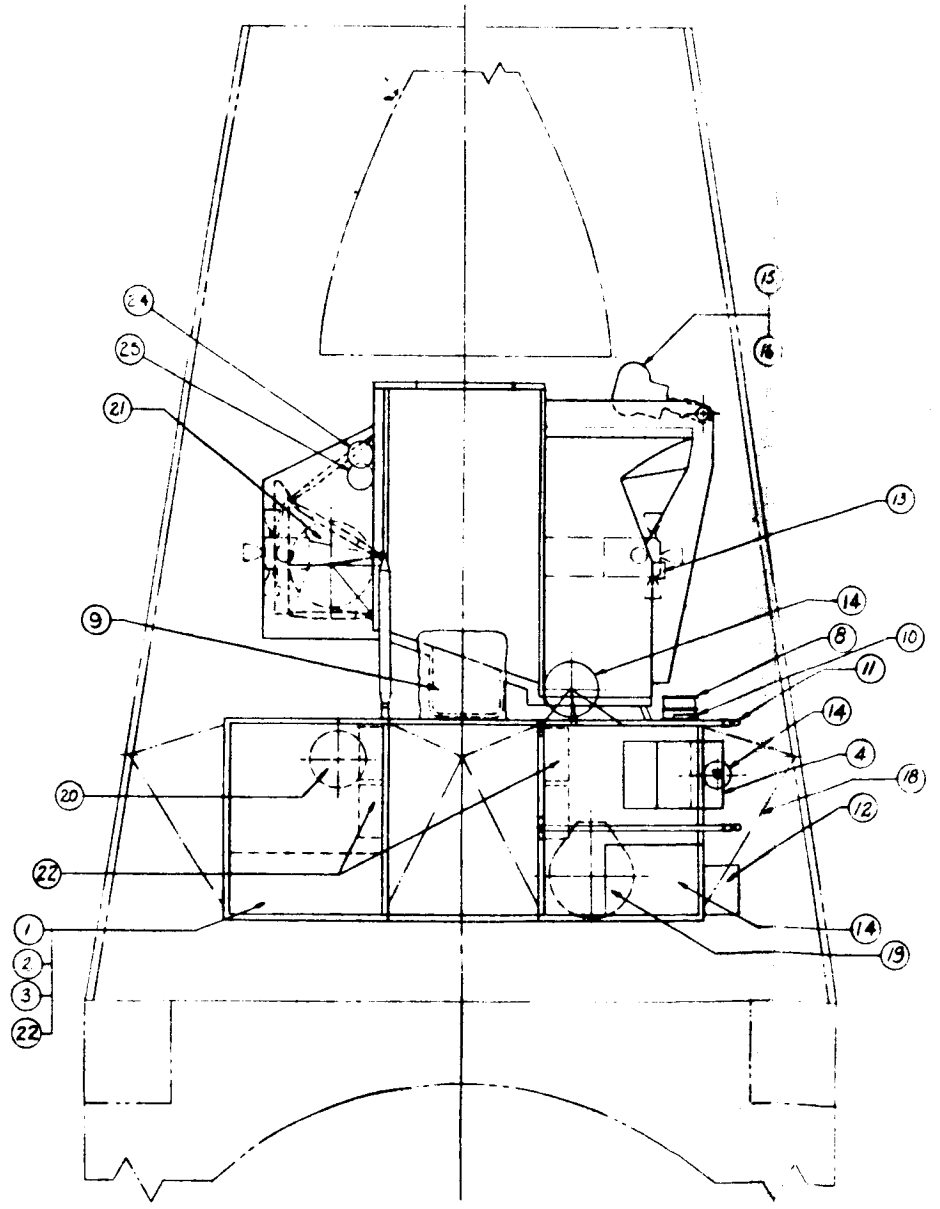

LAUNCH CONFIGURATION

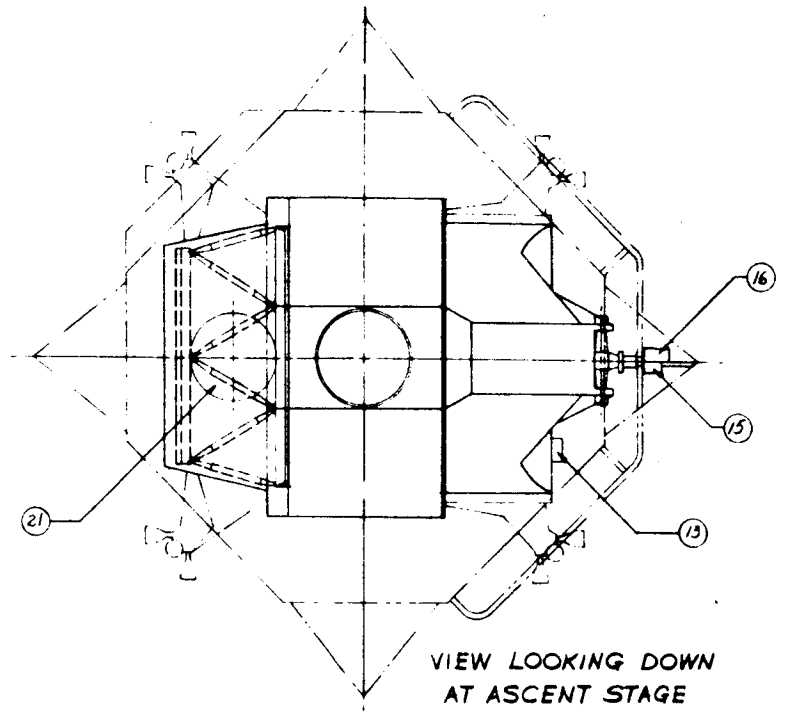

VIEW LOOKING DOWN AT ASCENT STAGE

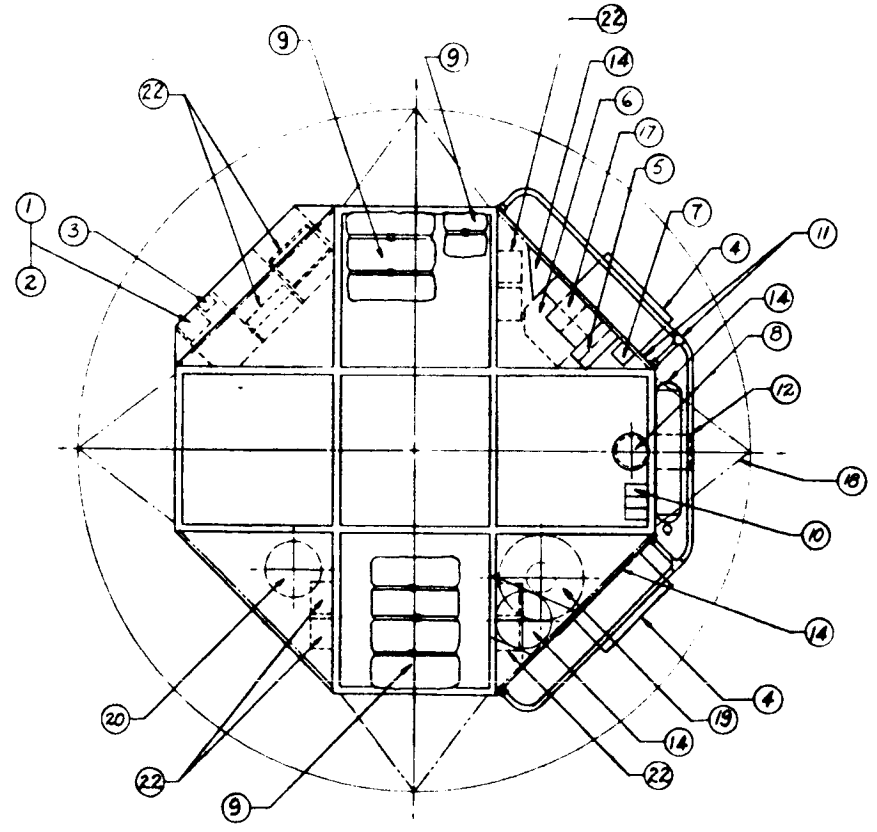

VIEW LOOKING DOWN AT DESCENT STAGE

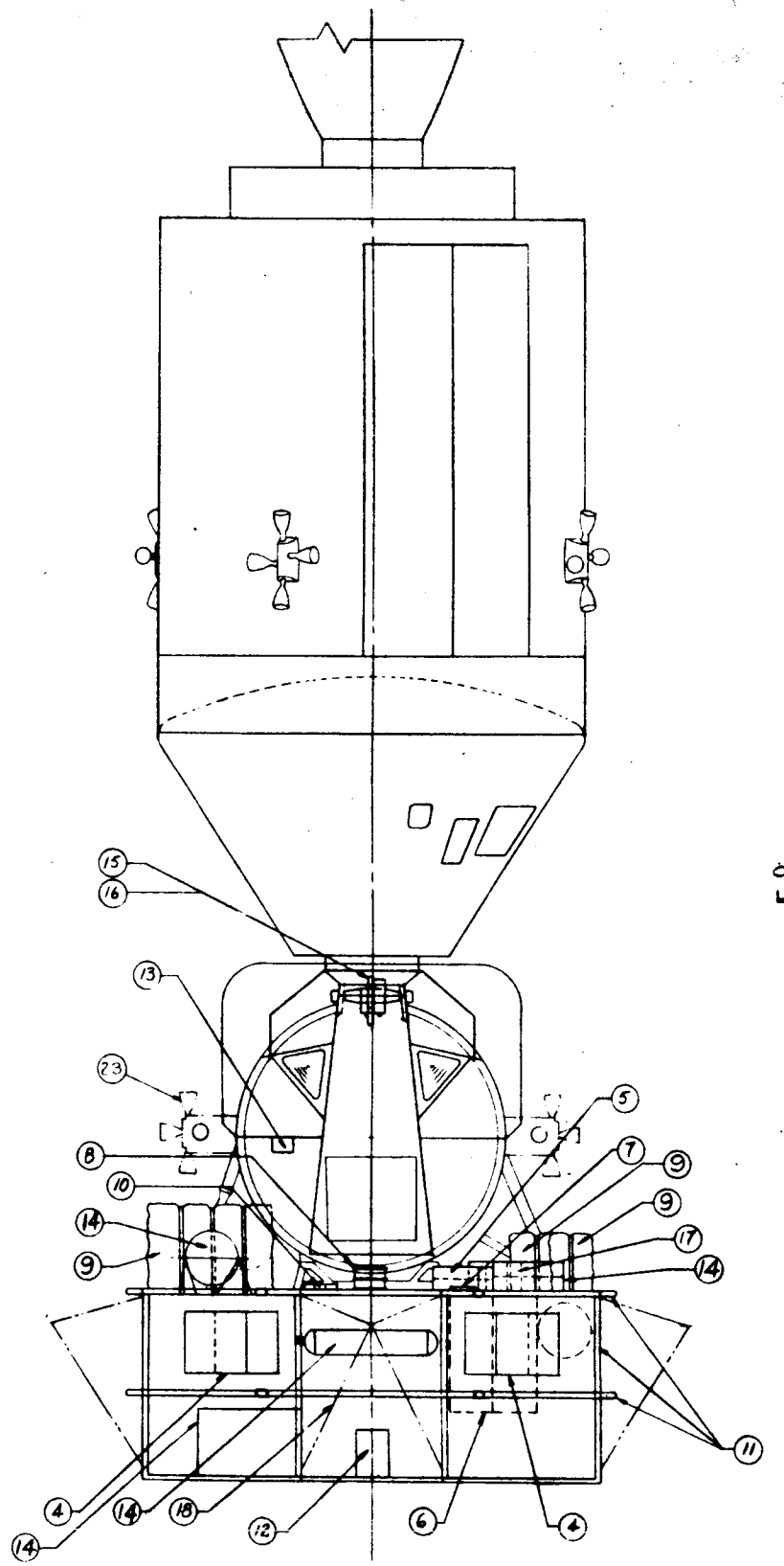

ORBITING CONFIGURATION

0 20 40 60 80 100
SCALE: 1" = 20"

Grumman
AIRCRAFT ENGINEERING CORPORATION
PRELIMINARY DESIGN DEPT.

Gen Arrgmt Flt. 209
Space Operations
& Technology

SCALE OF ORIG. DWG. 1/20

AES 1016

Fig. 3-1

KEY

No.	Experiment	Name
1	0100-0200	Biomed Exercise Equipt
2	00100	Biomed Refrigerator
3	00100	Biomed Incubator
4	0100,0200, 0501,0601, 1501,1502 1503	Biomed Display Panel
5	0100-0200	Biomed Equip Storage
6	0501	Pulse Height Analyzer
7	0501	Tissue Equiv. Ionization Chamber (3)
	0501	Tissue Equiv. Ionization Chamber (Rate Meter (2))
		Film Packs (2)
8	0501	Battery Charger
9	0601	Liquid/Gas & Solids Capillarity Studies Lab
		Radioactive Tracer System
		Ultrasonic Flowmeter
		Illumination System
		Misc. Equipt
		Misc. Test Materials
10	0601	16 mm Camera
11	0601	Still Camera
12	0601	Camera
13	1501,1502 1503	Chest Pack; 2
14		ELSS Battery Spares (2)
		PLSS Battery Spares (6)
15		Modular Maneuvering Unit
16		Life Saving Bag
17		Safety & Static Lines (2 Reels)
18		Cargo Net Module (15 ftx15 ft)
19		Restraint Sys (3)
20		Platform & Rails
21		Medical Kit (1)
22		Personnel Transfer Equipt
23		ECS Station - Platform

KEY (Cont)

No.	Experiment	Name
24		Umbilical Lines (1 Reel)
25		Task Equip Harness
26		Logistics Materials
		A. Sheet Metal Panel 0.050x24x48 in.
		B. Gas Cylinder 9 dia x 48 in
27		Motion Picture Camera (Automatic)
28		TV Camera
29		Camera Boom
		A. Panel Control
		B. Yoke
30		Motion Picture Camera (Manual)
31		Audio Tape Recorder (2)
32		Data Tape Recorder
33		Film & Tape Storage
34	Basic LEM	ECS Suit Circuit Assy Incl. Blower
35		ECS LiOH Spare Canisters (14 Int; 8 Ext)
36		Food Storage
37		Circuit Breaker Panels (Existing)
38		Battery Controls (Existing)
39		CSM LSS (Back Pack) Temporary Stowage
40		Back Pack LiOH Spare Canisters (4 Existing; 2 Add'l)
41		Misc. Hand Tools
42		Sys Status Display Panel
43		LSS Warning Display Panel
44		Jettisonable Shroud Supt (Prior to EVA)
45		ECS Water Storage Tank (Existing)
46		ECS GOX Tank (Existing)
47		ECS SOX Tank (29-in. dia Sphere; Added)
48		EPS Batteries (12) (Existing & Add'l Locations)
49		Flight Controller

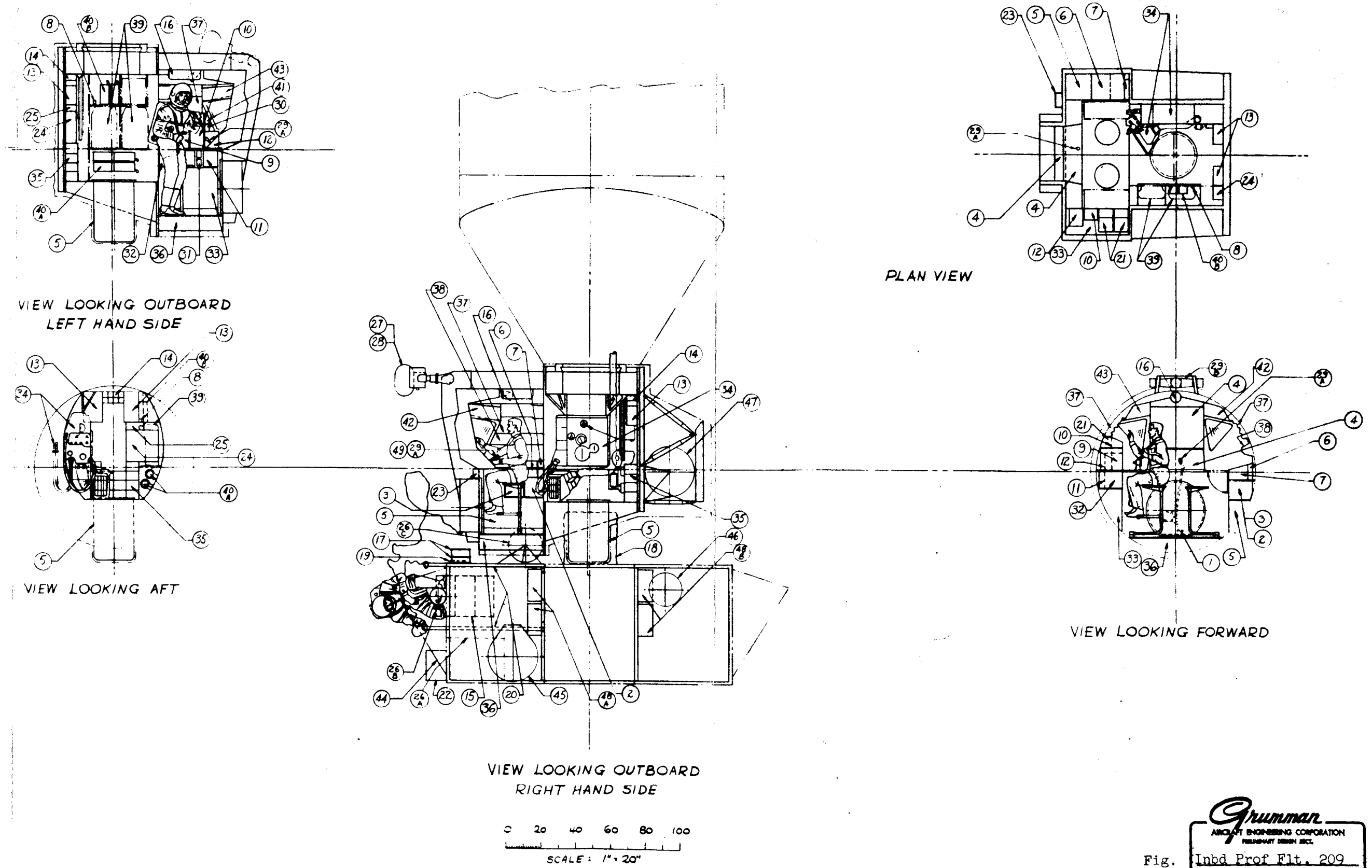

Grumman
AIRCRAFT ENGINEERING CORPORATION
PRELIMINARY DESIGN SECT.

Fig. 3-2 Inbd Prof Flt. 209 Space Operations & Technology

SCALE OF ORIG. DWG. - 1/20

AES 1017

The inboard profile (Fig. 3-2) shows that adequate internal volume is available to accommodate experiments. All primary experiment displays and controls including a left hand flight control station similar to LEM, are located in the forward cabin or are readily accessible from forward cabin crew positions. Food and LiOH canisters (seven day supply) are stored internally. Additional LiOH for the full mission duration is stored externally and retrieved during programmed EVA's.

This flight utilizes the present LEM battery power system, both ascent and descent, as well as the basic LEM thermal control system. Eight additional LEM descent batteries are required to provide the required experiment power. The two LEM ascent batteries are carried to provide the desired EPS reliability.

The thermal control water is carried in the standard LEM descent and ascent water tanks.

The estimated laboratory weight is 9629 lbs. (See tables 3-4 and 3-5.)

Basic subsystem characteristics pertinent to this flight are described below:

Vehicle Orientation	No Requirement (Earth Orientation Assumed)
Stabilization Requirements	$\pm 5^{\circ}$ @ 14 days
AVG Experiment Pwr (Delivered)	108 Watts
Number of Cabin Repressurizations	26
Equipment Cooling	Approx. 340 lbs. water

Number of Batteries	12 LEM Descent & 2 LEM Ascent
Oxygen Tanks	1 Block II
Peaking Battery	Not Appl.
RCS System	Std LEM Thrustors
RCS Tankage	Std LEM Tanks
S & C System	Controllers, Rate Gyro's, ATCA, & Panels

Table 3-4 LEM LAB DETAILED WEIGHT STATEMENT

FLIGHT 209

COMPONENT	Weight, lb. Configuration 1
Structure	(2254)
Basic Ascent	802
Basic Descent	750
Shielding	435
Power Pack Structure	50
Experiment Supports	164
RCS Supports	53
Stabilization and Control	(43)
Attitude Translation Control Ass'y.	27
Rate Gyro Ass'y.	2
Controllers	14
Crew Provisions	(132)
Restraints	35
Lighting	10
Food	60
LiOH - PLSS	27
Reaction Control System	(886)
Propellant	575
Propellant System	134
Pressurization System	55
Thruster Ass'y.	122
Controls and Displays	(205)
Environmental Control	(846)
Atmosphere Revitalization System	80
O_2 Supply and Cabin Pressurization	117
Water Management	36
Heat Transport, Cold Plates, Coolant	105
LiOH - ECS	104
Water	398
Thermal Control Insulation	6

Table 3-4 LEM LAB DETAILED WEIGHT STATEMENT (Cont'd)

FLIGHT 209

COMPONENT	Weight, lb. Configuration 1
Instrumentation	(147)
Signal Conditioner	45
PCM & Timing Elec. Assy	39
Data Storage	25
Experiment Selector	6
Data Tapes	30
Spare Voice Recorders	2
Electrical Power Supply	(2643)
Reactants and ECS Oxygen	231
Reactant Tankage	90
Batteries and Charger	1895
Inverters	75
Wiring, Distribution and Umbilical	352
Communications	(32)
Television	24
Audio Center	6
Voice Recorder	2
Experiment	(2432)
Spares	(9)
Total Laboratory	9629

Table 3-5 INTEGRATED SPACECRAFT WEIGHT STATEMENT

FLIGHT 209

COMPONENT	Weight, lb. Configuration 1
Command Module Basic Weight	(10,360)
Service Module Basic Weight	(9,216)
CSM Retro-Propellant	(1,180)
Laboratory Weight	(9,629)
Basic Laboratory Structure	2,254
Experiments	2,432
Experiment Support Systems	3,548
Expendables	1,395
CSM Experiment Dependent Weights	
RCS Propellant	40
Total Laboratory and Experiment	(9,669)
Allowable Lab & Exper. Weight	11,914
Total Orbiting Weight	30,425
Service Module Propellant (Ascent)	1,410
SLA Adapter	3,505
Launch Vehicle Payload	35,340

4. FLIGHT OPERATIONAL SUPPORT: FLIGHT NO. 209

Experiment 0100 & 0200 - Medicine and Behavioral - Periodic daily data transmission and ground monitoring of safety parameter data.

Experiment 0501 - Radiation Environment Monitoring - External particle flux measurements during a solar flare event are to be correlated with the solar activity observations made on earth stationed observatories and other satellites.

Table 4-1 presents the experimental data management requirements for the flight. A general discussion of this table and the data management system is contained in Volume 1.

FLIGHT 209

Table 4-1 Data Management

Avg Daily Data Recording Requirements

Experiment		Recording Time, min		Remarks
No.	Data Rate K-bits/sec	(A) 51.2 K-b/sec	(B) 1.6 K-b/sec	
0100_s	9 (AVG)	173		5.8 Exper Hr/Day
0200_s	6.4 (AVG)	54		3.1 Exper Hr/Day
0501	0.8		45	45 min/day Monitoring
1501	1.6		20	71 min x 4 times
1502	1.6		84	90 min x 13 times
1503	1.6		50	78 min x 9 times
0601	Negligible Data Tape Recording Requirements			
Totals		227	199	

Avg Daily Data Transmission Time, min:

- Reqd: (A) + (B/32) = 234
- Available = 280

Data Excess (min of Tape) Per Day:

Reqd minus available Transmission Time = Zero

$$\text{Data Tape Return Reqd} = \frac{\text{Data Excess/Mission (min)}}{\text{30 min/Tape Reel}} = \text{zero reels} \begin{cases} \text{Zero lb} \\ \text{Zero cu ft} \end{cases}$$

Optimum Average Daily Transmission Time Reqd = 87

Voice Tape Return Reqd (2 Packages)	4	lb	0.05 cu ft
Film Return Reqd	7	lb	0.15 cu ft
Data Tape Carried	30	lb	

5. ALTERNATE CONFIGURATION - FLIGHT 209A

The preceding sections described a LEM Lab containing only the subsystems that are essential to this particular mission. However, it should be noted that there is sufficient weight allowance within this mission to permit the use of an essentially unmodified lunar landing LEM, with landing gear removed. This approach may be of interest in the event that it is desired to fly Flight 209, which is primarily a 14-day medical/behavioral/extravehicular experiment flight, with a minimum retrofit version of the LEM.

To illustrate this point, Table 5-1 has been prepared for Flight 209A. This flight carries the same experiments as the original Flight 209, and therefore the mission timelines and expendable requirements are the same. Those hardware items which are easily removed, and obviously not necessary, have been eliminated. These include LEM ascent and descent engines, ascent engine tanks and helium pressurization system, landing and rendezvous radars, and landing gear. Additional batteries, water and oxygen have been added, as in Flight 209, to extend the mission duration to 14 days.

TABLE 5-1 LEM LAB WEIGHTS FOR FLIGHT 209A

LEM inert weight, 1 March statement	8842 lb
Changes for a Battery LEM	
- Ascent	-210
- Descent	+476
Inert weight of a Battery LEM	9108
Remove 'Easy' items	
Trapped Ascent and Descent prop	-583
Landing Gear	-560
Rendezvous Radar	- 73
Landing Radar	- 28
Remove Ascent Fuel, Oxid, and He Tanks and Plumb	-292
Remove Ascent and Descent Engines	-599
Weight of 'Stripped' Battery LEM	6973
Changes for Experiments	
Remove LEM Batteries	-804
Add Experiment Batteries	1895
Remove LEM O_2 and Tanks	- 76
Add Exper. O_2 and Tanks	316
Addn'l Water	112
Experiment	2432
Exp. Support	200
RCS Propellant	423
Micro Meteoroid Shielding	56
Misc Changes	200
Note: Inert wt has 152 lb of RCS Prop. Total LEM with 209	11,727 lb
Allowable	11,914 lb

[redacted]

1. FLIGHT MISSION DESCRIPTION

Flight No. 211

Altitude, n.mi 200	Inclination, deg 28.5	Duration, days 30	Crew 3

Mission Title: BIOMEDICAL/BEHAVIORAL AND TECHNOLOGY

Objectives: This is the first 30 day mission, and is therefore a primary Biomedical/Behavioral flight. It will assess man's viability in space for an extended period of 30 days, and perfect life support techniques. In addition, equipments designed for lunar orbit survey and mapping will be checked out.

Configuration: C (Extended CSM, LEM A/S, Low Profile D/S) or

D (Modified Block II CSM, LEM A/S, Low Profile D/S)

Experiment Summary:

No.	Title	Equipment Location: LEM Stage Asc	Equipment Location: LEM Stage Desc	Equipment Location: CM
0100	Biomedical (excluding 0101, 0102 and 0121)	X		
0200	Behavioral	X		
0501	Radiation Environment Monitoring	X		
1401	Personal Hygiene (excluding shower and washing machine)	X		
1402	Cabin Atmosphere Control for LSS	X		
LOS	Lunar Survey Equipment Checkout	X	X	

[redacted]

2. EXPERIMENT DESCRIPTION SUMMARY

FLIGHT - 211

EXPERIMENT: 0100-0200 - Medical/Behavioral experiments - The Medical/Behavioral Experiments are intended to evaluate the effects of prolonged space flight on man and to enhance his operational efficiency to permit more extensive manned space flight missions. Twenty-four experimental measurement packages have been defined to analyze critical human functions and to focus on those most likely to be affected adversely by prolonged space flight. Procedures and instrumentation employed in the experimental packages are a composite of updated, standard medical/behavioral and imminent state-of-the-art zero-g adapted, techniques. These procedures should provide: 1) an assessment of the effects of prolonged weightlessness on the psychophysiological integrity of the astronaut, 2) a determination of the mechanisms which mediate observed changes, 3) a prediction of the onset and extent of degraded functioning, and 4) a validation of preventive or countermeasures which may be necessary to support man's extended exploration of space. Experiments 0101 and 0102 require linear and/or rotational accelerations, such as would be obtained during a firing of the SM engine or during the artificial gravity experiment, in order to achieve all of the described experiment objectives. These experiments have been excluded from missions which lack sufficient SM propulsion and/or the artificial gravity experiment.

LOS EXPERIMENT - Qualification Test of Lunar Orbital Survey Systems - The objective of this experiment is to test, in Earth orbit, the systems to be used for lunar orbital survey missions. These systems will gather scientific data throughout the electromagnetic spectrum at appropriate spectral portions of the Gamma-Ray, ultraviolet, visual, infra-red, and radio regions. The data will be used to obtain surface composition, topographic and geologic mapping, thermal mapping, tectonic mapping, radar mapping and terrain profile. Additional sensors will measure the Mass distribution through gravity surveying, collect and measure the Mass distribution through gravity surveying, collect and measure meteoritic dust, and measure the three orthogonal components of the ambient magnetic field.

EXPERIMENT: 0501 - Radiation Environment Monitoring - The objectives of the experiment are to record radiation received by the crew, and to furnish external radiation environment data for other experiments. Techniques for the Apollo Mission, or those employed in Tiros and OGO, will be used. Detection devices proposed for the monitoring systems are: proton-alpha and electron spectrometers, tissue equivalent ionization chambers, and film packs.

EXPERIMENT: 1401 - Personal Hygiene and Food Technology - The objectives of this experiment are to test, evaluate, and develop techniques and equipment for the following: food storage, preparation, eating, salvage, and waste disposal; tooth and gum cleansing; gargle and mouth wash; bathing or washing; shaving and collection of cut whiskers; hair and nail clipping and collection; defecation and feces collection, reduction, and storage or disposal; urine collection, storage, and water recovery; and cleaning of clothing and bedding.

Evaluation by the astronauts of the effectiveness, convenience, comfort, and operation of the equipment and techniques, as opposed to specific quantitative measurements, will be made.

EXPERIMENT: 1402 - Cabin Atmosphere Control for Large Space Stations - The objective of this experiment is to test and evaluate advanced life support equipment required for: contaminant detection and control, carbon dioxide concentration with oxygen recovery, and atmosphere circulation. The experimental systems will supplement and normal vehicle life support system. Measurements will be made to evaluate the performance capability of the equipment.

TABLE 2-1 FLIGHT 211 INTEGRATED EXPERIMENT EQUIPMENT LIST

Exper. No.	Component	Weight, lb	Vol, cu ft or size*	Elec Energy or Elec Pwr	Remarks
0100	EKG (Apollo Hardware) (2)	(301)	(each)		
		.25	2.3 x 1.5 x .39	.1 (each)	
	Heart Rate	.125	.0007	.02	
	Cardiac Output	2	.2	2	
	Body Temp.	.125	2.3 x 1.5 x .39	.1	
	Core Temp. (Ear Thermistor)	.125	2.3 x 1.5 x .39	.1	
	Ear Oximeter	.125	2.3 x 1.5 x .39	6	
	Blood Pressure (Gemini Type)	2.3	.1	.15	
	Peripheral Venous Pressure	1	.0007	.1	
	Impedance Pneumograph (Apollo)	.125	2.3 x 1.5 x .39	.11	
	Respiration Rate	.125	.0007	.11	
	Respiration Depth	1.5	4.5 x 1.25x 3.8	5	
	Capacitance Plethysmograph	.5	.005	<5W	
	Telethermometer	2	.5	.2	
	Thermistor Harness (Vest)	1	.5	N/A	
	Endoradiosondes (Press. & Ph) 3 each	Insignif.	.03	self-contained	
	Telemetry Pickup (Short Range for Capsules)	2	1	Small	
	Cord (Optional with Endoradiosondes)	Insignif.	Contained	N/A	
	EMG	.125	2.3 x 1.5 x .39	.1	
	Tape Measure	.1	2 in^3	N/A	
	Body Mass	5	.6	N/A	
	LBNP Device	5	.5	.5	
	Bicycle Ergometer	5	1	N/A	
	Hand/Arm Ergometer	1	10 in^3	N/A	
	Dynamometer	.5	1.5 x 6	N/A	
	Body Volume	Small	Small	N/A	
	Biomed, Vest, Harness, Converter, Electrodes etc.	1	.3	N/A	
	Radio Isotope Analyzer System	129.5	1.9	50	
	Spectrocolorimeter	4.5	10-3/4 x 8 x 5	13	

*INCHES UNLESS OTHERWISE SPEC.

TABLE 2-1 FLIGHT 211 INTEGRATED EXPERIMENT EQUIPMENT LIST

Exper. No.	Component	Weight, lb	Vol, cu ft or size*	Elec Energy or Elec Pwr	Remarks
0100 (Cont)	Mass Flowmeters (2)	3.0	(each) 4.5 x 1.25 x 3.75	5 (each)	
	Face Mask w/Mouthpiece	2	.3	N/A	
	Gas Analyzer	25	1.16	50	
	X-Ray	25	1	500	
	Refractometer	.1	4 x 1/2	N/A	
	Electronic Particle Counter	6	3	40	
	Neck Cuff	2	.2	N/A	
	Limb Cuff Inflator	3	.25	N/A	
	Pressure XDCR	.35	2.5 x 2.5	1	
	Microcentrifuge	4	7 x 7 x 9	5	
	Sample Containers; Blood, Sweat, Feces, Urine	5	1	N/A	Total for all exps. requiring sample cont.
	Capillary Tubes	1	.2	N/A	
	Nutrient AGAR in Plates in Containers	5	8 x 8 x 16	N/A	
	Sterile Water and Container	3	5 x 5 x 8	N/A	
	Lyophilizer	6	.06	50	
	Microscope	5	.57	10	
	Syringes, Needles, Pipettes, etc.	5	1.5	N/A	
	Automatic Slide Stainer	2	4 x 6 x 2	2	
	Lancets, Test Tubes, etc.	5.2	.3	N/A	
	QAA (Antiseptic) ABD Soap Cotton Sterile Balls Gloves	1.5	.15	N/A	
	Saline .9 Solution	2	.06	N/A	
	Alcohol	2.5	.05	N/A	
	Strobe for Centrifuge	1	.05	5	
	Incubator	5	.5	25	
	Refrigerator	6	1	25	
	Sample Freezer/Storage Unit	6	.6	50	
	Stains and Container	1	4 x 4 x 6	N/A	
	Staining Pan	1	4 x 2 x 10	N/A	
	Cotton Swabs, Applicators, Tongue Dep.	.5	2 x 6 x 4	N/A	
	Assoc. Biochem Equip.	1	1	N/A	

*INCHES UNLESS OTHERWISE SPEC.

TABLE 2-1 FLIGHT 211 INTEGRATED EXPERIMENT EQUIPMENT LIST

Exper. No.	Component	Weight, lb	Vol, cu ft or size*	Elec Energy or Elec Pwr	Remarks
0100 (Cont)	The following are considered to be part of already on-board equipment with their associated instrumentation.				
	3 Axis Accelerometer				
	Humidity Sensors (ECS)				
	Ambient Temp.				
	Apollo BackPack				
	Water Cooled Suit				
0200		(20)			
	Orthorator	5	0.6	40	Test Console Requires 100W
	Barany Chair	5	0.6	20	
	Linear Acceleration Device	5	0.6	20	
	35 mm Camera w/Film	5	.5	N/A	
	The following are considered to be part of already on-board equipment:				
	Audiometer (Use tape in a playback recorder)				
	Microfilm Viewer				
0501		(46.5)			
	Proton-Alpha Spectrometer	7	8 x 8 x 8		
	High Energy Electron Spectrometer	10	8 x 8 x 8		
	Low Energy Electron Spectrometer	5.5	4 x 4 x 3		
	Tissue Equiv Ionization Chambers (3)	3	3 x 2 x1/2	5.3W	
	T.E.I.C. Rate Meters (2)	4	4 x 3 x 3		
	Film Packs and Pen Dosimeters (21)	1.5	2 x 2 x1/8		
	Pulse Height Analyzer	15	12 x12 x12		
	Battery Charger	0.5	1/2 x 1/2x1	1W	
1401		(154)			
	Extra Food	35	12 x12 x18	--	
	Food Dispensers, Hair Clipper, Tooth and Germ Gargle	25	10 x10 x10	--	
	Waste Incinerator	10	12 OD	100W	Used for 3-7 days
	Waste Freezer	9	24 OD		
	Miscellaneous Toilette Requirements	25	12 x12 x12	--	
	Water Evaperator	50	12 x12 x18	60W	

*INCHES UNLESS OTHERWISE SPEC.

TABLE 2-1 FLIGHT 211 INTEGRATED EXPERIMENT EQUIPMENT LIST

Exper. No.	Component	Weight, lb	Vol, cu ft or size*	Elec Energy or Elec Pwr	Remarks
1402		(218)			
	Contaminant Removal Subsystem	15	8 x 6 x 6	25W	
	Gas Chromatograph	10	10 x 10 x 6	85W	6 times/day, First 5 days. 3 times/day, After 5th day.
	Mass Spectrometer	15	10 x 10 x 9		
	Infra-Red Spectro-photometer	15	10 x 10 x10		
	CO_2 Concentrator - Adsorption	75	15 x 30 x24	250W	
	CO_2 Concentrator - Electrodialysis and Water	50	12 x 18 x15	275W	
	CO_2 Reduction - Sabatier H_2 + Tank	35	9 x 9 x 4	125W	6 times/day, First 5 days. 3 times/day, After 5th day.
	Atmosphere Circulation	3	2 x 2 x 8	1W	
LOS	Lunar Orbit Survey System Checkout	(1806)			The Lunar Orbit Survey Equipment Characteristics are as developed by Grumman during previous study of the LOS mission.
	Panoramic Cameras	650	450	400W	
	Cartographic Camera	50	2	60W	
	Multi-Spectral Camera	65	2	100W	
	Mapping Radar	750	11	5500W	
	IR Spectrometer	6	0.2	20W	
	UV Spectrometer	50	1.5	50W	
	IR Scanner	50	2.0	50W	
	Gamma Ray Spectrometer	12	0.5	10W	
	Gravimeter	25	0.3	10W	
	Micrometeroid Collector	50	10	20W	
	Viewfinder	65	2.5	25W	
	Magnetometer	5	0.15	10W	
	Radar Altimeter	28	0.29	100W	
	Total Weight	2546			

*INCHES UNLESS OTHERWISE SPEC.

3. EXPERIMENT/SPACECRAFT INTEGRATION

3.1 MISSION DEFINITION

Flight 211 is the first 30 day mission, and is therefore a primary biomedical/behavioral flight.

For Medical-Behavioral experimentation, the following assumptions were made to provide guidelines for mission integration of the experimental package.

- Each experiment is essential and stands by itself.
- All medical experiments (0101 to 0121) require a subject and an observer (experimenter).
- Experiment 0121 is not performed (this experiment is conducted on 45 day missions only).
- A few behavioral experiments (0201C and 0201D, 0202A and 0202B) require a subject and experimenter. The remaining 18 experiments of 0201, 0202 and 0203 require only a subject.
- Rotational 0100 & 0200 experiments have been deleted.

A Biomedical and Behavioral Program has been scheduled that requires 685 man hours (excluding experiments 0101 and 0102, which are performed in a rotating environment). This provides sufficient time for operators to accomplish other experiments and normal spacecraft activities. This schedule is shown in Table 3-2, and summarized in Table 3-1.

The biomedical/behavioral program differs from that presented in the Experiment Identification and Description. That program required 1343 man-hours for a 30 day mission, which far exceeded the allowable work period. The reduction to 685 man hours has been achieved with no significant degradation to the experiment program. This was accomplished through careful scheduling, taking into account commonality of equipment and procedures for testing the same and related physiological systems, and substitution of related experiments.

Table 3.1 FLIGHT 211 MISSION DEFINITION SUMMARY*

Exper. No.	Occurence, Day No.	Total Times Perf/ Mission	No. Men Req'd	Exper Time/Test Setup Time, min	Exper Time/Test Test Time, min	Total Exper Man-hr/ Mission Crewmen 1	2	3	Total	Total Exper Time/Mission, hr Achv'd	Spec'd.
0100	Every Day Except 13, 18, & 25	258	2	Var.	Var.	160	159	159	478		
0200	2,4-9,11, 12, 14-16, 18,20,21, 23,25-27, 29 & 30	195	1 or 2	Var.	Var.	69	69	69	207	685 MH	685 MH
0501	Every Day	30	1		10	5	5	5	15	15	15
1401 1402	(1) 2 Thru 30	66	1		30	11.5	11.	12.	34.5	34.5	
LOS	13,14,18 thru 23, 25, thru 28.	36	1		45-60	48	48	48	144	144	150
					TOTALS	293.5	293.0	293.0	878.5		

Maximum Work Day: 12 hrs on-duty; Average Work Day: 10.5 hrs on-duty; Minimum Work Day 6 hrs on-duty.

Total EVA Man hrs 4.

NOTES: (1) Not scheduled during on-duty time.

*See Tables 3-2 and 3-3 for crew schedules and experiment equipment duty cycles.

TABLE 3-2. **CREW SCHEDULING, FLIGHT 211, SHEET 1 OF 8**

DAY 1	ORBIT	CREWMEN ACTIVITIES 1	2	3
0000				
20		Rest	0104	0104
40				
0100		E/Hyg	(S)	(O)
20				
40				
0200		0104	Rest	0104
20				
40		(O)	E/Hyg	(S)
0300				
20		0104	0104	Rest
40				
0400		(S)	(O)	E/Hyg
20				
40		E/Hyg	0106	0106
0500			(S)	(O)
20				
40				
0600			0105	0105
20				
40			(O)	(S)
0700				
20		Sleep	1401	
40			0118(S)	0118
0800				
20			E/Hyg	(O)
40				
0900				
20				
40				Rest
1000				
20				E/Hyg.
40				
1100		0106		0106
20		(O)	Sleep	(S)
40				
1200		0105		0105
20				
40		(S)		(O)
1300				
20				
40		E/Hyg		E/Hyg
1400		Rest		
20				
40		0106	0106	
1500		(S)	(O)	
20				
40		0105	0105	
1600				
20		(O)	(S)	Sleep
40				
1700		0501		
20		0118	0118	
40		(S)		
1800		E/Hyg		
20			(O)	
40				
1900		Rest		
20				
40			E/Hyg	
2000				
20		0118		0118
40				(S)
2100				0501
20		(O)		
40				
2200				
20				
40		Rest	Rest	Rest
2300				
20				
40				
2400			0501	

DAY 2	ORBIT	CREWMEN ACTIVITIES 1	2	3
0000				
20		Rest	0104	0104
40				
0100		E/Hyg	(O)	(S)
20				
40				
0200		0104	Rest	0104
20				
40		(S)	E/Hyg	(O)
0300				
20		0104	0104	Rest
40				
0400		(O)	(S)	E/Hyg
20				
40		E/Hyg	0106	0106
0500			(O)	(S)
20				
40			0201C(S)	0201C(O)
0600			1402(1A)	0202
20			0501	d,f,g,h
40				0201a
0700				
20		Sleep	0118(S)	0118
40				
0800			E/Hyg	(O)
20				
40				
0900				
20				Rest
40				
1000				
20				E/Hyg
40				
1100		0106		0106
20		(S)	Sleep	(O)
40		0201C		0201C
1200		(O)		(S)
20		0118		0118
40				(S)
1300		(O)		E/Hyg
20				
40				
1400			E/Hyg	
20				
40		0106(O)	0106(S)	
1500				
20		0201C(S)	0201(O)	
40		0118	0118	
1600		(S)		
20			(O)	Sleep
40		E/Hyg		
1700				
20				
40			0203h	
1800				
20		Rest	0201a	
40			0202	
1900			d,f,g,h	
20				
40				0203h
2000				1402
20				
40				(1B)
2100				
20				
40				
2200		Rest	Rest	Rest
20				
40				
2300				
20				
40			1402(1)	E/Hyg
2400				

DAY 3	ORBIT	CREWMEN ACTIVITIES 1	2	3
0000				
20				
40				
0100			0113	0113
20				
40		Sleep		
0200				
20			(S)	(O)
40				
0300				
20				
40				
0400				
20				
40				
0500				
20			1402(1)	
40				
0600			E/Hyg	
20				
40				
0700				
20		0113	0113	Rest
40				
0800				
20		(S)	(O)	
40				
0900				
20				
40				
1000				
20				
40				
1100				
20		E/Hyg		
40		Rest		
1200				
20			E/Hyg	
40				
1300				
20				
40		0113	Sleep	0113
1400				
20				
40				
1500				
20		(O)		(S)
40				
1600				
20				
40				
1700				
20				0501
40				1402(1)
1800				E/Hyg
20		E/Hyg	0501	
40			E/Hyg	
1900				
20				
40				
2000		Rest	Rest	Rest
20				
40				
2100				
20				
40				
2200				
20				
40				
2300				
20				
40				
2400				

DAY 4	ORBIT	CREWMEN ACTIVITIES 1	2	3
0000				
20		Rest	0104	0104
40				
0100		E/Hyg	(S)	(O)
20				
40				
0200		0104	Rest	0104
20				
40		(O)	E/Hyg	(S)
0300				
20		0104	0104	Rest
40				
0400		(S)	(O)	E/Hyg
20				
40		E/Hyg	0106	0106
0500			(S)	(O)
20				
40			0109(O)	0109(S)
0600			1402(1)	0203a
20				
40			0203b	0501
0700				
20		Sleep	E/Hyg	E/Hyg
40				
0800				
20				
40				Rest
0900				
20				
40				
1000				0203b
20				
40				0202c,1
1100		0104(O)		0104(S)
20			Sleep	
40		0203b		E/Hyg
1200				
20		0202c,1		
40				
1300				
20		0203C		
40		E/Hyg	E/Hyg	
1400				
20		Rest	0203a	
40			0202c,1	
1500				
20			0501	
40		0109(O)	0109(S)	
1600				
20		0104(S)	0106(O)	Sleep
40				
1700		0203a		
20		0202a,	0202a,	
40		b (S)	b (O)	
1800		0109(S)	E/Hyg	0109(O)
20				
40		0202c,	Rest	0202a,
1900		b (O)		b (S)
20		0501		0203C
40		E/Hyg	0202a,	0202a,
2000			b (S)	b (O)
20			0203C	1402(1)
40				
2100		Rest	Rest	E/Hyg
20				
40				Rest
2200				
20				
40				
2300				
20				
40				
2400				

NOTES

- o LOS — Lunar Orbit Survey Equipment Checkout
  I — Panoramic Camera, II — Mapping Camera,
  VI — Scientific Sensors
  IIIMR — Mapping Radar
- o (O) — Observer
  (S) — Subject
- o E/Hyg — Eat & Personal Hygiene
- o Experiment 1402 divided into parts (1), (2) and (3)

E/Hyg — Eat & Personal Hygiene

Limits of Experiment Time

Limits of EVA

CREW SCHEDULING, FLIGHT 211, SHEET 2 OF 8

DAY 5	ORBIT	CREWMEN ACTIVITIES 1	2	3
0000				
20		0104	Rest	0104
40				
0100		(S)	E/Hyg	(0)
20				
40				
0200		0104	0104	Rest
20				
40		(0)	(S)	E/Hyg
0300				
20		E/Hyg	0104	0104
40				
0400			(0)	(S)
20				
40			0106	0106
0500			(S)	(0)
20				
40			0111	0111
0600			(0)	(S)
20		Sleep	0201c	0201c
40			(S)	(0)
0700			E/Hyg	0201a
20				0202
40				d,f,g,h
0800				0203h
20				E/Hyg
40				
0900				
20				
40		E/Hyg	Sleep	
1000		0202		
20		d,f,g,k		
40		0203h		
1100		0201a		Sleep
20				
40		0401(2)		
1200		0501		
20		1402(2)		
40				
1300				
20				
40			0201a	
1400				
20			0202	
40		Rest	d,f,g,h	
1500			0203h	
20		E/Hyg		
40		0106	0106	E/Hyg
1600		(S)	(0)	
20				
40		0111	0111	
1700		(0)	(S)	
20		0201c	0201c	
40		(S)	(0)	
1800		0201c		0201c
20		(0)		(S)
40		0106		0106
1900		(0)		(S)
20		0111	Rest	0111
40		(S)		(0)
2000				0501
20		E/Hyg	E/Hyg	E/Hyg
40				
2100				
20			1402(1)	
40			0501	
2200			1402(3)	
20				
40		Rest	Rest	Rest
2300				
20				
40				
2400				

DAY 6	ORBIT	CREWMEN ACTIVITIES 1	2	3
0000				
20		0104	Rest	0104
40				
0100		(0)	E/Hyg	(S)
20				
40				
0200		0104	0104	Rest
20				
40		(S)	(0)	E/Hyg
0300				
20		E/Hyg	0104	0104
40				
0400			(S)	(0)
20				
40			0106	0106
0500			(0)	(S)
20				
40			0103	0103
0600				
20		Sleep	(S)	(0)
40			E/Hyg	0203
0700				e
20				
40				0501
0800				
20				E/Hyg
40				
0900				
20				
40		E/Hyg	Sleep	
1000		0203		
20				
40		e		
1100				Sleep
20		0203d,f		
40		0201b		
1200		0202c		
20		0203g		
40		1402(2,3)		
1300		1402(1)		
20			E/Hyg	
40		0103	0103	
1400				
20		(S)	(0)	
40				
1500				0201b
20				0202c
40		E/Hyg		0203
1600				d,f
20		Rest	0203	E/Hyg
40			d,f	
1700			0201b	
20			0202c	
40			0501	1402
1800		0103		(2,3)
20				0203g
40		(0)	E/Hyg	0103
1900				(S)
20		0106	Rest	0106
40		(S)		(0)
2000		0201d(0)		0201d(S)
20		0106	0106	E/Hyg
40		(0)	(S)	
2100		0201d(S)	0201d(0)	
20			0201d(S)	0201d(0)
40		E/Hyg	1402(2,3)	
2200			0203g	
20				
40		0501		Rest
2300				
20		Rest		
40			0203e	
2400				

DAY 7	ORBIT	CREWMEN ACTIVITIES 1	2	3
0000				
20		E/Hyg	0104	0104
40			(S)	(0)
0100		Rest		
20				
40				
0200		0104	E/Hyg	0104
20		(0)		(S)
40			Rest	
0300				
20				E/Hyg
40		0104	0104	
0400		(S)	(0)	Rest
20				
40			Support	LIOH
0500		E/Hyg	EVA	
20				
40			0109	0109
0600			(0)	(S)
20			0106(S)	0106(0)
40				
0700			0203	0202
20			b	c,i
40		Sleep	E/Hyg	0203(a)
0800				0501
20				E/Hyg
40				
0900				
20				Rest
40				
1000				
20				
40			Sleep	
1100				
20				
40		0106		0106
1200		(0)		(S)
20		0109		0109
40		(S)		(0)
1300		0113p		0113p
20		(0)		(S)
40		0203		1402
1400		a	E/Hyg	(2,3)
20		E/Hyg	0203a	E/Hyg
40			0501	
1500		Rest	0202	
20			e,i	
40		0202ab	0202ab	
1600		(0)	(S)	
20		0106	0106	
40		(S)	(0)	
1700		0501		
20		0202		
40		e,i		
1800		0203		
20		b		
40		1402		
1900		(2,3)	0109	
20		0109	(S)	
40		(0)		
2000		Rest		
20			0203b	
40		E/Hyg	E/Hyg	E/Hyg
2100		0202ab		
20		(S)		0202ab
40				(0)
2200				0203b
20		Rest	0202a,b	0202a,b
40			(0)	(S)
2300		0113p	0113p	
20		(S)	(0)	
40			0113p	0113p
2400		0203c	(S)	(0)

DAY 8	ORBIT	CREWMEN ACTIVITIES 1	2	3
0000				
20			0104	0104
40		E/Hyg	(S)	(0)
0100				
20				
40				
0200		0104	0104	
20		(S)	(0)	
40				E/Hyg
0300				
20		0104		0104
40		(0)	E/Hyg	(S)
0400				
20				
40		0106		0106
0500		(S)		(0)
20				
40		E/Hyg	0106	0106
0600			(0)	(S)
20			0105	0105
40		Sleep	(S)	(0)
0700				
20				
40				0501
0800				
20				E/Hyg
40				
0900				
20			Sleep	
40				
1000				
20				
40				1402
1100				(2,3)
20				
40				
1200		0105		0105
20		(S)		(0)
40				
1300				
20				
40				
1400		E/Hgy	E/Hyg	E/Hyg
20				
40		0201c	0201c	Sleep
1500		(0)	(S)	
20		0201c	0201c	
40		(S)	(0)	
1600		0201a		
20		0202d,f		
40		0202g		
1700		0203h		
20		1402		
40		2,3		
1800			0201d,f	
20			0202g,h	
40			0203h	
1900		Rest	0201a	
20		0106	0106	
40		(S)	(0)	
2000				
20		0105		0105
40		(0)		(S)
2100			E/Hyg	
20				
40		0501		
2200		E/Hyg	0201c	0201c
20			(0)	(S)
40			0501	0201a
2300			1402	
20		Rest	1	0202
40				d,f
2400			Rest	0202g,h
				0203h

NOTES

CREW SCHEDULING, FLIGHT 211, SHEET 3 OF 8

DAY 9	ORBIT	CREWMEN ACTIVITIES 1	2	3
0000				
20		0115 (S)		0203a
40				
0100				0115 (O)
20				
40				0203b
0200				0203 d,f
20			E/Hyg	
40		0203a		E/Hyg
0300			0115 (S)	
20		0115 (O)		
40				
0400				0203c
20				0202e
40		E/Hyg		0202c
0500				
20		Sleep	0203a	0115 (S)
40				
0600			0115 (O)	
20				
40			0203 t	
0700			0203 d,f	
20				
40			0202ab (S)	0202ab (O)
0800			E/Hyg	E/Hyg
20				
40				
0900				
20			Sleep	1402 2,3
40				
1000		0118 (S)		0118 (O)
20				
40		02020		
1100		02021		
20				
40		0203c		
1200		0203d,f		
20		0106 (S)		0106 (O)
40				
1300		0203b		E/Hyg
20				
40		0202e		
1400				
20		E/Hyg	E/Hyg	
40			02022	Sleep
1500			0203c	
20			0202e	
40			02021	
1600		0106 (O)	0106 (S)	
20				
40		0202ab (S)	0202ab (O)	
1700				
20			0118 (S)	
40		0118 (O)		
1800				
20				
40				E/Hyg
1900				02021
20		0202ab		0202ab
40				0118 (S)
2000			0118 (O)	
20				
40				
2100		Rest		
20				
40				
2200				
20			0106(O)	0106 (S)
40				
2300			0501	
20		1402 2,3		
40		0501	Rest	
2400				

DAY 10	ORBIT	CREWMEN ACTIVITIES 1	2	3
0000				
20				
40		E/Hyg	E/Hyg	
0100				0501
20				
40				
0200		0113 (O)	0113 (S)	
20				
40				Rest
0300				
20				
40				
0400				
20				
40				
0500				
20				
40				
0600				
20				
40				
0700			0113 (O)	0113 (S)
20				
40				
0800		Sleep		
20				
40				
0900				
20				
40				
1000				
20				
40				
1100				
20				
40				E/Hyg
1200				
20			E/Hyg	
40				
1300		0113 (S)		0113 (O)
20				
40			Sleep	
1400				
20				
40				
1500				
20				
40				
1600				
20				
40				
1700				
20				
40		E/Hyg		
1800				
20			1402 2,3	E/Hyg
40			0501	
1900				
20				
40				
2000				
20				Sleep
40				
2100				
20		Rest	Rest	
40				
2200				
20				
40				
2300				
20		0501		
40				
2400				

DAY 11	ORBIT	CREWMEN ACTIVITIES 1	2	3
0000				
20		0103 (S)	0103 (O)	
40				
0100				E/Hyg
20				
40				
0200		E/Hyg	0103 (S)	0103 (O)
20				
40				
0300		0103 (O)		0103 (S)
20			E/Hyg	
40				
0400			0201c (S)	0201c (O)
20				
40			0111 (O)	0111 (S)
0500				
20			0106 (O)	0106 (S)
40				
0600		Sleep	0202d,f	E/Hyg
20			0201a	CM
40				
0700			0202g	
20			0203b	
40			0113p (S)	0113p (O)
0800				
20			E/Hyg	0202d,f
40				0201a
0900				0202g
20				0203b
40				0501
1000			Sleep	
20		E/Hyg		
40		0106 (S)		0106 (O)
1100				
20		0201c (O)		0201c (S)
40				
1200		0111 (S)		0111 (O)
20				
40				1402 (1)
1300		Rest		E/Hyg
20				
40				
1400		0111 (O)	0111 (S)	
20				
40		0201c (S)	0201c (O)	
1500				
20		0113p (S)	0113p (O)	Sleep
40				
1600		0106 (O)	0106 (S)	
20				
40		0202d,f	0501	
1700				
20		0201a		
40		0202g		
1800		0203b	Rest	
20				
40		E/Hyg		
1900			E/Hyg	E/Hyg
20			0109 (S)	0109 (O)
40				
2000				
20		0109 (O)		0109 (S)
40				
2100				
20		0109 (S)	0109 (O)	
40				
2200				
20		0113p (O)		0113p (S)
40		0501		
2300				
20				
40			1402 (2,3)	
2400				

DAY 12	ORBIT	CREWMEN ACTIVITIES 1	2	3
0000		E/Hyg		
20			0106 (S)	0106 (O)
40				
0100		0106 (O)		0106 (S)
20			E/Hyg	
40		0106 (S)	0106 (O)	
0200				
20			0202ab (S)	0202ab (O)
40				
0300		0202ab (O)		0202ab (S)
20				
40		0202ab (S)	0202ab (O)	
0400				
20			0203a	E/Hyg
40		E/Hyg	0203e	
0500				
20				
40			0203c	
0600		Sleep		
20			0203d,f	
40			1402(2,3)	
0700				
20			0203b	0201c
40				
0800				0203e
20			E/Hyg	E/Hyg
40				
0900				0501
20				
40				
1000			Sleep	
20				
40				
1100				0201b
20				
40		0203e		
1200				
20				
40		0203c		E/Hyg
1300		0203d,f		
20		0203g		
40		E/Hyg	E/Hyg	
1400			0203g	
20				
40			0201e	
1500				
20				
40				
1600				Sleep
20		02020	Rest	
40				
1700		02021		
20		E/Hyg	E/Hyg	
40		Rest	0501	
1800				
20		0203b		E/Hyg
40		0201e		0203a
1900				
20		0201d		0203e
40				
2000				
20				0203b
40		1402 (1)		
2100				
20		0501		0203d,f
40		0203a		
2200		0201b		
20				
40				
2300				
20				
40			E/Hyg	
2400				

NOTES

CREW SCHEDULING, FLIGHT 211, SHEET 4 OF 8

DAY 13	ORBIT	CREWMEN ACTIVITIES 1	2	3
0000				
20				
40		LOS II	LOS III	E/Hyg
0100			MR	
20		LOS III		
40			LOS III	
0200		LOS I		Rest
20				
40		LOS III	LOS III	
0300		0501		
20		LOS II	Rest	
40				LOS III
0400			E/Hyg	MR
20		E/Hyg		
40			LOS I	LOS III
0500				
20			LOS III	
40				
0600				0501
20				LOS II
40			LOS III	
0700		Sleep		Rest
20				
40			E/Hyg	E/Hyg
0800				
20				
40				
0900				
20				
40				LOS III
1000				
20		E.Hyg		
40				
1100		LOS I	Sleep	LOS II
20				
40		LOS III		
1200				E/Hyg
20				
40		Rest		
1300				
20				
40		LOS III		
1400				
20				
40		LOS III		
1500			E/Hyg	
20				
40		LOS III	LOS II	Sleep
1600		MR		
20			Rest	
40				
1700		E/Hyg	LOS I	
20				
40		Rest	LOS III	
1800				
20				
40		LOS II	LOS III	E/Hyg
1900			MR	
20		Rest		
40			Rest	
2000			LOS I	LOS III
20				
40			Rest	
2100		LOS III		
20				
40				LOS I
2200				
20		LOS III	E/Hyg	
40				Rest
2300		E/Hyg	LOS III	LOS II
20			MR	
40				
2400		Rest	0501	Rest

DAY 14	ORBIT	CREWMEN ACTIVITIES 1	2	3
0000				
20				
40		0109	E/Hyg	0109(S)
0100		(O)		
20		Rest		
40			0109(S)	0109(O)
0200		0109(S)		
20			0109(O)	E/Hyg
40		0201c		
0300			0201c	Rest
20		0201a		
40		0203h		
0400			Rest	0501
20		0201c		0201c
40			0201a	
0500		E/Hyg		Rest
20			0202d,f	
40			0202g,h	
0600			1402	0201a
20			(2,3)	
40				0202g,h
0700		Sleep	Rest	0203h
20				0202d,f
40			0201c	0201c
0800				
20			E/Hyg	E/Hyg
40				
0900				Rest
20				
40				LOS II
1000			Sleep	
20				Rest
40				
1100		E/Hyg		LOS II
20				
40		0202		
1200		d,f,g,h		
20				
40				
1300		0501		
20				
40		LOS III		
1400				Sleep
20				
40			E/Hyg	
1500		LOS III	0501	
20			0203h	
40				
1600		LOS II		
20				
40		Rest	LOS III	
1700				
20				
40				
1800		E/Hyg		E/Hyg
20				
40		EVA		EVA
1900		OBS	EVA	F11m/
20			(Supp.)	LIOH
40		Rest		
2000			E/Hyg	LOS III
20		LOS II		
40				LOS III
2100		Rest	Rest	MR
20				
40				LOS III
2200		LOS II	LOS III	Rest
20				
40		E/Hyg	Rest	
2300				E/Hyg
20		LOS II	LOS III	
40			MR	
2400		Rest	Rest	

DAY 15	ORBIT	CREWMEN ACTIVITIES 1	2	3
0000				
20				
40			0104	0104
0100		E/Hyg	(S)	(O)
20				
40				
0200		0104		0104
20		(O)		(S)
40			E/Hyg	
0300				
20				
40		0104	0104	
0400		(S)	(O)	
20				E/Hyg
40		E/Hyg		
0500				
20			0105	0105
40			(S)	(O)
0600				
20				0202e
40			0113p	0113p
0700		Sleep	O	S
20			0501	0203
40				a
0800			E/Hyg	0203
20				d,f
40				0202
0900				c,i
20				
40				
1000			Sleep	
20				
40		E/Hyg		E/Hyg
1100		0202		0202
20		a,b(S)		a,b(O)
40		0202		0202
1200		a,b(O)		a,b(S)
20		0203		0501
40		a		
1300		0203		1402
20		d,f		(1)
40		0202 c		
1400		0202 e		
20		0202 i		
40				
1500		0105	0105	
20		(S)	(O)	
40			0203	Sleep
1600			a	
20			0203	
40			d,f	
1700			0202	
20			c,i	
40			0203	
1800		E/Hyg	b	
20		0113 p	0202 e	
40		(O	0113 p	
1900		0203	(S)	
20		b	E/Hyg	E/Hyg
40		0113 p		
2000		(S)		0113 p
20				(O)
40		0105		
2100		(O)		0105
20				(S)
40				
2200			0202	0202
20			a,b(S)	a,b(O)
40			0203	
2300			(c)	
20		0203		
40		c		
2400			1402	0203
			(2,3)	c

DAY 16	ORBIT	CREWMEN ACTIVITIES 1	2	3
0000				
20		0103	0103	
40		(S)	(O)	
0100				E/Hyg
20				
40		E/Hyg		
0200			0103	0103
20			(S)	(S)
40			E/Hyg	
0300		0103		0103
20		(O)		(S)
40				
0400		E/Hyg	0111	0111
20			(S)	(O)
40			0109	0109
0500			(O)	(S)
20			0201,c	0201,c
40			(S)	(O)
0600		02	0203,h	1402(1)
20		Sleep	0201a	
40			0202d	E/Hyg
0700			0202f	
20			0202g,h	
40			E/Hyg	
0800				
20				
40				
0900				0202d,f
20				0202g,h
40			Sleep	0203,h
1000				
20		0118		
40		(S)		
1100		0202h		
20		0201a		
40		0202d f		
1200		0203 h		
20		0111		0111
40		(O)		(S)
1300		0109		0109
20		(S)		(O)
40				E/Hyg
1400		0111	0111	
20		(S)	(O)	
40		E/Hyg	1402	
1500			(2,3)	
20			0501	
40				
1600				
20				
40				Sleep
1700		0501	E/Hyg	
20				
40				
1800		0118	0118(S)	
20		(O)		
40				
1900				
20		0201,c	0201,c	
40		(S)	(O)	
2000				0118
20				(S)
40				0201
2100			01 8	(a)
20				0501
40			(O)	
2200				
20		0201 c		0201 c
40		(O)		E/Hyg
2300		0109(O)	0109(S)	
20				
40				
2400				

NOTES

CREW SCHEDULING, FLIGHT 211, SHEET 5 OF 8

DAY 17	ORBIT	CREWMEN ACTIVITIES 1	2	3
0000				
20				
40				
0100				
20				
40				
0200		0113 (S)		0113 (O)
20				
40			Sleep	
0300				
20				
40				
0400				
20				
40				
0500				
20		E/Hyg		
40				
0600				
20				
40				
0700				
20				
40				
0800				
20		0113 (O)	0113 (S)	Sleep
40				
0900				
20				
40				
1000				
20				
40				
1100				
20			E/Hyg	
40				
1200				
20		E/Hyg		
40				
1300				
20				
40				
1400				
20				
40				
1500		Sleep	0113 (O)	0113 (S)
20				
40				
1600				
20				
40				
1700				
20				0501
40				E/Hyg
1800				
20		1402	E/Hyg	
40		(1)		
1900		E/Hyg		
20				
40				
2000				
20				
40				
2100				
20				
40				
2200				
20				
40				
2300				
20			0501	
40			1402	
2400			(2,3)	E/Hyg

DAY 18	ORBIT	CREWMEN ACTIVITIES 1	2	3
0000				
20				
40		LOS II	E/Hyg	LOS III MR
0100				
20				
40				LOS III
0200		0200	Rest	
20				
40				Rest
0300				
20				E/Hyg
40				
0400				
20			0200	Rest
40				
0500		E/Hyg		
20				
40				
0600				
20				0200
40				
0700				
20			E/Hyg	
40				
0800		Sleep		E/Hyg
20				
40				
0900				
20				LOS III
40				
1000				
20				
40				
1100				
20			Sleep	
40		E/Hyg		E/Hyg
1200				
20				
40				
1300				
20		0200		
40				
1400			E/Hyg	
20				
40				
1500				Sleep
20			0200	
40				
1600		Rest		
20				
40				
1700				
20				
40		0200	E/Hyg	
1800				
20				
40		LOS II	LOS II MR	E/Hyg
1900				
20				
40		E/Hyg	LOS III	
2000				
20				
40			Rest	
2100		LOS III		0200
20				
40				
2200				
20				
40		Rest		
2300			LOS III	
20				
40		E/Hyg		Rest
2400				

DAY 19	ORBIT	CREWMEN ACTIVITIES 1	2	3
0000				
20				
40			E/Hyg	Rest
0100				
20		0115		0115
40		(S)	Rest	(O)
0200				0501
20				
40				E/Hyg
0300		1402		
20		(2,3)	0115	
40		0115	(S)	Rest
0400				
20				
40		E/Hyg		LOS III
0500				
20				
40				
0600			0115(O)	0115
20				(S)
40				
0700			E/Hyg	
20		Sleep		
40				
0800				Rest
20				
40				
0900			Sleep	
20				
40				LOS III
1000				
20				
40				
1100		E/Hyg		
20				
40		0113P		0113P
1200				
20		0113P		0113P
40		0501		
1300				E/Hyg
20		Rest		
40			E/Hyg	
1400		0113P	0113P	
20				
40				
1500		LOS III	1402(1)	
20			0501	
40				
1600		Rest	LOS III	Sleep
20				
40				
1700		LOS II	LOS III MR	
20				
40				
1800			LOS III	
20		Rest		
40				
1900			Rest	
20				
40				
2000		E/Hyg		E/Hyg
20			E/Hyg	1402
40		LOS III	Rest	(2,3)
2100				Rest
20				
40				LOS II
2200		Rest	LOS III	
20				
40				
2300		LOS II		Rest
20				
40		Rest	Rest	
2400				

DAY 20	ORBIT	CREWMEN ACTIVITIES 1	2	3
0000				
20				
40		0109	E/Hyg	0109
0100				
20		E/Hyg	0109	0109
40				
0200		0109	0109	E/Hyg
20				
40		0201c	0201c	
0300		0201a	0501	Rest
20				
40		0203h	Rest	
0400		0201c		0201c
20		E/Hyg	0202d,f	LOS III
40				
0500			0201a	LOS II
20			0202d,f	
40			0203h	
0600			0201c	0201c
20			LOS II	0501
40				0202
0700		Sleep	LOS II	d,f,g,h
20				0203h
40				0201a
0800			LOS II	E/Hyg
20				
40			E/Hyg	
0900				
20				Rest
40				
1000				
20				
40				
1100		E/Hyg		LOS II
20		0202	Sleep	
40				LOS III
1200		d,f		
20		0203g,h		
40		1402		LOS II
1300		(2,3)		
20		0501		
40				E/Hyg
1400				
20				
40		LOS III		
1500			E/Hyg	
20				
40			LOS II	
1600				
20			LOS III	
40				
1700			LOS II	
20				
40		Rest	Rest	Sleep
1800				
20			LOS II	
40				
1900				
20			LOS III	
40				
2000				
20				E/Hyg
40		LOS III		Rest
2100				
20		LOS II		
40				
2200			Rest	LOS III
20		Rest		
40				
2300		LOS II		
20				
40		Rest		Rest
2400				

NOTES

CREW SCHEDULING, FLIGHT 211, SHEET 6 OF 8

DAY 21	ORBIT	CREWMEN ACTIVITIES 1	2	3
0000				
20				
40		0103		E/Hyg
0100				
20			0103	
40				
0200		Rest		
20				
40				0103
0300				
20		0103	Rest	
40				
0400				
20		E/Hyg	LOS III	
40				Rest
0500			LOS II	
20				0501
40			0111	0111
0600			0202	0202
20			a,b	a,b
40			0203a	1402(2,3)
0700			0202	
20			c,e,i	LOS III
40		Sleep		
0800			0203df	LOS II
20			E/Hyg	
40				LOS III
0900				
20				0203
40				b,d,f
1000				
20				
40				E/Hyg
1100		E/Hyg		
20		0203		
40		a,d,f	Sleep	
1200				Rest
20		0202		
40		c,e,i		
1300		0203b		
20				
40		0202a,b		0202a,b
1400		0501		0203a
20		1402(1)		
40				0202
1500		E/Hyg	E/Hyg	c,e,i
20			1.10H	Stdby
40			Change	For 1.10H
1600		Rest		Change
20			0203b	E/Hyg
40				
1700		0202a,b	0202a,b	
20				
40		0111	0111	
1800		LOS III	0203c	
20		LOS II		
40			0501	
1900				
20		LOS III		
40			Rest	Sleep
2000		LOS II		
20				
40		0203c		
2100				
20			LOS II	
40		Rest		
2200				
20			LOS III	
40				E/Hyg
2300		LOS II	E/Hyg	0203c
20				
40		0111	Rest	0111
2400				

DAY 22	ORBIT	CREWMEN ACTIVITIES 1	2	3
0000				
20		E/Hyg		
40			0104	
0100				
20		Rest		
40				0104
0200				
20			E/Hyg	
40			Rest	
0300		0104		
20				
40			0104	E/Hyg
0400				
20				Rest
40				
0500		E/Hyg	0106	0106
20				
40				
0600			0105	0105
20				
40				
0700				0501
20			E/Hyg	
40				E/Hyg
0800		Sleep		
20				
40				
0900				Rest
20				
40				
1000				LOS III
20			Sleep	
40				LOS II
1100				
20				LOS III
40		E/Hyg		
1200		0501		
20		1402		
40		(2,3)		LOS II
1300		LOS III		
20				LOS III
40				
1400		LOS II	E/Hyg	E/Hyg
20		0106	0106	
40				
1500				
20		0105	0105	
40				
1600			1402	
20			(1)	
40				
1700		E/Hyg	0501	
20				Sleep
40			LOS III	
1800		Rest		
20			LOS II	
40				
1900				
20				
40		LOS II I		
2000				
20			Rest	E/Hyg
40				
2100		0106		0106
20				
40				
2200		0105		0105
20				
40				
2300			LOS II	
20				
40		Rest	LOS III	Rest
2400				

DAY 23	ORBIT	CREWMEN ACTIVITIES 1	2	3
0000		E/Hyg		
20				
40			0113P(S)	0113P
0100				(0)
20		0113P	CM	0113P
40		(0)	E/Hyg	(S)
0200		0113P	0113P	E/Hyg
20		(S)	(0)	
40		0109(0)	0109	
0300			(S)	
20				0109
40			0109	(S)
0400			(0)	
20			0201(a)	1402(2,3)
40		E/Hyg	0201c	0201c
0500			(0)	(S)
20				
40				LOS
0600				III
20				
40			0202	
0700		Sleep	df	
20				
40				
0800				
20				
40				
0900				
20				
40				202g/h
1000		0118		0203h
20		(S)	Sleep	
40		0202g/h		
1100		0201a		0118
20				(0)
40		0202df		
1200		0203h		
20		0109		0109
40		(S)		(0)
1300		0201c		0201c
20		(S)	E/Hyg	(0)
40		E/Hyg	0202g/h	E/Hyg
1400			0203h	
20				
40			LOS	
1500			III	
20				
40				
1600				Sleep
20		0501		
40		1401		
1700		(1)		
20		0118	0118	
40		(0)	(S)	
1800			E/Hyg	
20				
40				
1900				
20		0201c	0201c	
40		(0)	(S)	
2000				0118
20				(S)
40			0118	0201
2100			(0)	a
20				0202d,f
40				0501
2200		LOS		
20		III	0501	
40				
2300				
20				
40				E/Hyg
2400				

DAY 24	ORBIT	CREWMEN ACTIVITIES 1	2	3
0000				
20				
40				
0100				
20				
40		0113		0113
0200		(S)		(0)
20			Sleep	
40				
0300				
20				
40				
0400				
20				
40		E/Hyg		
0500				
20				
40				
0600				
20				
40				
0700				
20				
40				
0800				
20		0113	0113	
40		(0)	(S)	Sleep
0900				
20				
40				
1000				
20				
40				
1100				
20			F/Hyg	
40				
1200				
20		E/Hyg		
40				
1300				
20				
40			0113	0113
1400			(0)	(S)
20				
40		Sleep		
1500				
20				
40				
1600				
20				
40				
1700				
20				E/Hyg
40				
1800		E/Hyg	E/Hyg	0501
20				
40				
1900		0501		1402(1)
20				
40				
2000				
20				
40				
2100				
20				
40				
2200				
20				
40				
2300				
20			0501	
40			1402	
2400			(2,3)	

NOTES

CREW SCHEDULING, FLIGHT 211, SHEET 7 OF 8

DAY 26	ORBIT	CREWMEN ACTIVITIES 1	2	3
0000				
20				
40		0103	Rest	0103
0100			E/Hyg	
20				
40				
0200		LOS II	0103	0103
20		LOS III		
40				
0300				E/Hyg
20		0103	0103	
40				Rest
0400		E/Hyg	0111	0111
20				
40				
0500			0109	0109
20				
40			0201c	0201c
0600				0202
20			E/Hyg	d,f,g,h
40				0201a
0700				0203h
20				
40				0501
0800				1402(1)
20				
40				E/Hyg
0900				
20				
40			Sleep	
1000				
20				Rest
40				
1100		E/Hyg		
20				
40				
1200		0111		0111
20				
40		0109		0109
1300			E/Hyg	
20		0201c		
40		0202	LOS III	0201c
1400		d,f,g,h	LOS II	E/Hyg
20		0201a		
40				
1500		0203h	LOS III	
20		0501		
40			LOS II	
1600				
20				
40		Rest	Rest	Sleep
1700				
20				
40		0111	0111	
1800				
20		0109	0109	
40				
1900		0201c	0201c	
20		LOS III	1402	
40			(2,3)	
2000		LOS II	0501	
20			Rest	
40		LOS III	E/Hyg	E/Hyg
2100				LOS III
20			Rest	
40				LOS II
2200			0201a	
20			0202	LOS III
40		Rest	d,f,g,h	
2300			0203h	LOS II
20				
40			Rest	Rest
2400				

DAY 27	ORBIT	CREWMEN ACTIVITIES 1	2	3
0000				
20				
40		0113P	0113P	E/Hyg
0100				
20		0113P	E/Hyg	0113P
40				
0200		E/Hyg	0113P	0113P
20				
40		0106	0106	Rest
0300				
20				
40		0106	Rest	0106
0400				
20		E/Hyg	0106	0106
40				
0500			0202a,b	0202
20				a,b
40			0203a	1402-2,3
0600			0203	
20			d,f	E/Hyg
40			0202	
0700			c,e,i	Rest
20			0203b	
40		Sleep	0501	
0800				0203a
20			E/Hyg	
40				
0900				0202
20				c,e,i
40				0203
1000				d,f
20				0203b
40			Sleep	
1100				0501
20				
40				Rest
1100		E/Hyg		
20				
40		0202a,b		0202a,b
1200				
20		1402(1)		0203c
40				
1300		0203a		
20				
40		0202		LOS III
1400		c,e,i		
20		0203d,f		
40				
1400				
20		0203b		
40		0501	E/Hyg	E/Hyg
1500		0202a,b	0202a,b	
20				
40			0203c	
1600				
20				
40		Rest	LOS	
1700				
20			III	Sleep
40				
1800				
20				
40				
1900			E/Hyg	
20		E/Hyg		
40		0203c		
2000				
20				
40				
2100		LOS III	Rest	
20				
40				
2200				Rest
20				
40				
2300		Rest		
20			LOS III	
40				
2400				

DAY 28	ORBIT	CREWMEN ACTIVITIES 1	2	3
0000				
20				
40				Rest
0100		0115	Rest	
20				0115
40		(S)		(O)
0200				
20			E/Hyg	0501
40		1402		E/Hyg
0300		(2,3)		
20			0115	
40		0115	(S)	Rest
0400		(O)		
20			Rest	
40		E/Hyg		
0500			0115	
20			(O)	
40				0115
0600			0501	(S)
20				
40			LOS II I	
0700				Rest
20				
40		Sleep		
0800				E/Hyg
20			E/Hyg	
40				
0900				
20				LOS
40				
1000				III
20				
40				
1100		E/Hyg		
20			Sleep	
40				
1200				
20		LOS III		Rest
40				
1300				
20				
40				
1400		Rest		
20				
40				
1500			E/Hyg	E/Hyg
20		L10H		EVA
40		EVA		Supp
1600				
20		0501	1402(1)	
40				LOS III
1700				
20		Rest		
40			LOS III	
1800				E/Hyg
20				
40				
1900				
20				
40		LOSIII		
2000				
20				
40				
2100			Rest	Sleep
20				
40				
2200				
20				
40				
2300		Rest		
20			LOS III	
40				
2400				

DAY 29	ORBIT	CREWMEN ACTIVITIES 1	2	3
0000				
20				
40		0105		0105
0100		(S)	E/Hyg	(O)
20				
40				
0200				0203h
20		0105	0105	
40		(O)	(S)	
0300				
20				
40				E/Hyg
0400		E/Hyg		
20			0105	0105
40			(O)	(S)
0500				
20				
40				
0600			0203h	
20			0201c(S)	0201c(O)
40		Sleep	0202d,f	
0700			0202gh	
20			E/Hyg	
40				0202gh
0800				1402-2,3
20				0201a
40				0202d,f
0900				
20				
40				
1000		E/Hyg		E/Hyg
20				
40		0104		0104
1100		(S)	Sleep	(O)
20				
40				
1200		0203b		
20		0202d,f		
40		0202gh		
1300				
20				
40		E/Hyg	E/Hyg	
1400		0201c	0201c	
20		(S)	(O)	
40				
1500		0104	0104	
20		(O)	(S)	
40				Sleep
1600				
20		0109	0109	
40		(S)	(O)	
1700			0201a	
20				
40				
1800				
20		E/Hyg	E/Hyg	E/Hyg
40		0109		0109
1900		(O)		(S)
20		0201c		0201c
40		(O)		(S)
2000				
20			0109	0109
40			(S)	(O)
2100				
20		Rest	0104	0104
40			(O)	(S)
2200				
20				
40				
2300		1402		
20		(1)	Rest	Rest
40		0201a		
2400				

NOTES

[redacted]

CREW SCHEDULING, FLIGHT 211, SHEET 8 OF 8

DAY 30	ORBIT	CREWMEN ACTIVITIES 1	2	3
0000				
20		E/Hyg	0202a,b	0202a,b
40		0202a,b	(S)	(O)
0100		(O)		0202a,b
20		0202a,b	0202a,b	(S)
40		(S)	(O)	
0200		0201e	0202d,f	
20		0201b	0201e	
40		0203g		
0300		0203d,f		1402(1)
20		0203a		
40		E/Hyg	E/Hyg	E/Hyg
0400			0201d	0201d
20			(S)	(O)
40			0501	0203
0500				a,g
20				
40			0111(S)	0111(O)
0600				
20			E/Hyg	
40		Sleep		
0700				
20				
40				Rest
0800				
20				
40				
0900				
20			Sleep	0501
40				
1000		E/Hyg		0203b
20		0118(S)		
40				
1100				0118
20		0203		(O)
40		b,c,e,i		
1200				
20				
40		0203c		
1300		0201d(O)		0201d(S)
20		0201d(S)	0201d(O)	
40		0501		
1400		1402	0202	
20		(2,3)	c,e,i	
40				E/Hyg
1500			0203e	
20				
40		E/Hyg	E/Hyg	
1600				
20				
40				
1700				
20				
40				
1800				
20				
40				
1900				
20				
40				
2000				
20				
40				
2100				
20				
40				
2200				
20				
40				
2300				
20				
40				
2400				

DAY	ORBIT	CREWMEN ACTIVITIES 1	2	3
0000				
20				
40				
0100				
20				
40				
0200				
20				
40				
0300				
20				
40				
0400				
20				
40				
0500				
20				
40				
0600				
20				
40				
0700				
20				
40				
0800				
20				
40				
0900				
20				
40				
1000				
20				
40				
1100				
20				
40				
1200				
20				
40				
1300				
20				
40				
1400				
20				
40				
1500				
20				
40				
1600				
20				
40				
1700				
20				
40				
1800				
20				
40				
1900				
20				
40				
2000				
20				
40				
2100				
20				
40				
2200				
20				
40				
2300				
20				
40				
2400				

DAY	ORBIT	CREWMEN ACTIVITIES 1	2	3
0000				
20				
40				
0100				
20				
40				
0200				
20				
40				
0300				
20				
40				
0400				
20				
40				
0500				
20				
40				
0600				
20				
40				
0700				
20				
40				
0800				
20				
40				
0900				
20				
40				
1000				
20				
40				
1100				
20				
40				
1200				
20				
40				
1300				
20				
40				
1400				
20				
40				
1500				
20				
40				
1600				
20				
40				
1700				
20				
40				
1800				
20				
40				
1900				
20				
40				
2000				
20				
40				
2100				
20				
40				
2200				
20				
40				
2300				
20				
40				
2400				

DAY	ORBIT	CREWMEN ACTIVITIES 1	2	3
0000				
20				
40				
0100				
20				
40				
0200				
20				
40				
0300				
20				
40				
0400				
20				
40				
0500				
20				
40				
0600				
20				
40				
0700				
20				
40				
0800				
20				
40				
0900				
20				
40				
1000				
20				
40				
1100				
20				
40				
1200				
20				
40				
1300				
20				
40				
1400				
20				
40				
1500				
20				
40				
1600				
20				
40				
1700				
20				
40				
1800				
20				
40				
1900				
20				
40				
2000				
20				
40				
2100				
20				
40				
2200				
20				
40				
2300				
20				
40				
2400				

NOTES

[redacted]

A qualification test of the lunar orbit survey (LOS) equipment is also performed on this flight. The flight will assess both crew procedures and equipment performance associated with the lunar mission, and the adequacy of techniques for reducing data acquired. Equipment capability, crew procedures, and data reduction techniques will be studies. Approximately 150 man-hours are considered necessary for this checkout and 144 are provided, even though it is scheduled on a secondary basis to the biomedical/behavioral tests. The largest time block is on day 13, when 33.5 man-hours are spent on LOS equipment operation. The photographic time segments for both the panoramic and mapping cameras are assigned to assumed day-light portions of the orbit. Also, the mapping camera and mapping radar have coincident sequences.

The Personal Hygiene and Food Preparation experiment (1401) and Cabin Atmosphere Control Experiment (1402) have been included on this flight. No on-duty manhours have been included for Experiment 1401. On-duty manhours for Experiment 1402 are shown in Table 3-2.

Table 3-3 presents the experiment equipment mission profile for selected days of this mission.

DAY 3, 10, 17, 24

GRUMMAN AIRCRAFT ENGINEERING CORPORATION

Table 3-3 APOLLO EXTENSION SYSTEM EARTH ORBIT MISSION STUDY
FLIGHT [211] EXPERIMENT MISSION PROFILE

SHEET 1 OF 4

TIME - HOURS 0000 2400
ORBITS

POWER, KW: 1.0, .8, .6, .4, .2, 0

EXPERIMENT POINTING REQUIREMENTS
DIRECTION (1): FD
ACCURACY, ±DEGREES: 5°

STABILITY REQUIREMENTS, DEG/SEC: 10, 1.0, .1, .01, .001, .0001

TYPICAL OF DAY 3, 10, 17 & 24

NOTES, OTHER TIME - DEPENDENT VARIABLES, ETC

EXP 0113 2242 0113 0113 1801 1802

(1) INDICATE EO(EARTH ORIENTATION), IO(INERTIAL ORIENTATION), OR FD(FREE DRIFT)

2-2.19

[redacted]

[redacted]

GRUMMAN AIRCRAFT ENGINEERING CORPORATION

DAY 13

Table 3-3 APOLLO EXTENSION SYSTEM EARTH ORBIT MISSION STUDY
FLIGHT [2/1] EXPERIMENT MISSION PROFILE

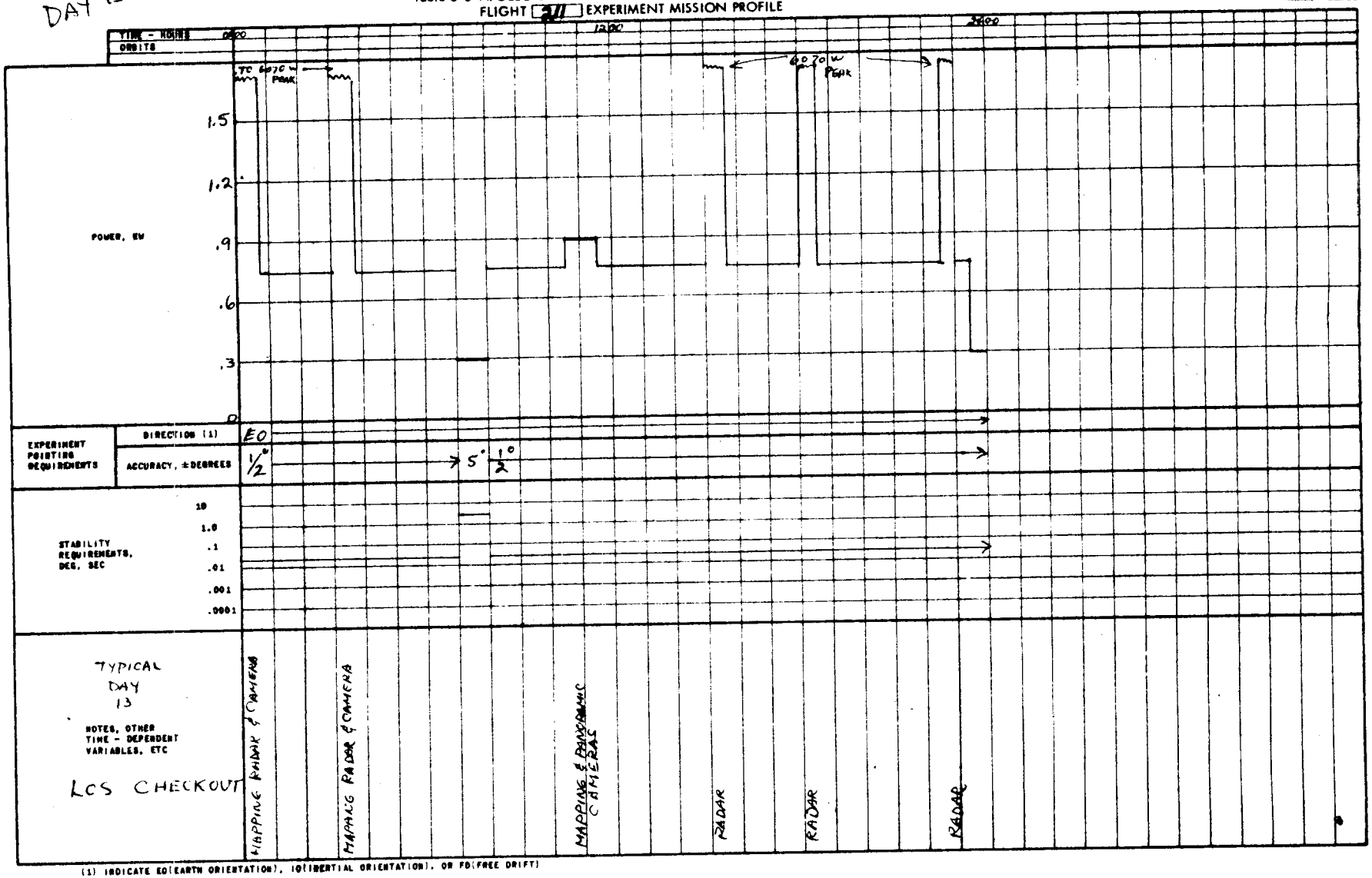

(1) INDICATE EO(EARTH ORIENTATION), IO(INERTIAL ORIENTATION), OR FD(FREE DRIFT)

2-2.20

DAY 18&25

GRUMMAN AIRCRAFT ENGINEERING CORPORATION

Table 3-3 APOLLO EXTENSION SYSTEM EARTH ORBIT MISSION STUDY
FLIGHT 211 EXPERIMENT MISSION PROFILE

SHEET 3 OF 4

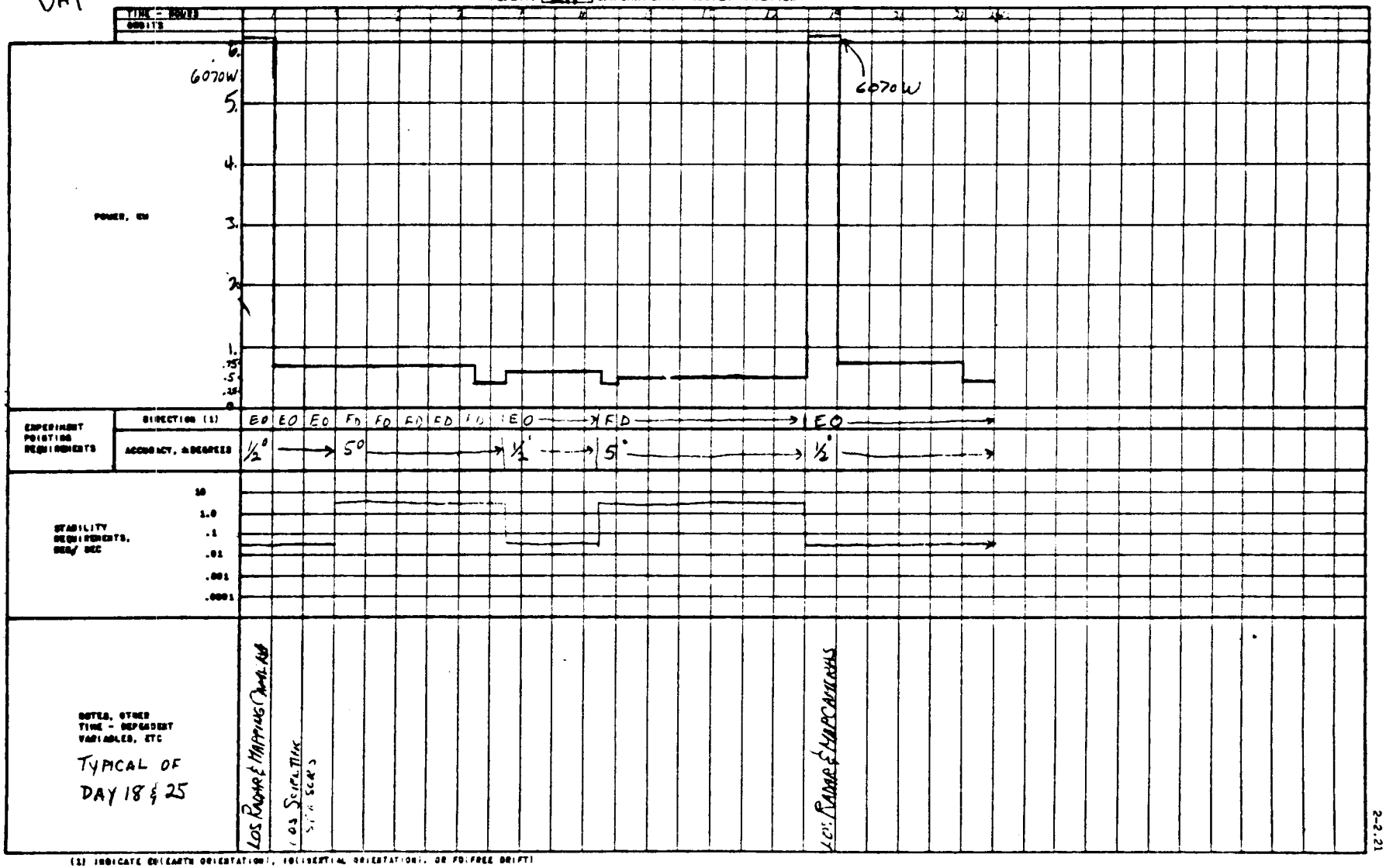

(1) INDICATE EO(EARTH ORIENTATION), IO(INERTIAL ORIENTATION), OR FD(FREE DRIFT)

2-2.21

DAY 19

GRUMMAN AIRCRAFT ENGINEERING CORPORATION

Table 3-3 APOLLO EXTENSION SYSTEM EARTH ORBIT MISSION STUDY
FLIGHT 211 EXPERIMENT MISSION PROFILE

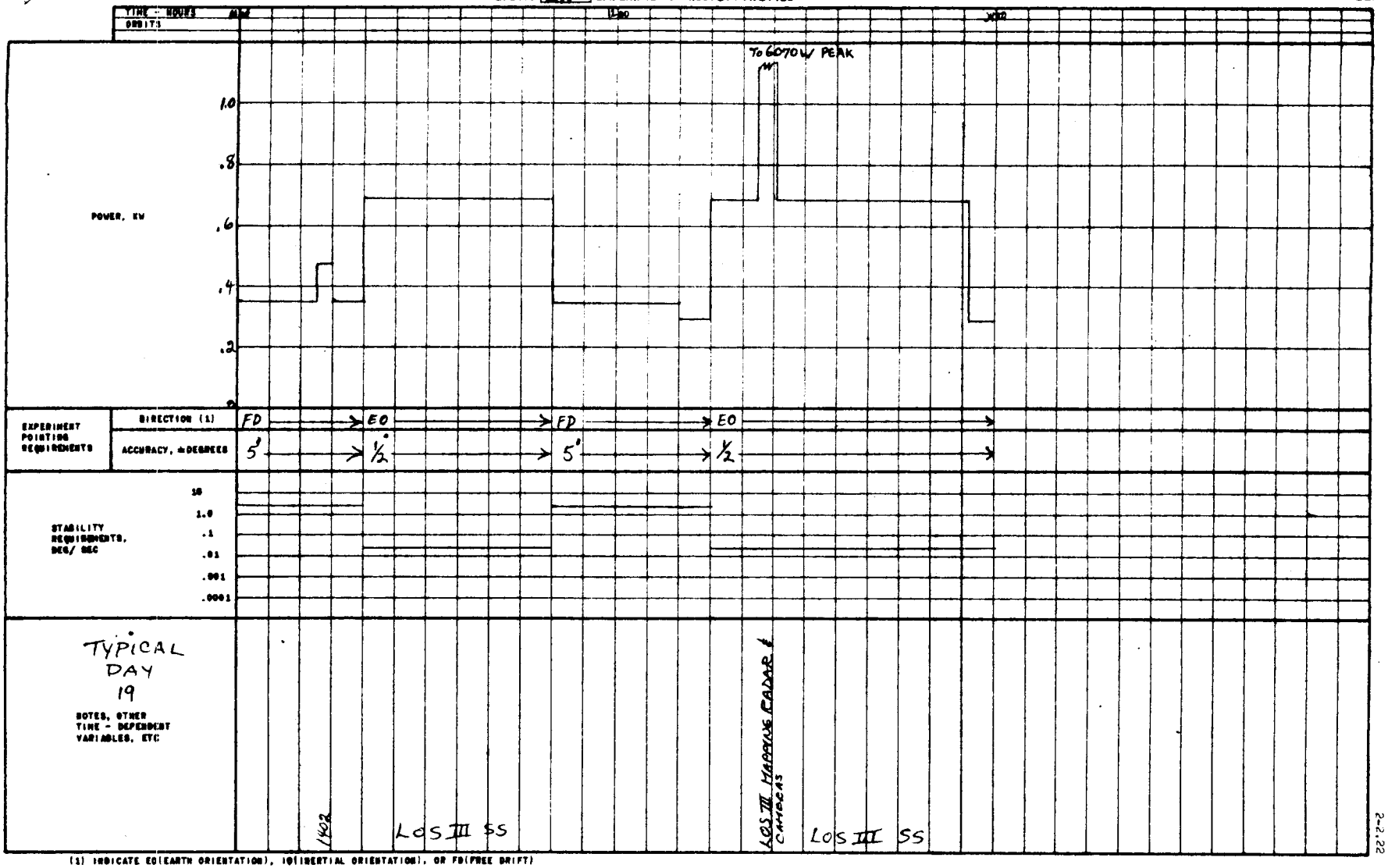

(1) INDICATE EO(EARTH ORIENTATION), IO(INERTIAL ORIENTATION), OR FD(FREE DRIFT)

2-2.22

3.2 SPACECRAFT DEFINITION

Flight #211 configuration, shown in Figures 3-1 & 3-2, carries experiments dealing with checkout of lunar survey equipment (LOS), and requires earth pointing. Nominal spacecraft attitude is earth oriented with the spacecraft's longitudinal axis normal to the orbit plane. Attitude is held within a deadband of $\pm 5^{\circ}$, except during experiment periods having specific pointing and stability requirements. Pointing and stability requirements are accommodated by the CSM within the RCS propellant capacities of both the "C" and "D" CSM versions.

Additional experiments, carried on this flight, dealing with personal hygiene (1401), cabin atmosphere control (1402) experiments are readily accommodated.

The large panoramic cameras, associated with the lunar survey system are supported by a low profile descent stage (30 in. depth). The cameras are mounted 17° to the spacecraft local vertical with the panning plane orthogonal to the flight path. Other camera equipments are mounted on a common module located in front of the existing LEM forward hatch, and are readily accessible from the Lab cabin. The camera module is designed to swing away during programmed EVA's. The radar mapping unit is mounted on the descent stage.

Magnetometer, gamma ray surveying and gravity surveying experiments are all mounted on extendable booms. The micrometeoroid collector is mounted on the descent stage and normal to the flight path.

Structural modifications to the LEM A/S are required to accommodate the viewfinder. A low profile descent stage is used to support the lab and experiment equipment. All other experiment equipment installations are additions to existing LEM A/S or basic low profile D/S structure.

The inboard profile (figure 3-2) shows that adequate internal volume is available to accommodate the required experiments. All primary experiment displays and controls, including the viewfinder, are located in the cabin and are accessible by the crew. Biomed equipment is stored in a canister below the floor where the LEM ascent engine is normally housed. All food is stored internally. A seven day supply of LiOH is also stored internally and is

KEY

No.	Experiment	Name
1	LOS	Micrometeoroid Collector
2	LOS	Multispectral Camera
3	LOS	Cartographic Camera
4	LOS	Mapping Radar
5	LOS	Panoramic Cameras
6		FCA Package Radiator
7	1402	CO_2 Concentrator-Electrodialysis Subsys
8	1402	CO_2 Concentrator-Adsorption Subsys
9	0501	Radiation Environment Monitoring Equipt
10		Power Package (Config "D")
11	LOS	Gamma Ray Spectrometer
12		Equipment Radiators
13		Boom Mechanism
14	LOS	Magnetometer
15	LOS	Gravimeter
16	LOS	Spectrometer
17	LOS	Spectrometer
18	LOS	Radar Altimeter
19		Power Package (Config "C")
20		Gox Tank
21		Portable Water Tank
22		Waste Storage Tank
23		LiOH
24		Horizon Scanner & Star Tracker

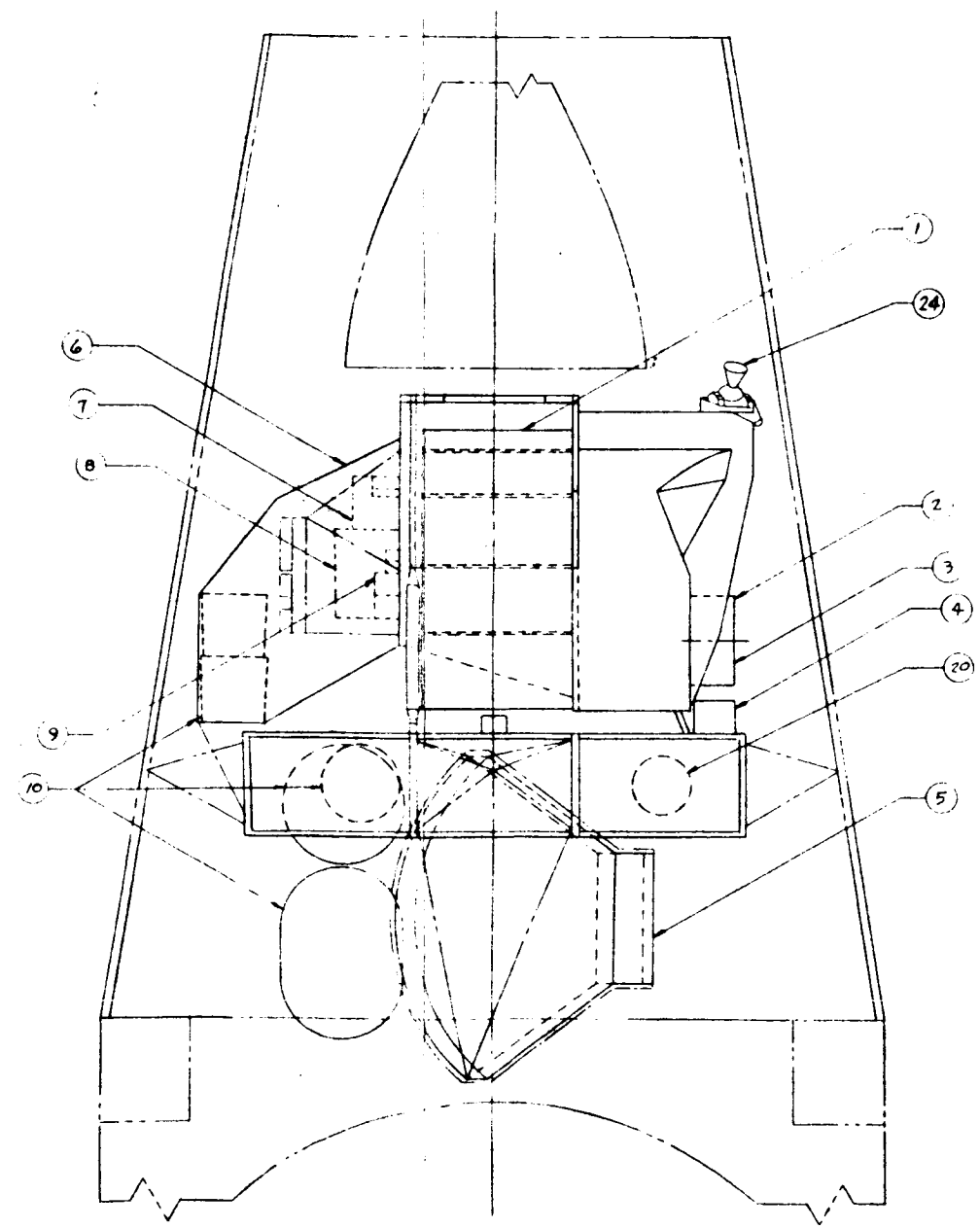

LAUNCH CONFIGURATION

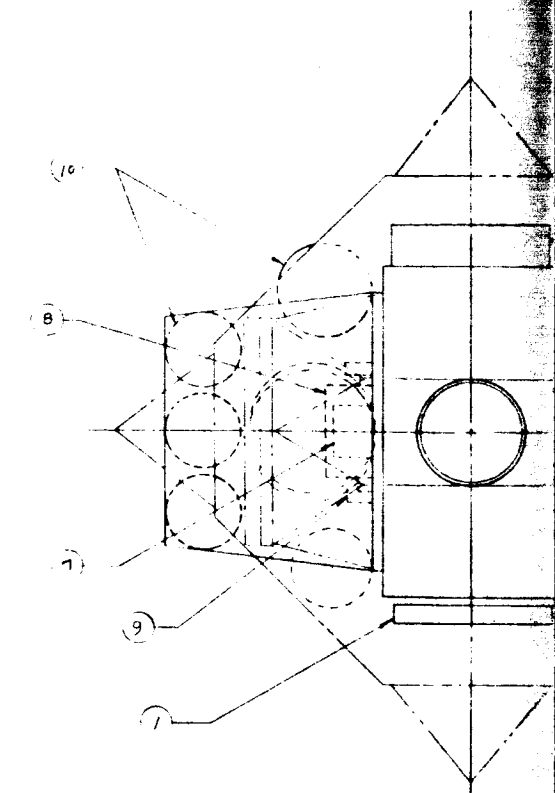

VIEW LOOKING DO
AT ASCENT STAG

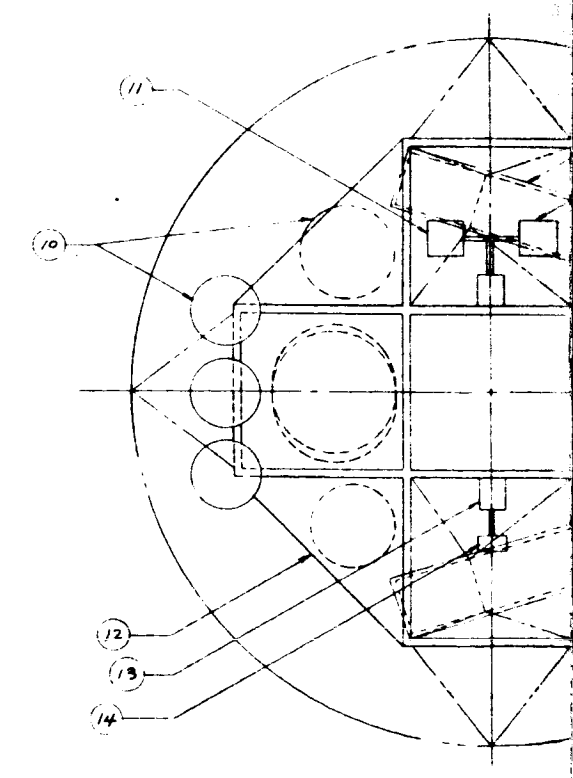

VIEW LOOKING DO
AT DESCENT STA

FOLD-OUT #1

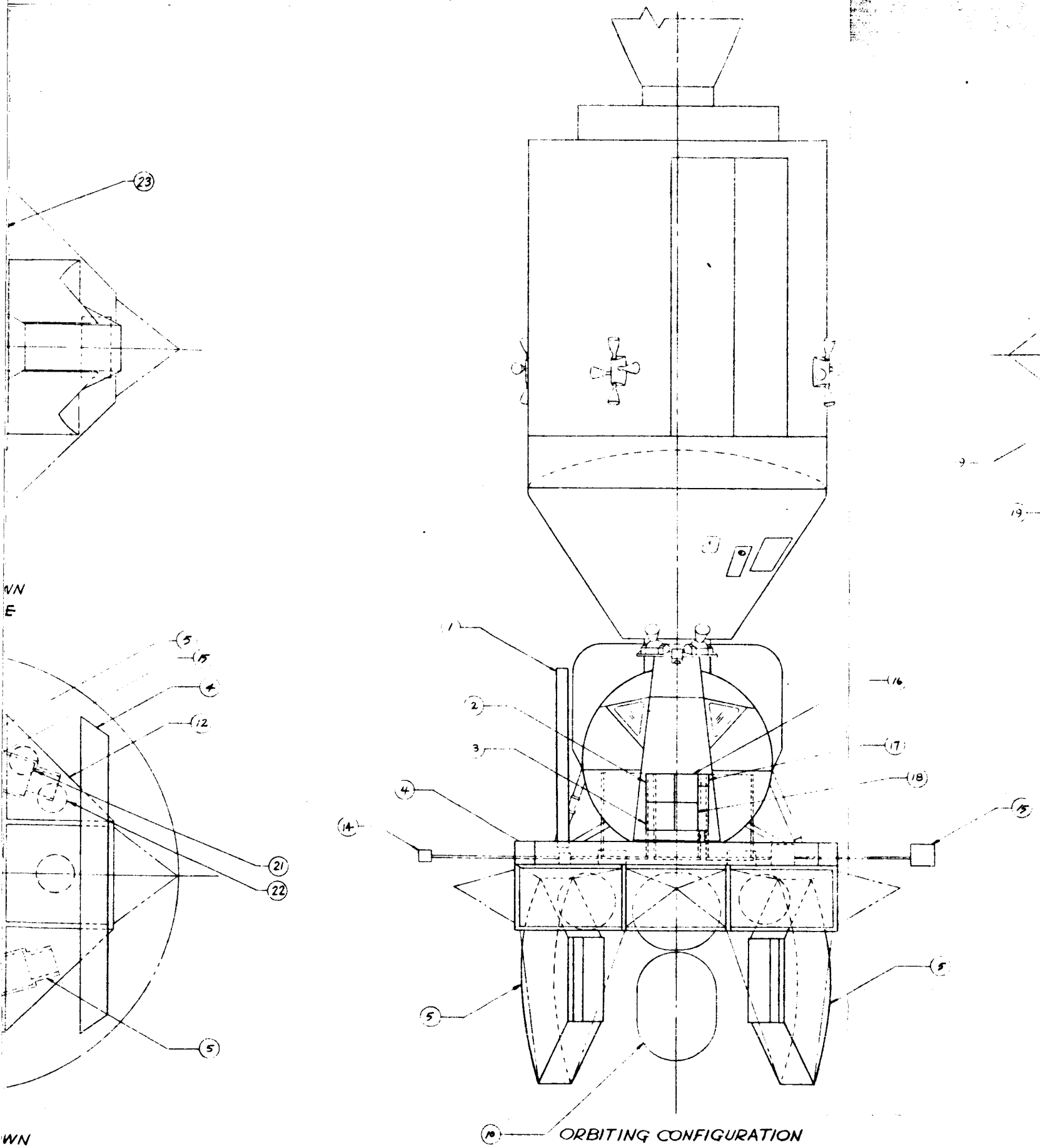

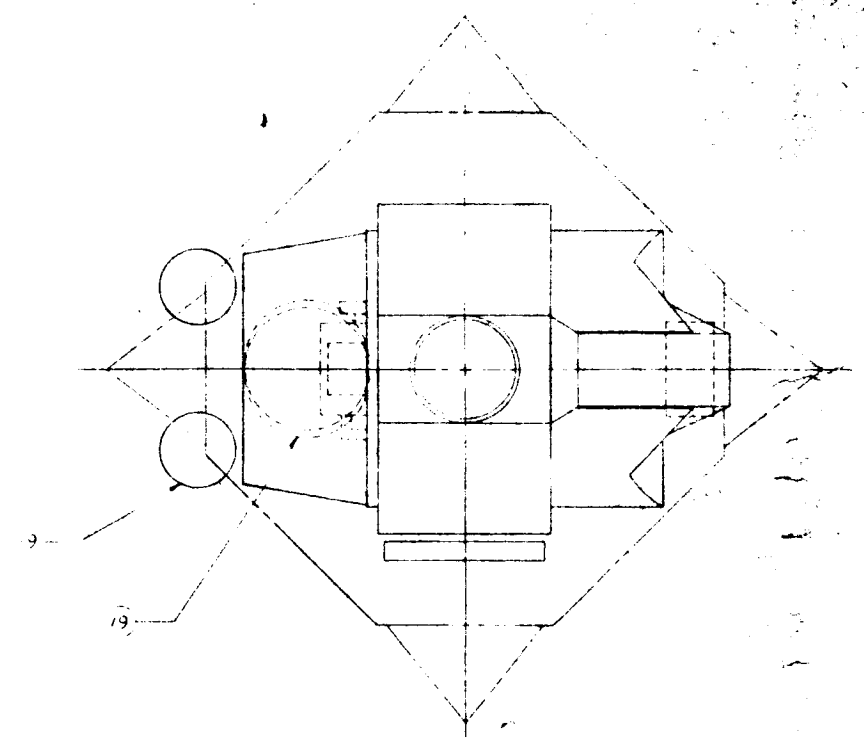

ALTERNATE POWER PACK CONFIGURATION

0 20 40 60 80 100
SCALE: 1" = 20"

Grumman
AIRCRAFT ENGINEERING CORPORATION
PRELIMINARY DESIGN DEPT.

Gen Arrgmt Flt. 211 Biomedical/Behavioral & Technology

SCALE OF DWG. DWG. 1/20

AES 1018A

Fig. 3-1

FOLD-OUT #2

KEY

No.	Experiment	Name
1		Cryogenic Panel
2		Circuit Breakers
3	LOS	Lunar Survey Viewfinder Panel
4	LOS	Viewfinder
5	LOS	Lunar Survey Cameras
6	0100&0200	Biomed & Behavioral Storage
7		Food Storage
8		Air Duct
9		Suit Circuit Assy
10		LiOH
11		Power Package
12	LOS	Panoramic Cameras
13	1401&1402	Personal Hygiene & Radiation Environment Monitoring
14		ECS
15		Seat Stowed
16		Voice Recorders (2)
17	LOS	Digital Computer
18		Log, Data Books, Sensors, Films, & Tape Storage
19	0501	Pulse Height Analyzer
20	0501	Tissue Equiv. Ionization Chamber
21	0100&0200	Basic Lab, Biomed & Behavioral Panel
22	LOS	Lunar Survey Viewfinder Panel
23	LOS	Data Recorder
24		Config 211 "B" Descent Stage

LOS Lunar Survey Equipment Checkout

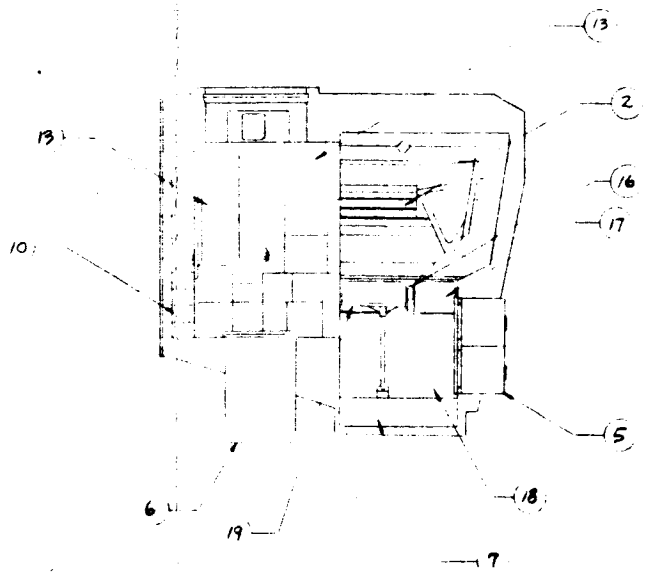

VIEW LOOKING OUTBOARD LEFT HAND SIDE

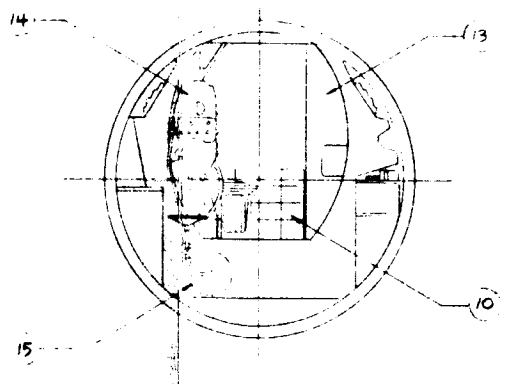

VIEW LOOKING AFT

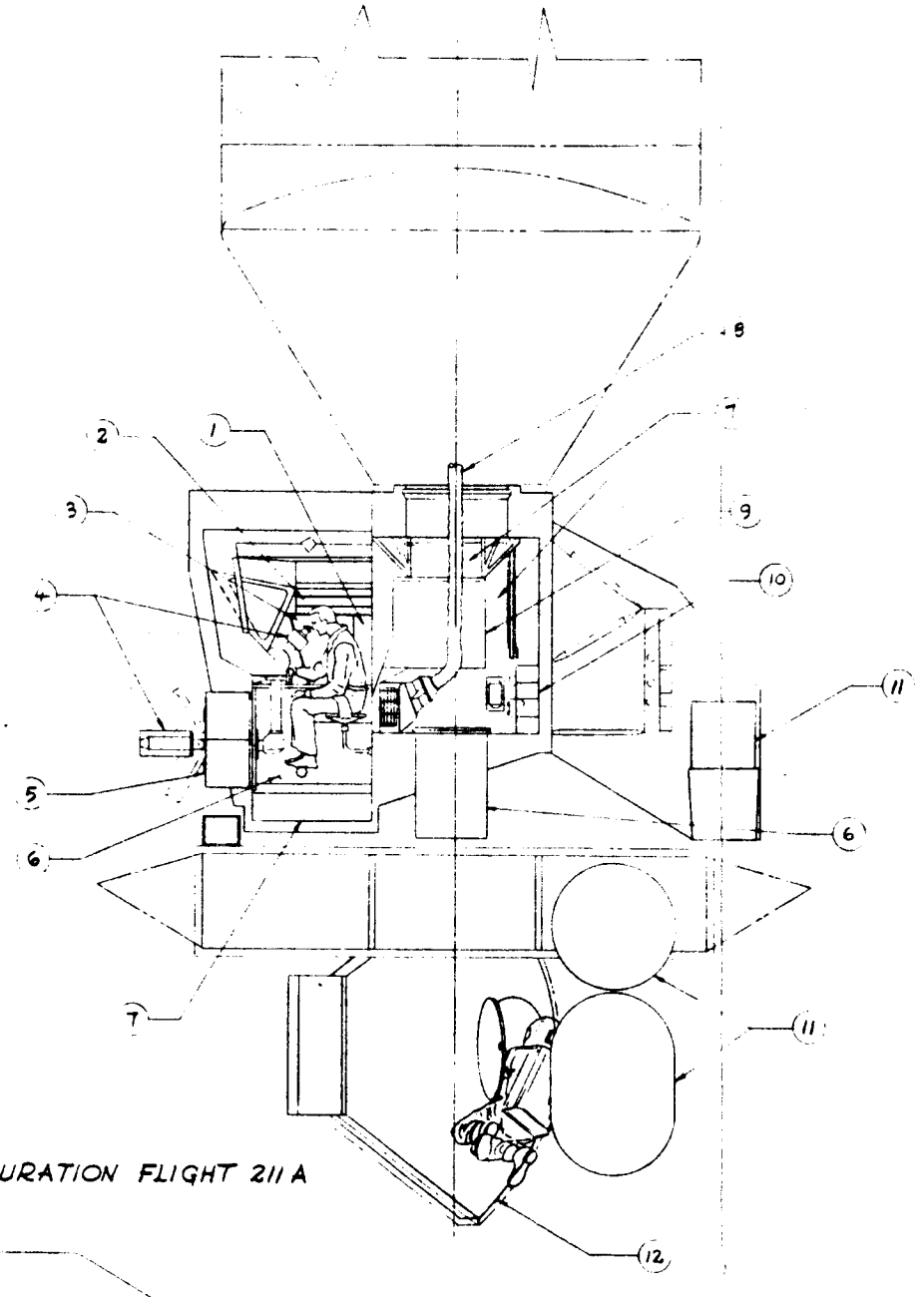

CONFIGURATION FLIGHT 211 A

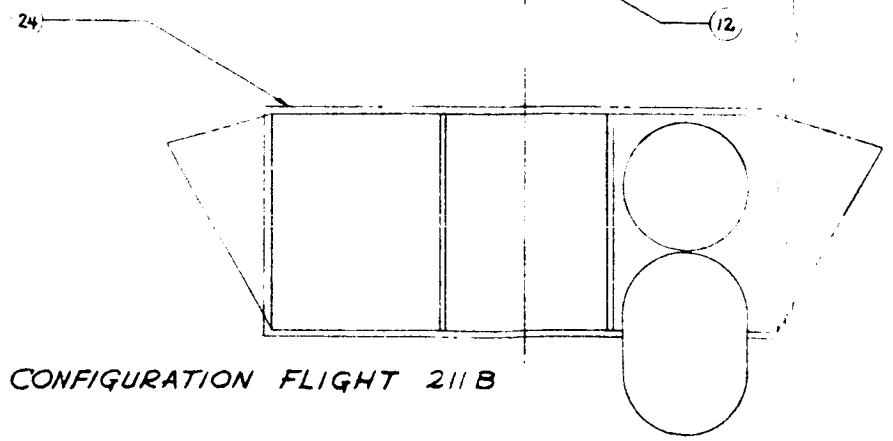

CONFIGURATION FLIGHT 211 B

VIEW LOOKING OUTBOARD RIGHT HAND SIDE

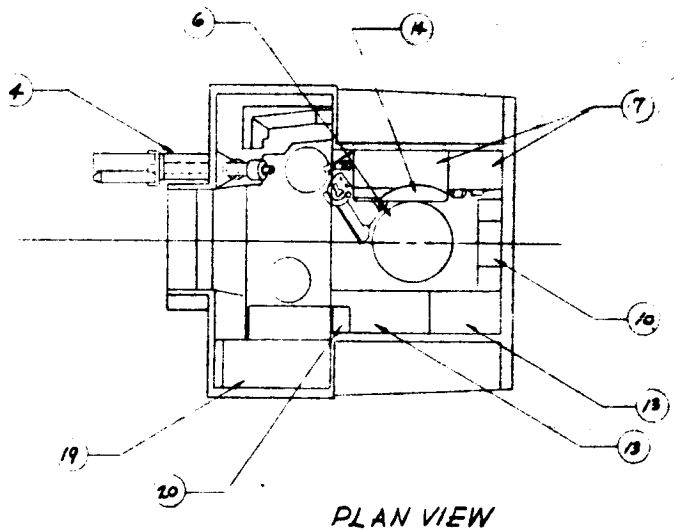

PLAN VIEW

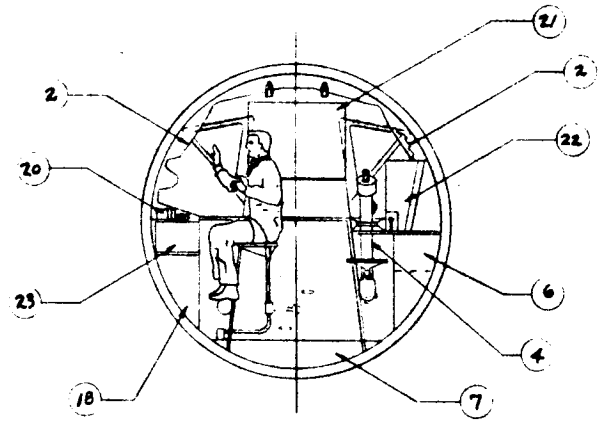

VIEW LOOKING FORWARD

0 20 40 60 80 100

SCALE: 1" = 20"

Grumman AIRCRAFT ENGINEERING CORPORATION PRELIMINARY DESIGN DEPT.

Fig. 3-2 Inbd Prof Flt. 211 Biomedical/Behavioral & Technology

SCALE OF ORIG. DWG. = 1/20

AES 1019

replenished from external storage during programmed EVA's.

In addition to the standard CSM/Lab interface, this flight requires additional wiring for accommodating the earth pointing requirements of experiments. Interface wiring involves star tracker and horizon scanner sensory inputs used to maintain attitude hold.

The difference between "C" and "D" versions of the lab are the addition of one FCA one Block II O_2 and H_2 tank, added fuel cell reactants, and increase in FCA radiator area of 16 $ft.^2$. These modifications to a "C"-version lab. accommodate the added power demand of the "D"-version lab. required by taking over CSM power requirements after (nominally) 14 days.

This flight utilizes an Apollo CSM fuel cell electrical generation system, a LEM ECS to provide suit circuit operation in the lab during EVA and selected components to provide data transmission, status and appropriate displays.

This flight requires a large peaking battery to accommodate peaks created by the mapping radar. A 300 Amp-Hr battery is carried for this purpose.

The estimated laboratory weight of the "C" version is 8774 lbs and of the "D" version is 9988 lbs. (See tables 3-4 and 3-5).

Basic subsystem characteristics pertinent to this flight are described below:

Vehicle Orientation	Earth Oriented
Stabilization Reqm'nts	$\pm .5^\circ$ @ 3 days; $\pm 5^\circ$ @ 27 days
Avg. Experiment Pwr (Delivered)	696 Watts
Number of Repressurizations	5
Equipment Cooling	46 Ft^2 Radiator

	C Config.	D Config. Takeover Pt = 14.8 days
Number of Fuel Cells	2	3
Oxygen Tanks	1 Apollo X	1 Apollo X & 1 Block II
Hydrogen Tanks	1 Apollo X	1 Apollo X & 1 Block II
Peaking Battery	300 Amp Hr	300 Amp Hr
Fuel Cell Cooling	15ft^2 Rad	31 ft^2 Rad
RCS System	None	None
RCS Tankage	None	None
S & C System	Sensors only	Sensors only
Water for Thermal Con (Max)	143 lb	147 lb
Water Generated	756 lb	1182 lb

Table 3-4 LEM LAB DETAILED WEIGHT STATEMENT

FLIGHT 211

COMPONENT	Weight, lb Configuration C	D
Structure	(1929)	(1929)
Basic Ascent	802	802
Rack	470	470
Shielding	402	402
Power Pack Structure	50	50
Experiment Supports	205	205
Stabilization & Control	(120)	(120)
Star Trackers & Electronics	84	84
Horizon Scanner	36	36
Crew Provisions	(200)	(200)
Restraints	35	35
Lighting	10	10
Food	146	146
LiOH - PLSS	9	9
Controls & Displays	(255)	(255)
Environmental Control	(660)	(660)
Atmosphere Revitalization System	80	80
O_2 Supply & Cabin Pressurization	34	34
Water Management	36	36
Heat Transport, Cold Plates, Coolant	105	105
LiOH - ECS	248	248
Water	40	40
Radiators	114	114
Thermal Control	3	3
Instrumentation	(269)	(269)
Signal Conditioner	45	45
PCM & Timing Elect Assy	39	39
Data Storage	25	25
Experiment Selector	6	6
Data Tapes	150	150
Spare Voice Recorders	4	4
Electrical Power Supply	(2708)	(3922)
Fuel Cell Ass'ys	492	738
Reactants & ECS Oxygen	782	1521
Reactant Tankage	424	603

Table 3-4 LEM LAB DETAILED WEIGHT STATEMENT

FLIGHT 211

COMPONENT	Weight, lb Configuration C	D
Electrical Power Supply (Cont'd)		
Batteries & Charger	332	332
Plumbing	40	60
Inverters	75	75
Wiring, Distribution & Umbilical	563	593
Communications	(32)	(32)
Television	24	24
Audio Center	6	6
Voice Recorder	2	2
Experiment	(2546)	(2546)
Spares	(55)	(55)
Total Laboratory	8774	9988

TABLE 3-5 INTEGRATED SPACECRAFT WEIGHT STATEMENT

Flight 211

Component	Weight, lb Configuration C	D
Command Module Basic Weight	(10,287)	(10,287)
Service Module Basic Weight	(10,546)	(9,160)
CSM Retro-Propellant	(1,349)	(1,191)
Laboratory Weight	(8,774)	(9,988)
Basic Laboratory Structure	1,929	1,929
Experiments	2,546	2,546
Experiment Support Systems	3,074	3,549
Expendables	1,225	1,964
CSM Experiment Dependent Weights		
RCS Propellant	107	112
Total Laboratory & Experiment	(8,881)	(10,100)
Allowable Lab. & Exper. Weight	10,488	12,032
Total Orbiting Weight	31,063	30,738
Service Module Propellant (Ascent)	1,410	1,410
SLA Adapter	3,504	3,505
Launch Vehicle Payload	35,978	35,653

4. FLIGHT OPERATIONAL SUPPORT: FLIGHT NO. 211

Experiment 0100 & 0200 - Medicine and Behavioral - Periodic daily data transmission and ground monitoring of safety parameter data.

Experiment 0501 - Radiation Environment Monitoring - External particle flux measurements during a solar flare event are to be correlated with the solar activity observations made on earth stationed observatories and other satellites.

Table 4-1 presents the experimental data management requirements of the flight. A general discussion of this table and the data management system is contained in volume 1.

FLIGHT 211

Table 4-1 Data Management

Avg Daily Data Recording Requirements

Experiment		Recording Time, min		Remarks
No.	Data Rate K-bits/sec	(A) 51.2 K-b/sec	(B) 1.6 K-b/sec	
0100_s	9 (AVG)	226		7.9 Exper Hr/Day Based on
0200_s	6.4 (AVG)	120		6.9 Exper Hr/Day Suggested Exper Freq. for 30/day mission.
0501	0.8		45	45 min/day Monitoring
1401	0.2		30	30 min/day Monitoring
1402	0.8		30	30 min/day Monitoring
Lunar Survey Equipt	0.9		120	6HR x 10 times
Totals		346	225	

Avg Daily Data Transmission Time Reqd: (A) + (B/32) = 354

Avg Daily Data Transmission Time Available = 280

Data Excess (min of Tape) Per Day:

Reqd minus available Transmission Time = 74

Data Tape Return Reqd = $\frac{\text{Data Excess Per Mission (min)}}{\text{30 min/Tape Reel}}$ = 74 reels $\begin{cases} 148 \text{ lb} \\ 7.4 \text{ ft}^3 \end{cases}$

Optimum AVG Daily Transmission Time Reqd = 87

Voice Tape Return Reqd (3 Packages) 6 lb .075 ft^3

Film Return Reqd 400 lb 11 ft^3

Data Tapes Carried 150 lb

5. ALTERNATE CONFIGURATION - FLIGHT 211A

The previous sections described the mission and spacecraft configuration based primarily on a description of the lunar orbit survey experiment equipment which was provided by NASA/MSC for use on Grumman's basic AES/LEM study contract. This study assumed that all of the experiments are located on the Lab.

Fig. 5-1 shows a configuration arrangemnt for Flight #211A that assumes the large panoramic and the cartographic cameras have been removed from the Lab, and equivalent equipment located in the Service Module. The interior arrangement for this flight is the same as for Flight #211, Fig. 3-2.

It has been assumed that the installation of camera equipments in the Service Module (rather than the Lab) do not alter mission timeline descriptions or spacecraft total weights. The small increase in retro propellant, required in the Service Module due to a higher CSM dry weight, has been neglected.

KEY

No.	Experiment	Name
1	LOS	Micrometeoroid Collector
2	LOS	Multispectral Camera
3		Gox Tank
4	LOS	Mapping Radar
5	1402	CO_2 Reduction
6		FCA Radiator
7	1402	CO_2 Concentrator-Electrodialysis Subsystem
8	1402	CO_2 Concentrator Adsorption Subsystem
9	0501	Radiation Environment Monitoring Equip.
10		Power Package (Config "D")
11	LOS	Gamma Ray Spectrometer
12		Equipment Radiators
13		Boom Mechanism
14	LOS	Magnetometer
15	LOS	Gravimeter
16	LOS	UV Spectrometer
17	LOS	IR Spectrometer
18	LOS	Radar Altimeter
19		Power Package (Config. "C")
20		Potable Water Tank
21		Waste Storage Tank
22		Horizon Scanner & Star Tracker
23		LiOH

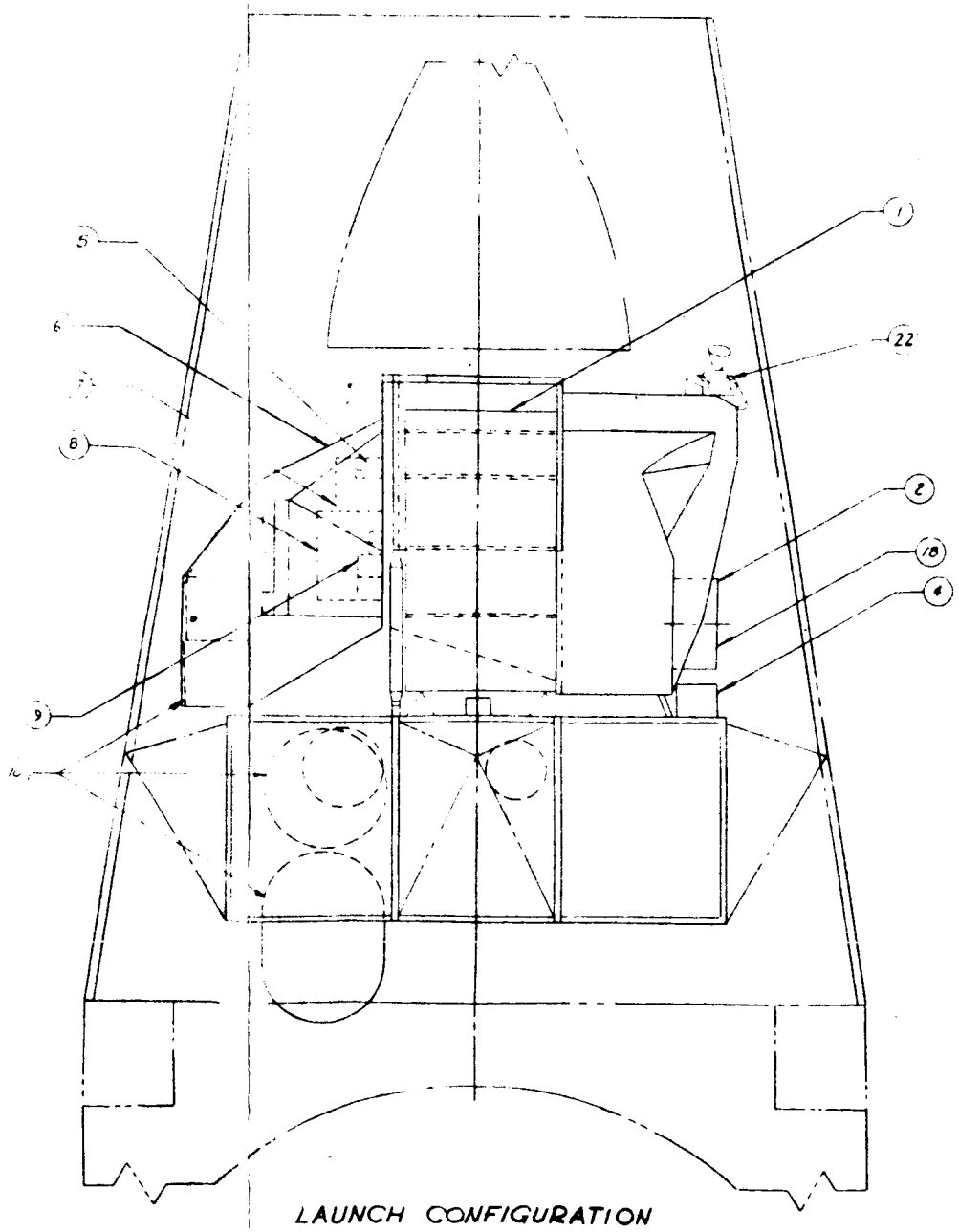

LAUNCH CONFIGURATION

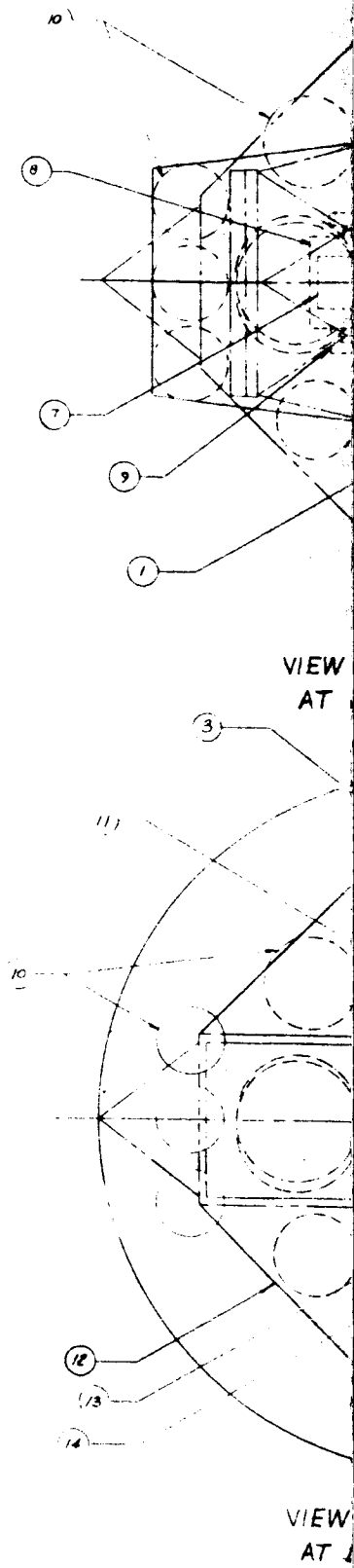

FOLD-OUT #1

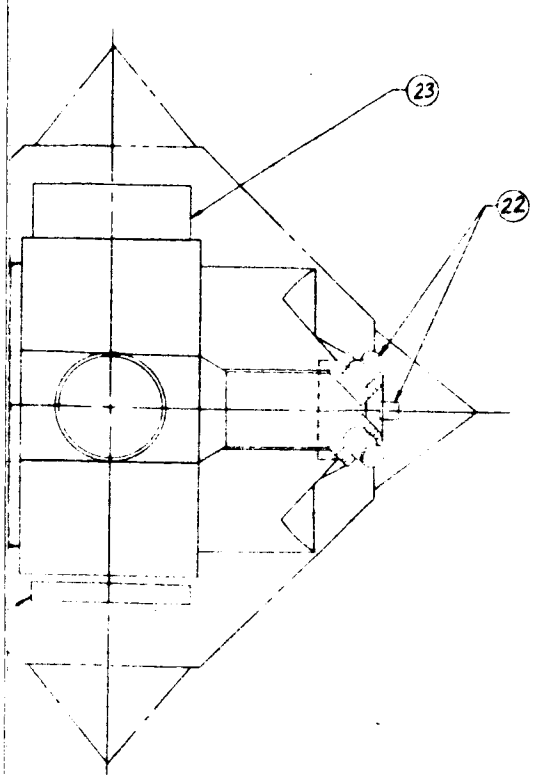

LOOKING DOWN
ASCENT STAGE

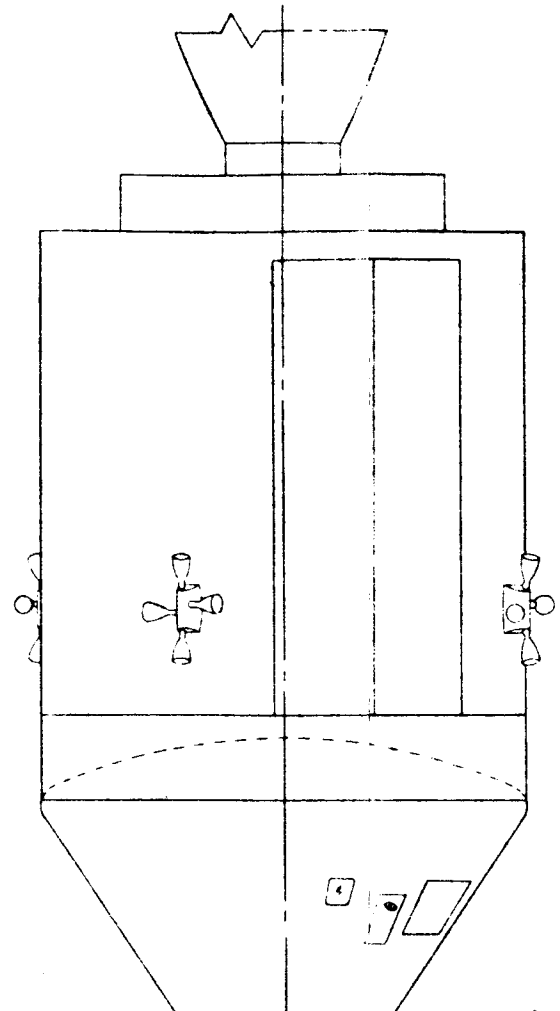

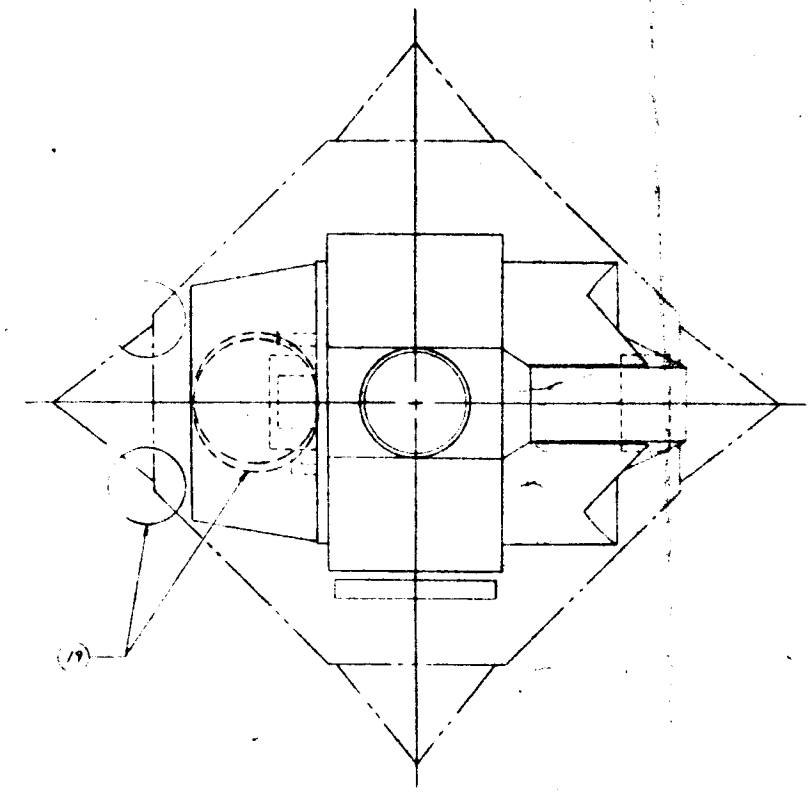

ALTERNATE POWER PACK
CONFIGURATION

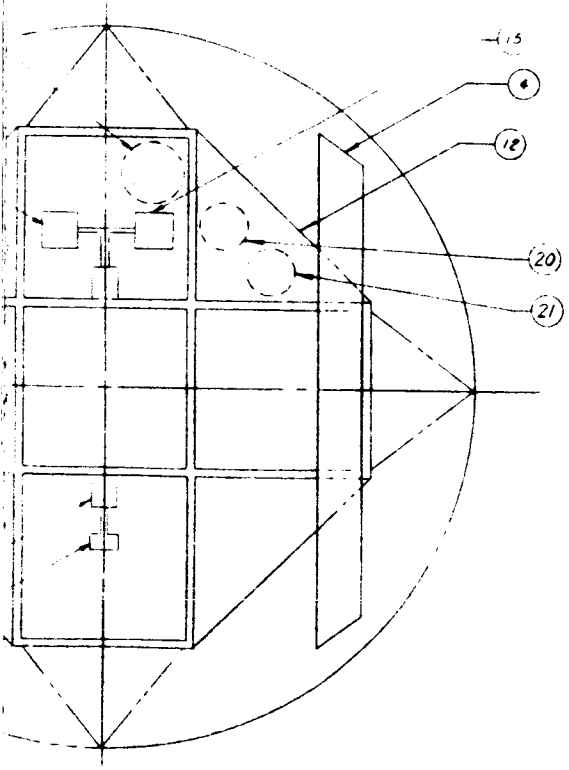

LOOKING DOWN
DESCENT STAGE

FOLD-OUT #2

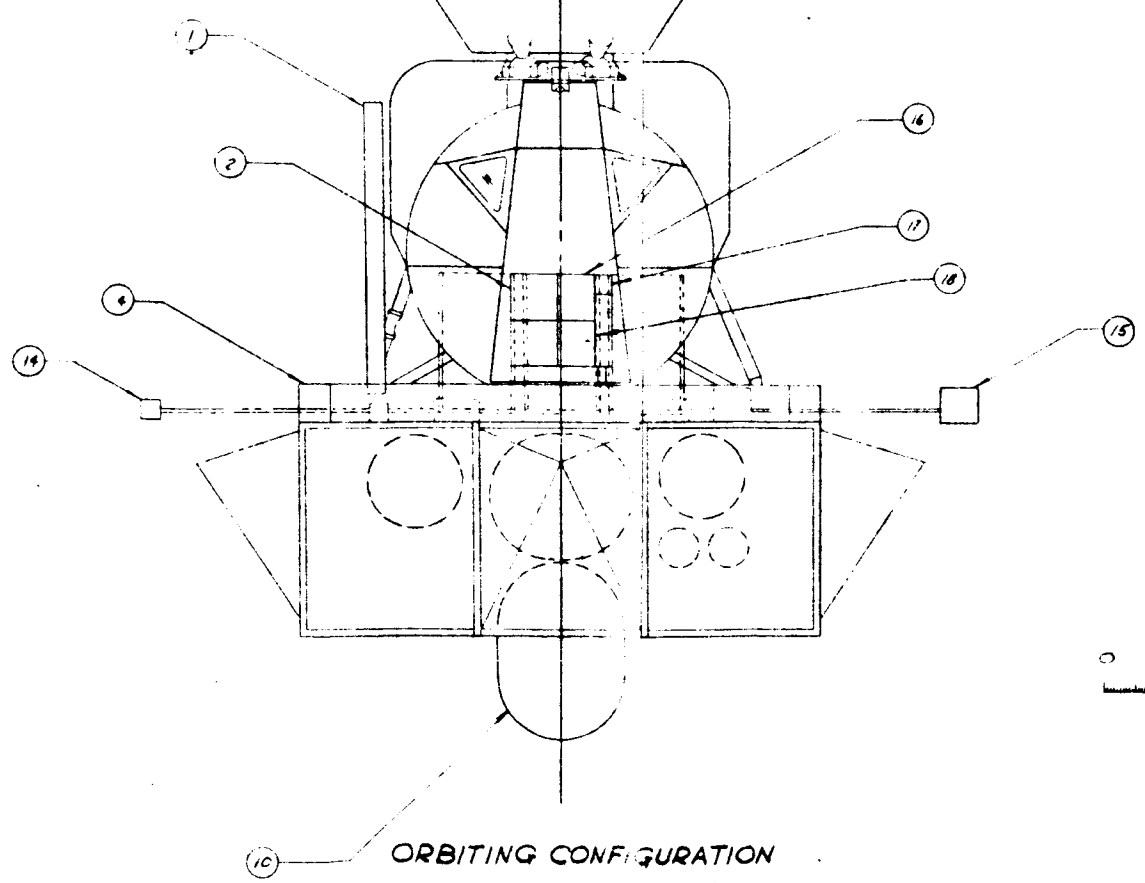

ORBITING CONFIGURATION

0 20 40 60 80 100

SCALE: 1" = 20"

Fig. 5-1

Grumman
AIRCRAFT ENGINEERING CORPORATION
PRELIMINARY DESIGN DEPT.

Gen Arrgmt Flt. 211
Biomedical/Behavioral & Technology

1/20

AES 1018B

1. FLIGHT MISSION DESCRIPTION

Flight No. 507

Altitude, n.mi 200	Inclination, deg 90	Duration, days 14	Crew 3

Mission Title: EARTH'S SURFACE SENSING AND SUBSYSTEM DEVELOPMENT

Objectives: This flight will qualify remote sensing elements for identification of characteristic multi-spectral signatures of biological, geological and ocean surface areas. Also, manned survey techniques for high resolution earth mapping will be demonstrated. The entire earth will be mapped in various emitted radio frequency bands of man-made origin. In addition, high power, high data rate spacecraft-to-earth transmitting systems will be tested. A large solar cell array will be erected, and its power utilized for the multi-spectral and high resolution mapping experiments.

Configuration: Block II CSM, LEM A/S, D/S

Experiment Summary:

No.	Title	Equipment Location: LEM Stage Asc	Equipment Location: LEM Stage Desc	Equipment Location: CM
0100	Biomedical (excluding 0101 and 0102)	X		
0200	Behavioral	X		
0501	Radiation Environment Monitoring	X		
0901	Multi-Spectral Target Characteristics	X	X	
0902	Synoptic Earth Mapping	X	X	
1201	Measure Radio Frequency Radiation	X	X	
1202	Wide-Band Transmission	X	X	
1405	Orbital Test of a Large Solar Cell Array		X	

2. EXPERIMENT DESCRIPTION SUMMARY

FLIGHT - 507

EXPERIMENT: 0100-0200 - Medical/Behavioral Experiments - The objective of the Medical/Behavioral Experiments is to evaluate the effects of prolonged space flight on man and to enhance his operational efficiency to permit more extensive manned space flight missions. Twenty-four experimental measurement packages have been defined to analyze critical human functions and to focus on those most likely to be affected adversely by prolonged space flight. The procedures and instrumentation employed in the experimental packages are a composite of updated, standard medical/behavioral and imminent state-of-the-art zero-g adapted, techniques. These procedures should provide: 1) an assessment of the effects of prolonged weightlessness on the psychophysiological integrity of the astronaut, 2) a determination of the mechanisms which mediate observed changes, 3) a prediction of the onset and extent of degraded functioning, and 4) a validation of preventive or countermeasures which may be necessary to support man's extended exploration of space.

NOTE

Experiments 0101 and 0102 require linear and/or rotational accelerations, such as would be obtained during a firing of the SM engine or during the artificial gravity experiment, in order to achieve all of the described experiment objectives. These experiments have been excluded from missions which lack sufficient SM propulsion and/or the artificial gravity experiment.

EXPERIMENT: 0501 - Radiation Environment Monitoring - The objective of the experiment is to record radiation received by the crew, and to furnish external radiation environment data for other experiments. Techniques for the Apollo Mission, or those employed in Tiros and OGO, will be used. Detection devices proposed for the monitoring systems are: proton-alpha and electron spectrometers, tissue equivalent ionization chambers, and film packs.

EXPERIMENT: 0901 - Multi-Spectral Target Characteristics Determination - The objective of the experiment is to gather multispectral imagery and spectral response samples from a wide diversity of target areas under different illumination, temperature, and atmospheric conditions. This will provide the data to establish the extent to which characteristic distinguishable spectral signatures as gathered from space may be used to identify and to measure useful earth and atmospheric properties. The experiment involves the identification of surface and subsurface features, and their interrelationships, by simultaneous mapping with sensors at different portions of the spectrum; allowing unique spectral responses to be correlated to establish both spatial and spectral signatures for unambiguous identification. In addition to spectral discrimination, signature variations are to be observed as a function of aspect or stereoscopic viewing and polarization. The spectral region covered lies between the near ultraviolet and radar wavelengths. All techniques, excepting radar, are passive receptors of the spectral emittance/reflectance radiations from the surface areas resolved. Supplementing the imaging techniques are non-imaging instruments which require motion compensation to permit greater observation times of select areas of interest. Other accessory instrumentation includes the use of VHF equipment to afford greater penetration and sublayer measurement, gravity gradiometers and geochemical spectrometry to detect trace components in the atmosphere.

EXPERIMENT: 902 - Synoptic Earth Mapping - The objective of the experiment is to comprehensively photograph the land areas of the earth with very high resolution film to show the detailed geomorphology, transportation networks, urban and rural land use, vegetation types, and to provide for hydrologic surveys, road surveys, and resource assessment. Additionally, surface moisture, ice depth and microwave emission profiles will be obtained. Black and white photographs of 20 ft. resolution will be acquired at the red end of the visual spectrum for maximum haze penetration. Such photos will be taken only during good atmospheric viewing conditions. A pair of photos of the same area shall be acquired to provide good stereo resolutions. A rotating mirror may be used to acquire several photo pairs adjacent to the satellite ground track when weather conditions are favorable, so that complete coverage may be obtained within the 14-day mission duration. Simultaneous photographs shall be acquired in the blue, yellow and near-infrared spectral regions to a resolution of 200 ft. This imagery will provide the capability for the construction of true-color photographs and the custom selection of a false-color best suited to identification of a particular image class. A broadband VHF radar will provide surface moisture conditions and type while a radiometer operating at four different microwave frequencies will provide emission characteristics.

EXPERIMENTS: 1201 - Measurement of Radio Frequency Radiation - The objective of the experiment is to make sensitive radio frequency radiation measurements, specifically of man made earth origin (and to a lesser degree from planets, stars and galaxie) to determine the interference and background noise environment in space communications. Spacecraft antennas and receiver will scan the 100 mc to 100 Kmc spectrum. The geographical area from which the radiation emanated will be logged and the spectral characteristics recorded.

EXPERIMENT: 1202 - Wide Bandwidth Transmission in Space - The objective of the experiment is to develop high power transmitting systems capable of sending information at high data rates from spacecraft to earth and to other spacecraft. The experiment will be performed by transmitting wideband signals to ground receiving stations using three transmitters with input power and frequency range shown below:

HF	3 mc to 30 mc at 5000 watts
UHF	300 mc to 3000 mc at 5000 watts
MM Waves	8 Gc to 80 Gc at 100 watts

EXPERIMENT: 1405 - Orbital Test of Large Area Solar Cell System - The objective of the experiment is to assess the role of man in the deployment of a large solar cell array; and to determine the effects of the array on other vehicle systems. The astronaut will assist in the deployment of the solar array. The system will be verified by operation and utilization as a by-pass loop of the operational power supply. The effect of the increased drag on the attitude control and orbit maintenance requirements will be determined.

TABLE 2-1 FLIGHT 507 INTEGRATED EXPERIMENT EQUIPMENT LIST

Exper. No.	Component	Weight, lb	Vol, cu ft or size*	Elec Energy or Elec Pwr	Remarks
0100 and 0200	Medicine and Behavior Experiments	321	14.5	100W Continuous plus 50W during Oper.	See Flt. 211 for Detailed Equip. list.
0501		(46.5)			
	Proton-Alpha Spectrometer	7	8 x 8 x 8		Duty Cycle - Continuous During mission.
	High Energy Electron Spectrometer	10	8 x 8 x 8		
	Low Energy Electron Spectrometer	5.5	4 x 4 x 3		
	Tissue Equiv ionization Chambers (3)	3	3 x 2 x1/2	5.3W	
	T.E.I.C. Rate Meters (2)	4	4 x 3 x 3		
	Film Packs and Pen Dosimeters (21)	1.5	2 x 2 x1/8		
	Pulse Height Analyzer	15	12 x12 x12		
	Battery Charger	0.5	1/2 x1/2 x1	1W	
0901-1		(953)			E.O., ±0.5°, 0.5°/sec.
	16 Telescope and Mirror	350	30	100	Grating Spectrometer and Multispectral Camera share common telescope alternately.
	Gimbal	50	5		
-2A	Grating Spectrometer	30	5.5	50	
	Closed Loop Cryogenic System	13	14	280W	
-2B	Cryogenic Storage Tank	200	2	- -	Precision pointing (2 secs) through Gimbal with Inertial package on telescope.
	Spectro Photometer	50	5.5	250	
	Dewar	60	1	- -	
-4	Multispectral Camera Ass'y.	100	5.5	10W	
-5B	Microwave Imager Antenna	50	6'x 6'x1/2'	- -	Performed during daylight portion of orbit
	Microwave Imager Antenna Inst. Data Equip.	50	8	100W	Standby power - 10 watts
					Controls and display panel Require 200W.
0902		(1435)			
	24" Focal length mapping Cameras (2)	600	8	60W	E.O., ± 0.2°, 0.2°/sec.
	6" Focal length mapping Cameras (3)	300	3.6	50W	Image Viewfinder and star Camera common to 0901.
	VHF Pulse Radar and Antenna	40	3.6	30W	Film includes that used in 0901.
	Microwave Radiometer and Antenna	100	36.3	200W	0901, 0902 performed simultaneously.
	Image Motion Compensation and Stable Platform	100	5	15W	
	Image ViewFinder	90	2.5	20W	
	Star Field Camera	40	1.5	20W	Standby power-20 watts
	Secor/Arod	40	1.5	20W	
	Film	125	2.3	- -	

*INCHES UNLESS OTHERWISE SPEC.

TABLE 2-1 FLIGHT 507 INTEGRATED EXPERIMENT EQUIPMENT LIST

Exper. No.	Component	Weight, lb	Vol, cu ft or size*	Elec Energy or Elec Pwr	Remarks
1201		(230)			
	Low Frequency Antennas (2)	40	53.2		Continuous operation at 50 watt average for 6 days.
	Mid Frequency Antennas (2)	168	.06		
	High Frequency Antennas (2)	2	.006		
	Preamplifiers	6	1.25	50	
	Receiver	8	1.5		
	Calibration and checkout equipment	6	1.25		
1202		(420)			Each 5,000 watt level is transmitted 75 times over a 3 day period for 1.5 minute each time.
	High Frequency Transmitter	50	1	5,000	
	High Frequency Antenna	30	.08		
	Ultra High Frequency Transmitter	50	1	5,000	
	Ultra High Frequency Antenna	5	.58		100 watt level is transmitted 75 times over a 3 day period for 3 minutes each time.
	Millimeter Wave Transmitter	30	.63	100	
	Millimeter Wave Antenna	5	.08		
	Power Supply	100	2	- -	
	Cooling Loops for Transmitters	150	1	50	
1405		(321.7)			Gimballed for sun pointing ± 15°.
	Solar Cell Panels (162ft^2)	260	27		
	Gimbal Mechanism	50	2	50	Sunlight 60 min/orbit
	Voltmeters (2)	.1	.01	- -	Gimbal power required continuously
	Ammeters (2)	.1	.01	- -	
	Multimeter (portable)	2	.02	- -	Generated power used for 0901 and 0902
	Pyheliometer	5	.3	- -	
	Movie and Still Cameras	4.5	.04	- -	Generates 1100 watts in sunlight
Auxiliary Equipment		(118)			
	Lights and TV Camera	20	.27	5/750	750 watts during nighttime.
	Movie Camera and spare magazine } EVA	38	.76	5	
	Gimbal and Booms	20	1	10	
	Computer	40	1	50	
	Data Storage, Telemetry, Signal Conditioners				
	Total Weight	3845			

*INCHES UNLESS OTHERWISE SPEC.

3. EXPERIMENT/SPACECRAFT INTEGRATION

3.1 MISSION DEFINITION

The primary purposes of Flight 507 are earth mapping in multiple frequency bands, and development of communication techniques for application to future missions. Experiments 1201, Earth Mapping of Man-made Emitted Radiation, and 0901-2, Earth Photography in Multiple Spectrum Bands, have dictated the use of a crew duty cycle in which an astronaut is always available for work.
The crew schedule is summarized in Table 3-1 and shown in detail in Table 3-2.

Use of this crew duty cycle allows Experiment 1201 to be completely fulfilled, and gives an additional two days for rechecking areas of interest. Experiment 0901-2 is performed during the daylight portion of every orbit over a three-day period. At other times during the mission, 0901-2 is performed when there is available crew time. A total of 110 daylight orbital portions are devoted to this experiment.

As implied by the notation 0901-2, it has been assumed that it is desirable and feasible to couple Experiments 0901 and 0902 so that both may be performed at the same time by one astronaut. In this way, when an area of interest is chosen, all sensors determine the signature of the area in their respective frequency bands.

Experiment 1202 (wideband transmission to earth) is performed five times per orbit, five orbits per day. However, due to the constraints imposed by other experiments, it is performed over only a three day period.

Also present on the flight is Experiment 1405: Testing of a Large Solar Array As a Power Source. Its power output, rated at 1100 watts, is to be used for the 0901-2 experiment. Tables 3-3 and 3-3A show power profiles where the solar array provides the power for 0901-2, and where the power penalty for performing 0901-2 is assumed taken from the primary power source, respectively.

Experiment 0501, Radiation Environment Monitoring, requires only ten minutes per man per day and is readily accommodated in the crew schedule.

Excluding experiment 0501, 0300 (biomedical), and 0200 (behavioral), it should be noted that complete accomplishment of any one experiment precludes the total accomplishment of others. For a ten hour/man/day work cycle, it is obvious that, with daily crew requirements for 1405 and 0501 to be satisfied, it is not possible to perform 0901-2 for the desired 12 hours per day. In addition, experiment 1201 requires 24 man hours per day. A further difficulty is that 1201 receives weak

TABLE 3-1 FLIGHT 5C7 MISSION DEFINITION SUMMARY*

Exper. No.	Occurence Day No.	Total Times Perf/ Mission	No. Men Req'd	Exper Time/Test Setup Time, min	Test time min	Total Exper Man-hr/ Mission Crewman 1	2	3	Total	Total Exper Man-hr/Mission Achv'd	Spec'd	Remarks
0100	1 thru 8	18	2		30 to 45	4.0	10.0	6.0	20.0	10.0	120.6	
0200	1 thru 8	43	1		30 to 90	17.1	16.1	7.9	41.1	41.1	70.9	0200's requiring 2 men cannot be performed
0501	1 thru 14	41	1		10	2.6	2.8	2.8	8.2	8.2	8.2	
0901,2	1 thru 14	110	1		48	26.4	20.0	41.6	88.0	88.0	175.7	1 EVA required for film change
1201	8 thru 14	6	1		1,440	51.0	48.0	48.0	147.0	147.0	148.0	
1202	5 thru 8	15	1		90	9.0	13.5	0	22.5	22.5	105.0	
1405	1 thru 14	21	1 or 2		30 to 180	10.0	12.5	20.0	42.5	24.5	24.5	3 EVA's required for setup & teardown
Film Change	5	1	3		120	2.0	2.0	2.0	6.0	2.0	2.0	
LiOH Change	7	1	2		60	1.0	1.0	0	2.0	1.0	1.0	1 EVA required
System Check(1)	1 thru 14	53	1		30 to 45	7.8	9.7	15.7	33.2	33.2	33.2	
					Totals	130.9	135.6	144.0	410.5			

Maximum Work Day: 11.9 Hrs on duty; Average Work Day: 10.0 Hrs. on duty; Minmum Work Day: 7.8 Hrs. on duty Total EVA Man Hrs. 19

NOTES:

(1) Systems checks have been removed from the crew schedule, Table 3-2 (see Volume 1, Section 3). The man hours for system checks are retained on this table to avoid changes in previously released man hour totals.

* See Tables 3-2 and 3-3 for crew schedules and experiment equipment duty cycles.

[redacted]

Table 3-2 CREW SCHEDULING, FLIGHT 507, SHEET 1 OF 4

DAY 1	ORBIT	CREWMEN ACTIVITIES 1	2	3
0000				
20				
40				
0100				StdBy For 1405 Setup
20		1405 Setup	1405 Setup	
40				
0200				
20				
40				
0300				
20		E/Hyg	E/Hyg	E/Hyg
40		Rest	Rest	
0400				Rest
20				
40				
0500				0901,2
20				0501
40				
0600				
20				
40				0901,2
0700		Sleep	Sleep	
20				
40				
0800				0901,2
20				
40				0200
0900				
20				
40				0901,2
1000				E/Hyg
20		E/Hyg	E/Hyg	
40		Rest	Rest	Rest
1100				
20				StdBy For 1405 Setup & Align
40				
1200				
20		Setup & Align	Setup & Align	
40				
1300				
20				
40				
1400				
20		E/Hyg	E/Hyg	
40				E/Hyg
1500		Rest	Rest	
20		1405 Cal	1405 Cal	
40				Rest
1600				
20		Rest	Rest	
40		1405 Cal	1405 Cal	
1700				
20				
40		Rest	Rest	
1800				
20		1405 Cal	1405 Cal	
40				
1900		0501	0501	Sleep
20		0100	0100	
40		1405 Cal	1405 Cal	
2000				
20				
40		0100	0100	
2100				
20		1405 Cal	1405 Cal	
40				
2200				
20		E/Hyg	Rest	
40			1405 Data	E/Hyg
2300				
20				
40		Rest	Rest	Rest
2400				

DAY 2	ORBIT	CREWMEN ACTIVITIES 1	2	3
0000				
20				
40			E/Hyg	0901,2
0100				
20				
40			Rest	
0200				0901,2
20				
40			0200	
0300		Sleep		
20				Rest
40			0901,2	
0400				
20			0100	0100
40				
0500			0901,2	0200
20			0501	
40				
0600			0100	0100
20				0901,2
40		E/Hyg	E/Hyg	
0700				
20				
40		Rest	Rest	
0800				0901,2
20				
40		0200		E/Hyg
0900				
20				
40		0901,2		
1000				Rest
20				
40				
1100		Rest	Sleep	0901,2
20				
40				
1200				
20				0901,2
40		0200		
1300				0501
20				
40				1405
1400		0901,2		
20				
40		0200	E/Hyg	E/Hyg
1500				
20		0901,2	Rest	Rest
40				
1600				
20				
40		E/Hyg		
1700			0901,2	
20				
40		Rest	0200	
1800				
20		0901,2		
40				
1900		0501	Rest	Sleep
20				
40				
2000		0901,2		
20				
40		0100	0100	
2100				
20			0901,2	
40		0200		
2200				
20			0200	
40		E/Hyg	0901,2	E/Hyg
2300				
20				
40		Rest	0200	Rest
2400				

DAY 3	ORBIT	CREWMEN ACTIVITIES 1	2	3
0000				
20			E/Hyg	0901,2
40				
0100				
20				
40			Rest	
0200				0901,2
20				
40			0200	
0300		Sleep		
20				Rest
40			0901,2	
0400				
20			0100	0100
40				
0500			0901,2	0200
20			0501	
40				
0600			0100	0100
20				0901,2
40		E/Hyg	E/Hyg	
0700				
20				
40		Rest	Rest	
0800				0901,2
20				
40		0200		E/Hyg
0900				
20				
40		0901,2		
1000				Rest
20				
40				
1100		Rest	Sleep	0901,2
20				
40				
1200				
20				0901,2
40		0200		
1300				0501
20				
40				1405
1400		0901,2		
20				
40		0200	E/Hyg	E/Hyg
1500				
20		0901,2	Rest	Rest
40				
1600				
20				
40		E/Hyg		
1700			0901,2	
20				
40		Rest	0200	
1800				
20		0901,2		
40				
1900		0501	Rest	Sleep
20				
40				
2000		0901,2		
20				
40		0100	0100	
2100				
20			0901,2	
40		0200		
2200				
20			0200	
40		E/Hyg		E/Hyg
2300			0901,2	
20				
40		Rest	0200	Rest
2400				

DAY 4	ORBIT	CREWMEN ACTIVITIES 1	2	3
0000				
20			E/Hyg	0901,2
40				
0100				
20				
40			Rest	
0200				0901,2
20				
40			0200	
0300		Sleep		
20				Rest
40			0901,2	
0400				
20			0100	0100
40				
0500			0901,2	0200
20			0501	
40				
0600			0100	0100
20				0901,2
40		E/Hyg	E/Hyg	
0700				
20				
40		Rest	Rest	
0800				0901,2
20				
40		0200		E/Hyg
0900				
20				
40		0901,2		
1000				Rest
20				
40				
1100		Rest	Sleep	0901,2
20				
40				
1200				
20				0901,2
40		0200		
1300				0501
20				
40				1405
1400		0901,2		
20				
40		0200	E/Hyg	E/Hyg
1500				
20		0901,2	Rest	Rest
40				
1600				
20				
40		E/Hyg		
1700			0901,2	
20				
40		Rest	0200	
1800				
20		0901,2		
40				
1900		0501	Rest	Sleep
20				
40				
2000		0901,2		
20				
40		E/Hyg	0200	
2100		Rest		
20			0901,2	
40				
2200				
20			0200	
40		Sleep		E/Hyg
2300			0901,2	
20				
40			0200	Rest
2400				

NOTES

Earth Dark

Earth Lighted

etc.

E/Hyg — Eat & Personal Hygiene

Limits of Experiment time

Limits of EVA

[redacted]

Table 3-2 **CREW SCHEDULING, FLIGHT 507, SHEET 2 OF 4**

DAY 5	ORBIT	CREWMEN ACTIVITIES 1	2	3
0000				
20				
40			E/Hyg	0901,2
0100				
20		Sleep		
40			Rest	
0200				0901,2
20			0501	
40			0200	
0300				Rest
20		E/Hyg	0901,2	
40		Rest		
0400				
20			Film Change & Solar Cell Photo	Film Change & Solar Cell Photo
40		StdBy For Film Change		
0500				
20				
40				
0600				
20				0901,2
40		E/Hyg	E/Hyg	
0700				
20				
40		Rest	Rest	
0800				0901,2
20				
40				E/Hyg
0900		1202		
20				
40				Rest
1000				
20				0200
40				
1100		Rest	Sleep	0901,2
20				
40				
1200				
20				0901,2
40				
1300		0200		0501
20				
40				1405
1400		0901,2		
20				
40			E/Hyg	E/Hyg
1500				
20		1202		
40			Rest	Rest
1600				
20				
40		E/Hyg		
1700			1202	
20				
40		Rest		
1800				
20		0901,2		
40				
1900		0501		Sleep
20			Rest	
40				
2000		0901,2		
20				
40		0100	0100	
2100				
20		0901,2		
40			0200	
2200				
20		E/Hyg		
40				E/Hyg
2300			1202	
20				
40		Rest		Rest
2400				

DAY 6	ORBIT	CREWMEN ACTIVITIES 1	2	3
0000				
20				
40			E/Hyg	0901,2
0100				
20				
40			Rest	
0200				0901,2
20			0200	
40				
0300		Sleep	1202	Rest
20				
40				
0400				
20			0100	0100
40				
0500			0901,2	0200
20				
40			0501	
0600			0100	0100
20				
40		E/Hyg	E/Hyg	0901,2
0700				
20				
40		Rest	Rest	
0800				0901,2
20				
40				E/Hyg
0900		1202		
20				
40				Rest
1000				
20				
40				
1100		Rest	Sleep	0901,2
20				
40				
1200				
20				0901,2
40				
1300		0200		0501
20				
40				1405
1400		0901,2		
20				
40			E/Hyg	E/Hyg
1500				
20		1202		
40			Rest	Rest
1600				
20				
40		E/Hyg		
1700			1202	
20				
40		Rest		
1800				
20		0901,2		
40				
1900		0501		Sleep
20			Rest	
40				
2000		0901,2		
20				
40		0100	0100	
2100				
20		0901,2		
40			0200	
2200				
20		E/Hyg		
40				E/Hyg
2300			1202	
20				
40		Rest		Rest
2400				

DAY 7	ORBIT	CREWMEN ACTIVITIES 1	2	3
0000				
20				
40			E/Hyg	0901,2
0100				
20				
40			Rest	
0200				0901,2
20			0200	
40				
0300		Sleep	1202	Rest
20				
40				
0400				
20			0100	0100
40				
0500			0901,2	0200
20			0501	
40				
0600			0100	0100
20				
40		E/Hyg	E/Hyg	0901,2
0700				
20				
40		Rest	Rest	
0800				0901,2
20				
40				E/Hyg
0900		1202		
20				
40				Rest
1000				
20				
40				
1100		Rest	Sleep	0901,2
20				
40				
1200				
20				0901,2
40				
1300		0200		0501
20				
40				1405
1400		0901,2		
20				
40			E/Hyg	E/Hyg
1500				Rest
20		1202		
40			Rest	
1600				
20				
40		E/Hyg		
1700			1202	
20				
40		Rest		
1800				Sleep
20		0901,2		
40				
1900		0501	Rest	
20				
40				
2000		0901,2		
20				
40				
2100				
20		LIoh & S.Cell Foto	StdBy For L10H	E/Hyg
40				
2200				
20		E/Hyg	0200	
40				Rest
2300			1202	
20				
40		Rest		
2400				

DAY 8	ORBIT	CREWMEN ACTIVITIES 1	2	3
0000				
20				0901,2
40			E/Hyg	
0100				
20				
40			Rest	
0200				0901,2
20			0200	
40				
0300		Sleep	1202	Rest
20				
40				
0400				
20			0100	0100
40				
0500			0901,2	0200
20				
40			0501	
0600			0100	0100
20				
40		E/Hyg	E/Hyg	0901,2
0700				
20				
40		Rest	Rest	
0800				0901,2
20				
40		0200		E/Hyg
0900				
20		0901,2		
40				Rest
1000				
20				
40				
1100		Rest	Sleep	0901,2
20				
40				
1200				
20		1201 Setup		0901,2 Passive
40				
1300				0501
20				
40				1405
1400				
20		1201	E/Hyg	E/Hyg
40				
1500				
20			Rest	Rest
40				
1600				
20		E/Hyg	1201	
40				
1700				
20		Rest		
40				
1800				
20		1201	Rest	Sleep
40				
1900				
20				
40				
2000		0501		
20				
40				
2100				
20		0901,2 Passive	1201	
40				
2200				
20		E/Hyg		E/Hyg
40				
2300				
20				
40		Rest		Rest
2400				

NOTES

Table 3-2 CREW SCHEDULING, FLIGHT 507, SHEET 3 OF 4

DAY 9	ORBIT	CREWMEN ACTIVITIES 1	2	3
0000		Sleep	E/Hyg	1201
20				
40				
0100			Rest	
20				
40				
0200			1201	Rest
20				
40				
0300				
20				
40				
0400				
20				
40			0901,2 Passive	1201
0500			0501	
20				
40				
0600			E/Hyg	E/Hyg
20				
40				
0700			Rest	Rest
20				
40				
0800			1201	Sleep
20				
40				E/Hyg
0900				
20				
40				Rest
1000			Rest	1201
20				
40				
1100				
20				
40				
1200			1201	0901,2 Passive
20				
40				0501
1300			1201 Setup	1405
20				
40				
1400			1201	E/Hyg
20				
40				E/Hyg
1500				
20				
40				Rest
1600				Rest
20				
40			E/Hyg	1201
1700				
20				
40			Rest	
1800				
20				
40			1201	Rest
1900				Sleep
20				
40				
2000				
20			0501	
40				
2100				
20			0901,2 Passive	
40				
2200				1201
20				
40			E/Hyg	
2300				E/Hyg
20				
40			Rest	
2400				Rest

DAY 10	ORBIT	CREWMEN ACTIVITIES 1	2	3
0000		Sleep	E/Hyg	1201
20				
40				
0100			Rest	
20				
40				
0200			1201	Rest
20				
40				
0300				
20				
40				
0400				
20				
40			0901,2 Passive	1201
0500			0501	
20				
40				
0600			E/Hyg	E/Hyg
20				
40				
0700			Rest	Rest
20				
40				
0800			1201	Sleep
20				
40				E/Hyg
0900				
20				
40				Rest
1000			Rest	1201
20				
40				
1100				
20				
40				
1200			1201	0901,2 Passive
20				
40				0501
1300				1405
20				
40				
1400			1201 Setup	E/Hyg
20				
40				E/Hyg
1500				
20				
40			1201	Rest
1600				Rest
20				
40			E/Hyg	1201
1700				
20				
40			Rest	
1800				
20				
40			1201	Rest
1900				Sleep
20				
40				
2000				
20			0501	
40				
2100				
20			0901,2 Passive	
40				
2200				1201
20				
40			E/Hyg	
2300				E/Hyg
20				
40			Rest	
2400				Rest

DAY 11	ORBIT	CREWMEN ACTIVITIES 1	2	3
0000		Sleep	E/Hyg	1201
20				
40				
0100			Rest	
20				
40				
0200			1201	Rest
20				
40				
0300				
20				
40				
0400				
20				
40			0901,2 Passive	1201
0500			0501	
20				
40				
0600			E/Hyg	E/Hyg
20				
40				
0700			Rest	Rest
20				
40				
0800			1201	Sleep
20				
40				E/Hyg
0900				
20				
40				Rest
1000			Rest	1201
20				
40				
1100				
20				
40				
1200			1201	0901,2 Passive
20				
40				0501
1300				1405
20				
40				
1400			1201 Setup	E/Hyg
20				
40				E/Hyg
1500				
20				
40			1201	Rest
1600				Rest
20				
40			E/Hyg	1201
1700				
20				
40			Rest	
1800				
20				
40			1201	Rest
1900				Sleep
20				
40				
2000				
20			0501	
40				
2100				
20			0901,2 Passive	
40				
2200				1201
20				
40			E/Hyg	
2300				E/Hyg
20				
40			Rest	
2400				Rest

DAY 12	ORBIT	CREWMEN ACTIVITIES 1	2	3
0000		Sleep	E/Hyg	1201
20				
40				
0100			Rest	
20				
40				
0200			1201	Rest
20				
40				
0300				
20				
40				
0400				
20				
40			0901,2 Passive	
0500			0501	
20				
40				
0600			E/Hyg	E/Hyg
20				
40				
0700			Rest	Rest
20				
40				
0800			1201	Sleep
20				
40				E/Hyg
0900				
20				
40				Rest
1000			Rest	1201
20				
40				
1100				
20				
40				
1200			1201 Redone	0901,2 Passive
20				
40				0501
1300				1405
20				
40				
1400				E/Hyg
20				
40				E/Hyg
1500				
20				
40				Rest
1600				Rest
20				
40			E/Hyg	1201 Redone
1700				
20				
40			Rest	
1800				
20				
40			1201 Redone	Rest
1900				Sleep
20				
40				
2000				
20			0501	
40				
2100				
20			0901,2 Passive	
40				
2200				1201 Redone
20				
40			E/Hyg	
2300				E/Hyg
20				
40			Rest	
2400				Rest

NOTES

Table 3-2 **CREW SCHEDULING, FLIGHT** 507, **SHEET** 4 **OF** 4

DAY 13	ORBIT	CREWMEN ACTIVITIES 1	2	3
0000				
20				
40			E/Hyg	
0100				1201 Redone
20			Rest	
40				
0200				
20				
40				
0300		Sleep	1201 Redone	Rest
20				
40				
0400				
20				
40			0901,2 Passive	
0500				
20				
40			0501	
0600				1201 Redone
20				
40		E/Hyg	E/Hyg	
0700				
20				
40		Rest	Rest	
0800				
20				
40				E/Hyg
0900		1201 Redone		
20				
40				Rest
1000				
20				
40				
1100		Rest	Sleep	1201 Redone
20				
40				
1200				
20				0901,2 Passive
40				
1300				0501
20				
40		1201 Redone		1405
1400				
20				
40			E/Hyg	E/Hyg
1500				
20				
40			Rest	Rest
1600				
20				
40		E/Hyg		
1700			1201 Redone	
20				
40		Rest		
1800				
20				
40				
1900		1201 Redone	Rest	Sleep
20				
40				
2000				
20		0501		
40				
2100				
20		0901,2 Passive		
40				
2200			1201 Redone	
20				
40		E/Hyg		E/Hyg
2300				
20				
40		Rest		Rest
2400				

DAY 14	ORBIT	CREWMEN ACTIVITIES 1	2	3
0000				
20				
40			E/Hyg	
0100				1201 Redone
20			Rest	
40				
0200				
20				
40				
0300		Sleep	1201 Redone	Rest
20				
40				
0400				
20				
40			0901,2 Passive	
0500				
20				
40			0501	
0600				1201 Redone
20				
40		E/Hyg	E/Hyg	
0700				
20				
40		Rest	Rest	
0800				
20				
40				E/Hyg
0900		1201 Redone		
20				
40				Rest
1000				
20				
40				
1100		Rest	Sleep	1201 Redone
20				
40				
1200				
20				0901,2 Passive
40				
1300				0501
20				
40		1201 Redone		
1400				
20				
40			E/Hyg	
1500				
20			Rest	
40		E/Hyg	1405 Tear Down	StnBy For 1405 Tear Down
1600				
20				
40		Rest		
1700				
20				
40				
1800				
20				
40				
1900				
20				
40				
2000				
20				
40				
2100				
20				
40				
2200				
20				
40				
2300				
20				
40				
2400				

DAY	ORBIT	CREWMEN ACTIVITIES 1	2	3
0000				
20				
40				
0100				
20				
40				
0200				
20				
40				
0300				
20				
40				
0400				
20				
40				
0500				
20				
40				
0600				
20				
40				
0700				
20				
40				
0800				
20				
40				
0900				
20				
40				
1000				
20				
40				
1100				
20				
40				
1200				
20				
40				
1300				
20				
40				
1400				
20				
40				
1500				
20				
40				
1600				
20				
40				
1700				
20				
40				
1800				
20				
40				
1900				
20				
40				
2000				
20				
40				
2100				
20				
40				
2200				
20				
40				
2300				
20				
40				
2400				

DAY	ORBIT	CREWMEN ACTIVITIES 1	2	3
0000				
20				
40				
0100				
20				
40				
0200				
20				
40				
0300				
20				
40				
0400				
20				
40				
0500				
20				
40				
0600				
20				
40				
0700				
20				
40				
0800				
20				
40				
0900				
20				
40				
1000				
20				
40				
1100				
20				
40				
1200				
20				
40				
1300				
20				
40				
1400				
20				
40				
1500				
20				
40				
1600				
20				
40				
1700				
20				
40				
1800				
20				
40				
1900				
20				
40				
2000				
20				
40				
2100				
20				
40				
2200				
20				
40				
2300				
20				
40				
2400				

NOTES

earth-originating signals. If 1202, or the active portion of 0901-2 were to be performed, signals would be drowned out. Similarly, the signal returns associated with 0901-2 would be drowned out, if this experiment were performed simultaneously with 1202.

Because of experiment demands on crew time, only a minimum amount of 0100 and 0200 Experiments could be scheduled for this flight.

Day 14 is not included in Table 3-1, since only 17 hours of that day are devoted to the flight.

Each man's work-rest cycle is essentially the same for each day. Changes in the daily routine, such as moving the sleep period up two hours and temporarily decreasing the eating and rest times, have been made where it has been necessary to have three men on duty for extra-vehicular activities. These changes in routine have been kept to a minimum and do not exceed two such changes per man.

GRUMMAN AIRCRAFT ENGINEERING CORPORATION

Table 3-3 APOLLO EXTENSION SYSTEM EARTH ORBIT MISSION STUDY
FLIGHT 507 EXPERIMENT MISSION PROFILE

DAY 1

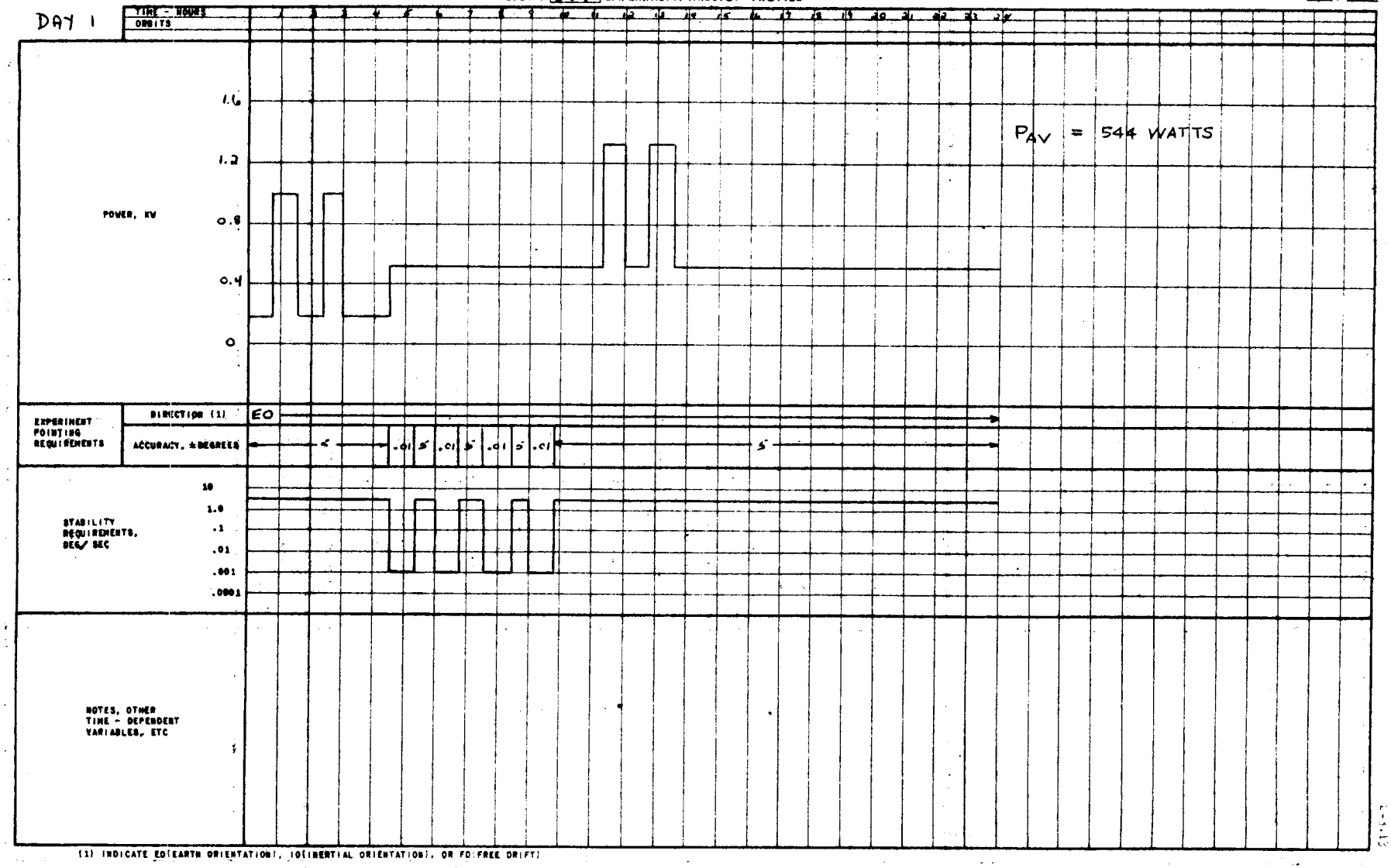

(1) INDICATE EO(EARTH ORIENTATION), IO(INERTIAL ORIENTATION), OR FD(FREE DRIFT)

GRUMMAN AIRCRAFT ENGINEERING CORPORATION

Table 3-3 APOLLO EXTENSION SYSTEM EARTH ORBIT MISSION STUDY
FLIGHT 509 EXPERIMENT MISSION PROFILE

DAYS 2-4

TIME - HOURS
ORBITS

POWER, KW: 1.6, 1.2, 0.8, 0.4, 0

P_{AV} = 500 WATTS

EXPERIMENT POINTING REQUIREMENTS

DIRECTION (1): EO

ACCURACY, ±DEGREES: .01 5 .01 5 .01 5 .01 5 .01 5 .01 5 .01 5 .01 5 .01 5 .01 5 .01 5 .01 5 .01 5 .01 5 .01 5 .01 5

STABILITY REQUIREMENTS, DEG/SEC: 10, 1.0, .1, .01, .001, .0001

NOTES, OTHER TIME - DEPENDENT VARIABLES, ETC

(1) INDICATE EO(EARTH ORIENTATION), IO(INERTIAL ORIENTATION), OR FD(FREE DRIFT)

GRUMMAN AIRCRAFT ENGINEERING CORPORATION

Table 3-3 APOLLO EXTENSION SYSTEM EARTH ORBIT MISSION STUDY
FLIGHT 507 EXPERIMENT MISSION PROFILE

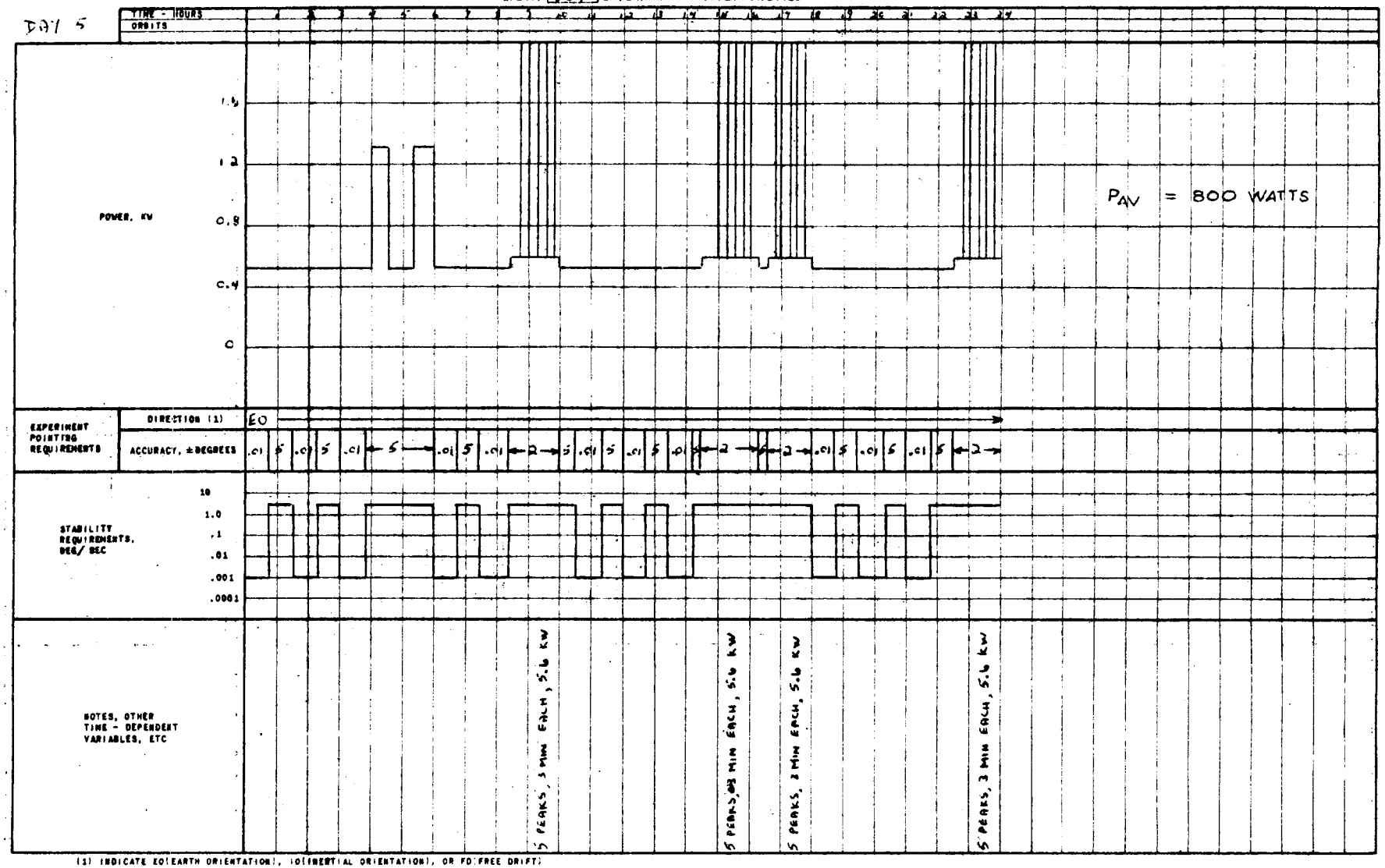

(1) INDICATE EO(EARTH ORIENTATION), IO(INERTIAL ORIENTATION), OR FD(FREE DRIFT)

GRUMMAN AIRCRAFT ENGINEERING CORPORATION

Table 3-3 APOLLO EXTENSION SYSTEM EARTH ORBIT MISSION STUDY
FLIGHT 607 EXPERIMENT MISSION PROFILE

SHEET 4 OF 8

DAY 6

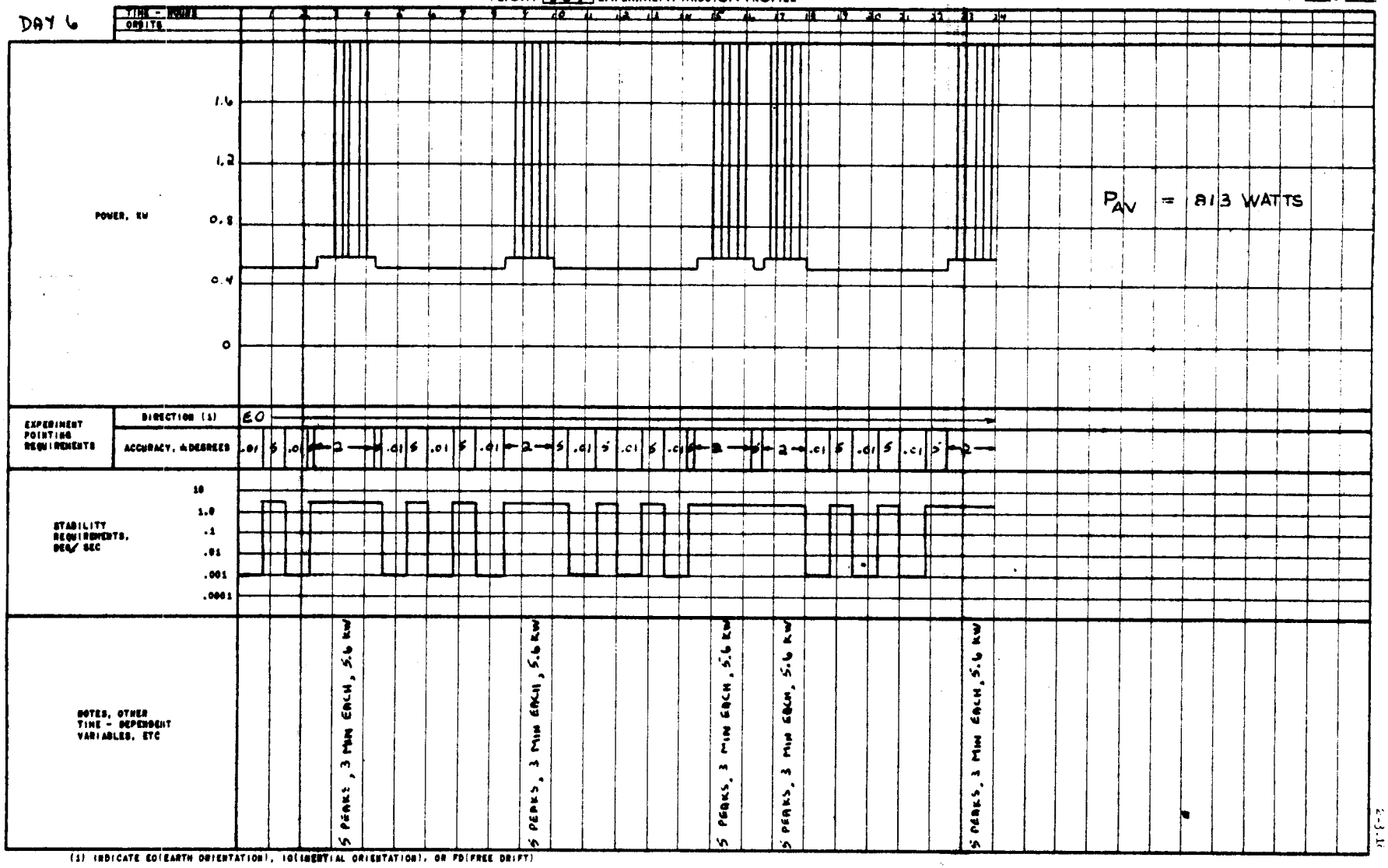

(1) INDICATE EO(EARTH ORIENTATION), IO(INERTIAL ORIENTATION), OR FD(FREE DRIFT)

Table 3-3 APOLLO EXTENSION SYSTEM EARTH ORBIT MISSION STUDY
FLIGHT [501] EXPERIMENT MISSION PROFILE

DAY 7

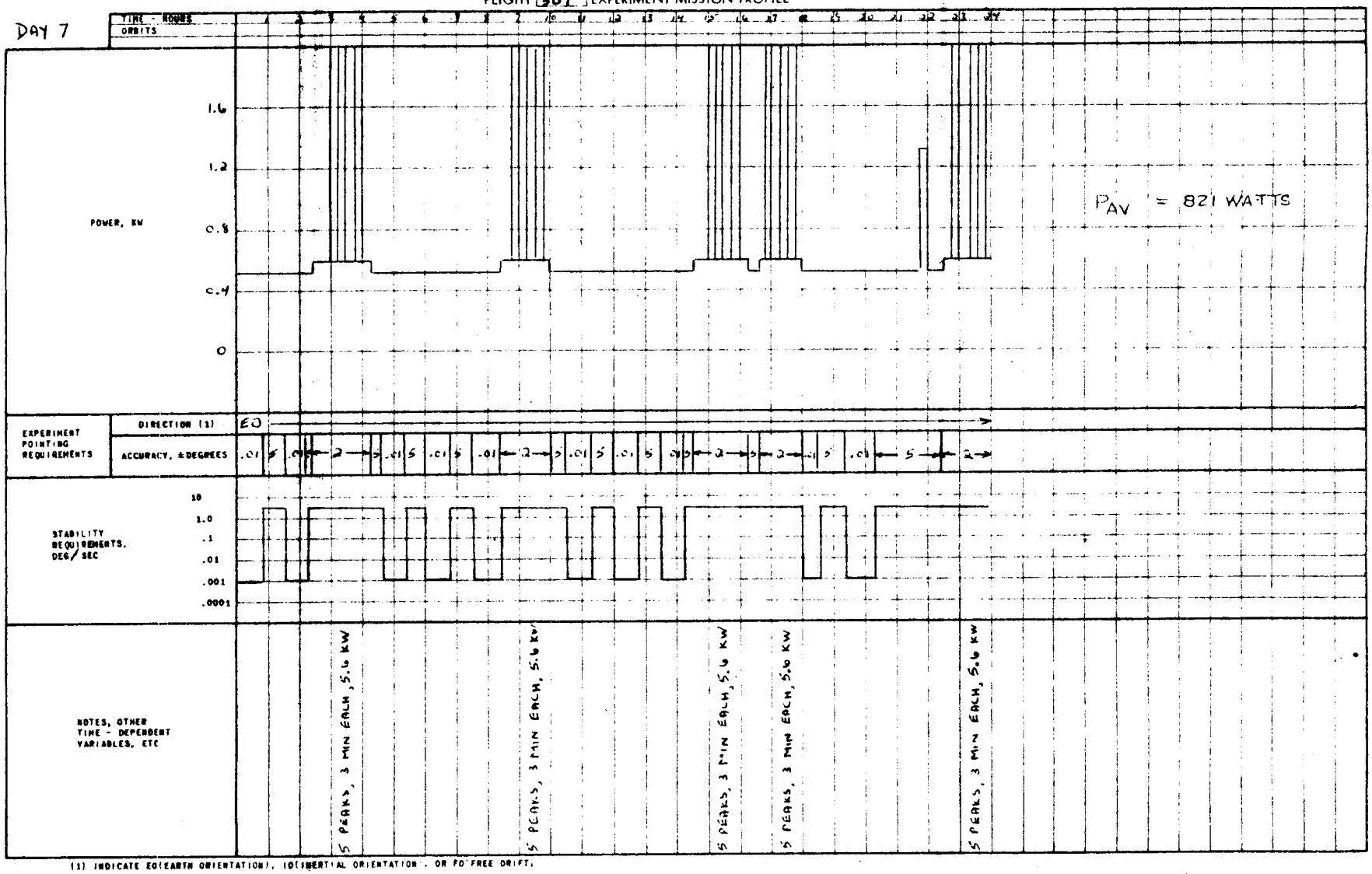

(1) INDICATE EO(EARTH ORIENTATION), IO(INERTIAL ORIENTATION), OR FD'FREE DRIFT.

GRUMMAN AIRCRAFT ENGINEERING CORPORATION

Table 3-3 APOLLO EXTENSION SYSTEM EARTH ORBIT MISSION STUDY
FLIGHT 507 EXPERIMENT MISSION PROFILE

SHEET 6 OF 8

DAY 8

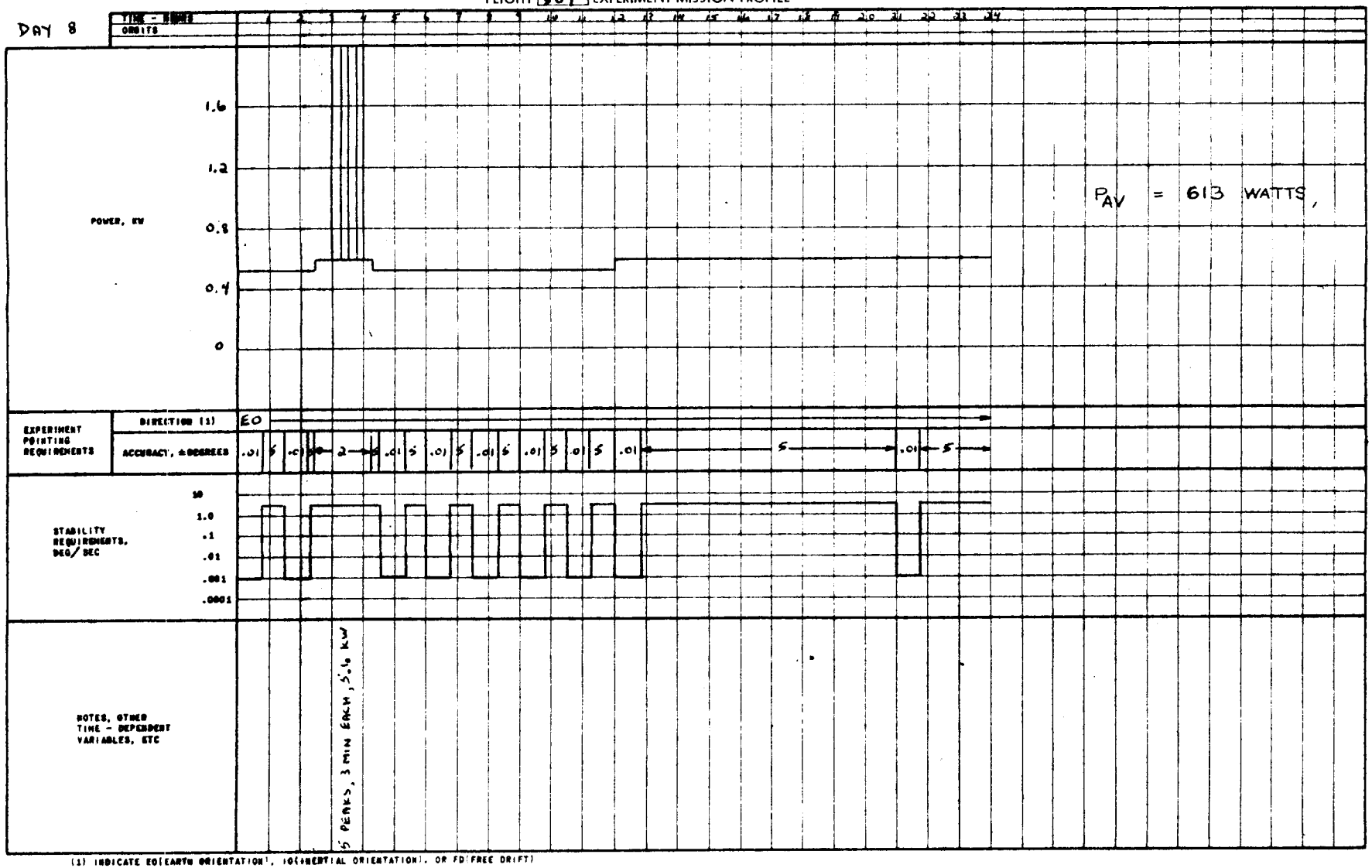

(1) INDICATE EO(EARTH ORIENTATION), IO(INERTIAL ORIENTATION), OR FD(FREE DRIFT)

GRUMMAN AIRCRAFT ENGINEERING CORPORATION

Table 3-3 APOLLO EXTENSION SYSTEM EARTH ORBIT MISSION STUDY

FLIGHT [ ] EXPERIMENT MISSION PROFILE

DAYS 9-13

TIME - HOURS

ORBITS

1 2 3 4 5 6 7 8 9 10 11 12 13 14 15 16 17 18 19 20 21 22 23 24

POWER, KW: 1.6, 1.2, 0.8, 0.4, 0

P_{AV} = 600 WATTS

EXPERIMENT POINTING REQUIREMENTS

DIRECTION (1): EO

ACCURACY, ±DEGREES: 5 → .01 ← 5 → .01 ← 5 → .01 ← 5 →

STABILITY REQUIREMENTS, DEG/SEC: 10, 1.0, .1, .01, .001, .0001

NOTES, OTHER TIME - DEPENDENT VARIABLES, ETC

(1) INDICATE EO(EARTH ORIENTATION), IO(INERTIAL ORIENTATION), OR FO(FREE DRIFT)

[redacted]

[redacted]

GRUMMAN AIRCRAFT ENGINEERING CORPORATION

Table 3-3 APOLLO EXTENSION SYSTEM EARTH ORBIT MISSION STUDY
FLIGHT 501 EXPERIMENT MISSION PROFILE

DAY 14

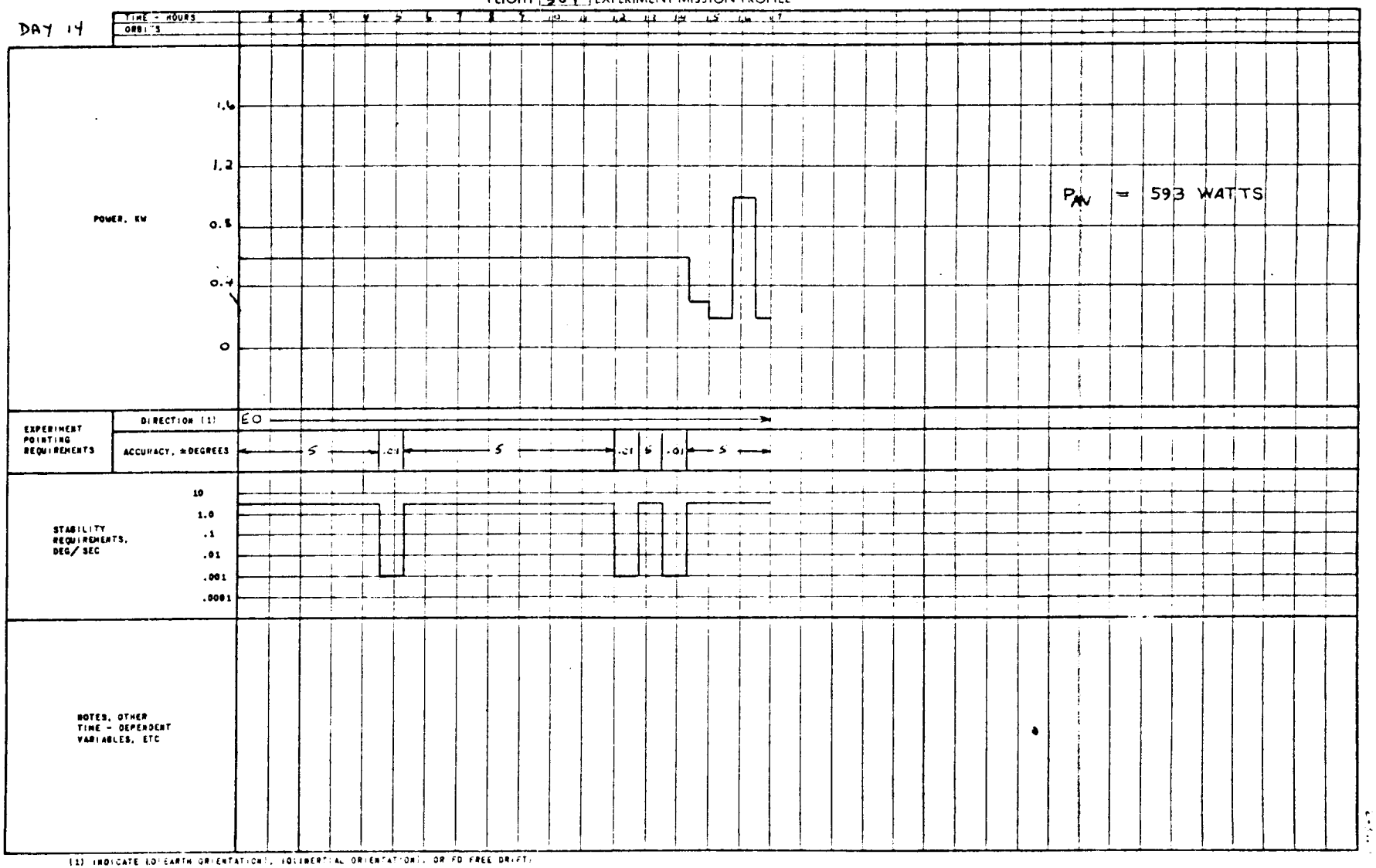

(1) INDICATE (0) EARTH ORIENTATION, (0) INERTIAL ORIENTATION, OR FD FREE DRIFT)

GRUMMAN AIRCRAFT ENGINEERING CORPORATION

Table 3-3a -APOLLO EXTENSION SYSTEM EARTH ORBIT MISSION STUDY

FLIGHT #07 EXPERIMENT MISSION PROFILE

SHEET 1 OF 8

DAY 1

TIME - HOURS: 1 2 3 4 5 6 7 8 9 10 11 12 13 14 15 16 17 18 19 20 21 22 23 24

ORBITS

POWER, KW: 1.6, 1.2, 0.8, 0.4, 0

P_{AV} = 680 WATTS

EXPERIMENT POINTING REQUIREMENTS

DIRECTION (1): EO

ACCURACY, ±DEGREES: 5 .01 5 .01 5 .01 5 .01 5

STABILITY REQUIREMENTS, DEG/SEC: 10, 1.0, .1, .01, .001, .0001

NOTES, OTHER TIME - DEPENDENT VARIABLES, ETC

NO SOLAR CELL CREDIT

(1) INDICATE EO(EARTH ORIENTATION), IO(INERTIAL ORIENTATION), OR FD(FREE DRIFT)

CONFIDENTIAL

GRUMMAN AIRCRAFT ENGINEERING CORPORATION

Table 3-3a APOLLO EXTENSION SYSTEM EARTH ORBIT MISSION STUDY

FLIGHT 507 EXPERIMENT MISSION PROFILE

SHEET 2 OF 3

DAYS 2-4

TIME - HOURS: 1 2 3 4 5 6 7 8 9 10 11 12 13 14 15 16 17 18 19 20 21 22 23 24

ORBITS

POWER, KW: 1.6 / 1.2 / 0.8 / 0.4 / 0

P_{AV} = 1044 WATTS

EXPERIMENT POINTING REQUIREMENTS

DIRECTION (1): EO

ACCURACY, ±DEGREES: .01 5 .01 5 .01 5 .01 5 .01 5 .01 5 .01 5 .01 5 .01 5 .01 5 .01 5 .01 5 .01 5 .01 5 .01 5 .01 5 .01 5

STABILITY REQUIREMENTS, DEG/SEC: 10 / 1.0 / .1 / .01 / .001 / .0001

NOTES, OTHER TIME - DEPENDENT VARIABLES, ETC

NO SOLAR CELL CREDIT

(1) INDICATE EO (EARTH ORIENTATION), IO (INERTIAL ORIENTATION), OR FO (FREE DRIFT)

2-3.22

GRUMMAN AIRCRAFT ENGINEERING CORPORATION

Table 3-3a APOLLO EXTENSION SYSTEM EARTH ORBIT MISSION STUDY
FLIGHT 507 EXPERIMENT MISSION PROFILE

SHEET 3 OF 3

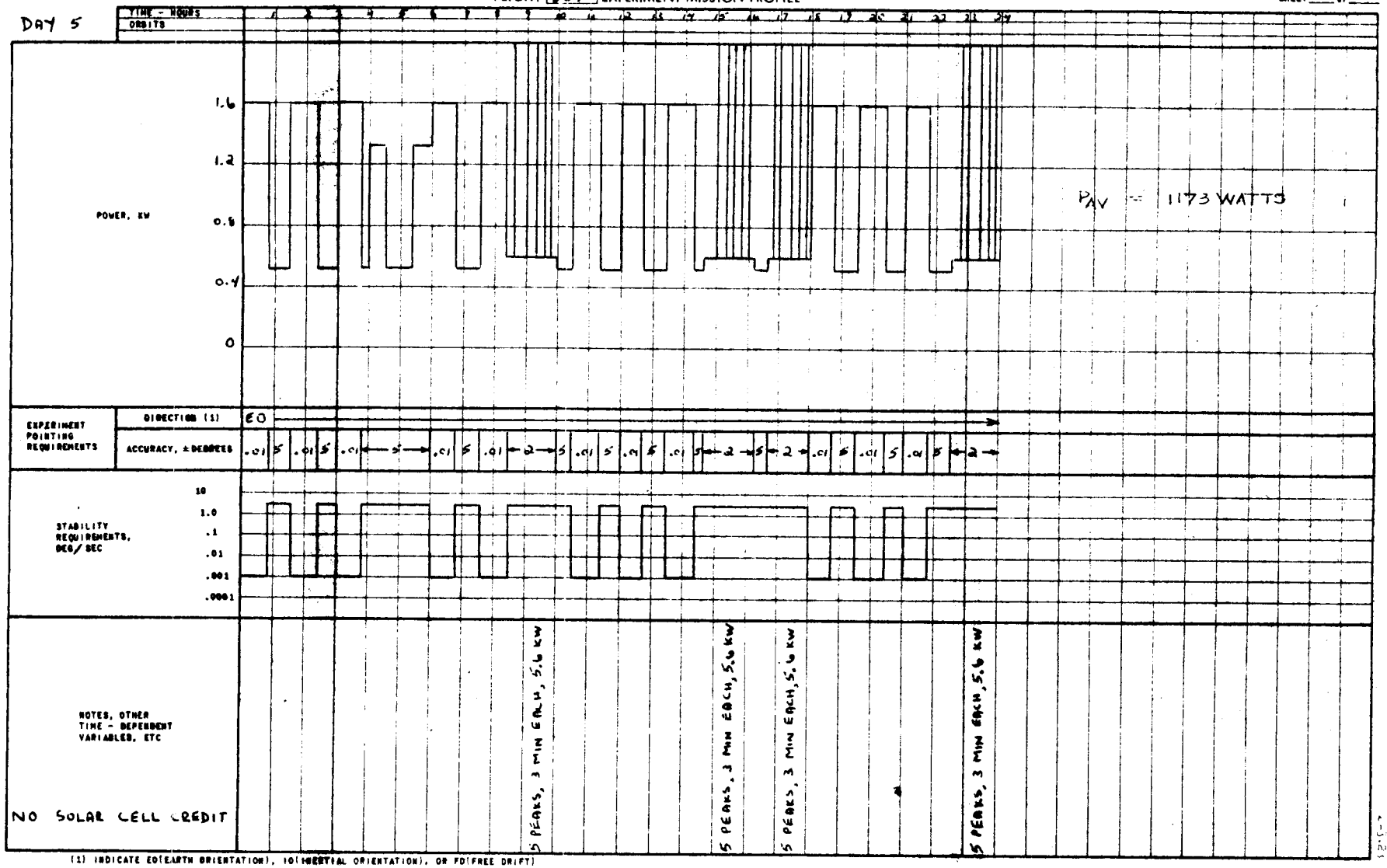

(1) INDICATE EO(EARTH ORIENTATION), IO(INERTIAL ORIENTATION), OR FO(FREE DRIFT)

GRUMMAN AIRCRAFT ENGINEERING CORPORATION

Table 3-3a APOLLO EXTENSION SYSTEM EARTH ORBIT MISSION STUDY
FLIGHT 207 EXPERIMENT MISSION PROFILE

SHEET 4 OF 8

DAY 6

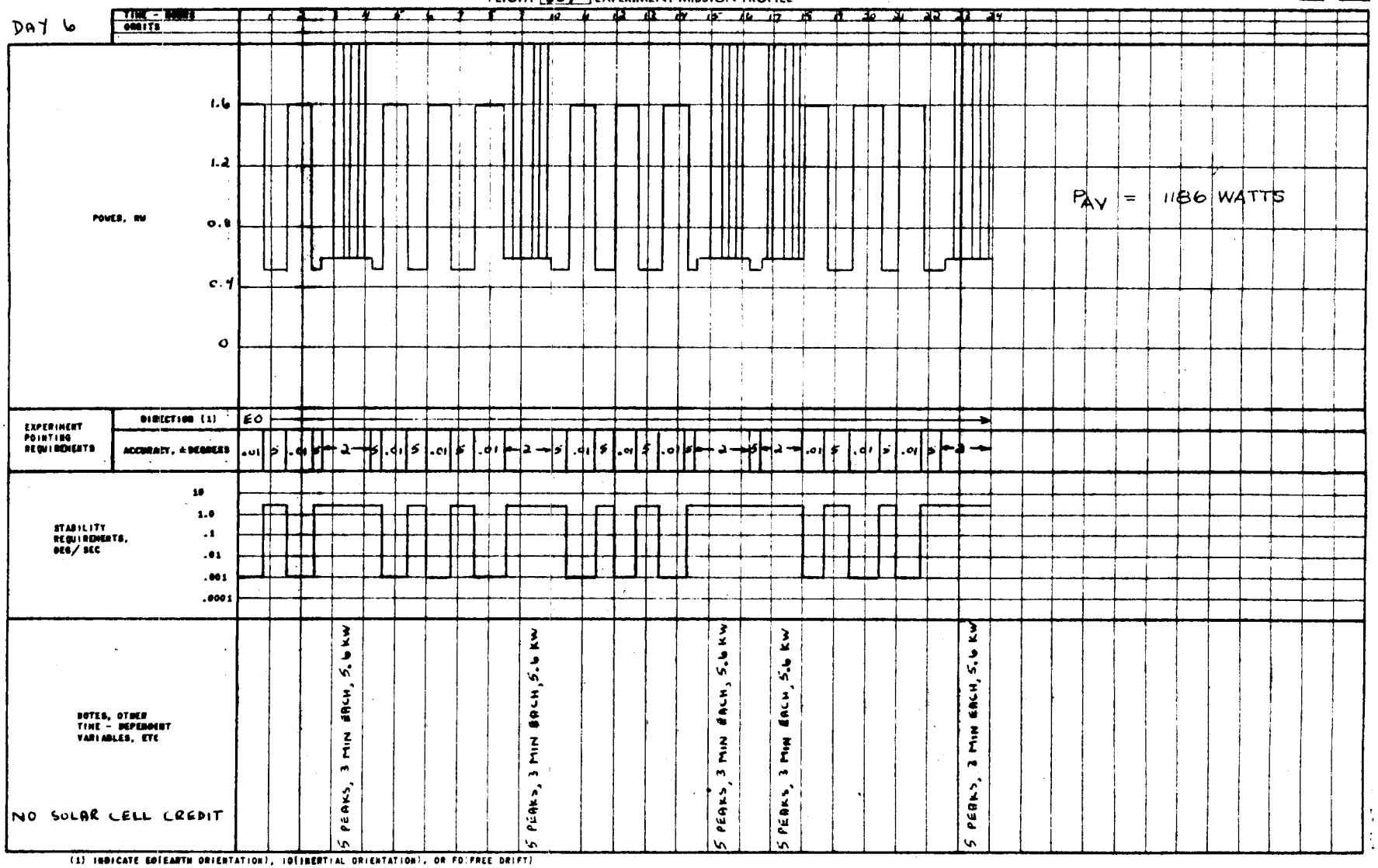

(1) INDICATE EO(EARTH ORIENTATION), IO(INERTIAL ORIENTATION), OR FO(FREE DRIFT)

BOEING AIRCRAFT ENGINEERING CORPORATION

Table 3-3a APOLLO EXTENSION SYSTEM EARTH ORBIT MISSION STUDY
FLIGHT [501] EXPERIMENT MISSION PROFILE

DAY 7

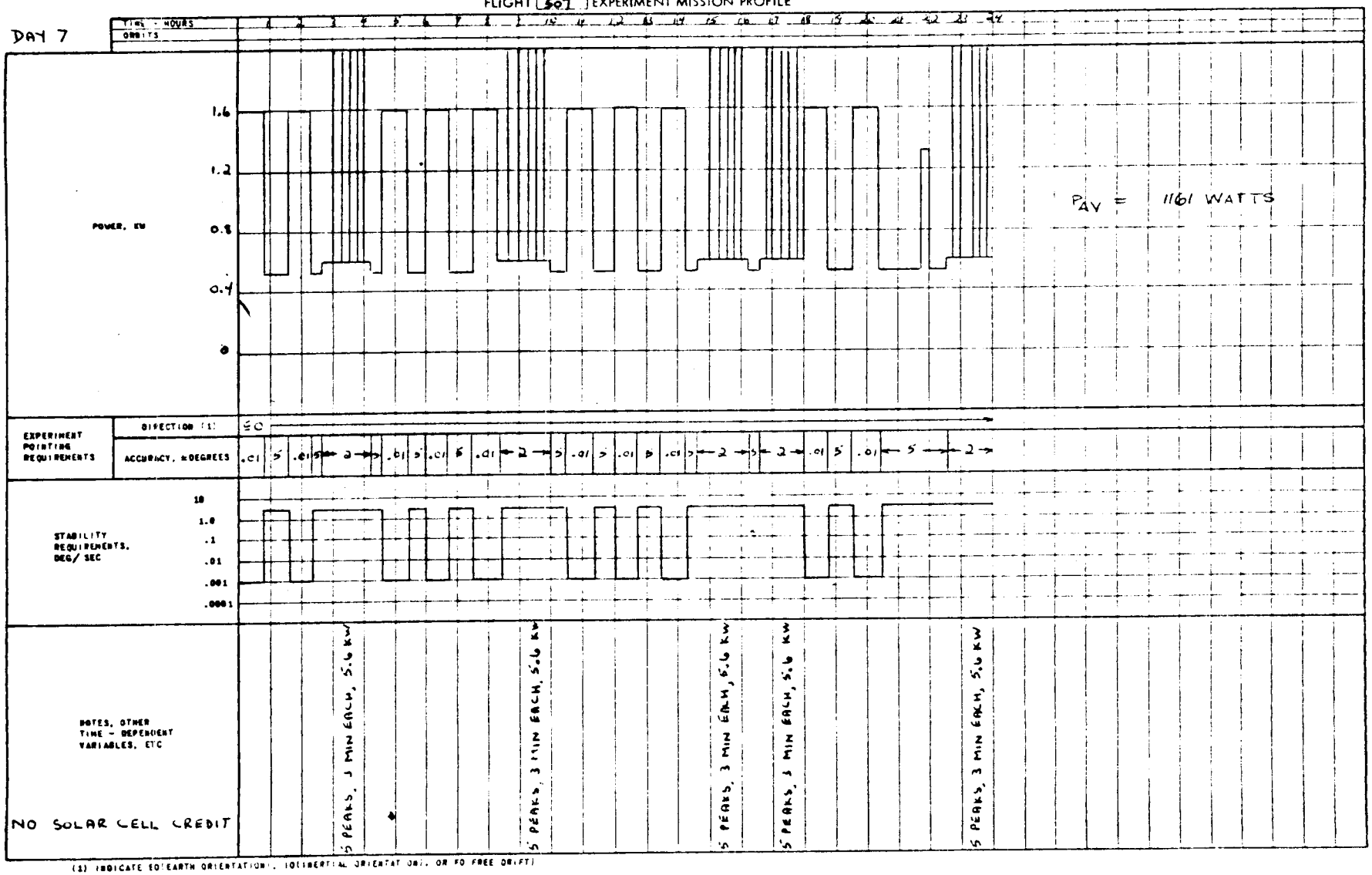

(1) INDICATE EO (EARTH ORIENTATION), IO (INERTIAL ORIENTATION), OR FO (FREE DRIFT)

GRUMMAN AIRCRAFT ENGINEERING CORPORATION

Table 3-3a APOLLO EXTENSION SYSTEM EARTH ORBIT MISSION STUDY
FLIGHT [607] EXPERIMENT MISSION PROFILE

SHEET 7 OF 8

DAYS 9-13

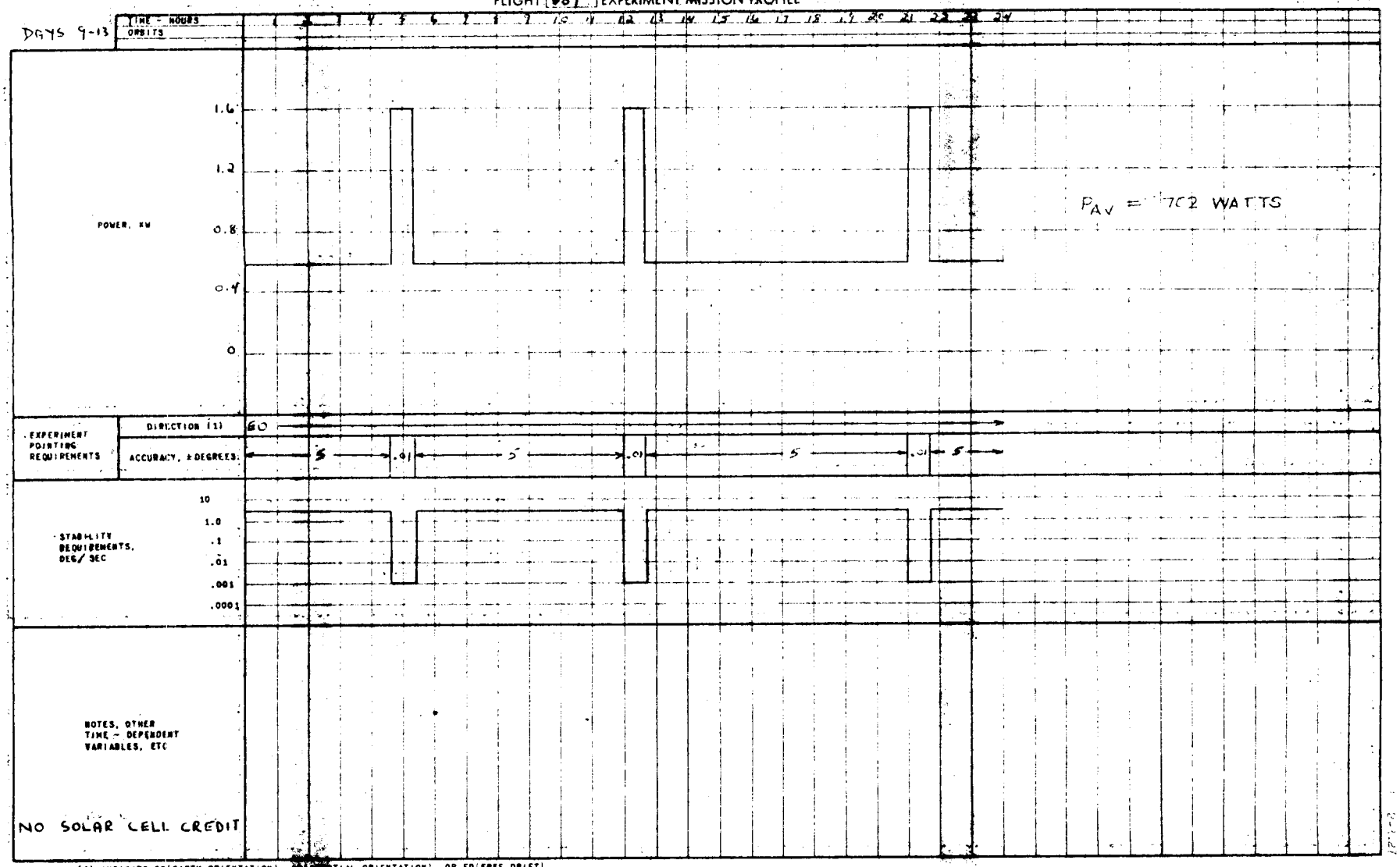

(1) INDICATE EO(EARTH ORIENTATION), [illegible]TIAL ORIENTATION), OR FD(FREE DRIFT)

GRUMMAN AIRCRAFT ENGINEERING CORPORATION

Table 3-3a APOLLO EXTENSION SYSTEM EARTH ORBIT MISSION STUDY
FLIGHT 509 EXPERIMENT MISSION PROFILE

DAY 14

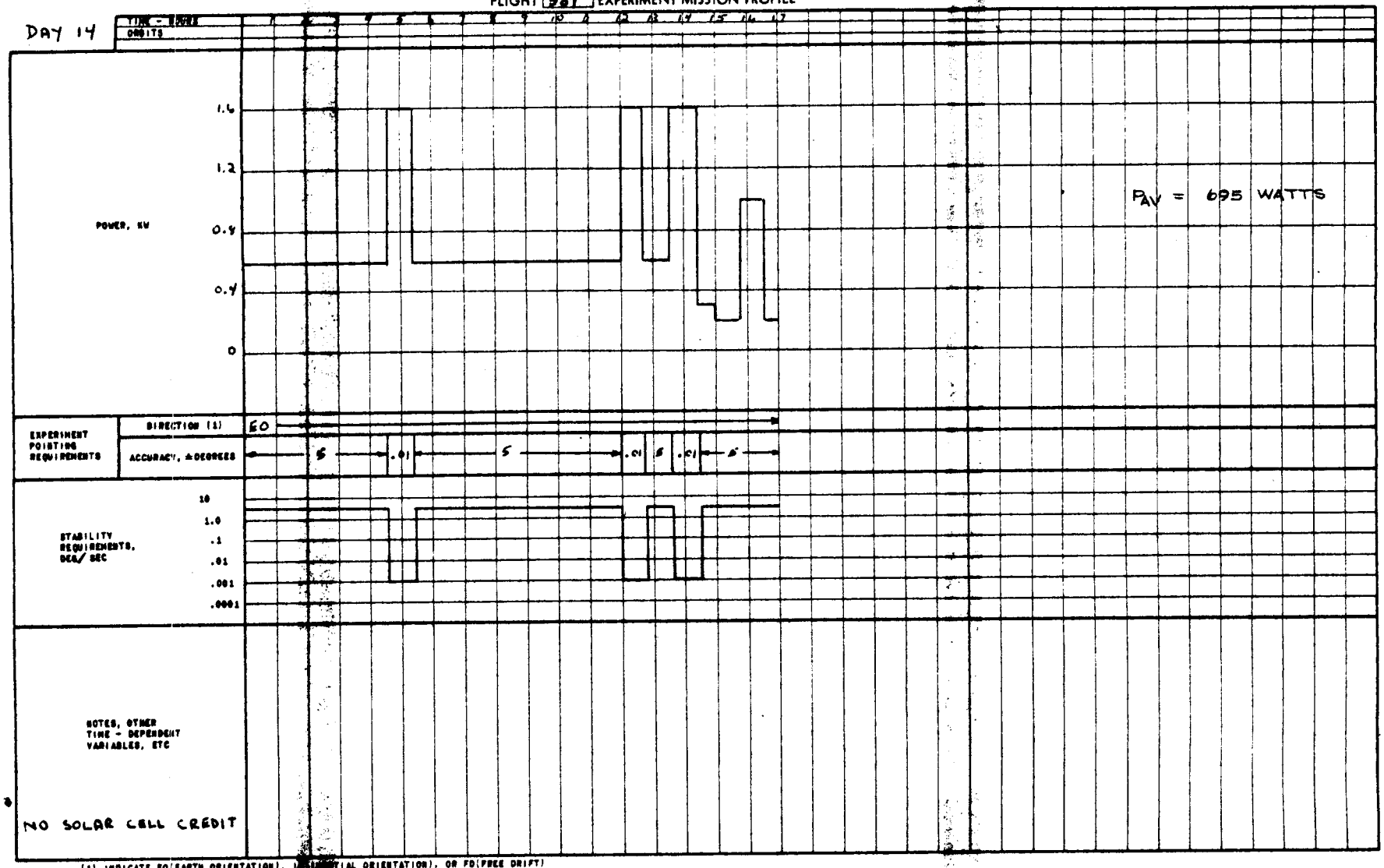

(1) INDICATE EO (EARTH ORIENTATION), [illegible]IAL ORIENTATION), OR FD (FREE DRIFT)

[redacted]

[redacted]

3.2 SPACECRAFT DEFINITION

Flight 507 configuration, shown in Figs. 3-1 and 3-2, carries experiments dealing with remote sensing of the earth's surface (0901, 0902), mapping of RF radiation (1201), wide-band data transmission (1202), and requires Earth pointing. In addition, a large solar cell array experiment (1405) is carried, requiring gimballing for sun orientation. Nominal spacecraft attitude is Earth oriented with the spacecraft's longitudinal axis located in the orbit plane. Attitude is held within a deadband of $\pm 5^{\circ}$, except during experiment periods having specific pointing and stability requirements. Pointing and stability requirements are accommodated by the CSM within the RCS propellant capacities of the Block II CSM.

The Viewfinder (0902) installation provides hemispherical coverage for all experiments. The microwave radiometer antenna (0902) is stowed on the A/S and deployed for experimentation.

The 0901 optical sensor installation utilizes the 0901-1 optics, and is mounted in the descent stage on a 2-axis gimbal to accommodate the higher pointing accuracy required of the experiment. During an EVA, the 0901-4 multi-spectral camera is substituted for the 0901-2A grating spectrometer sensor installation on the 0901-1 optics, and film is changed. Similarly, the 24 in. and 6 in. F.L. mapping cameras (0902), mounted on the D/S, require EVA for film change. Additional equipment mounted on the D/S includes:

- IR Imager (0901-2B)
- Microwave imager antenna (0901-5B)
- VHF Pulse antenna (0902)
- Low frequency antenna (1201)
- Hi and mid frequency antenna module (1201)
- HF antenna (1202)
- UHF antenna (1202)
- Millimeter antenna (1202)

KEY

No.	Experiment	Name
1	0901	16-in. Telescope
2	0901	Spectrophotometer
3	0901,0902 1201,1202 0501	Electronic Equip
4	0902	24-in. Fl Camera
5	0902	6-in. Fl Camera
6	0902	Star Field Camera
7	0902	Image Viewfinder
8	0902	Microwave Radiometer Antenna
9	1202	HF Antenna
10	1202	MM Wave Antenna
11	1405	Solar Cell Array
12	1405	16-mm Movie Camera & TV Camera
13		Fuel Cells (2)
14		H_2 Tanks (2)
15		O_2 Tanks (2)
16		Radiators
17		LioH Storage
18	0100	Biomed
19	0501	Pulse Height Analyzer & TEIC Rate Meters
20		Recorders
21		Digital Computer
22	1201	LF Antenna
23		Film, Tape Storage, & Log Book
24	1405	Pyrheliometer
25	1201	Polaroid Camera
26		ECS
27		Water Module
28		Fan
29	1405	Multimeter
30	0501	Battery Charger
31		Basic Lab
32		Main Panel Floodlights
33		Food Storage

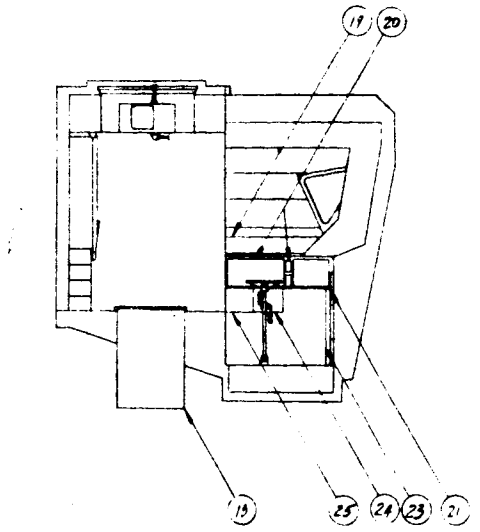

VIEW LOOKING OUTBOARD
LEFT HAND SIDE

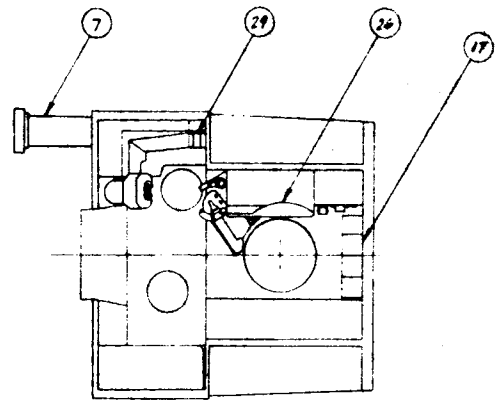

PLAN VIEW

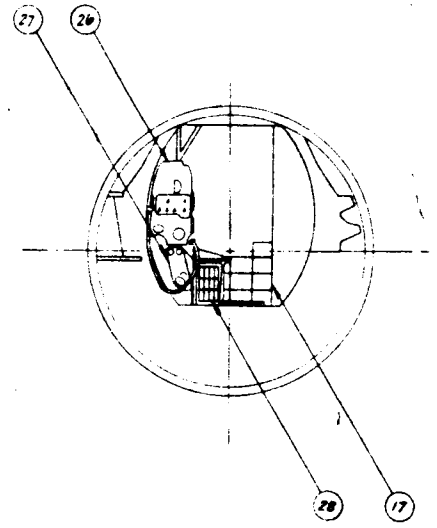

VIEW LOOKING AFT

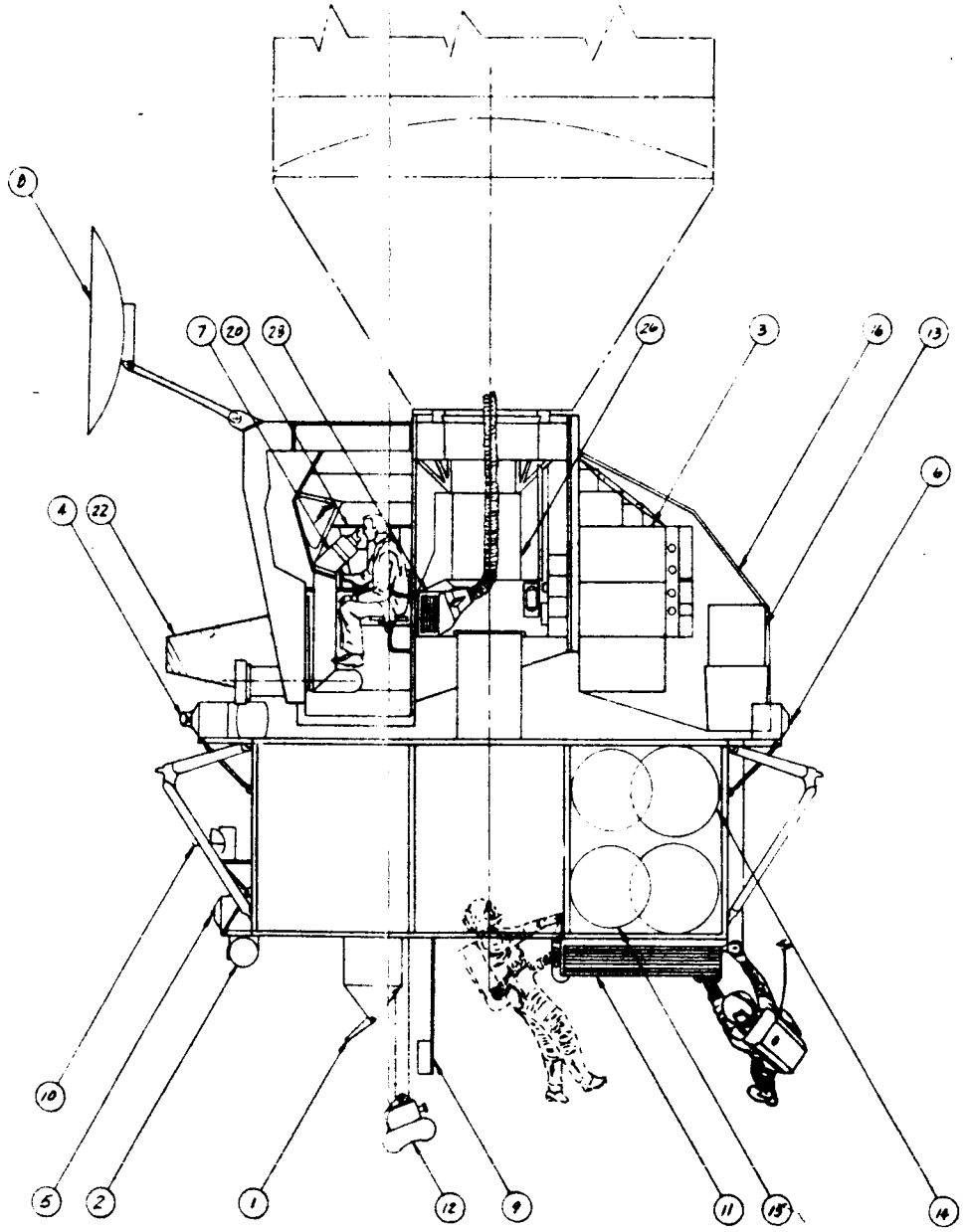

VIEW LOOKING OUTBOARD
RIGHT HAND SIDE

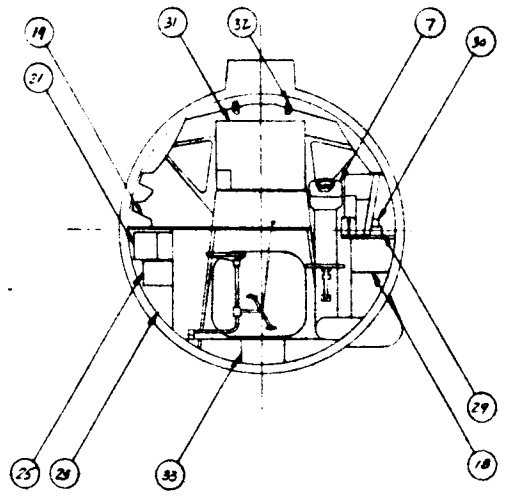

VIEW LOOKING FORWARD

0 20 40 60 80 100
SCALE: 1" = 20"

Grumman
AIRCRAFT ENGINEERING CORPORATION
PRELIMINARY DESIGN DEPT.

Inbd Prof Flt. 507
~~Earth's Surface~~
Sensing & Subsys
~~Devel~~

1/20

AES 1021

Fig. 3-1

No.	Experiment	Name
1	0901	16-in. Telescope
2	0901	Microwave Imager Antenna
3	0901	Grating Spectrometer & Dewar
4	0901	Spectro Photometer
5	0901	Multi-Spect. Camera Ass'y
6	0902,0901 1202,1201 0501	Electronic Equip
7	0901	Cryogenics Storage
8	0902	24-in. FL Camera (2)
9	0902	6-in. FL Camera (3)
10	0902	Star Field Camera
11	0902	Image Viewfinder
12	0902	VHF Pulse Radar Antenna
13	0902	Microwave Radiometer Antenna
14	1201	Low Freq. Antenna
15	1201	Low Freq. Ant. Opposite Polarization
16	1201	Mid. Freq. Ant.
17	1201	Mid. Freq. Ant. Opposite Polarization
18	1201	Hi Freq. Ant.
19	1201	Hi Freq. Ant. Opposite Polarization
20	1202	Hi Freq. Ant.
21	1202	UHF Ant.
22	1202	MM Wave Antenna
23	1405	Solar Cell Array
24	1405	16mm Movie Camera & TV Camera
25	1405	Batteries
26	0501	Radiation Environment Spectrometers
27		Power Pack
28		Potable Water Tank
29		Waste Storage Tank
30		Radiators
31		LiOH Storage
32		GOX Tank
33		Star Tracers (2)
34		Horizon Scanner

FOLD-OUT #1

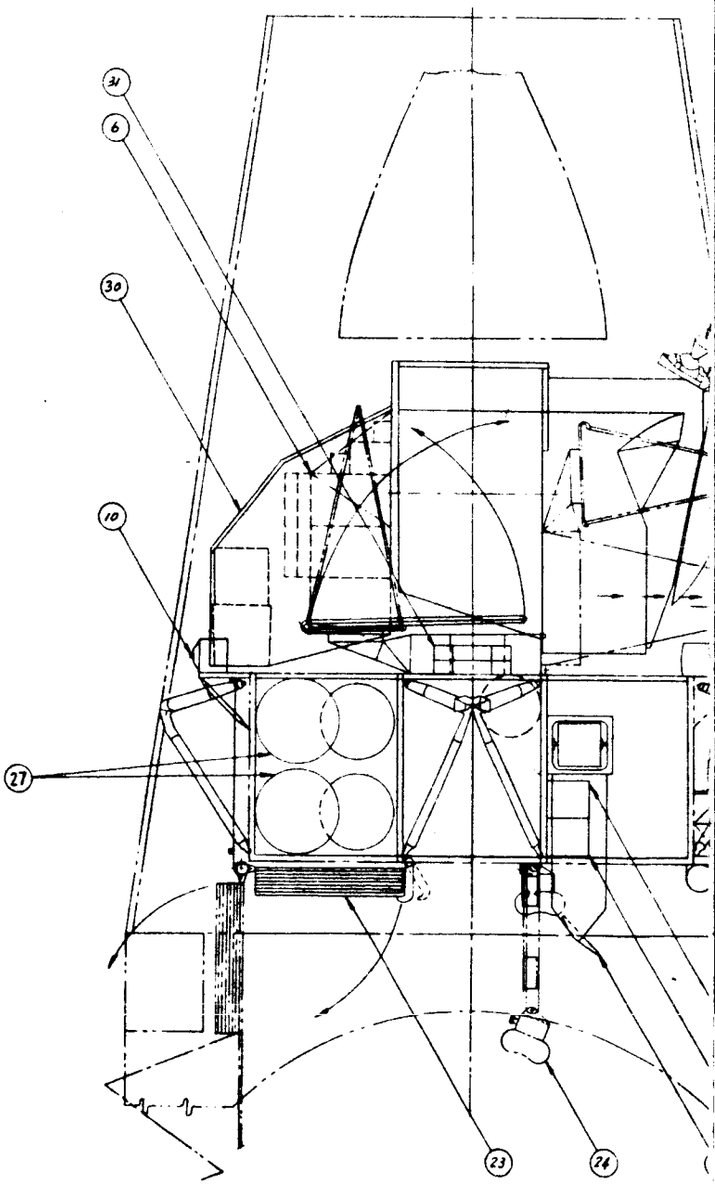

LAUNCH CONFIGURATION

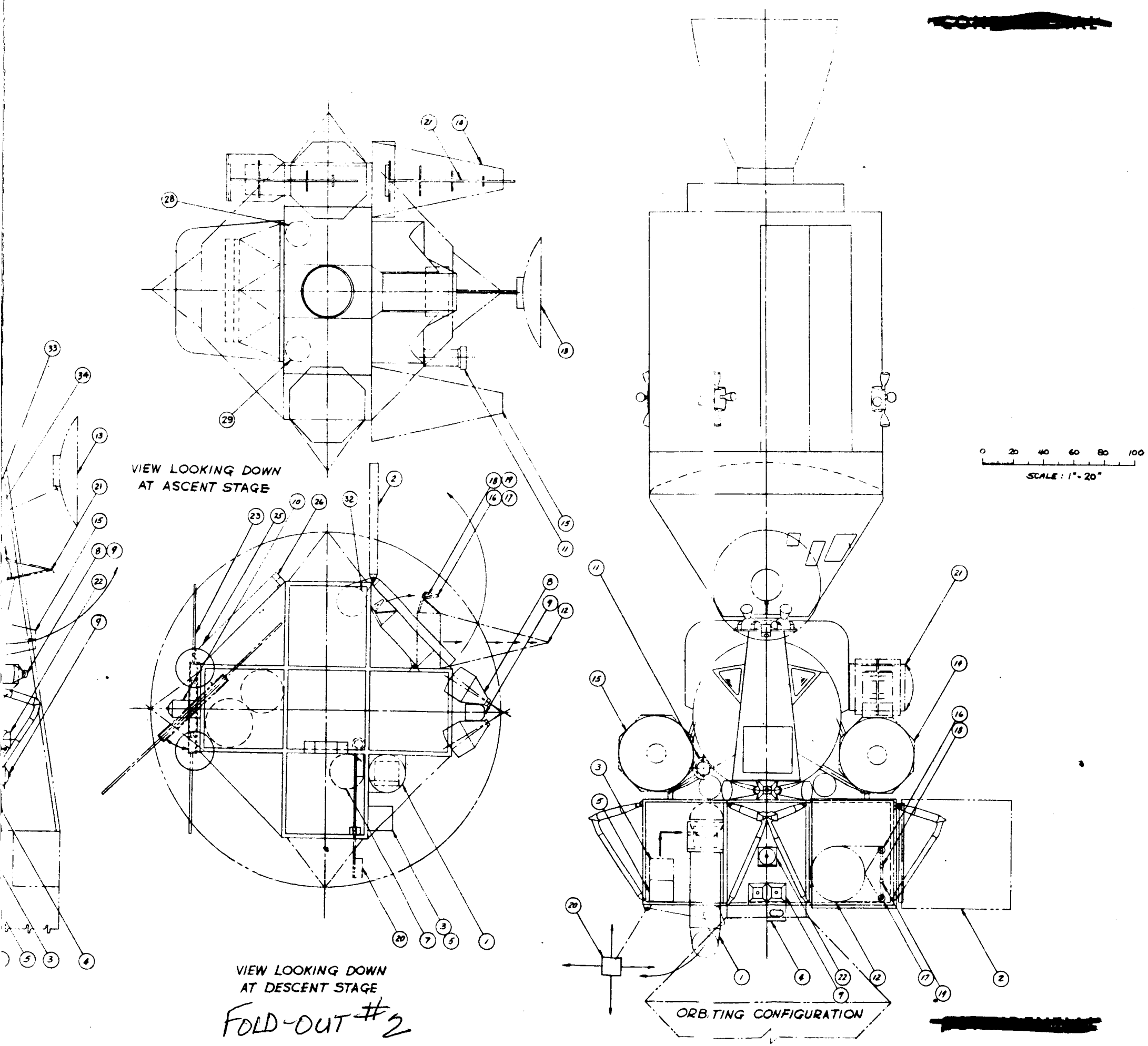

FOLD-OUT #2

Fig. 3-2

Grumman
AIRCRAFT ENGINEERING CORPORATION
PRELIMINARY DESIGN DEPT.

Gen Arrgmt Flt. 507
Earth's Surface
Sensing & Subsy
Devel

SCALE OF ORIG. DWG. - 1/20

AES 1020

[redacted]

A 162 ft^2 Solar Cell Array Assembly (1405) is mounted on a 2-axis gimbal on the D/S to allow sun orientation. Deployment is accomplished manually by an astronaut during the first EVA; the activity is recorded by a 16 mm motion picture camera and monitored by a TV camera located on a D/S mounted extendable boom.

Structural modifications to the LEM A/S are required to accommodate the viewfinder (0902). All other experiment equipment installations involve additions to existing LEM A/S and D/S structure.

The inboard profile Fig. 3-2 shows that adequate internal volume is available to accommodate experiments. All primary experiment displays and controls are located in the forward cabin, or are accessible from forward cabin crew positions. Food is stored internally. A seven day supply of LiOH canisters is also stored internally, mounted on the aft bulkhead of the Lab, and is replaced from external storage during programmed EVA's.

(0100) Behavioral, (0200) Biomed, and (0501) Radiation Monitoring Equipment Installations are common to all flights.

Supporting electronics for experiments are carried in the existing LEM electronics bay mounted to the back of the A/S.

In addition to the standard CSM/LEM Lab interface, this flight requires additional wiring for accommodating the earth pointing requirements of experiments. Interface wiring involves startracker and horizon scanner sensory inputs used to maintain attitude hold.

This flight utilizes an Apollo CSM fuel cell electrical generation system, a LEM ECS to provide suit circuit operation in the lab during EVA and selected components to provide data transmission, status, and appropriate displays.

The output of the large area solar cell system (1405) is used to power experiments 0901 and 0902. These experiments are performed for 45 min. during the daylight portion of each orbit for half the mission duration. No fuel cell reactants have been provided to power cameras 0901 and 0902.

The estimated laboratory weight is 9763 lbs (see Tables 3-4 and 3-5).

Basic subsystem characteristics pertinent to this flight are described below:

Vehicle Orientation	Earth Pointing
Stabilization Requirements	$\pm .2^{o}$ for 7 days, $\pm 5^{o}$ for 7 days
Avg Experiment Pwr (Delivered)	650 Watts
Number of Repressurizations	8
Equipment Cooling	70 ft^2 Radiator
Number of Fuel Cells	2
Oxygen Tanks	2 Block II
Hydrogen Tanks	2 Block II
Peaking Battery	100 Amp Hr
Fuel Cell Cooling	29 Ft^2 Radiator
RCS System	None
RCS Tankage	None
S & C System	Sensors Only
Water for Thermal Control (Max)	325 lbs.
Water Generated	367 lbs.

TABLE 3-4 LEM LAB DETAILED WEIGHT STATEMENT

Flight 507

Component	Weight, lb Configuration 1
Structure	(2325)
Basic Ascent	802
Basic Descent	750
Shielding	415
Power Pack Structure	50
Experiment Supports	308
Stabilization & Control	(120)
Star Trackers & Electronics	84
Horizon Scanner	36
Crew Provisions	(137)
Restraints	35
Lighting	10
Food	60
LiOH-PLSS	32
Controls & Displays	(385)
Environmental Control	(711)
Atmosphere Revitalization System	80
O_2 Supply & Cabin Pressurization	34
Water Management	36
Heat Transport, Cold Plates, Coolant	255
LiOH-ECS	104
Water	40
Radiators	94
Thermal Control	68
Instrumentation	(207)
Signal Conditioner	45
PCM & Timing Elect Assy	39
Data Storage	25
Experiment Selector	6
Data Tapes	90
Spare Voice Recorders	2

TABLE 3-4 LEM LAB DETAILED WEIGHT STATEMENT (Cont'd)

Flight 507

Component	Weight, lb Configuration 1
Electrical Power Supply	(1992)
Fuel Cell Ass'ys	492
Reactants & ECS Oxygen	425
Reactant Tankage	358
Batteries & Charger	130
Plumbing	40
Inverters	75
Wiring, Distribution & Umbilical	472
Communications	(32)
Television	24
Audio Center	6
Voice Recorder	2
VHF/UHF Antenna	
Experiment	(3845)
Spares	(9)
Total Laboratory	9763

TABLE 3-5 INTEGRATED SPACECRAFT WEIGHT STATEMENT

FLIGHT 507

Component	Weight, lb Configuration 1
Command Module Basic Weight	(10,360)
Service Module Basic Weight	(9,248)
CSM Retro-Propellant	(1,180)
Laboratory Weight	(9,763)
Basic Laboratory Structure	2,325
Experiments	3,845
Experiment Support Systems	2,932
Expendables	661
CSM Experiment Dependent Weights	
RCS Propellant	419
Main Propellant	
Total Laboratory & Experiment	(10,182)
Allowable Lab & Exper. Weight	85,707
Total Orbiting Weight	30,970
Service Module Propellant (Ascent)	0
SLA Adapter	3505
Launch Vehicle Payload	34,475

4. FLIGHT OPERATIONAL SUPPORT: FLIGHT NO. 507

Experiment 0100 & 0200 - Medicine and Behavioral - Periodic daily data transmission and ground monitoring of safety parameter data.

Experiment 0501 - Radiation Environment Monitoring - External particle flux measurements during a solar flare event are to be correlated with the solar activity observations made on earth stationed observatories and other satellites.

Experiment 0902 - Synoptic Earth Mapping - A network of ground transponders is necessary to determine the relative position of the sapcecraft to positions within the photographic field of view to 10 foot accuracies. A SECOR or AROD system with a world-wide deployment of transponders would satisfy this requirement.

Experiment 1201 - Measurement of Radio Frequency Radiation - Transmit accurate position data to spacecraft.

Experiment 1202 - Wide Bandwidth Transmission in Space - Ground stations will have to be suitably equipped to receive the wideband signals. NASA networks (MSFN, STADAN, or DSIF) will require additional antennas, receivers, recorders and trained operators.

Table 4-1 presents the experimental data management requirements of the flight. A general discussion of this table and the data management system is contained in Volume 1

FLIGHT 507

Table 4-1 Data Management

Avg Daily Data Recording Requirements

Experiment	Recording Time, min			Remarks
No.	Data Rate K-bits/sec	(A) 51.2 K-b/sec	(B) 1.6 K-b/sec	
0100_s	9 (AVG)	24		0.8 Exper. Hr/Day
0200_s	6.4 (AVG)	82		4.7 Exper. Hr/Day
0501	0.8		45	45 min/day Monitoring
0901 & 0902	2.5	61		10 sec x 40 targets x 104 times
1201	1.6		618	6 Days Continuously
1405	0.4		15	15 min/day Monitoring
1202	Negligible Recording Requirements			
Totals		167	678	

Avg Daily Data Transmission Time Reqd (A) + (B/32) = 189

Avg Daily Data Transmission Time Available = 96

Data Excess (min of Tape) Per Day:

Reqd minus available Transmission Time 93

Data Tape Return Rqd: $\frac{\text{Data Excess Per Mission (min)}}{\text{30 min/Tape Reel}}$ = 44 Reels $\left\{ \begin{array}{l} 88 \text{ lb} \\ 4.4 \text{ ft}^3 \end{array} \right.$

Optimum AVG Daily Transmission Time Rqd = 47 min

Voice Tape Return Rqd (2 Packages)	4 lb	.05 ft^3
Film Return Rqd	125 lb	2.0 ft^3
Data Tape Carried	90 lbs	

1. FLIGHT MISSION DESCRIPTION

Flight No. 509

Altitude, n.mi 19,350	Inclination, deg 0	Duration, days 14	Crew 2

Mission Title: ORBITAL OPERATIONS, SCIENCE AND TECHNOLOGY

Objectives: This flight will test the ability of a manned spacecraft to perform orbital maneuvers necessary to rendezvous and capture passive spinning satellites, and to perform non-coplan r rendezvous and docks to an unmanned passive spacecraft. Large structures will be deployed and their performance measured during their use in space physics experiments. Orbital control of an inflatable sphere by utilizing solar radiation pressure will be verified. In addition, Syncom III will be captured and returned to Earth for study.

Configuration: Modified Block II CSM, LEM A/S, Low Profile D/S

Experiment Summary:

No.	Title	Equipment Location: LEM Stage Asc	Equipment Location: LEM Stage Desc	Equipment Location: CM
0100	Biomedical (0106 and 0107 only)	X		
0200	Behavioral (only those requiring 1 crew member)	X		
0501	Radiation Environment Monitoring	X		
0705B	Radio Astronomy		X	
0801	Conjugate Aurora		X	
1302	Deployment of RF Reflective Structures		X	
1303	Extendable Rod Performance Test		X	
1304	Solar Sailing		X	
1306	Large Aperture Erectable Antennas		X	
1601	Orbital Maneuvering, Rendezvous, and Docking Systems and Techniques		X	
1603	Recapture of Syncom III		X	

2. EXPERIMENTAL DESCRIPTION SUMMARY

FLIGHT - 509

EXPERIMENT: 0100-0200 - Medical/Behavioral Experiments - The Medical/Behavioral Experiments are intended to evaluate the effects of prolonged space flight on man and to enhance his operational efficiency to permit more extensive manned space flight missions. Twenty-four experimental measurement packages have been defined to analyze critical human functions and to focus on those most likely to be affected adversely by prolonged space flight. Procedures and instrumentation employed in the experimental packages are a composite of updated, standard medical/behavioral and imminent state-of-the-art zero-g adapted, techniques. These procedures should provide: 1) an assessment of the effects of prolonged weightlessness on the psychophysiological integrity of the astronaut, 2) a determination of the mechanisms which mediate observed changes, 3) a prediction of the onset and extent of degraded functioning, and 4) a validation of preventive or countermeasures which may be necessary to support man's extended exploration of space.

NOTE

> These experiments require two crew men working together, one as the subject and the other as observer. Since the crew work/sleep cycle on this flight allows only two hours out of each day when both crew members work together, only one integrated Biomedical Experiment can be performed (0106-0107).

EXPERIMENT: 0501 - Radiation Environment Monitoring - The objective of the experiment is to record radiation received by the crew, and to furnish external radiation environment data for other experiments. Techniques for the Apollo Mission, or those employed in Tiros and OGO, will be used. Detection devices proposed for the monitoring systems are: proton-alpha and electron spectrometers, tissue equivalent ionization chambers, and film packs.

EXPERIMENT: 0705B - Radio Astronomy 1-5 mcps range, using simple tunable "V" antenna - The object of this experiment is to obtain a mapping of the galatic noise in the 1 to 5 mcps range; to determine the location and magnitude of these noise sources; and, to determine the relationship of signal strength and frequency. The equipment to perform the experiment will consist of a five channel receiving system and includes a "V" antenna. The antenna will use two insulated and gimballed STEM devices, which are also used in experiment 1303. The antenna beamwidth, position and tuning is to be controlled by the angle separating the antennas, the angle of the "V" relative to the vehicle, and the length of the two extendible rods respectively.

EXPERIMENT: 0801 - Conjugate Aurora and Airglow - The objective of the experiment is to investigate the detailed nature of the conjugate auroral forms, structures and geometries in both the Arctic and Antarctic auroral regions with a view toward defining the causality factors and the extent of congruity. Observation and recording of both aurorae from a single, orbiting platform at several Earth radii will provide simultaneous measurement of the auroral form, structure, spectral intensity, and location of the conjugate phenomena.

EXPERIMENT: 1302 - Deployment of R. F. Reflective Studies - The objective of the experiment is to observe and describe development of large RF reflective structures composed of firbrous material which, on release, tends to assume a preformed shape. A fifty (50) foot balloon will be released from the spacecraft and the astronaut will observe and photograph the deployment. The structure will be tethered to the spacecraft to assure proper visual range until the deployment is completed.

EXPERIMENT: 1303 - Extendible Rod Performance Tests - The objective of the experiment is to obtain data, i.e., characteristics and performance of extendible members (rods or fine wires), during payout and deployment, and while subjected to gradient gravity forces and solar perturbations. Stiff rods, such as the "STEM" device, will be packaged for deployment while attached to the spacecraft, following which they will be monitored and observed. This will be accomplished under various spacecraft orientations. Malfunctioning will be diagnosed following the system's retrieval. These rods will also serve as the "V" antenna on Experiment 0705B, Radis Astronomy.

EXPERIMENT: 1304 - Operation of Solar Sailing Passive Communications Satellite - The objective of the experiment is to confirm and evaluate a technique for control of a satellite's orbital period (kinetic energy control) by utilization of the radiation forces on large surface areas. A 50 ft. diameter spherical mylar balloon is to be deployed from, and tethered, to the spacecraft. Half of the balloon is to be covered with a low reflectivity, high emissivity coating; the other half is to have opposite attributes. The balloon will also carry a command receiver, power supply, and orthogonal coils to produce a magnetic field vector, which can be commanded to accomplish orientation with respect to the sun. Resulting relative motions between balloon and spacecraft will be compared with predicted values to refine design data relating force with material surface properties.

EXPERIMENT: 1306 - Large Aperture Space Erectible Antenna (30 ft. Diameter) - The objective of the experiment is to prove the design feasibility of space erection of a compactly packaged antenna system, erected in orbit, in a precisely shaped parabollic collinator for RF signals. After antenna deployment, photogrammetric measurements of the antenna surface will be made. Signal level, recorded as the antenna is rotated through several revolutions, while receiving ground transmitted test signal, will measure the antenna's radiation pattern.

EXPERIMENT: 1601 - Orbital Maneuvering and Docking - The objective is to develop capabilities beyond Gemini and Apollo to (a) rendezvous with passive, non-cooperative satellites, (b) rendezvous with non-coplanar satellites, and (c) dock with satellites not specifically designed for docking. This experiment will be conducted in two phases. In Phase I, the CSM will separate from the LEM to demonstrate non-coplanar rendezvous and docking. The CSM will separate up to 100 n mi away in an orbit inclined 1-2 degrees from the LEM. After rendezvous is accomplished various docking techniques will be assessed. Phase II will use target satellites to evaluate optical, IR, and radar tracking techniques to identify and track the target. Two different capture devices will also be evaluated on their ability to capture a spinning target satellite.

EXPERIMENT: 1603 - Recapture of SYNCOM III - The objective of the experiment is to recover SYNCOM III, the geostationary communications satellite, to analyze its components after being subjected to space environment since August 19, 1964, and to demonstrate, for the first time, the recovery of an orbiting satellite. The ex-

periment will consist of launching the CSM into a near synchronous orbit of zero degree inclination, track and drift to SYNCOM III position, and recover satellite by manually control snare to bring aboard CSM for return to Earth.

TABLE 2-1 FLIGHT 509 INTEGRATED EXPERIMENT EQUIPMENT LIST

Exper. No.	Component	Weight, lb	Vol, cu ft or size*	Elec Energy or Elec-Pwr	Remarks
0100 and 0200	Medicine and Behavior Experiments	321	14.5	100 W Continuous plus 50w during Oper.	See Flt. 211 for Detailed Equip. List
0501		(46.5)			
	Proton-Alpha Spectrometer	7	8 x 8 x 8		
	High Energy Electron Spectrometer	10	8 x 8 x 8		
	Low Energy Electron Spectrometer	5.5	4 x 4 x 3		Duty Cycle - Continuous During Mission
	Tissue Equiv ionization Chambers (3)	3	3 x 2 x 1/2	5.3 W Total Continuous	
	T.E.I.C. Rate Meters (2)	4	4 x 3 x 3		
	Film Packs and Pen Dosimeters (21)	1.5	2 x 2 x 1/8		
	Pulse Height Analyzer	15	12 x 12 x12		
	Battery Charger	0.5	1/2 x1/2x1	1 W	
1601		(1103)			
	Laser Head	5.0	.01	50 W	All equipment for 1601 is stored on the CSM except low power FM transmitter Current CSM attitude hold capability is required for rendezvous and docking
	Laser Electronics	30.0	.07	50 W	
	Rotating Sensor Head	135	2.65	50 W	
	Main Optics and Frame	70.	1.25	50 W	
	Eyepiece + Derotating Assy	10	.1	50 W	
	Mirror + Drive	20	.06	50 W	
	CW Laser Module	15	.09	50 W	
	C-2C Intensifier	3	.07	50 W	
	IR Cooling System	110	10	50 W	
	Rendezvous Radar Electronics	185	3	1000 W	
	Rendezvous Radar Antenna	185	6' Dish		
	Rendezvous Radar (Short Range)	25	1.0	50 W	
	Data Recording System (25 Chan)	60	3.0	120 W	Common to exp. 1303, 1306, 0501, 0705 b.
	Time Base Generator	10	.5	20 W	
	Positional Data Recording	15	1.0	20 W	
	F.M. Transmitter (Positional Data)	40	2.0	50 W	
	F.M. Transmitter (Low Power)	20	1.0	20 W	
	F.M. Receiver (Low Power)	20	1.0	20 W	
	Target Satellite	100	3.0	-	
	Capture Device #1	120	3.3	-	
	Strobe Light	20	.5	500 W	Common to 1603
	16 MM Camera	10	.5	30 W	Common to 1603, 1302, 1303, 1304,
	Capture Device #2	60	1.2	-	
	16 MM Film	20			

*INCHES UNLESS OTHERWISE SPEC.

TABLE 2-1 FLIGHT 50[illegible] INTEGRATED EXPERIMENT EQUIPMENT LIST

Exper. No.	Component	Weight, lb	Vol, cu ft or size*	Elec Energy or Elec Pwr	Remarks
1603		(13)			
	Tie-Down for Syncom III	10.0	11.0	-	Attitude requirements same as 1601
	Binoculars	1.0	.3	-	Equipment on CSM
	16 MM Film	2.0			
1302		(154)			
	50' Balloon	150	10	-	Course control only
	16 MM Film	4			
1303		(269)			
	2 200' Retractable Rods	60	2.0	-	RCS Not operating
	2 1000' Retractable Rods	120	2.0	-	Stored on LEM
	2 1000' Inflatable Rods	60	2.3	-	
	Time Lapse 70 MM Camera	20	1.0	30	
	16 MM Film	4			
	70 MM Film	5			
1304		(235)			
	50' Balloon w/coils + Power Supply	200	10	-	Same as 1601
	Command Transmitter	5	.25	10 W	Attitude hold req'ts.
	Optical Range Finder	20	.25	-	Stored on LEM
	16 MM Film	10			Control Panel requires 25W
1306		(540)			
	Antenna	300	252	300 W	2 Spacecraft revolution
	Tracking Receiver	25	.25	50 W	req'd in 15 min along
	Parametric Amplifier	20	2.25	100 W	X-X & Z-Z axis done
	Data Receiver (1-15 Kc)	100	2.25	100 W	sequentially
	Radiometer (1-15 Kc)	70	2.25	100 W	Equipment stored on LEM
	Modulator	15	.25	10 W	Recorder Requires 20 W
	Frequency Meter	10	.20	10 W	
0801		(245)			
	Telescopes (2)	50	.36	100 W	Attitude hold req'd during
	Platform	100	-	-	each of 4 12 hrs period.
	Spectrograph	25	2.0	5	Current CSM hold capability can be used
	Photometer	2.0	1.5	5 W	Equipment stored on LEM
	Image Orthicon	30.0	.5	55 W	
	Magnetometer	13.0	.81	10 W	TV Display requires 100 W
	Plasma Probes	10.0	.45	5 W	
	A Scope	15.0	.14	100 W	

*INCHES UNLESS OTHERWISE SPEC.

TABLE 2-1 FLIGHT 509 INTEGRATED EXPERIMENT EQUIPMENT LIST

Exper. No.	Component	Weight, lb	Vol, cu ft or size*	Elec Energy or Elec Pwr	Remarks
0705B	Antenna Tuner	(75)			
	Receivers (5)	25.0	1		Pointing accuracy .2°
	Erectable "V" Antenna (2)	50.0	2.1	150 W	Continuous 3 orbits Common to Exp 1303
	Total Weight - LAB	2238			
	- CSM	764			
		3002			

*INCHES UNLESS OTHERWISE SPEC.

3. EXPERIMENT/SPACECRAFT INTEGRATION

3.1 Mission Definition

Flight 509 has a two man crew because of the necessity of removing a crew couch to provide volume to recover SYNCOM III. The work/sleep cycle for this mission is staggered to afford nearly continuous distribution of work throughout the day. There are only two hours during each 24 hour period when neither crew member is awake, and two hours when both crew members work together. This cycle, which is followed for the first nine days of the mission, is primarily influenced by the continual nature of the experiments occuring in this time period, and a desire to have one crew member awake at all times in the event of an emergency. These two considerations are in some conflict with the performance of the Biomedical experiments which require both crew members to work together as much as possible. The compromise work/sleep cycle minimizes the time when both crew members are asleep, maximizes the time work can be performed on a continual basis, and partially satisfies the Biomedical experiment requirements.

The work/sleep cycle for the remaining five days of the mission is governed by the dynamic nature of the 1600 series experiments i.e., the time required to perform orbital transfers and docking maneuvers. The work/sleep cycle is tailored to fit within the time limitations of these maneuvers.

This flight is primarily an Orbital Maneuvering and Docking mission with major emphasis given also to the Space Structures Experiments (1302, 1303, 1304, 1306) and Conjugate Aurora, Radio Astronomy and Radiation Monitoring Experiments (0801, 0705b, and 0501 respectively). Biomedical and Behavioral Experiments (0100-0200 series have secondary priority and are performed in unscheduled work periods. Since there are only two hours out of each day when both crew members work together, only one integrated Biomedical Experiment can be performed (0106-0107). The maximum length of time which can be devoted to all secondary experiments is 11-1/2 days, since after this time the LEM Lab is separated from the CSM to perform Phase I of Experiment 1601.

Experiment scheduling is influnced by spacecraft orientation requirements, lighting requirements, and the number of crew members required to perform the experiment. Within the first nine days all of the secondary experiments are satisfactorily accomplished. In the time remaining most of the Behavioral Experiments (0200 series) requiring only one crew member, are also performed.

The tenth through fourteenth days are primarily devoted to performing the Orbital Maneuvering and Docking Experiments (1601, 1603). Experiment 1601 Phase II is scheduled before 1601 Phase I, so as to retain the LEM Lab as long as possible, in the event Phase I is unsuccessful. Phase I requires the separation of the LEM Lab from the CSM and subsequent out-of-plane rendezvous and docking by the CSM to the LEM Lab. Obviously, if 1601 Phase I is performed early in the mission, and is unsuccessful, the mission must be aborted, since all secondary experiments are stored in the Lab. (Phase I is independent of Phase II so the reversal of phases will not adversely affect the achievement of experiment objectives.)

Capture of Syncom III (1603) is scheduled to follow 1601 Phase II because the techniques and experience gained in Phase II are of great value in performing this experiment. It has been assumed that after Phase II is complete the CSM/LEM spacecraft will be only a few miles distant from Syncom III. Therefore, only the terminal phase of rendezvous will be required to capture Syncom III.

The crew schedule is summarized in Table 3-1 and detailed in Table 3-2. A typical 36-hour period of the experiment mission profile is shown in Table 3-3. Additional data of interest is listed below:

Spacecraft Inertially Oriented	8 1/6 days
Spacecraft Earth Oriented	15 hours
Spacecraft Free Drift	5 days 7 hours
Angular Reorientations	40
EVA's	4 to 5

Table 3.1 FLIGHT 509 MISSION DEFINITION SUMMARY*

Exper. No.	Occurence Day No.	Total Times Perf/ Mission	No. Men Req'd	Exper Time/Test Setup Time, min	Exper Time/Test Test Time, min	Total Exper Man-hr/ Mission Crewman 1	Crewman 2	Total	Total Exper Time/Mission, hr Achv'd	Spec'd	Remarks
0100	1-9	9	2	-	80	12	12	24.0	12.0	12.0	Exp. 106 & 107 only.
0200			1	-	36.8 hrs	18.4	18.4	36.8	36.8	36.8	All 200 ser. requiring 1 crew member.
0501	1-11, 14	11	1	10	10	1.67	.33	2.0	2.0	2.33	2 readings unattainable; LEM sep. from CSM.
0705b	2-4	3	1	150	120	6.5	1	7.5	7.5	7.5	
0801	2, 5, 7, 8	4	1	45	720	1.67	.833	2.5	46.0	48.0	Done during auroral activity.
1302	1-2	14		-	140	2.0	1.5	3.5	2.33	(2.33)	Done as long as possible.
1303	1	1	1	15	24 hrs	2.0	1.0	3.0	24.0	24.0	
1304	5-6	1	1	60	2 days	1.75	1.75	3.0	48.0	(48.0)	Done as long as possible.
1306	5	1	1	60	120	3		3.0	2.0	2.0	
1601	10-14	1	2	152	4 days	28.3	27.5	55.8	96.0	96.0	Includes Phases I & II 2 EVA's req'd.
1603	11-12	1	2	2	360	8	8	16	8.0	8.0	1 EVA req'd.
					TOTALS	85.3	71.8	157.1			

Maximum Work Day: 11 hrs on-duty; Average Work Day: 6 hrs on-duty; Minimum Work Day: 1.5 hrs on-duty.

NOTES:

*See Tables 3-2 and 3-3 for crew schedules and experiment equipment duty cycles.

[redacted]

Table 3-2 **CREW SCHEDULING, FLIGHT** 509, **SHEET** 1 **OF** 4

DAY 1	ORBIT	CREWMEN ACTIVITIES 1	2	3
0000		0501	E/Hyg	
20		1302&3		
40		0202H	Rest	
0100		1302		
20		1303		
40		0201a		
0200				
20				
40				
0300				
20				
40		1302&3	Sleep	
0400		E/Hyg		
20				
40		Rest		
0500				
20				
40				
0600				
20				
40				
0700			E/Hyg	
20				
40			Rest	
0800		Sleep	1303	
20			1302	
40			0201a	
0900			0201b	
20			0201e	
40			0202	
1000			c-e	
20			1303	
40			0202fh	
1100		E/Hyg		
20				
40		Rest	1302&3	
1200		0501		
20		0201b,e		
40		0202c,d	Rest	
1300				
20		1303		
40				
1400				
20		0106-	0106-	
40		0107	0107	
1500				
20		0202e,f		
40		1302	1303	
1600				
20				
40				
1700		Rest	Rest	
20				
40				
1800		1303		
20				
40				
1900			E/Hyg	
20				
40		1302		
2000			1303	
20				
40				
2100		Rest		
20				
40				
2200			1303	
20				
40				
2300		E/Hyg		
20				
40			1302&3	
2400				

DAY 2	ORBIT	CREWMEN ACTIVITIES 1	2	3
0000				
20			E/Hyg	
40			Rest	
0100		0705b		
20				
40				
0200				
20				
40				
0300		0203e		
20				
40		1302		
0400		E/Hyg	Sleep	
20				
40		Rest		
0500				
20				
40				
0600				
20				
40				
0700			E/Hyg	
20				
40			Rest	
0800		Sleep	1302 &	02021
20				
40				
0900				
20				
40			0203a-h	
1000				
20				
40				
1100		E/Hyg		
20				
40		Rest	0705b	
1200		1302	0501	
20				
40		0203		0801
1300		a,d,fh	Rest	02021
20				
40				
1400		0801		
20		0106-	0106	
40		0107	-0107	
1500				
20				
40		1302		
1600				
20				
40				
1700		Rest	Rest	
20				
40				
1800		0801		
20		0203b,g		
40				
1900		0801	E/Hyg	
20		1302		
40		0203c		
2000			0705b	
20				
40				
2100		Rest		
20				
40				
2200			0801	
20				
40				
2300		E/Hyg		
20				
40			0801	
2400			1302	

DAY 3	ORBIT	CREWMEN ACTIVITIES 1	2	3
0000				
20			E/Hyg	
40			Rest	
0100		0705b		
20				
40				
0200				
20				
40				
0300				
20				
40				
0400		E/Hyg	Sleep	
20				
40		Rest		
0500				
20				
40				
0600				
20				
40				
0700			E/Hyg	
20				
40			Rest	
0800		Sleep		
20				
40				
0900				
20				
40				
1000				
20				
40				
1100		E/Hyg		
20				
40		Rest	0705b	
1200		0501		
20				
40				
1300			Rest	
20				
40				
1400				
20		0106-	0106-	
40		0107	0107	
1500				
20				
40				
1600				
20				
40				
1700		Rest	Rest	
20				
40				
1800				
20				
40				
1900			E/Hyg	
20				
40				
2000			0705b	
20			0201a	
40				
2100		Rest	0202	
20			c-f	
40				
2200				
20				
40				
2300		E/Hyg		
20				
40				
2400				

DAY 4	ORBIT	CREWMEN ACTIVITIES 1	2	3
0000				
20			E/Hyg	
40			Rest	
0100		0705b		
20				
40				
0200		0201a		
20				
40		0202		
0300		c-f,h		
20				
40				
0400		E/Hyg	Sleep	
20				
40		Rest		
0500				
20				
40				
0600				
20				
40				
0700			E/Hyg	
20				
40			Rest	
0800		Sleep		
20				
40				
0900				
20				
40				
1000				
20				
40				
1100		E/Hyg		
20			0202h	
40		Rest	0501	
1200			0705b	
20				
40				
1300			Rest	
20				
40				
1400				
20		0106-	0106-	
40		0107	0107	
1500				
20				
40				
1600				
20				
40				
1700		Rest	Rest	
20				
40				
1800				
20				
40				
1900			E/Hyg	
20				
40				
2000				
20				
40				
2100		Rest		
20				
40				
2200				
20				
40				
2300		E/Hyg		
20				
40			0705b	
2400				

NOTES E/Hyg Eat & Personal Hygiene

Limits of Experiment Time

Limits of EVA

[redacted]

Table 3-2 **CREW SCHEDULING, FLIGHT** 509 , **SHEET** 2 **OF** 4

DAY 5	ORBIT	CREWMEN ACTIVITIES 1	2	3
0000			E/Hyg	
20				
40			Rest	
0100				
20				
40		1306		
0200				
20				
40				
0300				
20		1304		
40				
0400			Sleep	
20		E/Hyg		
40		Rest		
0500				
20				
40				
0600				
20				
40				
0700			E/Hyg	
20				
40			Rest	
0800		Sleep	02021	
20				
40			0203a	
0900				
20				
40			0203b	
1000				
20				
40				
1100		E/Hyg		
20				
40		Rest	0203c	
1200		0501		
20		1304		
40		0801		
1300			Rest	
20		02021		
40		0203a		
1400		0801		
20		0203d,f	0203d,f	
40		0106-	0106-	
1500		0107	0107	
20				
40		0203h	0203h	
1600		0801		
20				
40				
1700		Rest	Rest	
20				
40				
1800		0801		
20		0203b		
40				
1900			E/Hyg	
20				
40		0203c		
2000				
20				
40				
2100		Rest		
20				
40				
2200				
20				
40				
2300		E/Hyg		
20			0801	
40			1304	
2400				

DAY 6	ORBIT	CREWMEN ACTIVITIES 1	2	3
0000			E/Hyg	
20				
40			Rest	
0100				
20				
40				
0200				
20				
40				
0300				
20				
40				
0400			Sleep	
20		E/Hyg		
40		Rest		
0500				
20				
40				
0600				
20				
40				
0700			E/Hyg	
20				
40			Rest	
0800		Sleep		
20				
40				
0900				
20				
40				
1000				
20				
40				
1100		E/Hyg		
20				
40		Rest	1304	
1200		0501		
20				
40				
1300			Rest	
20				
40				
1400				
20				
40				
1500		0106-	0106-	
20		0107	0107	
40				
1600				
20				
40				
1700		Rest	Rest	
20				
40				
1800				
20				
40				
1900			E/Hyg	
20				
40				
2000				
20				
40				
2100		Rest		
20				
40				
2200				
20				
40				
2300		E/Hyg		
20				
40			1304	
2400				

DAY 7	ORBIT	CREWMEN ACTIVITIES 1	2	3
0000			E/Hyg	
20				
40			Rest	
0100				
20				
40				
0200				
20				
40				
0300				
20				
40				
0400		E/Hyg	Sleep	
20				
40		Rest		
0500				
20				
40				
0600				
20				
40				
0700			E/Hyg	
20				
40			Rest	
0800		Sleep	0201	
20			a,b,e	
40				
0900			0202	
20			c,d,e	
40				
1000				
20				
40				
1100		E/Hyg		
20				
40		Rest	1304	
1200		0501		
20		0801		
40				
1300		0201	Rest	
20		a,b,e		
40		0801		
1400				
20				
40		0106-	0106-	
1500		0107	0107	
20				
40		0202e		0801
1600				
20				
40				
1700		Rest	Rest	
20				
40				
1800		0801		
20		0202fh		
40				
1900			E/Hyg	
20				
40				
2000				
20			Lioh	
40			EVA	
2100				
20		Stand		
40		By		
2200				
20				
40				
2300		E/Hyg		
20			0801	
40			1304	
2400				

DAY 8	ORBIT	CREWMEN ACTIVITIES 1	2	3
0000		02021	E/Hyg	
20				
40		0203	Rest	
0100		a,b,d,e,f		
20				
40				
0200				
20				
40				
0300				
20				
40		0203c		
0400			Sleep	
20		E/Hyg		
40		Rest		
0500				
20				
40				
0600				
20				
40				
0700			E/Hyg	
20				
40			Rest	
0800		Sleep	02021	
20				
40			0203	
0900			d,e,f,h	
20				
40				
1000				
20				
40				
1100		F/Hyg	0203g	
20				
40		Rest	1304	
1200		0501		
20		0801		
40				
1300		0203g,h	Rest	
20				
40				
1400		0801		
20				
40				
1500				
20		0106	0106	
40				
1600				
20				
40				
1700		Rest	Rest	
20				
40				
1800		0801		
20				
40				
1900			E/Hyg	
20				
40		0801		
2000				
20				
40				
2100		Rest		
20				
40				
2200				
20				
40				
2300		E/Hyg		
20			0801	
40			1304	
2400				

NOTES

Table 3-2 **CREW SCHEDULING, FLIGHT 509, SHEET 3 OF 4**

DAY 4	ORBIT	CREWMEN ACTIVITIES 1	2	3
0000				
20			E/Hyg	
40			Rest	
0100				
20				
40				
0200				
20				
40				
0300				
20				
40				
0400		E/Hyg	Sleep	
20				
40		Rest		
0500				
20				
40				
0600				
20				
40				
0700			E/Hyg	
20				
40			Rest	
0800		Sleep		
20				
40				
0900				
20				
40				
1000				
20				
40				
1100		E/Hyg		
20				
40		Rest		
1200		0501		
20				
40				
1300			Rest	
20				
40				
1400				
20				
40		0106-0107	0106-0107	
1500				
20				
40				
1600				
20				
40				
1700		Rest	Rest	
20				
40				
1800				
20				
40				
1900			E/Hyg	
20				
40				
2000				
20				
40				
2100		Rest		
20				
40				
2200				
20				
40				
2300		E/Hyg		
20				
40				
2400				

DAY 10	ORBIT	CREWMEN ACTIVITIES 1	2	3
0000				
20			E/Hyg	
40			Rest	
0100				
20				
40				
0200		1601 PH II	1601 PH II	
20				
40				
0300				
20				
40				
0400		E/Hyg	E/Hyg	
20				
40		Rest	Rest	
0500				
20				
40				
0600				
20				
40				
0700				
20				
40				
0800		Sleep	Sleep	
20				
40				
0900				
20				
40				
1000				
20				
40				
1100		E/Hyg	E/Hyg	
20				
40		Rest	Rest	
1200		0501		
20				
40				
1300				
20				
40				
1400				
20				
40				
1500		1601 PH II	1601 PH II	
20				
40				
1600				
20				
40				
1700				
20				
40				
1800				
20				
40				
1900		Rest	Rest	
20				
40				
2000				
20				
40				
2100		E/Hyg	E/Hyg	
20				
40				
2200				
20				
40				
2300		Rest	Rest	
20				
40				
2400				

DAY 11	ORBIT	CREWMEN ACTIVITIES 1	2	3
0000			1601 PH II	
20		1601 PH II		
40			E/Hyg	
0100		0201a		
20				
40		0202 c-f		
0200				
20				
40				
0300				
20				
40				
0400		E/Hyg	Sleep	
20				
40		Rest		
0500				
20				
40				
0600				
20				
40				
0700			E/Hyg	
20				
40			Rest	
0800		Sleep	1601 PH II	
20				
40			0201a	
0900			0202 c-f	
20				
40				
1000				
20				
40				
1100			Rest	
20		E/Hyg		
40		Rest		
1200		0501		
20				
40				
1300				
20				
40				
1400		1601 PH II	1601 PH II	
20				
40				
1500				
20				
40				
1600				
20				
40				
1700		Rest	Rest	
20				
40				
1800		E/Hyg	E/Hyg	
20				
40				
1900				
20				
40				
2000		Sleep	Sleep	
20				
40				
2100				
20				
40				
2200		E/Hyg	E/Hyg	
20				
40				
2300		1603	1603	
20				
40				
2400				

DAY 12	ORBIT	CREWMEN ACTIVITIES 1	2	3
0000		E/Hyg	E/Hyg	
20				
40		Rest	Rest	
0100				
20				
40				
0200				
20				
40				
0300				
20				
40				
0400		1603	1603	
20				
40				
0500				
20				
40				
0600				
20				
40				
0700		E/Hyg	E/Hyg	
20				
40		Rest	Rest	
0800				
20				
40				
0900		1601 PH I	1601 PH I	
20				
40				
1000				
20		Rest	Rest	
40				
1100				
20				
40				
1200				
20		1601 PH I	1601 PH I	
40				
1300				
20				
40				
1400				
20		E/Hyg	E/Hyg	
40				
1500		Rest	Rest	
20				
40				
1600				
20				
40				
1700				
20				
40				
1800		Sleep	Sleep	
20				
40				
1900				
20				
40				
2000				
20				
40				
2100		E/Hyg	E/Hyg	
20				
40				
2200		Rest	Rest	
20				
40				
2300		Rest	Rest	
20				
40				
2400				

NOTES

Table 3-2 **CREW SCHEDULING, FLIGHT** 509, **SHEET** 4 **OF** 4

DAY 13	ORBIT	CREWMEN ACTIVITIES 1.	2	3	DAY 14	ORBIT	CREWMEN ACTIVITIES 1	2	3	DAY	ORBIT	CREWMEN ACTIVITIES 1	2	3	DAY	ORBIT	CREWMEN ACTIVITIES 1	2	3
0000		1601 PH I	1601 PH I		0000					0000					0000				
20					20					20					20				
40					40					40					40				
0100					0100					0100					0100				
20					20					20					20				
40					40					40					40				
0200					0200		1601 PH I	1601 PH I		0200					0200				
20					20					20					20				
40					40					40					40				
0300		Rest	Rest		0300					0300					0300				
20					20					20					20				
40					40					40					40				
0400					0400		E/Hyg	E/Hyg		0400					0400				
20					20					20					20				
40					40					40					40				
0500		E/Hyg	E/Hyg		0500		Rest	Rest		0500					0500				
20					20					20					20				
40					40					40					40				
0600					0600					0600					0600				
20					20					20					20				
40					40					40					40				
0700					0700		Sleep	Sleep		0700					0700				
20					20					20					20				
40		1601 PH I	1601 PH I		40					40					40				
0800					0800					0800					0800				
20					20					20					20				
40					40					40					40				
0900					0900					0900					0900				
20					20					20					20				
40					40					40					40				
1000		E/Hyg	E/Hyg		1000					1000					1000				
20					20					20					20				
40		Rest	Rest		40					40					40				
1100					1100		1601 PH I	1601 PH I		1100					1100				
20					20					20					20				
40					40					40					40				
1200					1200					1200					1200				
20					20					20					20				
40					40					40					40				
1300					1300		0501			1300					1300				
20					20					20					20				
40					40					40					40				
1400		Sleep	Sleep		1400					1400					1400				
20					20					20					20				
40					40					40					40				
1500					1500					1500					1500				
20					20					20					20				
40					40					40					40				
1600					1600					1600					1600				
20					20					20					20				
40					40					40					40				
1700		E/Hyg	E/Hyg		1700					1700					1700				
20					20					20					20				
40		Rest	Rest		40					40					40				
1800		1601 PH I	1601 PH I		1800					1800					1800				
20					20					20					20				
40					40					40					40				
1900					1900					1900					1900				
20					20					20					20				
40					40					40					40				
2000					2000					2000					2000				
20					20					20					20				
40					40					40					40				
2100		Rest	Rest		2100					2100					2100				
20					20					20					20				
40					40					40					40				
2200					2200					2200					2200				
20					20					20					20				
40					40					40					40				
2300		E/Hyg	E/Hyg		2300					2300					2300				
20					20					20					20				
40					40					40					40				
2400					2400					2400					2400				

NOTES

GRUMMAN AIRCRAFT ENGINEERING CORPORATION

Table 3-3 APOLLO EXTENSION SYSTEM EARTH ORBIT MISSION STUDY
FLIGHT [redacted] EXPERIMENT MISSION PROFILE

SHEET 1 OF 1

SAMPLE
DAY 5-6

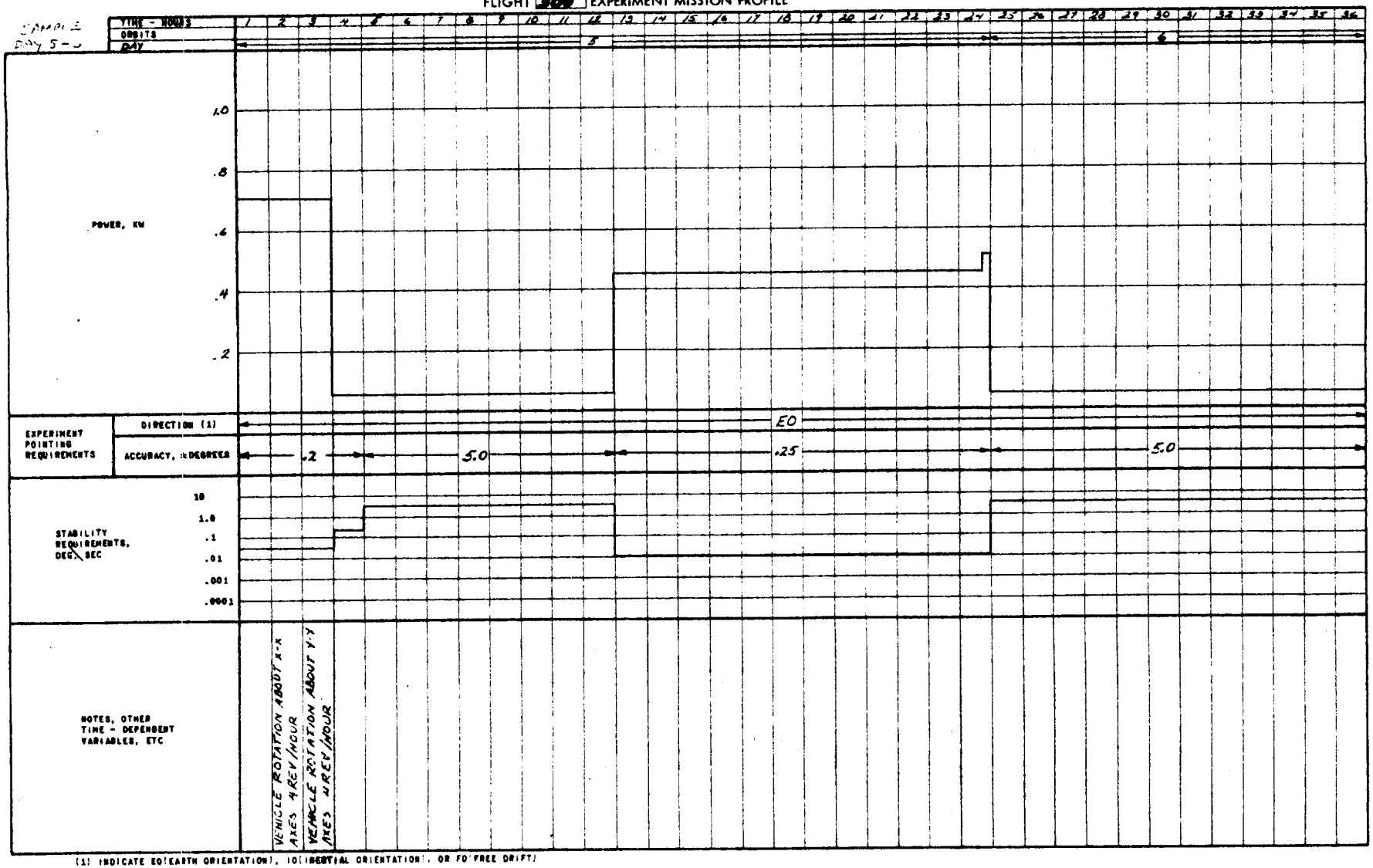

(1) INDICATE EO (EARTH ORIENTATION), IO (INERTIAL ORIENTATION), OR FD (FREE DRIFT)

3.2 SPACECRAFT DEFINITION

Flight 509 configuration, shown in Figures 3-1 and 3-2, carries experiments dealing with Space Structures Technology (1302, 1303, 1304, 1306), Maneuvering and Docking (1601, 1603), Radio Astronomy (0705B) and Conjugate Aurora (0801). Additional experiments are Biomedical (0100), Behaviorial (0200) and Radiation Monitoring (0501). The conjugate aurora experiment (0801) and the Large Aperature Space Erectable Antenna experiment (1306) require earth pointing. The radio astronomy experiment (0705B), deployed and evaluated as a portion of the extendable Rod Experiment (1303), requires stellar orientation. Maneuvering and Docking Experiments (1601, 1603) require that relative orientation between rendezvous vehicles be maintained to less than 0.2°.

During the remainder of the experiments nominal spacecraft attitude is earth oriented with the spacecraft's longitudinal axis located in the orbit plane. Attitude is held within a dead band of $\pm 5^{\circ}$ except during experiment periods having specific pointing and stability requirements. The CSM RCS is used for the Orbital Maneuvering and Docking Experiment (1601) and Syncom III Capture (1063), and requires additional RCS tankage. LEM RCS is used to stabilize the unmanned Lab for Phase I of the 1601 experiment. Pointing and stability requirements are accommodated by the CSM up to the RCS propellant capacity of the Block II CSM version. Beyond this capacity, the LEM RCS system assumes the attitude hold function.

All experiments except Biomed (0100) and Behaviorial (0200) and a portion of Radiation Monitoring (0501) are located in the D/S. The Biomed (0100) and Behaviorial (0200) equipment installations are common for all flights. Proton-alpha, High and Low Energy Spectrometers of 0501 are located in the D/S and supporting equipment in the A/S cabin.

The capture devices (net and magnetic boom) and target satellite for the maneuvering and docking experiment (1601) are located on the D/S. The net associated with 1601 is also used to capture Syncom III (1603).

KEY

No.	Experiment	Name
1		FCA Radiator
2	1304	Command Transmitter
3	1306	Tracking Receiver
4	1306	Modulator
5	1306	Parametric Amplifier
6	1306	Data Receiver (-15 Gc)
7		Power Pack
8	0501,0801	Proton-Alpha Spectrometer
9	0501,0801	Electron Spectrometer
10	1306	Antenna
11		Supplementary RCS Fuel
12	0801	Telescope Assy
13	1303	1000-ft Inflatable Rod
14	1601	Capture Device No. 2
15	1302	50-ft dia Ballon & Cannister
16	1601	Target Satellite
17	1601	Capture Device No. 1
18	1601	Equipt Radiator
19	1303	200-ft Retractable Rod
20	1303,0705b	1000-ft Retractable Rod
21	0801	Plasma Probes
22	0801	Magnetometer
23	1304	50-ft dia Ballon, Coils, Power Supply & Cannister
24	1601	Energy Absorbing Winch
25	1603	Syncom III
26		GOX Tank
27		Potable Water Storage
28		Waste Storage Tank
29		LioH Storage

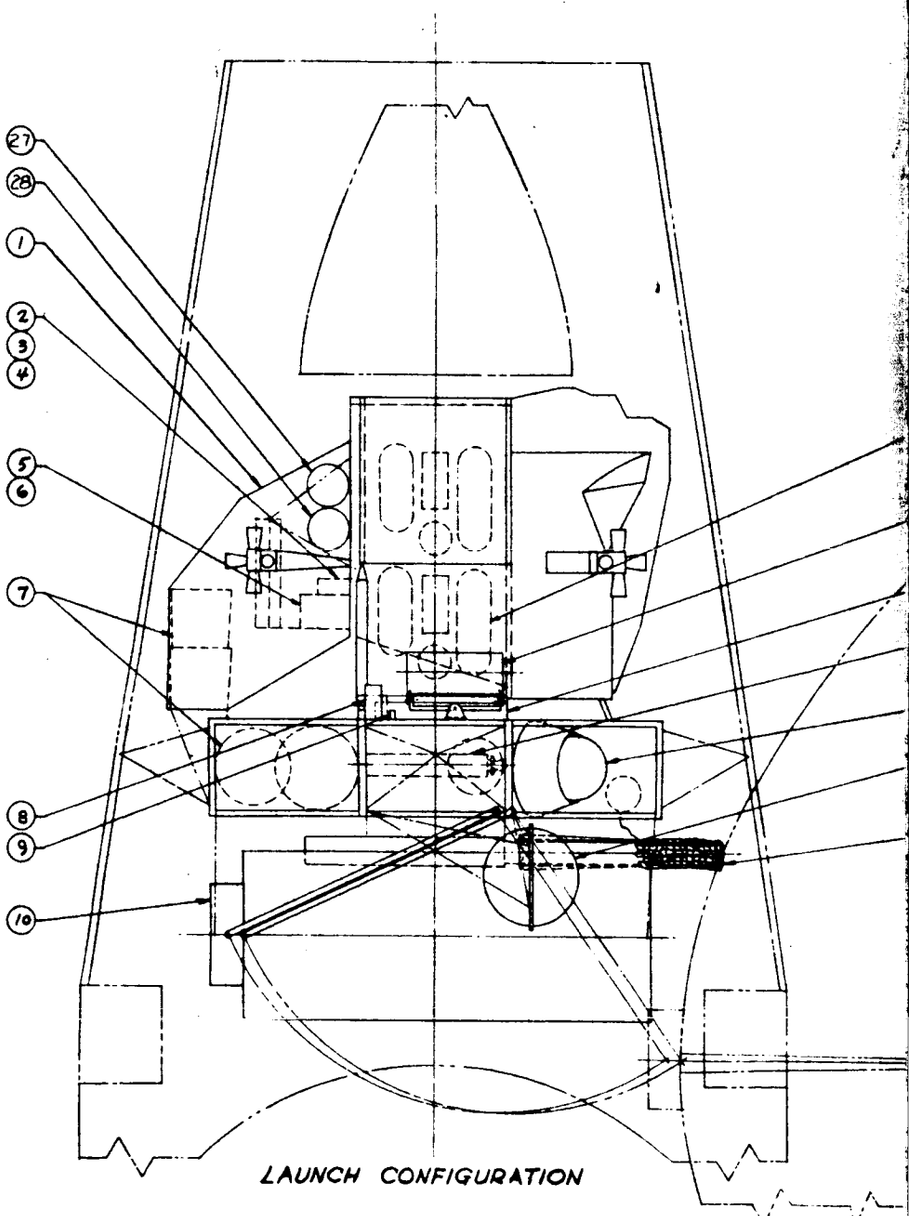

LAUNCH CONFIGURATION

FOLD-OUT #1

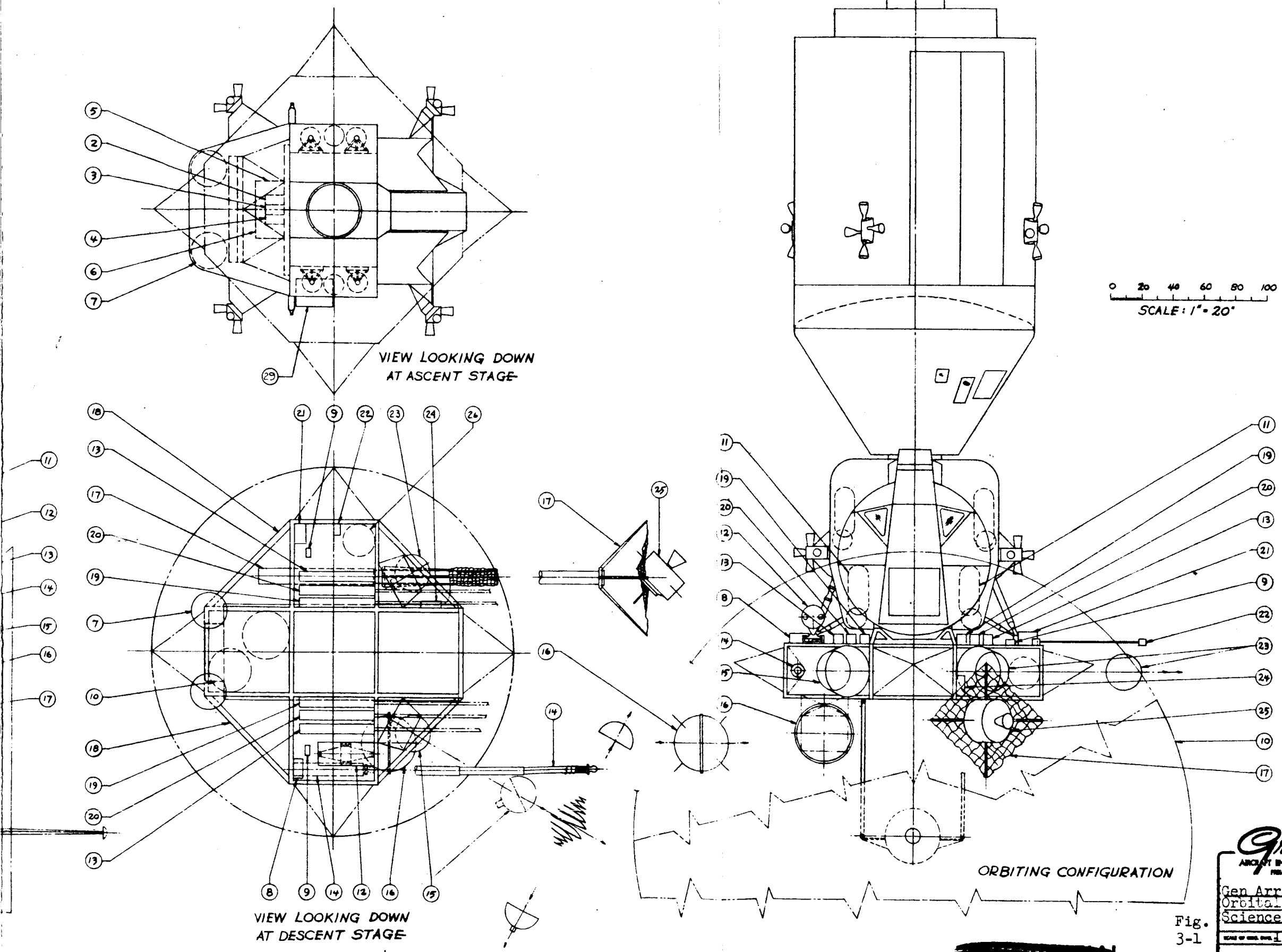

Fig. 3-1

Grumman AIRCRAFT ENGINEERING CORPORATION PRELIMINARY DESIGN DEPT.

Gen Arrgmt Flt. 509 Orbital Operations, Science & Technology

SCALE OF MODEL DWG. 1/20

AES 1022

FOLD-OUT #2

KEY

No.	Experiment	Name
1		ECS
2	0100&02[illegible]	Biomed
3		N & G
4		Attitude Controller
5		Lighting & Cryogenics
6		Translation Controller
7		Swing-out Work Top
8		Fan
9		Biomed
10		LiOH
11		Floodlights
12		N&G, ECS, PCS & Comm
13		Stab & Power Gen & Dist
14	0705b	Antenna Tuner
15	1306	Freq Meter
16		Recorders
17	1304	Binoculars
18		Food
19		Power Pack
20	1306	Antenna
21		IMU
22		Circuit Breakers
23		Ref igerator
24		Incubator
25	0501	Batt Charger
26	0501	Tissue Equiv. Ioniz. Chamber
27	0501	T.E.I.C. Rate Meter
28		Log & Data Book, Film & Tape Storage
29	1304	Optical Range Finder
30	1601	FM Transmitter
31		LGC
32		CDU
33		PSA & Sig Cond
34	1306	Radiometer
35	1601	Strobe Light
36	1601	16mm Camera
37	0501	Pulse Height Analyzer
38		LH Seat Stowed
39		RH Seat Stowed
40		Water Mod

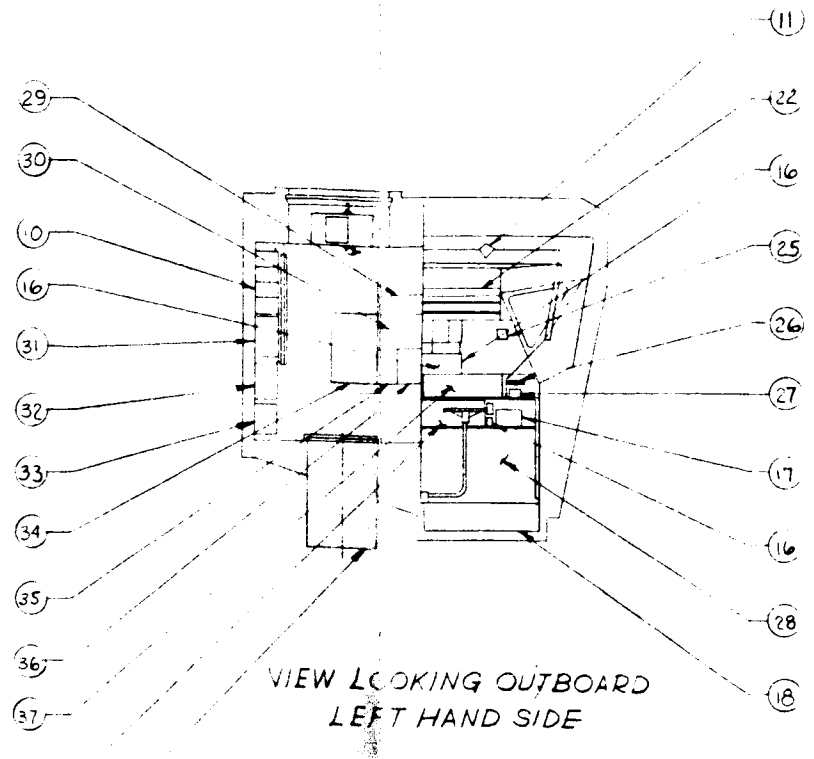

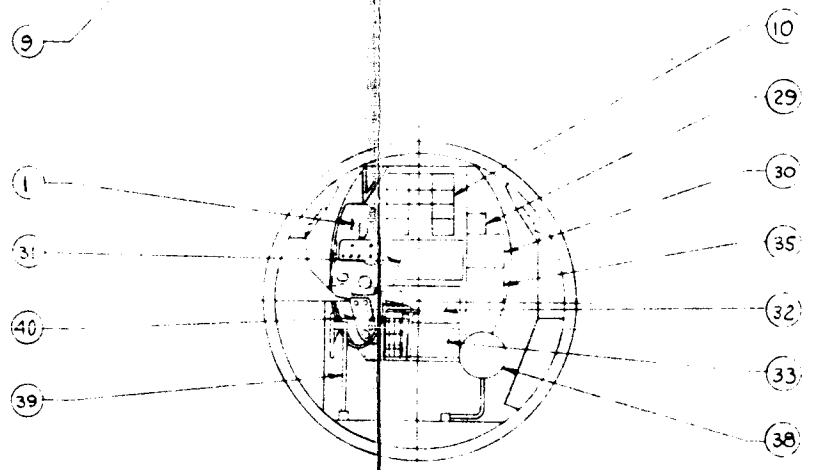

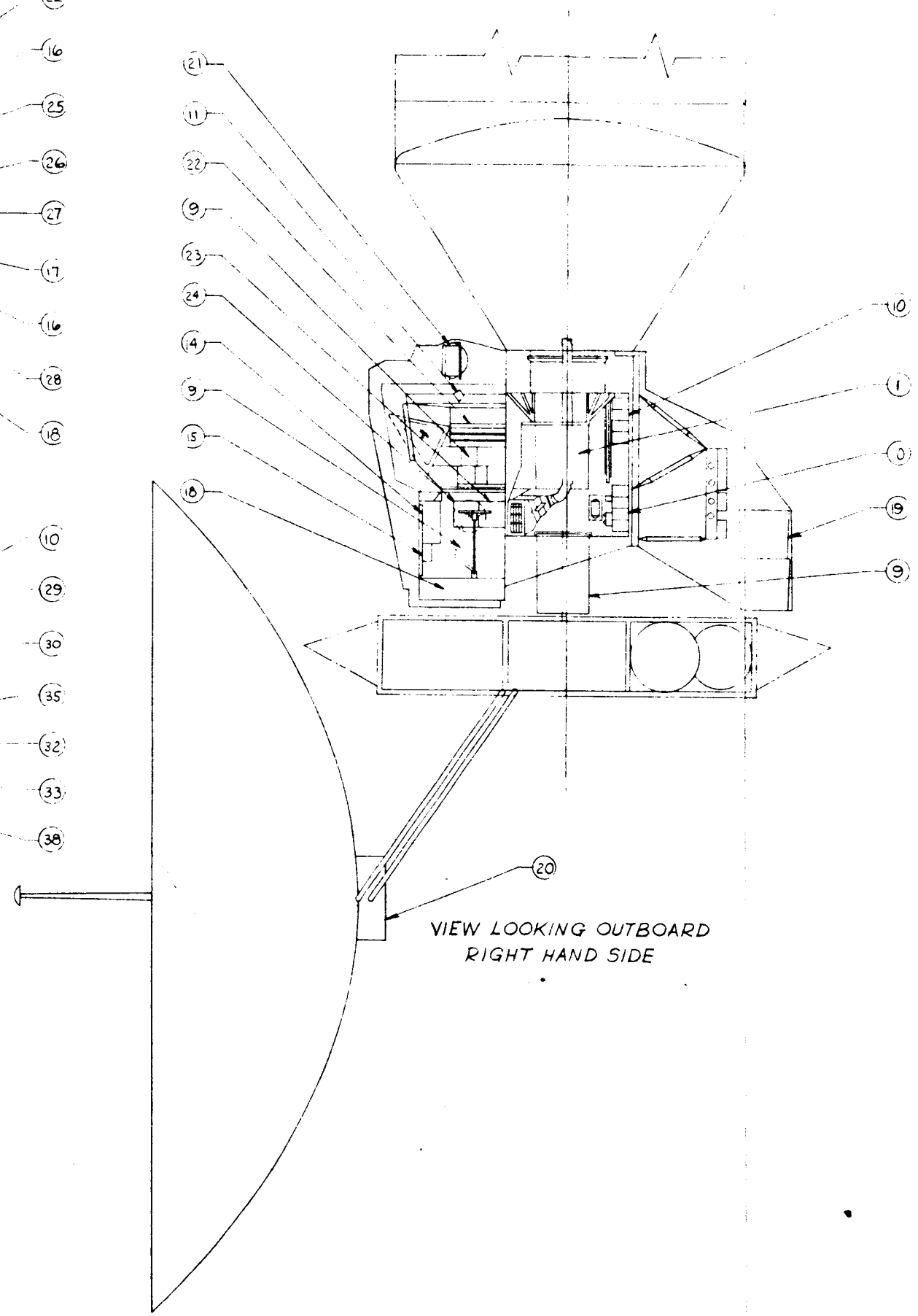

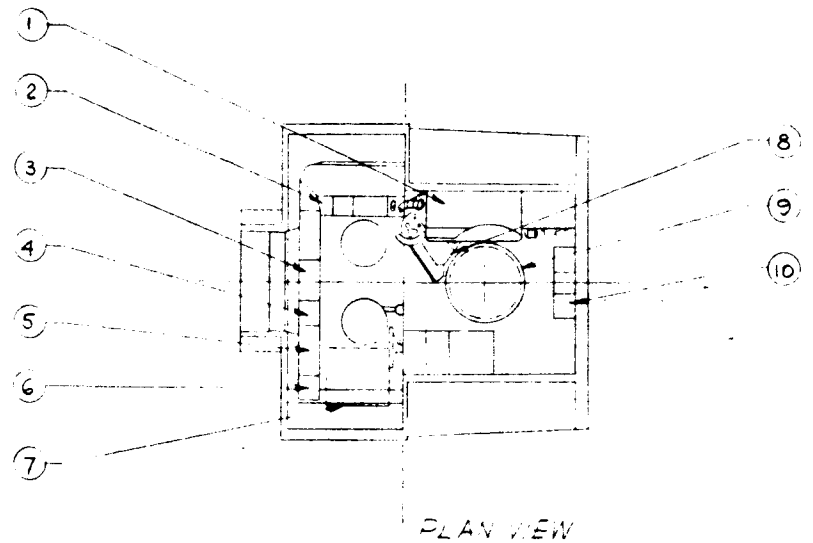

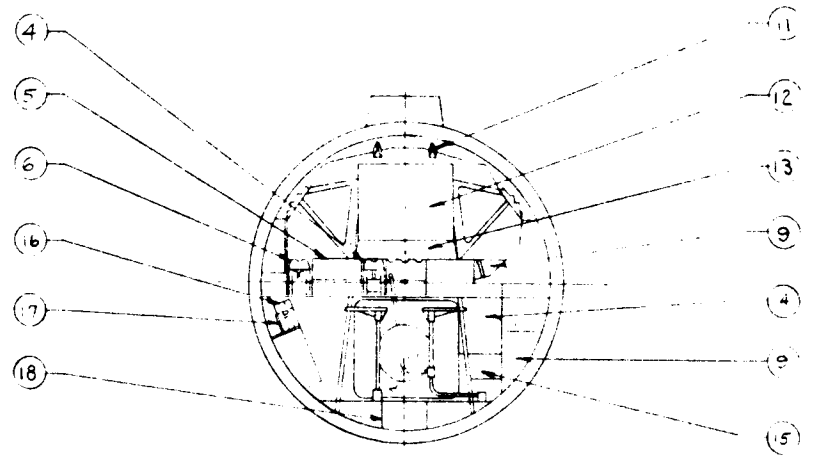

0 20 40 60 80 100
SCALE: 1" = 20"

Grumman
AIRCRAFT ENGINEERING CORPORATION
PRELIMINARY DESIGN SECT.

Fig. 3-2

Inbd Prof. Flt. 509
Orbital Operations
~~Science & Technology~~
SCALE OF ORIG. DWG 3/20
AES 1023

A boresighted star tracker, located on the D/S, and a star tracker, located on the A/S; are used for the Radio Astronomy Experiment (0705B).

A 30 in. descent stage is required to accomodate the erectable antenna of Exp. 1306. All other experiment equipment installations involve additions to existing LEM A/S structure and the basic low profile descent stage.

The inboard profile (Fig. 3-2) shows that adequate internal volume is available to accommodate experiments. All experiment displays and controls are located in the forward cabin or are accessible from forward cabin crew positions. Food and LIOH canisters are stored internally mounted on the aft bulkhead of the Lab.

Supporting electronics for experiments are carried in the aft equipment bay of the ascent stage. An existing LEM ascent equipment rack and cold plate is used.

In addition to the standard CSM/LEM Lab interface, this flight requires additional wiring for accommodating earth pointing requirements. Interface wiring involves star tracker and earth tracker sensory inputs used to maintain attitude hold.

This flight utilizes an Apollo CSM fuel cell electrical generation system, a LEM ECS to provide suit circuit operation in the lab during EVA and selected components to provide data transmission, status and appropriate displays.

Maneuvering, docking, and limit cycle operations required by the experiments result in the following propellant requirements:

- Must be carried in LEM: 85 lbs
- Must be carried in SM: 2225 lbs
- Carried in either LEM or SM: 900 lbs

To accommodate these requirements, an Apollo X SM RCS capacity of 2280 lbs is assumed for the Block II CSM. The LEM carries the 85 lbs required and also the 900 lbs that can be carried in either vehicle. Four sets of LEM RCS tanks will provide this capacity.

For operation during the separated mode, a 5 watt S-band data link to ground is suggested. A VHF command link, operated from the CM, is used to provide fine attitude hold control of the LEM Lab before docking.

The estimated laboratory weight is 8314 lbs (see tables 3-4 and 3-5).

[redacted]

Basic subsystem characteristics pertinent to this flight are described below:

Vehicle Pointing Reqm'nts	Inertial (8 1/2 days); Earth (1/2 day); Drift (5 days)
Stabilization Reqm'nts	$\pm.5^{\circ}$ @ 4 days; $\pm5^{\circ}$ @ 10 days
Avg. Experiment Pwr (Delivered)	225 Watts
Number of Repressurizations	3
Equipment cooling	20 ft^2 radiators
Number of Fuel Cells	2
Oxygen Tanks	1 Block II
Hydrogen Tanks	1 Block II
Peaking Battery	None
Fuel Cell Cooling	10 Ft^2 Radiator
RCS System	St'd LEM Thrustors
RCS Tankage	4 LEM Ox & 4 LEM Fuel
S & C System	ATCA, Rate Gyros, Command Assembly, Sensors
Water for Thermal Con (Max)	5.9 lbs
Water Generated	195 lbs

[redacted]

[redacted]

Table 3-4 LEM LAB DETAILED WEIGHT STATEMENT

Flight 509

COMPONENT	Weight, lb Configuration 1
Structure	(1966)
Basic Ascent	802
Rack	470
Shielding	402
Power Pack Structure	50
Experiment Supports	179
RCS Supports	63
Stabilization & Control	(163)
Attitude Translation Control Ass'y	27
Rate Gyro Ass'y	2
Controllers	14
Star Trackers & Electronics	84
Earth Tracker	36
Navigation & Guidance	(47)
Digital Command Ass'y	15
Program Coupler Ass'y	32
Crew Provisions	(114)
Restraints	35
Lighting	10
Food	60
LiOH - PLSS	9
Reaction Control System	(1485)
Propellant	985
Propellant System	268
Pressurization System	110
Thruster Ass'y	122
Controls & Displays	(224)
Environmental Control	(481)
Atmosphere Revitalization System	80
O_2 Supply and Cabin Pressurization	34
Water Management	36
Heat Transport, Cold Plates, Coolant	105
LiOH-ECS	104
Water	40
Radiators	76
Thermal Control	6

[redacted]

TABLE 3-4 LEM LAB DETAILED WEIGHT STATEMENT (Cont'd)

Flight 509

Component	Weight, lb Configuration 1
Instrumentation	(147)
Signal Conditioner	45
PCM & Timing Elect Ass'y	39
Data Storage	25
Experiment Selector	6
Data Tapes	30
Spare Voice Recorders	2
Electrical Power Supply	(1341)
Fuel Cell Ass'ys	492
Reactions and ECS Oxygen	203
Reactant Tankage	179
Plumbing	40
Inverters	75
Wiring, Distribution & Umbilical	352
Communications	(99)
Television	24
Audio Center	6
Voice Recorder	2
VHF/UHF Communications	67
Experiment	(2238)
Spares	(9)
Total Laboratory	8314

Table 3-5 INTEGRATED SPACECRAFT WEIGHT STATEMENT

FLIGHT 509

COMPONENT	Weight, lb Configuration 1
Command Module Basic Weight	(10,360)
Service Module Basic Weight	(9,254)
CSM Retro-Propellant	(17,500)
Laboratory Weight	(8,314)
Basic Laboratory Structure	1,966
Experiments	2,238
Experiment Support Systems	2,709
Expendables	1,401
CSM Experiment Dependent Weights	
RCS Propellant	2,123
Main Propellant	2,005
Experiment	764
Additional RCS Prop. Tankage	378
Total Laboratory & Experiment	(13,584)
Allowable Lab & Exper Weight	20,136
Total Orbiting Weight	50,698
Service Module Propellant (Ascent)	21,200
SLA Adapter	3,505
Launch Vehicle Payload	75,403

4. FLIGHT OPERATIONAL SUPPORT: FLIGHT NO. 509

Experiment 0100 & 0200 - Medicine and Behavioral - Periodic daily data transmission and ground monitoring of safety parameter data.

Experiment 0501 - Radiation Environment Monitoring - External particle flux measurements during a solar flare event are to be correlated with the solar activity observations made on earth stationed observatories and other satellites.

Experiment 0801 - Conjugate Aurora and Airglow - Coordinated auroral observations from ground stations. And, particle and geomagnetic measurements from satellites and ground stations.

Experiment 1302 - Deployment of R.F. Reflective Structures - Radar observations at as many frequencies as possible when the structure has been separated from the spacecraft.

Experiment 1306 - Large Aperature Space Erectable Antenna (30 ft. Diameter) - Spacecraft antenna system to track either earth-generated signals or switch to other spacecraft for comparative tracking accuracy experiments

Experiment 1601 - Orbital Maneuvering and Docking (Phase I & Phase II) Ground tracking at least once per orbit to accurately determine ephemeris of all vehicles.

Experiment 1603 - Recapture of Syncom III - Ground station ranging observations of both spacecraft and satellite to aid in effecting the recovery.

Table 4-1 presents the experimental data management requirements of the flight. A general discussion of this table and the data management system is contained in Volume 1.

TABLE 4-1. FLIGHT 509 DATA MANAGEMENT

Avg. Daily Data Recording Requirements

Experiment		Recording Time, min		Remarks
No.	Data Rate K-bits/sec	(A) 51.2 K-b/sec	(B) 1.6 K-b/sec	
0100_s	9 (AVG)	40		1.3 Exper-Hr/Day
0200_s	6.4 (AVG)	30		1.7 Exper-Hr/Day
0501	0.8		45	45 Min/Day Monitoring
0801	1.2		103	6 Hr x 4 Times
1303	0.2		17	4 Hr/Mission
1306	0.2		13	3 Hr/Mission
1302, 1304, 1603	Negligible Recording Requirements			
705B	Requires three days continuous transmission. Data from the other exper. must be recorded during this period.			
Totals		70	178	

Avg. Daily Data Transmission Time, min:

- Reqd: A + B = 248 min
- Available - Continuous

NOTE: During exper 1601, the Lab is separated and unmanned. Both exper and status data must be transmitted and/or recorded during these periods. Data recording is also required on the CSM during exper 1601.

Data Tape Return Required	zero lb, zero cu ft
Voice Tape Return Required (2 packages)	4 lb, 0.05 cu ft
Film Return Required	40 lb, 1.0 cu ft
Data Tape Carried	30 lb

1. FLIGHT MISSION DESCRIPTION

Flight No. 215

Altitude, n.mi 200	Inclination, deg 50	Duration, days 14	Crew 3

Mission Title: REMOTE SENSING OF EARTH'S SURFACE

Objectives: This flight is devoted almost entirely to multi-spectral and high resolution Earth mapping. At the end of the mission, the configuration for producing artificial gravity will be tested for a future operational flight. The spin-up and despin operation will also be used to perform Medical Experiments 0101 and 0102.

Configuration: Block II CSM, LEM A/S, D/S

Experiment Summary:

No.	Title	Equipment Location: LEM Stage Asc	Equipment Location: LEM Stage Desc	Equipment Location: CM
0100	Biomedical	X		
0200	Behavioral	X		
0301	Artificial "g"	X	X	
0501	Radiation Environment Monitoring	X		
0901	Multi-Spectral Target Characteristics	X	X	
0902	Synoptic Earth Mapping	X	X	

2. EXPERIMENT DESCRIPTION SUMMARY

FLIGHT - 215

EXPERIMENT: 0100-0200 - Medical/Behavior Experiments - The Medical/Behavioral Experiments are intended to evaluate the effects of prolonged space flight on man and to enhance his operational efficiency to permit more extensive manned space flight missions. Twenty-four experimental measurement packages have been defined to analyze critical human functions and to focus on those most likely to be affected adversely by prolonged space flight. Procedures and instrumentation employed in the experimental packages are a composite of updated, standard medical/behavioral and imminent state-of-the-art zero-g adapted, techniques. These procedures should provide: 1) an assessment of the effects of prolonged weightlessness on the psychophysiological integrity of the astronaut, 2) a determination of the mechanisms which mediate observed changes, 3) a prediction of the onset and extent of degraded functioning, and 4) a validation of preventive or countermeasures which may be necessary to support man's extended exploration of space.

EXPERIMENT: 0301 - Artificial Gravity by Rotation of Entire Station - The objective of this experiment is to determine the radius and rotational speed of a system to supply artificial gravity for convenience and/or maintenance of physical condition in a spacecraft. Artificial gravity will be simulated in the Apollo command module and LEM, by separating the vehicles with a cable system and rotating the entire system. Equipment will be provided to facilitate control of radius and rate of change of radius or rotation. Operational procedures to obtain different degrees of gravity will be developed and studied for parameters of radius, rotational rates and time.

EXPERIMENT: 0501 - Radiation Environment Monitoring - The objectives of this experiment are to record radiation received by the crew, and to furnish external radiation environment data for other experiments. Techniques for the Apollo Mission, or those employed in Tiros and OGO, will be used. Detection devices proposed for the monitoring systems are: proton-alpha and electron spectrometers, tissue equivalent ionization chambers, and film packs.

EXPERIMENT: 0901 - Multi-Spectral Target Characteristics Determination - The objectives of this experiment are to gather multispectral imagery and spectral response samples from a wide diversity of target areas under different illumination, temperature, and atmospheric conditions. This will provide the data to establish the extent to which characteristic, distinguishable, spectral signatures as gathered from space may be used to identify and to measure useful earth and atmospheric properties. The experiment involves the identification of surface and subsurface features and their interrelationships, by simultaneous mapping with sensors at different portions of the spectrum; allowing unique spectral responses to be correlated to establish both spatial and spectral signatures for unambiguous identification. In addition to spectral discrimination, signature variations are to be observed as a function of aspect or stereoscopic viewing and polarization. The spectral region covered lies between the near ultraviolet

and radar wavelengths. All techniques, excepting radar, are passive receptors of the spectral emittance/reflectance radiations from the surface areas resolved. Supplementing the imaging techniques are non-imaging instruments which require motion compensation to permit greater observation times of select areas of interest. Other accessory instrumentation includes the use of VHF equipment to afford greater penetration and sublayer measurement, gravity gradiometers and geochemical spectrometry to detect trace components in the atmosphere.

EXPERIMENT: 902 - Synoptic Earth Mapping - The objective of this experiment is to comprehensively photograph the land areas of the earth with very high resolution film to show the detailed geomorphology, transportation networks, urban and rural land use, vegetation types, and to provide for hydrologic surveys, road surveys, and resource assessment. Additionally, surface moisture, ice depth and microwave emission profiles will be obtained. Black and white photographs of 20 ft. resolution will be acquired at the red end of the visual spectrum for maximum haze penetration. Such photos will be taken only during good atmospheric viewing conditions. A pair of photos of the same area shall be acquired to provide good stereo resolution. A rotating mirror may be used to acquire several photo pairs adjacent to the satellite ground track when weather conditions are favorable, so that complete coverage may be obtained within the 14-day mission duration. Simultaneous photographs shall be acquired in the blue, yellow and near infrared special regions to a resolution of 200 ft. This imagery will provide the capability for the construction of true-color photographs and the custom selection of a false-color best suited to identification of a particular image class. A broadband VHF radar will provide surface moisture conditions and type while a radiometer operating at four different microwave frequencies will provide emission characteristics.

TABLE 2-1 FLIGHT 215 INTEGRATED EXPERIMENT EQUIPMENT LIST

Exper. No.	Component	Weight, lb	Vol, cu ft or size*	Elec Energy or Elec Pwr	Remarks
0100 & 0200	Medicine & Behavior Experiments	333	14.5	100 W Continuous plus 50W during oper	See Flt 218 for detailed Equip List
0501		(46.5)			
	Proton-Alpha Spectrometer	7	8 x 8 x 8	5.3 W Contin.	Duty Cycle - Continuous During Mission
	High Energy Electron Spectrometer	10	8 x 8 x 8		
	Low Energy Electron Spectrometer	5.5	4 x 4 x 3		
	Tissue Equiv ionization Chambers (3)	3	3 x 2 x 1/2		
	T.E.I.C. Rate Meters (2)	4	4 x 3 x 3		
	Film Packs & Pen Dosimeters (21)	1.5	2 x 2 x 1/8		
	Pulse Height Analyzer	15	12x12x12		
	Battery Charger	0.5	1/2x1/2x1	1 W	
0301		(351)			
	'g' Sensor	0.5			
	Rotation Rate Sensor	0.5			
	Cable, Motor, Gear Box, Drum Brake (4 of each)	350	48		
0901		(953)			
-1	16" Telescope & Mirror	350	30	100	o E.O., ± 0.5°, 0.5°/SEC
	Gimbal	50	5		o Grating Spectrometer and
-2A	Grating Spectrometer	30	5.5	50	o Multispectral Camera Share
					o Common Telescope Alternately
					o Precision Pointing (2SECS) through Gimbal with Inertial package on Telescope
	Closed Loop Cryogenic Cooling	13	.14	280	o Performed During Daylight Portion of Orbit
-2B	Cryogenic Storage Tank	200	2	-	
	Spectro Photometer	50	5.5	250	o Standby Power - 10 Watts
	Dewar	60	1	-	o 200 W Required for Controls & Displays
-4	Multispectral Camera Assembly	100	5.5	10	
	Microwave Imager Antenna	50	6 x 6 x1/2		
	Microwave Imager Inst. Data Equip.	50	8	100	

*INCHES UNLESS OTHERWISE SPEC.

TABLE 2-1 FLIGHT 215 INTEGRATED EXPERIMENT EQUIPMENT LIST

Exper. No.	Component	Weight, lb	Vol, cu ft or size*	Elec Energy or Elec Pwr	Remarks
		(1510)			
0902	24" Focal Length Mapping Cameras (2)	600	8	60	E.O., $\pm 0.2^{\circ}$, $.02^{\circ}$/SEC
	6" Focal Length Mapping Cameras (3)	300	3.6	50	Image Viewfinder and Star Camera common to 0901
	VHF Pulse Radar and Antenna	40	3.6	30	Film includes that used in 0901
	Microwave Radiometer and Antenna	100	36.3	200	0901, 0902 performed simultaneously
	Image Motion Compensation and Stable Platform	100	5	15	Standby Power-20 Watts
	Image Viewfinder	90	2.5	20	
	Star Field Camera	40	1.5	20	
	Film	200	3		
	SECOR/AROD	40	1.5	20	
		(118)			
Aux Equipt	Lights and TV Camera } EVA	20	.27	5/750	
	Movie Camera and Spare Magazine } EVA	38	.76	5	
	Gimbal and Booms } EVA	20	1	10	
	Computer	40	1	50	
	Data Storage, Telemetry, Signal Conditioners				
	Total Weight	3312			

*INCHES UNLESS OTHERWISE SPEC.

3. EXPERIMENT/SPACECRAFT INTEGRATION

3.1 MISSION DEFINITION

The primary purpose of Flight 215 is earth mapping in the visible and near visible spectral regions. At the end of the flight, the mechanism and operational technique to be used for producing artificial gravity on a later flight is tested to ensure its operational feasibility.

The crew duty cycle has been chosen so that there is always an astronaut available for work. With this cycle, Experiment 0901-2, Earth Photography in Multiple Spectrum Bands, is performed during the daylight portion of every orbit for 13 1/2 days, except for the seventh day where film and LIOH changes are necessary.

As implied by the notation 0901-2, it has been assumed that it is desirable and feasible to couple experiments 0901 and 0902 so that both may be performed at the same time by one astronaut. In this way, when an area of interest is chosen, all sensors determine the signature of the area in their respective frequency bands.

At the end of the flight, five hours are devoted to testing of artificial gravity apparatus (Experiment 0301). Two hours are allotted for extra-vehicular activity in setting up and tearing down the experiment, two hours for separating and reeling together the vehicles, and one hour for spin when separated.

Experiment 0501, Radiation Environment Monitoring, requires only ten minutes per day per man and is easily fitted into the crew schedule.

Adequate time is available to perform all primary experiments as defined. Nominal working hours are devoted to system checks and performance of 0100 (Biomedical) and 0200 (Behavioral) Experiments. However, because of the crew schedule selected to properly perform 0901-2, a minimum of crew time is available for the 0100 experiments where two men are required.

Because of the repetitive nature of the experiments, crew schedules for days 1 through 6 and 8 through 13 are identical. Day 7 is slightly different because of the need to have all three astronauts available for 0301.

The crew schedules are summarized in Table 3-1 and detailed in Table 3-2. The experiment equipment mission profile is shown in Table 3-3.

Table 3-1 Flight 215 Mission Definition Summary *

Exper. No.	Occurrence Day No.	Total Times Perf/ Mission	No. Men Req'd	Exper Time/Test Setup Time, min	Test Time, min	Total Exper Man-hr/ Mission Crewman 1	2	3	Total	Total Exper Time/Mission, hr Achv'd	Spec'd	Remarks
0100	1 thru 14	51	2		30 to 45	16.8	24.5	24.5	65.8	32.9	120.6	
0200	1 thru 14	106	1		45 to 90	36.3	31.5	21.7	89.5	89.5	70.9	0200's requiring 2 men cannot be performed
0301	14	1	3		300	5.0	5.0	5.0	15.0	5.0	5.0	2 EVA's required for setup & teardown 0101 & 0102 performed during 0301.
0501	1 thru 14	42	1		10	2.8	2.8	2.8	8.4	8.4	8.4	
0901,2	1 thru 14	214	1		48	52.8	52.0	66.4	171.2	171.2	175.7	1 EVA required for film change
Film & LiOH changes	7	1	3		120	2.0	2.0	2.0	6.0			
System Check (1)	1 thru 14	91	1		30 to 45	17.5	14.9	23.3	55.7			
					Total	133.2	132.7	145.7	411.6			

Maximum Work Day: 10.2 hrs on duty; Average Work Day: 10.0 hrs. on duty; Minimum Work Day: 8.0 hrs. on duty.

Total EVA Man Hours: 6

Notes: (1) Systems checks have been removed from the crew schedule, Table 3-2 (see Volume 1 Section 3). The man hours for system checks are retained in this table to avoid changes in previously released man hour totals.

* See Tables 3-2 and 3-3 for crew schedules and experiment equipment duty cycles.

Table 3-2 CREW SCHEDULING, FLIGHT 215, SHEET 1 OF 1

DAY 1	ORBIT	CREWMEN ACTIVITIES 1	2	3
0000		Sleep	E/Hyg	0901,2
20				
40				
0100			Rest	0501
20				
40				
0200			0200	0901,2
20				
40				
0300			0901,2	Rest
20			0501	
40				
0400			0100	0100
20				
40				
0500			0901,2	0200
20				
40			0100	0100
0600				
20		E/Hyg	E/Hyg	0901,2
40				
0700				
20		Rest	Rest	
40				
0800				0901,2
20		0200	Sleep	
40				
0900				E/Hyg
20		0901,2		
40				
1000		0501		Rest
20				
40				
1100		Rest		0901,2
20				
40				0200
1200				
20		0200		0901,2
40				
1300				
20		0100		0100
40				
1400		0901,2		
20				
40			E/Hyg	E/Hyg
1500				
20		0901,2	Rest	Rest
40				
1600				
20		E/Hyg		Sleep
40				
1700			0901,2	
20				
40		Rest	0200	
1800				
20		0901,2		
40				
1900			Rest	
20				
40				
2000		0901,2		
20				
40		0100	0100	
2100				
20			0901,2	
40		0200		
2200				
20				
40		E/Hyg		E/Hyg
2300			0901,2	
20				
40		Rest	0200	Rest
2400				

DAY 7	ORBIT	CREWMEN ACTIVITIES 1	2	3
0000		Sleep	E/Hyg	0901,2
20				
40				
0100			Rest	0501
20				
40				
0200			0200	0901,2
20				
40				
0300			0901,2	Rest
20			0501	
40				
0400			0100	0100
20				
40				
0500			0901,2	0200
20				
40			0100	0100
0600				
20		E/Hyg	E/Hyg	0901,2
40				
0700				
20		Rest	Rest	
40				
0800				0901,2
20		0200	Sleep	
40				
0900				E/Hyg
20		0901,2		
40				
1000		0501		Rest
20				
40				
1100		Rest		0901,2
20				
40				0200
1200				
20		0901,2		E/Hyg
40				
1300				Rest
20		0200		
40				
1400		0901,2		
20				
40			E/Hyg	
1500				
20		0901,2	Rest	
40				
1600				Sleep
20		E/Hyg		
40				
1700			0901,2	
20				
40		Rest	0200	
1800				
20		0901,2		
40				
1900			Rest	
20				E/Hyg
40				
2000				Rest
20				Stand-
40		Film	Film	by For
2100		And	And	Film
20		L10H	L10h	And
40		Changes	Changes	L10H
2200				Changes
20				
40		E/Hyg		
2300			Rest	0901,2
20				
40		Rest		0200
2400				

DAY 14	ORBIT	CREWMEN ACTIVITIES 1	2	3
0000			E/Hyg	0901,2
20				
40				
0100				0501
20				
40			Rest	
0200				0901,2
20				
40			0200	
0300		Sleep		
20			0901,2	Rest
40				
0400			0501	
20			0100	0100
40				
0500			0901,2	
20				0200
40			E/Hyg	
0600				
20				0901,2
40		E/Hyg		
0700				
20				
40		Rest		
0800				0901,2
20				
40		0200	Sleep	
0900				E/Hyg
20		0901,2		
40				
1000		0501		Rest
20				
40				
1100		Rest		0901,2
20			E/Hyg	
40				
1200			Rest	
20				0301
40				Setup
1300				
20				
40				
1400		0301	0301	0301
20				
40				
1500				
20				
40				
1600				
20				0301
40				Tear
1700				Down
20				
40				
1800				
20				
40				
1900				
20				
40				
2000				
20				
40				
2100				
20				
40				
2200				
20				
40				
2300				
20				
40				
2400				

DAY	ORBIT	CREWMEN ACTIVITIES 1	2	3
0000				
20				
40				
0100				
20				
40				
0200				
20				
40				
0300				
20				
40				
0400				
20				
40				
0500				
20				
40				
0600				
20				
40				
0700				
20				
40				
0800				
20				
40				
0900				
20				
40				
1000				
20				
40				
1100				
20				
40				
1200				
20				
40				
1300				
20				
40				
1400				
20				
40				
1500				
20				
40				
1600				
20				
40				
1700				
20				
40				
1800				
20				
40				
1900				
20				
40				
2000				
20				
40				
2100				
20				
40				
2200				
20				
40				
2300				
20				
40				
2400				

NOTES Days 2 thru 6, and 8 thru 13 are identical to Day 1.

Earth Dark

Earth Light

etc.

E/Hyg Eat & Personal Hygiene

Limits of Experiment Time

Limits of EVA

GRUMMAN AIRCRAFT ENGINEERING CORPORATION

Table 3-3 APOLLO EXTENSION SYSTEM EARTH ORBIT MISSION STUDY
FLIGHT 2,5 EXPERIMENT MISSION PROFILE

SHEET 1 OF 3

DAYS 1-4, 8-13

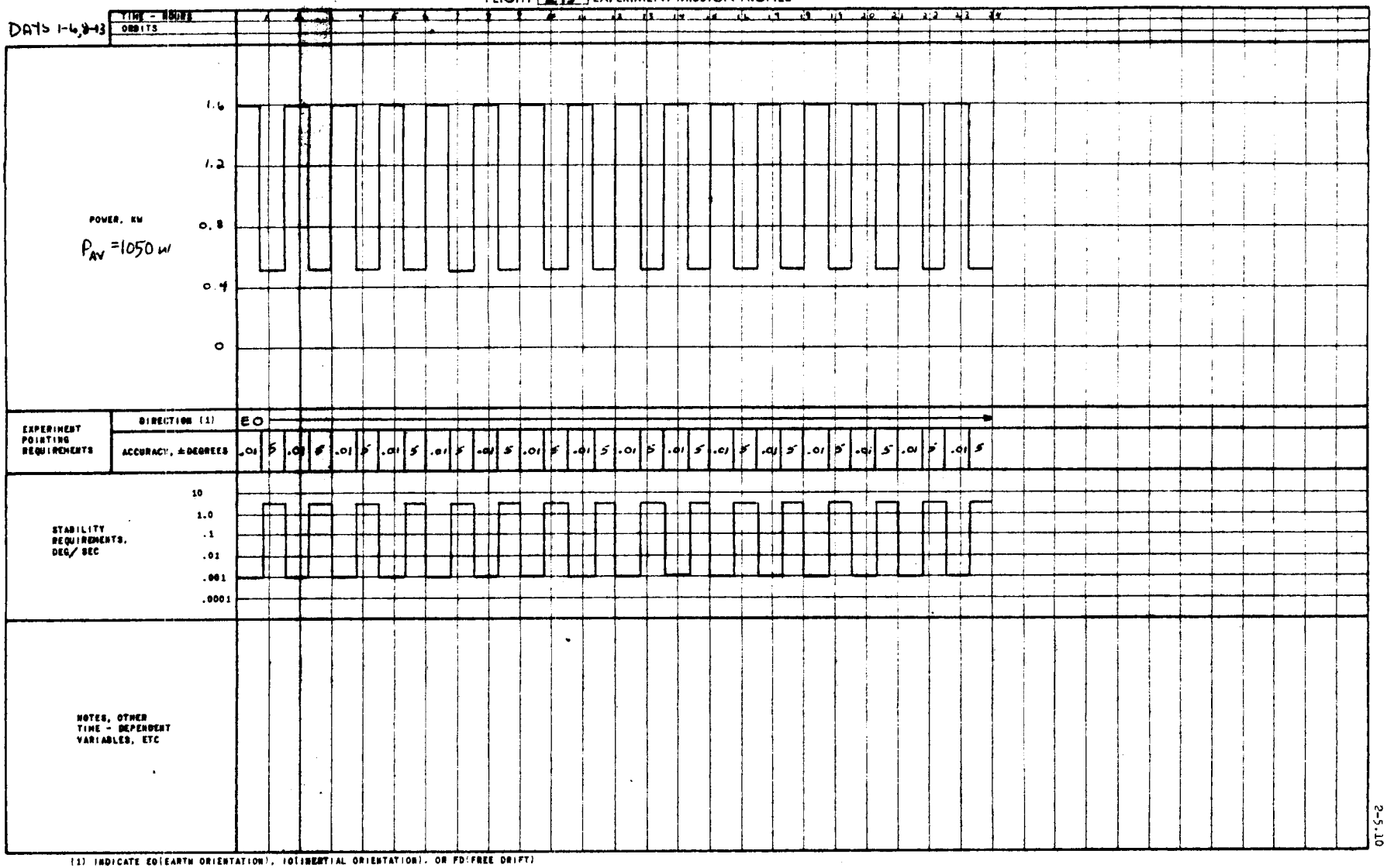

(1) INDICATE EO(EARTH ORIENTATION), IO(INERTIAL ORIENTATION), OR FD(FREE DRIFT)

GRUMMAN AIRCRAFT ENGINEERING CORPORATION

Table 3-3 APOLLO EXTENSION SYSTEM EARTH ORBIT MISSION STUDY
FLIGHT 2.15 EXPERIMENT MISSION PROFILE

SHEET 2 OF 3

DAY 7

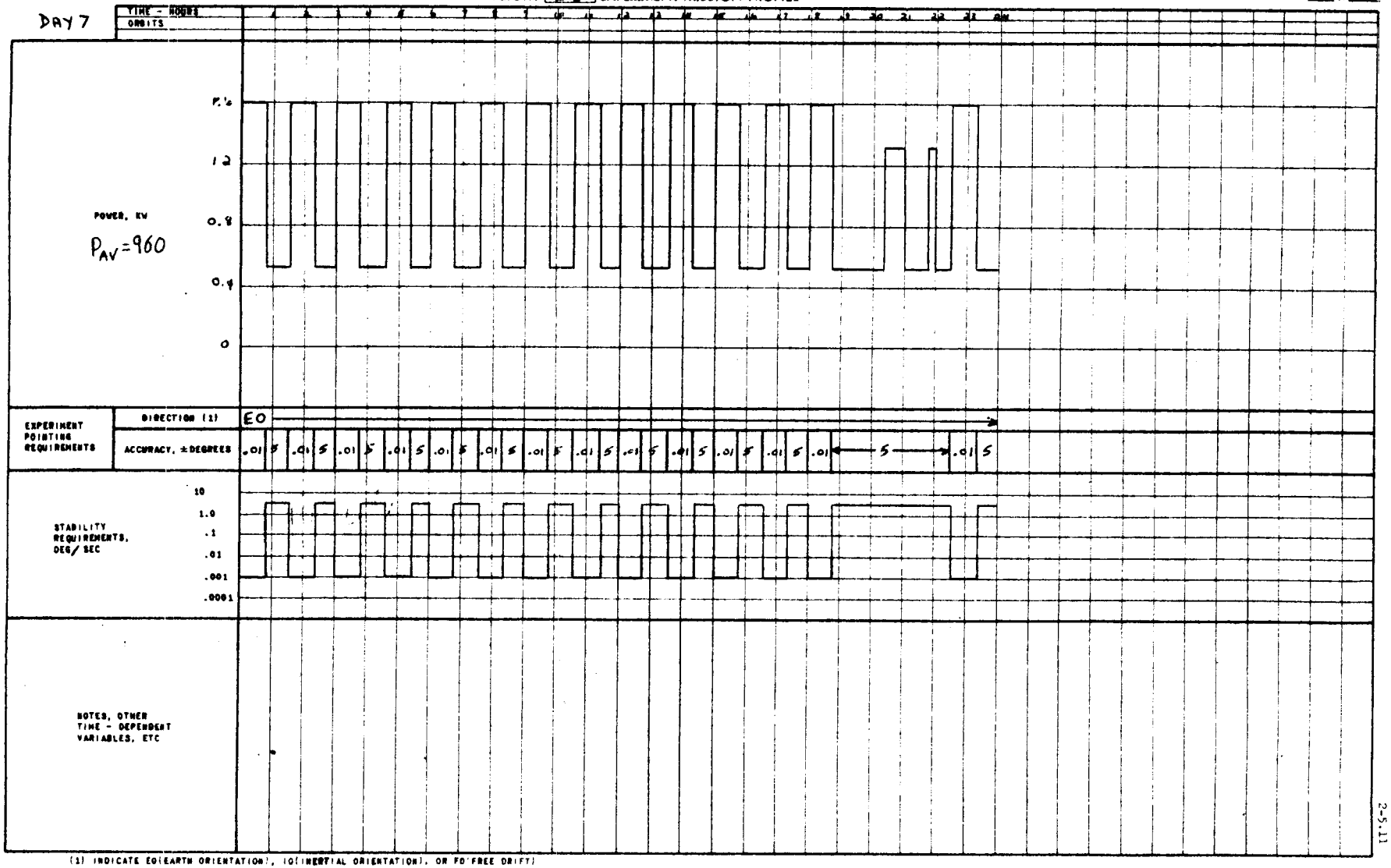

(1) INDICATE EO(EARTH ORIENTATION), IO(INERTIAL ORIENTATION), OR FD(FREE DRIFT)

GRUMMAN AIRCRAFT ENGINEERING CORPORATION

Table 3-3 APOLLO EXTENSION SYSTEM EARTH ORBIT MISSION STUDY
FLIGHT 218 EXPERIMENT MISSION PROFILE

DAY 14

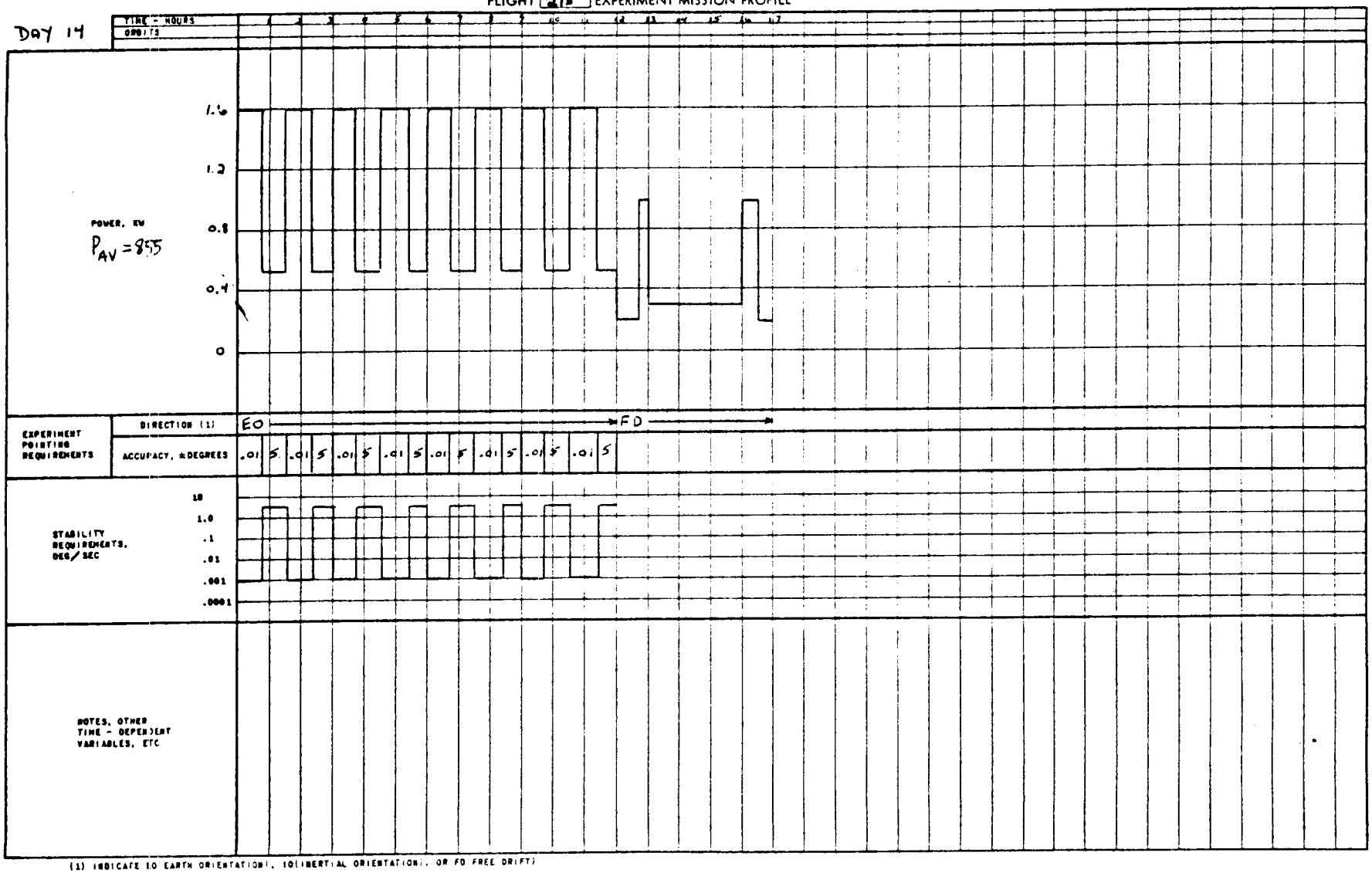

(1) INDICATE (O) EARTH ORIENTATION, (I) INERTIAL ORIENTATION, OR (F) FREE DRIFT)

3.2 SPACECRAFT DEFINITION

Flight 215 configuration, shown in Figs 3-1 and 3-2, carries experiments dealing with remote sensing of the earth's surface (0901 and 0902) and requires earth pointing. In addition, this flight checks out an artificial "g" mechanism to be used on a later flight. Nominal spacecraft attitude is earth oriented with the spacecraft's longitudinal axis located in the orbit plane. Attitude is held within a deadband of $\pm 5^{\circ}$, except during experiment periods having specific pointing and stability requirements. Pointing and stability requirements are accommodated by the CSM within the RCS propellant capacities of the Block II CSM.

The viewfinder (0902) installation provides hemispherical coverage for all experiments. The microwave radiometer antenna (0902) is stowed on the A/S and is deployed for experimentation.

The 0901 optical sensor installation utilizes the 0901-1 optics, and is mounted in the descent stage on a 2-axis gimbal to accommodate the higher pointing accuracy required of the experiment. During an EVA the 0901-4 multi-spectral camera is substituted for the 0901-2A grating spectrometer sensor installation on the 0901-1 optics, and film is changed. Similarly, the 24 in. and 6 in. F. L. mapping camera's (0902), mounted on the D/S, require E.V.A. for film change. Additional equipment mounted on the D/S includes:

- IR Imager (0901-2B)
- Microwave imager antenna (0901-5B)
- VHF Pulse antenna (0902)

The artificial "g" test involves separating the CSM and LEM Lab, retaining physical connection via a cable mechanism and rotating the extended configuration about a common spin axis. The artificial "g" cable mechanism is a 4 cable system, using brake-equipped motorized winches mounted to the descent stage. The mechanism allows for varying the distance between CSM and Lab. Setup of the mechanism requires an astronaut to attach the cables to special fittings on the SM. Checkout of the mechanism and control concept will involve separating the CM and Lab to the maximum distance required for the later artificial "g" flight

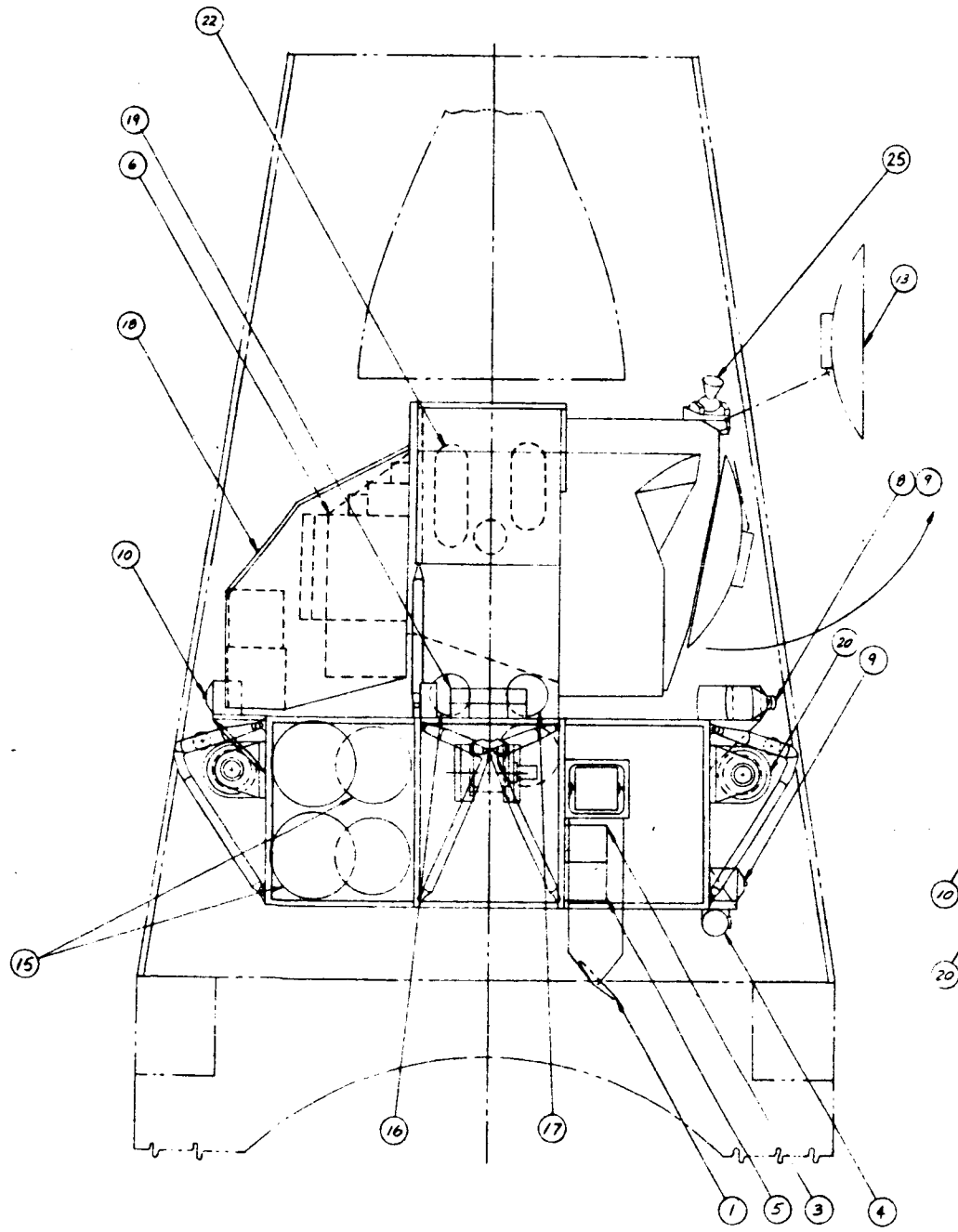

LAUNCH CONFIGURATION

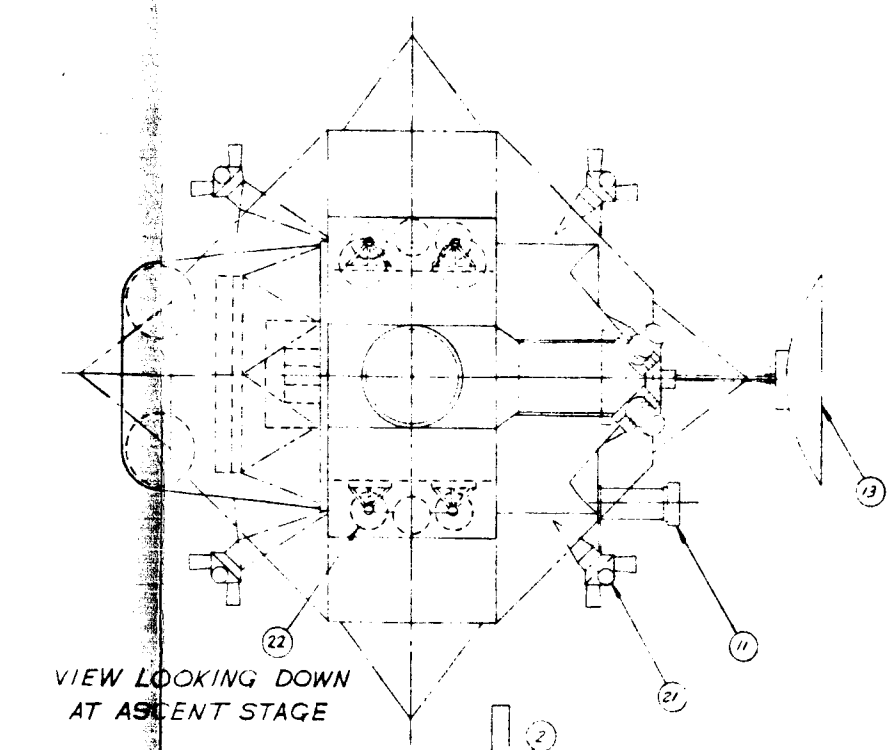

VIEW LOOKING DOWN AT ASCENT STAGE

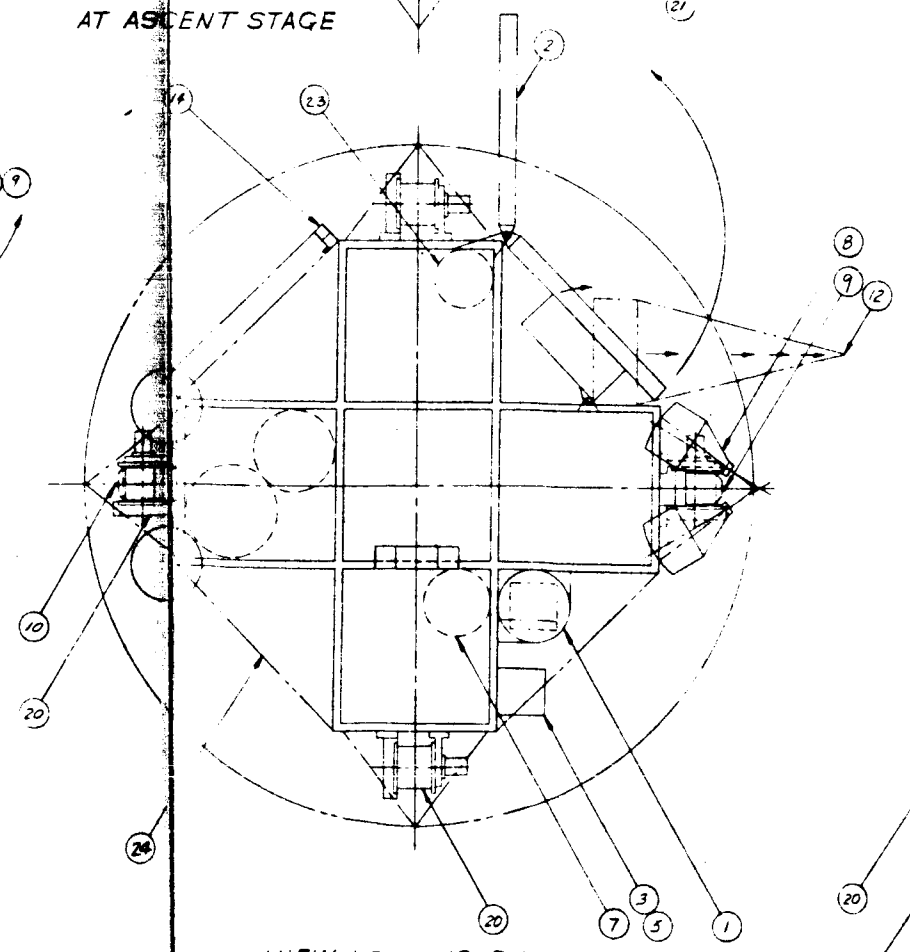

VIEW LOOKING DOWN AT DESCENT STAGE

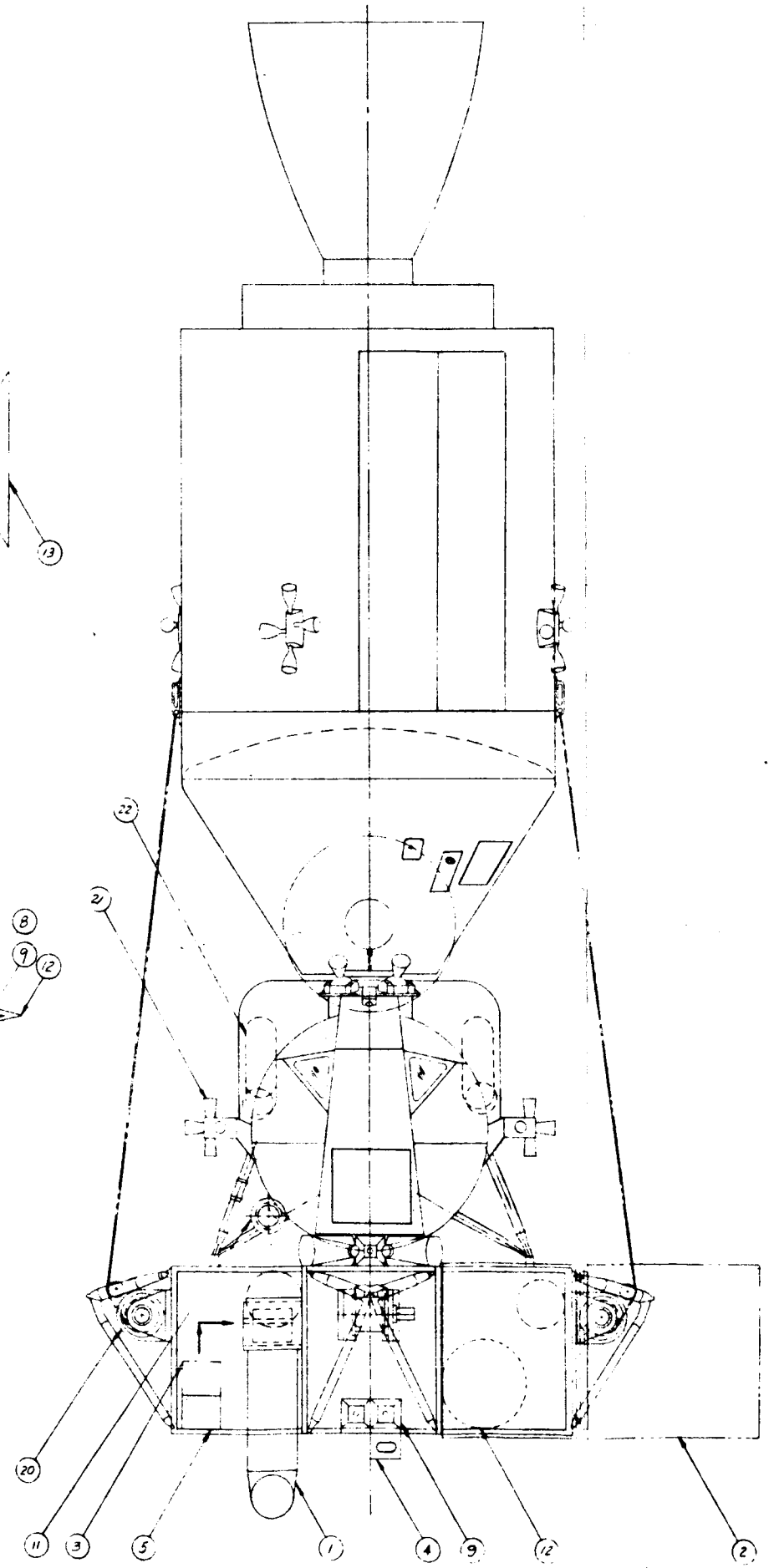

ORBITING CONFIGURATION

KEY

No.	Experiment	Name
1	0901	16-in. Telescope
2	0901	Microwave Imager Antenna
3	0901	Grating Spectrometer
4	0901	Spectro Photometer
5	0901	Multi Spectral Camera
6	0902,0901	Electronics Bay
7	0901	Cryogenics Storage
8	0902	24-in. FL Camera
9	0902	6-in. FL Camera
10	0902	Star Field Camera
11	0902	Image Viewfinder
12	0902	VHF Pulse Radar Antenna
13	0902	Microwave Radiometer Antenna
14	0501	Radiation Environment Spectrometers
15		Power Pack
16		Potable Water Tank
17		Waste Storage Tank
18		FCA Radiators
19		LioH Storage
20	0301	Artificial "g" Cable, Motor, Gear Box, Drum, Brake
21	0301	RCS
22	0301	RCS Fuel Tanks
23		GOX Tank
24		Equip. Radiator
25		Horizon Scanner & Star Tracker

0 20 40 60 80 100

SCALE: 1" = 20"

Fig. 3-1

Grumman AIRCRAFT ENGINEERING CORPORATION PRELIMINARY DESIGN SECT.

Gen Arrgmt Flt. 215
Remote Sensing
Of Earth's Surface

SCALE OF ORIG. DWG. - 1/20

AES 1024

KEY

No.	Experiment	Name
1	0901	16-in. Telescope
2	0901	Spectro Photometer
3	0902,0901	Electronics Bay
4	0902	24-in. FL Camera
5	0902	6-in. FL Camera
6	0902	Star Field Camera
7	0902	Image Viewfinder
8	0902	Microwave Radiometer Ant.
9		Power Pack
10		Potable Water Tank
11		Waste Storage Tank
12		Radiators
13		LioH Storage
14	0100	Biomed
15	0501	Pulse Height Anal
16		Recorders
17		Digital Computer
18		Film & Tape Storage & Log Book
19		ECS
20		Water Module
21		Fan
22	0501	Battery Charger
23	0100-0200	Basic Lab
24		Main Panel Floodlights
25		Food Storage
26	0301	Artificial "g" Cable, Motor Gear Box, Drum, Brake
27	0200	Integrated Human Performance Test Console
28	0501	TEIC & TEIC Rate Meter
29	0301	"g" sensor & Rotation Rate Sensor
30		Flight Controller

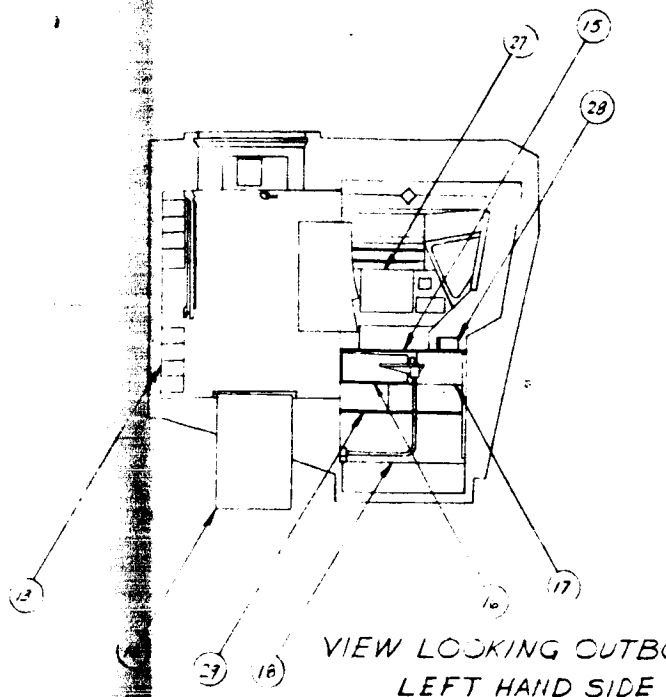

VIEW LOOKING OUTBOARD
LEFT HAND SIDE

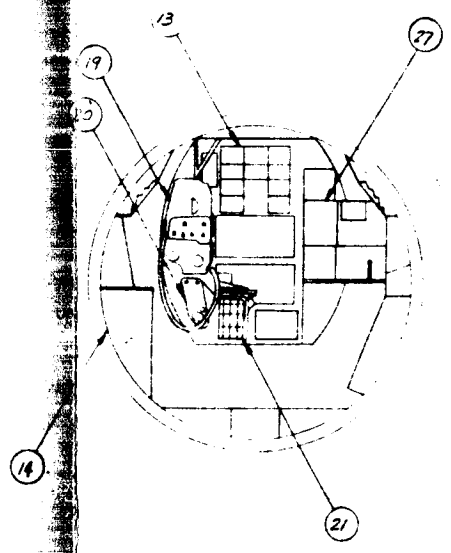

VIEW LOOKING AFT

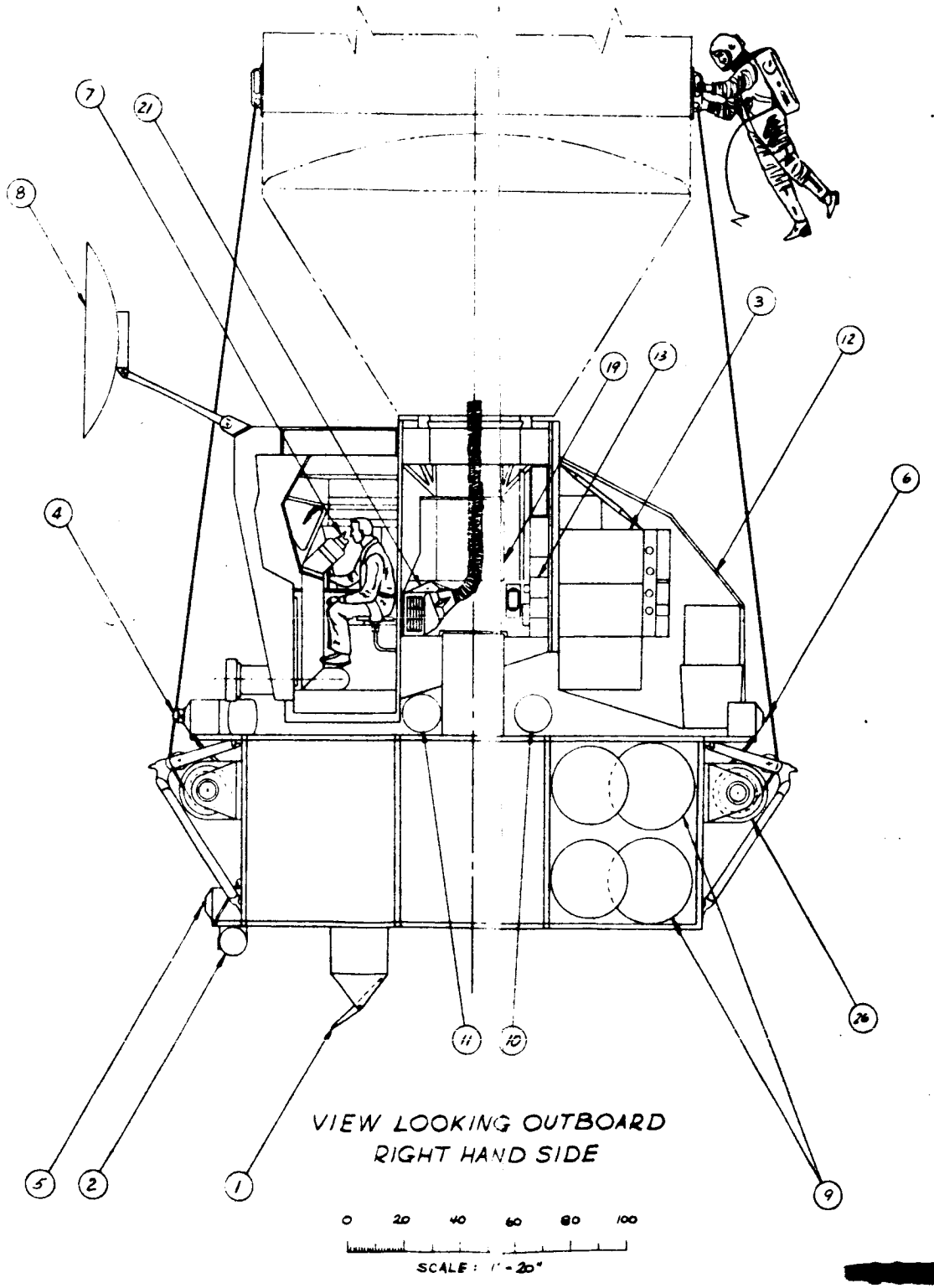

VIEW LOOKING OUTBOARD
RIGHT HAND SIDE

0 20 40 60 80 100
SCALE: 1"-20"

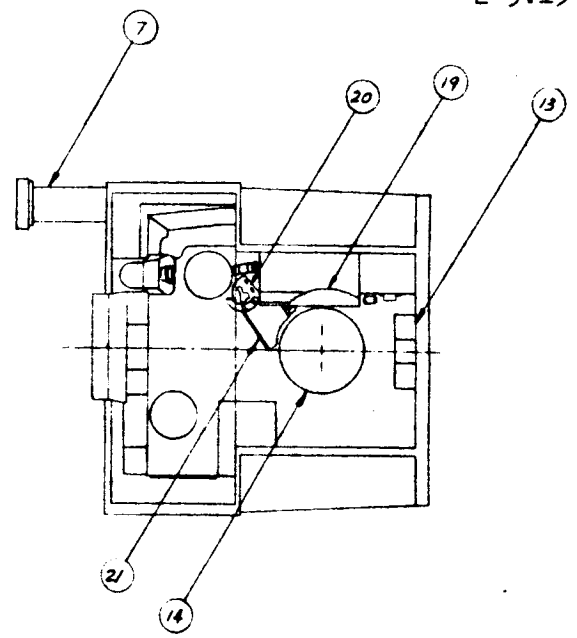

PLAN VIEW

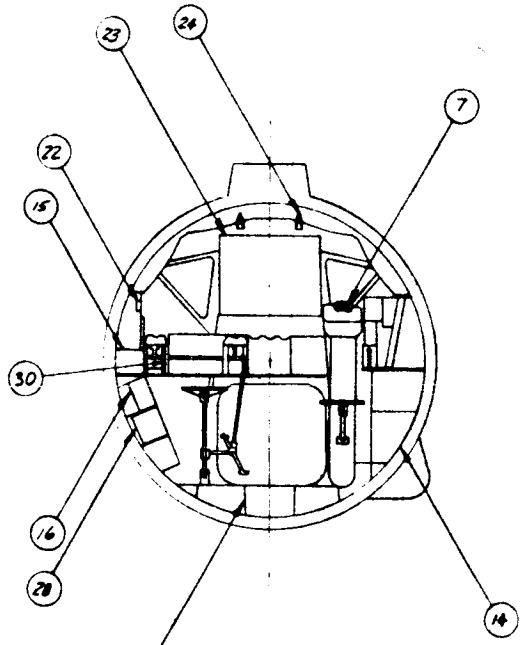

VIEW LOOKING FORWARD

Fig. 3-2

Grumman
AIRCRAFT ENGINEERING CORPORATION
PRELIMINARY DESIGN DEPT.

Inbd Prof Flt. 215
Remote Sensing of Earth's Surface

SCALE OF MODEL DWG. - 1/20

AES 1025

(Fig. 3-3) and duplicate the RPM ("g" level) to be tested at that separation distance.

The test sequence involves the following:

(1) Spin up the docked CSM and Lab to about 1 RPM
(2) Separate the vehicles
(3) Play out the cables to the desired distance
(4) Activate RCS systems in both the CSM and Lab to spin up to the required RPM or "g" level
(5) Maintain gravity condition and stable environment for the test duration desired
(6) De-spin to about 1 RPM
(7) Retract the cables
(8) Dock the CSM and Lab
(9) Stop the rotation.

During this test one astronaut is in the CM, two astronauts are in the Lab, and attitude stabilization and control is available in both vehicles. For this experiment the Lab carries the LEM flight control and RCS system.

Structural modifications to the LEM A/S are required to accomodate the viewfinder (0902). All other experiment equipment installations involve additions to existing LEM A/S and D/S structure.

The inboard profile Fig. 3-2 shows that adequate internal volume is available to accomodate experiments. All primary experiment displays and controls are located in the forward cabin, or are accessible from forward cabin crew positions. Food is stored internally. A seven-day supply of LiOH canisters is also stored internally, mounted on the aft bulkhead of the Lab, and are replaced from external storage during programmed EVA's.

(0100) behavioral, (0200) biomed, and (0501) radiation monitoring equipment installations are common to all flights.

Supporting electronics for experiments are carried in the existing LEM electronics bay mounted to the back of the A/S.

In addition to the standard CSM/LEM Lab interface, this flight requires

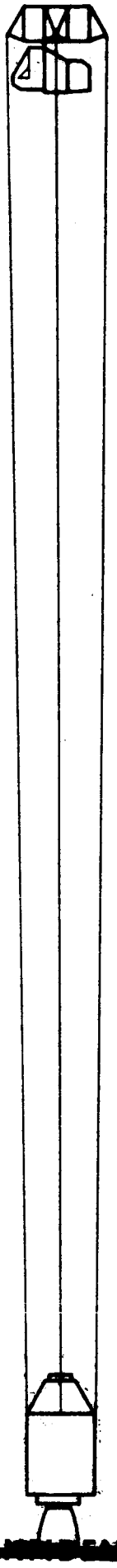

Fig. 3-3 Artificial g~235 ft

additional wiring for accommodating the earth pointing requirements of experiments. Interface wiring involves star tracker and horizon scanner sensory inputs used to maintain attitude hold.

This flight utilizes an Apollo CSM fuel cell powered electrical generation system, a LEM ECS to provide suit circuit operation in the Lab during EVA and artificial "g" operation, and selected components to provide data transmission, status and appropriate displays.

The RCS requirements for this flight accrue from precise limit cycle requirements for earth pointing experiments, and for the spin-despin operation associated with the artificial "g" test.

The estimated laboratory weight is 9895 lbs (see tables 3-4 and 3-5).

Basic subsystem characteristics pertinent to this flight are described below:

Vehicle Orientation	Earth Pointing
Stabilization Reqm'nts	$\pm .2^{\circ}$ 7 days; $\pm 5^{\circ}$ 7 days
Avg Experiment Pwr (Delivered)	1140 Watts
Number of Repressurizations	3
Equipment Cooling	60 Ft^2 Radiator
Number of Fuel Cells	3
Oxygen Tanks	2 Block II
Hydrogen Tanks	2 Block II
Peaking Battery	None
Fuel Cell Cooling	20.6 Ft^2 Radiator
RCS System	St'd LEM Thrustors
RCS Tankage	St'd LEM Tanks
S & C System	Sensors, Controllers, Rate Gyros, ATCA & Panels
Water for Thermal (MAX)	463 Lbs
Water Generated	502 Lbs

Table 3-4 LEM LAB DETAILED WEIGHT STATEMENT

FLIGHT 215

COMPONENT	Weight, lb. Configuration 1
Structure	(2260)
Basic Ascent	802
Basic Descent	750
Shielding	415
Power Pack Structure	50
Experiment Supports	190
RCS Supports	53
Stabilization and Control	(163)
Attitude Translation Control Ass'y	27
Rate Gyro Ass'y	2
Controllers	14
Star Trackers and Electronics	84
Horizon Scanner	36
Crew Provisions	(114)
Restraints	35
Lighting	10
Food	60
LiOH-PLSS	9
Reaction Control System	(496)
Propellant	185
Propellant System	134
Pressurization System	55
Thruster Ass'y	122
Controls and Displays	(330)
Environmental Control	(579)
Atmosphere Revitalization System	80
O_2 Supply and Cabin Pressurization	34
Water Management	36
Heat Transport, Cold Plates, Coolant	105
LiOH-ECS	104
Water	40
Radiators	112
Thermal Control	68

Table 3-4 LEM LAB DETAILED WEIGHT STATEMENT (Cont'd.)

FLIGHT 215

COMPONENT	Weight, lb. Configuration 1
Instrumentation	(217)
Signal Conditioner	45
PCM & Timing Elect Assy	39
Data Storage	25
Experiment Selector	6
Data Tapes	100
Spare Voice Recorders	2
Electrical Power Supply	(2316)
Fuel Cell Ass'ys.	738
Reactants and ECS Oxygen	539
Reactant Tankage	358
Plumbing	40
Inverters	75
Wiring, Distirbution and Umbilical	566
Communications	(99)
Television	24
Audio Center	6
Voice Recorder	2
VHF/UHF Antenna	67
Experiment	(3312)
Spares	(9)
Total Laboratory	9895

[redacted]

Table 3-5 INTEGRATED SPACECRAFT WEIGHT STATEMENT

FLIGHT 215

COMPONENT	Weight, lb. Configuration 1
Command Module Basic Weight	(10,360)
Service Module Basic Weight	(9,248)
CSM Retro-Propellant	(1,180)
Laboratory Weight	(9,895)
Basic Laboratory Structure	2,260
Experiments	3,312
Experiment Support Systems	3,386
Expendables	937
CSM Experiment Dependent Weights	
RCS Propellent	614
Total Laboratory and Experiment	(10,509)
Allowable Lab. and Exper. Weight	10,387
Total Orbiting Weight	31,297
Service Module Propellant (Ascent)	1,345
SLA Adapter	3,505
Launch Vehicle Payload	36,147

[redacted]

4. FLIGHT OPERATIONAL SUPPORT: FLIGHT NO. 215

Experiment 0100 & 0200 - Medicine and Behavioral - Periodic daily data transmission and ground monitoring of safety parameter data.

Experiment 0501 - Radiation Environment Monitoring - External particle flux measurements during a solar flare event are to be correlated with the solar activity observations made on earth stationed observatories and other satellites.

Experiment 0902 - Synoptic Earth Mapping - A network of ground transponders is necessary to determine the relative position of the spacecraft to positions within the photographic field of view to 10 foot accuracies. A SECOR or AROD system with a world-wide deployment of transponders would satisfy this requirement.

Table 4-1 presents the experimental data management requirements of the flight. A general discussion of this table and the data management system is contained in Volume 1.

TABLE 4-1. FLIGHT 215 DATA MANAGEMENT

Avg. Daily Data Recording Requirements

Experiment		Recording Time, min		Remarks
No.	Data Rate K-bits/sec	(A) 51.2 K-b/sec	(B) 1.6 K-b/sec	
0100_s	9 (AVG)	90		3 Exper-Hr/Day
0200_s	6.4 (AVG)	103		5.9 Exper-Hr/Day
0501	0.8		45	45 Min/Day Monitoring
0301	8-0.2	5	15	4 Hr x 1 Time
0901 & 0902	2.5	107		10 Sec x 40 Targets x 16 Times/Day
Totals		305	60	

Avg. Daily Data Transmission Time, min:

- Reqd: A + B/32 = 307 min
- Available = 200 min

Data Excess (minutes of tape) per day:

Required minus available transmission time = 107 min

Data Tape Return Required: $\frac{\text{Data Excess per Mission (min)}}{\text{30 min/tape reel}}$ = 50 reels $\begin{cases} \text{100 lb} \\ \text{5.0 cu ft} \end{cases}$

Optimum Avg Daily Transmission Time Required = 53 min.

Voice Tape Return Required (2 packages) 4 lb, .05 cu ft

Film Return Required 225 lb, 3.0 cu ft

Data Tape Carried 100 lbs

1. FLIGHT MISSION DESCRIPTION

Flight No. [illegible]

Altitude, n.mi 200	Inclination, deg [illegible]	Duration, days 14	Crew 3

Mission Title: SPACE SCIENCE AND OPERATIONS

Objectives: This flight will study some aspects of the space environment, including radiation, magnetic fields, and the generation of comet-like particle clouds. Remote sensing of the Earth's atmosphere with various sensors will be conducted. In addition, extravehicular assembly operations will be performed. Near the end of the flight, the CSM will separate from the LEM Lab module, and will be placed in an elliptical orbit to observe Echo II.

Configuration: Block II CSM, LEM A/S, D/S

Experiment Summary:

No.	Title	Equipment Location: LEM Stage Asc	LEM Stage Desc	CM
0100	Biomedical (excluding 0101 and 0102)	x		
0200	Behavioral	x		
0501	Radiation Environment Monitoring	x		
0502	Study of Magnetic Field Lines		x	
0503	Generation and Study of Comet-Like Particle Clouds		x	
0802A	Op. of High Resol. Infrared Radiometer		x	
0802B	Test of an Infrared Scanning Spectrometer		x	
0802C	Test Calibration and Evaluation of Microwave Spectrometer		x	
0802D	Test of a Prototype Star-Tracker	x		
1500	Extravehicular Assembly Operations		x	
1600	Observation of Echo II			x

2. EXPERIMENT DESCRIPTION SUMMARY

FLIGHT - 513

EXPERIMENT: 0100-0200 - Medical/Behavioral Experiments - The Medical/Behavioral Experiments are intended to evaluate the effects of prelonged space flight on man and to enhance his operational efficiency to permit more extensive manned space flight missions. Twenty-four experimental measurement packages have been defined to analyze critical human functions and to focus on those most likely to be affected adversely by prolonged space flight. Procedures and instrumentation employed in the experimental packages are a composite of updated, standard medical/behavioral and imminent state-of-the-art zero-g adapted, techniques. These procedures should provide: 1) an assessment of the effects of prolonged weightlessness on the psychophysiological integrity of the astronaut, 2) a determination of the mechanisms which mediate observed changes, 3) a prediction of the onset and extent of degraded functioning, and 4) a validation of preventive or countermeasures which may be necessary to support man's extended exploration of space.

NOTE

Experiments 0101 and 0102 require linear and/or rotational accelerations, such as would be obtained during a firing of the SM engine or during the artificial gravity experiment, in order to achieve all of the described experiment objectives. These experiments have been excluded from missions which lack sufficient SM propulsion and/or the artificial gravity experiment.

EXPERIMENT: 0501 - Radiation Environment Monitoring - The objectives of this experiment are to record radiation received by the crew, and to furnish external radiation environment data for other experiments. Techniques for the Apollo Mission, or those employed in Tiros and OGO, will be used. Detection devices proposed for the monitoring systems are: proton-alpha and electron spectrometers, tissue equivalent ionization chambers, and film packs.

EXPERIMENT: 0502 - Study of Magnetic Field Lines - The objective of this experiment is to study the terrestrial magnetic field's line of force geometry, by measuring paths followed by artificially injected electrons. A linear accelerator will inject precise charges along a field line. Electrons will be injected in a manner, such that, when they hit the atmosphere an aurorae spot will be produced which can be traced visibly and photographed via camera or radar. Several types of field line motion are expected - such as diurnal and solar cycle motion, due to quiescent solar-wind magnetosphere interaction and magnetic storm perturbation. Beam energy changes may elicit information about large scale electric fields from E x B drift measurements.

EXPERIMENT: 0503 - Generation and Analysis of an Artificial, Comet-like, Particulate Cloud. - The objective of this experiment is to determine the chemical composition and certain physical characteristics of comets, by producing an artificial comet cloud, studying particle growth rate and formation, and observing optical properties. Spectroscopic cloud analysis will facilitate the study of radical's behavior. Photographic, photometric and visual observations of a comet-like cloud, artifically generated at a time and under conditions favorable to photography from ground stations and spacecraft, will be made.

EXPERIMENT: 0802A - Operation of High-Resolution Infrared Radiometer (HRIR) Detectors - The objective of the experiment is to monitor the thermal radiation of the

Earth and its atmosphere in the near-infrared region between wavelengths of 3 and 5 microns for the purpose of producing cloud-cover pictures and measuring cloud-top temperatures. The detected thermal radiation is expected to provide the scientific community with an improved understanding of the heat balance of the Earth's atmosphere, a useful tool for upgrading the weather forecaster's prediction, and for evaluating the role of the trained astronaut-meteorologist. The radiometer, which integrates the energy received from meteorological targets of particular interest, does not form a television-type image. However, the timed and oriented thermal radiation data obtained are readily composed into cloud-cover "pictures" for detailed analysis.

EXPERIMENT: 0802B - Test of an Infrared Scanning Spectrometer - The objectives of this experiment are to study man's capability to calibrate, test, adjust, and evaluate an infrared scanning spectrometer while it is gathering meaningful data in the entire 0.2 to 40 micron band. Man's presence will enable him to determine those portions of the band best suited to give the required accuracy in measuring the Earth's radiation and its atmosphere. These optimized observations will provide a quantity of data on absorption, scattering, and extinction coefficients of the atmosphere, as well as distribution of species, to improve the existing mathematical models of the Earth's atmosphere. The astronaut-meteorologist will selectively program the infrared spectrometer for scans from a wavelength of 0.2 micron to 40 microns, making apparatus adjustments in the light of his own intelligence and observations, or from ground instructions.

EXPERIMENT: 0802C - Test, Calibration, and Evaluation of a Microwave Spectrometer - The objectives of this experiment are to study man's capability to calibrate, test, adjust and evaluate a microwave scanning spectrometer while it is operating in the 0.5 cm to 3 cm band. Investigations involving the detection of water vapor and studies of the atmospheric temperature profile can be performed near the instrument's lower design limit. The trained astronaut-meteorologist will be able to optimize the instrument's operation to monitor sudden changes caused by varying meteorological phenomena in the Earth's lower atmosphere, or change in the upper atmosphere due to solar storms. This experiment will be based on the trained astronauts-meteorologist's ability to program the employment of a microwave spectrometer in a very complex manner, to use and evaluate new, unproven instrumental concepts and techniques and to test, calibrate, adjust, and evaluate the instrument itself.

EXPERIMENT: 0802D - Test of a Prototype Star-Tracker - The objective of this experiment is to demonstrate the ability of a prototype star-tracker to lock on and track stars of the fourth magnitude, when viewed near the horizon, beneath the airglow layer. From these data it will be possible to determine the feasibility and to test the concept of inferring atmospheric vertical pressure distribution. The experiment will be performed by simultaneous initial acquisition of two stars, of known angular separation, by two separate star-trackers, followed by occultation of one of the stars by the Earth's atmosphere, and the Earth itself. Measurement of the angular motion of the occulted star relative to the reference star will reveal the degree to which the starlight was refracted by the atmosphere.

EXPERIMENT: 1507 - Space Operations Techniques/Subsystems - The objectives of this experiment are to determine the feasibility of and demonstrate the techniques and systems required for earth orbit assembly. The inital tasks will involve simple assembly task board devices. Use of various structural fasteners and tools will be demonstrated plus handling of structural elements in the space environment. These will be followed by more complex tasks such as assembly and disassembly of experimental tankage and structure.

EXPERIMENT: 1602 - Observation of Echo Satellite - The objective of this experiment is to determine, via visual observation and/or photographic methods, the characteristics of the Echo I and/or II satellite structure. At the completion of the flight mission, the CSM will separate from the LEM Lab and transfer to an orbit permitting close observation of the satellite during rendezvous.

TABLE 2-1 FLIGHT 513 INTEGRATED EXPERIMENT EQUIPMENT LIST

Exper. No.	Component	Weight, lb	Vol, cu ft or size*	Elec Energy or Elec Pwr	Remarks
0100 and 0200	Medicine and Behavior Experiments	321	14.5	100 W Continuous Plus 50W during Oper.	See Flt. 211 for Detailed Equip. List
0501		(46.5)			
	Proton-Alpha Spectrometer	7	8 x 8 x 8		
	High Energy Electron Spectrometer	10	8 x 8 x 8		
	Low Energy Electron Spectrometer	5.5	4 x 4 x 3		
	Tissue Equiv. Ionization Chambers (3)	3	3 x 2 x 1/2	5.3 W Total	Duty Cycle - Continuous During Mission
	T.E.I.C. Rate Meters (2)	4	4 x 3 x 3		
	Film Packs and Pen Dosimeters (2)	1.5	2 x 2 x 1/8		
	Pulse Height Analyzer	15	12 x 12 x 12		
	Battery Charger	0.5	1/2x1/2x1	1 W	
0502		(289)			
	Electron Gun	15	8 Dia x 5		1/2° Alignment to Mag. Field Line 12 Times
	Gimbal Mount	25			150 W Peak
	Capacitor Bank HVPS	230	20 x 20 x 20		0.4 KWH
	Magnetometer - Directional	13	0.5	10	6.5 MH
	VTVM	6	5 x 5 x 5		
0503		(147)			
	Chemical Canisters (4)	40-50	r=h=6.5		Performed 5 times @ 2 hrs. each
	Image Orthicon	30	.6	55	Pointing not critical
	Camera	1			
	Spectrographic Camera	35	2.5	5	100 W Peak
	Photometer	2	8 x 3 D	5	1 KWH
	Film	4	0.4		40 W Required for Tape Recorders and Video Displays.
	Shielding	25			
	Solenoid Release Mechanism				
0802a		(246)			
	Infrared Radiation Detector Assembly	25	0.3^3	25W	E.O., ± 0.5°, 0.5°/sec
	Optical Collector and Scan Mirror Assembly	48	3^3		45 minutes - 8x/day
	Cryogenic Cooling Supply	118	32 dia.		Cryogenic Cooling is Apollo Block II Liquid Hydrogen Cont
	Calibration Equipment	35	1.5		

*INCHES UNLESS OTHERWISE SPEC.

TABLE 2-1 FLIGHT 513 INTEGRATED EXPERIMENT EQUIPMENT LIST

Exper. No.	Component	Weight, lb	Vol, cu ft or size*	Elec Energy or Elec Pwr	Remarks
	Documentary Camera	20	0.2		
0802b		(308)			
	IR Spectrometer	50	0.25		
	Near IR Spectrometer	50	0.25	40W/75 min.	
	UV-Visual Spectrometer	50	0.25		
	Optical System	120	6.1	60W Peak	
	Resonance Chamber	30	1.0		
	Calibrating Equipment	5	0.5		
	Film	3			
0802c		(129.3)			
	12" Diameter Antenna	1.8	12 x 6		E.O, $\pm 0.5^{\circ}$, 0.5°/sec
	24" Diameter Antenna	7.5	24 x 8		45 minutes - 2X/day
	48" Diameter Antenna	30	48 x 12		Standby Power - 5W
	10-18 Gc Receiver				
	18-26 Gc Receiver				
	26-40 Gc Receiver	90 Total	1.3	90 W	
	40-50 Gc Receiver				
	49-59 Gc Receiver				
0802d		(.60)			
	Stable Platform	30	1.5	30 W	Two stars 20° Apart with one setting behind earth Orbit Ephereris Data Required Altitude Pointing not Critical Provided Within Platform and Gimbal Capability Drift - 1°/sec 10 minutes - 1/day Control Panel Requires 10 W
	Theodolites (2)	30	2.0		
1507		(824)			
	AMU/ECS	165	5.0		
	PLSS Chest Pack	41	1.0		
	Tool Kit	50	3.0		13 Tasks
	Task Boards	35	3.0		3 hours each
	Tankage	20	9.0	150 W	
	Structure	30	2.0		
	Restraint Equipment	5	1.0		

*INCHES UNLESS OTHERWISE SPEC.

[redacted]

TABLE 2-1 FLIGHT 513 INTEGRATED EXPERIMENT EQUIPMENT LIST

Exper. No.	Component	Weight, lb	Vol, cu ft or size*	Elec Energy or Elec Pwr	Remarks
1507 (cont.)	Television	10	0.4		
	Photo Equipment	11	0.5		
	Tape Recorders	--	--		
	Mounts, Attachments and Handholds	7	0.13		
	AMJ Fuel Supply System	450	16.0		
	Battery Charger			250 W	Every 4.5 hr, 13 times every
	Lighting			75 W	0.5 hr, 13 times
1602		(10.5)			
	70 mm Camera	5	0.5		
	Sighting Telescope	1.5			
	Bezel Mount	2	1.0		In command module
	70 mm Film (250')	2	0.25		
	Total Weight	2381			

*INCHES UNLESS OTHERWISE SPEC.

[redacted]

3. EXPERIMENT/SPACECRAFT INTEGRATION

3.1 MISSION DEFINITION

Flight 513 performs space science experiments related to radiation, magnetic lines and the generation of comet-like particulate clouds. In addition, daily operational tests of sensors of the Earth's atmosphere are to be performed. On the last day of the mission, the CSM separates from the LEM Lab Module and is placed in an elliptical orbit to observe Echo II. Since all experiments, with the exception of experiment 0503, the Generation of Comet-Like Particulate Clouds, are to be performed on a daily basis, the daily crew activity can be made nearly identical.

The crew schedule is summarized in Table 3-1, and detailed in Table 3-2. In addition, Table 3-3 presents the experiment equipment mission profile.

Experiment 0503 requires up to four experiment periods, therefore days 1, 5, 9 and 13 have been arranged to include this experiment. On the remaining days, medical and behavioral experiments are performed during this period.

On the fourteenth day the last three hours of experiment time have been allocated to experiment 1602, observation of Echo II. The Lab is jettisoned and the CSM is placed in an orbit to rendezvous with Echo II, permitting close up visual and photographic observation.

Table 3-1 Flight 513 Mission Definition Summary*

Exper. No.	Occurrence Day No.	Total Times Perf/ Mission	No. Men Req'd	Exper Time/Test Setup Time, min	Test Time, min	Total Exper Man-hr/ Mission Crewman 1	2	3	Total	Total Exper Man-hr/Mission Achv'd	Spec'd
0100	1 thru 14	42	2			28	38	38	104		
0200	1 thru 14	82	1 or 2			39.8	21.5	23.5	84.8		
0501	1 thru 14	42	1		10	2.3	2.3	2.3	6.9		
0502	1 thru 14	82	1			18.6	17.3	18.6	54.5		
0503	1, 5, 9, 13	4	1	60	120	-	-	12	12		
0802	1 thru 14	82	1			33.8	44.2	45.5	123.5		
1507	1 thru 13	13	3	60	120	26	26	26	78		
1602	14	1	3			2.5	2.5	2.5	7.5		
Sys.Ck.						-	-		26		
					Totals	164.0	164.8	168.4	497.2		

Maximum Work Day: 12 hrs on duty; Average Work Day: 12 hrs. on duty; Minimum Work Day: 12 hrs on duty

Total EVA Man Hours: 52

Notes:

*See table 3-2 and 3-3 for crew schedules and experiment equipment duty cycles

Table 3-2 **CREW SCHEDULING, FLIGHT 513, SHEET 1 OF 1**

DAY I	ORBIT	CREWMEN ACTIVITIES 1	2	3
0000				
20				
40		0100	0100	Rest
0100				
20		Rest	0200	0802
40				
0200				
20			Rest	
40		0502		
0300				
20		0501	E/Hyg	E/Hyg
40		0502	Rest	Rest
0400		E/Hyg		
20				
40			0802	0503
0500				
20				
40				
0600			0200	
20				
40				
0700		Sleep		
20			0100	0100
40				
0800				
20				
40			Rest	Rest
0900				
20			E/Hyg	E/Hyg
40				
1000				Rest
20				
40		E/Hyg		0502
1100				
20				0501
40		0802 A & B		0502
1200			Sleep	
20				0200
40				
1300		0100		0100
20				
40		0200		
1400				0802 A & B
20				
40		Rest		
1500				E/Hyg
20				
40				
1600		E/Hyg	E/Hyg	
20				
40			0802B	
1700				
20		0200		
40			0200	
1800			0502	Sleep
20				
40			0501	
1900		0802B	0502	
20				
40				
2000			Rest	
20		Rest		
40				
2100		E/Hyg	E/Hyg	
20				
40				E/Hyg
2200				
20				
40		1507	1507	
2300				
20				
40				
2400				Rest

DAY II	ORBIT	CREWMEN ACTIVITIES 1	2	3
0000				
20				
40		0100	0100	Rest
0100				
20				
40		Rest	0200	0802
0200				
20				
40			Rest	
0300		0502		
20				
40		0501	E/Hyg	E/Hyg
0400		0502	Rest	Rest
20		E/Hyg		
40				
0500			0802	0200
20				
40				
0600				
20				
40				
0700		Sleep	0100	0100
20				
40				
0800				
20				
40			Rest	Rest
0900				
20			E/Hyg	E/Hyg
40				
1000				Rest
20				
40				
1100		E/Hyg		0502
20				
40				0501
1200		0802 A & B		0502
20			Sleep	
40				0200
1300		0100		0100
20				
40		0200		
1400				0802 A & B
20				
40				
1500		Rest		E/Hyg
20				
40				
1600		E/Hyg	E/Hyg	
20				
40			0802B	
1700				
20		0200		
40			0200	
1800			0502	Sleep
20				
40			0501	
1900		0802B	0502	
20				
40				
2000			Rest	
20		Rest		
40				
2100		E/Hyg	E/Hyg	
20				
40				E/Hyg
2200				
20				
40		1507	1507	
2300				
20				
40				
2400				Rest

DAY III	ORBIT	CREWMEN ACTIVITIES 1	2	3
0000				
20				
40		0100	0100	Rest
0100				
20				
40		Rest	0200	0802
0200				
20		E/Hyg		
40			Rest	
0300		0502		
20				
40		0501		E/Hyg
0400		0502	E/Hyg	
20		E/Hyg		
40				
0500			0802	0200
20				
40				
0600				
20				
40				
0700		Sleep	0100	0100
20				
40				
0800				
20				
40			Rest	Rest
0900				
20			E/Hyg	E/Hyg
40				
1000				Rest
20				
40				
1100		E/Hyg		0502
20				
40				0501
1200		0802 A & B		0502
20			Sleep	
40				0200
1300		0100		0100
20				
40		0200		
1400				0802 A & B
20				
40				
1500		Rest	E/Hyg	E/Hyg
20				
40		Rendezvous and Observe ECHO Satellite 1602		
1600				
20				
40				
1700				
20				
40				
1800				
20				
40				
1900				
20				
40				
2000				
20				
40				
2100				
20				
40				
2200				
20				
40				
2300				
20				
40				
2400				

DAY	ORBIT	CREWMEN ACTIVITIES 1	2	3
0000				
20				
40				
0100				
20				
40				
0200				
20				
40				
0300				
20				
40				
0400				
20				
40				
0500				
20				
40				
0600				
20				
40				
0700				
20				
40				
0800				
20				
40				
0900				
20				
40				
1000				
20				
40				
1100				
20				
40				
1200				
20				
40				
1300				
20				
40				
1400				
20				
40				
1500				
20				
40				
1600				
20				
40				
1700				
20				
40				
1800				
20				
40				
1900				
20				
40				
2000				
20				
40				
2100				
20				
40				
2200				
20				
40				
2300				
20				
40				
2400				

NOTES
I = Day 1, 5, 9, 13
II = Day 2, 3, 4, 6, 7, 8, 10, 11, 12
III = Day 14

Earth Dark
Earth Lighted
etc.

E/Hyg Eat & Personal Hygiene
Limits of Experiment 1
Limits of EVA

GRUMMAN AIRCRAFT ENGINEERING CORPORATION

Table 3-3 APOLLO EXTENSION SYSTEM EARTH ORBIT MISSION STUDY
FLIGHT [STS] EXPERIMENT MISSION PROFILE

SHEET 1 OF 1

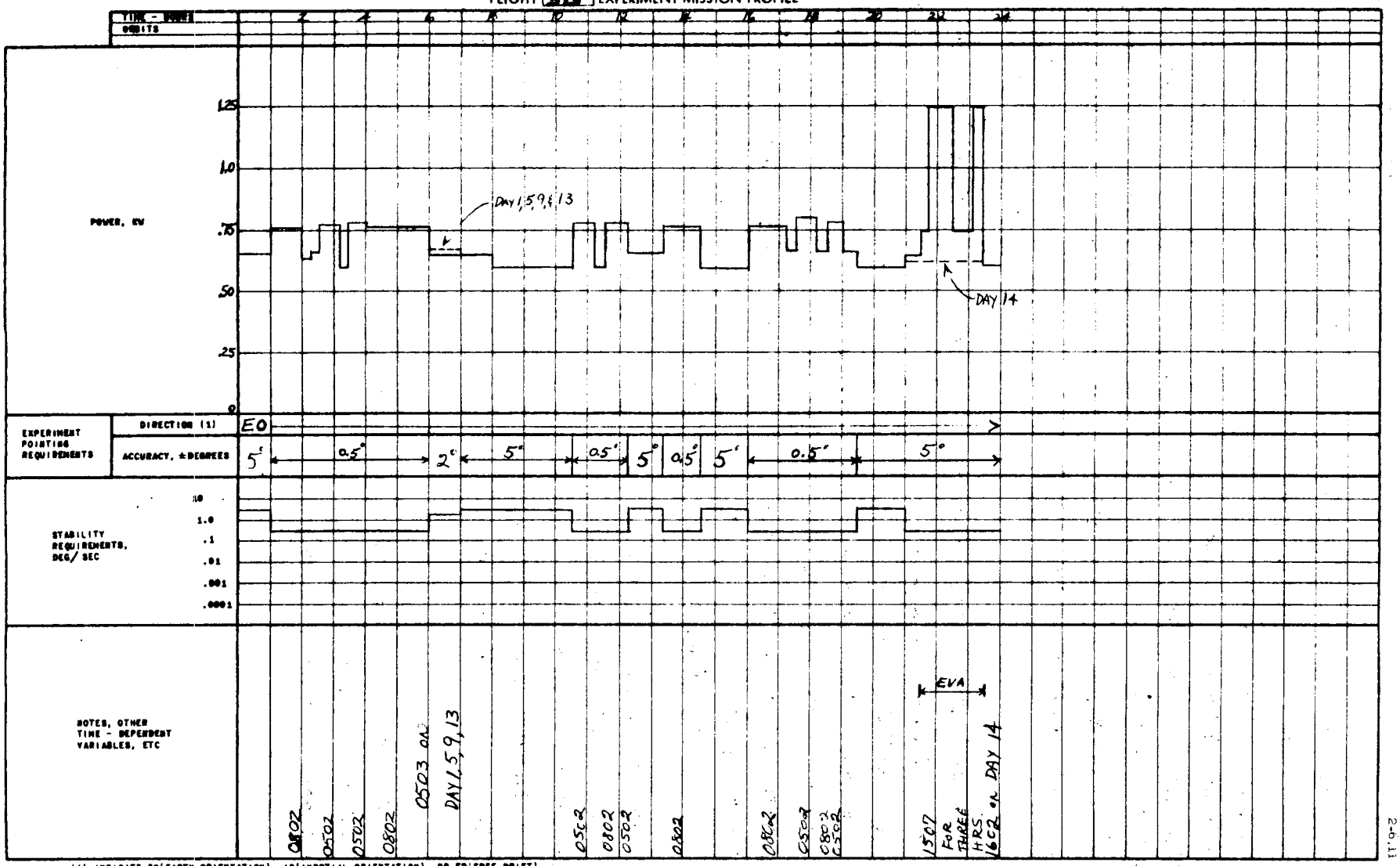

(1) INDICATE EO(EARTH ORIENTATION), IO(INERTIAL ORIENTATION), OR FD(FREE DRIFT)

3.2 SPACECRAFT DEFINITION

Flight 513 configuration, shown in Figures 3-1 and 3-2, carries experiments dealing with extra vehicular activities (1507), remote earth atmosphere sensing (0802A, B, C, D) and others dealing with monitoring of space environment (0501, 2, 3). Experiment equipment for observing the Echo Satellite (1603) is located in the CSM. Nominal spacecraft attitude is earth oriented with the spacecraft's longitudinal axis located in the orbit plane. Altitude is held within a deadband of $\pm 5^{\circ}$ except during experiment periods having specific pointing and stability requirements. These requirements are accommodated by the CSM within the RCS propellant capacities of the Block II CSM.

The viewfinder installation provides hemispheric coverage for earth atmosphere experiments (0802A, B, C, D) and other visual observations. The 0501 spectrometers (proton-alpha, high and low energy electron) are all mounted on the descent stage, the 0502 linear electron accelerator gun is mounted on the side of the descent stage and oriented parallel to the flight path. The 0503 cloud generator (4 canisters and release mech) are mounted on one side of the descent stage and oriented normal to the flight path. The spectrographic camera, image orthicon T.V. and conventional camera are axially coupled to the cloud generator.

The I.R. radiometer (0802A), I.R. spectrometers (0802B), and associated optics, are located in the descent stage to allow adequate earth scanning. Three earth oriented microwave antennas (0802C) are located on the fwd side of the descent stage. Associated spectrometers are located aft of the ascent stage in the LEM equipment bay. The 0802D star tracker is located in the ascent stage to afford compatible viewing for the experiment.

Two AMU/ECS (1507) packs, spare batteries, and fuel supply are located in the descent stage. A hinged platform containing tools, etc., provides a working area for the astronaut to perform his tasks. T.V. and motion picture cameras are also located in this area to record all EVA activity.

KEY

No.	Experiment	Name
1		Power Pack:
2		FCA Radiator
3	1507	AMU/ECS (2)
4	1507	AMU Fuel Supply Sys
5	0802D	Star Tracker - 2 Theodolites & Stable Platform
6	1507	AMU Batteries
7	0802C	48-in., 24-in., & 12-in. dia Antennas
8	0502	Electron Gun & Gimbal Mount
9	0502	Magnetometer-Directional
10	0501	Low Energy Electron Spectrometer
11	0501	High Energy Electron Spectrometer
12	0501	Proton-Alpha Spectrometer
13	0502	Capacitor Bank HVPS
14	0501	TIIC
15	0501	Film Packs & Pen Dosimeters
16	0501	TIIC (Rate Meters) (2)
17	0503	Cloud Generator (4 Cannisters & Release Mech.)
18	0802B	IR Spectrometers & Scanner (Near-IR, UV-Visual, & Far IR Spects.)
19	0802C	Microwave Spectrometers Receivers (5)
20	0802A	IR Radiation Detector & Scanner
21	0503	Photometer
22	1507	A. Eva Package - Tool Kit, Task Boards, Structure, Restraint Equip. & Eva Platform B. Eva Tankage
23	0802D	View Finder
24		LiOH (8 Containers)
25	1507	Television Camera
26	1507	Motion Picture Camera
27	0503	Spectrographic Camera
28	0503	Camera
29	0802A	Documentary Camera
30	0503	Image Orthicon
31	1602	70mm Camera, Sighting Telescope & Bezel Mount in CSM for Echo Satellite Observation
32		GOX Tank
33		Horizon Scanner
34		Equipment Rad.
35		Potable Water Tank
36		Waste Storage Tank

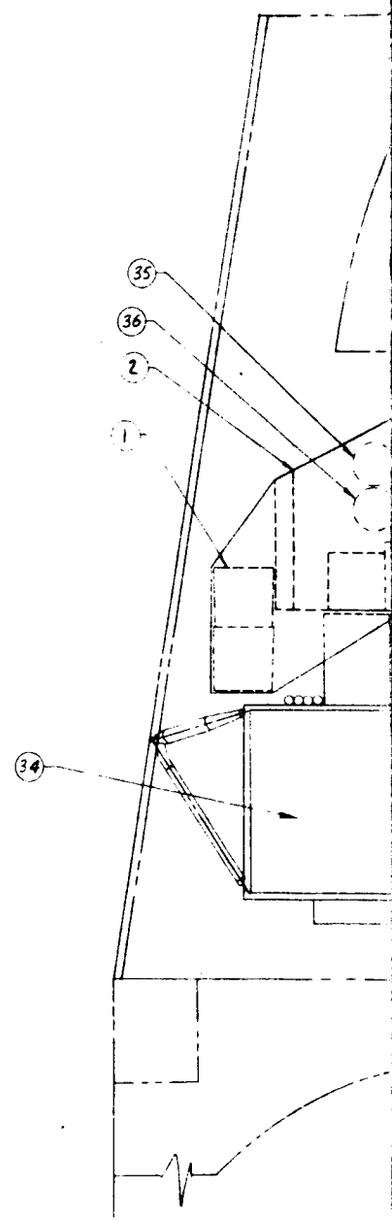

FOLD-OUT #1

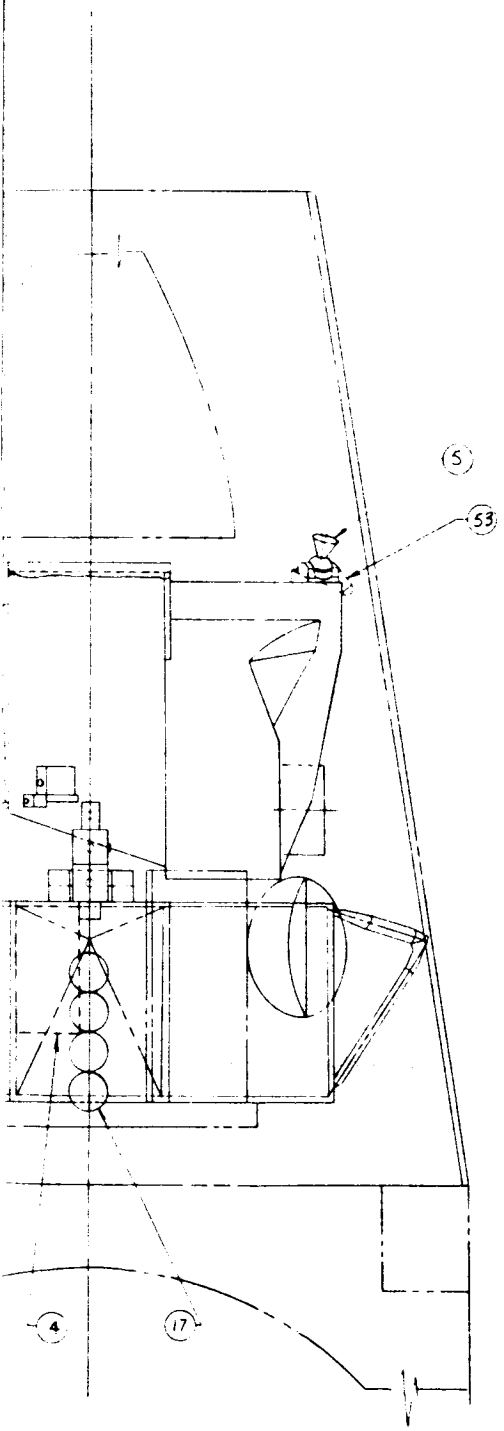

'H CONFIGURATION

FOLD-OUT #2

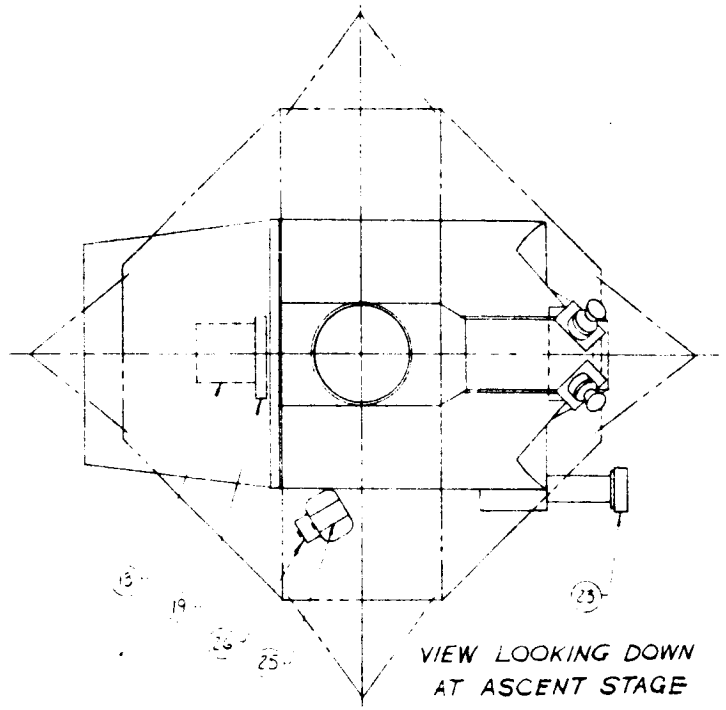

VIEW LOOKING DOWN AT ASCENT STAGE

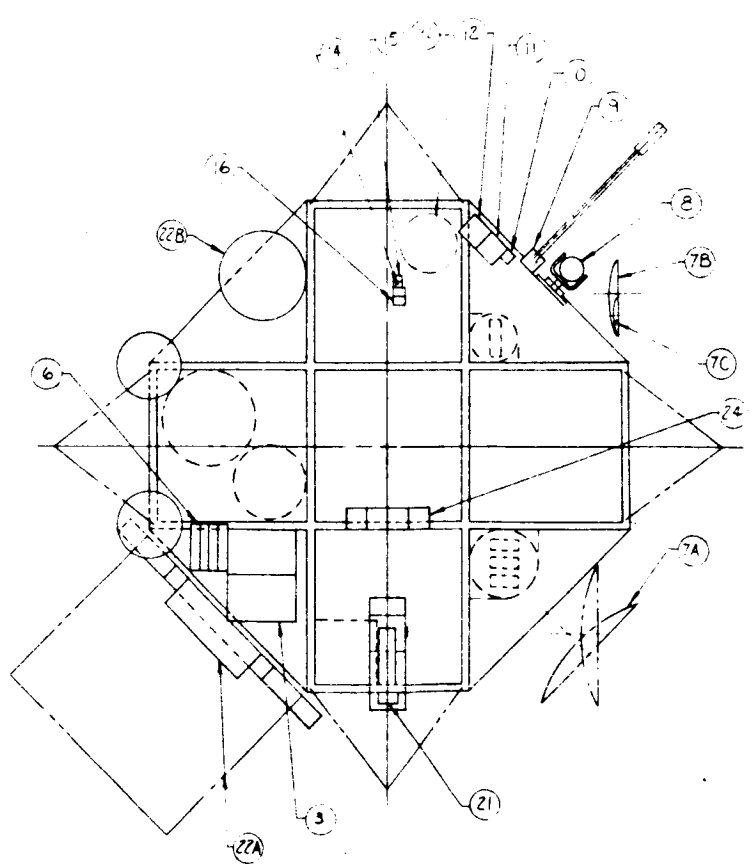

VIEW LOOKING DOWN AT DESCENT STAGE

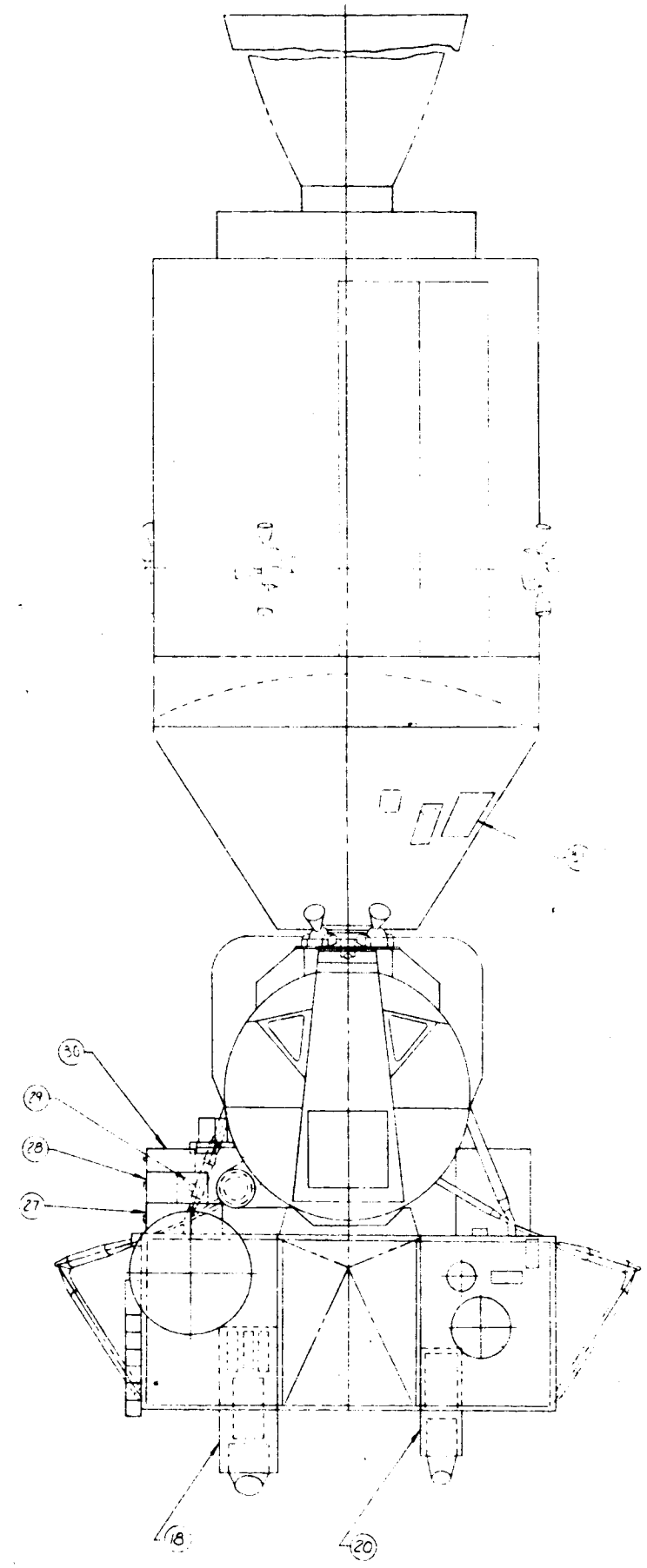

ORBITING CONFIGURATION

0 20 40 60 80 100

SCALE: 1" = 20"

Grumman
AIRCRAFT ENGINEERING CORPORATION
PRELIMINARY DESIGN SECT.

Gen Arrgmt Flt. 1
Space Science &
Operations

SCALE OF ORIG. DWG. = 1/20

AES 10

Fig. 3-1

KEY

No.	Experiment	Name
1	1507	Chest Packs (2)
2	0501	Battery Charger
3	0200	Camera (Stowed)
4	0100-0200	Biomed
5		LioH
6		Food Storage
7	0501,0503 0802C, 0802D	Tape Recorder
8		Data Recorder
9		Digital Computer
10	0501,0503, 0802A,0802B, etc.	Film & Tape Storage
11	0802D	Viewfinder
12		Cabin Floodlights
13		Flex Duct to CSM
14	0501	Pulse Height Analyser, Encoder, etc.
15	0100-0200	Biomed Console

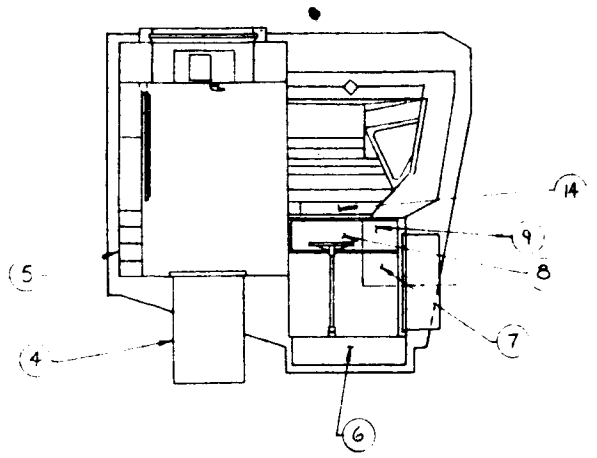

VIEW LOOKING OUTBOARD
LEFT HAND SIDE

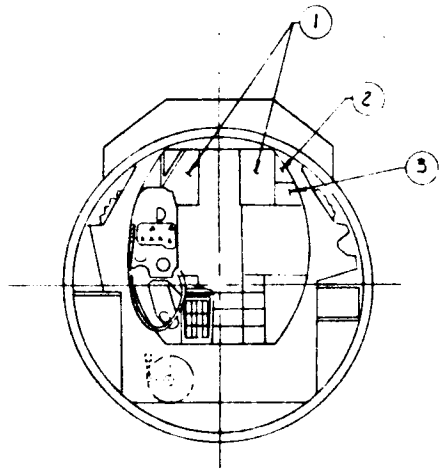

VIEW LOOKING AFT

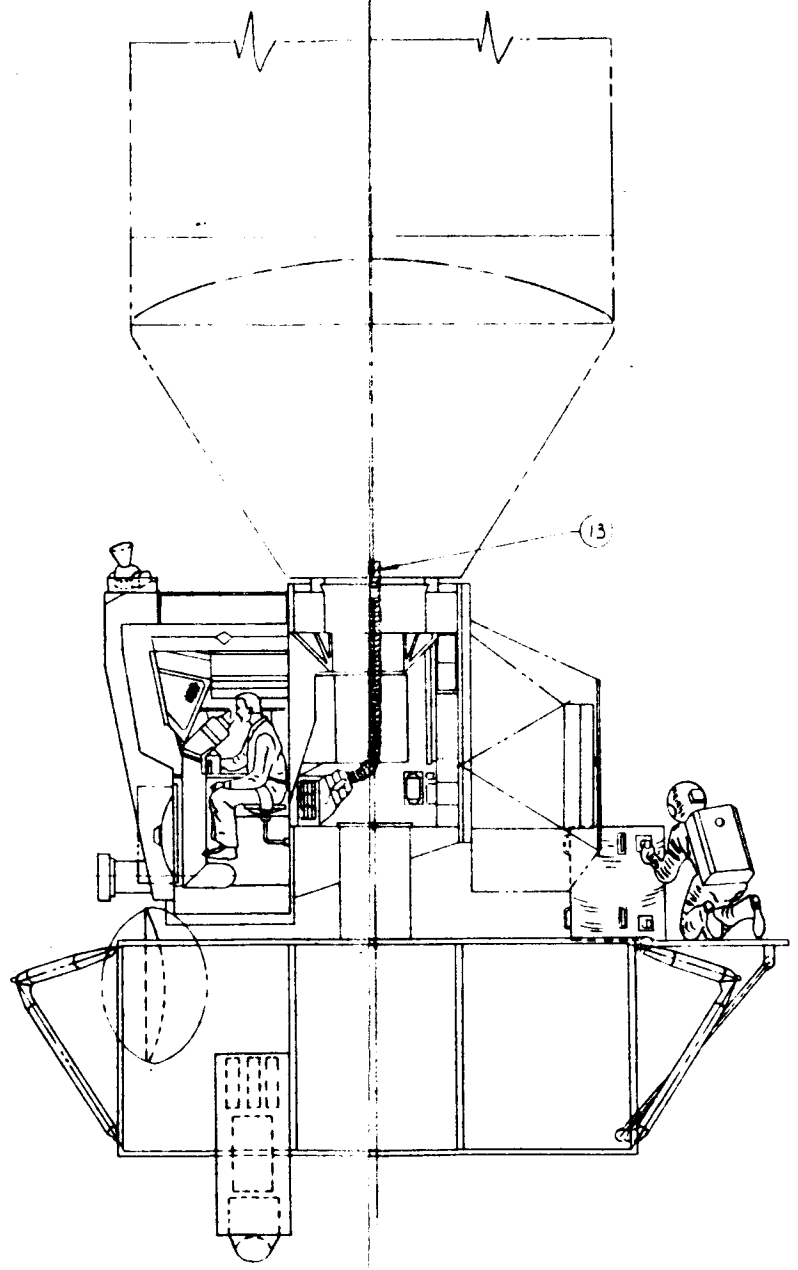

VIEW LOOKING OUTBOARD
RIGHT HAND SIDE

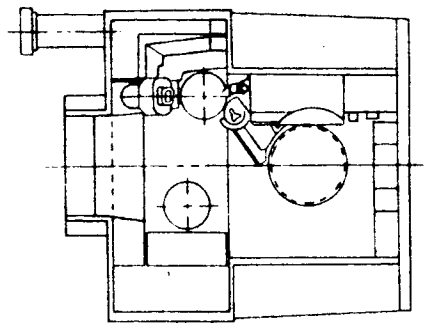

PLAN VIEW

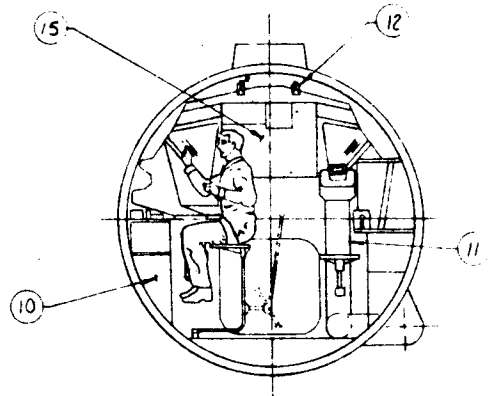

VIEW LOOKING FORWARD

0 20 40 60 80 100

SCALE: 1" = 20"

Grumman
AIRCRAFT ENGINEERING CORPORATION
PRELIMINARY DESIGN SECT.

Fig. 3-2

Inbd Prof Flt. 513
Space Science & Operations

SCALE OF DWG. DWG. 1/20

AES 1031

Structural modifications to the LEM A/S are required to accommodate the view-finder. All other experiment equipment installations involve additons to existing LEM A/S and D/S structure.

The inboard profile (Figure 3-2) shows that adequate internal volume is available to accommodate experiments. All experiment displays and controls are located in the forward lab cabin or are accessible from forward cabin crew positions. Food is stored internally. LiOH canisters are internally mounted on the aft bulkhead of the Lab and are replaced from external storage during programmed EVA's.

0100 behaviorial, 0200 biomed and 0501 radiation monitoring equipment are similar installations on all flights.

Supporting electronics for experiments are carried in the existing LEM aft electronics bay mounted off the A/S.

In addition to the standard CSM/LEM-Lab interface, this flight requires additional wiring for accommodating the earth pointing requirements of experiments. Interface wiring involves star tracker and horizon scanner sensory inputs used to maintain attitude hold.

This flight utilizes an Apollo CSM fuel cell electrical generation system, a LEM ECS to provide suit circuit operation in the lab during EVA and selected components to provide data transmission, status and appropriate displays.

SM Main propellant requirements, to establish renedezvous with Echo II, have been estimated at 4265 lbs.

The estimated laboratory weight is 8075 lbs. (See Table 3-4 and 3-5.)

Basic subsystem characteristics pertinent to this flight are described below:

Vehicle Orientation	Earth Oriented
Stabilization Reqm'nts	$\pm .5^{\circ}$-147 hrs; $\pm 5^{\circ}$-186 hrs
Avg Experiment Pwr (Delivered)	753 watts
Number of Repressurizations	13
Equipment Cooling	48 ft^2 Radiators
Number of Fuel Cells	2
Oxygen Tanks	2 Block II
Hydrogen Tanks	2 Block II
Peaking Battery	20 AMP hr
Fuel Cell Cooling	10 ft^2 Radiator
RCS System	None
RCS Tankage	None
S & C System	Sensors and Data Processor
Waste Reactants	0
Water for Thermal Cont (max)	24 lbs
Water generated	360 lbs

Table 3-4 LEM LAB DETAILED WEIGHT STATEMENT

FLIGHT 513

COMPONENT	Weight, lb. Configuration 1
Structure	(2207)
Basic Ascent	802
Basic Descent	750
Rack	
Shielding	415
Power Pack Structure	50
Experiment Supports	190
Stabilization and Control	(120)
Star Trackers and Electronics	84
Horizon Scanner	36
Crew Provisions	(146)
Restraints	35
Lighting	10
Food	60
LiOH-PLSS	41
Controls and Displays	(238)
Environmental Control	(528)
Atmosphere Revitalization System	80
O_2 Supply and Cabin Pressurization	34
Water Management	36
Heat Transport, Cold Plates, Coolant	105
LiOH-ECS	104
Water	40
Radiators	126
Thermal Control	3

Table 3-4 LEM LAB DETAILED WEIGHT STATEMENT (Cont'd.)

FLIGHT 513

COMPONENT	Weight, lb. Configuration 1
Instrumentation	(347)
Signal Conditioner	45
PCM & Timing Elect Assy	39
Data Storage	25
Experiment Selector	6
Data Tapes	230
Spare Voice Recorders	2
Electrical Power Supply	(2067)
Fuel Cell Ass'ys.	492
Reactants and ECS Oxygen	480
Reactant Tankage	351
Batteries and Charger	38
Plumbing	40
Inverters	75
Wiring, Distribution and Umbilical	591
Communications	(32)
Television	24
Audio Center	6
Voice Recorder	2
Experiment	(2381)
Spares	(9)
Total Laboratory	8075

Table 3-5 INTEGRATED SPACECRAFT WEIGHT STATEMENT

FLIGHT 513

COMPONENT	Weight, lb. Configuration 1
Command Module Basic Weight	(10,360)
Service Module	(9,248)
CSM Retro-Propellant	(3,000)
Laboratory Weight	(8,075)
Basic Laboratory Structure	2,207
Experiments	2,381
Experiment Support Systems	2,762
Expendables	725
CSM Experiment Dependent Weights	
RCS Propellant	224
Main Propellant	4,265
Total Laboratory and Experiment	(12,564)
Allowable Lab. and Exper. Weight	83,889
Total Orbiting Weight	35,172
Service Module Propellant (Ascent)	0
SLA Adapter	3,505
Launch Vehicle Payload	38,677

[redacted]

4. FLIGHT OPERATIONAL SUPPORT: FLIGHT NO. 513

Experiment 0100 & 0200 - Medicine and Behavioral - Periodic daily data transmission and ground monitoring of safety parameter data.

Experiment 0501 - Radiation Environment Monitoring - External particle flux measurements during a solar flare event are to be correlated with the solar activity observations made on earth stationed observatories and other satellites.

Experiment 0502 - Study of Magnetic Field Lines - Observation and tracking of artificial aurorae with ground-based equipment, from aircraft, and from orbital stations. Also monitoring of solar activity by astronomical and radio observations.

Experiment 0503 - Generation and Analysis of Comet-Like Particulate Clouds - Coordinated ground based optical coverage. These are restricted to periods of twilight.

Experiment 0802B - Test of an Infrared Scanning Spectrometer - Consultation with instrumentation man on ground to maintain adjustment and calibration of instrument.

Experiment 0802D - Test of a Prototype Star-Tracker - Spacecraft attitude and trajectory must be accurately calculated.

Experiment 1602 - Observation of Echo Satellite - Transmission to spacecraft the estimated location of Echo in relation to the manned spacecraft, and the ground radar station should transmit time of radar measurements so that photographs may be taken before and after fly-by.

Table 4-1 presents the experimental data management requirements of the flight. A general discussion of this table and the data management system is contained in Volume 1.

[redacted]

TABLE 4-1. FLIGHT 513 DATA MANAGEMENT

Avg. Daily Data Recording Requirements

Experiment		Recording Time, min		Remarks
No.	Data Rate K-bits/sec	(A) 51.2 K-b/sec	(B) 1.6 K-b/sec	
0100_s	9 (AVG)	120		4 Exper-Hr/Day
0200_s	6.4 (AVG)	103		5.9 Exper-Hr/Day
0501	0.8		45	45 Min/Day Monitoring
0502	0.3		60	10 Min x 84 Times
0503	0.2		29	100 Min x 4 Times
0802 A,B C,D	5	120		20 Min x 6 Times/Day
1507	1.6		60	60 Min x 14 Times
1602	Negligible Recording Requirements			
Totals		343	194	

Avg. Daily Data Transmission Time, min

- Reqd: A + B/32 = 350 min
- Available = 104 min

Data Excess (Minutes of Tape) per Day:

Required Minus Available Transmission Time = 246 min

Data Tape Return Required: $\frac{\text{Data Excess per Mission (min)}}{\text{30 min/Tape Reel}}$ = 115 Reels $\begin{cases} 230 \text{ lb} \\ 11.5 \text{ cu ft} \end{cases}$

Optimum Avg Daily Transmission Time Required = 72 min

Voice Tape Return Required (2 packages) 4 lb, .05 cu ft

Film Return Required 83 lb, 2 cu ft

Data Tape Carried 230 lbs

[redacted]

1. FLIGHT MISSION DESCRIPTION

Flight No. 218

Altitude, n.mi 200	Inclination, deg 28.5	Duration, days 45	Crew 3

Mission Title: BIOSCIENCE/PHYSICAL SCIENCE LABORATORY

Objectives: This is the first 45 day flight, and is therefore a primary Biomedical/Behavioral Flight. Man and other living organisms will be studied in zero "g". Physical phenomena will also be studied at zero "g". The next flight will rendezvous with this flight for continuation of portions of both biological and physical experiments.

Configuration: C (Extended CSM, LEM A/S, D/S), or
D (Modified Block II CMS, LEM A/S, D/S)

Experiment Summary:

No.	Title	Equipment Location: LEM Stage Asc	Equipment Location: LEM Stage Desc	Equipment Location: CM
0100	Biomedical (excluding 101 and 102)	x		
0200	Behavioral	x		
0501	Radiation Environment Monitoring	x		
0601	Capillarity Studies	x		
0602A	Kinetics and Dynamic of Vapor/Gas	x		
0602B	Liquid Drop Dynamic Studies	x		
0603A	Pool Boiling in Long-Term Zero "g"	x		
0603B	Nucleate Condensation of Fluids in Zero "g"	x		
0604	Density Gradient of a Fluid	x		
0605	Crystallization Studies	x		
0606	Cosmic Ray Emission (Performed during rendezvous flt.)	x		
1407	On-board Guid. and Nav. (Performed during rendezvous flt.)	x		
1500	Extravehicular Operations (Performed during rendezvous flt.)		x	

[redacted]

2. EXPERIMENT DESCRIPTION SUMMARY

FLIGHT - 218

EXPERIMENT: 0100-0200 - Medical/Behavioral Experiments - The Medical/Behavioral Experiments are intended to evaluate the effects of prolonged space flight on man and to enhance his operational efficiency to permit more extensive manned space flight missions. Twenty-four experimental measurement packages have been defined to analyze critical human functions and to focus on those most likely to be affected adversely by prolonged space flight. Procedures and instrumentation employed in the experimental packages are a composite of updated, standard medical/behavioral and imminent state-of-the-art zero-g adapted, techniques. These procedures should provide 1) an assessment of the effects of prolonged weightlessness on the psychophysiological integrity of the astronaut, 2) a determination of the mechanisms which mediate observed changes, 3) a prediction of the onset and extent of degraded functioning, and 4) a validation of preventive or countermeasures which may be necessary to support man's extended exploration of space. Experiments 0101 and 0102 will be performed during the rendezvous mission of flight 219.

EXPERIMENT: 0501 - Radiation Environment Monitoring - The objectives of this experiment are to record radiation received by the crew, and to furnish external radiation environment data for other experiments. Techniques for the Apollo Mission, or those employed in Tiros and OGO, will be used. Detection devices proposed for the monitoring systems are: proto-alpha and electron spectrometers, tissue equivalent ionization chambers, and film packs.

EXPERIMENT: 0601 - Capillarity Studies - The objective of this experiment is to provide knowledge of interactions of matter, at simultaneous solid/liquid vapor interfaces, through systematic study of capillary flow statics and dynamics at zero-g, and to develop a compatible theory. Static measurements of wetting angles will be made of height and diameter of spherical zones of various liquids on various test surfaces. Dynamic measurements of capillary height will be made by timing flow in tubes of different diameters and materials. A radio isotope tracking device will be used to determine interface distance-time relationships for transparent and non-transparent tubes. Motion pictures will be taken of the transparent tubes. Liquids will be stored in evacuated bladders. Capillary flow will be initiated by equalizing pressure difference between tube interior and bladder exterior.

EXPERIMENT: 0602A - Kinetics and Dynamics of Vapor/Gas Bubbles In Free-Fall Liquids (Far From Walls) - The objective of this experiment is to augment understanding of the mechanisms controlling free (non-surface) nucleated boiling, and the kinetics of bubble growth and collapse, under transient conditions, free from convection in the liquid or liquid migration. And, to study dynamics modes of vapor-liquid interface oscillations in suspended bubbles, and the dynamic modes associated with the coalescence or fractionization of two or more bubbles. Cinematography will be used to study the motion of liquid/vapor-gas interfaces in free bubbles within a liquid. A temperature and pressure controlled chamber will be used. Liquid, temperature, pressure and excitation modes will be varied.

EXPERIMENT: 1602B - Liquid Drop Dynamics Studies - The objective of this experiment is to determine the fluid dynamical behavior (instability conditions, and oscillatory, fragmentation, fissioning modes, etc.) of freely suspended liquid drops subject to different disturbances and to perturbations arising from the coalescence of various size drops. And, to study kinetics of miscibility and drop dynamics resulting from coalescence of different liquid drops. Drops of various size and liquids, with attendant differences in surface tension viscosity and density, will be freely suspended in a well-stabilized spacecraft. Induced perturbations will be observed by a stereoscopic camera. Small controlled gas jets will facilitate perturbation and manipulation of the drops.

EXPERIMENT: 0603A - Pool Boiling In Long-Term Zero-G Environment - The objective of this experiment is to acquire knowledge of bubble growth rates, interaction of growing bubbles, hydrodynamic stability of bubble columns and nucleation criteria. Boiling from a heated surface would be observed optically. Direct images and shadowgraph would be used to examine bubbles and thermal layer.

EXPERIMENT: 0603B - Nucleate Condensation of Fluids In Zero Gravity - The objective of this experiment is to study initiation of a pure substance in zero-g. A light-scattering technique will be used to observe the onset of nucleate condensation in a sealed vessel, with chemically clean interior, containing a pure fluid. Droplet growth will be observed photographically.

EXPERIMENT: 0604 - Density Gradient of a Fluid At a Near-Critical State - The objective of this experiment is to study pressure, volume, and temperature behavior of near-critical fluid under zero-g. A bomb cell with light source, lens, prism, thermostat and two view-windows, will be used to determine density gradients via diffraction of light. The constant-volume cell will be heated slowly until entering the critical region, and then maintained at constant temperatures. Light scattering technique can also be used to measure the magnitude of fluctuation.

EXPERIMENT: 0605 - Crystallization Studies - The objectives of this experiment are: to provide information on relationships between the character of crystalline materials and their mode of formation, and to use unique facilities for crystal fabrication in a manned zero-g laboratory; and, to prepare samples of a character which cannot be produced terrestrially for solid state investigations or for use in other space experiments. Samples of various pure materials and compounds will be manipulated within a melting/solidification diameter filled to an appropriate pressure with an inert gas (e.g., argon) and heated by illumination through a window from a solar concentrator. Molten samples will be allowed to "float" by propelling the laboratory so as to prevent wall contact while they cool due to radiation and gas conduction below their crystallization temperature. Supercooled liquids will crystallize and the solid samples will be removed from the chamber for metallographic examination on Earth. Other crystals of low surface temperature, lower melting point materials (e.g., organics) will be purified and crystallized in a separate floating zone furnace, with proper thermal controls. Samples recovered would be studied later on Earth.

EXPERIMENT: 0606 - Cosmic Ray Emulsion - The objective of this experiment is to obtain a charge spectrum of the primary cosmic radiation, and - indirectly - a measure of the intensity and angular distribution at several times in the solar cycle. Some data may also be obtained on the gamma ray flux, spectrum and source.

Paths of cosmic rays will leave lines of darkened gains in a three-dimensional photographic emulsion made up of a large number of thin sheets of sensitized gelatin. When a particle decays into two or more sub-particles, the rays of each subparticle can be seen, and measurements of the resulting angles define the momentums of each. Film packs will be mounted to the exterior of the vehicle during the flight. The astronaut will initiate an automatic pre-development of the film. Final Development and examination for ray tracks will be made on Earth.

EXPERIMENT: 1407 - Performance Assessment of ON-Board Guidance and Navigation Systems and Components - The objective of this experiment is to assess the performance of on-board guidance and navigation systems and components. Evaluation is accomplished by comparison of on-board orbit determination techniques with ground based determination.

TABLE 2-1 FLIGHT 218 INTEGRATED EXPERIMENT EQUIPMENT LIST

Exper. No.	Component	Weight, lb	Vol, cu ft or size*	Elec Energy or Elec Pwr	Remarks
		(313)	(each)		
0100	EKG (Apollo Hardware) (2)	.25	2.3x1.5x.39	.1 each	
	Heart Rate	.125	.0007 ft 3	.02	
	Cardiac Output	2	.2ft^3	2	
	Body Temp.	.125	2.3x1.5x.39	.1	
	Core Temp. (Ear Thermistor)	.125	2.3x1.5x.39	.1	
	Ear Oximeter	.125	2.3x1.5x.39	6	
	Blood Pressure (Gemini Type)	2.3	.1ft^3	.15	
	Peripheral Venous Pressure	1	.0007ft 3	.1	
	Impedance Pneumograph (Apollo)	.125	2.3x1.5x.39	.11	
	Respiration Rate	.125	.0007ft 3	.11	
	Respiration Depth	1.5	4.5x1.25x3.8	5	
	Capacitance Plethysmograph	.5	.005ft^3	<5W	
	Telethermometer	2	.5ft^3	.2	
	Thermistor Harness (Vest)	1	.5ft^3	N/A	
	Endoradiosondes (Press. & Ph) 3 each	Insignif.	.03ft^3	Self Contained	
	Telemetry Pickup (Short Range for Capsules)	2	1ft^3	Small	
	Cord (Optional with Endoradiosondes)	Insignif.	Contained	N/A	
	EKG	.125	2.3x1.5x.39	.1	
	Tape Measure	.1	2in^3	N/A	
	Microcentrifuge	4	7 x 7 x 9	5	
	Sample Containers; Blood, Sweat, Feces, Urine	5	1ft^3	N/A	Total for all experiments requiring sample containers
	Capillary Tubes	1	.2ft^3	N/A	
	Nutrient AGAR in Plates in Containers	5	8 x 8 x 16	N/A	
	Sterile Water and Container	3	5 x 5 x 8	N/A	
	Lyophilizer	6	.06ft^3	50	
	Microscope	5	.57ft^3	10	
	Syringes, Needles, Pipettes, etc.	5	1.5ft^3	N/A	
	Automatic Slide Stainer	2	4 x 6 x 2	2	
	Lancets, Test Tubes, etc.	5.2	.3ft^3	N/A	
	QAA (Antiseptic) ABD Soap Cotton Sterile Balls Gloves	1.5	.15ft^3	N/A	
	Saline .9 Solution	2	.06ft^3	N/A	
	Alcohol	2.5	.05ft^3	N/A	
	Strobe for Centrifuge	1	.05ft^3	5	

*INCHES UNLESS OTHERWISE SPEC.

[redacted]

TABLE 2-1 FLIGHT 218 INTEGRATED EXPERIMENT EQUIPMENT LIST

Exper. No.	Component	Weight, lb	Vol, cu ft or size*	Elec Energy or Elec Pwr	Remarks
Cont. 0100	Body Mass	5	.6ft^3	N/A	
	LBNP Device	5	.5ft^3	.5	
	Bicycle Ergometer	5	1ft^3	N/A	
	Hand/Arm Ergometer	1	10in^3	N/A	
	Dynamometer	.5	1.5x6	N/A	
	Body Volume	Small	Small	N/A	
	Biomed. Vest, Harness, Converter, Electrodes, etc.	1	.3ft^3	N/A	
	Radio Isotope. Analyzer System	129.5	1.9ft^3	50	
	Spectrocolorimeter	4.5	10 3/4x8x5	13	
	Mass Flowmeters (2)	3.0	4.5x1.25x 3.75 (each)	5 (each)	
	Face Mask w/Mouthpiece	2	.3ft^3	N/A	
	Gas Analyzer	25	1.16ft^3	50	
	X-Ray	25	1ft^3	500	
	Refractometer	.1	4 x 1/2	N/A	
	Electronic Particle Counter	6	3ft^3	40	
	Neck Cuff	2	.2ft^3	N/A	
	Limb Cuff Inflator	3	.25ft^3	N/A	
	Pressure XOCR	.35	2.5Dx 2.5	1	
	Incubator	5	.5ft^3	25	
	Refrigerator	6	1ft^3	25	
	Sample Freezer/Storage Unit	6	.6ft^3	50	
	Stains and Container	1	4 x 4 x 6	N/A	
	Staining Pan	1	4 x 2 x 10	N/A	
	Cotton Swabs, Applicators, Tongue Dept.	5	2 x 6 x 4	N/A	
	Assoc. Biochem. Equip.	1	1ft^3	N/A	
	TV Camera (LEM Type)	6	12x 6 x 4	6	(.17 ft^3)
	Fiber Optics Bundle	2	3'x.25 Diam	N/A	
	Goggles (Otolith and Vestibular)	1	1.5 x 5 x 8	Self Contained	
	Calibration Spring	1	3x1 Diam.	N/A	
	Test Charts	1.5	3'x3' Flat	N/A	
	Cine Camera (Optional)	(2)	.01ft^3	Hand Powered	Used only if TV not provided
	(Exp. 0102 also requires using an EKG and Impedance Pneumograph but they are already included in the equipt. list for exps. 0103 thru 0121)				

*INCHES UNLESS OTHERWISE SPEC.

[redacted]

TABLE 2-1 FLIGHT 218 INTEGRATED EXPERIMENT EQUIPMENT LIST

Exper. No.	Component	Weight, lb	Vol, cu ft or size*	Elec Energy or Elec Pwr	Remarks
Cont. 0100	*The following are considered to be part of already on-board equipment with its associated instrumentation. 3 Axis Accelerometer Humidity Sensors (ECS) Ambient Temp Apollo Backpack Water Cooled Suit				
0200		(20)			
	Orthorator	5	$0.6ft^3$	40	Test Console Requires 100 W
	Barany Chair	5	$0.6ft^3$	20	
	Linear Acceleration Device	5	$0.6ft^3$	20	
	35 mm Camera w/Film	5	$.5ft^3$	N/A	
	The following are considered to be part of already on-board equipment: Audiometer (use tape in a playback recorder) Microfilm Viewer				
0501		(465)			
	Proton-Alpha Spectrometer	7	8 x 8 x 8		Duty Cycle - Continuous During Mission
	High Energy Electron Spectrometer	10	8 x 8 x 8		
	Low Energy Electron Spectrometer	5.5	4 x 4 x 3		
	Tissue Equiv ionization Chambers (3)	3	3 x 2 x 1/2	5.3 W	
	T.E.I.C. Rate Meters (2)	4	4 x 3 x 3		
	Film Packs & Pen Dosimeters (21)	1.5	2 x 2 x 1/8		
	Pulse Height Analyzer	15	12x12x12		
	Battery Charger	0.5	1/2x1/2x1	1 W	
0601		(113)			
	Bladders, Capil Tubes & Fluids	60	1		Accel $< 10^{-4}$ g
	Misc. Equip (Screen, 5cc Syringe, Thermom)	2	1/2		4 Hr. Set-up Plus
	Still Cameras - 70 mm (2)	8	0.2	20 W	2 Experiments of 1 Hr. each
	Radioactive Tracer System	20	1		
	Illuminating System	1	0.5		
	16 mm Camera	15	0.28	410 W	
	400 Ft. Reels of Film (7)	7	0.15	N/A	

*INCHES UNLESS OTHERWISE SPEC.

TABLE 2-1 FLIGHT 218 INTEGRATED EXPERIMENT EQUIPMENT LIST

Exper. No.	Component	Weight, lb	Vol, cu ft or size*	Elec Energy or Elec Pwr	Remarks
0602A		(41)			
	Bubble Chamber with Lamps	30	6 x 6 x 12	100 W	Accel. $< 10^{-4}$g
	Electronics & Support Package	1	3 x 4 x 6		16 mm Camera used from 0601
	Film	10	0.21ft^3	N/A	
0602B		(71)			
	Test Chamber with Lamps	30	6 x 6 x 12	N/A	Accel. $< 10^{-4}$g
	Stereo Cameras (2)	15	0.3ft^3	N/A	Peak Power 1350 W for 30 sec
	Camera Control System	1	0.05ft^3		Weight for only one camera shown - second camera used from 0601
	Air Supply	-	0.5ft^3	110 W	
	Fluids	5	0.1ft^3		
	Film	20	0.4ft^3	N/A	
0603A		(52.3)			
	Bubble Chamber with Lamps				Accel $< 10^{-4}$g
	Vent System	51	2.5ft^3	180 W	Peak Power - 550 W for 30 sec.
	Pressure Regulation System				16 mm camera used from 0601
	Fluid Supply				
	Film	1.3	0.07ft^3	N/A	
0603B		(21)			
	Test Tank				Peak Power 500 W for 30 sec
	Coolant loops	20	1.2ft^3		16 mm camera used from 0601
	Light diffuser				
	Film	1	0.05ft^3	N/A	
0604		(42.1)			
	Test cell & Pressurization System	40	2ft^3	200 W	
	Telescope	2	1.5Dx10	N/A	
	Film	0.1	-	N/A	
0605		(152.1)			
	Solar Concentrator & Test Chamber	130	3'Dx4'		Spacecraft flown for 3 hrs to avoid contact with sample
	Pyrometer	-	-	500 W	Accel $< 10^{-10}$g
	Auxiliary Equipment	20	2ft^3		
	Crystals (Material Returned)	2	0.1ft^3	N/A	One 70 mm Still camera used from 0601
	Film	0.1	-	N/A	
0606		(60)			
	Emulsion Cassette	30	6 x 8 x 12		Orient parallel to magnetic lines of force over South Atlantic Anomoly
	Erectable Boom, Gimbals & Drives	15	30x18 x 12	50 W	
	Magnetometer	13	0.5ft^3		
	Electronic Package (boom control)	2	4 x 6 x 12	10 W	Peak power 100 W for 30 min High and low energy electron spectrometers used from 501

*INCHES UNLESS OTHERWISE SPEC.

TABLE 2-1 FLIGHT 218 INTEGRATED EXPERIMENT EQUIPMENT LIST

Exper. No.	Component	Weight, lb	Vol, cu ft or size*	Elec Energy or Elec Pwr	Remarks
		(369)			
1407	Digital Computer	57	$0.5ft^3$	85 W	Roll axis $\pm 0.5^\circ$ 15 min $\pm 5.0^\circ$ 180 min
	Precision Clock	30	$1ft^3$	35 W	Pitch Axis $\pm 0.5^\circ$ 15 min
	Horizon Scanner	5	$0.1ft^3$	12 W	$\pm 5.0^\circ$ 180 min
	Star Tracker	7	$0.1ft^3$	10 W	Yaw Axis $\pm 10^\circ$ 180 min
	Sun Sensor	5	$0.1ft^3$	10 W	Attitude Drift Rate
	IMU & Electronics	57	$1.2ft^3$	195 W	for all axis 0.02°/Sec
	Doppler Altimeter	75	$3ft^3$	150 W	Carried on Flt 218, performed
	Antennas	50	$1ft^3$		when Flt 219 arrives
	Elect., Mech. Interfaces, Spares	74	$2ft^3$		Controls & Displays
	Telescope (Apollo)	9	$0.5ft^3$		require 50 W
	Total Weight	1301			

*INCHES UNLESS OTHERWISE SPEC.

3. EXPERIMENT/SPACECRAFT INTEGRATION

3.1 MISSION DEFINITION

Flight 218 is the first 45 day mission and is therefore treated as a primary biomedical and behavioral experiment flight. The basic experiments involve biomedical and behavioral phenomena associated with prolonged weightlessness. In addition, six experiments are conducted on solid/liquid/gas behavior in zero gravity.

All the experiments have been scheduled to meet their designated frequencies, where possible. The total time devoted to experimentation is 1096 man-hours out of a possible 1335 man-hours. The biomedical/behavioral series developed by Grumman by combination and elemination of experiments was used as the objective. A complete description is provided in Volume 1, Section 1.

The crew schedule is shown in Table 3-2, and summarized in Table 3-1. In addition, Table 3-3 presents the experiment equipment mission profile.

This flight will then rendezvous with flight 219 to extend the mission duration to 90 days.

Table 3-1. Flight 218 Mission Definition Summary*

Exper. No.	Occurrence Day No.	Total Times Perf/ Mission	No. Men Req'd	Exper Time/Test Setup Time, min	Test Time, min	Total Exper Man-hr/ Mission Crewman 1	2	3	Total	Total Exper (1) Time/Mission, hr Achv'd	Spec'd
0100	All Except 40	VAR	2	VAR	VAR	VAR	VAR	VAR	(690.05) 996.65		
0200		VAR	1 or 2	VAR	VAR	VAR	VAR	VAR	(306.6)		
0601	22	2	1	240 Setup 120 Teardown	60	3	3	2	8	2	2
0602A	13,18,19	5	1	60 Setup 60 Teardown	240	10	10	7	27	20	20
0602B	20,21	5	1	480 Setup 120 Teardown	60	6	5	4	15	5	5
0603A	28	3	1	360 Setup 180 Teardown	90	4	5-1/2	4	13.5	4.5	4.5
0603B	33	3	1	60 Setup 60 Teardown	120	2	2	4	8	6	6
0604	34	2	1	60 Setup 60 Teardown	150	2-1/2	1	3-1/2	7	5	5
0605	44	3	1	60 Setup 60 Teardown	120	2	3	3	8	6	6
0606	29,43	2	2	--	60	1	1	2	4	2	2
EVA LiOH	7,14,21,28, 35,41	6	2		45		VAR.		9	4.5	4.5
					Totals				1096.15 (2)		

Maximum Work Day: 12 Hrs on Duty; Average Work Day: 8 Hrs on Duty; Minimum Work Day: 0 Hrs on Duty
Total EVA Man Hrs: 9

Notes: 1. This is the time involved in doing the experiment and does not include setup or teardown time.
2. No specific experiments are scheduled on day 40 - an outcome of the several specified frequencies.

*See Tables 3-2 and 3-3 for crew schedules and experiment equipment duty cycles.

Table 3-2 **CREW SCHEDULING, FLIGHT** 218, **SHEET** 1 **OF** 12

3-7.12

DAY 1	ORBIT	CREWMEN ACTIVITIES 1	2	3
0000				
20				
40		Rest	0104 (s)	0104 (o)
0100				
20		E/Hyg		
40				
0200			E/Hyg	
20		0104 (o)		0104 (s)
40				
0300				
20				
40		0104 (s)	0104 (o)	E/Hyg
0400				
20				
40				
0500			0106 (s)	0106 (o)
20				
40				
0600			0105 (o)	0105 (s)
20				
40				
0700				
20		Sleep	Rest	
40			0118 (s)	
0800				
20			E/Hyg	0118 (o)
40				
0900				
20				
40				
1000				
20		E/Hyg		E/Hyg
40				
1100		0106 (o)	Sleep	0106 (s)
20				
40				
1200				
20		0105 (s)		0105 (o)
40				
1300				
20				
40				
1400				Sleep
20				
40		0106 (s)	0106 (o)	
1500				
20				
40				
1600		0105 (o)	0105 (s)	
20				
40				
1700		Rest		
20		0118 (s)		
40				
1800		E/Hyg	0118 (o)	
20				
40				
1900				
20		Rest		
40			E/Hyg	
2000				
20				0118 (s)
40				
2100		0118 (o)		E/Hyg
20				
40			Rest	
2200				
20				
40				
2300				
20		Rest		Rest
40				
2400				

DAY 2	ORBIT	CREWMEN ACTIVITIES 1	2	3
0000				
20		Rest		
40			0104 (o)	0104 (s)
0100				
20		E/Hyg		
40				
0200				
20		0104 (s)		0104 (o)
40			E/Hyg	
0300				
20				
40		0104 (o)	0104 (s)	E/Hyg
0400				
20				
40				
0500			0106 (o)	0106 (s)
20				
40			201c (s)	201c (o)
0600				202 d, f,g,h
20			Rest	
40				201 a
0700				
20			0118 (s)	
40		Sleep		
0800				0118 (o)
20				
40				
0900				
20				
40				E/Hyg
1000				
20		E/Hyg		
40			Sleep	
1100		0106 (s)		0106 (o)
20				
40		201c (o)		201c (s)
1200				
20				0118 (s)
40		0118 (o)		
1300				
20				
40				
1400			E/Hyg	
20				
40		0106 (o)	0106 (s)	
1500				
20		201c (s)	201c (o)	
40				
1600		0118 (s)		Sleep
20				
40		E/Hyg	0118 (o)	
1700				
20				
40				
1800			203h	
20			201a	
40		Rest	202d, f g & h	
1900				203h
20				
40				
2000				
20				
40		201a		
2100		202d, f g & h	Rest	Rest
20				
40		203h		
2200				
20				
40				
2300		Rest		
20				
40			E/Hyg	
2400				

DAY 3	ORBIT	CREWMEN ACTIVITIES 1	2	3
0000				
20				
40				
0100				
20				
40				
0200				
20			0103 (o)	0113 (s)
40				
0300		Sleep		
20				
40				
0400				
20				
40				
0500				
20				
40				E/Hyg
0600				
20				
40				
0700				
20				
40				
0800		0113 (s)		0113 (o)
20				
40			Sleep	
0900				
20				
40				
1000				
20				
40				
1100		E/Hyg		
20				
40				
1200		Rest		
20				
40				E/Hyg
1300				
20				
40				
1400				
20				
40		0113 (o)	0113 (s)	
1500				
20				
40				
1600				
20				Sleep
40				
1700				
20				
40			E/Hyg	
1800				
20		E/Hyg		
40				
1900				
20				
40				
2000				
20			Rest	
40				E/Hyg
2100		Rest		
20				
40				
2200				Rest
20				
40				
2300				
20			E/Hyg	
40				
2400				

DAY 4	ORBIT	CREWMEN ACTIVITIES 1	2	3
0000				
20				Rest
40		0104 (s)	0104 (o)	
0100				
20				E/Hyg
40				
0200				
20			0104 (s)	0104 (o)
40				
0300		E/Hyg		
20				
40		0104 (o)	Rest	0104 (s)
0400				
20				
40				
0500			E/Hyg	
20				
40			0106 (o)	0106 (s)
0600				
20			0109 (o)	0109 (s)
40				
0700			203b	
20				
40		Sleep		
0800				
20				
40				
0900				E/Hyg
20				
40				
1000				202e
20				2021
40				203b
1100		0106 (s)	Sleep	0106 (o)
20				
40				
1200		203b		
20		202e		
40		2021		
1300		E/Hyg		
20				
40				
1400				
20			E/Hyg	
40			2021	Sleep
1500		Rest	202e	
20			203a	
40				
1600				
20			Rest	
40		203a		
1700		Rest	203c	
20		202a & b (o)	202a & b (s)	
40				
1800		0109 (s)		0109 (o)
20				
40		202a & b (s)		202a, b (o)
1900				
20		E/Hyg	202a, b (o)	202a, b (s)
40				
2000			Rest	203a
20		0109 (o)	0109 (s)	E/Hyg
40				
2100			E/Hyg	
20				203c
40				
2200		Rest		
20			Rest	
40		0106 (o)	0106 (s)	
2300				Rest
20		Rest		
40		203c		
2400				

NOTES (O) Observer
(S) Subject

Radiation monitoring Exper. 0501 will be conducted once a day for 10 min during unassigned periods.
Day No. 40: Day of Rest

Spacecraft Occulted
In Sunlight
Occulted etc.

E/Hyg Eat & Personal Hygiene
Limits of Experiment Time
Limits of EVA

Table 3-2 **CREW SCHEDULING, FLIGHT 218, SHEET 2 OF 12**

DAY 5	ORBIT	CREWMEN ACTIVITIES 1	2	3
0000				
20				
40		0104 (s)	0104 (o)	E/Hyg
0100				Rest
20				
40				
0200		E/Hyg		
20			0104 (s)	0104 (o)
40				
0300				
20			E/Hyg	
40		0104 (o)		0104 (s)
0400				
20				
40				
0500			Rest	E/Hyg
20				
40			0106 (o)	0106 (s)
0600				
20			Rest	203h
40			201a	
0700				Rest
20			202d&f	
40		Sleep	202g&h	
0800			E/Hyg	
20				
40				202d&f
0900				202g&h
20				201a
40				
1000				
20				
40				E/Hyg
1100		0106 (s)		0106 (o)
20				
40		201c (o)	Sleep	201c (s)
1200		Rest		Rest
20		201a		
40				
1300		203h		
20		202d,f, g & h		
40		E/Hyg		
1400				
20				
40				
1500				
20				
40				
1600				
20			203h	
40		0111 (s)	0111 (o)	
1700				
20			E/Hyg	
40		Rest		
1800				
20				
40				
1900				
20		E/Hyg	Rest	
40				
2000		0106 (o)	0106 (s)	E/Hyg
20				
40		0111 (o)	Rest	0111 (s)
2100				
20		Rest		
40		201c (s)	201c (o)	Rest
2200				
20			201c (s)	201c (o)
40				
2300		Rest	E/Hyg	Rest
20				
40			0111 (s)	0111 (o)
2400				

DAY 6	ORBIT	CREWMEN ACTIVITIES 1	2	3
0000				
20				
40		0104 (s)	0104 (o)	Rest
0100				
20				E/Hyg
40				
0200		E/Hyg		
20			0104 (s)	0104 (o)
40				
0300				
20				
40		0104 (o)	Rest	0104 (s)
0400				
20				
40				
0500			E/Hyg	E/Hyg
20				
40			0106 (o)	0106 (s)
0600				
20			201b	
40			203g,d & f	
0700				Rest
20			201e	
40				
0800				
20		Sleep		203e
40				
0900				
20				
40				
1000				
20				E/Hyg
40		E/Hyg		
1100				203d&f
20		0106 (s)		0106 (o)
40				
1200			Sleep	203g
20				201b&e
40				202c
1300		Rest		
20		203d&f		
40		201d(s)		
1400				201d (o)
20			E/Hyg	
40			202c	
1500		203g	Rest	
20		201e		
40		201b		
1600		202c		
20		Rest	Rest	
40				
1700		0103 (s)	0103 (o)	Sleep
20				
40		201d (o)	201d (s)	
1800				
20		E/Hyg	203e	
40				
1900		Rest		
20		0106 (o)	0106 (s)	
40				
2000		0103 (o)	E/Hyg	0103 (s)
20				
40			Rest	
2100				
20			0103 (s)	0103 (o)
40		Rest		
2200				
20			201d (o)	201d (s)
40				
2300		203e	Rest	E/Hyg
20				
40				
2400				Rest

DAY 7	ORBIT	CREWMEN ACTIVITIES 1	2	3
0000				
20				
40			0104(S)	0104(O)
0100				
20		E/Hyg		
40				
0200			E/Hyg	
20		0104(O)		0104(S)
40				
0300			Rest	
20				E/Hyg
40		0104(S)	0104(O)	
0400				
20				Rest
40			- - - -	
0500			L10H	EVA(O)
20			- - - -	
40			0106(O)	0106(S)
0600				
20				
40			0109(S)	0109(O)
0700				
20			0203b	Rest
40			E/Hyg	
0800		Sleep		0202e
20				02021
40				0203b
0900				
20				
40				
1000				E/Hyg
20				
40		E/Hyg		0203a
1100			Sleep	
20		0106(S)		0106(O)
40				
1200		0203b		
20		0202e		
40		02021		
1300				
20		Rest		
40				
1400				
20			0203c	
40				
1500		0203c	Rest	
20				
40				Sleep
1600		0113P(O)	0113P(S)	
20				
40		E/Hyg	E/Hyg	
1700				
20		Rest	0202e	
40			02021	
1800		0202ab(S)	0202ab(O)	
20				
40		0109(S)	0109(O)	E/Hyg
1900				
20		Rest	0202ab(S)	0202ab(O)
40		0202ab(O)		0202ab(S)
2000				
20		Rest	0113P(O)	0113P(S)
40				
2100		E/Hyg	0203a	Rest
20				0203c
40			E	
2200		0109(O)	E/Hyg	0109(S)
20				
40		0106(O)	0106 S	Rest
2300		0203a		
20			Rest	
40		0113P(S)		0113P(O)
2400				

DAY 8	ORBIT	CREWMEN ACTIVITIES 1	2	3
0000				
20				
40			0104(S)	0104(O)
0100				
20		E/Hyg		
40				
0200				
20		0104(S)	0104(O)	E/Hyg
40				
0300				Rest
20			Rest	
40				
0400		0104(O)		0104(S)
20			E/Hyg	
40				
0500		0106(S)		0106(O)
20				
40		E/Hyg	0106(O)	0106(S)
0600				
20				
40			0105(S)	0105(O)
0700				
20				
40				E/Hyg
0800				
20		Sleep		
40				
0900				
20				
40				
1000				Rest
20				
40				
1100			Sleep	
20				
40				
1200				
20				
40		0105(S)		0105(O)
1300				
20				
40				
1400		E/Hyg		
20			E/Hyg	
40				
1500		0201c(O)	0201c(S)	
20		0201c(S)	0201c(O)	
40				
1600				
20		0201a	Rest	Sleep
40		0202d,f g & h.		
1700		0203h		
20				
40			0202df	
1800			0202gh	
20			0203h	
40		E/Hyg	0201a	
1900				
20		0106(O)	0106(S)	E/Hyg
40				
2000			E/Hyg	
20		0105(O)		0105(S)
40				
2100			Rest	
20				
40				
2200		Rest	0201c(O)	0201c(S)
20				0201a
40			Rest	
2300				0202d, f, g&h
20				0203h
40				E/Hyg
2400		E/Hyg		

NOTES

Table 3-2 **CREW SCHEDULING, FLIGHT** 218 , **SHEET** 3 **OF** 12

2-7.14

DAY 9	ORBIT	CREWMEN ACTIVITIES 1	2	3
0000				
20				0203d
40				
0100		0115(S)		0115(0)
20			Rest	
40				
0200				0203b
20			E/Hyg	0203df
40				
0300		0203a		E/Hyg
20				
40		0115(0)	0115(S)	Rest
0400				
20		E/Hyg		0203c
40				0202e
0500				0202c
20			0203a	
40				
0600			0115(0)	0115(S)
20				
40				
0700			0203b	
20		Sleep	0203df	
40				
0800			0202ab(S)	0202ab(0)
20				
40			E/Hyg	
0900				
20				
40				
1000				E/Hyg
20		0118(S)		
40				
1100		0202c		
20		02021		0118(0)
40		0203c	Sleep	
1200		0203df		
20				
40		0106(S)		0106(0)
1300				
20		0203b		
40		0202e		
1400		E/Hyg		
20				
40			0202c	Sleep
1500		Rest	0203c	
20			0202e	
40			02021	
1600				
20		0106(0)	0106(S)	
40				
1700		0202ab(S)	0202ab(0)	
20			0118(S)	
40				
1800		0118(0)		
20			Rest	
40				
1900				02021
20		0202ab(0)		0202ab(S)
40				
2000				
20				0118(S)
40				
2100		Rest	0118(0)	E/Hyg
20				
40				
2200				Rest
20			Rest	
40				
2300			0106(0)	0106(S)
20				
40		E/Hyg		Rest
2400				

DAY 10	ORBIT	CREWMEN ACTIVITIES 1	2	3
0000				
20				
40				
0100				
20				
40				
0200				
20		0113(0)	0113(S)	Sleep
40				
0300				
20				
40				
0400				
20				
40				
0500				
20				
40			E/Hyg	
0600				
20				
40				
0700				
20				
40				
0800				
20				
40				
0900		Sleep	0113(0)	0113(S)
20				
40				
1000				
20				
40				
1100				
20				
40				E/Hyg
1200				
20				
40			E/Hyg	
1300				
20				
40				
1400				
20				
40		0113(S)		0113(0)
1500				
20				
40				
1600				
20				
40				
1700				
20				
40		E/Hyg		
1800			Sleep	
20				E/Hyg
40				
1900				
20				
40				Rest
2000				
20		Rest		
40				
2100				
20				
40				
2200				
20				
40				
2300				
20				
40			E/Hyg	
2400				

DAY 11	ORBIT	CREWMEN ACTIVITIES 1	2	3
0000				
20				Rest
40		0103(S)	0103(0)	
0100				E/Hyg
20				
40				
0200		E/Hyg	0103(S)	0103(0)
20				
40				
0300				
20		0103(0)	E/Hyg	0103(S)
40				
0400			0201c(S)	0201c(0)
20			0201c(S)	0201c(0)
40			0111(0)	0111(S)
0500				
20			0106(0)	0106(S)
40				
0600			0202df	
20				E/Hyg
40			0201a	
0700			0102g	
20		Sleep	0203h	
40			0113P(0)	0113P(S)
0800				
20				0202df
40			E/Hyg	
0900				
20				0201a
40				0202g
1000				0203h
20				Rest
40				
1100		0106(S)		0106(0)
20			Sleep	
40		0201c(0)		
1200				0101c(S)
20				
40		0111(S)		0111(0)
1300				
20		E/Hyg		E/Hyg
40				
1400		Rest		
20				
40		0111(0)	0111(S)	
1500				
20		0201c(S)	0201c(0)	
40				
1600		0113P(0)	0113P(S)	
20				Sleep
40				
1700			E/Hyg	
20		0202df		
40				
1800		0201a		
20		0202g		
40		0203h		
1900		E/Hyg		
20			Rest	
40				
2000		0113P(S)		0113P(0)
20				
40				
2100		0109(0)		0109(S)
20		Rest		
40				
2200		0109(S)	0109(0)	E/Hyg
20			Rest	
40				
2300		Rest	0109(S)	0109(0)
20				
40				
2400		0106(0)	0106(S)	

DAY 12	ORBIT	CREWMEN ACTIVITIES 1	2	3
0000				
20			0106(S)	0106(0)
40		E/Hyg		
0100				
20		0106(0)	E/Hyg	0106(S)
40				
0200		0106(S)	0106(0)	E/Hyg
20				
40		Rest	0202ab(S)	0202ab(0)
0300		0202ab(0)		0202ab(S)
20				
40		0202ab(S)	0202ab(0)	
0400			0203a	E/Hyg
20				
40				0203a
0500			Rest	0203df
20				
40				0201a
0600				0203b
20				
40			E/Hyg	
0700				Rest
20		Sleep	0203b	
40				
0800				0203c
20				
40				Rest
0900				
20				
40				0203e
1000				0201d
20		E/Hyg		0202c
40			Sleep	02021
1100		0203a		Rest
20				E/Hyg
40		0203e		
1200				
20				Rest
40		0203c		
1300		0203df		
20		0203g		
40				
1400				
20			0203g	
40		Rest	0201e	
1500			0201b	
20		0203b		
40		0201b	E/Hyg	
1600		0201d		
20		0202c,		Sleep
40		e & 1	0601	
1700				
20				
40			0203e	
1800		Rest		
20				
40			Rest	
1900		E/Hyg		
20				
40		Rest	E/Hyg	0203e
2000				
20				
40			Rest	Rest
2100		0201e		E/Hyg
20				
40			0203c	
2200		Rest		
20			0203df	
40			Rest	0202e
2300			0201d	0201b
20			0202c,	Rest
40		E/Hyg	e & 1	
2400				

NOTES

[redacted]

Table 3-2 CREW SCHEDULING, FLIGHT 218, SHEET 4 OF 12

2-7.15

DAY 13	ORBIT	CREWMEN ACTIVITIES 1	2	3
0000				
20			Rest	Rest
40		0121(S)	0121(O)	
0100			0602a	E/Hyg
20				
40				
0200		0120 O		0121(S)
20			E/Hyg	
40		E/Hyg		
0300				Rest
20			0121(S)	0121(O)
40		Rest		Rest
0400				
20				
40				
0500				
20				
40				
0600		Sleep	Rest	0602a
20				
40				
0700				
20				
40				
0800				E/Hyg
20				
40				
0900			Sleep	
20				
40				
1000				
20		E/Hyg		
40				
1100				Rest
20				
40				
1200				
20				
40		0602a		
1300				
20				
40				Sleep
1400				
20			E/Hyg	
40				
1500		E/Hyg		
20				
40				
1600			0602a	
20				
40				
1700				
20				
40		Rest		
1800				
20				
40				
1900			Rest	
20				
40		0602a		0602a
2000			E/Hyg	
20				E/Hyg
40				
2100				
20				
40		Rest	Rest	Rest
2200				
20				
40				
2300				
20				
40		E/Hyg		
2400				

DAY 14	ORBIT	CREWMEN ACTIVITIES 1	2	3
0000				
20		0109(O)	E/Hyg	0109(S)
40				
0100		Rest	0109(S)	0109(O)
20				
40				
0200		0109(S)	0109(O)	
20				E/Hyg
40		0201c(O)	0201c(S)	
0300		0201a		
20		0203h	Rest	Rest
40				
0400		0201c(S)		0201c(O)
20				
40		E/Hyg		
0500			0202df	
20			0201a	Rest
40			0202gh	
0600			E/Hyg	
20				
40			Rest	
0700				E/Hyg
20			0201c(O)	0201c(S)
40				
0800		Sleep		Rest
20				
40				
0900				
20				
40				0202df
1000				0201a
20				0202gh
40				0203h
1100			Sleep	
20				
40				
1200		0105(O)		0105(S)
20				
40		0202gh		
1300		0202d		
20		0202f		E/Hyg
40		E/Hyg		
1400			E/Hyg	
20				
40				
1500		0105(S)	0105(O)	
20				
40				Sleep
1600			0203h	
20				
40		Rest		
1700			Rest	
20				
40				
1800		EVA(O)	L10H	
20				
40				
1900		E/Hyg	Rest	
20				
40				
2000			0105(S)	0105(O)
20				
40				
2100		Rest		
20				
40			E/Hyg	E/Hyg
2200				
20				
40				
2300			Rest	Rest
20				
40				
2400				

DAY 15	ORBIT	CREWMEN ACTIVITIES 1	2	3
0000				
20		Rest	0104(S)	0104(O)
40				
0100				
20		E/Hyg		
40				
0200				
20		0104(O)	Rest	0104(S)
40				
0300				
20				E/Hyg
40				
0400		0104(S)	0104(O)	
20				
40				
0500			E/Hyg	
20				
40				Rest
0600			Rest	
20				
40				
0700			0113P(O)	0202e 0113P(S)
20				
40				0203a
0800		Sleep		
20				0203df
40				0202c
0900				0202f
20				
40				E/Hyg
1000				
20			Sleep	
40				
1100				Rest
20		E/Hyg		
40				0203b
1200		0202 ab(S)		0202 ab(O)
20				
40		0203a		
1300				
20		0203df		
40		0202c,e		
1400		02021		
20		0202 ab(O)	0202 ab(S)	
40				
1500			E/Hyg	
20				
40		Rest		
1600		E/Hyg	0203a	Sleep
20			0203df	
40				
1700		Rest	0202c1	
20			0203b	
40			0202e	
1800		0113 P(O)	0113 P(S)	
20				
40				
1900		0203b		E/Hyg
20				
40		0113 P(S)	Rest	0113 P(O)
2000				
20		E/Hyg		
40				Rest
2100				
20			E/Hyg	
40				
2200			0202 ab(O)	0202 ab(S)
20		Rest		
40			0203c	
2300				Rest
20				
40		0203c		
2400		Rest	Rest	0203c

DAY 16	ORBIT	CREWMEN ACTIVITIES 1	2	3
0000				
20				E/Hyg
40		0103(S)	0103(O)	
0100				
20				
40				
0200			0103(S)	0103(O)
20		E/Hyg		
40				
0300				
20		0103(O)	E/Hyg	0103(S)
40				
0400				
20			0111(S)	0111(O)
40				
0500			0109(O)	0109(S)
20				
40			0210c(S)	0210c(O)
0600			0203h	E/Hyg
20			0201a	
40			0202d	
0700		Sleep	0202f	
20			0202gh	
40				
0800			E/Hyg	Rest
20				
40				
0900				
20				0202df
40				0202gh
1000		E/Hyg		0202h
20				
40		0118(S)		
1100		0202g	Sleep	
20		0201a		0118(O)
40				
1200		0202df		
20		0203h		
40				
1300		0111(O)		0111(S)
20				
40		0109(S)		0109(O)
1400				
20		0111(S)	0111(O)	E/Hyg
40				
1500				
20				
40		Rest	Rest	
1600				
20				
40			E/Hyg	
1700				
20				Sleep
40			0118(S)	
1800		0118(O)		
20			Rest	
40				
1900				
20				
40		0201c(S)	0201c(O)	
2000				
20				0118(S)
40		Rest		
2100			0118(O)	0201a
20				
40				E/Hyg
2200				
20				
40		0201c (O)	Rest	0201(S)
2300				
20				Rest
40		0109(O)	0109(S)	
2400				

NOTES

[redacted]

Table 3-2 **CREW SCHEDULING, FLIGHT** 218, **SHEET** 5 **OF** 12

2-7.16

DAY 17	ORBIT	CREWMEN ACTIVITIES 1	2	3
0000				
20				
40				
0100				
20				
40				
0200				
20				
40		0113(S)	Sleep	0113(0)
0300				
20				
40				
0400				
20				
40				
0500				
20				
40		E/Hyg		
0600				
20				
40				
0700				
20				
40				
0800				
20				
40		0113(0)	0113(S)	Sleep
0900				
20				
40				
1000				
20				
40				
1100				
20				
40			E/Hyg	
1200				
20				
40		E/Hyg		
1300				
20				
40				
1400				
20				
40				
1500		Rest	0113(0)	0113(S)
20				
40				
1600				
20				
40				
1700				
20				
40				E/Hyg
1800				
20				
40			E/Hyg	
1900				
20				
40				
2000				
20		Sleep		Rest
40				
2100				
20				
40				
2200			Rest	
20				
40				
2300				
20				
40		E/Hyg		E/Hyg
2400				

DAY 18	ORBIT	CREWMEN ACTIVITIES 1	2	3
0000				
20				
40				0203b
0100				0202c
20			Rest	0202e
40		Rest		02021
0200				0203df
20				0203a
40		0202ab(0)		0202ab(S)
0300		0201d(S)	E/Hyg	0201d(0)
20				
40			0203a	E/Hyg
0400			0203df	
20		Rest	0202c,e	
40			02021	Rest
0500		E/Hyg		
20			0204b	
40			0202ab(S)	0202ab(0)
0600			0201d(0)	0201d(S)
20			0201b	
40			0203c	
0700		Rest		
20			0201e	
40		0203a	E/Hyg	Rest
0800		0203df		
20		0202c		
40		0202e		
0900		02021		
20		0203b		
40				E/Hyg
1000				
20			Sleep	
40				
1100		E/Hyg		
20				
40		0203g		Rest
1200				0203c
20		0602a		
40				0203g
1300		Rest		0201e
20		0201b		
40		0201e		
1400				
20		0203c		
40		0202ab(0)	0202ab(0)	
1500		0201d(0)	0201d(S)	
20				
40		0203e	E/Hyg	Sleep
1600				
20				
40		E/Hyg		
1700			0203e	
20				
40				
1800				
20				
40				
1900				
20				
40				0203e
2000			0602a	
20		Sleep		
40				
2100				E/Hyg
20				
40				Rest
2200				
20				
40			E/Hyg	0602a
2300				
20			0203g	
40		E/Hyg	Rest	
2400				Rest

DAY 19	ORBIT	CREWMEN ACTIVITIES 1	2	3
0000				
20			Rest	
40				
0100		0115		0115
20		(s)		(0)
40				
0200				E/Hyg
20			E/Hyg	
40				
0300		Rest		
20				Rest
40		0115	0115	
0400		(0)	(s)	
20				
40		E/Hyg		0603A
0500				
20				
40				
0600			0115	0115
20			(0)	(s)
40				
0700			E/Hyg	
20				
40		Sleep		
0800				E/Hyg
20				
40				
0900				
20				
40				Rest
1000			Sleep	
20				
40				
1100		0113P		0113P
20		(s)		(0)
40		0113P		0113P
1200		(0)		(s)
20		E/Hyg		
40				E/Hyg
1300				
20				
40				
1400		0113P	0113P	
20		(0)	(s)	
40			E/Hyg	Rest
1500				
20				
40				
1600		0602A		
20				
40			Rest	
1700				
20				
40				
1800				Sleep
20				
40		E/Hyg	0602A	
1900				
20				
40				
2000				
20				
40		Rest		
2100				
20				
40		Rest	Rest	
2200				
20				
40				
2300				
20				
40				E/Hyg
2400				

DAY 20	ORBIT	CREWMEN ACTIVITIES 1	2	3
0000				
20		0109		0109
40		(0)	E/Hyg	(s)
0100			0109	0109
20		E/Hyg	(s)	(0)
40				
0200		0109	0109	
20		(s)	(0)	
40		201c(0)	201c(S)	E/Hyg
0300		201a		
20		203h		
40		201c	Rest	201c
0400		(s)		(0)
20			203h	
40			202df	
0500			201a	
20				
40			202g&h	
0600			Rest	Rest
20				
40				
0700			E/Hyg	
20				
40			201c	201c
0800		Sleep	(0)	(s)
20				E/Hyg
40				
0900				
20				
40				
1000				Rest
20				
40				
1100				202df
20				201a
40				202g&h
1200		E/Hyg	Sleep	203h
20				
40		202d		
1300		202f		
20		202g&h		
40				Sleep
1400				
20		0602B	Rest	
40				
1500				
20				
40				
1600				
20			E/Hyg	
40				
1700				
20		E/Hyg		
40				
1800				E/Hyg
20				
40			0602B	
1900				
20				
40				Rest
2000				
20		Rest		
40				
2100				
20				0602B
40			E/Hyg	
2200				
20				0602B
40				
2300			Rest	
20				
40		E/Hyg		E/Hyg
2400				

NOTES

Table 3-2 **CREW SCHEDULING, FLIGHT 218, SHEET 6 OF 12**

DAY 21	ORBIT	CREWMEN ACTIVITIES 1	2	3
0000				
20				
40		0103(S)	0103(0)	
0100				Rest
20				
40		Rest		
0200			0103(S)	0103(0)
20				
40				
0300		0103(0)	E/Hyg	
20				0103(S)
40				
0400				
20		E/Hyg		E/Hyg
40				
0500			0111(S)	0111(0)
20				
40			0202ab(S)	0202ab(0)
0600			0203df	
20			0202c	Rest
40			0202e	
0700		Sleep	02021	
20			0202b	
40				0602b
0800			E/Hyg	
20				
40				0602b
0900				
20				
40				
1000				E/Hyg
20				
40		0202ab(0)		0202ab(S)
1100		0203df	Sleep	
20		0203c		
40		0202e		
1200		02021		
20		0203b		
40				
1300		E/Hyg		
20				
40				
1400		0203a		
20		0111(S)		
40			0111(0)	Sleep
1500				
20			0203a	
40		0203c	E/Hyg	
1600				
20				
40		Rest	Rest	
1700				
20				
40				
1800				0203b
20				0203df
40			0602b	0202c
1900		E/Hyg		0202e
20				02021
40			Rest	0203a
2000		0202	0202	
20		ab(S)	ab(0)	E/Hyg
40			0203c	
2100		Rest	Rest	0203c
20				
40		0111(0)	E/Hyg	0111(S)
2200				- - - -
20				
40		0602B	EVA(C)	L10H
2300		Tear-		
20		down		Rest
40			Rest	
2400				E/Hyg

DAY 22	ORBIT	CREWMEN ACTIVITIES 1	2	3
0000				
20		E/Hyg		
40			0104(S)	0104(0)
0100				
20		Rest		
40				
0200				
20		0104(0)		
40				0104(S)
0300			E/Hyg	
20				
40		0104(S)	0104(0)	
0400				E/Hyg
20				
40				
0500			0106(S)	0106(0)
20				
40			0105(S)	
0600				
20				0105(0)
40				
0700				
20				
40		Sleep		Rest
0800				
20				
40				E/Hyg
0900				
20				
40				0601
1000				
20			Sleep	
40				0601
1100				
20		0601		
40				
1200				
20		0601		
40				
1300		E/Hyg		
20				
40				
1400			E/Hyg	Sleep
20				
40		0106(S)	0106(0)	
1500				
20				
40		0105(S)	0105(0)	
1600				
20				
40		Rest	0601	
1700				
20				
40			0601	
1800				
20		E/Hyg		E/Hyg
40				
1900		0106(0)		0106(S)
20				
40				
2000				
20		0105(0)		0105(S)
40				
2100			E/Hyg	
20				
40		Rest	0601	
2200				
20				Rest
40				
2300		0601	Rest	
20				
40		Rest		E/Hyg
2400				

DAY 23	ORBIT	CREWMEN ACTIVITIES 1	2	3
0000				
20		E/Hyg	0113P(S)	0113P(0)
40				
0100				
20		0113P(0)	E/Hyg	0113P(S)
40				
0200		0113P(S)	0113P(0)	
20				
40		0109(0)	0109(S)	
0300				E/Hyg
20				
40			0109(0)	0109(S)
0400				
20			0201a	Rest
40			0201c(0)	0201c(S)
0500				
20				0202df
40			Rest	
0600				Rest
20				
40			E/Hyg	
0700		Sleep	0202df	
20				
40				
0800				
20				
40				
0900				E/Hyg
20				
40				0202gh
1000		E/Hyg		0203b
20				
40		0118(S)	Sleep	
1100		0202gh		
20		0201d		0118(0)
40				
1200		0202df		
20		0203b		
40				0109(0)
1300		0109(S)		
20		0201c(S)		0201c(0)
40			0202gh	
1400			0203b	E/Hyg
20				
40				
1500		Rest	Rest	
20				
40				
1600				Sleep
20				
40			E/Hyg	
1700				
20				
40			0118(S)	
1800				
20		0118(0)		
40			Rest	
1900				
20				
40		0201c(0)	0201c(S)	
2000				
20				0118(S)
40				
2100			0118(0)	0201a
20				
40		Rest		
2200				
20				Rest
40			Rest	
2300				
20				
40				E/Hyg
2400				

DAY 24	ORBIT	CREWMEN ACTIVITIES 1	2	3
0000				
20				
40				
0100				
20				
40				
0200				
20		0113(S)		0113(
40			Sleep	
0300				
20				
40				
0400				
20				
40				
0500				
20				
40		E/Hyg		
0600				
20				
40				
0700				
20				
40				Sleep
0800				
20				
40				
0900		0113(C)	0113(S)	
20				
40				
1000				
20				
40				
1100				
20				
40			E/Hyg	
1200				
20				
40		E/Hyg		
1300				
20				
40				
1400				
20				
40				
1500			0113(C)	0113(S)
20				
40				
1600				
20				
40				
1700				
20				
40				
1800		Sleep		
20				
40			E/Hyg	E/Hyg
1900				
20				
40				
2000				
20			Rest	
40				
2100				
20		Rest		
40				
2200				
20				
40				Rest
2300				
20				
40		E/Hyg		
2400				

NOTES

[redacted]

Table 3-2 **CREW SCHEDULING, FLIGHT** 218, **SHEET** 7 **OF** 12

DAY 25	ORBIT	CREWMEN ACTIVITIES 1	2	3
0000				
20				0203b
40				0202c
0100			Rest	0202e
20				02021
40		Rest		0203df
0200				0203a
20				
40		0202ab(0)	E/Hyg	0202ab(S)
0300		0201d(S)		0201d(0)
20		0201b		
40		0201e		E/Hyg
0400		0203c	Rest	
20				
40		E/Hyg		
0500				0203c
20				0203a
40			0202ab(s)	0202ab(0)
0600			0201d(0)	0201d(S)
20			0201b	
40			0203c	
0700			0201e	Rest
20		Sleep		
40				
0800				
20				
40				E/Hyg
0900				
20				0201e
40				
1000				
20				0203e
40				
1100			Sleep	
20		0203g		
40				
1200		0203e		
20				
40				
1300		E/Hyg		E/Hyg
20				
40				
1400		Rest		
20			0203g	
40		0202ab(S)	0202ab(0)	
1500		0201d(0)	0201d(S)	
20		0203a	Rest	
40				
1600		0203df	E/Hyg	Sleep
20		0202c		
40		0202e		
1700		02021		
20		0203b		
40				
1800			0203a	
20		Rest	0203df	
40			0202c	
1900			0202e	
20			02021	
40			0203b	
2000				
20				
40				
2100				Rest
20				
40			Rest	
2200				
20				
40			0203e	
2300				
20				
40		E/Hyg	E/Hyg	E/Hyg
2400				

DAY 26	ORBIT	CREWMEN ACTIVITIES 1	2	3
0000				
20				
40		01030	0103S	E/Hyg
0100				
20				
40				
0200		Rest	01030	0103S
20				
40				
0300				
20		0103S		01030
40			E/Hyg	
0400				
20			01110	0111S
40				
0500			0109S	01090
20				
40			0201c0	0201cS
0600			0202d	
20			0202f	E/Hyg
40			0202gh	
0700		Sleep	0201a	
20			0203h	
40				
0800				Rest
20				
40				
0900				0203h
20				0201a
40				0202d
1000		E/Hyg		0202f
20				0202gh
40		0111S		01110
1100			Sleep	
20				
40		01090		0109S
1200				
20		0201cS		0201c0
40				
1300		0201a		E/Hyg
20		0202d		
40		0202f		
1400		0202gh		
20		0203h		
40		0201c0	0201cS	Rest
1500			E/Hyg	
20		Rest		
40				
1600			Rest	
20				
40		E/Hyg		
1700				
20		01110	0111S	
40				
1800		0109S	0109C	
20				Sleep
40				
1900				
20		Rest		
40				
2000			Rest	
20				
40		E/Hyg		
2100				
20				
40				
2200				
20			E/Hyg	E/Hyg
40		Rest		
2300				
20			Rest	
40				Rest
2400				

DAY 27	ORBIT	CREWMEN ACTIVITIES 1	2	3
0000				
20			0113P(0)	0113P(S)
40		E/Hyg		
0100				
20		0113P(S)	E/Hyg	0113P(0)
40				
0200		0113P(0)	0113P(S)	Rest
20				
40				
0300		0106(S)	0106(0)	E/Hyg
20				
40		0106(0)		0106(S)
0400				
20			0106S	0106(0)
40		Rest		
0500			0202ab(0)	0202ab(S)
20				
40		E/Hyg	Rest	0203b
0600			0203df	E/Hyg
20			0202c	
40			0202e	
0700			02021	
20			E/Hyg	
40				Rest
0800		Rest		
20				
40				203df
0900				
20				0203a
40				0202c
1000				0202e
20				02021
40			Sleep	0203c
1100		0202ab(S)		0202ab(0)
20		0203a		
40		0202c		Rest
1200		0202e		
20		02021		
40		0203df		E/Hyg.
1300		0203b		
20				
40		E/Hyg		
1400				
20				
40		Rest	0203b	
1500				
20		0121(0)	0121(S)	Sleep
40				
1600			0203c	
20				
40			E/Hyg	
1700				
20			Rest	
40		Sleep		
1800			0203a	
20				
40			Rest	
1900				
20				
40			0121(0)	0121(S)
2000			Rest	
20				Rest
40		0121(S)		0121(0)
2100			E/Hyg	
20				E/Hyg
40		0202ab(0)	0202ab(S)	
2200				
20		0203c		
40		E/Hyg	Rest	
2300				
20				Rest
40		Rest		
2400				

DAY 28	ORBIT	CREWMEN ACTIVITIES 1	2	3
0000				
20				Rest
40			Rest	
0100		0115(S)		
20				0115(0)
40				
0200				Rest
20			E/Hyg	
40				E/Hyg
0300		E/Hyg		
20				
40		0115(0)		
0400			0115(S)	
20				Rest
40				
0500		Sleep		
20			Rest	
40				
0600			0115(0)	0115(S)
20				
40				
0700			E/Hyg	
20				
40			0603a	
0800				
20				Rest
40			Sleep	
0900				
20				E/Hyg
40				
1000				0603a
20				
40				
1100				0603a
20				
40				
1200				0603a
20		E/Hyg		
40				
1300		0603a		
20				
40				
1400		0603a		
20			E/Hyg	
40				
1500				
20			0603a	
40				
1600		Rest		Sleep
20				
40				
1700			0603a	
20				
40				
1800		E/Hyg		
20			0603a	
40				
1900		Rest		
20				
40			E/Hyg	
2000		0603a		
20				
40				E/Hyg
2100				
20				
40		Rest		
2200			Rest	0603a
20				
40		LIOH		EVA(0)
2300				
20				
40		E/Hyg		Rest
2400				

NOTES

[redacted]

Table 3-2 **CREW SCHEDULING, FLIGHT** 218, **SHEET** 8 **OF** 12

DAY 29	ORBIT	CREWMEN ACTIVITIES 1	2	3
0000				
20				
40				
0100		0105(S)		0105(0)
20				
40			E/Hyg	
0200				0203h
20				
40				E/Hyg
0300		0105(0)	0105(S)	
20				
40				
0400				Rest
20		E/Hyg		
40				
0500			0105(0)	0105(S)
20				
40				
0600			0203h	
20			0201c(S)	0201c(0)
40			0202d	
0700			0202f	
20			0202gh	Rest
40		Sleep	E/Hyg	
0800				0201a
20				0202d
40				0202f
0900				0202gh
20				
40				
1000			Sleep	E/Hyg
20				
40				
1100		0104S		01040
20				
40				
1200		0203h		
20		0202d		
40		0202f		
1300		0202gh		
20		E/Hyg		
40				
1400			E/Hyg	
20		0201c(s)	0201c(0)	
40				
1500				
20		0104(0)	0104(S)	Sleep
40				
1600				
20		0109(S)	0109(0)	
40				
1700				
20		Rest	0201a	
40				
1800				
20		E/Hyg		E/Hyg
40				
1900		0109(0)	Rest	0109(S)
20				
40		0201c(0)		0201c(S)
2000				
20			0109(S)	0109(0)
40				
2100		Rest		
20			0104(0)	0104(S)
40				
2200				
20				
40		0606	E/Hyg	0606(0)
2300				
20		Rest		
40		0201a	Rest	Rest
2400				

DAY 30	ORBIT	CREWMEN ACTIVITIES 1	2	3
0000				
20		E/Hyg	0202ab(S)	0202ab(0)
40				
0100		0202ab(0)	Rest	0202ab(S)
20		0202ab(S)	0202ab(0)	Rest
40				
0200		0201e	Rest	E/Hyg
20		0201b		
40		0203g		
0300				0201e
20			E/Hyg	0201b
40				Rest
0400			0201d(S)	0201d(0)
20			0201b	
40			0203g	
0500			0203a	
20			Rest	Rest
40			0111(S)	0111(0)
0600				
20				
40		Sleep		0203e
0700			E/Hyg	
20				
40				0203a
0800				0203g
20				0203df
40				
0900			Sleep	E/Hyg
20				
40		E/Hyg		
1000				0203b
20				
40		0118(S)		
1100		0203b		0118(0)
20		0202c		
40		0202e		
1200		02021		
20		Rest		
40		0203c		Rest
1300		0201d(0)		0201d(S)
20		0201d(S)	0201d(0)	
40			0202c	Rest
1400			0202e	
20		Rest	02021	
40				
1500			0203e	
20				
40		E/Hyg	0203b	
1600				Sleep
20		0203e	E/Hyg	
40				
1700			Rest	
20			0118(S)	
40				
1800		0118(0)	0203c	
20				
40			0203df	
1900			0201e	
20		0203df	Rest	
40				
2000				0118(S)
20				
40		Rest		0203c
2100			0118(0)	
20				0202c
40				0202e
2200				02021
20		0203a		Rest
40				
2300		0111(0)	E/Hyg	0111(S)
20				
40		0111(S)	0111(0)	
2400				

DAY 31	ORBIT	CREWMEN ACTIVITIES 1	2	3
0000				
20				
40				
0100				
20				
40				
0200			0113(0)	0113(S)
20				
40		Sleep		
0300				
20				
40				
0400				
20				
40				
0500				
20				
40				E/Hyg
0600				
20				
40				
0700				
20				
40				
0800				
20		0113(S)		0113(0)
40			Sleep	
0900				
20				
40				
1000				
20				
40				
1100				
20				
40		E/Hyg		
1200				
20				
40				E/Hyg
1300				
20				
40				
1400				Rest
20				
40		0113(0)	0113(S)	
1500				
20				
40				
1600				
20				
40				Sleep
1700			E/Hyg	
20				
40				
1800				
20				
40		E/Hyg		
1900				
20				
40				
2000				
20			Rest	
40				
2100				
20		Rest		
40				
2200				
20				
40				
2300				E/Hyg
20				
40			E/Hyg	
2400				Rest

DAY 32	ORBIT	CREWMEN ACTIVITIES 1	2	3
0000				
20				
40		0103(S)	0103(0)	Rest
0100				
20				
40				
0200		E/Hyg	0103(S)	0103(0)
20				
40				
0300				
20		0103(0)		0103(S)
40				
0400				
20			E/Hyg	E/Hyg
40				
0500			0109(0)	0109(S)
20				
40			0201c(S)	0201c(0)
0600			0203h	
20				
40		Sleep	0201a	Rest
0700			0202df	
20			0202g	
40				0202df
0800				0202g
20				0203h
40				0201a
0900				
20				
40				
1000		E/Hyg		E/Hyg
20				
40		0109(S)	Sleep	0109(0)
1100				
20		0202g		
40		0202df		
1200		0201a		
20				
40		0203h		
1300				
20				
40				
1400		Rest		
20				Sleep
40				
1500				
20		0121(0)	0121(S)	
40				
1600		Rest	E/Hyg	
20				
40		E/Hyg	Rest	
1700				
20				
40				
1800		Rest		
20				E/Hyg
40		0201c(S)	0201c(0)	
1900			Rest	
20				
40		Rest	0121(0)	0121(S)
2000				
20				
40		0121(S)	Rest	0121(0)
2100				
20				Rest
40		0201c(0)		0201c(S)
2200				
20		0109(0)	0109(S)	
40				Rest
2300		E/Hyg	E/Hyg	
20				
40		Rest	Rest	E/Hyg
2400				

NOTES

[redacted]

Table 3-2 **CREW SCHEDULING, FLIGHT** 218, **SHEET** 9 **OF** 12

2-7.20

DAY 33	ORBIT	CREWMEN ACTIVITIES 1	2	3
0000				
20		0203a	Rest	Rest
40		0203df		
0100				
20		0202c		
40		0202e		
0200		0203b		Rest
20				
40		0202ab(O)		0202ab(S)
0300			E/Hyg	0203b
20		E/Hyg		
40			0203a	E/Hyg
0400			0203df	
20			0202c	
40			0202e	
0500			0203b	Rest
20				
40			0202ab(S)	0202ab(O)
0600			Rest	Rest
20			0203c	
40				0603b
0700		Sleep	E/Hyg	
20				
40				
0800				
20				
40				0603b
0900				
20				
40				
1000				
20		0203c	Sleep	E/Hyg
40				
1100		0106(O)		0106(S)
20				
40		E/Hyg		
1200				
20				
40		Rest		
1300				
20		0202	0202	Sleep
40		ab(S)	ab(O)	
1400				
20		0106(S)	0106(O)	
40				
1500		Rest	E/Hyg	
20				
40				
1600				
20				
40		0603b	Rest	
1700				
20				
40				
1800				
20				E/Hyg
40		E/Hyg		
1900				
20			0106(S)	0106(O)
40				
2000			Rest	0203df
20				0203a
40				0202c
2100		Rest	0603b	0202e
20				02021
40				
2200				0203c
20				
40			E/Hyg	0603b
2300				
20		E/Hyg		E/Hyg
40			Rest	
2400				

DAY 34	ORBIT	CREWMEN ACTIVITIES 1	2	3
0000				
20				
40		0105(S)	Rest	0105(O)
0100				
20				
40			E/Hyg	
0200				
20				
40				Rest
0300		0105(O)	0105(S)	
20				
40				
0400				E/Hyg
20		E/Hyg		
40				
0500			0105(O)	0105(S)
20		Rest		
40				
0600				
20			E/Hyg	
40				0604
0700		Sleep		
20			Rest	
40				
0800				
20				E/Hyg
40				
0900				Rest
20				
40			Sleep	
1000				
20				0604
40				
1100				
20				
40				
1200				
20				E/Hyg
40				
1300				
20		0604		Rest
40				
1400				
20				
40				
1500		E/Hyg	0604	
20				
40				
1600			E/Hyg	
20				
40				
1700			Rest	
20				
40		Rest		
1800				
20				
40			Rest	
1900				
20				
40				
2000		E/Hyg		
20			E/Hyg	
40				
2100				
20				
40		Rest		
2200				
20			Rest	
40				
2300				
20				
40				Rest
2400				

DAY 35	ORBIT	CREWMEN ACTIVITIES 1	2	3
0000				
20		E/Hyg	0113P(S)	0113P(O)
40				
0100				
20		0113P(O)	E/Hyg	0113P(S)
40				
0200		0113P(S)	0113P(O)	E/Hyg
20				
40				
0300		0109(O)	0109(S)	
20				
40			0109(O)	0109(S)
0400				
20			0201a	Rest
40				
0500			0201c(O)	0201c(S)
20				
40			0104(S)	0104(O)
0600		Sleep		
20				
40			E/Hyg	E/Hyg
0700			S	
20				0202df
40				0202g
0800				0203h
20				
40				0201a
0900				
20				Rest
40		E/Hyg	Sleep	
1000				
20		0109(S)		0109(O)
40				
1100		0202g		
20		0201a		
40				Rest
1200		0202df		
20		0203b		
40		0201c(S)		0201c(O)
1300				
20		0111(O)	0202df	0111(S)
40			0202g	
1400			0203h	E/Hyg
20		0201c(O)	0201c(S)	
40				
1500		E/Hyg	E/Hyg	
20				
40				
1600		LIOH	EVA(O)	
20				
40		Rest		
1700				Sleep
20				
40		0104(S)	0104(O)	
1800				
20				
40		0111(S)	0111(O)	
1900				
20		Rest		
40			E/Hyg	
2000				
20		E/Hyg		
40				
2100			Rest	
20		01040		0104S
40				
2200				
20			0111(S)	0111(O)
40				
2300		Rest	Rest	E/Hyg
20				
40				
2400			E/Hyg	

DAY 36	ORBIT	CREWMEN ACTIVITIES 1	2	3
0000				
20		0103(S)	0103(O)	Rest
40				
0100				
20				
40		E/Hyg	0103(S)	0103(O)
0200				
20				
40				
0300		0103(O)	Rest	0103(S)
20				
40				
0400				0203a
20				
40			E/Hyg	E/Hyg
0500				
20				
40			0203a	
0600			0202c	
20			0202e	
40		Sleep	02021	Rest
0700			0203df	
20				0203g
40				0203c
0800				
20				0203df
40				0201b
0900				0203b
20				0202e
40			Sleep	0202a
1000				02021
20		E/Hyg		
40				E/Hyg
1100				E
20		0203e		
40				Rest
1200		0201d(S)		0201d(O)
20		0201b		
40		0203a		
1300		0202c		
20		0202e		
40		02021	E/Hyg	
1400				
20		0203df		
40		E/Hyg		
1500			0203e	Sleep
20		Rest		
40			0201b	
1600			Rest	
20		0203c		
40		0201d(O)	0201d(S)	
1700				
20			0201e	
40		Rest	0203g	
1800			0203b	
20				
40			Rest	
1900		0201e		
20			E/Hyg	0201c
40				E/Hyg
2000			0203c	
20		Rest	0201d(O)	0201d(S)
40			0202ab(S)	0202ab(O)
2100		0202ab(O)	Rest	0202ab(S)
20				
40		0202ab(S)	0202ab(O)	Rest
2200				
20		E/Hyg	E	
40		Rest	Rest	0203e
2300				
20				
40		0203b		E/Hyg
2400		0203g		

NOTES

[redacted]

Table 3-2 **CREW SCHEDULING, FLIGHT** 218, **SHEET** 10 **OF** 12

DAY 37	ORBIT	CREWMEN ACTIVITIES 1	2	3
0000				
20		Rest	0106(S)	0106(0)
40				
0100				
20		0106(0)	E/Hyg	0106(S)
40				
0200		0106(S)	0106(0)	
20				Rest
40		0201c(S)	0201c(0)	
0300		0201c(0)	Rest	0201c(S)
20				
40		E/Hyg	0201c(S)	0201c(0)
0400				
20			0201a	
40				
0500			0109(S)	0109(0)
20				
40				E/Hyg
0600				
20		Sleep	E/Hyg	
40				
0700			0202df	
20			0202g	
40			0203h	Rest
0800				
20				
40				0202g
0900				0203h
20				
40				E/Hyg
1000				
20		0118(S)		
40				
1100		0202g	Sleep	
20		0201a		0118(0)
40		0203h		
1200		0202df		
20		Rest		
40				0201a
1300		E/Hyg		
20				0202df
40				
1400				
20			0109(0)	
40		0109(S)		
1500			E/Hyg	
20				
40		Rest		Sleep
1600				
20			Rest	
40				
1700		E/Hyg		
20				
40			0118(S)	
1800				
20		0119(0)		
40			Rest	
1900				
20				
40				
2000				
20				0118(S)
40		Rest		
2100			0118(0)	
20				
40				Rest
2200				
20				
40		0109(0)	Rest	0109(S)
2300				
20				
40		Sleep	E/Hyg	Rest
2400				

DAY 38	ORBIT	CREWMEN ACTIVITIES 1	2	3
0000				
20				
40				
0100				
20				
40				
0200				
20				
40		Sleep	0113(0)	0113(S)
0300				
20				
40				
0400				
20				
40				
0500				
20				
40				E/Hyg
0600				
20				
40				
0700				
20				
40				
0800				
20				
40		0113(S)	Rest	0113(0)
0900				
20				
40				
1000				
20				
40				
1100				
20				
40		E/Hyg		
1200				
20				
40				E/Hyg
1300				
20				
40				Rest
1400				
20				
40			0113(S)	
1500		0113(0)		
20				
40				
1600				
20				
40				
1700				Sleep
20				
40			E/Hyg	
1800				
20		E/Hyg		
40				
1900				
20				
40				
2000				
20				
40			Sleep	
2100				
20		Rest		
40				
2200				
20				E/Hyg
40				
2300				
20				
40		E/Hyg		Rest
2400				

DAY 39	ORBIT	CREWMEN ACTIVITIES 1	2	3
0000				
20				0203a
40			Rest	
0100				
20		0115(S)		0115(0)
40				0202c
0200				0202e
20			E/Hyg	02021
40				E/Hyg
0300		0203a		
20				
40		0115(0)	0115(S)	
0400				
20				
40		E/Hyg		0203df
0500				0203b
20				
40			0203a	
0600				
20			0115(0)	0115(S)
40				
0700			E/Hyg	
20				
40		Sleep		
0800				
20				E/Hyg
40				
0900				
20				Rest
40				
1000				
20			Sleep	
40				0203c
1100		0113P(0)		0113P(S)
20				
40		0202ab(S)		0202ab(0)
1200				
20		E/Hyg		
40				
1300				
20			0203b	
40				
1400		0113P(S)	0113P(0)	Sleep
20				
40		0203b	Rest	
1500			0202c	
20			0202e	
40		Rest	02021	
1600			E/Hyg	
20		0203df		
40		0202c	Rest	
1700		0202e		
20		02021		
40		0203c		
1800		Rest	0203df	
20		0202ab(0)	0202ab(S)	E/Hyg
40				
1900		E/Hyg	0113P(S)	0113P(0)
20				
40			0202ab(0)	0202ab(S)
2000				
20			0203c	
40				
2100				
20			Rest	Rest
40		Rest		
2200				
20				
40				
2300			E/Hyg	
20				
40		E/Hyg		E/Hyg
2400			Rest	

DAY 40	ORBIT	CREWMEN ACTIVITIES 1	2	3
0000				
20				
40				
0100				
20				
40		Rest		Rest
0200				
20				
40				
0300				
20				
40				
0400				
20				
40		E/Hyg.	Sleep	E/Hyg
0500				
20				
40				
0600				
20				
40				
0700				Rest
20				
40				
0800				
20				
40				E/Hyg
0900				
20				
40		Sleep		E/Hyg
1000				
20				
40				
1100				
20				
40			Rest	
1200				
20				Rest
40				
1300				
20				
40				
1400				
20				
40		E/Hyg		
1500				
20				E/Hyg
40				
1600				
20				
40				
1700				
20				
40		Rest		
1800				
20				Rest
40				
1900				
20				
40				Sleep
2000				
20				
40		E/Hyg		
2100				
20				
40				
2200				E/Hyg
20		Rest		
40				
2300				
20				
40				Rest
2400				

NOTES

Table 3-2 **CREW SCHEDULING, FLIGHT 218 , SHEET 11 OF 12**

DAY 41	ORBIT	CREWMEN ACTIVITIES 1	2	3
0000				
20				
40		0103(S)	0103(0)	E/Hyg
0100				
20				
40				
0200		E/Hyg	0103(S)	0103(0)
20				
40				
0300		0103(0)		0103(S)
20			E/Hyg	
40				
0400				
20		0109(0)	0109(S)	
40				
0500			0201d(0)	0201c(S)
20			0111(S)	0111(0)
40				
0600			Rest	0201a
20				0203h
40				
0700			0202df	E/Hyg
20				
40				
0800		Sleep		
20			Sleep	
40				
0900				Rest
20				
40				
1000				
20				
40				0202gh
1100				0203df
20				
40		0109(S)		0109(0)
1200				
20		0201d(S)		0201d(0)
40				
1300		0111(0)		0111(S)
20				
40		0201a		E/Hyg
1400			0202g	
20		E/Hyg	0201a	
40				
1500			E/Hyg	
20				
40			0203h	
1600				
20				
40		Rest	Rest	Sleep
1700				
20				
40				
1800				
20				
40		E/Hyg		
1900				
20		0202df		
40		0203h		
2000		0202g	E/Hyg	
20				
40		E/Hyg	0109(0)	0109(S)
2100				
20		0201c(0)	0201d(S)	
40				E/Hyg
2200		0111(S)	0111(0)	
20				
40				Rest
2300		Rest		
20				
40		EVA(0)	Rest	LIOH
2400				Rest

DAY 42	ORBIT	CREWMEN ACTIVITIES 1	2	3
0000				
20				
40		E/Hyg	0106(S)	0106(0)
0100				
20		0106(0)	E/Hyg	0106(S)
40				
0200		0106(S)	0106(0)	E/Hyg
20				
40		Rest	0202abS	0202ab(0)
0300		0202ab(0)	Rest	0202ab(S)
20				
40		0202ab(S)	0202ab(0)	Rest
0400				
20		0201e	0203a	
40				
0500				0203a
20			Rest	0203df
40				
0600				0201e
20				0203b
40			E/Hyg	
0700		Sleep		Rest
20				
40			0203b	
0800			0203df	
20				
40				E/Hyg
0900				
20				0203e
40				
1000				
20				0203c
40		E/Hyg		0203g
1100				0201b
20				0201d
40		Rest	Sleep	0202c
1200				0202e
20				02021
40		0203c		
1300		0203df		
20		0203g		
40				
1400				
20				
40				
1500		E/Hyg	E/Hyg	Sleep
20		0203b		
40		0201d	Rest	
1600		0201b		
20		0202c		
40		0202e		
1700		02021		
20			0202c, e, 1	
40		Rest	0203g	
1800				
20			0201e	
40			0201b	
1900		Rest	0201d	
20			E/Hyg	
40				E/Hyg
2000		E/Hyg		
20				
40		0203e	Rest	
2100				
20				
40		0203a		Rest
2200				
20				
40		Rest	0203e	
2300				
20				
40			0203c	
2400				

DAY 43	ORBIT	CREWMEN ACTIVITIES 1	2	3
0000				
20				
40		0104(0)	0104(S)	
0100				E/Hyg
20				
40				
0200				
20		0104(S)	E/Hyg	0104(0)
40				
0300				
20				
40		E/Hyg		
0400			0104(C)	0104(S)
20				
40				
0500			0201c(S)	0201c(0)
20				
40			0201a	E/Hyg
0600			0202df	
20		Sleep	0202gh	
40			0203h	
0700				
20			E/Hyg	
40				Rest
0800				
20				
40				
0900				0202df
20				0202gh
40				0203h
1000		0113P(0)	Sleep	0113P(S)
20				
40		0118(S)		
1100				
20		0202gh		0118(0)
40		0203h		
1200				
20		E/Hyg		
40				
1300				E/Hyg
20		Rest		
40				
1400		0113P(S)	0113P(0)	
20				
40		0201d(S)	0201c(0)	
1500				
20		Rest		Sleep
40			E/Hyg	
1600				
20		E/Hyg		
40			0118(S)	
1700				
20				
40		0118(0)	Rest	
1800				
20				
40				
1900			0113P(S)	0113P(0)
20				
40		Rest	Rest	0201a
2000				
20				0118(S)
40				
2100		0202df	0118(0)	E/Hyg
20				
40				
2200		E/Hyg		
20				
40		0201c(0)	E/Hyg	0201c(S)
2300				
20		Rest	0606	0606(0)
40				
2400		0201a	Rest	Rest

DAY 44	ORBIT	CREWMEN ACTIVITIES 1	2	3
0000				
20		0109(S)	Rest	0109(0)
40				
0100				
20		0109(0)	0109(S)	Rest
40				
0200				
20		E/Hyg	0109(0)	0109(S)
40				
0300		0121(S)	0121(0)	E/Hyg
20				
40			Rest	
0400				Rest
20			0121(S)	0121(0)
40				
0500				Rest
20			0605	
40				
0600				
20			E/Hyg	
40				0605
0700				
20				
40			Rest	
0800				
20				E/Hyg
40			Sleep	
0900				Rest
20				
40				
1000				0605
20		E/Hyg		
40				
1100				
20		Rest		
40				
1200		0121(0)		0121(S)
20				
40				
1300		Rest		
20				
40				
1400				
20				
40				Sleep
1500		0605	E/Hyg	
20				
40			Rest	
1600				
20		E/Hyg		
40				
1700			0605	
20				
40		Rest	Rest	
1800				
20				
40				
1900		0105(0)	0105(S)	E/Hyg
20				
40				Rest
2000				
20				
40				
2100		0105(S)	Rest	0105(0)
20				
40				
2200				
20				
40		Rest		
2300			0105(0)	0105(S)
20				
40				
2400		E/Hyg		

NOTES

Table 3-2 **CREW SCHEDULING, FLIGHT** 218 , **SHEET** 12 **OF** 12

2-7.23

DAY 45	ORBIT	CREWMEN ACTIVITIES 1	2	3
0000				
20				
40				
0100				
20				
40				
0200				
20				Sleep
40		0113(0)	0113(S)	
0300				
20				
40				
0400				
20				
40				
0500				
20				
40			E/Hyg	
0600				
20				
40				
0700				
20				
40				
0800				
20				
40				
0900		Sleep	0113(0)	0113(S)
20				
40				
1000				
20				
40				
1100				
20				
40				E/Hyg
1200				
20				
40			E/Hyg	
1300				
20				
40				
1400				
20				
40		0113(S)		0113(0)
1500				
20				
40				
1600				
20				
40				
1700				
20		E/Hyg		
40				
1800				
20				
40				E/Hyg
1900				
20				
40				
2000				
20				
40				
2100				
20				
40				
2200				
20				
40				
2300				
20				
40				
2400				

DAY	ORBIT	CREWMEN ACTIVITIES 1	2	3
0000				
20				
40				
0100				
20				
40				
0200				
20				
40				
0300				
20				
40				
0400				
20				
40				
0500				
20				
40				
0600				
20				
40				
0700				
20				
40				
0800				
20				
40				
0900				
20				
40				
1000				
20				
40				
1100				
20				
40				
1200				
20				
40				
1300				
20				
40				
1400				
20				
40				
1500				
20				
40				
1600				
20				
40				
1700				
20				
40				
1800				
20				
40				
1900				
20				
40				
2000				
20				
40				
2100				
20				
40				
2200				
20				
40				
2300				
20				
40				
2400				

DAY	ORBIT	CREWMEN ACTIVITIES 1	2	3
0000				
20				
40				
0100				
20				
40				
0200				
20				
40				
0300				
20				
40				
0400				
20				
40				
0500				
20				
40				
0600				
20				
40				
0700				
20				
40				
0800				
20				
40				
0900				
20				
40				
1000				
20				
40				
1100				
20				
40				
1200				
20				
40				
1300				
20				
40				
1400				
20				
40				
1500				
20				
40				
1600				
20				
40				
1700				
20				
40				
1800				
20				
40				
1900				
20				
40				
2000				
20				
40				
2100				
20				
40				
2200				
20				
40				
2300				
20				
40				
2400				

DAY	ORBIT	CREWMEN ACTIVITIES 1	2	3
0000				
20				
40				
0100				
20				
40				
0200				
20				
40				
0300				
20				
40				
0400				
20				
40				
0500				
20				
40				
0600				
20				
40				
0700				
20				
40				
0800				
20				
40				
0900				
20				
40				
1000				
20				
40				
1100				
20				
40				
1200				
20				
40				
1300				
20				
40				
1400				
20				
40				
1500				
20				
40				
1600				
20				
40				
1700				
20				
40				
1800				
20				
40				
1900				
20				
40				
2000				
20				
40				
2100				
20				
40				
2200				
20				
40				
2300				
20				
40				
2400				

NOTES

GRUMMAN AIRCRAFT ENGINEERING CORPORATION

Table 3-3 APOLLO EXTENSION SYSTEM EARTH ORBIT MISSION STUDY

FLIGHT [redacted] EXPERIMENT MISSION PROFILE

Day 3

TIME - HOURS	1	2	3	4	5	6	7	8	9	10	11	12	13	14	15	16	17	18	19	20	21	22	23	24
ORBITS																								
POWER, KW (.10, .08, .06, .04, .02)																								
EXPERIMENT POINTING REQUIREMENTS: DIRECTION (1)	FD	FD	FD	FD	FD	FD	FD	FD	FD	FD	FD	FD	FD	FD	FD	FD	FD	FD	FD	FD	FD	FD	FD	
EXPERIMENT POINTING REQUIREMENTS: ACCURACY, ±DEGREES	5																							
STABILITY REQUIREMENTS, DEG, SEC (10, 1.0, .1, .01, .001, .0001)																								

7 days have the above profile

NOTES, OTHER TIME - DEPENDENT VARIABLES, ETC

(1) INDICATE EO(EARTH ORIENTATION), IO(INERTIAL ORIENTATION), OR FD(FREE DRIFT)

2-7.24

GRUMMAN AIRCRAFT ENGINEERING CORPORATION

Table 3-3 APOLLO EXTENSION SYSTEM EARTH ORBIT MISSION STUDY
FLIGHT [2/3] EXPERIMENT MISSION PROFILE

SHEET 2 OF

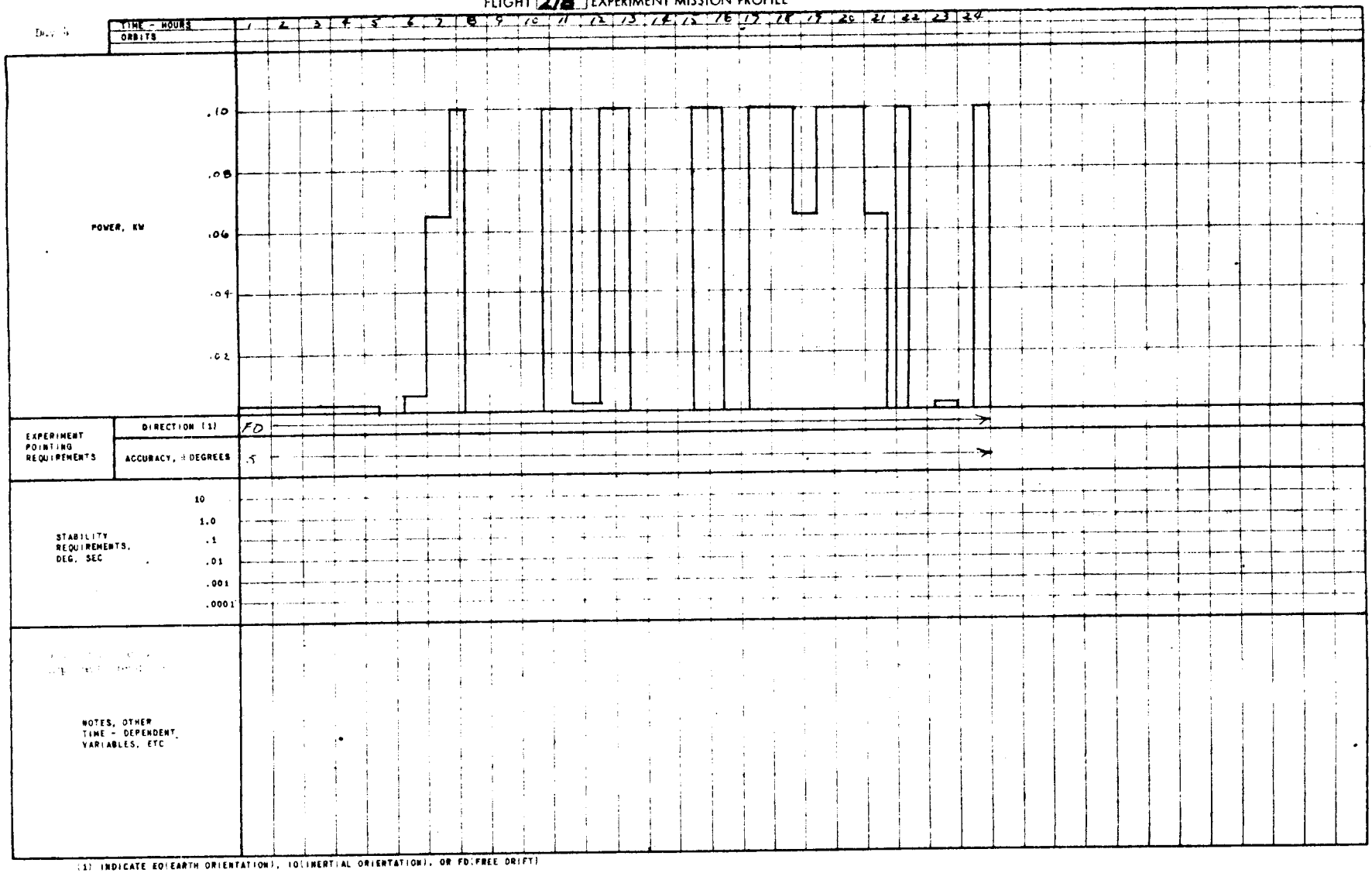

(1) INDICATE EO(EARTH ORIENTATION), IO(INERTIAL ORIENTATION), OR FD(FREE DRIFT)

2-7.25

[redacted]

[redacted]

GRUMMAN AIRCRAFT ENGINEERING CORPORATION

Table 3-3 APOLLO EXTENSION SYSTEM EARTH ORBIT MISSION STUDY
FLIGHT [illegible] EXPERIMENT MISSION PROFILE

SHEET 3 OF 5

Day 13

TIME - HOURS: 1 2 3 4 5 6 7 8 9 10 11 12 13 14 15 16 17 18 19 20 21 22 23 24

ORBITS

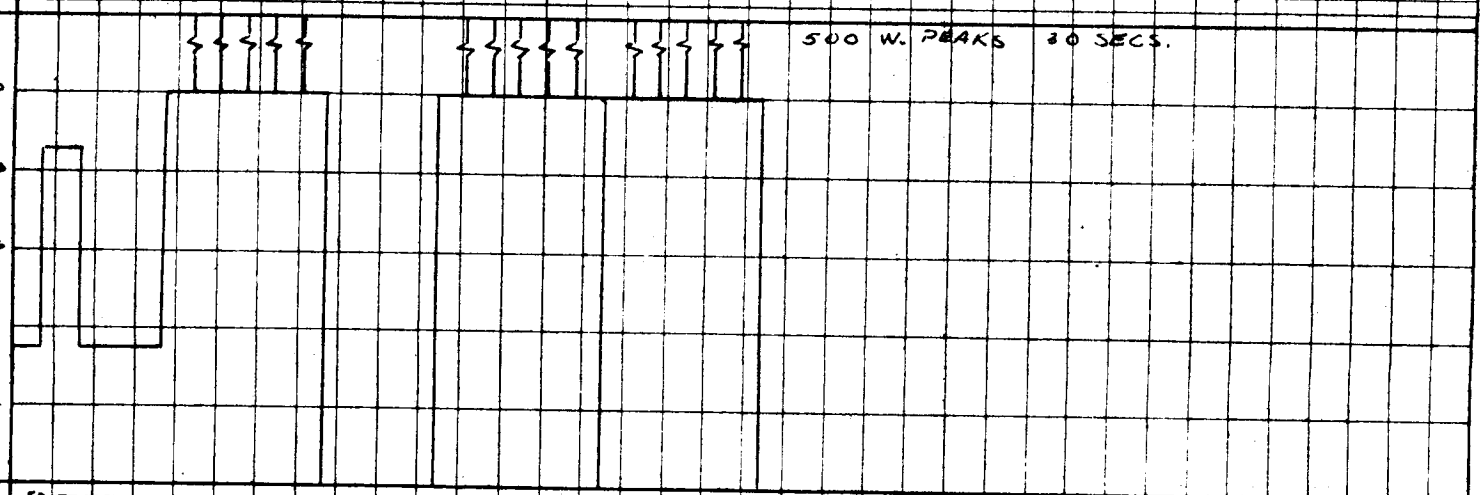

EXPERIMENT POINTING REQUIREMENTS

DIRECTION (1): FD

ACCURACY, ±DEGREES: 5

STABILITY REQUIREMENTS, DEG, SEC: 10, 1.0, .1, .01, .001, .0001

2 days have above profile

NOTES, OTHER TIME - DEPENDENT VARIABLES, ETC

10^{-5} g

10^{-5} g

(1) INDICATE ED(EARTH ORIENTATION), ID(INERTIAL ORIENTATION), OR FD(FREE DRIFT)

2-7.26

[redacted]

GRUMMAN AIRCRAFT ENGINEERING CORPORATION

Table 3-3 APOLLO EXTENSION SYSTEM EARTH ORBIT MISSION STUDY

FLIGHT [redacted] EXPERIMENT MISSION PROFILE

SHEET 4 OF 5

Day 20

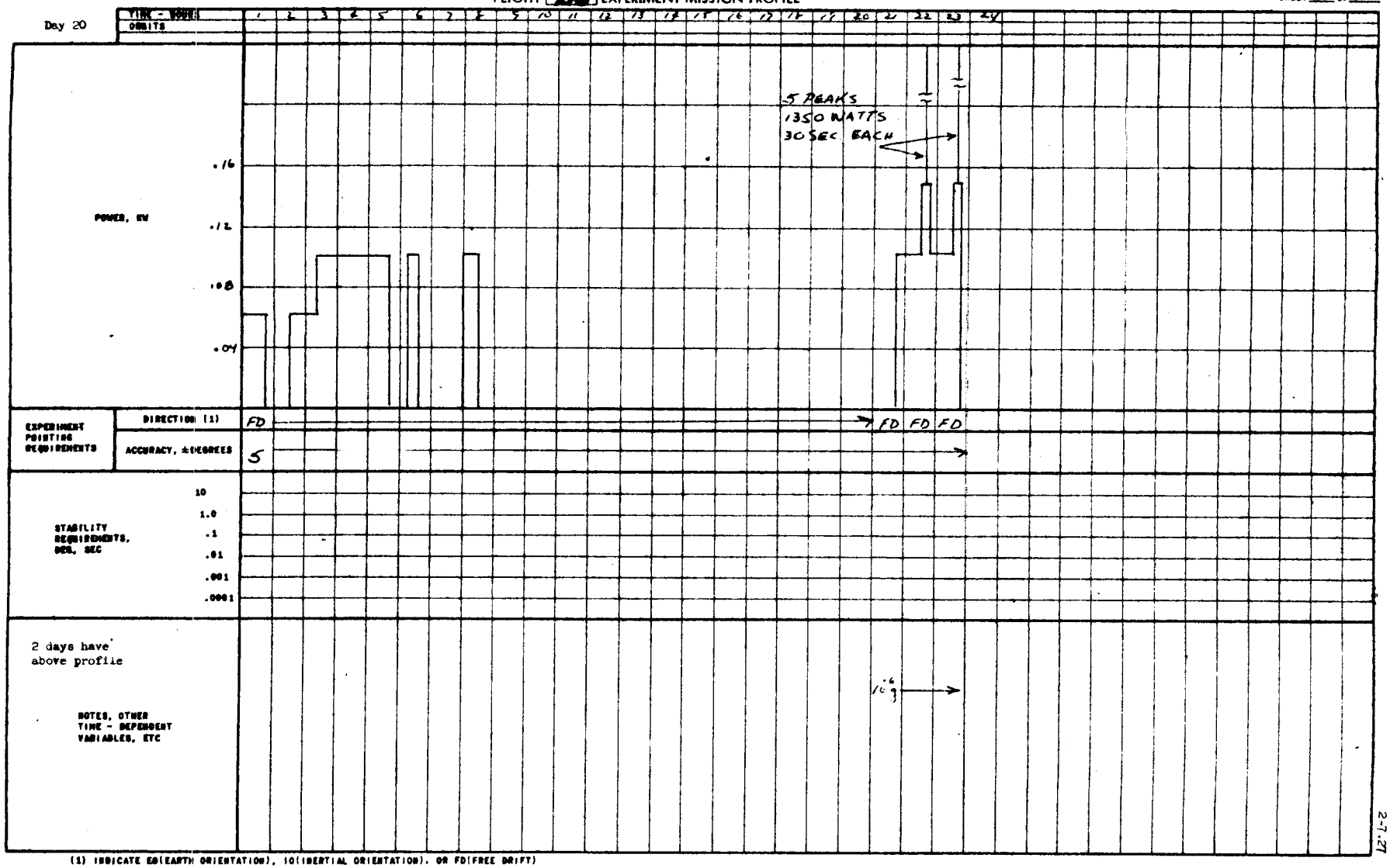

(1) INDICATE EO(EARTH ORIENTATION), IO(INERTIAL ORIENTATION), OR FD(FREE DRIFT)

2-7.27

[redacted]

GRUMMAN AIRCRAFT ENGINEERING CORPORATION

Table 3-3 APOLLO EXTENSION SYSTEM EARTH ORBIT MISSION STUDY
FLIGHT [redacted] EXPERIMENT MISSION PROFILE

Day 44

TIME - HOURS	1	2	3	4	5	6	7	8	9	10	11	12	13	14	15	16	17	18	19	20	21	22	23	24
ORBITS																								

POWER, KW: .5, .4, .3, .2, .1

EXPERIMENT POINTING REQUIREMENTS — DIRECTION (1)	FD	FD	FD	FD	IO	IO	IO	IO	FD	FD	FD	FD	FD	FD	IO	IO	IO	IO	FD	FD	FD	FD	FD	FD
ACCURACY, ±DEGREES	5 →								5 →										5 →					

STABILITY REQUIREMENTS, DEG, SEC: 10, 1.0, .1, .01, .001, .0001

6 days have above profile

NOTES, OTHER TIME - DEPENDENT VARIABLES, ETC

10^{-10} g →

10^{-10} g →

(1) INDICATE EO(EARTH ORIENTATION), IO(INERTIAL ORIENTATION), OR FD(FREE DRIFT)

2-7.28

[redacted]

[redacted]

3.2 SPACECRAFT DEFINITION

Flight 218 configuration, shown in Figures 3-1 and 3-2, carries experiments dealing with Biosciences/Physical Sciences, and rendezvous with Flight 219 to extend mission duration. The Cosmic Ray Emulsion Experiment (0606), mounted on a boom during an EVA, requires earth orientation. The Solar Concentrator for Crystallization Studies (0605) requires orientation towards the sun. The Navigation and Guidance Experiment (1407) requires periodic spacecraft orientation towards a landmark, a stellar inertial reference, and to local vertical. Although 1407 experiment equipment is carried on this flight the experiment is performed after rendezvous with flight 219.

Attitude is held within a deadband of $\pm 5^{\circ}$, except during experiment periods having specific pointing and stability requirements. Pointing and stability requirements are accommodated by the CSM within the RCS propellant capacities of both the "C" and "D" versions. In addition, the "C" version of the Lab carries additional RCS propellant to supplement CSM propellant capacity (for the attitude hold function). The Lab takes over during the latter part of the mission following rendezvous with the subsequent flight. The "D" version of the Lab carries additional propellant and tankage for the same purpose.

The final rendezvous and docking operation, associated with the resupply flight, is accomplished by the Lab. The Lab detaches from the original CSM, and using the LEM RCS system and flight controls, docks with the resupply CSM. The reason for flying the Lab for the final rendezvous operation is that the Lab retains crew visibility for the docking maneuver, and the LEM RCS and flight control system is readily available. A docking ring is provided on the descent stage of this flight spacecraft to permit the original CSM to re-dock following rendezvous. The return crew transfers to the CSM by EVA. It should be noted however, that a continuous tunnel between the Lab and re-docked CSM could be accomodated, provided that the crewmen transfer in shirt sleeve condition.

The LEM optical telescope installation in the upper forward cabin provides conical (60°) coverage for the 1407 experiment. The Star Tracker (1407) installed in the upper forward portion of the ascent stage also provides a conical (45°) coverage.

KEY

No.	Experiment	Name
1		Docking Ring
2		Power Pack
[illegible]		RCS
4		Supplementary RCS (D Configuration Only)
5		Potable Water Tank
[illegible]		Waste Storage Tank
[illegible]		LiOH
[illegible]		Equipt Radiator
[illegible]		FCA Radiator
[illegible]	605	Solar Concentrator
[illegible]	605	Erectable Boom for Cosmic Ray Emulsion Exper
2	605	Magnetometer
[illegible]	605	Crystallization Studies Test Chamber during experiment
[illegible]	1501	Radiation Monitor Equipt - Electron Spectrometer (2) Proton Alpha Spectrometer (1)
[illegible]	1407	Sun Sensor
[illegible]	1407	IMU
[illegible]	1407	Star Tracker
[illegible]	1407	Telescope
[illegible]	1407	Horizon Scanner
[illegible]	1407	Doppler Altimeter
[illegible]	1501,2,3,4,5	Cameras (TV & Movie)
22	1501	EOS Station
[illegible]	1501	Safety Line
[illegible]	1501	AMU
[illegible]		Docking Window
[illegible]		Rail & Platform
[illegible]		AMU Resupply Station
[illegible]	1501	AMU Fuel Supply
[illegible]	1502	Cargo Net
[illegible]	1502	Tethers (3)
[illegible]	1502	AMU Spare Battery Package
[illegible]	1503	Personnel Transfer Equipt
[illegible]	1503	Logistics Material Storage
4	1503	Tool Kit for Rescue & Pickup of Objects
5	1504	Motor Reel
[illegible]	1504	Rope Gun
[illegible]	1505	EVA Tool Kit
[illegible]		GOX

FOLD-OUT #1

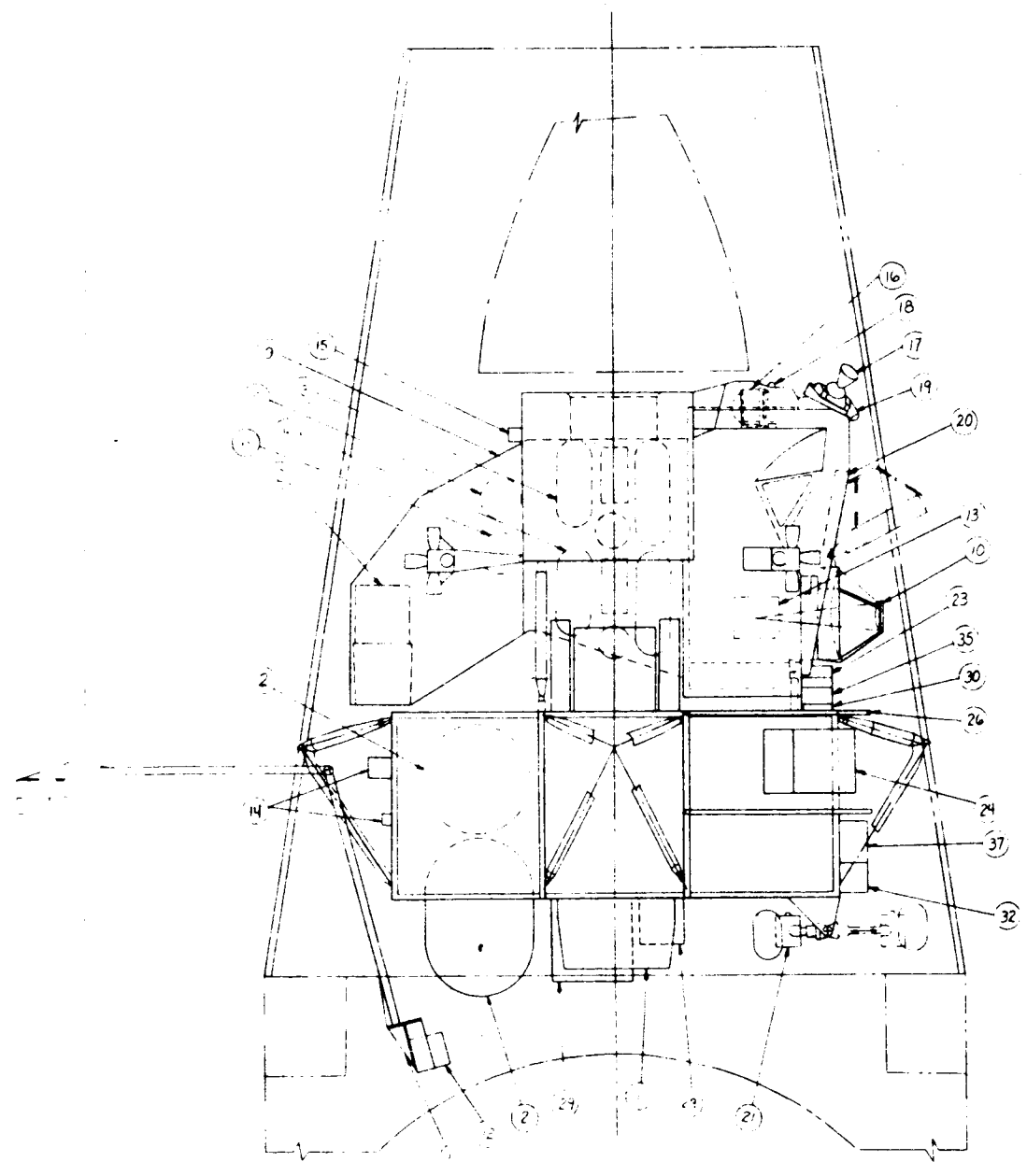

LAUNCH CONFIGURATION

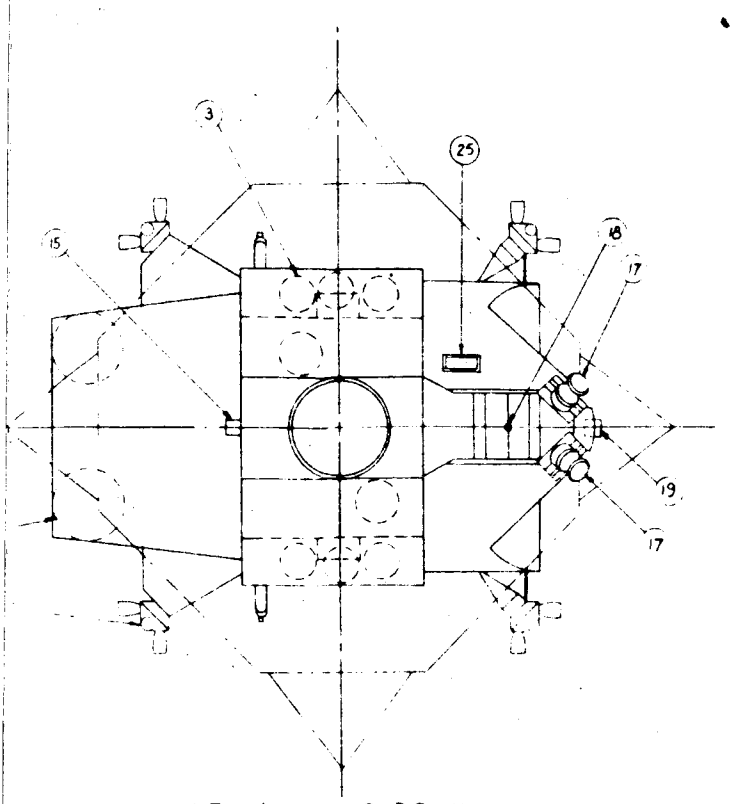

VIEW LOOKING DOWN AT ASCENT STAGE

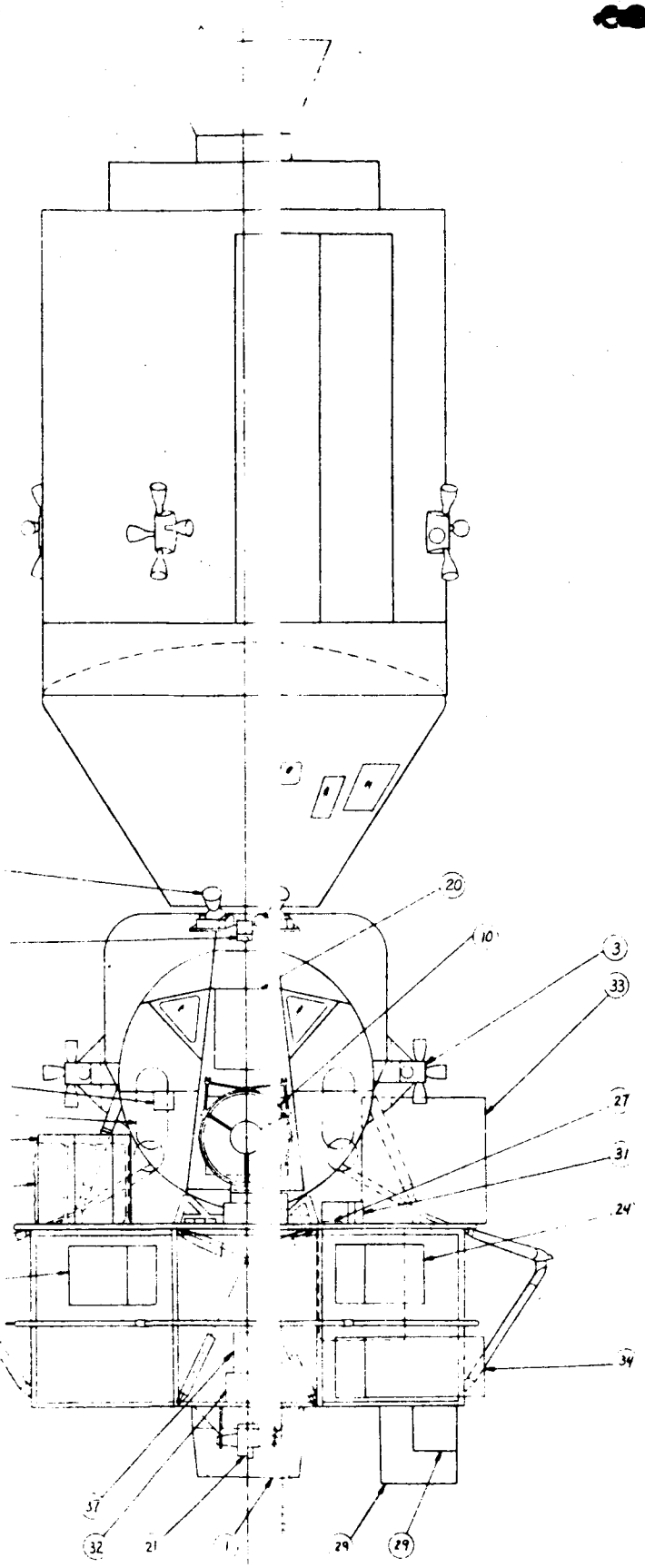

ORBITING CONFIGURATION

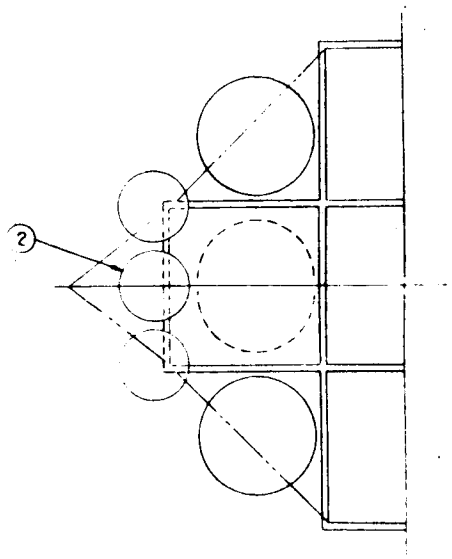

ALTERNATE POWER PACK CONFIGURATION

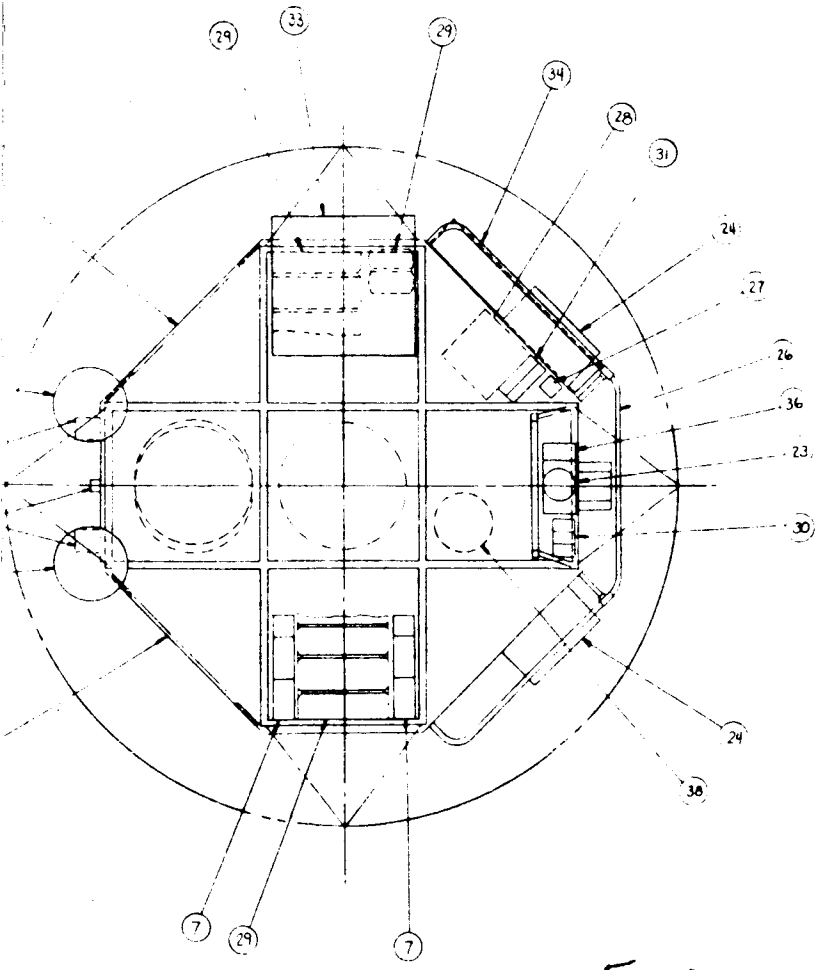

VIEW LOOKING DOWN AT DESCENT STAGE

FOLD-OUT #2

0 20 40 60 80 100

SCALE: 1" = 20"

Grumman

AIRCRAFT ENGINEERING CORPORATION

PRELIMINARY DESIGN SECT.

Gen Arrgnt Flt 218

Bioscience/Physical Science Lab

SCALE OF ORIG. DWG. - 1/20

AES 1026

Fig. 3-1

KEY

No.	Experiment	Name
1		Air Duct
2		Food
3		GOX Tank
4		LioH
5		ECS
6		Power Pack
7		Potable Water Tank
8		Waste Storage Tank
9		Attitude Controller Assy
10		Translation Controller Assy
11		Recorders
12		S & C, Power, N&G, ECS, RCS, Comm Panel
13		RCS
14		Docking Ring
15	501	Radiation Environment Monitor Panel
16	501	Radiation Environment Monitor Equipt
17	0100 & 02	Biomed Incubator
18	0100 & 02	Biomed Refrigerator
19	0100 & 02	Biomed Panel
20	0100 & 02	Biomed Storage
21		CDU, LGC, PSA & Signal Conditioner
22	0601	Capillarity Studies Exper.
23	0602A	Kinetics & Dynamics of Vapor /Gas Exper.
24	0602B	Liquid Drop Dynamics Study Exper.
25	0603A	Pool Boiling in Long Term zero-g Environment Exper.
26	0603B	Nucleate Condensation of Fluids in zero-Exper.
27	604	Density Gradient of a Fluid at near-critical state Exper.
28	605	Crystallization Studies Exper. (Stowed)
29	605	Solar Concentrator
30	606	Cosmic Ray Emulsion Exper. (Stowed)
31	606	Cosmic Ray Emulsion Exper. (Exposed)
32	606	Magnetometer
33	1407	Horizon Scanner
34	1407	Star Tracker

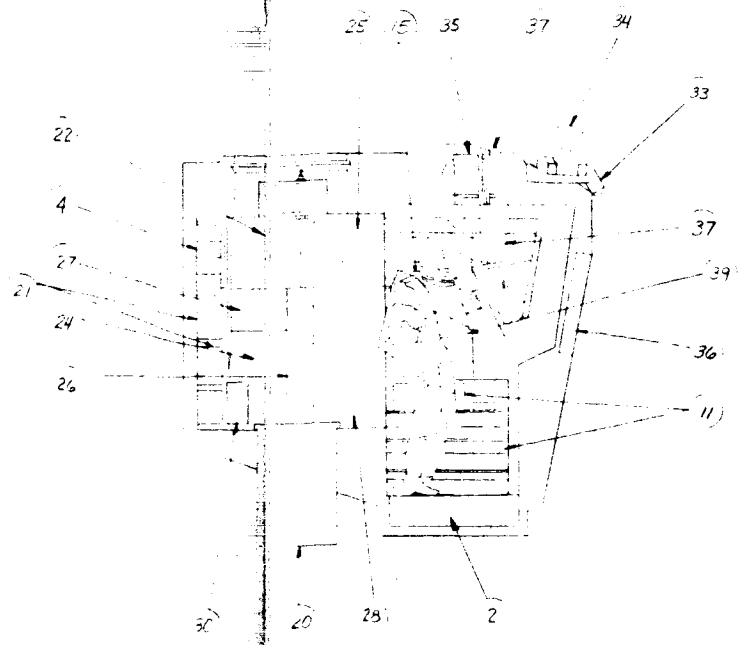

VIEW LOOKING OUTBOARD
LEFT HAND SIDE

VIEW LOOKING AFT

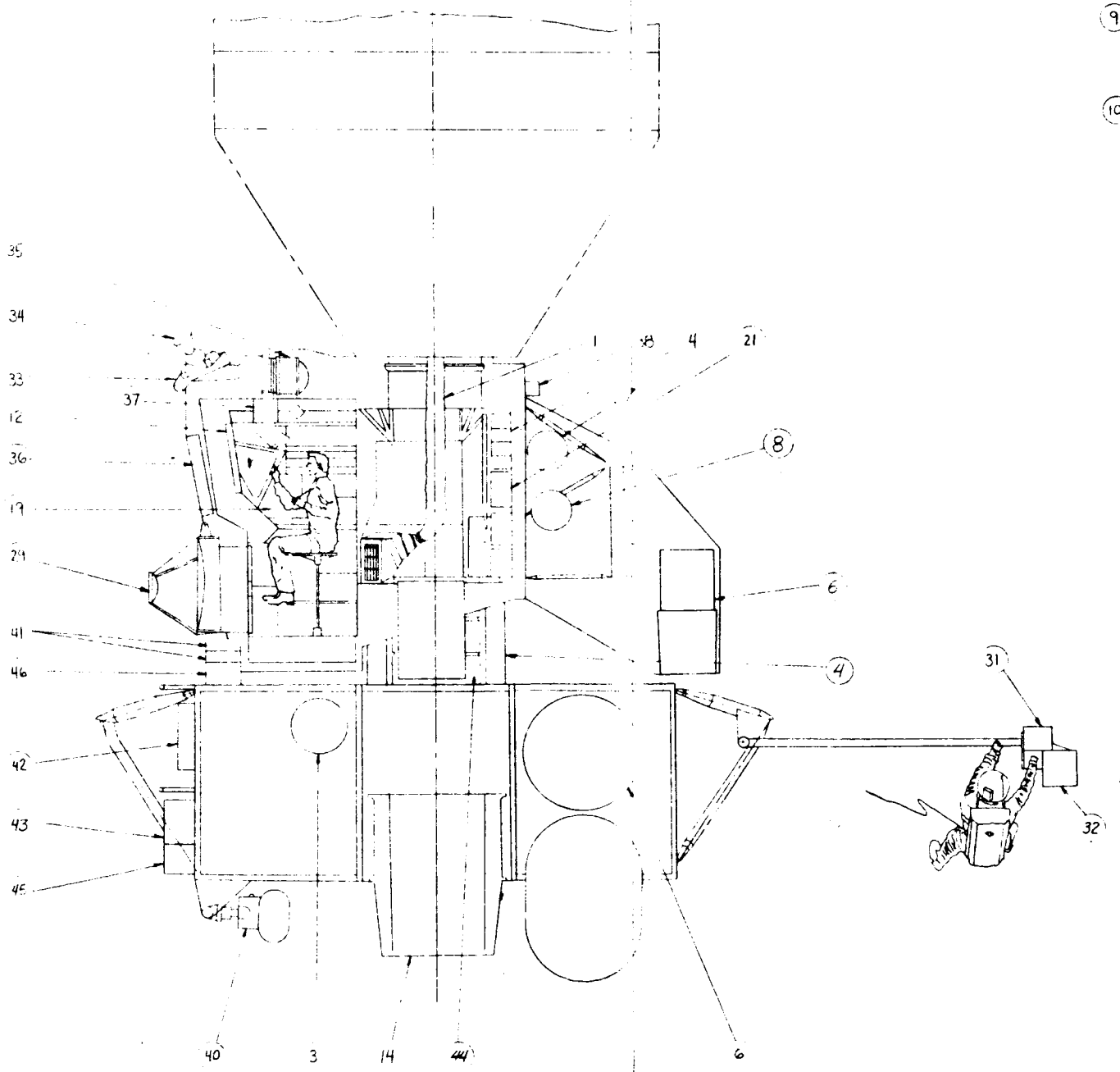

VIEW LOOKING OUTBOARD
RIGHT HAND SIDE

0 20 40 60 80 100
SCALE: 1" = 20"

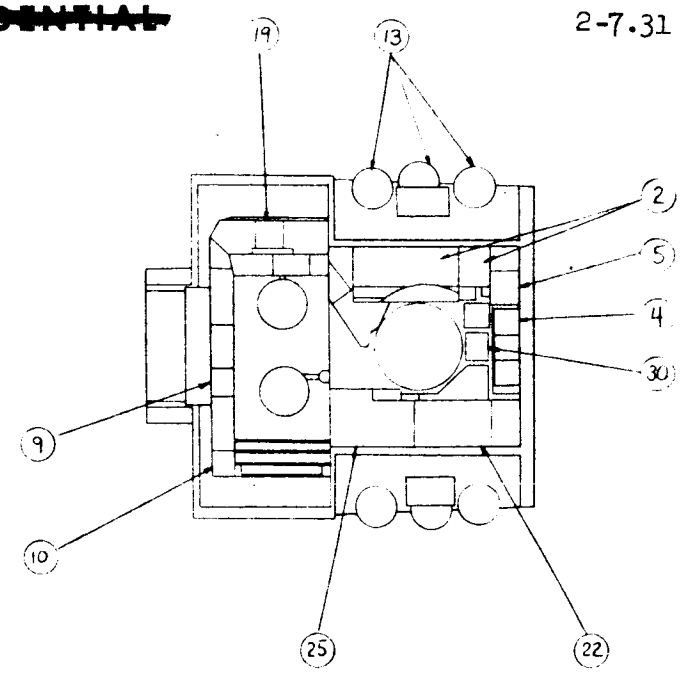

PLAN VIEW

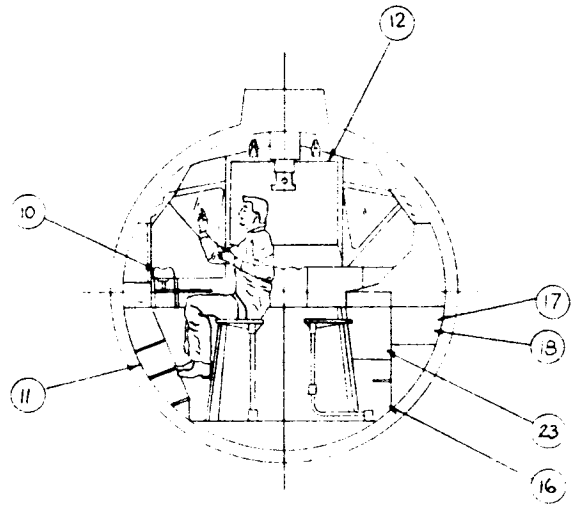

VIEW LOOKING FORWARD

Grumman
AIRCRAFT ENGINEERING CORPORATION
PRELIMINARY DESIGN SECT.

Fig. 3-2

Inbd Prof Flt. 218
Bioscience/Physical Science Lab

SCALE OF DWG. DWG. 1/2

AES 1027

The bulk of equipment for Extra Vehicular Operations (1501, 2, 3, 4, 5) are located externally in the forward portion of the D/S. The Solar Concentrator (0605) is rotated away to permit ingress/egress through the forward hatch for EVA. Prior to docking, the Transfer Experiment (1504) is conducted. A motor reel assembly located on the D/S below the forward hatch deploys a line for transfer of material between the two spacecraft.

Structural modifications to the LEM A/S are required to accommodate the Solar Concentrator quartz window on the forward hatch. All other experiment equipment installations involve additions to existing LEM A/S and D/S structure.

The inboard profile (Fig. 3-2) shows that adequate internal volume is available to accommodate experiments. All experiment displays and controls, including the LEM left hand flight control station, are located in the forward cabin or are accessible from forward cabin crew positions. In addition, experiment displays and controls for the subsequent rendezvous flight experiments are located in the Lab. Food is stored below the floor in the forward compartment and in a canister below the floor where the LEM ascent engine is normally housed. LiOH canisters are stored internally, mounted on the aft bulkhead and are replaced from external storage during programmed EVA's.

0100 (Biomed) and 0200 (Behavioral) and 0501 (Radiation Monitoring) equipment installations are common for all flights.

In addition to the standard CSM/LEM Lab interface, this flight requires additional wiring for accommodating the Earth pointing requirements of experiments. Interface wiring involves star tracker and horizon scanner sensory inputs used to maintain attitude hold. This interface is also duplicated between the Lab and the subsequently resupplied spacecraft.

The difference between "C" and "D" versions of the Lab are the addition of one Apollo X O_2 and H_2 tank, added fuel cell reactants, an additional fuel cell, and in increase in FCA radiator area of 18 ft^2. These modifications to a "C"-version Lab accommodate the added power demand of the "D"-version Lab required by taking over CSM power requirements after (nominally) 14 days. In addition, the "D" version of the Lab carries additional RCS propellant and tankage to supplement the RCS propellant requirements of the CSM "D" configuration.

This flight utilizes an Apollo CSM fuel cell electrical generation system, a LEM ECS to provide independent life support during rendezvous and selected components to provide data transmission, status and appropriate displays.

VHF communications are carried in the Lab to provide voice and data links with the CM during rendezvous.

The estimated laboratory weight of the "C" version is 8134 lbs and of the "D" version is 11,079 lbs (see Tables 3-4 and 3-5).

Basic subsystem characteristics pertinent to this flight are described below:

Vehicle Orientation	Nominally Earth Pointing
Stabilization Requirements	$\pm.5^{\circ}$ - 19 hr; $\pm.5^{\circ}$ - 1061 Hr.
Avg Experiment Pwr (Delivered)	62 Watts
Number of Repressurizations	5
Equipment Cooling	24 ft^2 Radiators

	C Config.	D Config Takeover Point = 14.8 Days
Number of Fuel Cells	2	3
Oxygen Tanks	1 Apollo X	2 Apollo X
Hydrogen Tanks	1 Apollo X	2 Apollo X
Peaking Battery	5 AMP HR	5 AMP HR
Fuel Cell Cooling	7.5 ft^2 Radiator	26 ft^2 Radiators
RCS System	Std LEM Thrustors	Std LEM Thrusters
RCS Tankage	STD LEM Tanks	4 LEM Ox - 4 LEM Fuel
S & C System	Controllers, ATCA, Rate Gyro FDAI Needles, Panels	
Waste Reactants	297 lb	83 lb
Water for Thermal Contr. (Mix)	0	0
Water Generated	531 lb	1273 lb

Waste reactants are needed to accommodate the estimated boiloff rates. These fluids are disposed of by increasing the power output of the normally operating fuel cells and energizing either a dummy load or idle equipment.

TABLE 3-4. LEM LAB DETAILED WEIGHT STATEMENT FLIGHT 218

COMPONENT	Weight, lb. Configuration C	D
Structure	(2340)	(2350)
Basic Ascent	802	802
Basic Descent	750	750
Shielding	542	542
Power Pack Structure	50	50
Experiment Supports	104	104
RCS Supports	53	63
Docking Ring	39	39
Stabilization and Control	(43)	(43)
Attitude Translation Control Ass'y	27	27
Rate Gyro Ass'y	2	2
Controllers	14	14
Crew Provisions	(291)	(291)
Restraints	35	35
Lighting	10	10
Food	228	228
LiOH-PLSS	18	18
Reaction Control System	(611)	(1650)
Propellant	300	1150
Propellant System	134	268
Pressurization System	55	110
Thruster Ass'y	122	122
Controls and Displays	(130)	(130)
Environmental Control	(760)	(792)
Atmosphere Revitalization System	80	80
O_2 Supply and Cabin Pressurization	34	34
Water Management	36	36
Heat Transport, Cold Plates, Coolant	105	105
LiOH-ECS	382	382
Water	40	40
Radiators	80	112
Thermal Control	3	3
Instrumentation	(301)	(301)
Signal Conditioner	45	45
PCM Timing Elec. Ass'y	39	39
Data Storage	25	25
Experiment Selector	6	6
Data Tapes	180	180
Spare Voice Recorder	6	6

TABLE 3-4. LEM LAB DETAILED WEIGHT STATEMENT FLIGHT 218 (Cont'd.)

CONPONENT	Weight, lb Configuration C	D
Electrical Power Supply	(2239)	(4103)
Fuel Cell Ass'ys	492	738
Reactants and ECS Oxygen	843	1987
Reactant Tankage	424	848
Batteries and Charger	13	13
Plumbing	40	60
Inverters	75	75
Wiring, Distribution and Umbilical	352	382
Communications	(58)	(58)
Television	24	24
Audio Center	6	6
Voice Recorder	2	2
VHF/UHF Communications	26	26
Experiment	(1301)	(1301)
Spares	(60)	(60)
Total Laboratory	8134	11,079

TABLE 3-5 INTEGRATED SPACECRAFT WEIGHT STATEMENT

FLIGHT 218

COMPONENT	Weight, lb. Configuration C	D
Command Module Basic Weight	(10,287)	(10,287)
Service Module Basic Weight	(10,546)	(9,160)
CSM Retro-Propellant	(1,349)	(1,191)
Laboratory Weight	(8,134)	(11.079)
Basic Laboratory Structure	2,340	2,350
Experiments	1,301	1,301
Experiments Support Systems	2,682	3,623
Expendables	1,811	3,805
CSM Experiment Dependent Weights		
RCS Propellant	380	370
Total Laboratory and Experiment	(8,514)	(11,449)
Allowable Lab. and Exper. Weight	9,555	12,032
Total Orbiting Weight	30,696	32,087
Service Module Propellant (Ascent)	1,410	1,410
SLA Adapter	3,505	3,505
Launch Vehicle Payload	35,611	37,002

4. FLIGHT OPERATIONAL SUPPORT: FLIGHT NO. 218

Experiment 0100 & 0200 - Medicine and Behavioral - Periodic daily data transmission and ground monitoring of safety parameter data.

Experiment 0501 - Radiation Environment Monitoring - External particle flux measurements during a solar flare event are to be correlated with the solar activity observations made on earth stationed observatories and other satellites.

Experiment 0606 - Cosmic Ray Emulsion - Routine monitoring of solar activity.

Experiment 1407 - Performance Assessment of On-Board Guidance and Navigation System and Components - Periodic ground station tracking for orbital parameter upgrading of the on-board computations. Assessment by ground stations of on-board test data.

Table 4-1 presents the experimental data management requirements of the flight. A discussion of this table and the data management system is contained in Volume 1.

TABLE 4-1. FLIGHT 218 DATA MANAGEMENT

Avg. Daily Data Recording Requirements

Experiment		Recording Time, min		Remarks
No.	Data Rate K-bits/sec	(A) 51.2 K-b/sec	(B) 1.6 K-b/sec	
0100_s	9 (AVG)	215		7.6 Exper-Hr/Day
0200_s	6.4 (AVG)	120		6.8 Exper-Hr/Day
0501	0.8		45	45 Min/Day Monitoring
0603 A&B	0.2		13	10 Hours/Mission
0601, 0602A&B, 0604, 0605, 0606	Negligible Recording Requirements			
Totals		335	58	

Avg. Daily Data Transmission Time, min:

- Reqd: A + B/32 = 337 min
- Available = 280 min

Data Excess (Minutes of Tape) per Day:

Required Minus Available Transmission Time = 57 min

Data Tape Return Required: $\frac{\text{Data Excess per Mission (min)}}{\text{30 min/Tape Reel}}$ = 86 Reels $\begin{cases} 172 \text{ lb} \\ 8.6 \text{ cu ft} \end{cases}$

Optimum Avg Daily Transmission Time Required = 7.9 min

Voice Tape Return Required (4 packages)	8 lb, 0.1 cu ft
Film Retrun Required	zero lb, zero cu ft
Data Tape Carried	180 lbs.

1. FLIGHT MISSION DESCRIPTION

Flight No. 219

Altitude, n.mi 200	Inclination, deg 28.5	Duration, days 45	Crew 3

Mission Title: SPACE OPERATIONS, BIOSCIENCE LAB.

Objectives: This flight will rendezvous with the previous flight for the continuation of the exploration of the effects of space flight on living organisms. In this respect, this flight contains biological systems ranging from microbes to mammals. In addition, on-board guidance and navigation systems, as well as extravrhicular operations, will be assessed and evaluated. A centrifuge for biomedical experimentation will also be carried.

Configuration: C (Extended CSM, LEM A/S, Low profile D/S With Docking Tunnel) or
D (Modified Block II CSM, LEM A/S Low profile D/S with docking tunnel.)

Experiment Summary:

No.	Title	Equipment Location: LEM Stage Asc	Equipment Location: LEM Stage Desc	Equipment Location: CM
0302	On-Board Centrifuge		x	
0401	Microbial Genetics and Growth	x		
0402	Development Biology	x		
0403	Mammalian Physiology	x		
0404	Limb Regeneration and Wound Healing	x		
0405	Effects of Drugs on Mammalian Behavior	x		
0406	Soft Capture, Innumeration and Identification in Space Borne Micro organisms	x	x	
1501	Evaluation of Advanced Space Suit Assemblies			x
1502	Development of Manned Locomotion and Maneuvering Capability	x		
1503	Emergency Techniques for Rescue	x		
1504	Development of Personnel and Cargo Transfer Operations	x		
1505	Maintenance and Repair	x		
1407	On-board Guid. & Nav. (carried up on Flight 218, used on Flight 219)			

2. EXPERIMENT DESCRIPTION SUMMARY

FLIGHT - 219

EXPERIMENT: 0302 - On Board Centrifuge - The centrifuge will serve as a conditioning device for reducing or preventing debilitation, and as a test device to determine the frequency, duration and levels of g-loading required to maintain physical fitness in a zero-g field. The crew will operate the centrifuge, install biological sensors on the centrifuged astronaut, and monitor responses during and after centrifuging. Tests will be made periodically; g level, time, and physical position of the subject will be varied. Derived data will include blood pressure, heart rate, oxygen consumption, respiratory rate, EKG, etc. A TV monitor will be provided. As an evaluation technique, records will be made of g tolerance with work assignments, exposure time, and physical and mental condition.

EXPERIMENT: 0401 - Genetic Effects in Microorganisms (DNA Recombination, Mutation Rate, and Phage Production) - This experiment is an investigation in the fundamental mechanism of reproduction. The objectives are: to determine effects of the zero gravity condition on replication and recombination of DNA in microorganisms; and, to test the hypothesis that synergistic effects on mutuation rates and phage production in microbial cells may occur due to prolonged weightlessness in combination with other space environmental factors, particularly radiation. This experiment involves the transfer of microorganisms into tubes of suitable culture media, infection of the cultures with lysogenic phage strains, halting the infection at timed intervals, and observing results in the space laboratory. Additional examinations, after return to earth, will be made.

EXPERIMENT: 0402 - Effects of Space Flight on Morphology, Growth, and Gas/Liquid Separation in Microorganisms, Unicellular Organisms, and Animal Tissue Cells. - The objective of this experiment is to determine the effects of weightlessness, independently and in combination with other space flight environmental conditions, on growth rates and morphology of unicellular organisms and tissue cells. Changes observed will provide information of such effects applicable to animals and man at the cellular level of body tissues that can be related to the results of biomedical and behavioral investigations. One part of this experiment involves the incubation of microorganisms (E. coli) in a suitable liquid culture medium and measuring their rate of multiplication by means of a spectrophotometric record of increase in density. A second part of this experiment is the investigation of a hypothesis that gaseous metabolic products of a non-motile organism remain as an envelope surrounding the cell in quiescent aqueous solutions and could thereby interfere with normal metabolism of the cells. A third part of the experiment involves the growth and observation of paramecia and of HeLa cells to detect possible changes in growth rates and specific metabolic effects. The paramecia and the HeLa cells would be introduced into their separate appropriate liquid-nutrient media by the astronaut. Their growth rate would be studied, using a continuous culture process in which the aerated nutrient solution will be circulated. The nutrient solution will be pumped in and the effluent removed at the same constant rate. At selected daily intervals, samples from the effluent would be frozen and returned to Earth for measurement of growth rate, analysis of enzyme changes, and determination of morphological changes.

EXPERIMENT: 0403 - The Effects of Weightlessness on Cardiovascular and Respiratory Functions, Hormone, Mineral, and Water Metabolism, ANS, CNS and Brain Mechanisms, Operant Behavior, and Biorhythms in the Primate. - The objective of this experiment is to study in detail the effects that immobilization, isolation, sensory deprivation and weightlessness may induce on physiological, neurological, metabolic and performance characteristics of the mammalian organism. Measurements will be made, such that, any effects will be indicated by such symptoms as: changes in blood pressure, volume and velocity, pulmonary mechanisms, mineral mobilization, metabolic rate, RG, BMR, slowing of the reflex arc, abnormalities in EKG and EEG patterns, and degradation of performance. The study will be conducted on a heavily instrumented chimpanizee. Effects on the measurements of motivational factors will be investigated. Finally, study of higher mental processes, learning, and decision making ability will also be included. The cardiovascular functions will be measured by means of clinical methods applicable to spaceflight conditions. The respiratory measurements concern respiratory rate, tidal volume, vital capacity, and carbon dioxide production. The ineraction with food intake, water intake, thermo regulation, exercise, oxygen level, and various performance measures with metabolic rate will be determined and analyzed.

EXPERIMENT: 0404 - Limb Regeneration and Wound Healing During Weightlessness - The objective of this experiment is to investigate possible changes in capacity and rate of tissue regeneration in newts and planaria that may result from prolonged weightlessness, and to relate the results to effects on tissue regeneration and wound-healing in higher forms of animals. Planaria have been used extensively to study properties of tissue regeneration because of their ability to form separate animals by fission and to regenerate new intact animals from severed segments. The astronaut will be required to maintain the planaria culture during the flight, after their surgical preparation at the launch site. The mechanism for recirculation of water in the animal chambers will have to be stopped during a feeding period of 2 hours duration every other day. The morphological changes in the animals will be observed and recorded by low-power photomicrography. Radiation shields will be used to vary the environmental radiation. Similar investigation using newts as the experimental animal is included in this overall experiment concept.

EXPERIMENT: 0405 - The Effects of Drugs on Mammalian Behavior in Space Flight - The objective of this experiment is to determine the effect of drugs on behavior patterns under conditions of weightlessness, isolation, partial and complete sensory deprivation, and forced immobility. It is assumed that these factors will act as stressors on the living organism and will effect behavior and performance. In particular, if the basic biologic mechanisms for altering behavior by means of pharmocological agent can be identified, drugs possibly can be used to minimize any adverse effects of space flight or to control behavior: The fundamental experiment will be to observe the influence of drugs on trained animals both on the ground and in spacecraft. For example, groups of rats will be trained to obtain a liquid reward (water) on a fixed interval schedule. After achieving a stable level of performance, each group will be subject to different periods of isolation and the rats observed and the rate of water intake measured by means of standard procedures. As a second step, different types of drugs that are active on the central nervous system will be used to modify any behavioral or performance pattern that occurs during isolation. Typical drugs might be amphetamine, caffeine, methylphenidate, iproniazid, imipramine, pentobarbital, cholorpromaxine, reserpine, and benactyzine.

EXPERIMENT: 0406 - Soft Capture, Enumeration, and Identification of Space-Borne Microorganisms - The objective of this experiment is to test and perfect techniques for the capture of microorganisms in space, in order to permit their enumeration and identification.. The feasibility of employing various sampling techniques already developed and under development will be evaluated. The yield attained by the collection techniques will be analyzed with respect to types of organisms and viability of life forms. It is hypothesized that microorganisms can occur in near space either as free cells or as adherents to solid particles. Techniques to be assessed include screens covered with hylax, as used earlier in satellites and very-high-altitude aircraft, and simple infraction methods involving the use of silicon greases and other materials as imfraction surfaces. Provisions for protection of collected samples from contamination by terrestrial organisms will be evaluated. Collected material will be assayed chemically for protein nucleic acids, or other significant compounds after the samples have been returned to the Earth.

EXPERIMENT: 1501 - Evaluation of Advanced Space Suit Assemblies - The objectives of this experiment are to validate the structural and dynamic integrity, and protective and performance characteristics of advanced space suit systems. And, to resolve problem areas of suit design and development by establishing criteria for those specifics for which earth-bound simulations cannot suffice. Following preflight dynamic testing utilizing articulated dummies and simulating space environment, manned evaluations of the suit will be made. Extravehicular tests of mobility, dexterity and lifting capability will be conducted. In addition, extended operations utilizing the AMU will be conducted. Post-flight inspection of the suit will determine the integrity and protective effectiveness of materials and fabricating techniques as used in suit assemblies.

EXPERIMENT: 1502 - Development of Manned Locomotion and Maneuvering Capability - The objectives of this experiment are to develop techniques, operations and equipments enabling man to move and maneuver intravehicular and extravehicular by using his own physical power, or aided by special propulsion systems and encumbered by tools, equipment, supplies or other impediments. Initial tests will be intravehicular and will include evaluation of techniques required to don and doff space suits, life support systems and propulsion systems. Emergency repair and life saving techniques will be evaluated. Extravehicular attitude control operations using "body english" movements, safety lines and the AMU will be conducted. Extravehicular locomotion operations using hand holds, cargo nets, static lines, body-powered free soaring and AMU-powered flight will be conducted. The above will be repeated using various tools or logistics loads to serve as encumberances. Cooperative maneuver techniques will be developed by using the "buddy-system" for some of the above tests.

EXPERIMENT: 1503 - Emergency Techniques, Equipment and Procedures for Rescue Operations. - The objectives of this experiment are to develop techniques, equipment and procedures for: the rescue of personnel who have been injured or require evacuation from a disabled spacecraft; failure detection and warning systems; and, rescuing extravehicular subjects. Initial tests will include the emergency repair of the space suit, PLSS systems and propulsion systems, the use of external ECS umbilicals, emergency techniques utilizing the life support bag and the evaluation of failure detection and warning systems for the rescue of extravehicular objects. Various techniques of rescue operations (buddy rescue system, safety line, net, sled, etc.) using an empty pressurized suit as a dummy will be evaluated. Subsequently, rescue operations of an astronaut simulating injuries will be conducted

utilizing the techniques developed above. In addition, rescue of extravehicular objects utilizing nets, safety lines, hooks, remote controlled systems, etc. will be conducted.

EXPERIMENT: 1504 - Development of Personnel and Cargo Transfer Operations - The objectives of this experiment are: to perfect the equipment needed for transfer; to develop handling techniques; and to train the crews in the methods of intravehicular and extravehicular transfer operations. Personnel and cargo transfer operations will be conducted on the resupply flight. The transfers will be accomplished prior to the docking operations. Transfer will be accomplished by the following means: tether line, conveyor-type system, and AMU-powered transfer with the personnel carrying cargo.

EXPERIMENT: 1505 - Maintenance and Repair Techniques - The objective of this experiment are: to develop maintenance techniques usable for space missions; to determine the design effects of these techniques on space hardware; to train astronaut personnel in space maintenance techniques; and to develop supporting equipment and tool requirements. The maintenance and repair techniques will be developed in conjunction with the performance of other experiments. The techniques will be demonstrated on an "as-required" basis.

TABLE 2-1 FLIGHT 219 INTEGRATED EXPERIMENT EQUIPMENT LIST

Exper. No.	Component	Weight, lb	Vol, cu ft or size*	Elec Energy or Elec Pwr	Remarks
0401		(60.1)			
	Incubator with Shielded Compt.	7.0	2	25 W	
	Vials, Test Tubes, Petri Dishes	5.0	2	N/A	
	Phase Contrast and Dissecting Microscope	5.0	0.57	10W	
	Work Shelf	1.0	20 x 24	N/A	
	35 MM Camera	3.0	0.2	N/A	
	Colony Counter	20.0			If use Quebec use following Wt. (10# or Less). Power (10 Watt or less)
	Nutrient Media	2.0	0.5	N/A	
	Refrigerator	6.0	1		May be tied into ECS Glycol Loop. If not Add 25 Watt Power.
	Needles with Syringes	1.0	6 x 6 x 6	N/A	
	Stored Chemicals	0.1	0.01	N/A	
	Freezer	10.0	1		May be tied into Cryogenic Supply. If not add 50 Watts Power.
0402		(174.7)			
	E. Coli Tubes Pseudomoivas Algae Culture Flasks Paramecium Hela Cells	15.0	2	N/A	
	Sterile Nutrient Media	2.0	Contained		
	Incubator	15.0	3	25 W	
	Compressed Air				ECS
	CO_2 Sampler	2.0	0.2	5 W	
	Finger Pumps (2)	2.0	0.5	30 W	
	Chemostat (Shielded)	3.0	0.3	50 W	
	Syringes	1.5	Contained	N/A	
	Sample Vials	1.5	Contained	N/A	
	Freezer	25.0	3	50 W	
	Refrigerator	25.0	3	25 W	
	Densitometer	0.2	Contained		
	Microscope	5.0	0.57	10 W	
	Photographic Equipment	3.0	0.2	N/A	
	Centrifuge	4.0	7x7x9	5 W	
	Centrifuge Tubes	1.0	Contained		
	Scintillation Counter	20.0	1.5	3 W	
	Particle Counter	6.0	3.0	40 W	
	Lights (For Algae)	1.5	0.15	100 W	

*INCHES UNLESS OTHERWISE SPEC.

TABLE 2-1 FLIGHT 219 INTEGRATED EXPERIMENT EQUIPMENT LIST

Exper. No.	Component	Weight, lb	Vol, cu ft or size*	Elec Energy or Elec Pwr	Remarks
	Slides, Etc	2.0	Contained	N/A	
	Fixatives, Etc.		Contained	N/A	
	Leadshield	20.0	Contained	N/A	
	Supply Cabinet	20.0	4		
0403		(235.9)			
	Chimpanzee	50.0	Contained	N/A	
	Chimpanzee Enclosure	45.0	7.6	N/A	
	Water Management System	10.0	0.5	2 W	
	Waste Management System	25.0	0.5	5 W	
	Psychological Panel	25.0	1.5	3 W	Periodic
	Food Management Syst and Food	40.0	1.5	5 W	Periodic
	Programer and Computer	25.0	2.0	5 W	
	Electrocardiogram	0.2	Contained		
	Blood Pressure Apparatus	0.01			
	Cardiac Output Device	0.03			
	Ballistocardiogram	0.03			
	Respirometer	0.1		10 W	Intermittent
	Vascular Catheter	0.01			
	Phonovibrocardiogram	0.03	Contained		
	Instrument Package	10.0	1.5		
	Urine and Blood Analysis Equipment	1.5	Contained		
	Supplies and Cabinet	2.0	1.0		
	Camera and Supplies	2.0	Contained		
0404		(78)			
	Planaria Culture Chamber	20	1'x1'x1'	N/A	
	New Culture Chamber	20	1'x1'x1.4'	N/A	
	Food	3		N/A	
	Water System	2	Contained in Culture Cham.	10 W	
	Waste Disposal System	4	1'x1'x1'	10 W	
	Microscope	5	0.57	10 W	
	Surgical Equipment	3	On Board	N/A	
	Freezer	10	1.0	50 W	
	Aeration Apparatus	2	-	N/A	
	Film Storage	5	0.2	N/A	
	Camera				On Board
	Equipment Storage Box	4	0.5	N/A	

*INCHES UNLESS OTHERWISE SPEC.

TABLE 2-1 FLIGHT 219 INTEGRATED EXPERIMENT EQUIPMENT LIST

Exper. No.	Component	Weight, lb	Vol, cu ft or size*	Elec Energy or Elec Pwr	Remarks
0405		(618)/(708)			Totals for "C" and "D" Flts.
	TV-Camera	6	12 x 6 x 4	6 W	TV Camera Will Be Westinghouse Lem Type
	Animals	25	Contained	N/A	
	Response Mechanism	50	Contained	N/A	
	Drugs	3	Cont ined	N/A	
	Plumbing and Feeders	40	0.5	N/A	
	Quick Freezer	10	1.0	50 W	Could be tied into Cryogenic supply
	Storage Cabinet	5	0.5	N/A	
	Food	30	Contained	N/A	
	Rat Cages	35	10.5	N/A	
	Food Storage	6	3.4	N/A	
	Charcoal Canister	5	0.5	N/A	
	Water	280/370		N/A	Existing Lem Tanks 280# on 218C Flt, 370# on 218D
	Water Tanks Installed	45		N/A	
	Waste Storage	3	1.0	N/A	
	Oxygen	75		N/A	
0406		(41)			
	Sampling Device	4-6		N/A	
	Dissecting Microscope	5		10 W	
	Growth Media and Supplies		Contained	N/A	
	Refrigerator	10	1		Maybe tied into ECS Glycol Loop. If not add 25 Watts
	Storage Incubator (2)	10	0.5	50 W	
	Anaerobic Incubator (2)	10	0.5	50 W	
1501		(1155)			
	(1) Hard Suit	55	42 x 23x23	N/A	
	(2) AMU	330	32 x 23x16	N/A	Common to 1502, 1503, 1504, 1505
	(1) AMU Fuel Supply System	450	44 x 22x22	N/A	Common to 1502, 1503, 1504, 1505
	(3) Restraint System	24	8 x 4 x 2	N/A	Common to 1502, 1503, 1505
	(3) Task Equipment Harness	36	10 x 6 x 4	N/A	Common to 1502
	(1) Tools	25	14 1/2x14 1/2 x 9 1/2	N/A	
	(2) Chest Pack	82	12 x 11x 6	N/A	Common 1502, 1503, 1504, 1505, 0302
	(2) Biomed Vest	2	12 x 12 x 4	N/A	

*INCHES UNLESS OTHERWISE SPEC.

TABLE 2-1 FLIGHT 219 INTEGRATED EXPERIMENT EQUIPMENT LIST

Exper. No.	Component	Weight, lb	Vol, cu ft or size*	Elec Energy or Elec Pwr	Remarks
	(2) Safety Line (100 ft.)	20		N/A	Common to 1502, 1503, 1504 1505
	(1) Platform and Rails	75		N/A	Common to 1503
	Movie Camera Automatic	25	17 x 17 1/4 x 4 1/2		Common to 1502, 1503, 1504 1505
	Manual Movie Camera	3			Common to 1502, 1503, 1504 1505, 0302
	Still Camera	8	8 x 8 x 10	N/A	Common to 1502, 1503, 1504, 1505, 0302
	TV Camera	20	4 x 9 1/2 x 12	5 W	Common to 1502, 1503, 1504, 1505, 0302
1502		(364)			Common to 1503
	(1) Life Saving Bag	15	18 x 6 D	N/A	
	(3) Cargo Net Modules	225	30 x 30 x 45	N/A	
	(8) Logistics Material	10-60	Variable	N/A	Common to 1503
	(4) Spare AMU Battery Pkg.	64	3 1/4 D x 16 1/4	N/a	
1503		(68)			
	(1) Personnel Transfer Equipment	12	17 x 12 x 12	N/A	
	(2) Umibilicals	16	18 x 18 x 6	N/A	
	(1) Tool Kit for Rescue and Pickup of Objects	25	72 x 24 x 12	N/A	
	(2) Rope Throwing Spring Gun	3	12 x 6 x 6	N/A	
	(2) Tumbling Preventing Mechanism	12	12 x 12 x 2	N/A	
1504	(1) Motor/Reel System	100	12 x 12 D	250 W	
1505	(UNPLANNED EVENT)	(34)			
	(1) Maintenance Instruction File	6	24 x 24 x 12	N/A	
	(1) Binocular	3	9 x 4 x 3	N/A	
	(1) General Mechanical EVA Tool Kit	25	15 x 15 x 10	N/A	
0302		(943)			
	(1) Centrifuge Structure Including Motor Display, Counterbalance	928	158 x 48 x 93	20 W	Peak Power 250 W for 2.5 min.
	(1) O_2 Tank	15	12 D Sphere	N/A	

*INCHES UNLESS OTHERWISE SPEC.

[redacted]

TABLE 2-1 FLIGHT 219 INTEGRATED EXPERIMENT EQUIPMENT LIST

Exper. No.	Component	Weight, lb	Vol, cu ft or size*	Elec Energy or Elec Pwr	Remarks
1407	See Flt. 218 for Equipment List				* Carried up on Flt. 218, performed during Flt. 219
	Total Weight of Experiments 3872 'C' Flt. 3962 'D' Flt.				

*INCHES UNLESS OTHERWISE SPEC.

[redacted]

3. EXPERIMENT/SPACECRAFT INTEGRATION

3.1 MISSION DEFINITION

Flight 219 may be best described as a physical sciences and biological sciences flight. This flight will rendezvous with Flight 218. Basic experiments on this flight involve on-board centrifuge tests, extravehicular activities (i.e., cargo transfer, human locomotion), and the effects of space flight on biological systems ranging from microbes to mammals. In addition, on-board guidance and navigation equipment will be evaluated and assessed. All the experiments have been scheduled so as to meet their specified frequencies, with the exception of the first day, which is primarily concerned with cargo transfer and docking, and the last day, where the total time block for orbit and deorbit is reserved.

The crew schedule is summarized in Table 3-1 and detailed in Table 3-2. In addition, Table 3-3 presents the experiment equipment mission profile.

Approximately 800 man hours are scheduled for non-biomedical/behavioral experiments. Biomedical and behavioral experiments have not been specified pending further study of the approach to be used on this rendezvous flight. If an arbitrary number of 200 man hours is chosen, the total on-duty time is 1000 man hours as indicated. However, this total could go as high as the 1335 available. Biomedical and behavioral experiments would be scheduled during portions of the periods currently labelled "rest."

Table 3-1 Flight 219 Mission Definition Summary*

Exper. No.	Occurrence Day No.	Total Times Perf/ Mission	No. Men Req'd	Exper Time/Test Setup Time, min	Test Time, min	Total Exper Man-hr/Mission Crewman 1	2	3	Total	Total Exper Man-hr/Mission Achv'd	Spec'd
302	Day 2-45		3			45	45	45	135		
401	Days 2-7		1			2	2	2	6		
402	Days 2-43		1			2	74	8	84		
403	Days 1-44		1			2	37	5	44		
404	Days 4-44		1			4	76	2	82		
405	Days 24-44		1			42	18	22	82		
406	Days 3,5		2			3	2	1	6		
1501	Day 5		2			3 1/2	7	3 1/2	14		
1502	Days 2-5		Var.			19	30	26	75		
1503	Days 6-8		3			15	15	15	45		
1504	Day 1		2			2 1/2	6 1/2	4	12.5		
1407	Days 9-18		2			37 1/2	-	37 1/2	75		
0100 0200	VAR.	VAR.	VAR.			VAR	VAR	VAR	340(1)		
				Totals		—	—	—	1000		

Maximum Work Day: See note 1 hrs on-duty; Average Work Day 7.5 hrs. on-duty; Minimum Work Day: See note 1 hrs on-duty

Total EVA Man Hours: 93.25

Notes: (1) Arbitrary number chosen to give total of 1000 - Biomedical/behavioral experiment time could go as high as 690 man-hr when experiment program is established.

*See Tables 3-2 and 3-3 for crew schedules and experiment equipment duty cycles

Table 3-2 **CREW SCHEDULING, FLIGHT** 219, **SHEET** 1 **OF** 12

2-8.13

DAY 1	ORBIT	CREWMEN ACTIVITIES 1	2	3
0000				
20				
40				E/Hyg
0100				
20		1504	1504	
40				Rest
0200				
20				
40				
0300		E/Hyg		
20				
40			1504	1504
0400				
20		Rest		
40				
0500				
20				
40			1504	1504
0600				
20				
40			E/Hyg	E/Hyg
0700				
20				
40			Rest	
0800		Sleep		
20				
40				
0900				
20				
40				Rest
1000				
20				
40		E/Hyg		
1100				
20				
40			Sleep	
1200				
20				
40				E/Hyg
1300				
20				
40				
1400				Rest
20		Rest	E/Hyg	
40				
1500				
20				
40			Rest	
1600				
20				
40				Sleep
1700		E/Hyg		
20				
40				
1800				
20				
40			Rest	
1900				
20				
40				
2000				
20				E/Hyg
40		Rest		
2100				
20				
40				Rest
2200				
20				
40				
2300			E/Hyg	
20				
40				403
2400				

DAY 2	ORBIT	CREWMEN ACTIVITIES 1	2	3
0000				
20				E/Hyg
40				
0100		1502 1A &2A	1502 1A&2A	
20				
40				Rest
0200		E/Hyg		
20				
40				
0300			1502 1B&2B	1502 1B&2B
20				
40				
0400		Rest		
20				
40				
0500				
20				
40			E/Hyg	
0600				
20				Rest
40			Rest	
0700				
20				
40				
0800		Sleep		402
20				
40				
0900				
20				Rest
40				
1000				
20				
40		E/Hyg	Sleep	E/Hyg
1100				
20				
40		1502 3A&3B		1502 3A&3B
1200				
20				
40				
1300				Rest
20		302(s)		302(o)
40		Rest	302(o)	302(s)
1400		302(o)	302(s)	
20		Rest	E/Hyg	
40				
1500				
20		1502 3C	1502 3C	
40				
1600				
20			Rest	
40				
1700		Rest		Sleep
20				
40				
1800				
20		1502 4B	1502 4B	
40				
1900				
20				
40				
2000				
20		Rest	Rest	
40		302(s)		302(o)
2100		Rest	302(o)	302(s)
20		302(o)	302(s)	E/Hyg
40		E/Hyg		
2200				
20				
40		401		
2300			Rest	Rest
20				
40		403		
2400				

DAY 3	ORBIT	CREWMEN ACTIVITIES 1	2	3
0000				
20		E/Hyg		
40				
0100				
20			1502 4C,D,F	1502 4C,D,F
40		Rest		
0200				
20				
40				
0300				
20				
40				
0400		302(s)		302(o)
20		Rest	302(o)	302(s)
40		302(o)	302(s)	E/Hyg
0500			Rest	
20				
40				
0600			1502 4E	1502 4E
20				
40				
0700				
20				
40				
0800		Sleep		
20			E/Hyg	
40				
0900				
20				Rest
40				
1000				
20				
40		E/Hyg	Sleep	401
1100				
20				
40		406		406
1200				
20				
40				403
1300		402		
20				
40				E/Hyg
1400				
20			E/Hyg	
40				
1500				
20				
40				
1600		Rest	Rest	
20				
40				
1700				Sleep
20		406	406	
40				
1800		E/Hyg		
20			406	
40				
1900				
20				
40		Rest	E/Hyg	E/Hyg
2000				
20				
40		1502 5A	1502 5A	1502 5A
2100				
20				
40				
2200		1502 5B	1502 5B	1502 5B
20				
40				
2300		Rest	Rest	Rest
20				
40		302(s)		302(o)
2400		Rest	302(o)	302(s)
		302(o)	302(s)	Rest

DAY 4	ORBIT	CREWMEN ACTIVITIES 1	2	3
0000				
20				
40				
0100				
20		1502 5C,D,F	1502 5C,D,F	1502 5C.D,F
40				
0200				
20				
40				
0300				
20		Rest	Rest	Rest
40				
0400		302(s)		302(o)
20		Rest	302(o)	302(s)
40		302(o)	302(s)	E/Hyg
0500		E/Hyg	E/Hyg	
20				
40				
0600			404	
20				Rest
40				
0700				
20			401	
40				
0800		Sleep		402
20				
40				
0900				
20				
40				
1000				
20				
40			Sleep	Rest
1100				
20		302(s)		302(o)
40		302(o)		302(s)
1200		E/Hyg		E/Hyg
20				
40				
1300				403
20				
40				
1400		Rest		
20				
40		302(o)	302(s)	
1500			E/Hyg	
20				
40				
1600		Rest		
20				
40				
1700				Sleep
20				
40		E/Hyg		
1800			Rest	
20				
40				
1900				
20		Rest		
40			E/Hyg	E/Hyg
2000				
20				
40		1502 5E	1502 5E	1502 5E
2100				
20				
40				
2200				
20				
40				
2300		1502 6A	1502 6A	1502 6A
20				
40				
2400		Rest	Rest	Rest

NOTES Biomedical & behavioral experiments may be performed as required during rest periods.

Spacecraft Occulted
In Sunlight
Occulted etc.

E/Hyg Eat & Personal Hygiene
Limits of Experiment Time
Limits of EVA

Table 3-2 **CREW SCHEDULING, FLIGHT 219, SHEET 2 OF 12**

2-8-64

DAY 5	ORBIT	CREWMEN ACTIVITIES 1	2	3
0000				
20			E/Hyg	E/Hyg
40				
0100				
20		Rest		Rest
40			Rest	
0200		302(s)		302(o)
20		Rest	302(o)	302(s)
40		302(o)	302(s)	Rest
0300		1502 6B	1502 6B	1502 6B
20				
40				
0400				
20				
40				
0500		E/Hyg	1502 7A,B	1502 7A,B
20				
40				
0600			1502 7C	1502 7C
20				
40				
0700				
20			E/Hyg	E/Hyg
40				
0800		Sleep		
20				
40				
0900				Rest
20				
40				
1000				
20				
40				
1100		E/Hyg	Sleep	402
20				
40				
1200		404		
20				Rest
40				
1300				401
20				
40				
1400		Rest		E/Hyg
20			E/Hyg	
40				
1500				
20				
40		1501	1501	
1600				
20				
40				Sleep
1700				
20				
40				
1800				
20		406	403	
40				
1900				
20		Rest		
40			Rest	
2000				
20		302(s)		302(o)
40		Rest	302(o)	302(s)
2100		302(o)	302(s)	E/Hyg
20		E/Hyg		
40				
2200			1501	1501
20				
40				
2300		Rest		
20				
40				
2400				

DAY 6	ORBIT	CREWMEN ACTIVITIES 1	2	3
0000				
20				
40				
0100		1503 (I)	1503 (I)	1503 (I)
20				
40				
0200				
20				
40		302(s)	Rest	302(o)
0300		Rest	302(o)	302(s)
20		302(o)	302(s)	
40		E/Hyg	E/Hyg	403
0400				
20				E/Hyg
40				
0500				
20			Rest	
40				
0600				
20				
40			402	
0700				
20				
40		Sleep		
0800			E/Hyg	Rest
20				
40				
0900				
20				
40				
1000				
20				
40		E/Hyg		
1100			Sleep	
20				
40		401		
1200				E/Hyg
20				
40				
1300				
20				Rest
40				
1400				
20				
40		Rest		
1500				
20				
40			404	
1600				
20				
40				
1700			E/Hyg	Sleep
20				
40				
1800				
20		Rest		
40				
1900				
20			Rest	
40				
2000				
20		302(s)		302(o)
40		Rest	302(o)	302(s)
2100		302(o)	302(s)	Rest
20				
40				
2200		1503 (I)	1503 (I)	1503 (I)
20				
40				
2300				
20				
40		E/Hyg	E/Hyg	E/Hyg
2400				

DAY 7	ORBIT	CREWMEN ACTIVITIES 1	2	3
0000				
20				
40				
0100		1503 (II)	1503 (II)	1503 (II)
20				
40				
0200				
20				
40		302(s)	Rest	302(o)
0300		Rest	302(o)	302(s)
20		302(o)	302(s)	E/Hyg
40		E/Hyg	E/Hyg	
0400				
20				
40				
0500			Rest	
20				
40				
0600				Rest
20				
40			402	
0700				
20				
40		Sleep		
0800			E/Hyg	
20				
40				
0900				404
20				
40				
1000				
20				
40				Rest
1100		E/Hyg	Sleep	
20				
40		403		
1200				
20				
40		Eva.OH		L.OH
1300				
20				E/Hyg
40				
1400				
20				
40				
1500			401	
20				
40				
1600			E/Hyg	
20				
40		Rest		
1700				Sleep
20				
40				
1800				
20			Rest	
40				
1900				
20				
40				
2000				
20		302(s)		302(o)
40		Rest	302(o)	302(s)
2100		302(o)	302(s)	Rest
20				
40				
2200		1503 (II)	1503 (II)	1503 (II)
20				
40				
2300				
20				
40		E/Hyg	E/Hyg	E/Hyg
2400				

DAY 8	ORBIT	CREWMEN ACTIVITIES 1	2	3
0000				
20				
40				
0100		1503 (I)	1503 (I)	1503 (I)
20				
40				
0200				
20				
40		302(s)	Rest	302(o)
0300		Rest	302(o)	302(s)
20		302(o)	302(s)	
40		E/Hyg	E/Hyg	403
0400				
20				E/Hyg
40				
0500			Rest	
20				
40				
0600				
20				
40			402	
0700				
20				
40		Sleep		
0800				Rest
20			E/Hyg	
40				
0900				
20				
40				
1000				E/Hyg
20				
40		E/Hyg	Sleep	
1100				
20				
40		404		
1200				Rest
20				
40				
1300				
20				
40				E/Hyg
1400				
20				
40				
1500		Rest	E/Hyg	
20				
40				
1600				
20				
40				
1700		E/Hyg		Sleep
20				
40				
1800				
20		Rest	Rest	
40				
1900				
20				
40				
2000				
20		302(s)		302(o)
40		Rest	302(o)	302(s)
2100		302(o)	302(s)	Rest
20				
40				
2200		1503 (II)	1503 (II)	1503 (II)
20				
40				
2300				
20				
40		Rest	Rest	Rest
2400				

NOTES

[redacted]

Table 3-2 **CREW SCHEDULING, FLIGHT** 219 , **SHEET** 3 **OF** 12

2-8.1)

DAY 9	ORBIT	CREWMEN ACTIVITIES 1	2	3
0000				
20		E/Hyg	E/Hyg	E/Hyg
40				
0100				
20				
40		Rest	Rest	Rest
0200				
20				
40				
0300		302(s)		302(o)
20		Rest	302(o)	302(s)
40		302(o)	302(s)	Rest
0400			Rest	
20				
40		E/Hyg		
0500				1407
20				
40			403	Rest
0600				
20				1407
40				
0700			402	
20				Rest
40		Sleep		
0800				1407
20			E/Hyg	
40				Rest
0900				
20				1407
40				
1000				
20				Rest
40				
1100			Sleep	1407
20		E/Hyg		
40				
1200				
20				Rest
40		Rest		
1300				
20		1407		E/Hyg
40				
1400		Rest		
20				
40		1407		
1500				
20				
40		Rest	404	
1600				
20		1407		
40				
1700		Rest	E/Hyg	Sleep
20				
40		1407		
1800				
20				
40		Rest		
1900				
20		1407	Rest	
40				
2000		Rest		
20		302(s)		302(o)
40		Rest	302(o)	302(s)
2100		302(o)	302(s)	E/Hyg
20				
40		E/Hyg	E/Hyg	
2200				
20				
40		Rest	Rest	Rest
2300				
20				
40				
2400				

DAY 10	ORBIT	CREWMEN ACTIVITIES 1	2	3
0000				
20		E/Hyg	E/Hyg	E/Hyg
40				
0100				
20				
40		Rest	Rest	Rest
0200				
20				
40				
0300		302(s)		302(o)
20		Rest	302(o)	302(s)
40		302(o)	302(s)	
0400				
20		E/Hyg		
40			Rest	
0500				
20				
40			403	Rest
0600				
20				
40				
0700			402	
20				
40		Sleep		
0800				E/Hyg
20			E/Hyg	
40				
0900				
20				
40				1407
1000				
20				
40				
1100			Sleep	
20				
40		E/Hyg		
1200				
20				
40				
1300				Rest
20				
40				
1400		1407		
20				
40				
1500			E/Hyg	
20				
40				
1600				
20				
40				
1700				Sleep
20				
40				
1800		Rest	Rest	
20				
40				
1900				
20				
40				
2000				
20		302(s)		302(o)
40		Rest	302(o)	302(s)
2100		302(o)	302(s)	E/Hyg
20		E/Hyg		
40			404	
2200				
20				Rest
40		Rest		
2300				
20				
40			Rest	
2400				

DAY 11	ORBIT	CREWMEN ACTIVITIES 1	2	3
0000				
20		E/Hyg	E/Hyg	E/Hyg
40				
0100				
20				
40		Rest	Rest	Rest
0200				
20				
40				
0300		302(s)		302(o)
20		Rest	302(o)	302(s)
40		302(o)	302(s)	E/Hyg
0400		E/Hyg	Rest	
20				1407
40			E/Hyg	
0500				Rest
20				
40			403	1407
0600				
20				
40				Rest
0700			402	
20				1407
40		Sleep		
0800				Rest
20				
40				
0900				1407
20				
40				Rest
1000				
20				1407
40				
1100			Sleep	E/Hyg
20				
40		E/Hyg		
1200				
20				
40		1407		Rest
1300				
20		Rest		
40				
1400		1407		
20				
40		Rest		
1500			E/Hyg	
20				
40		1407		
1600				
20		Rest		
40				
1700		1407		Sleep
20				
40				
1800		Rest	Rest	
20				
40		1407		
1900				
20				
40				
2000				
20		302(s)		302(o)
40		Rest	302(o)	302(s)
2100		302(o)	302(s)	E/Hyg
20		E/Hyg		
40			404	
2200				
20				Rest
40		Rest		
2300				
20			E/Hyg	
40				
2400				

DAY 12	ORBIT	CREWMEN ACTIVITIES 1	2	3
0000				
20		E/Hyg	E/Hyg	E/Hyg
40				
0100				
20				
40		Rest	Rest	Rest
0200				
20				
40				
0300		302(s)		302(o)
20		Rest	302(o)	302(s)
40		302(o)	302(s)	
0400		E/Hyg	Rest	E/Hyg
20				
40			E/Hyg	
0500				
20				
40			403	
0600				
20				
40				Rest
0700			402	
20				
40		Sleep		
0800				
20				
40				
0900				
20				
40				1407
1000				
20				
40				
1100			Sleep	
20				
40		E/Hyg		
1200				
20				
40				E/Hyg
1300				
20				
40				
1400		1407		
20				
40				
1500			E/Hyg	
20				
40				
1600				
20		E/Hyg		
40				
1700				Sleep
20				
40				
1800				
20				
40		Rest	Rest	
1900				
20				
40				
2000				
20		302(s)		302(o)
40		Rest	302(o)	302(s)
2100		302(o)	302(s)	E/Hyg
20		E/Hyg		
40			404	
2200				
20				Rest
40		Rest		
2300				
20			E/Hyg	
40				
2400				

NOTES

[redacted]

[redacted]

Table 3-2 **CREW SCHEDULING, FLIGHT** 219, **SHEET** 4 **OF** 12

DAY 13	ORBIT	CREWMEN ACTIVITIES 1	2	3
0000				
20		E/Hyg	E/Hyg	E/Hyg
40				
0100				
20				
40		Rest	Rest	Rest
0200				
20				
40		302(s)		302(o)
0300		Rest	302(o)	302(s)
20		302(o)	302(s)	
40				E/Hyg
0400		E/Hyg	E/Hyg	
20				
40				
0500				1407
20				
40			403	Rest
0600				
20				
40				1407
0700			402	
20				Rest
40		Sleep		
0800				1407
20				
40				Rest
0900				
20				
40				1407
1000				
20				Rest
40				
1100			Sleep	1407
20		E/Hyg		
40				E/Hyg
1200				
20				
40		Rest		
1300				
20		1407		Rest
40				
1400		Rest		
20				
40		1407		
1500			E/Hyg	
20		Rest		
40				
1600				
20		1407		
40				Sleep
1700		Rest		
20				
40		1407		
1800			Rest	
20		Rest		
40				
1900				
20		1407		
40				
2000		Rest		
20		302(s)		302(o)
40		Rest	302(o)	302(s)
2100		302(o)	302(s)	
20		E/Hyg		E/Hyg
40			404	
2200				
20				Rest
40		Rest		
2300			E/Hyg	
20				
40				
2400				

DAY 14	ORBIT	CREWMEN ACTIVITIES 1	2	3
0000				
20		E/Hyg	E/Hyg	E/Hyg
40				
0100				
20				
40		Rest	Rest	Rest
0200				
20				
40		302(s)		302(o)
0300		Rest	302(o)	302(s)
20		302(o)	302(s)	
40				
0400		E/Hyg	E/Hyg	
20				E/Hyg
40				
0500				
20				
40			403	
0600				
20				
40				Rest
0700			402	
20				
40		Sleep		
0800				
20				
40				
0900				
20				
40				
1000				1407
20				
40				
1100			Sleep	
20		E/Hyg		
40				
1200		Rest		
20				
40				E/Hyg
1300				
20				
40				
1400		1407		
20				
40				
1500			E/Hyg	
20				
40				
1600			Rest	
20				
40				Sleep
1700		E/Hyg		
20				
40		Rest		
1800				
20				
40				
1900				
20				
40		Eva.OB	L1OH	
2000				
20		302(s)	Rest	302(o)
40		Rest	302(o)	302(s)
2100		302(o)	302(s)	
20		E/Hyg		E/Hyg
40			404	
2200				
20				Rest
40		Rest		
2300			E/Hyg	
20				
40				
2400				

DAY 15	ORBIT	CREWMEN ACTIVITIES 1	2	3
0000				
20		E/Hyg	E/Hyg	E/Hyg
40				
0100				
20				
40		Rest	Rest	Rest
0200				
20				
40		302(s)		302(o)
0300		Rest	302(o)	302(s)
20		302(o)	302(s)	
40				E/Hyg
0400		E/Hyg	E/Hyg	
20				1407
40				
0500				Rest
20				
40			403	1407
0600				
20				
40				Rest
0700			402	
20				1407
40		Sleep		
0800				Rest
20				
40				1407
0900				
20				
40				Rest
1000				
20				1407
40				
1100			Sleep	E/Hyg
20		E/Hyg		
40				
1200		Rest		
20				
40		1407		
1300				Rest
20		Rest		
40				
1400		1407		
20				
40		Rest		
1500			E/Hyg	
20				
40		1407		
1600				
20		Rest		
40				Sleep
1700		1407		
20				
40		Rest		
1800				
20		1407	Rest	
40				
1900				
20				
40				
2000		Rest		
20		302(s)		302(o)
40		Rest	302(o)	302(s)
2100		302(o)	302(s)	
20		E/Hyg		E/Hyg
40			404	
2200				
20				Rest
40		Rest		
2300			E/Hyg	
20				
40				
2400				

DAY 16	ORBIT	CREWMEN ACTIVITIES 1	2	3
0000				
20		E/Hyg	E/Hyg	E/Hyg
40				
0100				
20				
40		Rest	Rest	Rest
0200				
20				
40		302(s)		302(o)
0300		Rest	302(o)	302(s)
20		302(o)	302(s)	
40			E/Hyg	
0400		E/Hyg		
20				E/Hyg
40				
0500			Rest	
20				
40			403	
0600				
20				
40			402	Rest
0700				
20		Sleep		
40				
0800				
20				
40				1407
0900				
20				
40				
1000				
20			Sleep	
40				
1100				
20		E/Hyg		
40				
1200		Rest		
20				
40				E/Hyg
1300				
20				
40				
1400		1407		
20				
40				
1500			E/Hyg	
20				
40				
1600				
20		E/Hyg		
40				Sleep
1700				
20				
40				
1800				
20		Rest	Rest	
40				
1900				
20				
40				
2000				
20		302(s)		302(o)
40		Rest	302(o)	302(s)
2100		302(o)	302(s)	
20		E/Hyg		E/Hyg
40			404	
2200				
20				Rest
40		Rest		
2300			E/Hyg	
20				
40				
2400				

NOTES

[redacted]

Table 3-2 **CREW SCHEDULING, FLIGHT** 219 , **SHEET** 5 **OF** 12

2-8.17

DAY 17	ORBIT	CREWMEN ACTIVITIES 1	2	3
0000				
20		E/Hyg	E/Hyg	E/Hyg
40				
0100				
20				
40		Rest	Rest	Rest
0200				
20		302(s)		302(o)
40		Rest	302(o)	302(s)
0300		302(o)	302(s)	E/Hyg
20				
40				
0400		E/Hyg	Rest	
20				Rest
40			E/Hyg	
0500				1407
20				
40			403	Rest
0600				
20				
40				1407
0700			402	
20				Rest
40				
0800		Sleep		1407
20				
40				Rest
0900				
20				
40				1407
1000				
20				Rest
40				
1100			Sleep	1407
20		E/Hyg		
40				E/Hyg
1200				
20		Rest		
40				
1300				
20		1407		Rest
40				
1400		Rest		
20				
40		1407		
1500			E/Hyg	
20		Rest		
40				
1600				
20		1407		Sleep
40				
1700		Rest		
20				
40		1407		
1800				
20		Rest	Rest	
40				
1900				
20		1407		
40				
2000		Rest		
20		302(s)		302(o)
40		Rest	302(o)	302(s)
2100		302(o)	302(s)	E/Hyg
20		E/Hyg		
40				
2200			404	
20				Rest
40		Rest		
2300				
20			E/Hyg	
40				
2400				

DAY 18	ORBIT	CREWMEN ACTIVITIES 1	2	3
0000				
20		E/Hyg	E/Hyg	E/Hyg
40				
0100				
20				
40		Rest	Rest	Rest
0200				
20		302(s)		302(o)
40		Rest	302(o)	302(s)
0300		302(o)	302(s)	
20			E/Hyg	E/Hyg
40				
0400		E/Hyg		
20				
40			Rest	
0500				
20				
40			403	
0600				
20				Rest
40				
0700			402	
20				
40				
0800		Sleep		
20				
40				
0900				
20				
40				
1000				
20				1407
40				
1100			Sleep	
20				
40		E/Hyg		
1200				
20				
40				
1300				
20				
40		1407		
1400				
20				
40				
1500			E/Hyg	
20				
40				
1600				
20		E/Hyg		Sleep
40				
1700				
20				
40				
1800		Rest	Rest	
20				
40				
1900				
20				
40				
2000				
20		302(s)		302(o)
40		Rest	302(o)	302(s)
2100		302(o)	302(s)	E/Hyg
20		E/Hyg		
40				
2200			404	
20				Rest
40		Rest		
2300				
20			E/Hyg	
40				
2400				

DAY 19	ORBIT	CREWMEN ACTIVITIES 1	2	3
0000				
20		E/Hyg	E/Hyg	E/Hyg
40				
0100				
20				
40		Rest	Rest	Rest
0200				
20		302(s)		302(o)
40		Rest	302(o)	302(s)
0300		302(o)	302(s)	
20			E/Hyg	E/Hyg
40				
0400		E/Hyg		
20				
40			Rest	
0500				
20				
40			403	
0600				
20				Rest
40				
0700			402	
20				
40				
0800		Sleep		E/Hyg
20				
40				
0900				
20				
40				
1000				
20				
40				
1100			Sleep	Rest
20				
40		E/Hyg		
1200				
20				
40				
1300				
20				E/Hyg
40				
1400				
20				
40				
1500			E/Hyg	
20				
40				
1600				
20		Rest		Sleep
40				
1700				
20				
40				
1800			Rest	
20				
40				
1900				
20				
40				
2000				
20		302(s)		302(o)
40		Rest	302(o)	302(s)
2100		302(o)	302(s)	E/Hyg
20		E/Hyg		
40				
2200			404	
20				
40		Rest		Rest
2300				
20			E/Hyg	
40				
2400				

DAY 20	ORBIT	CREWMEN ACTIVITIES 1	2	3
0000				
20		E/Hyg	E/Hyg	E/Hyg
40				
0100				
20				
40		Rest	Rest	Rest
0200				
20		302(s)		302(o)
40		Rest	302(o)	302(s)
0300		302(o)	302(s)	
20			E/Hyg	E/Hyg
40				
0400		E/Hyg		
20		Rest		
40			Rest	
0500				
20				
40			403	
0600				Rest
20				
40				
0700			402	
20				
40				
0800		Sleep		E/Hyg
20				
40				
0900				
20				
40				
1000				
20				
40				
1100			Sleep	Rest
20				
40		E/Hyg		
1200				
20				
40				
1300				
20				E/Hyg
40				
1400				
20				
40				
1500			E/Hyg	
20				
40				
1600				
20		Rest		Sleep
40				
1700				
20				
40				
1800			Rest	
20				
40				
1900				
20				
40				
2000				
20		302(s)		302(o)
40		Rest	302(o)	302(s)
2100		302(o)	302(s)	E/Hyg
20		E/Hyg		
40				
2200			404	
20				Rest
40		Rest		
2300				
20			E/Hyg	
40				
2400				

NOTES

[redacted]

Table 3-2 **CREW SCHEDULING, FLIGHT** 219, **SHEET** 6 **OF** 12

2-6.1

DAY 21	ORBIT	CREWMEN ACTIVITIES 1	2	3
0000				
20		E/Hyg	E/Hyg	E/Hyg
40				
0100				
20				
40		Rest	Rest	Rest
0200				
20		302(s)		302(o)
40		Rest	302(o)	302(s)
0300		302(o)	302(s)	
20				
40			Rest	Rest
0400		E/Hyg		
20			E/Hyg	E/Hyg
40				
0500				
20				
40			403	
0600				
20				
40			402	
0700				
20				
40		Sleep		
0800				
20				
40				
0900				Rest
20				
40				
1000				
20				
40				
1100				
20		E/Hyg	Sleep	
40				
1200				E/Hyg
20				
40				
1300				
20				Rest
40				
1400				
20		Rest		
40				
1500			E/Hyg	
20				
40				
1600				
20		E/Hyg		
40				Sleep
1700			Rest	
20				
40		Rest		
1800				
20				
40		L10H	Eva. OHS	
1900				
20				
40				
2000				
20		302(s)		302(o)
40		Rest	302(o)	302(s)
2100		302(o)	302(s)	E/Hyg
20		E/Hyg		
40				
2200			404	
20				Rest
40		Rest		
2300				
20			E/Hyg	[redacted]
40				
2400				

DAY 22	ORBIT	CREWMEN ACTIVITIES 1	2	3
0000				
20		E/Hyg	E/Hyg	E/Hyg
40				
0100				
20				
40		Rest	Rest	Rest
0200				
20		302(s)		302(o)
40		Rest	302(o)	302(s)
0300		302(o)	302(s)	
20				E/Hyg
40				
0400		E/Hyg	E/Hyg	
20				
40				
0500				
20				
40			403	
0600				
20				
40			402	
0700				
20				
40		Sleep		Rest
0800				
20				
40				
0900				
20				
40				
1000				
20				
40				
1100				
20			Sleep	
40		E/Hyg		E/Hyg
1200				
20				
40				
1300				
20				Rest
40				
1400				
20		Rest		
40				
1500				
20				
40				
1600				
20				Sleep
40				
1700		E/Hyg		
20				
40				
1800				
20		Rest		
40				
1900				
20				
40				
2000				
20		302(s)		302(o)
40		Rest	302(o)	302(s)
2100		302(o)	302(s)	E/Hyg
20		E/Hyg		
40				
2200			404	
20				Rest
40		Rest		
2300				
20			E/Hyg	
40				
2400				

DAY 23	ORBIT	CREWMEN ACTIVITIES 1	2	3
0000				
20		E/Hyg	E/Hyg	E/Hyg
40				
0100				
20				
40		Rest	Rest	Rest
0200				
20		302(s)		302(o)
40		Rest	302(o)	302(s)
0300		302(o)	302(s)	
20				E/Hyg
40				
0400		E/Hyg	E/Hyg	
20				
40			Rest	
0500				
20				
40			403	
0600				
20				
40			402	Rest
0700				
20				
40		Sleep		
0800				
20				
40				
0900				
20				
40				
1000				
20				
40				
1100				
20			Sleep	
40		E/Hyg		E/Hyg
1200				
20				
40				
1300				Rest
20				
40				
1400				
20				
40				
1500		Rest	E/Hyg	
20				
40				
1600				
20				Sleep
40				
1700		E/Hyg		
20				
40				
1800			Rest	
20		Rest		
40				
1900				
20				
40				
2000				
20		302(s)		302(o)
40		Rest	302(o)	302(s)
2100		302(o)	302(s)	E/Hyg
20		E/Hyg		
40				
2200			404	
20				Rest
40		Rest		
2300				
20			E/Hyg	
40				
2400				

DAY 24	ORBIT	CREWMEN ACTIVITIES 1	2	3
0000				
20		E/Hyg	E/Hyg	E/Hyg
40				
0100				
20				
40		Rest	Rest	Rest
0200				
20		302(s)		302(o)
40		Rest	302(o)	302(s)
0300		302(o)	302(s)	
20				E/Hyg
40				
0400		E/Hyg	E/Hyg	
20				
40			Rest	
0500				
20				
40			403	
0600				
20				
40			402	
0700				
20				
40		Sleep		Rest
0800				
20				
40				
0900				
20				
40				
1000				
20				
40				
1100				
20			Sleep	
40				E/Hyg
1200		405		
20				
40				
1300				
20		E/Hyg		Rest
40				
1400				
20				
40				
1500			E/Hyg	
20				
40				
1600		Rest		
20				
40				Sleep
1700				
20				
40				
1800		E/Hyg	Rest	
20				
40				
1900				405
20		Rest		
40				
2000				
20		302(s)		302(o)
40		Rest	302(o)	302(s)
2100		302(o)	302(s)	E/Hyg
20		E/Hyg		
40				
2200			404	
20				Rest
40		Rest		
2300				
20			E/Hyg	
40				
2400				

NOTES

[redacted]

[redacted]

Table 3-2 **CREW SCHEDULING, FLIGHT** 219, **SHEET** 7 **OF** 12

DAY 25	ORBIT	CREWMEN ACTIVITIES 1	2	3
0000				
20				
40		405	E/Hyg	E/Hyg
0100				
20				
40			Rest	Rest
0200		Rest		
20		302(s)		302(o)
40		Rest	302(o)	302(s)
0300		302(o)	302(s)	
20		E/Hyg	E/Hyg	E/Hyg
40				
0400				
20		Rest		
40			Rest	
0500				Rest
20				
40			403	
0600				
20				
40			402	405
0700				
20				
40				E/Hyg
0800		Sleep		
20				
40				
0900				
20				
40				
1000				
20				Rest
40				
1100			Sleep	
20				
40		E/Hyg		
1200				
20				
40		405		E/Hyg
1300				
20				Rest
40				
1400				
20				
40				
1500		Rest	E/Hyg	
20				
40				
1600				
20				
40				
1700		E/Hyg	Rest	Sleep
20				
40				
1800				
20			405	
40				
1900		Rest		
20				
40				
2000				
20		302(s)		302(o)
40		Rest	302(o)	302(s)
2100		302(o)	302(s)	E/Hyg
20		E/Hyg		
40				
2200			404	
20				
40		Rest		Rest
2300				
20			E/Hyg	
40				
2400				

DAY 26	ORBIT	CREWMEN ACTIVITIES 1	2	3
0000				
20			E/Hyg	E/Hyg
40		405		
0100				
20				
40			Rest	Rest
0200				
20		302(s)		302(o)
40		Rest	302(o)	302(s)
0300		302(o)	302(s)	
20		E/Hyg	E/Hyg	E/Hyg
40				
0400				
20		Rest		
40				
0500			Rest	
20				Rest
40			403	
0600				
20				
40			402	405
0700				
20				
40				E/Hyg
0800		Sleep		
20				
40				
0900				
20				
40				
1000				
20				Rest
40				
1100			Sleep	
20				
40		E/Hyg		
1200				
20				E/Hyg
40		405		
1300				
20				Rest
40				
1400				
20				
40				
1500		Rest	E/Hyg	
20				
40				
1600				
20				
40				
1700		E/Hyg	Rest	Sleep
20				
40				
1800				
20		Rest	405	
40				
1900				
20				
40				
2000				
20		302(s)		302(o)
40		Rest	302(o)	302(s)
2100		302(o)	302(s)	E/Hyg
20		E/Hyg		
40				
2200			404	
20				
40		Rest		Rest
2300				
20			E/Hyg	
40				
2400				

DAY 27	ORBIT	CREWMEN ACTIVITIES 1	2	3
0000				
20			E/Hyg	E/Hyg
40		405		
0100				
20				
40			Rest	Rest
0200		Rest		
20		302(s)		302(o)
40		Rest	302(o)	302(s)
0300		302(o)	302(s)	
20		E/Hyg	E/Hyg	E/Hyg
40				
0400				
20		Rest		
40			Rest	Rest
0500				
20				
40			403	
0600				
20				
40			402	405
0700				
20				
40				E/Hyg
0800		Sleep		
20				
40				
0900				
20				
40				
1000				
20				Rest
40				
1100			Sleep	
20				
40		E/Hyg		
1200				
20				E/Hyg
40		405		
1300				
20				Rest
40				
1400				
20				
40				
1500		Rest	E/Hyg	
20				
40				
1600				
20				
40				
1700		E/Hyg		Sleep
20				
40				
1800			Rest	
20		Rest		
40				
1900				
20				
40				
2000				
20		302(s)		302(o)
40		Rest	302(o)	302(s)
2100		302(o)	302(s)	E/Hyg
20		E/Hyg		
40				
2200			404	
20				
40		Rest		Rest
2300				
20			E/Hyg	
40				
2400				

DAY 28	ORBIT	CREWMEN ACTIVITIES 1	2	3
0000				
20			E/Hyg	E/Hyg
40		405		
0100				
20				
40			Rest	Rest
0200				
20		302(s)		302(o)
40		Rest	302(o)	302(s)
0300		302(o)	302(s)	
20		E/Hyg	E/Hyg	E/Hyg
40				
0400				
20		Rest		
40			Rest	
0500				Rest
20				
40			403	
0600				
20				
40			402	405
0700				
20				
40				E/Hyg
0800		Sleep		
20				
40				
0900				
20				
40				
1000				
20				Rest
40				
1100			Sleep	
20				
40		EVA OBS		L10H
1200				
20				E/Hyg
40		405		
1300				
20				Rest
40		E/Hyg		
1400				
20				
40				
1500		Rest	E/Hyg	
20				
40				
1600				
20				
40				
1700		E/Hyg		Sleep
20				
40				
1800			Rest	
20		Rest		
40				
1900				
20				
40				
2000				
20		302(s)		302(o)
40		Rest	302(o)	302(s)
2100		302(o)	302(s)	
20		E/Hyg		E/Hyg
40				
2200			404	
20				
40		Rest		Rest
2300				
20			E/Hyg	
40				
2400				

NOTES

[redacted]

Table 3-2 **CREW SCHEDULING, FLIGHT** 219 , **SHEET** 8 **OF** 12

2-5.20

DAY 29	ORBIT	CREWMEN ACTIVITIES 1	2	3
0000				
20		405	E/Hyg	E/Hyg
40				
0100				
20			Rest	Rest
40				
0200				
20		302(s)		302(o)
40		Rest	302(o)	302(s)
0300		302(o)	302(s)	
20		E/Hyg	E/Hyg	E/Hyg
40				
0400				
20		Rest		
40			Rest	Rest
0500				
20				
40			403	
0600				
20				
40				405
0700			402	
20				
40				E/Hyg
0800		Sleep		
20				
40				
0900				
20				
40				
1000				Rest
20				
40				
1100				
20				
40		E/Hyg	Sleep	E/Hyg
1200				
20				
40		405		
1300				Rest
20				
40				
1400				
20				
40				
1500		Rest	E/Hyg	
20				
40				
1600				
20				
40				
1700		E/Hyg	Rest	Sleep
20				
40				
1800				
20				
40			405	
1900				
20		Rest		
40				
2000				
20		302(s)		302(o)
40		Rest	302(o)	302(s)
2100		302(o)	302(s)	
20		E/Hyg		E/Hyg
40				
2200			404	
20				
40		Rest		Rest
2300				
20			E/Hyg	
40				
2400			Rest	

DAY 30	ORBIT	CREWMEN ACTIVITIES 1	2	3
0000				
20		405	E/Hyg	E/Hyg
40				
0100				
20			Rest	Rest
40				
0200				
20		302(s)		302(o)
40		Rest	302(o)	302(s)
0300		302(o)	302(s)	
20		E/Hyg	E/Hyg	E/Hyg
40				
0400				
20		Rest		
40			Rest	Rest
0500				
20				
40			403	
0600				
20				
40				405
0700			402	
20				
40				E/Hyg
0800		Sleep		
20				
40				
0900				
20				
40				
1000				Rest
20				
40				
1100				
20				
40		E/Hyg	Sleep	E/Hyg
1200				
20				
40		405		
1300				Rest
20				
40				
1400				
20				
40				
1500		Rest	E/Hyg	
20				
40				
1600				
20				
40				
1700		E/Hyg	Rest	Sleep
20				
40				
1800				
20				
40			405	
1900				
20		Rest		
40				
2000				
20		302(s)		302(o)
40		Rest	302(o)	302(s)
2100		302(o)	302(s)	
20		E/Hyg		E/Hyg
40				
2200			404	
20				
40		Rest		Rest
2300				
20			E/Hyg	
40				
2400			Rest	

DAY 31	ORBIT	CREWMEN ACTIVITIES 1	2	3
0000				
20		405	E/Hyg	E/Hyg
40				
0100				
20			Rest	Rest
40				
0200				
20		302(s)		302(o)
40		Rest	302(o)	302(s)
0300		302(o)	302(s)	
20		E/Hyg	E/Hyg	E/Hyg
40				
0400				
20		Rest		
40			Rest	Rest
0500				
20				
40			403	
0600				
20				
40				405
0700			402	
20				
40				E/Hyg
0800		Sleep		
20				
40				
0900				
20				
40				
1000				Rest
20				
40				
1100				
20				
40		E/Hyg	Sleep	E/Hyg
1200				
20				
40		405		
1300				Rest
20				
40				
1400				
20				
40				
1500		Rest	E/Hyg	
20				
40				
1600				
20				
40				
1700		E/Hyg	Rest	Sleep
20				
40				
1800				
20				
40			405	
1900				
20		Rest		
40				
2000				
20		302(s)		302(o)
40		Rest	302(o)	302(s)
2100		302(o)	302(s)	
20		E/Hyg		E/Hyg
40				
2200			404	
20				
40		Rest		Rest
2300				
20			E/Hyg	
40				
2400			Rest	

DAY 32	ORBIT	CREWMEN ACTIVITIES 1	2	3
0000				
20		405	E/Hyg	E/Hyg
40				
0100				
20			Rest	Rest
40				
0200				
20		302(s)		302(o)
40		Rest	302(o)	302(s)
0300		302(o)	302(s)	
20		E/Hyg	E/Hyg	E/Hyg
40				
0400				
20		Rest		
40			Rest	Rest
0500				
20				
40			403	
0600				
20				
40				405
0700			402	
20				
40				E/Hyg
0800		Sleep		
20				
40				
0900				
20				
40				
1000				Rest
20				
40				
1100				
20				
40		E/Hyg	Sleep	E/Hyg
1200				
20				
40		405		
1300				Rest
20				
40				
1400				
20		Rest		
40				
1500			E/Hyg	
20				
40				
1600				
20				
40				
1700		E/Hyg	Rest	Sleep
20				
40				
1800				
20				
40			405	
1900				
20		Rest		
40				
2000				
20		302(s)		302(o)
40		Rest	302(o)	302(s)
2100		302(o)	302(s)	
20		E/Hyg		E/Hyg
40				
2200			404	
20				
40		Rest		Rest
2300				
20			E/Hyg	
40				
2400			Rest	

NOTES

Table 3-2 **CREW SCHEDULING, FLIGHT** 219 **SHEET** 9 **OF** 12

DAY 33	ORBIT	CREWMEN ACTIVITIES 1	2	3
0000				
20				
40		405	E/Hyg	E/Hyg
0100				
20				
40			Rest	Rest
0200				
20		302(s)		302(o)
40		Rest	302(o)	302(s)
0300		302(o)	302(s)	
20		E/Hyg	E/Hyg	E/Hyg
40				
0400				
20		Rest		
40			Rest	Rest
0500				
20				
40			403	
0600				
20				
40				405
0700			402	
20				
40		Sleep		E/Hyg
0800				
20				
40				
0900				
20				
40				
1000				
20				Rest
40				
1100			Sleep	
20				
40		E/Hyg		
1200				E/Hyg
20				
40		405		
1300				
20				Rest
40				
1400				
20				
40				
1500		Rest	E/Hyg	
20				
40				
1600			Rest	
20				
40				Sleep
1700		E/Hyg		
20				
40				
1800				
20				
40			405	
1900		Rest		
20				
40				
2000				
20		302(s)		302(o)
40		Rest	302(o)	302(s)
2100		302(o)	302(s)	
20		E/Hyg		E/Hyg
40				
2200			404	
20				
40		Rest		Rest
2300				
20			E/Hyg	
40				
2400				

DAY 34	ORBIT	CREWMEN ACTIVITIES 1	2	3
0000				
20				
40		405	E/Hyg	E/Hyg
0100				
20				
40			Rest	Rest
0200				
20		302(s)		302(o)
40		Rest	302(o)	302(s)
0300		302(o)	302(s)	
20		E/Hyg	E/Hyg	E/Hyg
40				
0400				
20		Rest		
40			Rest	Rest
0500				
20				
40			403	
0600				
20				
40				405
0700			402	
20				
40		Sleep		E/Hyg
0800				
20				
40				
0900				
20				
40				
1000				
20				Rest
40				
1100			Sleep	
20				
40		E/Hyg		
1200				E/Hyg
20				
40		405		
1300				
20				Rest
40				
1400				
20				
40				
1500		Rest	E/Hyg	
20				
40				
1600			Rest	
20				
40				Sleep
1700		E/Hyg		
20				
40				
1800				
20				
40			405	
1900		Rest		
20				
40				
2000				
20		302(s)		302(o)
40		Rest	302(o)	302(s)
2100		302(o)	302(s)	
20		E/Hyg		E/Hyg
40				
2200			404	
20				
40		Rest		Rest
2300				
20			E/Hyg	
40				
2400				

DAY 35	ORBIT	CREWMEN ACTIVITIES 1	2	3
0000				
20				
40		405	E/Hyg	E/Hyg
0100				
20				
40			Rest	Rest
0200				
20		302(s)		302(o)
40		Rest	302(o)	302(s)
0300		302(o)	302(s)	
20		E/Hyg	E/Hyg	E/Hyg
40				
0400				
20		Rest		
40			Rest	Rest
0500				
20				
40			403	
0600				
20				
40				405
0700			402	
20				
40		Sleep		E/Hyg
0800				
20				
40				
0900				
20				
40				
1000				
20				Rest
40				
1100			Sleep	
20				
40		E/Hyg		
1200				E/Hyg
20				
40		405		
1300				
20				Rest
40				
1400				
20				
40				
1500		Rest	E/Hyg	
20				
40				
1600			Rest	
20				
40				Sleep
1700		E/Hyg		
20				
40				
1800				
20				
40			405	
1900		Rest		
20				
40				
2000				
20		302(s)		302(o)
40		Rest	302(o)	302(s)
2100		302(s)	302(s)	
20		E/Hyg		E/Hyg
40				
2200			404	
20				
40		Rest		Rest
2300				
20			E/Hyg	
40		EVA.OBS		L1OH
2400				

DAY 36	ORBIT	CREWMEN ACTIVITIES 1	2	3
0000				
20				
40		405	E/Hyg	E/Hyg
0100				
20				
40			Rest	Rest
0200				
20		302(s)		302(o)
40		Rest	302(o)	302(s)
0300		302(o)	302(s)	
20		E/Hyg	E/Hyg	E/Hyg
40				
0400				
20		Rest		
40			Rest	Rest
0500				
20				
40			403	
0600				
20				
40				405
0700			402	
20				
40		Sleep		E/Hyg
0800				
20				
40				
0900				
20				
40				
1000				
20				Rest
40				
1100			Sleep	
20				
40		E/Hyg		
1200				E/Hyg
20				
40		405		
1300				
20				Rest
40				
1400				
20				
40				
1500		Rest	E/Hyg	
20				
40				
1600			Rest	
20				
40				Sleep
1700		E/Hyg		
20				
40				
1800				
20				
40			405	
1900		Rest		
20				
40				
2000				
20		302(s)		302(o)
40		Rest	302(o)	302(s)
2100		302(o)	302(s)	
20		E/Hyg		E/Hyg
40				
2200			404	
20				
40		Rest		Rest
2300				
20			E/Hyg	
40				
2400				

NOTES

Table 3-2 **CREW SCHEDULING, FLIGHT** 219, **SHEET** 10 **OF** 12

2-8.22

DAY 37	ORBIT	CREWMEN ACTIVITIES 1	2	3
0000				
20			E/Hyg	E/Hyg
40		405		
0100				
20			Rest	Rest
40				
0200				
20		302(s)		302(o)
40		Rest	302(o)	302(s)
0300		302(o)	302(s)	
20		E/Hyg	E/Hyg	E/Hyg
40				
0400				
20		Rest		
40			Rest	
0500				Rest
20			403	
40				
0600				
20				405
40			402	
0700				
20		Sleep		E/Hyg
40				
0800				
20				
40				
0900				
20				
40				
1000				Rest
20				
40				
1100			Sleep	
20				
40		E/Hyg		
1200				E/Hyg
20				
40		405		
1300				Rest
20				
40				
1400				
20				
40				
1500		Rest	E/Hyg	
20				
40				
1600			Rest	
20				
40				Sleep
1700		E/Hyg		
20				
40			405	
1800				
20		Rest		
40				
1900				
20				
40				
2000				
20		302(s)		302(o)
40		Rest	302(o)	302(s)
2100		302(o)	302(s)	
20		E/Hyg		E/Hyg
40			404	
2200				
20				
40		Rest		Rest
2300				
20				
40			Rest	
2400				

DAY 38	ORBIT	CREWMEN ACTIVITIES 1	2	3
0000				
20			E/Hyg	E/Hyg
40		405		
0100				
20			Rest	Rest
40				
0200				
20		302(s)		302(o)
40		Rest	302(o)	302(s)
0300		302(o)	302(s)	
20		E/Hyg	E/Hyg	E/Hyg
40				
0400				
20		Rest		
40			Rest	
0500				Rest
20			403	
40				
0600				
20				405
40			402	
0700				
20		Sleep		E/Hyg
40				
0800				
20				
40				
0900				
20				
40				
1000				Rest
20				
40				
1100			Sleep	
20				
40		E/Hyg		
1200				E/Hyg
20				
40		405		
1300				Rest
20				
40				
1400				
20				
40				
1500		Rest	E/Hyg	
20				
40				
1600			Rest	
20				
40				Sleep
1700		E/Hyg		
20				
40			405	
1800				
20		Rest		
40				
1900				
20				
40				
2000				
20		302(s)		302(o)
40		Rest	302(o)	302(s)
2100		302(o)	302(s)	
20		E/Hyg		E/Hyg
40			404	
2200				
20				
40		Rest		Rest
2300				
20				
40			Rest	
2400				

DAY 39	ORBIT	CREWMEN ACTIVITIES 1	2	3
0000				
20			E/Hyg	E/Hyg
40		405		
0100				
20			Rest	Rest
40				
0200				
20		302(s)		302(o)
40		Rest	302(o)	302(s)
0300		302(o)	302(s)	
20		E/Hyg	E/Hyg	E/Hyg
40				
0400				
20		Rest		
40			Rest	
0500				Rest
20			403	
40				
0600				
20				405
40			402	
0700				
20		Sleep		E/Hyg
40				
0800				
20				
40				
0900				
20				
40				
1000				Rest
20				
40				
1100			Sleep	
20				
40		E/Hyg		
1200				E/Hyg
20				
40		405		
1300				Rest
20				
40				
1400				
20				
40				
1500		Rest	E/Hyg	
20				
40				
1600			Rest	
20				
40				Sleep
1700		E/Hyg		
20				
40			405	
1800				
20		Rest		
40				
1900				
20				
40				
2000				
20		302(s)		302(o)
40		Rest	302(o)	302(s)
2100		302(o)	302(s)	
20		E/Hyg		E/Hyg
40			404	
2200				
20				
40		Rest		Rest
2300				
20				
40			Rest	
2400				

DAY 40	ORBIT	CREWMEN ACTIVITIES 1	2	3
0000				
20			E/Hyg	E/Hyg
40		405		
0100				
20			Rest	Rest
40				
0200				
20		302(s)		302(o)
40		Rest	302(o)	302(s)
0300		302(o)	302(s)	
20		E/Hyg	E/Hyg	E/Hyg
40				
0400				
20		Rest		
40			Rest	
0500				Rest
20			403	
40				
0600				
20				405
40			402	
0700				
20		Sleep		E/Hyg
40				
0800				
20				
40				
0900				
20				
40				
1000				Rest
20				
40				
1100			Sleep	
20				
40		E/Hyg		
1200				E/Hyg
20				
40		405		
1300				Rest
20				
40				
1400				
20				
40				
1500		Rest	E/Hyg	
20				
40				
1600				
20				Sleep
40				
1700		E/Hyg	Rest	
20				
40			405	
1800				
20		Rest		
40				
1900				
20				
40				
2000				
20		302(s)		302(o)
40		Rest	302(o)	302(s)
2100		302(o)	302(s)	
20		E/Hyg		E/Hyg
40			404	
2200				
20				
40		Rest		Rest
2300				
20				
40			Rest	
2400				

NOTES

Table 3-2 CREW SCHEDULING, FLIGHT 219, SHEET 11 OF 12

2-5.23

DAY 41	ORBIT	CREWMEN ACTIVITIES 1	2	3
0000				
20			E/Hyg	E/Hyg
40		405		
0100				
20			Rest	Rest
40				
0200				
20		302(s)		302(o)
40		Rest	302(o)	302(s)
0300		302(o)	302(s)	
20		E/Hyg	E/Hyg	E/Hyg
40				
0400				
20		Rest	Rest	Rest
40				
0500				
20				
40			403	
0600				
20				
40				405
0700			402	
20				
40				E/Hyg
0800		Sleep		
20				
40				
0900				
20				
40				
1000				Rest
20				
40				
1100			Sleep	
20				
40		E/Hyg		
1200				E/Hyg
20				
40		405		
1300				
20				Rest
40				
1400				
20				
40				
1500		Rest	E/Hyg	
20				
40				
1600				
20				
40				Sleep
1700		E/Hyg	Rest	
20				
40				
1800				
20		Rest		
40			405	
1900				
20				
40				
2000				
20		302(s)		302(o)
40		Rest	302(o)	302(s)
2100		302(o)	302(s)	E/Hyg
20		E/Hyg		
40				
2200			404	
20				Rest
40		Rest		
2300				
20			Rest	
40				
2400				

DAY 42	ORBIT	CREWMEN ACTIVITIES 1	2	3
0000				
20			E/Hyg	E/Hyg
40		405		
0100				
20			Rest	Rest
40				
0200				
20		302(s)		302(o)
40		Rest	302(o)	302(s)
0300		302(o)	302(s)	
20		E/Hyg	E/Hyg	R/Hyg
40				
0400				
20		Rest	Rest	Rest
40				
0500				
20				
40			403	
0600				
20				
40				405
0700			402	
20				
40				E/Hyg
0800		Sleep		
20				
40				
0900				
20				
40				
1000				Rest
20				
40				
1100			Sleep	
20				
40		E/Hyg		
1200				E/Hyg
20				
40		405		
1300				
20				Rest
40				
1400				
20				
40				
1500		Rest	E/Hyg	
20				
40				
1600				
20				
40				Sleep
1700		E/Hyg	Rest	
20				
40				
1800				
20		Rest		
40			405	
1900				
20				
40		EVA, OBS.	L1OH	
2000				
20		302(s)		302(o)
40		Rest	302(o)	302(s)
2100		302(o)	302(s)	E/Hyg
20		E/Hyg		
40				
2200			404	
20				Rest
40		Rest		
2300				
20			Rest	
40				
2400				

DAY 43	ORBIT	CREWMEN ACTIVITIES 1	2	3
0000				
20			E/Hyg	E/Hyg
40		405		
0100				
20			Rest	Rest
40				
0200				
20		302(s)		302(o)
40		Rest	302(o)	302(s)
0300		302(o)	302(s)	
20		E/Hyg	E/Hyg	E/Hyg
40				
0400				
20		Rest	Rest	Rest
40				
0500				
20				
40			403	
0600				
20				
40				405
0700			402	
20				
40				E/Hyg
0800		Sleep		
20				
40				
0900				
20				
40				
1000				Rest
20				
40				
1100			Sleep	
20				
40		E/Hyg		
1200				E/Hyg
20				
40		405		
1300				
20				Rest
40				
1400				
20				
40				
1500		Rest	E/Hyg	
20				
40				
1600				
20				
40				Sleep
1700		E/Hyg	Rest	
20				
40				
1800				
20		Rest		
40			405	
1900				
20				
40				
2000				
20		302(s)		302(o)
40		Rest	302(o)	302(s)
2100		302(o)	302(s)	E/Hyg
20		E/Hyg		
40				
2200			404	
20				Rest
40		Rest		
2300				
20			Rest	
40				
2400				

DAY 44	ORBIT	CREWMEN ACTIVITIES 1	2	3
0000				
20			E/Hyg	E/Hyg
40		405		
0100				
20			Rest	Rest
40				
0200				
20		302(s)		302(o)
40		Rest	302(o)	302(s)
0300		302(o)	302(s)	
20		E/Hyg	E/Hyg	E/Hyg
40				
0400				
20		Rest	Rest	Rest
40				
0500				
20				
40			403	
0600				
20				
40				405
0700			Rest	
20				
40				E/Hyg
0800		Sleep		
20				
40				
0900				
20				
40				
1000				Rest
20				
40				
1100			Sleep	
20				
40		E/Hyg		
1200				E/Hyg
20				
40		405		
1300				
20				Rest
40				
1400				
20				
40				
1500		Rest	E/Hyg	
20				
40				
1600				
20				
40				Sleep
1700		E/Hyg	Rest	
20				
40				
1800				
20		Rest		
40			405	
1900				
20				
40				
2000				
20		302(s)		302(o)
40		Rest	302(o)	302(s)
2100		302(o)	302(s)	E/Hyg
20		E/Hyg		
40				
2200			404	
20				Rest
40		Rest		
2300				
20			Rest	
40				
2400				

NOTES

Table 3-2 CREW SCHEDULING, FLIGHT 219 , SHEET 12 OF 12

2-8.24

DAY 45	ORBIT	CREWMEN ACTIVITIES 1	2	3
0000		E/Hyg	E/Hyg	E/Hyg
20				
40				
0100				
20				
40		Rest	Rest	Rest
0200				
20		302(s)		302(o)
40		Rest	302(o)	302(s)
0300		302(o)	302(s)	
20				
40				
0400				
20				
40				
0500				
20				
40				
0600		Rest	Rest	Rest
20				
40				
0700				
20				
40				
0800				
20				
40				
0900		E/Hyg	E/Hyg	E/Hyg
20				
40				
1000				
20				
40				
1100				
20				
40				
1200				
20				
40				
1300				
20				
40				
1400				
20				
40				
1500				
20				
40				
1600				
20				
40				
1700				
20				
40				
1800				
20				
40				
1900				
20				
40				
2000				
20				
40				
2100				
20				
40				
2200				
20				
40				
2300				
20				
40				
2400				

DAY	ORBIT	CREWMEN ACTIVITIES 1	2	3
0000				
20				
40				
0100				
20				
40				
0200				
20				
40				
0300				
20				
40				
0400				
20				
40				
0500				
20				
40				
0600				
20				
40				
0700				
20				
40				
0800				
20				
40				
0900				
20				
40				
1000				
20				
40				
1100				
20				
40				
1200				
20				
40				
1300				
20				
40				
1400				
20				
40				
1500				
20				
40				
1600				
20				
40				
1700				
20				
40				
1800				
20				
40				
1900				
20				
40				
2000				
20				
40				
2100				
20				
40				
2200				
20				
40				
2300				
20				
40				
2400				

DAY	ORBIT	CREWMEN ACTIVITIES 1	2	3
0000				
20				
40				
0100				
20				
40				
0200				
20				
40				
0300				
20				
40				
0400				
20				
40				
0500				
20				
40				
0600				
20				
40				
0700				
20				
40				
0800				
20				
40				
0900				
20				
40				
1000				
20				
40				
1100				
20				
40				
1200				
20				
40				
1300				
20				
40				
1400				
20				
40				
1500				
20				
40				
1600				
20				
40				
1700				
20				
40				
1800				
20				
40				
1900				
20				
40				
2000				
20				
40				
2100				
20				
40				
2200				
20				
40				
2300				
20				
40				
2400				

DAY	ORBIT	CREWMEN ACTIVITIES 1	2	3
0000				
20				
40				
0100				
20				
40				
0200				
20				
40				
0300				
20				
40				
0400				
20				
40				
0500				
20				
40				
0600				
20				
40				
0700				
20				
40				
0800				
20				
40				
0900				
20				
40				
1000				
20				
40				
1100				
20				
40				
1200				
20				
40				
1300				
20				
40				
1400				
20				
40				
1500				
20				
40				
1600				
20				
40				
1700				
20				
40				
1800				
20				
40				
1900				
20				
40				
2000				
20				
40				
2100				
20				
40				
2200				
20				
40				
2300				
20				
40				
2400				

NOTES

GRUMMAN AIRCRAFT ENGINEERING CORPORATION

Table 3-3 APOLLO EXTENSION SYSTEM EARTH ORBIT MISSION STUDY

FLIGHT 219 EXPERIMENT MISSION PROFILE

SHEET 1 OF 4

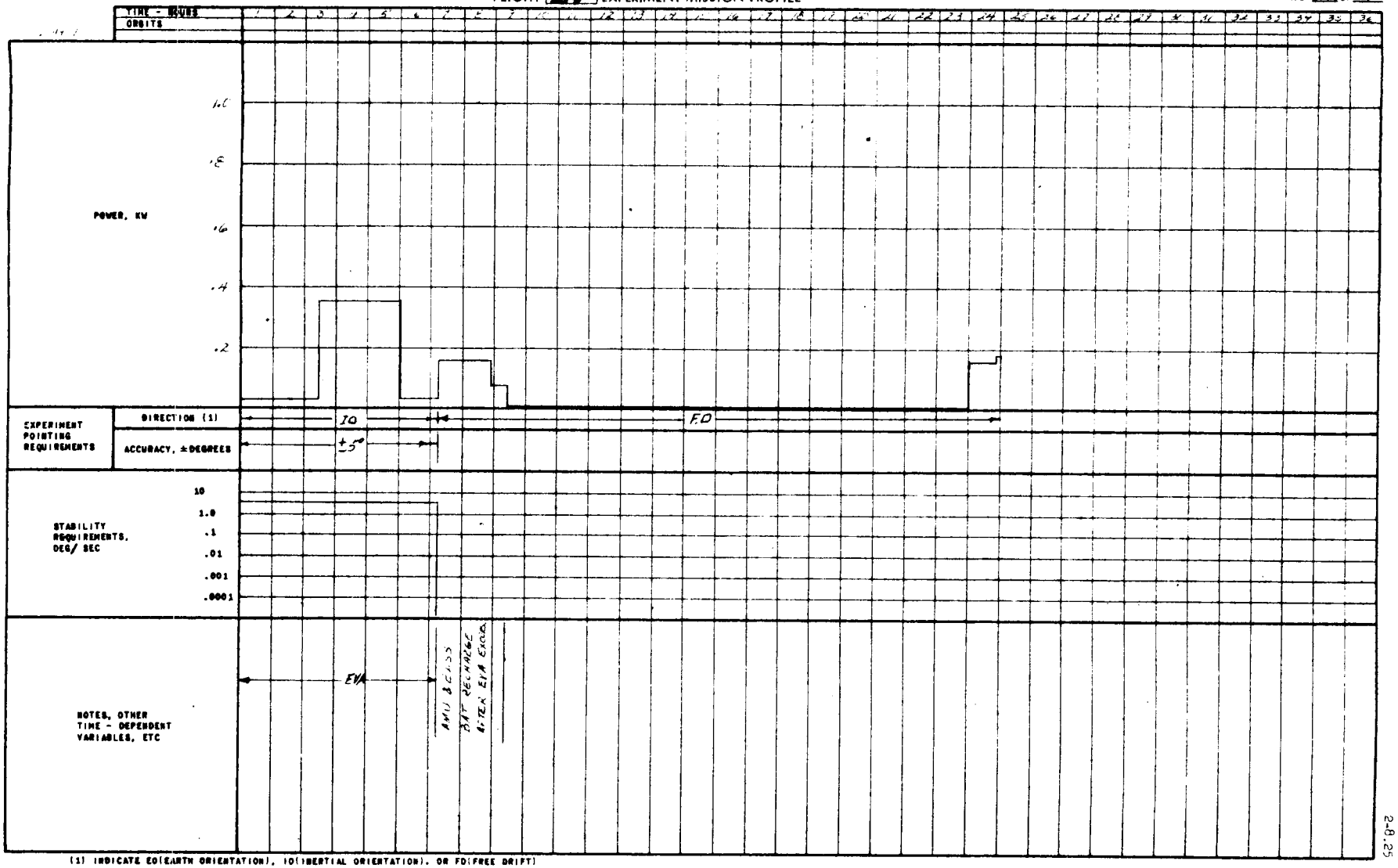

(1) INDICATE EO(EARTH ORIENTATION), IO(INERTIAL ORIENTATION), OR FD(FREE DRIFT)

2-8.25

~~CONFIDENTIAL~~

GRUMMAN AIRCRAFT ENGINEERING CORPORATION

Table 3-3 APOLLO EXTENSION SYSTEM EARTH ORBIT MISSION STUDY
FLIGHT [2/9] EXPERIMENT MISSION PROFILE

SHEET 2 OF 4

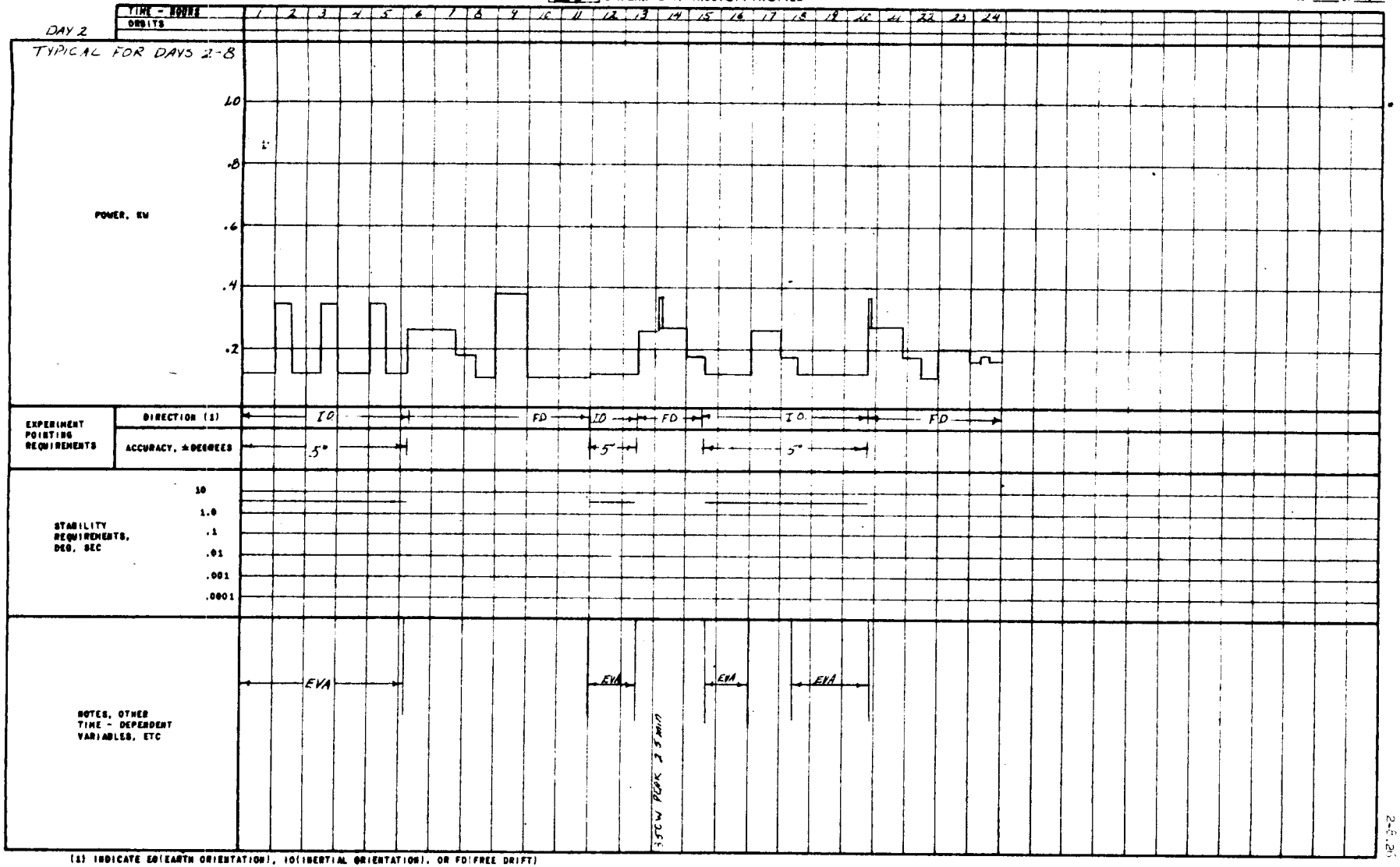

(1) INDICATE EO(EARTH ORIENTATION), IO(INERTIAL ORIENTATION), OR FD(FREE DRIFT)

2-8.26

~~CONFIDENTIAL~~

Table 3-3 APOLLO EXTENSION SYSTEM EARTH ORBIT MISSION STUDY
FLIGHT [redacted] EXPERIMENT MISSION PROFILE

DAY 10

TYPICAL FOR DAYS 9-19

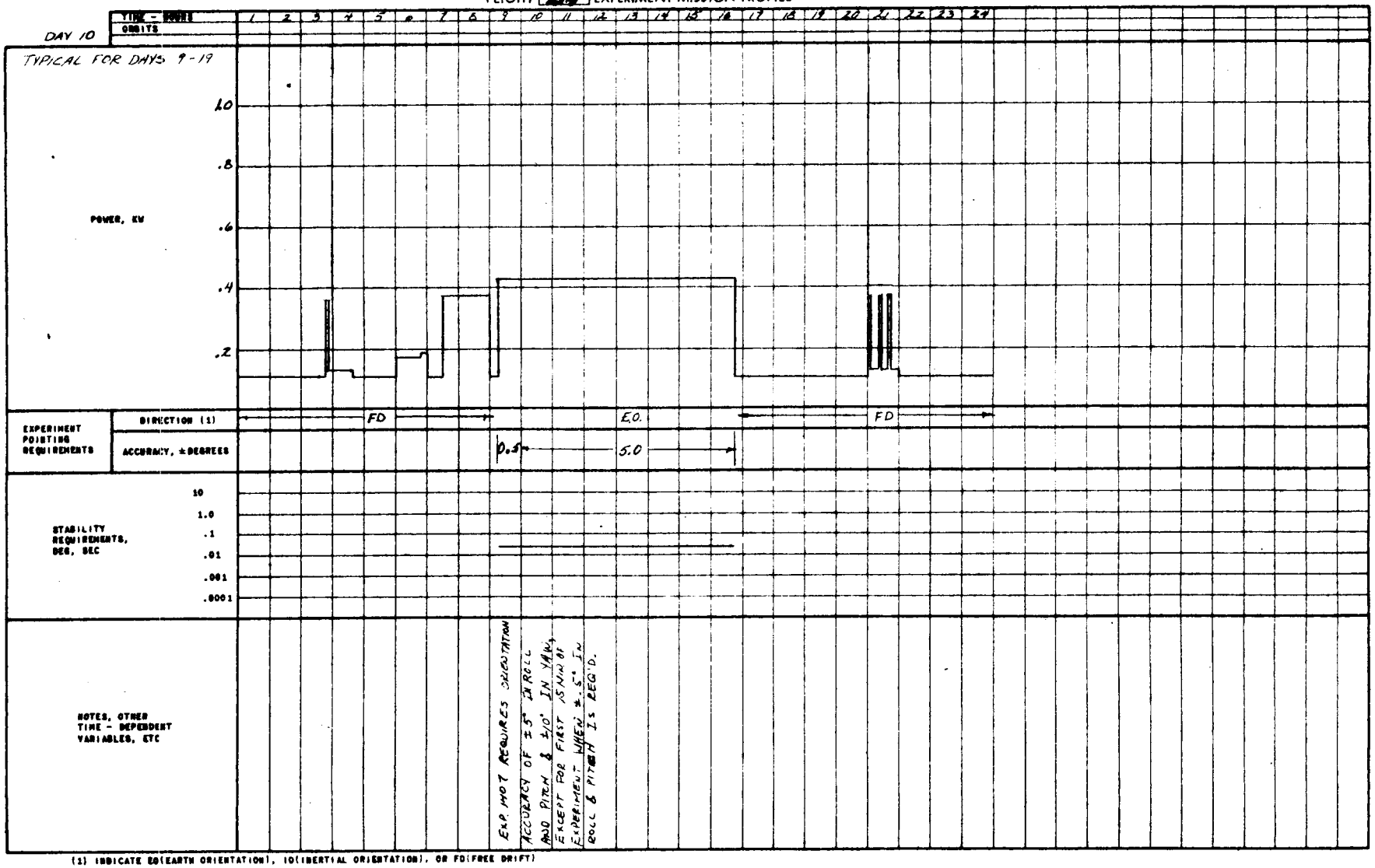

(1) INDICATE EO(EARTH ORIENTATION), IO(INERTIAL ORIENTATION), OR FO(FREE DRIFT)

[redacted]

GRUMMAN AIRCRAFT ENGINEERING CORPORATION

Table 3-3 APOLLO EXTENSION SYSTEM EARTH ORBIT MISSION STUDY
FLIGHT [redacted] EXPERIMENT MISSION PROFILE

SHEET 4 OF 4

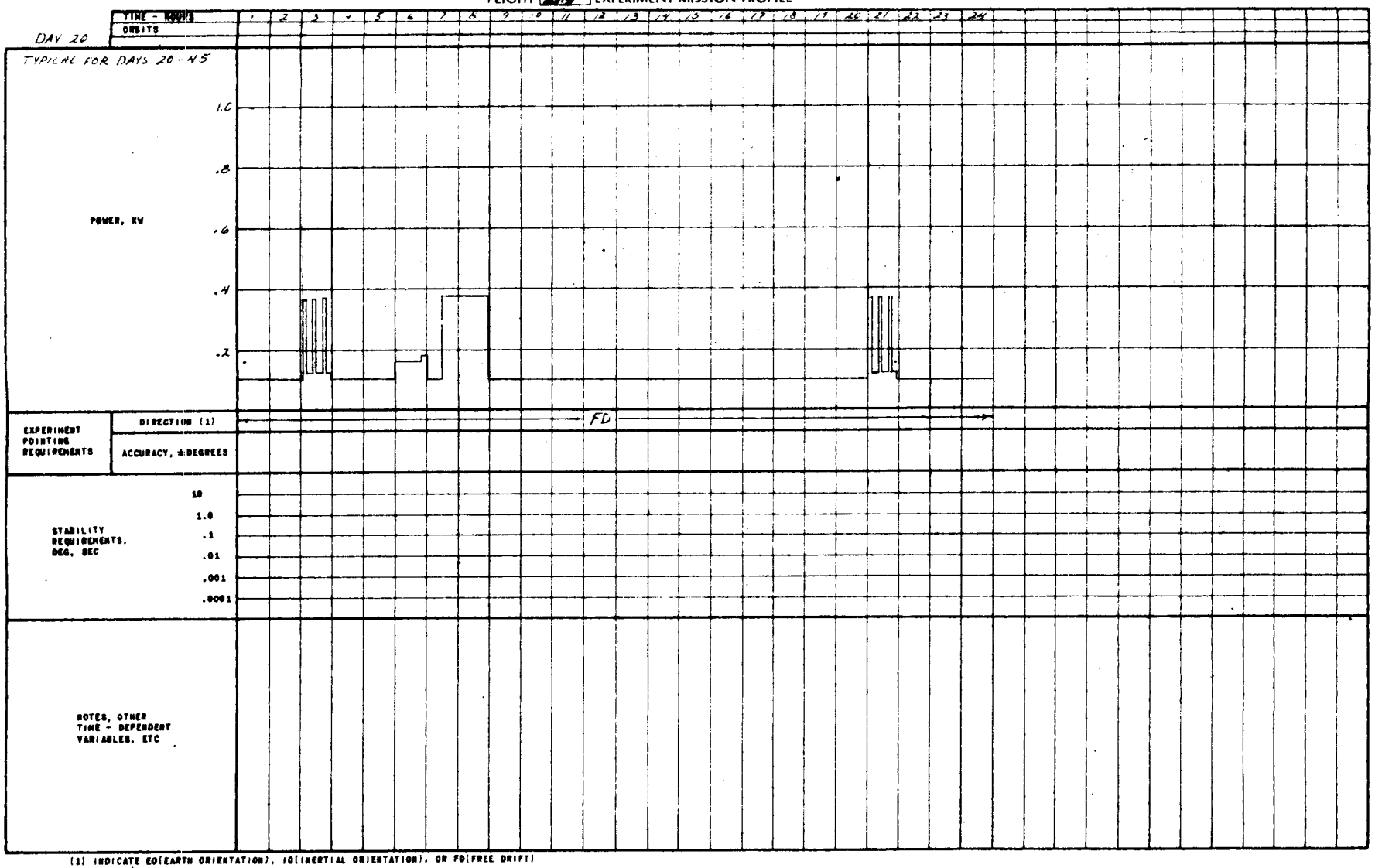

(1) INDICATE EO(EARTH ORIENTATION), IO(INERTIAL ORIENTATION), OR FD(FREE DRIFT)

[redacted]

3.2 SPACECRAFT DEFINITION

Flight 219 configuration, shown in Figures 3-1 and 3-2, carries resupply and supplementary experiments dealing with Bioscience and EVA, and are to be evaluated after rendezvous with the previous flight. This flight also carries the 0302 On-Board Centrifuge. Navigation and Guidance Experiment (1407), carried on the previous flight and performed on this flight, requires periodic orientation towards a landmark, to a stellar inertial reference and to local vertical. Attitude is held within a deadband of $\pm 5^{o}$, except during experiment periods having specific pointing and stability requirements. Pointing and stability requirements within the propellant capacity of the CSM, for this flight, are exceeded for both the "C" and "D" versions. For the "C" version, the previous flight's Lab RCS system supplements the attitude hold function. However, for the "D" version, the Lab for this flight must carry a LEM RCS system and added tankage to supplement the attitude hold function ---- and is also supplemented by the previous flight's Lab RCS system.

The laboratory is a standard LEM ascent state modified for living organisms experiments. The Living Organism Experiments (0401, 2, 3, 4, 4) are located in the forward cabin and equipment area of the A/S. The incubators and refrigerator associated with the Space Borne Micro-organisms experiment (0406) are located in the forward cabin of the A/S while the cartridges are stowed on the D/S. All animal containers are capable of pressurization and contain an ECS loop and waste management system.

Equipment for Extra Vehicular Operations (1501, 2, 3, 4, 5), requiring internal storage, is located on the aft bulkhead and on the right hand side of the equipment area of the A/S. A safety line is provided outside the forward hatch.

All experiment equipment installations are additions to existing LEM A/S structure. A low profile descent stage contains a docking tunnel and supports the On-board Centrifuge (0302). The tunnel permits passage through the existing A/S engine floor cutout, in coveralls. Pressure suits and backpacks may be passed down if required. The centrifuge is operated in a shirt sleeve environment.

The inboard profile (Figure 3-2) shows that adequate internal volume is available to accommodate experiments. All primary experiment displays and controls for this flight are located in the forward cabin of the previous Lab. A freezer for the Living Organisms Experiments (0401, 2, 3, 4, 5) is located below the floor in the forward cabin. All resupply LiOH cannisters are stored externally in the D/S. Resupply food is stored in the resupply Lab cabin and restocked into the previous flight's Lab once docking is achieved.

In addition to the standard CSM/Lab interface, this flight requires additional interface connections between this Lab and the originally resupplied Lab. The interface wiring is the same as that required for the Lab/CSM interface.

The difference between "C" and "D" versions of this Lab are the addition of one Apollo-X O_2 and one Apollo-X H_2 tank, added fuel cell reactants, a FCA and an increase in FCA radiator area of 19 ft^2. These modifications to a "C"-version Lab accommodate the added power demand of the "D" version Lab required by taking over CSM power requirements after (nominally) 14 days. In addition, the "D" version of the Lab carries the LEM RCS system and added tankage to supplement the RCS propellant requirements of the CSM "D" configuration.

KEY

No.	Experiment	Name
1		Fuel Cell Assy
2		Potable Water Tank
3		Waste Storage Tank
4		Power Pack
5		Water Tanks (Zoo)
6		RCS (on D Config. Only)
7		Tunnel & Docking Ring
8		Docking Probe
9		LioH
10		GOX
11		Safety Line
12		Equipment Radiator
13		Fuel Cell Radiator
14		Flight 218
15	0302	On-Board Centrifuge
16	1302	Centrifuge Counterbalance
17	0406	Sampling Device (Stowed)
18	0406	Sampling Device (Exposed)

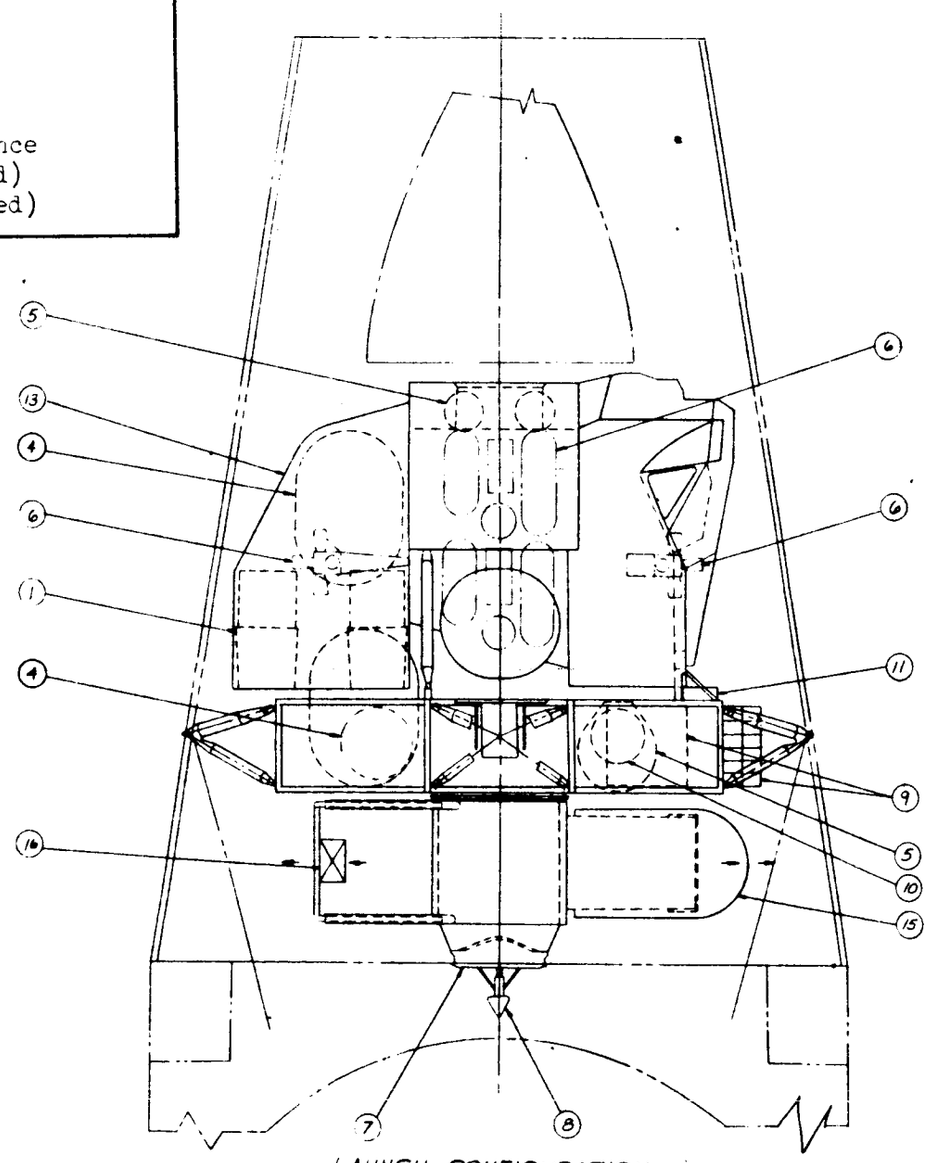

LAUNCH CONFIGURATION

FOLD-OUT #1

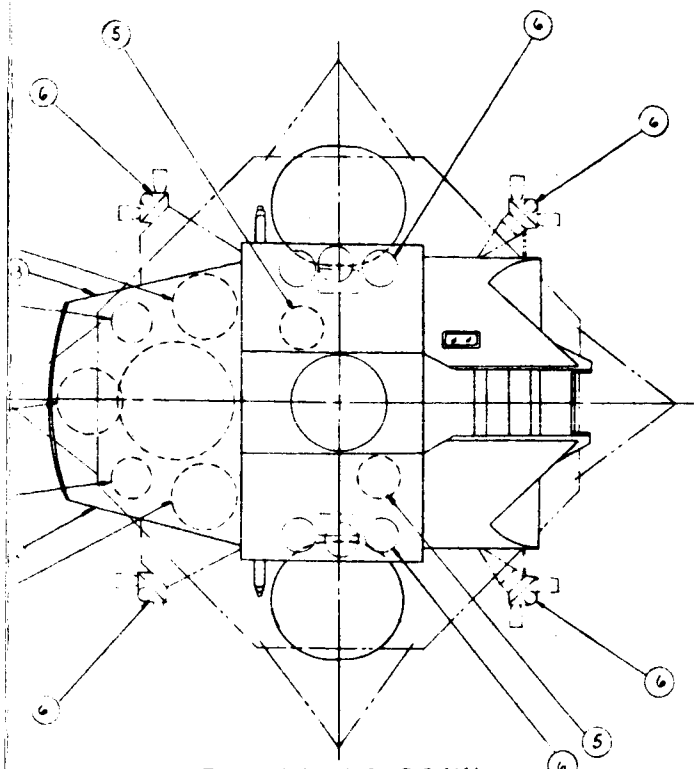

VIEW LOOKING DOWN
AT ASCENT STAGE

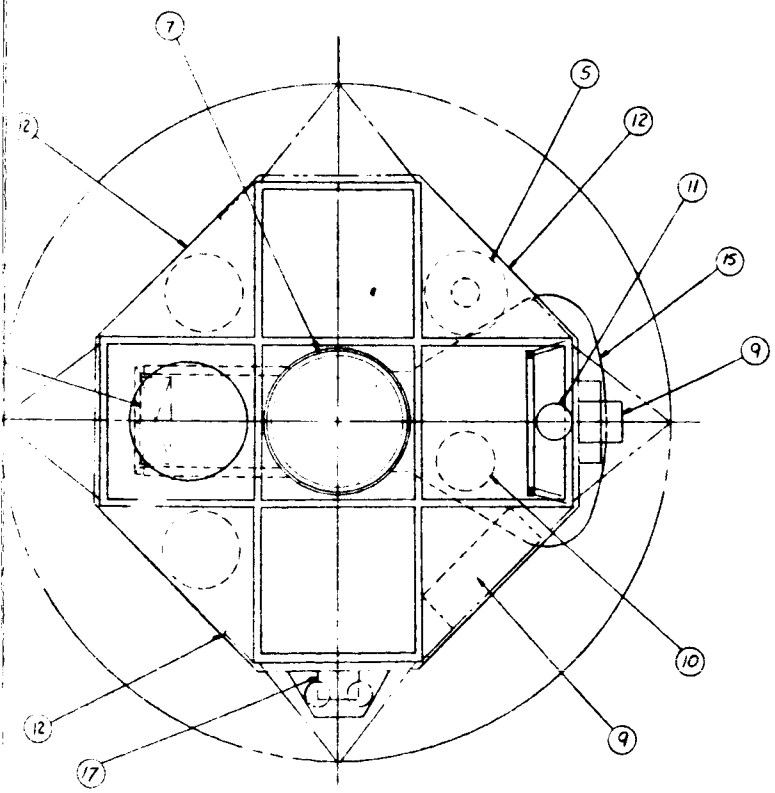

VIEW LOOKING DOWN
AT DESCENT STAGE

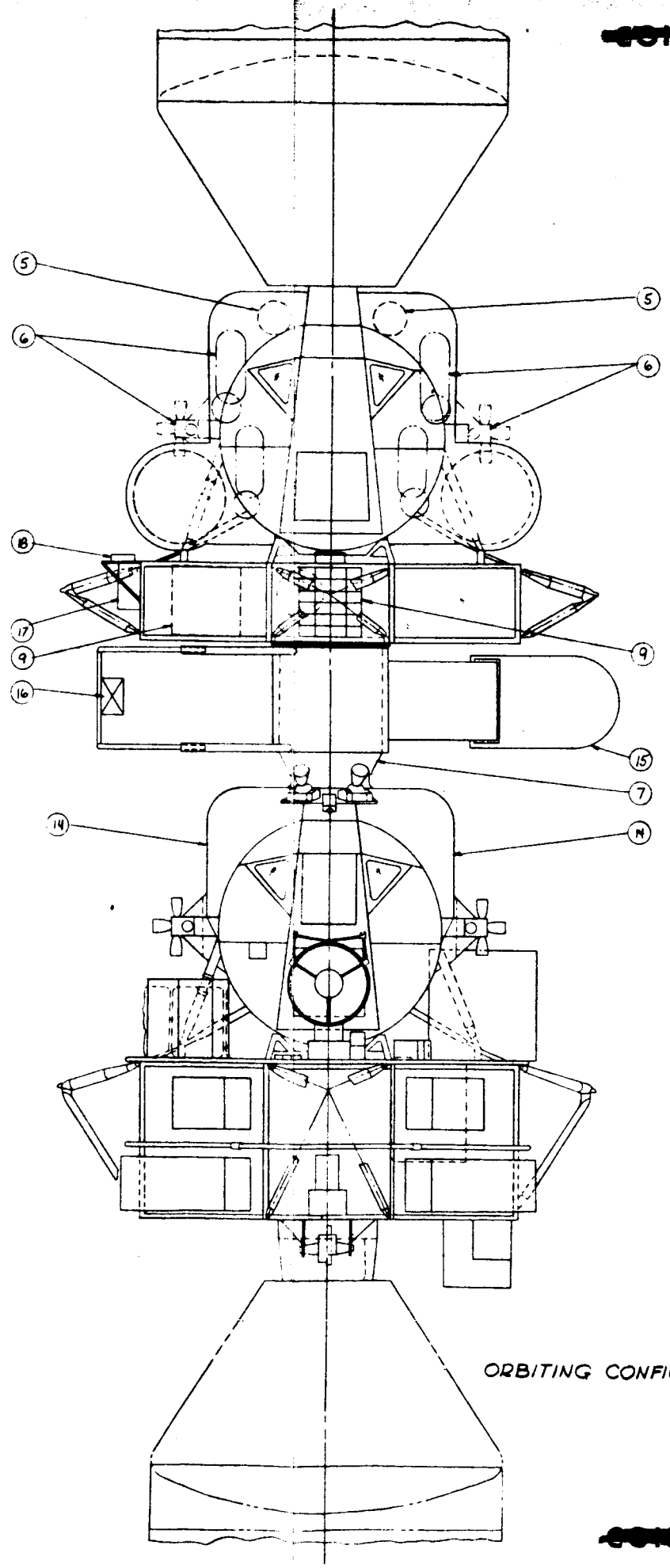

ORBITING CONFIGURATION

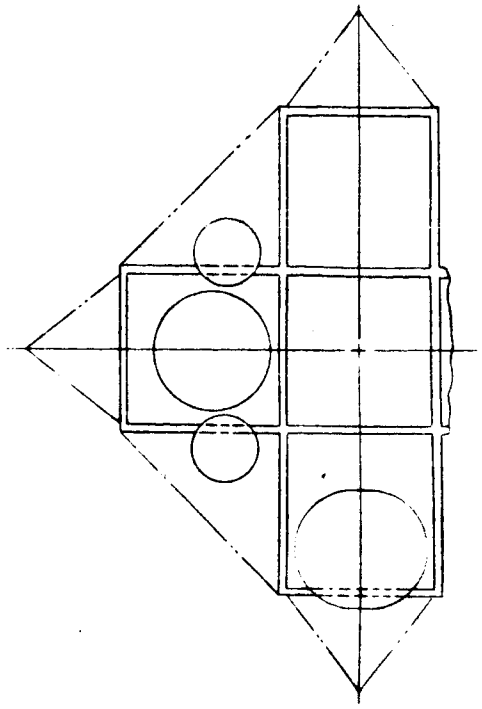

ALTERNATE POWER PACK
CONFIGURATION

0 20 40 60 80 100

SCALE : 1" = 20"

FOLD-OUT #2

[redacted]

Grumman
AIRCRAFT ENGINEERING CORPORATION
PRELIMINARY DESIGN SECT.

Fig. 3-1 Gen Arrgmt Flt. 219 Space Operation, Bioscience Lab

SCALE OF ORIG. DWG. 1/20

AES 1028

KEY

No.	Experiment	Name
1		ECS
2		Tunnel & Docking Ring
3		Film Storage
4		GOX
5		Fuel Cell Assy
6		Power Pack
7		LioH
8		Flight 218 Lab
9	401,2,[illegible],2,5	Freezer
10	40[illegible]	Lyophilization Apparatus
11	401,40[illegible],404	Chemical & Equipment Storage
12	401,40[illegible],406	Incubators
13	401,40[illegible],406	Microscope
14	40[illegible],402	Refrigerator (-15°c)
15	40[illegible]	Refrigerator (-20°c)
16	40[illegible]	Culture Flasks
17	402,40[illegible],404	Supply Cabinets (Includes 35mm Camera)
18	40[illegible]	Scintillation Counter
19	40[illegible]	Particle Counter
20	40[illegible]	Centrifuge
21	40[illegible]	Chimpanzee Enclosure (Pressurized)
22	40[illegible]	Waste Management (Chimpanzee)
23	40[illegible]	Food Management System
24	40[illegible]	Instrumentation for Chimpanzee Psychological Panel
25	40[illegible]	Planaria & Newts Chamber (Pressurized)
26	40[illegible]	Refrigerator (-5°c)
27	40[illegible]	Rat Cages (Pressurized)
28	40[illegible]	Food Storage
29	40[illegible]	Waste Storage
30	40[illegible]	Quick Freezer
31	40[illegible]	Refrigerator (+5°c)
32	302	On-Board Centrifuge
33	302	Centrifuge Counterbalance
34	1501	Chest Pack (2)
35		Safety Line
36	150[illegible]	Binoculars
37	1501,1502	Task Equipment Harness (3)
38	1503	Medical Kit (2)
39	1502	Life Saving Bag
40	150[illegible]	Umbilical (2)
41	150[illegible]	Tumbling Preventing Mechanism
42	150[illegible]	Maintenance Instruction File
43		Air Duct

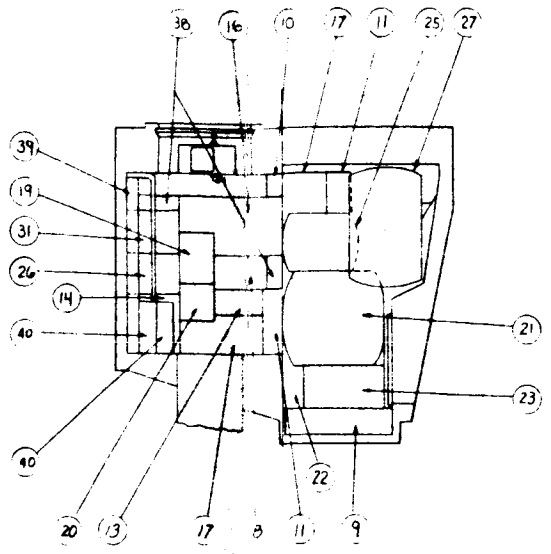

VIEW LOOKING OUTBOARD
LEFT HAND SIDE

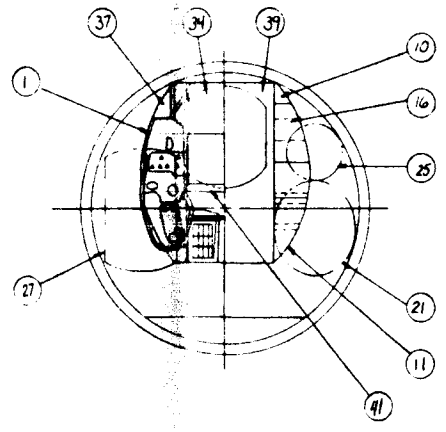

VIEW LOOKING AFT

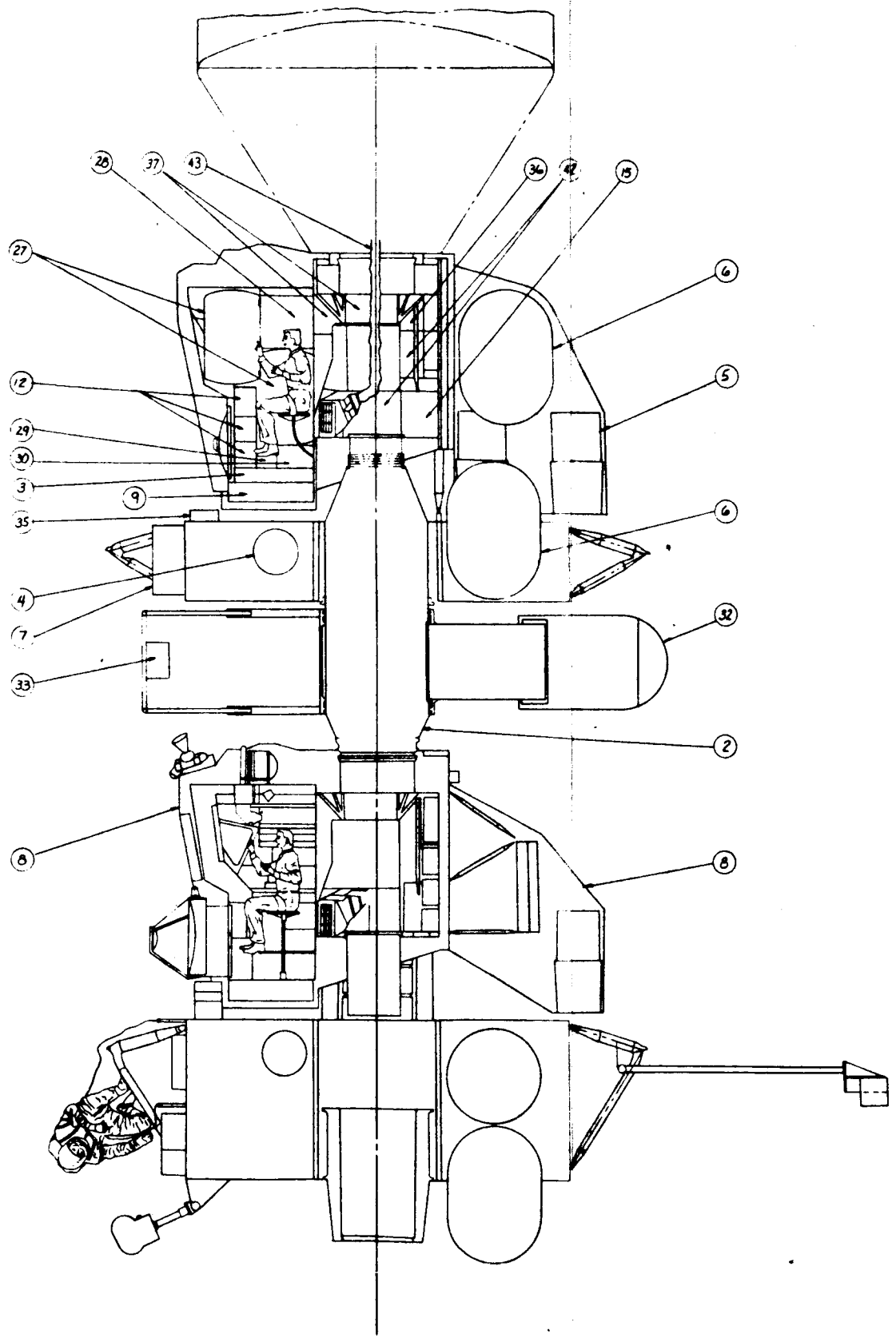

VIEW LOOKING OUTBOARD
RIGHT HAND SIDE

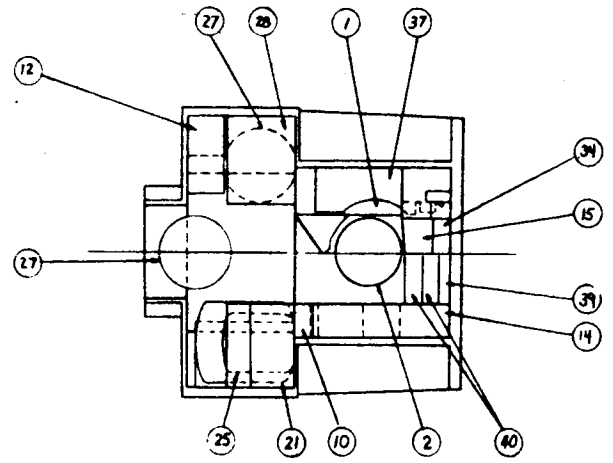

PLAN VIEW

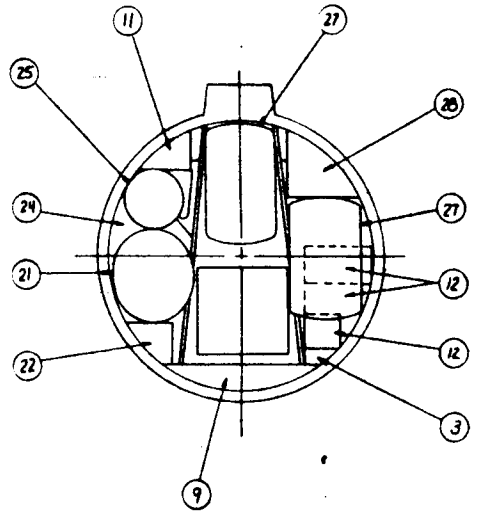

VIEW LOOKING FORWARD

0 20 40 60 80 100
SCALE: 1"=20"

Grumman
AIRCRAFT ENGINEERING CORPORATION
PRELIMINARY DESIGN DEPT.

Fig. 3-2

Inbd Prof Flt. 219
Space Operations,
Bioscience Lab

SCALE OF ORIG. DWG. 1/20

IAES 1029

This flight utilizes an Apollo CSM fuel cell electrical generation system, a LEM ECS to provide atmosphere revitalization to the animal tanks and recirculation of atmosphere both from the CM and LAB #218. It is anticipated that open hatch operation can be made available for LAB #219 if desired.

The power supply carried on this flight is sized to provide "housekeeping" power both for this flight and the resupply flight. An oxygen and electrical interface will be provided from this flight to the resupply flight.

The estimated laboratory weight of the "C" version is 10,963 lbs and of the "D" version is 14,971 lbs (see Tables 3-4 and 3-5). A brief discussion of how this flight could be brought within the allowable weight limit is included in Volume 1 Sec. 4.6.

Basic subsystem characteristics pertinent to this flight are described below:

Vehicle Orientation	Various
Stabilization Requirements	$\pm .5^{\circ}$ - 4 Hrs., $\pm 5^{\circ}$ - 45 days
AVG Experiment PWR (Delivered)	162 watts
Number of Repressurizations	5
Equipment Cooling	30 ft^2 Radiators

	"C" Config.	"D" Config. Takeover Point=14.8 days
Number of Fuel Cells	2	3
Oxygen Tanks	1 Apollo X and 1 Block II	2 Apollo X and 1 Block II
Hydrogen Tanks	1 Apollo-X	2 Apollo X
Peaking Battery	None	None
Fuel Cell Cooling	11.3 ft^2 Radiator	30.6 ft^2 Radiator
RCS System	None	Std LEM Thrusters
RCS Tankage	None	4 LEM ox- 4 LEM Fuel
S and C System	None	Interface to #218 ATCA and Panels
Waste Reactants	9.2 lb.	11 lb.
Water for Thermal Con (Max)	None	None
Water Generated	723 lb.	1499 lb.

Waste reactants are needed to accommodate the estimated boiloff rates. These fluids are disposed of by increasing the power output of the normally operating fuel cells and energizing either a dummy load or idle equipment.

Table 3-4 LEM LAB DETAILED WEIGHT STATEMENT

FLIGHT 219

COMPONENT	Weight, lb. Configuration C	D
Structure	(2163)	(2246)
Basic Ascent	802	802
Rack	470	470
Shielding	426	446
Power Pack Structure	50	50
Experiment Supports	310	310
RCS Supports		63
Docking Ring & Tunnel	105	105
Crew Provisions	(350)	(350)
Restraints	35	35
Lighting	10	10
Food	228	228
LiOH-PLSS	77	77
Reaction Control System		(1640)
Propellant		1140
Propellant System		268
Pressurization System		110
Thruster Ass'y		122
Controls and Displays	(387)	(387)
Environmental Control	(935)	(979)
Atmosphere Revitalization System	80	80
O_2 Supply and Cabin Pressurization	34	34
Water Management	36	36
Heat Transport, Cold Plates, Coolant	105	105
LiOH-ECS	526	526
Water	40	40
Radiators	114	158
Instrumentation	(151)	(151)
Signal Conditioner	45	45
PCM and Timing Elec. Ass'y	39	39
Data Storage	25	25
Experiment Selector	6	6
Data Tapes	30	30
Spare Voice Recorders	6	6

Table 3-4 LEM LAB DETAILED WEIGHT STATEMENT (Cont'd.)

FLIGHT 219

COMPONENT	Weight, lb. Configuration C	D
Electrical Power Supply	(2987)	(5138)
Fuel Cell Ass'ys	492	738
Reactants and ECS Oxygen	1408	2839
Reactant Tankage	514	938
Plumbing	40	60
Inverters	75	75
Wiring, Distribution and Umbilical	458	488
Communications	(58)	(58)
Television	24	24
Audio Center	6	6
Voice Recorder	2	2
VHF/UHF Antenna	26	26
Experiment	(3872)	(3962)
Spares	(60)	(60)
Total Laboratory	10995	14971

Table 3-5 INTEGRATED SPACECRAFT WEIGHT STATEMENT

FLIGHT 219

COMPONENT	Weight, lb. Configuration	
Command Module Basic Weight	(10,287)	(10,287)
Service Module Basic Weight	(11,479)	(9,160)
CSM Retro-Propellant	(1,349)	(1,191)
Laboratory Weight	(10,963)	(14,971)
Basic Laboratory	2163	2246
Experiments	3872	3962
Experiment Support Systems	2649	3913
Expendables	2461	4850
CSM Experiment Dependent Weights		
RCS Propellant	2210	720
Total Laboratory and Experiment	(13,173)	(15,691)
Allowable Laboratory and Exper. Weight	9,555	12,032
Total Orbiting Weight	36,288	36,329
Service Module Propellant (Ascent)	1,410	1,410
SLA Adapter	3,505	3,505
Launch Vehicle Payload	41,203	41,244

4. FLIGHT OPERATIONAL SUPPORT: FLIGHT NO. 219

Experiment 0401 - Genetic Effects in Microorganisims (DNA Mutation Rate, and Phage Production) - Control experiment identical to flight experiment must be performed simultaneously on the ground, with temperature measured to within 0.5°C.

Experiment 0402 - Effects of Space on Morphology, Growth, and Gas/Liquid Separations in Microorganisms, Unicellular Organisms and Animal Tissue Cells - Experiments will be conducted simultaneously on the ground.

Experiment 0404 - Limb Regeneration and Wound Healing During Weightlessness - Earth based control experiment.

Table 4-1 presents the experimental data management requirements of the flight. A general discussion of this table and the data management systems is contained in Volume 1.

TABLE 4-1. FLIGHT 219 (RENDEZVOUS WITH FLT. 218) DATA MANAGEMENT

Avg. Daily Data Recording Requirements

Experiment No.	Data Rate K-bits/sec	Recording Time, min (A) 51.2 K-b/sec	Recording Time, min (B) 1.6 K-b/sec	Remarks
0100_s	9 (AVG)	74		2.7 Exper-Hr/Day
0200_s	6.4 (AVG)	46		2.7 Exper-Hr/Day
0302	14	90		90 Min/Day
0403	29	45		45 Min/Day
0405	0.1		27	60 Min x 20 Times
0501	0.8		45	45 Min/Day Monitoring
1407	1.4		33	300 Min x 5 Times
1501	1.6		8	120 Min x 3 Times
1502	1.6		24	1150 Min/Mission
1503	1.6		8	120 Min x 3 Times
1504	1.6		7	5 Hr/Mission
1505	1.6			As Required
0401, 0402, 0404, 0406	Negligible Recording Requirements			
0100_s, 0200_s, 1407_s	Carried on Flt. 218; Performed on Flt. 219			
Totals		255	152	

Real Time Video Transmission as required

NOTE: All Data Management Equip. carried on Flt 218 and used on both flights.

Avg. Daily Data Transmission Time, min:

- Reqd: A + B/32 = 260
- Available = 280

Data Excess (Minutes of Tape) per Day:

Required Minus Available Transmission Time = zero min

Data Tape Return Required: $\frac{\text{Data Excess per Mission (min)}}{\text{30 Min/Tape Reel}}$ = zero Reels {zero lb, zero cu ft

Optimum Avg Daily Transmission Time Required = 108 min

Voice Tape Return Required (4 packages) 8 lb, 0.1 cu ft

Film Return Required 40 lb, 1 cu ft

Data Tape Carried 30 lb,

1. FLIGHT MISSION DESCRIPTION

Flight No. 221

Altitude, n.mi 200	Inclination, deg 28.5	Duration, days 45	Crew 3

Mission Title: ARTIFICIAL GRAVITY LABORATORY

Objectives: This flight will permit separation of the CSM and LEM Lab, while joined by a cable connection of variable length. The deployed spacecraft configuration will be spun at various rates and separation distances to study the crew's adaptability to different combinations of "g" level and angular velocity.

Configuration: C (Extended CSM, LEM A/S, D/S), or
D (Modified Block II CSM, LEM A/S, D/S)

Experiment Summary:

No.	Title	Equipment Location: LEM Stage Asc	LEM Stage Desc	CM
0100	Biomedical	x		
0200	Behavioral	x		
0301	Artifical "g"	x	x	x
0501	Radiation Environment Monitoring	x		

2. EXPERIMENT DESCRIPTION SUMMARY

FLIGHT - 221

EXPERIMENT: 0100-0200 - Medical/Behavioral Experiments - The Medical/Behavioral Experiments are intended to evaluate the effects of prolonged space flight on man and to enhance his operation efficiency to permit more extensive manned space flight missions. Twenty-four experimental measurement packages have been defined to analyze critical human functions and to focus on those most likely to be affected adversely by prolonged space flight. Procedures and instrumentation employed in the experimental packages are a composite of updated, standard medical/behavioral and imminent state-of-the-art zero-g adapted, techniques. Selected experiments will be performed during the artificial "g" conditions to assess the astronauts performance in a rotating environment.

EXPERIMENT: 0301 - Artificial Gravity by Rotation of Entire Station - the objective of this experiment is to determine radius and rotational speed of a system to supply artifical gravity for convenience and/or maintenance of physical condition in a spacecraft. Artificial gravity will be simulated in the Apollo command module and LEM, by separating the vehicles with a cable system and rotating the entire system. Equipment will be provided to facilitate control of radius and rate of change of radius or rotation. Levels of artificial gravity, from 1/6 "G" to one "G" will be provided by varying rotational radius and rates. Evaluation of coriolis effects, vehicle and cable dynamics and biomedical observations will be made.

EXPERIMENT: 0501 - Radiation Environment Monitoring - The objectives of this experiment are to record radiation received by the crew, and to furnish external radiation environment data for other experiments. Techniques for the Apollo Mission, or those employed in Tiros and OGO, will be used. Detection devices proposed for the monitoring systems are: proton-alpha and electron spectrometers, tissue equivalent ionization chambers, and film packs.

[redacted]

TABLE 2-1 FLIGHT 221 INTEGRATED EXPERIMENT EQUIPMENT LIST

Exper. No.	Component	Weight, lb	Vol, cu ft or size*	Elec Energy or Elec Pwr	Remarks
0100 & 0200	Medicine & Behavior Experiments	321	14.5	100 W Continuous Plus 50 W During Oper	See Flt 211 for Detailed Equip List
0501		(46.5)			Duty Cycle - Continuous During Mission
	Proton-Alpha Spectrometer	7	8 x 8 x 8	5.3 W	
	High Energy Electron Spectrometer	10	8 x 8 x 8		
	Low Energy Electron Spectrometer	5.5	4 x 4 x 3		
	Tissue Equiv ionization Chambers (3)	3	3 x 2 x 1/2		
	T.E.I.C. Rate Meters (2)	4	4 x 3 x 3		
	Film Packs & Pen Dosimeters (21)	1.5	2 x 2 x 1/8		
	Pulse Height Analyzer	15	12x12x12		
	Battery Charger	0.5	1/2x1/2x1	1 W	
0301		(351)			Continuous for 45 days with breaks of 1 day duration for adjusting Rotation Radius occurring 9 times in Flight
	'g' Sensor	0.5			
	Rotation Rate Sensor	0.5			
	Cable, Motor, Gear, Box, Drum, Brake (4 of each)	350	48		
	Total Weight	719			

*INCHES UNLESS OTHERWISE SPEC.

[redacted]

3. EXPERIMENT/SPACECRAFT INTEGRATION

3.1 MISSION DEFINITION

The main purpose of flight 221 is to evaluate man's performance in a rotating environment. To accomplish this objective both the Lab and CSM will be rotated after being separated by a cable system. Both vehicles have control systems to prevent rotation about the cables and for maintaining attitude rates.

To achieve a variety of gravity levels and rotation rates, the length of the cabling system is changed on the average of once every 4 or 5 days as shown below.

Cable length (ft)	Test Duration Days	RPM	Gravity Level CM	Gravity Level Lab
235	3	3	.25	.50
110	3	3	.12	.25
106	3	6	.43	1.0
45	4	6	.19	.50
16	4	6	.08	.25
37	4	9	.35	1.0
25	5	9	.25	.75
12	5	9	.14	.50
0	4	9	.02	.26

During each test mode one astronaut is in the CM, two astronauts are in the Lab. On 9 separate days (between test conditions) the vehicles are docked to one another, and a crew rotation accomplished. On each of the nine days, an astronaut will perform an EVA to bring in LiOH from outside the spacecraft.

The last test mode results in a spacecraft configuration wherein the astronaut in the CM is very close to the center of rotation. The attendant coriolis forces, in this mode, may result in untenable conditions for this astronaut for the 4 day test duration. Thus, additional experiment time may be available for re-evaluating previous test conditions.

Since both the Lab and the CSM will be rotating, only a limited amount of experimentation can be accomplished. The Astronauts will spend the majority of time experimenting with physiological reactions to the rotational environment. Since specific artificial "g" biomedical and behavioral experiments have not been defined to data, only the time allocated for performing these experiments is programmed on the time line diagrams. This is shown on Sheet 1 of Table 3-2. The 0301* represents the time increments available. Total man hours are 1,050 for rotating days. Total time for biomedical and behavioral experiments are 1,032.5 man-hrs. The other 17.5 man-hrs will be used for experiment 0501. These numbers are based on 10-hour work days per man throughout the mission, 6 hours, of sleep/day/man and the remainder divided between rest periods, meals, and personal hygiene.

There will be about 258 lbs of tape returned from this flight. The crew schedules are summarized in Table 3-1 and detailed in Table 3-2. The experiment equipment mission profile is shown in Table 3-3.

TABLE 3-1 FLIGHT 221 MISSION DEFINITION SUMMARY *

Experiment Number	Occurence Day Number	Total Times Performed Per Mission	Number Men Req'd	Expermt Time Per Test: Set-up Time Minutes	Expermt Time Per Test: Test Time Minutes	Total Experiment Man Hrs. Per Mission: Crewman 1	Crewman 2	Crewman 3	Total	Total Experiment Time per Mission, Hrs.: Achieved	Specified
0501	1 thru 44	45/man	1	0	10	7	7	8	22		
0301*	1 thru 45	-	1 or 2	Varies	Varies	423	423	423	1269		
Eva	5, 9, 13, 18, 23, 28, 34, & 40	8	1	-	-	3	6	3	12		
Crew Transfer		8	2	-	-	10	12	10	32		
					Totals	440	447	441	1335		

Maximum Work Day: 10 hrs. on-duty; Average Work Day: 10 hrs. on duty; minimum work day: 10 hrs. on-duty

Total Eva Man Hours 4

Notes:

0301* Contains Biomed & Behavioral expt's in a rotating environment

* See Tables 3-2 and 3-3 for crew schedules and experiment equipment duty cycles

Table 3-2 **CREW SCHEDULING, FLIGHT 221, SHEET 1 OF 2**

DAY 1	ORBIT	CREWMEN ACTIVITIES 1	2	3
0000				
20				
40			Set Up	
0100				
20				
40			Rotating Mechanism	
0200				
20				
40				
0300				
20				
40				
0400				
20				E/Hyg
40			Rest	
0500				
20				
40			E/Hyg	
0600				
20				
40			Rest	Rest
0700				
20				
40				
0800		Sleep		
20				
40				E/Hyg
0900				
20				
40				
1000			0301*	
20				
40				
1100				
20		E/Hyg		
40				
1200		Rest	0501	0301*
20			E/Hyg	
40			Rest	
1300				
20				
40				
1400				0501
20		0301*		
40				E/Hyg
1500				
20				
40			Sleep	
1600		0501		
20				
40				
1700		Rest		
20				
40				
1800				Sleep
20				
40				
1900		0301*		
20				
40			0301*	
2000				
20				
40				
2100		Rest		
20				
40			Rest	Rest
2200				
20				
40		E/Hyg	E/Hyg	
2300				0301*
20				
40				
2400				

DAY A	ORBIT	CREWMEN ACTIVITIES 1	2	3
0000				
20				
40				E/Hyg
0100				
20		0301*	0301*	
40				
0200				
20				
40				
0300				
20				
40				
0400		0501	0501	0301*
20		E/Hyg		
40			Rest	
0500		Rest		
20				
40			E/Hyg	
0600				0501
20				
40				
0700			Rest	Rest
20				
40				
0800		Sleep		
20				
40				E/Hyg
0900				
20				
40				
1000			0301*	
20				
40				
1100				
20		E/Hyg		
40				
1200		Rest		0301*
20			E/Hyg	
40			Rest	
1300				
20				
40				
1400		0301*		
20				
40				E/Hyg
1500				
20				
40			Sleep	
1600				
20				
40				
1700		Rest		
20				
40				
1800				Sleep
20				
40				
1900		0301*		
20				
40				
2000			0301*	
20				
40				
2100		Rest		
20				
40			Rest	Rest
2200				
20				
40		E/Hyg	E/Hyg	
2300				0301*
20				
40				
2400				

DAY 5,18,34	ORBIT	CREWMEN ACTIVITIES 1	2	3
0000				
20				
40		LiOH		E/Hyg
0100				
20				
40				
0200			0301*	
20				
40			(2)	(2)
0300		0301*		
20				
40				
0400			0301*	0301*
20		E/Hyg		
40			Rest	
0500		Rest		
20				
40			E/Hyg	
0600				501
20				
40				
0700			Rest	Rest
20				
40				
0800		Sleep		
20				
40				E/Hyg
0900				
20				
40				
1000			0301*	
20				
40				
1100				
20		E/Hyg		
40				
1200		Rest	0501	0301*
20		0501	E/Hyg	
40			Rest	
1300				
20				
40				
1400		0301*		
20				
40				E/Hyg
1500				
20				
40			Sleep	
1600				
20				
40				
1700		Rest		
20				
40				
1800				Sleep
20				
40				
1900		0301*		
20				
40				
2000			0301*	
20				
40				
2100		Rest		
20				
40			Rest	Rest
2200				
20				
40		E/Hyg	E/Hyg	
2300				0301*
20				
40				
2400				

DAY 13,28	ORBIT	CREWMEN ACTIVITIES 1	2	3
0000				
20				
40				E/Hyg
0100			LiOH	
20				
40			Rest	
0200		0301*		
20				
40		(4)		(4)
0300			0301*	
20				
40		0301*		
0400				0301*
20		E/Hyg		
40			Rest	
0500		Rest		
20				
40			E/Hyg	
0600				0501
20				
40				
0700			Rest	Rest
20				
40				
0800		Sleep		
20				
40				E/Hyg
0900				
20				
40			0301*	
1000				
20				
40				
1100				
20		E/Hyg		
40				
1200		Rest	0501	
20		0501	E/Hyg	0301*
40			Rest	
1300				
20				
40				
1400				
20		0301*		
40				E/Hyg
1500				
20				
40			Sleep	
1600				
20				
40				
1700		Rest		
20				
40				
1800				Sleep
20				
40				
1900		0301*		
20				
40				
2000			0301*	
20				
40				
2100		Rest		
20				
40			Rest	Rest
2200				
20				
40		E/Hyg	E/Hyg	
2300				0301*
20				
40				
2400				

NOTES
(1) 0301* - Refer to text
(2) Astronaut #2 transfers from Lab to CM while Astronaut #3 transfers from CM to LAB
(3) Astronaut #1 transfers from Lab to CM while Astronaut #2 transfers from CM to LAB
(4) Astronaut #3 transfers from Lab to CM while Astronaut #1 transfers from CM to LAB

E/Hyg — Eat & Personal Hygiene

x x x x — Limits of Experiment Time

- - - - — Limits of EVA

Table 3-2 **CREW SCHEDULING, FLIGHT 221 , SHEET 2 OF 2**

DAY 9,23 40	ORBIT	CREWMEN ACTIVITIES 1	2	3	DAY 45	ORBIT	CREWMEN ACTIVITIES 1	2	3	DAY	ORBIT	CREWMEN ACTIVITIES 1	2	3	DAY	ORBIT	CREWMEN ACTIVITIES 1	2	3
0000					0000					0000					0000				
20					20					20					20				
40		(3)	(3)	E/Hyg	40				E/Hyg	40					40				
0100					0100					0100					0100				
20					20		0301*			20					20				
40		0301*	0301*		40			0301*		40					40				
0200					0200					0200					0200				
20				LiOH	20					20					20				
40					40					40					40				
0300					0300				(4)	0300					0300				
20					20					20					20				
40					40					40					40				
0400					0400					0400					0400				
20		E/Hyg			20					20					20				
40			Rest	0301*	40		E/Hyg	Rest		40					40				
0500		Rest			0500					0500					0500				
20					20				0301*	20					20				
40			E/Hyg		40			E/Hyg		40					40				
0600					0600					0600					0600				
20					20					20					20				
40					40					40					40				
0700			Rest	Rest	0700			Rest	Rest	0700					0700				
20					20					20					20				
40					40		Sleep			40					40				
0800		Sleep			0800					0800					0800				
20					20					20					20				
40				E/Hyg	40					40					40				
0900					0900					0900					0900				
20					20					20					20				
40			0301*		40			0301*	0301*	40					40				
1000					1000					1000					1000				
20				0501	20					20					20				
40					40					40					40				
1100					1100					1100					1100				
20		E/Hyg			20		E/Hyg	E/Hyg	E/Hyg	20					20				
40					40					40					40				
1200		Rest	0501	0301*	1200		Rest	Rest	Rest	1200					1200				
20		0501	E/Hyg		20					20					20				
40					40					40					40				
1300			Rest		1300					1300					1300				
20					20					20					20				
40					40					40					40				
1400		0301*			1400					1400					1400				
20					20					20					20				
40				E/Hyg	40					40					40				
1500					1500					1500					1500				
20					20					20					20				
40			Sleep		40					40					40				
1600					1600					1600					1600				
20					20					20					20				
40					40					40					40				
1700		Rest			1700					1700					1700				
20					20					20					20				
40				Sleep	40					40					40				
1800					1800					1800					1800				
20					20					20					20				
40					40					40					40				
1900		0301*			1900					1900					1900				
20					20					20					20				
40					40					40					40				
2000			0301*		2000					2000					2000				
20					20					20					20				
40					40					40					40				
2100					2100					2100					2100				
20		Rest			20					20					20				
40			Rest	Rest	40					40					40				
2200					2200					2200					2200				
20					20					20					20				
40		E/Hyg	E/Hyg		40					40					40				
2300				0301*	2300					2300					2300				
20					20					20					20				
40					40					40					40				
2400					2400					2400					2400				

GRUMMAN AIRCRAFT ENGINEERING CORPORATION

Table 3-3 APOLLO EXTENSION SYSTEM EARTH ORBIT MISSION STUDY
FLIGHT 221 EXPERIMENT MISSION PROFILE

SHEET 1 OF 2

DAYS 1-8 10-39

TIME - MONTHS
ORBITS

1 2 3 4 5 6 7 8 9 10 11 12 13 14 15 16 17 18 19 20 21 22 23 24

E41-45

POWER, KW: .120, .100, .080, .060, .040, .020

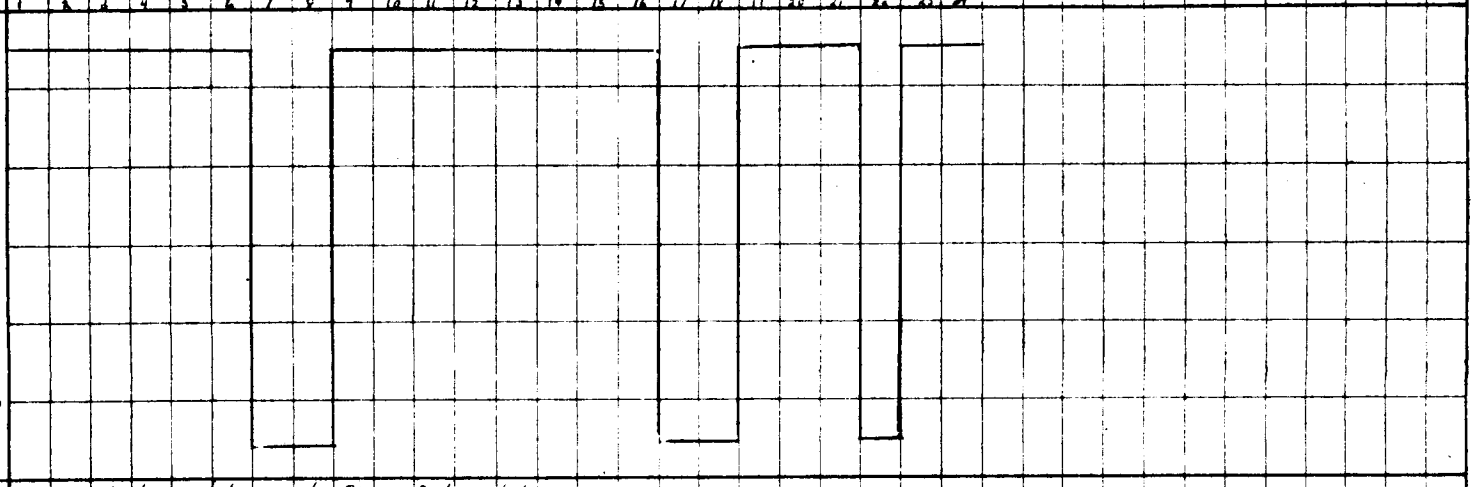

EXPERIMENT POINTING REQUIREMENTS

DIRECTION (1): vehicle rotates in the plane of the orbit

ACCURACY, ±DEGREES: ±0.10

STABILITY REQUIREMENTS, DEG/SEC: 10, 1.0, .1, .01, .001, .0001

NOTES, OTHER TIME - DEPENDENT VARIABLES, ETC

(1) INDICATE EO(EARTH ORIENTATION), IO(INERTIAL ORIENTATION), OR FD(FREE DRIFT)

CONFIDENTIAL

~~CONFIDENTIAL~~

GRUMMAN AIRCRAFT ENGINEERING CORPORATION

Table 3-3 APOLLO EXTENSION SYSTEM EARTH ORBIT MISSION STUDY

FLIGHT [redacted] EXPERIMENT MISSION PROFILE

SHEET 2 OF 2

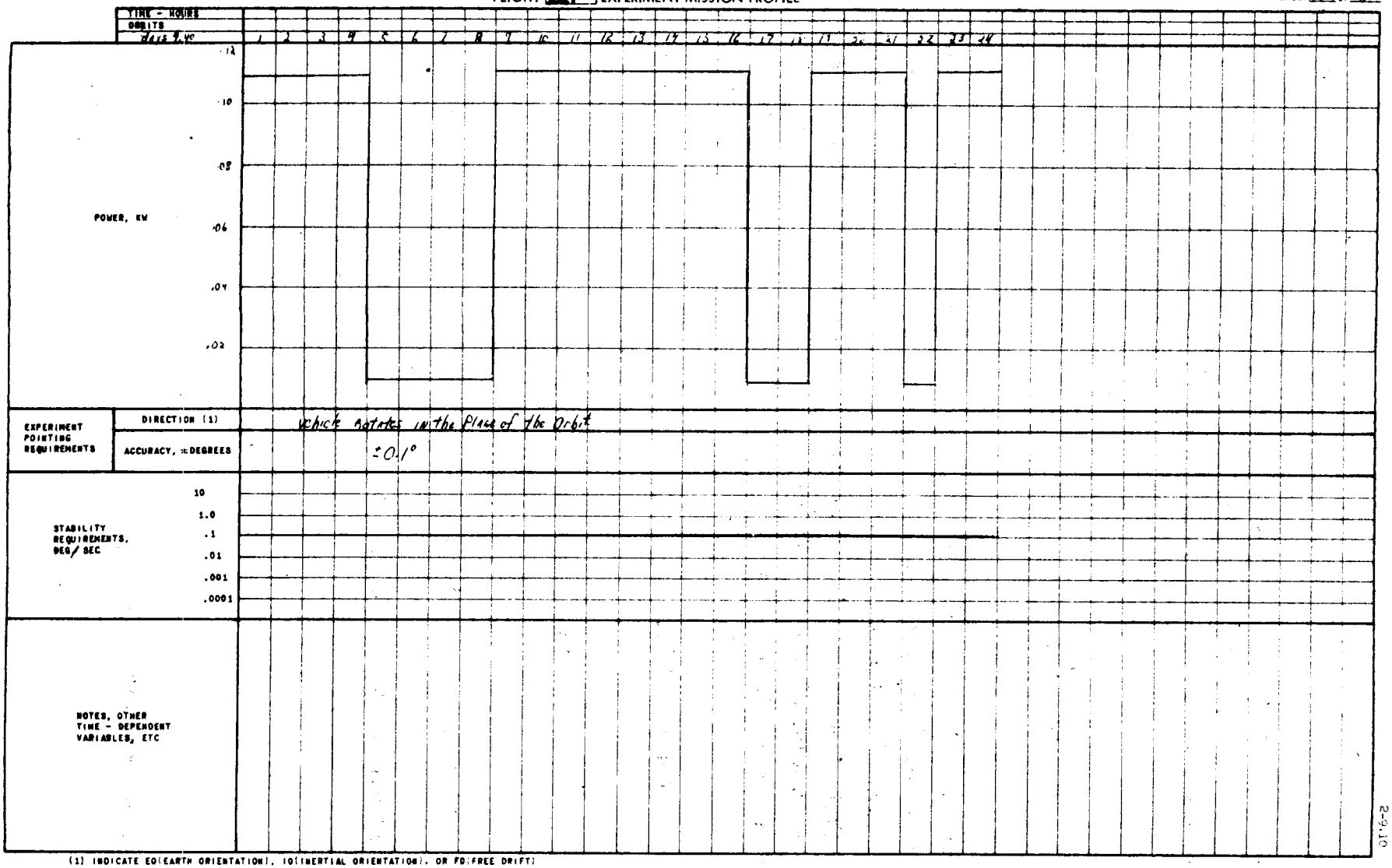

(1) INDICATE EO(EARTH ORIENTATION), IO(INERTIAL ORIENTATION), OR FD(FREE DRIFT)

~~CONFIDENTIAL~~

3.2 SPACECRAFT DEFINITION

Flight 221 configuration, shown in Figures 3-1 and 3-2, is an artificial gravity experiment (0301) and only Biomed (0100) and Behavioral (0200) experiments dealing with the effects of artificial gravity are performed. The radiation monitoring experiment (0501) is also carried on this flight.

The desired orientation of the plane of rotation is within the plane of the orbit. During non-rotation periods the spacecraft will be oriented within a deadband of $\pm 5^{\circ}$.

The artificial "g" experiment involves separating the CSM and LEM Lab, retaining physical connection via a cable mechanism and rotating the extended configuration about a common spin axis. The artificial "g" cable mechanism is a 4 cable system, using brake-equipped motorized winches mounted to the descent stage. The mechanism allows for varying the distance between CSM and Lab in accordance with experiment "g" level and RPM requirements. Setup of the mechanism requires an astronaut to attach the cables to special fittings on the SM.

A total of nine different gravity/RPM modes will be tested. For each mode, the test sequence involves the following:

(1) spin up the docked CSM and Lab to about 1 RPM
(2) separate the vehicles
(3) play out the cables to the desired distance
(4) activate RCS systems in both the CSM and Lab to spin up to the required RPM or "g" level
(5) maintain gravity condition and stable environment for the test duration desired
(6) de-spin to about 1 RPM
(7) retract the cables
(8) dock the CSM and Lab
(9) stop the rotation

Gravity levels vary from 0.02 to 1 "g", RPM's vary, 3, 6, 9 RPM, and cable lengths vary from zero to 235 feet, Figure 3-3.

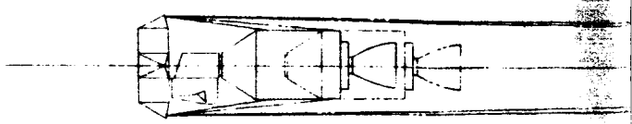

12'-0" SEPARATION

KEY

No.	Experiment	Name
1		Power Pack: "F" Config
2		FCA Radiator
3	0301	Cable Winch, Motor, Gear Box, Drum, Brake (4)
4		Supplementary RCS
5		Power Pack: "E" Config
6	0501	Proton Alpha Spectrometer
7	0501	High Energy Electron Spectrometer
8	0501	Low Energy Electron Spectrometer
9		LiOH
10		Equipt Radiator
11		GOX Tank
12		Potable Water Tank
13		Waste Storage Tank

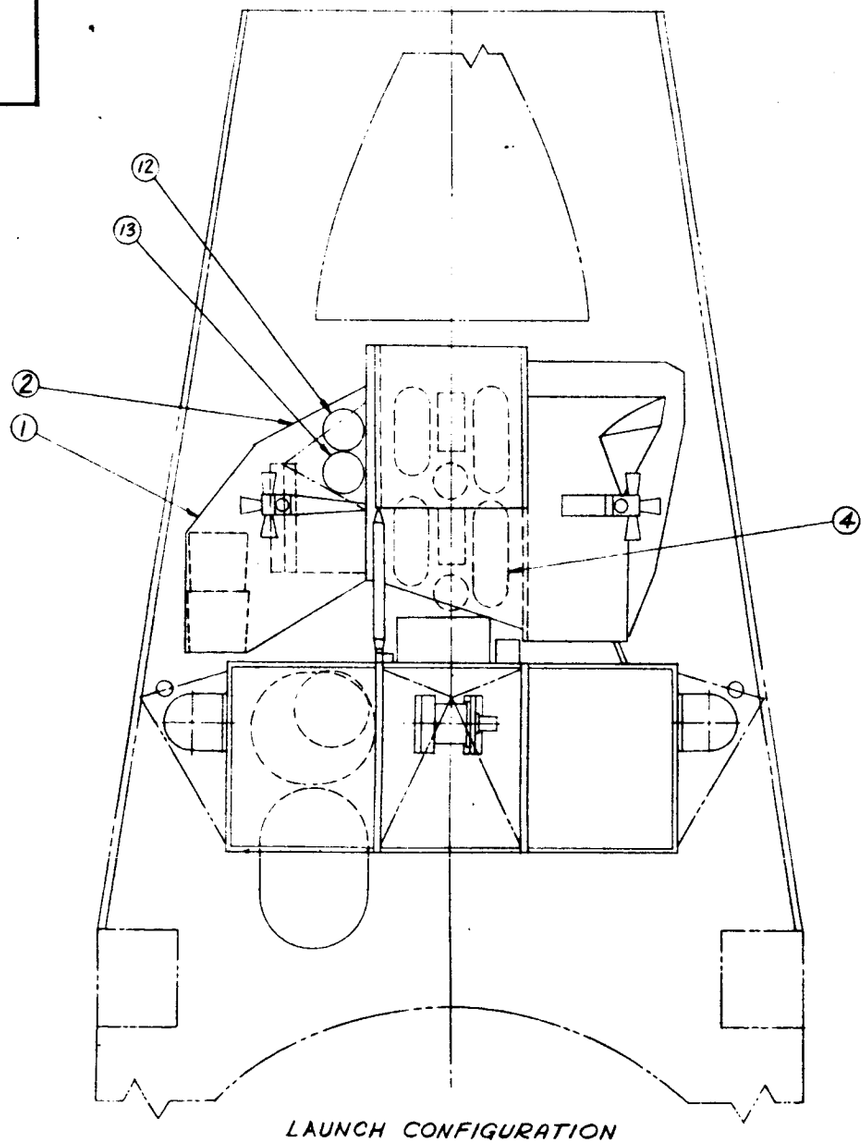

LAUNCH CONFIGURATION

FOLD-OUT #1

VIEW SHOWING CABLE EXTENSION
SCALE : 1" = 10'-0"

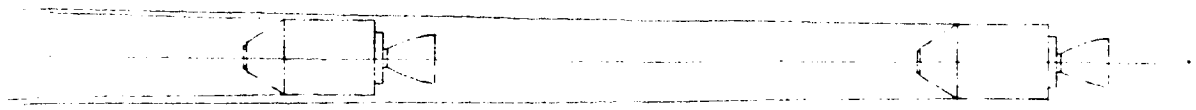

120'-0" SEPARATION

235'-0" SEPARATION

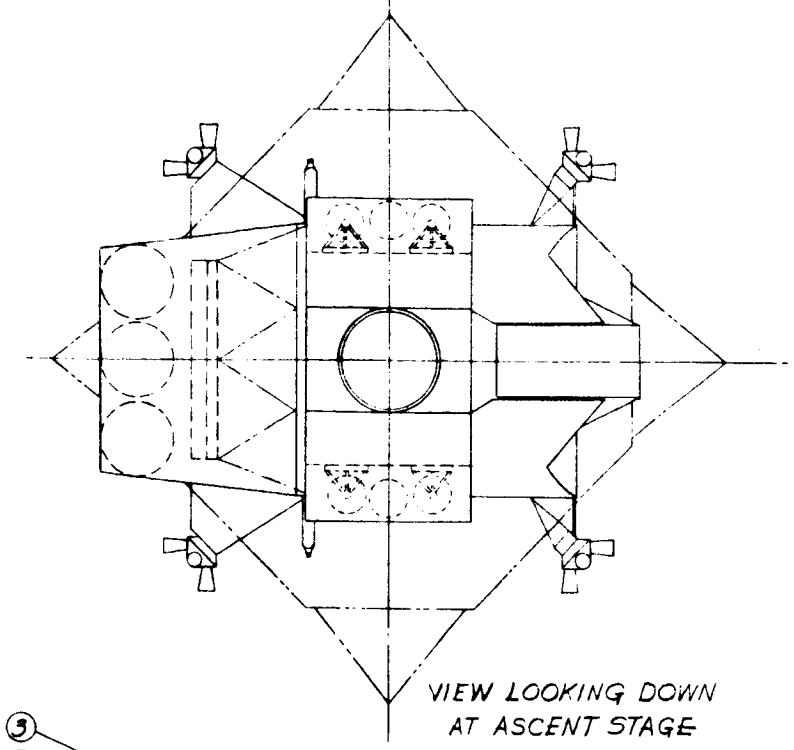

VIEW LOOKING DOWN
AT ASCENT STAGE

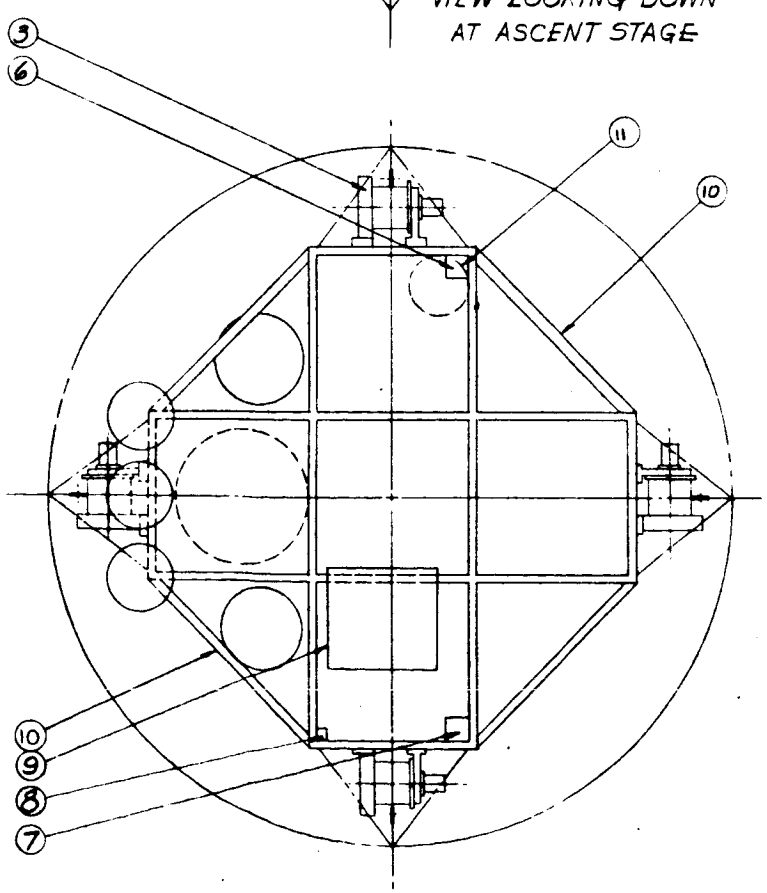

VIEW LOOKING DOWN
AT DESCENT STAGE

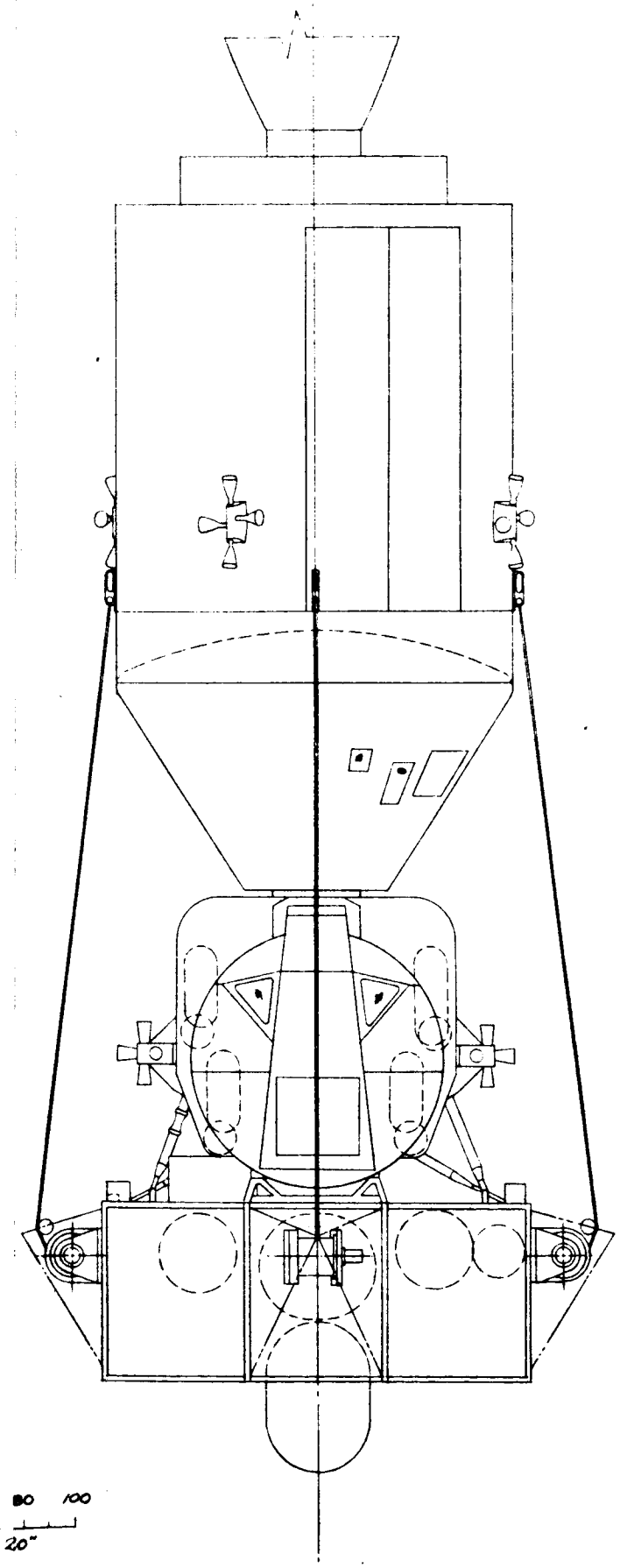

ORBITING CONFIGURATION

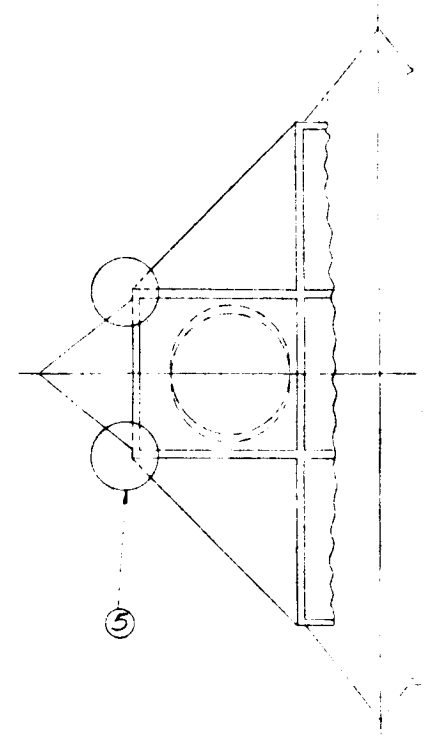

ALTERNATE POWER PACK
CONFIGURATION

0 20 40 60 80 100
SCALE : 1" = 20"

FOLD-OUT #2

[redacted]

Fig. 3-1

Grumman
AIRCRAFT ENGINEERING CORPORATION
PRELIMINARY DESIGN SECT.

Gen Arrgmt Flt. 221
Artificial g Lab

SCALE OF GEN. DWG. - 1/20

AES 1032

KEY

No.	Experiment	Name
1		Air Duct
2		Food
3		Circuit Breakers
4		LioH
5		LGC
6		CDU
7		PSA & Signal Conditioner
8	0100 & 0200	Biomed Storage
9		ECS
10	0100 & 0200	Biomed Behavioral
11	0100 & 0200	Biomed Refrigerator
12	0100 & 0200	Biomed Incubator
13		N & G, RCS, & Exper. Display
14		ECS, CMM Display
15	0501	Pulse Height Analyzer
16	0501	Tissue Equiv. Ionization Chamber - Ratemeter
17	0501	Tissue Equiv. Ionization Chamber
18	0301	g-Sensor & Rotation Rate Sensor
19		Attitude Controller Assy
20		Translation Controller Assy
21		Recorder & 0501 Controls
22	0100	Bicycle Ergometer
23		PLSS - Back Pack (2)
24		Urine Storage
25		Feces Storage
26		Folded Bed Storage
27		Personal Hygiene
28		Laundry & Clothing
29		Oral Hygiene & Water
30		Waste Storage
31		Toilet
32		Sample Collection
33		Recorder Data
34		Log Data Book & Sensors
35		Film & Tape Storage
36		Voice Recorder
37		Lighting & Cyrogenics
38		N & G

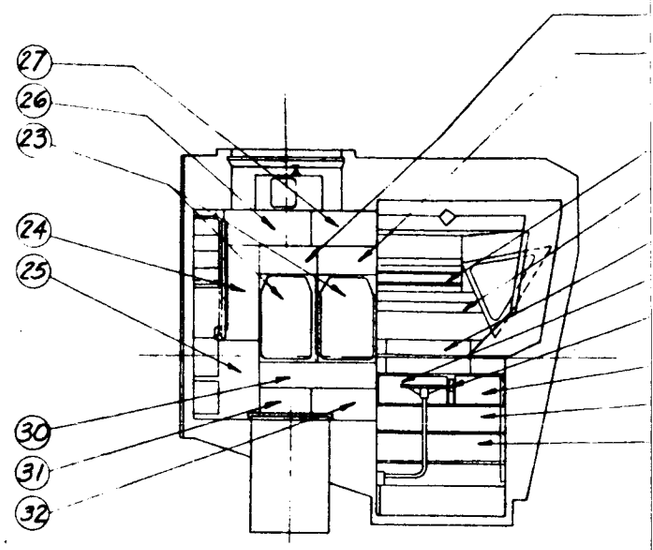

VIEW LOOKING OUTBOARD
LEFT HAND SIDE

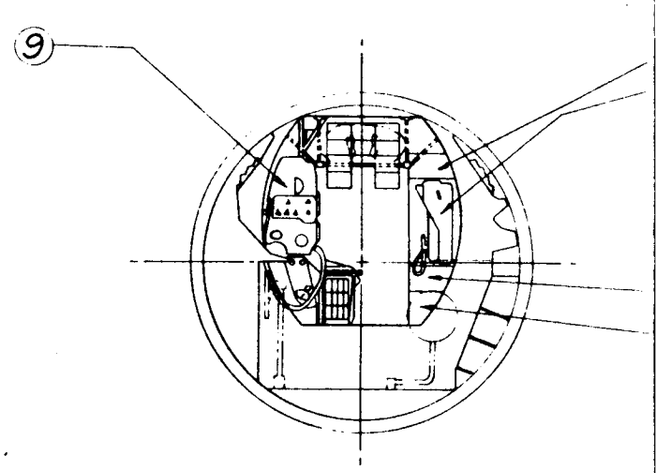

VIEW LOOKING AFT

FOLD-OUT #1

NOTE: ERECTABLE BED TO BE DEPLOYED WHEN CSM & LAB ARE SEPARATED FOR 0301 ARTIFICIAL GRAVITY EXPERIMENT – AIR DUCT FROM CSM TO LAB TO BE USED WHEN VEHICLES ARE HARD DOCKED.

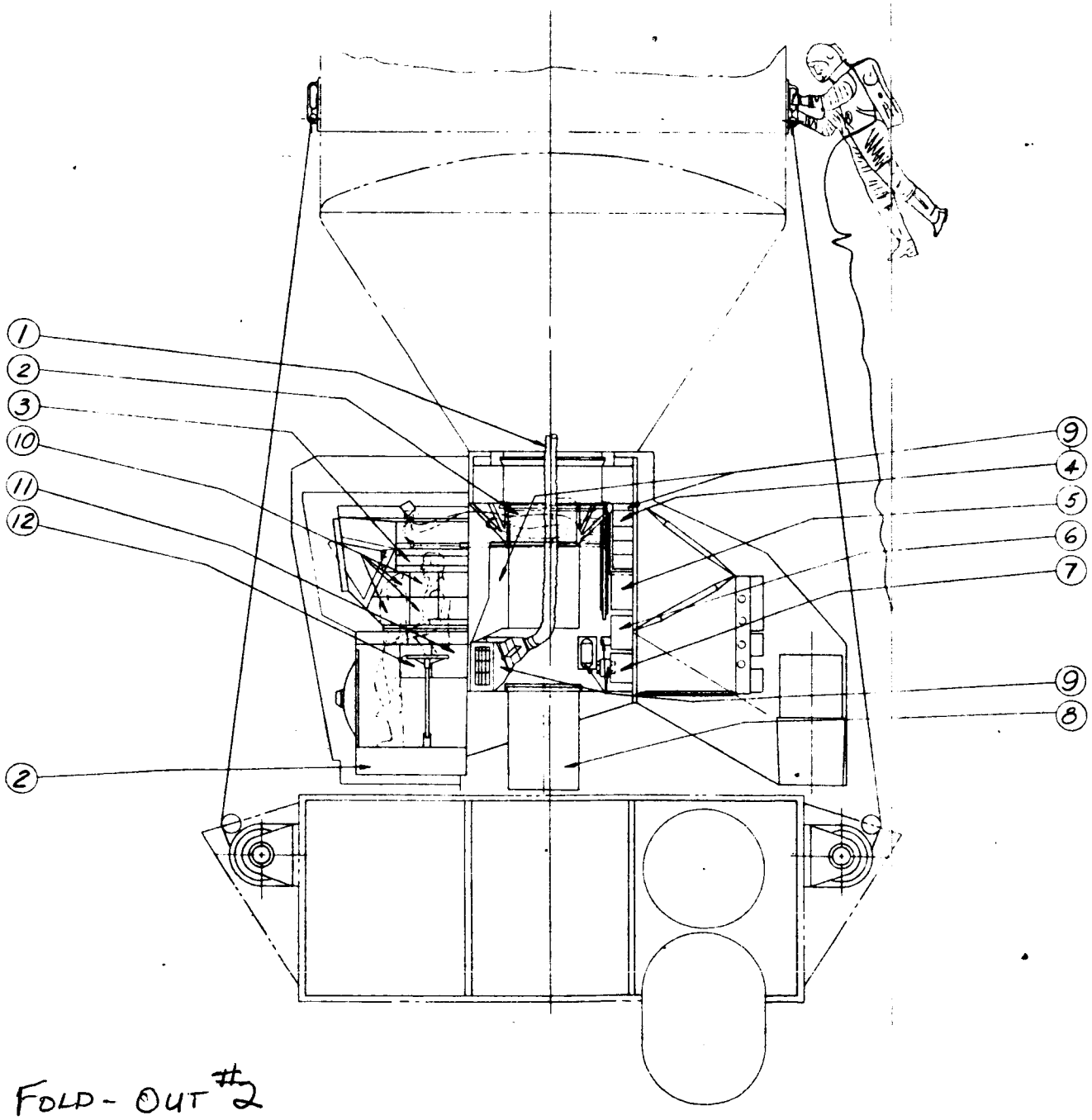

FOLD-OUT #2

VIEW LOOKING OUTBOARD
RIGHT HAND SIDE.

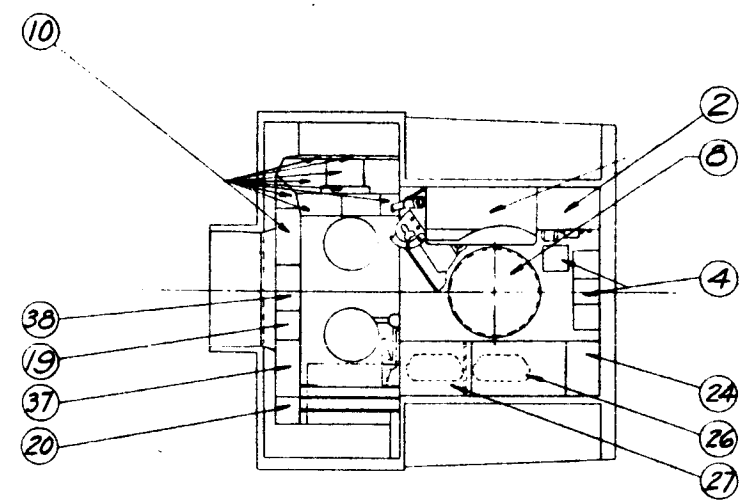

PLAN VIEW

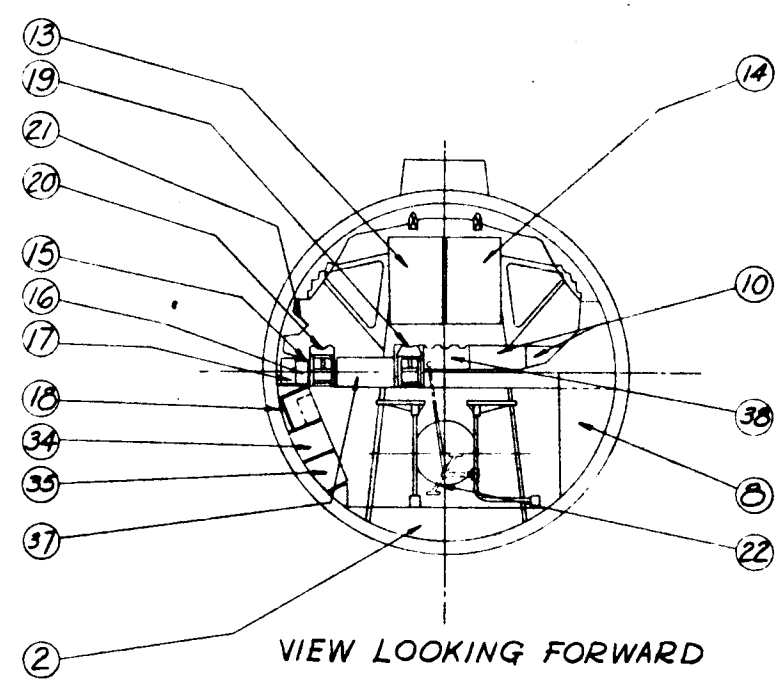

VIEW LOOKING FORWARD

0 20 40 60 80 100

SCALE: 1" = 20"

[redacted]

Fig. 3-2

Grumman
AIRCRAFT ENGINEERING CORPORATION
PRELIMINARY DESIGN SECT.

Inbd Prof Flt. 221
Artificial g Lab

SCALE OF ORIG. DWG. 1/20

AES 1033

During each test mode one astronaut is in the CM, two astronauts are in the Lab and attitude stabilization and control is available in both vehicles. The Lab carries the LEM flight control and RCS system. To accommodate the Lab RCS propellant requirements additional RCS tankage is provided on the A/S. RCS propellant requirements for the CSM exceed Block II capacity. It is assumed that SM RCS tankage can be increased to carry 1580 lbs of propellant.

No structural modifications to the LEM A/S or D/S are required to accommodate the experiments. All equipment installations involve additions to existing LEM A/S and D/S structure.

The inboard profile (Fig. 3-2) shows that adequate internal volume is available to accommodate experiments. All experiment displays and controls are located in the forward cabin or are accessible from forward cabin crew positions. Food is stored internally. A seven day supply of LiOH canisters is also stored internally, and are replaced from external storage during programmed EVA's. This approach is consistent with that followed for all NASA flight configurations, however, volume could be made available internally to negate the necessity for EVA's.

Behavioral (0200) and Biomed (0100) equipment installations are common for all flights.

The 100 psi OX interface has been deleted from this flight, the electrical interface is still carried and the Lab still supplies power to the CSM in the "D" version.

The difference between "C" and "D" versions of the Lab are the addition of one Apollo-X O_2 and H_2 tank, added fuel cell reactants, a fuel cell, and an increase in FCA radiator area of 14 ft^2. These modifications to a "C"-version Lab accommodate the added power demand of the "D"-version Lab required by taking over CSM power requirements. The takeover point has been recalculated for this flight since the CSM must reserve sufficient oxygen to provide a full 45 day metabolic requirement for one man, and must also overcome CM leakage for the entire period. Only the O2 quantity available in excess of this requirement is thus available for fuel cell reactant. These considerations result in a takeover point of 14.1 days for the "D" version. Conversely for both the "C" and "D" versions, the LEM must

always supply its own life support oxygen.

This flight utilizes an Apollo CSM fuel cell electrical generation system, a LEM ECS to provide independent operation of the LEM during the artificial "g" experiment, selected components to provide data transmission, status and appropriate displays.

The Lab also carries a LEM-type S-band transceiver and signal processor for voice and data. This approach provides a voice transmission capability for back up of the hardline communication.

The estimated laboratory weight of the "C" version is 9017 lbs and of the "D" version is 10457 lbs (see tables 3-4 and 3-5).

Basic subsystem characteristics pertinent to this flight are described below:

Vehicle Orientation	Rotating in Orbital Plane
AVG Experiment Pwr (Delivered)	90 Watts
Number of Repressurizations	5
Equipment Cooling	38 ft^2 Radiator

	"C" Config	"D" Config Takeover Pt = 14.1 Days
Number of Fuel Cells	2	3
Oxygen Tanks	1 Apollo X	2 Apollo X
Hydrogen Tanks	1 Apollo X	2 Apollo X
Peaking Battery	None	None
Fuel Cell Cooling	8 ft^2 Radiators	23.2 ft^2 Radiators
RCS System	St'd LEM Thrustors	St'd LEM Thrustors
RCS Tankage	4 LEM Ox & 4 LEM Fuel	4 LEM Ox & 4 LEM Fuel
S & C System	Controllers, FDAI Needles, Gyro's, Panels	ATCA, Rate
Waste Reactants	13.4 lbs	12 lbs
Water for Thermal Cont. (MAX)	3 lbs	3 lbs
Water Generated	652 lbs	1430 lbs

CONFIDENTIAL

Waste reactants are needed to accommodate the estimated boiloff rates. These fluids are disposed of by increasing the power output of the normally operating fuel cells and energizing either a dummy load or idle equipment.

CONFIDENTIAL

Table 3-4 LEM LAB DETAILED WEIGHT STATEMENT

FLIGHT 221

COMPONENT	Weight, lb. Configuration C	D
Structure	(2220)	(2220)
Basic Ascent	802	802
Basic Descent	750	750
Shielding	497	497
Power Pack Structure	50	50
Experiment Supports	58	58
RCS Supports	63	63
Stabilization and Control	(43)	(43)
Attitude Translation Control Ass'y.	27	27
Rate Gyro Ass'y.	2	2
Controllers	14	14
Crew Provisions	(282)	(282)
Restraints	35	35
Lighting	10	10
Food	228	228
LiOH-PLSS	9	9
Reaction Control System	(1566)	(1566)
Propellant	1066	1066
Propellant System	268	268
Pressurization System	110	110
Thruster Ass'y.	122	122
Controls and Displays	(72)	(72)
Environmental Control	(910)	(938)
Atmosphere Revitalization System	80	80
O_2 Supply and Cabin Pressurization	34	34
Water Management	36	36
Heat Transport, Cold Plates, Coolant	105	105
LiOH-ECS	498	498
Water	40	40
Radiators	114	142
Thermal Control	3	3

Table 3-4 LEM LAB DETAILED WEIGHT STATEMENT (Cont'd.)

FLIGHT 221

COMPONENT	Weight, lb. Configuration C	D
Instrumentation	(381)	(381)
Signal Conditioner	45	45
PCM and Timing Elec. Ass'y.	39	39
Data Storage	25	25
Experiment Selector	6	6
Data Tapes	260	260
Spare Voice Recorders	6	6
Electrical Power Supply	(2665)	(4077)
Fuel Cell Ass'ys.	492	738
Reactants and ECS Oxygen	1189	1881
Reactant Tankage	424	848
Plumbing	40	60
Inverters	75	75
Wiring, Distribution and Umbilical	445	475
Communications	(99)	(99)
Television	24	24
Audio Center	6	6
Voice Recorder	2	2
VHF/UHF Communications	67	67
Experiment	(719)	(719)
Spares	(60)	(60)
Total Laboratory	9017	10,457

Table 3-5 INTEGRATED SPACECRAFT WEIGHT STATEMENT

FLIGHT 221

COMPONENT	Weight, lb. Configuration C	D
Command Module Basic Weight	(10,287)	(10,287)
Service Module Basic Weight	(11,479)	(9,160)
CSM Retro-Propellant	(1,349)	(1,191)
Laboratory Weight	(9,017)	(10,457)
Basic Laboratory Structure	2,220)	2,220
Experiments	719	719
Experiment Support Systems	3,048	3,796
Expendables	3,030	3,722
CSM Experiment Dependent Weights		
RCS Propellant	1,580	1,580
RCS Prop. Tanks		378
Total Laboratory and Experiment	(10,507)	(12,325)
Allowable Lab. and Exper. Weight	9,555	12,032
Total Orbiting Weight	33,622	32,963
Service Module Propellant (Ascent)	1,410	1,410
SLA Adapter	3,505	3,505
Launch Vehicle Payload	38,537	37,878

4. FLIGHT OPERATIONAL SUPPORT: FLIGHT NO. 221

Experiment 0100 & 0200 - Medicine and Behavioral - Periodic daily data transmission and ground monitoring of safety parameter data.

Experiment 0501 - Radiation Environment Monitoring - External particle flux measurements during a solar flare event are to be correlated with the solar activity observations made on earth stationed observatories and other satellites.

Table 4-1 presents the experimental data management requirements of the flight. A general discussion of this table and the data management system is contained in volume 1.

TABLE 4-1. FLIGHT 221 DATA MANAGEMENT

Avg. Daily Data Recording Requirements

Experiment		Recording Time, min		Remarks
No.	Data Rate K-bits/sec	(A) 51.2 K-b/sec	(B) 1.6 K-b/sec	
0100's	9 (AVG)	274		9.7 Exper-Hr/Day
0200's	6.4 (AVG)	90		5.1 Exper-Hr/Day
0501	0.8		45	45 Min/Day
0301	Monitored Continuously as status data Status Data Monitoring and Recording may be required in Lab.			
Totals		364	45	

Avg. Daily Data Transmission Time, min

- Reqd: A + B/32 = 366 min
- Available = 280 min

Data Excess (Minutes of Tape) per Day:

Required Minus Available Transmission Time = 86 min

Data Tape Return Required; $\frac{\text{Data Excess per Mission (min)}}{\text{30 min/Tape Reel}}$ = 129 Reels $\begin{cases} 258 \text{ lb} \\ 12.9 \text{ cu ft} \end{cases}$

Optimum Avg Daily Transmission Time Required = 89 min

Voice Tape Return Required (4 packages)	8 lb, 0.1 cu ft
Film Return Required	zero lb, zero cu ft
Data Tape Carried	260 lbs

[redacted]

1. FLIGHT MISSION DESCRIPTION

Flight No. 516

Altitude, n.mi	Inclination, deg	Duration, days	Crew
19,350	0	45	3

Mission Title: ASTRONOMY AND BIOSCIENCE LABORATORY I

Objectives: This flight will perform astronomical observations in the X-ray, visual, and infra-red portions of the spectrum from synchronous orbit. It will observe the time correlation between solar corona behavior and earth aurora. Space operational capabilities will be evaluated by deployment of a small maneuverable satellite, a solar-sail balloon, and erection of a radio astronomy antenna. In addition, pertinent genetic experiments will be conducted on living micro-organisms.

Configuration: C (Extended CSM, LEM A/S, D/S), or
D (Modified Block II CSM, LEM A/S, D/S)

Experiment Summary:

No.	Title	Equipment Location: LEM Stage Asc	Equipment Location: LEM Stage Desc	Equipment Location: CM
0100	Biomedical (excluding 0101 and 0102)	x		
0200	Behavioral	x		
0401	Microbial Genetics and Growth	x		
0402	Development Biology	x		
0406	Space Borne Micro-organisms	x		
0501	Radiation Environment Monitoring	x		
0701	Emission Line Radiometry		x	
0702	Intermediate - Size Reflecting Telescope		x	
0703	Manned Coronagraph		x	
0705B	Radio Astronomy		x	
0801	Conjugate Aurora		x	
1001	Maneuverable Sub-satellite		x	
1303	Extendable Rod Performance Tests		x	
1304	Solar Sail		x	

[redacted]

2. EXPERIMENT DESCRIPTION SUMMARY

FLIGHT - 516

EXPERIMENT: 0100-0200 - Medical/Behavioral Experiments - The objective of the Medical/Behavioral Experiments is to evaluate the effects of prolonged space flight on man and to enhance his operational efficiency to permit more extensive manned space flight missions. Twenty-four experimental measurement packages have been defined to analyze critical human functions and to focus on those most likely to be affected adversely by prolonged space flight. Procedures and instrumentation employed in the experimental packages are a composite of updated, standard medical/behavioral and imminent state-of-the-art zero-g adapted, techniques. These procedures should provide: 1) an assessment of the effects of prolonged weightlessness on the psychophysiological integrity of the astronaut, 2) a determination of the mechanisms which mediate observed changes, 3) a prediction of the onset and extent of degraded functioning, and 4) a validation of preventive or countermeasures which may be necessary to support man's extended exploration of space.

NOTE

> Experiments 0101 and 0102 require linear and/or rotational accelerations, such as would be obtained during a firing of the SM engine or during the artificial gravity experiment, in order to achieve all of the described experiment objectives. These experiments have been excluded from missions which lack sufficient SM propulsion and/or the artificial gravity experiment.

EXPERIMENT: 0401 - Genetic Effects in Microorganisms (DNA Recombination, Mutation Rate, and Phage Production - This experiment is an investigation in the fundamental mechanism of reproduction. The objectives are: to determine effects of the zero gravity condition on replication and recombination of DNA in microorganisms, and, to test the hypothesis that synergistic effects on mutation rates and phage production in microbial cells may occur due to prolonged weightlessness in combination with other space environmental factors, particularly radiation. This experiment involves the transfer of microorganisms into tubes of suitable culture media, infection of the cultures with lysongenic phage strains, halting the infection at timed intervals, and observing results in the space laboratory. Additional examinations will be made on return to the Earth laboratory.

EXPERIMENT: 0402 - Effects of Space Flight on Morphology, Growth, and Gas/Liquid Separation in Microorganisms, Unicellular Organisms, and Animal Tissue Cells - The objective of this experiment is to determine the effects of weightlessness, independently and in combination with other space flight environmental conditions, on growth rates and morphology of unicellular organisms and tissue cells. Changes observed will provide information of such effects applicable to animals and man at the cellular level of body tissues that can be related to the results of biomedical and behavioral investigations. One part of this experiment involves the incubation of microorganisms (E. coli) in a suitable liquid culture medium and measuring their rate of multiplication by means of a spectrophotometric record of increase in density. A second part of the experiment is the investigation of a hypothesis that

gaseous metabolic products of a non-motile organism remain as an envelope surrounding the cell in quiescent aqueous solutions and could thereby interfere with normal metabolism of the cells. A third part of the experiment involves the growth and observation of paramecia and of HeLa cells to detect possible changes in growth rates and specific metabolic effects. The paramecia and the HeLa cells would be introduced into their separate appropriate liquid-nutrient media by the astronaut. Their growth rate would be studied, using a continuous culture process in which the aerated nutrient solution will be circulated. The nutrient solution will be pumped in and the effluent removed at the same constant rate. At selected daily intervals, samples from the effluent would be frozen and returned to Earth for measurement of growth rate, analysis of enzyme changes, and determination of morphological changes.

EXPERIMENT: 0406 - Soft Capture, Enumeration, and Identification of Space-Borne Microorganisms - The object of this experiment is to test and perfect techniques for the capture of microorganisms in space, in order to permit their enumeration and identification. The feasibility of employing various sampling techniques already developed and under development will be evaluated. The yield attained by the collection techniques will be analyzed with respect to types of organisms and viability of life forms. It is hypothesized that microorganisms can occur in near space either as free cells or as adherents to solid particles. Techniques to be assessed include screens covered with hylax, as used earlier in satellites and very-high-altitude aircraft, and simple infraction methods involving the use of silicon greases and other materials as infraction surfaces. Provisions for protection of collected samples from contamination by terrestrial organisms will be evaluated. Collected material will be assayed chemically for protein nucleic acids, or other significant compounds after the samples have been returned to the Earth.

EXPERIMENT: 0501 - Radiation Environment Monitoring - The objective of the experiment is to record radiation received by the crew, and to furnish external radiation environment data for other experiments. Techniques for the Apollo Mission, or those employed in Tiros and OGO, will be used. Detection devices proposed for the monitoring systems are: proton-alpha and electron specrometers, tissue equivalent ionization chambers, and film packs.

EXPERIMENT: 0701 - Emission Line Radiometry - The objective of the experiment is to determine the distribution patterns and densities of interstellar gas. A radiometer, basically a Michelson interferometer, operating in the IR region and recording the photoelectric signal output on magnetic tape will be used for this experiment.

EXPERIMENT: 0702 - Intermediate Size Telescope for High Resolution Photography and Photometry in Astronomy - The objective of the experiment is to perform high resolution photography in visual and UV and perform associated calibration photometry. The telescope will have a 40" diameter reflecting mirror equipped at the Cassegrain focus for a UV field camera, automatic plate camera, photometer and slitless spectrograph.

EXPERIMENT: 0703 - Manned Coronagraph - The objective of the experiment is to examine the structure and phenomena of solar corona above 2° from the sun's limb, with design provision for extension to 1° from limb for correlation with data obtained from Coronascope II. The equipment will consist of an Evans coronagraph utilizing an external occulting disk to block the bright light of the sun's disk, thereby permitting the Lyot telescope behind it to detect features in the adjacent area of the sky as much as 100 million times fainter than the sun. By insertion of selected filters and polarizing elements into the optical path, it is possible to make both spectral and plane polarization investigations of the outer corona in addition to the white light observations of intensity and structure.

EXPERIMENT: 0705B - Radio Astronomy 1-5 mcps range, using simple tunable "V" antenna - The object of this experiment is to obtain a mapping of the galatic noise in the 1 to 5 mcps range; to determine the location and magnitude of these noise sources; and, to determine the relationship of signal strength and frequency. The equipment to perform the experiment will consist of a five channel receiving system and includes a "V" antenna. The antenna will use two insulated and gimballed STEM devices, which are also used in experiment 1303. The antenna beamwidth, position and tuning is to be controlled by the angle separating the antennas, the angle of the "V" relative to the vehicle, and the length of the two extendible rods respectively.

EXPERIMENT: 0801 - Conjugate Aurora and Airglow - The objective of the experiment is to investigate the detailed nature of the conjugate auroral forms, structures and geometries in both the Arctic and Antarctic auroral regions with a view toward defining the causality factors and the extent of congruity. Observation and recording of both aurorae from a single, orbiting platform at several Earth radii will provide simultaneous measurement of auroral form, structure, spectral intensity, and location of the conjugate phenomena.

EXPERIMENT: 1001 - Small Maneuverable Satellite (SMS) - The objective of this experiment is to provide a unique capability to perform a wide range of experiments, such as: occulting body, two satellites of accurately known separation, spatial survey of Apollo system, access to radiation belts, and the deployment and tuning of large radio antennas. The key technique will be to provide a small satellite which contains propulsion and can be observed, controlled and located with respect to the Apollo system by the astronaut.

EXPERIMENT: 1303 - Extendible Rod Performance Tests - The objective of the experiment is to obtain data, i.e., characteristics and performance of extendible members (rods or fine wires), during payout and deployment, and while subjected to gradient gravity forces and solar perturbations. Stiff rods, such as the "STEM" device, will be packaged for deployment while attached to the spacecraft, following which they will be monitored and observed. This will be accomplished under various spacecraft orientations. Malfunctioning will be diagnosed following the system's retrieval. These rods will also serve as the "V" antenna on Experiment 705B, Radio Astronomy.

EXPERIMENT: 1304 - Operation of Solar Sailing Passive Communications Satellite - The objective of the experiment is to confirm and evaluate a technique for control of a satellite's orbital period (kinetic energy control) by utilization of radiation forces on large surface areas. A 50 ft. diameter spherical mylar balloon is to be deployed from, and tethered to, the spacecraft. Half of the balloon is to

be covered with a low reflectivity, high emissivity coating; the other half is to have opposite attributes. The balloon will also carry a command receiver, power supply and orthogonal coils to produce a magnetic field vector, which can be commanded to accomplish orientation with respect to the sun. Resulting relative motions between balloon and spacecraft will be compared with predicted values to refine design data relating force with material surface properties.

TABLE 2-1 FLIGHT 516 INTEGRATED EXPERIMENT EQUIPMENT LIST

Exper. No.	Component	Weight, lb	Vol, cu ft or size*	Elec Energy or Elec Pwr	Remarks
0100 and 0200	Medicine and Behavior Experiments	321	14.5	100 W Continuous Plus 50 W During Oper.	See Flt. 211 for Detailed Equip. List
0501		(46.5)			
	Proton-Alpha Spectrometer	7	8 x 8 x 8		
	High Energy Electron Spectron Spectrometer	10	8 x 8 x 8		
	Low Energy Electron Spectrometer	5.5	4 x 4 x 3		
	Tissue Equiv. Ionization Chambers (3)	3	3 x 2 x1/2	5.3 W	
	T.E.I.C. Rate Meters (2)	4	4 x 3 x 3		
	Film Packs and Pen Dosimeters (21)	1.5	2 x 2 x1/8		
	Pulse Height Analyzer	15	12 x 12 x12		
	Battery Charger	0.5	1/2 x1/2x1	1 W	
0401		(60.1)			
	Incubator with Shielded Compt.	7.0	2	2.5 W	
	Vials, Test Tubes, Petri Dishes	5.0	2	N/A	
	Phase Contrast and Dissecting Microscope	5.0	0.57	10 W	
	Work Shelf	1.0	20 x 24	N/A	
	35 MM Camera	3.0	0.2	N/A	
	Colony Counter	20.0			If Quebec counter is used, use following: Wt (10# or Less) Power (10 Watt or Less)
	Nutrient Media	2.0	0.5	N/A	
	Refrigerator	6.0	1	20 W	May be tied into ECS Glycol loop.
	Needles with Syringes	1.0	6 x 6 x 6	N/A	
	Stored Chemicals	0.1	0.01	N/A	
	Freezer	10.0	1	30 W	May be tied into Cryogenic Supply.
0402		(174.7)			
	E. Coli Tubes Pseudomoivas Algae				
	Culture Flasks Paramecium HeLa Cells	15.0	2	N/A	
	Sterile Nutrient Media	2.0	Contained		
	Incubator	15.0	3	20 W	
	Compressed Air				E.C.S.
	CO_2 Sampler	2.0	0.2	5 W	
	Finger Pumps (2)	2.0	0.5	30 W	

*INCHES UNLESS OTHERWISE SPEC.

TABLE 2-1 FLIGHT 516 INTEGRATED EXPERIMENT EQUIPMENT LIST

Exper. No.	Component	Weight, lb	Vol, cu ft or size*	Elec Energy or Elec Pwr	Remarks
cont 0402	Chemostat (Shielded)	3.0	0.3	50 W	
	Syringes	1.5	Contained	N/A	
	Sample Vials	1.5	Contained	N/A	
	Freezer	25.0	3	30 W	
	Refrigerator	25.0	3	20 W	
	Densitometer	0.2	Contained		
	Microscope	5.0	0.57	10 W	
	Photographic Equipment	3.0	0.2	N/A	
	Centrifuge	4.0	7 x 7 x 9	5 W	
	Centrifuge Tubes	1.0	Contained		
	Scintillation Counter	20.0	1.5	3 W	
	Particle Counter	6.0	3	40 W	
	Lights (For Algae)	1.5	0.15	100 W	
	Slides, Etc	2.0	Contained	N/A	
	Fixatives, Etc		Contained	N/A	
	Leadshield	20.0	Contained	N/A	
	Supply Cabinet	20.0	4	N/A	
0406		(43)			
	Sampling Device	4-6		N/A	
	Dissecting Microscope	5		10 W	
	Growth Media and Supplies	2	Contained	N/A	
	Refrigerator	10	1	15 W	May be tied into ECS Glycol Loop.
	Storage Incubator (2)	10	0.5	40 W	
	Anaerobic Incubator (2)	10	0.5	40 W	

*INCHES UNLESS OTHERWISE SPEC.

TABLE 2-1 FLIGHT 516 INTEGRATED EXPERIMENT EQUIPMENT LIST

Exper. No.	Component	Weight, lb	Vol, cu ft or size*	Elec Energy or Elec Pwr	Remarks
0701		(220)			*Sensor cooler
	Interferometer	200	15D x 60	200 W*	Space oriented ± 0.5 Deg.
	Interferometer Electronics	10	8 x 8 x 10	70 W	Experiment Time 2.0 hr approx.
	Bore Sighted T.V. Camera	10	10 x 10 x4	50 W	Repeated 34 times.
	TV Monitor				
0702		(3680)			
	Telescope wth supts., gimbals & cont. syst	3350	4.3'D x 11'		0.01 Arc Sec Stability
	Roll Film Camera	10	8 x 8 x 6	200 W	Experiment performed as
	Plate Camera	65	24 x 24 x 8		often as possible
	Photometer	2	3D x 4		TV camera used from Exp 701
	Spectrograph	9	24 x 6 x 6		
	Film & Plates	120	2	N/A	
	Film & Plate Processor	18	8 x 6 x 12		
	Micrometer Microscope	6	4 x 5 x 8		
	Gas Bearing Supply System	100	10D x 48		
0703		(262)			
	Coronagraph	206	10D x 10		Sun oriented ± 0.5 deg.
	Light Shield	50	5' x 10'	133 w. h	Experiment Performed as
	Camera - 70MM SLR	4	8 x 5 x 5	Per sighting	often as possible
	Control Panel (Within Basic Lab)				Gas bearing supply system &
	Telescope	2	10 x 15'		Film Plate Processor used from Exp 0702
0705B	Erectable "V"	(75)	4.5 x	150 W	
	Antenna (2 of each Common to Exp. 1303)		7 x 12	Contin.	2 Hrs. to erect, 1 hour C/O, operate 24 hrs. continuously
	Antenna Tuner	25	1' x 1' x 1'		Repeat 3X
	Receiver (5)	50	18 x 6 x 6.5 ea.		
0801	Conjugate Aurora	(245)			Ptg. and Acc. Reqts. / Duty Cycle
	Telescope (2)	50	24 x 18 x12	5 W	1/4° to 1/2°, Earth-oriented / 1.2 Hrs. per Experiment, 24 Experiments per 45-day Mission
	Platform	100			
	Spectrograph	25	24 x 12 x 12	5 W	

*INCHES UNLESS OTHERWISE SPEC.

TABLE 2-1 FLIGHT 516 INTEGRATED EXPERIMENT EQUIPMENT LIST

Exper. No.	Component	Weight, lb	Vol, cu ft or size*	Elec Energy or Elec Pwr	Remarks
cont					
0801	Photometer	2	3 Diam x 8	5 W	
	Image Orthicon	30	8 Diam x 17	55	
	Magnetometer	13	4 x 5 x 7	10	
	Plasma Probes	10	8 x 8 x 12	5	
	TV Monitor (Common)			10	
	A-Scope	15	10 x 10 x 6	10	
	Camera, 16 MM (Common to 1001)				
	Data Recorder } in Basic Lab			25 W	
	Signal Conditioner } in Basic Lab			50 W	
1001	Small Maneuverable Satellite	(431) 300	6.25 ft.^{3}	Pt.1) 90 W 500 W	Pointing Accuracy N/A; for 2.5 hrs. for 1.0 hr.
	Checkout And Launch Eqt.	5	2.0 ft.^{3}		Performed once a day for 4 days.
	Refueling Propellant	100	1.3 ft.^{3}	Pt.2) 110 W	for 1.8 hrs.
	Camera, 16 MM	15	.28 ft.^{3}	500 W	for 1.0 hrs.
	Film (Returned)	.94	.143 ft.^{3}		Performed once a day for 4 days.
	TV Camera	10	6D x 12	Pt.3) 50 W 100 W 50 W	for 0.3 hrs. for 1.5 hrs. for 0.3 hrs. Performed once a day for 4 days.
1303	Extendible Rod Performance Tests	(269)			1.5 hours per orbit, 2 orbits per day for three days.
	2 - 200' Retractable Rods	60	2.0 ft.^{3}		
	2 - 1000' Retractable Rods	120	2.0 ft.^{3}		
	2- 1000' Inflatable Rods	60	2.3 ft.^{3}		
	Camera, 16 MM (Common to 1001)				
	Camera, 70 MM (Time Lapse)	20	1.0 ft.^{3}	30 W	20 W. for 1st 30 Min., 35 W for next 15 min., 20 W for next 45 min.
	Attitude & Rate Time Lapse Film	5	0.1 ft.^{3}		
	Retractable Rods (common to 1303)				
	Film, 16 MM (Returned 3000')	4	.6 ft.^{3}		

*INCHES UNLESS OTHERWISE SPEC.

TABLE 2-1 FLIGHT 516 INTEGRATED EXPERIMENT EQUIPMENT LIST

Exper. No.	Component	Weight, lb	Vol, cu ft or size*	Elec Energy or Elec Pwr	Remarks
1304	Operation of Solar Sail Passive Comsat	(235)			Coarse S/C Pointing, Record S/C Attitude, 0.5 Hours per experiment, 2 exp. per day for 7 days.
	Balloon		10 Ft.^{3}		
	Coils, Power Supply & Recvr. for attitude control	200	10 Ft.^{3}		
	Optical Range and Bearing Tracker	20	6 x 6 x 12	N/A	
	Short Range Transmitter	.5	6 x 6 x 12	10 W	
	Camera, 16 MM (Common to 1001)				
	Film (Returned)	10	1.52'		
	Total Weight	6062			

*INCHES UNLESS OTHERWISE SPEC.

3. EXPERIMENT/SPACECRAFT INTEGRATION

3.1 MISSION DEFINITION

Flight 516 is programmed primarily for Series 0700 astronomical experiments. These experiments will obtain spectral and photometric data from various regions of interest throughout the celestial sphere. These regions of interest are either discrete stellar sources or diffuse patterns of interstellar media. This flight also includes earth-pointing experiments for conjugate aurora observations.

Secondary experiments, carried on this flight, include observations of living organisms exposed to the space environment, a deployable maneuverable satellite, an extendable rod antenna for radio astronomy measurements, and a deployable passive communications satellite in the form of a solar sail. The secondary experiments are programmed such that any conflict with the pointing requirements of the primary astronomical experiments is minimized.

A crew schedule time line has been prepared for this flight (see Table 3-2). The duration/frequency requirements of each of the individual experiments was reviewed for commonalities, and work/sleep/eat cycles arranged so that the flight schedule is composed of a minimum number of "typical day" groups. Five typical daily routines have been evolved. One day is allowed to set-up of the various experiments, where such procedures are required. Wherever possible, experiment compatibility has been sought in order to avoid conflict, e.g., during a prolonged astonomical experiment requiring a high degree of precision, the spacecraft and occupants should be able to maintain a "quiet" condition.

In addition to EVA's for replenishing LiOH, EVA's are necessary for retrieval of the microorganism specimens (Experiment 0406), and "redocking" of the small maneuverable satellite (Experiment 1001). Where possible, concurrent EVA's have been scheduled. EVA man-hour requirements are:

	LiOH Replen.	1001	0406	EVA Support
Manhours	6.5	11	1	12.5
Occurrences	6 x	5 x	1 x*	-

Total EVAs - 11

Total Time Assoc. with EVA (including support): 31 Man-Hours

*In common with a 1001 EVA.

The crew schedule is summarized in Table 3-1 and detailed in Table 3-2. An analysis of the crew schedule shows that:

- Experiment time requirements have been satisfied.
- Reasonable work/eat/sleep duty cycles, with an equitable distribution of activities apportioned among the three astronauts, has been evolved.
- Astronomical assignments have been slanted toward Astronaut No. 1, biological toward Astronaut No. 2, and biomedical toward Astronaut No. 3.

Table 3-3 shows the experiment mission profile. Orientation requirements for the mission are as follows:

Inertial Orientation	-	368 hours
Earth Orientation	-	68 hours
Number of Reorientations	-	220

Table 3-1 Flight 516 Mission Definition Summary**

Exper. No.	Occurrence Day No.	Total Times Perf/ Mission	No. Men Req'd	Exper Time/Test Setup Time, hrs	Exper Time/Test Test Time, hrs	Total Exper Man-hr/ Mission Crewman 1	Crewman 2	Crewman 3	Total	Total Exper Time/Mission, hr Achv'd	Total Exper Time/Mission, hr Spec'd
0100	Setup Day										
0200	I,II,IV,V	146	1/2	Var.	Var.	87	96	209.5	392.5	392.5	330
0401	I,IV	8	1	-	0.5	20	4	2	26	26	24
0402	I	40	1	-	1/1.5	20	30	-	50	50	46
0406	IV	8	2/1	-	.25	-	2.0	2.0	4.0	2	2
0501	All		1	1		-	3.6	9.4	13.0	13.0	9.8
0701	S.U. I,II,V	57	1	1.5	1/2	52.5	20	-	72.5	72.5	60
0702	S.U. I,II,IV,V	59	1	5	1/2	55	51	57	163	163	As Freq. As Poss.
0703	S.U. I,II,IV,V	45	1	4	1/2	49	1	20	70	70	At Least 1 Hr. Per Day
0705B	II,III	15	1	2	8	24	24	30	78	78	72
0801	I,IV	24	2	-	3.3/1.2	-	70.8	-	70.8	70.8	To Be Employed As Opportunity Permits
1001	II,IV	15	2/1	-	2/2.2/3.5	7.2	17.2	19	43.4	43.4	36
1303	II	9	2/1	-	0.5/1	6	4.5	4.5	15	15	9
1304	II,III,V	35	1	-	0.5	2.5	4.5	1	8	8	7

Max Work Day = 10.0 Hours.

Average Work Day = 8.85 Days.

Minimum Work Day = 6.4 Hours.

Total EVA Man Hrs. 18.5

Table 3-2 **CREW SCHEDULING, FLIGHT** 516, **SHEET** 1 **OF** 3

2-10.14

DAY	ORBIT	CREWMEN ACTIVITIES 1	2	3
0000				
20				
40				
0100				E/Hyg
20				
40				
0200		0702 Set-up		
20				
40				
0300				
20				
40				
0400				
20		E/Hyg		
40			Rest	0702 Set-up
0500		Rest		
20				
40			E/Hyg	
0600				
20				
40				
0700			Rest	Rest
20				
40				
0800		Sleep		
20				
40				
0900				E/Hyg
20				
40				
1000			0100 0200	
20				
40				
1100				
20		E/Hyg		0100 0200
40			0702	
1200		Rest		
20			E/Hyg	
40				
1300			Rest	
20				
40				
1400		0703 Set-up		
20				
40				E/Hyg
1500				
20				
40			Sleep	
1600				
20				
40				
1700		E/Hyg		
20				
40				Sleep
1800				
20				
40		0701 Set-up		
1900				
20				
40			E/Hyg	
2000				
20			0703	
40				
2100		Rest		
20				
40				E/Hyg
2200			Rest	Rest
20				
40				
2300		E/Hyg	E/Hyg	0501
20				
40				
2400				

DAY I	ORBIT	CREWMEN ACTIVITIES 1	2	3
0000				
20				
40			0701	
0100				E/Hyg
20		0100 0200		
40				
0200				
20				
40			0801	
0300				
20				
40				0100 0200
0400				
20		Rest		
40				
0500		E/Hyg	E/Hyg	
20			Rest	
40				
0600				0501
20			0702	
40				
0700				Rest
20				
40				
0800		Sleep		
20				
40				
0900				E/Hyg
20				
40			0402	
1000				
20				
40				
1100				0100 0200
20		E/Hyg		
40				
1200		Rest		
20		0100 0200	E/Hyg	
40				
1300			Rest	0703
20				
40				
1400				0100 0200
20				
40				E/Hyg
1500				
20				
40		0402	Sleep	
1600				
20				
40		E/Hyg		
1700				
20				
40				Sleep
1800				
20				
40		0401		
1900				
20				
40		0701	E/Hyg	
2000				
20				
40		Rest		
2100				
20				E/Hyg
40			Rest	Rest
2200				
20				
40				
2300		E/Hyg	E/Hyg	0100 0200
20				
40				
2400				

DAY II	ORBIT	CREWMEN ACTIVITIES 1	2	3
0000				
20				
40				
0100		1001	1001	E/Hyg
20				
40		(Omit on 34th day)	(Omit on 34th day)	
0200				
20				
40				
0300				
20				
40				
0400				1001
20			Rest	
40		E/Hyg		
0500		Rest		1001 EVA
20			EVA Support	
40				LION EVA
0600				
20				
40			E/Hyg	
0700				Rest
20				
40			Rest	
0800		Sleep		
20				
40				
0900			0100 0200	E/Hyg
20				
40				
1000			1304	
20				
40				
1100				0705B Set-up
20				
40		E/Hyg		
1200			1304	
20			E/Hyg	1303
40		1303	Rest	
1300				
20				
40				0100 0200
1400				
20				
40		0701		E/Hyg
1500				
20				
40		0702	Sleep	
1600				
20				
40		E/Hyg		
1700				
20				Sleep
40				
1800				
20		0703		
40				
1900			E/Hyg	
20				
40		1303		
2000				
20			1303	
40		Rest		
2100				
20				E/Hyg
40			Rest	Rest
2200				
20				0501
40				
2300		E/Hyg	E/Hyg	
20				
40				
2400				

DAY III	ORBIT	CREWMEN ACTIVITIES 1	2	3
0000				
20				
40				E/Hyg
0100				
20			1304	
40			Rest	
0200			0501	
20		0705B		
40			E/Hyg	Rest
0300				
20				
40				
0400				
20		E/Hyg		
40				
0500		Rest		
20			Rest	
40				
0600				
20				0705B
40				
0700				
20		Sleep		
40				
0800			E/Hyg	
20				
40				
0900				E/Hyg
20				
40				
1000			0705B	
20				
40				Rest
1100				
20				
40		E/Hyg		
1200				
20				
40			E/Hyg	E/Hyg
1300				
20				
40		0705B		
1400				
20				Sleep
40				
1500				
20				
40			Sleep	
1600				
20				
40		E/Hyg		
1700				
20				
40				0705B
1800				
20				
40		Rest		
1900				
20				
40			E/Hyg	
2000				
20				E/Hyg
40				
2100				
20				
40		E/Hyg	0705B	
2200				
20				Sleep
40		Rest		
2300				
20				
40				
2400		1304		

NOTES

E/Hyg — Eat & Personal Hygiene

× × × × — Limits of Experiment Time

- - - - — Limits of EVA

Table 3-2 **CREW SCHEDULING, FLIGHT** 516, **SHEET** 2 **OF** 3

2-13.1

DAY IV	ORBIT	CREWMEN ACTIVITIES 1	2	3
0000				
20				
40			1001	E/Hyg
0100		0702		
20				
40			1001	
0200			EVA	EVA
20				Support
40			0406 EVA	on 14th
0300		0703	14th day	day
20		except	only	
40		14th day	0406	0406
0400				
20				
40			Rest	
0500				
20				0501
40			E/Hyg	
0600				0401
20				
40				
0700		Sleep	Rest	Rest
20				
40				
0800				
20			0401	
40				E/Hyg
0900				
20			0406	0406
40				
1000			0100	
20			0200	
40		E/Hyg		1001
1100			EVA for	
20		EVA	L10H on	
40		Support	14th &	
1200		14th & 20th day	20th day	
20				
40			E/Hyg	1001
1300		0702	Rest	EVA
20				
40				
1400				E/Hyg
20				
40				
1500		0703		
20				
40				
1600			Sleep	
20				
40				
1700		E/Hyg		
20				
40				
1800				Sleep
20				
40		0702		
1900				
20				
40			0401	
2000				
20			0801	
40				
2100				
20		Rest		E/Hyg
40			Rest	Rest
2200				
20				
40				
2300				0100
20		E/Hyg	E/Hyg	0200
40				
2400				

DAY V	ORBIT	CREWMEN ACTIVITIES 1	2	3
0000				
20				
40			E/Hyg	
0100		0701		E/Hyg
20				
40				
0200				
20				
40				
0300		1304		
20		9th day	0100	
40		only	0200	
0400		0100		
20		0200		0702
40		E/Hyg	Rest	
0500		Rest		
20				
40			E/Hyg	
0600				
20				
40			Rest	Rest
0700				
20				
40				
0800		Sleep		
20				
40				
0900				E/Hyg
20			0501	
40				
1000				
20				
40			0100	0100
1100			0200	0200
20		E/Hyg		
40				
1200		Rest		
20			E/Hyg	
40		0703		
1300			Rest	
20				1304
40				9th day
1400				only
20				
40		0703		E/Hyg
1500				
20				
40				
1600			Sleep	
20				
40				
1700		E/Hyg		
20				
40				
1800				Sleep
20				
40				
1900		0702		
20				
40				
2000			0100	
20			0200	
40				
2100		Rest		
20				E/Hyg
40			Rest	Rest
2200				
20				EVA
40				for
2300				L10H
20		E/Hyg	E/Hyg	Refuel
40				on 42nd
2400				day only

DAY	ORBIT	CREWMEN ACTIVITIES 1	2	3
0000				
20				
40				
0100				
20				
40				
0200				
20				
40				
0300				
20				
40				
0400				
20				
40				
0500				
20				
40				
0600				
20				
40				
0700				
20				
40				
0800				
20				
40				
0900				
20				
40				
1000				
20				
40				
1100				
20				
40				
1200				
20				
40				
1300				
20				
40				
1400				
20				
40				
1500				
20				
40				
1600				
20				
40				
1700				
20				
40				
1800				
20				
40				
1900				
20				
40				
2000				
20				
40				
2100				
20				
40				
2200				
20				
40				
2300				
20				
40				
2400				

NOTES

[redacted]

(MASTER)

FLIGHT 516 CREW SCHEDULE SHEET 3 OF 3

Nth DAY OF MISSION	DAILY SCHEDULE				
	I x20	II x3	III x3	IV x4	V x14
1		(SET-UP DAY)			
2	I				
3	I				
4	I				
5	I				
6	I				
7		II			
8			III		
9					V
10					V
11					V
12					V
13					V
14				IV	
15				IV	
16	I				
17	I				
18	I				
19	I				
20	I				
21		II			
22			III		
23					V
24					V
25					V

Nth DAY OF MISSION	DAILY SCHEDULE				
	I x20	II x3	III x3	IV x4	V x14
26					V
27				IV	
28				IV	
29	I				
30	I				
31	I				
32	I				
33	I				
34		II			
35			III		
36					V
37					V
38					V
39					V
40	I				
41	I				
42					V
43	I				
44	I				
45	I				

[redacted]

GRUMMAN AIRCRAFT ENGINEERING CORPORATION

Table 3-3 APOLLO EXTENSION SYSTEM EARTH ORBIT MISSION STUDY
FLIGHT [redacted] EXPERIMENT MISSION PROFILE

SCHEDULE SET-UP DAY

SHEET 1 OF 6

TIME - HOURS: 00, 02, 04, 06, 08, 10, 12, 14, 16, 18, 20, 22, 24

ORBITS

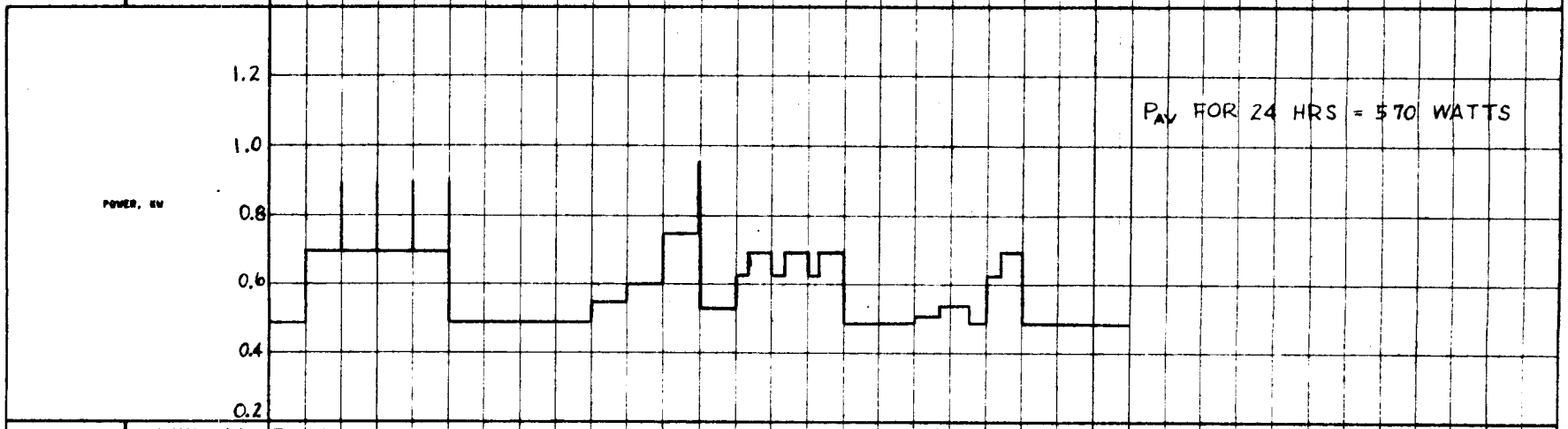

EXPERIMENT POINTING REQUIREMENTS																								
DIRECTION (1)	FD	IO	IO	IO	FD	FD	FD	FD	FD	FD	FD	IO	FD	IO	IO	IO	FD	FD	IO	IO	IO	FD	FD	FD
ACCURACY, ±DEGREES	N/A	2.8×10^{-6}	2.8×10^{-6}	2.8×10^{-6}	2.8×10^{-6}	N/A	N/A	N/A	N/A	N/A	N/A	2.8×10^{-6}	N/A	5.5×10^{-4}	5.5×10^{-4}	5.5×10^{-4}	N/A	N/A	0.5	0.5	5.5×10^{-4}	N/A	N/A	N/A

NOTES, OTHER TIME - DEPENDENT VARIABLES, ETC																								
			AR		AR							AR		AR					AR		AR			

AR = ANGULAR REORIENTATION

(1) INDICATE EO(EARTH ORIENTATION), IO(INERTIAL ORIENTATION), OR FD(FREE DRIFT)

2-10-17

GRUMMAN AIRCRAFT ENGINEERING CORPORATION

Table 3-3 APOLLO EXTENSION SYSTEM EARTH ORBIT MISSION STUDY
FLIGHT [redacted] EXPERIMENT MISSION PROFILE

SCHEDULE I

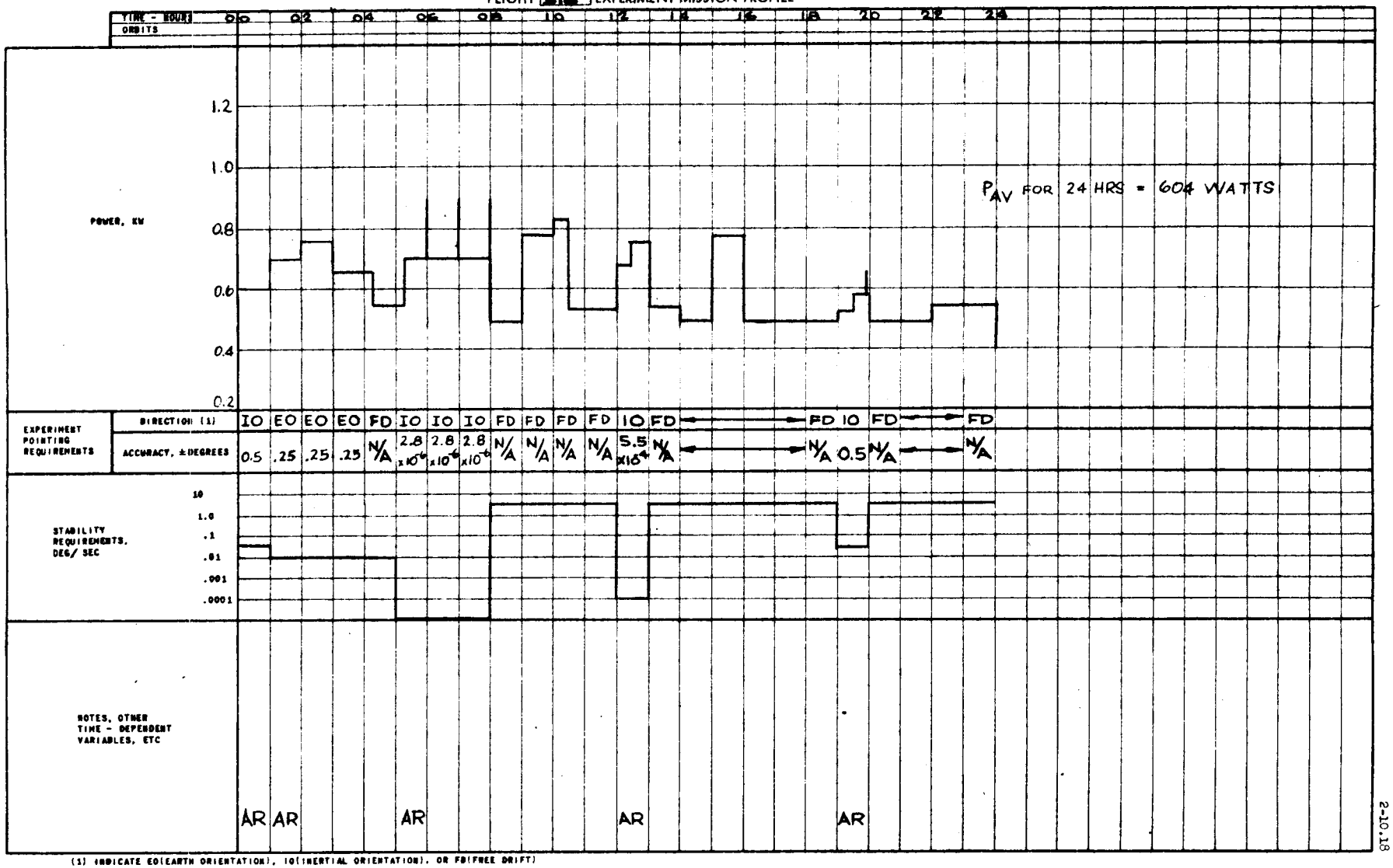

(1) INDICATE EO(EARTH ORIENTATION), IO(INERTIAL ORIENTATION), OR FD(FREE DRIFT)

2-10.18

GRUMMAN AIRCRAFT ENGINEERING CORPORATION

Table 3-3 APOLLO EXTENSION SYSTEM EARTH ORBIT MISSION STUDY
FLIGHT 516 EXPERIMENT MISSION PROFILE

SCHEDULE II

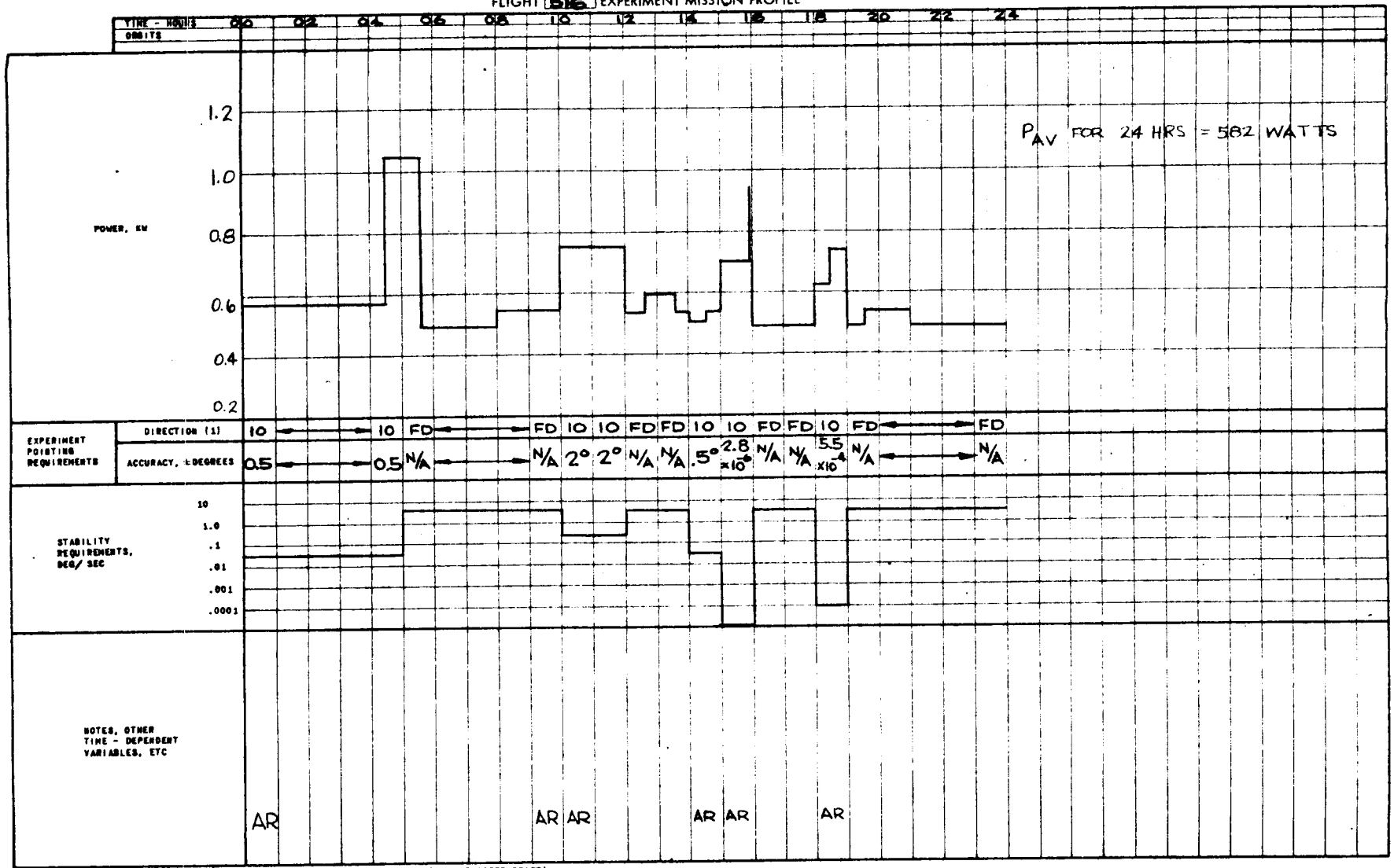

(1) INDICATE EO(EARTH ORIENTATION), IO(INERTIAL ORIENTATION), OR FD(FREE DRIFT)

BRUNSWICK AIRCRAFT ENGINEERING CORPORATION

Table 3-3 APOLLO EXTENSION SYSTEM EARTH ORBIT MISSION STUDY

FLIGHT [redacted] EXPERIMENT MISSION PROFILE

SCHEDULE III

SHEET 4 OF 6

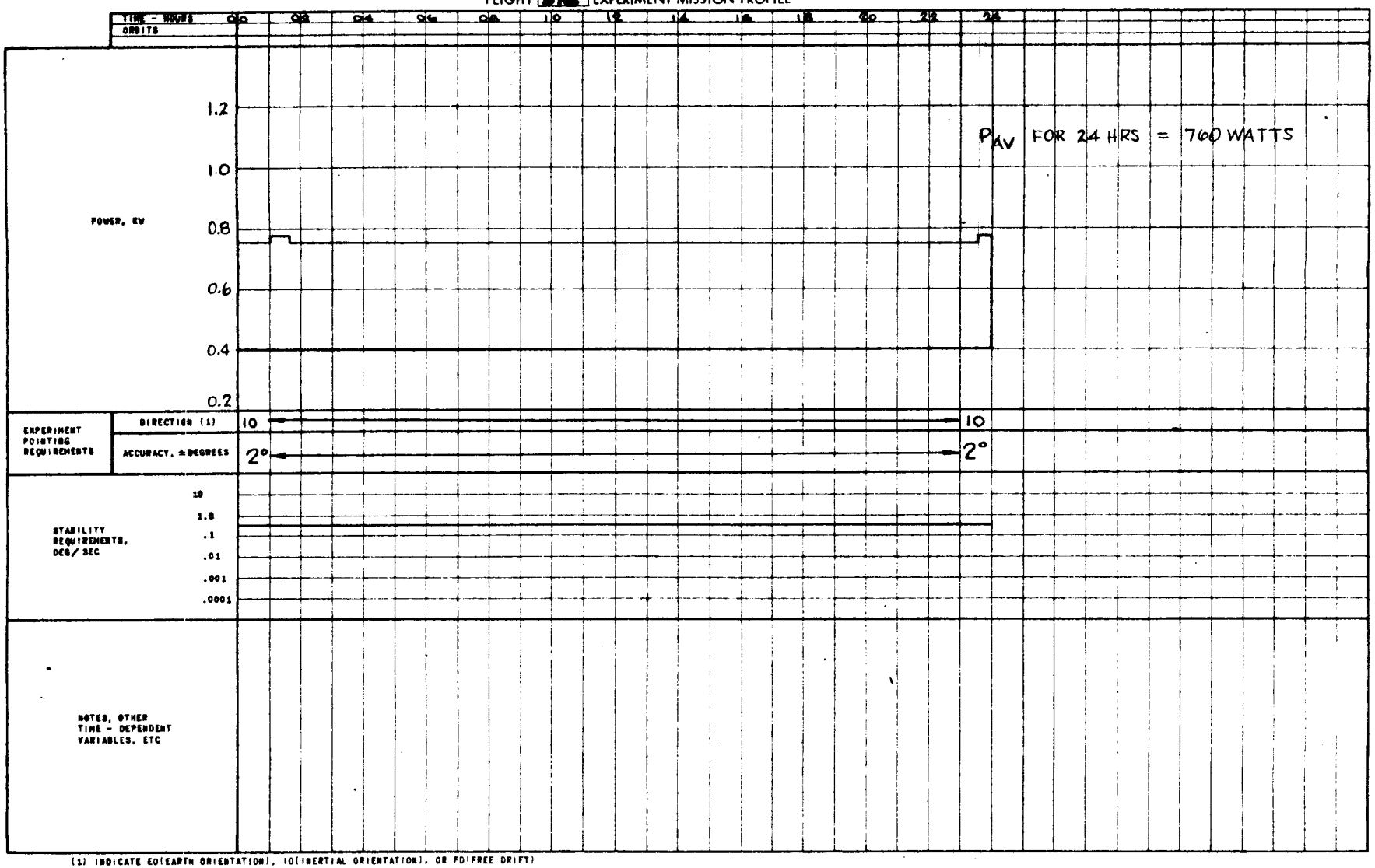

(1) INDICATE EO(EARTH ORIENTATION), IO(INERTIAL ORIENTATION), OR FD(FREE DRIFT)

2-10.22

GRUMMAN AIRCRAFT ENGINEERING CORPORATION

Table 3-3 APOLLO EXTENSION SYSTEM EARTH ORBIT MISSION STUDY
FLIGHT [illegible] EXPERIMENT MISSION PROFILE

SCHEDULE IV

TIME - HOURS: 0.0 0.2 0.4 0.6 0.8 1.0 1.2 1.4 1.6 1.8 2.0 2.2 2.4

ORBITS

POWER, KW: 1.2, 1.0, 0.8, 0.6, 0.4, 0.2

P_{AV} FOR 24 HRS = 639 WATTS

EXPERIMENT POINTING REQUIREMENTS

DIRECTION (1)	ACCURACY, ±DEGREES
10	2.8×10^{-4}
10	2.8×10^{-4}
10	5.5×10^{-4}
10	5.5×10^{-4}
FD	N/A
FD	N/A
FD	N/A
FD	N/A
10	0.5
10	0.5
10	0.5
10	0.5
10	2.8×10^{-6}
10	2.8×10^{-6}
10	5.5×10^{-4}
10	5.5×10^{-4}
FD	N/A
FD	N/A
IO	2.8×10^{-4}
EO	.25
EO	.25
FD	N/A
FD	N/A
FD	N/A

STABILITY REQUIREMENTS, DEG/SEC: 10, 1.0, .1, .01, .001, .0001

NOTES, OTHER TIME - DEPENDENT VARIABLES, ETC: AR AR AR AR AR AR AR AR AR AR AR

(1) INDICATE EO(EARTH ORIENTATION), IO(INERTIAL ORIENTATION), OR FD(FREE DRIFT)

Table 3-3 APOLLO EXTENSION SYSTEM EARTH ORBIT MISSION STUDY SCHEDULE V

FLIGHT 516 EXPERIMENT MISSION PROFILE

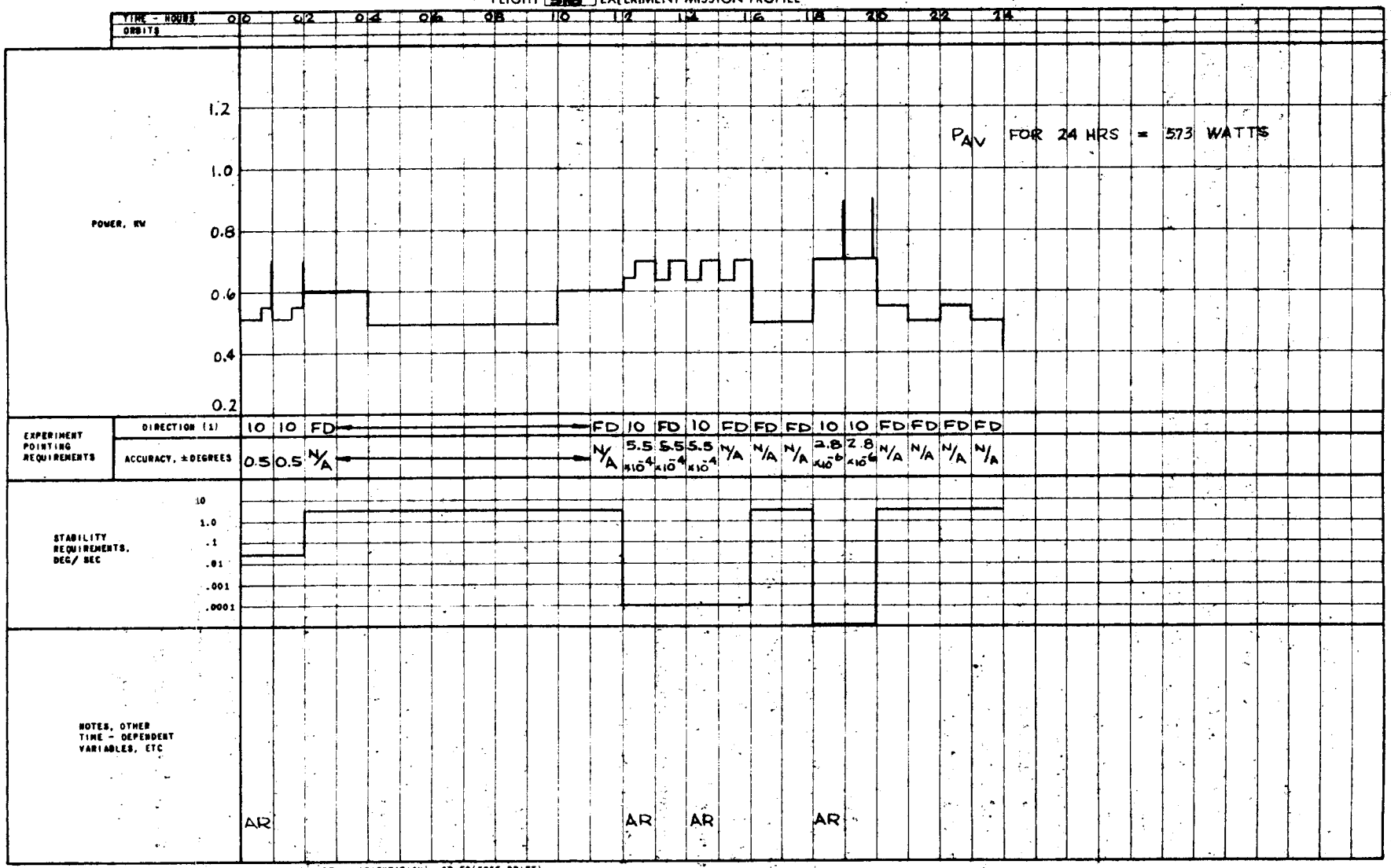

(1) INDICATE EO(EARTH ORIENTATION), IO(INERTIAL ORIENTATION), OR FO(FREE DRIFT)

2-10-22

3.2 SPACECRAFT DEFINITION

Flight 516, shown in Figures 3-1 and 3-2, carries Astronomy (0701, 2, 3, 5B), Bioscience (0100 and 0200), Space Structures (1303, 4), Conjugate Aurora (0801), Maneuverable Sub-satellite (1001), and Living Organisms (0401, 2, 6) experiments. Nominal spacecraft attitude is inertially oriented. Attitude is held within a deadband of $\pm 5^{\circ}$ except during experiment periods having specific pointing and stability requirements. Experiment pointing and stability requirements exceeding CSM capability (0701, 2, 3, 5B, 0801) are accommodated by installing the experiment telescopes on gimballed mounts and providing fine guidance and control systems within the telescopes. Spacecraft pointing and stability requirements are accommodated by the CSM up to the propellant capacity of both the "C" and "D" versions. For the "D" version a LEM RCS system is added to the Lab to supplement the propellant capacity of the CSM.

The astronomy experiments are all aligned parallel to the longitudinal axis of the spacecraft and are controlled from an astronomers console on the right side of the forward cabin. Access to the telescope and coronagraph is provided from inside the lab for readily changing cameras, magazines and spectrographs. A common T.V. viewfinder and star trackers provide inputs for orientation and control. Spacecraft pointing accuracy for these experiments is $\pm 1/2^{\circ}$. The telescopes, coronagraph, and conjugate aurora experiments are gimballed and incorporate fine error sensors to meet individual requirements.

As shown on the inboard profile, Figure 3-2, adequate storage and work space is available for all experiments. A control console on the left side of the forward cabin is used for the space structures, conjugate aurora, and subsatellite experiments. All food for the mission is stored internally. A seven day supply of LiOH is stored internally and is replaced from external storage, during scheduled EVA's.

The space structures technology, conjugate aurora, and maneuverable subsatellite experiments are mounted on the descent stage. A gimballed mount is provided on the D/S for the extendable rod antenna of the radio astronomy experiment. Pointing is controlled from the astronomer's console. The maneuverable subsatellite is checked out, launched from, and recovered by its launch package, mounted on the D/S. The subsatellite is refueled and its film retrieved during an EVA.

KEY

No.	Experiment	Name
1		FCA Radiator
2	0705B	Radio Astronomy 1-5 mc Range Using Tunable V-Antenna
3		Boresight Star Tracker
4	0406	Space-Borne Micro-organism Cartridges
5	0703	Manned Coronagraph
6	0702	Intermed-Size Reflecting Telescope
7		Equipt Radiator
8		Power Pack
9		Potable Water Tank
10		Waste Storage Tank
11	1001	Small Maneuverable Satellite
12	1303	Extendable Rod Perf. Test
14	1304	50 Foot Balloon W/Coils, Power Supply & Canister
15	0801	Telescope Assy
16	0701	Emission Line Radiometry
17		LiOH Storage
18		RCS ("D" configuration only)

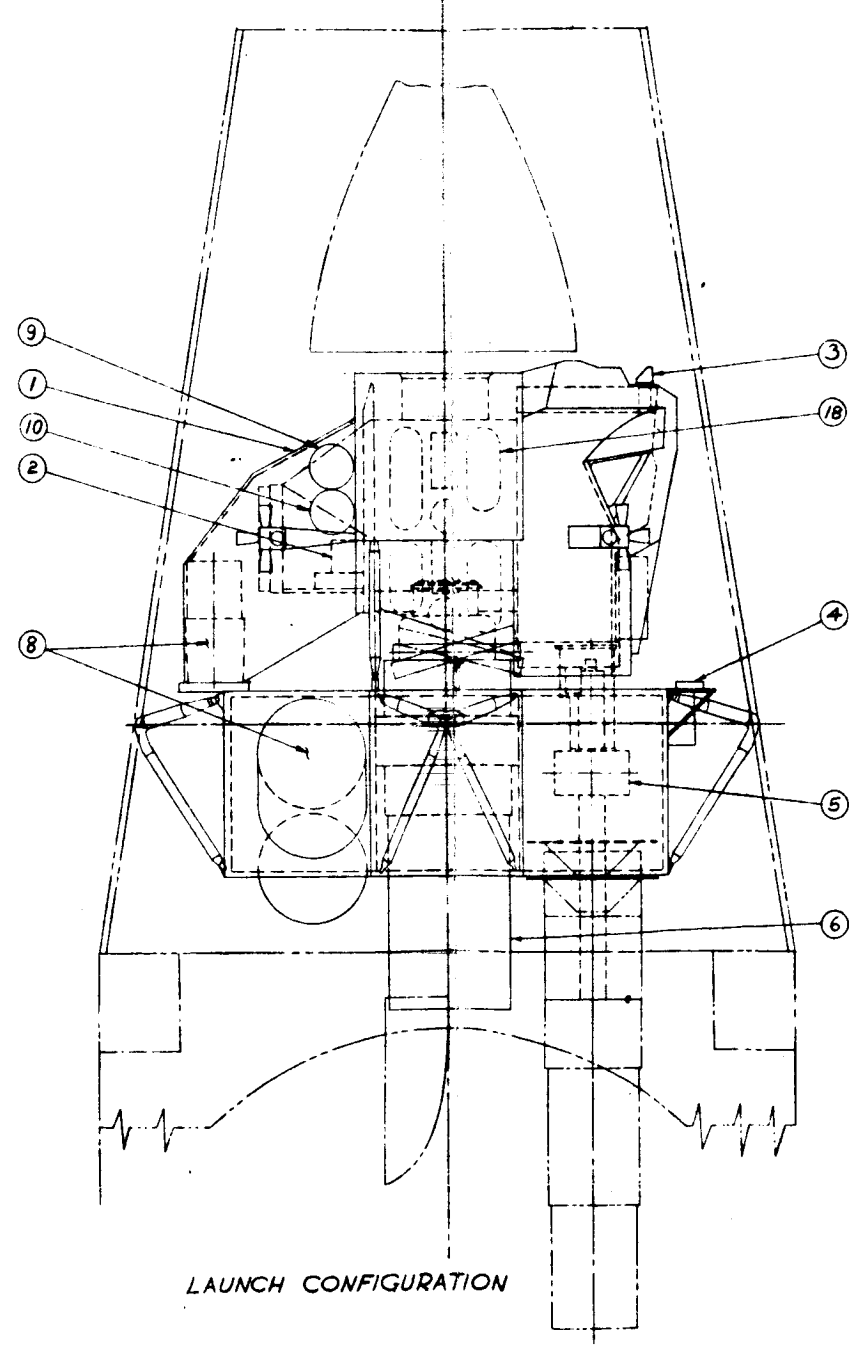

LAUNCH CONFIGURATION

FOLD-OUT #1

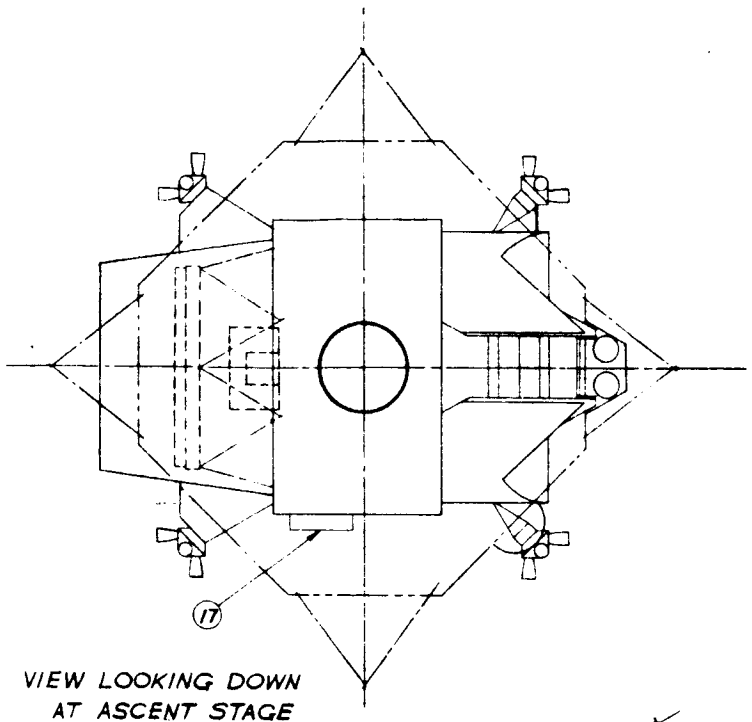

VIEW LOOKING DOWN AT ASCENT STAGE

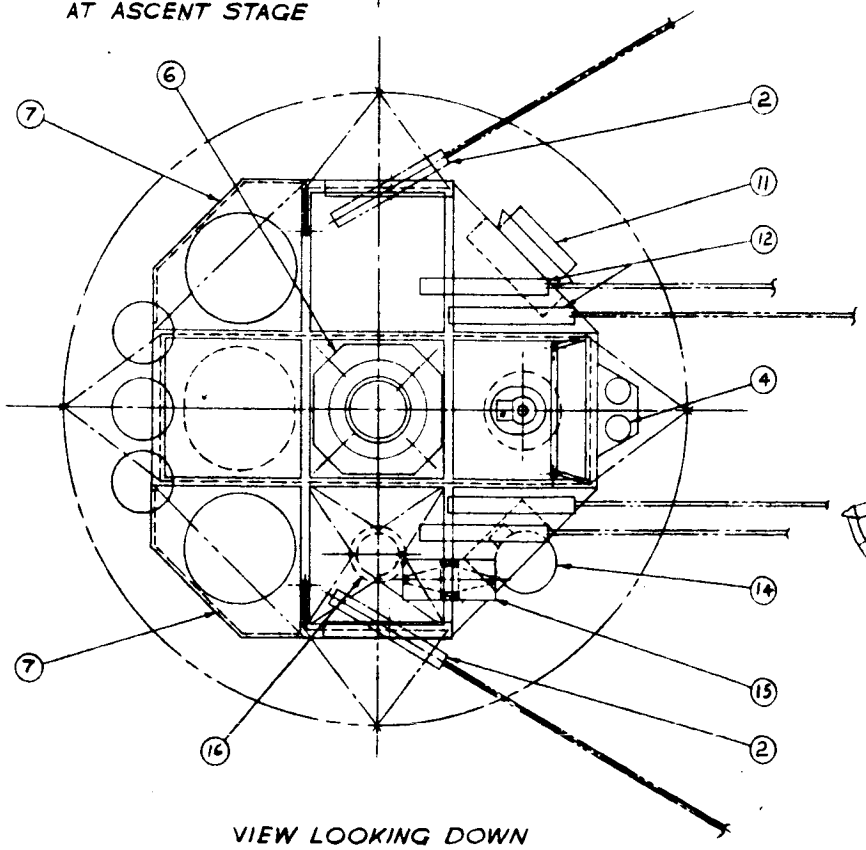

VIEW LOOKING DOWN AT DESCENT STAGE

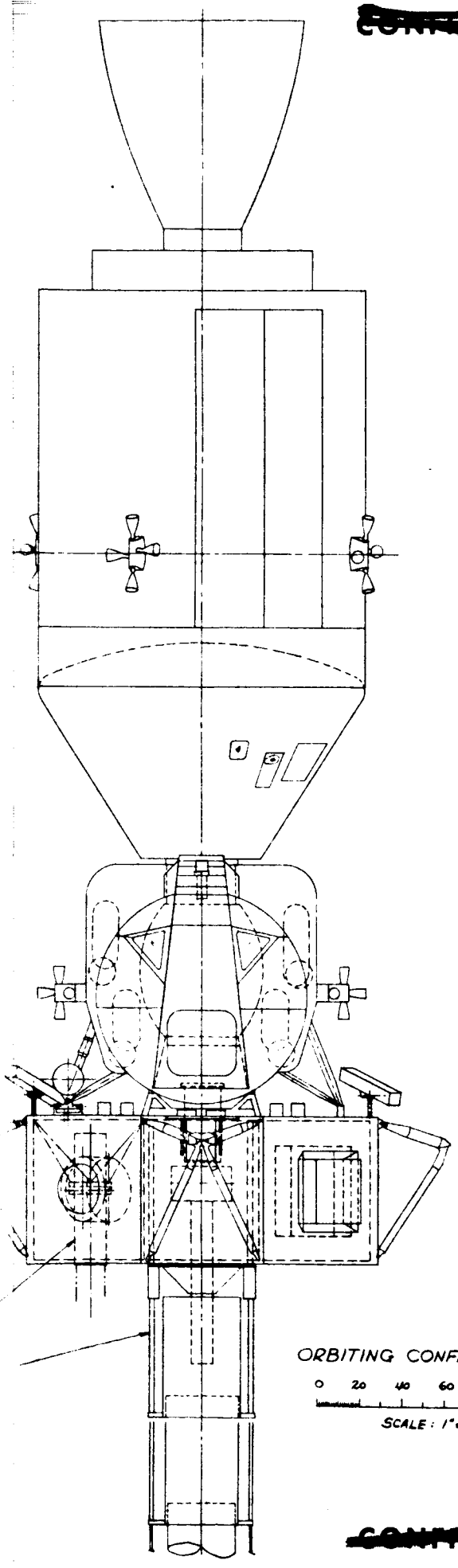

ORBITING CONFIGURATION

0 20 40 60 80 100

SCALE: 1" = 20"

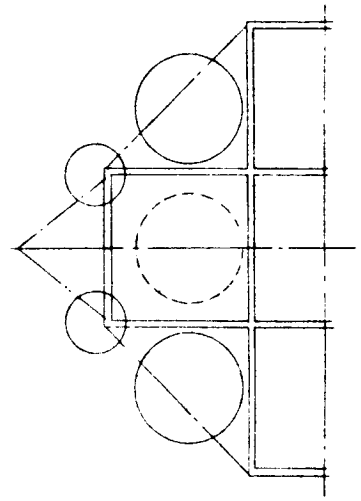

ALTERNATE POWER PACK CONFIGURATION

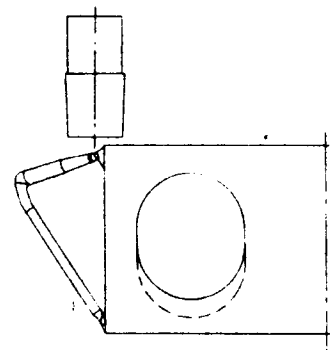

FOLD-OUT #2

Fig. 3-1

Grumman
AIRCRAFT ENGINEERING CORPORATION
PRELIMINARY DESIGN SECT.

Gen Arrgmt Flt. 516
Astronomy &
Bioscience Lab I

SCALE OF GEN. DWG. - 1/20

AES 1034

KEY

No.	Experiment	Name
1		Food
2	0702	Telescope
3	0402	-20°C Refrigerator
4		LiOH
5		Astronomers Display Console
6	0703	Coronagraph
7		ECS
8		Biomed
9		Biomed Incubator
10		Biomed Refrigerator
11	0401,0402	Incubator
12	0501	Radiation Environment Monitoring
13		Floodlights (2)
14	1304	Optical Range & Bearing Tracker
15		Logs, Film & Tape Storage, Recorders
16		Seat & Restraint (2)
17	0406	+5°C Refrigerator
18	0401	Lyophilization
19	0401	Chemical Equipment Storage
20	0402	Scintillation Counter
21	0402	Culture Flasks
22		ECS & Communications Control Console
23	0401,0402 0406	Microscope
24	0401,0402	-15°C Refrigerator
25	0406	Incubator
26	0402	Particule Counter
27	0402	Support Cabinet & 35mm Camera
28	0402	Centrifuge
29	0801,1001	Display
30	1303,1304 0801, & 1001	Control Console
31		Flight Controller

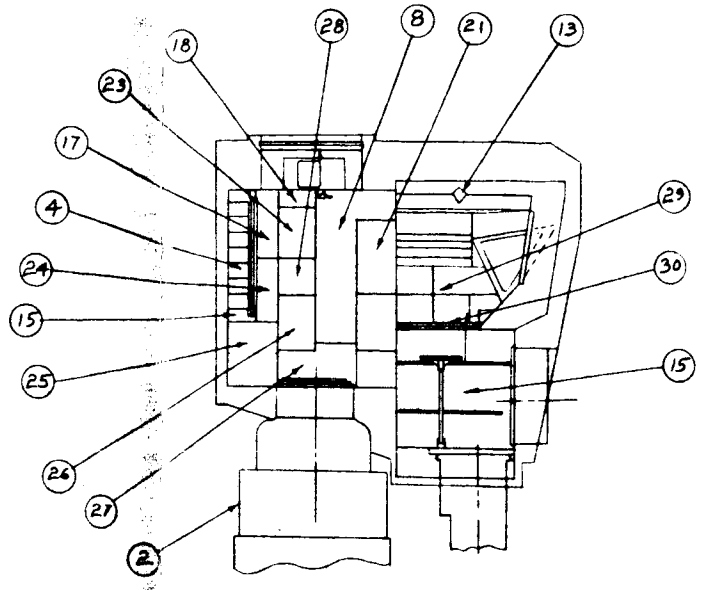

VIEW LOOKING OUTBOARD
LEFT HAND SIDE

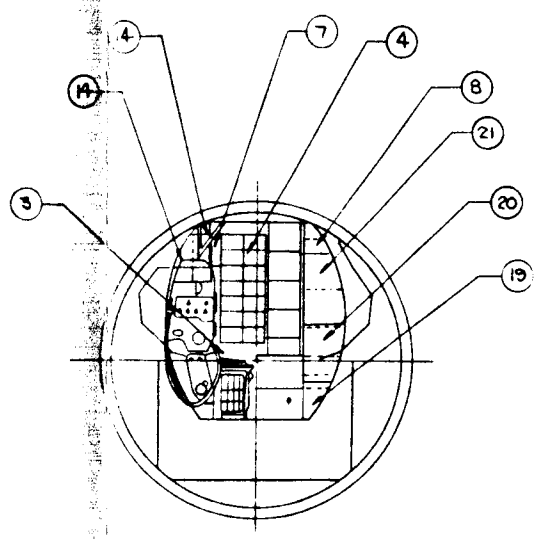

VIEW LOOKING AFT

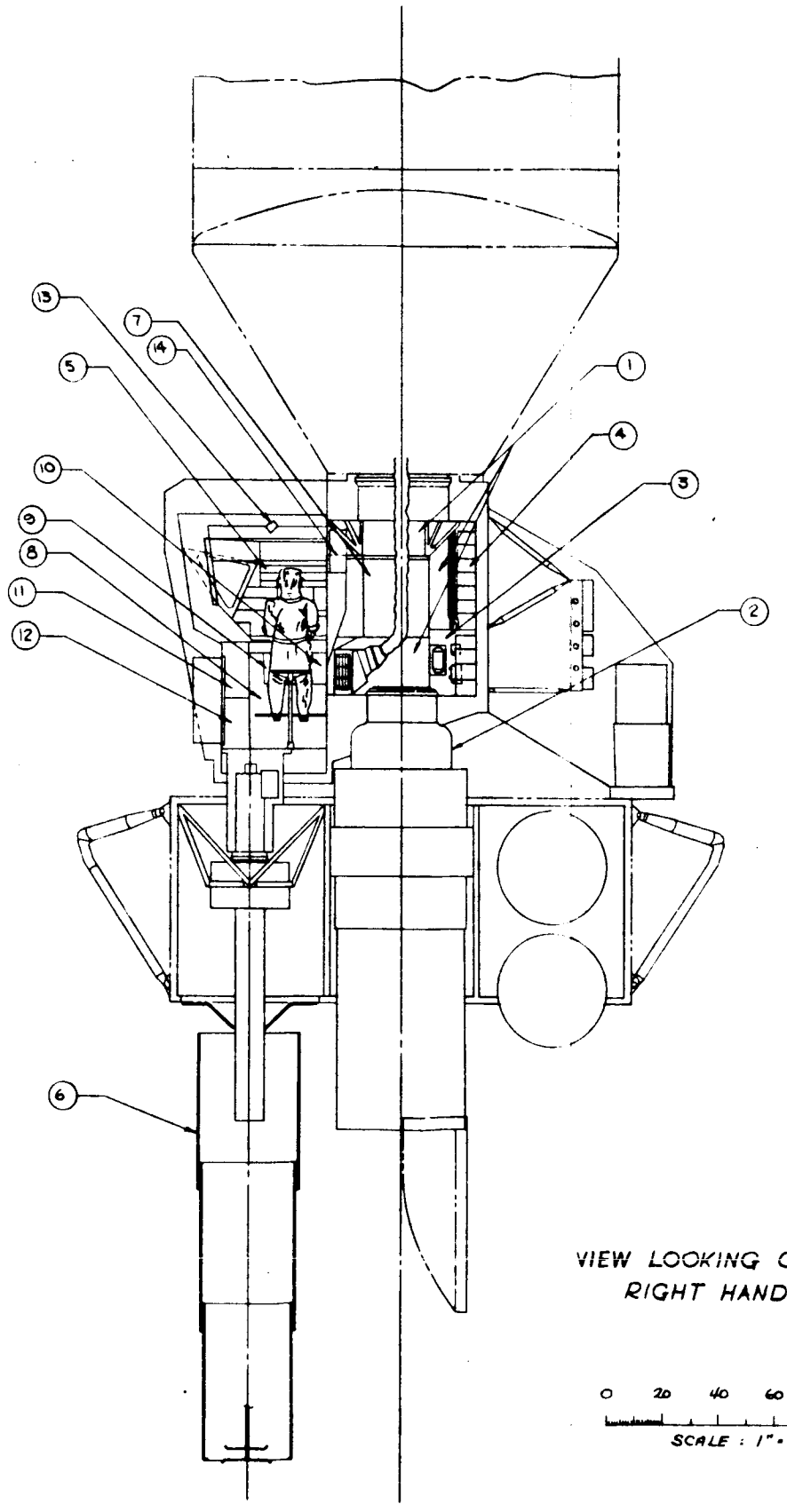

VIEW LOOKING OUTBOARD
RIGHT HAND SIDE

0 20 40 60 80 100
SCALE : 1" = 20"

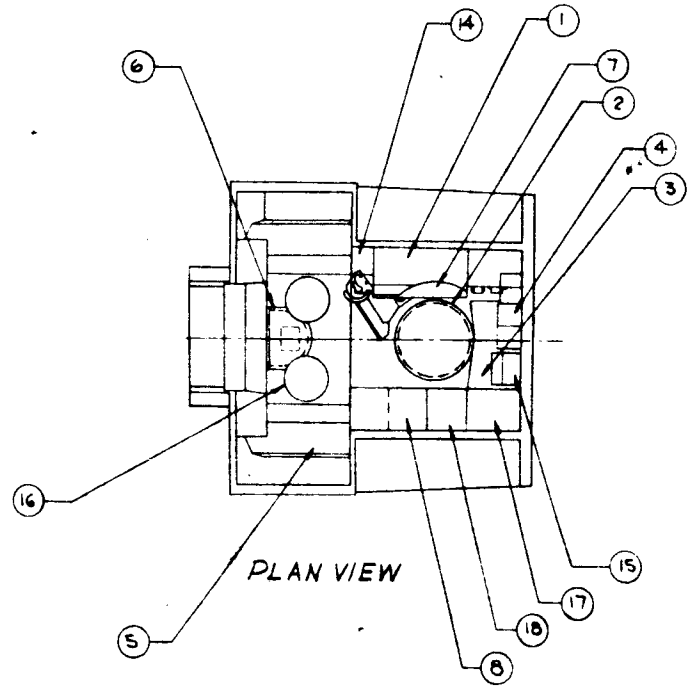

PLAN VIEW

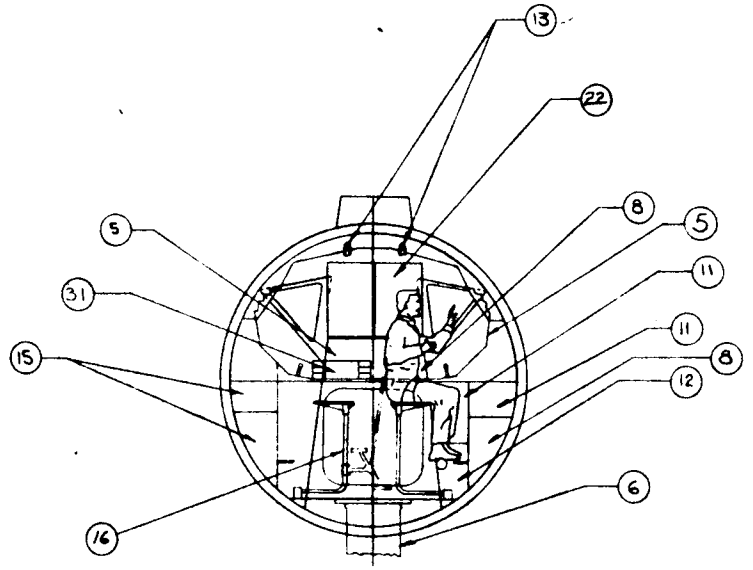

VIEW LOOKING FORWARD

Grumman
AIRCRAFT ENGINEERING CORPORATION
PRELIMINARY DESIGN SECT.

Inhd Prof Flt. 516
Astronomy & Bio-
science Lab I

SCALE OF DWG. SHEET - 1/20

AES 1035

Fig. 3-2

Supporting electronics and spares for experiments are carried in the aft equipment bay of the A/S.

Structural modifications to the LEM A/S are limited to incorporation of an air lock below the floor panel in the forward cabin to accommodate the coronagraph. The telescope air lock is designed to mount in the existing ascent engine hatch. The D/S structure must be reworked to accommodate the coronagraph. Supports for all other items can be added without modification.

In addition to the standard CSM/LEM interface, this flight requires additional wiring to accommodate the pointing requirements of the experiments. Interface wiring includes earth tracker and star tracker inputs to maintain attitude hold, and command data for the lab flight controller for manual control of spacecraft slewing operations.

The difference in power supply between "C" and "D" versions of the lab are the addition of one Apollo-X O_2 and one Apollo-X H_2 tank, fuel cell reactants and the addition of one FCA. Also, the FCA radiator is increased by 20 sq ft. on the "D" version. These modifications to a "C"-version Lab accommodate the added power demand of the "D"-version required by taking over spacecraft power requirements after (nominally) 14 days.

This flight utilizes an Apollo CSM fuel cell electrical generation system, a LEM ECS to provide suit circuit operation in the lab during EVA and selected components to provide data transmission, status and appropriate displays.

The large number of rotational maneuvers required by experiments 0801 and 0701, 0702 and 0703 together with gravity gradient disturbance torques create large R.C.S. propellant requirements. Four sets of LEM RCS tanks are carried on the "D" version.

The estimated laboratory weight of the "C" version is 13,698 lbs and of the "D" version is 17,225 lbs. (see tables 3-4 and 3-5).

Basic subsystem characteristics pertinent to this flight are described below:

Vehicle Orientation	Inertial Pointing
Stabilization Reqm'nts	$\pm .5^{\circ}$ 560 HR; $\pm 5^{\circ}$ 520 HR
Avg Experiment Pwr (Delivered)	535 Watts (includes 200 W for Exper 0701 Sensor Cooler)
Number of Repressurizations	11
Equipment Cooling	40 Ft^2 Radiator

	C Config	D Config Takeover P_T = 13.25 days
Number of Fuel Cells	2	3
Oxygen Tanks	1 Apollo-X	2 Apollo-X
Hydrogen Tanks	1 Apollo-X	2 Apollo-X
Peaking Battery	None	None
Fuel Cell Cooling	16 Ft^2	36 Ft^2
RCS System	None	Std LEM Thrustors
RCS Tankage	None	Std LEM Tanks
S & C System	Sensors, Controller, FDAI Needles	Sensors, Controller, ATCA, Gyros, FDAI Needles
Waste Reactants	22 lb	0
Water for Thermal Con (Max)	0	0
Water Generated	940 lb	1793 lb

Waste reactants are needed to accommodate the estimated boiloff rates. These fluids are disposed of by increasing the power output of the normally operating fuel cells and energizing either a dummy load or idle equipment.

TABLE 3-4 LEM LAB DETAILED WEIGHT STATEMENT

Flight 516

Component	Weight, lbs Configuration C	D
Structure	(2588)	(2671)
Basic Ascent	802	802
Basic Descent	750	750
Shielding	501	521
Power Pack Structure	50	50
Experiment Supports	485	485
RCS Supports		63
Stabilization and Control	(205)	(205)
Attitude Translation Control Ass'y	27	27
Rate Gyro Ass'y	2	2
Controllers	14	14
Star Trackers and Electronics	126	126
Earth Tracker	36	36
Crew Provisions	(309)	(309)
Restraints	35	35
Lighting	10	10
Food	228	228
LiOH - PLSS	36	36
Reaction Control System		(1195)
Propellant		695
Propellant System		268
Pressurization System		110
Thruster Ass'y		122
Controls and Displays	(606)	(606)
Environmental Control	(950)	(1002)
Atmosphere Revitalization System	80	80
O_2 Supply and Cabin Pressurization	34	34
Water Management	36	36
Heat Transport, Cold Plates, Coolant	105	105
LiOH - ECS	382	382
Water	40	40
Radiators	112	164
Thermal Control	161	161

TABLE 3-4 LEM LAB DETAILED WEIGHT STATEMENT (Con't)

Flight 516

Component	Weight, lbs Configuration C	D
Instrumentation	(151)	(151)
Signal Conditioner	45	45
PCM and Timing Elec. Ass'y	39	39
Data Storage	25	25
Experiment Selector	6	6
Data Tapes	30	30
Spare Voice Recorders	6	6
Electrical Power Supply	(2735)	(4896)
Fuel Cell Ass'ys	492	738
Reactants and ECS Oxygen	1104	2545
Reactant Tankage	424	848
Plumbing	40	60
Inverters	75	75
Wiring, Distribution and Umbilical	600	630
Communications	(32)	(32)
Television	24	24
Audio Center	6	6
Voice Recorder	2	2
Experiment	(6062)	(6062)
Spares	(60)	(96)
Total Laboratory	13,698	17,225

TABLE 3-5 INTEGRATED SPACECRAFT WEIGHT STATEMENT

Flight 516

Component	Weight, lbs Configuration C	D
Command Module Basic Weight	(10,287)	(10,287)
Service Module Basic Weight	(12,531)	(9,198)
CSM Retro-Propellant	(21,500)	(17,500)
Laboratory Weight	(13,698)	(17,225)
Basic Laboratory	2,588	2,671
Experiments	6,062	6,062
Experiment Support Systems	3,223	4,524
Expendables	1,790	3,926
CSM Experiment Dependent Weights		
RCS Propellant	1,250	688
Total Laboratory and Experiment	(14,948)	(17,913)
Allowable Lab and Exper. Weight	12,932	20,265
Total Orbiting Weight	59,266	54,898
Service Module Propellant (Ascent)	21,200	21,200
SLA Adapter	3,505	3,505
Launch Vehicle Payload	83,971	79,603

4. FLIGHT OPERATIONAL SUPPORT: FLIGHT NO. 516

Experiment 0100 & 0200 - Medicine and Behavioral - Periodic daily data transmission and ground monitoring of safety parameter data.

Experiment 0401 - Genetic Effects in Microorganisms (DNA Mutation Rate, and Phage Production) - Control experiment identical to flight experiment must be performed simultaneously on the ground, with temperature measured to within 0.5°C.

Experiment 0402 - Effects of Space on Morphology, Growth, and Gas/Liquid Separation in Microorganisms, Unicellular Organisims and Animal Tissue Cells - Experiments will be conducted simultaneously on the ground.

Experiment 0501 - Radiation Environment Monitoring - External particle flux measurements during a solar flare event are to be correlated with the solar activity observations made on earth stationed observatories and other satellites.

Experiment 0703 - Manned Coronagraph - Simultaneous measurement of the total solar energy profile at the time of coronal observation. Correlation of data collected at earth stations, OSO and AOSO satellites and the manned coronagraph.

Experiment 0801 - Conjugate Aurora and Airglow - Coordinated auroral observations from ground stations. Particle and geomagnetic measurements from satellites and ground stations.

Table 4-1 presents the experimental data management requirements of the flight. A general discussion of this table and the data management system is contained in Volume 1.

TABLE 4-1. FLIGHT 516 DATA MANAGEMENT

Avg. Daily Data Recording Requirements

Experiment		Recording Time, min		Remarks
No.	Data Rate K-bits/sec	(A) 51.2 K-b/sec	(B) 1.6 K-b/sec	
0100_s	9 (AVG)	74		2.7 Exper-Hr/Day
0200_s	6.4 (AVG)	46		2.7 Exper-Hr/Day
0501	0.8		45	45 Min/Day Monitoring
0701	Analog	80		60 Min x 60 Times
0801	1.2		96	3 Hr x 24 Times
1001	1.6		76	5.5 Hr x 6 Times + 6 Hr x 4 Times
1303	0.3		12	1.5 Hr x 6 Times
0401, 0402, 0702, 0703, 1304	Negligible Recording Requirements			
0705B	Req. 3 days continuous transmission. Data from other exper. must be recorded during this period			
Totals		200	229	

Avg. Daily Data Transmission Time, min

- Reqd: A + B = 429 min.

NOTE: If low bit rate data is recorded and dumped at the higher rate, the transmission time can be decreased to 208 min.

- Available - Continuous

Data Tape Return Required	zero lb,	zero cu ft
Voice Tape Return Required (4 packages)	8 lb,	0.1 cu ft
Film Return Required	149 lb,	3.7 cu ft
Data Tape Carried	30 lbs	

1. FLIGHT MISSION DESCRIPTION

Flight No. 518

Altitude, n.mi 200	Inclination, deg -83	Duration, days 45	Crew 3

Mission Title: REMOTE SENSING OF THE EARTH'S SURFACE AND ATMOSPHERE

Objectives: This flight will use multi-spectral sensors on a global basis, for further verification of earth sensing techniques using ground-truth sites, collection of scientifically and commercially useful data of uncharted regions, and further development of advanced space meteorological equipment. A large solar cell array will supply a portion of the power requirements, and will be evaluated for performance, ease of man-aided deployment, aerodynamic and inertial unbalance, and center-of-mass shift effect on the spacecraft.

Configuration: C (Extended CSM, LEM A/S, D/S), or
D (Modified Block II CSM, LEM A/S, D/S)

Experiment Summary:

No.	Title	Equipment Location: LEM Stage Asc	LEM Stage Desc	CM
0100	Biomedical (excluding 0101 and 0102)	x		
0200	Behavioral	x		
0501	Radiation Environment Monitoring	x		
0802A	High Resolution IR Radiometer		x	
0802B	Test of IR Scanning Spectrometer		x	
0802C	Test, Calibration and Evaluation of a Microwave Spectrometer		x	
0802D	Test of Prototype Star Tracker	x		
0901	Multispectral Target Characteristics	x	x	
0902	Synoptic Earth Mapping	x	x	
0903	Multi-Frequency Radar Imagery		x	
1405	Large Solar Cell Array		x	

2. EXPERIMENT DESCRIPTION SUMMARY

FLIGHT - 518

EXPERIMENT: 0100-0200 - Medical/Behavioral Experiments - The Medical/Behavioral Experiments are intended to evaluate the effects of prolonged space flight on man and to enhance his operational efficiency to permit more extensive manned space flight missions. Twenty-four experimental measurement packages have been defined to analyze critical human functions and to focus on those most likely to be affected adversely by prolonged space flight. Procedures and instrumentation employed in the experimental packages are a composite of updated, standard medical/behavioral and imminent state-of-the-art zero-g adapted, techniques. These procedures should provide: 1) an assessment of the effects of prolonged weightlessness on the psycho-physiological integrity of the astronaut, 2) a determination of the mechanisms which mediate observed changes, 3) a prediction of the onset and extent of degraded functioning, and 4) a validation of preventive or countermeasures which may be necessary to support man's extended exploration of space.

NOTE

Experiments 0101 and 0102 require linear and/or rotational accelerations, such as would be obtained during a firing of the SM engine or during the artificial gravity experiment, in order to achieve all of the described experiment objectives. These experiments have been excluded from missions which lack sufficient SM propulsion and/or the artifical gravity experiment.

EXPERIMENT: 0501 - Radiation Environment Monitoring - The objectives of this experiment are to record radiation received by the crew, and to furnish external radiation environment data for other experiments. Techniques for the Apollo Mission, or those employed in Tiros and OGO, will be used. Detection devices proposed for the monitoring systems are: proton-alpha and electron spectrometers, tissue equivalent ionization chambers, and film packs.

EXPERIMENT: 0802A - Operation of High-Resolution Infrared Radiometer (HRIR) Detectors Experiment - The objective of the experiment is to monitor the thermal radiation of the Earth and its atmosphere in the near-infrared region between wavelengths of 3 and 5 microns for the purpose of producing cloud-cover pictures and measuring cloud-top temperatures. The detected thermal radiation is expected to provide the scientific community with an improved understanding of the heat balance of the Earth's atmosphere, a useful tool for upgrading the weather forcaster's prediction, and for evaluating the role of the trained astronaut-meteorologist. The radiometer, which integrates the energy received from meteorological targets of particular interst, does not form a television-type image. However, the timed and oriented thermal radiation data obtained are readily composed into cloud-cover "pictures" for detailed analysis.

EXPERIMENT: 0802B - Test of an Infrared Scanning Spectrometer - The objectives of this experiment are to study man's capability to calibrate, test, adjust, and evaluate an infrared scanning spectrometer while it is gathering meaningful data in the entire 0.2 to 40 micron band. Man's presence will enable him to determine those portions of the band best suited to give the required accuracy in measuring

the Earth's radiation and its atmosphere. These optimized observations will provide a large quanity of data on absorption, scattering, and extinction coefficient of the atmosphere, as well as distribution of species, to improve the existing mathematical models of the Earth's atmosphere. The astronaut-meteorologist will selectively program the infrared spectrometer for scans from a wavelength of 0.2 micron to 40 microns, making apparatus adjustments in the light of his own intelligence and observations, or from ground instructions.

EXPERIMENT: 0802C - Test, Calibration, and Evaluation of a Microwave Spectrometer - The objectives of this experiment are to study man's capability to calibrate, test, adjust and evaluate a microwave scanning spectrometer while it is operating in the 0.5 cm to 3 cm band. Investigations involving the detection of water vapor and studies of the atmospheric temperature profile can be performed near the instrument's lower design limit. The trained astronaut-meteorologist will be abel to optimize the instrument's operation to monitor sudden changes caused by variable meteorological phenomena in the Earth's lower atmosphere, or change in the upper atmosphere due to solar storms. This experiment will be based on the trained astronauts-meteorologist's ability to program the employment of a microwave spectrometer in a very complex manner, to use and evaluate new, unproven instrumental concepts and techniques and to test, calibrate, adjust, and evaluate the instrument itself.

EXPERIMENT: 0802D - Test of a Prototype Star-Tracker - The objective of this experiment is to demonstrate the ability of a prototype star-tracker to lock on and track stars of the fourth magnitude, when viewed near the horizon, beneath the airglow layer. From these data it will be possible to determine the feasibility and to test the concept of inferring atmospheric vertical pressure distribution. The experiment will be performed by simultaneous initial acquisition of two stars, of known anular separation, by two separate star-trackers, followed by occultation of one of the stars by the Earth's atmosphere, and the Earth itself. Measurement of the angular motion of the occulted star relative to the reference star will reveal the degree to which the starlight was refracted by the atmosphere.

EXPERIMENT: 0901 - Multi-Spectral Target Characteristics Determination - The objectives of this experiment are to gather multispectral imagery and spectral response samples from a wide diversity of target areas under different illumination, temperature, and atmospheric conditions. This will provide the data to establish the extent to which characteristic distinguishable spectral signatures as gathered from space may be used to identify and to measure useful earth and atmospheric properties. The experiment involves the identification of surface and subsurface features, and their interrelationships, by simultaneous mapping with sensors at different portions of the spectrum; allowing unique spectral responses to be correlated to establish both spatial and spectral signatures for unambiguous identification. In addition to spectral discrimination, signature variations are to be observed as a function of aspect or stereoscopic viewing and polarization. The spectral region covered lies between the near ultraviolet and radar wavelengths. All techniques, excepting radar, are passive receptors of the spectral emittance/reflectance radiations from the surface areas resolved. Supplementing the imaging techniques are non-imaging instruments which require motion compensation to permit greater observation times of select areas of interest. Other accessory instrumentation includes the use of VHF equipment to afford greater penetration and sublayer measurement, and geochemical spectrometry to detect trace components in the atmosphere.

EXPERIMENT: 902 - Synoptic Earth Mapping - The objectives of this experiment are to comprehensively photograph the land areas of the earth with very high resolution film to show the detailed geomorphology, transportation networks, urban and rural land use, vegetation types, and to provide for hydrologic surveys, road surveys, and resource assessment. Additionally, surface moisture, ice depth and microwave emission profiles will be obtained. Black and white photographs of 20 ft. resolution will be acquired at the red end of the visual spectrum for maximum haze penetration. Such photos will be taken only during good atmospheric viewing conditions. A pair of photos of the same area shall be acquired to provide good stereo resolution. Simultaneous photographs shall be acquired in the blue, yellow and near-infrared spectral regions to a resolution of 200 ft. This imagery will provide the capability for the construction of true-color photographs and the custom selection of a false-color best suited to identification of a particular image class. A broadband VHF radar will provide surface moisture conditions and type, while a radiometer operating at four different microwave frequencies will provide emission characteristics.

EXPERIMENT: 0903 - Multi-frequency Radar Imagery - The objective of this experiment is to map the earth's surface in order to obtain information relating to agriculture, geography, glaciology, meteorology, oceanography and water resources. To accomplish the intended purposes, a combination of separate coherent high resolution radars and an altimeter shall be used to map the earth's surface.

EXPERIMENT: 1405 - Orbital Test of Large Area Solar Cell System - The objectives of this experiment are to assess the role of man in the deployment of a large solar cell array; and to determine the effects of the array on other vehicle systems. The astronaut will assist in the deployment of the solar array. The system will be verified by operation and utilization as a by-pass loop of the operational power supply. The effect of the increased drag on the attitude control and orbit maintenance requirements will be determined.

TABLE 2-1 FLIGHT 518 INTEGRATED EXPERIMENT EQUIPMENT LIST

Exper. No.	Component	Weight, lb	Vol, cu ft or size*	Elec Energy or Elec Pwr	Remarks
0100 and 0200	Medicine & Behavior Experiments	321	14.5	100 W Continuous Plus 50 W During Oper	See Flt 211 for detailed Equip List
0501		(46.5)			
	Proton-Alpha Spectrometer	7	8 x 8 x 8		
	High Energy Electron Spectrometer	10	8 x 8 x 8		
	Low Energy Electron Spectrometer	5.5	4 x 4 x 3		
	Tissue Equiv. Ionization chambers (3)	3	3 x 2 x 1/2	5.3 W	Duty Cycle - Continuous during mission
	T.E.I.C Rate meters (2)	4	4 x 3 x 3		
	Film Packs & Pen Dosimeters (21)	1.5	2 x 2 x 1/8		
	Pulse Height Analyzer	15	12 x12 x 12		
	Battery Charger	0.5	1/2 x 1/2x1	1 W	
0802A		(283)			
	Infrared Radiation Detector Assembly	25	0.3 ft.^{3}	25 W	E.O., ± 0.5°, 0.5°/sec
	Optical Collector & Scan Mirror Assembly	48	3 ft.^{3}		45 minutes - 8 X/day
	Cryogenic Cooling Supply	118	32		Cryogenic Cooling is Apollo
	Calibration Equipment	35	15 ft.^{3}		Block II liquid Hydrogen
	Documentary Camera (Use 902-6" FL)				Cont.
	Film	57	0.8 ft.^{3}		Stand by Power - 5 W
0802B	Use 901-2A				
0802C		(129.3)			
	12" Diameter Antenna	1.8	12 x 6		E.O., ± 0.5°, 0.5°/sec
	24" Diameter Antenna	7.5	24 x 8		45 minutes - 2 X/day
	48" Diameter Antenna	30	48 x 12		Standby Power - 5W
	10-18 GC Receiver				
	18-26 GC Receiver				
	26-40 GC Receiver	90	1.3 ft.^{3}	90 W	
	40-50 GC Receiver				
	49-59 GC Receiver				
0802D		(60)			
	Stable Platform	30	1.5 ft.^{3}	30 W	Two stars, 20° apart with one setting behind earth
	Theodolites (2)	30	2.o ft.^{3}		Orbit Ephemeris data require Attitude ptg. not critical provided within platform & gimbal capability drift - 1°/sec

*INCHES UNLESS OTHERWISE SPEC.

TABLE 2-1 FLIGHT 518 INTEGRATED EXPERIMENT EQUIPMENT LIST

Exper. No.	Component	Weight, lb	Vol, cu ft or size*	Elec Energy or Elec Pwr	Remarks
Cont 0802D					10 minutes - 1x/day Control Panel Requires 10 W
		(814)			
0901-1	16" Telescope Tube & Mirror Gimbal	350 50	30 ft.^{3} 5 ft.^{3}	100 W	E.O., ± 0.5°, 0.5°/sec -2A & -4 share common telescope alternately. Precision pointing (2 secs) through gimbal with inertial package on telescope 45 minutes - 8 x/day (2A & 4 for 22 days each only) 901,2,3 simultaneously Standby Power - 10 W Control & display panel requires 200 W.
2A	Grating Spectrometer Closed loop Cryogenic System	30 13	5.5 ft.^{3} .14 ft.^{3}	50 W 280 W	
2B	IR Imager - Use 0802A				
5B	Microwaver Imager Antenna	50	6' x 6' x 1/2'		
	Microwaver Imager Inst. Data Equip.	50	8 ft.^{3}	100 W	
4	Multispectral Camera Assembly	100	5.5 ft.^{3}	10 W	
	Film	171	2.25 ft.^{3}		
		(1481)			
0902	24" Focal Length Mapping Cameras (2)	600	8 ft.^{3}	60 W	E.O., ± 0.2°, 0.2°/sec for 30 min - 8 x/day 45 minutes - 8x/day 901,2,3 simultaneously Standby Power 20 W
	6" Focal Length Mapping Cameras (3)	300	3.6 ft.^{3}	50 W	
	VHF Pulse Reflectivity-Helical Antenna -Electronics	40	3' x 6' 1.25 ft.^{3}	30 W	
	Microwave Radiometer - Parab. Antenna - Electonics	100	6' x 1' 8 ft.^{3}	200 W	
	Image Motion Comp. & Stable Platform	100	5 ft.^{3}	15 W	
	Image View Finder	90	2.5 ft.^{3}	20 W	
	Secor/Arod	40	1.5 ft.^{3}	20 W	
	Star Field Camera	40	1.5 ft.^{3}	20 W	
	Film	171	2.25 ft.^{3}		
		(1112)			
0903	Antenna	175	200 ft.^{3}		E.O., ± 0.2°, 0.18°/sec. for 30 min - 8 x/day simultaneous with 902. 45 minutes - 8x/day 901,2,3 Simultaneously Standby power 40 W.
	400 MC Altimeter & Antenna	20	40 x 18 x 4 + 0.5 ft.^{3}	15 W	
	8 GC Radar	100	7 ft.^{3}	180 W	
	2 GC Radar	100	7 ft.^{3}	84 W	
	0.5 GC Radar	100	7 ft.^{3}	25 W	
	Ancillary Equipment	100	6 ft.^{3}	350 W	
	Panoramic Camera	175	10 ft.^{3}	200 W	
	Film	342	45 ft.3		

*INCHES UNLESS OTHERWISE SPEC.

TABLE 2-1 FLIGHT 518 INTEGRATED EXPERIMENT EQUIPMENT LIST

Exper. No.	Component	Weight, lb	Vol, cu ft or size*	Elec Energy or Elec Pwr	Remarks
1405		(461.7)			
	Solar Cell Panels (250ft.^{2}-2000 W)	400	75 ft.^{3}		Gimballed for sun pointing ± 15°
	Gimbal Mech.	50	2 ft.^{3}	50 W	Sunlight 60 min/orbit
	Voltmeters (2)	0.1	0.01 ft.^{3}		Gimbal power required continuously
	Ammeters (2)	0.1	0.01 ft.^{3}		Peak power generated during peak required (daylight).
	Multimeter (Portable)	2	.02 ft.^{3}		Batteries sized for average power during night time
	Pyrheliometer	5	0.3 ft.^{3}		
	Movie & Still Cameras	4.5	.04 ft.^{3}		
Auxiliary Equip.		(136)			
	Lights & TV Camera } E.V.A.	20	4 x9 1/2x12	5W/750W	750 W during nighttime for floodlights - total time = 9 hours
	Movie Camera & Spare Magazine } E.V.A.	38	7x17 1/4x41/2	5W	EVA - 18 hours total time
	Gimbal & Booms } E.V.A.	20	1 ft.^{3}	10 W	Other EVA equipment not included herein, e.g. suits, back packs
	Film	18	4 x 4 x 18		
	Computer	40	1 ft.^{3}	50 W	
	Data Storage (Tape Recorders), Telemetry and Signal Conditioners				
	Total Weight	4845			

*INCHES UNLESS OTHERWISE SPEC.

3. EXPERIMENT/SPACECRAFT DEFINITION

3.1 Mission Definition

The primary objective of Flight 518 is mapping the earth's surface (0901, 0902, 0903) and atmosphere (0802A,B,C,D). The solar cell array experiment (1405) carried on this flight is also used to provide power for experiments. Secondary experiments (0100,0200,0501) requiring crew participation, are allocated time during dark periods of the flight, so that uninterrupted crew times are allocated to performance of the primary experiments.

Since only 40 percent of the earth's surface is covered by land mass, and because of cloud cover and photographic lighting considerations, continuous operation of the 0901,2,3 Experiments is not required. Half of the day-light periods were arbitrarily allocated to 0901,2,3 experiments and the remaining half to 0802A,B,C experiments. The actual experiments performed will be based on opportunity, availability and desirability of the land masses available. The 0802D star tracking experiment is performed once a day, for a 10 minute period, as the vehicle goes from dark-light orbit conditions.

An orbital plane inclined 83° to the equator (retrograde for a 1°/day precession) is specified for this flight. In addition, a 45° solar angle (angle between sun and orbital plane) inertial orientation is recommended. The 45° solar angle provides good lighting for photography (sun incident angle from 15° to 45°) in latitudes between 68° North and 68° South.

Because of the commonality of IR experiments in 0901 and 0802A,B, the 0901-2B experiment will be performed by 0802A equipment (IR Radiometer), and the 0802B experiment performed by 0901-2A equipment (Spectrometer).

The 0901 experiment uses a common gimballed telescope for the IR Spectrometer (0901-2A) and Multispectral Camera (0901-4) experiments. Cryogenic cooling, required by the spectrometer would use a closed-loop cryogenic system rather than stored liquid coolant. This approach facilitates changing detector assemblies in the telescope.

Stereo coverage for the 0902 experiment is obtained by using two 24" FL mapping cameras canted at approximately 30°, rather than, using rotating mirror systems. To obtain accurate orbit ephemeris data required for mapping, a Secor transponder has been included in the vehicle. Also, a star field camera has been included to provide orientation. The 6" FL mapping cameras of 0902 are also used to correlate the data of 802A, B & C experiments.

Experiment 0903 had originally been sized for a 100 n.mi. altitude and recommended the experiment be accomplished in three steps. For this study, the final step (8GC, 2GC and 0.5GC tests) was used, and transmitted powrs increased 16X for the 2 and 0.5 GC radars to obtain equivalent performance at 200 n.mi. 8GC radar power is increased only 4X to minimize the high voltage problem. This compromise to desired performance degrades the resolution 4X.

Since peak power requirements occur during daylight operation (for good photos), the solar cell array of 1405 is sized (250 sq. ft. - 2000 watts) to supplement these power peaks.

A computer has been added as auxiliary equipment to assist in programming multiple use of sensors, provide pointing commands, obtain predict-position coordinates, initiate measurement cycles, and to provide general purpose computation.

Except for days that require EVA, the work/rest/eat/hygiene cycles are repetitive. The first day requires erection and calibration of the solar cell array. Additional EVA days (6, 10, 13, 20, 23, 27, 34, 41 and 45) are required to replenish LIOH, replace film, evaluate the solar array and to change the detector assembly on experiment 0901. In order to have three men on duty during EVA, a change in schedule is required. Although only crewman #3's schedule is shown altered, rescheduling can be shared by each crewman.

During 35 days of the mission, a sleep period is preceded and followed by a total of 5 hours for eat/hygiene/rest. There are always two men awake and at least one crewman on duty during daylight. Three crewman can relax together for 45 min/day and two astronauts for 6 hours/day. An average of 10 man hours/day per astronaut in intervals of approximately 3-3/4 hours, 3 hours and 3-1/4 hours have been allocated to the work routine. The crew schedule is presented in Table 3-2 and summarized in Table 3-1. Table 3-3 shows the mission profile for experiment equipment.

A major limiting factor in this flight, results from the quantity of data produced during mapping. Also, because of high resolution requirements and resulting small swath-widths, many more orbits than exist in a 200 n.mi. 45 day mission, would be required for complete global coverage.

Experiment 0903 suggests a development time schedule of 7 years for a "Multi-Frequency High Resolution Radar With Polarization Diversity Reception and On-Board Processing." Unless this development period can be shortened, consideration should be given to scheduling this experiment for later flights.

Table 3-1 Flight 518 Mission Definition Summary*

Exper. No.	Occurrence Day No.	Total Times Perf/ Mission	No. Men Req'd	Exper Time/Test		Total Exper Man-hr/Mission				Total Exper Man-hr/Mission	
						Crewman					
				Setup Time, min	Test Time, min	1	2	3	Total	Achv'd	Spec'd
0100	Daily	3 x/day	2			124	92	92	308	308	-
0200	Daily	2 x/day	1			68 1/3	68 1/3	68 1/3	205	205	
0501	Daily	1 x/day	1		15	7 1/3	7 1/3	7 1/3	22	22	-
0802A 0802B 0802C	Daily	8 x/day	2 Set up 1 run	5	45	117	92	109	318	248	Note 2
0802D	Daily	1 x/day	1		15	-	-	7	7	7	7
0901 0902 0903	Daily	8 x/day	2 Setup 1 run	5	45	95	95	128	318	248	Note 2
1405	Day 1 - Setup	2	3	240	-						
	There-after Daily	44	1	-	90		57		57	57	Note 2
EVA (including support)						23 1/3	23 1/3	23 1/3	70	70	Note 3
				Totals		435	435	435	1305		

Maximum Work Day: 10 1/4 hrs on duty; Average Work Day 10 hrs. on-duty; Minimum Work Day: 10 hrs. on-duty

Total EVA Man Hours: 48

Notes: 1. Maximum Work Day occurs only first day.
2. Required as frequently as possible during good visibility
3. Required to change film, replace LiOH, check solar array and change detector for 901 Exper.

*See Table 3-2 and 3-3 for crew schedules and experiment equipment duty cycles

[redacted]

Table 3-2 **CREW SCHEDULING, FLIGHT 518, SHEET 1 OF 1**

DAY 1	ORBIT	CREWMEN ACTIVITIES 1	2	3
0000				
20				
40				
0100				
20		1405	1405	StdBy 1405
40				
0200				
20				
40				
0300				
20				
40				
0400				E/Hyg
20		E/Hyg	E/Hyg	
40				
0500				
20				
40				
0600		0802 A,C,D	0802 A,C,D	Sleep
20				
40				
0700				
20				
40				
0800				
20				
40				
0900		E/Hyg	Rest	
20				
40				
1000				E/Hyg
20				
40				
1100				
20				
40				
1200				
20		1405	StdBy 1405	1405
40				
1300				
20				
40				
1400		Rest		Rest
20			E/Hyg	
40		1405 Calib		1405 Calib
1500				
20				
40		Rest		Rest
1600		1405 Calib		1405 Calib
20				
40				
1700				
20			Sleep	
40				
1800		E/Hyg		E/Hyg
20				
40				
1900				
20				
40				
2000				
20			E/Hyg	Rest
40				
2100				
20				
40				
2200		Sleep		
20			0901	0901
40			0902	0902
2300			0903	0903
20				
40				
2400				

DAY *1	ORBIT	CREWMEN ACTIVITIES 1	2	3
0000				
20				
40			E/Hyg Rest	
0100		E/Hyg Rest	(2)	E/Hyg Rest
20			(1)a/b	
40				
0200				
20			1405	
40		(1)a/b	Calib	
0300				
20				
40		0200		
0400			Rest	
20		(1)a/b		
40				Sleep
0500		0100	0100	
20				
40		(1)a/b	(1)a/b	
0600				
20				
40			0200	
0700		E/Hyg		
20			(1)a/b	
40				
0800		0100	0100	
20				
40		(1)a/b		
0900				
20		0200	E/Hyg Rest	E/Hyg Rest
40				
1000				
20		(1)a/b		
40				
1100				
20		Rest		(2)
40				(1)a/b
1200				
20		0100		0100
40				
1300				(1)a/b
20		(1)a/b	Sleep	
40				
1400		0100		0100
20				
40		(1)a/b		
1500				E/Hyg Rest
20		(2)		
40				
1600				
20		E/Hyg Rest		(1)a/b
40				
1700				0200
20				
40			E/Hyg Rest	
1800				(1)a/b
20				
40				(3)
1900				
20			(1)a/b	
40				Rest
2000			0200	
20				
40			(1)a/b	(1)a/b
2100		Sleep		
20				
40			0100	0100
2200				
20			(1)a/b	(1)a/b
40				
2300			E/Hyg Rest	0200
20				
40				(1)a/b
2400				

DAY *2	ORBIT	CREWMEN ACTIVITIES 1	2	3
0000				
20			E/Hyg	
40		E/Hyg Rest	(2)	E/Hyg Rest
0100				
20			(1)a/b	
40				
0200				
20				
40		(4)	(4)	(4)
0300				
20				
40				
0400				
20		Rest		Rest
40			Rest	
0500		0200		
20				
40		(1)a/b	(1)a/b	
0600				Sleep
20				
40			0200	
0700		E/Hyg		
20			(1)a/b	
40				
0800		0100	0100	
20				
40		(1)a/b		
0900				
20			E/Hyg Rest	
40		0200		
1000				
20		(1)a/b		
40				
1100				
20		Rest		
40				E/Hyg Rest
1200				
20		0200		
40				
1300				
20		(1)a/b	Sleep	
40				(2)
1400		0100		0100
20				
40		(1)a/b		
1500				E/Hyg Rest
20		(2)		
40				
1600				
20		E/Hyg Rest		(1)a/b
40				
1700				0200
20			E/Hyg Rest	
40				(1)a/b
1800				
20				
40				(3)
1900				
20			(1)a/b	
40				Rest
2000			0200	
20				
40			(1)a/b	(1)a/b
2100		Sleep		
20				
40			0100	0100
2200				
20			(1)a/b	(1)a/b
40				
2300			E/Hyg Rest	0200
20				
40				(1)a/b
2400				

DAY 45	ORBIT	CREWMEN ACTIVITIES 1	2	3
0000				
20			E/Hyg	
40		E/Hyg Rest	(2)	E/Hyg Rest
0100				
20			(1)a/b	
40				
0200				
20				
40		(4)	(4)	(4)
0300				
20				
40				
0400				
20		Rest		Rest
40			Rest	
0500		0200		
20				
40		(1)a/b	(1)a/b	
0600				Sleep
20				
40			0200	
0700		E/Hyg		
20			(1)a/b	
40				
0800		0100	0100	
20				
40		(1)a/b		
0900				
20			E/Hyg Rest	
40		0200		
1000				
20		(1)a/b		
40				
1100				E/Hyg
20		Rest		
40				
1200				
20				
40				
1300				
20				
40				
1400				
20				
40				
1500				
20				
40				
1600				
20				
40				
1700				
20				
40				
1800				
20				
40				
1900				
20				
40				
2000				
20				
40				
2100				
20				
40				
2200				
20				
40				
2300				
20				
40				
2400				

NOTES

Undesignated time is rest or recreation

*1 Days 2-5, 7-9, 11-12, 14-19, 21-22: (1)a
24-26, 28-33, 35-40, 42-44 (1)b

*2 Days 6, 10, 13, 20: (1)a
23, 27, 34, 41, 45: (1)b
(Stop at 8th Orbit)

(1) a: 0901, 2, 3, or 0802A, 901-2A, 802C
(1) b: 0901, 2, 3, or 0802A, 802C
(2) : 0501
(3) : 0802D
(4) : Replace LiOH & Film, check solar panel array, change detectors for Exper. 0901 on Day 23

E/Hyg Eat & Personal Hygiene

Limits of Experiment Time

Limits of EVA

[redacted]

DAY #1

GRUMMAN AIRCRAFT ENGINEERING CORPORATION

Table 3-3 APOLLO EXTENSION SYSTEM EARTH ORBIT MISSION STUDY
FLIGHT [ ] EXPERIMENT MISSION PROFILE

SHEET 1 OF 5

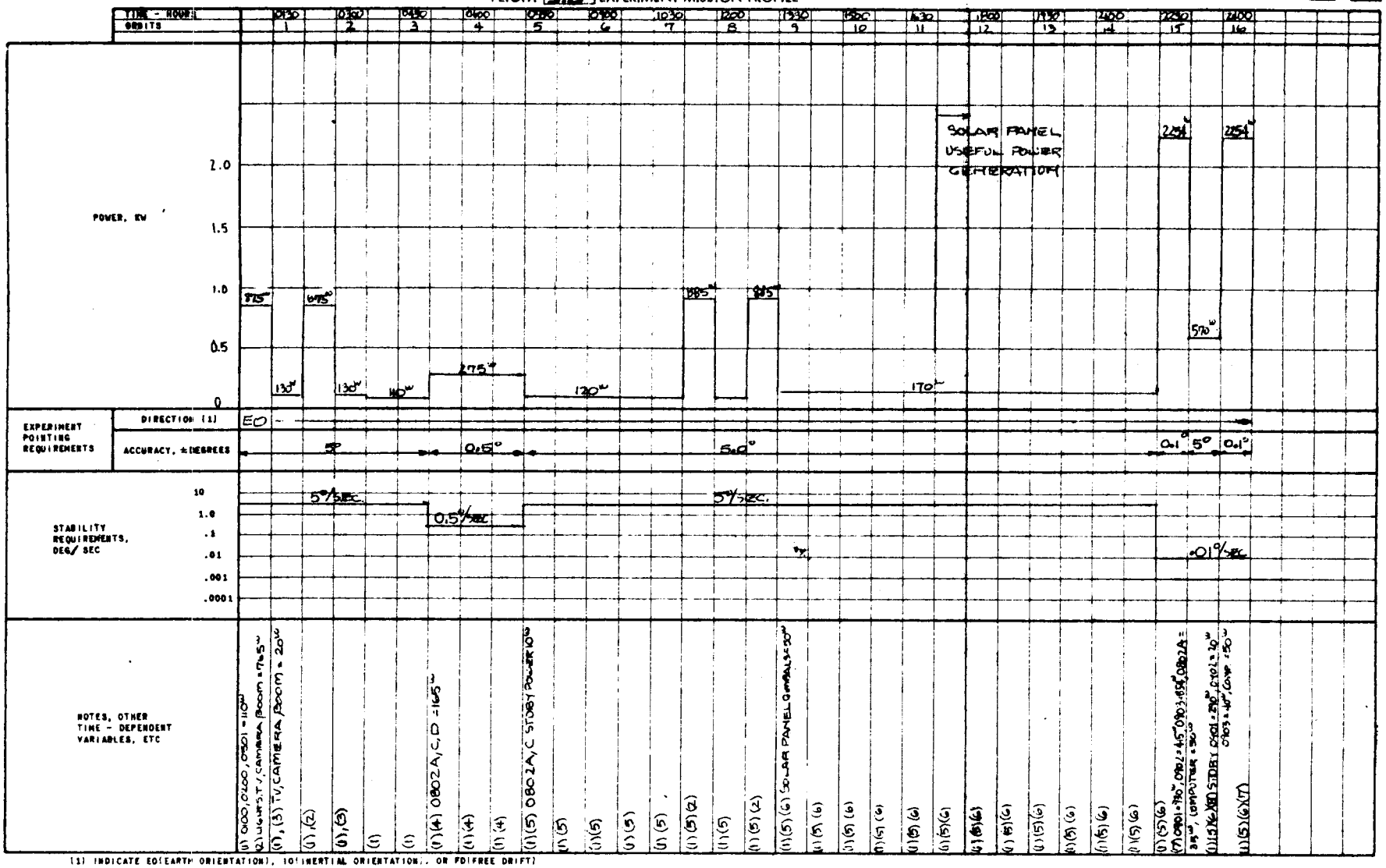

(1) INDICATE EO(EARTH ORIENTATION), IO(INERTIAL ORIENTATION), OR FD(FREE DRIFT)

2-11.13

DAYS 2-5, 7-9, 11-12, 14-19, 21-22

GRUMMAN AIRCRAFT ENGINEERING CORPORATION

Table 3-3 APOLLO EXTENSION SYSTEM EARTH ORBIT MISSION STUDY
FLIGHT [redacted] EXPERIMENT MISSION PROFILE

SHEET 2 OF 5

TIME - HOURS		0130	0300	0430	0600	0730	0900	1030	1200	1330	1500	1630	1800	1930	2100	2230	2400
ORBITS		1	2	3	4	5	6	7	8	9	10	11	12	13	14	15	16

POWER, KW (scale 0, 0.5, 1.0, 1.5, 2.0, 2.5): 570w; 2254; 570w; 2254; 1045; 640

EXPERIMENT POINTING REQUIREMENTS	
DIRECTION (1)	EO
ACCURACY, ± DEGREES	5°, 0.1°, 5°, 0.1°, 5°, 0.1°, 5°, 0.1°, 5°, 0.1°, 5°, 0.1°, 5°, 0.1°, 5°, 0.1°, 5°, 0.5°, 5°, 0.5°, 5°, 0.5°, 5°, 0.5°, 5°, 0.5°, 5°, 0.5°, 5°, 0.5°, 5°, 0.5°

STABILITY REQUIREMENTS, DEG/SEC (scale 10, 1.0, .1, .01, .001, .0001): 0.01°/sec; 5°/sec; 0.5°/sec

NOTES, OTHER TIME - DEPENDENT VARIABLES, ETC:

- (1) Strob: 0901 - 290w, 0902 = 20w, 0103 - 40w, 0802A = 10w, ... 0802C, 0501 ...
- (1)(2) 8X/DAY 0901 = 440w, 0902 = 395w, 0903 = 84w, 0802A = 25w
- (1)
- (1)(2)
- (1)
- (1)(2)
- (1)
- (1)(2)
- (1)
- (1)(2)
- (1)
- (1)(2)
- (1)
- (1)(2)
- (1)
- (1)(2)
- (1)(8) 8X/DAY = 0802A = 25w, 0901-2A = 360w, 0802C = 90w
- (1)
- (1)(3)
- (1)
- (1)(3)
- (1)
- (1)(3)
- (1)(4) 0802 = 40w for 10 min
- (1)(3)
- (1)
- (1)(3)
- (1)
- (1)(3)
- (1)
- (1)(3)

(1) INDICATE EO (EARTH ORIENTATION), IO (INERTIAL ORIENTATION), OR FD (FREE DRIFT)

DAYS 6, 10, 13, 20

GRUMMAN AIRCRAFT ENGINEERING CORPORATION

Table 3-3 APOLLO EXTENSION SYSTEM EARTH ORBIT MISSION STUDY
FLIGHT [redacted] EXPERIMENT MISSION PROFILE

TIME - HOURS	0430	0900	0930	0600	0730	0900	1030	1200	1330	1500	1630	1800	1930	2100	2230	2400
ORBITS	1	2	3	4	5	6	7	8	9	10	11	12	13	14	15	16
POWER, KW (2.0 / 1.5 / 1.0 / 0.5 / 0)	1254 W; 1340 W; 570 W	1340 W; 570 W		1254 W						1045 W	1045 W					
EXPERIMENT POINTING REQUIREMENTS — DIRECTION (1)	EO															
EXPERIMENT POINTING REQUIREMENTS — ACCURACY, ±DEGREES	5°	0.1°	5°	5°	5°	5°	5°	0.1	5°	0.1°	5°	0.1°	5°	0.1°	5°	0.1°
STABILITY REQUIREMENTS, DEG/SEC (10 / 1.0 / .1 / .01 / .001 / .0001)	5°/SEC			5°/SEC												
		.01°/SEC						.01°/SEC								
NOTES, OTHER TIME-DEPENDENT VARIABLES, ETC	(1) STEP 1 OPO1 = 240° OSO2 = 180° (2) OPO1 = 440° OSO2A = 180° SUN ARM = 90° OSO2B, D, OSO2 = 110° COMP = 50° (3) CSO3 = 84° OSO2A = 25° (4) TV CAMERA ROOM = 20°	(5) X(+)	(1)	(1)	(1)(2)	(1)	(1)(2)	(1)	(1)(2)	(1)	(1)(2)	(1)	(1)(2)	(1)	(1)(2)	(1)	(1)(2)
										(1)(5) OSO2A = 25°, OPO1 - 2A = 360° OSO2C = 90°	(1)	(1)(5)	(1)	(N)(5)	(1)(6) OSO2 D = 40° for 10 min	(N)(5)

(1) INDICATE EO (EARTH ORIENTATION), IO (INERTIAL ORIENTATION), OR FD (FREE DRIFT)

2-11.15

DAYS 24-26, 28-33, 35-41, 42-44

GRUMMAN AIRCRAFT ENGINEERING CORPORATION

Table 3-3 APOLLO EXTENSION SYSTEM EARTH ORBIT MISSION STUDY
FLIGHT [5/6] EXPERIMENT MISSION PROFILE

SHEET 4 OF 5

TIME - HOURS	0130	0300	0430	0600	0730	0900	1030	1200	1330	1500	1630	1800	1930	2100	2230	2400
ORBITS	1	2	3	4	5	6	7	8	9	10	11	12	13	14	15	16
POWER, KW (2.0 / 1.5 / 1.0 / 0.5 / 0)	1.94	1.94	—	—	—	—	—	—	—	.405	.405	—	—	—	—	—
	.240	.240	—	—	—	—	—	—	—	—	—	—	—	—	—	—
EXPERIMENT POINTING REQUIREMENTS — DIRECTION (1)	EO															
ACCURACY, ±DEGREES	5°	0.1	5	0.1	5	0.1	5	0.1	5	0.1	5	0.1	5	0.1	5	0.1
	5	0.1	5	0.1	5	0.1	5	0.1	5	0.5	5	0.5	5	0.5	5	0.5
	0.5	5	0.5	5	0.5	5	0.5	5	0.5	5	0.5	5	0.5	5	0.5	5
	0.5															
STABILITY REQUIREMENTS, DEG/SEC (10 / 1.0 / .1 / .01 / .001 / .0001)	50°/sec	50°/sec	—	—	—	—	—	—	—	—	—	—	—	—	—	—
	—	—	—	—	—	—	—	—	0.5°/sec	0.5°/sec	—	—	—	—	—	—
	—	.01°/sec	.01°/sec	—	—	—	—	—	—	—	—	—	—	—	—	—
NOTES, OTHER TIME - DEPENDENT VARIABLES, ETC	(1) STOOS1 0901 = 40°, 0902 = 30°, 0903 = 140°, 0802A = 10°, 0802B = 90°, 0802C = 90°, 0501 = 110°, COMP = 90°, 0100, 0200, 0300	(1)(2) BX/CAT 0901 = 450°, 0902 = 345°, 0903 = 814°, 0802A = 25°	(1)	(1)(2)	(1)	(1)(2)	(1)	(1)(2)	(1)	(1)(2)	(1)	(1)(2)	(1)	(1)(2)	(1)	(1)(2)	(1)	(1)(2)	(1)	(1)(3) BX/CAT 0802A = 25°, 0802C = 90°	(1)	(1)(3)	(1)	(1)(3)	(1)	(1)(4) 0802C = 90° for 10 min		(1)(3)	(1)	(1)(3)	(1)	(1)(3)	(1)	(1)(3)

(1) INDICATE EO(EARTH ORIENTATION), IO(INERTIAL ORIENTATION), OR FO(FREE DRIFT)

2-11.16

DAYS 23, 27, 34, 41 & 45 for ½ day

GRUMMAN AIRCRAFT ENGINEERING CORPORATION

Table 3-3 APOLLO EXTENSION SYSTEM EARTH ORBIT MISSION STUDY
FLIGHT [redacted] EXPERIMENT MISSION PROFILE

SHEET 5 OF 5

TIME - HOURS: 0000, 0300, 0600, 0900, 1200, 1500, 1800, 2100, 2400
ORBITS: 1, 2, 3, 4, 5, 6, 7, 8, 9, 10, 11, 12, 13, 14, 15, 16

POWER, KW (2.0, 1.5, 1.0, 0.5, 0)

EXPERIMENT POINTING REQUIREMENTS

DIRECTION (1): EO

ACCURACY, ± DEGREES: 5, 0.1, 5, 5, 5, 5, 5, 0.1, 5, 0.1, 5, 0.1, 5, 0.1, 5, 0.1, 5, 0.1, 5, 0.5, 5.0, 0.5, 5, 0.5, 5, 0.5, 5, 0.5, 5, 0.5, 5, 0.5

STABILITY REQUIREMENTS, DEG/SEC (10, 1.0, .1, .01, .001, .0001)

NOTES, OTHER TIME - DEPENDENT VARIABLES, ETC

(1) INDICATE EO (EARTH ORIENTATION), IO (INERTIAL ORIENTATION), OR FD (FREE DRIFT)

2-11.17

3.2 SPACECRAFT DEFINITION

Flight 518 configuration, shown in Figures 3-1 and 3-2, carries experiments dealing with remote sensing of the Earth's surface and atmosphere, and requires earth pointing. Nominal spacecraft attitude is Earth oriented with the spacecraft's longitudinal axis located in the orbit plane. Attitude is held within a deadband of $\pm 5^{\circ}$, except during experiment periods having specific pointing and stability requirements. Pointing and stability requirements up to 0.03 deg/sec can be accommodated by the CSM within the RCS propellant capacities of both the "C" and "D" CSM versions. Experiment pointing and stability requirements exceeding CSM capability (0901) are accommodated by installing the experiment telescope on gimballed mounts and providing a fine guidance and control system within the telescope. On the "D" version additional RCS propellant is required to maintain attitude hold, and is obtained by adding the LEM RCS system.

The present CSM drift control capability of 0.03 deg/sec is inadequate for the 0903 synthetic aperture radar c rried on this flight. Vehicle stability should be held within angular rates of 0.001 deg/sec in all axes. To accommodate this stability requirement two alternatives are available:

- Mounting the antenna on its own attitude control platform.
- Adding electronic compensation techniques to the radar system.

For the purposes of this study, the second alternative was assumed.

This flight is characterized by a large amount of return weight required to accomplish experiment objectives. Tape weight and volume amounts to 970 lb and 48.5 cu ft, film weight and volume is 750 lb and 10 cu ft. Allowable CM return weight is 300 lb, volume approximately 16 cu ft. Within these CM constraints two alternatives may be considered:

- Redesign the CSM tape recorder to optimize the amount of data that can be returned within the 51.2 kilo-bit CSM transmission constraint.
- Provide a data capsule(s) to return the data.

Since a data capsule can be accommodated within the allowable Lab weight, it is assumed that this mode of data return is acceptable for the purposes of this study. However, it is recommended that the first alternative be investigated.

No.	Experiment	Name
1	0501	Electron Spectrometer (2)
2	0501	Proton-Alpha Spectrometer
3	0802A	IR Radiation Detector (Also use on 901-2B in place of Spectro/ photometer)
4	7 0802	Ceramic Sphere
5	901,802B	Use 901 Grating Spectrometer & Telescope (replaces 802B IR, Near IR, and UV-vis spectrometers
6	802C	12-in., 24-in., & 48-in. Antennas
7	802C	Receivers 10-18 GC 40-50 GC 18-26 GC 49-59 GC 26-40 GC
8	802D	Theodolites
9	7.902,802D	Viewfinder
10	901	Microwave Imager Antenna
11	901, 802B	Grating Spectrometer & Dewar (Use on 802B)
12	901	Multispectral Camera
13	902	24-in. Fl Camera (2)
14	902,802A, 802B	6-in. Fl Camera (3)
15	902	Star Field Camera
16	902	VHF Pulse Reflectivity Antenna
17	902	Microwave Radiometer Antenna
18	903	Altimeter
19	903	Antenna (Folded on 518D FLT only, otherwise 1 piece construction)
20	903	Electronics (4 cu ft)
21	903	Panoramic Camera
22	902, 901 902,903	Electronics Equipt Bay
23	1405	Solar Cell Array
24	1405	Movie Camera & TV Camera
25		GOX
26		FCA
27		Potable Water Tank
28		Waste Storage
29		LiOH Storage
30		LiOH
31	901,902 903,802	Cryogenic Cooling
32		Radiators (FCA)
33		Radiators Equipt
34		RCS He (D Conf. Only)
35		RCS (D Conf. Only)
36		Horizon Scanner

FOLD-OUT #1

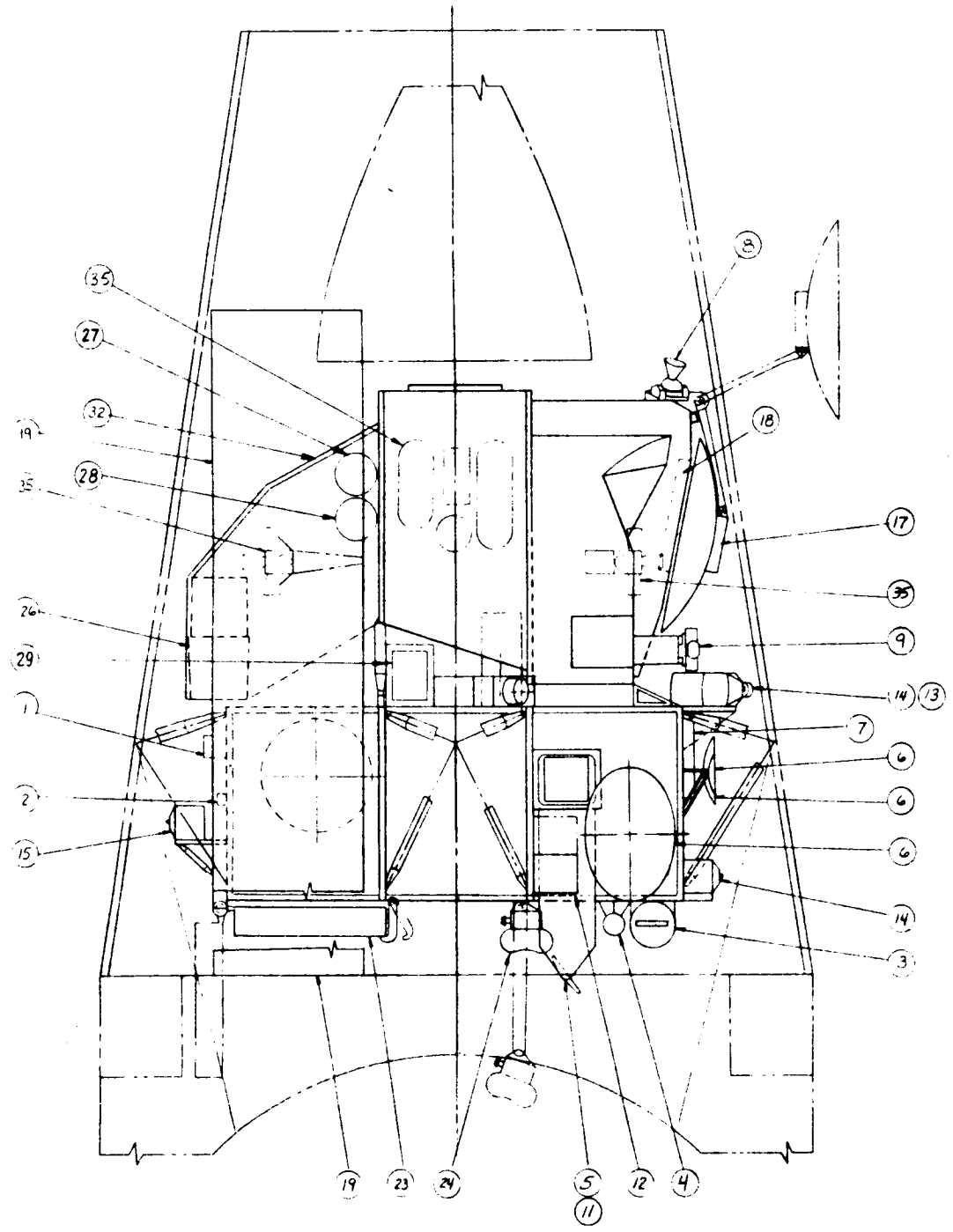

LAUNCH CONFIGURATION

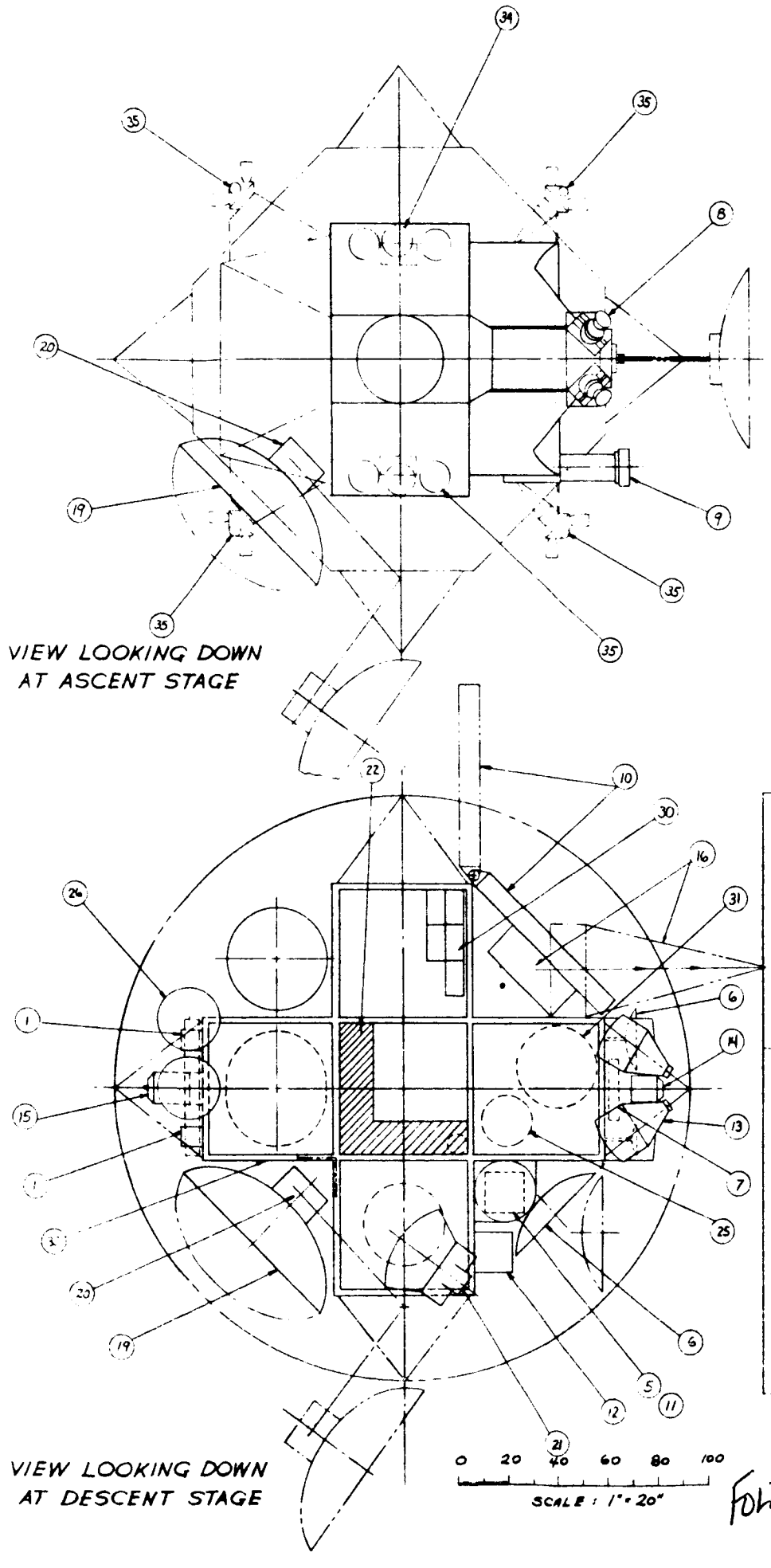

FOLD-OUT #2

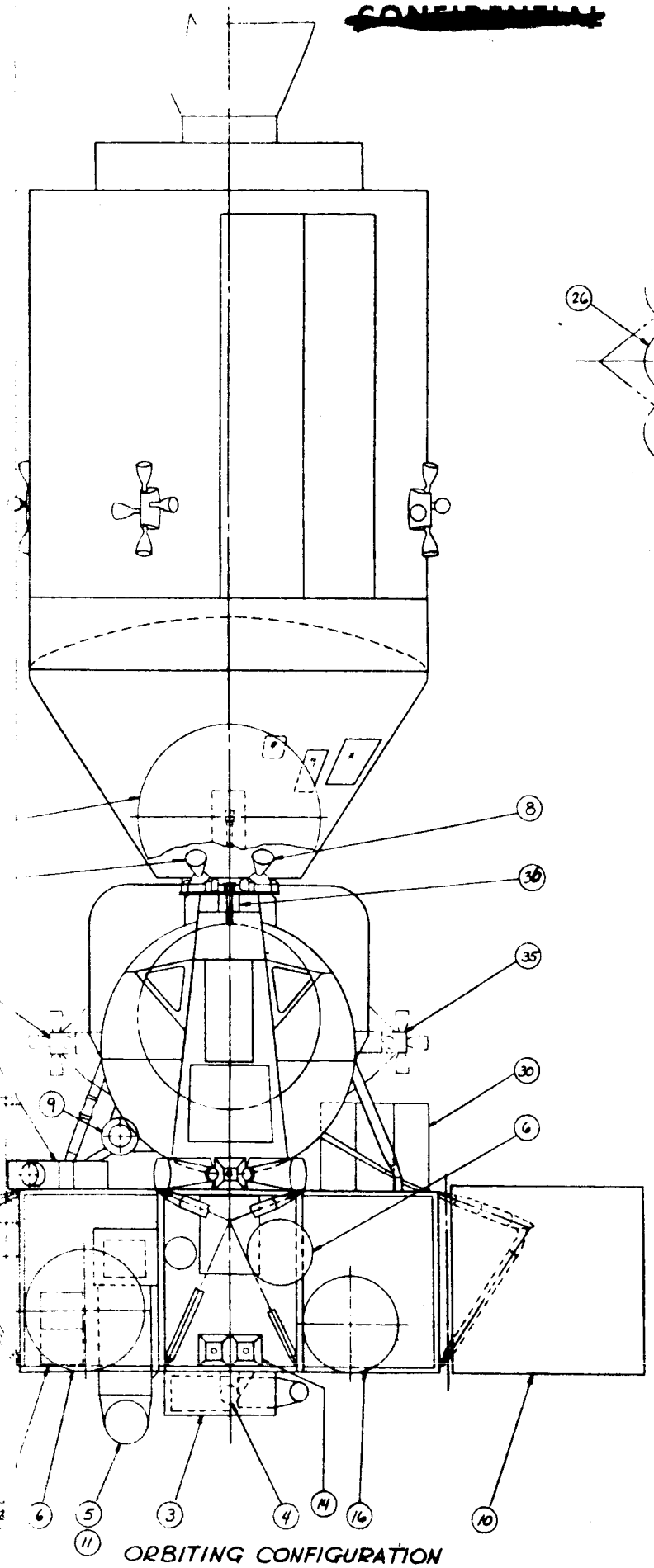

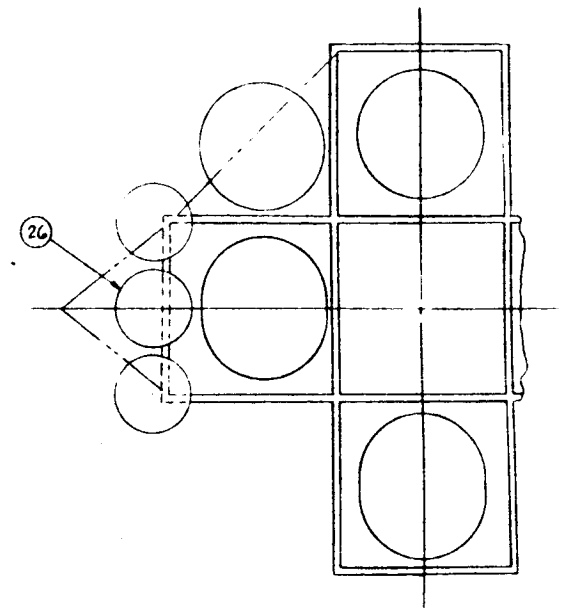

Fig. 3-1

Grumman
AIRCRAFT ENGINEERING CORPORATION
PRELIMINARY DESIGN SECT.

Gen Arrgmt Flt. 518
Remote Sensing of Earth's Surface & Atmosphere
SCALE OF GEN. DWG. - 1/20
AES 1036

KEY

No.	Experiment	Name
1		Air Duct
2		Food
3		GOX Tank (Accumulator)
4		LiOH
5		Water Module
6		Fan
7		ECS
8		Seat
9		Flood Lights
10		Adjustable Work Top
11		O_2 (SOX)
12		Fuel Cell Assy
13		Pwr Gen & Dist Panel
14		Cryogenic Panel
15		Computer Input Panel
16		Circuit Breaker Panel
17		Digital Computer
18		Data Receiver
19		Film & Tape Storage
20		Log & Data Book
21		Tape Recorder
22	0100&0200	Biomed Incubator
23		Biomed Refrigerator
24		Biomed Panel
25	0100&0200	Biomed Storage
26	0501	Pulse Height Analyzer
27	0501	Radiation Envir Monitor Panel
28	0802D	Theodilite
29	0802C	Antenna (12")
30	0802C	Receivers
31	0802	Ceramic Sphere
32	801,802	Telescope
33	802,802D	Viewfinder
34	801-2B, 802A	IR Radiation Detector
35	801,802	Cryogenic Tank (Cooling)
36	802	Microwave Radiometer
37	802	Mapping Cameras
38	803	Antenna
39	801,802, 803	Electronics
40	802	Star Field Camera
41	1405	Pyrheliometer
42		Multimeter
43		Solar Cell Array Readout Panel
44		Solar Cell Array
45	1405	Camera
46		Horizon Scanner
47		Flight Controller (D Conf. Only)

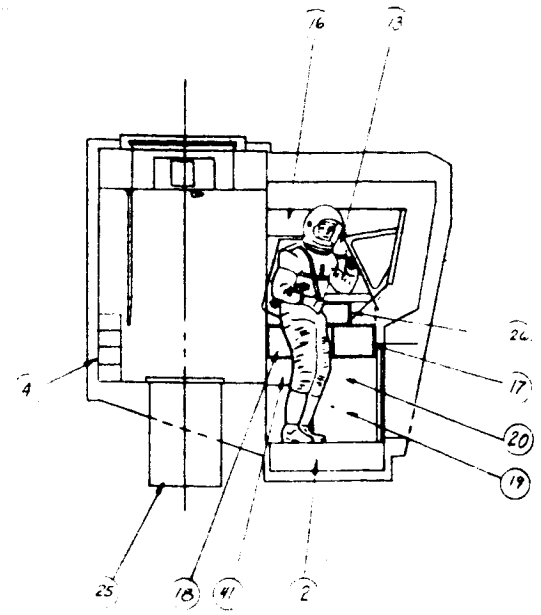

VIEW LOOKING OUTBOARD
LEFT HAND SIDE

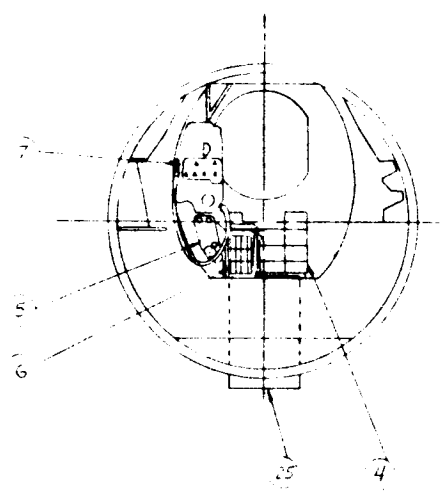

VIEW LOOKING AFT

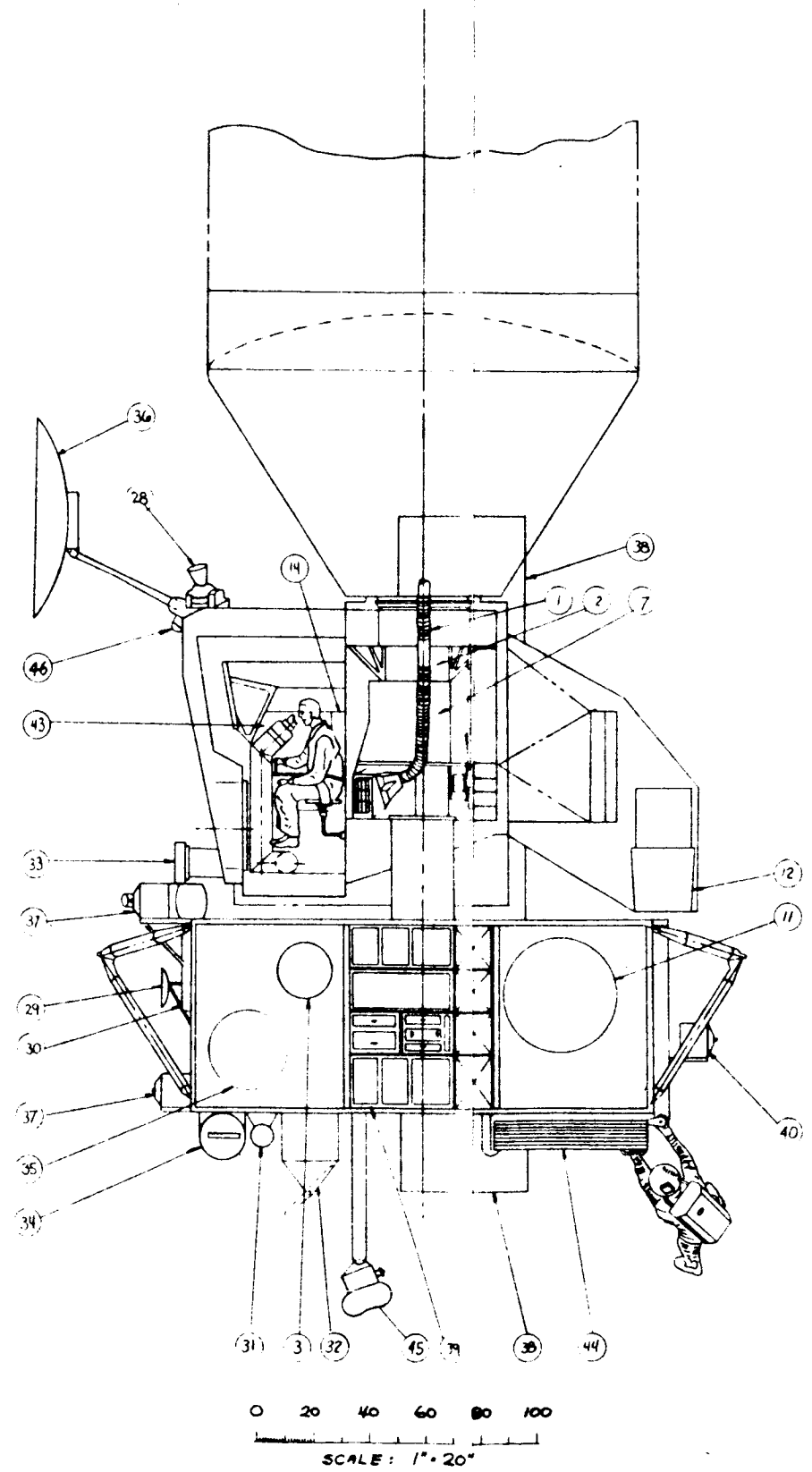

VIEW LOOKING OUTBOARD
RIGHT HAND SIDE

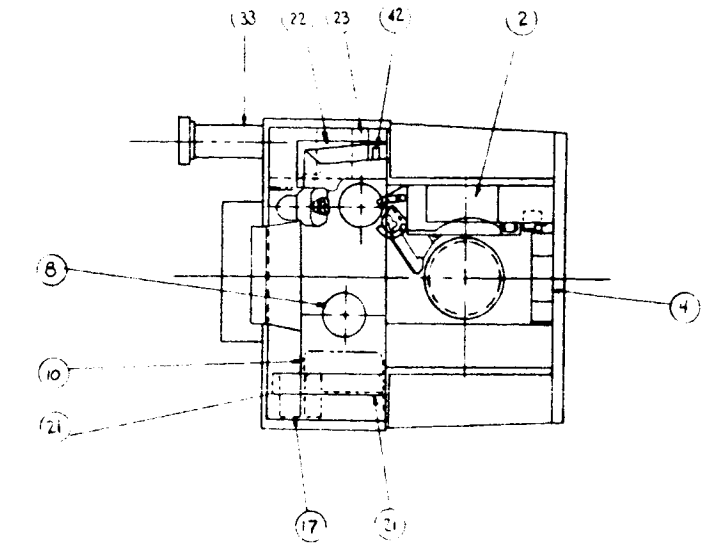

PLAN VIEW

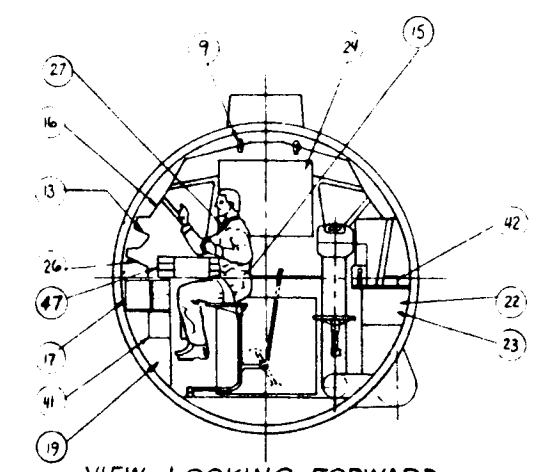

VIEW LOOKING FORWARD

Fig. 3-2

Grumman
AIRCRAFT ENGINEERING CORPORATION
PRELIMINARY DESIGN DEPT.

Inbd Profile Flt.
518 Remote Sensing
of Earth's Surface &
Atmosphere
SCALE OF ORIG. DWG. 1/20
AES 1037

The viewfinder installation provides hemispherical coverage for all experiments. The 0901 optical sensor is a gimbal-mounted installation, utilizing the 0901-1 optics and is located in the decent stage. During an EVA, the Multispectral Camera (0901-4) unit is substituted for the Grating Spectrometer (0901-2A) sensor installation on the 0901 optics and film is changed.

A 250 ft.^{2} solar panel assembly (1405) is used to supply peak power demands above 487 watts for experiments 0901, 0902, 0903, 0802A, and 0802C. These experiments are dependent upon the solar cell power and no "back up" with fuel cell reactants or battery has been provided. The array is stored in the descent stage and deployed by the astronauts during early orbit operations.

The Microwave Imager antenna (0901-5b), 1 ft, 2 ft and 4 ft antennas (0802C), and IR Radiometer (0802A) are also mounted on the descent stage. The IR Radiometer uses cryogenic fluids supplied by a Block II liquid H_2 tank.

The Microwave Radiometer and VHF Pulse Reflectivity Antennas (0902) are stowed on the ascent stage and deployed for experimentation. Prototype Star Trackers (0802D) are located on a stable platform mounted on top of the A/S having a field of view ($\pm 22\ 1/2^{\circ}$) adequate for the experiment. The 0903 synthetic aperture radar antenna is stowed in the descent stage and rotated to 35° off local vertical for experimentation. On the "D" version, the antenna is folded to clear the LEM RCS system.

Structural modifications to the LEM A/S are required to accommodate the Viewfinder. All other experiment equipment installations involve additions to existing LEM A/S and D/S structure.

The inboard profile (Fig. 3-2) shows that adequate internal volume is available to accommodate experiments. All experiment displays and controls are located in the forward cabin or are accessible from forward cabin crew positions. A seven day capacity of LiOH canisters is stored internally, mounted on the aft bulkhead of the Lab and is replaced during programmed EVA's.

0100 (Behavioral), 0200 (Biomed) and 0501 (Radiation Monit.) equipment installations are common for all flights.

Supporting electronics and spares for experiments are carried in the center bay of the descent stage, affording ready access for maintenance. Additional equipments may be carried on the aft equipment racks of the LEM A/S.

Basic subsystem characteristics pertinent to this flight are described below:

Vehicle Orientation	Earth Pointing
Stabilization Reqm'nts	±.2° @ 540 Hrs; ±5° @540 Hrs
Avg Experiment Pwr (Delivered)	487 Watts Avg (Includes 280 Watts for Cryo Cooling on Exp 0901)
Number of Repressurizations	8
Equipment Cooling	64 Ft^2 Radiator

	C	D
		Takeover Point = 14.3 Days
Number of Fuel Cells	2	3
Oxygen Tanks	1 Apollo X	2 Apollo X
Hydrogen Tanks	1 Apollo X	2 Apollo X
Peaking Battery	40 AMP Hr	40 AMP Hr
Fuel Cell Cooling	14.5 ft^2 Rad	29 ft^2 Rad
RCS System	None	Std LEM Thrustors
RCS Tankage	None	Std LEM Tanks
S & C System	Sensors, Data Proc, Att Lock on Disp, FDAI Needles	ATCA, Rate Gryos & Panels
Waste Reactants	36 lbs	20 lbs
Water for Thermal Cont (max)	730 lbs	730 lbs
Water Generated	893 lbs	1721 lbs

Waste reactants are needed to accommodate the estimated boiloff rates. These fluids are disposed of by increasing the power output of the normally operating fuel cells and energizing either a dummy load or idle equipment.

In addition to the standard CSM/LEM Lab interface, this flight requires additional wiring for accommodating the earth pointing requirements of experiments. Interface wiring includes star tracker and horizon scanner sensory inputs used to maintain attitude hold.

The difference between "C" and "D" versions of the Lab are the addition of one FCA, one Apollo-X O_2 tank, one Apollo-X H_2 tank, added fuel cell reactants, and an increase in FCA radiator area of 14.5 ft.^{2}. The LEM RCS system is also added to the "D" version. These modifications to a "C"-version Lab accommodate the added power demand of the "D"-version Lab required b taking over CSM power requirements after (nominally) 14 days, and accommodating additional RCS propellant requirements beyond the capacity of the "D" version CSM.

This flight utilizes an Apollo CSM fuel cell electrical generation system, a LEM ECS to provide suit circuit operation in the Lab during EVA, and selected components to provide data transmission, status and appropriate displays.

The estimated laboratory weight of the "C" version is 12,932 lbs and of the "D" version is 15,961 lbs. (See tables 3-4 and 3-5.)

TABLE 3-4 LEM LAB DETAILED WEIGHT STATEMENT

Flight 518

	Weights lbs Configuration C	D
Structure	(2467)	(2540)
Basic Ascent	802	802
Basic Descent	750	750
Shielding	472	497
Power Pack Structure	50	50
Experiment Supports	388	388
RCS Supports		53
Stabilization and Control	(163)	(163)
Attitude Translation Control Ass'y	27	27
Rate Gyro Ass'y	2	2
Controllers	14	14
Star Trackers and Electronics	84	84
Horizon Scanner	36	36
Crew Provisions	(327)	(327)
Restraints	35	35
Lighting	10	10
Food	228	228
LiOH - PLSS	54	54
Reaction Control System		(716)
Propellant		405
Propellant System		134
Pressurization System		55
Thruster Ass'y		122
Controls and Displays	(485)	(485)
Environmental Control	(853)	(899)
Atmosphere Revitalization System	80	80
O_2 Supply and Cabin Pressurization	34	34
Water Management	36	36
Heat Transport, Cold Plates, Coolant	105	105
LiOH - ECS	382	382
Water	40	40
Radiators	102	148
Thermal Control	74	74
Instrumentation	(1091)	(1091)
Signal Conditions	45	45
PCM and Timing Elec. Ass'y	39	39
Data Storage	25	25

TABLE 3-4 LEM LAB DETAILED WEIGHT STATEMENT (Con't)

Flight 518

Component	Weight, lbs Configuration C	D
Experiment Selector	6	6
Data Tapes	970	970
Spare Voice Recorders	6	6
Electrical Power Supply	(2609)	(4767)
Fuel Cell Ass'y	492	738
Reactants and ECS Oxygen	1000	2438
Reactant Tankage	424	848
Batteries and Charger	68	68
Plumbing	40	60
Inverters	75	75
Wiring, Distribution and Umbilical	510	540
Communications	(32)	(32)
Television	24	24
Audio Center	6	6
Voice Recorder	2	2
Experiment	(4845)	(4845)
Spares	(60)	(96)
Total Laboratory	12,932	15,961

TABLE 3-5 INTEGRATED SPACECRAFT WEIGHT STATEMENT

Flight 518

Component	Weight, lbs Configuration C	D
Command Module Basic Weight	(10,287)	(10,287)
Service Module Basic Weight	(12,525)	(9192)
CSM Retro-Propellant	(1349)	(1191)
Laboratory Weight	(12,932)	(15,961)
Basic Laboratory Structure	2467	2540
Experiments	4845	4845
Experiment Support Systems	3916	5029
Expendables	1704	3547
CSM Experiment Dependent Weights		
RCS Propellant	1044	694
Total Laboratory and Experiment	(13,974)	(16,654)
Allowable Lab and Exper. Weight	82334	85825
Total Orbiting Weight	38,135	37,324
Service Module Propellant (Ascent)	0	0
SLA Adapter	3505	3505
Launch Vehicle Payload	41,640	40,829

4. FLIGHT OPERATION SUPPORT: FLIGHT NO. 518

Experiment 0100 & 0200 - Medicine and Behavioral - Periodic daily data transmission and ground monitoring of safety parameter data.

Experiment 0501 - Radiation Environment Monitoring - External particle flux measurements during a solar flare event are to be correlated with the solar activity observations made on earth stationed observatories and other satellites.

Experiment 0802B - Test of an Infrared Scanning Spectrometer - Consultation with instrumentation man on ground to maintain adjustment and calibration of instrument.

Experiment 0802D - Test of a Prototype Star-Tracker - Spacecraft attitude and trajectory must be accurately calculated.

Experiment 0902 - Synoptic Earth Mapping - A network of ground transponders is necessary to determine the relative position of the satellite to positions within the photographic field of view to 10 foot accuracies. A SECOR or AROD system with a world-wide deployment of transponders would satisfy this requirement.

Table 4-1 presents the emperimental data management requirements of the flight. A general discussion of this table and the data management system is contained in Volume 1.

TABLE 4-1. FLIGHT 518 DATA MANAGEMENT

Avg. Daily Data Recording Requirements

Experiment		Recording Time, min		Remarks
No.	Data Rate K-bits/sec	(A) 51.2 K-b/sec	(B) 1.6 K-b/sec	
0100_s	9 (AVG)	70		2.5 Exper-Hr/Day
0200_s	6.4 (AVG)	35		2.0 Exper-Hr/Day
0501	0.8		45	45 Min/Day Monitoring
0802 A,B, C,D	5	160		20 Min x 8 Times/Day
0901, 0902, 0903	9.5	160		20 Min x 8 Times/Day
1405	0.5		30	30 Min/Day Monitoring
Totals		425	75	

Avg. Daily Data Transmission Time, min:

- Reqd: A + B/32 = 427 min
- Available = 104 min

Data Excess (Minutes of Tape) per Day:

Required Minus Available Transmission Time ≐ 323 min.

Data Tape Return Required: $\frac{\text{Data Excess per Mission (min)}}{\text{30 Min/Tape Reel}}$ = 485 Reels $\begin{cases} 970 \text{ lb} \\ 48.5 \text{ cu ft} \end{cases}$

Optimum Avg. Daily Transmission Time Required ≐ 105 min

Voice Tape Return Required (4 packages)	8 lb, 0.1 cu ft
Film Return Required	750 lb, 10 cu ft
Data Tape Carried	970 lbs

1. FLIGHT MISSION DESCRIPTION

Flight No. 521

Altitude, n.mi 19,350	Inclination, deg 0	Duration, days 45	Crew 3

Mission Title: SPACE PHYSICS AND SUBSYSTEM DEVELOPMENT

Objectives: This flight will investigate the mechanism of aurora formation and associated aspects of the space environment in the vicinity of earth, and will investigate the operation of advanced technology subsystems under actual operating conditions. The space environment will be examined by observing natural aurorae occuring at both poles, the natural background radiation, micrometeroid fluxes and the geometry of lines of force of the terrestrial magnetic field. Additional objectives include the determination of the chemical composition and certain physical characteristics of comets by generation and observation of artificial formations. Advanced ~~technology experiments~~ include the operation of a large, diffraction limited laser telescope, advanced life support and power generation subsystems, and the check-out and launch of an unmanned probe (OGO) while in orbit. The OGO will be placed in an elliptical orbit while the Apollo spacecraft is orbiting the earth in a 15 hr Hohman transfer orbit.

Configuration: C (Extended CSM, LEM A/S, Low Profile D/S), or
D (Modified Block II CSM, LEM A/S, Low Profile D/S)

Experiment Summary:

No.	Title	Equipment Location: LEM Stage Asc	LEM Stage Desc	CM
0100	Biomedical (excluding 0101 and 0102)	x		
0200	Behavioral	x		
0501	Radiation Monitoring	x	x	
0502	Magnetic Field Lines		x	
0503	Comet-like Particles		x	
0504	Micrometeoroid Collection		x	
0801	Conjugate Aurora		x	
1101	Launch OGO		x	
1403	Fluid Management for LSS	x		
1404	Radioisotope		x	
1406	Optical Technology		x	

2. EXPERIMENT DESCRIPTION SUMMARY

FLIGHT - 521

EXPERIMENT: 0100-0200 - Medical/Behavioral Experiments - The Medical/Behavioral Experiments are intended to evaluate the effects of prolonged space flight on man and to enhance his operational efficiency to permit more extensive manned space flight missions. Twenty-four experimental measurement packages have been defined to analyze critical human functions and to focus on those most likely to be affected adversely by prolonged space flight. Procedures and instrumentation employed in the experimental packages are a composite of updated, standard medical/behavioral and imminent state-of-the-art zero-g adapted, techniques. These procedures should provide: 1) an assessment of the effects of prolonged weightlessness on the psychophysiological integrity of the astronaut, 2) a determination of the mechanisms which mediate observed changes, 3) a prediction of the onset and extent of degraded functioning, and 4) a validation of preventive or countermeasures which may be necessary to support man's extended exploration of space.

NOTE

Experiments 0101 and 0102 require linear and/or rotational accelerations, such as would be obtained during a firing of the SM engine or during the artificial gravity experiment, in order to achieve all of the described experiment objectives. These experiments have been excluded from missions which lack sufficient SM propulsion and/or the artifical gravity experiment.

EXPERIMENT: 0501 - Radiation Environment Monitoring - The objectives of this experiment are to record radiation received by the crew, and to furnish external radiation environment data for other experiments. Techniques for the Apollo Mission, or those employed in Tiros and OGO, will be used. Detection devices proposed for the monitoring systems are: proton-alpha and electron spectrometers, tissue equivalent ionization chambers, and film packs.

EXPERIMENT: 0502 - Study of Magnetic Field Lines - The objective of this experiment is to study the terrestrial magnetic field's line of force geometry, by measuring paths followed by artificially injected electrons. A linear accelerator will inject precise charges along a field line. Electrons will be injected in a manner, such that, when they hit the atmosphere an aurorae spot will be produced which can be traced visibly and photographed via camera or radar. Several types of field line motion are expected - such as diurnal and solar cycle motion, due to quiescent solar-wind magnetosphere interaction and magnetic storm perturbation. Beam energy changes may elicit information about large scale electric fields from E x B drift measurements.

EXPERIMENT: 0503 - Generation and Analysis of an Artificial, Comet-like, Particulate Cloud. - The objectives of this experiment are to determine the chemical composition and certain physical characteristics of comets, by producing an artificial comet cloud, studying particle growth rate and formation, and observing optical properties. Spectroscopic cloud analysis will facilitate the study of radical's behavior. Photographic, photometric and visual observations of a comet-

like cloud, artificially generated at a time and under conditions favorable to photography from ground stations and spacecraft, will be made.

EXPERIMENT: 0504 - Micrometeoroid Collection - The objective of this experiment is to determine physical and chemical properties of the dust cloud surrounding the Earth. Exposed collector plates will trap particles. Variations in exposure duration will aid in the discrimination of differences due to shower activity. Particle velocities will be used to differentiate between those in geocentric or solar orbits.

EXPERIMENT: 0801 - Conjugate Aurora and Airglow - The objectives of this experiment are to investigate the detailed nature of the conjugate auroral forms, structures and geometries in both the Arctic and Antarctic auroral regions with a view toward defining the causality factors and the extent of congruity. Observation and recording of both aurorae from a single, orbiting platform at several Earth radii will provide simultaneous measurement of auroral form, structure, spectral intensity, and location of the conjugate phenomena.

EXPERIMENT: 1101 - Launch of Unmanned Satellites - The objectives of this experiment are to develop procedures and operations for the checkout and activation of unmanned satellites and their subsequent launch by a manned space station. The experiment will be performed using an Orbiting Geophysical Observatory (OGO) carried into orbit within the Apollo S/C LEM adapter. Checkout will utilize the on-board LEM digital computer.

EXPERIMENT: 1403 - Fluid Management Technology for Life Support System - The objectives of this experiment are to develop techniques and perform operational tests on components or systems for: water electrolysis, cabin water removal sublimation, cryogenic heat leak, and liquid/gas phase control. The components and/or systems will be operated independently of the normal vehicle system to evaluate their performance.

EXPERIMENT: 1404 - Radioisotope - Thermoelectric Power System Integration - The objective of this experiment is to qualify and evaluate a 500 watt radioisotope power supply system, integrated with life support equipment which utilizes the waste heat from the supply. Life support components that can utilize the waste heat of the isotope supply (such as evaporators and stills) will be integrated with heat sources from the power system and operated in the zero "g" environment of the orbiting vehicle. Data will be taken at regular intervals to evaluate equipment performance.

EXPERIMENT: 1406 Optical Technology Experiments - The objectives of this experiment are to advance the state of optical technology in large spacecraft telescopes, optical instrumentation and communications; and, to determine the effects of the aerospace medium on the propagation of coherent and inchorent optical radiation. A large optical system will be operated in space to: perform a coherent wave front examination of the geometrical characteristic of the telescope surface in a space environment, and through thermal and mechanical controls maintain the total optical system in a diffraction limited condition; perform wave front and polarization analysis on received radiation; and perform accurate tracking of a ground beacon to provide stabilization of the telescope.

TABLE 2-1 FLIGHT 521 INTEGRATED EXPERIMENT EQUIPMENT LIST

Exper. No.	Component	Weight, lb	Vol, cu ft or size*	Elec Energy or Elec Pwr	Remarks
0100 0200	Medicine & Behavior Experiments	321	14.5	100 W Continuous Plus 50 W during Oper	see flt 211 for detailed Equip List
0501		(46.5)			
	Proton/Alpha Spectrometer	7	8 x 8 x 8		
	Electron Spectrometer	10	8 x 8 x 8		
	Electron Spectrometer	5.5	4 x 4 x 3		
	Tissue Equiv. Ion Chamber	3.0	3 x 2 x 1/2	5.3 W	*Duty Cycle - Continuous during mission
	Tissue Equiv. Rate Meter	4.0	4 x 4 x 3		
	Film Packs	1.5	2 x 2 x 1		
	Pulse Height Analyzer	15	1.0		
	Battery Charger	0.5	1/2 x1/2 x1	1 W	
0502		(289)			
	Electron Gun	15	8 x 5		1/2° alignment to mag. field line 12 times
	Gimbal Mount	25			
	Capacitor Bank HVPS	230	20x20 x20		150 W peak 0.4 KWH
	Magnetometer - Directional	13	0.5	10	6.5 MH
	VTVM	6	5 x 5 x 5		
0503		(147)			
	Chemical Canisters (4)	40-50	12x6.5		Performed 5 x @ 2 hrs each
	Image Orthicon	30	.6	55	Pointing not critical
	Camera	1			
	Spectrographic Camera	35	2.5	5	100 W peak
	Photometer	2	8 x 3	5	1 KWH
	Film	4	0.4		
	Shielding	25			40 W required for tape recorders and video displays
	Solenoid Release Mechanism				
0504		(95)			
	Balloon Panels (10'D)	20	8.0		No specified pointing.
	Removable panels	23	5.0		Attitude must be recorded.
	Velocity Tubes (3)	48	8.5		Pwr negligible
	Acoustic sensors (3)	4	.6		10 M H
0801		(188)			
	Telescope (2)	50	24 x 18 x12	5	45 days target of opportunity
	Magnetometer	13	4 x 5 x 7	10	1/4 - 1/2° Pointing 75 W peak
	Plasma Probes	10	8 x 8 x 12	5	
	Image Orthicon Common to Spectrograph Exp 0503				

*INCHES UNLESS OTHERWISE SPEC.

TABLE 2-1 FLIGHT 521 INTEGRATED EXPERIMENT EQUIPMENT LIST

Exper. No.	Component	Weight, lb	Vol, cu ft or size*	Elec Energy or Elec Pwr	Remarks
Cont 0801	Photometer - Common to Exp 0503				
	A-scope	15	4 x 5 x 12	10	12 KWH, 125 M H
	Platform	100			
		(1125)			
1101	OGO Satellite	~1000	240	250	± 5° pointing
	c/o Equip	125	16	100	350 w pk
	Hand Tools				1 KWH
					8 MH est
		(100)			
1403	Vapor Cell	20	0.1	250 cont	2-3 days duration
	KOH - Rotating	20	0.24	315 cont	11 MH
	Porous Plate	25	0.6	500 av	No pointing
	Gas Chromatograph	10	0.2		1 KW peak
	Water Separator		0.2	25 cont	35 KWH
		(473)			
1404	RTE 6	155	19 x 10x24		No pointing
	Radiator	9	75		can supply 300 W continuously
	Pumps (2)	6	5 x 2.50 ea		jettison provision necessary
	Radiation Shield	185			53 M H
	Life Support Heat Exch.		6 x 2 x 1		
	Life Support Pumps	2	3 x 1.50 ea		
	CO_2 concentrator	75	15 x 30x24		
	H_2O Evaporator	40	12x 24x 15		
		(3060)			
1406	Beacons	~3000			Telescope Pointing
	Telescope				0.1°
	Stable Platform				0.05° in roll
	Laser Xmtr- Revr.				Spacecraft Pointing
	Detectors				
	Amplitude				500 W peak
	Frequency				18 KWH
	Polarization				45 MH
	Coherence				
	Chronograph	10	.5		
	Mirror Figure Sensor	30	.4		
	Polarizer		.25		
	DePolarizer		.03		
	IR Radiometer	20	10 x 6 x15		
	Total Weight	5845			

*INCHES UNLESS OTHERWISE SPEC.

CONFIDENTIAL

3 EXPERIMENT/SPACECRAFT INTEGRATION

3.1 Mission Definition

Flight 521 has both scientific and engineering objectives. Five scientific and four engineering experiments will be performed in addition to the bio-medical and behavioral experiments on the crew. The mechanism of auroral formation will be investigated by simultaneously observing both poles of the earth. Optimal viewing of the auroral displays occurs where the spacecraft's position in orbit results in maximum deviation from the earth-Sun line. These periods occur at two points in the orbit, twelve hours apart, and are each about three hours in duration. It is anticipated that not all of the observing opportunities available will yield singularities worthy of recording. One crew member will therefore monitor the video display during the optimum viewing periods and activate the recorders at his own discretion. Because of the synchronous feature of the orbit, it will be possible to alert the crew from the ground and vice versa in essentially real-time.

The 100% ground station visibility feature of this orbit has been utilized to schedule thirty separate optical technology experiments. Maximum time is scheduled between experiments to allow for data reduction and interpretation and possible experiment modification. Modifications to the telescope or other external equipment are to be accomplished during the regularly scheduled (weekly) EVA's.

The synchronous orbit of this flight is probably non-optimum for experiments 0502, the study of the earth's magnetic field lines and 0503, the generation and analysis of an artifical, comet-like, particulate cloud. For general investigations of the earth's magnetic field, the spacecraft should cross all field lines and cover various latitudes. In synchronous orbit the magnetic field variation is small, and at synchronous altitude the magnetic field will probably be too weak for accurate determination. Because of the large percentage of time spent by the spacecraft in sunlight, for the defined orbit, ground observation of experiment 0503 cannot be made.

Transfer to synchronous altitude will be accomplished by an elliptical orbit with perigee at parking orbit altitude and apogee at synchronous altitude. It is presently assumed that the spacecraft will be allowed one complete elliptical orbit before circularizing at synchronous altitude. This will allow time for an EVA to erect and checkout OGO sensors and subsystems. The satellite would then be released in this elliptical orbit, which is more appropriate to the OGO mission. During this orbit unique opportunities will be available for generation of artifical clouds at various altitudes and lighting conditions and for injection of electrons into a variety of magnetic field lines. Crew time has been scheduled to permit maximum flexibility in this regard.

Experiment 0501, radiation environment monitoring requires only ten minutes per man per day and is readily fitted into the crew schedule at the same time each day.

Micrometeroid collection, associated with experiment 0504, is performed every seven days during the extra-vehicular activity required for LiOH canister replacement.

The crew schedule is summarized in Table 3-1 and detailed in Table 3-2. The experiment equipment mission profile is shown on Table 3-3.

TABLE 3-1 FLIGHT 521 MISSION DEFINITION SUMMARY*

Exper. No.	Occurence Day No.	Total Times Perf/ Mission	No. Men Req'd	Exper Time/Test Setup Time, min	Test Time, min	Total Exper Man-Hrs/ Mission Crewman 1	2	3	Total	Total Exper Man-hr/ Mission Achv'd	Spec'd
0100	All except 1 & 45		1-2	Var	Var	114	193	183,5	490.5		1165
0200	All		1	Var	Var	62.75	118.25	143	324		382
0501	All except 1 & 45		1	-	5	11	10.5	10.5	32		22
0502	1,15,22,27 30,40,43		1	25	30	-	6.5	2	8.5		6.5
0503	1,11,18,25, 35		1	35	120	-	10	1	11		10.5
0504	1,7,14,21, 28,35,42		2	30	20	8	10	10	28		21.7
EVA											
0801	All except 1,8,17,24, 28,32,39,42		1	2	60-240	186-25	23	-	209.25		100-400
1101	1	1.	1	30	410	2	-	7	9		7.8
1403	36,37,38		1	A	A	9.25	4.25	1.25	14.75		11
1404	All		1	A	A	11.75	13.5	31.75	57		53
1406	All except 1,6,8,10,11, 16,17,18		1	60	90	6	32.75	27.5	66.25		47
					TOTALS	411	421.75	417.5	1250.25		

Remarks

Exper. No.	Part	Setup Time (min)	Test Time (min)	Tests Per Day
1403	1a	60	20	3
	1b	60	20	3
	2	30	10	6
	3	30	10	
1404	A1	20		
	A2a		1	10
	A2b		15	1/5
	A3		30	1/3
	B1	30		
	B2a		5	6
	B2b		5	3
	C1		5	1/15
	C2		22	1/45
	C3		42	1/45

Maximum Work Day: 14 Hrs on duty; Average Work Day 9.4 Hrs on duty; Mininum Work Day: 7 Hrs on duty

Total EVA Man Hours:

Notes: *See Tables 3-2 and 3-3 for crew schedules and experiment equipment duty cycles.

[redacted]

Table 3-2 **CREW SCHEDULING, FLIGHT 521, SHEET 1 OF 6**

2-12.3

DAY 1	ORBIT	CREWMEN ACTIVITIES 1	2	3
0000				
20				
40				
0100				0502
20				
40				
0200				
20				
40				0503
0300				
20				
40		0504	0504	
0400		1101	1101	
20		1406	1406	
40		Set-Up	Set-Up	
0500				
20				
40		E/Hyg	E/Hyg	E/Hyg
0600				
20				
40			Rest	Rest
0700				
20				
40				
0800				
20				
40				
0900		Sleep		
20			0502	
40			&	
1000			0503	1101
20				
40				
1100				
20				
40				
1200				
20				
40		E/Hyg	E/Hyg	E/Hyg
1300				
20				
40				
1400		1101		1101
20				
40				
1500				
20				
40				
1600			Sleep	
20				
40				
1700				
20				
40		E/Hyg		
1800				Sleep
20				
40				
1900				
20				
40			E/Hyg	
2000				
20				
40				
2100		1404	0200	
20				
40				E/Hyg
2200				
20				
40				
2300		E/Hyg	E/Hyg	0200
20				
40				
2400				

DAY 2	ORBIT	CREWMEN ACTIVITIES 1	2	3
0000				
20				
40				
0100		0200	0801	E/Hyg
20				
40				
0200				
20				
40				1404
0300				
20				
40			1406	
0400		Rest		
20		E/Hyg	Rest	
40				0200
0500				
20				
40			E/Hyg	
0600				
20				
40				
0700			Rest	Rest
20				
40				
0800		Sleep		
20			0501	
40				
0900				E/Hyg
20			0200	
40				
1000				
20				
40				
1100				
20		E/Hyg	0100	
40				0100
1200		Rest		
20				
40		0100	E/Hyg	
1300			Rest	
20				
40				0200
1400				
20				
40		0801		E/Hyg
1500				
20				
40			Sleep	
1600				
20				
40				
1700		Rest		
20				
40				Sleep
1800				
20		0501		
40				
1900		1404		
20				
40				
2000		0100	0100	
20				
40				
2100				
20				
40		0200	Rest	Rest
2200				
20				0501
40				1404
2300		E/Hyg	E/Hyg	
20				1406
40				
2400				

DAY ▲	ORBIT	CREWMEN ACTIVITIES 1	2	3
0000				
20				
40				
0100			0200	E/Hyg
20		0801		
40				
0200				
20				
40			0100	0100
0300				
20				
40				
0400		Rest		
20		E/Hyg		
40			Rest	1404
0500				
20				
40			E/Hyg	1406
0600				
20				
40			Rest	Rest
0700				
20				
40				
0800		Sleep		
20			0501	
40				
0900				E/Hyg
20			0200	
40				
1000				
20				
40				
1100			0100	0100
20		E/Hyg		
40				
1200		Rest		
20				
40		0100	E/Hyg	
1300			Rest	
20				
40				0200
1400				
20				
40		0801		E/Hyg
1500				
20				
40			Sleep	
1600				
20				
40				
1700		Rest		
20				
40				Sleep
1800				
20		0501		
40				
1900		0200		
20				
40		0100	0100	
2000				
20				
40			0200	
2100		Rest		
20				
40			Rest	Rest
2200				
20				0501
40				
2300		E/Hyg	E/Hyg	
20				0200
40				
2400				

DAY *	ORBIT	CREWMEN ACTIVITIES 1	2	3
0000				
20				
40				
0100			0200	E/Hyg
20		0801		
40				
0200				
20				
40			0100	0100
0300				
20				
40				
0400		Rest		
20		E/Hyg		
40			Rest	
0500				0200
20				
40			E/Hyg	
0600				
20				
40			Rest	Rest
0700				
20				
40				
0800		Sleep		
20				
40				
0900				1406
20				E/Hyg
40				
1000				
20				
40				
1100			0100	
20		E/Hyg		
40				0100
1200		Rest		
20				
40		0100	E/Hyg	
1300			0501	
20				
40				1404
1400				
20		0801		
40				E/Hyg
1500				
20				
40			Sleep	
1600				
20				
40		Rest		
1700				
20				
40		1404		
1800				Sleep
20		0501		
40				
1900		0200		
20				
40		0100	0100	
2000				
20				
40				
2100		Rest		
20				
40			Rest	Rest
2200				
20				0501
40				
2300		E/Hyg	E/Hyg	
20				0200
40				
2400				

NOTES

E/Hyg — Eat & Personal Hygiene

Mid-Night Assumed at 0600 or 1800 hrs

Limits of Experiment Time

Limits of EVA

▲Day 3,9,23,26,29,33,41,44 *Day 4,13,19,20,31 & 34

[redacted]

[redacted]

CREW SCHEDULING, FLIGHT 521, SHEET 2 OF 2

2-17-10

DAY 5	ORBIT	CREWMEN ACTIVITIES 1	2	3
0000				
20				
40				
0100		0200	0801	E/Hyg
20				
40				
0200				
20				
40				
0300				
20			0100	
40				
0400		Rest		0100
20				
40		E/Hyg	Rest	
0500				
20				
40			E/Hyg	0200
0600				
20				
40				
0700			Rest	Rest
20				
40				
0800		Sleep		
20			0501	
40				
0900			1406	E/Hyg
20				
40				
1000				
20				
40				
1100			0100	0100
20				
40		E/Hyg		
1200		Rest		
20				1404
40		0200	E/Hyg	
1300			Rest	
20				
40				0200
1400				
20		0801		
40				E/Hyg
1500				
20				
40				
1600			Sleep	
20				
40				
1700		Rest		
20				
40				Sleep
1800				
20		0501		
40		0200		
1900				
20				
40		0100	0100	
2000				
20				
40			0200	
2100		Rest		
20				
40			Rest	Rest
2200				
20				0501
40				
2300		E/Hyg	E/Hyg	
20				
40				1406
2400				

DAY 16	ORBIT	CREWMEN ACTIVITIES 1	2	3
0000				
20				
40				
0100			0200	E/Hyg
20				
40		0801		
0200				
20				
40				
0300			0100	0100
20				
40				
0400		Rest		
20				
40		E/Hyg	Rest	
0500				0200
20				
40			E/Hyg	
0600				
20				
40				
0700			Rest	Rest
20				
40				
0800		Sleep		
20			0501	
40				
0900				E/Hyg
20				
40				
1000				
20				
40				
1100			0100	
20				
40		E/Hyg		
1200		Rest		
20			E/Hyg	
40		0100		
1300			Rest	
20				
40				1404
1400				
20		0801		
40				E/Hyg
1500				
20				
40				
1600			Sleep	
20				
40				
1700				
20		Rest		
40				Sleep
1800				
20		0501		
40				
1900				
20		0200		
40			Rest	
2000				
20				
40			0200	
2100		Rest		
20				
40			Rest	Rest
2200				
20				0501
40				
2300		E/Hyg	E/Hyg	
20				0200
40				
2400				

DAY #	ORBIT	CREWMEN ACTIVITIES 1	2	3
0000				
20				
40		1406	0801	E/Hyg
0100				
20				
40				
0200				
20				
40			Stand-by For 0504 L10H Change	0504 L10H Change
0300				
20				
40				
0400		Rest		
20				
40		E/Hyg	Rest	
0500				1406
20				
40			E/Hyg	
0600				
20				
40				
0700			Rest	Rest
20		Sleep		
40				
0800				
20			0501	
40				
0900			0200	E/Hyg
20				
40				
1000				
20				
40				
1100			0100	0100
20				
40		E/Hyg		
1200		Rest		
20			E/Hyg	
40		0100		
1300			Rest	
20				
40				1404
1400				
20		0801		
40				E/Hyg
1500				
20				
40			Sleep	
1600				
20				
40				
1700		Rest		
20				Sleep
40				
1800				
20		0501		
40				
1900		0200		
20				
40		0100	0100	
2000				
20				
40			0200	
2100		Rest		
20				
40			Rest	Rest
2200				
20				0501
40				
2300		E/Hyg	E/Hyg	
20				0200
40				
2400				

DAY 8	ORBIT	CREWMEN ACTIVITIES 1	2	3
0000				
20				
40				E/Hyg
0100				
20				
40		0100	0100	
0200				
20				
40				
0300				
20				
40				
0400				
20		E/Hyg		
40			Rest	
0500		Rest		
20				0200
40			E/Hyg	
0600				
20				
40				
0700			Rest	Rest
20		Sleep		
40				
0800				
20			0501	
40				
0900				E/Hyg
20				
40				
1000			1404	
20				
40				
1100			0100	
20				
40		E/Hyg		
1200		Rest		
20				0100
40			E/Hyg	
1300		0100	Rest	
20				
40				
1400				
20				
40		0200		E/Hyg
1500				
20				
40			Sleep	
1600				
20				
40				
1700		Rest		
20				
40				Sleep
1800				
20		0501		
40				
1900		0200		
20				
40		0100	0100	
2000				
20				
40			0200	
2100		Rest		
20				
40			Rest	Rest
2200				
20				0501
40				
2300		E/Hyg	E/Hyg	
20				0200
40				
2400				

NOTES

#Day 7,14 & 21

[redacted]

[redacted]

CREW SCHEDULING, FLIGHT 501, SHEET 3 OF 6

2-12.11

DAY 10	ORBIT	CREWMEN ACTIVITIES 1	2	3
0000				
20				
40			1404	E/Hyg
0100		0801		
20				
40				
0200			0200	
20				
40				
0300			0100	0100
20				
40				
0400				
20		E/Hyg	Rest	
40				
0500		Rest		0200
20				
40			E/Hyg	
0600				
20				
40				
0700			Rest	Rest
20		Sleep		
40				
0800				
20			0501	
40				
0900				E/Hyg
20			0200	
40				
1000				
20				
40				
1100			0100	
20		E/Hyg		
40				
1200		Rest		0100
20				
40			E/Hyg	
1300		0100	Rest	
20				
40				
1400				
20				
40				E/Hyg
1500		0200		
20			Sleep	
40				
1600				
20				
40				
1700		Rest		
20				
40				Sleep
1800				
20		0501		
40		0200		
1900				
20				
40		0100	0100	
2000				
20				
40			0200	
2100		Rest		
20				
40			Rest	Rest
2200				
20				
40				0501
2300		E/Hyg	E/Hyg	
20			0	0200
40				
2400				

DAY 11 18	ORBIT	CREWMEN ACTIVITIES 1	2	3
0000				
20				
40			0503	E/Hyg
0100		0801		
20				
40				
0200				
20				
40				
0300			0100	0100
20				
40				
0400				
20		E/Hyg	Rest	1404
40				
0500		Rest		
20				
40			E/Hyg	0200
0600				
20				
40				
0700			Rest	Rest
20		Sleep		
40				
0800				
20			0501	
40				
0900				
20				E/Hyg
40				
1000				
20				
40				
1100			0100	
20		E/Hyg		
40				0100
1200		Rest		
20				
40			E/Hyg	
1300		0100	Rest	
20				
40				
1400				
20				
40		0801		
1500				E/Hyg
20				
40			Sleep	
1600				
20				
40				
1700		Rest		Sleep
20				
40				
1800				
20		0501		
40		0200		
1900				
20				
40		0100	0100	
2000				
20				
40			0200	
2100		Rest		
20				
40			Rest	Rest
2200				
20				
40				0501
2300		E/Hyg	E/Hyg	
20				0200
40				
2400				

DAY 12	ORBIT	CREWMEN ACTIVITIES 1	2	3
0000				
20				
40				
0100				E/Hyg
20			1404	
40		0801		
0200				
20				
40				0200
0300				
20				
40		0100		0100
0400				
20		E/Hyg	Rest	
40				
0500		Rest		1406
20				
40			E/Hyg	
0600				
20				
40				
0700			Rest	Rest
20		Sleep		
40				
0800			0501	
20				
40				E/Hyg
0900			0200	
20				
40				
1000				
20				
40				
1100			0100	
20		E/Hyg		
40				0100
1200		Rest		
20				
40			E/Hyg	
1300		0100	Rest	
20				
40				0200
1400				
20				
40		0801		E/Hyg
1500				
20				
40			Sleep	
1600				
20				
40				
1700		Rest		
20				
40				Sleep
1800				
20		0501		
40		0200		
1900				
20				
40		0100	0100	
2000				
20				
40			0200	
2100		Rest		
20				
40			Rest	Rest
2200				
20				
40				0501
2300		E/Hyg	E/Hyg	
20				0200
40				
2400				

DAY 13 22	ORBIT	CREWMEN ACTIVITIES 1	2	3
0000				
20				
40				E/Hyg
0100			1404	
20		0801		
40			0200	
0200				
20				
40			0502	
0300			0501	
20				
40		0100	0100	
0400				
20		E/Hyg	Rest	
40				
0500		Rest		0200
20				
40			E/Hyg	
0600				
20				
40				
0700			Rest	Rest
20		Sleep		
40				
0800				
20				
40				1406
0900				E/Hyg
20				
40				
1000				
20				
40				
1100				0100
20		E/Hyg		
40				
1200		Rest		
20				
40		0100	E/Hyg	
1300			Rest	
20				
40				0200
1400				
20				
40		0801		E/Hyg
1500				
20				
40			Sleep	
1600				
20				
40				
1700		Rest		Sleep
20				
40				
1800				
20		0501		
40		0200		
1900				
20				
40		0100	0100	
2000				
20				
40			0200	
2100		Rest		
20				
40			Rest	Rest
2200				
20				0501
40				
2300		E/Hyg	E/Hyg	
20				0200
40				
2400				

NOTES

[redacted]

[redacted]

CREW SCHEDULING, FLIGHT 521, SHEET 4 OF 6

2-12.12

DAY ●	ORBIT	CREWMEN ACTIVITIES 1	2	3
0000				
20				
40				
0100		0100	0100	E/Hyg
20				
40				
0200				
20				
40				
0300		Rest		0100
20				
40				
0400				
20		E/Hyg		
40			Rest	1404
0500				
20				
40			E/Hyg	0200
0600				
20				
40				
0700			Rest	Rest
20				
40				
0800				
20		Sleep	0501	
40				
0900				E/Hyg
20			0200	
40				
1000				
20				
40				
1100			0100	
20		E/Hyg		
40				
1200		Rest		0100
20			E/Hyg	
40				
1300		0100	Rest	
20				
40				
1400				
20				
40				E/Hyg
1500		0200		
20				
40				
1600			Sleep	
20				
40				
1700		Rest		
20				
40				
1800				Sleep
20		0501		
40		0200		
1900				
20				
40		0100	0100	
2000				
20				
40			0200	
2100		Rest		
20				
40			Rest	Rest
2200				0501
20				
40				
2300		E/Hyg	E/Hyg	0200
20				
40				
2400				

DAY 25	ORBIT	CREWMEN ACTIVITIES 1	2	3
0000				
20				
40				
0100		0801	0503	E/Hyg
20				
40				
0200				
20				
40			0200	
0300				
20			0501	
40				
0400		0100	0100	
20				
40		E/Hyg		
0500			Rest	
20		Rest		0200
40				
0600			E/Hyg	
20				
40				
0700		Sleep	Rest	Rest
20				
40				
0800				
20				
40				
0900			1406	E/Hyg
20				
40				
1000				
20				
40				
1100			0100	
20		E/Hyg		
40				
1200		Rest		0100
20			E/Hyg	
40				
1300		0100	Rest	
20				
40				
1400				
20				
40				E/Hyg
1500		0200		
20				
40			Sleep	
1600				
20				
40				
1700		Rest		
20				
40				Sleep
1800				
20		0501		
40		0200		
1900				
20				
40		0100	0100	
2000				
20				
40			1406	
2100		Rest		
20				
40			Rest	Rest
2200				0501
20				
40				
2300		E/Hyg	E/Hyg	
20				
40				1404
2400				

DAY 27	ORBIT	CREWMEN ACTIVITIES 1	2	3
0000				
20				
40			0501	
0100		0801	0200	E/Hyg
20				
40				
0200			0502	
20				
40				1404
0300				
20				0200
40				
0400		0100		0100
20				
40		E/Hyg		
0500			Rest	
20		Rest		0200
40				
0600			E/Hyg	
20				
40				
0700			Rest	Rest
20				
40				
0800		Sleep		
20				
40				
0900			1406	E/Hyg
20				
40				
1000				
20				
40				
1100			0100	0100
20		E/Hyg		
40				
1200		Rest		
20			E/Hyg	
40		0100		
1300			Rest	
20				
40				
1400				
20				
40		0801		E/Hyg
1500				
20				
40			Sleep	
1600				
20				
40				
1700		Rest		Sleep
20				
40				
1800				
20		0501		
40		0200		
1900				
20				
40		0100	0100	
2000				
20				
40			0200	
2100		Rest		
20				
40			Rest	Rest
2200				0501
20				
40				
2300		E/Hyg	E/Hyg	0200
20				
40				
2400				

DAY 28	ORBIT	CREWMEN ACTIVITIES 1	2	3
0000				
20				
40		0200	1404	E/Hyg
0100				
20				
40		0100	0100	
0200				
20				
40		0504 L10H Change	Stand-by For 0504 L10H Change	
0300				
20				
40				
0400				
20		E/Hyg		
40			Rest	
0500		Rest		0200
20				
40			E/Hyg	
0600				
20				
40				
0700			Rest	Rest
20				
40				
0800		Sleep		
20			0501	
40				
0900			0200	E/Hyg
20				
40				
1000				
20				
40				
1100			0100	
20		E/Hyg		
40				
1200		Rest		0100
20			E/Hyg	
40				
1300		0100	Rest	
20				
40				
1400				
20				
40		0200		E/Hyg
1500				
20				
40			Sleep	
1600				
20				
40				
1700		Rest		
20				
40				Sleep
1800				
20		0501		
40		0200		
1900				
20				
40		0100	0100	
2000				
20				
40			0200	
2100		Rest		
20				
40			Rest	Rest
2200				
20				0501
40				
2300		E/Hyg	E/Hyg	0200
20				
40				
2400				

NOTES ● Day 17, 24, 32, 39

[redacted]

[redacted]

CREW SCHEDULING, FLIGHT 521, SHEET 5 OF 6 2-12.13

DAY 43	ORBIT	CREWMEN ACTIVITIES 1	2	3
0000				
20			0501	
40				
0100			0200	E/Hyg
20				
40		0801		
0200			1404	
20				
40				
0300			0502	
20				
40		0100	0100	
0400				
20		E/Hyg		
40			Rest	
0500		Rest		0200
20				
40			E/Hyg	
0600				
20				
40				
0700			Rest	Rest
20				
40				
0800		Sleep		
20				
40				
0900			1406	E/Hyg
20				
40				
1000				
20				
40				
1100			0100	
20		E/Hyg		
40				0100
1200		Rest		
20			E/Hyg	
40		0100		
1300			Rest	
20				
40				0200
1400				
20				
40		0801		E/Hyg
1500				
20				
40				
1600			Sleep	
20				
40				
1700		Rest		
20				
40				
1800				Sleep
20		0501		
40		0200		
1900				
20				
40		0100	0100	
2000				
20				
40			0200	
2100		Rest		
20				
40			Rest	Rest
2200				
20				0501
40				
2300		E/Hyg	E/Hyg	
20				
40				
2400				

DAY 35	ORBIT	CREWMEN ACTIVITIES 1	2	3
0000				
20				
40				
0100		0801	0503	E/Hyg
20				
40				
0200				
20		Stand-By For 0504, LiOH Change		
40				0504, LiOH Change
0300				
20				
40				
0400				
20		E/Hyg		
40			Rest	
0500		Rest		0200
20				
40			E/Hyg	
0600				
20				
40				
0700			Rest	Rest
20				
40				
0800		Sleep		
20			0501	
40				
0900				E/Hyg
20			0200	
40				
1000				
20				Rest
40				
1100			1404	
20		E/Hyg		
40				
1200		Rest		1406
20			E/Hyg	
40		0200		
1300			Rest	
20				
40				
1400				
20				
40		0801		
1500				E/Hyg
20				
40				
1600			Sleep	
20				
40				
1700		Rest		
20				
40				
1800				Sleep
20		0501		
40		0200		
1900				
20				
40		0100	0100	
2000				
20				
40			0200	
2100		Rest		
20				
40			Rest	Rest
2200				
20				0501
40				
2300		E/Hyg	E/Hyg	
20				0200
40				
2400				

DAY 36	ORBIT	CREWMEN ACTIVITIES 1	2	3
0000				
20				
40		1403	Rest	
0100				E/Hyg
20			0501	
40				
0200				
20		0801		
40				
0300			1403	
20				
40		1404		
0400				
20		E/Hyg		
40			1403	
0500		Rest		0200
20				
40			E/Hyg	
0600				
20				
40				
0700			Rest	Rest
20				
40				
0800		Sleep		
20				
40				
0900			1406	E/Hyg
20				
40				
1000				
20				
40				
1100			0100	0100
20		E/Hyg		
40				
1200		Rest		
20			E/Hyg	
40		0100		
1300			Rest	
20		0801		
40				0200
1400				
20				
40		1403		E/Hyg
1500				
20				
40				
1600		0801	Sleep	
20				
40				
1700		Rest		
20				
40				
1800				Sleep
20		0501		
40		0200		
1900				
20				
40		0100	0100	
2000				
20				
40			0200	
2100		Rest		
20				
40			Rest	Rest
2200				
20				0501
40				
2300		E/Hyg	E/Hyg	0200
20				
40				
2400				

DAY 37	ORBIT	CREWMEN ACTIVITIES 1	2	3
0000				
20				
40				
0100				E/Hyg
20				
40		1403	0801	
0200				
20				
40				
0300				
20		0501		
40		0200	1404	
0400				
20		E/Hyg		
40			Rest	
0500		Rest		0200
20				
40			E/Hyg	
0600				
20				
40			Rest	
0700				Rest
20				
40			1403	
0800		Sleep		
20				
40				
0900			1406	E/Hyg
20				
40				
1000				
20				
40				
1100			0100	
20		E/Hyg		
40				0100
1200		Rest		
20			E/Hyg	
40		0100		
1300			Rest	
20				
40				0200
1400				
20				
40		0801		E/Hyg
1500				
20				
40				
1600			Sleep	
20				
40				
1700		Rest		
20				
40				
1800				Sleep
20		0501		
40		0200		
1900				
20				
40		0100	0100	
2000				
20				
40		1403	0200	
2100				
20				
40		Rest	Rest	Rest
2200				
20				0501
40				
2300		E/Hyg	E/Hyg	0200
20				
40				
2400				

NOTES

[redacted]

CREW SCHEDULING, FLIGHT 521 , **SHEET** 6 **OF** 6

2-12.14

DAY 38	ORBIT	CREWMEN ACTIVITIES 1	2	3
0000				
20				
40				
0100		0200	0801	E/Hyg
20				
40				
0200				
20				
40				
0300		1403		
20				
40		0100	0100	
0400				
20		E/Hyg		
40			Rest	1406
0500		Rest		
20				
40			E/Hyg	0200
0600				
20				
40				
0700			Rest	Rest
20				
40		Sleep		
0800				
20			0501	
40				
0900				E/Hyg
20			0200	
40				
1000				
20				
40				
1100			0100	
20		E/Hyg		
40				0100
1200		Rest		
20			E/Hyg	
40		0100		
1300			Rest	
20		1403		
40				
1400				1403
20				
40				E/Hyg
1500		0801		
20			Sleep	
40				
1600				
20				
40				
1700		Rest		
20				Sleep
40				
1800				
20		0501		
40		0200		
1900				
20				
40		0100	0100	
2000				
20				
40			1404	
2100		Rest		
20				
40			Rest	Rest
2200				
20				0501
40				1403
2300		E/Hyg	E/Hyg	
20				
40				1406
2400				

DAY 40	ORBIT	CREWMEN ACTIVITIES 1	2	3
0000				
20				
40				
0100			0200	E/Hyg
20				
40		0801		
0200			0502	
20				
40			0200	
0300				
20				
40		0100	0100	
0400				
20		E/Hyg		
40			Rest	
0500		Rest		0200
20				
40			E/Hyg	
0600				
20				
40				
0700			Rest	Rest
20				
40				
0800		Sleep		
20				
40				
0900			1406	E/Hyg
20				
40				
1000				
20				
40				
1100			0100	
20		E/Hyg		
40				0100
1200		Rest		
20			E/Hyg	
40		0100		
1300			Rest	
20				
40				0200
1400				
20				
40		0801		E/Hyg
1500				
20				
40			Sleep	
1600				
20				
40				
1700		Rest		
20				Sleep
40				
1800				
20		0501		
40		0200		
1900				
20				
40		0100	0100	
2000				
20				
40			0200	
2100		Rest		
20				
40			Rest	Rest
2200				
20				0501
40				
2300		E/Hyg	E/Hyg	1404
20				
40				
2400				

DAY 42	ORBIT	CREWMEN ACTIVITIES 1	2	3
0000				
20				
40			0200	E/Hyg
0100				
20				
40				
0200				
20		Stand-		
40		By For	0504	
0300		0504	Lioh	0200
20		Lioh	Change	
40		Change		
0400				
20		E/Hyg		
40			Rest	
0500		Rest		1406
20				
40			E/Hyg	
0600				1404
20				
40				
0700		Sleep	Rest	Rest
20				
40				
0800				
20			0501	
40				
0900			0200	E/Hyg
20				
40				
1000				
20				
40			0100	
1100				
20		E/Hyg		
40				0100
1200		Rest		
20			E/Hyg	
40				
1300		0100	Rest	
20				
40				
1400				
20				
40				E/Hyg
1500		0200		
20			Sleep	
40				
1600				
20				
40				
1700		Rest		
20				Sleep
40				
1800				
20		0501		
40		0200		
1900				
20				
40		0100	0100	
2000				
20				
40			0200	
2100		Rest		
20				
40			Rest	Rest
2200				
20				0501
40				
2300		E/Hyg	E/Hyg	
20				0200
40				
2400				

DAY 45	ORBIT	CREWMEN ACTIVITIES 1	2	3
0000				
20				
40		1404	0801	E/Hyg
0100				
20				
40				
0200				
20		E/Hyg		
40		Rest		1406
0300				
20				
40				
0400				
20				
40			Rest	0200
0500				
20				
40		Sleep	E/Hyg	
0600				
20				
40				
0700			0200	Rest
20				
40				
0800				
20				
40			Rest	E/Hyg
0900				
20				
40		E/Hyg		
1000				
20				
40		Rest		
1100				
20				
40				
1200				
20				
40				
1300			Sleep	Sleep
20				
40				
1400				
20				
40		0801		
1500				
20				
40				
1600				
20				
40		Rest	E/Hyg	E/Hyg
1700				
20			Rest	Rest
40				
1800				
20				
40				
1900				
20				
40				
2000				
20				
40				
2100				
20				
40				
2200				
20				
40				
2300				
20				
40				
2400				

NOTES

GRUMMAN AIRCRAFT ENGINEERING CORPORATION

Table 3-3 APOLLO EXTENSION SYSTEM EARTH ORBIT MISSION STUDY
FLIGHT [S27] EXPERIMENT MISSION PROFILE

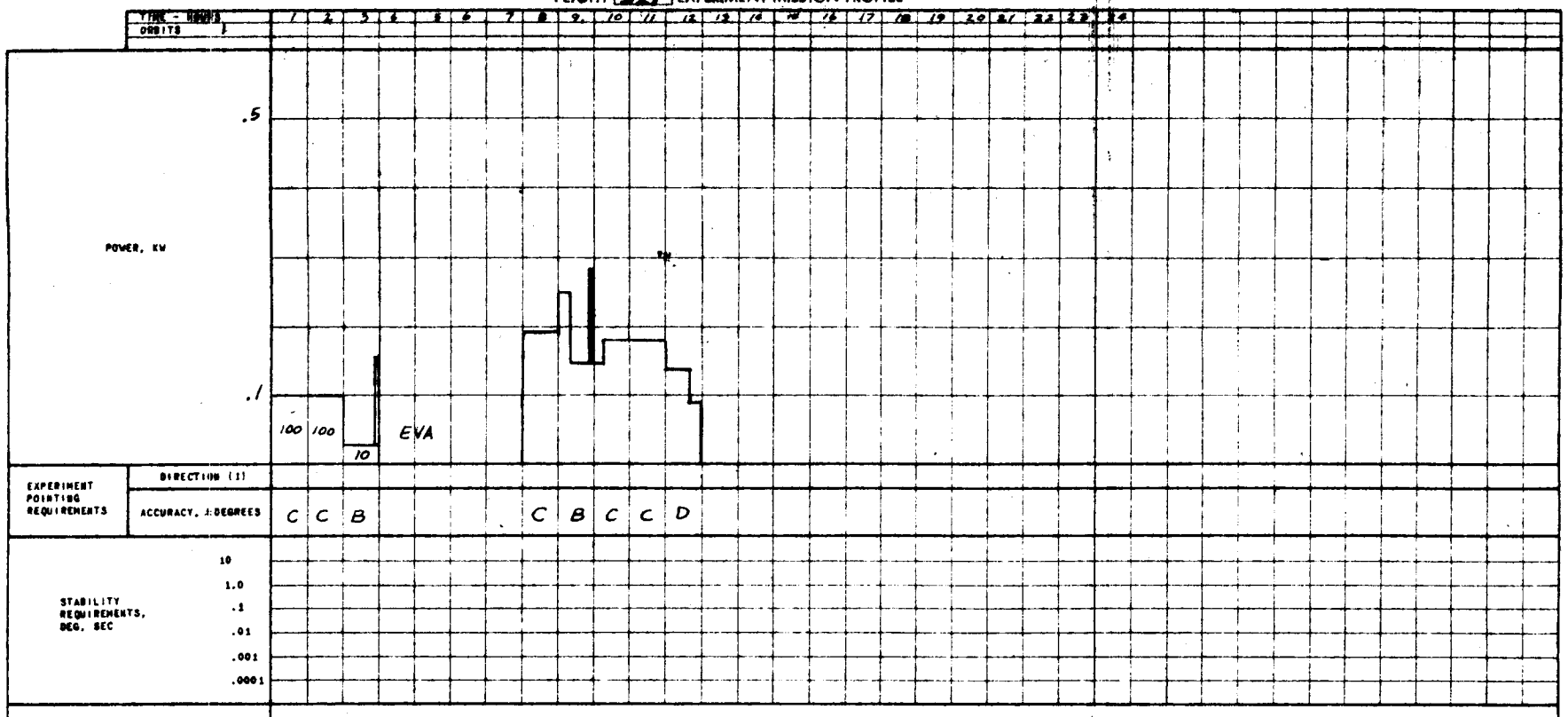

NOTES, OTHER TIME - DEPENDENT VARIABLES, ETC

Representative Power Profiles shown for 23 of the 45 days. Power peaks on the days not shown do not exceed 575 watts; for six of days not shown there are no peaks above 10 watts and no pointing requirements.

A= $1/2^{\circ}$-$1/4^{\circ}$ nadir
B= $\pm 5^{\circ}$ of magnetic line of force
C= 2° for 30 sec; 5° for 2 subsequent hours in direction of desired aloud information
D= $\pm 5^{\circ}$ of desired 060 launch direction.

(1) INDICATE ED(EARTH ORIENTATION), IO(INERTIAL ORIENTATION), OR FD(FREE DRIFT)

2-12.15

Table 3-3 APOLLO EXTENSION SYSTEM EARTH ORBIT MISSION STUDY
FLIGHT [SX1] EXPERIMENT MISSION PROFILE

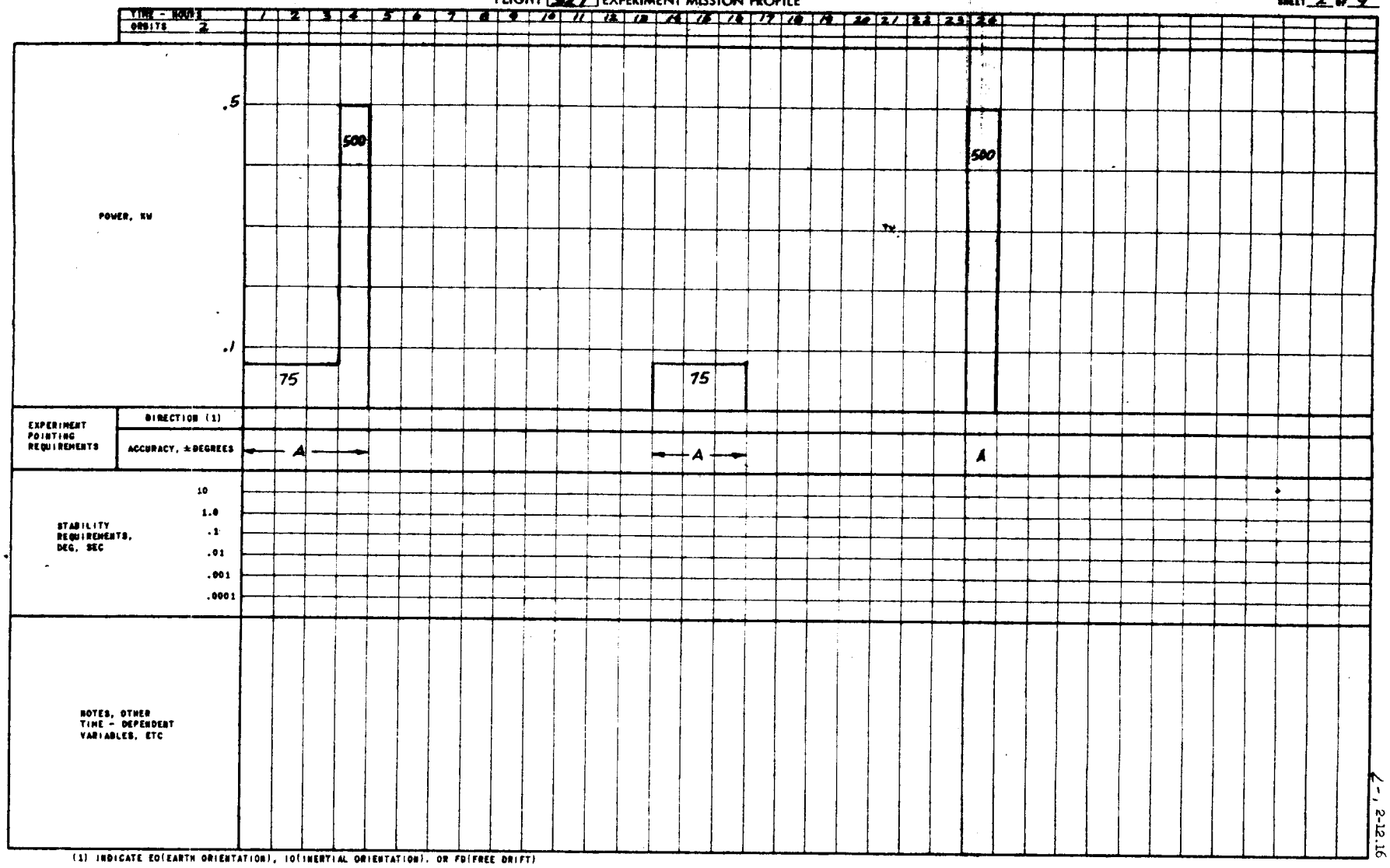

(1) INDICATE EO(EARTH ORIENTATION), IO(INERTIAL ORIENTATION), OR FD(FREE DRIFT)

GRUMMAN AIRCRAFT ENGINEERING CORPORATION

Table 3-3 APOLLO EXTENSION SYSTEM EARTH ORBIT MISSION STUDY
FLIGHT 527 EXPERIMENT MISSION PROFILE

TIME - HOURS / ORBITS Δ	1	2	3	4	5	6	7	8	9	10	11	12	13	14	15	16	17	18	19	20	21	22	23	24
POWER, KW .5																								
POWER, KW					500																			
POWER, KW .1		75													75									
EXPERIMENT POINTING REQUIREMENTS — DIRECTION (1)																								
EXPERIMENT POINTING REQUIREMENTS — ACCURACY, ±DEGREES		A			A										A									
STABILITY REQUIREMENTS, DEG, SEC 10																								
1.0																								
.1																								
.01																								
.001																								
.0001																								
NOTES, OTHER TIME - DEPENDENT VARIABLES, ETC																								

(1) INDICATE EO(EARTH ORIENTATION), IO(INERTIAL ORIENTATION), OR FD(FREE DRIFT)

2-12.17

GRUMMAN AIRCRAFT ENGINEERING CORPORATION

Table 3-3 APOLLO EXTENSION SYSTEM EARTH ORBIT MISSION STUDY
FLIGHT 521 EXPERIMENT MISSION PROFILE

SHEET 4 OF 9

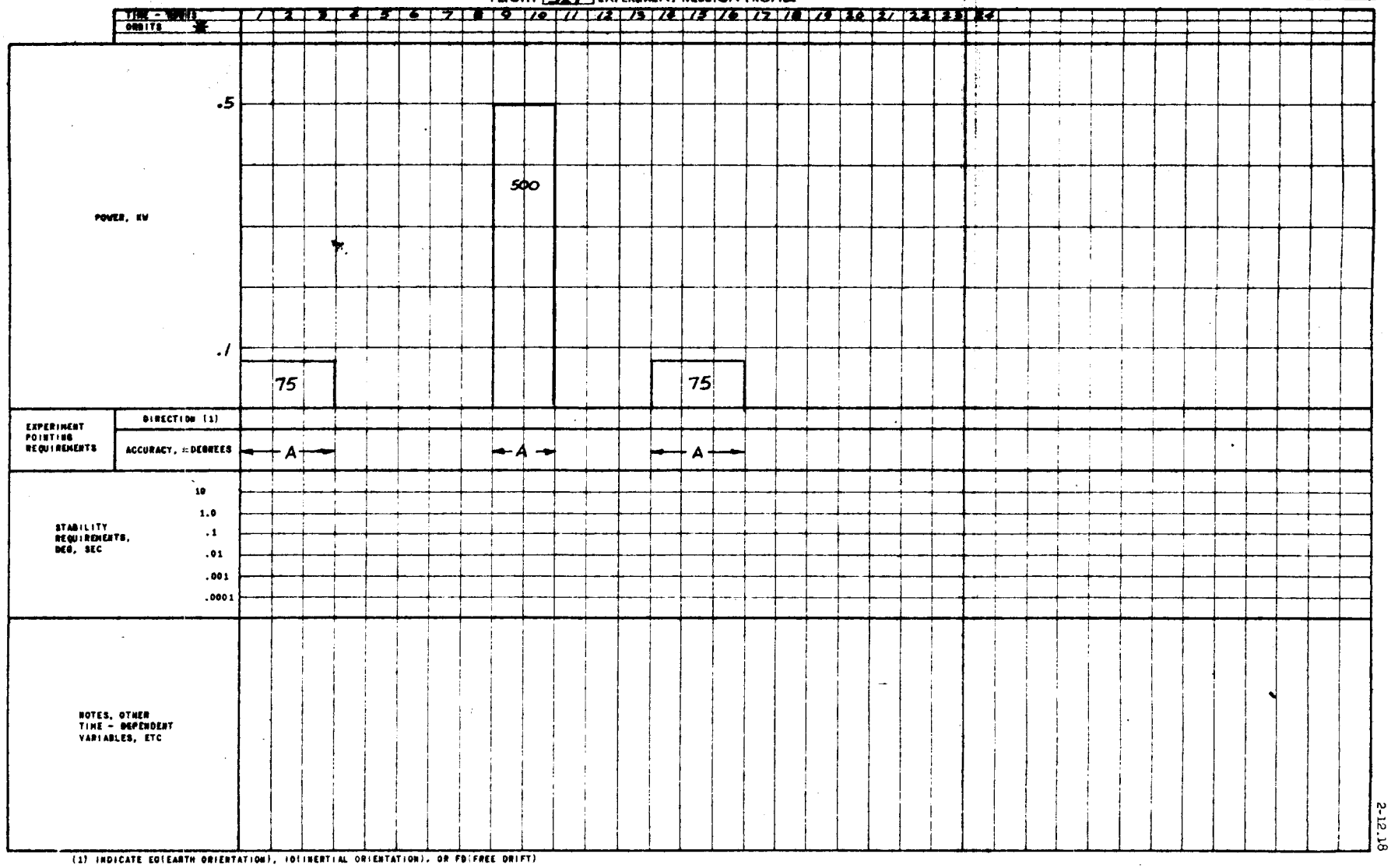

(1) INDICATE EO(EARTH ORIENTATION), IO(INERTIAL ORIENTATION), OR FD(FREE DRIFT)

Table 3-3 APOLLO EXTENSION SYSTEM EARTH ORBIT MISSION STUDY
FLIGHT 521 EXPERIMENT MISSION PROFILE

TIME - HOURS	1	2	3	4	5	6	7	8	9	10	11	12	13	14	15	16	17	18	19	20	21	22	23	24
ORBITS 7, 14, 21																								
POWER, KW .5	575				500																			
POWER, KW .1			EVA											75										
EXPERIMENT POINTING REQUIREMENTS: DIRECTION (1)																								
EXPERIMENT POINTING REQUIREMENTS: ACCURACY, ±DEGREES	A				A										A									
STABILITY REQUIREMENTS, DEG, SEC: 10																								
1.0																								
.1																								
.01																								
.001																								
.0001																								
NOTES, OTHER TIME - DEPENDENT VARIABLES, ETC																								

(1) INDICATE EO (EARTH ORIENTATION), IO (INERTIAL ORIENTATION), OR FD FREE DRIFT)

CONFIDENTIAL

CONFIDENTIAL

Table 3-3 APOLLO EXTENSION SYSTEM EARTH ORBIT MISSION STUDY
FLIGHT 527 EXPERIMENT MISSION PROFILE

TIME - HOURS	1	2	3	4	5	6	7	8	9	10	11	12	13	14	15	16	17	18	19	20	21	22	23	24
ORBITS 2.5																								
POWER, KW .5									500											500				500
POWER, KW .1		175																						
EXPERIMENT POINTING REQUIREMENTS — DIRECTION (1)																								
EXPERIMENT POINTING REQUIREMENTS — ACCURACY, ±DEGREES		A/C	A						A											A				A
STABILITY REQUIREMENTS, DEG, DEC 10																								
1.0																								
.1																								
.01																								
.001																								
.0001																								
NOTES, OTHER TIME - DEPENDENT VARIABLES, ETC																								

(1) INDICATE E0(EARTH ORIENTATION), I0(INERTIAL ORIENTATION), OR F0(FREE DRIFT)

[redacted]

GRUMMAN AIRCRAFT ENGINEERING CORPORATION

Table 3-3 APOLLO EXTENSION SYSTEM EARTH ORBIT MISSION STUDY
FLIGHT 521 EXPERIMENT MISSION PROFILE

SHEET 7 OF 9

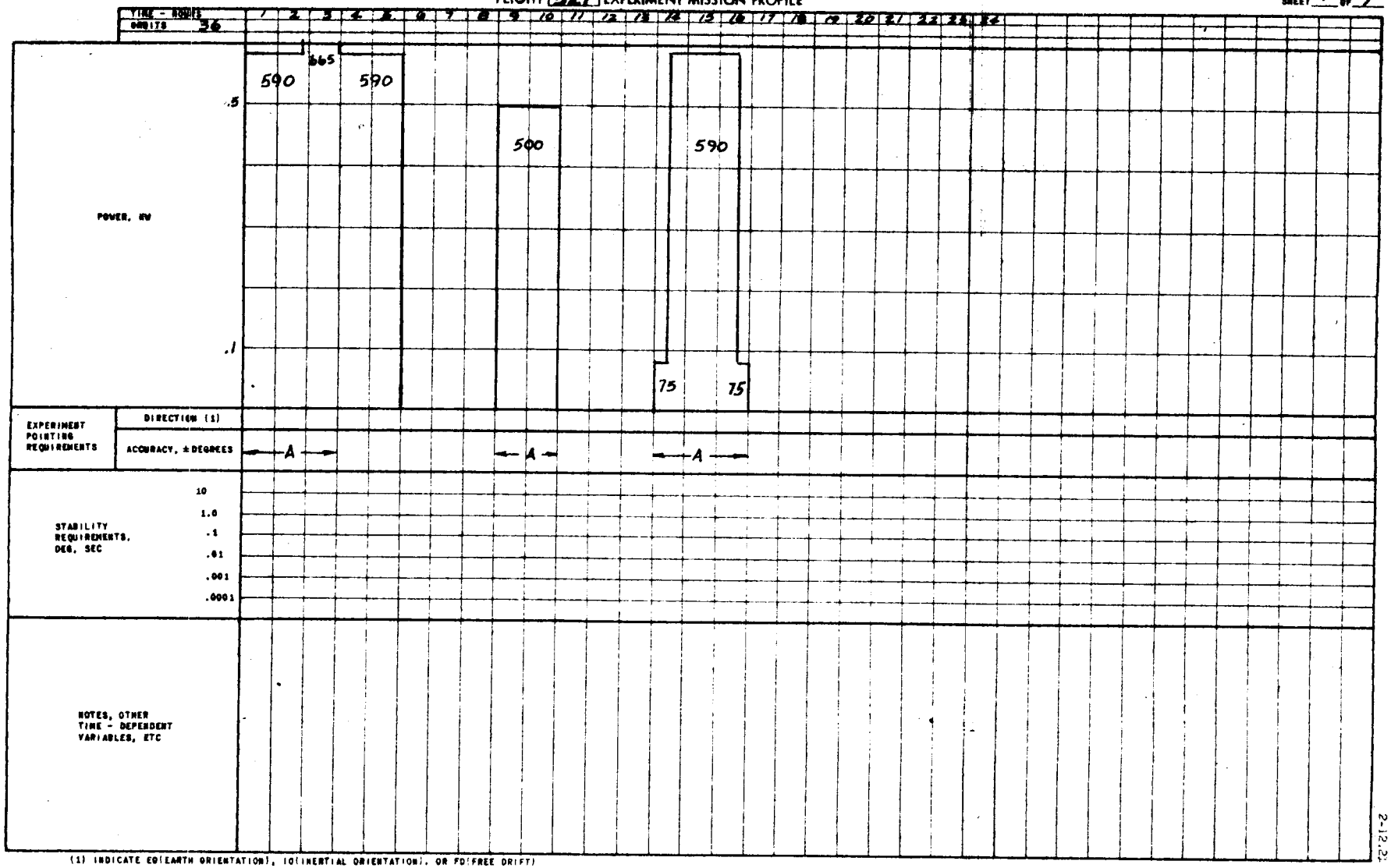

(1) INDICATE EO(EARTH ORIENTATION), IO(INERTIAL ORIENTATION), OR FD(FREE DRIFT)

[redacted]

2-12.2

Table 3-3 APOLLO EXTENSION SYSTEM EARTH ORBIT MISSION STUDY
FLIGHT 527 EXPERIMENT MISSION PROFILE

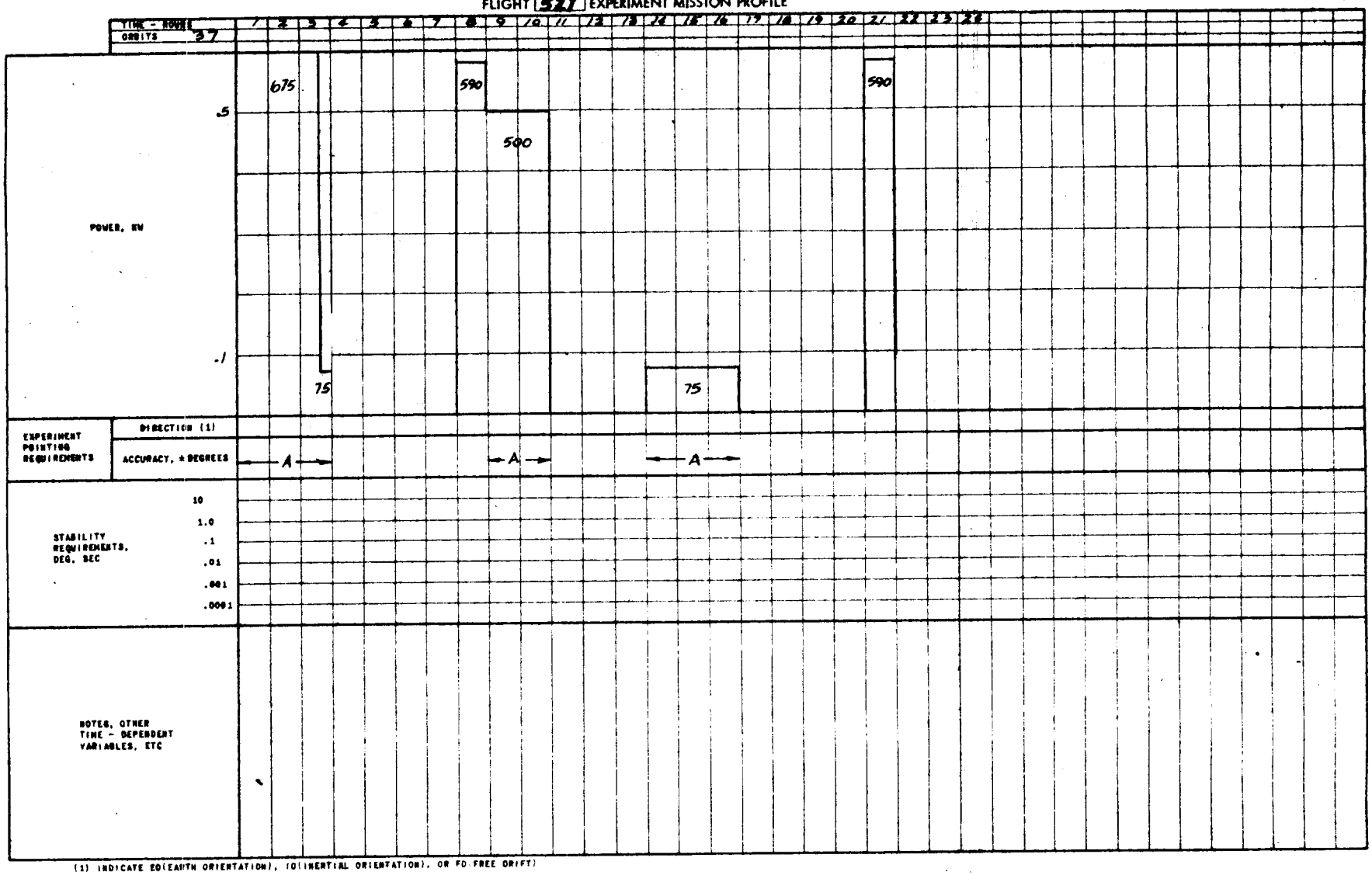

(1) INDICATE EO(EARTH ORIENTATION), IO(INERTIAL ORIENTATION), OR FD FREE DRIFT)

GRUMMAN AIRCRAFT ENGINEERING CORPORATION

Table 3-3 APOLLO EXTENSION SYSTEM EARTH ORBIT MISSION STUDY
FLIGHT 527 EXPERIMENT MISSION PROFILE

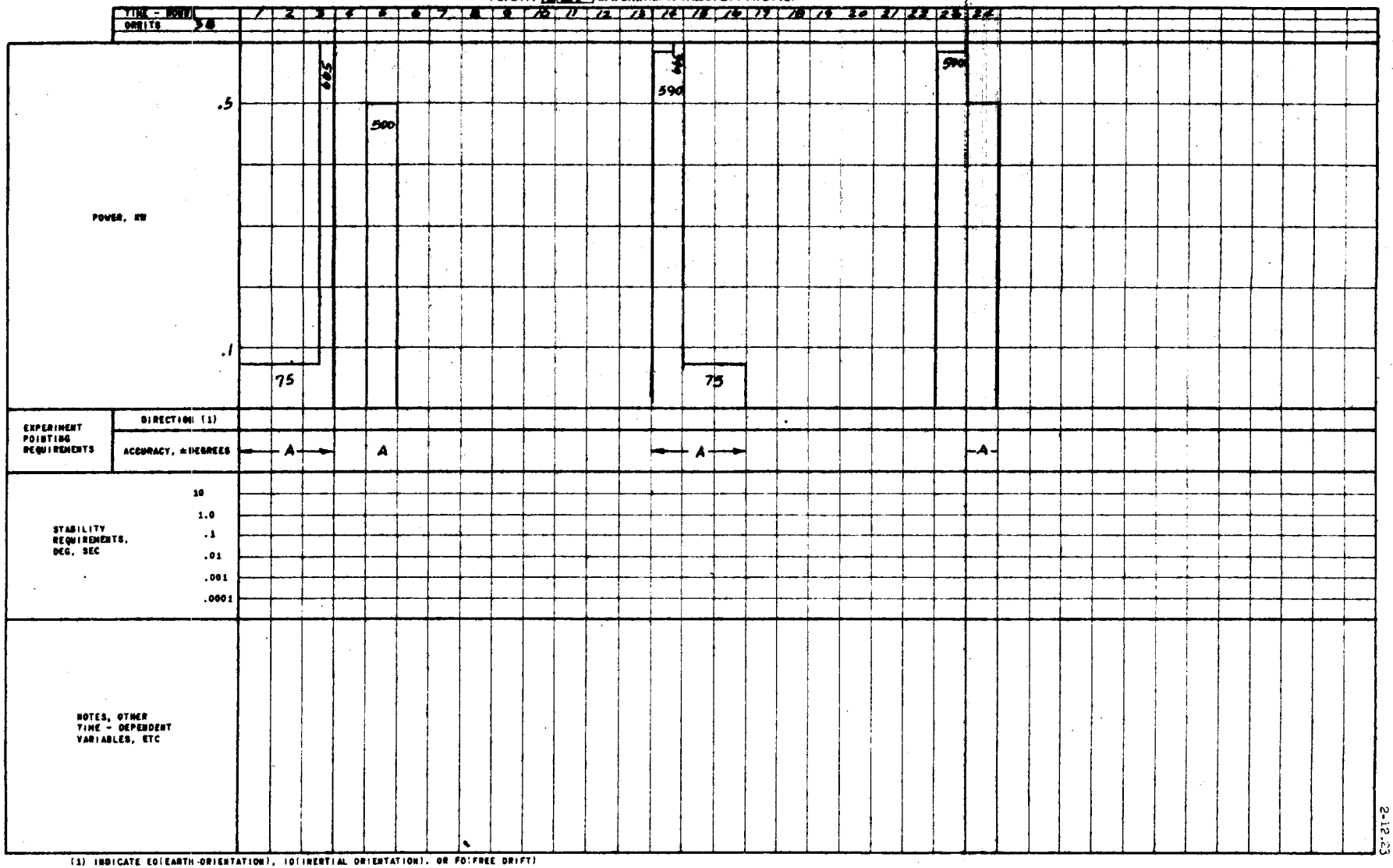

(1) INDICATE EO(EARTH-ORIENTATION), IO(INERTIAL ORIENTATION), OR FO(FREE DRIFT)

2-12-23

3.2 SPACECRAFT DEFINITION

Flight 521 configuration, shown in Figures 3-1 and 3-2, carries experiments dealing with micro-meteoroid collection (0504), generation and analysis of comet-like particulate clouds (0503), study of magnetic field lines (0502), radioisotope power supplies (1404), fluid management technology (1403), optical technology experiments (1406), sensing of conjugate aurora and airglow (0801) and the launching of the OGO (1101). The conjugate aurora and optical technology experiments require an earth oriented spacecraft. Experiment pointing and stability requirements are accommodated by the CSM within the RCS propellant capacities of both the "C" and "D" CSM versions. Experiment pointing and stability requirements exceeding CSM capability are accommodated by installing the experiment on a gimballed mount and providing fine guidance and control systems within the telescope. The 60 inch diameter telescope for 1406 is gimbal mounted to provide a pointing accuracy of .1 degree.

The size of the telescope to perform the optical technology experiment dictated the use of a 30 in. low profile descent stage.

The OGO is located in the rear quadrant of the descent stage. The micro-meteoroid collectors (0504) are boom mounted and can be oriented into any desirable position. A 10 ft diameter balloon (associated with 0504) is stowed in the descent stage and erected below the descent stage away from the telescope.

The Radioisotope Thermo-electric Generator (RTEG) unit is mounted to the side of the descent stage, near the SLA so that the RTEG fuel block can be loaded prior to launch. A 75 sq. ft. radiator required for the RTEG is mounted beneath the unit and deploys in orbit. Radiation monitoring equipment (0501) is located near this experiment to check radiation levels. In addition the RTEG unit is mounted so that the unit can be jettisoned from the spacecraft should the cooling loop fail.

The equipment for the comet-like particulate experiment (0503) is located on the side of the descent stage. Four chemical canisters (associated with 0503) are located such that cameras can record the experiment.

Equipment for sensing aurora (0801) is earth pointed and located on the descent stage so that it can view the earth's poles. The unit is gimbal mounted.

Equipment for the magnetic field experiment (0502) is also mounted on the descent stage. The electron gun is rotatable and contains its own power supply.

The fuel cells are mounted on the descent stage to the side of the ascent stage pressure vessel.

No structural modifications are required to the LEM A/S. A low profile descent stage is used to support the Lab and experiments. All experiment equipment installations are additions to existing LEM A/S and basic low profile descent stage structure.

KEY

No.	Experiment	Name
1	1101	OGO
2		Power Package (Config. "C")
3	1406	60-in. dia. Telescope
4	0502	Electron Gun
5	0502,0801	Magnetometer
6	0504	Micrometeoroid Collector Ballon
7	0503	Photometer
8	0503	Cameras
9	0504	Micrometeoroid Collector Panels
10	0502	Capacitor Bank
11		GOX Tank
12	1404	RTEG Radiator Stowed
13	1404	Pumps
14	1404	RTEG
15	0801	Telescope Array
16	0801	Plasma Probe
17	0503	Chemical Canisters
18	1404	Radiator Extended
19	0801-0501	Proton-Alpha & Electron Spectrometers
20		LiOH Storage
21		Power Package Radiator
22		Equipt Radiators
23		Potable Water Tank
24		Waste Storage Tank
25		OAD Star Tracker

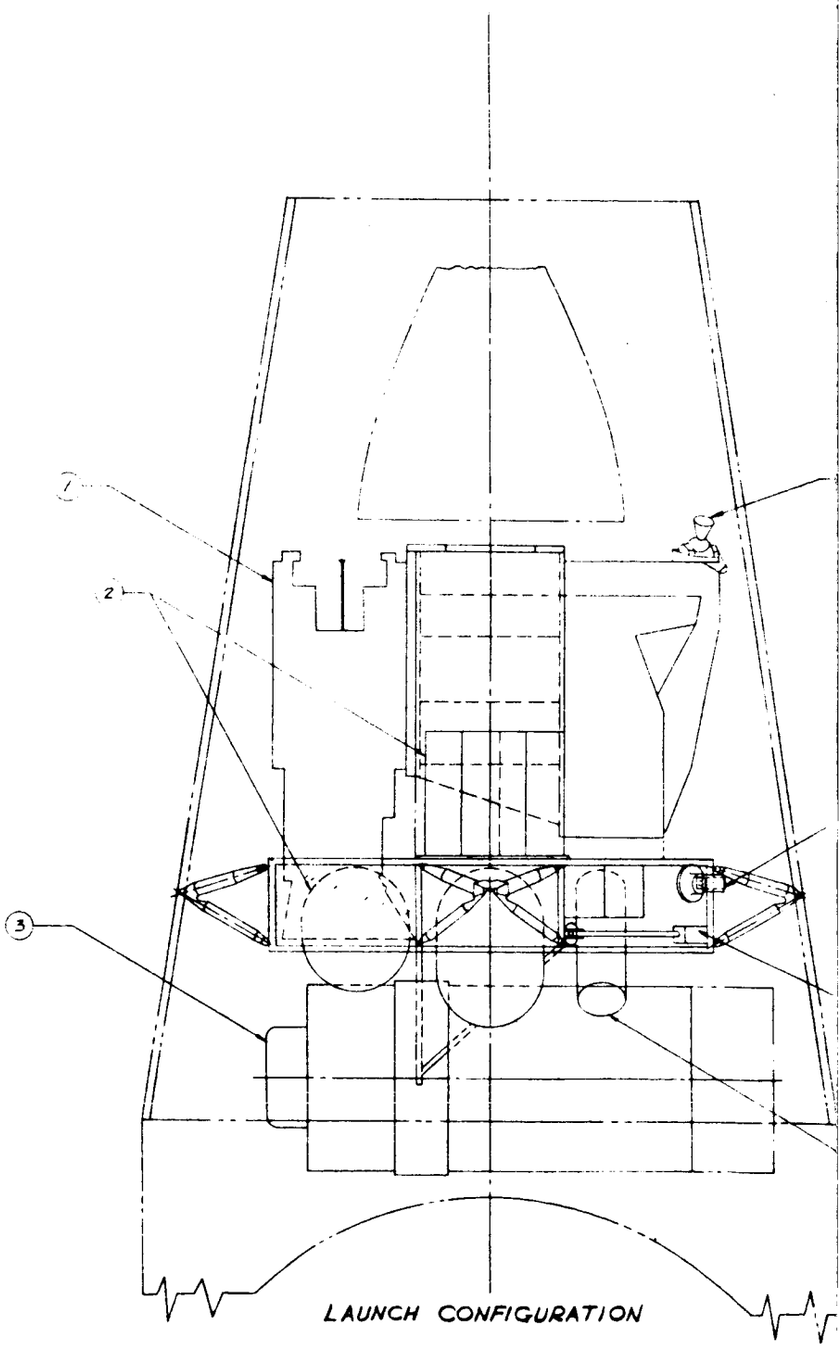

LAUNCH CONFIGURATION

FOLD-OUT #1

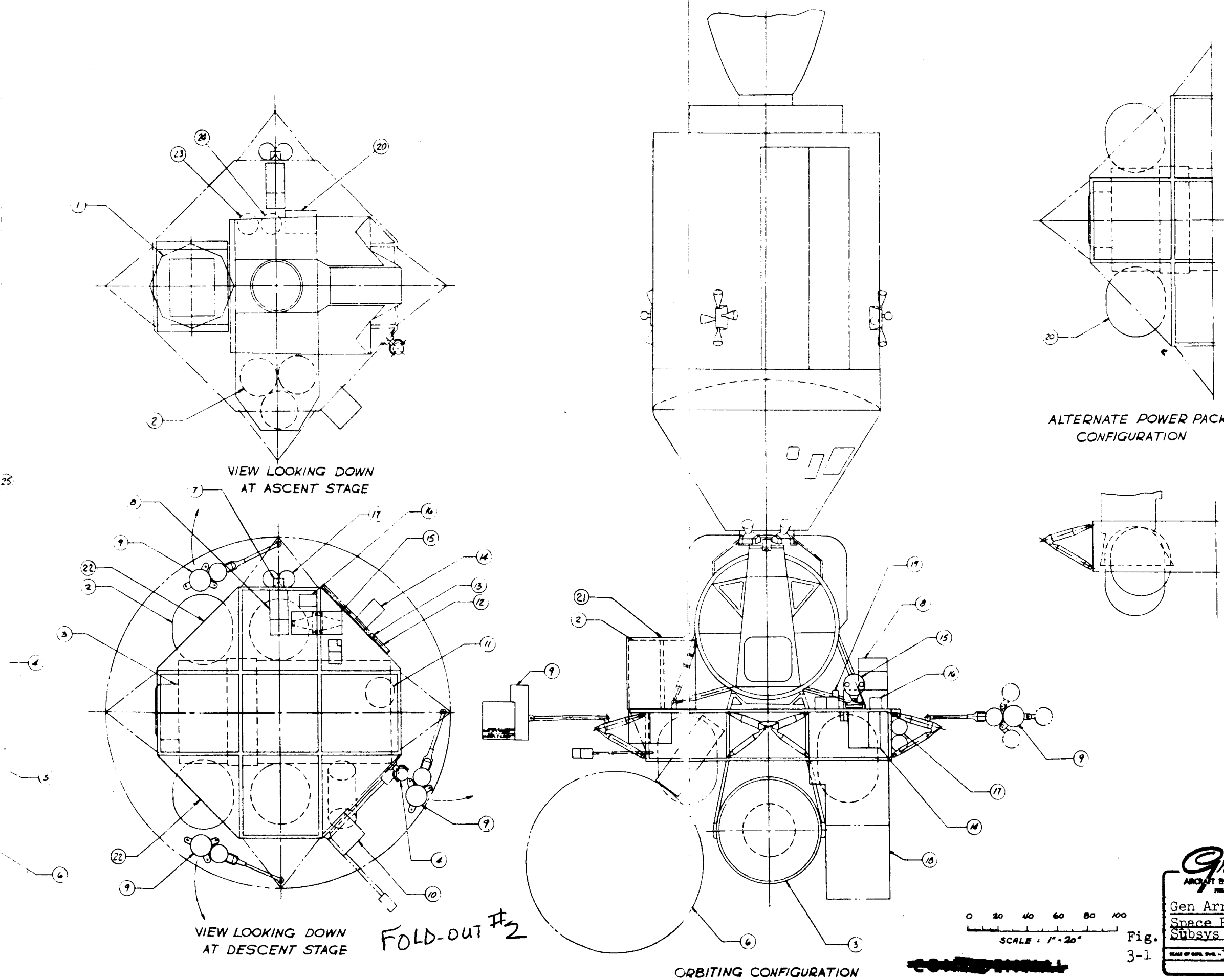

FOLD-OUT #2

Fig. 3-1

KEY

No.	Experiment	Name
1		Air Duct
2	1406	Display
3	1404	Display
4	0801	Display
5	0100-0200	Biomed Refrigerator
6	0100-1200	Biomed Incubator
7		Food Storage
8	0504	Micrometeroid Collection Panels
9	0504	Micrometeroid Collection Ballon
10	1406	60-in. Dia. Telescope
11		Biomed Storage
12	1101	OGO Stowed Position
13	1101	OGO Launch Position
14		LiOH Storage
15		ECS
16		Circuit Breakers
17	0502	V T V M
18		Log Data Books, Sensors, F Films, Tapes Storage
19		Recorders
20	1406	Chronograph
21		LSS Cabin Atmosphere
22	1403,1404,1406	Electronic Equipment Storage Areas
23		Voice Recorders
24	1101	Display
25	0504	Panel Storage
26	0503	Display
27	0501	Display
28	0502	Display
29	1404	H_2O Evaporator
30	1403	Rotating Porous Plate
31	1404	H_2O Separator
32	0100	Bicycle Ergometer
33		Basic Lab Panel
34	1404	CO_2 Concentrator
35		ECS Sys.
36	1403	Display
37	1403	Flight Controller

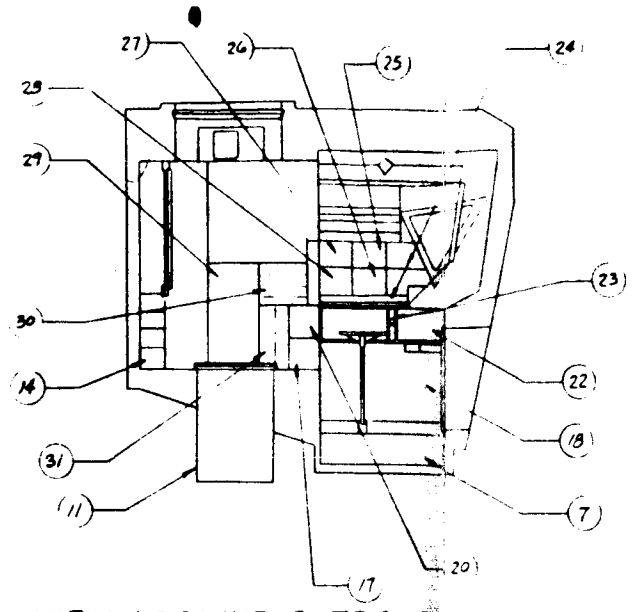

VIEW LOOKING OUTBOARD
LEFT HAND SIDE

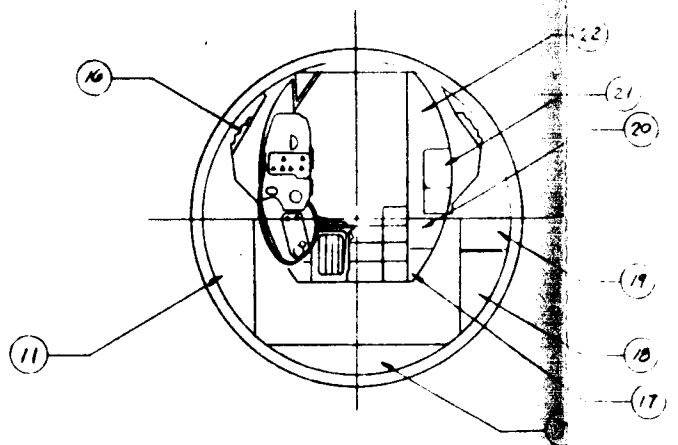

VIEW LOOKING AFT

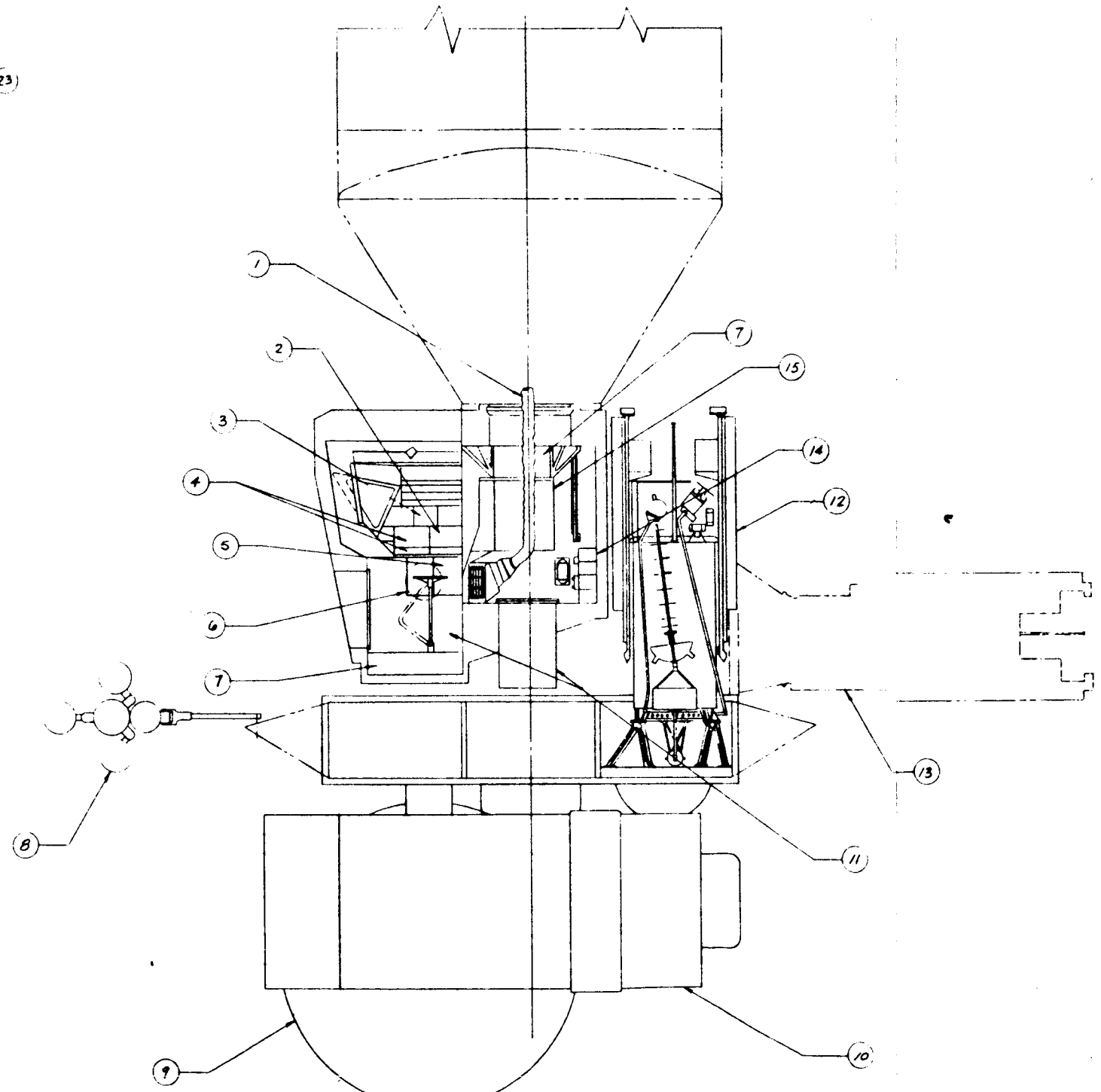

VIEW LOOKING OUTBOARD
RIGHT HAND SIDE

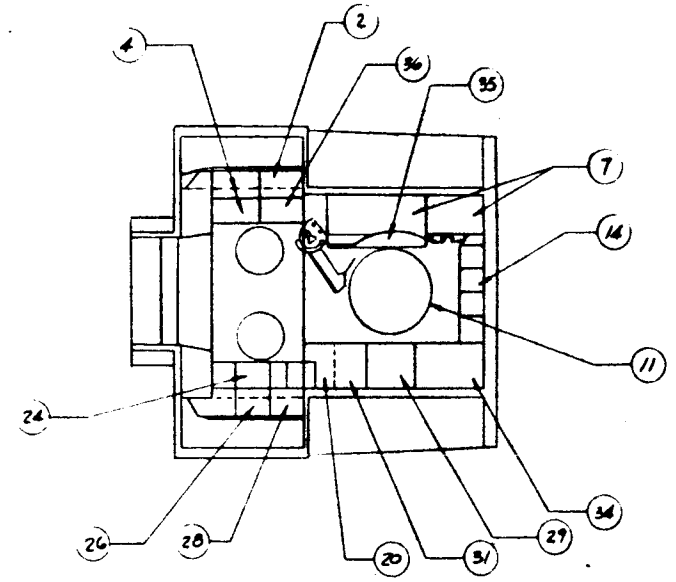

PLAN VIEW

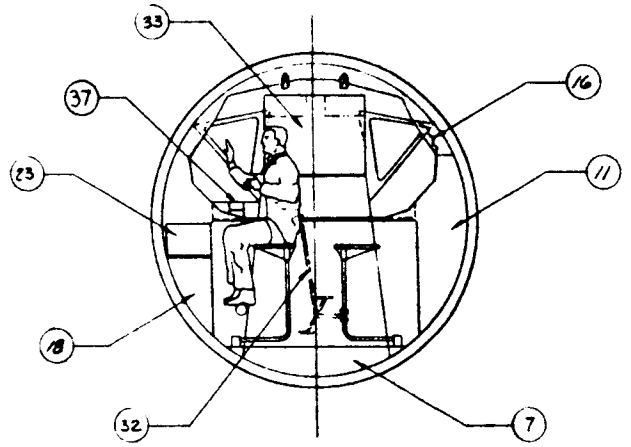

VIEW LOOKING FORWARD

0 20 40 60 80 100

SCALE : 1" = 20"

Grumman
AIRCRAFT ENGINEERING CORPORATION
PRELIMINARY DESIGN SECT.

Inbd Prof Flt. 521
Space Physics &
Subsys Devel

SCALE OF ORIG. DWG. = 1/20

AES 1039

Fig. 3-2

The inboard profile (Figure 3-2) shows that adequate internal volume is available to accommodate experiments. All displays and controls are located in the cabin and are readily accessible. Biomed equipment is stored in a canister below the floor where the LEM ascent engine is normally housed. Food is stored internally. LiOH canisters are also stored internally, and are replaced from external storage during programmed EVA's.

In addition to the standard CSM/Lab interface, this flight requires additional wiring for accommodating earth pointing requirements of experiments. Interface wiring includes earth tracker and star tracker sensory inputs used to maintain attitude hold.

The differences between "C" and "D" versions of the Lab are the addition of one FCA, one Apollo-X H_2 tank and substituting two Apollo-X for two Block II O_2 tanks and an increase in FCA radiator area of 18 ft^2.

These modifications to a "C" version Lab accommodate the added power demand of the "D" version Lab required by taking over CSM power requirements after (nominally) 14 days.

This flight utilizes an Apollo CSM fuel cell electrical generation system, a LEM ECS to provide suit circuit operation in the lab during EVA and selected components to provide data transmission, status and appropriate displays.

The estimated laboratory weight of the "C" version is 12403 lbs and of the "D" version is 14715 lbs (see Tables 3-4 and 3-5).

Basic subsystem characteristics pertinent to this flight are described below:

Vehicle Orientation	Earth Oriented
Stabilization Reqm'nts	$\pm .5^{\circ}$ - 7 days; $\pm 5^{\circ}$ - 38 days
Avg Experiment Pwr (Delivered)	108 watts
Number of Repressurizations	7
Equipment Cooling	20 Ft^2 radiators

	"C" Config	"D" Config Takeover Point=13.2 days
Number of Fuel Cells	2	3
Oxygen Tanks	1 Apollo X	2 Apollo X
Hydrogen Tanks	1 Apollo X	2 Apollo X
Peaking Battery	None	None
Fuel Cell Cooling	8.5 Ft^2	27 Ft^2
RCS System	None	None
RCS Tankage	None	None
S & C System	Sensors & Controller, Data Processor, FDAI Needles, Att Display	
Waste Reactants	114.3 lbs	175 lbs
Water for Thermal Cont (Max)	4.7 lbs	4.7 lbs
Water Generated	554 lb	1340 lb

Waste reactants are needed to accommodate the estimated boiloff rates. These fluids are disposed of by increasing the power output of the normally operating fuel cells and energizing either a dummy load or idle equipment.

TABLE 3-4 LEM LAB DETAILED WEIGHT STATEMENT

Flight 521

Component	Weight, lbs. Configuration C	D
Structure	(2240)	(2240)
Basic Ascent	802	802
Rack	470	470
Shielding	450	450
Power Pack Structure	50	50
Experiment Supports	468	468
Stabilization and Control	(189)	(189)
Attitude Translation Control Ass'y	27	27
Star Trackers and Electronics	126	126
Earth Tracker	36	36
Crew Provisions	(296)	(296)
Restraints	35	35
Lighting	10	10
Food	228	228
LiOH - PLSS	23	23
Controls and Displays	(585)	(585)
Environmental Control	(943)	(987)
Atmosphere Revitalization System	80	80
O_2 Supply and Cabin Pressurization	34	34
Water Management	36	36
Heat Transport, Cold Plates, Coolant	305	305
LiOH - ECS	382	382
Water	40	40
Radiators	60	104
Thermal Control	6	6
Instrumentation	(151)	(151)
Signal Conditioner	45	45
PCM and Timing Elec. Ass'y	39	39
Data Storage	25	25
Experiment Selector	6	6
Data Tapes	30	30
Spare Voice Recorders	6	6
Electrical Power Supply	(2149)	(4330)
Fuel Cell Ass'ys	492	738
Reactants and ECS Oxygen	766	2227
Reactant Tankage	424	848
Plumbing	40	60

TABLE 3-4 LEM LAB DETAILED WEIGHT STATEMENT (Cont'd)

Flight 521

Component	Weight, lbs Configuration C	D
Inverters	75	75
Wiring, Distribution and Umbilical	352	382
Communications	(32)	(32)
Television	24	24
Audio Center	6	6
Voice Recorder	2	2
Experiment	(5845)	(5845)
Spares	(60)	(60)
Total Laboratory	12,490	14,715

CONFIDENTIAL

TABLE 3-5 INTEGRATED SPACECRAFT WEIGHT STATEMENT

Flight 521

Component	Weight, lbs Configuration C	D
Command Module Basic Weight	(10,287)	(10,287)
Service Module Basic Weight	(12,531)	(9,198)
CSM Retro-Propellant	(21,500)	(17,500)
Laboratory Weight	(12,490)	(14,715)
Basic Laboratory Structure	2240	2240
Experiments	5845	5845
Experiment Support Systems	2966	3730
Expendables	1439	2900
CSM Experiment Dependent Weights		
RCS Propellant	121	129
Total Laboratory and Experiment	(12,611)	(14,844)
Allowable Lab and Exper. Weight	12,932	20,265
Total Orbiting Weight	56,929	51,829
Service Module Propellant (Ascent)	21,200	21,200
SLA Adapter	3505	3505
Launch Vehicle Payload	81,634	76,534

CONFIDENTIAL

4. FLIGHT OPERATIONAL SUPPORT: FLIGHT NO. 521

Experiment 0100 & 0200 - Medicine and Behavioral - Periodic daily data transmission and ground monitoring of safety parameter data.

Experiment 0501 - Radiation Environment Monitoring - External particle flux measurements during a solar flare event are to be correlated with the solar activity observations made on earth stationed observatories and other satellites.

Experiment 0502 - Study of Magnetic Field Lines - Observation and tracking of artificial aurorae with ground-based equipment, from aircraft, and from orbital stations. Also monitoring of solar activity by astronomical and radio observations.

Experiment 0503 - Generation and Analysis of Comet - Like Particulate Clouds - Coordinated ground based optical coverage. These are restricted to periods of twilight.

Experiment 0801 - Conjugate Aurora and Airglow - Coordinated auroral observations from ground stations. Particle and geomagnetic measurements from satellites and ground stations.

Experiment 1101 - Launch of Unmanned Satellite - Normal satellite tracking and data-handling facilities will be required.

Experiment 1406 - Optical Technology - At least two ground stations not too distantly separated similar to those at GSFC and Wallops Island. For example, two stations could be at GSFC and separated by one to a few miles to simulate the angles to be encountered in a deep space mission.

Table 4-1 presents the experimental data management requirements of the flight. A general discussion of this table and the data management system is contained in Volume 1.

TABLE 4-1. FLIGHT 521 DATA MANAGEMENT

Avg. Daily Data Recording Requirements

Experiment No.	Data Rate K-bits/sec	Recording Time, min (A) 51.2 K-b/sec	Recording Time, min (B) 1.6 K-b/sec	Remarks
0100_s	9 (AVG)	215		7.6 Exper-Hr/Day
0200_s	6.4 (AVG)	120		6.8 Exper-Hr/Day
0501	0.8		45	45 Min/Day
0502	0.2		3	10 Min x 12 Times
0503	0.3		14	120 Min x 5 Times
0504	1.6		30	22 Hr/Mission
0801	1.2		133	2 Hr x 50 Times
1403	0.4		4	60 Min x 3 Times
1404	0.6		60	60 Min/Day
1406	0.2		60	90 Min x 30 Times
1101	OGO PCM will be used.			
Totals		335	349	

Avg. Daily Data Transmission Time, min:

- Reqd: A + B = 684 min

NOTE: If low bit rate data is recorded and dumped at the higher rate, the transmission time can be reduced to 346 min.

- Available = Continuous

Data Tape Return Required	zero lb,	zero cu ft
Voice Tape Return Required (4 packages)	8 lb,	0.1 cu ft
Film Return Required	3 lb,	0.1 cu ft
Data Tape Carried	30 lbs	

1. FLIGHT MISSION DESCRIPTION

Flight No. 523

Altitude, n.mi 200	Inclination, deg 28.5	Duration, days 45	Crew 3

Mission Title: ASTRONOMY AND BIOSCIENCE LABORATORY II

Objectives: This flight will conduct conventional and radio astronomical studies. The next two flights will rendezvous with this flight to provide extended observation time. In addition, this flight will observe physical phenomena in zero "g", micrometeoroid densities, and effects of space environment on inflatable structures.

Configuration: C (Extended CSM, LEM A/S, D/S), or
D (Modified Block II CSM, LEM A/S, D/S)

Experiment Summary:

No.	Title	Equipment Location: LEM Stage Asc	Equipment Location: LEM Stage Desc	Equipment Location: CM
0100	Biomedical (excluding 0101 and 0102	x		
0200	Behavioral	x		
0501	Radiation Environment	x		
0504	Micrometeoroid Collection	x	x	
0601	Capillarity Studies	x		
0602A	Kinetics and Dynamics of Vapor/Gas Bubbles	x		
0602B	Liquid Drop Dynamics Studies	x		
0603A	Pool Boiling in Long-Term Zero "g" Environment	x		
0603B	Nucleate Condensation of Fluids in Zero "g"	x		
0604	Density Gradient of a Fluid at Near-Critical State	x		
0605	Crystallization Studies	x		
0606	Cosmic Ray Emission	x		
0701	Emission Line Radiometry		x	
0702	Intermediate-Size Reflecting Telescope		x	
0703	Manned Coronagraph		x	
0704	Gamma and X-ray Telescope		x	
0705A	Radio Astronomy		x	
1301	Effects of Space Environment on Structures		x	
1401	Personal Hygiene and Food Technology	x		

2. EXPERIMENT DESCRIPTION SUMMARY

FLIGHT - 523

EXPERIMENT: 0100-0200 - Medical/Behavioral Experiments - The Medical/Behavioral Experiments are intended to evaluate the effects of prolonged space flight on man and to enhance his operational efficiency to permit more extensive manned space flight missions. Twenty-four experimental measurement packages have been defined to analyze critical human functions and to focus on those most likely to be affected adversely by prolonged space flight. Procedures and instrumentation employed in the experimental packages are a composite of updated, standard medical/behavioral and imminent state-of-the-art zero-g adapted, techniques. These procedures should provide: 1) an assessment of the effects of prolonged weightlessness on the psychophysiological integrity of the astronaut, 2) a determination of the mechanisms which mediate observed changes, 3) a prediction of the onset and extent of degraded functioning, and 4) a validation of preventive or countermeasures which may be necessary to support man's extended exploration of space.

NOTE

Experiments 0101 and 0102 require linear and/or rotational accelerations, such as would be obtained during a firing of the SM engine or during the artificial gravity experiment, in order to achieve all of the described experiment objectives. These experiments have been excluded from missions which lack sufficient SM propulsion and/or the artifical gravity experiment.

EXPERIMENT: 0501 - Radiation Environment Monitoring - The objectives of this experiment are to record radiation received by the crew, and to furnish external radiation environment data for other experiments. Techniques for the Apollo Mission, or those employed in Tiros and OGO, will be used. Detection devices proposed for the monitoring systems are: Proton-alpha and electron spectrometers, tissue equivalent ionization chambers, and film packs.

EXPERIMENT: 0504 - Micrometeoroid Collection - The objective of this experiment is to determine physical and chemical properties of the dust cloud surrounding the Earth. Exposed collector plates will trap particles. Variations in exposure duration will aid in the discrimination of differences due to shower activity. Particle velocities will be used to differentiate between those in geocentric or solar orbits.

EXPERIMENT: 0601 - Capillarity Studies - The objective of this experiment is to provide knowledge of interactions of matter, at simultaneous solid/liquid vapor interfaces, through systematic study of capillary flow statics and dynamics at zero-g. Static measurements of wetting angles will be made of height and diameter of spherical zones of various liquids on various test surfaces. Dynamic measurements of capillary height will be made by timing flow in tubes of different diameters and materials. A radio isotope tracking device will be used to determine interface distance-time relationships for transparent and non-transparent tubes. Motion pictures will be taken of the transparent tubes. A secondary objective is the development of a compatible theory.

EXPERIMENT: 0602A - Kinetics and Dynamics of Vapor/Gas Bubbles In Free-Fall Liquids (Far From Walls) - The objective of this experiment is to determine the mechanisms controlling free (non-surface) nucleated boiling, and the kinetics of bubble growth and collapse, under transient conditions, free from convection in the liquid or liquid migration; and to study dynamic modes of vapor-liquid interface

oscillations in suspended bubbles, and the dynamic modes associated with the coalescence or fractionization of two or more bubbles. Cinematography will be used to study the motion of liquid/vapor-gas interfaces in free bubbles within a liquid. A temperature and pressure controlled chamber will be used. Liquid, temperature, pressure and excitation modes will be varied.

EXPERIMENT: 0602B - Liquid Drop Dynamics Studies - The objectives of this experiment are: To determine the fluid dynamical behavior (instability condition, and oscillatory, fragmentation, fissioning modes, etc.) of freely suspended liquid drops subject to different disturbances and to perturbations arising from the coalescence of various size drops; and to study kinetics of miscibility and drop dynamics resulting from colescence of different liquid drops. Drops of various size and liquids, with attendant differences in surface tension, viscosity and density, will be freely suspended in a well-stabilized spacecraft. Induced perturbations will be observed by stereoscopic camera. Small controlled gas jets will facilitate perturbation and manipulation of the drops.

EXPERIMENT: 0603A - Pool Boiling In Long-Term Zero-G Environment - The objective of this experiment is to acquire knowledge of bubble growth rates, interaction of growing bubbles, hydrodynamic stability of bubble columns and nucleation criteria. Boiling from a heated surface would be observed optically. Direct images and shadowgraph would be used to examine bubbles and thermal layer.

EXPERIMENT: 0603B - Nucleate Condensation of Fluids In Zero Gravity - The objective of this experiment is to study initiation of a pure substance in zero-g. A light-scattering technique would be used to observe the onset of nucleate condensations in a sealed vessel with chemically clean interior containing a pure fluid. Droplet growth to be observed photographically.

EXPERIMENT: 0604 - Density Gradient of a Fluid At a Near-Critical State - The objective of this experiment is to study pressure, volume, and temperature behavior of near-critical fluid under zero-g. A bomb cell with light source, lens, prism, thermostat and two view-windows, will be used to determine density gradients via diffraction of light. The constant-volume cell will be heated slowly until entering the critical region, and then maintained at constant temperatures. Light scattering technique can also be used to measure the magnitude of fluctuation.

EXPERIMENT: 0605 - Crystallization Studies - The objectives of this experiment are: to provide information on relationships between the character of crystalline materials and their mode of formation, and to use unique facilities for crystal fabrication in a manned zero-g laboratory; and, to prepare samples of a character which can not be produced terrestrially for solid state investigations or for use in other space experiments. Samples of various pure materials and compounds will be manipulated within a melting/solidification diameter filled to an appropriate pressure with an inert gas (e.g., argon) and heated by illumination through a window from a solar concentrator. Molten samples will be allowed to "float" by propelling the laboratory so as to prevent wall contact while they cool due to radiation and gas conduction below their crystallization temperature. Supercooled liquids will crystallize and the solid samples will be removed from the chamber for metallographic examination on Earth. Other crystals of low surface temperature, low melting point materials (e.g., organics) will be purified and crystallized in a separate floating zone furnace, with proper thermal controls. Samples recovered would be studied later on Earth.

EXPERIMENT: 0606 - Cosmic Ray Emulsion Experiment - The objective of this experiment is to obtain a charge spectrum of the primary cosmic radiation, and - indirectly - a measure of the intensity and angular distribution at several times in the solar cycle. Some data may also be obtained on the gamma ray flux, spectrum and source. Paths of cosmic rays leave lines of darkened grains in a three-dimensional photographic emulsion made up of a large number of thin sheets of sensitized gelatin. When a particle decays into two or more sub-particles, the rays of each sub-particle can be seen, and measurements of the resulting angles define the momentums of each. Film packs will be mounted to the exterior of the vehicle during flight. The astronaut will initiate automatic predevelopment of the film.

EXPERIMENT: 0701 - Emission Line Radiometry - The objective of the experiment is to determine the distribution patterns and densities of interstellar gas. A radiometer, basically a Michelson interferometer, operating in the IR region and recording the photoelectric signal output on magnetic tape will be used for this experiment.

EXPERIMENT: 0702 - Intermediate Size Telescope for High Resolution Photography and Photometry in Astronomy - The objective of the experiment is to perform high resolution photography in visual and UV and perform associated calibration photometry. The telescope will have a 40" diameter reflecting primary equipped at the Cassegrain focus for a UV field camera, automatic plate camera, photometer and slitless spectrograph.

EXPERIMENT: 0703 - Manned Coronagraph - The objective of the experiment is to examine the structure and phenomena of solar corona above 2° from the sun's limb, with design provision for extension to 1° from limb for correlation with data obtained from Coronascope II. The equipment will consist of an Evan's coronagraph utilizing an external occulting disk to block the bright light of the sun's disk, thereby permitting the Lyot telescope behind it to detect features in the adjacent area of the sky as much as 100 million times fainter than the sun. By insertion of selected filters and polarizing elements into the optical path, it is possible to make both spectral and plane polarization investigations of the outer corona in addition to the white light observations of intensity and structure.

EXPERIMENT: 0704 - Study of Nearby Solar-like Stars (e.g., Epsilon Eridani and Tau Ceti) in X-rays. - The objective of the experiment is to detect X-ray radiation from nearby F and G stars, in particular τ Cet and ϵ Eri; and to measure their rotational periods by observing the time-variation of the X-ray flux as the sources appear and disappear over the limb of the star. The experiment consists of a large aperture photon counter that accepts X-rays between $8A^{\circ}$ and $20A^{\circ}$ with 1/2 degree collimation. An anticoincidence scintilation cover is used to exclude background counts.

EXPERIMENT: 0705A - Ratio Astronomy 1-5 mcps Range - The object of this experiment is to obtain a mapping of the galactic noise in the 1 to 5 mcps range; to determine the location and magnitude of these noise sources; and to determine the relationship of signal strength and frequency. The equipment to perform the experiment consists of an interferometer receiving system including two physically independent antenna structures; one will be deployed from the LEM Lab, the other will be deployed from an SMS. Each structure consists of two 100 ft. dipoles

separated 250 ft. The two antenna structures will be separated by a measurable amount (greater than 2000 ft.)

EXPERIMENT: 1301 - Effects of Space Environment on Structures - The objective of this experiment is to provide the data for further development of advanced types of expandable, erectable, and inflatable space structures. The experiment on this flight details, specifically, a large inflatable type structure. The chamber volume of the inflatable space structure will be 405 cubic feet. The structure will be tethered to the Lab. The astronaut will conduct experiments within the pressurized chamber. The experiments will include: determination of leak rates and thermal factors; meteoroid penetration; radiation and vacuum effects on organic materials; deployment and inflation of the structure; airlock operation; application of chamber for living, sleeping and exercising; and, astronaut extravehicular activities.

EXPERIMENT: 1401 - Personal Hygiene and Food Technology - The objectives of this experiment are to test, evaluate, and develop techniques and equipment for the following: food storage, preparation, eating, salvage, and waste disposal; tooth and gum cleansing; gargle and mouth wash; bathing or washing; shaving and collection of cut whiskers; hair and nail clipping and collection; defecation and feces collection, reduction, and storage or disposal; urine collection, storage, and water recovery; and cleaning of clothing and bedding. Evaluation will be made by the astronauts of the effectiveness, convenience, comfort, and operation of the equipment and techniques as opposed to specific quantitative measurements.

TABLE 2-1 FLIGHT 523 INTEGRATED EXPERIMENT EQUIPMENT LIST

523-2

Exper. No.	Component	Weight, lb	Vol, cu ft or size*	Elec Energy or Elec Pwr	Remarks
Cont 0602B	Air supply Fluids Film	5 20	0.5 0.1 0.4	N/A	Experiment time 5 hr repeated five times Peak power - 1350 W for 30 sec. Weight for only one camera is shown - second camera used from Experiment 0601
0603A	Bubble chamber with lamps Vent system Pressure regulation system Fluid supply Film	(52.3) 51 1.3	2.5 0.07	180 W N/A	Accel. 10^{-4} g Experiment time 4.5 hr repeated three times Peak power - 550 W for 30 sec 16 MM camera used from Exper. 601
0603B	Test tank Coolant loops Light diffuser Film	(21) 20 1	1.2 0.05	90 W N/A	Experiment time 6 hr. repeated three times Peak power - 500 W for 30 sec 16 MM camera used from Exper. 601
0604	Test cell and pressurization system Telescope Film	(42.1) 40 2 0.1	2 1.50D x 10	200 W N/A N/A	Experiment time 4 hr.
0605	Solar concentrator and test chamber Pyrometer Auxiliary equipment Crystals (material returned) Film	(152.1) 130 20 2 0.1	3'D x 4 2 0.1	500 W N/A N/A	Experiment time 6 hr. repeated three times Spacecraft flown for 3 hr. to avoid contact with sample. One 70 MM still camera used from Exper. 601
0606	Emulsion cassette Erectable boom, gimbals and drives Magnetometer Electronic package (boom control)	(60) 30 15 13 2	6 x 8 x 12 30 x18 x12 0.5 4 x 6 x12	50 W 10 W	Orient parallel to magnetic lines of force over South Atlantic anomoly Operated continuously Peak power - 100 W for 30 min before processing High and low energy electron spectrometers used from Experiment 501

*INCHES UNLESS OTHERWISE SPEC.

TABLE 2-1 FLIGHT 523 INTEGRATED EXPERIMENT EQUIPMENT LIST

523-1

Exper. No.	Component	Weight, lb	Vol, cu ft or size*	Elec Energy or Elec Pwr	Remarks
0100 and 0200	Medicine and Behavior Experiments	321	14.5	100 W continuous Plus 50 W during operation	See Flt. 211 for detailed equipment list.
0501		(46.5)			
	Proton-Alpha spectrometer	7	8 x 8 x 8	↑	
	High energy electron spectrometer	10	8 x 8 x 8		
	Low energy electron spectrometer	5.5	4 x 4 x 3		
	Tissue equivalent ionization chambers (3)	3	3 x 2 x 0.5	5.3 W	
	TEIC rate meters (2)	4	4 x 3 x 3		
	Film packs and pen dosimeters (21)	1.5	2 x 2 x 1/8		
	Pulse height analyzer	15	12 x 12 x12		
	Battery Charger	0.5	0.5 x 0.5 x 1	1 W	
0504	10 ft. balloon (carried in storage container)	(95)			No preferred orientation, but attitude must be recorded during entire mission to within 2 millisteradians. Experiment deployed for entire mission.
	Replaceable data collection panels (30)	20	8	N/A	
	Velocity tube	23	5	N/A	
	Acoustic sensor	48	8.5	1 W	
		4	0.6	.01 W	
0601		(113)			
	Bladders, capil. tubes and fluids	60	1	↑	Accel. < 10^{-4} g 4 hr. set-up plus 2 experiments of 1 hr. each
	Misc. equip. (screen, 5 cc syringe, thermometer)	2	0.5		
	Still cameras - 70 MM (2)	8	0.2	20 W	
	Radioactive tracer system	20	1		
	Illuminating system	1	0.5		
	16 MM camera	15	0.28	410 W	
	400 ft. reels of film (7)	7	0.15	N/A	
0602A		(41)			
	Bubble chamber with lamps	30	6 x 6 x 12	100 W	Accel. < 10^{-4} g Experiment time 3.9 hr repeated five times 16 MM camera used from Exper. 601
	Electronics and support package	1	3 x 4 x 6		
	Film	10	0.21	N/A	
0602B		(71)			
	Test chamber with lamps	30	6 x 6 x 12	↑	
	Stereo cameras (2)(16 mm)	15	0.3	110 W	Accel. 10^{-4} g
	Camera control system	1	0.05	↓	

*INCHES UNLESS OTHERWISE SPEC.

TABLE 2-1 FLIGHT 523 INTEGRATED EXPERIMENT EQUIPMENT LIST

523-3

Exper. No.	Component	Weight, lb	Vol, cu ft or size*	Elec Energy or Elec Pwr	Remarks
0701		(220)		200 W	Cooling Cell
	Interferometer	200	15D x 60	↑	Space oriented ± 0.5 deg.
	Interferometer electronics	10	8 x 8 x10	70 W	Experiment time 0.5 hr
	Bore sighted TV camera	10	10 x 10 x 4	↓	repeated 30 times
0702	Telescope with supports, gimbals and control system	(3680) 3350	4.3'D x 11'	↑	0.01 arc sec stability
	Roll film camera	10	8 x 8 x 6		Experiment performed as often as possible
	Plate camera	65	24x24 x 8	200 W	TV camera used from Exper. 701.
	Photometer	2	3D x 4	↓	
	Spectrograph	9	24 x 6 x6		
	Film and plates	120	2	N/A	
	Film and plate processor	18	8 x 6 x 12		
	Micrometer microscope	6	4 x 5 x 8		
	Gas bearing supply system	100	10D x 48		
0703		(260)			
	Coronagraph	206	10D x 10'		Sun oriented ± 1.25 arc sec
	Light shield	50	5'D x 10'	133 W	Experiment performed
	Camera - 70 MM SLR	4	8 x 5 x 5	per	as often as possible
				sighting	Telescope used from Exper. 604
					Gas bearing supply system, and film and plate processor used from Exper. 702
0704		(310)			
	X-ray detector	300	20 x 40x24	↑ 60 W	Experiment time.5 hr repeated 70. times
	Solar monitor	10	2D x 7	↓	X-ray detector ± 0.5 deg to star of interest
					Solar monitor 5 deg to Sun
					TV camera used from Exper. 701
0705A		(1621.4)			
	Antenna Structure (8) and harness	495			Experiment oriented 2 deg of local vertical
	Radio astronomy receiver	5	12x12x12		Deployment time - 4 hr.
	Remote antenna structure (8) and harness	495			Experiment time 1.5 hr
	Gravity gradient rods and dampers (2)	100	13D x 19'		repeated every 4.5 orbits
	Remote system electronics	10	1.1	45w	for one week
					16 MM camera used from Exper. 601

*INCHES UNLESS OTHERWISE SPEC.

TABLE 2-1 FLIGHT 523 INTEGRATED EXPERIMENT EQUIPMENT LIST

523-4

Exper. No.	Component	Weight, lb	Vol, cu ft or size*	Elec Energy or Elec Pwr	Remarks
Cont 0705A	Remote system solar array, battery and regulator	37.5		35 W (ref.)	SMS recharge - 500 W
	Small maneuverable satellite	300	6.25	150 W	
	SMS checkout, launch and control equipment	50	2	100 W	
	SMS refueling propellant	100	1.3	N/A	
	70 MM time lapse camera	20	1	30 W	
	16 MM film	3.86	0.59	N/A	
	70 MM time lapse film	5	0.1	N/A	
1301		(491.7)			
	Inflatable structure	310		N/A	Deployment time - 5 min.
	Storage	35	56		Periodic monitoring through-out flight
	Tether and reel	25	1		16 MM camera used from Exper. 601
	Pressurization gas in inflatable structure	70	1.6		
	Pressurization gas in storage container	40	1.6		
	Pressure and temperature display		2	100W	Peak power 500 W during camera operation
	Telescope	10	0.1	N/A	
	Portable lamp	1.5	0.2	50 W	
	Film	0.16	0.024	N/A	
1401		(189.2)			
	Extra food	35	1.5	N/A	As required for normal crew eating and personal hygiene
	Waste incinerator	10	0.525		16 MM camera used from Exper 601
	Waste freezer	9	4.2		
	Washing machine	10	2	100 W	Peak power 500 W during camera operation
	Shower	25	43.5		
	Water evaporator	50	1.5		
	Miscellaneous toilette requirements	25	1	10.W	Continous
	Misc. food dispensers, hair clipper, etc.	25	0.58	N/A	
	Film	0.155	0.024	N/A	
	Total Weight	7787			

*INCHES UNLESS OTHERWISE SPEC.

3. EXPERIMENT/SPACECRAFT INTEGRATION

3.1 Mission Definition

Flight 523 is best described as an astronomical and physical sciences flight. The experiment list is heavily weighted toward Astronomical and Physical experiments, however, experiments associated with investigations of micro-meteorites, gamma rays and a series of biomedical experiments are also carried. It has been assumed that by the time this flight is flown the character of the biomedical experiments performed in earlier flights have changed from investigatory to countermeasures. Consequently, specific biomedical experiments are not broken down within the basic time blocks.

The flight plan was affected by the differing orientation modes of four experiments:

Type of Experiment	Attitude Required
• Astronomical (0701-0704)	• Inertial Orientation
• Radio Astronomy (0705A)	• Earth Orientation
• Solid, Liquid, Gas Experiments (0601-0605)	• Free Drift
• Inflatable Space Shelter (1301)	• Tethered

These modes occupy the following positions in the flight time-line:

• Radio Astronomy	Days 1 through 14
• Tethered Shelter Exp	Days 15 through 18
• Solid, Liquid, Gas Exps	Days 15 through 20
• Astronomical	Days 21 through 44.

The order of performance can be varied for the major time periods: days 1 to 14, 15 to 20, and 21 to 44, to initiate experiment groups earlier or later in the flight. Variations may be made freely subject to the following considerations:

- The size of the antennas on the Radio Astronomy Experiment (0705A) restricts the spacecraft to earth orientation as long as they are deployed. The time period between experiments is too short to consider any experiment except those that are earth oriented or have no orientation requirements. The flight schedule required for this experiment time period can be improved by:

1. Adding another earth-oriented experiment compatible with 0705A.
2. Adding another experiment that is not attitude-dependent.
3. Transferring the 0705A Experiment to a mission that is primarily earth-oriented.

- The Astronomical experiments may be performed in blocks of days interspersed with other experiment blocks without significant loss of efficiency. Only the X-Ray telescope experiment (0704) will be affected, since it requires regular operation over a significant time period. The present schedule is not the most desirable for this experiment, because it delays initiation until the 21st day, preventing observation of a full cycle of expected X-Ray activity within this flight. It is expected that the Astronomical experiments will continue on Flights 229 and 230.

Table 3-1 Summarizes the Analysis. Table 3-2 and 3-3 present the crew schedule and experiment equipment mission profile, respectively. Additional significant statistics applicable to Flight 523 are:

Spacecraft Inertially Oriented	608 hours
Spacecraft Earth Oriented	330 hours
Spacecraft in free drift	142 hours
Angular Reorientations	348
EVAs (2 occur together on day No. 1)	11

Scheduled work averages 9.15 man hours per day. However the amount of effort that an astronaut expends differs greatly from one category to another. For example: the Radio Astronomy and systems checks require full attention; the Tethered shelter, Solid-Liquid-Gas Experiments, Biomedical and EVAs require physical participation; the Astronomical experiments require periodic monitoring after physical activity associated with orienting the experiment.

Astronomical	499.8	24.
Systems Checks	92.8	Interspersed
Bio-Medical	278.6	Interspersed
Misc exp.	37.1	Interspersed
EVAs	72.0	Interspersed
Total	1,220.4	

Scheduled work averages 9.25 man hours per day. However the amount of effort that an astronaut expends differs greatly from one category to another. For example: the Radio Astronomy and systems checks require full attention; the Tethered shelter, Solid-Liquid-Gas Experiments, Biomedical and EVAs require physical participation; the Astronomical requires periodic monitoring after physical activity in orienting the Experiment.

This disparity in work requirements is balanced in scheduling. Where the work load requires maximum participation from the Astronauts (days 1 to 20) the work day averages 7.8 hours. In days 21 to 45 where periodic monitoring of the astronomical equipment becomes a major activity the work day averages 9.5 hours.

Throughout the flight the following guidelines were observed:

- One man is in the CM at all times.
- At least 2 men are awake at all times, except for day 45 where two men sleep simultaneously, prior to beginning reentry mode.
- During EVAs three men on duty.
- Biomedical time is scheduled simultaneously for two men.
- Eating and rest periods are grouped for social activity to the maximum extent possible.

This disparity in work requirements is balanced in scheduling. Where the work load requires maximum participation from the Astronauts (days 1 to 20) the work day averages 7.8 hours. In days 21 to 45 where periodic monitoring of the astronomical equipment becomes a major activity the work day averages 9.5 hours.

TABLE 3-1 FLIGHT 523 MISSION DEFINITION SUMMARY*

Experiment Number	Occurance Day Number	Total Times, Perform'd Per Mission	Number Men Req'd	Experimt Time Set-up Time Minutes	Per Test Test Time Minutes	Total Experiment Man-Hrs Per Mission: Crewman 1	2	3	Total	Total Experiment Time Per Mission, Hrs: Achieved	Specified	Remarks
0100-0200	1 thru 44	88	2	a	b	c	c	c	278.6	184.8		Not Scheduled on last day. a. Included in Test time b. Approx 126 min per man per day c. Approx. evenly distributed
0501	1 thru 45.	45	1	5.	10	.5	2.0	8.8	11.3	1080.	1080	Requires 15 min per day
0504	1 thru 42	42	1	30.	15		2.7	9.5	12.2	12.2	11.5	Eva Setup Shared with 0705A and 0606.
0601	16	2.	1	240.	60.	4.		2.4	6.4	6.4	6.0	
0602A	16, 17, 18	5	1	60.	230	8.8	7.8	3.9	20.5	20.5	20.5	
0602B	19	5	1	480.	60	5.0	3.6	4.6	13.2	13.2	13.0	
0603A	20	3	1	360.	90.	4.5	2.1	5.0	11.6	11.6	10.5	
0603B	15	3	1	60.	120.	2.		5.	7.0	7.0	7.0	
0604	16	2	1	60.	150.	3.5	2.5		6.0	6.0	6.0	
0605	18	3	1	30.	120.	2.0	.5	4.0	6.5	6.5	6.5	
0701	18 thru 44	70	1	90	a		32.4	22.9	55.3	55.3	a	a. Variable, Averages 47.5 Min Ea.
0702	20 thru 44	33	1	300.	a	140	89.	59.1	288.1	288.1	a	a. Variable, As long as possible
0703	18 thru 44	75	1	240.	60.		26.0	46.6	72.6	72.6	a	
0704	18 thru 44	161.	1	180.	30.	7.5	42.0	34.3	83.8	83.8	a	
0606	1, 14, 15	1.	1.	210.	Cont.	3.0	2.0		5.	313.	313	Set up req. 3 hr preparation, 2 man Eva, in conjunction with 0504 and 0705A. 1 Hr Post-Processing After Recovery
0705A	1 thru 14	65.	1.	240.	150.	65.	65.	32.5	162.5	162.5	162.5	
1301	15, 16, 18	2	3.	150	120	6.5	6.5	4.0	17.0	6.5	6.5	
1401	1,2,5,8,11, 14,17,20,23, 26,29,33,35,38, 41,44	15	1	60.	a	5.0	2.4	4.4	11.8	11.8	10.0	
Systems Checks									92.8			
Eva (including support)									60			
									1,222.2	2,341.8		

Maximum Work Day: 12.2 hrs. on-duty; average work day: 9.15 hrs. on-duty; Minimum work day: 7.8 hrs. on-duty (First)

* See Tables 3-2 and 3-3 for crew schedules and experiment equipment duty cycles

[redacted]

TABLE 3-2 **CREW SCHEDULING, FLIGHT 523 , SHEET 1 OF 12**

2-13.15

DAY 1	ORBIT	CREWMEN ACTIVITIES 1	2	3
0000				
20		0501		
40				
0100				
20				
40		0100-0200	0100-0200	Sleep
0200				
20				
40				
0300				
20				
40				
0400				
20				E/Hyg
40				
0500		E/Hyg	E/Hyg	
20				Rest
40		Rest	Rest	
0600				
20				
40			1401	
0700				
20				
40				0100-0200
0800				
20				
40		Sleep	0100 0200	
0900				
20				
40				
1000				
20			E/Hyg	E/Hyg
40			Rest	Rest
1100				
20		E/Hyg		
40				
1200				
20				
40				
1300		0506	Sleep	Sleep
20				
40				
1400				
20				
40				
1500				
20				
40		1502		
1600				
20		E/Hyg	E/Hyg	E/Hyg
40				
1700				
20				
40		Rest	EVA Prep	EVA Prep
1800				
20				
40				
1900			0506	0506
20			0524	0524
40				
2000				
20		Supt EVA	0705A Setup	0705A Setup
40				
2100				
20				
40				
2200				
20		E/Hyg	E/Hyg	E/Hyg
40				
2300				
20		Supt EVA	0705A Setup	0705A Setup
40				
2400				

DAY 2	ORBIT	CREWMEN ACTIVITIES 1	2	3
0000				
20			E/Hyg	
40				
0100		0705A		
20				
40				
0200				
20			Rest	
40				
0300				Sleep
20				
40				
0400				
20		E/Hyg		
40				
0500		Rest		
20				
40			0705A	
0600				
20				E/Hyg
40				
0700				
20			E/Hyg	
40				1401
0800			Rest	0504
20				
40		Sleep		
0900				
20			0705A	
40				
1000				
20				
40				
1100				
20				Rest
40				
1200				
20		E/Hyg	E/Hyg	E/Hyg
40				0501
1300		Rest		
20				
40			Rest	
1400				
20				
40		0705A		
1500				Rest
20				
40				
1600				
20				
40		0100-0200		0100-0200
1700			Sleep	
20				
40				
1800				
20		E/Hyg		
40				0705A
1900				
20				
40				
2000				
20		Rest		
40			E/Hyg	
2100				Rest
20				
40		0100-0200		
2200				
20			0100-0200	
40				
2300				Sleep
20		Rest		
40				
2400				

DAY 3	ORBIT	CREWMEN ACTIVITIES 1	2	3
0000				
20				
40			E/Hyg	
0100		0705A		
20				
40			Rest	Sleep
0200				
20				
40				
0300		0100-0200	0100-0200	
20				
40				
0400				
20				E/Hyg
40				
0500		E/Hyg		
20				Rest
40		Rest	0705A	
0600				0501
20				504
40				
0700				
20			E/Hyg	
40				
0800			Rest	
20		Sleep		
40				
0900				
20			0705A	
40				
1000				
20				
40				
1100				
20				Rest
40				
1200				E/Hyg
20		E/Hyg	E/Hyg	
40				
1300		Rest		
20			0100-0200	0100-0200
40				
1400		0705A		
20				
40				
1500				
20				
40				
1600				
20				Rest
40			Sleep	
1700				E/Hyg
20				
40				
1800				
20		E/Hyg		
40				0705A
1900				
20				
40				
2000				
20		Rest		
40			E/Hyg	
2100				E/Hyg
20				
40				
2200			Rest	
20				
40				
2300				Sleep
20		Rest		
40				
2400				

DAY 4	ORBIT	CREWMEN ACTIVITIES 1	2	3
0000				
20				
40			E/Hyg	
0100		0705A		
20				
40			Rest	Sleep
0200				
20				
40		0100-0200	0100-0200	
0300				
20				
40				
0400				
20				E/Hyg
40		E/Hyg		
0500			0705A	
20		Rest		Rest
40				
0600				0501
20				0504
40				
0700				
20				E/Hyg
40		Sleep		
0800				Rest
20				
40				
0900				
20				0705A
40				
1000				
20				
40				
1100				
20				Rest
40				
1200				
20		E/Hyg	E/Hyg	
40				
1300		Rest		
20				0100-0200
40				
1400				
20		0705A		
40				
1500				
20				
40				
1600				
20				Rest
40				
1700				
20				
40		SysCk		Sleep
1800				
20				
40		E/Hyg		
1900				
20				
40				
2000				
20		Rest		
40			E/Hyg	
2100				E/Hyg
20				
40				
2200			Rest	
20				
40				
2300				Sleep
20		Rest		
40				
2400				

NOTES

E/Hyg Eat & Personal Hygiene

Limits of Experiment Time

Limits of EVA

[redacted]

TABLE 3-2 **CREW SCHEDULING, FLIGHT** 523 **, SHEET** 2 **OF** 12

2-13.16

DAY 5	ORBIT	CREWMEN ACTIVITIES 1	2	3
0000				
20				
40			E/Hyg	
0100		0705A		
20				
40			Rest	Sleep
0200				
20				
40			0100-0200	
0300		0100-0200		
20				
40				
0400				
20				E/Hyg
40		E/Hyg		
0500				
20		Rest	0705A	Rest
40				
0600				
20				
40				
0700				
20			E/Hyg	1401
40			Rest	0504
0800				
20				
40		Sleep		
0900				
20				
40			0705A	
1000				
20				
40				
1100				
20				Rest
40				
1200				E/Hyg
20		E/Hyg	E/Hyg	0501
40				
1300		Rest		
20			0100-0200	0100-0200
40				
1400				
20				
40		0705A		
1500				
20				
40				
1600				
20				Rest
40				
1700			Sleep	
20				E/Hyg
40				
1800				
20				
40		E/Hyg		
1900				0705A
20				
40				
2000				
20		Rest		
40			E/Hyg	
2100				E/Hyg
20				
40				
2200				
20			Rest	
40				
2300				Sleep
20				
40		Rest		
2400				

DAY 6	ORBIT	CREWMEN ACTIVITIES 1	2	3
0000				
20				
40			E/Hyg	
0100		0705A		
20				
40			Rest	Sleep
0200				
20				
40			0100-0200	
0300		0100-0200		
20				
40				
0400				
20				E/Hyg
40		E/Hyg		
0500				
20			0705A	Rest
40				
0600				
20				0501
40				0504
0700				
20			E/Hyg	
40				
0800			Rest	
20				
40		Sleep		
0900				
20				
40			0705A	
1000				
20				
40				
1100				
20				Rest
40				
1200				E/Hyg
20		E/Hyg	E/Hyg	
40				
1300		Rest		
20			0100-0200	0100 0200
40				
1400				
20				
40		0705A		
1500				
20				
40				
1600				
20				Rest
40				
1700			Sleep	
20				E/Hyg
40				
1800				
20				
40		E/Hyg		
1900				0705A
20				
40				
2000				
20		Rest		
40			E/Hyg	
2100				E/Hyg
20				
40				
2200				
20			Rest	
40				
2300				Sleep
20				
40		Rest		
2400				

DAY 7	ORBIT	CREWMEN ACTIVITIES 1	2	3
0000				
20				
40			E/Hyg	
0100		0705A		
20				
40			Rest	Sleep
0200				
20				
40			0100-0200	
0300		0100-0200		
20				
40				
0400				
20				E/Hyg
40		E/Hyg		
0500				
20			0705A	Rest
40				
0600				
20				0501
40				0504
0700				
20			E/Hyg	
40				
0800			Rest	
20				
40		Sleep		
0900				
20				
40			0705A	
1000				
20				
40				
1100				
20				Rest
40				
1200				E/Hyg
20		E/Hyg	E/Hyg	
40				
1300		Rest		
20			0100-0200	0100-0200
40				
1400				
20				
40		0705A		
1500				
20				
40				
1600				
20				Rest
40				
1700			Sleep	
20				E/Hyg
40				
1800				
20				
40		E/Hyg		
1900				0705A
20				
40				
2000				
20		Rest		
40			E/Hyg	
2100				E/Hyg
20				
40				
2200				
20			Rest	
40				
2300				Sleep
20				
40		Rest		
2400				

DAY 8	ORBIT	CREWMEN ACTIVITIES 1	2	3
0000				
20				
40			E/Hyg	
0100		0705A		
20				
40			Rest	Sleep
0200				
20				
40			0100-0200	
0300		0100-0200		
20				
40				
0400				
20				E/Hyg
40		E/Hyg		
0500				
20			0705A	Rest
40				
0600				
20				
40				
0700				
20			E/Hyg	1401
40				
0800			Rest	0504
20				
40		Sleep		
0900				
20				
40			0705A	
1000				
20				
40				
1100				
20				Rest
40				
1200				E/Hyg
20		E/Hyg	E/Hyg	
40				0501
1300		Rest		
20			0100-0200	0100-0200
40				
1400				
20				
40		0705A		
1500				
20				
40				
1600				
20				Rest
40		E/Hyg		
1700			Sleep	
20				E/Hyg
40				
1800				
20				
40		Rest		
1900				0705A
20				
40				
2000				
20				
40			E/Hyg	E/Hyg
2100				
20				
40		Repl LiOH	Supt EVA	Supt EVA
2200				
20				
40				
2300				
20			Rest	
40		Rest		Sleep
2400				

NOTES

TABLE 3-2 CREW SCHEDULING, FLIGHT 523 , SHEET 3 OF 12

2-13.17

DAY 9	ORBIT	CREWMEN ACTIVITIES 1	2	3
0000				
20				
40			E/Hyg	
0100		0705A		
20				
40			Rest	
0200				
20				Sleep
40			0100-0200	
0300		0100-0200		
20				
40				
0400				
20				
40		E/Hyg		
0500				
20			0705A	
40				
0600				E/Hyg
20				
40				Rest
0700				0501
20			E/Hyg	0504
40				
0800			Rest	
20				
40		Sleep		
0900				
20				
40			0705A	
1000				
20				
40				
1100				Rest
20				
40				
1200		E/Hyg	E/Hyg	E/Hyg
20				
40				
1300		Rest		
20			0100-0200	0100-0200
40				
1400				
20				
40		0705A		
1500				
20				
40				
1600				
20				Rest
40				
1700			Sleep	
20				E/Hyg
40				
1800				
20				
40		E/Hyg		0705A
1900				
20				
40				
2000				
20		Rest		
40			E/Hyg	
2100				E/Hyg
20				
40				
2200				
20			Rest	
40				
2300				Sleep
20				
40		Rest		
2400				

DAY 10	ORBIT	CREWMEN ACTIVITIES 1	2	3
0000				
20				
40			E/Hyg	
0100		0705A		
20				
40			Rest	
0200				
20				Sleep
40			0100-0200	
0300		0100-0200		
20				
40				
0400				
20				E/Hyg
40		E/Hyg		
0500				
20			0705A	Rest
40				
0600				0501
20				0504
40				
0700				
20			E/Hyg	
40				
0800			Rest	
20				
40		Sleep		
0900				
20				
40			0705A	
1000				
20				
40				
1100				Rest
20				
40				
1200				E/Hyg
20		E/Hyg	E/Hyg	
40				
1300		Rest		
20			0100-0200	0100-0200
40				
1400				
20				
40		0705A		
1500				
20				
40				
1600				
20				Rest
40				
1700			Sleep	
20				E/Hyg
40				
1800				
20				
40		E/Hyg		0705A
1900				
20				
40				
2000				
20		Rest		
40			E/Hyg	
2100				E/Hyg
20				
40				
2200				
20			Rest	
40				
2300				Sleep
20				
40		Rest		
2400				

DAY 11	ORBIT	CREWMEN ACTIVITIES 1	2	3
0000				
20				
40			E/Hyg	
0100		0705A		
20				
40			Rest	
0200				
20				Sleep
40			0100-0200	
0300		0100-0200		
20				
40				
0400				
20				E/Hyg
40		E/Hyg		
0500				
20		Rest	0705A	Rest
40				
0600				
20				
40				
0700				
20			E/Hyg	1401
40				
0800			Rest	0504
20				
40		Sleep		
0900				
20				
40			0705A	
1000				
20				
40				
1100				Rest
20				
40				
1200				E/Hyg
20		E/Hyg	E/Hyg	0501
40				
1300		Rest		
20			0100-0200	0100-0200
40				
1400				
20				
40		0705A		
1500				
20				
40				
1600				
20				Rest
40				
1700			Sleep	
20				E/Hyg
40				
1800				
20				
40		E/Hyg		0705A
1900				
20				
40				
2000				
20		Rest		
40			E/Hyg	
2100				E/Hyg
20				
40				
2200				
20			Rest	
40				
2300				Sleep
20				
40		Rest		
2400				

DAY 12	ORBIT	CREWMEN ACTIVITIES 1	2	3
0000				
20				
40			E/Hyg	
0100		0705A		
20				
40			Rest	
0200				
20				Sleep
40			0100-0200	
0300		0100-0200		
20				
40				
0400				
20				E/Hyg
40		E/Hyg		
0500				
20			0705A	Rest
40				
0600				0501
20				0504
40				
0700				
20			E/Hyg	
40				
0800			Rest	
20				
40		Sleep		
0900				
20				
40			0705A	
1000				
20				
40				
1100				Rest
20				
40				
1200				E/Hyg
20		E/Hyg	E/Hyg	
40				
1300		Rest		
20			0100-0200	0100-0200
40				
1400				
20				
40		0705A		
1500				
20				
40				
1600				
20				Rest
40				
1700			Sleep	
20				E/Hyg
40				
1800				
20				
40		E/Hyg		0705A
1900				
20				
40				
2000				
20		Rest		
40			E/Hyg	
2100				E/Hyg
20				
40				
2200				
20			Rest	
40				
2300				Sleep
20				
40		Rest		
2400				

NOTES

TABLE 3-2 **CREW SCHEDULING, FLIGHT** 523 **, SHEET** 4 **OF** 12

2-13.1

DAY 13	ORBIT	CREWMEN ACTIVITIES 1	2	3
0000				
20				
40			E/Hyg	
0100		0705A		
20				
40			Rest	Sleep
0200				
20				
40			0100-0200	
0300		0100-0200		
20				
40				
0400				
20				E/Hyg
40		E/Hyg		
0500				
20			0705A	Rest
40				
0600				0501
20				0504
40				
0700				
20			E/Hyg	
40				
0800			Rest	
20				
40		Sleep		
0900				
20				
40			0705A	
1000				
20				
40				
1100				
20				Rest
40				
1200				E/Hyg
20		E/Hyg	E/Hyg	
40				
1300		Rest		
20			0100 0200	0100-0200
40				
1400				
20				
40		0705A		
1500				
20				
40				
1600				
20				Rest
40				
1700			Sleep	
20				
40				E/Hyg
1800				
20				
40		E/Hyg		
1900				0705A
20				
40				
2000				
20		Rest		
40			E/Hyg	
2100				
20				E/Hyg
40				
2200				
20			Rest	
40				
2300				Sleep
20				
40		Rest		
2400				

DAY 14	ORBIT	CREWMEN ACTIVITIES 1	2	3
0000				
20				
40			E/Hyg	
0100		0705A		
20				
40			Rest	
0200				Sleep
20				
40			0100-0200	
0300		0100-0200		
20				
40				
0400				
20				E/Hyg
40		E/Hyg		
0500				
20			0705A	Rest
40		Rest		
0600				
20				
40				
0700				
20			E/Hyg	1401
40				
0800			Rest	0504
20				
40		Sleep		
0900				
20				
40			0705A	
1000				
20				
40				
1100				
20				Rest
40				
1200				E/Hyg
20		E/Hyg	E/Hyg	0501
40				
1300		Rest		
20			0100-0200	0100-0200
40				
1400				
20				
40				
1500		0705A		
20				
40				
1600				
20				Rest
40		E/Hyg		
1700			Sleep	
20				
40				E/Hyg
1800				
20				
40		Rest		
1900				Compl 0705A
20				
40				
2000				
20				
40			E/Hyg	E/Hyg
2100				
20			0606	
40		Supt EVA		Supt EVA
2200			Repl LiOH	
20				
40				
2300		Rest	Rest	Sleep
20				
40				
2400				

DAY 15	ORBIT	CREWMEN ACTIVITIES 1	2	3
0000				
20		E/Hyg	E/Hyg	
40				
0100		Rest	Rest	
20				
40				Sleep
0200				
20				
40		1301 Deploy	1301	
0300				
20				
40				
0400				
20			0501	
40		E/Hyg	0504	
0500				
20			0606	E/Hyg
40		Rest		
0600				
20				EVA 1301
40		Supt EVA	Supt EVA	
0700				
20				
40				
0800				
20			E/Hyg	Rest
40				
0900				
20				
40			0100-0200	0100-0200
1000		Sleep		
20				
40				
1100				
20				E/Hyg
40				
1200				Rest
20			E/Hyg	
40				
1300				
20			Rest	0603B Setup
40				
1400				
20		E/Hyg		
40				0603B
1500				
20		Rest		
40				
1600				
20				
40		0603B		
1700			Sleep	
20				
40				Rest
1800				
20				E/Hyg
40				
1900		E/Hyg		0603B
20				
40				
2000				
20		Rest		
40				
2100			E/Hyg	E/Hyg
20				
40				
2200		0100-0200	0100-0200	
20				
40				Sleep
2300				
20				
40		Rest		
2400				

DAY 16	ORBIT	CREWMEN ACTIVITIES 1	2	3
0000				
20		0604 Setup		
40			E/Hyg	
0100				
20			Rest	
40		0604		Sleep
0200				
20				
40				
0300				
20				
40		0100 0200	0100 0200	
0400				
20				E/Hyg
40				
0500		E/Hyg		
20			0604	Rest
40				
0600				0501
20				0504
40				
0700				
20			E/Hyg	
40				
0800			Rest	
20		Sleep		
40				
0900				
20				
40			0100-0200	0100-0200
1000				
20				
40				
1100				
20				Rest
40				
1200		E/Hyg		E/Hyg
20			E/Hyg	
40		Rest		
1300				
20			Rest	
40				
1400				
20		0601 Setup		
40				
1500				
20				
40				
1600				
20				Rest
40				
1700		Rest		
20				E/Hyg
40				
1800				
20			Sleep	
40		E/Hyg		
1900				0601
20				
40				
2000				
20		Rest		
40			E/Hyg	E/Hyg
2100				
20		EVA 1301		
40			Supt EVA	Supt EVA
2200				
20				
40				
2300				
20		0602A Setup		
40				Sleep
2400				

NOTES

[redacted]

TABLE 3-2 **CREW SCHEDULING, FLIGHT** 523 **, SHEET** 5 **OF** 12

2-13.14

DAY 17	ORBIT	CREWMEN ACTIVITIES 1	2	3
0000				
20				
40			E/Hyg	
0100				
20				
40		0602A	Rest	
0200				
20				Sleep
40				
0300				
20				
40				
0400				
20		E/Hyg		
40				
0500				
20		Rest		E/Hyg
40				
0600				
20			0602A	Rest
40				
0700				
20				1401
40				
0800				
20		Sleep	E/Hyg	0504
40				0501
0900				
20			Rest	
40				
1000				
20			0100-0200	0100-0200
40				
1100				
20				E/Hyg
40				
1200				
20		E/Hyg	E/Hyg	Rest
40				
1300				
20		0100 0200	0100 0200	
40				
1400				
20		Rest		0602A
40				
1500				
20				
40				
1600				
20			Sleep	
40				
1700				
20				E/Hyg
40				
1800				
20				Rest
40		0602A		
1900				
20				
40				
2000				
20				
40				
2100				E/Hyg
20		E/Hyg	E/Hyg	
40				
2200				
20				
40			0602A	Sleep
2300				
20		Rest		
40				
2400				

DAY 18	ORBIT	CREWMEN ACTIVITIES 1	2	3
0000				
20				
40				
0100			0602A	
20				
40				
0200		0703		Sleep
20		Setup	E/Hyg	
40				
0300				
20			Rest	
40				
0400			0501	
20			0504	E/Hyg
40		E/Hyg		
0500				Rest
20		Rest		
40				
0600				
20				
40		Supt	Supt	1301
0700		EVA	EVA	EVA
20				
40				
0800				
20			E/Hyg	Rest
40				
0900				
20			0100-0200	0100-0200
40				
1000				
20				
40		Sleep		
1100				
20			0605	E/Hyg
40			Setup	
1200				Rest
20			E/Hyg	
40				
1300				
20			Rest	
40				
1400				
20		E/Hyg		0605
40				
1500				
20		Rest		
40				
1600				
20				0605
40				
1700				
20			Sleep	Rest
40				
1800				E/Hyg
20		0605		
40				
1900				0701
20		E/Hyg		Setup
40				
2000				
20				
40		Rest		
2100			E/Hyg	E/Hyg
20				
40				
2200				
20		0100-0200	0100-0200	
40				
2300				Sleep
20				
40		0704		
2400				

DAY 19	ORBIT	CREWMEN ACTIVITIES 1	2	3
0000				
20			0501	
40			0504	
0100			E/Hyg	
20				
40			Rest	Sleep
0200		0704		
20		Setup		
40				
0300				
20			0602B	
40			Setup	
0400				
20				E/Hyg
40				
0500		E/Hyg		
20				Rest
40				
0600				
20			0100-0200	0100-0200
40				
0700				
20			E/Hyg	
40				
0800				
20			Rest	
40		Sleep		
0900				0602B
20				Setup
40			0701	
1000				
20				
40				
1100			0703	
20				
40			0704	
1200				E/Hyg
20		E/Hyg	E/Hyg	
40				Rest
1300				
20		0602B	Rest	
40				
1400				
20		0602B		
40				
1500				
20		0602B		
40				
1600				
20		0602B		Rest
40				
1700				
20		0602B	Sleep	E/Hyg
40				
1800				
20				
40				
1900		E/Hyg		
20				0704
40				0703
2000				
20				
40		Rest		
2100			E/Hyg	
20				
40				E/Hyg
2200		0100-0200	0100-0200	
20				
40				
2300				Sleep
20				
40		Rest		
2400				

DAY 20	ORBIT	CREWMEN ACTIVITIES 1	2	3
0000			0501	
20			0504	
40				
0100				
20			Rest	
40				Sleep
0200		0702		
20		Setup	E/Hyg	
40				
0300				
20			1401	
40				
0400			0704	
20				E/Hyg
40			0603A	
0500			Setup	
20		E/Hyg Rest		Rest
40				
0600				
20				
40				
0700				
20			E/Hyg	0603A
40				Setup
0800			Rest	
20				
40		Sleep	0704	
0900				
20			0703	
40				
1000			0704	
20				
40				
1100			0701	
20				Rest
40				
1200				E/Hyg
20		E/Hyg	E/Hyg	
40				
1300		Rest		
20			Rest	
40				
1400				
20		0603A		
40				
1500		0603A		
20				
40				
1600				
20				Rest
40				
1700			Sleep	
20		0603A		E/Hyg
40				
1800		0100-0200		0100-0200
20				
40				
1900		E/Hyg		0701
20				
40				
2000				
20		Rest		Rest
40			E/Hyg	
2100				
20				
40			0100-0200	0100-0200
2200		0704		
20				
40				Rest
2300			0702	
20		Rest		Sleep
40				
2400				

NOTES

[redacted]

[redacted]

TABLE 3-2 **CREW SCHEDULING, FLIGHT** 523 **, SHEET** 6 **OF** 12

2-13.00

DAY 21	ORBIT	CREWMEN ACTIVITIES 1	2	3
0000				
20		E/Hyg	E/Hyg	
40				
0100				
20		Rest	Rest	
40				
0200			0501	
20		0704	0504	Sleep
40				
0300				
20				
40		0100-0200	0100-0200	
0400				
20				
40			0703	
0500		E/Hyg		E/Hyg
20				
40			Rest	
0600				
20				
40		Supt EVA	EVA L10H	Supt EVA
0700				
20				
40				
0800			E/Hyg	
20		Rest		
40			0100-0200	
0900				0100-0200
20				
40				
1000				
20			0702	
40				E/Hyg
1100				
20		Sleep		
40				Rest
1200				
20			E/Hyg	
40				0701
1300				
20				0704
40			Rest	0703
1400				
20				
40				0704
1500				
20		E/Hyg		0701
40				
1600		Rest		
20				
40				E/Hyg
1700		0702	Sleep	
20				
40		0704		Rest
1800				
20				
40				0704
1900		E/Hyg		
20				
40				0703
2000				
20				
40		Rest	E/Hyg	
2100				
20				E/Hyg
40				
2200				
20			0702	
40				Sleep
2300				
20				
40		Rest		
2400				

DAY 22	ORBIT	CREWMEN ACTIVITIES 1	2	3
0000				
20		Rest		
40				
0100			0702	
20				
40				Sleep
0200				
20			E/Hyg	
40				
0300		0702		
20			Rest	
40				
0400				
20		E/Hyg	0704	E/Hyg
40				
0500			0703	
20		Rest		Rest
40			0704	
0600				
20			0100-0200	
40				0100-0200
0700			0701	
20				
40				
0800				
20			E/Hyg	0704
40		Sleep		
0900				
20			Rest	0703
40				
1000			0704	
20				E/Hyg
40			0701	
1100				
20				Rest
40			0704	
1200				
20		E/Hyg	E/Hyg	0703
40				
1300				0704
20			0100-0200	0501
40		0100-0200		
1400				0701
20			Rest	
40				0504
1500				
20				Rest
40				
1600		0702		
20				E/Hyg
40				
1700				
20				Rest
40			Sleep	
1800				
20		E/Hyg		
40				
1900				
20				0702
40				
2000		Rest		
20				
40				
2100				
20			E/Hyg	Rest
40				
2200		0702		
20				
40				
2300				Sleep
20		Rest	0702	
40				
2400				

DAY 23	ORBIT	CREWMEN ACTIVITIES 1	2	3
0000				
20		Rest		
40				
0100			0702	
20		1401		
40				Sleep
0200				
20			E/Hyg	
40				
0300		0702		
20			Rest	
40				
0400				
20		E/Hyg	0704	E/Hyg
40				
0500			0703	
20		Rest		Rest
40			0704	
0600				
20			0100-0200	
40				0100-0200
0700			0701	
20				
40				
0800				
20			E/Hyg	0704
40		Sleep		
0900				
20			Rest	0703
40				
1000			0704	
20				E/Hyg
40			0701	
1100				
20				Rest
40			0704	
1200				
20		E/Hyg	E/Hyg	0703
40				
1300				0704
20			0100-0200	0501
40		0100-0200		
1400				0701
20			Rest	
40				0504
1500				
20				Rest
40				
1600		0702		
20				E/Hyg
40				
1700				
20				Rest
40			Sleep	
1800				
20		E/Hyg		
40				
1900				
20				0702
40				
2000		Rest		
20				
40				
2100				
20			E/Hyg	Rest
40				
2200		0702		
20				
40				
2300				Sleep
20		Rest	0702	
40				
2400				

DAY 24	ORBIT	CREWMEN ACTIVITIES 1	2	3
0000				
20		Rest		
40				
0100			0702	
20				
40				Sleep
0200				
20			E/Hyg	
40				
0300		0702		
20			Rest	
40				
0400				
20		E/Hyg	0704	E/Hyg
40				
0500			0703	
20		Rest		Rest
40			0704	
0600				
20			0100-0200	
40				0100-0200
0700			0701	
20				
40				
0800				
20			E/Hyg	0704
40		Sleep		
0900				
20			Rest	0703
40				
1000			0704	
20				E/Hyg
40			0701	
1100				
20				Rest
40			0704	
1200				
20		E/Hyg	E/Hyg	0703
40				
1300				0704
20			0100-0200	0501
40		0100-0200		
1400				0701
20			Rest	
40				0504
1500				
20				Rest
40				
1600		0702		
20				E/Hyg
40				
1700				
20				Rest
40			Sleep	
1800				
20		E/Hyg		
40				
1900				
20				0702
40				
2000		Rest		
20				
40				
2100				
20			E/Hyg	Rest
40				
2200		0702		
20				
40				
2300				Sleep
20		Rest	0702	
40				
2400				

NOTES

[redacted]

[redacted]

TABLE 3-2 **CREW SCHEDULING, FLIGHT** 523 **, SHEET** 7 **OF** 12

2-13.21

DAY 25	ORBIT	CREWMEN ACTIVITIES 1	2	3
0000		Rest		
20				
40				
0100			0702	
20				
40				Sleep
0200				
20			E/Hyg	
40				
0300		0702		
20			Rest	
40				
0400				
20		E/Hyg	0704	E/Hyg
40				
0500			0703	
20		Rest		Rest
40			0704	
0600				
20			0100-0200	
40				0100-0200
0700			0701	
20				
40				
0800				
20			E/Hyg	0704
40		Sleep		
0900				
20			Rest	0703
40				
1000			0704	
20				E/Hyg
40			0701	
1100				
20				Rest
40			0704	
1200				
20		E/Hyg	E/Hyg	0703
40				
1300				0704
20			0100-0200	
40		0100-0200		0501
1400				
20			Rest	0701
40				0504
1500				
20				Rest
40				
1600				
20		0702		E/Hyg
40				
1700				
20				Rest
40			Sleep	
1800				
20		E/Hyg		
40				
1900				
20				0702
40				
2000		Rest		
20				
40				
2100				
20			E/Hyg	Rest
40				
2200		0702		
20				
40				Sleep
2300				
20		Rest	0702	
40				
2400				

DAY 26	ORBIT	CREWMEN ACTIVITIES 1	2	3
0000		Rest		
20				
40				
0100			0702	
20				
40		1401		Sleep
0200				
20			E/Hyg	
40				
0300		0702		
20			Rest	
40				
0400				
20		E/Hyg	0704	E/Hyg
40				
0500			0703	
20		Rest		Rest
40			0704	
0600				
20			0100-0200	
40				0100-0200
0700			0701	
20				
40				
0800				
20			E/Hyg	0704
40		Sleep		
0900				
20			Rest	0703
40				
1000			0704	
20				E/Hyg
40			0701	
1100				
20				Rest
40			0704	
1200				
20		E/Hyg	E/Hyg	0703
40				
1300				0704
20			0100-0200	
40		0100-0200		0501
1400				
20			Rest	0701
40				0504
1500				
20				Rest
40				
1600				
20		0702		E/Hyg
40				
1700				
20				Rest
40			Sleep	
1800				
20		E/Hyg		
40				
1900				
20				0702
40				
2000		Rest		
20				
40				
2100				
20			E/Hyg	Rest
40				
2200		0702		
20				
40				Sleep
2300				
20		Rest	0702	
40				
2400				

DAY 27	ORBIT	CREWMEN ACTIVITIES 1	2	3
0000		Rest		
20				
40				
0100			0702	
20				
40				Sleep
0200				
20			E/Hyg	
40				
0300		0702		
20			Rest	
40				
0400				
20		E/Hyg	0704	E/Hyg
40				
0500			0703	
20		Rest		Rest
40			0704	
0600				
20			0100-0200	
40				0100-0200
0700			0701	
20				
40				
0800				
20			E/Hyg	0704
40		Sleep		
0900				
20			Rest	0703
40				
1000			0704	
20				E/Hyg
40			0701	
1100				
20				Rest
40			0704	
1200				
20		E/Hyg	E/Hyg	0703
40				
1300				0704
20			0100-0200	
40		0100-0200		0501
1400				
20			Rest	0701
40				0504
1500				
20				Rest
40				
1600				
20		0702		E/Hyg
40				
1700				
20				Rest
40			Sleep	
1800				
20		E/Hyg		
40				
1900				
20				0702
40				
2000		Rest		
20				
40				
2100				
20			E/Hyg	Rest
40				
2200		0702		
20				
40				Sleep
2300				
20		Rest	0702	
40				
2400				

DAY 28	ORBIT	CREWMEN ACTIVITIES 1	2	3
0000				
20		E/Hyg	E/Hyg	
40				
0100				
20		Rest	Rest	
40				
0200			0501	
20			0504	
40		0704		Sleep
0300				
20				
40		0100-0200	0100-0200	
0400				
20				
40				
0500				
20		E/Hyg	0703	
40				E/Hyg
			Rest	
0600				
20				
40		Supt EVA	EVA L10H	Supt EVA
0700				
20				
40				
0800				
20			E/Hyg	
40		Rest		
			0100-0200	
0900				0100-0200
20				
40				
1000				
20			0702	E/Hyg
40				
1100				
20		Sleep		Rest
40				
1200				
20			E/Hyg	
40				0701
1300				
20				0704
40			Rest	
1400				0703
20				
40				0704
1500				
20		E/Hyg		0701
40				
1600		Rest		
20				
40				E/Hyg
1700		0702	Sleep	
20				
40		0704		Rest
1800				
20				
40				
1900		E/Hyg		0704
20				
40				0703
2000				
20				
40		Rest	E/Hyg	
2100				
20				E/Hyg
40				
2200				
20			0702	
40				Sleep
2300				
20				
40		Rest		
2400				

NOTES

[redacted]

TABLE 3-2 **CREW SCHEDULING, FLIGHT** 523 **, SHEET** 8 **OF** 12

DAY 29	ORBIT	CREWMEN ACTIVITIES 1	2	3
0000		Rest		
20				
40				
0100			0702	
20		1401		
40				Sleep
0200				
20			E/Hyg	
40				
0300		0702		
20			Rest	
40				
0400				
20		E/Hyg	0704	E/Hyg
40				
0500			0703	
20		Rest		Rest
40			0704	
0600				
20			0100-0200	
40				0100-0200
0700				
20			0701	
40				
0800				
20			E/Hyg	0704
40		Sleep		
0900				
20			Rest	0703
40				
1000			0704	
20				E/Hyg
40			0701	
1100				
20				Rest
40			0704	
1200				
20		E/Hyg	E/Hyg	0703
40				
1300				0704
20			0100-0200	0501
40		0100-0200		
1400				
20			Rest	0701
40				0504
1500				
20				Rest
40				
1600		0702		
20				E/Hyg
40				
1700				
20				Rest
40			Sleep	
1800				
20		E/Hyg		
40				
1900				
20				0702
40				
2000		Rest		
20				
40				
2100				
20			E/Hyg	Rest
40				
2200		0702		
20				
40				
2300				Sleep
20		Rest	0702	
40				
2400				

DAY 30	ORBIT	CREWMEN ACTIVITIES 1	2	3
0000		Rest		
20				
40				
0100			0702	
20				
40				Sleep
0200				
20			E/Hyg	
40				
0300		0702		
20			Rest	
40				
0400				
20		E/Hyg	0704	E/Hyg
40				
0500			0703	
20		Rest		Rest
40			0704	
0600				
20			0100-0200	
40				0100-0200
0700				
20			0701	
40				
0800				
20			E/Hyg	0704
40		Sleep		
0900				
20			Rest	0703
40				
1000			0704	
20				E/Hyg
40			0701	
1100				
20				Rest
40			0704	
1200				
20		E/Hyg	E/Hyg	0703
40				
1300				0704
20			0100-0200	0501
40		0100-0200		
1400				
20			Rest	0701
40				0504
1500				
20				Rest
40				
1600		0702		
20				E/Hyg
40				
1700				
20				Rest
40			Sleep	
1800				
20		E/Hyg		
40				
1900				
20				0702
40				
2000		Rest		
20				
40				
2100				
20			E/Hyg	Rest
40				
2200		0702		
20				
40				
2300				Sleep
20		Rest	0702	
40				
2400				

DAY 31	ORBIT	CREWMEN ACTIVITIES 1	2	3
0000		Rest		
20				
40				
0100			0702	
20				
40				Sleep
0200				
20			E/Hyg	
40				
0300		0702		
20			Rest	
40				
0400				
20		E/Hyg	0704	E/Hyg
40				
0500			0703	
20		Rest		Rest
40			0704	
0600				
20			0100-0200	
40				0100-0200
0700				
20			0701	
40				
0800				
20			E/Hyg	0704
40		Sleep		
0900				
20			Rest	0703
40				
1000			0704	
20				E/Hyg
40			0701	
1100				
20				Rest
40			0704	
1200				
20		E/Hyg	E/Hyg	0703
40				
1300				0704
20			0100-0200	0501
40		0100-0200		
1400				
20			Rest	0701
40				0504
1500				
20				Rest
40				
1600		0702		
20				E/Hyg
40				
1700				
20				Rest
40			Sleep	
1800				
20		E/Hyg		
40				
1900				
20				0702
40				
2000		Rest		
20				
40				
2100				
20			E/Hyg	Rest
40				
2200		0702		
20				
40				
2300				Sleep
20		Rest	0702	
40				
2400				

DAY 32	ORBIT	CREWMEN ACTIVITIES 1	2	3
0000		Rest		
20				
40				
0100			0702	
20				
40		1401		Sleep
0200				
20			E/Hyg	
40				
0300		0702		
20			Rest	
40				
0400				
20		E/Hyg	0704	E/Hyg
40				
0500			0703	
20		Rest		Rest
40			0704	
0600				
20			0100-0200	
40				0100-0200
0700				
20			0701	
40				
0800				
20			E/Hyg	0704
40		Sleep		
0900				
20			Rest	0703
40				
1000			0704	
20				E/Hyg
40			0701	
1100				
20				Rest
40			0704	
1200				
20		E/Hyg	E/Hyg	0703
40				
1300				0704
20			0100-0200	0501
40		0100-0200		
1400				
20			Rest	0701
40				0504
1500				
20				Rest
40				
1600		0702		
20				E/Hyg
40				
1700				
20				Rest
40			Sleep	
1800				
20		E/Hyg		
40				
1900				
20				0702
40				
2000		Rest		
20				
40				
2100				
20			E/Hyg	Rest
40				
2200		0702		
20				
40				
2300				Sleep
20		Rest	0702	
40				
2400				

NOTES .

TABLE 3-2 **CREW SCHEDULING, FLIGHT** 523 **, SHEET** 2 **OF** 12

2-13.23

DAY 33	ORBIT	CREWMEN ACTIVITIES 1	2	3
0000		Rest		
20				
40				
0100			0702	
20				
40				Sleep
0200				
20			E/Hyg	
40				
0300		0702		
20			Rest	
40				
0400				
20		E/Hyg	0704	E/Hyg
40				
0500			0703	
20		Rest		Rest
40			0704	
0600			0100-0200	
20				0100-0200
40				
0700			0701	
20				
40				
0800				
20			E/Hyg	0704
40		Sleep		
0900				
20			Rest	0703
40				
1000			0704	
20				E/Hyg
40			0701	
1100				
20				Rest
40			0704	
1200				
20		E/Hyg	E/Hyg	0703
40				
1300				0704
20			0100-0200	0501
40		0100-0200		
1400			Rest	0701
20				
40				0504
1500				
20				Rest
40				
1600				
20		0702		E/Hyg
40				
1700				
20				Rest
40			Sleep	
1800				
20		E/Hyg		
40				
1900				
20				0702
40				
2000		Rest		
20				
40				
2100				
20			E/Hyg	Rest
40				
2200		0702		
20				
40				Sleep
2300				
20		Rest	0702	
40				
2400				

DAY 34	ORBIT	CREWMEN ACTIVITIES 1	2	3
0000				
20		Rest		
40				
0100			0702	
20				
40				Sleep
0200				
20			E/Hyg	
40				
0300		0702		
20			Rest	
40				
0400				
20		E/Hyg	0704	E/Hyg
40				
0500			0703	
20		Rest		Rest
40			0704	
0600			0100-0200	
20				0100-0200
40				
0700			0701	
20				
40				
0800				
20			E/Hyg	0704
40		Sleep		
0900				
20			Rest	0703
40				
1000			0704	
20				E/Hyg
40			0701	
1100				
20				Rest
40			0704	
1200				
20		E/Hyg	E/Hyg	0703
40				
1300				0704
20			0100-0200	0501
40		0100-0200		
1400			Rest	0701
20				
40				0504
1500				
20				Rest
40				
1600				
20		0702		E/Hyg
40				
1700				
20				Rest
40			Sleep	
1800				
20		E/Hyg		
40				
1900				
20				0702
40				
2000		Rest		
20				
40				
2100				
20			E/Hyg	Rest
40				
2200		0702		
20				
40				Sleep
2300				
20		Rest	0702	
40				
2400				

DAY 35	ORBIT	CREWMEN ACTIVITIES 1	2	3
0000				
20		E/Hyg	E/Hyg	
40				
0100		Rest	Rest	
20				
40				
0200			0501	
20			0504	
40		0704		Sleep
0300			1401	
20				
40		0100-0200	0100-0200	
0400				
20				
40				
0500		E/Hyg	0703	
20				E/Hyg
40			Rest	
0600				
20				
40		Supt EVA	EVA LiCH	Supt EVA
0700				
20				
40				
0800			E/Hyg	
20		Rest		
40			0100-0200	
0900				0100-0200
20				
40				
1000				
20			0702	
40				E/Hyg
1100				
20		Sleep		
40				Rest
1200				
20			E/Hyg	
40				0701
1300				
20				0704
40			Rest	
1400				0703
20				
40				0704
1500				
20		E/Hyg		0701
40				
1600		Rest		
20				
40				E/Hyg
1700		0702	Sleep	
20				
40		0704		Rest
1800				
20				
40				0704
1900		E/Hyg		
20				
40				0703
2000				
20				
40		Rest	E/Hyg	
2100				
20				E/Hyg
40				
2200				
20			0702	
40				Sleep
2300				
20				
40		Rest		
2400				

DAY 36	ORBIT	CREWMEN ACTIVITIES 1	2	3
0000				
20		Rest		
40				
0100			0702	
20				
40				Sleep
0200				
20			E/Hyg	
40				
0300		0702		
20			Rest	
40				
0400				
20		E/Hyg	0704	E/Hyg
40				
0500			0703	
20		Rest		Rest
40			0704	
0600			0100-0200	
20				0100-0200
40				
0700			0701	
20				
40				
0800				
20			E/Hyg	0704
40		Sleep		
0900				
20			Rest	0703
40				
1000			0704	
20				E/Hyg
40			0701	
1100				
20				Rest
40			0704	
1200				
20		E/Hyg	E/Hyg	0703
40				
1300				0704
20			0100-0200	0501
40		0100-0200		
1400			Rest	0701
20				
40				0504
1500				
20				Rest
40				
1600				
20		0702		E/Hyg
40				
1700				
20				Rest
40			Sleep	
1800				
20		E/Hyg		
40				
1900				
20				0702
40				
2000		Rest		
20				
40				
2100				
20			E/Hyg	Rest
40				
2200		0702		
20				
40				Sleep
2300				
20		Rest	0702	
40				
2400				

NOTES

TABLE 3-2 **CREW SCHEDULING, FLIGHT** 523 **, SHEET** 10 **OF** 12

2-13.24

DAY 37	ORBIT	CREWMEN ACTIVITIES 1	2	3
0000		Rest		
20				
40				
0100			0702	
20				
40				Sleep
0200				
20			E/Hyg	
40				
0300		0702		
20			Rest	
40				
0400				
20		E/Hyg	0704	E/Hyg
40				
0500			0703	
20		Rest		Rest
40			0704	
0600			0100-0200	
20				
40				0100-0200
0700			0701	
20				
40				
0800				
20			E/Hyg	0704
40		Sleep		
0900				
20			Rest	0703
40				
1000			0704	
20				E/Hyg
40			0701	
1100				
20				Rest
40			0704	
1200				
20		E/Hyg	E/Hyg	0703
40				
1300				0704
20			0100-0200	0501
40		0100-0200		
1400				
20			Rest	0701
40				0504
1500				
20				Rest
40				
1600				
20		0702		E/Hyg
40				
1700				
20				Rest
40			Sleep	
1800				
20		E/Hyg		
40				
1900				
20				0702
40				
2000		Rest		
20				
40				
2100				
20			E/Hyg	Rest
40				
2200		0702		
20				
40				
2300				Sleep
20		Rest	0702	
40				
2400				

DAY 38	ORBIT	CREWMEN ACTIVITIES 1	2	3
0000		Rest		
20				
40				
0100			0702	
20				
40		1401		Sleep
0200				
20			E/Hyg	
40				
0300		0702		
20			Rest	
40				
0400				
20		E/Hyg	0704	E/Hyg
40				
0500			0703	
20		Rest		Rest
40			0704	
0600			0100-0200	
20				
40				0100-0200
0700			0701	
20				
40				
0800				
20			E/Hyg	0704
40		Sleep		
0900				
20			Rest	0703
40				
1000			0704	
20				E/Hyg
40			0701	
1100				
20				Rest
40			0704	
1200				
20		E/Hyg	E/Hyg	0703
40				
1300				0704
20			0100-0200	0501
40		0100-0200		
1400				
20			Rest	0701
40				0504
1500				
20				Rest
40				
1600				
20		0702		E/Hyg
40				
1700				
20				Rest
40			Sleep	
1800				
20		E/Hyg		
40				
1900				
20				0702
40				
2000		Rest		
20				
40				
2100				
20			E/Hyg	Rest
40				
2200		0702		
20				
40				
2300				Sleep
20		Rest	0702	
40				
2400				

DAY 39	ORBIT	CREWMEN ACTIVITIES 1	2	3
0000		Rest		
20				
40				
0100			0702	
20				
40				Sleep
0200				
20			E/Hyg	
40				
0300		0702		
20			Rest	
40				
0400				
20		E/Hyg	0704	E/Hyg
40				
0500			0703	
20		Rest		Rest
40			0704	
0600			0100-0200	
20				
40				0100-0200
0700			0701	
20				
40				
0800				
20			E/Hyg	0704
40		Sleep		
0900				
20			Rest	0703
40				
1000			0704	
20				E/Hyg
40			0701	
1100				
20				Rest
40			0704	
1200				
20		E/Hyg	E/Hyg	0703
40				
1300				0704
20			0100-0200	0501
40		0100-0200		
1400				
20			Rest	0701
40				0504
1500				
20				Rest
40				
1600				
20		0702		E/Hyg
40				
1700				
20				Rest
40			Sleep	
1800				
20		E/Hyg		
40				
1900				
20				0702
40				
2000		Rest		
20				
40				
2100				
20			E/Hyg	Rest
40				
2200		0702		
20				
40				
2300				Sleep
20		Rest	0702	
40				
2400				

DAY 40	ORBIT	CREWMEN ACTIVITIES 1	2	3
0000		Rest		
20				
40				
0100			0702	
20				
40				Sleep
0200				
20			E/Hyg	
40				
0300		0702		
20			Rest	
40				
0400				
20		E/Hyg	0704	E/Hyg
40				
0500			0703	
20		Rest		Rest
40			0704	
0600			0100-0200	
20				
40				0100-0200
0700			0701	
20				
40				
0800				
20			E/Hyg	0704
40		Sleep		
0900				
20			Rest	0703
40				
1000			0704	
20				E/Hyg
40			0701	
1100				
20				Rest
40			0704	
1200				
20		E/Hyg	E/Hyg	0703
40				
1300				0704
20			0100-0200	0501
40		0100-0200		
1400				
20			Rest	0701
40				0504
1500				
20				Rest
40				
1600				
20		0702		E/Hyg
40				
1700				
20				Rest
40			Sleep	
1800				
20		E/Hyg		
40				
1900				
20				0702
40				
2000		Rest		
20				
40				
2100				
20			E/Hyg	Rest
40				
2200		0702		
20				
40				
2300				Sleep
20		Rest	0702	
40				
2400				

NOTES

[redacted]

TABLE 3-2 **CREW SCHEDULING, FLIGHT** 523 **, SHEET** 11 **OF** 12

2-13.25

DAY 41	ORBIT	CREWMEN ACTIVITIES 1	2	3
0000		Rest		
20				
40				
0100			0702	
20				
40		1401		Sleep
0200				
20			E/Hyg	
40				
0300		0702		
20			Rest	
40				
0400				
20		E/Hyg	0704	E/Hyg
40				
0500			0703	
20		Rest		Rest
40			0704	
0600				
20			0100-0200	
40				0100-0200
0700			0701	
20				
40				
0800				
20			E/Hyg	0704
40		Sleep		
0900				
20			Rest	0703
40				
1000			0704	
20				E/Hyg
40			0701	
1100				
20				Rest
40			0704	
1200				
20		E/Hyg	E/Hyg	0703
40				
1300				0704
20			0100-0200	0501
40		0100-0200		
1400				
20			Rest	0701
40				0504
1500				
20				Rest
40				
1600		0702		
20				E/Hyg
40				
1700				
20				Rest
40			Sleep	
1800				
20		E/Hyg		
40				
1900				
20				0702
40				
2000		Rest		
20				
40				
2100				
20			E/Hyg	Rest
40				
2200		0702		
20				
40				
2300				Sleep
20		Rest	0702	
40				
2400				

DAY 42	ORBIT	CREWMEN ACTIVITIES 1	2	3
0000				
20		E/Hyg	E/Hyg	
40				
0100				
20		Rest	Rest	
40				
0200			0501	
20			0504	
40		0704		Sleep
0300				
20				
40				
0400		0100-0200	0100-0200	
20				
40				
0500			0703	
20		E/Hyg		E/Hyg
40			Rest	
0600				
20				
40		Supt EVA	EVA L10H 0504	Supt EVA
0700				
20				
40				
0800			E/Hyg	
20		Rest		
40				
0900			0100-0200	0100-0200
20				
40				
1000				
20				
40			0702	E/Hyg
1100		Sleep		
20				Rest
40				
1200				
20			E/Hyg	0701
40				
1300				0704
20			Rest	0703
40				
1400				
20				0704
40				
1500				
20		E/Hyg		0701
40				
1600		Rest		
20				
40				E/Hyg
1700		0702	Sleep	
20				
40		0704		Rest
1800				
20				
40				
1900		E/Hyg		0704
20				
40				0703
2000				
20				
40		Rest	E/Hyg	
2100				
20				E/Hyg
40				
2200				
20				
40		Rest	0702	
2300				Sleep
20				
40				
2400				

DAY 43	ORBIT	CREWMEN ACTIVITIES 1	2	3
0000				
20		Rest		
40				
0100			0702	
20				
40				Sleep
0200				
20			E/Hyg	
40				
0300		0702		
20			Rest	
40				
0400				
20		E/Hyg	0704	E/Hyg
40				
0500			0703	
20		Rest		Rest
40			0704	
0600				
20			0100-0200	
40				0100-0200
0700			0701	
20				
40				
0800				
20			E/Hyg	0704
40		Sleep		
0900				
20			Rest	0703
40				
1000			0704	
20				E/Hyg
40			0701	
1100				
20				Rest
40			0704	
1200				
20		E/Hyg	E/Hyg	0703
40				
1300				0704
20			0100-0200	0501
40		0100-0200		
1400				
20			Rest	0701
40				
1500				
20				Rest
40				
1600		0702		
20				E/Hyg
40				
1700				
20				Rest
40			Sleep	
1800				
20		E/Hyg		
40				
1900				
20				0702
40				
2000		Rest		
20				
40				
2100				
20			E/Hyg	Rest
40				
2200		0702		
20				
40				
2300				Sleep
20		Rest	0702	
40				
2400				

DAY 44	ORBIT	CREWMEN ACTIVITIES 1	2	3
0000				
20		Rest		
40				
0100			0702	
20				
40		1401		Sleep
0200				
20			E/Hyg	
40				
0300		0702		
20			Rest	
40				
0400				
20		E/Hyg	0704	E/Hyg
40				
0500			0703	
20		Rest		Rest
40			0704	
0600				
20			0100-0200	
40				0100-0200
0700			0701	
20				
40				
0800				
20			E/Hyg	0704
40		Sleep		
0900				
20			Rest	0703
40				
1000			0704	
20				E/Hyg
40			0701	
1100				
20				Rest
40			0704	
1200				
20		E/Hyg	E/Hyg	0703
40				
1300				0704
20			0100-0200	0501
40		0100-0200		
1400				
20			Rest	0701
40				
1500				
20				Rest
40				
1600		0702		
20				E/Hyg
40				
1700				
20				Rest
40			Sleep	
1800				
20		E/Hyg		
40				
1900				
20				0702
40				
2000		Rest		
20				
40				
2100				
20			E/Hyg	Rest
40				
2200		0702		
20				
40				
2300				Sleep
20		Rest	0702	
40				
2400				

NOTES

[redacted]

TABLE 3-2 **CREW SCHEDULING, FLIGHT 243, SHEET 12 OF 12**

2-13.26

DAY 45	ORBIT	CREWMEN ACTIVITIES 1	2	3	DAY	ORBIT	CREWMEN ACTIVITIES 1	2	3	DAY	ORBIT	CREWMEN ACTIVITIES 1	2	3	DAY	ORBIT	CREWMEN ACTIVITIES 1	2	3
0000					0000					0000					0000				
20					20					20					20				
40					40					40					40				
0100					0100					0100					0100				
20					20					20					20				
40		Sleep		Sleep	40					40					40				
0200					0200					0200					0200				
20					20					20					20				
40					40					40					40				
0300					0300					0300					0300				
20					20					20					20				
40					40					40					40				
0400					0400					0400					0400				
20		E/Hyg	Rest	E/Hyg	20					20					20				
40					40					40					40				
0500					0500					0500					0500				
20		0501		Rest	20					20					20				
40					40					40					40				
0600					0600					0600					0600				
20					20					20					20				
40			Sleep	Prep	40					40					40				
0700		Prep		for	0700					0700					0700				
20		for		Ren-	20					20					20				
40		Ren-		dez-	40					40					40				
0800		dez-		vous	0800					0800					0800				
20		vous			20					20					20				
40					40					40					40				
0900					0900					0900					0900				
20		Eat/Hygiene			20					20					20				
40					40					40					40				
1000					1000					1000					1000				
20			Rest		20					20					20				
40					40					40					40				
1100					1100					1100					1100				
20					20					20					20				
40					40					40					40				
1200					1200					1200					1200				
20					20					20					20				
40		Prepare for			40					40					40				
1300					1300					1300					1300				
20		Rendezvous			20					20					20				
40					40					40					40				
1400			with		1400					1400					1400				
20					20					20					20				
40		Flight		229	40					40					40				
1500					1500					1500					1500				
20					20					20					20				
40					40					40					40				
1600					1600					1600					1600				
20					20					20					20				
40					40					40					40				
1700					1700					1700					1700				
20					20					20					20				
40					40					40					40				
1800					1800					1800					1800				
20					20					20					20				
40					40					40					40				
1900					1900					1900					1900				
20					20					20					20				
40					40					40					40				
2000					2000					2000					2000				
20					20					20					20				
40					40					40					40				
2100					2100					2100					2100				
20					20					20					20				
40					40					40					40				
2200					2200					2200					2200				
20					20					20					20				
40					40					40					40				
2300					2300					2300					2300				
20					20					20					20				
40					40					40					40				
2400					2400					2400					2400				

NOTES

GRUMMAN AIRCRAFT ENGINEERING CORPORATION

Table 3-3 APOLLO EXTENSION SYSTEM EARTH ORBIT MISSION STUDY
FLIGHT [redacted] EXPERIMENT MISSION PROFILE

SHEET 1 OF 7

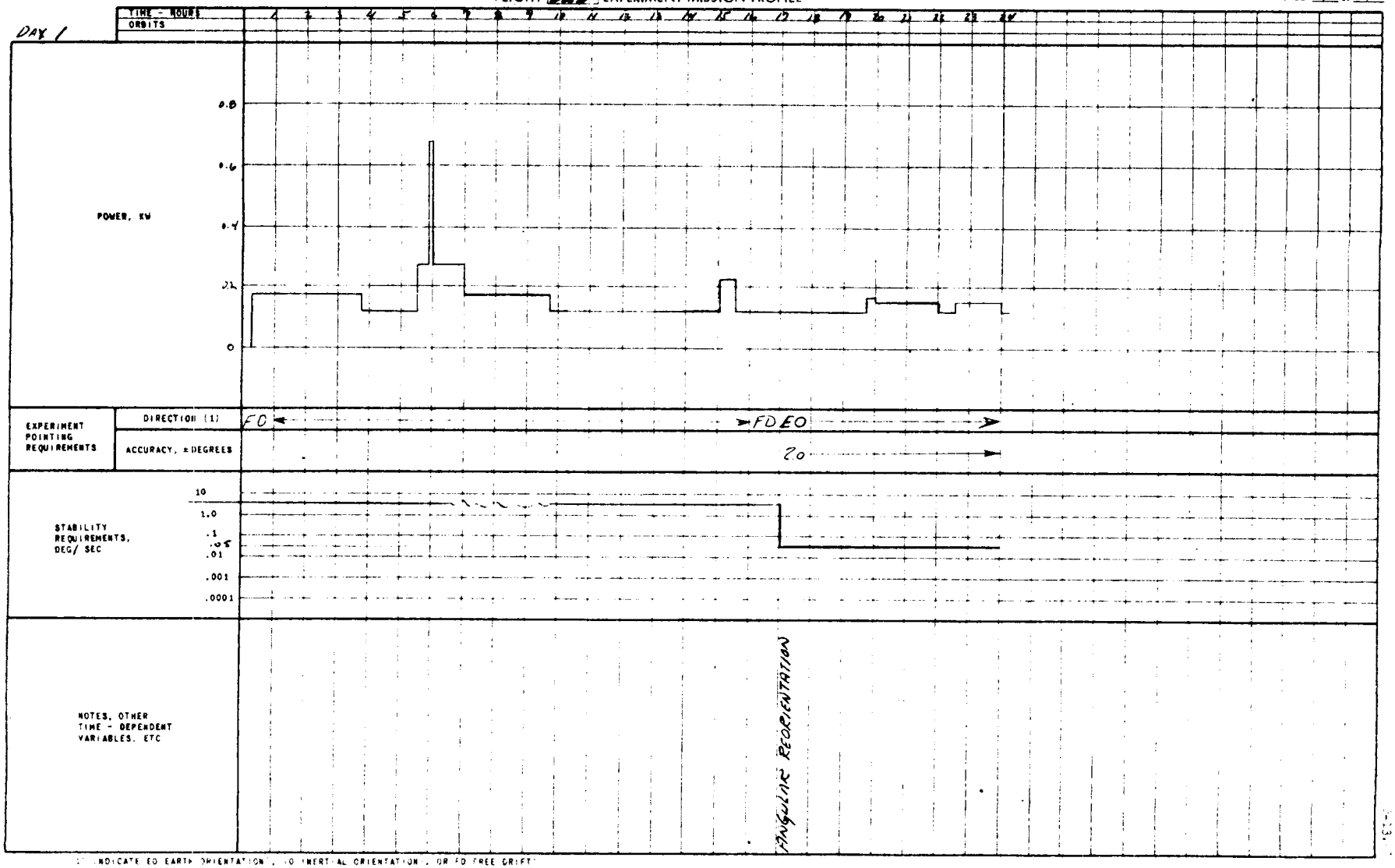

(1) INDICATE EO EARTH ORIENTATION, IO INERTIAL ORIENTATION, OR FD FREE DRIFT

GRUMMAN AIRCRAFT ENGINEERING CORPORATION

Table 3-3 APOLLO EXTENSION SYSTEM EARTH ORBIT MISSION STUDY
FLIGHT [illegible] EXPERIMENT MISSION PROFILE

TIME - HOURS
ORBITS

POWER, KW: 0.8, 0.6, 0.4, 0.2, 0

EXPERIMENT POINTING REQUIREMENTS
- DIRECTION (1): EO
- ACCURACY, ±DEGREES: Z

STABILITY REQUIREMENTS, DEG/SEC: 10, 1.0, .1, .05, .01, .001, .0001, N/A

NOTES, OTHER TIME - DEPENDENT VARIABLES, ETC

(1) INDICATE EO (EARTH ORIENTATION), IO (INERTIAL ORIENTATION), OR FO (FREE DRIFT)

GRUMMAN AIRCRAFT ENGINEERING CORPORATION

Table 3-3 APOLLO EXTENSION SYSTEM EARTH ORBIT MISSION STUDY
FLIGHT [redacted] EXPERIMENT MISSION PROFILE

DAY 19

TYPICAL OF: 15, 16, 17

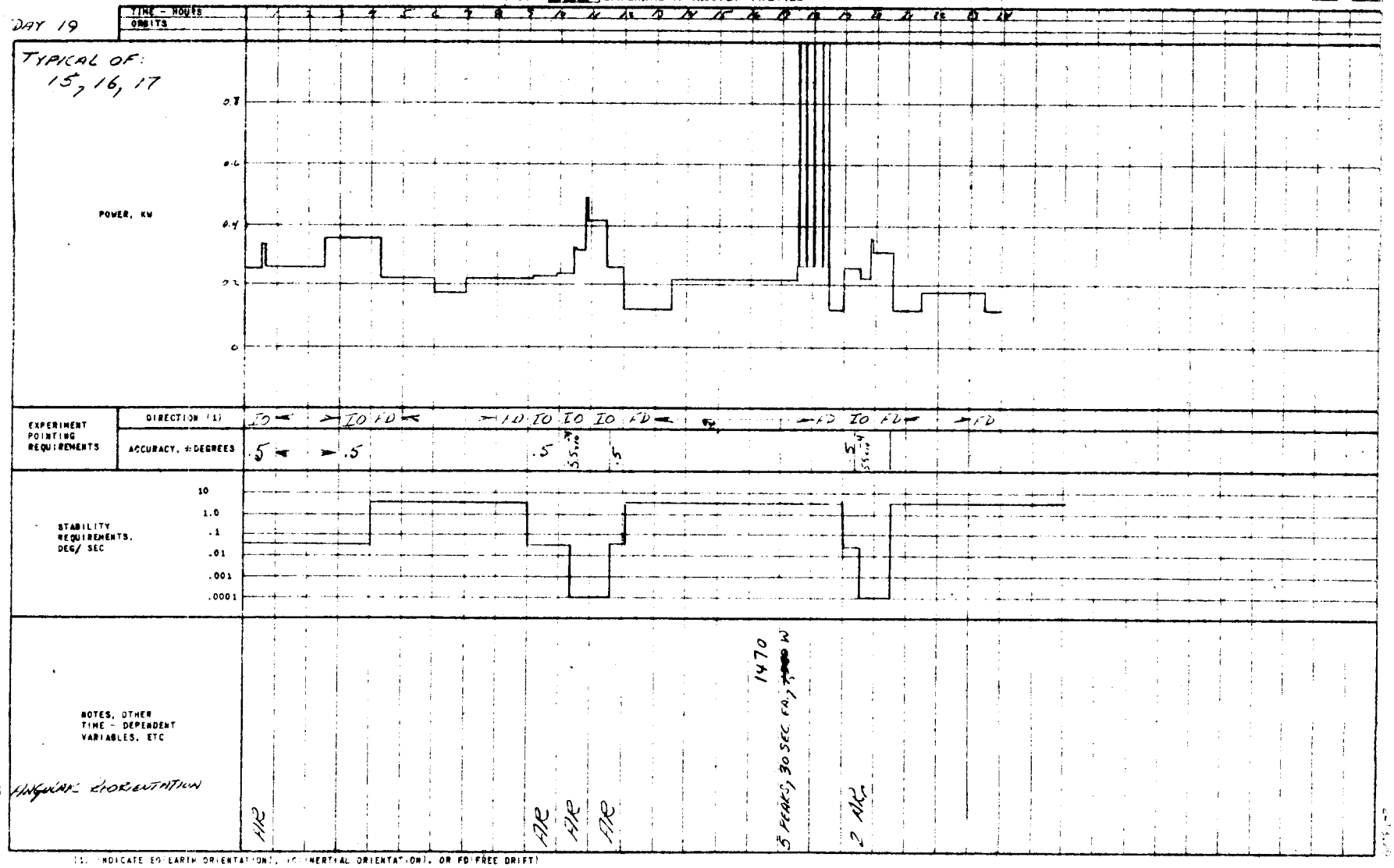

(1) INDICATE EO (EARTH ORIENTATION), IO (INERTIAL ORIENTATION), OR FD (FREE DRIFT)

GRUMMAN AIRCRAFT ENGINEERING CORPORATION

Table 3-3 APOLLO EXTENSION SYSTEM EARTH ORBIT MISSION STUDY
FLIGHT 525 EXPERIMENT MISSION PROFILE

DAY 18

TIME - HOURS: 1 2 3 4 5 6 7 8 9 10 11 12 13 14 15 16 17 18 19 20 21 22 23 24

ORBITS

POWER, KW: 0.8, 0.6, 0.4, 0.2, 0

EXPERIMENT POINTING REQUIREMENTS

DIRECTION (1): FD IO IO IO FD → FD IO IO FD FD FD FD

ACCURACY, ± DEGREES: N/A .5 .5 .5 N/A → N/A .5 .5 N/A → N/A

STABILITY REQUIREMENTS, DEG/SEC: 10, 1.0, .1, .01, .001, .0001

NOTES, OTHER TIME - DEPENDENT VARIABLES, ETC

(AR) ANGULAR REORIENTATION

AR

MINIMUM RATE

AR

(1) INDICATE EO (EARTH ORIENTATION), IO (INERTIAL ORIENTATION), OR FD (FREE DRIFT)

Table 3-3 APOLLO EXTENSION SYSTEM EARTH ORBIT MISSION STUDY
FLIGHT 323 EXPERIMENT MISSION PROFILE

DAY 20

TYPICAL OF 21, 28, 35, 42

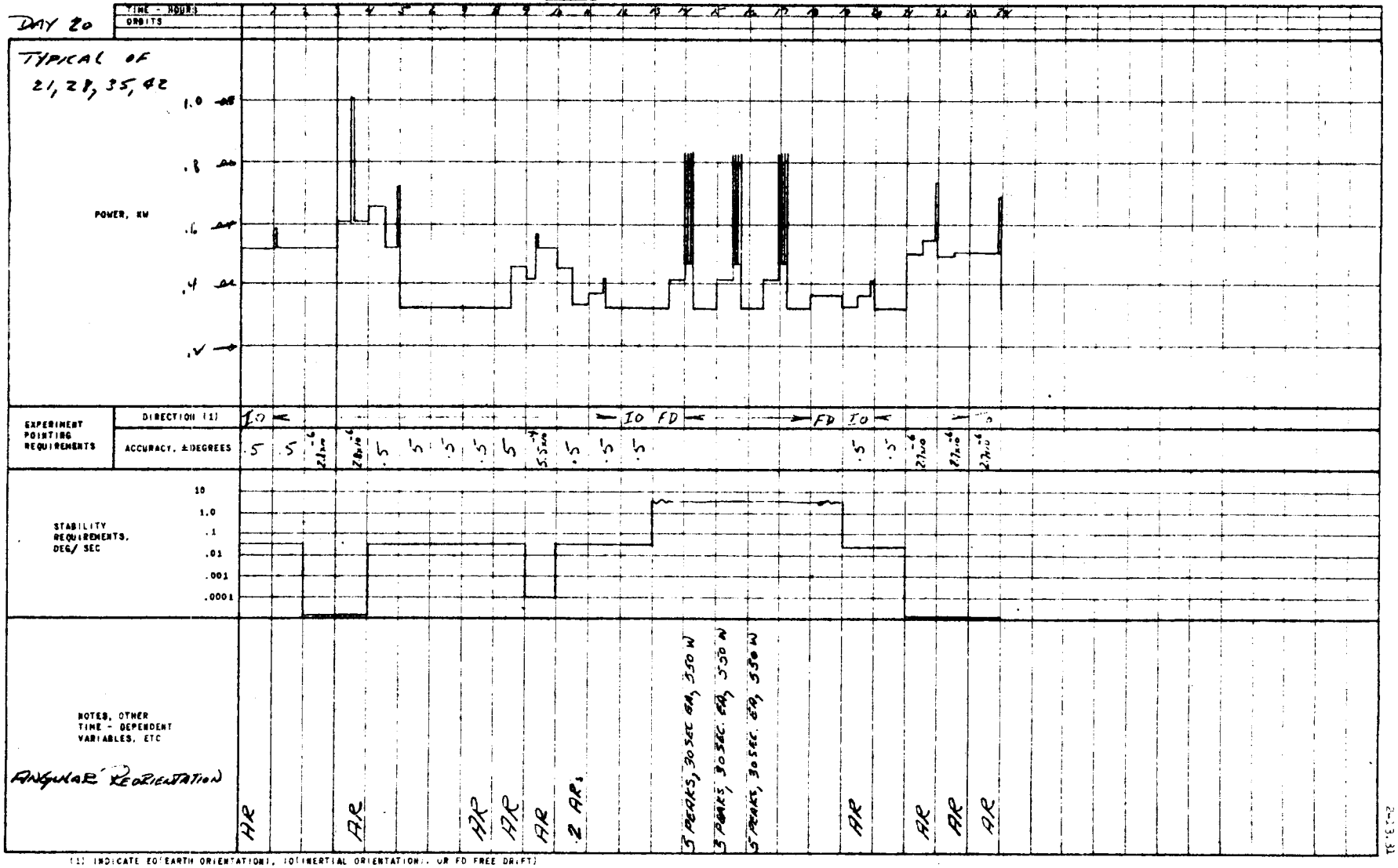

(AR) ANGULAR REORIENTATION

(1) INDICATE EO (EARTH ORIENTATION), IO (INERTIAL ORIENTATION), OR FD FREE DRIFT)

[redacted]

[redacted]

GRUMMAN AIRCRAFT ENGINEERING CORPORATION

Table 3-3 APOLLO EXTENSION SYSTEM EARTH ORBIT MISSION STUDY
FLIGHT [illegible] EXPERIMENT MISSION PROFILE

SHEET 6 OF 7

DAY 22

TIME - HOURS
ORBITS

TYPICAL FOR:
23 — 27
29 - 34
36 - 41,
43,
44.

POWER, KW

1.0
.8
.6
.4
.2

EXPERIMENT POINTING REQUIREMENTS

DIRECTION (1)

ACCURACY ±DEGREES

STABILITY REQUIREMENTS, DEG/SEC

10
1.0
.1
.01
.001
.0001

NOTES, OTHER TIME - DEPENDENT VARIABLES, ETC

(AR) ANGULAR REORIENTATION

AR AR AR AR AR AR AR AR AR AR AR

(1) INDICATE EO (EARTH ORIENTATION), IO (INERTIAL ORIENTATION), OR FD (FREE DRIFT)

[redacted]

GRUMMAN AIRCRAFT ENGINEERING CORPORATION

Table 3-3 APOLLO EXTENSION SYSTEM EARTH ORBIT MISSION STUDY
FLIGHT 523 EXPERIMENT MISSION PROFILE

SHEET 7 OF 7

DAY 45

TIME - HOURS		1 2 3 4 5 6 7 8 9 10 11 12 13 14 15 16 17 18 19 20 21 22 23 24
ORBITS		
POWER, KW	.2	.117 KW
	0	
EXPERIMENT POINTING REQUIREMENTS	DIRECTION (1)	FD ← → FD IO ← → IO
	ACCURACY, ±DEGREES	← N/A → ← 2.0 →
STABILITY REQUIREMENTS, DEG/ SEC	10	
	1.0	
	.1	
	.01	
	.001	
	.0001	
NOTES, OTHER TIME - DEPENDENT VARIABLES, ETC		STABILIZATION REQUIRED FOR EXPT. 1504 DURING INITIAL RENDEZVOUS WITH FLIGHT #229
AR (ANGULAR REORIENTATION)		FR

(1) INDICATE EO(EARTH ORIENTATION), IO(INERTIAL ORIENTATION), OR FD(FREE DRIFT)

[redacted]

2-13.33

3.2 SPACECRAFT DEFINITION

Flight 523 configuration, shown in **Figures 3-1 and 3-2,** is primarily an astronomy flight (0701, 2, 3, 4, 5A). The flight also carries bioscience (0100, 0200, 0501), liquid/gas and solids behavior (0601, 2, 3, 4, 5, 6), space structures technology (1301), space environment (0504), and subsystems development (1401) experiments.

The laboratory portion of this flight stays in orbit 135 days, being resupplied by two subsequent flights. The original Lab is resupplied by a CSM/Lab after 45 days, extending the mission duration to 90 days. The resupplied Lab is then ejected, and the second resupply payload (a CSM/LEM Descent Stage Rack) docks with the original Lab and extends the mission duration to 135 days.

The LEM guidance control station on the left side of the forward cabin is retained to accomplish docking. The final docking operation, associated with each resupply flight, is accomplished by the Lab. The Lab detaches from the original CSM, and using the LEM RCS system and flight controls, docks with the resupply CSM. The reason for flying the Lab for the final docking operation is to retain the docking techniques and hardware developed for Apollo. The Lab retains crew visibility for the docking maneuver, and the LEM RCS and flight control system is readily available. The original CSM parks alongside the Lab and resupply spacecraft, and the return crew transfers to the CSM by EVA.

Support instrumentation is included with experiments carried on resupply flights, earth orientation is required for two weeks to accomplish the radio astronomy and cosmic ray emission experiments. During this period, the liquid/gas and solids behavior experiment apparatus is brought into the laboratory from outside stowage. After the experiments are completed, the apparatus is returned to external stowage. During this period, spacecraft stabilization input is provided by Lab-mounted star trackers.

The astronomy experiments are all aligned parallel to the longitudinal axis of the spacecraft, and are controlled from an astronomer's console on the right side of the forward cabin. Access to the telescope and coronagraph is provided from inside the Lab for readily changing cameras, magazines, and spectrographs. A T.V. view-finder and star trackers provide inputs for orientation and control. Spacecraft pointing accuracy for these experiments is $\pm 1/2^{\circ}$. The telescope and coronagraph are gimballed and incorporate fine error sensors to meet individual experiment requirements.

As shown on the inboard profile, Figure 3-2, adequate internal volume is available to accommodate experiments. A seven day supply of LiOH and all but about 6 cu. ft. of food required for the mission is stored internally. Expended food and LiOH is replaced from external storage by scheduled EVA's.

The radio astronomy antenna arrays, space structures experiment and micrometeoroid collection apparatus are mounted externally on the descent stage. The radio astronomy antenna arrays are deployed manually during an EVA. The portion that remains attached to the spacecraft must be restowed upon completion of the experiment.

Supporting electronics and spares for experiments are carried in the aft equipment bay of the A/S. Structural modifications to the LEM A/S are limited to the incorporation of an air lock below the floor panel in the forward cabin to accommodate the coronagraph. The telescope air lock is designed to mount in the existing ascent engine hatch. D/S structure must be reworked to accommodate the coronagraph. Supports for all other items can be added without modification.

KEY

No.	Experiment	Name
1	0504	Micrometeoroid Collection
2	0606	Cosmic Ray Emission
3	0704	Study of Nearby Solar-Like Stars in X-Rays
4		Boresight Star Tracker
5	0605	Crystallization Studies
6	0703	Manned Coronagraph
7	0702	Intermed-Size Reflecting Telescope
8		RCS Fuel
9	0705A	Radio Astronomy 1-5 mc Range
10		Potable Water Tank
11		Waste Storage Tank
12		LiOH Storage
13	1301	Space Environment Effects on Structures
14		External Storage for Exp. 0601, 0602B, 0603A, 0603B, 0604, 0605 & Food.
15	0701	Emission Line Radiometry
16		FCA Radiator
17		Equipment Radiator
18		TV Viewfinder
19		GOX Tank
20		RCS Fuel - 8 Sets (D Conf. Only)
21		RCS Fuel - 4 Sets (C Conf. Only)
22		IR Earth Sensor
23		Power Pack

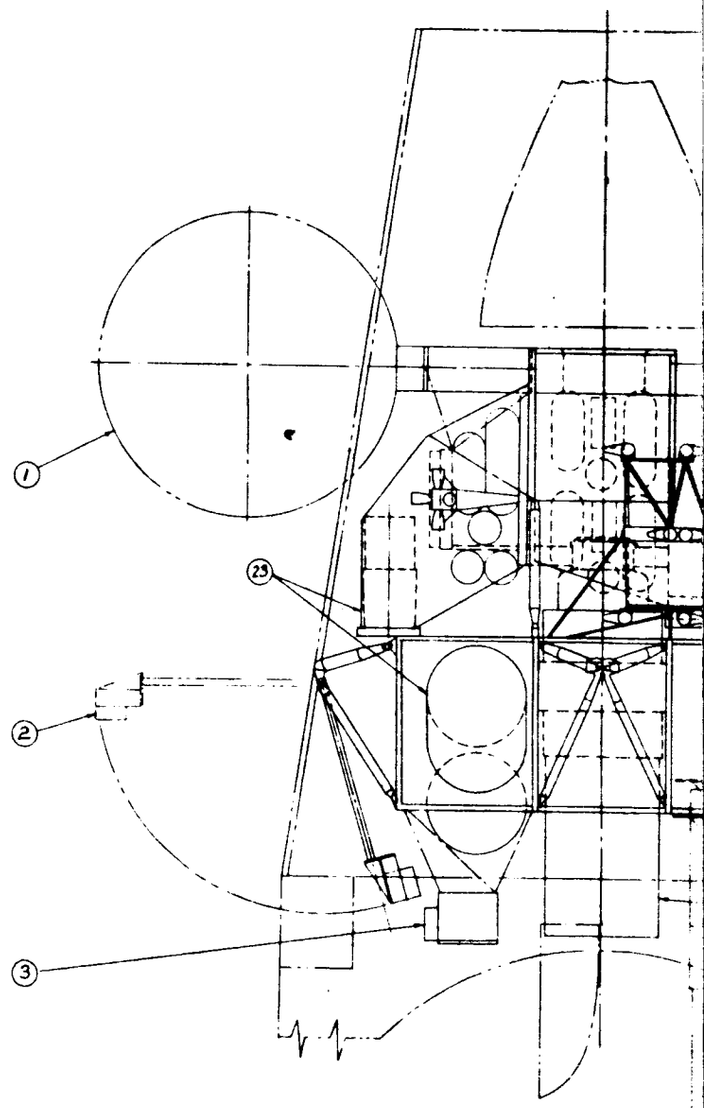

LAUNCH CONFIGURATION

FOLD-OUT #1

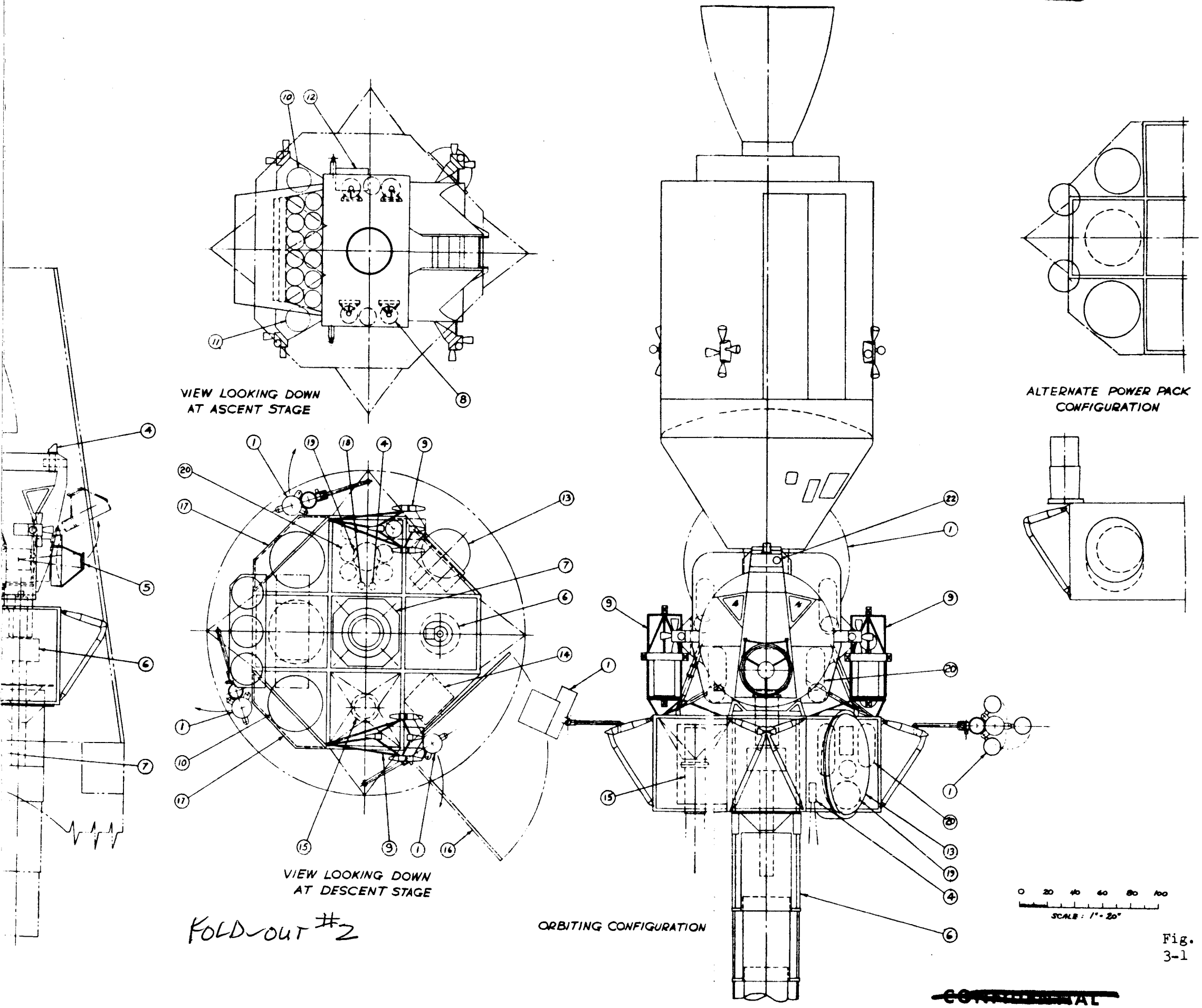

FOLD-OUT #2

Fig. 3-1

Grumman
AIRCRAFT ENGINEERING CORPORATION
PRELIMINARY DESIGN SECT.

Gen Arrgmt Flt. 523
Astronomy &
Bioscience Lab II

SCALE OF DESIG. DWG. - 1/20

AES 1040

KEY

No.	Experiment	Item
1		Food
2		ECS
3		LiOH (10)
4		Biomed
5		
6	0703	Coronagraph
7		Data Recorder, Log & Data Book, Tape Recorder, F[illegible] & Tape Storage
8	0702	Telescope
9	0606	Cosmic Ray Emulsion
10		LGC
11		Equipt. Packages [illegible], 0602B, 0603A, 0603B, 0604, & [illegible]5. Held here during experiment. Upon completion will be removed to outside storage.
12	1401	Personnel Hygiene & Food Tech.
13		Floodlights
14	1401	Shower, Stowed
15	0704	X-ray Detector
16	0504	Micrometeroid Col[illegible]ion
17	0605	Solar Concentrat[illegible]
18		Biomed Refrigerat[illegible]
19		Biomed Incubator
20	1506	Display Panel
21		Astronomers Disp[illegible] Console
22	0602B	Liquid Drop Dynar[illegible] Study
23		Seat and Restrain[illegible])
24		Bicycle Ergometer
25		Attitude Control[illegible] Assy
26		Battery Charger, [illegible]e Height Analyzer, Tissu[illegible]quiv. Ionization Chamber
27		ECS Display Panel [illegible]xp. 0403
28		N&G Display Panel
29	0504	Display Panel

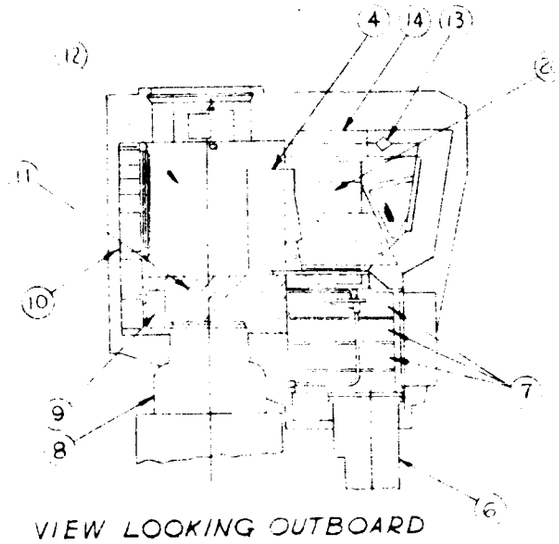

VIEW LOOKING OUTBOARD LEFT HAND SIDE

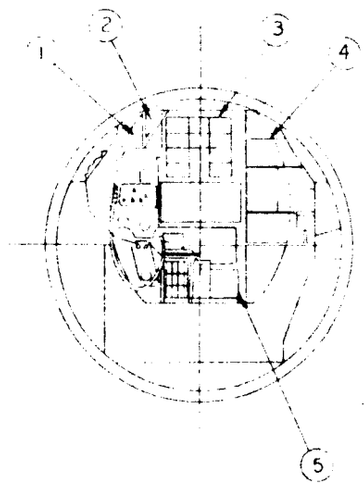

VIEW LOOKING AFT

FOLD-OUT #1

[redacted]

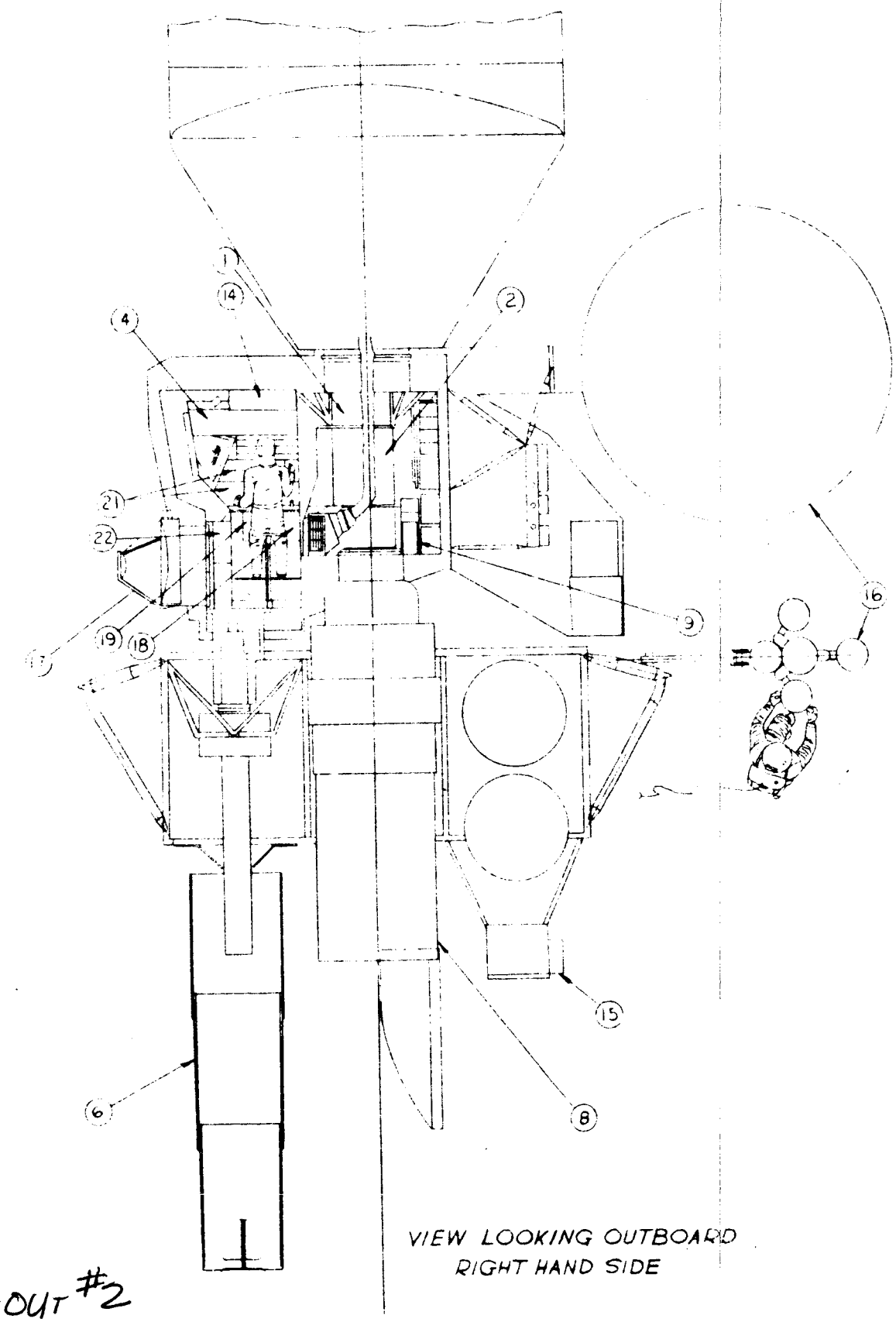

VIEW LOOKING OUTBOARD
RIGHT HAND SIDE

FOLD-OUT #2

0 20 40 60 80 100
SCALE : 1" = 20"

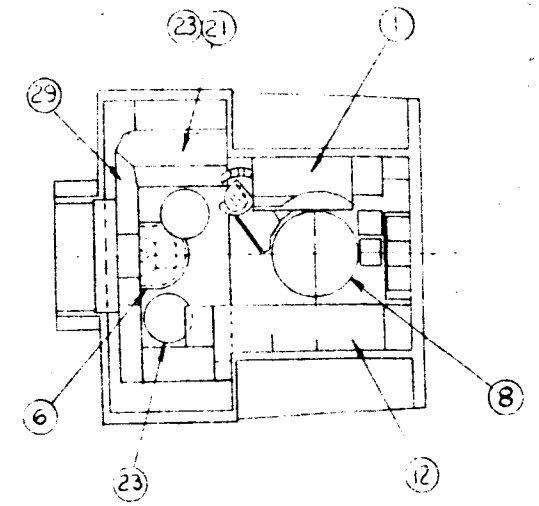

PLAN VIEW

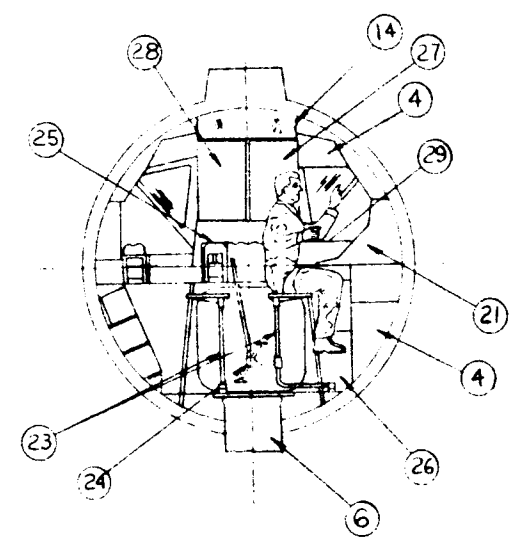

VIEW LOOKING FORWARD

Grumman
AIRCRAFT ENGINEERING CORPORATION
PRELIMINARY DESIGN SECT.

Fig. 3-2

Ind Prof Flt. 523
Astronomy & Bio-
science Lab II

SCALE OF ORIG. DWG. - 1/20

AES 1041

~~CONFIDENTIAL~~

Pointing and stability propellant requirements beyond the RCS propellant capacity of the CSM versions are accommodated by the laboratory. Sufficient LEM RCS tankage can be provided for the "C" -version requirements, but an additional propellant supply mounted on both the A/S and D/S is required for the "D" -version. Sufficient RCS propellant is also included on this flight to satisfy the requirements of the second resupply vehicle "D" version.

In addition to the standard CSM/LEM interface, this flight requires additional wiring to accommodate the pointing requirements of experiments. Interface wiring includes horizon scanner and star tracker sensory inputs used to maintain attitude hold, and command data from the Lab flight controller for manual control of spacecraft slewing operations.

The difference between "C" and "D" versions of the Lab are the addition of one Apollo X O_2 and one Apollo X H_2 tanks, added fuel cell reactants, and the addition of one FCA. Also, the FCA radiator is increased by 20 sq. ft. These modifications to a "C" -version Lab accommodate the added power demand of the "D" -version required by taking over spacecraft power requirements after (nominally) 14 days.

This flight utilizes an Apollo CSM fuel cell electrical generation system, a LEM ECS to provide independent life support operation during rendezvous, and selected components to provide data transmission, status and appropriate displays.

VHF communications are provided in the LEM to provide voice and data links to the CM during rendezvous operations.

The estimated laboratory weight of the "C" version is 19282 lbs and of the "D" version is 24592 lbs (see table 3-4 and 3-5).

Basic subsystem characteristics pertinent to this flight are described below:

Vehicle Orientation	Inertial and Earth Pointing
Stabilization Reqm'nts	$\pm .5^{\circ}$ @ 330 hr $\pm 5^{\circ}$ @ 750 hr
AVG Experiment Pwr (Delivered)	680 watts
Number of Repressurizations	1°
Equipment Cooling	26 Ft^2 radiator

	"C" Config	"D" Config Takeover Point = 14.8 days
Number of Fuel Cells	2	3
Oxygen Tanks	1 Apollo X	2 Apollo X
Hydrogen Tanks	1 Apollo X & 1 Block II	2 Apollo X
Peaking Battery	5 Amp Hr	5 Amp Hr
Fuel Cell Cooling	12 Ft^2 radiator	32 Ft^2 radiator
RCS System	Std LEM Thrusters	Std LEM Thrusters
RCS Tankage	8 LEM Ox - 8 LEM Fuel	16 LEM Ox - 16 LEM Fuel
S & C System	Sensors, Controllers, ATCA, Rate Gyros, Panels, FDAI Needles	
Waste Reactants	0	0
Water for Thermal Control (Max)	7.2	7.2 lbs
Water Generated	770 lb	1590

TABLE 3-4 LEM LAB DETAILED WEIGHT STATEMENT

Flight 523

Component	Weight, lbs Configuration C	D
Structure	(2883)	(2913)
Basic Ascent	802	802
Basic Descent	750	750
Shielding	575	575
Power Pack Structure	50	50
Experiment Supports	623	623
RCS Supports	83	113
Stabilization and Control	(205)	(205)
Attitude Translation Control Ass'y	27	27
Rate Gyro Ass'y	2	2
Controllers	14	14
Star Trackers and Electronics	126	126
Horizon Scanner	36	36
Crew Provisions	(314)	(314)
Restraints	35	35
Lighting	10	10
Food	228	228
LiOH - PLSS	41	41
Reaction Control System	(3158)	(6264)
Propellant	2280	4630
Propellant System	536	1072
Pressurization System	220	440
Thruster Ass'y	122	122
Controls and Displays	(779)	(779)
Environment Control	(1281)	(1333)
Atmosphere Revitalization System	80	80
O_2 Supply and Cabin Pressurization	34	34
Water Management	36	36
Heat Transport, Cold Plates, Coolant	105	105
LiOH - ECS	382	382
Water	200	200
Radiators	286	338
Thermal Control	158	158
Instrumentation	(171)	(171)
Signal Conditioner	45	45
PCM and Timing Elec. Ass'y	39	39
Data Storage	25	25
Experiment Selector	6	6

TABLE 3-4 LEM LAB DETAILED WEIGHT STATEMENT (Cont'd)

FLIGHT 523

Component	Weight, lbs Configuration C	D
Data Tapes	50	50
Spare Voice Recorders	6	6
Electrical Power Supply	(2586)	(4708)
Fuel Cell Ass'ys	492	738
Reactants and ECS Oxygen	920	2322
Reactant Tankage	424	848
Batteries and Charger	86	86
Plumbing	40	60
Inverters	75	75
Wiring, Distribution and Umbilical	549	579
Communications	(58)	(58)
Television	24	24
Audio Center	6	6
Voice Recorder	2	2
VHF/UHF Communications	26	26
Experiment	(7787)	(7787)
Spares	(60)	(60)
Total Laboratory	19,282	24,592

TABLE 3-5 INTEGRATED SPACECRAFT WEIGHT STATEMENT

Flight 523

Component	Weight, lbs Configuration C	Weight, lbs Configuration D
Command Module Basic Weight	(10,287)	(10,287)
Service Module Basic Weight	(12,443)	(9160)
CSM Retro-Propellant	(1349)	(1191)
Laboratory Weight	(19,282)	(24,592)
Basic Laboratory Structure	2883	2913
Experiments	7787	7787
Experiment Support Systems	4561	6089
Expendables	4051	7803
CSM Experiment Dependent Weights		
RCS Propellant	2210	720
Total Laboratory and Experiment	(21,492)	(25,312)
Allowable lab and Exper. Weight	195,921	199,362
Total Orbiting Weight	45,571	45,950
Service Module Propellant (Ascent)	0	0
SLA Adapter	3505	3505
Launch Vehicle Payload	49,076	49,455

4. FLIGHT OPERATIONAL SUPPORT: FLIGHT NO. 523

Experiment 0100 & 0200 - Medicine and Behavioral - Periodic daily data transmission and ground monitoring of safety parameter data.

Experiment 0501 - Radiation Environment Monitoring - External particle flux measurements during a solar flare event are to be correlated with the solar activity observations made on earth stationed observatories and other satellites.

Experiment 0606 - Cosmic Ray Emulsion - Routine monitoring of solar activity.

Experiment 0703 - Manned Coronagraph - Simultaneous measurement of the total solar energy profile at the time of coronal observation. Correlation of data collected at earth stations, OSO and AOSO satellites and the manned coronagraph.

Table 4-1 presents the experimental data management requirements of the flight. A general discussion of this table and the data management system is contained in Volume 1.

TABLE 4-1. FLIGHT 523 DATA MANAGEMENT

Avg. Daily Data Recording Requirements

Experiment No.	Data Rate K-bits/sec	Recording Time, min (A) 51.2 K-b/sec	(B) 1.6 K-b/sec	Remarks
0100s	9 (AVG)	43		1.5 Exper-Hr/Day
0200s	6.4 (AVG)	59		3.3 Exper-Hr/Day
0501	0.8		45	45 Min/Day Monitoring
0504	1.6		30	22 Hr/Mission
0603 A&B	0.2		13	10 Hr/Mission
0701	Analog	20		30 Min x 30 Times
0704	1.0		47	35 Hr/Mission
0705A	51.2	130		90 Min x 65 Times
1301	0.2		14	10.4 Hr/Mission
1401	0.2		11	8 hr/mission
0601 0602A&B 0604 0606 0702 0703	Negligible Recording Requirements			
Totals		252	160	

Avg. Daily Data Transmission Time, min:

Reqd: A + B/32 = 257 min

Available = 280 min

Data Excess (Minutes of Tape) per Day:

Required Minus Available Transmission Time = zero

Data Tape Return Required: Data Excess per Mission (min) = zero
30 Min/Tape Reel

Optimum Avg. Daily Transmission Time Required = 174 min.

Voice Tape Return Required (4 packages)	8 lb, 0.1 cu ft
Film Return Required	196 lb, 4.1 cu ft
Data Tape Carried	50 lbs

1. FLIGHT MISSION DESCRIPTION

Flight No. 229

Altitude, n.mi 200	Inclination, deg 28.5	Duration, days 45	Crew 3

Mission Title: ASTRONOMY LOGISTICS I AND BIOSCIENCE LABORATORY

Objectives: This flight will rendezvous with the previous flight for continuation of the astronomy experiments and the initiation of bioscience experiments. Space structures technology experiments will also be conducted. Personnel and cargo transfer operations will be developed as new crew and equipment are integrated into the existing laboratory.

Configuration: C (Extended CSM, LEM A/S, Low Profile D/S with Docking Tunnel), or
D (Modified Block II CSM, LEM A/S, Low Profile D/S with Docking Tunnel)

Experiment Summary:

No.	Title	Equipment Location: LEM Stage Asc	LEM Stage Desc	CM
0401	Microbial Genetics and Growth	x		
0402	Development Biology	x		
0403	Mammalian Physiology	x		
0404	Limb Regeneration and Wound Healing	x		
0405	Effects of Drugs on Mammalian Behavior	x		
0406	Space-Borne Micro-Organisms	x		
1302	Deployment of RF Reflective Structures		x	
1306	Large Aperture, Space Erectable Antenna		x	
1504	Development of Personnel and Cargo Transfer Operations		x	

2. EXPERIMENT DESCRIPTION SUMMARY

FLIGHT - 229

EXPERIMENT: 0401 - Genetic Effects in Microorganisms (DNA Recombination, Mutation Rate, and Phage Production) - This experiment is an investigation in the fundamental mechanism of reproduction. The objectives are: to determine effects of the zero gravity condition on replication and recombination of DNA in microorganisms; and, to test the hypothesis that synergistic effects on mutation rates and phage production in microbial cells may occur due to prolonged weightlessness in combination with other space enfironmental factors, particularly radiation. This experiment involves the transfer of microorganisms into tubes of suitable culture media, infection of the cultures with lysogenic phage strains, halting the infection at timed intervals, and observing results in the space laboratory. Additional examinations will be made on return to the Earth laboratory.

EXPERIMENT: 0402 - Effects of Space Flight on Morphology, Growth, and Gas/Liquid Separation in Microorganisms, Unicellular Organisms, and Animal Tissue Cells. - The objective of this experiment is to determine the effects of weightlessness, independently and in combination with other space flight environmental conditions, on growth rates and morphology of unicellular organisms and tissue cells. Changes observed will provide information of such effects applicable to animals and man at the cellular level of body tissues that can be related to the results of biomedical and behavioral investigations. One part of this experiment involves the incubation of microorganisms (E. coli) in a suitable liquid culture medium and measuring their rate of multiplication by means of a spectrophotometric record of increase in density. A second part of this experiment is the investigation of a hypothesis that gaseous metabolic products of a non-motile organism remain as an envelope surrounding the cell in quiescent aqueous solutions and could thereby interfere with normal metabolism of the cells. A third part of the experiment involves the growth and observation of paramecia and of HeLa cells to detect possible changes in growth rates and specific metabolic effects. The paramecia and the HeLa cells would be introduced into their separate appropriate liquid-nutrient media by the astronaut. Their growth rate would be studied, using a continuous culture process in which the aerated nutrient solution will be circulated. The nutrient solution will be pumped in and the effluent removed at the same constant rate. At selected daily intervals, samples from the effluent would be frozen and returned to Earth for measurement of growth rate, analysis of enzyme changes, and determination of morphological changes.

EXPERIMENT: 0403 - The Effects of Weightlessness on Cardiovascular and Respiratory Functions, Hormone, Mineral, and Water Metabolism, ANS, CNS and Brain Mechanisms, Operant Behavior, and Biorhythms in the Primate. - The objective of this experiment is to study in detail the effects that immobilization, isolation, sensory deprivation and weightlessness may induce on physiological, neurological, metabolic and performance characteristics of the mammalian organism. Measurements will be made, such that, any effects will be indicated by such symptoms as: changes in blood pressure, volume and velocity, pulmonary mechanisms, mineral mobilization, metabolic rate, RG, BMR, slowing of the reflex arc, abnormalities in EKG and EEG patterns, and degradation of performance. The study will be conducted on a heavily instrumented chimpanzee. Effects on the measurements of motivational factors will be investigated. Finally, study of higher mental processes, learning, and decision making ability will also be included. The cardiovascular functions will be measured by means of clinical methods applicable to spaceflight conditions. The respiratory measurements concern respiratory rate, tidal volume, vital capacity, and carbon dioxide production. The interaction with food intake, water intake, thermo regulation, exercise, oxygen level, and various performance measures with metabolic rate will be determined and analyzed.

EXPERIMENT: 0404 - Limb Regeneration and Wound Healing During Weightlessness - The objective of this experiment is to investigate possible changes in capacity and rate of tissue regeneration in newts and planaria that may result from prolonged weightlessness, and to relate the results to effects on tissue regeneration and wound-healing in higher forms of animals. Planaria have been used extensively to study properties of tissue regeneration because of their ability to form separate animals by fission and to regenerate new intact animals from severed segments. The astronaut will be required to maintain the planaria culture during the flight, after their surgical preparation at the launch site. The mechanism for recirculation of water in the animal chambers will have to be stopped during a feeding period of 2 hours duration every other day. The morphological changes in the animals will be observed and recorded by low-power photomicrography. Radiation shields will be used to vary the environmental radiation. Similar investigation using newts as the experimental animal is included in this overall experiment concept.

EXPERIMENT: 0405 - The Effects of Drugs on Mammalian Behavior in Space Flight - The objective of this study is to determine the effect of drugs on behavior patterns under conditions of weightlessness, isolation, partial and complete sensory deprivation, and forced immobility. It is assumed that these factors will act as stressors on the living organism and will effect behavior and performance. In particular, if the basic biologic mechanisms for altering behavior by means of pharmacological agent can be identified, drugs possibly can be used to minimize any adverse effects of space flight or to control behavior. The fundamental experiment will be to observe the influence of drugs on trained animals both on the ground and in spacecraft. For example, groups of rats will be trained to obtain a liquid reward (water) on a fixed interval schedule. After achieving a stable level of performance, each group will be subject to different periods of isolation and the rats observed and the rate of water intake measured by means of standard procedures. As a second step, different types of drugs that are active on the central nervous system will be used to modify any behavioral or performance pattern that occurs during isolation. Typical drugs might be amphetamine, caffeine, methylphenidate, iproniazid, imipramine, pentobarbital, chlorpromaxine, reserpine, and benactyzine.

EXPERIMENT: 0406 - Soft Capture, Enumeration, and Identification of Space-Borne Microorganisms - The object of this experiment is to test and perfect techniques for the capture of microorganisms in space, in order to permit their enumeration and identification. The feasibility of employing various sampling techniques already developed and under development will be evaluated. The yield attained by the collection techniques will be analyzed with respect to types of organisms and viability of life forms. It is hypothesized that microorganisms can occur in near space either as free cells or as adherents to solid particles. Techniques to be assessed include screens covered with hylax, as used earlier in satellites and very-high-altitude aircraft, and simple infraction methods involving the use of silicon greases and other materials as imfraction surfaces. Provisions for protection of collected samples from contamination by terrestrial organisms will be evaluated. Collected material will be assayed chemically for protein nucleic acids, or other significant compounds after the samples have been returned to the Earth.

EXPERIMENT: 1302 - Deployment of R.F. Reflective Studies - The objective of this experiment is to observe and describe development of large RF reflective structures composed of fibrous material which, on release, tends to assume preformed shape. The structure will be released from the spacecraft and the astronaut will observe and photograph deployment. The structure may be tethered to assure proper visual range until deployment is completed.

EXPERIMENT: 1306 - Large Aperture Space Erectible Antenna (30 ft. Diameter) - The objective of this experiment is to prove the feasibility of space erection of a packaged antenna system, which when erected will provide a precisely shaped parabolic collimator for RF signals. Parabolic segments with high strength to weight ratio, low distortion under thermal differentials, high current conductivity, will be erected. After antenna deployment, a photogrammetric record of the antenna surface will be made. Signal level, recorded as the antenna is rotated through several revolutions, while receiving ground transmitted test signals will constitute the antenna's radiation pattern.

EXPERIMENT: 1504 - Development of Personnel and Cargo Transfer Operations - The objectives of this experiment are: to perfect the equipment needed for transfer; to develop handling techniques; and to train the crews in the methods of intra-vehicular and extravehicular transfer operations. Personnel and cargo transfer operations will be conducted on the resupply flight. The transfers will be accomplished prior to the docking operations. Transfer will be accomplished by the following means: tether line; conveyor-type system, and AMU-powered transfer with the personnel carrying cargo.

[redacted]

TABLE 2-1 FLIGHT 229 INTEGRATED EXPERIMENT EQUIPMENT LIST

Exper. No.	Component	Weight, lb	Vol, cu ft or size*	Elec Energy or Elec Pwr	Remarks
0401		(60.1)			
	Incubator with Shielded Comp.	7.0	2	25 W	
	Vials, Test Tubes, Petri Dishes	5.0	2	N/A	
	Phase contrast & Dissecting Microscope	5.0	0.57	10 W	
	Work Shelf	1.0	20 x 24	N/A	
	35 MM Camera	3.0	0.2	N/A	
	Colony Counter	20.0			If Quebec counter is used, the following are applicable: Wt (10 lb or less) Power (10 w or less)
	Nutrient Media	2.0	0.5	N/A	
	Refrigerator	6.0	1	20 W*	
	Needles with Syringes	1.0	6 x 6 x 6	N/A	
	Stored chemicals	0.1	0.01	N/A	
	Freezer	10.0	1	30 W*	*May be tied into Cryogenic supply
0402		(174.7)			
	E. Coli tubes Pseudomoivas Alcae				
	Culture Flasks Paramecium HeLa Cells	15.0	2	N/A	
	Sterile Nutrient Media	2.0	Contained		
	Incubator	15.0	3	20 W	
	Compressed Air				*E.C.S.
	CO_2 Sampler	2.0	0.2	5 W	
	Finger Pumps (2)	2.0	0.5	30 W	
	Chemostat (Shielded)	3.0	0.3	50 W	
	Syringes	1.5	Contained	N/A	
	Sample Vials	1.5	Contained	N/A	
	Freezer	25.0	3	30 W	
	Refrigerator	25.0	3	20 W	
	Densitometer	0.2	Contained		
	Microscope	5.0	0.57	10 W	
	Photographic Equipment	3.0	0.2	N/A	
	Centrifuge	4.0	7 x 7 x 9 4	5 W	
	Centrifuge Tubes	1.0	Contained		
	Scintillation Counter	20.0	1.5	3 W	
	Particle Counter	6.0	3.0	40 W	
	Lights (For Algae)	1.5	0.15	100 W	
	Slides Etc.	2.0	Contained	N/A	

*INCHES UNLESS OTHERWISE SPEC.

[redacted]

TABLE 2-1 FLIGHT 229 INTEGRATED EXPERIMENT EQUIPMENT LIST

Exper. No.	Component	Weight, lb	Vol, cu ft or size*	Elec Energy or Elec Pwr	Remarks
cont 0402	Fixatives Etc.		Contained	N/A	
	Leadshield	20.0	Contained	N/A	
	Supply Cabinet	20.0	4		
		(235.9)			
0403	Chimpanzee	50.0	Contained	N/A	
	Chimpanzee Enclosure	45.0	7.6	N/A	
	Water Management System	10.0	0.5	2 W	
	Waste Management System	25.0	0.5	5 W	
	Psychological Panel	25.0	1.5	3 W	Periodic
	Food Management Syst & Food	40.0	1.5	5 W	Periodic
	Programer & Computer	25.0	2.0	5 W	
	Electrocardiogram	0.2	Contained		
	Blood Pressure Apparatus	0.01			
	Cardiac Output Device	0.03			
	Ballistocardiogram	0.03			
	Respirometer	0.1		10 W	Intermittent
	Vascular Catheter	0.01			
	Phonovibrocardiogram	0.03	Contained		
	Instrument Package	10.0	1.5		
	Urine & Blood Analysis Equipment	1.5	Contained		
	Supplies & Cabinet	2.0	1.0		
	Camera & Supplies	2.0	Contained		
0404		(78)			
	Planaria Culture Chamber	20	1' x 1' x 1'	N/A	
	New Culture Chamber	20	1' x 1' x 1.4'	N/A	
	Food	3		N/A	
	Water System	2	Contained in Culture Chamb	10 W	
	Waste Disposal System	4	1' x 1' x 1'	10 W	
	Microscope	5	0.57	10 W	
	Surgical Equipment	3	on board	N/A	
	Freezer	10	1.0	30 W	
	Aeration Apparatus	2		N/A	
	Film Storage	5	0.2	N/A	
	Camera				On Board
	Equipment Storage Box	4	0.5	N/A	

*INCHES UNLESS OTHERWISE SPEC.

TABLE 2-1 FLIGHT 229 INTEGRATED EXPERIMENT EQUIPMENT LIST

Exper. No.	Component	Weight, lb	Vol, cu ft or size*	Elec Energy or Elec Pwr	Remarks
0405		(618)/(708)			Totals for "C" & "D" Flts
	TV - Camera	6	12 x 6 x 4	6 W	TV camera will be Westinghouse LEM type
	Animals	25	Contained	N/A	
	Response Mechanism	50	Contained	N/A	
	Drugs	3	Contained	N/A	
	Plumbing & Feeders	40	0.5	N/A	
	Quick Freezer	10	1.0	30 W*	*Could be tied into cryogenic supply.
	Storage Cabinet	5	0.5	N/A	
	Food	30	Contained	N/A	
	Rat Cages	35	10.5	N/A	
	Food Storage	6	3.4	N/A	
	Charcoal Canister	5	0.5	N/A	
	Water	280/370			280#-'C' flt. 370#-'D' flt
	Water tanks installed	45	6.4	N/A	Existing LEM tanks
	Waste Storage	3	1.0	N/A	
	Oxygen	75		N/A	
0406		(41)			
	Sampling Device	4-6		N/A	
	Dissecting Microscope	5		10 W	
	Growth Media & Supplies		Contained	N/A	
	Refrigerator	10	1	15 W*	*Maybe tied into ECS Glycol loop.
	Storage Incubator (2)	10	0.5	40 W	
	Anaerobic Incubator (2)	10	0.5	40 W	
1302		(159)			
	50 Foot Balloon	150	10		Spacecraft oriented to see experiment
	16 MM Film	4			
	Fixed Lighting System	5	.75	750 W	
1306		(540)			
	Antenna, Gimbal, Motor Drive, Servo Amp.	300	252	300 W	Operates 2 hrs. once/day after 1 hr warmup at 500 W
	4 Channel Paper Tape Recorder		2	20 W	
	Antenna Pattern Receiver/Recorder		1	20 W	
	Tracking Receiver	25	.25	50 W	
	Parametric Amplifier	20	2.25	100 W	
	Data Receiver	100	2.25	100 W	

*INCHES UNLESS OTHERWISE SPEC.

TABLE 2-1 FLIGHT 229 INTEGRATED EXPERIMENT EQUIPMENT LIST

Exper. No.	Component	Weight, lb	Vol, cu ft or size*	Elec Energy or Elec Pwr	Remarks
Cont 1306	Radiometer	70	2.25	100 W	
	Modulator	15	.25	10 W	
	Frequency Meter	10	.19	10 W	
		(1002)			
1504	Safety Line (2) (100 Ft)	20	.5		
	AMU Battery Recharge			250 W	
	Motor/Reel System	100	1	250 W	
	AMU (2)	330	10	250 W	Require Battery charge
	Dummy Cargo Container	20	2		
	Chest Pack	82	0.15		
	Chest Pack Battery Recharger			75 W	30 min. each time
	AMU Fuel Resupply System	450	16.0		
0501	Radiation Environment Monitoring				
0702	Intermediate Size Telescope				continued from flight 523
0703	Coronagraph				
0704	Gamma and X-ray Telescope, TV camera and Monitor, 16-MM cameras (2)				
	Total Weight	2909 2999	C' flt D' flt		

*INCHES UNLESS OTHERWISE SPEC.

3 EXPERIMENT/SPACECRAFT INTEGRATION

3.1 Mission Definition

Flight 229 is designed to rendezvous with the previous flight. In addition to its own complement of experiments, the rendezvous provides an opportunity to evaluate cargo and personnel transfer techniques, study the effects of spaceflight beyond 45 days and continue the astronomical experiments begun on the previous flight. Experiments on the flight include the cargo and personnel transfer (1504), two space-structures technology experiments (1302, 1306) and the living organisms series (0401 to 0406). With the possible exception of the bio-medical experiments, the astronomical studies are considered to be of prime importance. The exception can come about if one of the astronauts from the previous flight remained with this flight to extend his stay to 90 days. In this case bio-medical experiments would be prime for him and preventative for the other astronauts.

Scheduling the experiments presented no problems. The space structures experiment required very little time to perform and cargo and personnel transfer fitted naturally at the beginning of the mission. Living organisms experiments require periodic attention throughout the mission which is ordinarily in conflict with the requirements of the astronomical studies, however, the abundance of available time removes any objection to the combination.

The crew schedule (Table 3-2) was developed to meet all experiment requirements and to provide a work-eat-sleep cycle that avoided staggered shifts. The lettered blocks are available for performance of systems checks, and biomedical and astronomical experiments as the flight may require. They are shown in the time-line as available blocks of hours, however, the power profiles and the flight statistics include a representative series of experiments inserted into the blocks. The approximate lengths of time represented by the blocks are:

A	20 min.	F	120 min.	L	220 min.
B	40	G	140	M	240
C	60	H	160	N	260
D	80	J	180	O	280
E	100	K	200		

The "available" blocks in the time line amount to 961 manhours. Of this total, 768 manhours are assumed to be consumed in the mission for astronomical, biomedical and systems checks, and are reflected in the flight statistics.

The mission summary and experiment equipment profile are presented as Tables 3-1 and 3-3, respectively. Additional experiment requirements applicable to this flight are:

Spacecraft Inertially Oriented	418.3 hours
Spacecraft Earth Oriented	9.3 hours
Spacecraft in Free Drift	628.4 hours
Angular Reorientations	235
EVA's (2 occur together on first and last days)	12

Table 3-1 Flight 229 Mission Definition Summary *

Exper. No.	Occurance Day No.	Total Times Perf/ Mission	No. Men Req'd	Exper Time/Test Setup Time, min	Exper Time/Test Test Time, min	Total Exper Man-Hrs/ Mission Crewman 1	2	3	Total	Total Exper Time/Mission, hrs Achv'd	Spec'd	Remarks
0401	2 thru 13 21 thru 27 35 thru 40	32	1	0	a.	4.3	3.2	20.2	27.7	27.7	27.7	a. 12 periods of 38 min plus 20 periods of 60 min.
0402	1 thru 41	80	1	0	a.		100.		100.0	100.	100.	a. 30 min every 12 hrs 60 min every 24 hrs 30 min every 24 hrs } 40 days
0403	1 thru 45	133	1	0	15	22.0	11.0	.25	33.25	33.25	31.25	
0404	1 thru 45	354	1	240	a.		71.8	59.6	131.4	131.4	135.0	Complete cycle not scheduled on 45th day. a. 8 periods of 15 min per day 3 periods of 20 min per day
0405	1 thru 45	100	1	10	a.	45.45	6.0	4.0	55.45	55.45		a. 30 min every 4 hrs for 2 days 30 min every 12 hrs for 5 days 45 min every 24 hrs for 7 days Repeat cycle.
0406	1,3,4	6	1	20 (EVA)	15	1.5	.8		2.3	2.3	2.0	
1302	3,4	18	1	60	15		4.0	2.0	6.0	6.0	3.0	
1306	2	1	1	60	120	3.3			3.3	3.3	3.0	Exp contains 8 observations
1504	1	1	3	0	a.	6.3	6.0	6.0	18.3	18.3	13.0	a. 4 periods of 2.5 hrs 2 periods of 1.5 hrs
						82.8	202.8	92.0	377.6			
Carry-Over From Flight 523									768			
EVA (incl support)									42			
					Totals				1187.6			

Maximum Work Day: 11.7 hrs on duty; Average Work Day: 8.8 hrs on duty; Minimum Work Day: 4. hrs on duty

Total EVA Man Hours: 21

Notes: * See Tables 3-2 and 3-3 for crew schedules and experiment equipment duty cycles.

[redacted]

Table 3-2 **CREW SCHEDULING, FLIGHT** 229, **SHEET** 1 **OF** 4

DAY 1	ORBIT	CREWMEN ACTIVITIES 1	2	3
0000				
20		0405	0404	Sleep
40		0403		
		0406		
0100				
20				
40		1504A	1504A	SPT
0200				EVA
20				
40				
0300		EVA	EVA	
20				
40			0404	
0400		0406		
20			0405	E/Hyg
40				
0500		E/Hyg	E/Hyg	
20				Rest
40				
0600			0406	0404
20			EVA	EVA
40				
0700				
20		SPT	1504B	1504B
40				
0800				
20		EVA		
40				
0900			0404	
20				
40			EVA	EVA
1000			1504C	1504C
20				
40			0406	0405
1100				
20		Rest	Rest	Rest
40				
1200				
20		E/Hyg	E/Hyg	E/Hyg
40		Rest	Rest	Rest
1300				
20		0403		0404
40		0405		
1400				
20				Rest
40				
1500				
20				
40				0404
1600			Sleep	
20				0405
40		Sleep		
1700				0403
20				0404
40				
1800				Rest
20				
40				
1900				
20		E/Hyg	E/Hyg	E/Hyg
40		Rest	Rest	Rest
2000				
20		Rest	Rest	0404
40				
2100				
20				
40				0501
2200			0402	
20				
40		0405		
2300				Sleep
20		Rest	Rest	
40				
2400				

DAY 2	ORBIT	CREWMEN ACTIVITIES 1	2	3
0000				
20		0405	0403	
40			0401	
0100				
20			0404	
40				
0200		1306	E	Sleep
20				
40				
0300				
20				
40			0404	
0400				
20		0401	0405	E/Hyg
40				
0500		E/Hyg	E/Hyg	
20				Rest
40				
0600				
20				0401
40				
0700				
20			0404	
40				
0800				
20			K	J
40				
0900		Sleep		
20				
40				
1000				
20				0404
40			0405	0402
1100				
20			Rest	Rest
40				
1200				
20		E/Hyg	E/Hyg	E/Hyg
40		Rest	Rest	Rest
1300				
20		0403		
40		0405		0401
1400				
20				0404
40				
1500		G		F
20				
40				
1600			Sleep	
20				0404
40				
1700		0405		
20		0403		0401
40				
1800		Rest		Rest
20				
40				
1900				
20		E/Hyg	E/Hyg	E/Hyg
40		Rest	Rest	Rest
2000				
20		Rest	Rest	0404
40				
2100				
20				C
40				
2200		0401	0402	0501
20				
40		0405		
2300				Sleep
20		Rest	Rest	
40			0404	
2400				

DAY 3	ORBIT	CREWMEN ACTIVITIES 1	2	3
0000				
20		0405	0403	
40		0406	1302	
0100			0404	
20				
40			1302	Sleep
0200		H		
20			0401	
40			C	
0300				
20				
40			1302	
0400			0404	
20				E/Hyg
40				
0500		E/Hyg	E/Hyg	
20				Rest
40				
0600				
20			1302	0404
40				
0700			C	
20				
40			0401	
0800			1302	
20				
40				J
0900		Sleep		
20			G	
40				
1000				
20				0404
40			1302	0402
1100				
20			Rest	Rest
40				
1200				
20		E/Hyg	E/Hyg	E/Hyg
40		Rest	Rest	Rest
1300				
20		0403		
40		0405		0404
1400				
20				1302
40				0401
1500		K		
20				
40				E
1600			Sleep	
20				
40				
1700				0404
20		0403		1302
40				
1800		Rest		Rest
20				
40				
1900				
20		E/Hyg	E/Hyg	E/Hyg
40		Rest	Rest	Rest
2000				1302
20		Rest	Rest	0404
40				
2100				
20				B
40				
2200		E	0402	0501
20				
40				
2300				Sleep
20		Rest	Rest	
40			0404	
2400				

DAY 4	ORBIT	CREWMEN ACTIVITIES 1	2	3
0000				
20		0405	0403	
40			1302	
0100			0404	
20				
40			1302	Sleep
0200		H		
20			0401	
40			C	
0300				
20				
40		0406	1302	
0400			0404	
20				E/Hyg
40				
0500		E/Hyg	E/Hyg	
20				Rest
40				
0600				
20			1302	0404
40				
0700			C	
20				
40			0401	
0800			1302	
20				
40				J
0900		Sleep		
20			G	
40				
1000				
20				0404
40			1302	0402
1100				
20			Rest	Rest
40				
1200				
20		E/Hyg	E/Hyg	E/Hyg
40		Rest	Rest	Rest
1300				
20		0403		
40		0405		0404
1400				
20				1302
40				0401
1500		J		
20				
40				E
1600			Sleep	
20				
40				
1700				0404
20		0403		1302
40				
1800		Rest		Rest
20				
40				
1900				
20		E/Hyg	E/Hyg	E/Hyg
40		Rest	Rest	Rest
2000				1302
20		Rest	Rest	0404
40				
2100				
20				B
40				
2200		E	0402	0501
20				
40				
2300				Sleep
20		Rest	Rest	
40			0404	
2400				

NOTES Letters indicate available time blocks approximately equal in length.

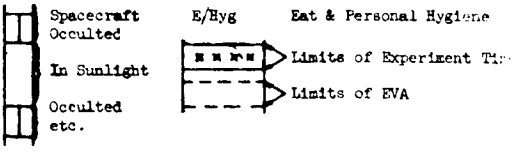

[redacted]

[redacted]

Table 3-2 CREW SCHEDULING, FLIGHT 228, SHEET 2 OF 4

DAY 5	ORBIT	CREWMEN ACTIVITIES 1	2	3
0000				
20		0405	0403	
40				
0100				
20			0404	
40				Sleep
0200		M	H	
20				
40				
0300				
20				
40				
0400			0404	E/Hyg
20				
40				
0500		E/Hyg	E/Hyg	
20				Rest
40				
0600				
20			0404	
40				
0700				
20				
40				
0800			K	N
20				
40		Sleep		
0900				
20				
40				
1000			0404	
20				
40				0402
1100				
20			Rest	Rest
40				
1200		E/Hyg	E/Hyg	E/Hyg
20				
40		Rest	Rest	Rest
1300		0403		
20				0404
40		0405		
1400				
20				
40				
1500				
20		K		J
40				
1600			Sleep	
20				
40				
1700				
20		0403		0404
40				
1800				
20		Rest		Rest
40				0404
1900				
20		E/Hyg	E/Hyg	E/Hyg
40		Rest	Rest	Rest
2000				
20				
40		Rest	Rest	C
2100				
20				0404
40				
2200		E	0402	0501
20				
40				
2300				
20		Rest	Rest	Sleep
40				
2400				

DAY 6	ORBIT	CREWMEN ACTIVITIES 1	2	3
0000				
20		0405	0403	
40				
0100				
20			0404	
40				Sleep
0200		M	H	
20				
40				
0300				
20				
40				
0400			0404	E/Hyg
20				
40				
0500		E/Hyg	E/Hyg	
20				Rest
40				
0600				
20			0404	
40				
0700				
20				
40				
0800			K	N
20				
40		Sleep		
0900				
20				
40				
1000			0404	
20				
40			0402	
1100				
20			Rest	Rest
40				
1200		E/Hyg	E/Hyg	E/Hyg
20				
40		Rest	Rest	Rest
1300		0403		
20				0404
40		0405		
1400				
20				
40				
1500				
20		K		J
40				
1600			Sleep	
20				
40				
1700				
20		0403		0404
40				
1800				
20		Rest		Rest
40				0404
1900				
20		E/Hyg	E/Hyg	E/Hyg
40		Rest	Rest	Rest
2000				
20				
40		Rest	Rest	C
2100				
20				0404
40				0501
2200		E	0402	
20				
40				
2300				
20		Rest	Rest	Sleep
40				
2400				

DAY 7	ORBIT	CREWMEN ACTIVITIES 1	2	3
0000				
20		0405	0403	
40				
0100				
20			0404	
40				Sleep
0200		M	H	
20				
40				
0300				
20				
40				
0400			0404	E/Hyg
20				
40				
0500		E/Hyg	E/Hyg	
20				Rest
40				
0600				
20			0404	
40				
0700				
20				
40				
0800			K	N
20				
40		Sleep		
0900				
20				
40				
1000			0404	
20				
40			0402	
1100				0405
20			Rest	Rest
40				
1200		E/Hyg	E/Hyg	E/Hyg
20				
40		Rest	Rest	Rest
1300		0403		
20				0404
40		0405		
1400				
20				
40				
1500				
20		K		J
40				
1600			Sleep	
20				
40				
1700				
20		0403		0404
40				
1800				
20		Rest		Rest
40				0404
1900				
20		E/Hyg	E/Hyg	E/Hyg
40		Rest	Rest	Rest
2000				
20				
40		Rest	Rest	
2100				
20		LiOH	SPT	SPT
40		EVA	EVA	EVA
2200				
20		0401		0404
40				
2300				
20		0501	0402	Sleep
40				
2400				

DAY 8	ORBIT	CREWMEN ACTIVITIES 1	2	3
0000				
20			0403	
40				
0100			0404	
20				
40				
0200		M	J	Sleep
20				
40				
0300				
20				
40				
0400				
20			0404	
40				E/Hyg
50		E/Hyg	E/Hyg	
20				Rest
40				
0600				
20			0404	
40				
0700				
20				
40				
0800			K	N
20				
40		Sleep		
0900				
20				
40				
1000				
20			0404	
40				
1100			0402	
20			Rest	Rest
40				
1200		E/Hyg	E/Hyg	E/Hyg
20				
40		Rest	Rest	Rest
1300		0403		
20				0404
40		0405		
1400				
20				
40				
1500				
20		J		J
40				
1600			Sleep	
20				
40				
1700				
20		0403		0404
40				
1800				
20		Rest		Rest
40				0404
1900				
20		E/Hyg	E/Hyg	E/Hyg
40				
2000				
20				
40		Rest	Rest	0401
2100				
20				0404
40				0501
2200		E	0402	
20				
40				
2300				
20		Rest	Rest	Sleep
40				
2400				

NOTES
Days 17-20, 31-34 the same as day 5
Days 21, 35 same as day 7
Days 9-13, 22-27, 36-40 the same as day 8

[redacted]

[redacted]

Table 3-2 **CREW SCHEDULING, FLIGHT** 229, **SHEET** 3 **OF** 4

DAY 14	ORBIT	CREWMEN ACTIVITIES 1	2	3
0000			0403	
20				
40			0404	
0100				
20				
40				Sleep
0200				
20		L	J	
40				
0300				
20				
40				
0400			0404	
20				E/Hyg
40				
0500		E/Hyg	E/Hyg	
20				Rest
40				
0600				
20				0404
40				
0700				
20				
40				
0800				
20			L	M
40				
0900		Sleep		
20				
40				
1000			0404	
20				
40			0402	
1100				
20			Rest	Rest
40				
1200				
20		E/Hyg	E/Hyg	E/Hyg
40		Rest	Rest	Rest
1300		0403		0404
20				
40		0405		
1400				
20				
40				
1500				
20		J		J
40				
1600			Sleep	
20				
40				
1700				0404
20		0403		
40				
1800				
20		Rest		Rest
40				
1900				
20		E/Hyg	E/Hyg	E/Hyg
40		Rest	Rest	Rest
2000				
20		Rest	0404	
40			Rest	
2100				
20		L1OH	SPT	SPT
40		EVA	EVA	EVA
2200				
20				
40			0402	0501
2300				Sleep
20		Rest		
40				
2400				

DAY 15	ORBIT	CREWMEN ACTIVITIES 1	2	3
0000				
20		0405	0403	
40				
0100				
20			0404	
40				Sleep
0200				
20		L	J	
40				
0300				
20				
40			0404	
0400				
20			0405	E/Hyg
40				
0500		E/Hyg	E/Hyg	
20				
40				
0600				
20				0404
40				
0700				
20				
40				
0800				
20			L	M
40				
0900		Sleep		
20				
40				
1000			0404	
20				
40			0402	0405
1100				
20			Rest	Rest
40				
1200				
20		E/Hyg	E/Hyg	E/Hyg
40		Rest	Rest	Rest
1300		0403		0404
20				
40		0405		
1400				
20				
40				
1500				
20		J		K
40				
1600			Sleep	
20				
40				
1700		0405		0404
20		0403		
40				
1800				
20		Rest		Rest
40				
1900				
20		E/Hyg	E/Hyg	E/Hyg
40		Rest	Rest	Rest
2000				
20		Rest	Rest	0404
40				
2100				D
20				
40				0501
2200			0402	
20				
40				
2300		0405	0404	Sleep
20		Rest	Rest	
40				
2400				

DAY 21	ORBIT	CREWMEN ACTIVITIES 1	2	3
0000				
20		0405	0403	
40				
0100			0404	
20				
40				Sleep
0200				
20		L	H	
40				
0300				
20				
40				
0400			0404	
20				E/Hyg
40				
0500		E/Hyg	E/Hyg	
20				Rest
40				
0600				
20				0404
40				
0700				
20				
40				
0800				
20			L	M
40				
0900		Sleep		
20				
40				
1000			0404	
20				
40			0402	
1100				
20			Rest	Rest
40				
1200				
20		E/Hyg	E/Hyg	E/Hyg
40		Rest	Rest	Rest
1300		0403		0404
20				
40		0405		
1400				
20				
40				
1500				
20		J		K
40				
1600			Sleep	
20				
40				
1700				0404
20		0403		
40				
1800				
20		Rest		Rest
40				
1900				
20		E/Hyg	E/Hyg	E/Hyg
40		Rest	Rest	Rest
2000				
20		Rest	Rest	0404
40				
2100				
20		L1OH	SPT	SPT
40		EVA	EVA	EVA
2200				
20		0501		0404
40				
2300			0402	Sleep
20		Rest		
40				
2400				

DAY 41	ORBIT	CREWMEN ACTIVITIES 1	2	3
0000				
20			0403	
40				
0100			0404	
20				
40				Sleep
0200				
20		L	J	
40				
0300				
20				
40				
0400			0404	
20				E/Hyg
40				
0500		E/Hyg	E/Hyg	
20				Rest
40				
0600				
20				0404
40				
0700				
20				
40				
0800				
20			L	O
40				
0900		Sleep		
20				
40				
1000			0404	
20				
40				
1100				
20			Rest	Rest
40				
1200				
20		E/Hyg	E/Hyg	E/Hyg
40		Rest	Rest	Rest
1300		0403		0404
20				
40		0405		
1400				
20				
40				
1500				
20		J		K
40				
1600			Sleep	
20				
40				
1700				0404
20		0403		
40				
1800				
20		Rest		Rest
40				
1900				
20		E/Hyg	E/Hyg	E/Hyg
40		Rest	Rest	Rest
2000				
20			Rest	0404
40				
2100				D
20			0402	
40				0501
2200		F	E	
20				
40				
2300			0404	Sleep
20		Rest	Rest	
40				
2400				

NOTES

Day 28 the same as day 14
Day 16, 29, 30 the same as day 15
Day 35 the same as day 21

[redacted]

Table 3-2 **CREW SCHEDULING, FLIGHT 229, SHEET 4 OF 4**

DAY 42	ORBIT	CREWMEN ACTIVITIES 1	2	3
0000			0403	Sleep
20				
40			0404	
0100		M	J	
20				
40				
0200				
20				
40				
0300				
20				
40				
0400			0404	E/Hyg
20				
40				
0500		E/Hyg	E/Hyg	Rest
20				
40				
0600				
20				0404
40				
0700				
20				
40				
0800			K	N
20				
40				
0900		Sleep		
20				
40				
1000			0404	
20				
40				
1100			Rest	Rest
20				
40				
1200		E/Hyg	E/Hyg	E/Hyg
20				
40		Rest	Rest	Rest
1300		0403		
20				0404
40		0405		
1400				
20				
40				
1500		F		F
20				
40				
1600			Sleep	
20				
40				
1700				0404
20		0403		
40				
1800		Rest		Rest
20				
40				
1900		E/Hyg	E/Hyg	E/Hyg
20				
40		Rest	Rest	Rest
2000				
20		Rest	Rest	0404
40				
2100				
20		L10H	SPT	SPT
40		EVA	EVA	EVA
2200			0501	
20				
40			0404	
2300				Sleep
20		Rest	Rest	
40				
2400				

DAY 43	ORBIT	CREWMEN ACTIVITIES 1	2	3
0000		0405	0403	
20				
40				
0100			0404	
20				
40				Sleep
0200		M	G	
20				
40				
0300				
20				
40			0404	
0400				
20			0405	E/Hyg
40				
0500		E/Hyg	E/Hyg	Rest
20				
40				
0600				
20				0404
40				
0700				
20				
40				
0800				
20			H	M
40				
0900		Sleep		
20				
40				
1000			0404	
20				
40				
1100				0405
20			Rest	Rest
40				
1200		E/Hyg	E/Hyg	E/Hyg
20				
40		Rest	Rest	Rest
1300		0403		0404
20				
40		0405		
1400				
20				
40				
1500		F		F
20				
40				
1600			Sleep	
20				
40				
1700		0405		0404
20		0403		
40				
1800		Rest		Rest
20				
40				
1900		E/Hyg	E/Hyg	E/Hyg
20				
40		Rest	Rest	Rest
2000				
20		Rest	Rest	0404
40				
2100				D
20				
40				
2200				0501
20				
40		0405	0404	
2300				Sleep
20		Rest	Rest	
40				
2400				

DAY 45	ORBIT	CREWMEN ACTIVITIES 1	2	3
0000		0405	0403	
20				
40			0404	
0100				
20				
40				Sleep
0200		M	J	
20				
40				
0300				
20				
40				
0400			0404	
20				E/Hyg
40				
0500		E/Hyg	E/Hyg	Rest
20				
40				
0600				
20				0404
40				
0700				
20				
40				
0800				
20			Sleep	M
40				
0900		Sleep		
20				
40				
1000				
20				
40				0406
1100				
20			Rest	Rest
40				
1200		Prepare For		
20				
40		Rendezvous		
1300		With Flight		
20		230		
40				
1400				
20				
40				
1500				
20				
40				
1600				
20				
40				
1700				
20				
40				
1800				
20				
40				
1900				
20				
40				
2000				
20				
40				
2100				
20				
40				
2200				
20				
40				
2300				
20				
40				
2400				

DAY	ORBIT	CREWMEN ACTIVITIES 1	2	3
0000				
20				
40				
0100				
20				
40				
0200				
20				
40				
0300				
20				
40				
0400				
20				
40				
0500				
20				
40				
0600				
20				
40				
0700				
20				
40				
0800				
20				
40				
0900				
20				
40				
1000				
20				
40				
1100				
20				
40				
1200				
20				
40				
1300				
20				
40				
1400				
20				
40				
1500				
20				
40				
1600				
20				
40				
1700				
20				
40				
1800				
20				
40				
1900				
20				
40				
2000				
20				
40				
2100				
20				
40				
2200				
20				
40				
2300				
20				
40				
2400				

NOTES Day 44 Same as the day 43

GRUMMAN AIRCRAFT ENGINEERING CORPORATION

Table 3-3 APOLLO EXTENSION SYSTEM EARTH ORBIT MISSION STUDY
FLIGHT [illegible] EXPERIMENT MISSION PROFILE

SHEET 1 OF 1

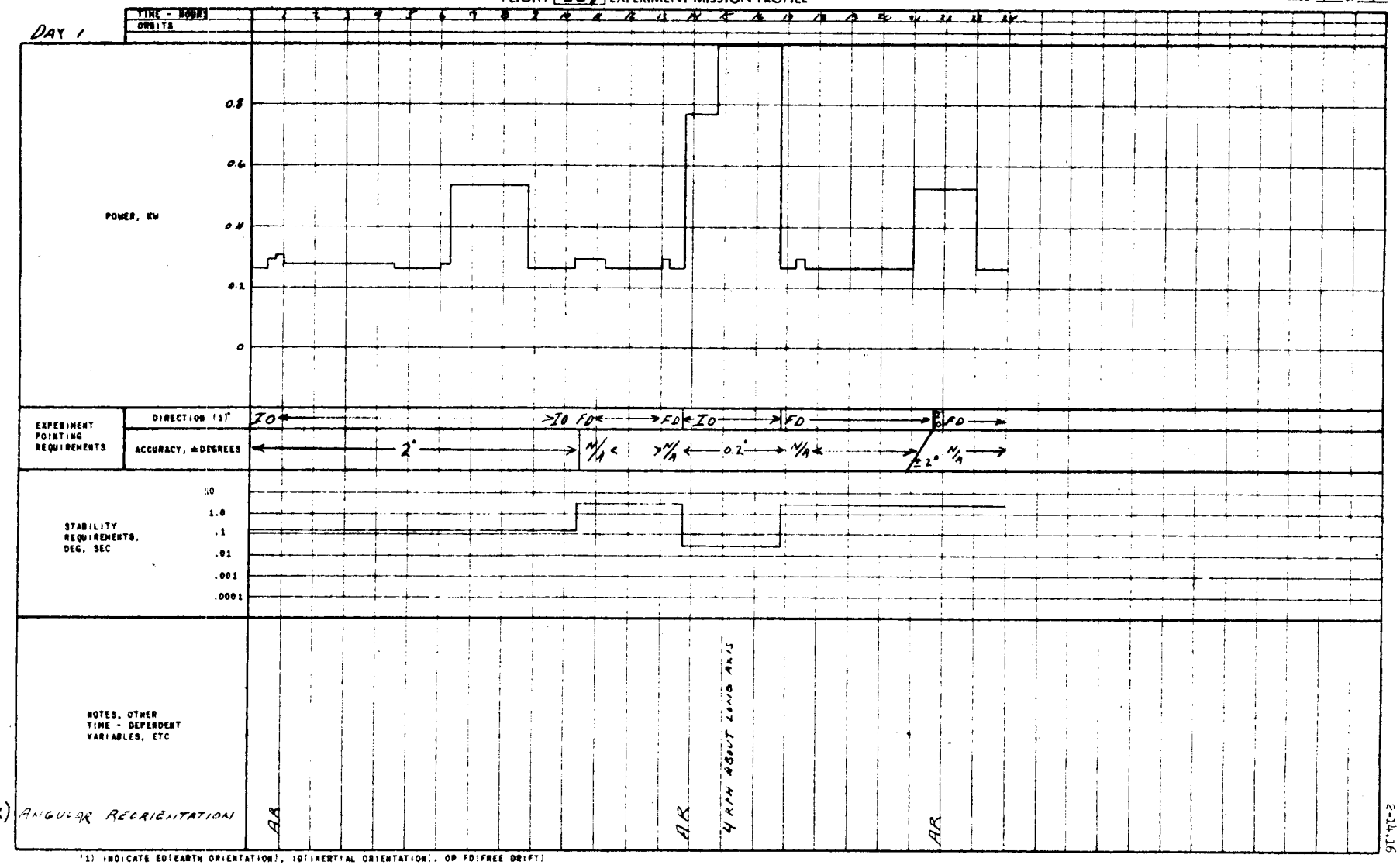

(1) INDICATE ED(EARTH ORIENTATION), IO(INERTIAL ORIENTATION), OR FD(FREE DRIFT)

2-24.16

~~CONFIDENTIAL~~

GRUMMAN AIRCRAFT ENGINEERING CORPORATION

Table 3-3 APOLLO EXTENSION SYSTEM EARTH ORBIT MISSION STUDY
FLIGHT 229 EXPERIMENT MISSION PROFILE

SHEET 2 OF 4

DAY 2

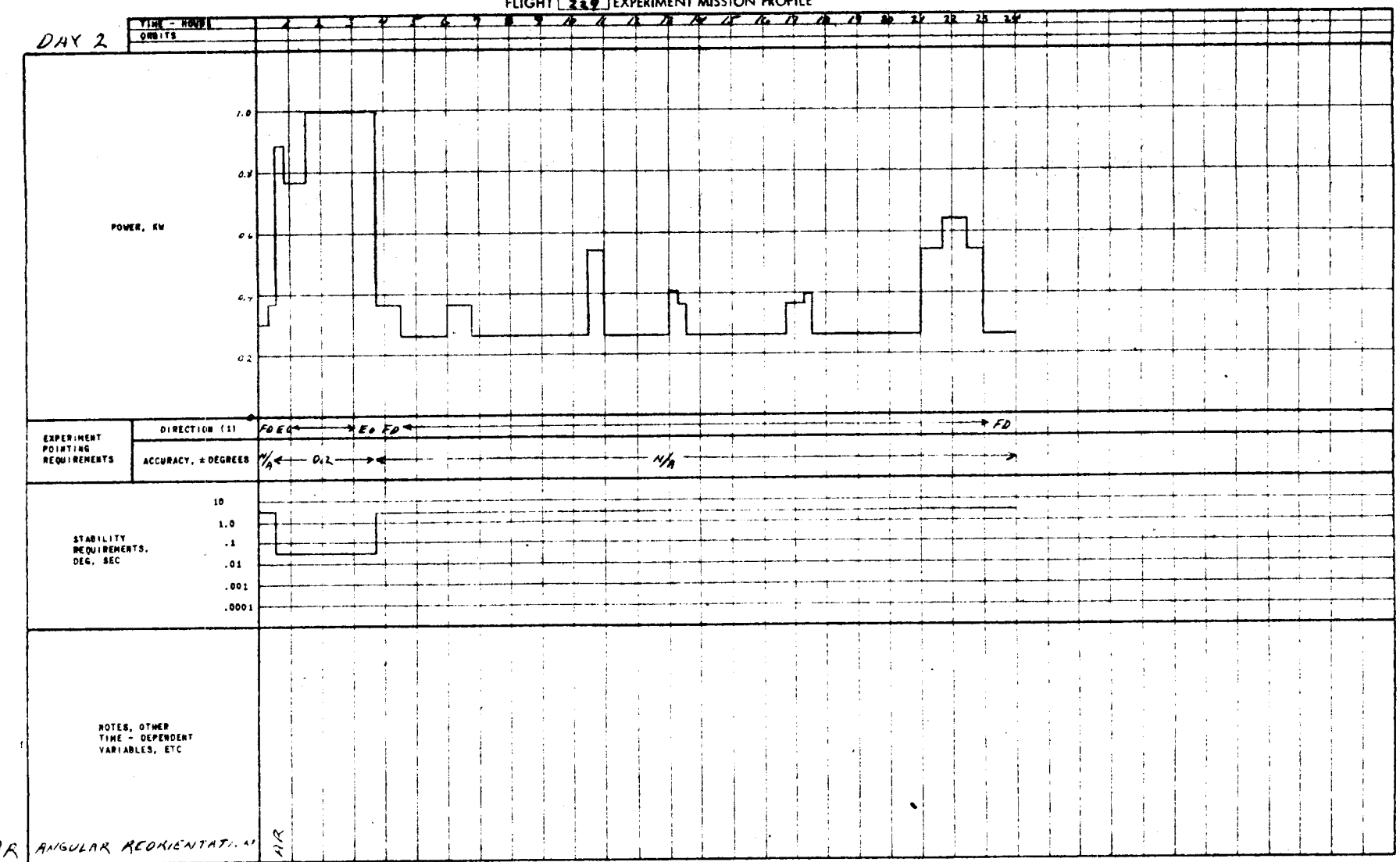

1: INDICATE EO (EARTH ORIENTATION), (O INERTIAL ORIENTATION), OR FD FREE DRIFT.

~~CONFIDENTIAL~~

3-14.17

GRUMMAN AIRCRAFT ENGINEERING CORPORATION

Table 3-3 APOLLO EXTENSION SYSTEM EARTH ORBIT MISSION STUDY

FLIGHT [289] EXPERIMENT MISSION PROFILE

SHEET ___ OF ___

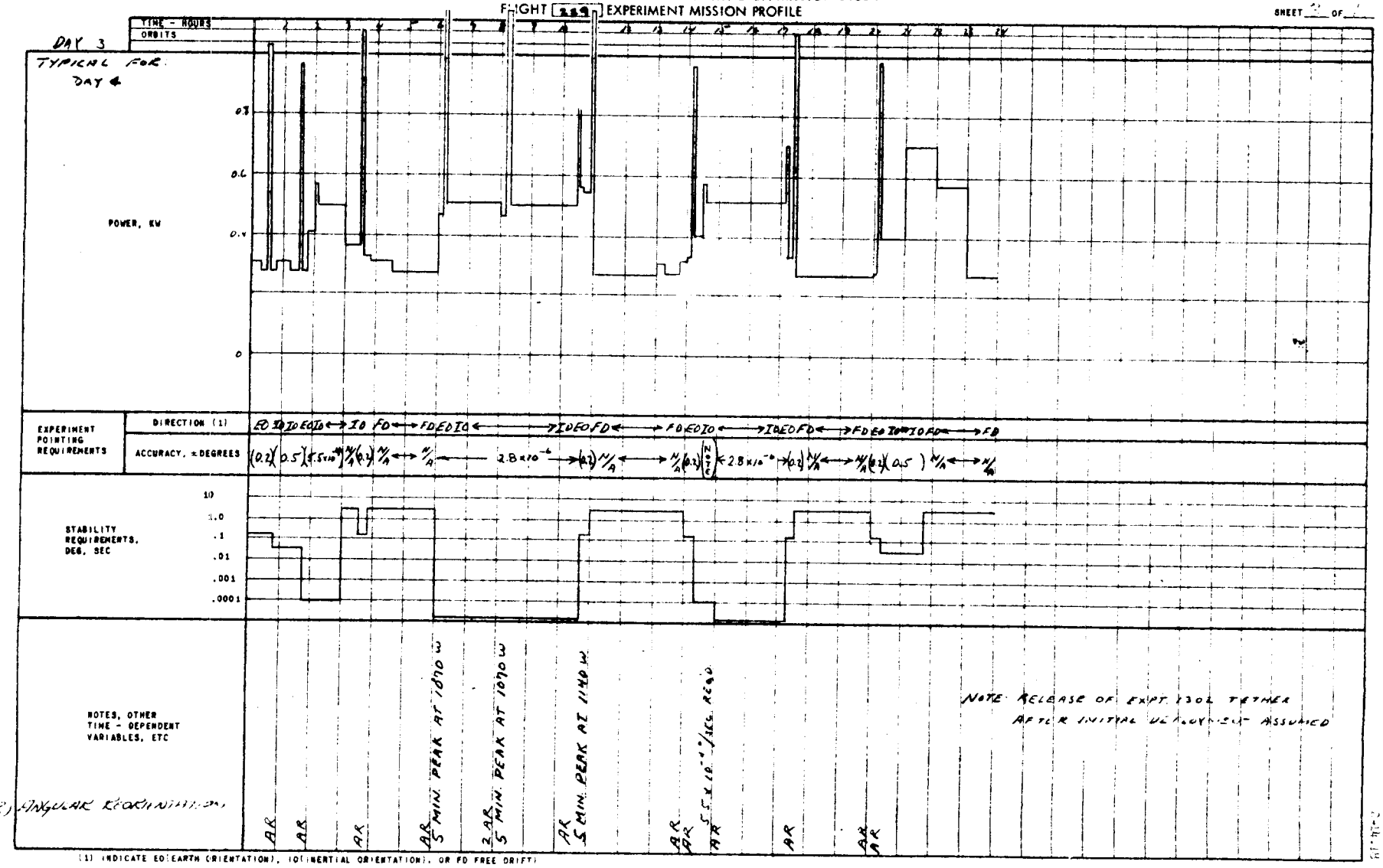

(1) INDICATE EO (EARTH ORIENTATION), IO (INERTIAL ORIENTATION), OR FD FREE DRIFT)

CONFIDENTIAL

CONFIDENTIAL

[redacted]

GRUMMAN AIRCRAFT ENGINEERING CORPORATION

Table 3-3 APOLLO EXTENSION SYSTEM EARTH ORBIT MISSION STUDY
FLIGHT [229] EXPERIMENT MISSION PROFILE

SHEET ___ OF ___

DAY 5

TYPICAL FOR DAYS 6 – 44

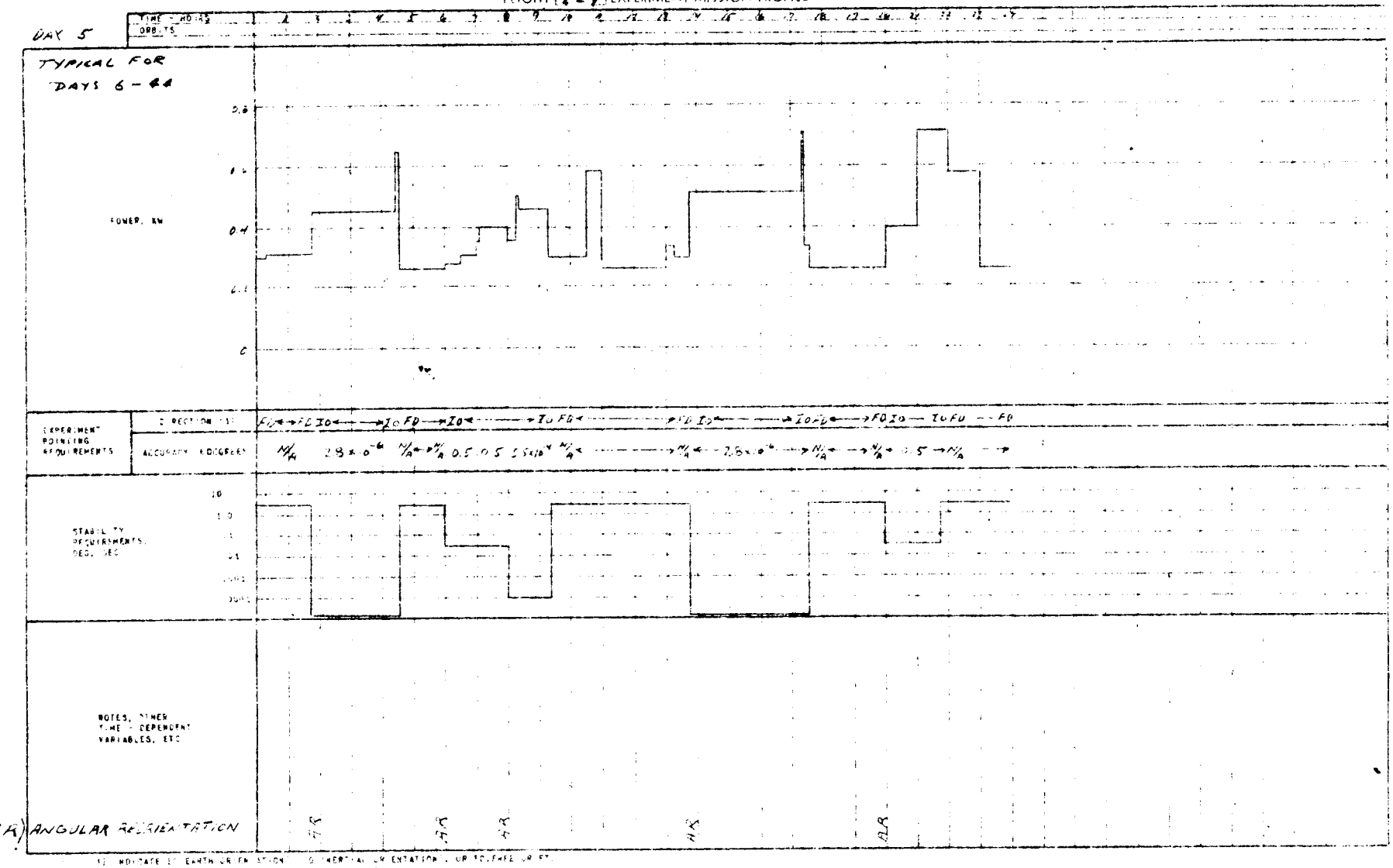

(1) INDICATE IF EARTH ORIENTATION, OR INERTIAL ORIENTATION, OR FD, FREE OR FT.

[redacted]

3.2 SPACECRAFT DEFINITION

Flight 229, shown in Fig. 3-1 and 3-2 is a first resupply mission for a previous Astronomy flight. In addition to the expendables and crew replacements the flight carries a laboratory for study of living organisms (0401, 2, 3, 4, 5, 6), space structures technology experiments (1302 & 1306), and an extra vehicular operations experiment (1504).

The laboratory is a standard LEM ascent stage modified for the living organism experiments. The experiments are located in the forward and center cabins. All animal containers are capable of pressurization and are sustained by the existing LEM ECS which is retained. Equipment for EVA requiring internal storage is located on the aft bulkhead.

All food for the mission is carried internally and transferred to the food lockers of the previous flight after docking. LiOH supplies are stored externally to replace internal storage on the previous flight's Lab at seven day intervals.

A 30 inch deep low profile descent stage is utilized on this flight. This is necessary to provide staging clearance for the large aperture space erectable antenna experiment. A 44 inch dia. pressurixed passageway is mounted in the center bay of the rack, its upper end is designed to fit into the engine hatch of the A/S Lab and a pressure hatch is provided. The opposite end of the passageway duplicates the docking port of the CM providing compatible docking procedures with the previous flight.

The laboratory is used as an airlock for EVA, and apparatus associated with the EVA experiment is mounted on the descent stage convenient to the forward hatch.

The large aperture space erectable antenna experiment is suspended below the descent stage during launch and manually moved to deployment position during an EVA.

Pointing and stability requirements are accommodated by the CSM within the RCS propellant capacities on the "C" CSM version. On the "D" version, the additional attitude hold propellant requirement is satisfied by adding LEM RCS system and tankage

All experiment equipment installations involve additions to the existing LEM A/S and basic low profile descent stage structure.

In addition to the standard CSM/Lab interface, this flight requires additional interface connections between this Lab and the originally resupplied Lab. The interface wiring is the same as that required for the Lab/CSM interface.

The difference between "C" and "D" versions of the Lab are the addition of one Apollo-X O_2 and one Apollo-X H_2 tank, added fuel cell reactants, and the addition of one FCA. Also, the FCA radiator is increased by 20 sq. ft. The modifications to the "C" version lab accommodate the added power demand of the "D" version CSM required by taking over spacecraft power requirements after (nominally) 14 days. In addition, the "D" version of the Lab carries the LEM RCS system to supplement the RCS propellant requirements of the CSM "D" configuration.

KEY

No.	Experiment	Name
1		FCA Radiator
2		FCA
3		RCS Fuel ("D" Config. only)
4		Pressurized Passageway
5		Potable Water Tank
6		RCS Thrusters ("D" Config. only)
7		Equipt. Radiator
8		Docking Probe (Stored in CM)
9	1306	Launch Position
10	1306	Deployed
11		Waste Storage Tank
12		Water
13	1504	AMU
14	1504	AMU Fuel Supply
15		Safety Line
16	1504	Tether
17	1504	Motor/Reel System
18		LiOH 48 LEM Canisters
19	1302	50 Foot Ballast and Canister
20	0406	Sampling Device
21		LiOH (36 CM Canisters)
22		Water ("C" Config. only)
23		Flight 523 Lab.
24		GOX Tank
25		Power Pack

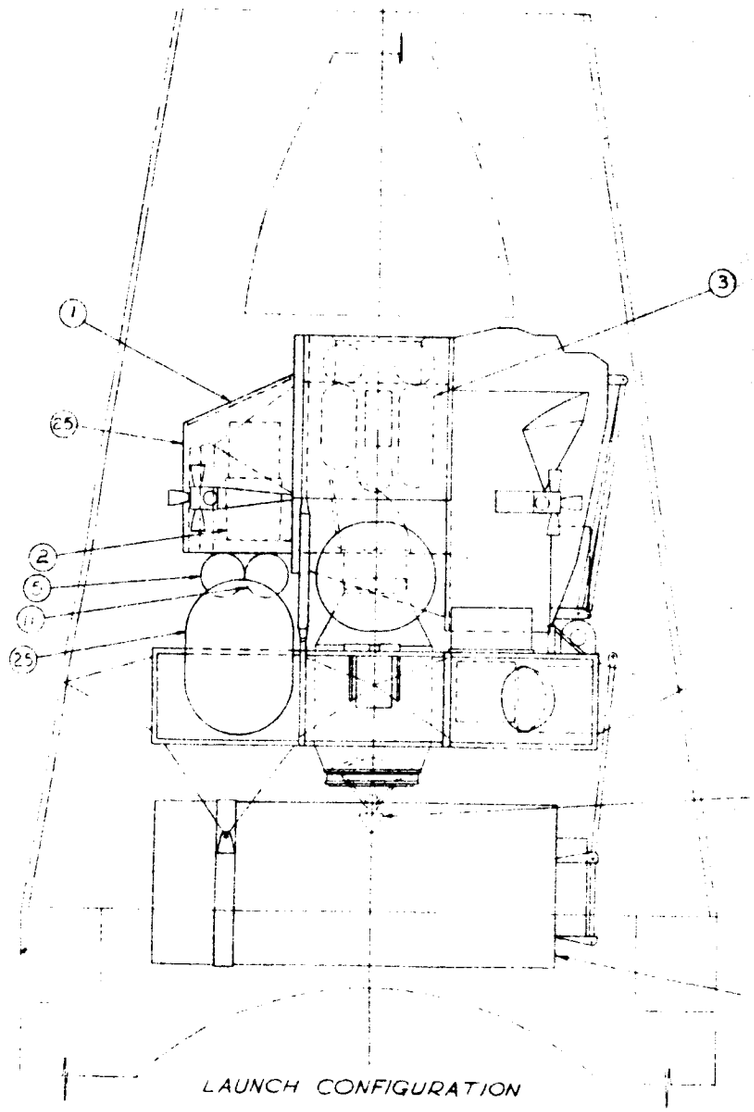

LAUNCH CONFIGURATION

FOLD-OUT #1

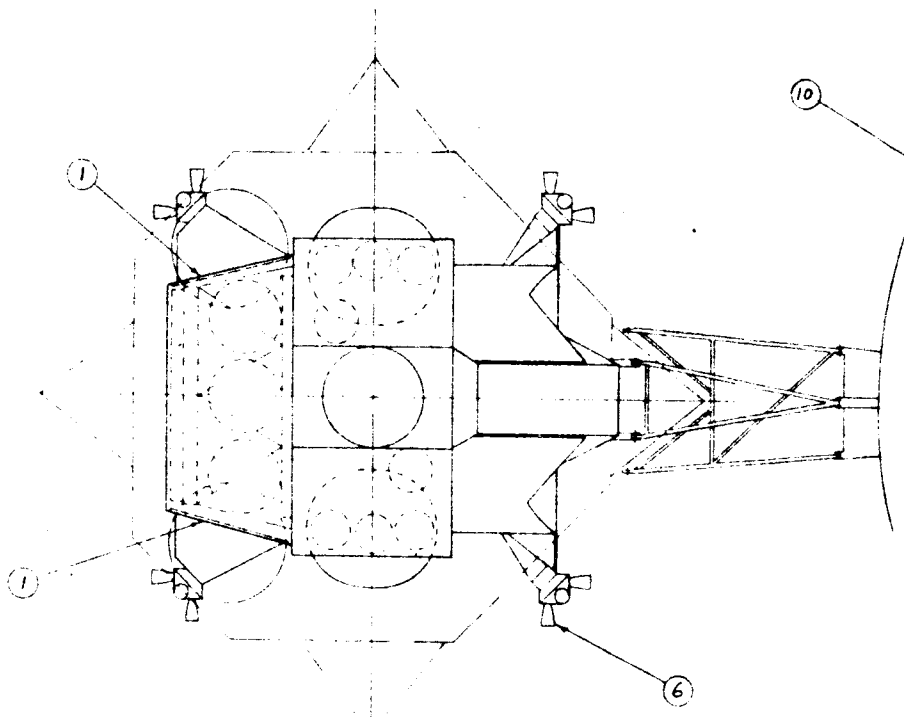

VIEW LOOKING DOWN AT ASCENT STAGE

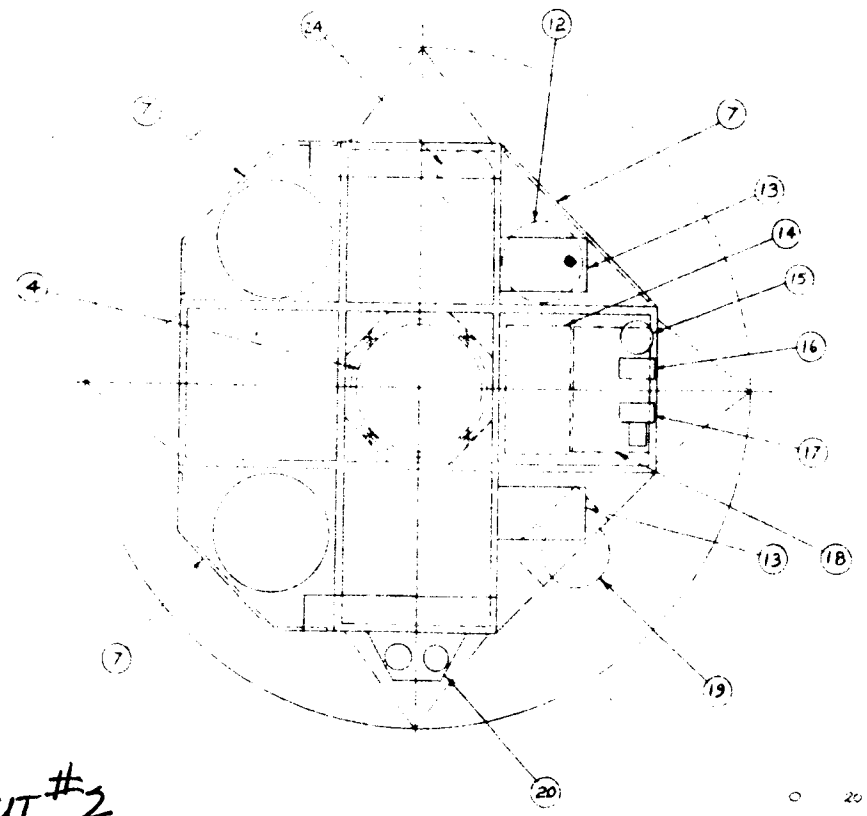

FOLD-OUT #2

VIEW LOOKING DOWN AT DESCENT STAGE

0 20 40 60 80

SCALE 1" = 20"

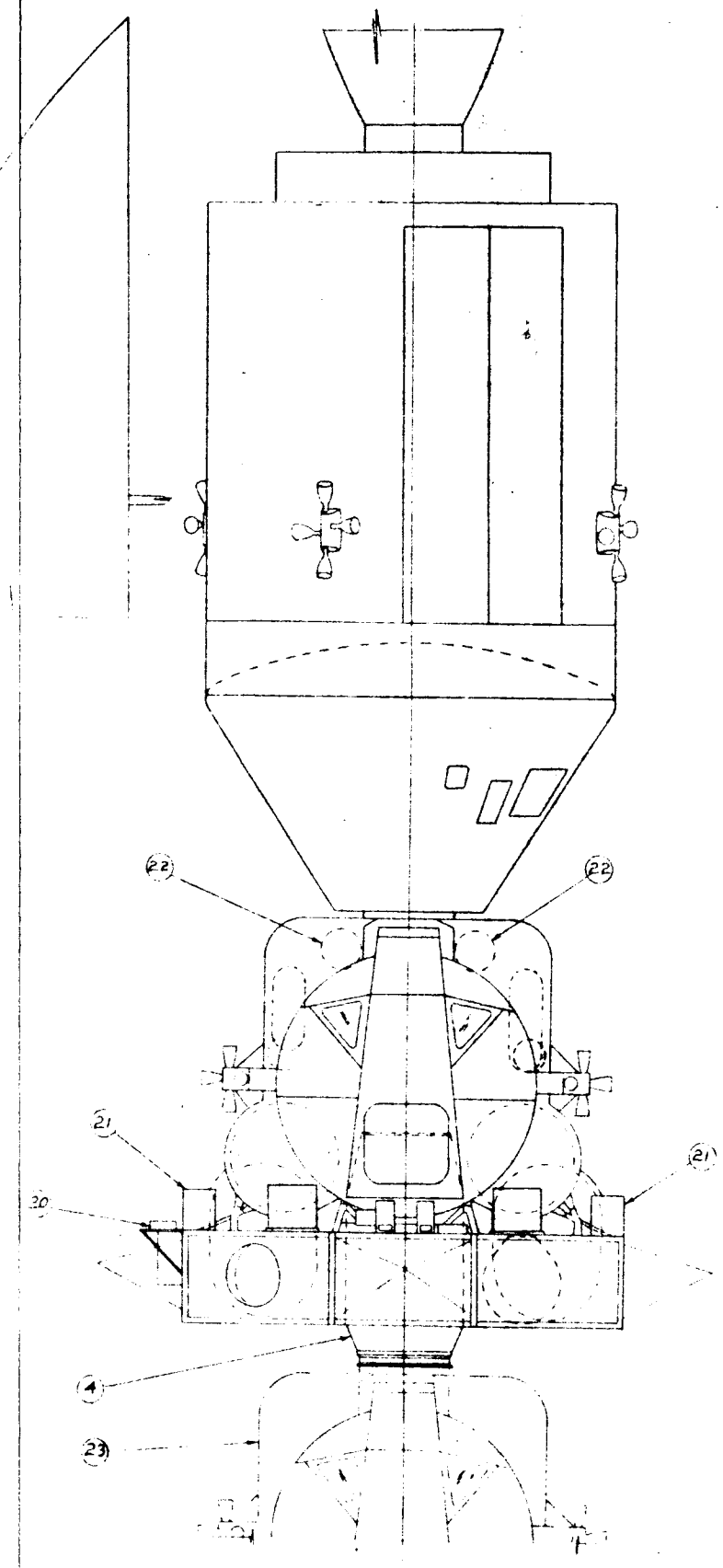

ORBITING CONFIGURATION

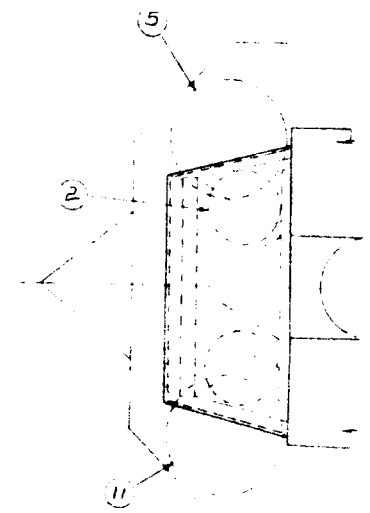

ALTERNATE POWER PACK CONFIGURATION

Fig. 3-1

Grumman
AIRCRAFT ENGINEERING CORPORATION
PRELIMINARY DESIGN SECT.

Gen Arrgmt Flt. 229
Astronomy Logistics
L & Bioscience Lab

SCALE OF ORIG. DWG. = 1/20

AES 1942

KEY

No.	Experiment	Name
1		Film Storage
2	0401&04 2	Incubator
3	04 6	Incubators
4	04 5	Food Storage
5	04 4	Equipt. Storage
6	04 4	Planaria & Newt
7	04 5	Rats
8	04 3	Chimpanzee Instr. Panel
9	04 3	Chimpanzee
10	0 3	Waste & Food Management
11	04 0	Freezer
12	04 2	-20°C Refrigerator
13	15 4	Chest Packs
14	04 1	Lyophilization
15	04 5	Waste Storage
16	04 5	Quick Freezer
17	04 1	Chemical & Equipt. Storage
18	04 2	Culture Flasks
19	04 3	Supply Cabinet
20	04 6	+5°C Refrigerator
21	04 4	-5°C Refrigerator
22	04 2	Particle Counter
23	04 2	Centrifuge
24	04 2	Supply Cabinet & Camera
25	04 2	Scintillation Counter
26	0401,04 2 0406	Microscope
27	15 4	Anti-Tumbling Mech (2)

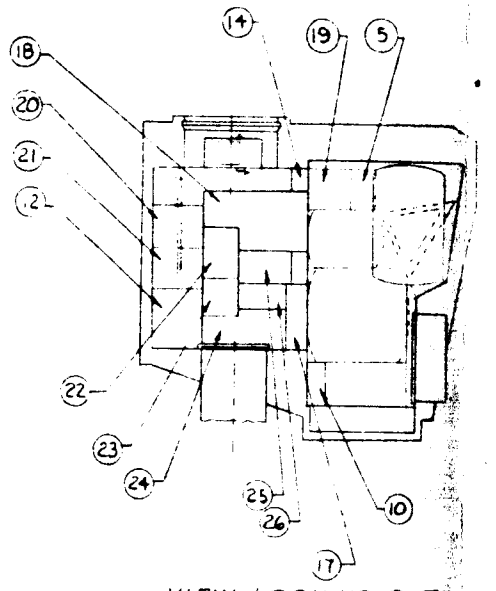

VIEW LOOKING OUTBOARD
LEFT HAND SIDE

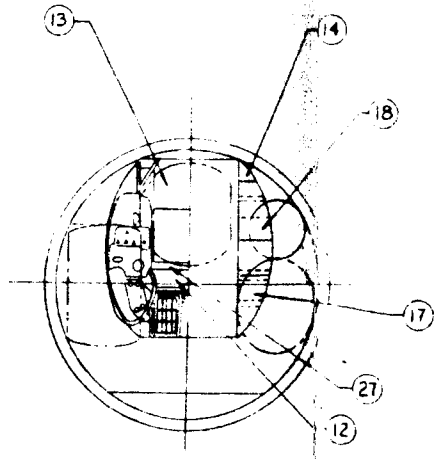

VIEW LOOKING AFT

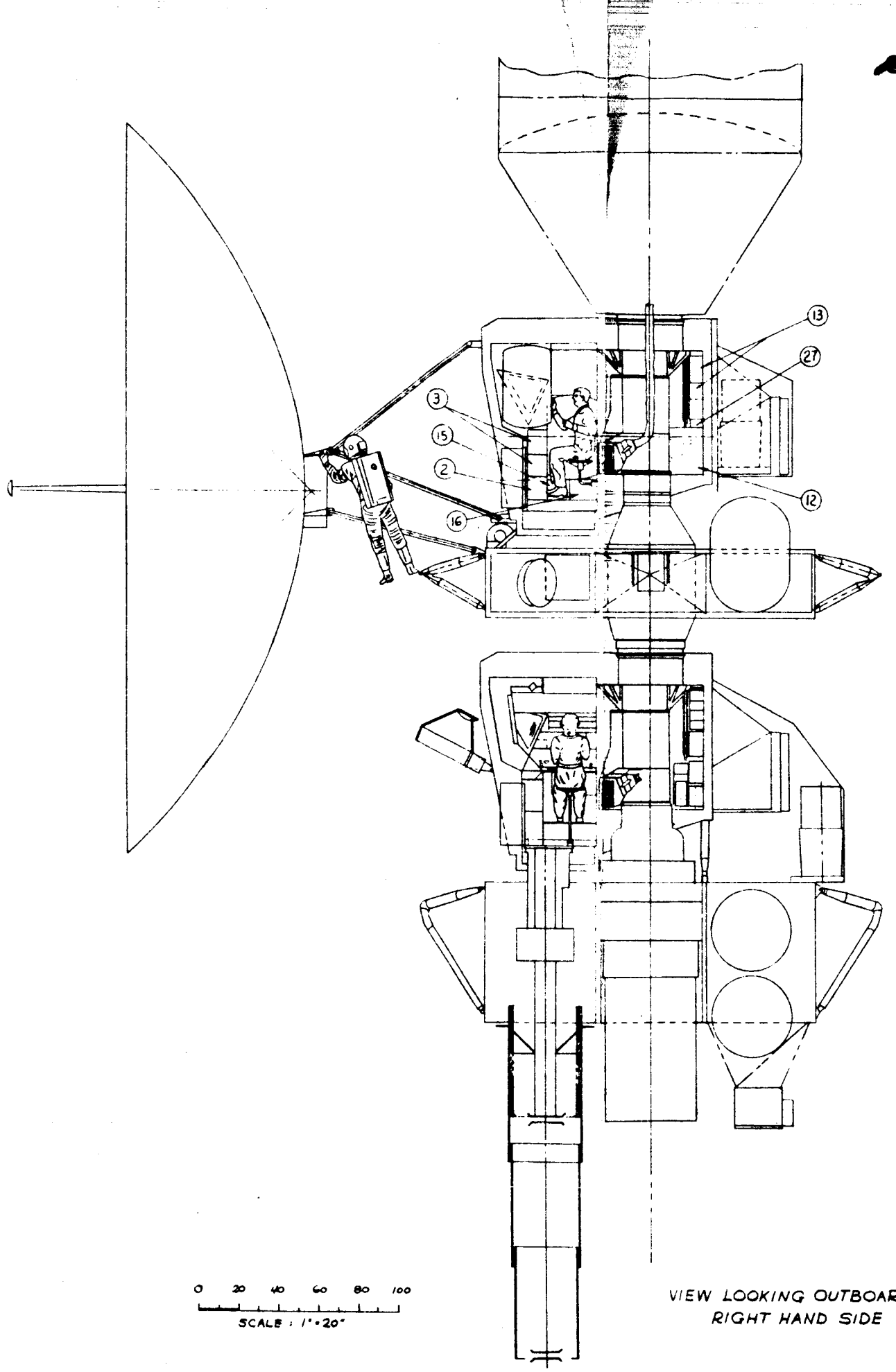

0 20 40 60 80 100
SCALE : 1"=20"

VIEW LOOKING OUTBOARD
RIGHT HAND SIDE

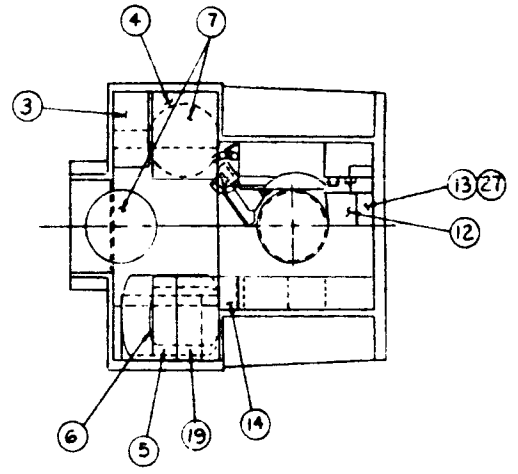

PLAN VIEW

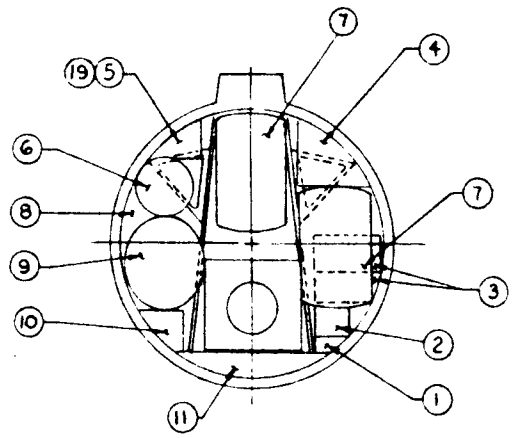

VIEW LOOKING FORWARD

Fig. 3-2

Grumman
AIRCRAFT ENGINEERING CORPORATION
PRELIMINARY DESIGN DEPT.

Inbd Prof Flt. 229
Astronomy Logistics
L & Bioscience Lab

SCALE OF MODEL DWG. 1/20

AES 1043

This flight utilizes an Apollo CSM fuel cell electrical generation system, a LEM ECS to provide atmosphere revitalization and waste control to the animal tanks and recirculation of cabin atmosphere, and selected components to provide data transmission, status and appropriate displays.

It is anticipated that Lab #229 will be capable of "open hatch" operation with both the CM and Lab #523. An oxygen line and electrical umbilical will be provided from the power supply on #229 to the #523 Lab in addition to the 229-CM interface.

The estimated laboratory weight of the "C" version is 11,061 lbs and of the "D" version is 16,803 lbs (see tables 3-4 and 3-5). A brief discussion of how this flight could be brought within the allowable weight limit is included in Volume 1, Section 4.6.

Basic subsystem characteristics pertinent to this flight are described below:

Vehicle Orientation	Inertial Pointing
Stabilization Capability	$\pm.2^{\circ}$ @ 406 hr; $\pm5^{\circ}$ @ 674 hr
AVG Experiment Pwr (Delivered)	412 watts
Number of Repressurizations	10
Equipment Cooling	44 ft^2 radiators

	"C" Config	"D" Config Takeover Pt = 14.8 days
Number of Fuel Cells	2	3
Oxygen Tanks	1 Apollo X	2 Apollo X
Hydrogen Tanks	1 Apollo X	2 Apollo X
Peaking Battery	20 amp hr	20 Amp hr
Fuel Cell Cooling	1 - 16 Ft^2 radiator	2 - 18 Ft^2 radiators
RCS System	STD LEM Thrusters	STD LEM thrusters
RCS Tankage	4 LEM Ox - 4 LEM fuel	12 LEM Ox - 12 LEM fuel
S & C System	Interface to #523 ATCA	Interface to #523 ATCA
Waste Reactants	19 lb	10 lb
Water for Thermal Control (Max)	66.7 lb	72.2 lb
Water Generated	963 lb	1782 lb

Waste reactants are needed to accommodate the estimated boiloff rates. These fluids are disposed of by increasing the power output of the normally operating fuel cells and energizing either a dummy load or idle equipment.

Table 3-4 LEM LAB DETAILED WEIGHT STATEMENT

FLIGHT 229

COMPONENT	Weight, lb. Configuration C	D
Structure	(2169)	(2214)
Basic Ascent	802	802
Rack	470	470
Shielding	446	446
Power Pack Structure	50	50
Experiment Supports	233	233
RCS Supports	63	100
Docking Ring & Tunnel	105	105
Crew Provisions	(296)	(296)
Restraints	35	35
Lighting	10	10
Food	228	228
LiOh-PLSS	23	23
Reaction Control System	(1630)	(5051)
Propellant	1130	3700
Propellant System	268	871
Pressurization System	110	358
Thruster Ass'y	122	122
Controls and Displays	(290)	(290)
Environmental Control	(941)	(981)
Atmosphere Revitalization System	80	80
O_2 Supply and Cabin Pressurization	34	34
Water Management	36	36
Heat Transport, Cold Plates, Coolant	105	105
LiOH-ECS	526	526
Water	40	40
Radiators	120	160
Instrumentation	(151)	(151)
Signal Conditioner	45	45
PCM and Timing Elec. Ass'y	39	39
Data Storage	25	25
Experiment Selector	6	6
Data Tapes	30	30
Spare Voice Recorders	6	6

Table 3-4 LEM LAB DETAILED WEIGHT STATEMENT (Cont'd.)

FLIGHT 229

COMPONENT	Weight, lb. Configuration C	D
Electrical Power Supply	(2583)	(4729)
Fuel Cell Ass'ys.	492	738
Reactants and ECS Oxygen	1039	2465
Reactant Tankage	424	848
Batteries & Charger	25	25
Plumbing	40	60
Inverters	75	75
Wiring, Distribution and Umbilical	488	518
Communications	(32)	(32)
Television	24	24
Audio Center	6	6
Voice Recorder	2	2
Experiment	(2909)	(2999)
Spares	(60)	(60)
Total Laboratory	11,061	16,803

Table 3-5 INTEGRATED SPACECRAFT WEIGHT STATEMENT

FLIGHT 229

COMPONENT	Weight, lb. Configuration C	D
Command Module Basic Weight	(10,287)	(10,287)
Service Module Basic Weight	(11,479)	(9,160)
CSM Retro-Propellant	(1,349)	(1,191)
Laboratory Weight	(11,061)	(16,803)
Basic Laboratory Structure	2,149	2,214
Experiments	2,909	2,999
Experiment Support Systems	2,997	4,608
Expendables	2,986	6,982
CSM Experiment Dependent Weights		
RCS Propellant	2,210	720
Total Laboratory and Experiment	(13,271)	(17,523)
Allowable Lab. and Exper. Weight	9,555	12,032
Total Orbiting Weight	36,386	38,161
Service Module Propellant (Ascent)	1,410	1,410
SLA Adapter	3,505	3,505
Launch Vehicle Payload	41,301	43,076

4. FLIGHT OPERATIONAL SUPPORT: FLIGHT NO. 229

Experiment 0401 - Genetic Effects in Microorganisms (DNA Mutation Rate, and Phage Production) - Control experiment identical to flight experiment must be performed simultaneously on the ground, with temperature measured to within 0.5°C.

Experiment 0402 - Effects of Space on Morphology, Growth, and Gas/Liquid Separation in Microorganisms, Unicellular Organisms and Animal Tissue Cells - Experiments will be conducted simultaneously on the ground.

Experiment 0404 - Limb Regeneration and Wound Healing During Weightlessness - Earth based control experiment.

Experiment 1302 - Deployment of R.F. Reflective Structures - Radar observations at as many frequencies as possible when the structure has been separated from the spacecraft.

Experiment 1306 - Large Aperture Space Erectable Antenna (30 ft diameter) - Antenna system to track either earth-generated signals or switch to other spacecraft for comparative tracking accuracy experiments.

Table 4-1 presents the experimental data management requirements of the flight. A general discussion of this table and the data management system is contained in Volume 1.

TABLE 4-1. FLIGHT 229 (RENDEZVOUS WITH FLT 523) DATA MANAGEMENT

Avg. Daily Data Recording Requirements

Experiment		Recording Time, min		Remarks
No.	Data Rate K-bits/sec	(A) 51.2 K-b/sec	(B) 1.6 K-b/sec	
0100_s	9 (AVG)	85		3.3 Exper-Hr/Day
0200_s	6.4 (AVG)	46		3.0 Exper-Hr/Day
0403	29	45		45 Min/Day
0405	0.1		60	60 Min/Day
0501	0.8		45	45 Min/Day Monitoring
0704	1.0		228	4.2 Exper-Hr/Day
1306	0.2		4	3 Hr x 1 Time
1504	1.6		9	6.5 Hr x 1 Time
0401, 0402, 0404, 0406, 0702, 0703, 1302	Negligible Recording Requirements			
0100_s, 0200_s, 0702, 0703, 0704	Carried on Flt. 523; Performed on Flt. 229			
Totals		176	346	

NOTE: All Data Management Equip. carried on Flt 523 and used on both flights.

Avg. Daily Data Transmission Time, min:

- Reqd: A + B/32 = 187 min
- Available = 280 min

Data Excess (Minutes of Tape) per Day:

Required Minus Available Transmission Time = zero min.

Data Tape Return Required: $\frac{\text{Data Excess per Mission (min)}}{\text{30 Min/Tape Reel}}$ = zero Reels $\begin{cases}\text{zero lb}\\ \text{zero cu ft}\end{cases}$

Optimum Avg. Daily Transmission Time Required = 78 min.

Voice Tape Return Required (4 packages) 8 lb, 0.1 cu ft

Data Tape Carried 30 lbs

[redacted]

1. FLIGHT MISSION DESCRIPTION

Flight No. 230

Altitude, n.mi 200	Inclination, deg 28.5	Duration, days 45	Crew 3

Mission Title: ASTRONOMY LOGISTICS II

Objectives: This flight will rendezvous with the previous flight for continuation of astronomy experiments. In addition, the cabin atmosphere control experiment and propellant handling experiment will be taken up. All experiments begun on the two previous flights will be continued to the limits of available crew time

Configuration: C (Extended CSM, LEM D/S with Docking Tunnel), or
D (Modified Block II CSM, LEM D/S with Docking Tunnel)

Experiment Summary:

No.	Title	Equipment Location: LEM Stage Asc	Equipment Location: LEM Stage Desc	Equipment Location: CM
1305	Deployment and Observation of Gravity Gradient Structures		x	
1402	Cabin Atmosphere Control For LSS		x	
1506	Propellant Handling Techniques		x	

[redacted]

2. EXPERIMENT DESCRIPTION SUMMARY

FLIGHT - 230

EXPERIMENT: 1305 - Deployment and Observation of Gravity Gradient Stabilized Lenticular Structures - The objectives of this experiment are: to observe and describe a gravity gradient stabilized, inflatable, lenticular satellite's deployment in a zero-g environment; to observe and evaluate the structure's stabilization and damping characteristics (failure to erect or stabilize, as planned, would be observed and reported.); and to evaluate the RF characteristics of the lenticular surface. A tethered, evacuated, canister will be ejected to a distance of 1000 ft (approx.) from the orbiting laboratory. The experimenter will command the canister to open; he will observe and photograph its opening and subsequent sequence of events. Ground station radars will also make pertinent measurements.

EXPERIMENT: 1402 - Cabin Atmosphere Control for Large Space Stations - The objective of this experiment is to test and evaluate advanced life support equipment required for: contaminant detection and control, carbon dioxide concentration with oxygen recovery, and atmosphere circulation. Experimental systems will supplement the normal vehicle life support system. Measurements will be made to evaluate the performance capability of the equipment.

EXPERIMENT: 1506 - Propellant Handling Techniques - The objectives of this experiment are: to determine optimum methods of storing, handling and transferring liquid propellants in space; and to provide design information and develop equipment and techniques to support space operations and space travel. Phase I of the experiments using sealed models in the lab will be conducted, producing technology data pertaining to thermal characteristics, insulation requirements, ullage control, venting concepts, liquid orientation, pumping techniques, etc. Tests will be performed on fluid transfer from one container to another utilizing water and using differing techniques. Techniques to be investigated include bladder, capillaries, dielectricphoresis, roll acceleration and linear acceleration.

[redacted]

TABLE 2-1 FLIGHT 230 INTEGRATED EXPERIMENT EQUIPMENT LIST

Exper. No.	Component	Weight, lb	Vol, cu ft or size*	Elec Energy or Elec Pwr	Remarks
1402		(218)			
	Contaminant Removal Subsystem	15	8 x 6 x 6	25	continuous, entire mission
	Gas chromatograph	10	10 x 10 x6		180 minutes per day for first
	Mass Spectrometer	15	10 x 10 x9		5 days; 90 minutes per day
	Infrared Spectrometer	15	10 x 10 x10		after 5 days
	CO_2 Concentrator - Adsorption	75	15 x 30 x24	330W	continuous, first 15 days
	CO_2 Concentrator - Electrodialysis & Water	50	12 x 18 x15	275 W	continuous, second 15 days
	CO_2 Reduction System	35	9 x 9 x 4	25 W	90 minutes per day for first 5 days 45 minutes per day after 5 days
	Atmosphere Circulation	3	2 x 2 x 8	1 W	continuous, entire mission
1506		(786)			
	(3) Water Containers	200	18 D Sphere	1.5 kw hr	per experiment
	Fuel transfer systems and Sensors	350	24 x 24x36	.75 kw	Spinup
				.25 kw	Standby
	TV Camera	20	0.58 cuft	15 W	30 min/experiment
	Time and Motion Camera	36	4.5 cuft	10 W	5 min/experiment
	AMU Resupply System (Propellant, O_2, N_2)	180	44 x 22 x22	N A	
1305	Deployment and Observation of Gravity Gradient Structures	1250	151 cu ft.		
0501 0702 0703 0704	Radiation Environment Monitoring Intermediate Size Telescope Manned Coronagraph Gamma and X-ray Telescope				Continued from flight 523 and 229
	Total Weight	2254			

*INCHES UNLESS OTHERWISE SPEC.

[redacted]

3 EXPERIMENT/SPACECRAFT INTEGRATION

3.1 Mission Definition

Flight 230 is designed to rendezvous with the previous flight. It provides an opportunity to extend an individual astronaut's space flight time to 135 days and to continue the astronomical studies begun on Flight 523. Experiments associated with this flight include handling of propellants (1506), a gravity gradient experiment (1305) and a cabin atmosphere experiment (1402).

The astronomical studies are prime. The same considerations apply to the biomedical experiments on this flight as on the previous flight if extended stay time is desired.

There are no problems in scheduling any of the experiments. The crew schedules are summarized in Table 3-1 and detailed in Table 3-2. The equipment mission profile is shown in Table 3-3. Additional significant statistics applicable to this flight are:

Spacecraft Inertial Oriented	448 hours
Spacecraft Free Drift	624 hours
Angular Reorientation	217
EVA's	8

All experimental objectives can be achieved on this flight. Additional experiments that do not require particular spacecraft attitudes can be accommodated during the time when the astronomical experiments are being performed.

Table 3-1 Flight 230 Mission Definition Summary*

Exper. No.	Occurrence Day No.	Total Times Perf/ Mission	No. Men Req'd	Exper Time/Test Setup Time, min	Test Time, min	Total Exper Man-hr/ Mission Crewman 1	2	3	Total	Total Exper Man-hr/Mission Achv'd	Spec'd	Remarks
1305	1 thru 44	45	a.	96	15	.3	1.6	14.5	16.4	1,045.		a. 2 men required for 96 min. during setup.
1402	1 thru 45	140	1	210.	2	43.8	137.7	25.2	206.7	206.7	186.	a. Test is continuous throughout mission. Test times differ widely.
1506	1 thru 5	10	1	63.	29	28.5	1.5		30.	30.	30.	96 min of cleanup after each experiment cycle
Continued From Flight 229.												
0100 0200	2 thru 45	88	2	a.	b.	80.	80.	80.	240	176.		a. Included in experiment time b. Approx 120 min per man per day
0501	1 thru 45	45	1	5	10	.2		11.0	11.2	11.2	11.2	
0702	2 thru 45	83	1		Variable	180.	4.5	197.	381.5	381.5		Perform as often as practical
0703	1 thru 44	44	1		60	44			44.	44.		Perform as often as practical
0704	1 thru 45	45	1		30		22.5		22.5	22.5		Perform as often as practical
Systems Checks									115.5			
EVA (Incl. Support)									24			
					Total				1091.8			

Maximum Work Day: 10.5 hrs on duty; Average Work Day: 8.2 hrs. on duty; Minimum Work Day: 6.5 hrs on duty.

Total EVA Man Hours: 10

Notes: Avg Work Day on 5 Days when propellant handling experiments are performed: 9.9 hr
Avg Work Day on 6 Days that require LiOH EVA's: 9.2 hr
Avg Work Day on remaining work days: 7.8 hr.

* See Tables 3-2 and 3-3 for crew schedules and experiment equipment duty cycles

Table 3-2 **CREW SCHEDULING, FLIGHT 230, SHEET 1 OF 2**

DAY 1	ORBIT	CREWMEN ACTIVITIES 1	2	3
0000				
20		Cargo & Transfer EVA	Pers.	
40				
0100				Supp't EVA
20				
40				
0200				
20				
40		1506		
0300				
20				
40				
0400				
20				E/Hyg
40				
0500		E/Hyg	E/Hyg	
20				Rest
40				
0600				
20				
40			1506	
0700				
20				
40				
0800			1305	1305
20				DEPLOY
40				
0900		Sleep		
20				
40				
1000			0704	
20				
40				
1100			Rest	Rest
20				
40				
1200		E/Hyg	E/Hyg	E/Hyg
20				
40		Rest	Rest	Rest
1300				
20				
40				
1400				
20				
40		1506		1402 Set up
1500				
20				
40				
1600			Sleep	
20				
40				
1700		1305		
20		0501		
40				
1800		Rest		Rest
20				
40				
1900		E/Hyg	E/Hyg	E/Hyg
20				
40				Rest
2000				
20		Rest	Rest	
40				
2100				
20				
40		0703		
2200				
20				
40				
2300				Sleep
20		Rest	Rest	
40				
2400				

DAY 2	ORBIT	CREWMEN ACTIVITIES 1	2	3
0000				
20				
40				
0100				
20		1506		
40				Sleep
0200				
20				
40			1402	
0300				
20				
40				
0400				
20				E/Hyg
40				
0500		E/Hyg	E/Hyg	
20				Rest
40				
0600				
20				
40				
0700				
20				0704
40				
0800			1402	
20				
40				
0900		Sleep		
20			0100 -	
40			0200	
1000				0100 -
20			0704	0200
40				
1100			Rest	Rest
20				
40				
1200		E/Hyg	E/Hyg	E/Hyg
20				
40		Rest	Rest	Rest
1300				
20				
40				
1400				
20				
40		1506		
1500				
20				
40				0702
1600			Sleep	
20				
40		1402		
1700				
20				
40				
1800		Rest		Rest
20				
40				
1900		E/Hyg	E/Hyg	E/Hyg
20				
40		Rest	Rest	Rest
2000				1305
20		Rest	Rest	0501
40				
2100				
20				
40		0702		1402
2200				
20				
40		0100 -		
2300		0200		Sleep
20			0100 -	
40			0200	
2400				

DAY 3	ORBIT	CREWMEN ACTIVITIES 1	2	3
0000				
20				
40				
0100				
20		1506		
40				Sleep
0200				
20				
40			1402	
0300				
20				
40				
0400				
20				E/Hyg
40				
0500		E/Hyg	E/Hyg	
20				Rest
40				
0600				
20			1402	
40				
0700				
20				0704
40				
0800			1402	
20				
40				
0900		Sleep		
20			0100 -	
40			0200	
1000				0100 -
20			0704	0200
40				
1100			Rest	Rest
20				
40				
1200		E/Hyg	E/Hyg	E/Hyg
20				
40		Rest	Rest	Rest
1300				
20				
40				
1400				
20				
40		1506		
1500				
20				
40				0702
1600			Sleep	
20				
40		1402		
1700				
20				
40				
1800		Rest		Rest
20				
40				
1900		E/Hyg	E/Hyg	E/Hyg
20				
40		Rest	Rest	Rest
2000				
20		Rest	Rest	
40				
2100				
20				
40		0703		1402
2200				
20				
40				
2300		0100		Sleep
20		0200	0100	
40			0200	
2400				

DAY 4	ORBIT	CREWMEN ACTIVITIES 1	2	3
0000				
20				
40				
0100				
20		1506		
40				Sleep
0200				
20				
40			1402	
0300				
20				
40				
0400				
20				E/Hyg
40				
0500		E/Hyg	E/Hyg	
20				Rest
40				
0600				
20				
40				
0700				
20				0704
40				
0800			1402	
20				
40				
0900		Sleep		
20			0100 -	
40			0200	
1000				0100 -
20			0704	0200
40				
1100			Rest	Rest
20				
40				
1200		E/Hyg	E/Hyg	E/Hyg
20				
40		Rest	Rest	Rest
1300				
20				
40				
1400				
20				
40		1506		
1500				
20				
40				0702
1600			Sleep	
20				
40		1402		
1700				
20				
40				
1800		Rest		Rest
20				
40				
1900		E/Hyg	E/Hyg	E/Hyg
20				
40		Rest	Rest	Rest
2000				1305
20		Rest	Rest	0501
40				
2100				
20				
40		0703		1402
2200				
20				
40				
2300		0100		Sleep
20		0200	0100	
40			0200	
2400				

NOTES

Experiment Scheduled — E/Hyg — Rest & Personal Hygiene

Limits of Experiment Time

Limits of EVA

[redacted]

CREW SCHEDULING, FLIGHT 230, SHEET 2 OF 2

2-15.7

DAY 5	ORBIT	CREWMEN ACTIVITIES 1	2	3
0000				
20				
40			1402	
0100		1506		
20				Sleep
40				
0200				
20				
40			1402	
0300				
20				
40				
0400				
20				E/Hyg
40				
0500		E/Hyg	E/Hyg	
20				Rest
40				
0600				
20				
40				
0700				0100-
20			0704	0200
40			0100-	
0800			0200	
20				
40				
0900		Sleep	Rest	
20				
40				1402
1000				
20			0704	
40				
1100				
20			Rest	Rest
40				
1200		E/Hyg	E/Hyg	E/Hyg
20				
40		Rest	Rest	Rest
1300				
20				1402
40				
1400				
20				
40		1506		
1500				
20				
40				0702
1600			Sleep	
20				
40				
1700				
20				
40				
1800		Rest		Rest
20				
40				
1900				
20		E/Hyg	E/Hyg	E/Hyg
40		Rest	Rest	Rest
2000				1305
20		Rest	Rest	0501
40				
2100				
20				1402
40		0703		
2200				
20				
40		0100-		
2300				Sleep
20		0200	0100-	
40			0200	
2400				

DAY 6	ORBIT	CREWMEN ACTIVITIES 1	2	3
0000				
20				
40			1402	
0100				
20				Sleep
40				
0200				
20				
40				
0300		0702		
20				
40				
0400				
20				E/Hyg
40				
0500		E/Hyg	E/Hyg	
20				Rest
40				
0600				
20				
40				
0700				
20			0704	
40				
0800				
20				
40				
0900		Sleep		
20				
40			0100-	
1000			0200	0100-
20			0704	0200
40				
1100				
20			Rest	Rest
40				
1200		E/Hyg	E/Hyg	E/Hyg
20				
40		Rest	Rest	Rest
1300				
20		0704		
40				
1400				
20		1402		
40				
1500				
20				
40				0702
1600			Sleep	
20				
40				
1700				
20				
40				
1800		Rest		Rest
20				
40				
1900				
20		E/Hyg	E/Hyg	E/Hyg
40		Rest	Rest	Rest
2000				1305
20		Rest	Rest	0501
40				
2100				
20				
40		0703		
2200			1402	
20				
40		0100-		
2300				Sleep
20		0200	0100-	
40			0200	
2400				

DAY 7	ORBIT	CREWMEN ACTIVITIES 1	2	3
0000				
20				
40			1402	
0100				
20				Sleep
40				
0200				
20		0702		
40				
0300				
20				
40				
0400				
20				E/Hyg
40				
0500		E/Hyg	E/Hyg	
20				Rest
40				
0600				
20				
40				
0700				1402
20			0704	
40				
0800				
20				
40				
0900		Sleep		
20				
40			0100-	
1000			0200	0100-
20			0704	0200
40				
1100				
20			Rest	Rest
40				
1200		E/Hyg	E/Hyg	E/Hyg
20				
40		Rest	Rest	Rest
1300				
20		0704		
40				
1400				
20		1402		
40				
1500				
20				
40				0702
1600			Sleep	
20				
40				
1700				
20				
40				
1800				Rest
20		0703		
40				
1900				
20		E/Hyg	E/Hyg	E/Hyg
40				
2000				Rest
20		Rest	Rest	1305
40				0501
2100				
20		Supp't	Lich	Supp't
40		EVA	EVA	EVA
2200				
20				
40		0100-	1402	
2300				Sleep
20		0200	0100-	
40			0200	
2400				

DAY 45	ORBIT	CREWMEN ACTIVITIES 1	2	3
0000				
20				
40				
0100		1402		
20				
40				Sleep
0200				
20				
40			0702	
0300				
20				
40				
0400				
20				E/Hyg
40				
0500		E/Hyg	E/Hyg	
20				Rest
40				
0600				
20			0100-	
40			0200	0100-
0700				0200
20			0704	
40				
0800			0501	
20		Sleep		
40				
0900				
20				
40				Sleep
1000				
20				
40				
1100				
20			Rest	Rest
40				
1200			0100-	
20			0200	
40		0100-		
1300		0200		
20				
40				
1400				
20				
40				
1500				
20				
40				
1600				
20				
40				
1700				
20				
40				
1800				
20				
40				
1900				
20				
40				
2000				
20				
40				
2100				
20				
40				
2200				
20				
40				
2300				
20				
40				
2400				

NOTES Days 8-13, 15-20, 22-27, 29-34, 36-41, 43-44 are the same as day 6
Days 14, 21, 23, 35, 42 are the same as day 7

[redacted]

Table 3-3 APOLLO EXTENSION SYSTEM EARTH ORBIT MISSION STUDY
FLIGHT 230 EXPERIMENT MISSION PROFILE

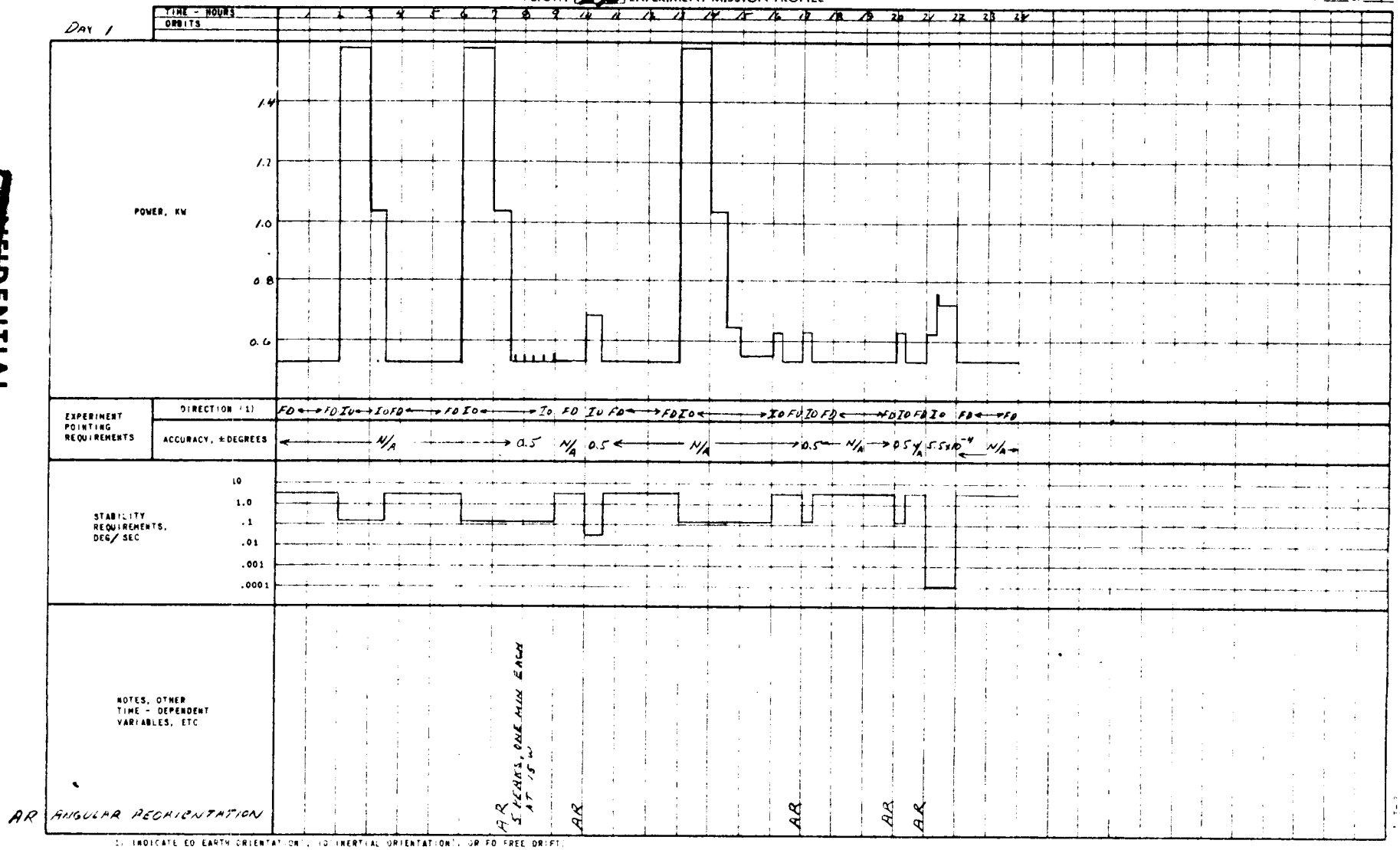

(1) INDICATE EO EARTH ORIENTATION, IO INERTIAL ORIENTATION, OR FO FREE DRIFT.

GRUMMAN AIRCRAFT ENGINEERING CORPORATION

Table 3-3 APOLLO EXTENSION SYSTEM EARTH ORBIT MISSION STUDY
FLIGHT 230 EXPERIMENT MISSION PROFILE

DAY 2

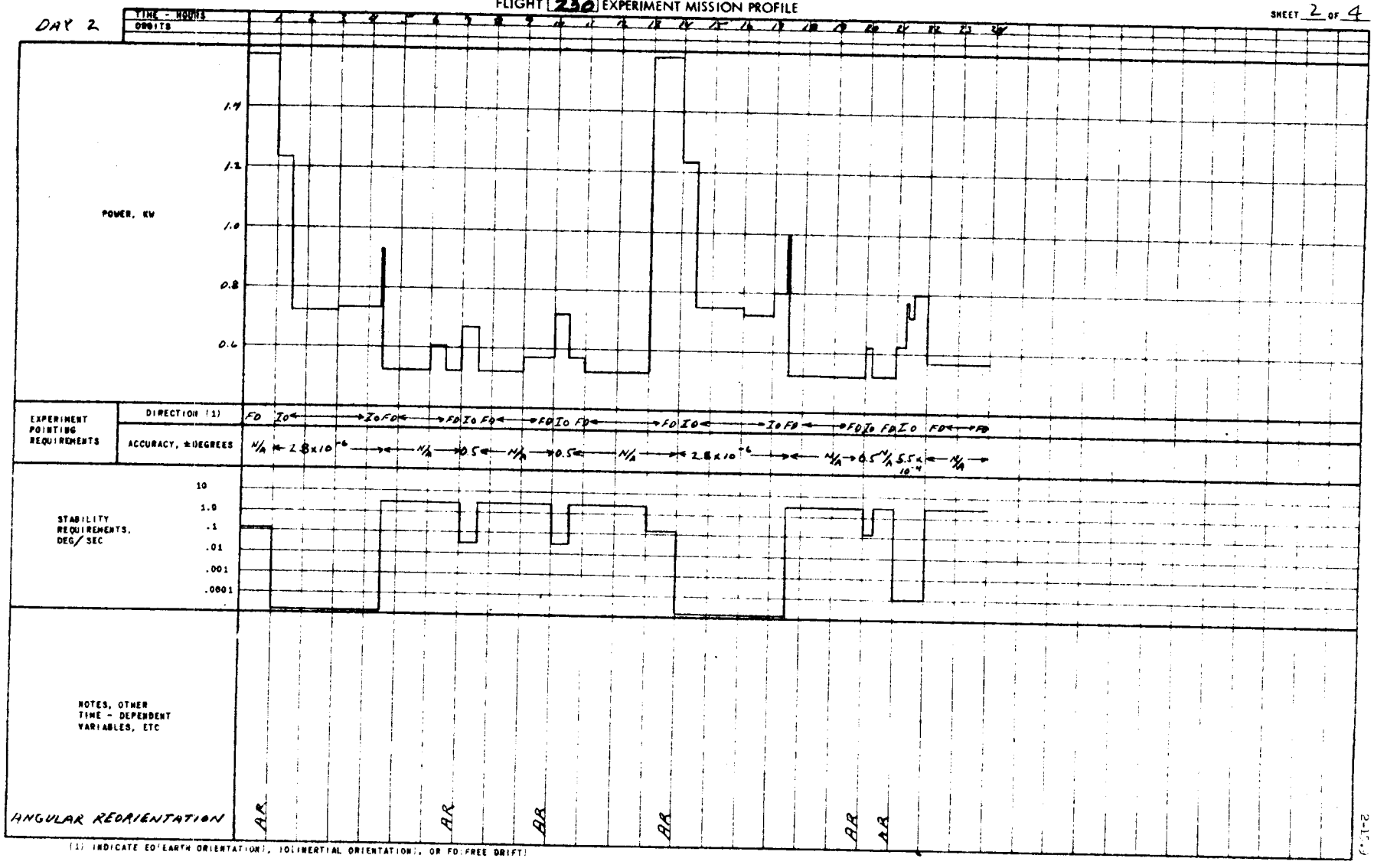

AR ANGULAR REORIENTATION

(1) INDICATE EO (EARTH ORIENTATION), IO (INERTIAL ORIENTATION), OR FD (FREE DRIFT)

GRUMMAN AIRCRAFT ENGINEERING CORPORATION

Table 3-3 APOLLO EXTENSION SYSTEM EARTH ORBIT MISSION STUDY

FLIGHT 230 EXPERIMENT MISSION PROFILE

SHEET 3 OF 4

DAY 6

TIME - HOURS: 1 2 3 4 5 6 7 8 9 10 11 12 13 14 15 16 17 18 19 20 21 22 23 24

ORBITS

TYPICAL FOR DAYS 8-13, 15-20, 22-27, 29-34, 36-41, 43, 44

POWER, KW: 1.4, 1.2, 1.0, 0.8, 0.6

EXPERIMENT POINTING REQUIREMENTS

DIRECTION (1): IO ← → IO FD ← → FD IO FD ← → FD IO FD ← → FD IO FD IO ← → IO FD ← → FD IO FD IO FD ← → FD

ACCURACY, ±DEGREES: ← 2.8×10^{-6} → ← N/A → 0.5 ← N/A → 0.5 ← N/A → 0.5 N/A ← 2.8×10^{-6} → ← N/A → 0.5 N/A 5.5×10^{-4} ← N/A →

STABILITY REQUIREMENTS, DEG/SEC: 10, 1.0, .1, .01, .001, .0001

NOTES, OTHER TIME - DEPENDENT VARIABLES, ETC

AR ANGULAR REORIENTATION: AR AR AR AR AR AR AR

(1) INDICATE EO (EARTH ORIENTATION), IO (INERTIAL ORIENTATION), OR FD (FREE DRIFT)

[redacted]

[redacted]

GRUMMAN AIRCRAFT ENGINEERING CORPORATION

Table 3-3 APOLLO EXTENSION SYSTEM EARTH ORBIT MISSION STUDY
FLIGHT 230 EXPERIMENT MISSION PROFILE

SHEET 4 OF 4

DAY 7

TYPICAL FOR DAYS 14, 21, 28, 35, 42

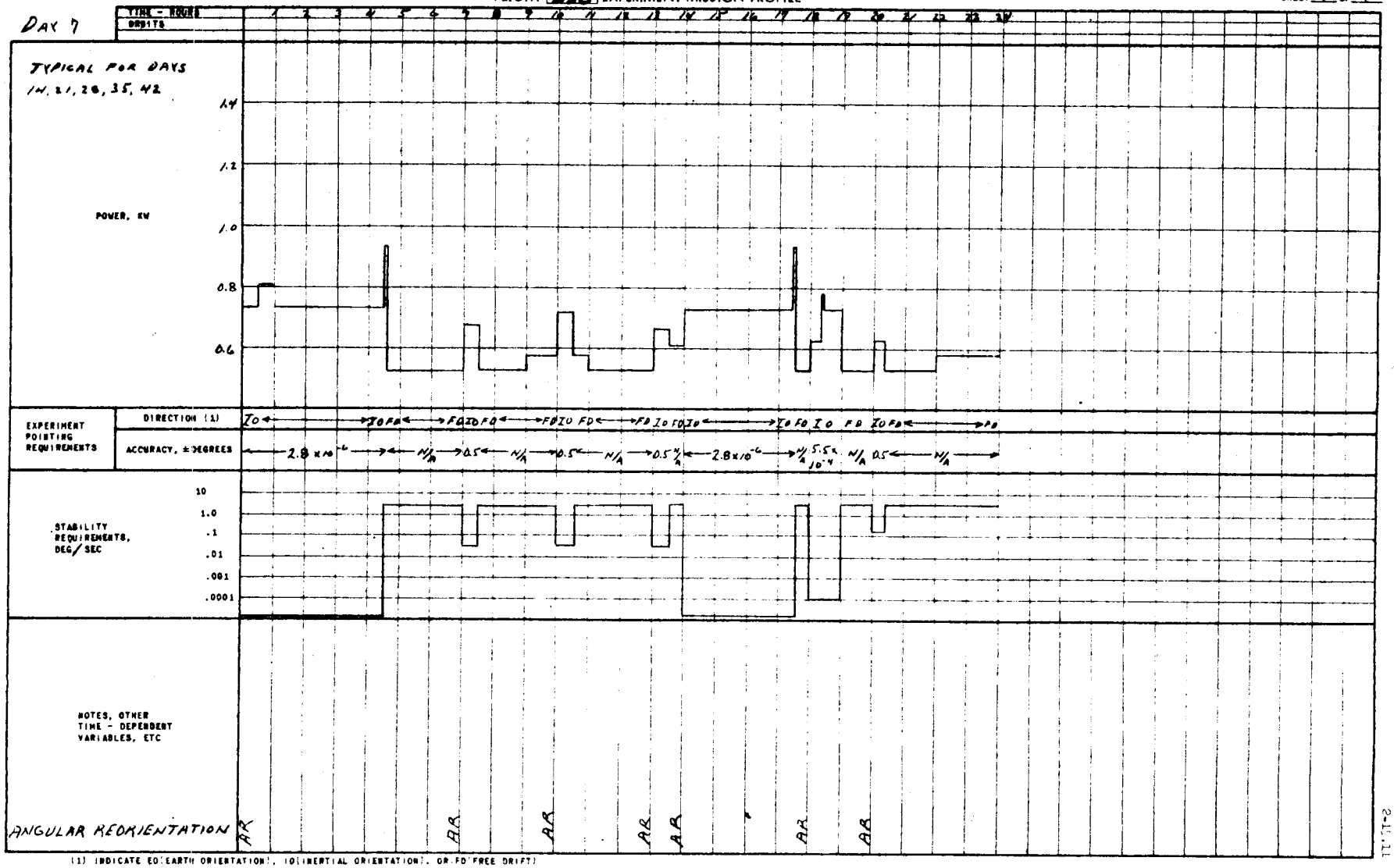

(1) INDICATE EO (EARTH ORIENTATION), IO (INERTIAL ORIENTATION), OR FD (FREE DRIFT)

2-1.11

3.2 SPACECRAFT DEFINITION

Flight 230, shown in Figure 3-1, is a second resupply mission for a previous astronomy flight. In addition to the expendables and crew replacements the flight carries subsystem development and test (1402), extravehicular operations (1506), and space structures technology experiments (1305).

This flight consists of a CSM with a standard LEM descent stage rack which carries expendables and experiments. A 44 inch dia. pressurized passageway is mounted in the center bay of the descent stage. Its upper end duplicates the LEM docking hatch while the lower end duplicates the docking port of the CM, providing identical docking procedures.

Resupply food, and the propellant handling techniques experiment (1506) are carried inside the passageway and removed to the resupplied Lab after docking. The experiment is conducted in the Lab and the apparatus stored externally after experiment completion. LiOH supplies in the Lab are replaced from external stowage on the descent stage (D/S) during scheduled EVA's.

Experiment 1402, Cabin Atmosphere Control for LSS, is contained within the D/S rack, unpressurized, and an associated control console and duct outlets are located in the passageway.

Experiment 1305 is ejected from a canister mounted on the rack and is viewed and photographed from the CM and Lab.

All experiment equipment installations involve additions to the existing LEM descent stage structure.

In addition to the standard CSM/Lab interface, this flight requires additional interface connections between the racks and the originally resupplied Lab. The interface wiring is the same as that required for the Lab/CSM interface.

The difference between "C" and "D" versions of the D/S rack are the addition of one Apollo X O_2 and one Apollo X H_2 tank, added fuel cell reactants, and the addition of one FCA. Also, the FCA radiator is increased by 20 sq. ft. These modifications to a "C" version D/S rack accommodate the added power demand of the "D" version CSM required by taking over spacecraft power requirements after (nominally) 14 days.

This flight utilizes an Apollo CSM fuel cell electrical generation system, and the associated thermal control system.

No capability to carry LEM RCS propellant is available on this flight since the descent stage only is carried.

The estimated rack weight of the "C" version is 7685 lbs. and of the "D" version is 9841 lbs. (See Tables 3-4 and 3-5.)

KEY

No.	Experiment	Name
1		Pressurized Passageway
2	1506	Removed for Flt. 523 after Docking
3	1305	Lenticular Satellite & Canister
4	1402	Cabin Atmosphere System
5		H_2
6		O_2
7		Equipment Radiator
8		FCA Radiator
9		FCA
10		Control Panel for Exp. 1402
11		Flight Bio Lab
12		LiOH Storage
13		Food & Food Canister

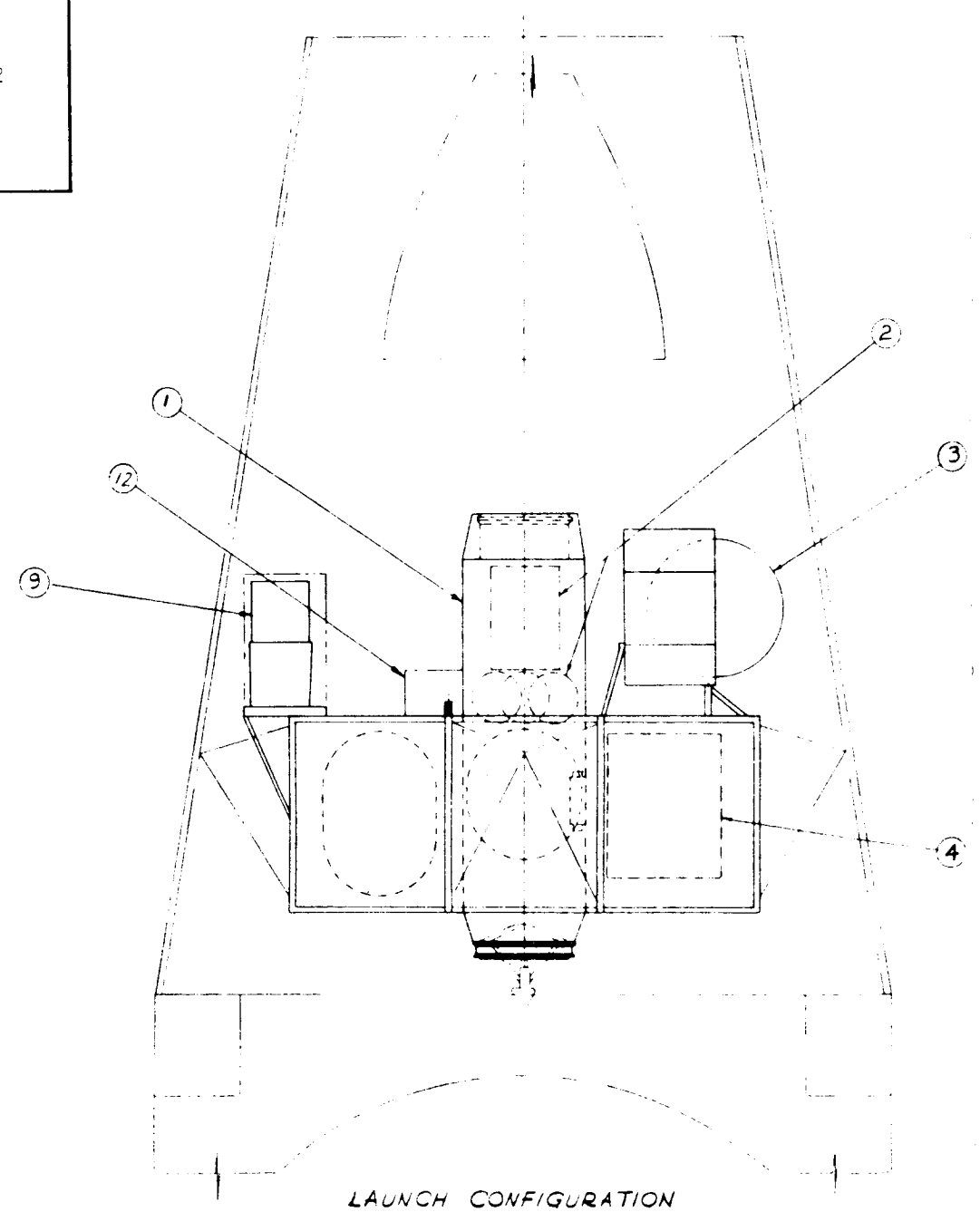

LAUNCH CONFIGURATION

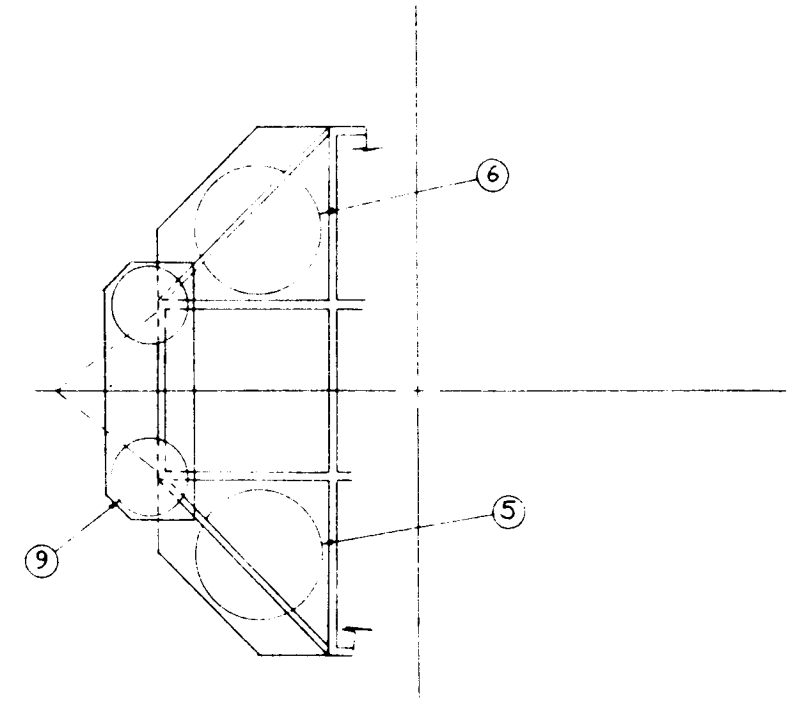

VIEW LOOKING DOWN AT ASCENT STAGE

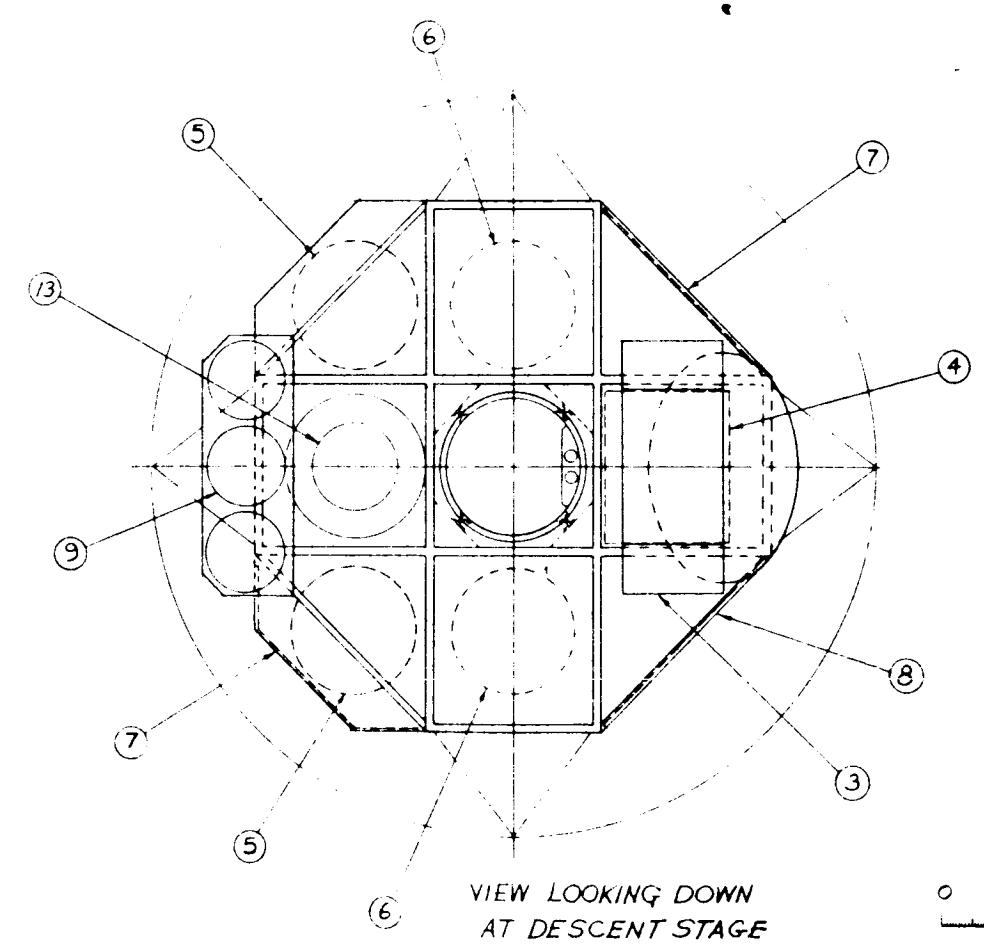

VIEW LOOKING DOWN AT DESCENT STAGE

0 20 40 60
SCALE:

FOLD-OUT #1

[redacted]

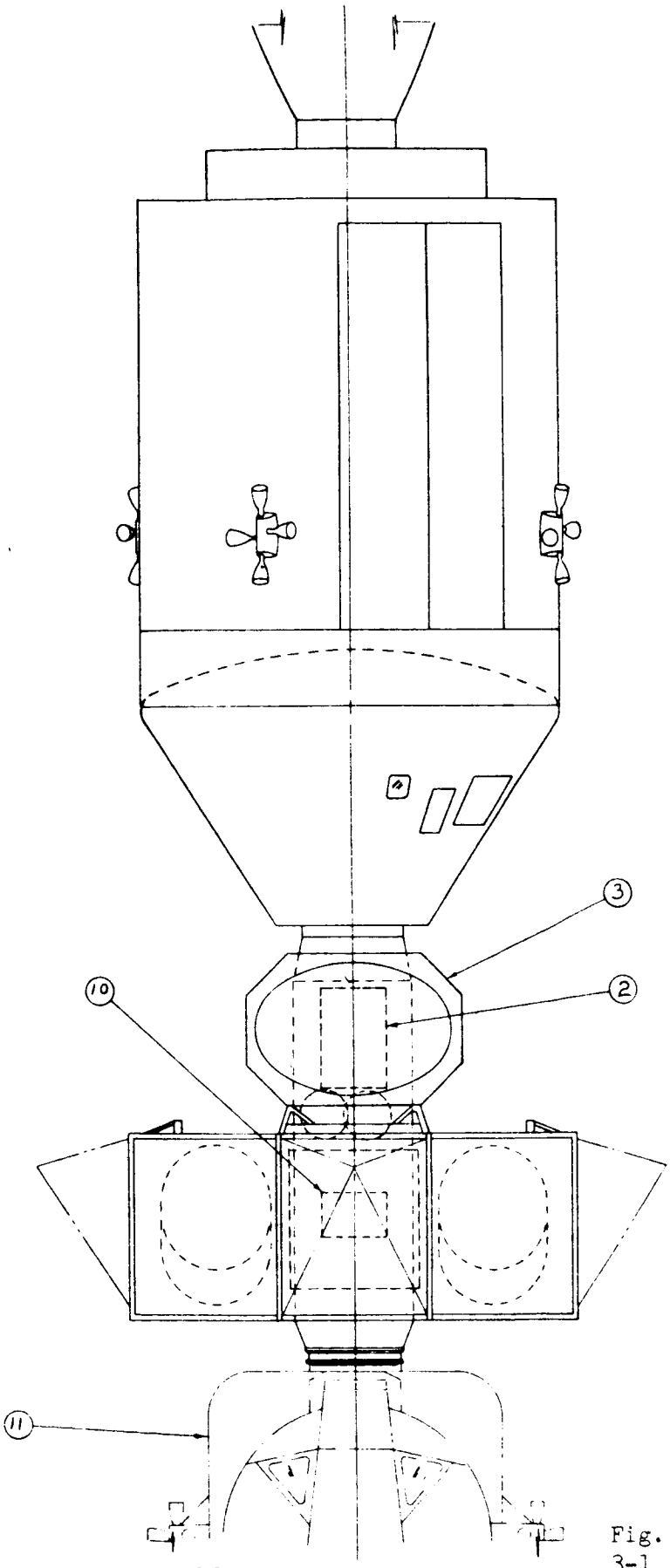

ORBITING CONFIGURATION

Fig. 3-1

Grumman
AIRCRAFT ENGINEERING CORPORATION
PRELIMINARY DESIGN SECT.

Gen Arrgmt Flt. 23[illegible]
Astronomy Logistics
II

SCALE OF ORIG. DWG. 1/20

AES 1044

80 100
20"

FOLD-OUT #2

[redacted]

TABLE 3-4 LEM LAB SUPPORT RACK DETAILED WEIGHT STATEMENT

Flight 230

Component	Weight, lbs Configuration C	D
Structure	(1240)	(1240)
Basic Descent	750	750
Shielding	155	155
Power Pack Structure	50	50
Experiment Supports	180	180
Docking Ring and Tunnel	105	105
Crew Provisions	(255)	(255)
Food	228	228
LiOH - PLSS	27	27
Controls and Displays	(225)	(225)
Environmental Control	(767)	(831)
Atmosphere Revitalization System	80	80
O_2 Supply and Cabin Pressurization	34	34
Water Management	36	36
Heat Transport, Cold Plates, Coolant	105	105
LiOH - ECS	382	382
Water	40	40
Radiators	90	154
Instrumentation	(151)	(151)
Signal Conditioner	45	45
PCM and Timing Elec. Ass'y	39	39
Data Storage	25	25
Experiment Selector	6	6
Data Tapes	30	30
Spare Voice Recorders	6	6
Electrical Power Supply	(2701)	(4793)
Fuel Cell Ass'ys	492	738
Reactant and ECS Oxygen	1135	2596
Reactant Tankage	513	848
Batteries and Charger	74	74
Plumbing	40	40
Inverters	75	75
Wiring, Distribution and Umbilical	372	402
Communications	(32)	(32)
Television	24	24
Audio Center	6	6
Voice Recorder	2	2

TABLE 3-4 LEM LAB SUPPORT RACK DETAILED WEIGHT STATEMENT (Cont'd)

Flight 230

Component	Weight, lbs Configuration	
	C	D
Experiment	(2254)	(2254)
Spares	(60)	(60)
Total Support Rack	7685	9841

TABLE 3-5 INTEGRATED SPACECRAFT WEIGHT STATEMENT

Flight 230

Component	Weight, lbs Configuration C	D
Command Module Basic Weight	(10,287)	(10,287)
Service Module Basic Weight	(11,479)	(9,160)
CSM Retro-Propellant	(1,349)	(1,191)
Support Rack Weight	(7,685)	(9,841)
Basic Support Rack Structure	1,240	1,240
Experiments	2,254	2,254
Experiment Support Systems	2,379	3,074
Expendables	1,812	3,273
CSM Experiment Dependent Weights		
RCS Propellant	2,210	720
Total Support Rack & Experiment	(9,895)	(10,561)
Allowable Support Rack & Exper. Weight	9,555	12,032
Total Orbiting Weight	33,010	31,199
Service Module Propellant (Ascent)	1,410	1,410
SLA Adapter	3,505	3,505
Launch Vehicle Payload	37,925	36,114

Basic subsystem characteristics pertinent to this flight are described below:

Vehicle Orientation	Inertial Pointing
Stabilization Capability	± .20 @ 405 Hr.; ±5° @ 675 Hr.
AVG Experiment PWR (Delivered)	693 watts
Number of Repressurizations	8
Equipment Cooling	48 ft^2 Radiator

	"C" Config.	"D" Config. Takeover Pt = 14.8 days
Number of Fuel Cells	2	3
Oxygen Tanks	1 Apollo X	2 Apollo X
Hydrogen Tanks	1 Apollo X and 1 Block II	2 Apollo X
Peaking Battery	100 AMP Hr.	100 AMP Hr.
Fuel Cell Cooling	19 ft^2 Radiator	39 ft^2 Radiators
Water for Thermal Cont (Max)	808 lb	866 lb
Water Generated	1119 lb	1965 lb

Waste reactants are needed to accommodate the estimated boiloff rates. These fluids are disposed of by increasing the power output of the normally operating fuel cells and energizing either a dummy load or idle equipment.

4. FLIGHT OPERATIONS SUPPORT: FLIGHT NO. 230

Experiment 1305 - Deployment and Observation of Gravity Gradient Stabilized Lenticular Structures - Observation by ground based radars to evaluate RF characteristics.

Table 4-1 presents the experimental data management requirements of the flight. A general discussion of this table and the data management system is contained in Volume 1.

TABLE 4-1. FLIGHT 230 (RENDEZVOUS WITH FLT 523 & 229) DATA MANAGEMENT

Avg. Daily Data Recording Requirements

Experiment		Recording Time, min		Remarks
No.	Data Rate K-bits/sec	(A) 51.2 K-b/sec	(B) 1.6 K-b/sec	
0100_s	9 (AVG)	85		3 Exper-Hr/Day
0200_s	6.4 (AVG)	46		2.5 Exper-Hr/Day
0501	0.8		45	45 Min/Day Monitoring
0704	1.0		228	4.2 Exper-Hr/Day
1402	0.9		30	30 Min/Day
1506	0.2		7	30 Min x 10 Times
0702, 0703, 1305	Negligible Recording Requirements			
0100_s, 0200_s, 0501, 0702, 0703, 0704	Carried on Flt. 523; Performed on Flt. 230			
Totals		131	310	

NOTE: All Data Management Equip. carried on Flt 523 and used on both flights.

Avg. Daily Data Transmission Time, min:

- Reqd: A + B/32 = 141 min
- Available = 280 min

Data Excess (Minutes of Tape) per Day:

Required Minus Available Transmission Time = zero min

Data Tape Return Required: $\frac{\text{Data Excess Per Mission (min)}}{\text{30 Min/Tape Reel}}$ = zero Reels { zero lb, zero cu ft

Optimum Avg Daily Transmission Time Required = 40 min

Voice Tape Return Required (4 packages) 8 lb, 0.1 cu ft

Data Tape Carried 30 lb

1. FLIGHT MISSION DESCRIPTION

Flight No. 16

Altitude, n.mi 200	Inclination, deg 28.5	Duration, days 4	Crew 3

Mission Title: RENDEZVOUS TECHNIQUES WITH EVASIVE SATELLITES

Objectives: The primary purpose of this mission is to experiment with techniques for rendezvous with non-co-operative, evasive satellites.

Configuration: Block II CSM and an essentually unmodified lunar landing LEM

Experiment Summary:

No.	Title	Location: LEM Stage Asc	Location: LEM Stage Desc	Location: CM
Note: See Section 2, "Experiment Description".				

2 EXPERIMENT DESCRIPTION SUMMARY

This mission was not included in the original list of flights prepared by NASA Headquarters. Also, there is no detailed experiment description similar to those appearing in Volume 4. The purpose of this flight description is to illustrate the suitability of the essentially unmodified Apollo spacecraft to perform experiments in techniques for rendezvous with evasive satellites.

This flight would utilize the propulsion systems in both the CSM and LEM. A larger radar with skin tracking capability of ranges the order of 100 miles could be added to the LEM. Although the primary objective of the mission is to explore rendezvous techniques, it will require a Saturn V launch vehicle, and therefore will have the weight capability to carry additional experiments. For example, if the ascent engine were removed, the biomedical/behavorial experiment could be added. In fact, the same experiments as listed for Flight 209 could readily be included in this flight, in which case the experiment listing would be:

0100	Biomedical
0200	Behavioral
0501	Radiation environment monitoring
0601	Capillarity studies
1501	Evaluation of space suits
1502	Manned locomotion and manuvering capability
1503	Emergency techniques for rescue
-	Rendezvous techniques with evasive satellites.

3 EXPERIMENT/SPACECRAFT INTEGRATION

3.1 MISSION DEFINITION

If all the experiments listed in section 2.0 were included in Flight #16, the mission could be described by the mission timelines of Flight #209, with the addition of activities related to the rendezvous experiment. While the rendezous experiment, that would be conducted, would obviously result from a thorough study of the evasive satellite problem, the mission profile, described below, has been included to illustrate spacecraft capability.

A basic LEM and Block II CSM would be used, except for the addition to the LEM of a large (6 ft) rendezvous radar antenna. Following Saturn V launch into a circular 200 nm orbit, systems checkout and orbital determination would be performed. Two crewmen would enter the LEM, perform a status check, and separate the LEM from the CSM.

The CSM crewmen would then perform a 4° plane change maneuver, requiring 760 fps. Approximately 35 min. later after a maximum separation of 240 n.mi., the spacecraft are 120 n.mi. apart and radar skin tracking by the LEM begins. A short time later, the CSM crewman begins his evasive maneuver. This second burn consists of a 3° plane change plus a 750 n.mi. increase in apogee, requiring 1700 fps.

When the LEM crew detects this evasive maneuver, they initiate a chase which could consist of a 7° plane change, a 1000 n.mi. increase in apogee to obtain proper phasing, and a rendezvous maneuver, requiring 3080, 1500, and 1300 fps. respec tively, or a total of approximate 5900 fps. The total time required following separation is less than 2 hours.

The above maneuvers, although preliminary and somewhat arbitrary, were chosen for specific reasons. Limiting the LEM ΔV to 5900 fps enables use of either the ascent or descent engine, which have capabilities of approximately 6600 and 7400 fps, respectively. Deletion of the ascent engine would enable this rendezvous experiment to be performed using the experiments carried in Flight 209A, thus, eliminating one launch. Limiting the LEM ΔV to 5900 fps and the CSM ΔV to 3500 fps also makes

rescue of the LEM by the CSM possible, since the CSM has a total available separated ΔV of 10,600 fps (reentry from 200 nm requires about 600 fps).

More generally, the manuvering performance of LEM could be summarized as the capability for changing planes or for transferring to circular orbits of different altitudes, as illustrated below.

Stage	Alt from 200 N.MI N.MI			Plane Change DEG		
	No. Round Trips			No. Plane Changes		
	1	5	10	1	5	10
Descent	1580	430	310	17.2	3.4	1.7
Ascent	1290	390	285	14.2	2.8	1.4
ASC + DESC	3525	640	425	32.8	6.3	3.1

3.2 SPACECRAFT DEFINITION

If only the rendezvous experiment were flown, the spacecraft would consist of a Block II CSM and a lunar landing LEM with the landing gear removed and a larger rendezvous radar added. The general arrangement of this configuration is shown in Figure 3-1.

If it is desired to extend the life of this flight beyond the basic two day capability and add additional experiments similar to flight 209, the descent stage would be modified similar to flight 209 to add batteries, oxygen, water, lithium hydroxide and food. These modifications could extend the life to at least 14 days. The addition of fuel cells and more expendables could extend the life even further.

4 OPERATIONS

The rendezvous experiment could either include or exclude ground tracking, depending upon the detailed objectives of the experiment.

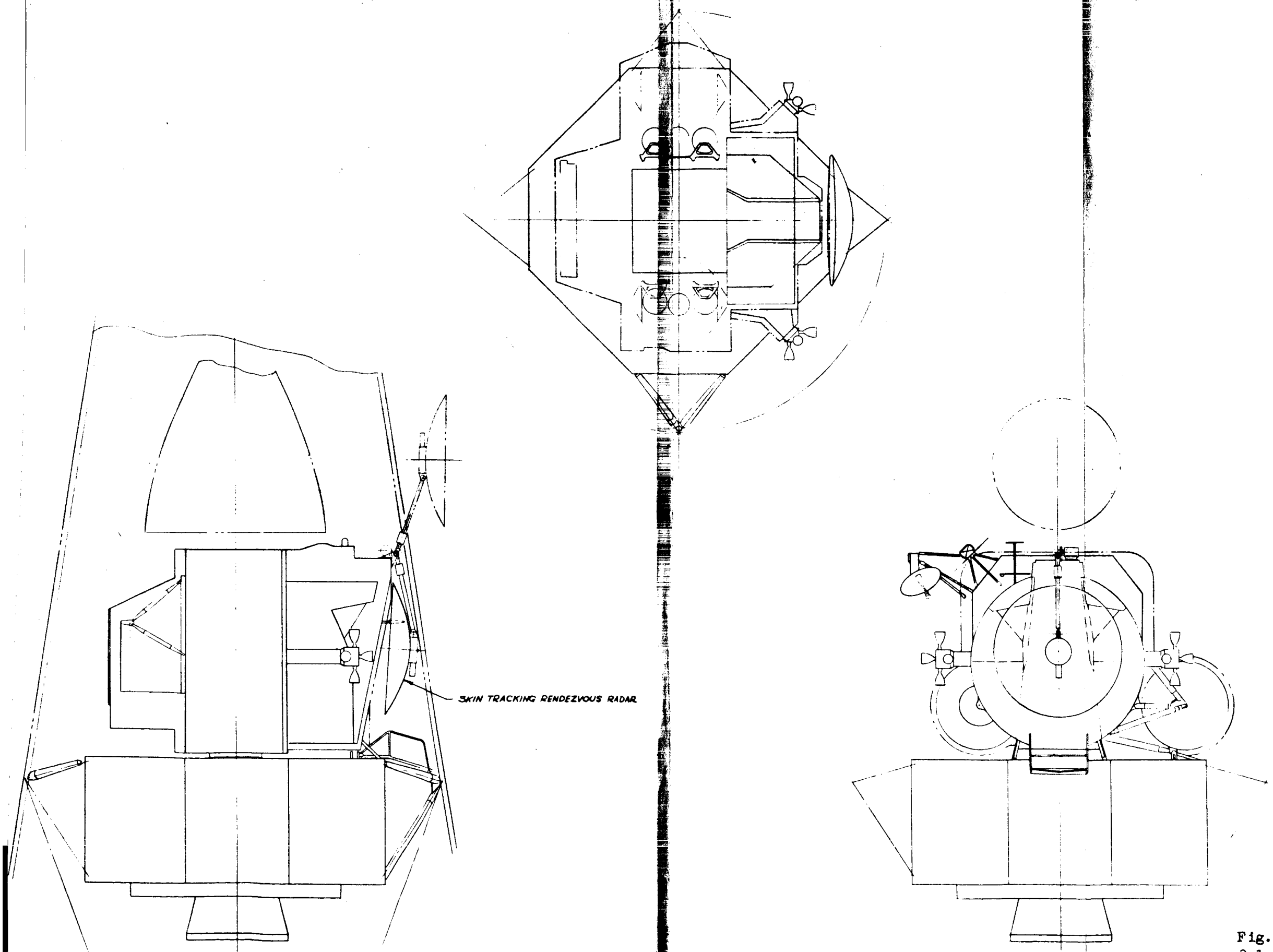

Fig. 3-1

Grumman
AIRCRAFT ENGINEERING CORPORATION
PRELIMINARY DESIGN SECT.

Gen Arrgmt Flt. 16
Rendezvous Techniques with Evasive Satellites

SCALE OF DWG. DWG. - 1/20

AES 1158