SE002-308-3T USS-10

~~CONFIDENTIAL~~

GRUMMAN AIRCRAFT ENGINEERING CORPORATION
Bethpage, L. I., N. Y.

CLASSIFICATION CHANGE
UNCLASSIFIED
To
By authority of GDS - EO 11652 Date 12/31/72
Changed by L. Shirley
Classified Document Master Control Station, NASA
Scientific and Technical Information Facility

Page: Title and 64

This document supersedes Specification No. LSP-440-41001B, dated 6-2-65, and Amendments No. 1, 2, 3, 4 and 5.

SPECIFICATION

No. LSP-440-41001C Date: 6-14-66

C66-8580

RECEIVED
SEP 30 1966
M/A
DOCUMENT CENTER

DISPLAY EQUIPMENT, EXTERNAL VISUAL

DESIGN CONTROL SPECIFICATION FOR (U)

Supersedes
Z66-15253

Contract No. NAS 9-1100

Exhibit E; para. 4.2 Line Item No. 15

Document Type II Primary No. 655

J. Oberlies 7-15-66
J. Oberlies Specs. Grp.

R. Carbee 7/14/66
R. Carbee Subsystem Engrg.

R. Rulon Engr.

A. Whitaker Systems Engrg.
G. Wiesinger

A. Reynolds GSE Engr.

H. Peck GSE Project Engr.

GROUP 4
Downgraded at 3 year intervals; declassified after 12 years.

X [redacted]
(ACCESSION NUMBER) (THRU)
[redacted]
(PAGES) (CODE)
[redacted]
(NASA [redacted] OR AD NUMBER) (CATEGORY)
[redacted]

FF No. 602(A)

"WARNING: This material contains information affecting the national defense of the United States, within the meaning of the Espionage Laws, Title 18, U. S. C., Sections 793 and 794, the transmission or revelation of which in any manner to an unauthorized person is prohibited by law."

Grumman LEM

(NASA-CR-118525) EXTERNAL VISUAL DESIGN CONTROL SPECIFICATION FOR DISPLAY EQUIPMENT (Grumman Aircraft Engineering Corp.) 65 p

N79-76674

Unclas
00/54 11601

C66-8580

SPECIFICATION

Grumman

Spec. No. LSP-440-41001C

Date: 6-14-66

Page: a

Rev.	Date	REVISION DESCRIPTION
A	7-15-63	Reissue due to incorporation of three amendments and negotiations with vendor. Changes are noted by vertical bar lines in adjacent margin to instituted changes.
B	6-2-65	Reissue due to incorporation of amendment and latest engineering changes. Changes are noted by vertical bar lines in adjacent margin to instututed changes.
C	6-14-66	Reissue required to incorporate amendments 1 through 5 of LSP-440-41001B. Changes are noted by vertical bar lines adjacent to paragraphs affected.

AVAILABLE TO NASA [redacted] ERS ONLY

TABLE OF CONTENTS

Paragraph			Page
1	SCOPE		1
	1.1	Scope	1
2	APPLICABLE DOCUMENTS		1
	2.1	General	1
	2.2	Availability of Documents	3
3	REQUIREMENTS		3
	3.1	General	3
	3.1.1	Purpose	4
	3.1.2	Data Requirements	5
	3.2	Design and Construction	5
	3.2.1	General	5
	3.2.2	Selection of Materials	5
	3.2.3	Electrical Requirements	7
	3.2.4	External Visual Display Requirements	10
	3.2.5	Telescope	14
	3.2.6	Interface	15
	3.3	Performance	15
	3.3.1	General EVDE Operating Capabilities	15
	3.3.2	Detail EVDE Operating Capabilities	16
	3.3.3	Solar Effects	24
	3.3.4	Accuracy	24
	3.3.5	Scene Brightness	25
	3.3.6	Lunar Model	25
	3.4	Standard Conditions	28
	3.5	Non-Operational Conditions	28
	3.6	Identification of Product	29
	3.6.1	Identification Data Requirements	29
	3.6.2	Definition of Identification Terms	29
	3.6.3	Marking	30

TABLE OF CONTENTS (Continued)

Paragraph			Page
	3.7	Reliability	32
	3.7.1	Numerical Reliability Requirements	32
	3.7.2	Accumulated Operating Time	32
	3.7.3	Maintainability	32
	3.8	Mounting	33
	3.9	Service Conditions	33
	3.10	Warm-Up Time	33
	3.11	Cooling	33
	3.12	Finish and Protective Coatings	34
	3.12.1	Surface Preparation	34
	3.12.2	Metal Surfaces	34
	3.12.3	Wood Surfaces	34
	3.12.4	Aluminum Alloy Parts	34
	3.12.5	Steel Parts	35
	3.12.6	Plastic Covers	35
	3.12.7	Plating	35
	3.12.8	Color Standards	36
	3.13	Lettering	36
	3.14	Border	36
	3.15	Legibility	36
4	QUALITY ASSURANCE PROVISIONS		36
	4.1	General	36
	4.2	Quality Control Program	36
	4.3	Testing	37
	4.4	Acceptance Tests	37
	4.4.1	Vendor's Demonstration Test	37
	4.4.2	Service Approval Test	37
	4.5	Test Procedures	38
	4.6	Presubmission Testing	38
	4.7	Rejection and Retest	38

TABLE OF CONTENTS (Continued)

Paragraph			Page
5	PREPARATION FOR DELIVERY		38
	5.1	General	38
	5.2	Preservation and Packaging	38
	5.3	Adequacy of Packaging and Packing	38
	5.4	Marking of Shipments	39
6	NOTES		39
	6.1	Intended Use	39
	6.2	Definitions (Operational Phases)	39
	6.2.1	Lunar Orbit	39
	6.2.2	Descent	39
	6.2.3	Ascent	40
	6.2.4	Abort	40
	6.2.5	Resolution	41
	6.3	Performance Objectives	41
TABLE I	LEM AND CSM DYNAMICS		42
FIGURE 1	LEM BODY AXES AND COORDINATE REFERENCE SYSTEM		43
FIGURE 2	CSM BODY AXES RELATIONSHIP		44
FIGURE 3	BODY AXES INTERFACE DURING EARTH AND LUNAR ORBITS PRIOR TO SEPARATION AND AFTER DOCKING		45
FIGURE 4	OUTLINE AND DIMENSIONS OF CSM TO BE USED FOR DESIGN PURPOSES		46
FIGURE 5	VISIBILITY DIAGRAM FROM COMMANDERS DESIGN EYE		47
FIGURE 6 (Sh. 1 of 2)	WINDOW CONFIGURATION		48
FIGURE 6 (Sh. 2 of 2)	WINDOW CONFIGURATION		49
FIGURE 7	SIMULATED LEM CABIN FOR LEM MISSION SIMULATOR		50
FIGURE 8	LUNAR ORBIT		51
FIGURE 9	COASTING DESCENT TRANSFER ORBIT		52
FIGURE 10	PROFILE OF FINAL RENDEZVOUS AND DOCKING PHASE		53
FIGURE 11	INITIAL POWERED DESCENT		54
FIGURE 12	LEM FINAL POWERED DESCENT		55
FIGURE 13	LEM POWERED DESCENT-GEOMETRY		56
FIGURE 14 (Sh. 1 of 2)	LUNAR FLARE TO TOUCHDOWN TRAJECTORY		57
FIGURE 14 (Sh. 2 of 2)	LUNAR FLARE TO TOUCHDOWN TRAJECTORY		58
FIGURE 15	NOMINAL ALTITUDE AND VELOCITY TIME HISTORIES DURING ASCENT		59
FIGURE 16	ASCENT GEOMETRY - POLAR PLOT		60

DISPLAY EQUIPMENT, EXTERNAL VISUAL

DESIGN CONTROL SPECIFICATION

1 SCOPE

1.1 Scope. - This specification establishes the requirements for the design, fabrication, testing and preparation for delivery of an External Visual Display simulation equipment (EVDE) for use in conjunction with the Apollo Spacecraft LEM Mission Simulator (LMS). The EVDE and associated equipment when integrated with the LMS shall be used in the training of the LEM flight crews.

2 APPLICABLE DOCUMENTS

2.1 General. - The following documents form a part of this specification to the extent specified herein. Federal and Military documents shall be the issue in effect on 14 January 1963 unless otherwise specified.

(a) Government Documents

(1) Military

STANDARDS

MIL-STD-681	Identification, Coding and Applicable Hookup Wire
MS 33586	Metals, Definition of Dissimilar

SPECIFICATIONS

MIL-C-5541	Chemical Films for Aluminum and Aluminum Alloys
MIL-T-7003	Trichlorethylene-Stabilized Degreasing
MIL-A-8625	Anodic Coatings, for Aluminum and Aluminum Alloys
MIL-P-16232B	Phosphate Heavy Manganese Coatings, or Zinc Base (for Ferrous Metals)

2.1

(a) (Continued)

(2) Federal

STANDARDS

TT-S-176	Sealer, Surface, Varnish Type, Floor, Wood or Cork
QQ-P-416	Plating, Cadmium (Electrodeposited)
TT-E-527	Enamel, Alkyd, Lusterless
TT-E-529	Enamel, Alkyd, Semi-gloss
FED-STD-595	Colors

(3) NASA

DOCUMENTS

MSFC	Drafting Manual, Section 15
Office of Systems	"Visual Detection of Protuberance Hazards on the Lunar Surface" by Breshears, R.R. and Lewyn, L.L., NASA, Washington, D. C. dated 1963
MSC	"Environmental Factors Involved in the Choice of Lunar Operational Dates and the Choice of Lunar Landing Sites" by Eggleston, J.M., etal, NASA, Houston, Texas, dated Nov. 22, 1963

PHOTOGRAPHS

NASA Nos.

S-64-29031 S-64-29032 S-64-29033 S-64-29035 S-64-29040	Photographs taken by Ranger VII Spacecraft on July 31, 1964.

2.1 (Continued)

(b) Grumman Documents

QCP No. 2.12	Vendor Quality Control Requirements - Supplies

Drawings

LSC440-41001 (Latest Revision)	Display Equipment, External Visual, Specification Control Drawing for

2.2 Availability of Documents. -

(a) Copies of Federal or Military documents may be obtained upon application to the Superintendent of Documents, U.S. Government Printing Office, Washington 25, D. C., 20402.

(b) Copies of NASA documents may be obtained upon request from the procuring activity or as directed by the Contracting Officer.

(c) Copies of this specification and other Grumman documents may be obtained upon request from LEM Program Data Management, Grumman Aircraft Engineering Corporation, Bethpage, Long Island, New York, 11714.

3 REQUIREMENTS

3.1 General. - The EVDE shall consist of the following:

(a) Image Generating Section

(b) Visual Display Section

(c) Interface Junction Section

(d) EVDE Acceptance Test Equipment

3.1 (Continued)

The Image Generating Section shall be capable of generating the images and views specified in this specification and transmitting same to the Visual Display Section.

The Visual Display Section shall be capable of presenting the views generated to the two crew members of the simulated LEM.

The Interface Junction Section shall provide for the electrical and mechanical connection to the computer complex when integrated with the LMS or EVDE acceptance test equipment. Buffering and signal conditioning will be the responsibility of Grumman.

The acceptance test equipment to be supplied with the EVDE shall consist of test film and resolution charts. However, the vendor shall make available for acceptance tests the equipment capable of supplying on a single axis basis signals to the EVDE system in all normal degrees of freedom. These signals shall have calibrated static and dynamic magnitudes directly related to performance requirements specified herein. These signals shall be injected in the EVDE via the Interface Junction Section.

3.1.1 Purpose. - Functionally, the equipment shall be designed to present an accurate and realistic visual simulation of expected views to be seen by Astronauts through the LEM windows and optical instrument, when inflight under the operational phases outlined in 6.2.

The window and optical instrument displays when integrated into the LMS shall provide, but not be limited to, the following training criteria:

(a) Provide realistic visual presentation of external environment.

(b) Aid in LEM attitude orientation training by crew members with corresponding reaction control system training and practice.

(c) Train crew to select moon landmarks specified for navigation and judge general range and position by surveillance of the window and optical instrument scenes.

3.1.1 (Continued)

(d) Train in the APOLLO mission phases of rendezvous, docking and transposition and all other phases defined in 6.2.

(e) Train in moon landing procedures.

3.1.2 Data Requirements. - Data and drawings referenced or described by the paragraphs herein, shall be submitted in accordance with the purchase order.

3.2 Design and Construction. -

3.2.1 General. - The detailed mechanical and electrical design of the equipment shall be accomplished by the vendor, subject to the requirements of this specification. Requirements of this specification are detailed only to the extent considered necessary to obtain the desired mechanical, electrical and visual characteristics, performance and permanence of same.

3.2.1.1 Configuration. - The configuration of the EVDE shall be in accordance with Grumman Specification Control Drawing LSC440-41001.

3.2.2 Selection of Materials. -

3.2.2.1 Electron Devices. - A list of selected electron tubes, transistors, and diodes, including the description, application, and quantity, shall be submitted to Grumman for review and approval.

3.2.2.2 Metals. - Metals shall be corrosion-resistant wherever practicable. Non-corrosion-resistant metals, when used, shall be suitably protected to resist corrosion.

3.2.2.3 Dissimilar Metals. - Contact of dissimilar metals as defined in MS-33586 shall be avoided wherever possible. When such contact is unavoidable, and if practicable, the metals shall be electrically insulated with paint, non-metallic washers, chemical films, or anodic coatings.

3.2.2.4 Non-Metals. - Materials not nutrient to fungi shall be used wherever possible. Wherever fungus nutrient materials must be used, they shall be treated with an approved fungicidal agent acceptable to Grumman.

3.2.2.5 Materials Finish. - Protective coatings and finishes which will crack, chip or scale during normal service use or extremes of atmospheric conditions shall not be used.

3.2.2.6 Materials and Processes. - In the selection of materials and processes, fulfillment of major design requirements shall be the prime consideration. Grumman approval shall be obtained prior to the use of any materials, processes, processing equipment and processing personnel. When temporary substitutions are made, drawings shall note the applicable government specification of the alternate material.

3.2.2.7 Limited Life Items. - No item shall be scheduled to be removed or replaced within a 350-hour period. Where material and articles having definite characteristics of degradation with life or use, are employed, they shall be marked to indicate, by date or frequency of use, the beginning and expected end of useful life. Adequate procedures shall be initiated to control items of this nature, to insure their removal and replacement on a scheduled basis in the appropriate phase of the program. The maximum permissible testing time shall be given as a percentage of total life. Articles exceeding this maximum test life may not be used in deliverable equipment. Accurate operating logs shall be maintained on parts and equipment containing items with limited life characteristics and these logs shall be submitted with the equipment. Prior to use of any item with limited life characteristics, approval shall be received from Grumman. A waiver may be given for illumination lamps, if present state-of-the art does not indicate 350 hours of life for these components.

3.2.2.8 Commercial Parts. - Commercial parts having suitable properties may be used where, on the date of invitation for bids, there are no suitable standard parts. In any case, commercial utility parts, such as screws, bolts, nuts, and cotter pins, having suitable properties may be used provided:

(a) They can be replaced by the standard parts (MS or AN) without alteration.

(b) The corresponding standard part numbers are referenced in the parts list and, if practical, on the contractor's drawings.

3.2.2.9 Interchangeability. - All parts having the same supplier's part number shall be functionally and dimensionally interchangeable.

3.2.3 Electrical Requirements. -

3.2.3.1 Available Primary Power. - Primary power available at site of installation is 277/480 V - 3 phase - 60 cycle at 8% voltage regulation and ± 3% frequency regulation. Maximum voltage transient will be 15% for 0.25 seconds. Also available is 120/208 V transformer coupled from prime power.

3.2.3.2 Simulator Power. - All simulator equipment shall be designed to operate from the prime power with a power factor not less than 85 percent. The equipment shall be capable of connection to power supply in accordance with power demand as follows:

Demand	Power Supply
1000 watts or less	120/208 V - 1 phase - 2 wire
Over 1000 watts	277/480 V - 3 phase - 4 wire

3.2.3.3 Power Conversion Equipment. - Power conversion equipment necessary for correct image generation and display shall be vendor furnished as part of the EVDE. The equipment when in normal operation shall present a load that is balanced as close as possible on each phase. Any unbalanced current on one leg shall not be greater than 10% of the average of the three leg currents.

3.2.3.4 Overload Protection. - Protective devices shall be incorporated to protect the EVDE from damage due to overload, excessive heating and shorts. Loss of power or reference voltages shall not damage the EVDE. The protective devices shall be located as to be readily accessible for replacement. Light indications shall be used to indicate blown fuses or tripped circuit breakers. The equipment shall be capable of resuming normal operation upon removal of the overload or restoration of power or reference voltages.

3.2.3.5 Workmanship. - The equipment, including all parts and accessories shall be constructed and finished in a thoroughly workmanlike manner. Particular attention shall be paid to neatness and thoroughness of soldering, wiring, impregnation of coils, marking of parts and assemblies, plating, painting, riveting, machine screw assemblage, welding and brazing, and freedom of parts from burrs and sharp edges.

3.2.3.6 Internal Wiring. - All wires within electronic subassemblies and assemblies, shall be identified by adequate color coding in accordance with Standard MIL-STD-681.

3.2.3.7 External Wiring. - Each wire and cable installed between subassemblies, assemblies, and their units, except those within electronic subassemblies and assemblies, shall be identified by imprinting on the wire, cable, or sleeve in addition to color coding requirements of Standard MIL-STD-681. The identification shall be placed within three inches of each connection and shall be so located that shielding, ties, clamps, or supporting devices do not have to be removed to read the identification. Each wire shall be identified by a dual method of marking which designates the connection points at each end of the wire. The portion of the dual marking designating the connection for that end of the wire shall be placed nearest to the end of the wire. A slash mark shall separate the two parts (portions) of the identification marking (for example, switch S-3 has one wire leading to terminal three of terminal board TB-1. The wire should be identified on the switch end as S-3-1/TB-1-3 and on the terminal board end as TB-1-3/S-3-1). To facilitate this method of marking, at least every tenth terminal shall be identified. The terminals shall be labeled as to the voltage and frequency. All plugs and connectors shall be assigned a reference designation in accordance with NASA Document MFSC, Drafting Manual, Section 15. All wire markings shall be of sufficient size to be legible and shall be marked in permanent colors to provide suitable contrast with background wire, sleeve, or cable covering. The type shall retain adequate hardness to permit legible marking.

3.2.3.7.1 Grounding. - A separate chassis, signal and power ground, isolated from each other, shall be provided to minimize cross talk and noise. All common grounds shall have a common tie point (to be determined by Grumman).

3.2.3.8 Electronic Parts Identification. - Electronic parts such as capacitors, resistors, relays, transformers, and other circuit parts, shall be identified by reference designations stamped on the subassemblies and assemblies adjacent to the parts. All subassemblies and assemblies shall be identified by reference designations stamped on the mounting adjacent to the subassemblies and assemblies. These identification symbols shall be the same that appear on the applicable circuit diagrams and shall be completely legible and located in a position to facilitate identification.

3.2.3.9 Electronic Parts Replacement. - To facilitate electronic parts replacement, appropriate standard type designations, such as 6AC7, IN34, etc., shall be marked on the surface of all subassemblies and assemblies adjacent to each device. Where electronic parts are socket mounted, the opposite side of the subassemblies and assemblies shall be marked with the appropriate circuit symbol designation, such as V-1, V-2, etc.

3.2.3.10 Transformer Connections. - Transformer connections shall be clearly marked on the subassemblies and assemblies near each connection.

3.2.3.11 Circuit Diagrams. - Circuit diagrams shall be prepared as specified herein.

3.2.3.12 Circuit Parts Representation. - All circuit parts shall be represented on circuit diagrams using symbols conforming to NASA Document MSFC, Drafting Manual, Section 15.

3.2.3.13 Electronic Parts Reference Designations. - Electronic parts, such as condensers, resistors, relays, transformers, and other miscellaneous circuit parts of the simulator equipment, shall be identified on the applicable circuit diagram by reference designations conforming to NASA Document MSFC, Drafting Manual, Section 15 and numerical designations assigned by the subcontractor.

3.2.3.14 Cables and Connectors. - The equipment shall provide for use of cables and connectors in accordance with commercial standards. The design shall be such as to provide maximum convenience and safety to personnel in installing, operating, and interchanging a complete assembly or component part. Satisfactory provision shall be made to prevent personnel from accidentally coming into contact with hazardous voltages. The design shall be such as to prevent reversed assembly or installation of connectors and cables. Cables shall be suitably identified with their mating connections.

3.2.3.15 Reference Signals. - Outputs in the form of analog voltages will be provided by Grumman for driving the visual display when integrated into the LMS. The dc reference voltages for potentiometers, servos, etc. shall be ± 10 volts maximum. A reference voltage power supply will be furnished when the equipment is integrated into the LMS, and will have the following characteristics:

Voltage	± 10 volts DC
Ripple	2.5 mv peak-to-peak
	Less than 1 mv RMS
Current	100 ma

Maximum total scale factor for any one signal shall not exceed ± 10 volts.

The ac reference voltage shall be 26 volts, 400 cycles at 10 ma.

3.2.4 External Visual Display Requirements. -

3.2.4.1 Visual Presentation. - The external views through the LEM windows and optical instruments shall be realistically simulated by the display of virtual images. The image pattern, shape, proportionate size, outline and detail shall depend on viewing range, orientation of object with respect to LEM angular displacement and visual perspective. Superimposed scenes over background presentation shall be accomplished without noticeable blurring, distortion or "bleed through" except that "bleed through" of stars through the CSM is allowable. Scenes shall be shifted so that no noticeable jitter is perceived by the LEM crew. Shifts in scale are permissible provided they do not detract from the training value.

3.2.4.1 (Continued)

In addition to the generation and display of the window view images, there shall also be generated those portions of the exterior part of the LEM vehicle that are within the field of view. The following portions of the exterior of the LEM vehicle shall be generated and displayed:

(a) Reaction Control System Jets

(b) LEM structure as visible in the two (2) front windows

(c) Front Landing Gear Leg

(d) LEM structure as visible in overhead window

These items shall be displayed in the correct relative position, distance and size as seen from the viewing position.

During the ascent phase, the front landing gear leg shall be deleted.

During rendezvous and docking, the CSM shall be visible in either the two (2) front windows or the overhead window.

3.2.4.2 Simulated Scenes. - For design purposes, in relation to simulated scenes, the LEM and CSM dynamics as specified in Table I shall be used.

3.2.4.2.1 Provision for repositioning of the display scene to any position previously attained during a problem, following a stop, shall be provided and shall include adequate control of transient effects of the return to protect the equipment from damage. Repositioning to any part of the problem shall not exceed 2 minutes, except that lunar occulation repositioning shall not exceed 5 minutes.

3.2.4.3 Standardization. - For design purposes in relation to standardization the axes coordinates, body axes interface and outside dimensions of the CSM as specified in Figures 1 through 4 shall be used.

3.2.4.4 Relative Motion and Position. - Relative motion and positioning of the objects being viewed by the LEM crew shall be a function of the image generation and/or visual display. The simulated LEM spacecraft through whose windows the LEM crew will be viewing the visual display will be a fixed land based item.

3.2.4.5 Resolution. - The resolution (see 6.2.5) of the display as viewed by the crew members shall be a minimum of 5 minutes of arc, as seen from the normal eye position for each window. The scenes presented by the television system shall have minimum resolution of 12 minutes of arc as seen from the normal eye position.

3.2.4.6 Visual Perspective. - The displays to each crew member at the time of docking, rendezvous landing and ascent shall be presented independently so that a proper perspective can be attained at shorter ranges. These independent presentations shall occur whenever the object viewed is displayed at simulated slant ranges of 10,000 feet or less. All other views need not be presented independently.

3.2.4.7 Starfield Display. - Display of all stars down to but not including the fifth (5th) magnitude. A list of these stars, approximately a thousand (1000) stars, will be furnished by Grumman. All stars shall be located to within 0.5 degrees of real star interspatial position, as viewed from the LEM. All stars shall be of subliminal diameter.

3.2.4.8 Viewing Area. - The visual display shall be viewed by the two man LEM crew through three (3) windows and one (1) telescope. In normal flight position, the two-man crew shall be separated (on centers) by 44 inches and each shall have an eye excursion and viewing area as shown in Figure 5. The geometry of the windows and telescope is as shown in Figure 6, sheets 1 and 2. The telescope penetrates the upper portion the cabin at Y = 0, Z = 58.5. Field of view of telescope is directed along an axis -45° up from the Z axis and rotated 0°, CW 60°, CCW 60°, and STOW (no view) about the X axis when viewed from the top of the LEM.

The field of view of the two (2) front windows shall have a minimum major diameter of 110° and a minimum minor diameter of 80°. Within these boundaries the external view shall be supplied to the normal eye position by means of an exit pupil of 12 inches in diameter. This exit pupil may be placed slightly forward of the eye position so as to allow maximum head movement of the astronauts and still remain within the eye pupil.

For the two front windows wherein vehicle window, or Astronauts constraints prevent viewing the entire field of view over the entire exit pupil, the unobservable view can be clipped with Grumman approval.

3.2.4.8.1 Overhead Window Viewing Area. -

(a) The overhead window shall be provided with all visual displays with continuous $\pm 360^{\circ}$ rotation about all axes. The quality and number of possible views provided shall be in accordance with this specification. LEM DYNAMICS as specified in Table I shall be applicable to the overhead window. The field of view shall be at least $\pm 20^{\circ}$ each side of the window centerline in the Y direction and $+15^{\circ}$ and -50° from the vertical in the Z direction (i.e. the -50° is in the +Z direction). Within these boundaries the external view shall be supplied to the docking eye position by means of an exit pupil of 8 inches in diameter.

(b) The necessary docking targets on the model of the Command Module in the present T.V. docking system shall be provided. A sighting device in the LEM overhead window (latter to be specified by Grumman) shall be provided.

3.2.4.9 Display Installation Boundary. - Images shall be generated and displayed within the following boundaries:

(a) Installed height of any one unit shall not exceed 20 feet.

(b) Length of any one unit shall not exceed 40 feet.

(c) Width of any one unit shall not exceed 25 feet.

(d) Floor area of any one unit shall not exceed 575 sq. ft.

(e) The floor area including all units shall not exceed 1800 sq. ft.

The LMS cabin to be mated to the EVDE is as specified in Figure 7. The EVDE shall not protrude in the LMS cabin without Grumman approval.

3.2.4.10 There shall be no objectionable reflection of the crew or other vehicle systems or hardware from the display elements of the EVDE.

3.2.4.11 The vendor shall supply the necessary engineering liaison services, information and data with Grumman to enable manufacture of the required lunar and earth film for procurement as GFE.

3.2.4.12 Occultation. - Provisions shall be made for the following occultations:

(a) Star Field - Occultation of the star field behind the Earth and Moon.

(b) Moon - Occultation of the Moon Behind the CSM.

(c) Earth - Occultation of the Earth behind the Moon.

(d) CSM - Occultation of the CSM behind the Moon.

(e) Sun - Occultation of the Sun behind the Moon during orbit of the LEM and during the hover and landing phases.

3.2.4.13 Status Signals From the Interface Junction Section. - In addition to those signals from the EVDE drive computation and control, status signals shall be provided as follows:

(a) Power ON - Indicates power is available at the output side of the first EVDE circuit breaker or switch and output of power supplies in the Interface Junction Station.

(b) Power OFF - Indicates power has been shut down to any individual section of the EVDE.

(c) Limit Signal - Indicates any probe or similar equipment has reached a limit stop which would abort the training mission.

The specific points from which these status indications are taken shall be selected by the vendor and shall be approved by Grumman.

3.2.5 Telescope. - LEM flight equipment includes a telescope to be utilized for star sightings to update position information for the inertial measuring unit, for landmark sightings and for observation of the CSM during rendezvous phases. This telescope will be provided by Grumman. The following telescope characteristics shall be used in the design of the EVDE:

(a) 60 Degree Field of View

(b) 1X Power

(c) Rotatable to four (4) fixed detent positions. Positions are as follows: $+60^{\circ}$, 0°, -60°, and STOW (no view). Positions are measured in the LEM Y-Z plane.

(d) Telescope equipped with reticle capable of reading $\pm$ 1 min. of arc.

(e) Outside dimensions of the Telescope shall be supplied by Grumman.

3.2.5 (Continued)

The star field display capable of being viewed thru the telescope shall consist of all stars down to and including the fourth magnitude. Fifty four (54) of these stars will be chosen as the star catalog for navigational purposes at a later date. These navigational stars shall be presented to the optics of the telescope with an accuracy of ± 1 MIN of ARC with respect to their true interspatial position. The remainder of the star background shall be only accurate enough to enable recognition of constellation so that navigational stars can be recognized.

3.2.6 Interface. - The EVDE shall be capable of being integrated into the LMS by use of Interface Junction Section. All parameters of control and operation of the EVDE shall terminate in this Interface Junction Section for connection to the input/output section of the computer in the LMS. This shall inc ude all 60-cycle power and all reference voltages.

3.3 Performance. -

3.3.1 General EVDE Operating Capabilities. - The EVDE shall be capable of generating, integrating and presenting views of Sun Shafting, Moon Surface, Command Service Module, Starfield and Earth (including semi-fixed cloud cover) in apparent 6 degrees of freedom with respect to two viewers during the following operational phases (as defined in 6.2). Washout of all visual scenes when the Sun is in the Astronauts field of view shall be provided.

(a) Lunar Orbit

(b) Descent:

- (1) Coasting Descent Transfer Orbit
- (2) Powered Descent:
  - a. Initial Powered Descent
  - b. Final Powered Descent
  - c. Flare to Landing

(c) Ascent:

- (1) Powered Ascent
- (2) Coasting Ascent Transfer Orbit
- (3) Rendezvous
- (4) Docking

(d) Abort

(e) Limited Earth Orbit

3.3.2 Detail EVDE Operating Capabilities. -

3.3.2.1 Lunar Orbit. - The EVDE shall only provide for an equatorial Moon orbit with deviations of ± 5 degrees about this orbit in either circular and/or elliptical trajectories from 6 to 200 nautical miles (nm) altitude. Nominal trajectories are as depicted in Figure 8. Velocity and scenes shall be as listed below.

		NOMINAL TRAJECTORY CHARACTERISTICS	EQUIPMENT CAPABILITIES
(a)	Altitude	80 nm	6 to 200 nm
(b)	Velocity with respect to Moon	5285 ft/sec	4000 to 6000 ft/sec (This will allow an approximate 30,000 ft pericynthion and a 500 nm apocynthion. No accurate lunar visual display required above 200 nm altitude)
(c)	Orbit	Equatorial Moon Orbit (Circular & Elliptical)	System shall be capable of providing orbit inclinations of up to ±45 degrees with deviations from this preselected orbit of ± 5 degrees. Orbit can be circular or elliptical from 6 to 200 nm. Design shall be such to accomodate Polar Orbit by future modification.
(d)	Earth		Distant earth with semi fixed cloud cover. Earth landmarks as appropriate to distant and ephemeris.

3.3.2.1 (Continued)

NOMINAL TRAJECTORY CHARACTERISTICS	EQUIPMENT CAPABILITIES
(e) Moon Details	Scenes covering Lunar Surface shall be compatible with the orbital altitude specified above. Lunar detail shall be shown out to the horizon or to 80° from nadir, whichever is the lesser angle. The horizon line shall be correctly placed and oriented in relationship to the vehicle. 10 specific landing sites as follows:

Target No.	Long.	Lat.
I	36°55'E.	1°45'N.
II	31°00'E.	0°00'N.
III	28°22'E.	1°10'N.
IV	24°10'E.	0°10'N.
V	12°50'E.	0°20'N.
VI	1°28'W.	0°30'S.
VII	13°15'W.	2°45'N.
VIII	28°15'W.	2°45'N.
IX	31°30'W.	1°05'S.
X	41°30'W.	1°10'S.

Landmarks and landing sites to be displayed in either earth shine or sunshine as appropriate to the ephemeris.

Design shall not preclude presenting partial earth shine and sunshine portions of Moon.

3.3.2.1 (e) (Continued)

	NOMINAL TRAJECTORY CHARACTERISTICS	EQUIPMENT CAPABILITIES
(e) Moon Details (Continued)		Where lunar surface details are not known or indeterminate, artist concepts shall be used with Grumman approval. Lunar scenes with respect to 360° attitude changes about each and/or any combination of vehicle axes. The lunar horizon line shall be simulated in true perspective from 200 nm altitude to touchdown. The shadow of the LEM on the Lunar surface shall be simulated with sufficient accuracy as to provide a range reference to the LEM view.

3.3.2.2 Coasting Descent Transfer Orbit. - The EVDE shall have the following capabilities while in the trajectory characteristics of the Coasting Descent Orbit (see 6.2.2.1) as specified herein. Nominal Trajectories are as depicted in Figure 9.

	TRAJECTORY CHARACTERISTICS	EQUIPMENT CAPABILITIES
(a) LEM Altitude	80 nm to Pericynthion of 50,000 ft.	200 nm to Pericynthion of 2 nm
(b) LEM Velocity	5285 ft/sec to 5670 ft/sec	4000 ft/sec to 6000 ft/sec at Pericynthion.
(c) LEM Orbit	Synchronous with CSM from 80 nm Altitude to 50,000 ft.	Synchronous Orbit from 200 nm to Pericynthion of 2 nm.
(d) Moon Detail		Same as in lunar orbit (i.e., greater detail perspective at lower altitudes).
(e) Earth		Same as in lunar orbit.
(f) CSM		At ranges of 14,000 feet and greater, CSM is viewed as a steady or blinking white light, the intensity of which is dependent on range. From 14,000 feet down to 8,000 feet the CSM becomes visible as an object. At ranges of 8,000 feet. down to 2,500 feet CSM becomes visible in shape. At 2,500 foot range perception of detail commences and increases down to terminal docking with the LEM (as shown in Figure 3). Figure 10 shows profile of final rendezvous and docking phase.

3.3.2.3 Initial Powered Descent. - During this phase (see Figure 11) the equipment shall provide an off-course capability of ± 1/2 degree. In the initial powered descent (see 6.2.2.2.1) the EVDE shall be capable of presenting visual scenes with a variation of ± 50% in the horizontal velocity and ± 10% in the vertical velocity. The equipment shall be capable of detail viewing out to 80 degrees minimum from the nadir throughout the full altitude range.

3.3.2.4 Final Powered Descent. - In the final powered descent and flare (see 6.2.2.2.2) phase the EVDE shall be capable of generating and presenting visual scenes with a variation of ± 20% in the horizontal velocity and ± 30% in the vertical velocity as the LEM is free to maneuver with 6 degrees of freedom. Attitude changes include continuous 360° rotation about any axis for altitudes above 1200 feet from the lunar surface.

The nominal Trajectory for the Final Powered Descent and Flare, which starts at approximately 20 nm from the chosen landing site and terminates at a point of approximately 1200 feet altitude is as specified in Figure 12.

The geometry of the powered descent is as specified in Figure 13.

3.3.2.5 Flare to Landing. - In the flare to landing stage (see 6.2.2.2.3) the display equipment shall be capable of generating and presenting visual scenes with a variation of ± 50% for the Sink Rate, Surface Velocity and Total Velocity. Trajectory parameters are as specified in Figure 14, sheet 1 and 2. Below 1,200 feet elevation, three-dimentional views of the lunar surface shall be presented to the left front window. These views shall meet all requirements of this specification. Views in the remaining windows may be two-dimensional and adequate for attitude and velocity cues only. Provisions shall be made to switch the three-dimensional views to the right-hand window when below 1200 feet elevation.

3.3.2.6 Powered Ascent. - In the following conditions of the powered ascent (see 6.2.3.1) stage the display equipment shall be capable of generating and displaying the visual scenes through the full range of the LEM dynamic characteristics as outlined in Table I.

(a) The LEM ascent begins when the CSM has passed over the launch point and leads the LEM by a central angle of approximately 1.8 degrees.

(b) The LEM ascends at a pitch angle referenced to the local horizon at time = 0 of 90 degrees.

(c) At approximately 17.5 seconds a constant pitch rate of -10 degrees/second may be initiated.

(d) At time = 24 seconds pitch rate may be changes to 0.125 degrees/sec. (This pitch rate may be maintained until end of boost (Time = 296 seconds)).

(e) Burnout velocity (in attaining the Hohmann orbit) which will be 5,580 ft/sec. and at an altitude of 49,930 feet.

(f) Hohmann orbit with apocynthion of 80 nm.

(g) At a constant altitude of 80 nm and in circular orbit.

Nominal ascent trajectories are as specified in Figures 15 and 16.

3.3.2.7 Rendezvous and Docking. - In the Rendezvous and Docking phase the EVDE shall be capable of generating and presenting views of the CSM vehicle as described by paragraph 3.3.2.2(f).

3.3.2.7.1 Rendezvous. - In the Rendezvous phase (see 6.2.3.3) the simulated view of the CSM vehicle shall be presented to both crew members, simultaneously and in proper perspective, through the two forward window displays. In addition to the forward window view presentation, the EVDE shall also be capable of presenting a view through the overhead window and through the telescope. The view of the CSM through the forward windows, the telescope, and the overhead window need not be presented simultaneously. The particular display shall be selected externally by switching signals through the Interface Junction Section. During the Rendezvous phase the EVDE shall be capable of presenting a view of the CSM through the full 360° rotational range of the LEM and CSM vehicles, at the angular rates and accelerations specified by Table I. In addition, the maximum relative velocity and acceleration, as a function of range between the two vehicles, shall comply with the requirements of Figure 10. The specific values of velocity and acceleration indicated by this figure apply to both closing and separation maneuvers, including "fly-by". A "fly-by" maneuver occurs when the two vehicles pass each other, i.e., the range between the CSM and LEM vehicles decreases to a minimum and then increases.

3.3.2.7.2 Docking. - In the Docking phase (see 6.2.3.4) the simulated view of the CSM vehicle shall be presented to the crew members as described under paragraph 3.3.2.7.1, with the following exceptions:

(a) The telescope view is not required.

(b) "Fly-by" maneuvers shall be simulated to a minimum "skin-to-skin" range of ten feet.

(c) Inside this 10 feet range, simulation of the angular excursion of the two vehicles with respect to one another shall be a minimum of 10° from the normal docking attitude. The CSM center-line shift capability shall be a minimum of one foot from the normal docking position.

3.3.2.7.2 (Continued)

(d) Docking shall be presentable at the overhead docking hatch and the location shall be defined by Grumman.

3.3.2.8 Earth Orbit. - Limited Earth orbits shall be simulated by the EVDE. The orbit capabilities shall be as follows:

(a) Orbits of from 100 nm to 300 nm altitude.

(b) Orbits of inclination angles to the equator of up to ± 40 degrees.

(c) Earth views with fixed cloud cover with detail out to the horizon.

3.3.3 Solar Effects. - Solar effects shall be simulated by providing one type of Visual Display. This effect is concerned with the flash blindness of a crew man as caused by the Sun entering his field of view. The EVDE shall present the flash blindness by "washing out" the display under observation.

3.3.4 Accuracy. - The dynamic and static accuracy of the EVDE shall be as follows:

(a) Dynamic - The EVDE shall follow a ramp rate input within 5% and shall settle out within 0.5 degrees of the final input signal within 25 milliseconds. The sensitivity of the systems shall be such that a signal equivalent to a 0.05 degree change shall cause the EVDE to track smoothly with no perceptible or noticeable jitter. For translational velocities the accuracy shall be ± 2% of input rate from 2400 to 6000 feet/sec; ± 3% from 500 to 2400 ft/sec and ± 5% from 20 to 500 ft/sec. For translational velocities the system shall settle out within 5% of the final input signal within 25 milliseconds.

(b) Static - Static accuracy in rotational position shall be ± 0.5 degrees about all axes. Static sensitivity shall be such that a signal equivalent to 0.05 degrees for any axes shall cause start of repositioning in a smooth manner. For translational ranges the accuries shall be as follows:

(1) ORBIT

± 1% for orbital position (200 nm to 6 nm)

(2) RENDEZVOUS-DOCKING

± 1% from 30,000 to 10 feet
± 10% from 10 to 4 feet

(3) LANDING

± 1% from 2,000 to 20 feet

3.3.5 Scene Brightness. - Scene brightness as seen by the astronauts from their normal eye position in the LEM mockup shall be as follows:

(a) Moon Surface (Sunlit Side)
7.5 Ft Lamberts (Min.)

(b) Moon Surface (Earth Shine Side)
0.1 ± .02 Ft Lamberts

(c) CSM (Rend. & Docking) (in Sunshine)
7.5 Ft Lamberts (Min.)

(d) CSM (Rend. & Docking) (in Earth Shine)
0.5 ± .1 Ft Lamberts

When TV high light brightness is expected to be less than 7.5 Ft Lamberts Grumman approval shall be obtained.

The scene brightness listed above is at the nadir view. Due to the absence of a lunar atmosphere the scene brightness falls off rapidly as the angle increases from the nadir. This fall-off of scene brightness with change of viewing angle shall be incorporated into the EVDE. Contrast range due to the different albedos of the various substances that make up the lunar surface shall be simulated. This contrast range is approximately 6, however, in the absence of incident light (surface in shadows) this area shall be as black as the state of the art permits. Brightness of each star shall be to the nearest magnitude (that is a brightness change of 2.51 is equal to a one (1) magnitude change). Brightness shall be rounded to the nearest magnitude integer.

3.3.6 Lunar Model. - A model of the lunar surface composed of three (3) different surface types, "A", "B", and "C", shall be supplied by the vendor. Size and scale of the model shall be approved by Grumman.

3.3.6.1 Surface "A". - Surface "A" shall contain hummocks (approximately conically shaped) ranging in size from 20 inches in height with 15 degrees sloping sides to 400 inches in height with 30 degrees sloping sides. Surface "A" shall also contain small fissures and fault

3.3.6.1 (Continued)

scarps ranging in size from 4 to 23 inches in width for fissures (length of fissure can be varied to fit in with the surrounding landscape), and ranging in size from 4 inches to 55 inches in height for fault scarps (length of fault scarps can also be varied to fit in with surrounding landscape).

3.3.6.2 Surface "B". - Surface "B" shall contain blocks (approximately rectangular shaped) ranging in size from 20 inches to 400 inches in height. Surface "B" shall also contain large fissures and fault scarps ranging in size from 20 inches to 200 inches in width for fissures (length of fissure to agree with width and surrounding landscape), and ranging in size from 20 inches to 200 inches in height for fault scarps (length of fault scarp to agree with height and surrounding landscape).

3.3.6.3 Surface "C". - Surface "C" shall contain surface features shown in photographs taken by Ranger VII spacecraft. Photographs showing surface features are as follows:

(a) NASA S-64-29031

(b) NASA S-64-29032

(c) NASA S-64-29033

(d) NASA S-64-29035

(e) NASA S-64-29040

Surface "C" shall include, but not be limited to, craters ranging from 3 feet to 300 feet in diameter, with depths of from 1 foot to 100 feet, respectively. The craters shall have rounded corners.

NOTE: The larger craters shall contain secondary craters.

3.3.6.4 Lunar Surface Details Not Specified. - Where lunar surface details are not known, or are indeterminate, artist concepts shall be used with Grumman approval. Artist concepts shall make use of the following NASA documents for surface details:

(a) NASA Document "Visual Detection of Protuberance Hazards on the Lunar Surface".

(b) NASA Document "Environmental Factors Involved in the Choice of Lunar Operational Dates and the Choice of Lunar Landing Site".

3.3.6.5 Lunar Horizon. - The lunar horizon line shall be simulated in true persective.

3.3.6.6. Contour Maps. - Contour maps (2) shall be provided which indicates elevation contours of 5-foot increments. The elevation accuracy of the fully installed model as related to this map shall be ± 2.5 feet. The contour maps shall be as follows:

(a) One at 1:1 scale

(b) One with three (3) separate sheets; each 22 inches x 34 inches.

3.4 Standard Conditions. - The following operating conditions shall be used to establish performance characteristics as outlined in this specification:

Temperature	Room ambient 25°C +15°C -5°C
Altitude	0 to 2,500 feet
Vibration	None
Humidity	15 to 95% relative humidity

3.5 Non-Operational Conditions. - The EVDE shall be capable of withstanding the following non-operational environmental conditions during transportation and storage. When returned to standard conditions of paragraph 3.4 it shall be capable of operating within its prescribed requirements.

Temperature	0°F to 130°F
Altitude	0 to 20,000 feet
Humidity	0 to 100%; 100% relative humidity to be condensate
Salt Spray	Salt atmosphere as experienced in coastal areas.
Sand and Dust	As encountered in desert and ocean beach areas (i.e. 140 mesh silica flour with particle up to 500 ft. per min.)
Shock	Shock accelerations of 11 ± 1 millisecond duration at 20g, along each of the three mutually perpendicular axes. Shock pulse to be sawtooth waveform, 11 ms rise ± 1 ms decay.

3.6 Identification of Product. -

3.6.1 Identification Data Requirements. - The following identification data shall be included on the nameplate, and the nameplate shall be affixed to all items of manufacture, except as otherwise specified herein.

(a) Identification Data -

NOMENCLATURE

CONTRACTOR'S CONTROL NUMBER

SERIAL NUMBER

CONTRACT NUMBER (ORDER NUMBER)

MANUFACTURER'S PART NUMBER

MANUFACTURER'S NAME, TRADE MARK OR CODE SYMBOL

SPECIAL CHARACTERISTICS (DATE OF MANUFACTURE, ETC.)

3.6.2 Definition of Identification Terms. -

3.6.2.1 Nomenclature. - Nomenclature shall be identical to the approved title of the specification to which the item is designed.

3.6.2.2 Contractor's Control Number. - Contractor's control number shall be assigned by the vendor.

3.6.2.3 Serial Number or Lot Number. - Serial or lot number assignment shall be established by the vendor and subject to Grumman approval. These numbers shall be unique and consecutively assigned to items bearing the identical manufacturer's part number.

3.6.2.4 Contract Number. - Contract number is NAS 9-1100.

3.6.2.5 Manufacturer's Part Number. - The manufacturer's part number shall be the number identifying the item. Numbers assigned to identify sales, outline, installation, specification control or purchase control drawing for procurement of items by contractor shall not be used on the manufacturer's part number. An item shall always be identified by the original assigned part number throughout its life, regardless of where used.

3.6.2.6 Manufacturer's Name, Trade Mark or Code Symbol. - The name, trademark, or code symbol entered shall be that of the manufacturing activity.

3.6.2.7 Special Characteristics and Information. - Pertinent ratings, operating characteristics, assembly data and other information necessary for identification may be entered.

3.6.2.8 U.S. - The notation "U.S." shall denote Government ownership. Other notations such as USA, NASA or LEM shall not be used.

3.6.3 Marking. -

3.6.3.1 Identification of Items Without Suitable or Sufficient Marking Surface. - Items which do not have suitable or sufficient surface to reflect the complete identification data shall, as a minimum, be accompanied by suitable means of identification subject to Grumman approval.

3.6.3.2 Identification of Unmarked Items Subject to Removal After Installation. - Unmarked items which are subject to removal after installation or assembly, shall be identified by the manufacturer's part number and serial or lot number. The identification marking shall be applied to the adjacent surface of the item in which the unmarked item is installed.

3.6.3.3 Items Intended for Permanent Installation. - Items which lose their identity after installation (e.g., items installed by welding and non-removable hardware) shall not be reidentified.

3.6.3.4 Reworked or Selected Items. - Items reworked or selected for special fit, performance or tolerance shall require re-identification as specified in 3.6.1.

3.6.3.5 Methods of Marking. - Identification of items shall be accomplished by suitable marking methods, materials and nameplates which will not adversely affect the item to which they are attached. All markings shall be permanent and legible.

(a)	Nameplates (wraparound tags)	Attached by a method allowing alteration of data, without requiring relisting.
(b)	Stencil or decalcomania	Applied over exterior finish and which may be removed; obliterated or otherwise altered without affecting the exterior finish.
(c)	Acid or electric etching or engraving	Shall be located where obliteration and additional markings may be added without retesting.
(d)	Branding, embossing or molding	Shall be used following the procedure for (c) above. Grumman Structural Engineering approval for use of these methods shall be required.

3.6.3.6 Location of Nameplate or Markings. - Wherever possible, the nameplate or marking shall be visible and readable after the item is assembled or installed. Other methods may be used provided they are entirely suitable for the intended purpose. Methods and materials shall be subject to Grumman approval.

3.7 Reliability. -

3.7.1 Numerical Reliability Requirements. - The EVDE shall be of such design and construction that the mean time between failure shall not be less than 1000 hours. A failure shall be interpreted as any action that would require complete shutdown of the EVDE or necessitate a maintenance procedure that would interfere with the performance of other LMS equipments and result in an aborted training mission. Failure to comply with this paragraph shall be negotiated with Grumman before taking corrective action.

3.7.2 Accumulated Operating Time. - The EVDE shall be designed to operate for an accumulated operating time of 30,000 hours before major overhaul is needed.

3.7.3 Maintainability. -

3.7.3.1 Maintainability Design Criteria. - During the design phase, the following maintainability objectives and related technical and operational constraints shall be considered as a minimum to determine the optimum manner of satisfying the maintainability requirements for the external visual display equipment:

(a) Design so that all faults can be isolated to an accessible removable assembly or component.

(b) Design so that electronic and mechanical faults can be isolated and corrected within a maximum of 45 minutes after a shutdown (following failure) in 95 percent of all cases.

(c) Design so that scheduled calibration and adjustments shall not be required during any 350 hour period of operation.

(d) Design so that start-up procedures for reinitiation shall not exceed 2 minutes in 95 percent of all cases.

(e) Fuses, if used, shall be readily accessible and shall be externally mounted.

(f) Standardized components requiring a minimum of lubrication, adjustment, cleaning, and protection shall be used wherever standardization does not penalize the EVDE in performance and reliability.

3.7.3.1 (Continued)

(g) Sequential assembly and subsequent disassembly arrangement of detail parts shall be avoided wherever possible.

(h) Sequential alignment and calibration arrangements shall be avoided wherever possible.

(i) The physical arrangement of components shall be such that they can be readily inspected, serviced, calibrated, and, if necessary, adjusted without removing the component and with minimum disturbance to other parts.

(j) Design so that inspection, adjustment, service and replacement shall be accomplished using a minimum of tools or support equipment.

(k) Provide adequate test points to facilitate rapid malfunction isolation to the removable assembly.

3.8 Mounting. - Mounting hardware and structure that will connect to the simulated LEM capsule must be compatible with the simulated LEM capsule. Structural requirements of the capsule and data will be furnished by Grumman as per purchase order.

3.9 Service Conditions. - The equipment shall be designed and constructed so that no fixed part or assembly shall become loose; no moving or movable part or assembly shall become undesirably free or sluggish in operation; no movable part or control shall be shifted in its setting, position or adjustment between scheduled maintenance periods. No degradation shall be caused in the performance below that specified under normal operating conditions.

3.10 Warm-up Time. - The time required for the equipment to warm-up prior to operation shall be kept to a maximum of 15 minutes.

3.11 Cooling. - The design of the equipment shall provide for adequate distribution of air for cooling purposes, under operating conditions. Any ventilating apertures shall be protected from adverse elements entering equipment.

3.12 Finish and Protective Coatings. - Finish shall be applied to all surfaces where consideration of appearance or protection against corrosion and other deterioration exists. Application of finish shall be accomplished in such a manner as not to impair performance of the simulator.

3.12.1 Surface Preparation. - The exterior and interior surfaces of all enclosures shall have all rust, scale or other corrosion products and flux removed. All machining operations (such as drilling, tapping, grinding, and the like) shall be completed before the corrosion-resistant treatment is applied, except in those instances where electrical bonding is required for shielding or connections and the presence of protective finishes would prevent proper bonding. Surfaces shall be free from grease, oil, dirt, and surface irregularities and shall be in a clean, smooth condition suitable for the intended finishes.

3.12.2 Metal Surfaces. - Metal surfaces which affect the outward appearance of the training equipment shall be finished with suitable coatings of untextured Epoxy Polyamide. Prior to painting, surfaces shall be:

(a) Suitably prepared by abrasive blasting where required and cleaned with MIL-T-7003 solvent (or its equivalent).

(b) Metal surfaces shall receive a chemical conversion coating in accordance with MIL-C-5541 for aluminum materials, and MIL-P-16232B, Class 3 Type M for ferrous metals (or its equivalent).

(c) Topcoat to be specified by Grumman.

3.12.3 Wood Surfaces. - Surfaces of soft wood or other naturally hygroscopic materials, if used, shall be thoroughly sanded and sealed against penetration of moisture using sealer conforming to TT-S-176. The use of sealer on hardwoods shall be optional. The surfaces shall be painted with appropriate coatings of enamel conforming to TT-E-527 or TT-E-529 as required.

3.12.4 Aluminum Alloy Parts. - Aluminum alloy parts shall be covered with an anodic coating conforming to MIL-A-8625, except as follows:

3.12.4.1 Dials, small holes, and case inserts need not be anodized.

3.12.4.2 Aluminum alloys which do not anodize satisfactorily shall be coated with a chemical film in accordance with MIL-C-5541.

3.12.4.3 Where the primary purpose of the treatment is to afford a suitable paint base, chemical treatments in accordance with MIL-C-5541 may be used in lieu of anodizing.

3.12.4.4 Castings containing nonaluminum alloy integral inserts may be treated with a chemical film in accordance with MIL-C-5541 in lieu of anodizing.

3.12.4.5 When abrasion resistance is a factor, chemical films in accordance with MIL-C-5541 shall not be used in lieu of anodizing.

3.12.5 Steel Parts. - Where painting the surfaces does not afford adequate protection against corrosion, steel parts shall be cadmium plated in accordance with QQ-P-416, Type II or III, as applicable and of a class that is adequate to achieve the degree of protection required.

3.12.5.1 Where the primary purpose of the treatment is to afford a suitable paint base, chemical treatment in accordance with MIL-P-16232B shall be used in lieu of plating.

3.12.6 Plastic Covers. - The plastic covers used for convenience of maintenance shall be polished to a high luster and shall be free from all residue of buffing rouge or polishing compounds.

3.12.7 Plating. - Electrodeposited metallic coatings shall be as specified herein. The plating thickness in all cases shall be adequate to assure conformance with the requirements for conductivity and corrosion resistance. Plating is not required on parts such as bearings, gears and shafts fabricated or machined from brass, bronze, or corrosion-resistant steels, unless they are in contact with dissimilar metals under corrosive conditions.

3.12.8 Color Standards. - Colors, conforming to Federal Standard 595, shall be applied as specified by Grumman.

3.12.8.1 All simulated LEM cabin equipment and enclosures shall be painted the same colors duplicating the LEM.

3.12.8.2 Instructor chairs shall be painted dark green, color 24108.

3.13 Lettering. - Gothic type lettering shall be used and shall be lusterless black in conformance with Federal Standard 595 color "37038".

3.14 Border. - A border of 1/4 inch or more shall be provided between the lettering on a panel and the panel's edge.

3.15 Legibility. - Lettering shall be legible and shall be designed to remain so for the service life of the LMS.

4 QUALITY ASSURANCE PROVISIONS

4.1 General. - The equipment shall be inspected to determine compliance with the requirements of this specification with respect to materials, processes, workmanship, markings, accessibility of units, assemblies, test points, and electrical/mechanical connections.

4.1.1 The equipment shall be subjected to tests that will determine its compliance with the requirements of this specification with regard to accuracy, resolution, performance, alignment and calibration. Tests shall consist of but not be limited to operating the equipment under minimum and maximum voltages specified, checking maximum and minimum rates and accelerations, fidelity of visual display and visual display at minimum and maximum ranges.

4.2 Quality Control Program. - The quality control program shall be in accordance with the requirements as specified in Grumman Vendor Quality Control Procedure Q.C.P. 2.12.

4.3 Testing. - The following tests shall be performed:

(a) Acceptance Tests

4.4 Acceptance Tests. - Acceptance tests shall be made on equipment to be supplied under the contract and shall consist of the following:

(a) Vendor's Demonstration Test

(b) Service Approval Test

4.4.1 Vendor's Demonstration Test. - Vendor's demonstration test shall be accomplished under the responsibility of the vendor and shall be conducted in accordance with the approved test procedure in 4.5. The vendor shall submit all data collected in conducting these tests to Grumman for review and approval. The vendor shall notify Grumman when tests are to be conducted so that Grumman and NASA representatives may be designated to witness or supervise the tests when so desired.

4.4.1.1 Accessory Material. - In addition to the completed Vendors' Demonstration Tested EVDE, the vendor shall also submit the accessory material, i.e., (design and test data compiled from the Vendor's Demonstration Test) as part of the equipment. This equipment shall indicate the physical and electrical characteristics of the equipment and establish the equipment's compliance with applicable requirements.

4.4.2 Service Approval Test. - At the completion of the Vendor's Demonstration Test and when requested by Grumman, the EVDE shall be delivered to a site designated by Grumman, for the Service Approval Test. This test may consist of duplicating tests previously conducted and such other tests deemed necessary to determine compliance with all applicable design and performance requirements. In addition to the examination of the product, the EVDE shall be operated long enough to permit the EVDE temperature to stabilize and to check all characteristics and record adequate data to assure satisfactory EVDE operation. During unpacking, setting up of EVDE, alignment, calibration and all tests the vendor representative shall be present.

4.5 Test Procedures. - The procedure used for conducting acceptance tests shall be prepared by the vendor and submitted to Grumman for review and approval. The right is reserved by Grumman to modify the tests or require any additional tests deemed necessary to determine compliance with the requirements of the specification or the contract. Preparation of test procedures shall include, but not be limited to, testing, to the logical sequence of presentations and the use of diagrams for practical functional test set-ups. When test procedures are available from previous contracts, such procedures may be used when approved by Grumman.

4.6 Presubmission Testing. - No item, part or complete EVDE shall be submitted by the vendor until it has been previously tested and inspected by the vendor and found to comply, to the best of his knowledge, and belief, with all applicable requirements.

4.7 Rejection and Retest. - EVDE assemblies which have been rejected may be reworked or have parts replaced to correct the defects and resubmitted for acceptance. Before resubmitting, full particulars concerning previous rejection and the action taken to correct the defects found in the original shall be furnished to Grumman.

5 PREPARATION FOR DELIVERY

5.1 General. - The preparation for delivery shall render the EVDE capable of long term reusable storage and shipment without degradation of reliability because of corrosion, contamination or physical damage from shock, and vibration or other shipping hazards encountered during handling and transportation to its final destination.

5.2 Preservation and Packaging. - The EVDE shall be packed in such a manner as to meet the environmental requirements stated in this specification. Cleanliness of the barrier materials shall be the same as/ or greater than the cleanliness level of the equipment being packaged.

5.3 Adequacy of Packaging and Packing. - The EVDE shall be shipped in a suitable manner to ensure safe delivery. Equipment shall be protected with shock absorbing material and secured in vans specially designed for the transportation of shock sensitive equipment. The vendor shall assume all responsibility for safe delivery. Adequacy of packaging shall be verified by Grumman.

5.4 Marking of Shipments. - Interior and exterior containers shall be durably and legibly marked such that the markings shall provide the following information:

Item Name _____

Contractor's Control No. _____

Stock No. _____

Contractor's Order No. _____

Manufacturer _____

Mfg.'s Serial No. _____

Date of Manufacture _____

6 NOTES

6.1 Intended Use. - The EVDE is intended to be integrated with the LMS for the training and checkout of a two-man crew in respect to the scenes they will encounter on the trip from the CSM to the moon and return. It may also be applied to training of a two-man crew during limited Earth-orbital missions.

6.2 Definitions (Operational Phases). -

6.2.1 Lunar Orbit. - The Lunar Orbit starts after successful injection of the CSM into lunar orbit, and terminates after the LEM separates from the CSM.

6.2.2 Descent. -

6.2.2.1 Coasting Descent Transfer Orbit. - The coasting descent transfer orbit starts with the insertion of LEM into a coasting descent orbit and terminates at the initiation of powered descent.

6.2.2.2 Powered Descent. - The powered descent starts at the completion of the coasting descent transfer orbit and terminates at LEM touchdown on the lunar surface. For convenience, this mission phase is subdivided as follows:

6.2.2.2.1 Initial Powered Descent. - The initial powered descent starts at the completion of the coasting descent transfer orbit and ends when the LEM is 20 nm from the landing site.

6.2.2.2.2 Final Powered Descent. - The final powered descent starts when the LEM is 20 nm from the landing site and terminates with a flare maneuver.

6.2.2.2.3 Flare to Landing. - Flare to landing starts at approximately 1200 feet and includes translation to the desired landing site and ends at touchdown.

6.2.3 Ascent. -

6.2.3.1 Powered Ascent. - Powered ascent starts with the ascent engine ignition and terminates with insertion into the coasting ascent transfer orbit or a parking orbit.

6.2.3.2 Coasting Ascent Transfer Orbit. - Coasting ascent transfer orbit starts immediately after insertion into the coasting ascent transfer orbit, either by direct insertion or from a parking orbit, and terminates when the LEM is 20 nm from the CSM.

6.2.3.3 Rendezvous. - Rendezvous starts 20 nm from the CSM and terminates when the LEM is 500 feet from the CSM.

6.2.3.4 Docking. - Docking starts 500 feet from the CSM and terminates at LEM - CSM contact at the overhead hatch.

6.2.4 Abort. - Abort trajectories are a family of possible trajectories that may be initiated at any point during the LEM mission due to a system failure that affects crew safety, or due to undesirable deviations from the nominal mission plan. These trajectories include the transition maneuver necessary to leave the planned trajectory as well as any coast and final burn phases at rendezvous.

6.2.5 Resolution. - Resolution is that angle subtended between two objects so that determination of two objects can be ascertained.

6.3 Performance Objectives. - Simplicity of operation, ease of maintenance, and an improvement in the performance and reliability of the specific functions beyond the requirements of this specification are objectives which shall be considered in the design and fabrication of this equipment. Where it appears a substantial reduction in size and weight or improvement in simplicity of design, performance, ease, of maintenance or reliability will result from the use of materials, parts and processes other than those specified, a request for approval shall be submitted to Grumman for consideration. Each request shall be accompanied by complete supporting information.

TABLE I

LEM AND CSM DYNAMICS

Both vehicles shall be assumed to have the following characteristics:

Angular Rate

X-Axis = 0 and 0.01 to 60°/SEC
Y-Axis = 0 and 0.01 to 60°/SEC
Z-Axis = 0 and 0.01 to 60°/SEC

Angular Acceleration

X-Axis = 1.0°/SEC^2 to 60°/SEC^2
Y-Axis = 1.0°/SEC^2 to 60°/SEC^2
Z-Axis = 1.0°/SEC^2 to 60°/SEC^2

Linear Rate (Using Reaction Control System)

X-Axis = .05ft/SEC to 250ft/SEC
Y-Axis = .05ft/SEC to 250ft/SEC
Z-Axis = .05ft/SEC to 250ft/SEC

Linear Acceleration (Using Reaction Control System)

X-Axis = 0 to 4.0 ft/SEC^2 (+0 to 40 ft/SEC^2 with main eng.)
Y-Axis = 0 to 4.0 ft/SEC^2
Z-Axis = 0 to 4.0 ft/SEC^2

Translational Velocities

Lunar Orbit - 5285 ft/SEC (continuous CM velocity)
LEM Coasting Descent Transfer Orbit - 5670 ft/SEC at Pericynthion
LEM Descent - 5670 to 0 ft/SEC (Hovering Capability)
LEM, Burnout at ascent - 5580 ft/SEC
LEM Hohmann Transfer - 5580 to 5285 ft/SEC

Acceleration Capability

For injection - 16 ft/SEC^2
For descent - 0 to 32 ft/SEC^2
For ascent - 0 to 35 ft/SEC^2

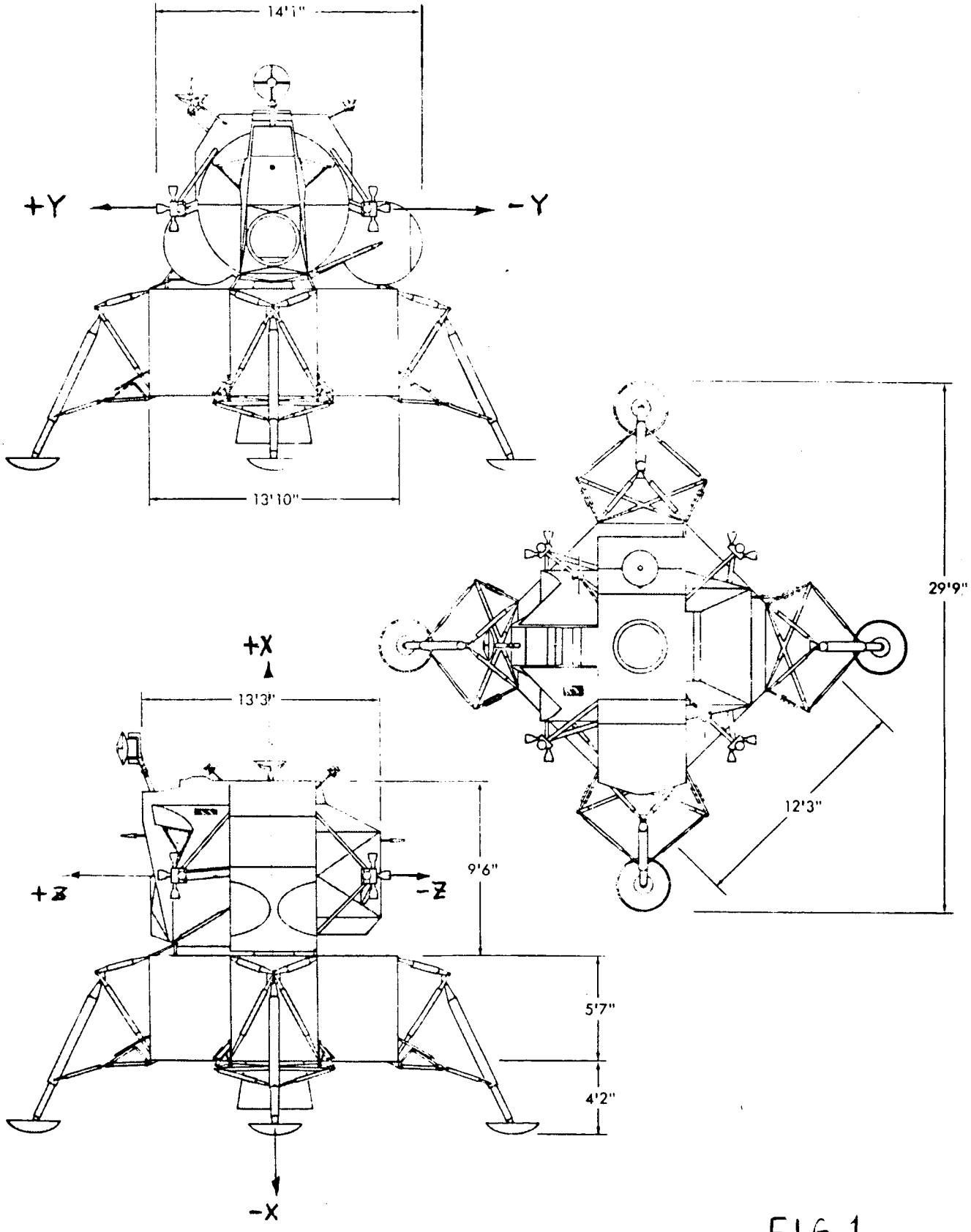

FIG. 1

LEM [illegible] AND COORDINATE REFERENCE SYSTEM

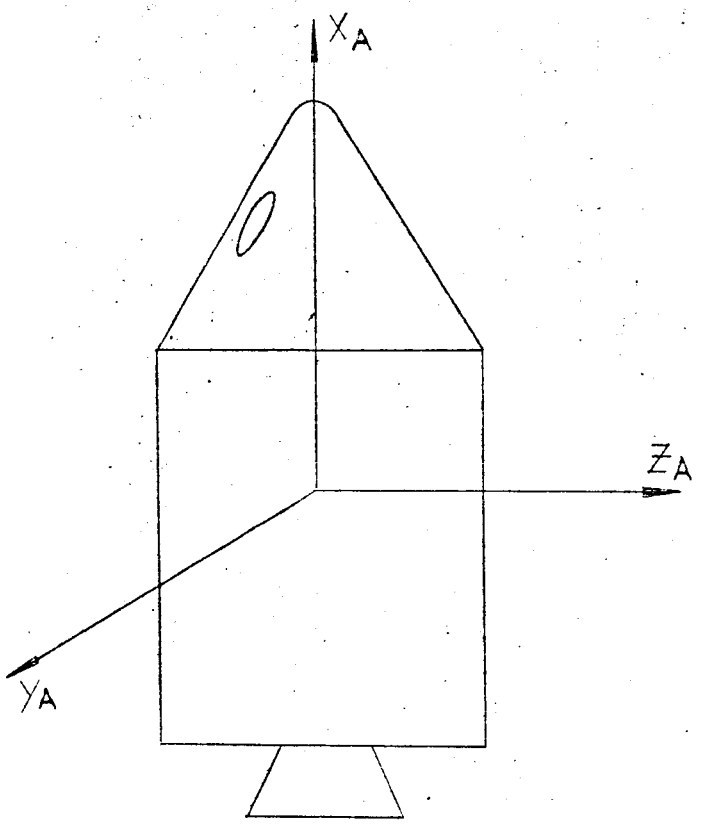

CSM

X_A, Y_A, Z_A = CSM BODY AXES

CSM
BODY AXES RELATIONSHIP

FIG. 2

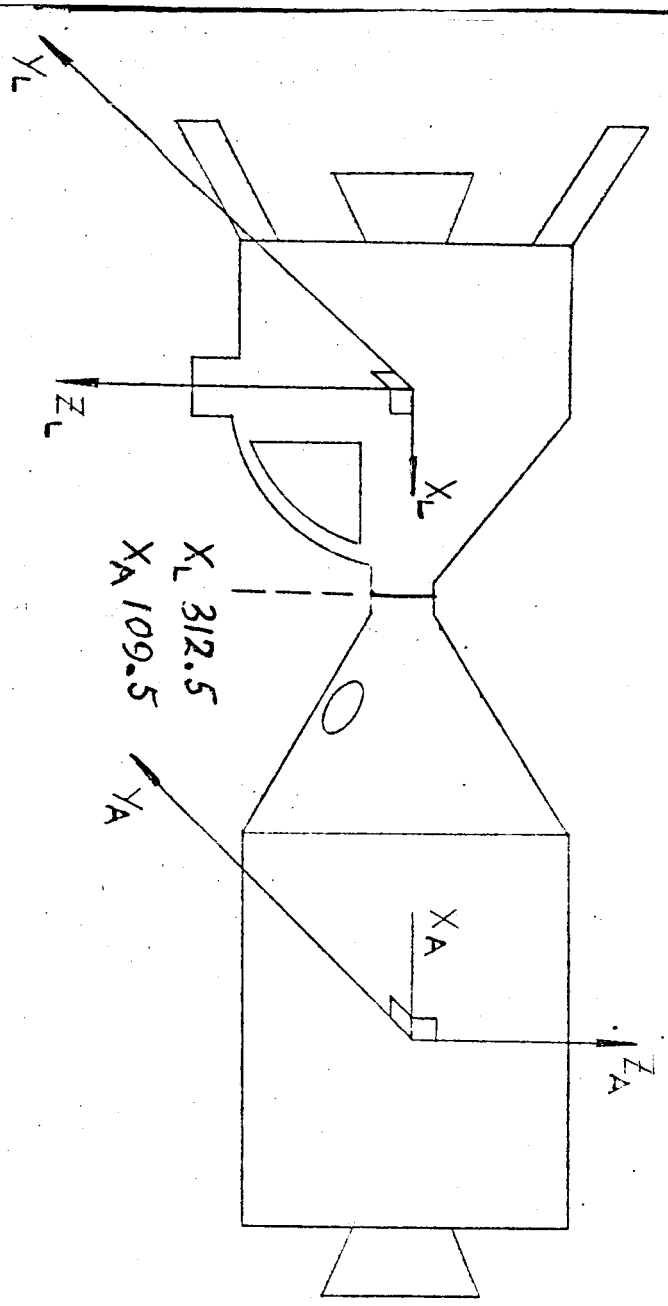

NOTE:
EITHER LEM OR CSM CAN BE ROTATED 360° ABOUT THE X AXIS FOR DOCKING.

FIG. 3

BODY AXES INTERFACE
DURING EARTH & LUNAR ORBITS
PRIOR TO SEPARATION
& AFTER DOCKING

OUTLINE & DIMENSIONS OF CSM TO BE USED FOR DESIGN PURPOSES

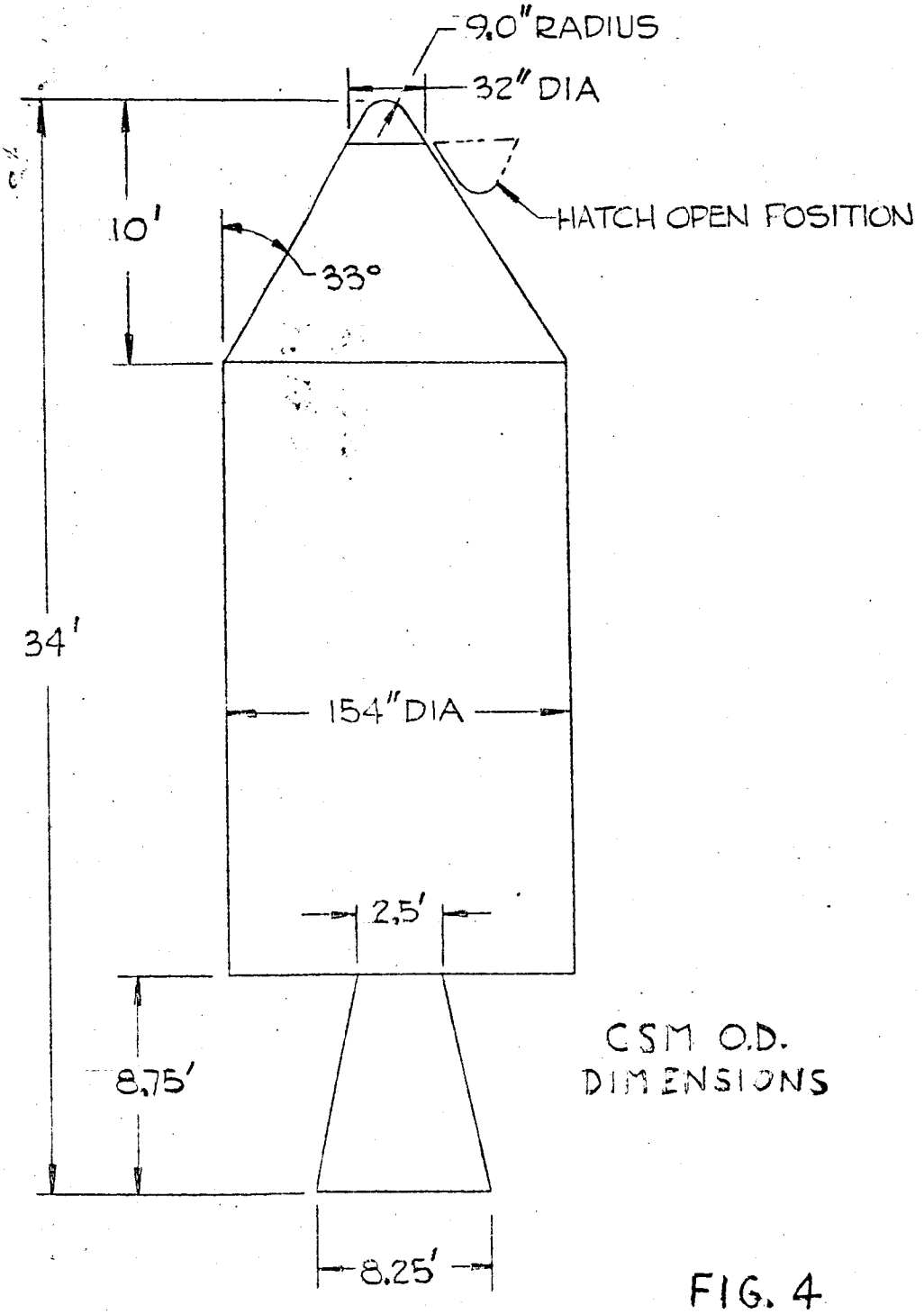

CSM O.D. DIMENSIONS

FIG. 4

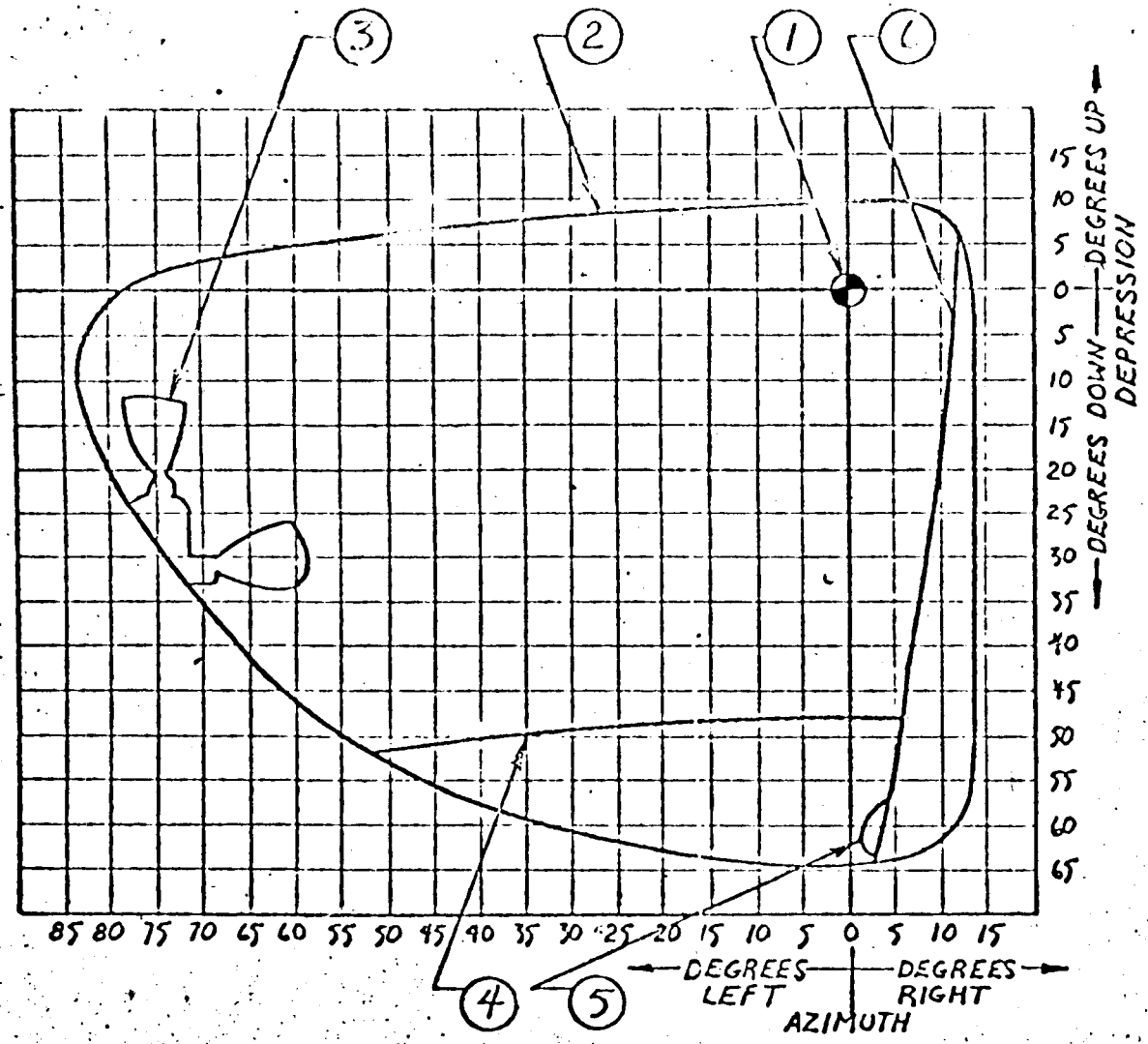

LEGEND

1. CMDR's Design Eye (Flight Sta. Geometry Ref Pt.)
2. Front Window (CMDRS)
3. L.H. Side RCS Cluster
4. Horizon (Altitude above Lunar Surface 10,000 ft.) (X axis attitude 44°39' to vertical)
5. Front Landing Gear Pad
6. Front Beam
7. CMDRS Docking Eye
8. Overhead Docking Window

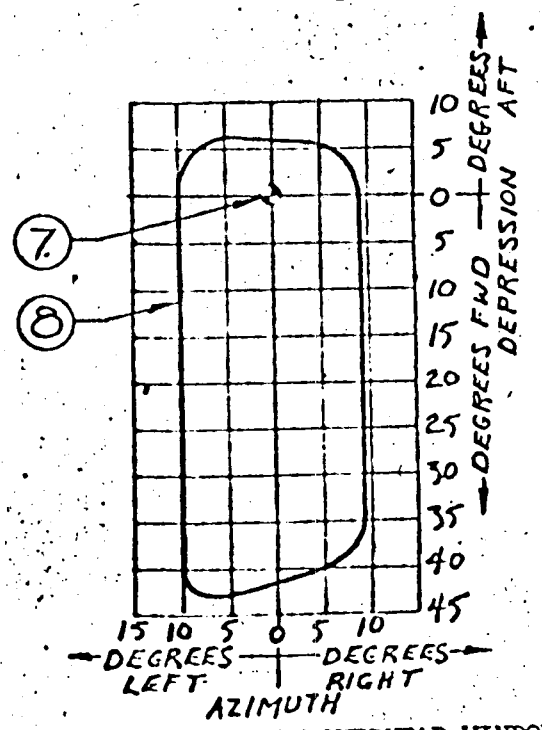

VISIBILITY DIAGRAM-OVERHEAD WINDOW

VISIBILITY DIAGRAM FROM COMMANDERS DESIGN EYE

Figure 5

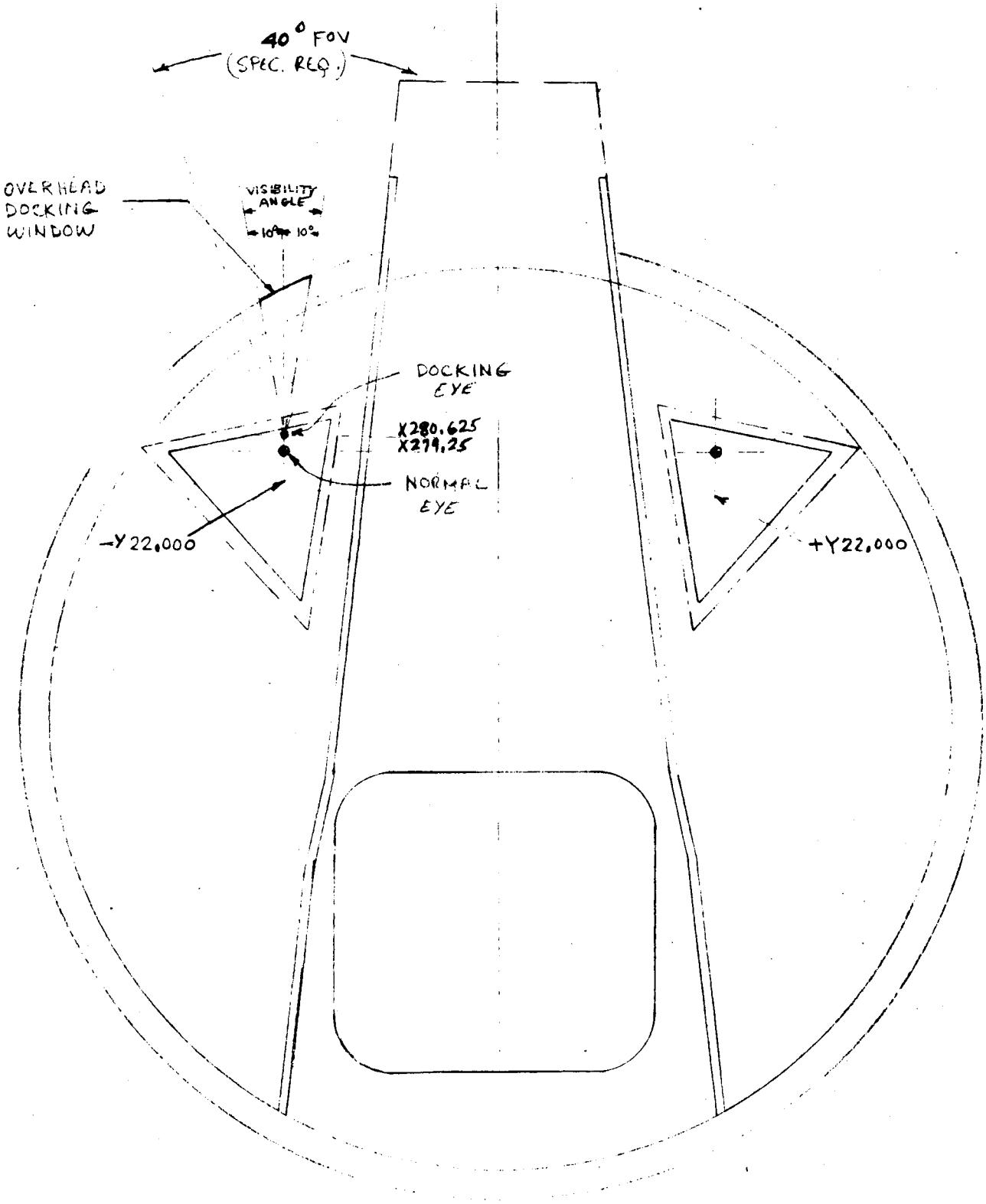

NOTE: WINDOW GEOMETRY DRAWING TO BE SUPPLIED BY GRUMMAN

VIEW LOOKING FORWARD FROM Z = 27.00

FIG. 6 WINDOW CONFIGURATION (SH. 1 OF 2)

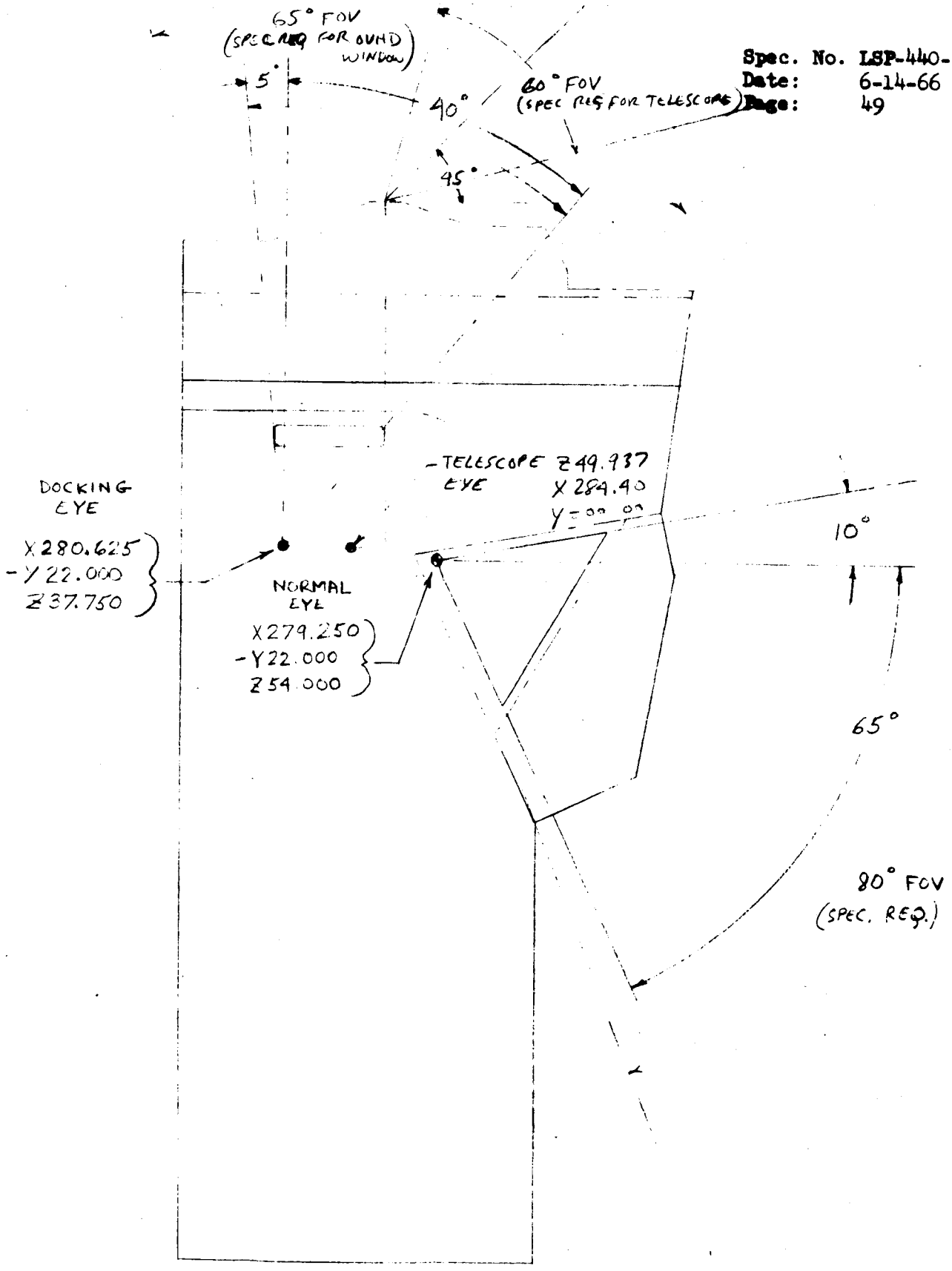

NOTE: WINDOW GEOMETRY DRAWING TO BE SUPPLIED BY GRUMMAN

FIG. 6 WINDOW CONFIGURATION (SH. 2 OF 2)

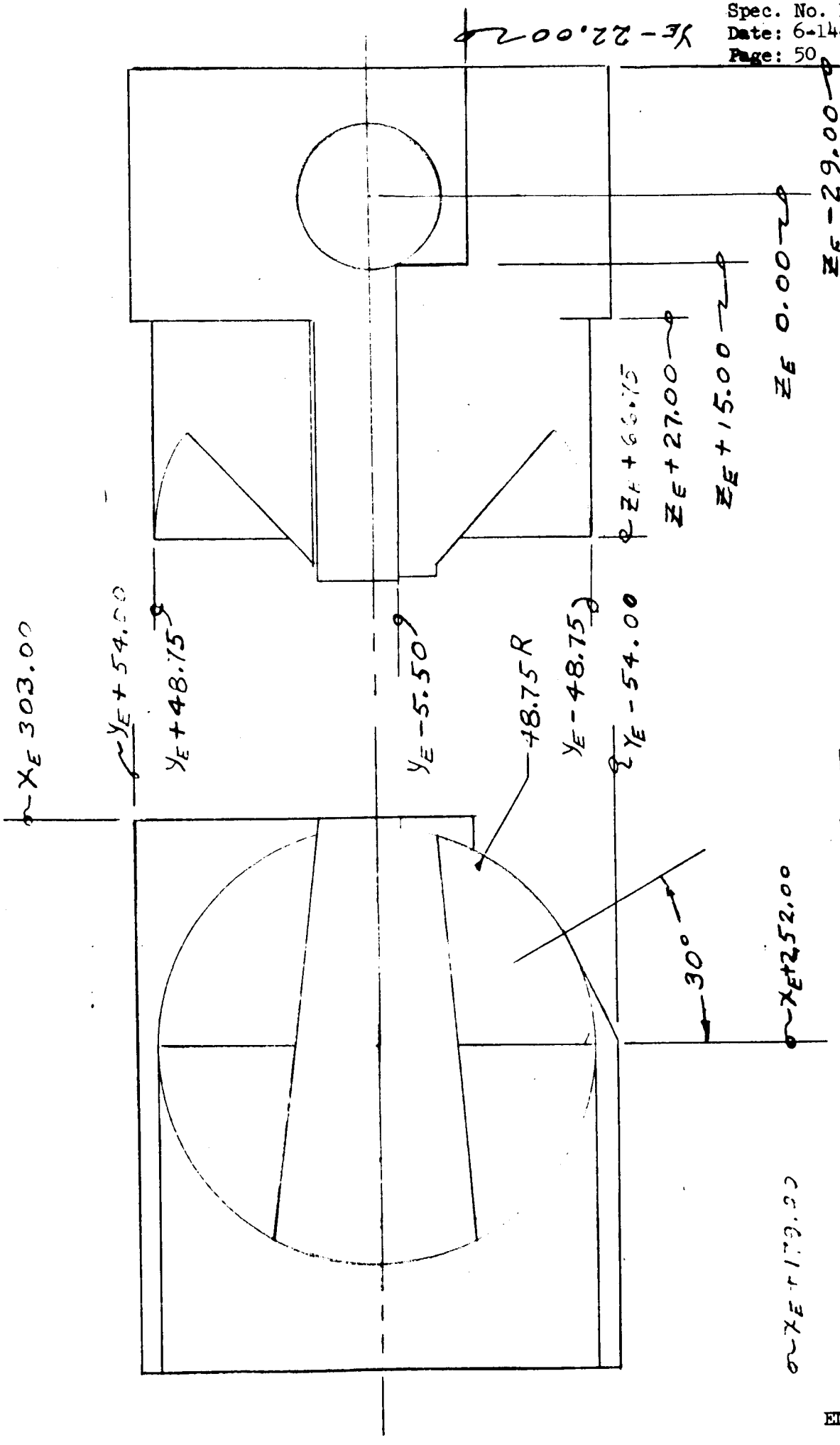

FIG. 7

SIMULATED LEM CABIN FOR LEM MISSION SIMULATOR

LUNAR ORBIT

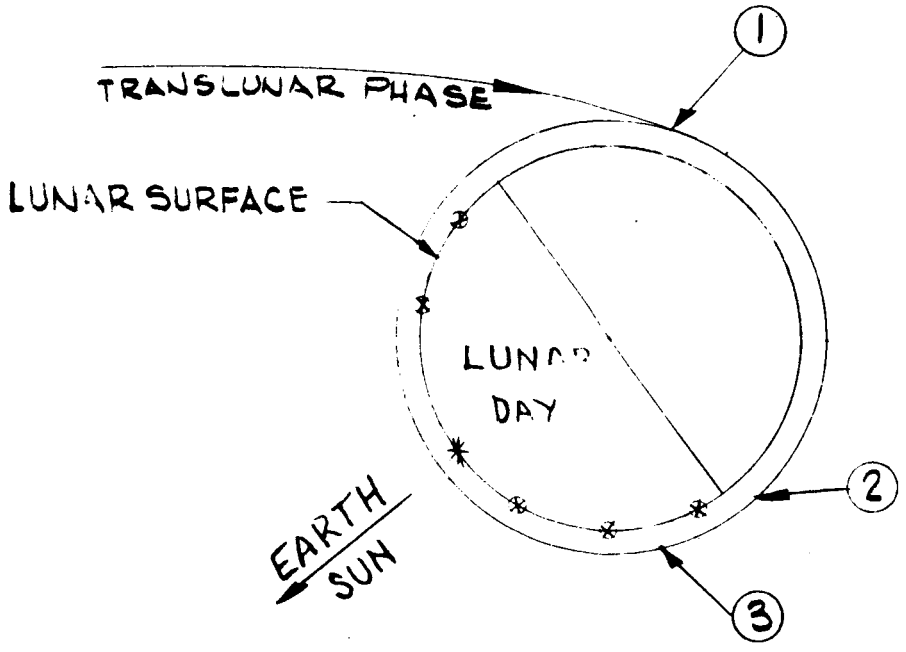

⊗ - LANDMARKS

✳ - LANDING SITE

(1) - LEM-CSM - INJECTION INTO LUNAR ORBIT

(2) - LEM-CSM - SEPARATION DURING 1ST QUARTER OF 2ND ORBIT

(3) - LEM INJECTION INTO SYNCHRONOUS ORBIT

FIG. 8

COASTING DESCENT TRANSFER ORBIT (U)

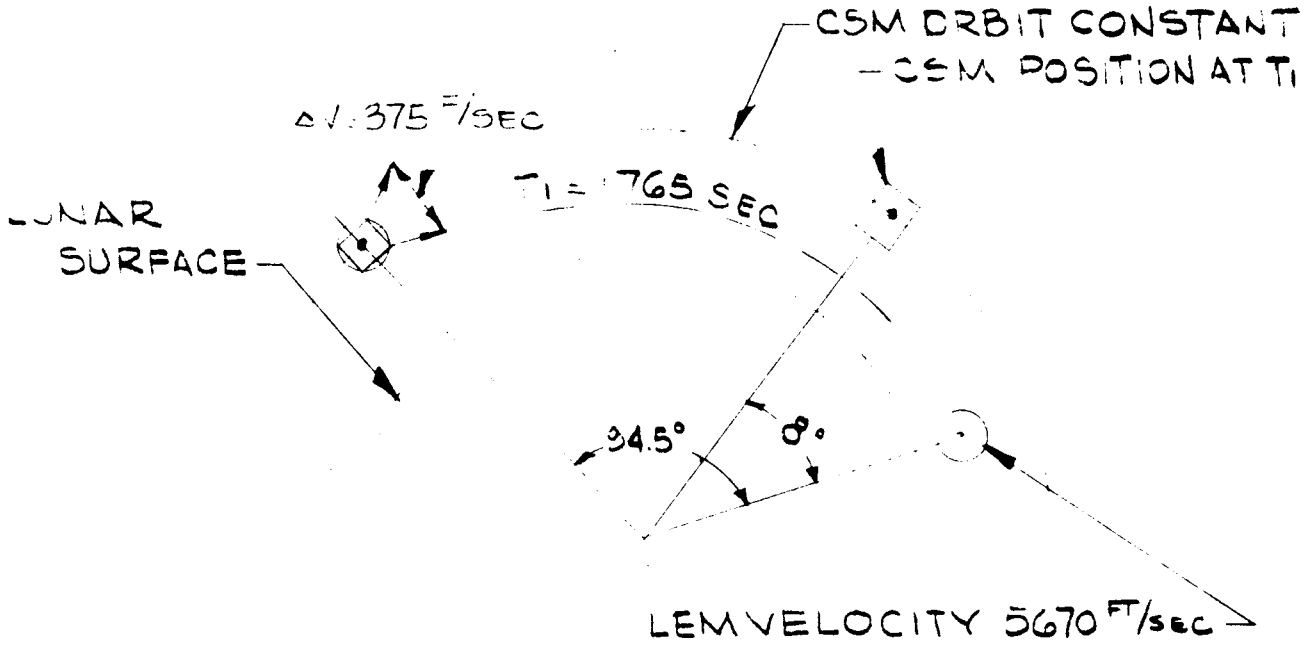

[•] = CSM REMAINS IN ORBIT AT CONSTANT VELOCITY OF 5283 FT/SEC AND ALTITUDE OF 80 N. MI

(•) = LEM

[redacted]

FIG. 9

10 X 10 TO THE ½ INCH 359T-11
KEUFFEL & ESSER CO.

FIG. 10

PROFILE OF FINAL RENDEZVOUS AND DOCKING PHASE

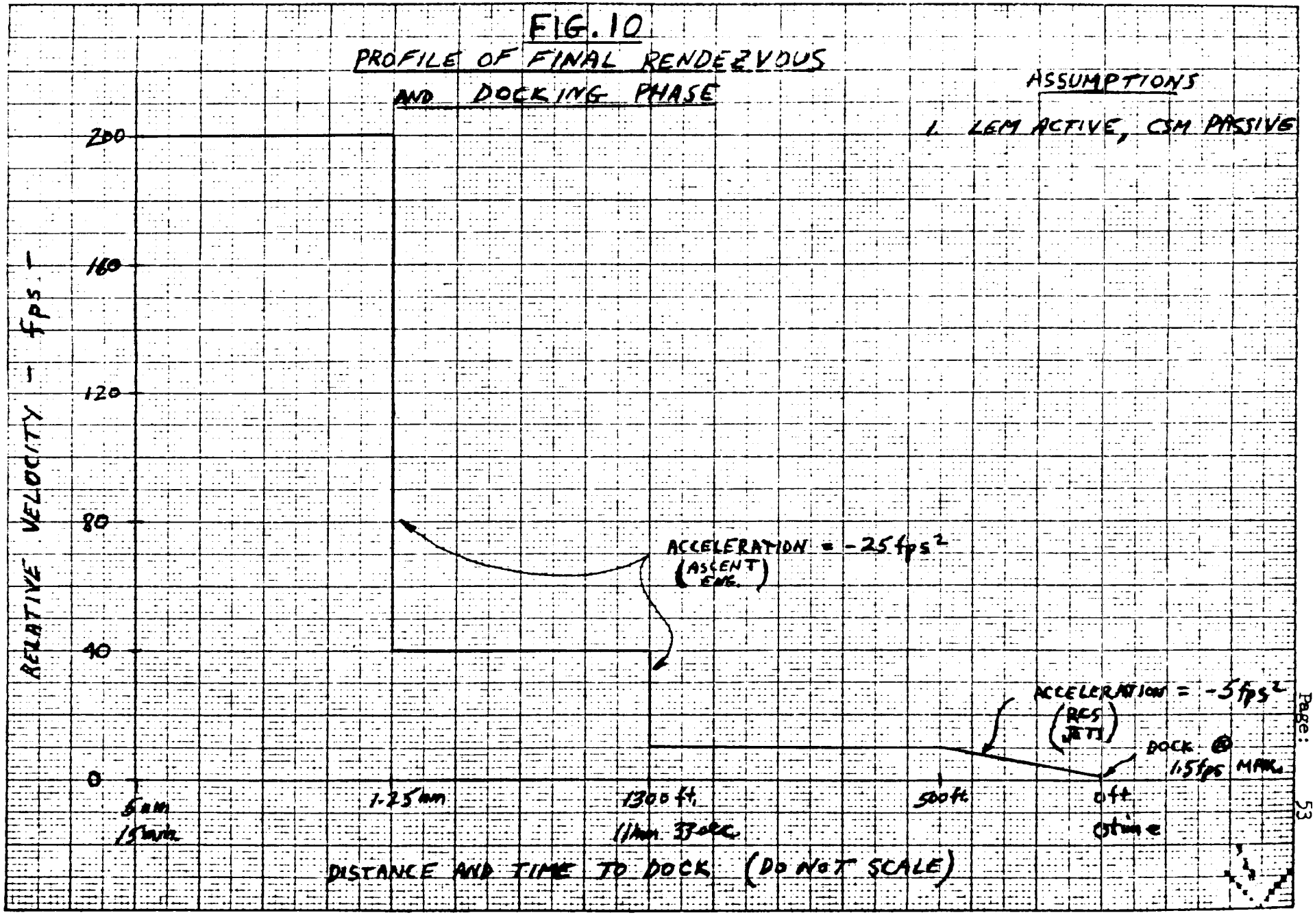

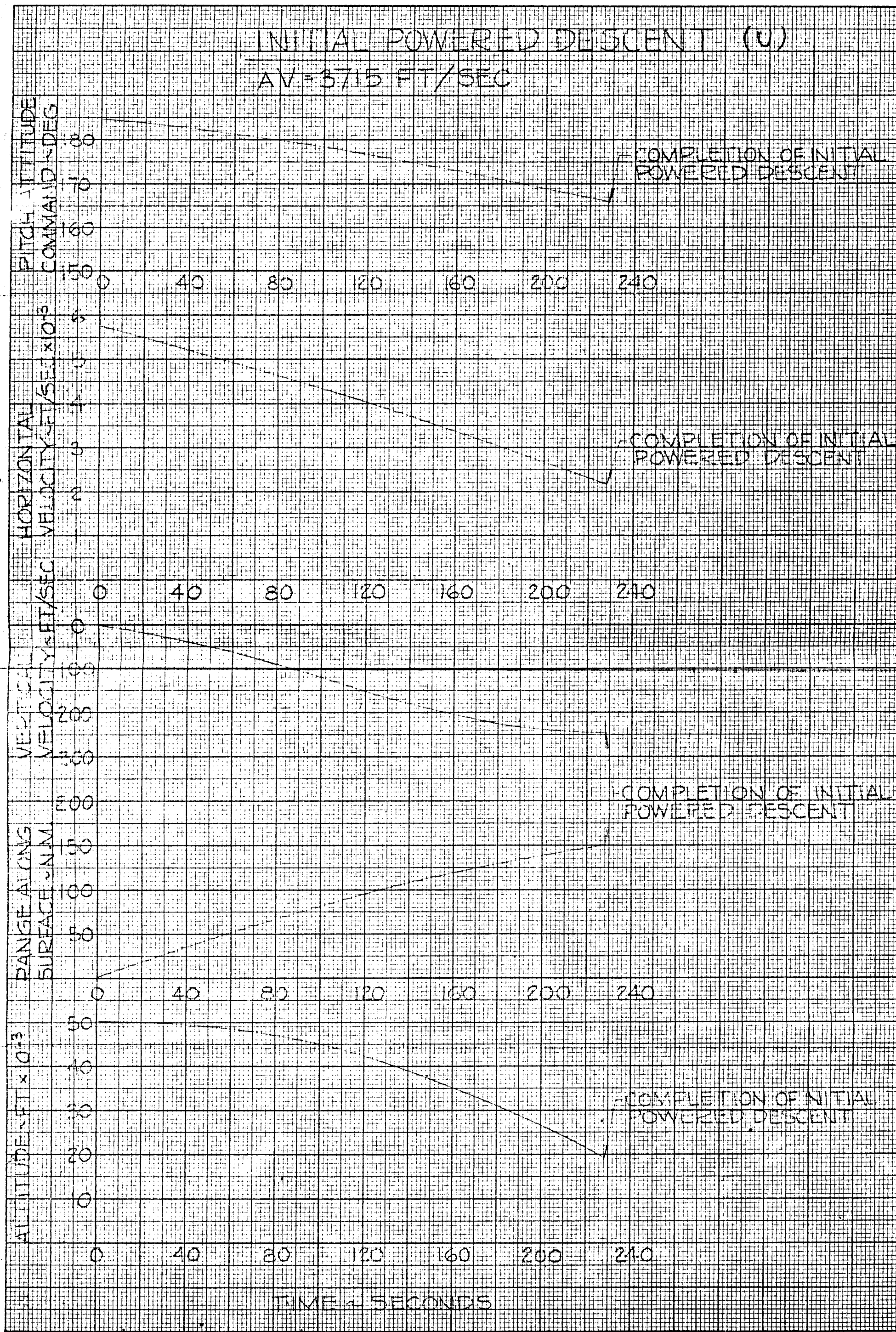
INITIAL POWERED DESCENT (U)
AV = 3715 FT/SEC
PITCH ATTITUDE COMMAND - DEG
HORIZONTAL VELOCITY - FT/SEC x 10-3
VERTICAL VELOCITY - FT/SEC
RANGE ALONG SURFACE - N.M.
ALTITUDE - FT x 10-3
TIME - SECONDS
COMPLETION OF INITIAL POWERED DESCENT

FIG. 11

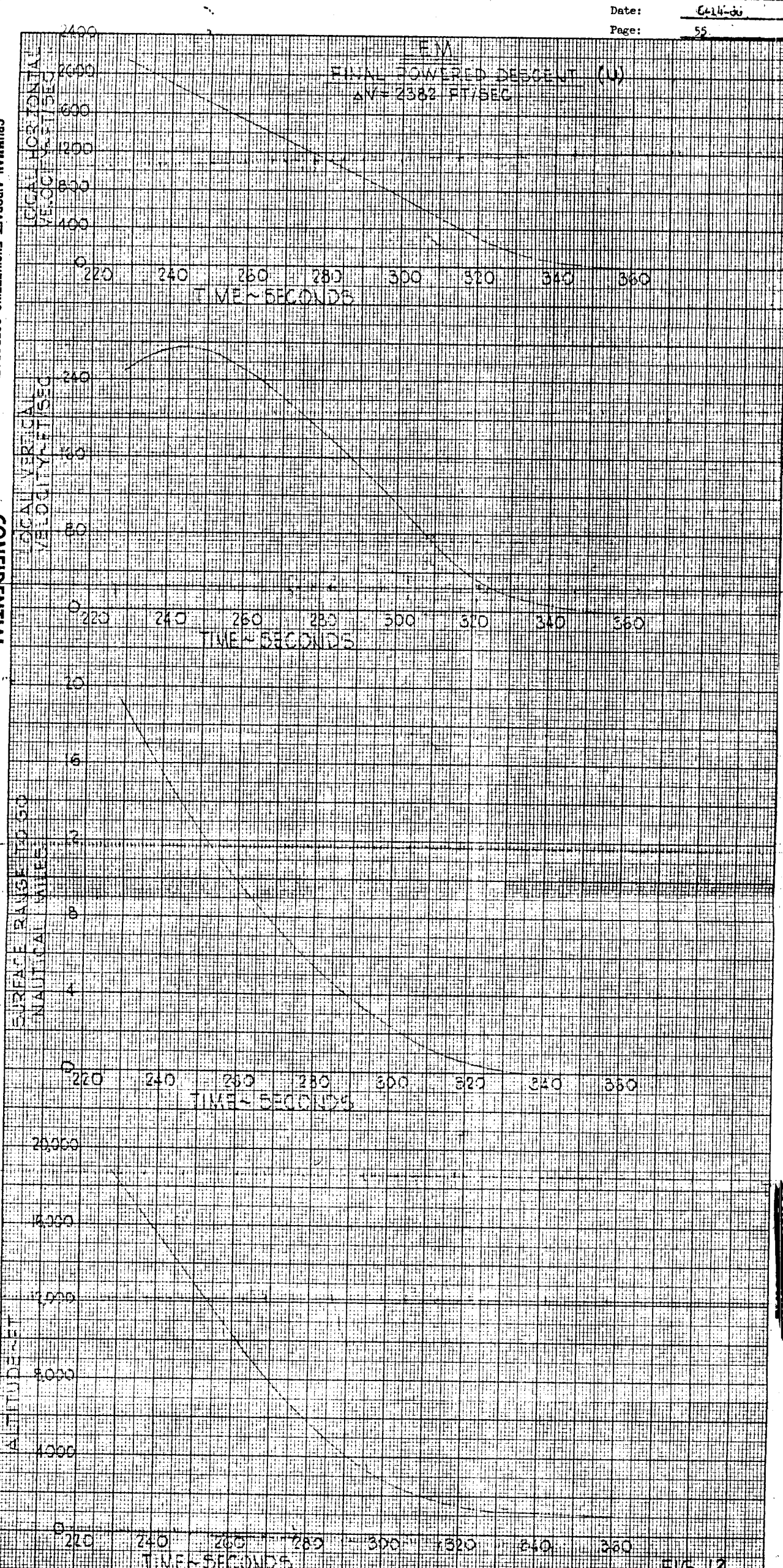

FIG. 12

SCALE	SERIES	RUN	CONFIGURATION

GRUMMAN AIRCRAFT ENGINEERING CORPORATION

CONFIDENTIAL

REPORT
DATE

PAGE
FIGURE

LEM - POWERED DESCENT - GEOMETRY (U)

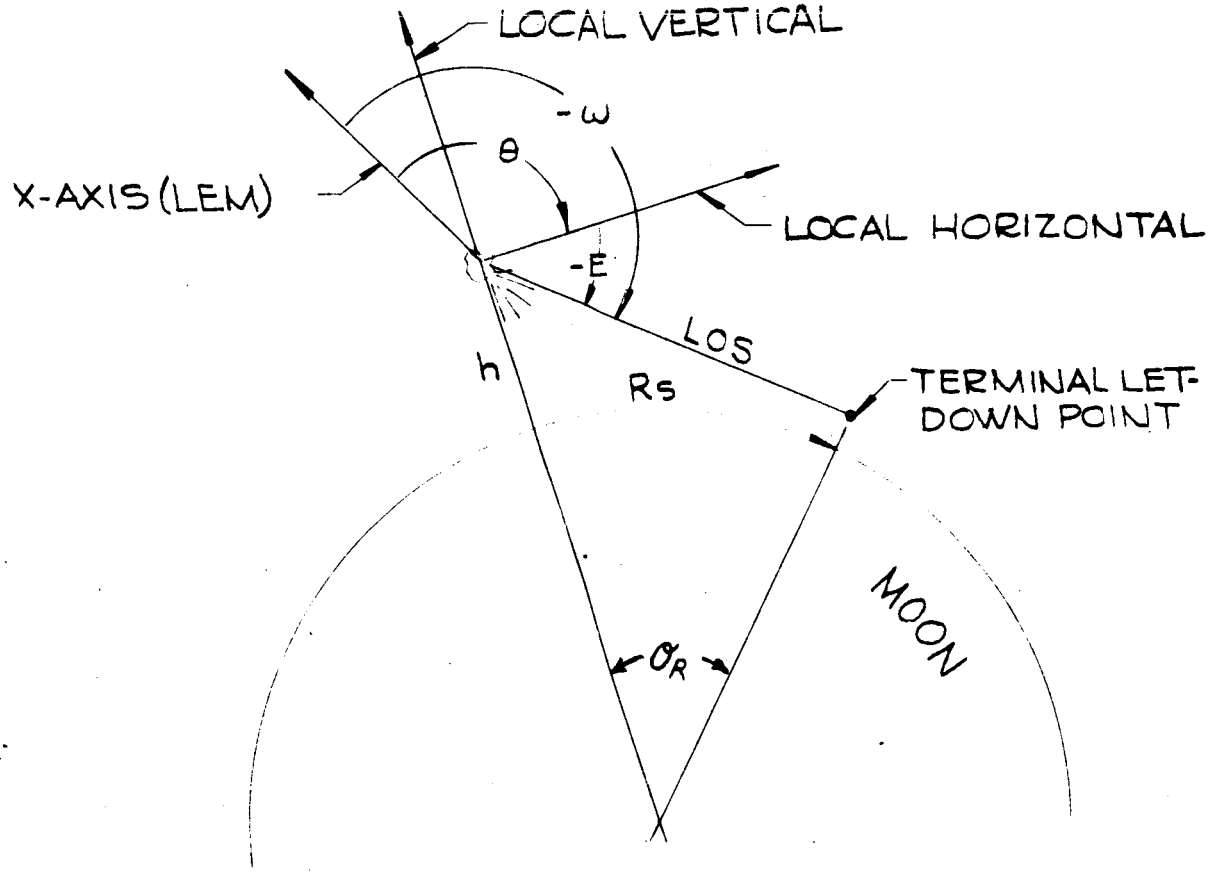

R_s = SURFACE RANGE TO THE TARGET

E = LINE OF SIGHT RANGE TO THE LOCAL HORIZONTAL

θ = LOCAL HORIZONTAL PITCH ANGLE

W = LINE OF SIGHT ANGLE TO THE LEM X-AXIS (THRUST AXIS)

σ_R = RELATIVE CENTRAL ANGLE TO THE TARGET

h = ALTITUDE ABOVE MOON SURFACE

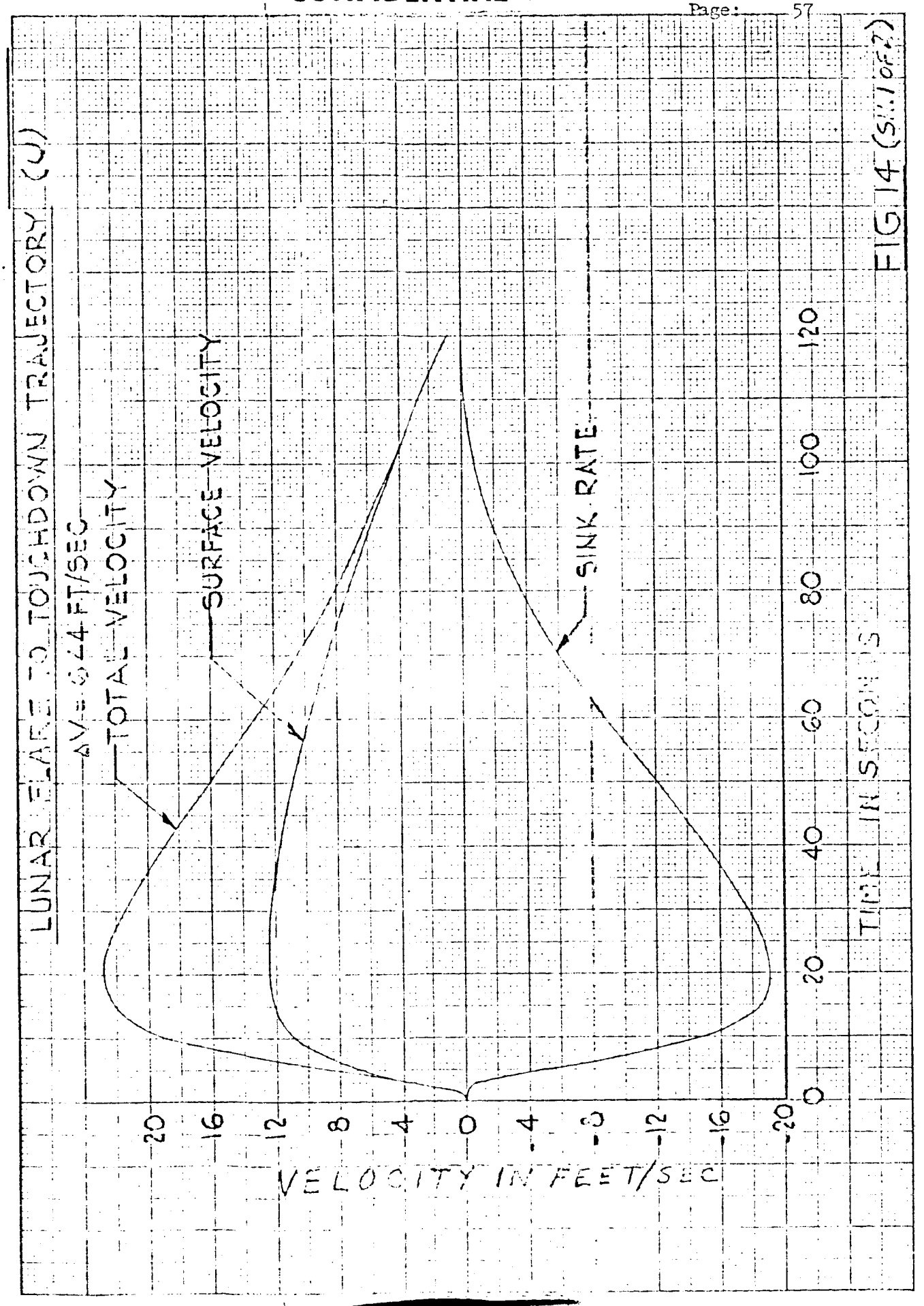

FIG 14 (SHT 1 OF 2)

FIG. 14 (SH. 2 OF 2)

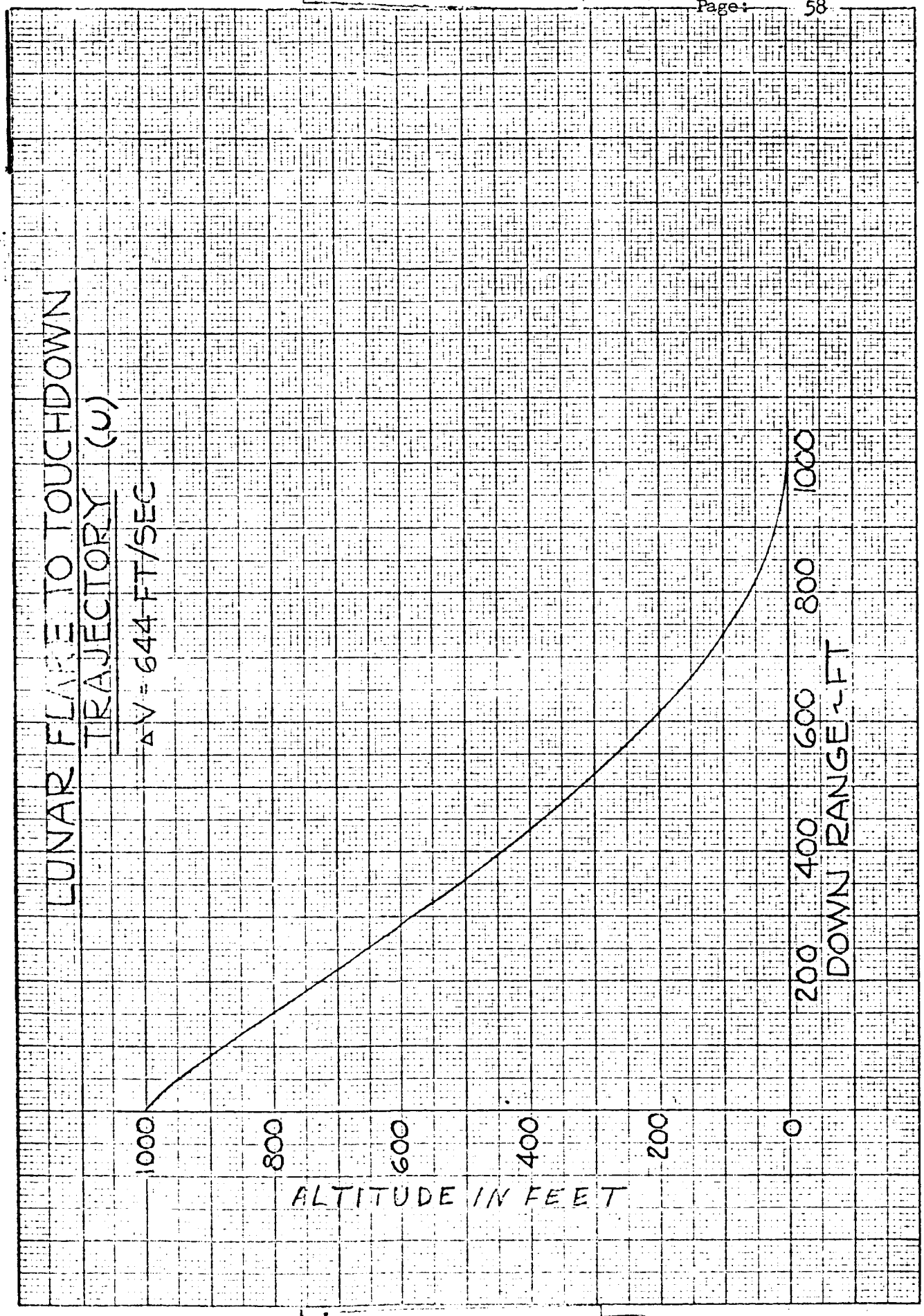

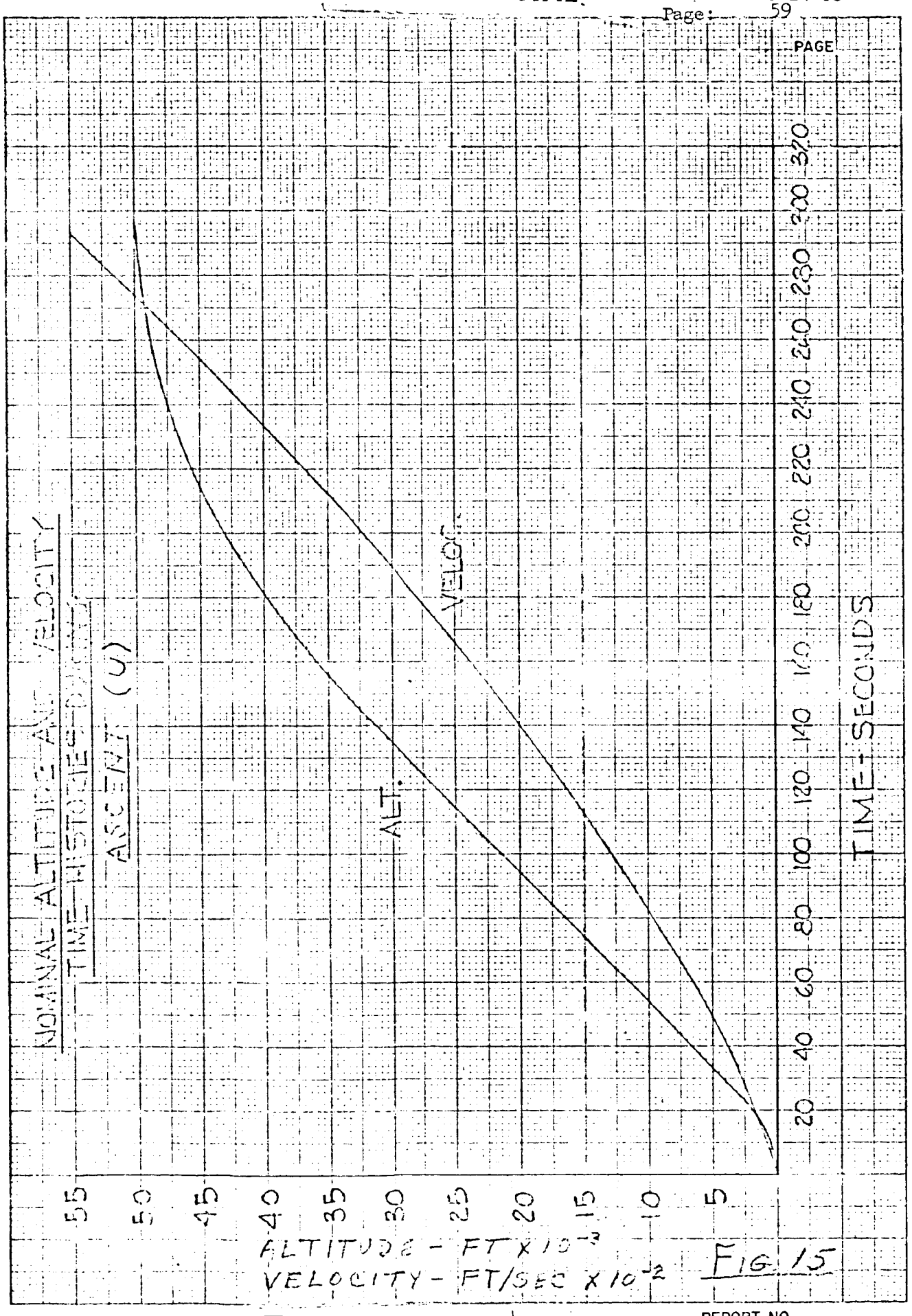
PAGE
NOMINAL ALTITUDE AND VELOCITY
TIME-HISTORIES
ASCENT (U)
ALT.
VELOC.
TIME - SECONDS
20 40 60 80 100 120 140 160 180 200 220 240 260 280 300 320
55 50 45 40 35 30 25 20 15 10 5
ALTITUDE - FT X 10^-3
VELOCITY - FT/SEC X 10^-2

FIG. 15

ASCENT GEOMETRY — POLAR PLOT (U)

ALTITUDE AND CENTRAL ANGLES

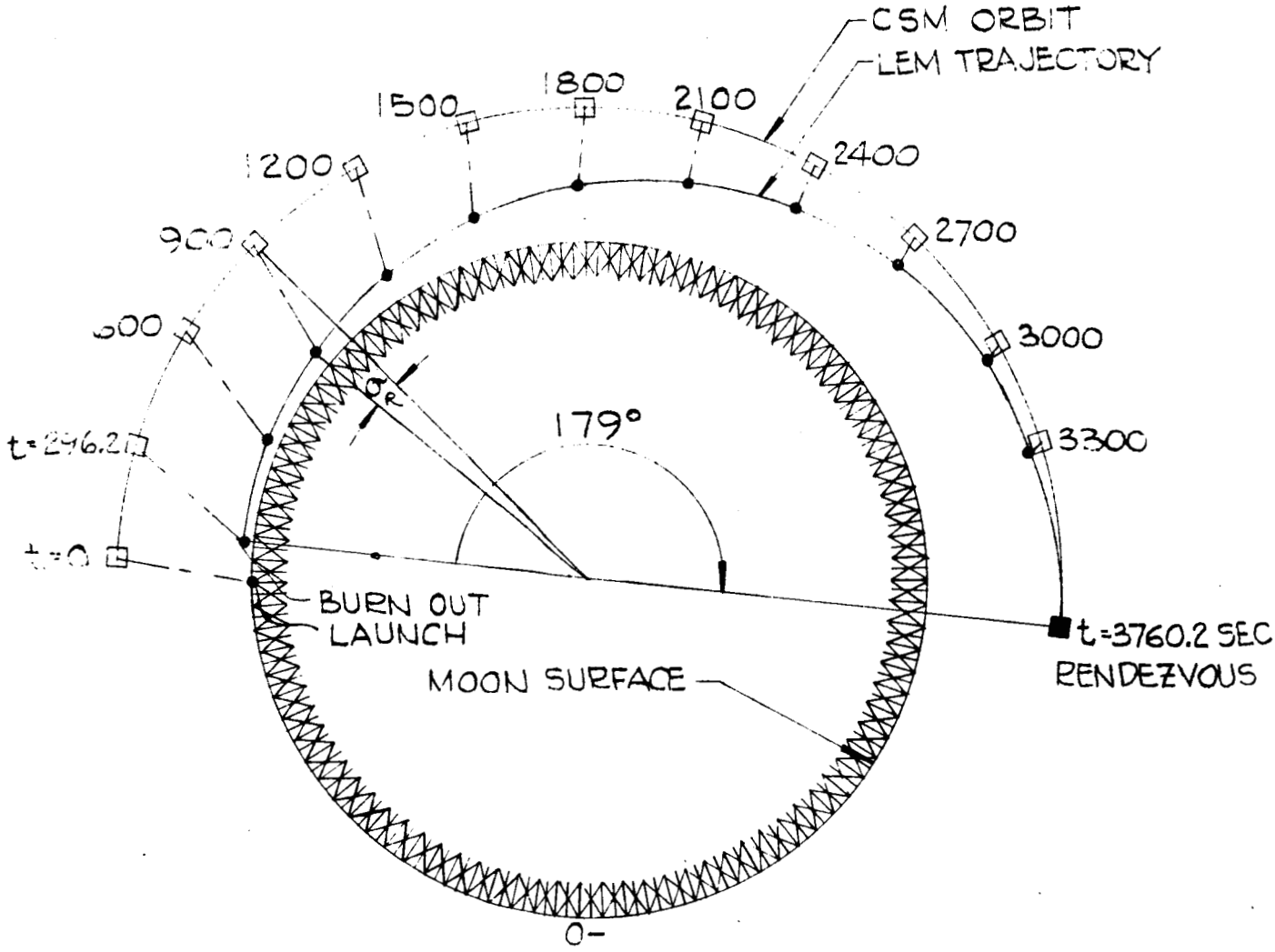

ELEVATION ANGLES, RANGES AND MOON RADIUS NOT TO SCALE

σ_R = CENTRAL ANGLE BETWEEN LEM AND CSM

FIG-16