[redacted]

MAC
Control No. C-86345

PROJECT GEMINI

PROGRAM PROGRESS REPORT [redacted]

25 October 1963

REPORT 8580-1-33
CONTRACT NAS 9-170

AVAILABLE TO U.S. GOVERNMENT AGENCIES ONLY

[redacted]

THIS MATERIAL CONTAINS INFORMATION AFFECTING TH[redacted]
[redacted]
ESPIONAGE [redacted]
TRANS[redacted] OF WHICH IN ANY MANNER TO [redacted]
U[redacted] PERSON IS PROHIBITED BY LAW

[redacted]

MAC
MASH. 4892 -2
NO. [redacted]

INDEX

I. SCHEDULES

SUMMARY SCHEDULE

PRODUCTION SCHEDULE

TEST PLAN SCHEDULE

TEST PROGRAM NARRATIVE

SIMULATORS AND TRAINER SCHEDULE

P.I.A. SCHEDULE

GEMINI MISSION 1A SUPPORT

II. WORK PLANS

SPACECRAFT MANUFACTURING

SUPPLEMENTARY WORK PLANS

ZONE STATUS CHARTS

STATIC ARTICLES

TARGET VEHICLE DOCKING ADAPTER

NARRATIVE

III. MAN-HOURS

ENGINEERING

IV. VENDOR STATUS

SYSTEM TABULATION

QUALIFICATION AND DEVELOPMENT TESTS

NARRATIVE

SCHEDULES

1. Production Schedule

   a. Updated status

2. Master Summary Schedule

   a. Mission Engineering Releases for spacecraft included for first time in Program Progress Report.
   b. S/C-1 Adapter deleted and replaced by S/C-2.
   c. Revised and updated status.

3. Mission Simulators 1 & 2, Translation and Docking Trainer

   a. Simulators updated and included slack times.
   b. Translation and Docking Trainer revised, updated, and included slack times.

4. Ground Test Program

   a. Revised and updated status.

5. Compatibility Test Program

   a. Revised and updated status.

6. Mission 1A Support

   a. Included for first time in Program Progress Report.

WORK PLANS

1. Manufacturing Work Plans S/C-1, 2, 3A, 3, 4, 5 & 6. Statics 2, 3, 4, 5 & 7

   a. S/C-6 included for first time in Program Progress Report.
   b. Balance revised and updated.

2. Zone Status Graphs for CTU S/C-2, 3A & 3

   a. CTU deleted
   b. Balance revised and updated

3. Final Assembly and White Room Graphs S/C-1, 2, 3A

   a. S/C-1 deleted
   b. Balance revised and updated

4. Equipment Study Graphs S/C-2, 3A & 3

   a. Revised and updated status

5. Supplementary Work Plans S/C-2, 3A & 3

   a. Revised and updated status.

MAN-HOURS

1. Actual Engineering Man-Hours

   a. Updated to latest actuals

VENDOR STATUS

1. Vendor Qualification & Development Test Program

   a. Revised and updated.

2. Master Schedules

   a. Updated

3. System Tabulation Sheets

   a. Revised and updated

4. A.G.E. Tabulation Sheets

   a. Revised and updated

5. Narratives

   a. Revised and updated

[redacted]

GEMINI SPACECRAFT MASTER SUMMARY SCHEDULE

PROGRAM GO-AHEAD 22 DEC. 1961

		STATUS +/− WEEKS
	ENGINEERING TASK	
3		
4	DESIGN DEVELOPMENT TESTS	
5		−2
6		−13
7		−8
8		
9		
10	DRAWING RELEASES	
11		
12	MOCK-UPS	
13		−2
	SYSTEM REQUIREMENT-S/C NO. 2	
16		
17	ENVIRONMENTAL CONTROL	−17
18	GUIDANCE AND CONTROL	−11
19	ELECTRICAL - ELECTRICAL POWER SUPPLY	−16
20	COMMUNICATIONS - V.C.C.	−14
21	TIMER REFERENCE UNIT	−21
22	ROCKETS - RETROGRADE	+2
23	LANDING SYSTEM	−8
24	BATTERY FUEL CELL	−18
25	MANEUVER AND ATTITUDE CONTROL	−12
26	REACTION CONTROL	−25
27	INSTRUMENTATION & RECORDING	−8
28		
	MANUFACTURING	
31		
32	DEVELOPMENT HARDWARE	
33		
34		
35		
36		
37	NO.2 SPACECRAFT & LAUNCH ADAPTER	
38	ADAPTER NO. 2	
39		
40	SPACECRAFT NO. 2	
41		−16
42		−17
43		
44	DELIVERY-SPACECRAFT	
45		
46	DELIVERY-LAUNCH ADAPTER	
47		
48	DELIVERY-TARGET VEHICLE DOCKING ADAPTER	
49		
50		

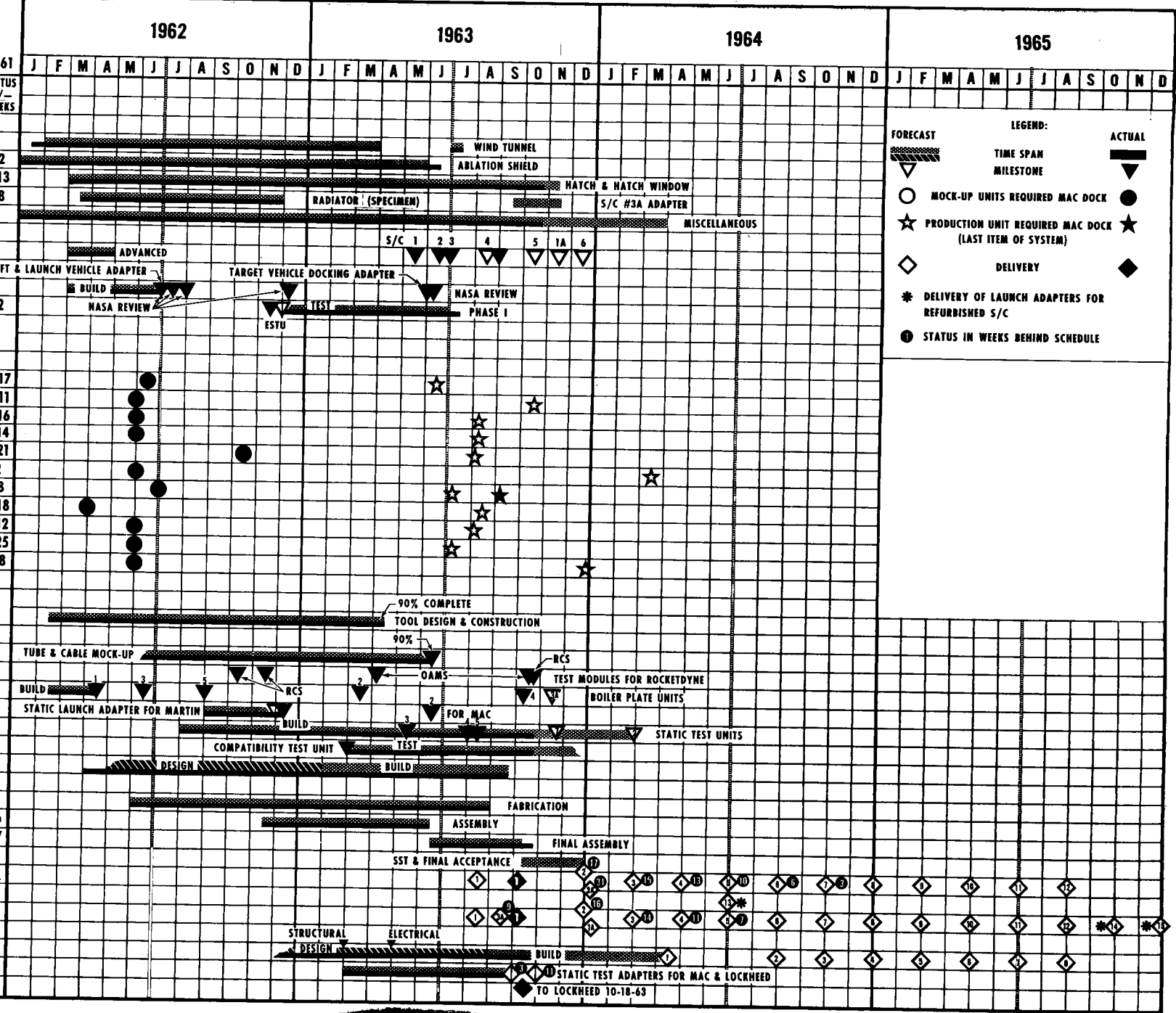

25 OCT. 1963

[redacted]

12-133P-01-01

PROJECT GEMINI COMPATIBILITY TEST UNIT TEST SCHEDULE

R & R SECTION		
SEQUENTIAL SYSTEM TEST	IA259	
MATE WITH RCS & CABIN		
R C S SECTION		
RCS PRESSURE & LEAK	● B255	
MOVE TO HYPERGOLIC AREA		
RCS SERVICING, STATIC FIRING & DE-SERVICING	● 260 - B263	
MOVE TO WHITE ROOM & MATE WITH CABIN		
CABIN SECTION - CTU		
ELECTRICAL & SEQUENTIAL SYSTEM TEST	IC250 - IC259	COMPLETED
COMMUNICATION SYSTEM	IC251	COMPLETED
COOLANT SYSTEM	C262	
INSTRUMENTATION SYSTEM	C253	
GUIDANCE & CONTROL	IC252	
GROUNDING CHANGES TO WIRING		
ECS	IC254	
MATE WITH RCS AND R & R		
BIO-MEDICAL	K253	COMPLETED
RE-ENTRY CONFIGURATION		
COMMUNICATION SYSTEM TEST & MATE	G251	
ADAPTER SECTION: CTU		
SEQUENTIAL SYSTEM	ID259	COMPLETED
COMMUNICATION SYSTEM	ID251	COMPLETED
COOLANT SYSTEM	ID262	
INSTRUMENTATION SYSTEM	ID253	
OAM SYSTEM	ID252	COMPLETED
MECH. SYSTEM PWR. DIST. TEST	D272	COMPLETED
ECS SYSTEM	ID254	
OAMS PRESSURE & LEAK	● D255	
MOVE TO HYPERGOLIC FACILITY		
SERVICING, STATIC FIRING & DE-SERVICING	● 260 - D263	
MOVE TO WHITE ROOM & MATE WITH RE-ENTRY		
INSTALL RCS/FC MODULE		
RSS LEAK & VALIDATION	● ID266	
COOLANT SYSTEM LEAK TEST	D262	
MOVE TO CRYOGENIC AREA		
F C TEST (GASEOUS REACTANTS)	● ID258	
CRYOGENIC SERVICING & OPERATION	● D261 - ID270	
ASSEMBLED SPACECRAFT		
COOLANT SYSTEM & ECS TEST	H262 - IH254	
ELECTRICAL & SEQUENTIAL SYSTEM	H250 - H259	
G & C SYSTEM & RADAR TEST	H252 - H257	
INSTRUMENTATION SYSTEM	H253	
RCS - OAMS TEST	H255	
COMMUNICATION SYSTEM	H251	
SIMULATED MISSION & DEMATE	265 - TR052.068	
MATE & MOVE TO ALTITUDE CHAMBER	269	
PRE-ALTITUDE SERVICING & ALTITUDE CHAMBER	● H268 - H269	

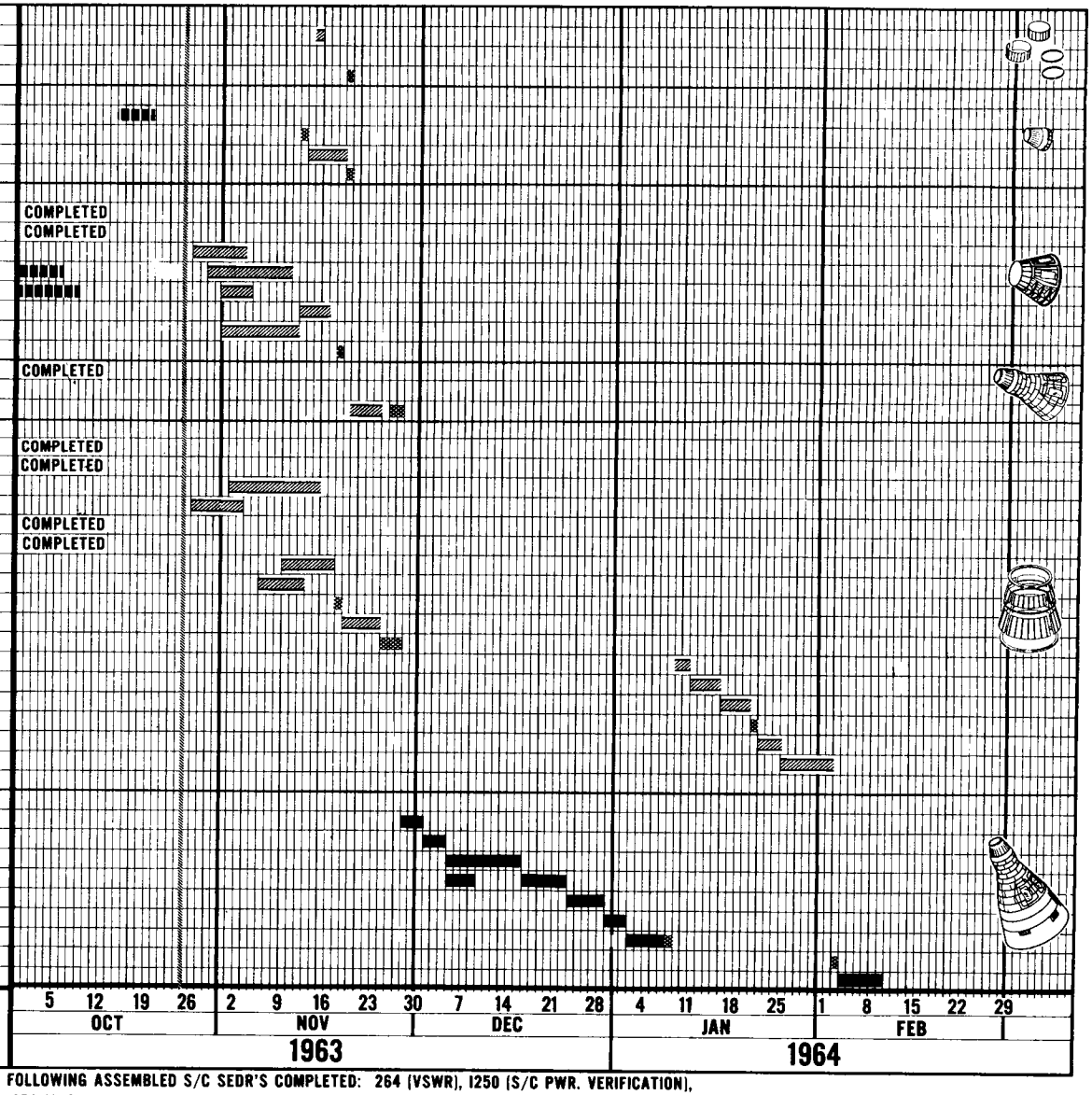

MFG. TIME, MOVES & MATES
PHASE I TESTING
PHASE II, III, & IV TESTING
COMPLETE OR IN WORK

● 3 SHIFTS/DAY - 7 DAYS/WEEK (IF REQUIRED)

25 OCTOBER 1963

FOLLOWING ASSEMBLED S/C SEDR'S COMPLETED: 264 (VSWR), I250 (S/C PWR. VERIFICATION), I259 (SEQUENTIAL C/O). MECHANICAL SYSTEM POWER DISTR.

[redacted]

GEMINI SPACECRAFT MASTER SUMMARY SCHEDULE

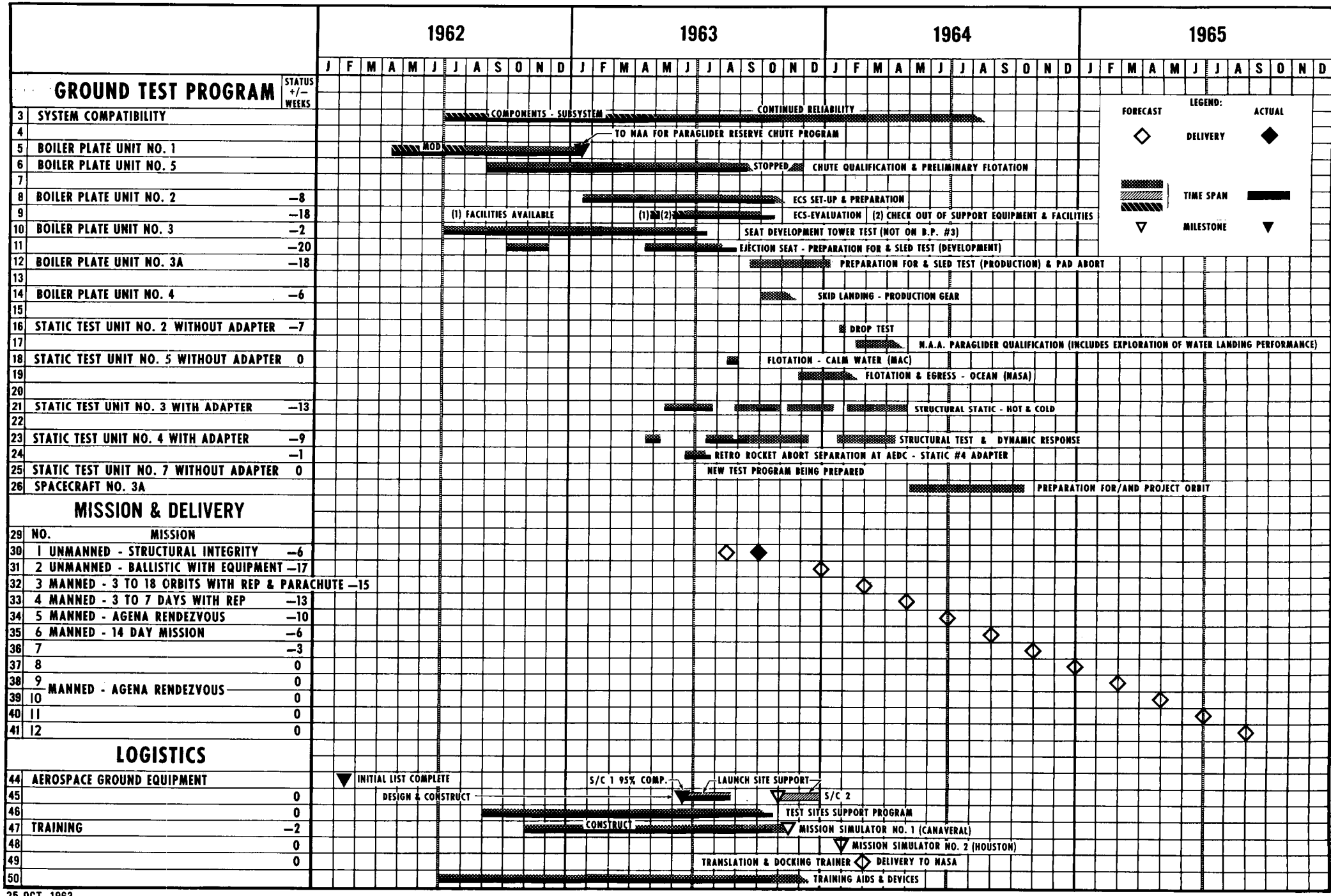

25 OCT. 1963

[redacted]

12-133P-01-02

[redacted]

GEMINI SPACECRAFT PRODUCTION SCHEDULE

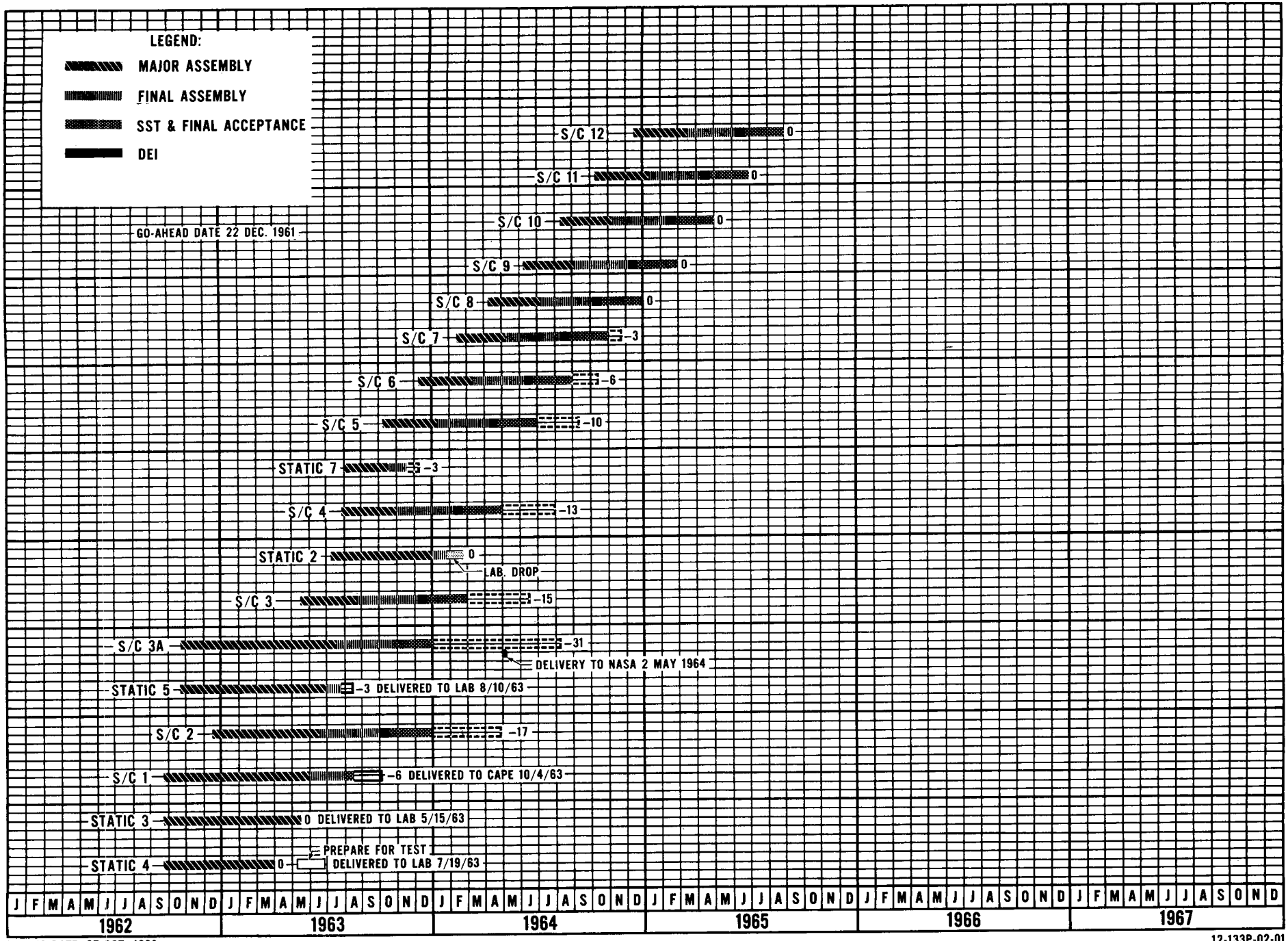

STATUS DATE: 25 OCT. 1963

12-133P-02-01

[redacted]

GEMINI TEST PLAN SCHEDULE

INDEX

WIND TUNNEL TESTS

Aerodynamic Tests — Page 2
Thermodynamic Tests — Page 3
Structural Dynamic Tests — Page 3

RECOVERY SYSTEMS

Parachute — Page 4
Paraglider Drogue Chute — Page 4
Skid Landing Gear — Page 5
Flotation & Egress — Page 5
Ejection Seat — Page 6
Hatch — Page 7
Heat Shield — Page 7

DOCKING SYSTEMS — Page 8

PROPULSION SYSTEMS — Page 9

MATERIALS & PROCESSES — Page 9

RELEASE MECHANISM — Page 10

STRUCTURAL TESTS — Page 11

R & R - RCS — Page 12
Miscellaneous Structural Tests — Page 12
Static Article No. 3 — Page 13
Static Article No. 4 — Page 14

DATA ACQUISITION SYSTEM — Page 15

ELECTRONICS SYSTEMS TEST UNIT — Page 16 & 17

ANTENNA SYSTEMS — Page 18 & 19

ELECTRICAL POWER SYSTEM COMPATIBILITY — Page 20

ENVIRONMENTAL CONTROL — Page 21

COMPATIBILITY TEST UNIT — Page 22

GUIDANCE & CONTROL SIMULATION — Page 22

THERMAL QUALIFICATION — Page 23

DATE 22 JANUARY 1962

REVISED 30 AUGUST 1963 (Rev. K)

REVISED 27 SEPTEMBER 1963 (Rev. L)

REVISED 28 OCTOBER 1963 (Rev. M)

MCDONNELL

ST. LOUIS, MISSOURI

GEMINI TEST PLAN SCHEDULE

REPORT

MODEL 133P

	Test Req. No. 52--	ACTIVITY	1963 J	F	M	A	M	J	J	A	S	O	N	D	1964 J	F	M	A	M	J	PLAN	COMMENTS
1		WIND TUNNEL TESTS:																				
2		AERODYNAMIC TESTS																				
3	41.02	6% LAUNCH CONFIG. - STATIC STAB. & PRESSURE (AMES UNITARY - LOW)																				TEST COMPLETED JUNE '62
4	41.16	6% LAUNCH CONFIG. - STATIC STAB. & PRESSURE (LEWIS 10' - HIGH)																				TEST COMPLETED SEPT '62
5	41.04	10% REENTRY MODULE & ABORT CONFIG. - STATIC STAB. (MAC PSWT)																				TEST COMPLETED JUNE '62
6	41.03	1.925% REENTRY MODULE & ABORT CONFIG. - STATIC STAB. (LANGLEY 11'																				
7	41.06	9% REENTRY MODULE - STATIC STABILITY (MAC HIT)																				TEST COMPLETED JUNE '62
8	41.11	10% REENTRY MODULE & ABORT CONFIG. DYN. STAB. (LANGLEY 8' & UNITARY)																				TEST COMPLETED NOV '62
9	41.14	REENTRY MODULE - DYNAMIC STAB. (AMES S.S. FREE FLT.)																				TEST COMPLETED DEC '62
10	41.01, 01.02, 01.03	20% SEAT - STATIC STAB. & PRESSURES (MAC PSWT)																				
11	41.12	10% JET/HATCH EFFECTS, EJECTION SEAT - STATIC STAB. (MAC PSWT)																				TEST COMPLETED OCT '62
12	41.07	10% REENTRY MODULE - PRESSURE & HATCH HINGE MOMENTS (MAC PSWT)																				TEST COMPLETED JULY '62
13	41.05	30% LANDING CONFIG. - STATIC STAB. & PRESSURE(MAC LSWT)																				TEST COMPLETED MAY '62
14	41.15	5% REENTRY MODULE - SPIN (LANGLEY SPIN)																				
15	41.19	FULL SCALE - BALLUTE (MAC LSWT).																				
16	41.20	FULL SCALE - 18.2' DIA. PILOT CHUTE (AMES)																				EQUIPMENT DEL. FOR NASA TEST
17																						

LEGEND:
TESTS
HDW. DEL.

① PLANNED
② CURRENT ESTIMATE
③ ACTUAL

DATE 22 JANUARY 1962
REVISED 30 AUGUST 1963 (Rev. K)
REVISED 27 SEPTEMBER 1963 (Rev. L)
REVISED 28 OCTOBER 1963 (Rev. M)

MCDONNELL
ST. LOUIS, MISSOURI

GEMINI TEST PLAN SCHEDULE

PAGE 3
REPORT
MODEL 133P

	Test Req. No. 52--	ACTIVITY	1963 J	F	M	A	M	J	J	A	S	O	N	D	1964 J	F	M	A	M	J	SLACK	COMMENTS
1		**WIND TUNNEL TESTS:**																				
2		**THERMODYNAMIC TEST**																				
3	41.08, 08.01, 08.02	10% REENTRY MODULE & LAUNCH CONFIG. - PRESS. & HEAT (AEDC)																				TESTS COMPLETED OCT '62
4	41.09	10% REENTRY MOD. & LAUNCH CONFIG. PRESS. & HEAT (LANGLEY UNITARY)																				TEST COMPLETED NOV '62
5		7% REENTRY MODULE - HEAT TRANSFER (CAL)																				TEST COMPLETED OCT '62
6		**STRUCTURAL DYNAMIC TESTS**																				
7	41.17	10% LAUNCH CONFIG. - DYN. PRESS. (AMES 11' - 14' & 9' x 7')																				TEST COMPLETED DEC '62
8																						
9		**PROPULSION:**																				
10		RETRO ABORT ROCKET JET FLOW EFFECTS																				TEST IN INITIAL PLANNING STAGE
11																						
12																						
13																						
14																						
15																						
16																						
17																						
			J	F	M	A	M	J	J	A	S	O	N	D	J	F	M	A	M	J		
			1963												1964							

LEGEND:
TESTS
HDW. DEL.

1 PLANNED
2 CURRENT ESTIMATE
3 ACTUAL

DATE 22 JANUARY 1962

REVISED 30 AUGUST 1963 (Rev. K)

REVISED 27 SEPTEMBER 1963 (Rev. L)

REVISED 28 OCTOBER 1963 (Rev. M)

MCDONNELL

ST. LOUIS, MISSOURI

PAGE 4

REPORT

MODEL 133P

GEMINI TEST PLAN SCHEDULE

	Test Req. No. 52--	ACTIVITY	COMMENTS
1		RECOVERY SYSTEMS DEVELOPMENT & QUALIFICATION	
2		PARACHUTE - NORTHROP-VENTURA	
3		BOMB DROPS - DROGUE DEVELOPMENT	(4) DROPS TEST COMPLETED SEPT '62
4		BOMB DROPS - MAIN CHUTE & DROGUE CHUTE DEVELOPMENT	(16) DROPS-AT EL CENTRO
5		MAC DELIVERY - BOILERPLATE 5 & STATIC 7	B/P 5 DELIVERY AUG '62 ① STATIC 7
6		COMPLETE SYSTEM DROPS (BOILER-PLATE 5 & STATIC 7)	PARACHUTE DEVEL. & QUAL PROGRAM STOPPED PER NASA MSG GLV-9-257, CHUTE QUAL TEST WILL BE RESCHEDULED TO INCLUDE ADDITION OF 8.2' DIA DROGUE CHUTE
7		MAC DELIVERY - STATIC 4 TO TEST SITE	
8		SYSTEM QUALIFICATION - STATIC 4 DROP TESTS	
9		B/P 5 TO NAA PROGRAM	PER NASA MESSAGE GLV-9-248
10		NAA DROP TESTS (B/P 5)	AWAITING DELIVERY OF NAA FURNISHED HARDWARE
11			
12			
13			
14		PARAGLIDER DROGUE CHUTE - NORTHROP-VENTURA	
15		BOMB DROPS - MERCURY 6' CHUTE	(7) DROPS AT EL CENTRO
16			PROGRAM HELD IN ABEYANCE PER NASA MSG GLV 8-319
17			

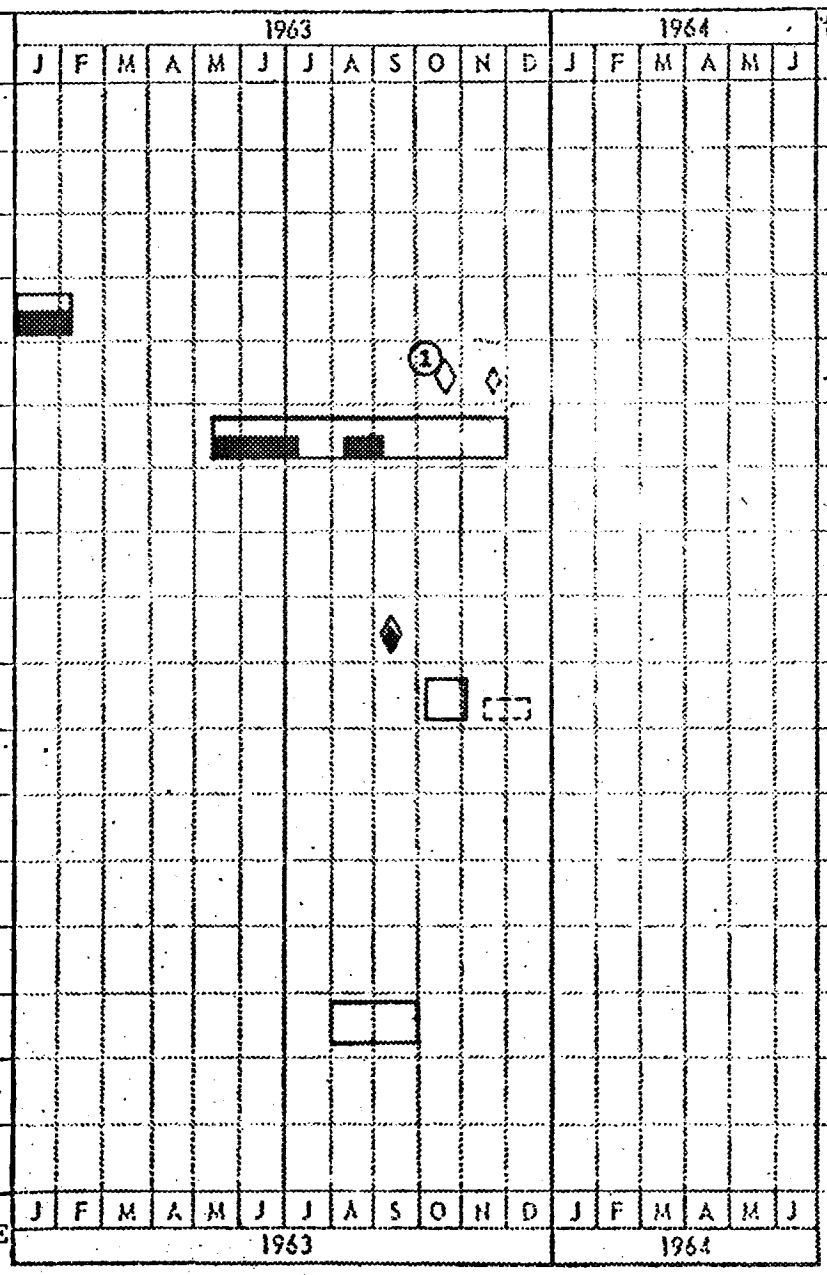

LEGEND:
TESTS
HDW. DEL.

① PLANNED
② CURRENT ESTIMATE
③ ACTUAL

DATE 22 JANUARY 1962 REVISED 28 OCT. '63 (Rev.M) MCDONNELL ST. LOUIS, MISSOURI

REVISED 22 JULY 1963 (Rev. J)

REVISED 30 AUGUST 1963 (Rev. K)

REVISED 27 SEPTEMBER 1963 (Rev. L)

REPORT

MODEL 133P

GEMINI TEST PLAN SCHEDULE

	Test Req. No. 52--	ACTIVITY	1963 J F M A M J J A S O N D	1964 J F M A M J	SLAC	COMMENTS
1		SKID LANDING GEAR				
2	42.02, .09 & .10	1/4 SCALE MODEL DROPS - GEAR DEVELOPMENT				
3	42.05	JIG DROPS - METERING TUBE EVALUATION - NOSE LANDING GEAR				
4	42.04	JIG DROPS - METERING TUBE EVALUATION - L/H MAIN LANDING GEAR			-3	
5	55.02	COMPONENT - ENVIRONMENTAL TEST - DAMPER			⚠	
6		DELIVERY & SET-UP OF LANDING SIMULATION APPARATUS - BY AMF			-3	SETUP COMPLETE
7		WEBER DELIVERY - BOILERPLATE 4 TO LAB			-8	
8	42.06	FUNCTIONAL & DROP TESTS - PROD. GEAR EVAL. - B/P 4			⚠	
9		MANUFACTURING DELIVERY - STATIC 2			-2	
10	52.18	DROP TESTS - LANDING GEAR CHECK-OUT - STATIC 2			-4	REF. PAGE 14, LINE 11, 1212 AMF TEST FIXTURE
11		MAC DELIVERY - STATIC 2 to NAA			-4	
12						
13		FLOTATION & EGRESS				
14	43.02 & .02.01	FLOTATION STABILITY, 1/4 SCALE MODEL				
15		FLOTATION EVALUATION, B/P 5, ST 7 CHUTE DROPS				PROGRAM STOPPED PER NASA MSG GLV-9-257
16		FLOTATION, CALM WATER, STATIC 5				
17		FLOTATION & EGRESS QUAL., STATIC 5			-5	TO BE CONDUCTED BY NASA

LEGEND:
TESTS
HDW. DEL.

① PLANNED
② CURRENT ESTIMATE
③ ACTUAL

NOTE: ⚠ LDG. GEAR TESTS HELD IN ABEYANCE DUE TO DE-EMPHASIS OF PARAGLIDER

DATE 22 JANUARY 1962
REVISED 30 AUGUST 1963 (Rev. K)
REVISED 27 SEPTEMBER 1963 (Rev. L)
REVISED 28 OCTOBER 1963 (Rev. M)

MCDONNELL
ST. LOUIS, MISSOURI

PAGE 6
REPORT
MODEL 133P

GEMINI TEST PLAN SCHEDULE

	Test Req. No. 52--	ACTIVITY	REQ.	COMMENTS
1		EJECTION SEAT DEVELOPMENT & QUALIFICATION		
2		SUSTAINER ROCKET TESTS, STATIC FIRING - AT RPI		
3		SUSTAINER ROCKET TESTS PLUME INVESTIBATION AT ALT.- AT AEDC		TESTS COMPLETED OCT '62
4	60.06.01	SLUMP TEST, DUMMY - AT ACEL		
5	60.06	SLUMP TEST, HUMAN - AT ACEL	-7	
6	60.09	SEAT MECHANISMS FUNCTIONAL TEST		
7	58.13	SEAT VIBRATION TEST		
8		SEAT-MAN SEPARATION TESTS - AT WEBER		
9		HORIZONTAL TRACK FIRING - AT RPI		
10		SOPE TESTS, SEAT DEVELOPMENT	-2	
11		MAC DELIVERY - BOILERPLATE 3 TO WEBER		JULY 1962
12	45.01	SLED TESTS, SEAT DEVELOPMENT (DRAG RUN TEST FIRST) B/P 3	-17	5 SLED RUNS; 1ST SLED RUN NOV '62. DELAY DUE TO EGRESS KIT REDESIGN
13		SEAT STATIC & ENVIRONMENTAL TESTS - AT WEBER	-17	
14		MAC DELIVERY - BOILERPLATE 3A TO WEBER	-18	REF: PAGE 7, LINE 9
15		SOPE TESTS, SEAT QUALIFICATION	-18	
16	58.06	SLED TESTS, SEAT QUALIFICATION	-15	5 SLED RUNS (INCL. 1 RUN FOR HATCH STRUCT. DYN.)
17				

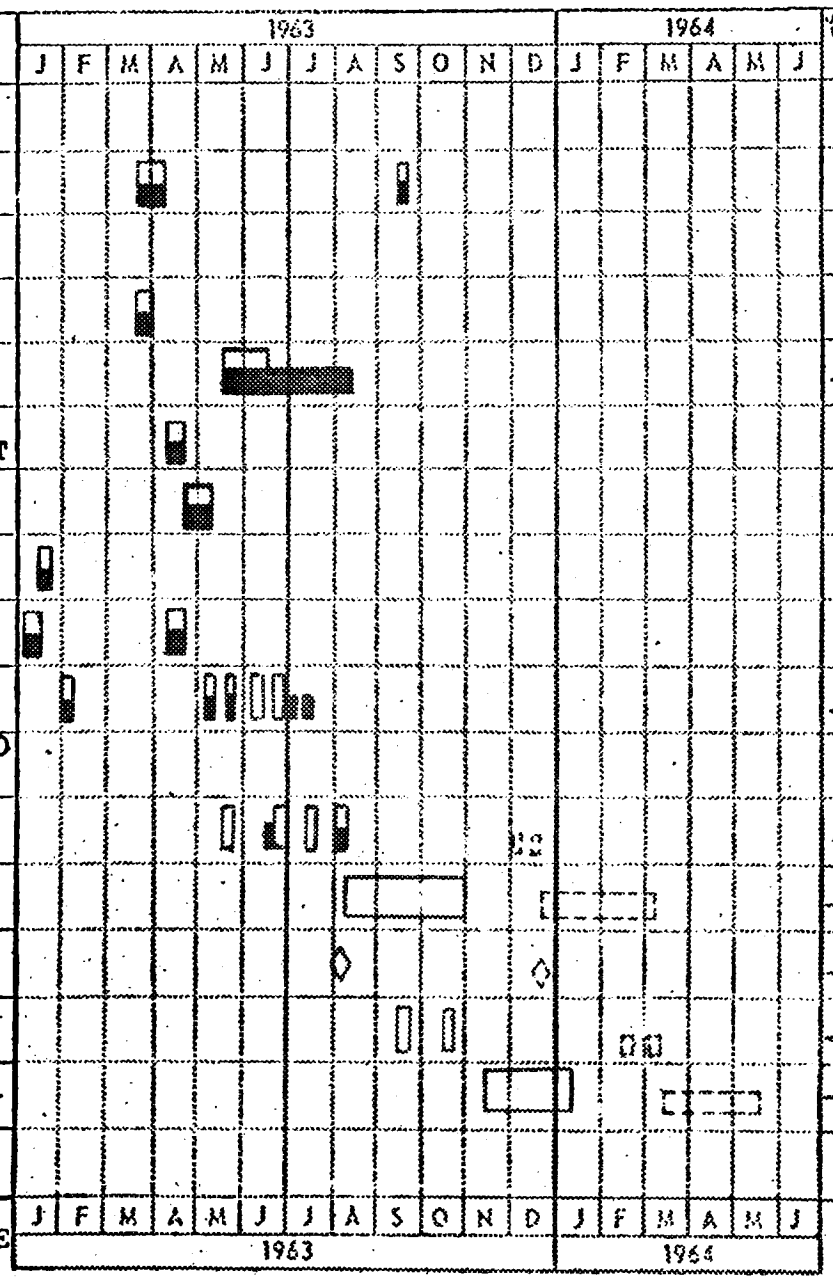

LEGEND:
TESTS
HDW. DEL.

1. PLANNED
2. CURRENT ESTIMATE
3. ACTUAL

DATE 22 JANUARY 1962

REVISED 28 OCTOBER 1963 (Rev. M)

REVISED

REVISED

MCDONNELL

ST. LOUIS, MISSOURI

PAGE 7

REPORT

MODEL 133P

GEMINI TEST PLAN SCHEDULE

	Test Req. No. 52--	ACTIVITY	SLACK	COMMENTS
1		HATCH DEVELOPMENT - QUALIFICATION TESTS		
2	51.01.01	MODEL TESTS - SEAL DEVELOPMENT		TESTS COMPLETED: JUNE 19
3	58.16	SPECIMEN HATCH - VIBRATION TEST	-28	HELD UP FOR REDESIGNED PARTS
4	45.02	SPECIMEN HATCH - LEAKAGE TESTS	-24	
5	45.02	SPECIMEN HATCH - FUNCTIONAL, STRUCTURAL & ULTIMATE PRESSURE	-24	
6	58.04 58.10	WINDOW VIBRATION & ACOUSTIC TESTS	-8	(1) ACOUSTIC AT MARTIN, DENVER
7	52.30	TEMPERATURE, SHOCK & PRESSURE - WINDOW STRUCTURE	-4	
8	45.01	HATCH PRESS. DISTRIBUTION AND AIRLOADS - B/P 3	-18	
9	45.04	B/P 3A HATCH ACTUATION - AT MAC (STL)	-19	
10		HEAT SHIELD DEVELOPMENT - QUALIFICATION		
11	51.03.05 & .03.06	ABLATION MATERIAL SELECTION - PLASMA JET		TESTS COMPLETED JUNE 1962
12	51.03.08 51.10	SPECIMEN TESTING OF SELECTED ABLATION MATERIAL		
13	51.03.01 & .03.02	ADHESIVE DEVELOPMENT		TESTS COMPLETED MARCH '62
14	51.05, 51.11	STRUCT. & THERMAL SHOCK - PROTO BACKUP STRUCTURE		TESTS COMPLETED JULY 1962
15		MFG. DELIVERY - PROTO HEAT SHIELD		
16	51.12 & .01, 51.18	STRENGTH, TEMPERATURE & ENVIRONMENT - PROTO SHIELD SPECIMENS		SPECIMEN FROM HEAT SHIELD LINE 17
17	52.32	LANDING IMPACT - WATER DROPS	-9	REF: PG 14, LINE 12

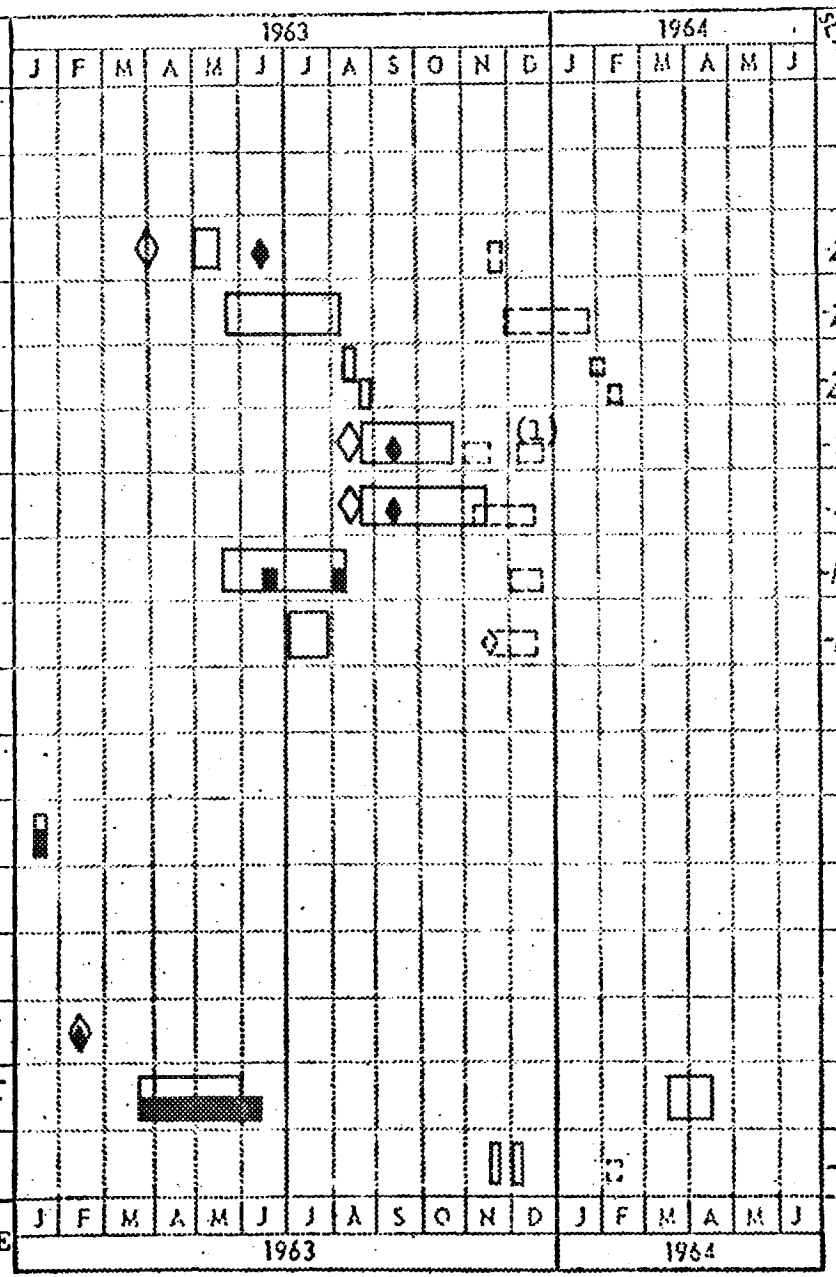

LEGEND:
TESTS
HDW. DEL.

① PLANNED
② CURRENT ESTIMATE
③ ACTUAL

DATE 22 JANUARY 1962

REVISED 30 AUGUST 1963 (Rev. K)

REVISED 27 SEPTEMBER 1963 (Rev. L)

REVISED 28 OCTOBER 1963 (Rev. M)

MCDONNELL

ST. LOUIS, MISSOURI

PAGE 8

REPORT

MODEL 133P

GEMINI TEST PLAN SCHEDULE

	Test Req. No. 52--	ACTIVITY	SLACK	COMMENTS
1		DOCKING SYSTEM DEVELOPMENT QUALIFICATION		
2		1/4 SCALE DESIGN CONCEPT MODEL DEVELOPMENT		COMPLETED JULY '62
3	52.16	DOCKING CONE IMPACT TEST		
4	44.05	1/4 SCALE DYNAMIC MODEL TESTS DOCKING DEVELOPMENT		
5	44.08	DAMPER ORIFICE DEVELOPMENT & ENVIRONMENTAL QUAL. TEST	22	
6		TRANSLATOR & DOCKING TRAINER DOCKING SIMULATOR TESTS	+4	① DEVELOPMENT TESTS ② DSN. EVALUATION TESTS
7		MFG. DELIVERY - TARGET DOCKING ADAPTERS (TDA)	-10	① TO IMSC ② TO MAC
8	44.07	FUNCTIONAL & LIFE TEST LATCHING, PULLUP, & RELEASE	-12	TDA ST 2; R&R ST 4
9	44.09	DYNAMIC SHOCK - FULL SCALE DOCKING	-18	TDA ST 2; R&R ST 4 RCS ST 3
10	44.06	DYNAMIC RESPONSE - STRUCTURE (DOCKED CONFIGURATION)	-2	TDA ST 2 & ST 4
11	52.27	ULT. STATIC TEST - GEMINI/AGENA MANEUVERING	-18	UTILIZES ST 3 R&R - RCS TDA 2 - EST. OCT. 1964
12		IMSC LAUNCH & ORBIT PHASE TESTS AGENA/GEMINI TDA	-2	
13	52.40	DEFLECTION TEST OF DOCKING CONE	-1	UTILIZES TDA #1
14				
15				
16				
17				

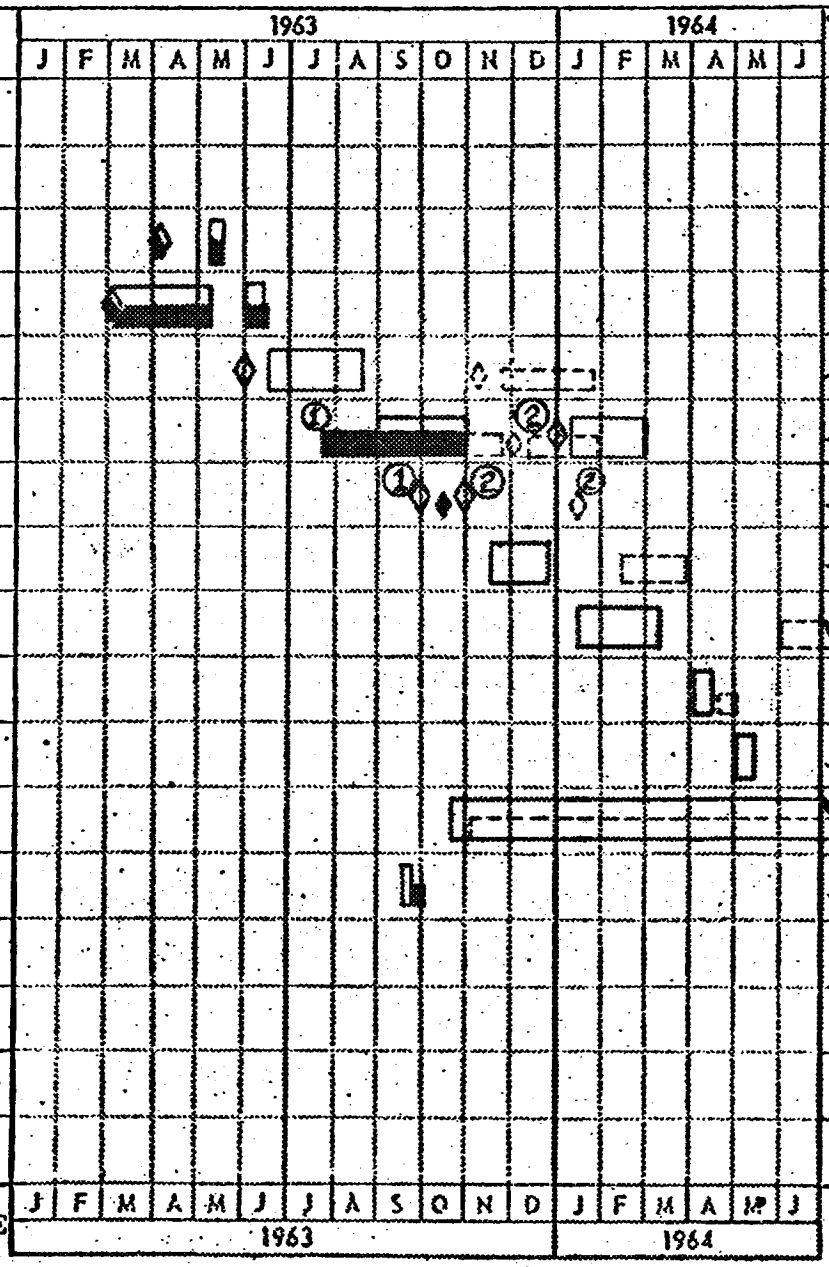

LEGEND:
TESTS
HDW. DEL.

① PLANNED
② CURRENT ESTIMATE
③ ACTUAL

DATE 22 JANUARY 1962
REVISED 30 AUGUST 1963 (Rev. K)
REVISED 27 SEPTEMBER 1963 (Rev. L)
REVISED 28 OCTOBER 1963 (Rev. M)

MCDONNELL
ST. LOUIS, MISSOURI

GEMINI TEST PLAN SCHEDULE

PAGE 9
REPORT
MODEL 133P

	Test Req. No. 52--	ACTIVITY	COMMENTS
1		PROPULSION SYSTEM:	
2	14.01	COMPATIBILITY TESTS PROPELLANT/MATERIAL	TESTING AS REQUIRED
3	70.01	RETRO ROCKET ABORT SEPARATION, FULL SCALE - AT AEDC	-1
4		B/P TEST ARTICLE DELIVERY TO - AEDC	
5	70.01.01	RETRO ROCKET ABORT SEPARATION - (SALVO) - POPGUN II	
6		RETRO ROCKET ABORT SEPARATION - (RIPPLE FIRE) - POPGUN III	TEST CANCELLED
7		RETRO ABORT ROCKET JET FLOW EFFECTS	WIND TUNNEL TEST - SEE PG 3, LINE 10
8			
9			
10			
11			
12		MATERIALS & PROCESSES DEVELOPMENT	
13	44.02, 60.02, 68.01 & .18	MATERIAL SELECTION	TESTING AS REQUIRED
14	11 & 14.01, 15.04, .06, .09	FABRICATION & ASSEMBLY PROCESSES	TESTING AS REQUIRED
15	17.01 & .03	MATERIAL THERMAL & ENVIR. CHARACTERISTICS	TESTING AS REQUIRED
16			
17			

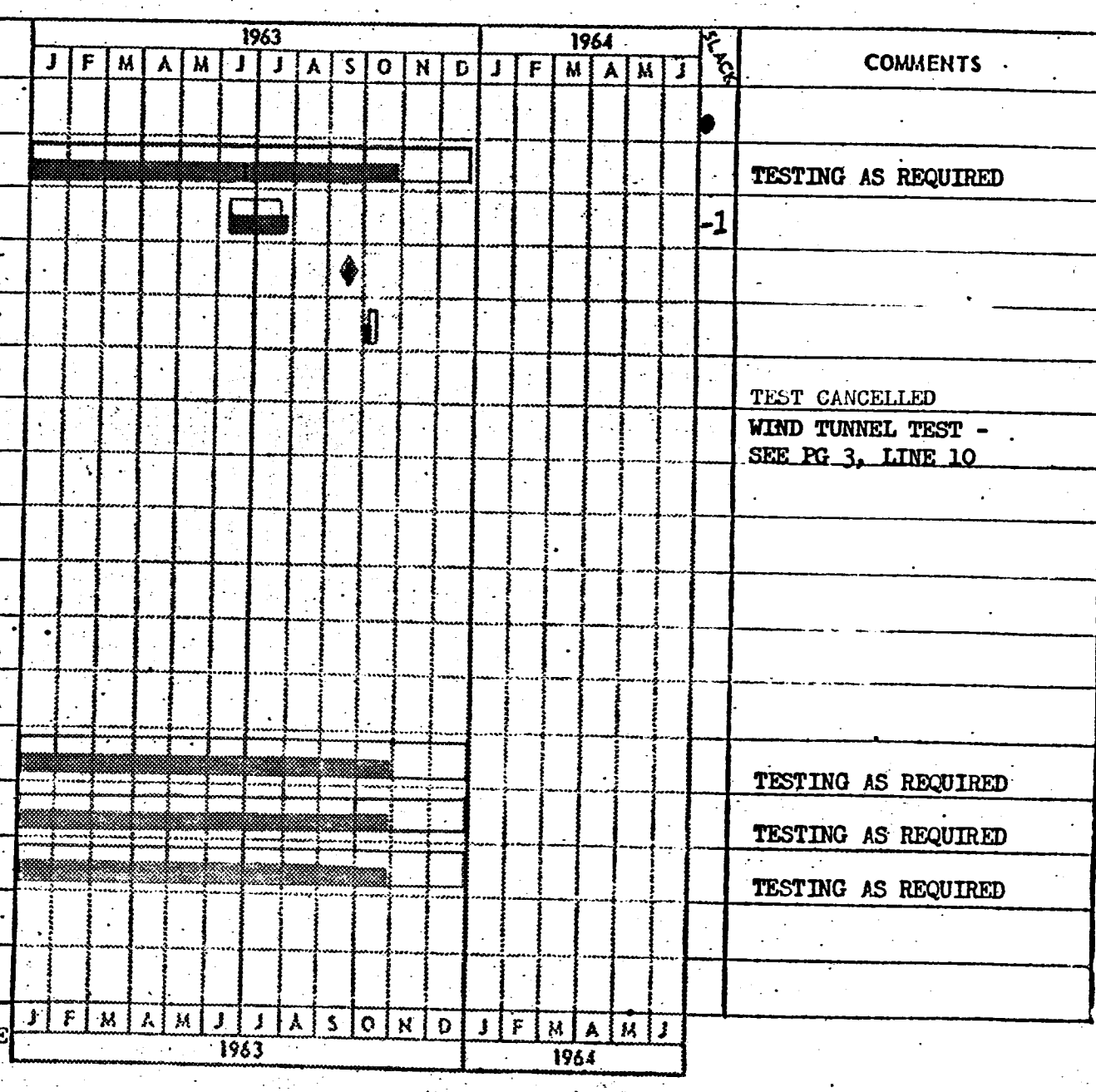

LEGEND:
TESTS
HDW. DEL.
① PLANNED
② CURRENT ESTIMATE
③ ACTUAL

DATE 22 JANUARY 1962

REVISED 30 AUGUST 1963 (Rev. K)

REVISED 27 SEPTEMBER 1963 (Rev. L)

REVISED 28 OCTOBER 1963 (Rev. M)

MCDONNELL

ST. LOUIS, MISSOURI

REPORT

MODEL 133P

GEMINI TEST PLAN SCHEDULE

	Test Req. No. 52--	ACTIVITY	STA.	COMMENTS
1		RELEASE MECHANISMS:		
2	69.01/01, .02,03&18	DEVELOPMENT TESTS, EXPLOSIVE SEPARATION CONFIGURATIONS	-4	TESTING AS REQUIRED
3	69.03 & .16	EVALUATION, FLSC BLAST EFFECTS (FULL SCALE)	-1	
4				
5		DEMONSTRATION TESTS - RELEASE MECHANISMS:		
6		STATIC ADAPTER, STATIC #3 & #4		① STATIC 3 ADAPTER ② STATIC 4 ADAPTER
7	69.12	BOOSTER/ADAPTER (FULL ADAPTER), 2 SEPARATION TESTS	-35	Z13 PYRO REDESIGNED FOR HIGHER TEMP. ENVIRO.
8	69.06FAB 69.12	BOOSTER/ADAPTER (PARTIAL SPECIMEN) STRUCT., 4 SEPAR. TESTS	-36	
9	69.12	ADAPTER/RETRO SECTION (FULL ADAPTER), 2 SEPAR. TESTS	-36	REF: PAGE 9, LINE 3.
10	69.06 FAB 69.12	ADAPTER/RETRO SECTION (PARTIAL SPEC.) STRUCT., 4 SEPAR. TESTS	-36	Z69 PYROS REDESIGNED FOR HIGHER TEMP. ENVIRO.
11	69.10	REENTRY SECTION/RETRO SECTION, 6 SEPARATION TESTS	-31	TEST HELD UP FOR PYRO DELIVERY
12	45.04	HATCH ACTUATOR (HATCH STRUCTURAL DYNAMICS), 2 SEPAR. TEST	-17	REF: PAGE 7, LINE 9
13		HATCH ACTUATOR (SEAT QUAL. PROGRAM), 14 SEPAR. TESTS	-17	REF: PAGE 6, LINE 15 & 16
14	69.13	MAIN LANDING GEAR DOOR - SPECIMEN SIEL (4 SEPARATIONS)		
15		MAIN LANDING GEAR DOOR - STATIC 3 (2 SEPARATIONS)	△1	FOLLOWS TEST PAGE 13, LINE 11.
16	69.20	MAIN LDG GEAR DOOR & GEAR EXTEN. (UNDERWATER) STA #4	△1	1 SEPARATION TEST (SCHEDULE LATER)
17				

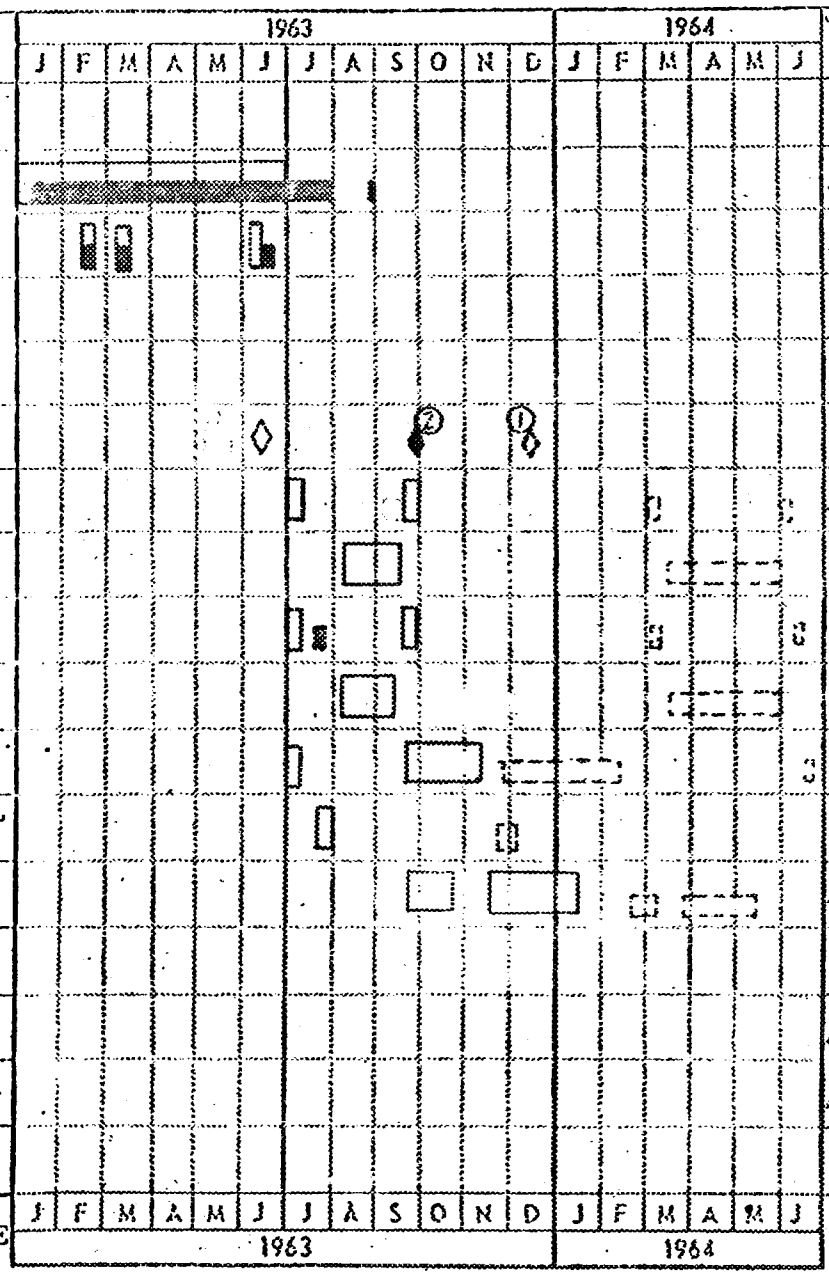

LEGEND: TESTS ① ② ③ ① PLANNED ② CURRENT ESTIMATE ③ ACTUAL

HDW. DEL. ① ② ③

NOTE: △1 PARAGLIDER TESTS HELD IN ABEYANCE

DATE 22 JANUARY 1962

REVISED 30 AUGUST 1963 (Rev. K)

REVISED 27 SEPTEMBER 1963 (Rev. L)

REVISED 28 OCTOBER 1963 (Rev. M)

MCDONNELL

ST. LOUIS, MISSOURI

PAGE 11

REPORT

MODEL 133P

GEMINI TEST PLAN SCHEDULE

	Test Req. No. 52--	ACTIVITY	COMMENTS
1		DEMONSTRATION TESTS - RELEASE MECHANISMS (CONT.):	
2	69.13	AFT RECOVERY HOIST LOOP DOOR (6 SEPARATIONS) PARACHUTE CONFIG.	STATIC 4
3	69.13	HORIZON SCANNER FAIRING (6 SEPARATIONS)	AT CONVENIENT TIME DURING STATIC 3 STRUCT. TEST PROG.
4	69.13	HORIZON SCANNER RELEASE SYSTEM (6 SEPARATIONS)	AT CONVENIENT TIME DURING STATIC 3 STRUCT. TEST PROG.
5	69.13	MAIN LANDING GEAR ACTUATOR - STATIC 2 & 3 & SPECIMENS (6 SEPARS.)	① SPECIMEN OF PG 10, LINE 14 ③ STATIC 3; ② STATIC 2
6	69.11	R&R SECTION & RCS (PYROTECHNICS)	
7	69.11	RADAR COVER RELEASE	
8	69.11	R & R MODULE RELEASE (PARA-GLIDER DEPLOY)	
9	52.07	DROGUE CHUTE MORTAR	WAITING DROGUE REDESIGN
10	69.11	NOSE LANDING GEAR DEPLOY	
11	69.11	EMERGENCY DOCKING RELEASE	SCHEDULE LATER
12	69.11	DOCKING INDEXING BAR	SCHEDULE LATER
13			
14			
15			
16			
17			

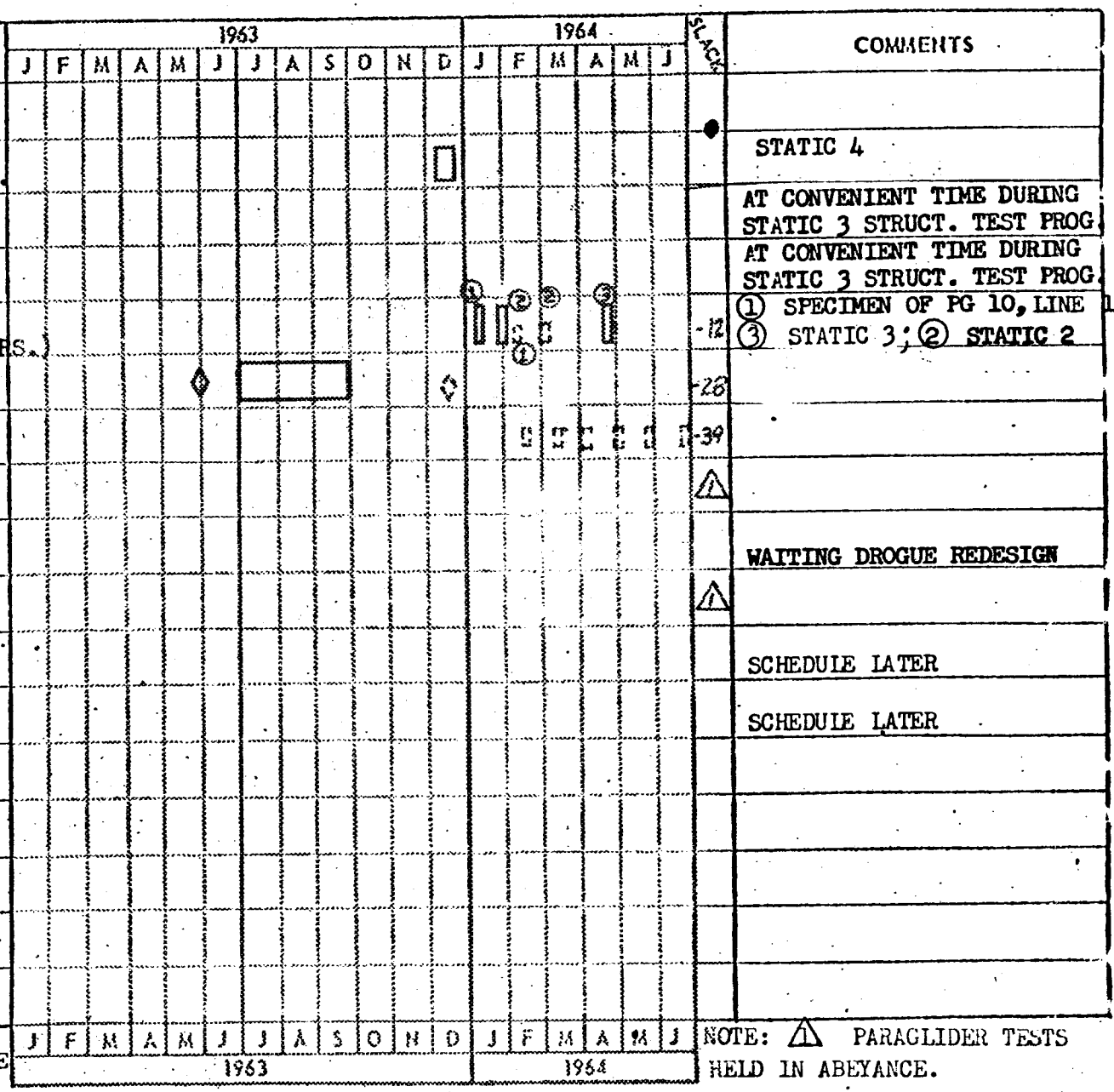

LEGEND: TESTS ① ② ③ ① PLANNED ② CURRENT ESTIMATE ③ ACTUAL

HDW. DEL. ① ② ③

NOTE: ⚠ PARAGLIDER TESTS HELD IN ABEYANCE.

DATE 22 JANUARY 1962 REVISED 28 OCT '63 (Rev. M) MCDONNELL

REVISED 22 JULY 1963 (Rev. J) ST. LOUIS, MISSOURI

REVISED 30 AUGUST 1963 (Rev. K)

REVISED 27 SEPTEMBER 1963 (Rev. L)

REPORT

MODEL 133P

GEMINI TEST PLAN SCHEDULE

	Test Req. No. 52--	ACTIVITY	SLACK	COMMENTS
1		STRUCTURAL TEST PROGRAM		
2		R & R - RCS SECTION (STRUCTURE TEST UNITS)		
3	52.20	PARACHUTE SUPPORT FITTINGS (2 FORWARD POINTS ONLY)		
4	52.11	RADAR SUPPORT STRUCTURE		
5	52.22	HOISTING PROVISIONS	-5	
6	52.12	NOSE LAUNCH FAIRING	-6	
7	52.10	REENTRY HEATING DROGUE CHUTE SUPPORT STRUCTURE	-26	CONTINGENT ON DROGUE REDSN & BERYLIUM SHINGLES
8	52.29	PARAGLIDER SUPPORT STRUCTURE - NOSE GEAR INTERFACE	⚠	STATIC #3 RCS SECTION.
9				
10				
11		MISCELLANEOUS STRUCTURAL TESTS:		
12		SPECIMEN HATCH		
13	52.29	PARAGLIDER AFT PITCH FITTING	⚠	
14	52.42 55.06	UMBILICAL DISCONNECT, ELECTRICAL & GROUND COOLING (ADAPT)		ST 4 ADAPTER
15		BOILERPLATES:		
16		HORIZON SCANNER FAIRING (B/P 3).	-24	REF: PAGE 6, LINE 12
17	52.29	PARAGLIDER ROLL FITTING	⚠	

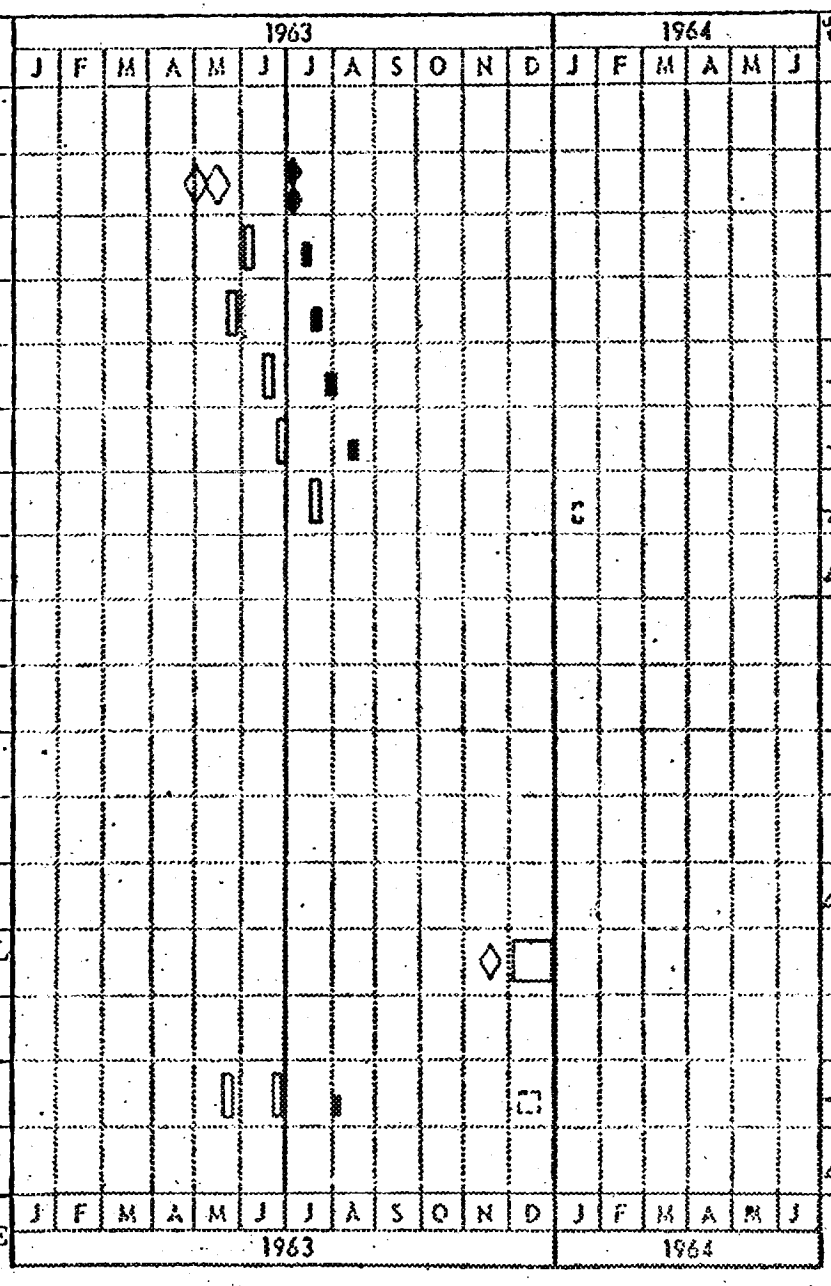

LEGEND: TESTS ① ② ③ ① PLANNED ② CURRENT ESTIMATE ③ ACTUAL

HDW. DEL. ◊ ①

NOTE: 1 PARAGLIDER TESTS HELD IN ABEYANCE

DATE 22 JANUARY 1962

REVISED 30 AUGUST 1963 (Rev. K)

REVISED 27 SEPTEMBER 1963 (Rev. L)

REVISED 28 OCTOBER 1963 (Rev. M)

MCDONNELL

ST. LOUIS, MISSOURI

GEMINI TEST PLAN SCHEDULE

REPORT

MODEL 133P

	Test Req. No. 52..	ACTIVITY	SLACK	COMMENTS
1		STRUCTURAL TEST PROGRAM		
2		STATIC ARTICLE NO. 3 (REENTRY SECT. PARACH.CONF.-LANDING GEAR)		
3	52.03	SPACECRAFT LANDING CONDITION		3 TEST CONDITIONS
4	52.20	PARACHUTE SUPPORT FITTING (AFT POINT)		
5		INSTRUMENTATION FOR TEST		
6		INSTALL SHINGLES	-4	
7	52.06	SPACECRAFT LAUNCH CONDITIONS	-7	USE MARTIN #2 ADAPTER
8	52.19.02	HEAT SHIELD BACKUP	-7	
9	52.14	CHUTE DEPLOY, HOT	-8	
10	52.19.01	SPACECRAFT REENTRY CONDITIONS	-8	
11	52.36	SPACECRAFT ABORT CONDITIONS	-13	USES MARTIN #2 ADAPTER
12				
13		STATIC "3" ADAPTER		
14	52.34 52.34.01	EQUIPMENT MOUNTS		
15	52.35	ADAPTER HOT LAUNCH	-9	
16	52.08,39 & 39.01	RETRO STRUCTURES	+5	
17				

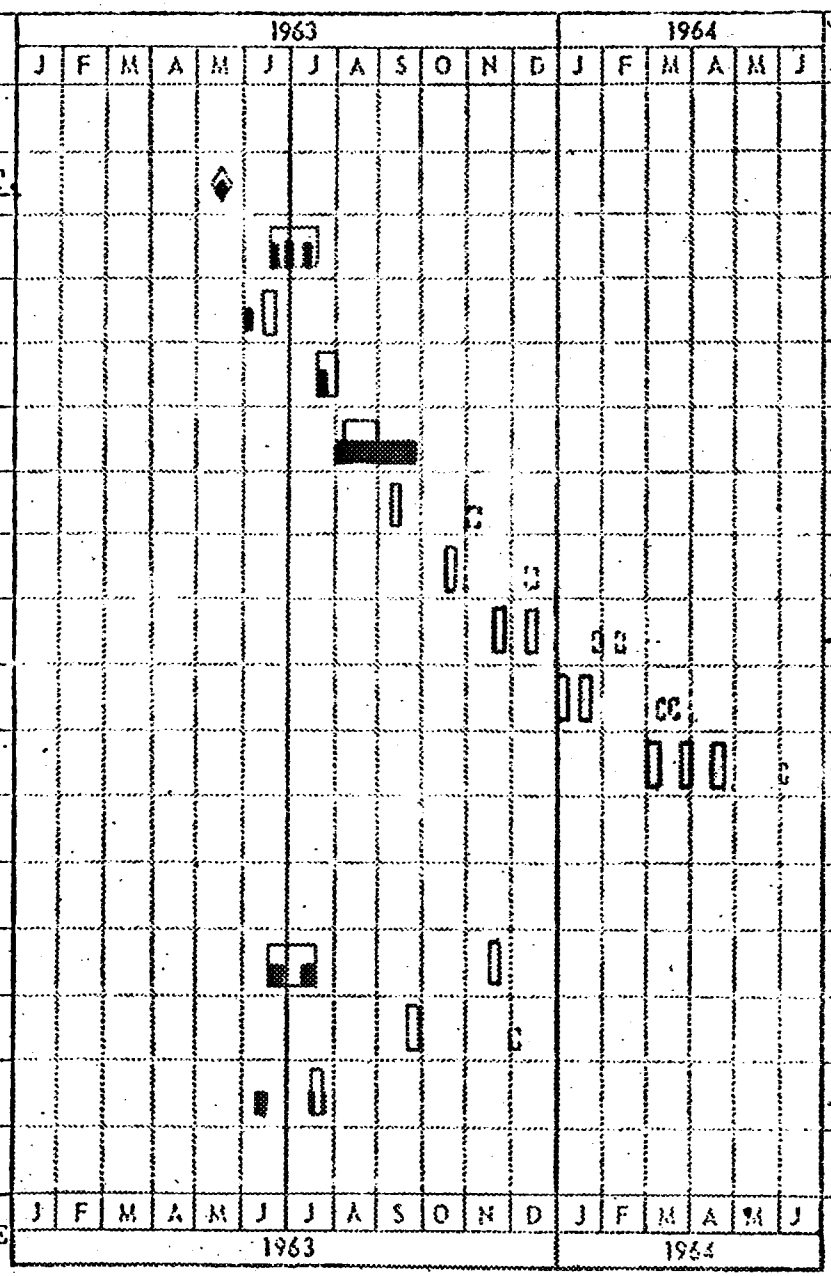

LEGEND:
TESTS
HDW. DEL.

① PLANNED
② CURRENT ESTIMATE
③ ACTUAL

DATE 22 JANUARY 1962
REVISED 30 AUGUST 1963 (Rev. K)
REVISED 27 SEPTEMBER 1963 (Rev. L)
REVISED 28 OCTOBER 1963 (Rev. M)

MCDONNELL
ST. LOUIS, MISSOURI

GEMINI TEST PLAN SCHEDULE

PAGE 14
REPORT
MODEL 133P

	Test Req. No. 52--	ACTIVITY	SLACK	COMMENTS
1		STRUCTURAL TEST PROGRAM:		
2		STATIC #4		
3	52.21	SEAT BACKUP		
4		PREPARATION FOR DYNAMIC RESPONSE	-3	
5	58.03	DYNAMIC RESPONSE TESTS (ABORT, REENTRY, LAUNCH)	-4	USE MARTIN #2 ADAPTER 3 TEST CONDITIONS
6		LIGHT HATCHES - INSTALL & RIG	-9	
7	52.24	PRESSURIZATION - CYCLING & ULTIMATE	-9	2 TEST CONDITIONS
8	52.33	HATCH BACKUP	-11	3 TEST CONDITIONS
9	52.26	AFT HOIST LOOP & SUPPORT (PARACHUTE CONFIG.)	-8	THIS TEST PREVIOUSLY PLANNED FOR SPECIMEN HATCH
10	52.21	SEAT BACKUP (RETEST)	-10	RETEST FROM LINE 3 ABOVE
11	52.23	LANDING IMPACT - PARAGLIDER	⚠	
12	52.32	LANDING IMPACT - PARACHUTE	-9	2 TEST CONDITIONS
13		MODIFICATION & SHIP TO N/V		SCHEDULE DEPENDING ON PARACHUTE CONFIG. REF: PAGE 4, LINE 7.
14				
15				
16				
17				

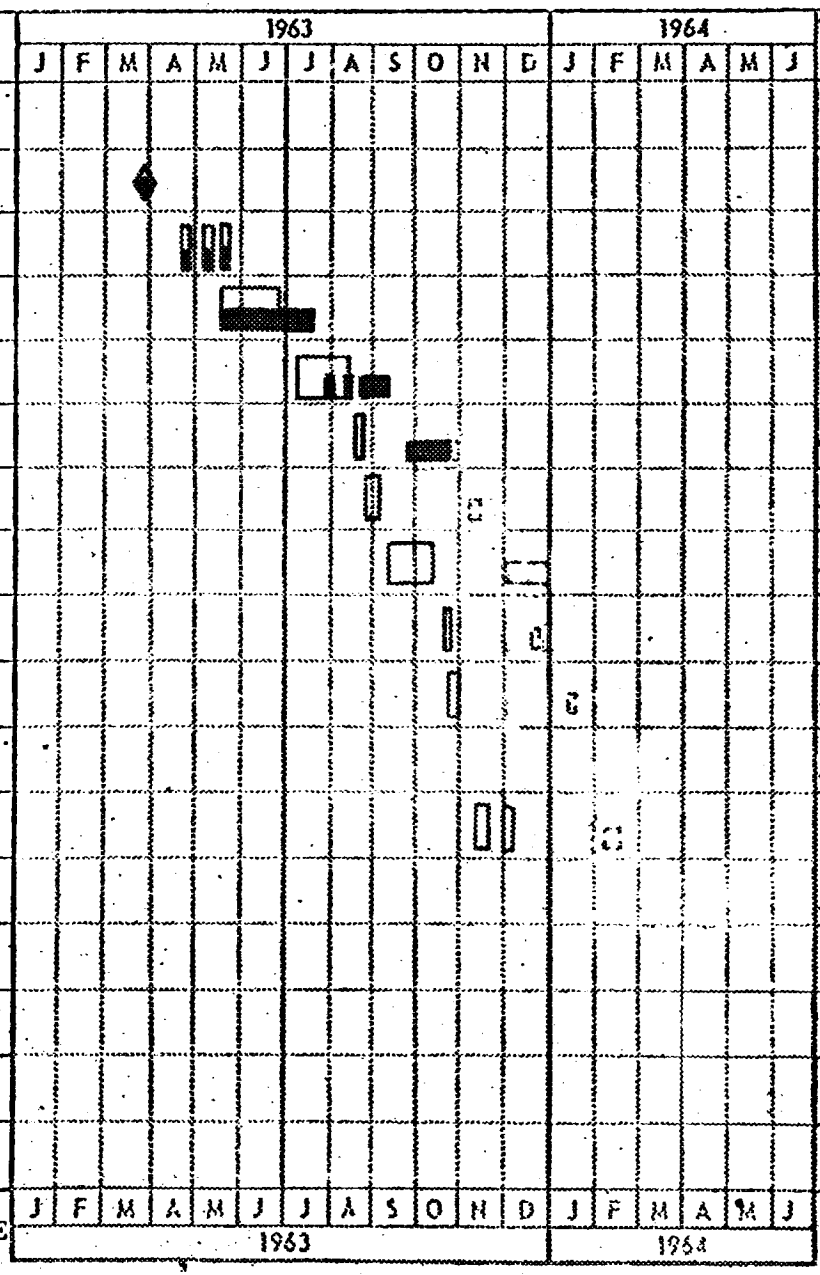

LEGEND:
TESTS
HDW. DEL.
① PLANNED
② CURRENT ESTIMATE
③ ACTUAL

NOTE: ⚠ PARAGLIDER TESTS HELD IN ABEYANCE

DATE 22 JANUARY 1962
REVISED 30 AUGUST 1963 (Rev. K)
REVISED 27 SEPTEMBER 1963 (Rev. L)
REVISED 28 OCTOBER 1963 (Rev. M)

MCDONNELL
ST. LOUIS, MISSOURI

GEMINI TEST PLAN SCHEDULE

REPORT
MODEL 133P

	Test Req. No. 52--	ACTIVITY	COMMENTS
1		DATA ACQUISITION SYSTEM:	
2		SIGNAL COND. VIBRATION TEST	TEST COMPLETED AUG '62
3		SIGNAL COND. DESIGN VERIFICATION	
4	64.08	SIGNAL COND. QUAL. TEST	-½
5	64.09	SIGNAL COND. ASSURANCE TEST	-16
6		COMPLETE INSTR. MOCKUP (CIMU)	
7	64.03	SIGNAL COND. HEAT TRANSFER	
8	64.03	PCM BREADBOARD AVAIL.	
9	64.05	TEST BENCH COMPATIBILITY	
10	64.03	PCM EVALUATION	
11	64.03	SIGNAL COND./PCM COMPATIBILITY	
12	64.03	EFFECT OF POWER BUSS VARIATION	
13	64.11 & 11.01	VOLT CONT. OSCILLATOR DEV. TEST	
14	58.14 58.15	SEAT PALLET S/C 1 & 2 - DYN RESPONSE	TEST RESCHEDULED BY S/C 2 CREWMAN SIMULATOR REDESIGN
15			
16			
17			

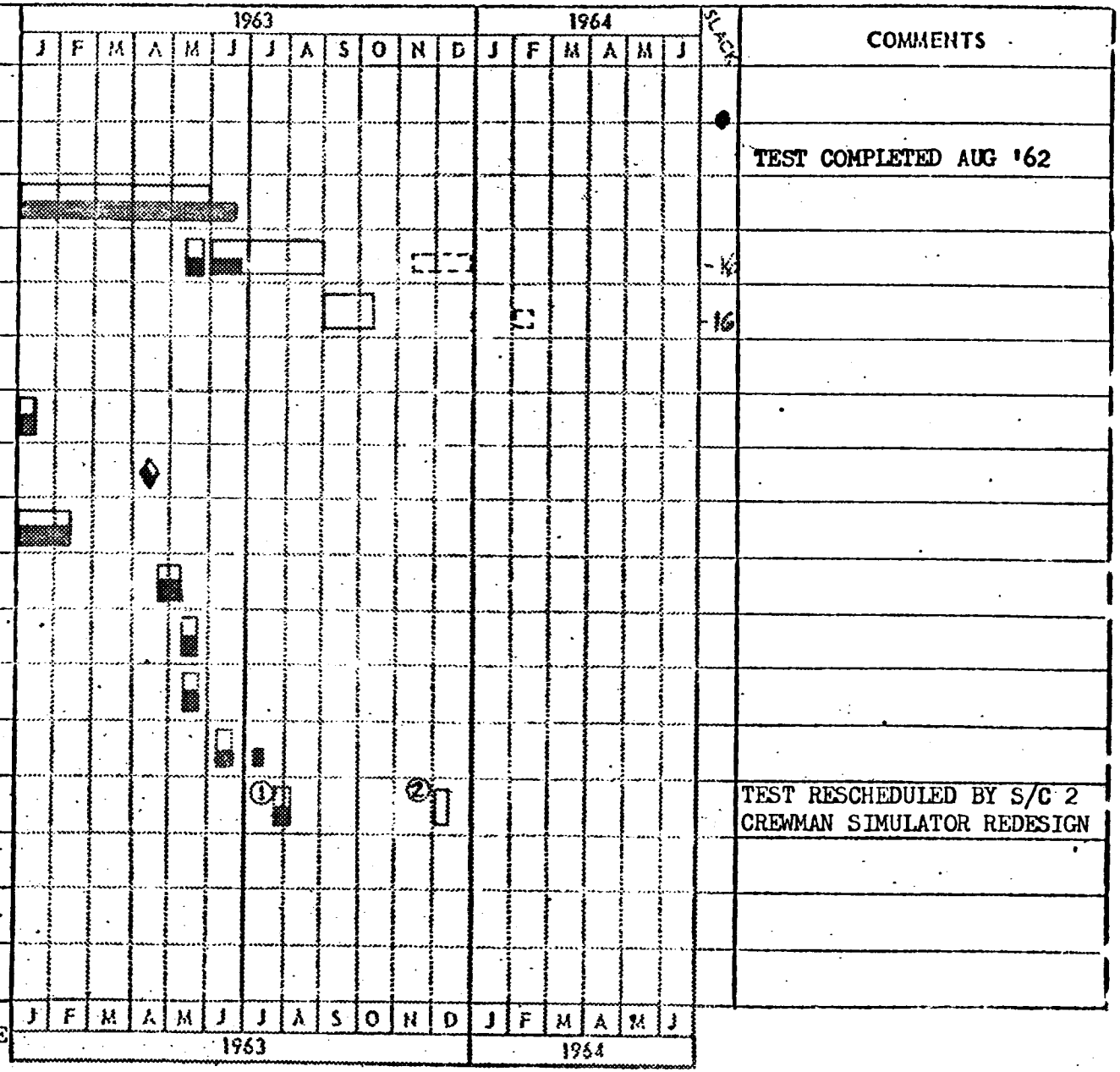

LEGEND:
TESTS
HDW. DEL.
① PLANNED
② CURRENT ESTIMATE
③ ACTUAL

DATE 22 JANUARY 1962
REVISED 30 AUGUST 1963 (Rev. K)
REVISED 27 SEPTEMBER 1963 (Rev. L)
REVISED 28 OCTOBER 1963 (Rev. M)

MCDONNELL
ST. LOUIS, MISSOURI

PAGE 16
REPORT
MODEL 133P

GEMINI TEST PLAN SCHEDULE

	Test Req. No. 52--	ACTIVITY	1963 J	F	M	A	M	J	J	A	S	O	N	D	1964 J	F	M	A	M	J	PLACE	COMMENTS
1		ELECTRONIC SYSTEMS TEST UNIT (ESTU)																				
2		INDIVIDUAL ENGINEERING PROTOTYPE SYSTEMS TESTS																				
3	63.01	C-BAND RADAR BEACON																				TEST COMPLETED SEPT '62 REF: PAGE 18, LINE 7
4	63.01	S-BAND RADAR BEACON																				TEST COMPLETED SEPT '62
5	62.06	HORIZON SENSOR																				TEST COMPLETED OCT '62
6	62.03	ATTITUDE CONTROL & MANEUVERING ELECTRONICS																				TEST COMPLETED OCT '62
7		ATTITUDE DISPLAY GROUP																				TEST COMPLETED OCT '62
8	63.05	UHF-HF COMMUNICATIONS																				TEST COMPLETED OCT '62
9		TIME REFERENCE SYSTEM																				TEST COMPLETED NOV '62
10	63.06	DIGITAL COMMAND SYSTEM																				TEST COMPLETED NOV '62
11	62.04	RENDEZVOUS RADAR																				
12	62.02	INERTIAL GUIDANCE SYSTEM																				
13		MFG. DELIVERY - ESTU STRUCTURE																				DELIVERED NOV '62
14																						
15																						
16																						
17																						
			J	F	M	A	M	J	J	A	S	O	N	D	J	F	M	A	M	J		
			1963												1964							

LEGEND:
TESTS
HDW. DEL.
① PLANNED
② CURRENT ESTIMATE
③ ACTUAL

DATE 22 JANUARY 1962

REVISED 30 AUGUST 1963 (Rev. K)

REVISED 27 SEPTEMBER 1963 (Rev. L)

REVISED 28 OCTOBER 1963 (Rev. M)

MCDONNELL

ST. LOUIS, MISSOURI

GEMINI TEST PLAN SCHEDULE

REPORT

MODEL 133P

	Test Req. No. 52--	ACTIVITY	1963 J F M A M J J A S O N D	1964 J F M A M J	SLACK	COMMENTS
1		ELECTRONIC SYSTEMS TEST UNIT (ESTU)				
2	63.03	ESTU INTEGRATION PROGRAM:				
3		ATT. CONT. ELECT./PWR. IN V./ORBIT ATT. & MANEUVER ELECT. (OAME)				TEST COMPLETED NOV '62
4		HORIZON SENSOR (HS)/ATT. CONT. & MANUV. ELECT. (ACME)				TEST COMPLETED NOV '62
5		ACME RATE GYRO/ATT. DISPLAY GRP. (ADG)				TEST COMPLETED DEC '62
6		HS/ INERTIA MEASURING UNIT (IMU)/ ACME/ADG				
7		AUDIO INTERFACE (HF, UHF & VOICE CONTROL CENTER)				
8		DIGITAL COMMAND SYS. (DCS)/TIME REF. SYS. (TRS)				
9		COMMUNICATION INTERFACE (C & S BAND, ACQ. AID,DCS,RESCUE BEACON)				
10		RADAR/ACME/ADG/HS				
11		RADAR/IMU/ACME/ADG/HS			-5	
12		G & C SYSTEM COMPATIBILITY CHECK			-4	
13	64.05	ESTU/CIMU INTEGRATION				
14		CIMU COMPONENTS INSTALLED IN ESTU				
15		INSTRUMENTATION COMPATIBILITY				
16		MISSION SIMULATION			-2	
17						

LEGEND:
TESTS
HDW. DEL.

① PLANNED
② CURRENT ESTIMATE
③ ACTUAL

DATE 22 JANUARY 1962

REVISED 30 AUGUST 1963 (Rev. K)

REVISED 27 SEPTEMBER 1963 (Rev. L)

REVISED 28 OCTOBER 1963 (Rev. M)

MCDONNELL

ST. LOUIS, MISSOURI

REPORT

MODEL 133P

GEMINI TEST PLAN SCHEDULE

	Test Req. No. 52--	ACTIVITY	SLACK	COMMENTS
1		ANTENNA SYSTEMS:		
2		UHF NOSE STUB, DESCENT & RECOVERY ANTENNAS		
3	063.02.01	RADIATION PATTERNS		TEST COMPLETED SEPT '62
4	063.02.01	IMPEDANCE MATCHING	-12	
5	052-063.19	QUALIFICATION TESTS	-30	
6		C BAND ANTENNAS (RADCOM - EMERTRON)		
7		VENDOR DEVELOPMENT		
8		ENGR. PROTOTYPE EVALUATION		
9		QUALIFICATION TESTS		
10		HF WHIP ANTENNA (DE HAVILLAND A/C)		
11		VENDOR DEVELOPMENT (MECHANICAL)		
12		ENGR. EVALUATION & IMPEDANCE MATCHING		TEST COMPLETED NOV '62
13		QUALIFICATION TESTS	-27	
14		UHF ADAPTER ANTENNAS (DE HAVILLAND A/C)		
15		VENDOR DEVELOPMENT (MECHANICAL)		
16		ENGR. EVALUATION & IMPEDANCE MATCHING		TEST COMPLETED DEC '62
17		QUALIFICATION TESTS	-15	

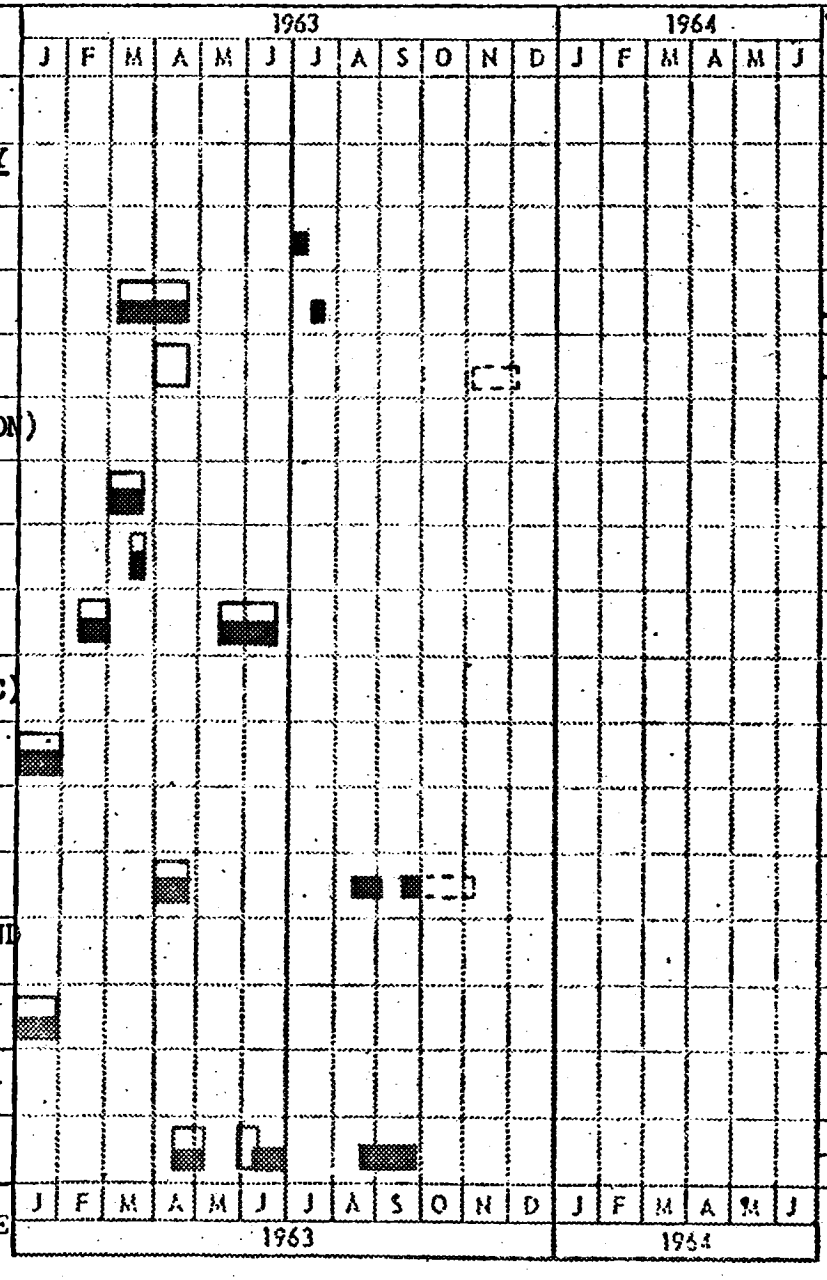

LEGEND:
TESTS
HDW. DEL.

① PLANNED
② CURRENT ESTIMATE
③ ACTUAL

DATE 22 JANUARY 1962

REVISED 30 AUGUST 1963 (Rev. K)

REVISED 27 SEPTEMBER 1963 (Rev. L)

REVISED 28 OCTOBER 1963 (Rev. M)

MCDONNELL

ST. LOUIS, MISSOURI

GEMINI TEST PLAN SCHEDULE

REPORT

MODEL 133P

	Test Req. No. 52--	ACTIVITY	1963 J	F	M	A	M	J	J	A	S	O	N	D	1964 J	F	M	A	M	J	SLACK	COMMENTS
1		ANTENNA SYSTEMS																				
2		C & S BAND SLOT ANTENNAS (ADAPTER) (RANTEC CORP.)																				
3		VENDOR DEVELOPMENT																				
4		ENGR. PROTOTYPE EVALUATION																				
5		QUALIFICATION TESTS																				
6		UHF MULTIPLEXERS (RANTEC CORP.)																				
7		VENDOR DEVELOPMENT																				
8		ENGR. EVALUATION																				
9		QUALIFICATION TESTS																				
10		COAXIAL SWITCHES																				
11		VENDOR DEVELOPMENT																				
12		ENGR. EVALUATION																				
13		QUALIFICATION TESTS																				
14																						
15																						
16																						
17																						
			J	F	M	A	M	J	J	A	S	O	N	D	J	F	M	A	M	J		
			1963												1964							

LEGEND:
TESTS
HDW. DEL.

① PLANNED
② CURRENT ESTIMATE
③ ACTUAL

DATE 22 JANUARY 1962

REVISED 30 AUGUST 1963 (Rev. K)

REVISED 27 SEPTEMBER 1963 (Rev. L)

REVISED 28 OCTOBER 1963 (Rev. M)

McDONNELL

ST. LOUIS, MISSOURI

GEMINI TEST PLAN SCHEDULE

REPORT

MODEL 133P

	Test Req. No. 52--	ACTIVITY	SLACK	COMMENTS
1	66.02	ELECTRICAL POWER SYSTEM COMPATIBILITY TESTING:		
2		FUEL CELL SECTION - ACCEPTANCE, CHECKOUT & FAMILIARIZATION	-19	UNITS 3A, 5 & 5A UNSATISFACTORY, RETURNED TO VENDOR
3		FUEL CELL SECTION - BENCH TEST (GASEOUS)	-28	
4		RSS REGULATORS - ACCEPTANCE, CHECKOUT & FAMIL. (GASEOUS)	-13	
5		COOLANT BENCH CHECKOUT, TEST SET-UP & INSTRUMENTATION		
6		RSS REGULATORS & FUEL CELL SECTION - SYSTEM TEST (GASEOUS)	-28	
7		ELECTRICAL POWER DISTRIBUTION SYS. FUNCTIONAL TESTS	-14	
8		ELECT. PWR. DIST. SYS., FUEL CELL SECTION & RSS REG. TEST (GASEOUS)	-27	
9		RSS SYSTEM CHECKOUT & BENCH TESTS	-20	
10		RSS SYSTEM & REMOTE CONTROL CHECKOUT & INSTRUMENTATION (CRYOGENIC)	-20	
11		FUEL CELL SECTIONS, RSS & ELECT. PWR. DIST. SYS. COMPAT. (CRYOGENIC)	-24	
12		ELECT. PWR. SYSTEM - FUNCTIONAL TESTS, ALT. & TEMP. (CRYOGENIC)	-24	
13		ELECT. PWR. SYSTEM - FUNCTIONAL TESTS, VIBRATION (CRYOGENIC)	-24	
14				
15				
16		PRODUCTION SPACECRAFT SYSTEMS TESTS		
17				

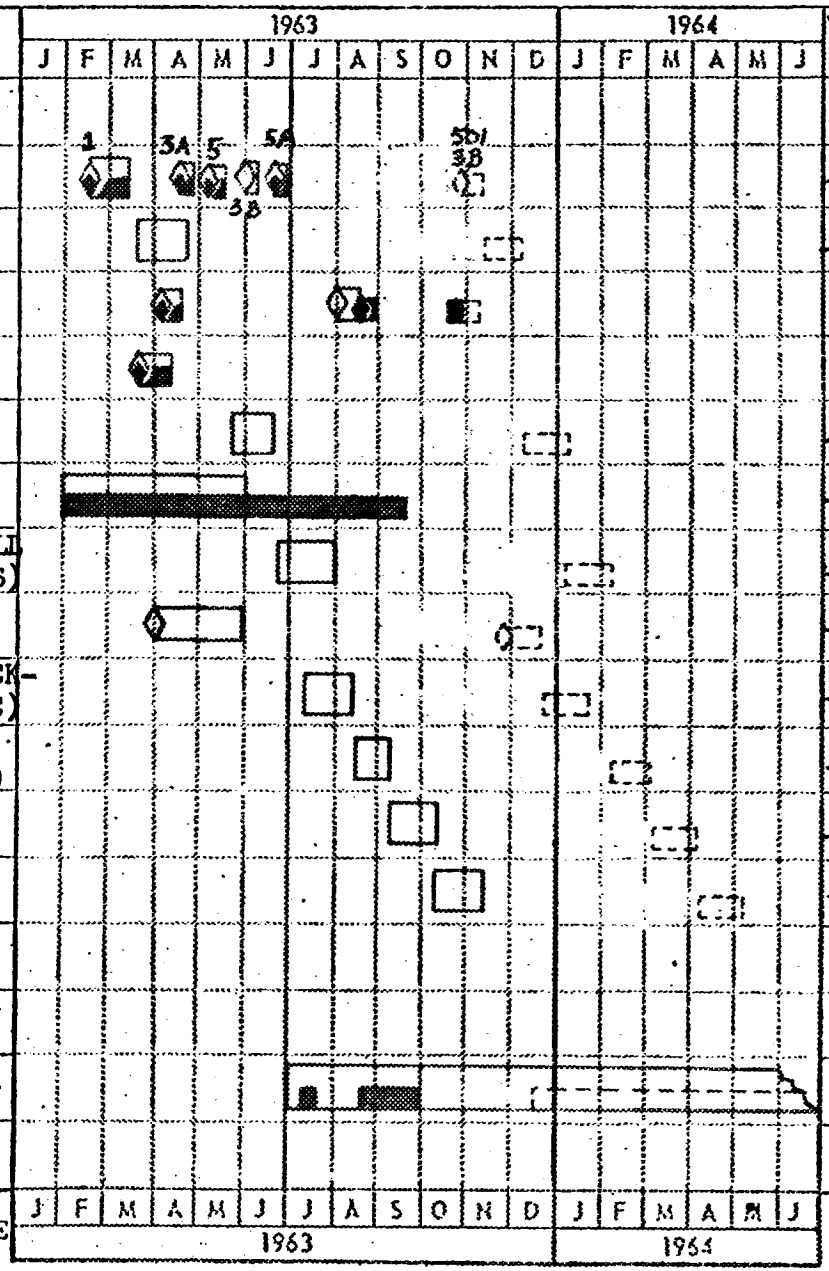

LEGEND:
TESTS
HDW. DEL.

① PLANNED
② CURRENT ESTIMATE
③ ACTUAL

DATE 22 JANUARY 1962

REVISED 30 AUGUST 1963 (Rev. K)

REVISED 27 SEPTEMBER 1963 (Rev. L)

REVISED 28 OCTOBER 1963 (Rev. M)

MCDONNELL

ST. LOUIS, MISSOURI

GEMINI TEST PLAN SCHEDULE

REPORT

MODEL 133P

	Test Req. No. 52--	ACTIVITY	SLACK	COMMENTS
1		ENVIRONMENTAL CONTROL:		
2		EQUIPMENT COOLING:		
3	68.02.01& .04,68.05	ALTITUDE TESTS - COLD PLATE DEVELOPMENT		TEST COMPLETED NOV '62
4	68.01.02	MODEL TESTS - RADIATOR HEAT & PRESSURE		TEST COMPLETED NOV '62
5	68.06	ALTITUDE . & TEMP ENVIR.- RADIATOR (THERMAL BALANCE)	-9	
6		BOILERPLATE NO. 2		
7		MFG. DELIVERY - BOILERPLATE NO.2 TO LAB		
8		ECS SYSTEM DELIVERY & ASSY.	-28	① CABIN & SUIT CIRCUIT ② COMPLETE ECS AVAIL.
9	68.04.02 68.04	ALTITUDE TESTS - UNMANNED	-24	
10	68.04.02 68.04	ALTITUDE TESTS - MANNED	-17	
11		COOLANT MODULE INSTRUMENTATION & INSTALLATION		
12		WATER MANAGEMENT SYSTEM INSTALLATION		
13		PRIMARY O_2 MODULE INSTALL.		
14		CHAMBER MODIFICATION		
15	68.09	EGRESS SYSTEM EVALUATION	-21	
16	68.04.01	14 DAY UNMANNED TEST	-21	
17		DELIVER BOILERPLATE NO. 2 TO MSC	-17	

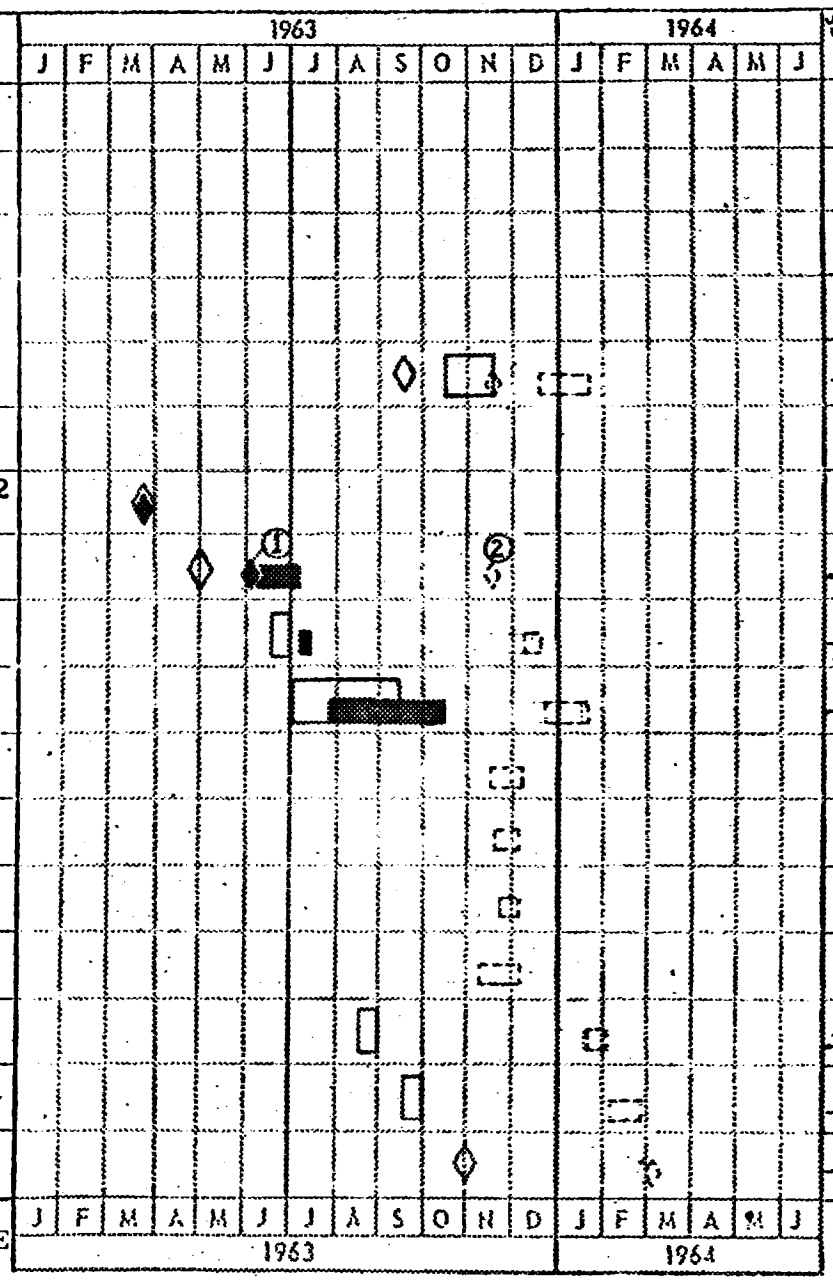

LEGEND:
TESTS
HDW. DEL.

① PLANNED
② CURRENT ESTIMATE
③ ACTUAL

DATE 22 JANUARY 1962

REVISED 30 AUGUST 1963 (Rev. K)

REVISED 27 SEPTEMBER 1963 (Rev. L)

REVISED 28 OCTOBER 1963 (Rev. M)

MCDONNELL

ST. LOUIS, MISSOURI

PAGE 22

REPORT

MODEL 133P

GEMINI TEST PLAN SCHEDULE

	Test Req. No. 52--	ACTIVITY	COMMENTS
1	61.00 thru .06	COMPATIBILITY TEST UNIT (CTU):	CTU WIRING CONFIGURED TO S/C 2
2		R & R SECTION - RADAR SYSTEM TEST	
3		RCS SECTION - RCS PRESS LEAKAGE & STATIC FIRING	-18
4		CABIN SECTION - ELECT & SEQUENT., COMM., COOLANT FLOW SPLIT, G & C	-18
5		MECH. SYS. PWR. DIST., ECS.	
6		RE-ENTRY MODULE - COMMUNICATIONS SYSTEM	-15
7		ADAPTER SECTIONS - SEQUENT., COMM. COOLANT, OAME, OAMS PRESS. CK. &	-24
8		STATIC FIRING, RSS LEAK, FC TEST & CRYO OPERATION	
9		ASSEMBLED SPACECRAFT - COOLANT SYS., ECS, ELECT. & SEQUENT SYS.	-13
10		G&C SYS. & RADAR, INSTR. SYS., COMM SYS.	-13
11		RCS - OAMS TEST	-14
12		SIMULATED MISSION & ALTITUDE CHAMBER	-17
13		GUIDANCE & CONTROL SIMULATION TEST (ANALOG):	
14		AVAILABILITY - THREE (3) AXIS MOTION TABLE & ESTU	3 AXIS TABLE DEL. NOV. 62
15	59.02	ATTITUDE MANEUVERING MODE	-14
16	59.01	IN-FLIGHT PLATFORM ALIGNMENT	-15
17	59.03	FLIGHT COMPUTER EVALUATION	-15

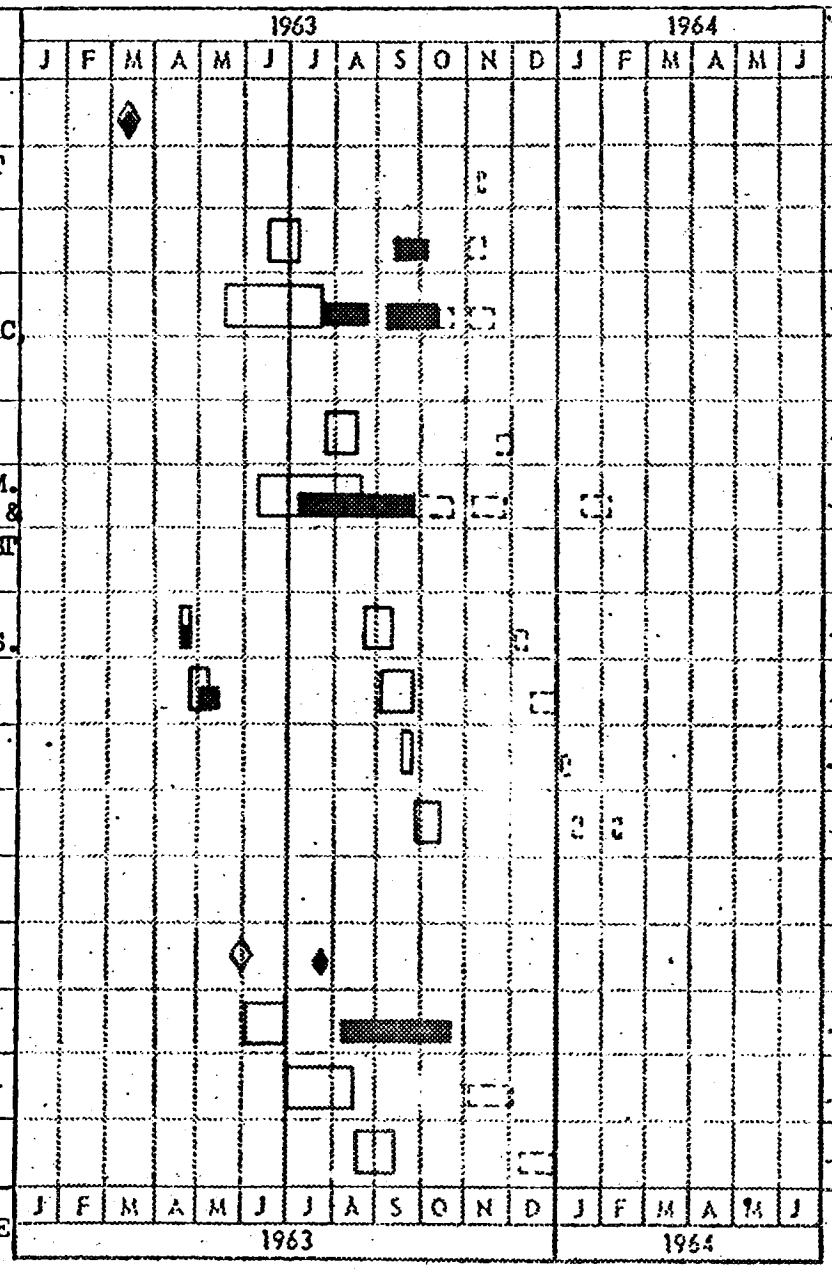

LEGEND:
TESTS
HDW. DEL.

1 PLANNED
2 CURRENT ESTIMATE
3 ACTUAL

DATE 22 JANUARY 1962

REVISED 28 OCTOBER 1963 (Rev. M)

REVISED

REVISED

MCDONNELL

ST. LOUIS, MISSOURI

GEMINI TEST PLAN SCHEDULE

REPORT

MODEL 133P

	Test Req. No. 52--	ACTIVITY	1963 J F M A M J J A S O N D	1964 J F M A M J	FLAG	COMMENTS
1	072 072.01	THERMAL QUALIFICATION TEST			●	
2	68.06	RADIATOR TEST (S/C 3A ADAPTER)			-9	
3		PHASE I SST - 3A ADAPTER			-10	
4		3A REENTRY MODULE RECEIVED FROM MFG.				PROGRAM RESCHEDULED TO REFLECT S/C 3A CONFIG. CHANGE
5		3A REENTRY MODULE & ADAPTER MATED				
6	58.03.01	3A SPACECRAFT VIBRATION (NOT THERMAL BALANCE TEST)				
7		3A SPACECRAFT AVAIL. FOR THERMAL TEST				
8		SPECIAL INSTRUMENTATION INSTALLATION				
9		HARDLINE CONTROL INSTALLED				
10		SPECIAL TEST EQUIPMENT INSTALLED & COMBINED SYSTEMS CHECKOUT				COMPLETE SEPTEMBER 1964
11		SYSTEM SERVICING				COMPLETE SEPTEMBER 1964
12		MISSIONS				
13		MINIMUM INTERNAL HEATING ONE LOOP, ONE PUMP				COMPLETE SEPTEMBER 1964
14		MAXIMUM INTERNAL HEATING, ONE LOOP, TWO PUMPS				COMPLETE OCTOBER 1964
15		MAXIMUM INTERNAL HEATING, TWO LOOPS, ONE PUMP PER LOOP				COMPLETE OCTOBER 1964
16						
17						

LEGEND:
TESTS
HDW. DEL.

1 PLANNED
2 CURRENT ESTIMATE
3 ACTUAL

[illegible] SUMMARY

[illegible]

[illegible]

[illegible]

[illegible] 30 Day [illegible] [illegible] scheduled for delivery [illegible]

[illegible]

STATIC 2

1. Under construction in manufacturing section. Delivery to test area now scheduled for 23 January 1964.

2. 30 Day Forecast - No test activity.

STATIC 3

1. Critical launch (cold). On 18 October 1963 a [illegible] for gaskets on all adapter mold line doors was added to the test requirement. Before the addition of these gaskets, test [illegible] was approximately two weeks ahead of [illegible]. [illegible] the test set up and gasket installation has been completed, and the set up is back in process. The two week ahead of [illegible] has been lost.

2. 30 Day Forecast - Anticipate set up to be completed to test runs to start by 1 November 1963. Testing to continue [illegible] November.

STATIC 4

1. Modification to -9 configuration by manufacturing completed on 30 October 1963.

2. 30 Day Forecast - [illegible] for pressure test [illegible] and ultimate to be completed on 8 October 1963. [illegible] completed by [illegible] November 1963. [illegible] to be completed by 22 November 1963. [illegible] set up for [illegible] [illegible] 22 [illegible] [illegible] in [illegible]

[illegible]

1. [illegible]

GEMINI SPACECRAFT
MANUFACTURING WORK PLAN AND TEST
TRANSLATION AND DOCKING TRAINER

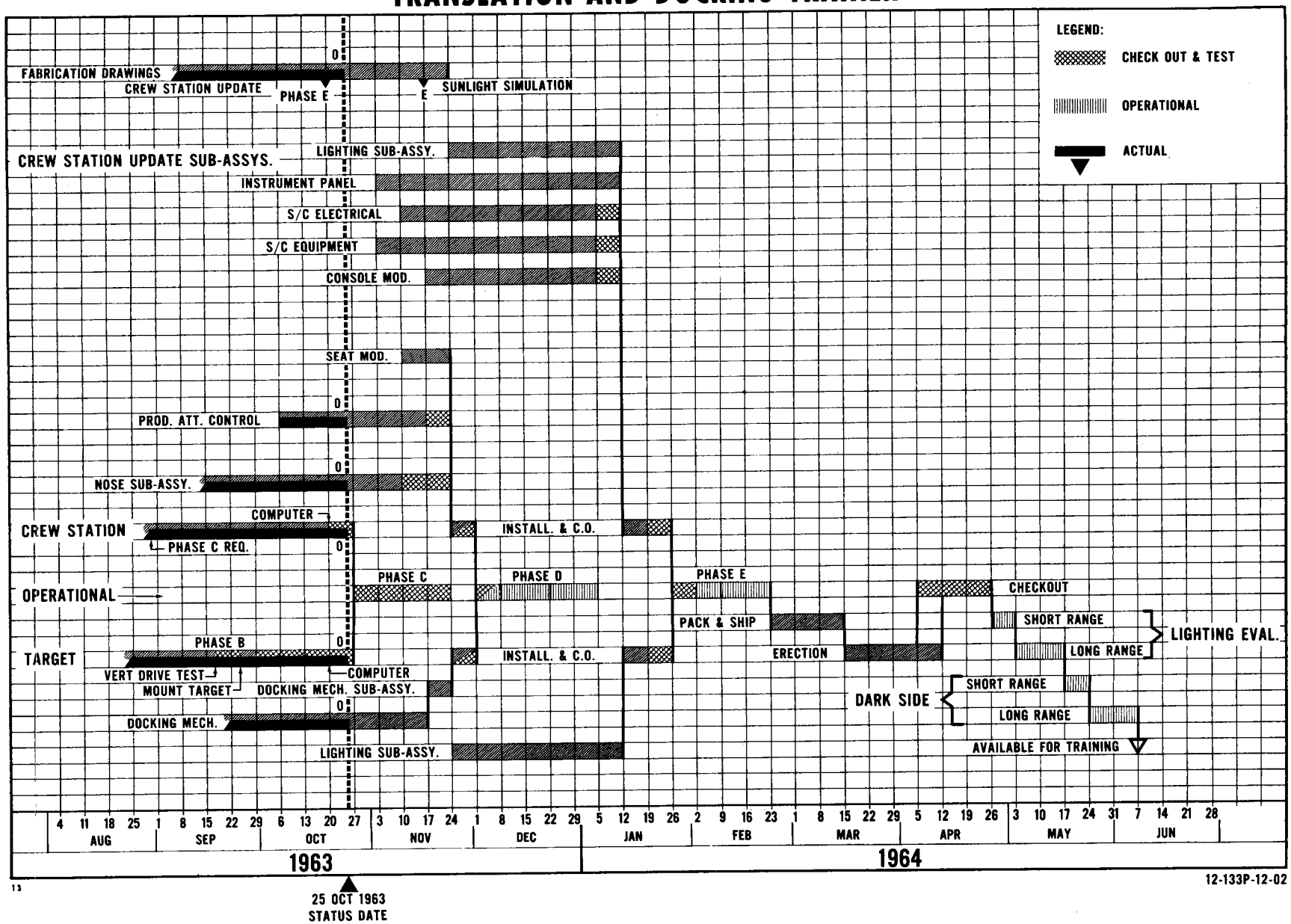

12-133P-12-02

GEMINI MISSION SIMULATOR
S/N-1,2 SCHEDULE

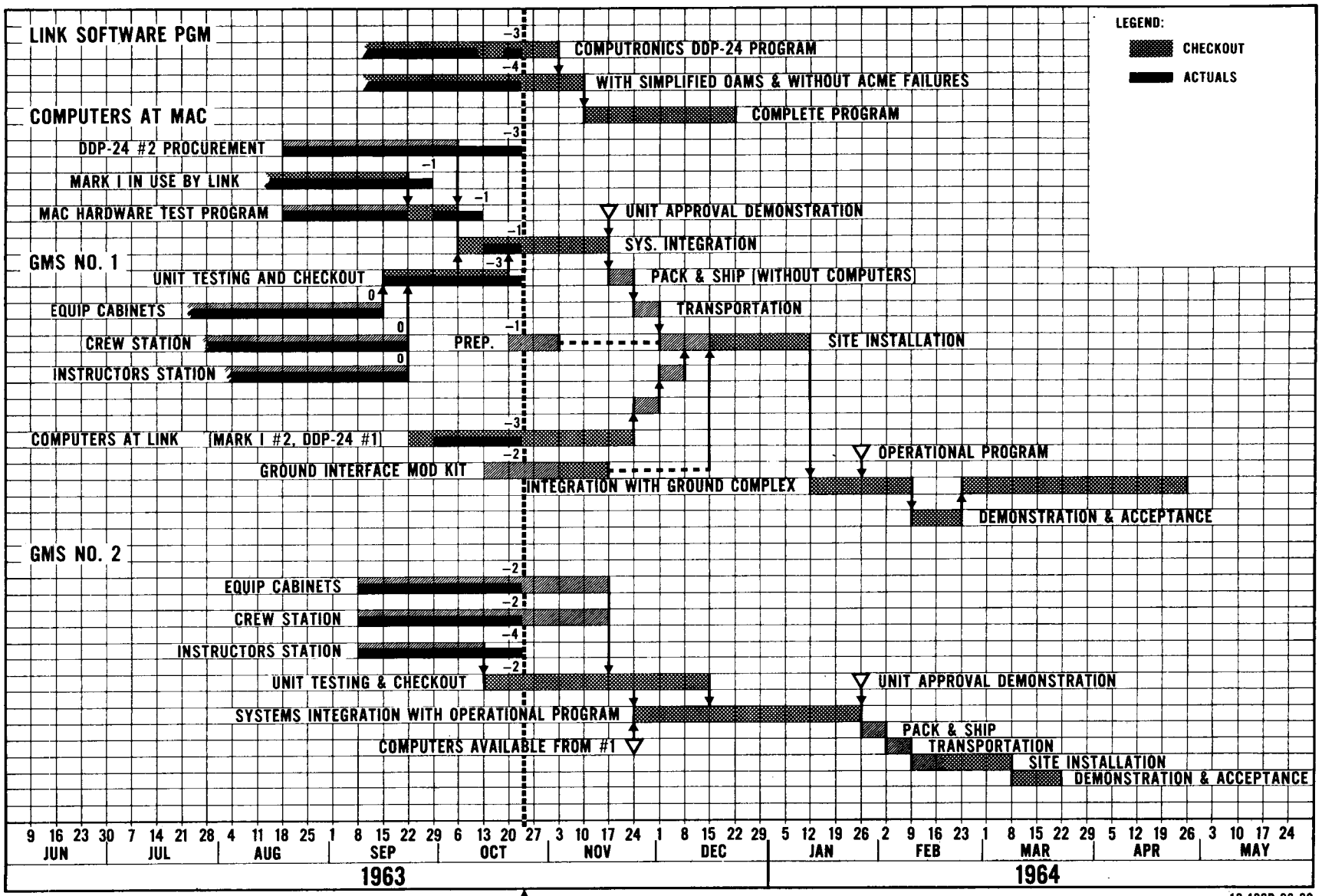

12-133P-03-02

GEMINI MISSION SIMULATOR
SN-2 SCHEDULE

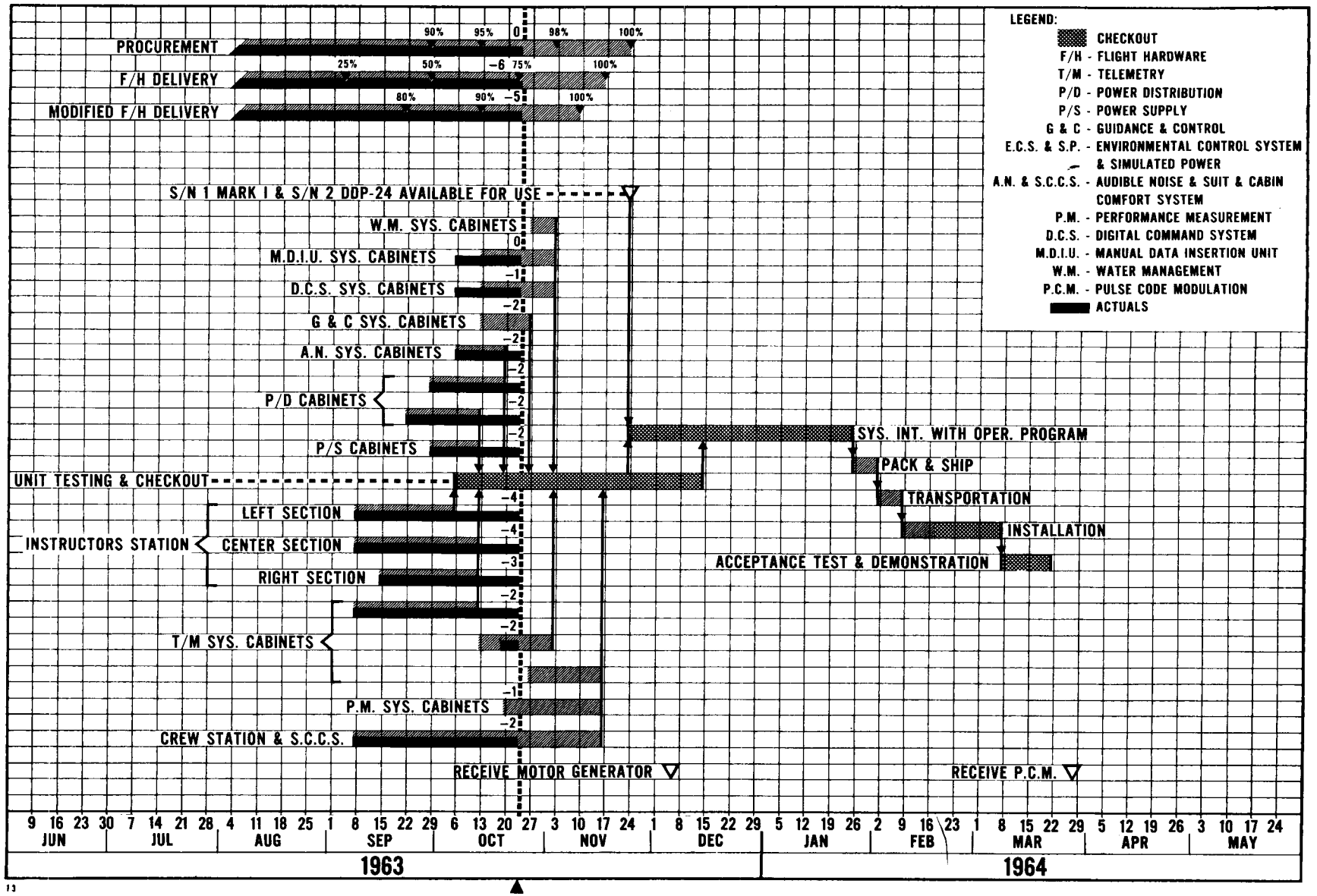

25 OCTOBER 1963
STATUS DATE

MONTHLY SUMMARY

[illegible]
[illegible]
Vehicle: [illegible]
[illegible]
DATE: 25 [illegible]

ENGINEERING STATUS

Testing and checkout of Simulator for S/N 1 is progressing and completion will be possible upon receipt of Flight Hardware. Estimate approximately [illegible] weeks of testing and checkout required after last piece of hardware is received.

PROCUREMENT

The #2 DDP-24 Computer shipped 24 October and should be installed the [illegible] of 28 October.

Modified and unmodified Flight Hardware shortages should be complete [illegible] 1 November. The propellant gage will ship date has slipped from [illegible] October to 30 October, due to Qual. Test consuming more time than originally anticipated by vendor.

One half of the Incremental Velocity Indicator was received on [illegible] which will enable testing of this system to begin. The [illegible] Incremental Velocity Indicator will ship on 3 November.

ASSEMBLY AND DELIVERY STATUS

The following Flight Hardware has been received this month and is being installed on Simulator S/N 1:

2-Lap Belts	Dock Entry [illegible]
4-Backboard Ejection Seats	Dock Entry [illegible]
4-Egress Kit, Cushion Assy.	Dock Entry [illegible]
4-Pelvic Seat Structure Block	Dock Entry [illegible]
1-Suit and Cabin Temp. Indicator	Dock Entry [illegible]
1-Cabin Pressure Indicator	Dock Entry [illegible]
1-Secondary O2 Indicator	Dock Entry [illegible]
3-Polished Mirrors Item #1	Receiver [illegible]
3-Polished Mirrors Item #2	Receiver [illegible]

Programming and de-bugging of the Mark I and DDP-24 Computer at Link, for shipment to the Cape, is approximately three weeks behind schedule. Mark I is about 63% complete while the DDP-24 is about [illegible]% complete.

The #2 DDP-24 was shipped 24 October and should be in place during the [illegible] of 28 October. Integration of the #2 DDP-24 with the Mark I [illegible] improve testing and final checkout of Simulator S/N 1.

Fabrication of the equipment cabinets and crew stations for Simulator [illegible] is about two weeks behind schedule. The instructors station is approximately [illegible] weeks behind schedule. Overall the equipment cabinets [illegible] are about 33% complete.

TEST STATUS

Simulator S/N 2 [illegible] starting, due to the [illegible]

GEMINI

P.I.A. TEST CAPABILITY ACTIVATION

DATE: 24 October 1963

YSTEM	PART NUMBER	NOMENCLATURE	LOCATION		DELIVERY DATE	FACILITY READY	PROCEDURE		OPERATIONAL		REMARKS
			INT.	FINAL			ATP	SEDR	INT.	FINAL	
MM.	52E 190001	HF & Audio Bn.	B.1 W/R #6	B101A W/R #6	11/19/63	12/25/63			12/01/63	*	*To be moved at convenient time during test schedule
	52E 190002	UHF Bn.			In-Plant				10/25/63		
	52E 190003	Beacon Bn.									
	52E 190020	DCC									Shared usage with SST
	52E 270012	TRS Console			11/19/63				12/01/63		
	52E 190007	Headset - MIC			11/11/63				11/25/63		
	52E 190023	Dig. Converter			In-Plant				Now		
S	52E 420010	Prop Bn.	None	B101A W/R #10	In-Plant	12/01/63			-	12/16/63	
	52E 420011	Adpt. Kit									
	52E 420097	Mass Spect.			1/01/64					1/10/64	SST Unit Available

NOTES:

1. Facility ready date defines location of brick and mortar area available for bench to be moved in.
2. Operation date defines time required to conduct checkout and calibration of bench to be ready for PIA testing.

STEM	PART NUMBER	NOMENCLATURE	LOCATION		DELIVERY DATE	FACILITY READY	PROCEDURE		OPERATIONAL		REMARKS
			INT.	FINAL			ATP	SEDR	INT.	FINAL	
S	52E 180010	Lo. Press. Bn.	B.1 W/R #10	B101A W/R #10	In-Plant	12/01/63			Now	12/16/63	
	52E 180011	Hi Press. Bn.	↓	↓	↓	↓			11/04/63	↓	
	52E 180013	Coolant Bn.	None	B101A W/R #6	↓	↓				↓	
	52E 180001	Fix-ECS Pkg.	B.1 W/R	B.101A W/R	↓	11/01/63			Now	11/01/63	Unit assigned to 188 - Shared usage
	52E 010086-1	Coolant Bench Laminar Flow Encl.	None	B101A W/R #6	11/01/63	12/01/63				12/16/63	
	52E 010014	Dly. FO. Ld. Strut	None	B101A W/R #10	12/24/63	12/01/63				1/15/63	
S	52E 180012	LO_2 Bn.	None	B103A Cryo Rm.	In-Plant	11/01/63				11/21/63	
	52E 230027	LH_2 Bn.	None	B.65	11/15/63	11/01/63				12/15/63	
	52E 010086-3	LH_2 Bn. Laminar Flow Encl.	None	B.65	11/01/63	11/01/63				12/15/63	

CEM	PART NUMBER	NOMENCLATURE	LOCATION		DELIVERY DATE	FACILITY READY	PROCEDURE		OPERATIONAL		REMARKS
			INT.	FINAL			ATP	SEDR	INT.	FINAL	
		Flashing Rec. Lite									SEDR in work now. No AGE for this. SEDR to spell out using existing GED Lab facilitie
		Baro. Swit.									
	52E 230001	Fuel Cell	B.102	B.62	1/01/64	Now			*	2/01/64	*Electrical interim in operation now at B.102 - Mechanical interim now in build-up. Estimated operational date 11/15/63

GEMINI
P.I.A. TEST CAPABILITY ACTIVATION

DATE: 24 Octo[illegible] 1963

TEM	PART NUMBER	NOMENCLATURE	LOCATION		DELIVERY DATE	FACILITY READY	PROCEDURE		OPERATIONAL		REMARKS
			INT.	FINAL			ATP	SEDR	INT.	FINAL	
C	52E 270023	Computer Bn.	B.1 W/R #6	B101A W/R #6	*	12/25/63			12/01/63	**	*AGE in plant less BTE which is coming in with hardware
	52E 270032	IMU Dolly IGS			In-Plant						
	52E 270036	IMU Bn.									
	52E 270053	IMU Cable									
	52E 270009	Box Test Pt.							Now		2 sets avail.
	52E 270034	MDIU & Delta V							Now		
	52E 270018-401	Kit - RIST	B.1 W/R #6	B101A W/R #6	11/14/63	12/25/63			-	**	**To be moved at convenient time during test schedule approx 1/1/64
	52E 270051	Dolly Computer			In-Plant				-		
	52E 270050	Dolly Computer			11/11/63				-		
	52E 270018	RIST Test Radar Ins.			11/14/63				12/01/63		Factory Test Unit Avail Now
	52E 270052	Dolly Radar			10/11/63				-		Not Rec'd-No new del date
	52E 270071	ACPU Charger PI	None		12/16/63				-		
	52E 270025	Radar Console	B.1 W/R #6		In-Plant				12/01/63		
	52E 270069	Recorder - G&C			12/03/63				12/06/63		
	52E 270056	Kit-Radar Press	None		1/29/64				-	2/10/64	
	52E 270007	Adpt Kit Plt.	None	B.102	In-Plant	Now			-	Now	Used in conj. w/Fecker Table
	52E 270020	Plt. Console	None	B.102	In-Plant	Now			-	Now	
	52E 270002	ACME Bn.	B.1 W/R #6	B.101A W/R #6	In-Plant	12/25/63			Now	**	
	52E 270019	Adpt-Rate Table									Shared usage with SST
	52E 270055	Rate Table									
	52E 270021	Hor. Sens. Bn.	B.1 W/R #6	B.101A W/R #6	In-Plant	12/25/63			10/25/63		Oper'l date depends on MRU disposition
	52E 270016	Horizon Simulator									
	52E 270047	Temp. Att. Ind.	B.1 W/R #6	B.101A W/R #6	In-Plant	12/25/63			10/25/63		
	52E 270035	Att. Ind.									

GEMINI

P.I.A. TEST CAPABILITY ACTIVATION

DATE: 24 Oct[illegible] 1963

ITEM	PART NUMBER	NOMENCLATURE	LOCATION INT.	LOCATION FINAL	DELIVERY DATE	FACILITY READY	PROCEDURE ATP	PROCEDURE SEDR	OPERATIONAL INT.	OPERATIONAL FINAL	REMARKS
IR.	52E 440036	Ratiometer	B.42	B.101A W Balc	In-Plant	1/15/64			Now	*	*To be moved at convenient time during test schedule approx 2/15/64
	52E 440039	Accelerometer	B.42	↓	↓	↓			↓	↓	
	52E 440008-1	DC-DC Convert.	↓	↓	↓	↓			11/01/63	↓	
	52E 440008-401	Control Indicator DC-DC Convert.	↓	↓	10/28/63	↓			11/07/63	↓	
	52E 440035	Harness Test	↓	↓	**	↓			11/01/63	↓	
	52E 440050	Bio-HED Power Supply Test Set	↓	↓	-	↓			-	↓	Not Available this date →
	52E 440002	CO_2 Xducer	↓	↓	10/30/63	↓			11/07/63	↓	
	52E 440040	Tape Recorder) CIMU	↓	↓	In-Plant	↓			Now	↓	Interim CIMU now in operation →
	"	Transmitters) ↓	↓	↓	11/15/63	↓			12/15/63	↓	
	"	PGM) ↓	↓	↓	11/15/63	↓			3/01/64	↓	
	52 - 04015	Circuit C/O Box	↓	↓	In-Plant	↓			Now	↓	
	52 - 04004	Signal Condit.	↓	↓	↓	↓			↓	↓	**2 units 1-95% complete 1-75% complete
	52 - 04026	Signal Condit.	↓	↓	↓	↓			↓	↓	
	52 - 04010	Component Selec.	↓	↓	↓	↓			↓	↓	
	52 - 04007	Burn in Console	↓	↓	↓	↓			↓	↓	
	52 - 04027	VCO Tester	↓	↓	↓	↓			↓	↓	
	52 - 04013	Interaction Tester	↓	↓	↓	↓			↓	↓	

RELOCATION OF PALLET EQUIPMENT
PER EJS 52-2399

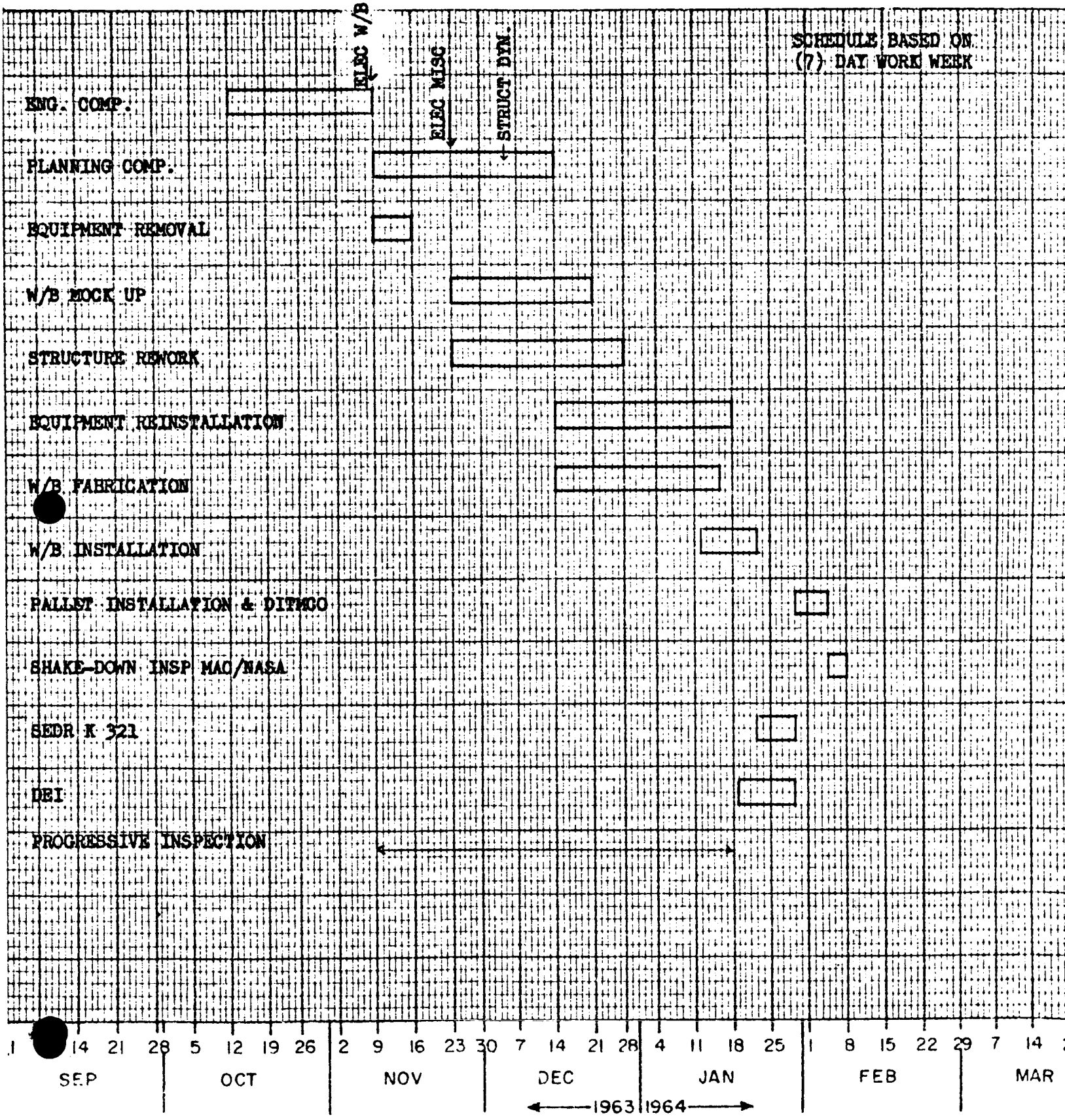

MASTER SCHEDULE

PROGRAM	GEMINI MISSION IA SUPPORT
CONTRACT	NAS 9-170
REFERENCE	R/E DAH-3524

Rev.: 25 Oct 1963
NO. 133-34.2
Date: 27 Sept 1963
ISSUE 1
Rev.: 11 Oct 1963
PAGE 1 OF 1

COORDINATION
ENG. [signature] 937
MFG. [signature]
PROC. L. S. Dahl
FLT.

APPROVAL 9-27-63
PREP. BY E. C. Wright
APP. [signature] 9/27
APP.
APP.

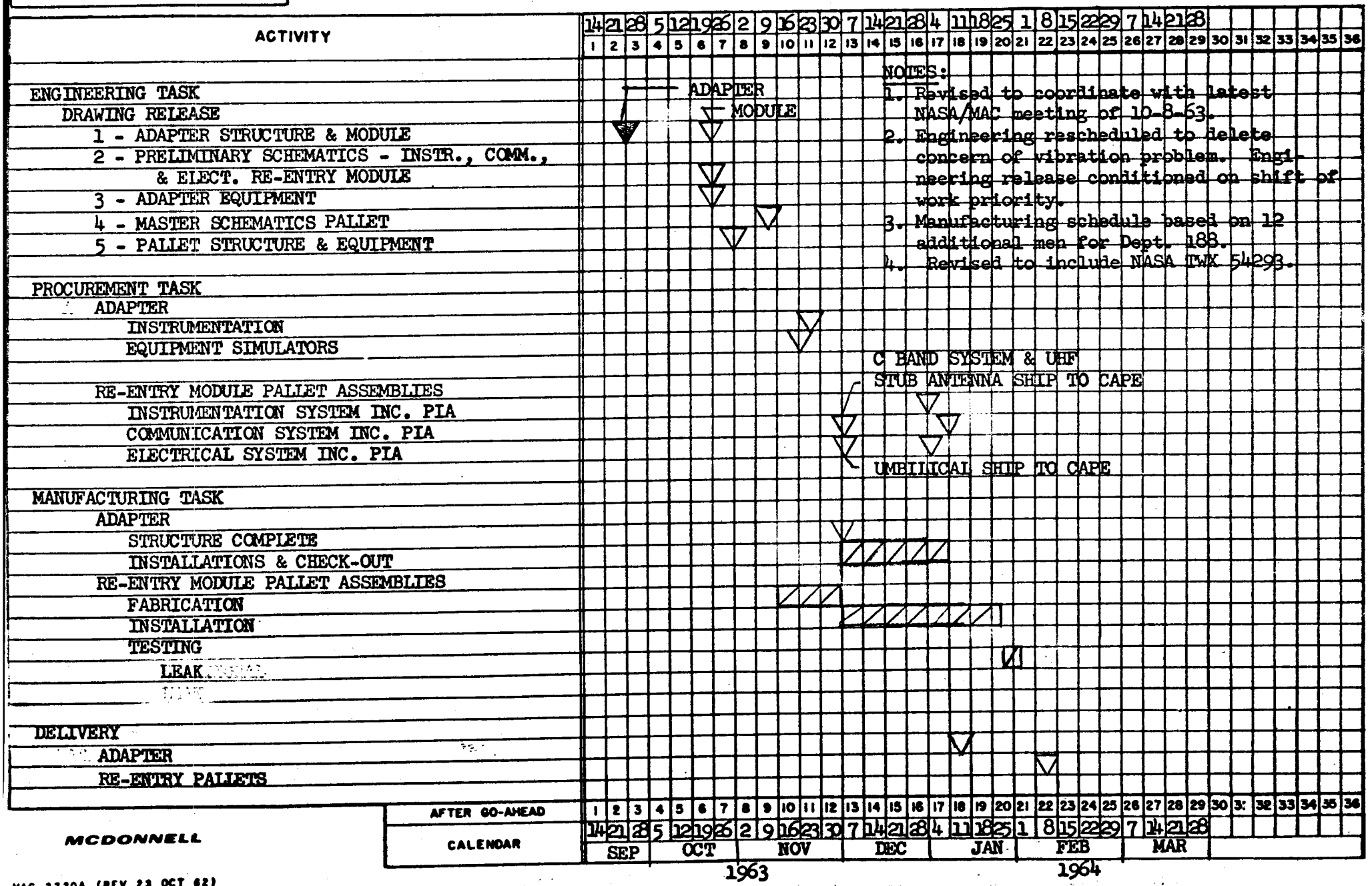

NOTES:
1. Revised to coordinate with latest NASA/MAC meeting of 10-8-63.
2. Engineering rescheduled to delete concern of vibration problem. Engineering release conditioned on shift of work priority.
3. Manufacturing schedule based on 12 additional men for Dept. 188.
4. Revised to include NASA TWX 54293.

MCDONNELL

MAC 2220A (REV 23 OCT 62)

CTU NO. 1 WORK PLAN FINAL ASSY

	ZONE	TOTAL HRS.	OPEN HRS.
R & R			
1. INSTALL EQUIPMENT	1	33	33
R.C.S.			
2. INSTALL EQUIPMENT	2	410	410
CABIN			
3. PEDESTAL INSTALLATION	9	24	24
4. E C S INSTALLATION - PLUMBING	4 9	126	126
5. EQUIPMENT INSTALLATION	3 4 7 8 9 11 12	565	350
6. MECHANICAL MATE	10 11 12 14 15	46	46
ADAPTER			
7. INSTALL PLUMBING	13	210	194
8. OAMS INSTALLATION	13		
9. EQUIPMENT INSTALLATION	13	158	124

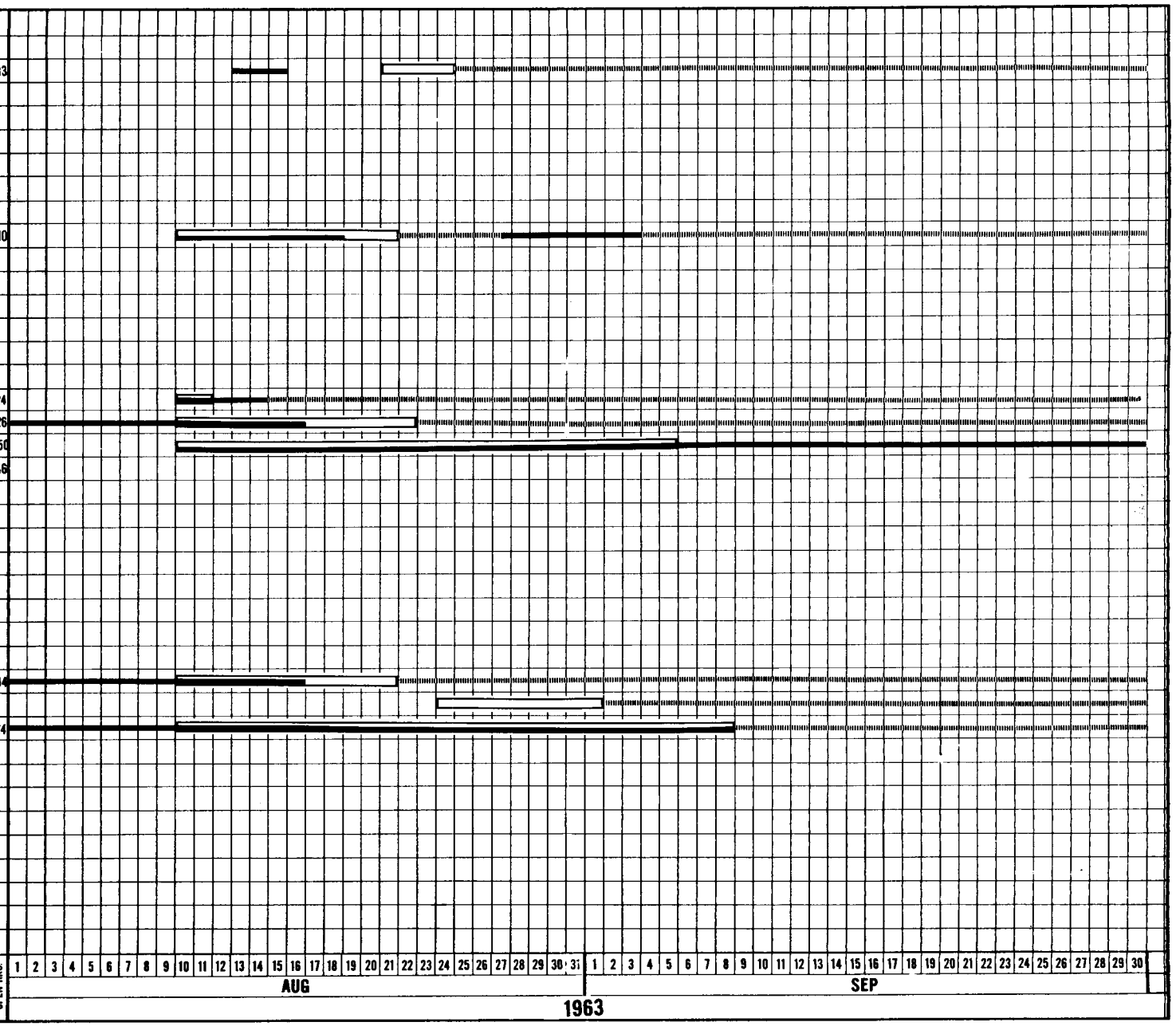

LEGEND:
- WORK PERIOD
- IN WORK
- EXTENDED WORK PERIOD

CTU NO. 1 WORK PLAN FINAL ASSY

	ZONE	TOTAL HRS.	OPEN HRS.
R & R			
1. INSTALL EQUIPMENT	1	33	33
MATE WITH RCS			
R.C.S.			
2. INSTALL EQUIPMENT	2	410	410
MATE WITH CABIN			
CABIN			
3. PEDESTAL INSTALLATION	9	24	24
4. E C S INSTALLATION - PLUMBING	4 9	126	126
5. EQUIPMENT INSTALLATION	3 4 7 8 9 11 12	565	350
6. MECHANICAL MATE	10 11 12 14 15	46	46
ADAPTER			
7. INSTALL PLUMBING	13	210	194
8. OAMS INSTALLATION	13		
9. EQUIPMENT INSTALLATION	13	158	124

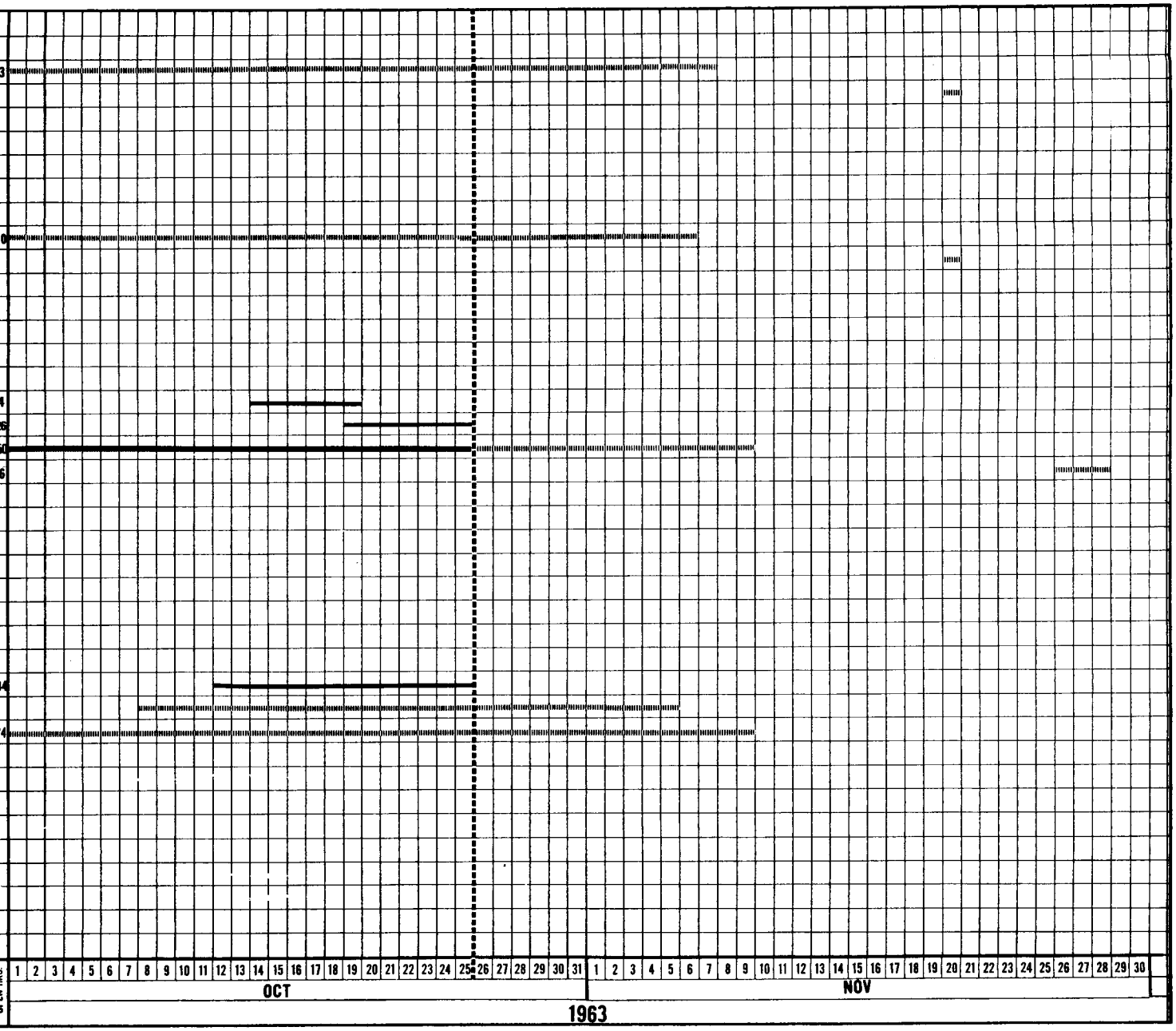

LEGEND:
- WORK PERIOD
- IN WORK
- EXTENDED WORK PERIOD

GEMINI ZONE CHART

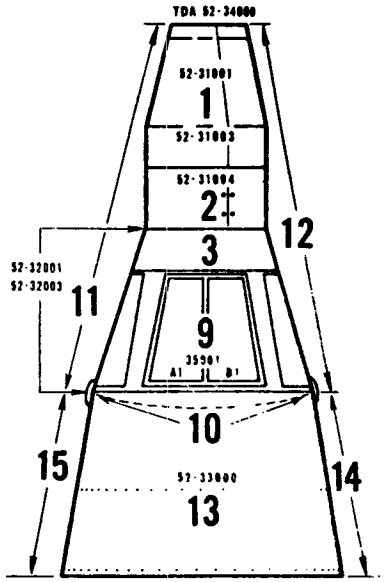

TOP VIEW

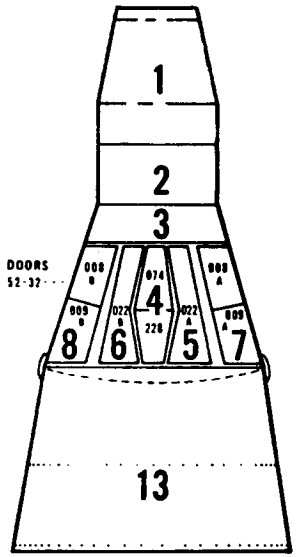

BOTTOM VIEW

1. RENDEZVOUS AND RADAR MODULE
2. RE-ENTRY RCS MODULE
3. FORWARD AREA CONE
4. CENTER EQUIPMENT BAY
5. L/H LANDING GEAR BAY
6. R/H LANDING GEAR BAY
7. L/H EQUIPMENT BAY
8. R/H EQUIPMENT BAY
9. CREW PRESSURIZED AREA
10. EXTERIOR AREA OF LARGE PRESS. BULKHEAD
11. SPACECRAFT EXTERIOR L/H
12. SPACECRAFT EXTERIOR R/H
13. INTERNAL ADAPTER AREA
14. R/H EXTERNAL ADAPTER AREA
15. L/H EXTERNAL ADAPTER AREA
16. ZONE FOR ENTIRE SPACECRAFT

GEMINI SPACECRAFT NO. CTU-#1

ZONE NO. 1

TOTAL EQUIPMENT REQUIRED 11

EQUIPMENT ON HAND 6

EQUIPMENT TO SCHEDULE 4

EQUIPMENT LATE 1

PART NO.	PART NAME	NORM. INST.	SLACK	DEF. INST.	SLACK	HOURS TO INSTALL
52 87701-9	Radar (1)	31001 A1	-13	00002 A2	+2	8

GEMINI ZONE CHART

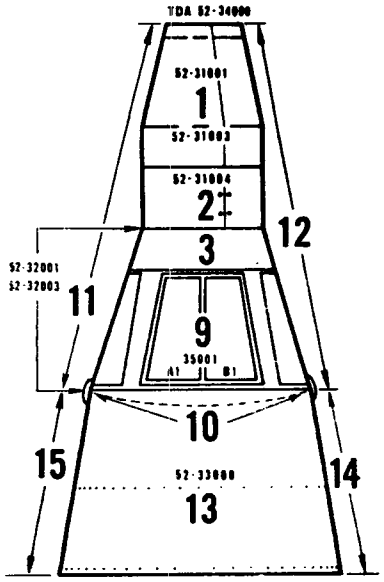

TOP VIEW

1. RENDEZVOUS AND RADAR MODULE
2. RE-ENTRY RCS MODULE
3. FORWARD AREA CONE
4. CENTER EQUIPMENT BAY
5. L/H LANDING GEAR BAY
6. R/H LANDING GEAR BAY
7. L/H EQUIPMENT BAY
8. R/H EQUIPMENT BAY
9. CREW PRESSURIZED AREA
10. EXTERIOR AREA OF LARGE PRESS. BULKHEAD
11. SPACECRAFT EXTERIOR L/H
12. SPACECRAFT EXTERIOR R/H
13. INTERNAL ADAPTER AREA
14. R/H EXTERNAL ADAPTER AREA
15. L/H EXTERNAL ADAPTER AREA
16. ZONE FOR ENTIRE SPACECRAFT

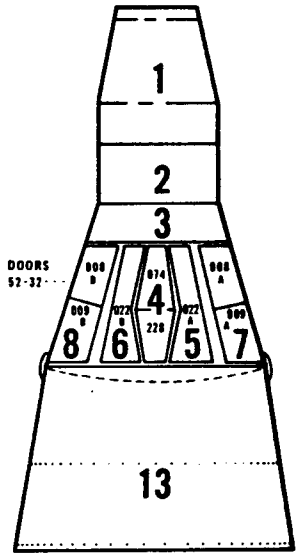

BOTTOM VIEW

GEMINI SPACECRAFT NO. CTU-#1

ZONE NO. 2

TOTAL EQUIPMENT REQUIRED 45

EQUIPMENT ON HAND 32

EQUIPMENT TO SCHEDULE 0

EQUIPMENT LATE 13

52

PART NO.	PART NAME	NORM. INST.	SLACK	DEF. INST.	SLACK	HOURS TO INSTALL
72712-3	Actuator Housing (1)	31002 A2	-15	00002 A2	0	2
72712-5	Actuator Extension (1)	31002 A2	-15	00002 A2	0	2
72706-43	Guillotine Body (1)	31002 A2	-15	00002 A2	0	1
72706-37	Guillotine Body (1)	31002 A2	-14	00002 A2	+1	1
72706-38	Guillotine Body (1)	31002 A2	-14	00002 A2	+1	1
72715-9	Detonator Housing (2)	31002 A2	-16	00002 A2	0	2
72715-7	Detonator Housing (2)	31002 A2	-16	00002 A2	0	2
506237-3-3	Union (2)	31002 A2	-16	00002 A2	+1	1
72705-9	Detonator Housing (2)	31002 A2	-15	00002 A2	0	2

GEMINI ZONE CHART

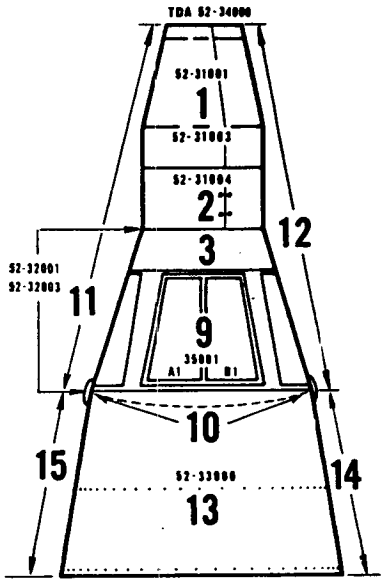

TOP VIEW

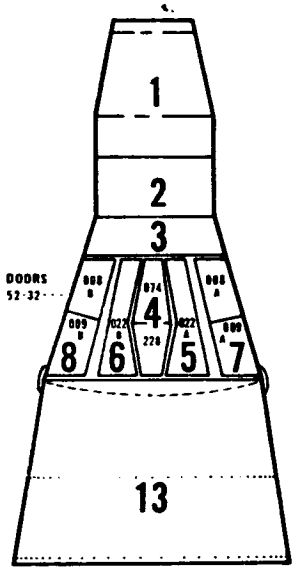

BOTTOM VIEW

1. RENDEZVOUS AND RADAR MODULE
2. RE-ENTRY RCS MODULE
3. FORWARD AREA CONE
4. CENTER EQUIPMENT BAY
5. L/H LANDING GEAR BAY
6. R/H LANDING GEAR BAY
7. L/H EQUIPMENT BAY
8. R/H EQUIPMENT BAY
9. CREW PRESSURIZED AREA
10. EXTERIOR AREA OF LARGE PRESS. BULKHEAD
11. SPACECRAFT EXTERIOR L/H
12. SPACECRAFT EXTERIOR R/H
13. INTERNAL ADAPTER AREA
14. R/H EXTERNAL ADAPTER AREA
15. L/H EXTERNAL ADAPTER AREA
16. ZONE FOR ENTIRE SPACECRAFT

GEMINI SPACECRAFT NO. CTU-#1

ZONE NO. 3

TOTAL EQUIPMENT REQUIRED 25

EQUIPMENT ON HAND 16

EQUIPMENT TO SCHEDULE 0

EQUIPMENT LATE 9

PART NO.	PART NAME		NORM. INST.	SLACK	DEF. INST.	SLACK	HOURS TO INSTALL
52 83717-1	In. Flow Assy	(1)	00005 A4	-13	00002 A2	0	1
72711-3	Actuator Housing	(1)	00005 A4	-15	00002 A2	+1	2
72711-5	Actuator	(1)	00005 A4	-15	00002 A2	+1	2
72711-9	Cart. Housing	(1)	00005 A4	-12	00002 A2	0	2
72709-13	Value Body	(1)	00005 A4	-2	00002 A2	+3	2
72709-13	Manifold	(1)	00005 A4	-15	00002 A2	+1	2
72709-21	Value Body	(1)	00005 A4	-15	00002 A2	+1	2
72709-27	Value Body	(1)	00005 A4	-15	00002 A2	+1	2
85702-13	Phase Shifter	(1)	00005 A3	-23	00002 A2	0	2

GEMINI ZONE CHART

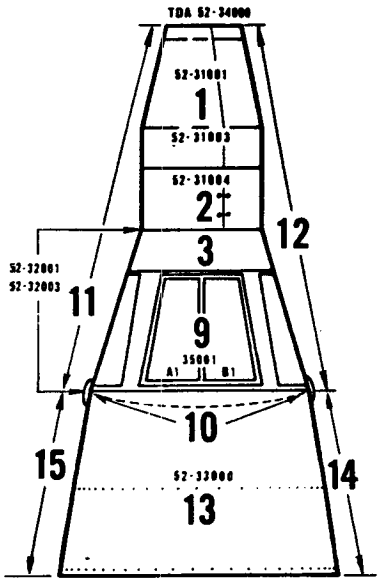

TOP VIEW

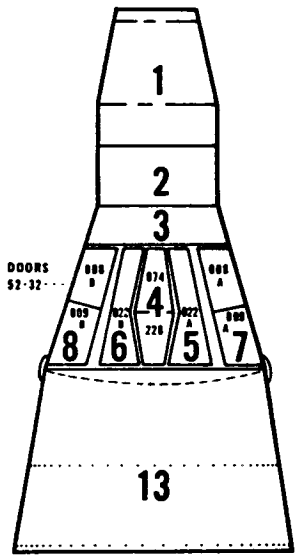

BOTTOM VIEW

1. RENDEZVOUS AND RADAR MODULE
2. RE-ENTRY RCS MODULE
3. FORWARD AREA CONE
4. CENTER EQUIPMENT BAY
5. L/H LANDING GEAR BAY
6. R/H LANDING GEAR BAY
7. L/H EQUIPMENT BAY
8. R/H EQUIPMENT BAY
9. CREW PRESSURIZED AREA
10. EXTERIOR AREA OF LARGE PRESS. BULKHEAD
11. SPACECRAFT EXTERIOR L/H
12. SPACECRAFT EXTERIOR R/H
13. INTERNAL ADAPTER AREA
14. R/H EXTERNAL ADAPTER AREA
15. L/H EXTERNAL ADAPTER AREA
16. ZONE FOR ENTIRE SPACECRAFT

GEMINI SPACECRAFT NO. CTU-#1

ZONE NO. 4

TOTAL EQUIPMENT REQUIRED 7

EQUIPMENT ON HAND 5

EQUIPMENT TO SCHEDULE 0

EQUIPMENT LATE 2

	PART NO.	PART NAME	NORM. INST.	SLACK	DEF. INST.	SLACK	HOURS TO INSTALL
52	83713-3	Valve (2)	00005 A1	-22	00002 A2	0	2

GEMINI ZONE CHART

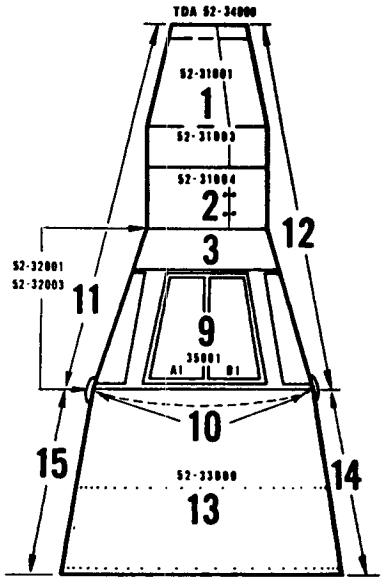

TOP VIEW

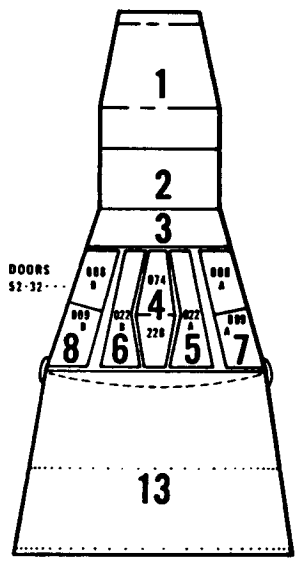

BOTTOM VIEW

1. RENDEZVOUS AND RADAR MODULE
2. RE-ENTRY RCS MODULE
3. FORWARD AREA CONE
4. CENTER EQUIPMENT BAY
5. L/H LANDING GEAR BAY
6. R/H LANDING GEAR BAY
7. L/H EQUIPMENT BAY
8. R/H EQUIPMENT BAY
9. CREW PRESSURIZED AREA
10. EXTERIOR AREA OF LARGE PRESS. BULKHEAD
11. SPACECRAFT EXTERIOR L/H
12. SPACECRAFT EXTERIOR R/H
13. INTERNAL ADAPTER AREA
14. R/H EXTERNAL ADAPTER AREA
15. L/H EXTERNAL ADAPTER AREA
16. ZONE FOR ENTIRE SPACECRAFT

GEMINI SPACECRAFT NO. CTU-#1

ZONE NO. 7

TOTAL EQUIPMENT REQUIRED 6

EQUIPMENT ON HAND 5

EQUIPMENT TO SCHEDULE 0

EQUIPMENT LATE 1

	PART NO.	PART NAME	NORM. INST.	SLACK	DEF. INST.	SLACK	HOURS TO INSTALL
52	79700-5	Fuel Cell Cont. (1)	00035 A3	-22	00002 A2	0	4

GEMINI ZONE CHART

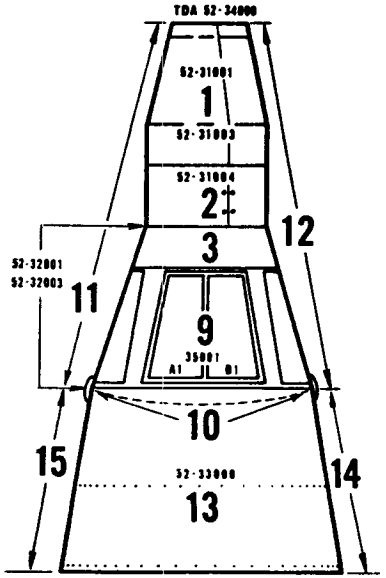

TOP VIEW

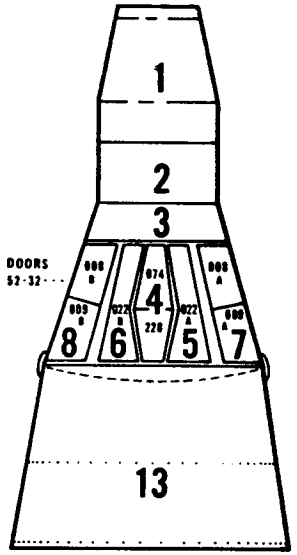

BOTTOM VIEW

1. RENDEZVOUS AND RADAR MODULE
2. RE-ENTRY RCS MODULE
3. FORWARD AREA CONE
4. CENTER EQUIPMENT BAY
5. L/H LANDING GEAR BAY
6. R/H LANDING GEAR BAY
7. L/H EQUIPMENT BAY
8. R/H EQUIPMENT BAY
9. CREW PRESSURIZED AREA
10. EXTERIOR AREA OF LARGE PRESS. BULKHEAD
11. SPACECRAFT EXTERIOR L/H
12. SPACECRAFT EXTERIOR R/H
13. INTERNAL ADAPTER AREA
14. R/H EXTERNAL ADAPTER AREA
15. L/H EXTERNAL ADAPTER AREA
16. ZONE FOR ENTIRE SPACECRAFT

GEMINI SPACECRAFT NO. CTU-#1

ZONE NO. 8

TOTAL EQUIPMENT REQUIRED 18

EQUIPMENT ON HAND 9

EQUIPMENT TO SCHEDULE 0

EQUIPMENT LATE 9

	PART NO.	PART NAME	NORM. INST.	SLACK	DEF. INST.	SLACK	HOURS TO INSTALL
52	85719-5	UHF Recovery Beacon (1)	00005 A3	-20	00002 A2	0	2
	72714-9	Switch Body (5)	00005 A4	-14	00002 A2	0	1
	72714-7	Switch Body (3)	00005 A4	-14	00002 A2	0	1

GEMINI ZONE CHART

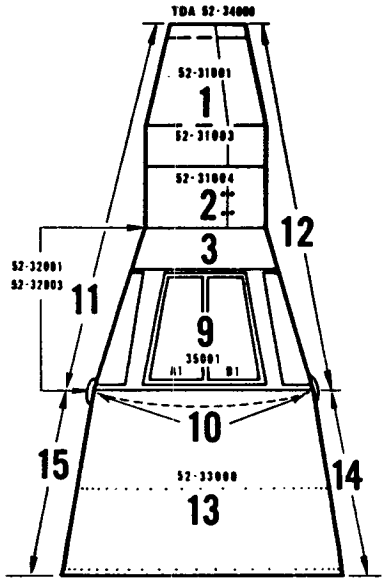

TOP VIEW

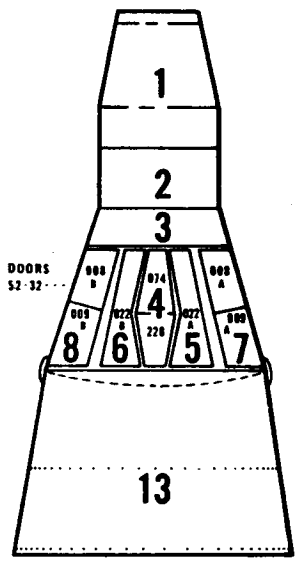

BOTTOM VIEW

1. RENDEZVOUS AND RADAR MODULE
2. RE-ENTRY RCS MODULE
3. FORWARD AREA CONE
4. CENTER EQUIPMENT BAY
5. L/H LANDING GEAR BAY
6. R/H LANDING GEAR BAY
7. L/H EQUIPMENT BAY
8. R/H EQUIPMENT BAY
9. CREW PRESSURIZED AREA
10. EXTERIOR AREA OF LARGE PRESS. BULKHEAD
11. SPACECRAFT EXTERIOR L/H
12. SPACECRAFT EXTERIOR R/H
13. INTERNAL ADAPTER AREA
14. R/H EXTERNAL ADAPTER AREA
15. L/H EXTERNAL ADAPTER AREA
16. ZONE FOR ENTIRE SPACECRAFT

GEMINI SPACECRAFT NO. CTU-#1

ZONE NO. 9

TOTAL EQUIPMENT REQUIRED 222

EQUIPMENT ON HAND 209

EQUIPMENT TO SCHEDULE 7

EQUIPMENT LATE 6

PART NO.	PART NAME	NORM. INST.	SLACK	DEF. INST.	SLACK	HOURS TO INSTALL
52 83717-1	In. Duct Assy. (1)	00005 A4	-13	00002 A2	0	2
79730-1	Cabin Light (1)	00005 A1	-12	00002 A2	0	2
79730-3	Cabin Light (1)	00005 A1	-12	00002 A2	0	2
79730-4	Cabin Light (1)	00005 A1	-12	00002 A2	0	2
72707-23	Manual Fire Mech. (2)	00005 A3	-15	00002 A2	0	2

GEMINI ZONE CHART

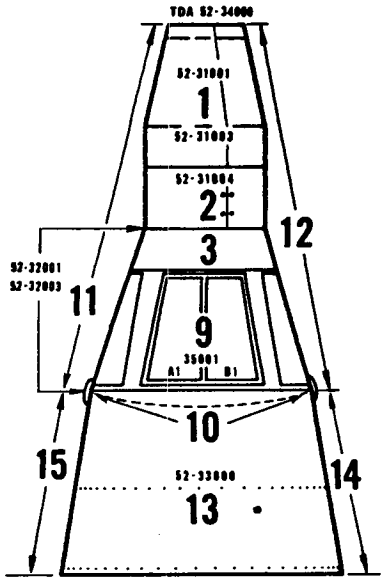

TOP VIEW

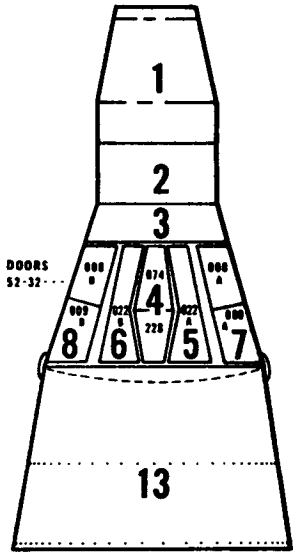

BOTTOM VIEW

1. RENDEZVOUS AND RADAR MODULE
2. RE-ENTRY RCS MODULE
3. FORWARD AREA CONE
4. CENTER EQUIPMENT BAY
5. L/H LANDING GEAR BAY
6. R/H LANDING GEAR BAY
7. L/H EQUIPMENT BAY
8. R/H EQUIPMENT BAY
9. CREW PRESSURIZED AREA
10. EXTERIOR AREA OF LARGE PRESS. BULKHEAD
11. SPACECRAFT EXTERIOR L/H
12. SPACECRAFT EXTERIOR R/H
13. INTERNAL ADAPTER AREA
14. R/H EXTERNAL ADAPTER AREA
15. L/H EXTERNAL ADAPTER AREA
16. ZONE FOR ENTIRE SPACECRAFT

GEMINI SPACECRAFT NO. CTU-#1

ZONE NO. 13

TOTAL EQUIPMENT REQUIRED 65

EQUIPMENT ON HAND 54

EQUIPMENT TO SCHEDULE 0

EQUIPMENT LATE 11

	PART NO.	PART NAME	NORM. INST.	SLACK	DEF. INST.	SLACK	HOURS TO INSTALL
52	72708-3	Cutter Sealer (1)	33000 A2	-17	00002 A2	0	2
	52701-165	Thrust Chamber 85# (2)	33000 A3	-24	00002 A2	+2	4
	52701-163	Thrust Chamber 25# (8)	33000 A3	-24	00002 A2	+2	16

GEMINI ZONE CHART

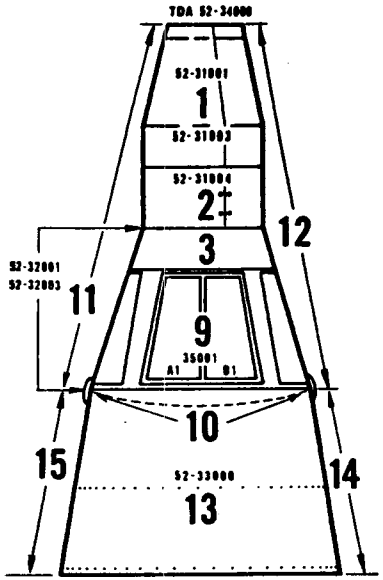

TOP VIEW

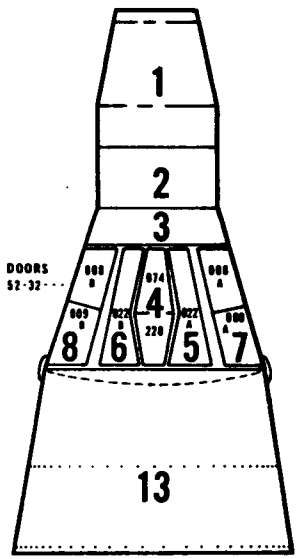

BOTTOM VIEW

1. RENDEZVOUS AND RADAR MODULE
2. RE-ENTRY RCS MODULE
3. FORWARD AREA CONE
4. CENTER EQUIPMENT BAY
5. L/H LANDING GEAR BAY
6. R/H LANDING GEAR BAY
7. L/H EQUIPMENT BAY
8. R/H EQUIPMENT BAY
9. CREW PRESSURIZED AREA
10. EXTERIOR AREA OF LARGE PRESS. BULKHEAD
11. SPACECRAFT EXTERIOR L/H
12. SPACECRAFT EXTERIOR R/H
13. INTERNAL ADAPTER AREA
14. R/H EXTERNAL ADAPTER AREA
15. L/H EXTERNAL ADAPTER AREA
16. ZONE FOR ENTIRE SPACECRAFT

GEMINI SPACECRAFT NO. CTU-#1

ZONE NO. Fuel Cell

TOTAL EQUIPMENT REQUIRED 23

EQUIPMENT ON HAND 16

EQUIPMENT TO SCHEDULE 0

EQUIPMENT LATE 7

	PART NO.	PART NAME	NORM. INST.	SLACK	DEF. INST.	SLACK	HOURS TO INSTALL
52	79700-9	Fuel Cell (2)	87124 A2A1	-17	00002 A2	+1	4
	83701-77	Hydrogen Sub Assy (1)	87124 A2A1	-21	00002 A2	+1	4
	83701-57	Valve, Fill Vent (2)	87124 A2A1	-19	00002 A2	+1	2
	83701-59	O_2 Valve (2)	87124 A2A1	-19	00002 A2	+1	2

[redacted]

CONFIDENTIAL

GEMINI MANUFACTURING WORK PLAN – SPACECRAFT NO. 1

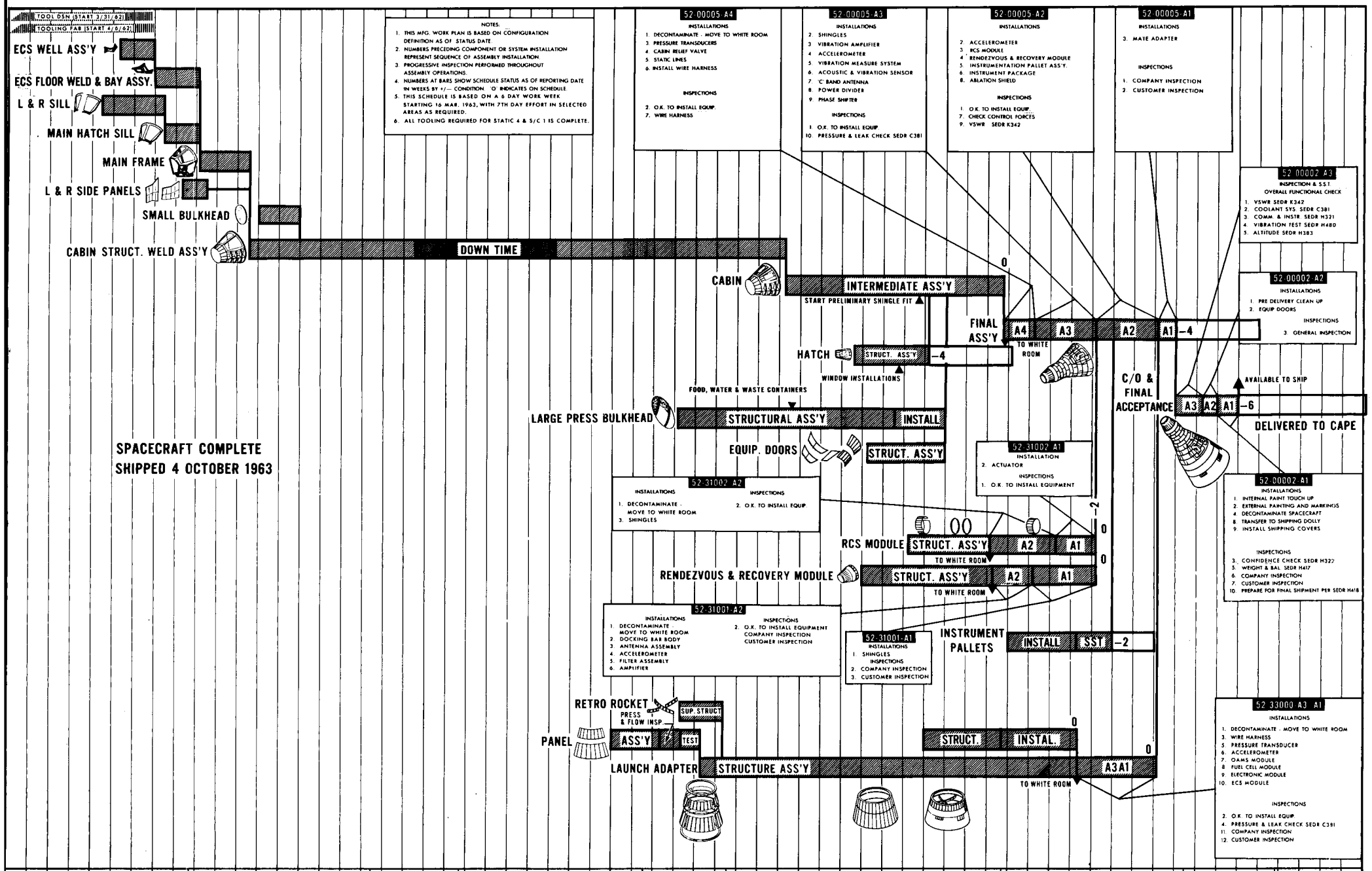

STATUS DATE: 25 OCT. 1963

12-133P-11-01

[redacted]

GEMINI MANUFACTURING WORK PLAN – SPACECRAFT NO. 2

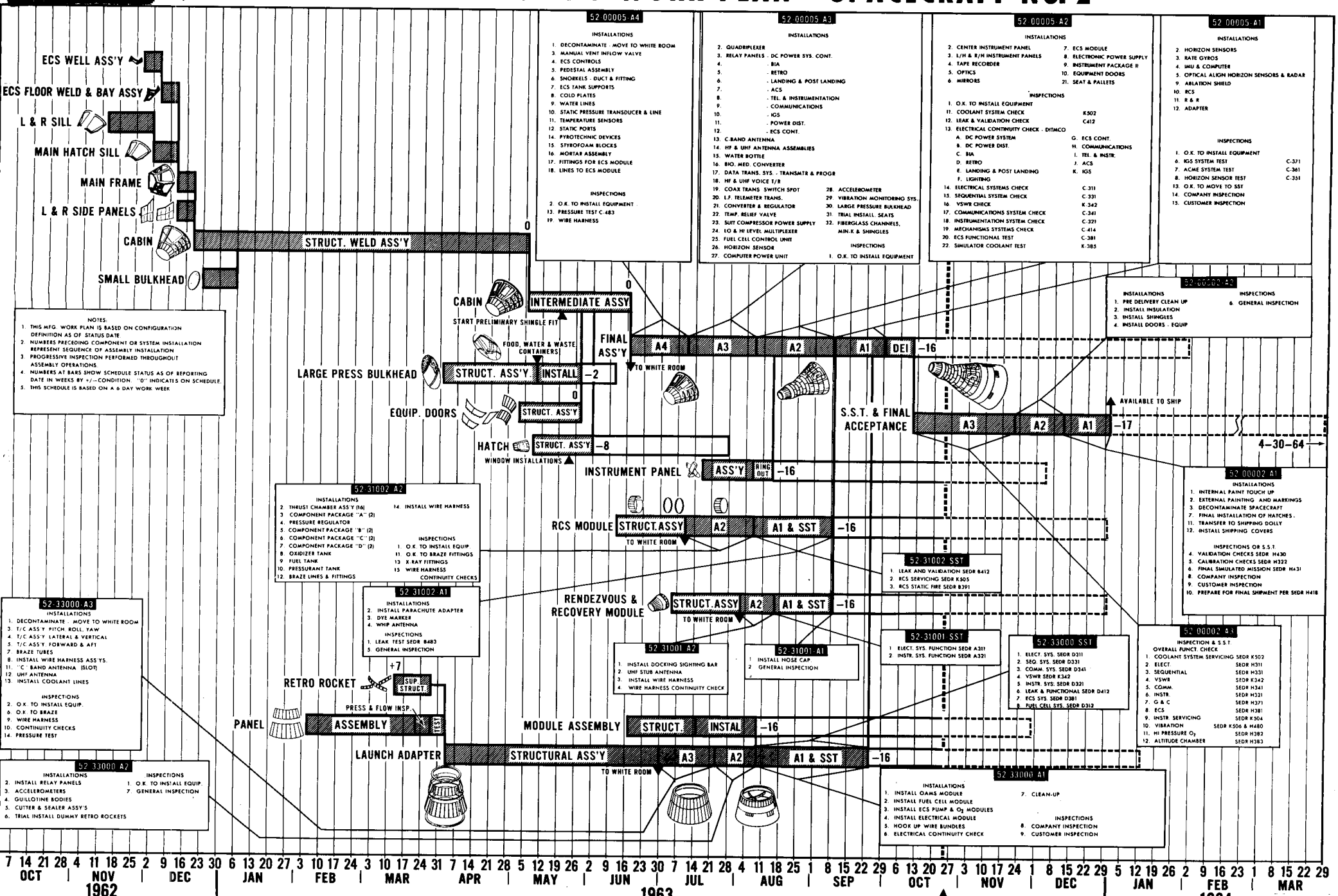

NOTES:
1. THIS MFG. WORK PLAN IS BASED ON CONFIGURATION DEFINITION AS OF STATUS DATE
2. NUMBERS PRECEDING COMPONENT OR SYSTEM INSTALLATION REPRESENT SEQUENCE OF ASSEMBLY INSTALLATION
3. PROGRESSIVE INSPECTION PERFORMED THROUGHOUT ASSEMBLY OPERATIONS
4. NUMBERS AT BARS SHOW SCHEDULE STATUS AS OF REPORTING DATE IN WEEKS BY +/– CONDITION. "0" INDICATES ON SCHEDULE.
5. THIS SCHEDULE IS BASED ON A 6 DAY WORK WEEK

52-00005-A4

INSTALLATIONS
1. DECONTAMINATE - MOVE TO WHITE ROOM
3. MANUAL VENT INFLOW VALVE
4. ECS CONTROLS
5. PEDESTAL ASSEMBLY
6. SNORKELS - DUCT & FITTING
7. ECS TANK SUPPORTS
8. COLD PLATES
9. WATER LINES
10. STATIC PRESSURE TRANSDUCER & LINE
11. TEMPERATURE SENSORS
12. STATIC PORTS
14. PYROTECHNIC DEVICES
15. STYROFOAM BLOCKS
16. MORTAR ASSEMBLY
17. FITTINGS FOR ECS MODULE
18. LINES TO ECS MODULE

INSPECTIONS
2. O.K. TO INSTALL EQUIPMENT
13. PRESSURE TEST C-483
19. WIRE HARNESS

52-00005-A3

INSTALLATIONS
2. QUADRIPLEXER
3. RELAY PANELS - DC POWER SYS. CONT.
4. - BIA
5. - RETRO
6. - LANDING & POST LANDING
7. - ACS
8. - TEL. & INSTRUMENTATION
9. - COMMUNICATIONS
10. - IGS
11. - POWER DIST.
12. - ECS CONT.
13. C-BAND ANTENNA
14. HF & UHF ANTENNA ASSEMBLIES
15. WATER BOTTLE
16. BIO. MED. CONVERTER
17. DATA TRANS. SYS. - TRANSMTR & PROGR
18. HF & UHF VOICE T/R
19. COAX TRANS SWITCH SPDT
20. L.F. TELEMETER TRANS.
21. CONVERTER & REGULATOR
22. TEMP. RELIEF VALVE
23. SUIT COMPRESSOR POWER SUPPLY
24. LO & HI LEVEL MULTIPLEXER
25. FUEL CELL CONTROL UNIT
26. HORIZON SENSOR
27. COMPUTER POWER UNIT
28. ACCELEROMETER
29. VIBRATION MONITORING SYS.
30. LARGE PRESSURE BULKHEAD
31. TRIAL INSTALL. SEATS
32. FIBERGLASS CHANNELS, MIN.K & SHINGLES

INSPECTIONS
1. O.K. TO INSTALL EQUIPMENT

52-00005-A2

INSTALLATIONS
2. CENTER INSTRUMENT PANEL
3. L/H & R/H INSTRUMENT PANELS
4. TAPE RECORDER
5. OPTICS
6. MIRRORS
7. ECS MODULE
8. ELECTRONIC POWER SUPPLY
9. INSTRUMENT PACKAGE II
10. EQUIPMENT DOORS
21. SEAT & PALLETS

INSPECTIONS
1. O.K. TO INSTALL EQUIPMENT
11. COOLANT SYSTEM CHECK K502
12. LEAK & VALIDATION CHECK C412
13. ELECTRICAL CONTINUITY CHECK - DITMCO
A. DC POWER SYSTEM
B. DC POWER DIST.
C. BIA
D. RETRO
E. LANDING & POST LANDING
F. LIGHTING
G. ECS CONT.
H. COMMUNICATIONS
I. TEL. & INSTR.
J. ACS
K. IGS
14. ELECTRICAL SYSTEMS CHECK C-311
15. SEQUENTIAL SYSTEM CHECK C-331
16. VSWR CHECK K-342
17. COMMUNICATIONS SYSTEM CHECK C-341
18. INSTRUMENTATION SYSTEM CHECK C-321
19. MECHANISMS SYSTEMS CHECK C-414
20. ECS FUNCTIONAL TEST C-381
22. SIMULATOR COOLANT TEST K-385

52-00005-A1

INSTALLATIONS
2. HORIZON SENSORS
3. RATE GYROS
4. IMU & COMPUTER
5. OPTICAL ALIGN HORIZON SENSORS & RADAR
9. ABLATION SHIELD
10. RCS
11. R & R
12. ADAPTER

INSPECTIONS
1. O.K. TO INSTALL EQUIPMENT
6. IGS SYSTEM TEST C-371
7. ACME SYSTEM TEST C-361
8. HORIZON SENSOR TEST C-351
13. O.K. TO MOVE TO SST
14. COMPANY INSPECTION
15. CUSTOMER INSPECTION

52-00002-A2

INSTALLATIONS
1. PRE DELIVERY CLEAN UP
2. INSTALL INSULATION
3. INSTALL SHINGLES
4. INSTALL DOORS - EQUIP

INSPECTIONS
6. GENERAL INSPECTION

52-00002-A1

INSTALLATIONS
1. INTERNAL PAINT TOUCH UP
2. EXTERNAL PAINTING AND MARKINGS
3. DECONTAMINATE SPACECRAFT
7. FINAL INSTALLATION OF HATCHES.
11. TRANSFER TO SHIPPING DOLLY
12. INSTALL SHIPPING COVERS

INSPECTIONS OR S.S.T.
4. VALIDATION CHECKS SEDR H430
5. CALIBRATION CHECKS SEDR H322
6. FINAL SIMULATED MISSION SEDR H431
8. COMPANY INSPECTION
9. CUSTOMER INSPECTION
10. PREPARE FOR FINAL SHIPMENT PER SEDR H418

52-31002-A2

INSTALLATIONS
2. THRUST CHAMBER ASS'Y (16)
3. COMPONENT PACKAGE "A" (2)
4. PRESSURE REGULATOR
5. COMPONENT PACKAGE "B" (2)
6. COMPONENT PACKAGE "C" (2)
7. COMPONENT PACKAGE "D" (2)
8. OXIDIZER TANK
9. FUEL TANK
10. PRESSURANT TANK
12. BRAZE LINES & FITTINGS
14. INSTALL WIRE HARNESS

INSPECTIONS
1. O.K. TO INSTALL EQUIP.
11. O.K. TO BRAZE FITTINGS
13. X-RAY FITTINGS
15. WIRE HARNESS CONTINUITY CHECKS

52-31002 SST
1. LEAK AND VALIDATION SEDR 6412
2. RCS SERVICING SEDR K505
3. RCS STATIC FIRE SEDR B391

52-31002-A1

INSTALLATIONS
2. INSTALL PARACHUTE ADAPTER
3. DYE MARKER
4. WHIP ANTENNA

INSPECTIONS
1. LEAK TEST SEDR 8483
5. GENERAL INSPECTION

52-31001 SST
1. ELECT. SYS. FUNCTION SEDR A311
2. INSTR. SYS. FUNCTION SEDR A321

52-33000 SST
1. ELECT. SYS. SEDR D311
2. SEQ. SYS. SEDR D331
3. COMM. SYS. SEDR D341
4. VSWR SEDR K342
5. INSTR. SYS. SEDR D321
6. LEAK & FUNCTIONAL SEDR D412
7. ECS SYS. SEDR D381
8. FUEL CELL SYS. SEDR D312

52-33000-A3

INSTALLATIONS
1. DECONTAMINATE - MOVE TO WHITE ROOM
3. T/C ASS'Y PITCH, ROLL, YAW
4. T/C ASS'Y LATERAL & VERTICAL
5. T/C ASS'Y FORWARD & AFT
7. BRAZE TUBES
8. INSTALL WIRE HARNESS ASS'YS.
11. "C" BAND ANTENNA (SLOT)
12. UHF ANTENNA
13. INSTALL COOLANT LINES

INSPECTIONS
2. O.K. TO INSTALL EQUIP.
6. O.K. TO BRAZE
9. WIRE HARNESS
10. CONTINUITY CHECKS
14. PRESSURE TEST

52-31001 A2
1. INSTALL DOCKING SIGHTING BAR
2. UHF STUB ANTENNA
3. INSTALL WIRE HARNESS
4. WIRE HARNESS CONTINUITY CHECK

52-31001-A1
1. INSTALL HOSE CAP
2. GENERAL INSPECTION

52-00002-A3

INSPECTION & S.S.T.
OVERALL FUNCT. CHECK
1. COOLANT SYSTEM SERVICING SEDR K502
2. ELECT. SEDR H311
3. SEQUENTIAL SEDR H331
4. VSWR SEDR K342
5. COMM. SEDR H341
6. INSTR. SEDR H321
7. G & C SEDR H371
8. ECS SEDR H381
9. INSTR. SERVICING SEDR K504
10. VIBRATION SEDR K506 & H480
11. HI PRESSURE O_2 SEDR H382
12. ALTITUDE CHAMBER SEDR H383

52-33000-A2

INSTALLATIONS
2. INSTALL RELAY PANELS
3. ACCELEROMETERS
4. GUILLOTINE BODIES
5. CUTTER & SEALER ASSY'S
6. TRIAL INSTALL DUMMY RETRO ROCKETS

INSPECTIONS
1. O.K. TO INSTALL EQUIP.
7. GENERAL INSPECTION

52-33000-A1

INSTALLATIONS
1. INSTALL OAMS MODULE
2. INSTALL FUEL CELL MODULE
3. INSTALL ECS PUMP & O_2 MODULES
4. INSTALL ELECTRICAL MODULE
5. HOOK UP WIRE BUNDLES
6. ELECTRICAL CONTINUITY CHECK
7. CLEAN-UP

INSPECTIONS
8. COMPANY INSPECTION
9. CUSTOMER INSPECTION

GEMINI SPACECRAFT NO. 2
EQUIPMENT STUDY

LEGEND
- ACTUAL SCHEDULED INSTALLATION POINT
- EQUIPMENT AVAILABLE THROUGH P.I.A. AT M.A.C.

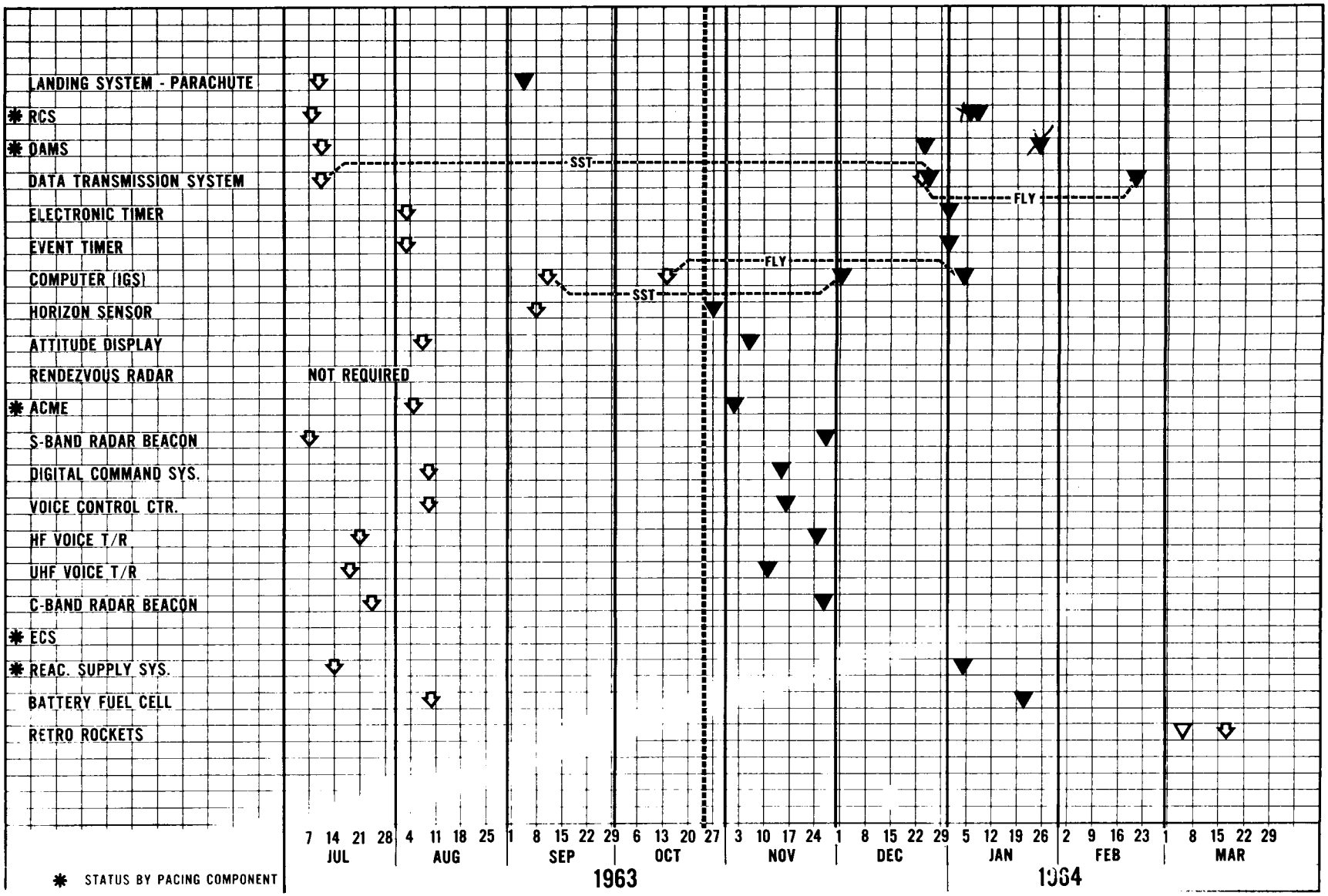

* STATUS BY PACING COMPONENT

STATUS DATE: 25 OCTOBER 1963

S C 2 WORK PLAN FINAL ASSY

	ZONE	TOTAL HRS	OPEN HRS
1. LARGE PRESSURE BULKHEAD	9	39	0
2. PRESSURE TEST	9	74	0
3. ECS INSTALLATION & PLUMBING	9	96	96
4. WIRE BUNDLES IN CABIN	9	452	422
5. PEDESTAL INSTALLATION	9	24	24
6. FIBERGLASS CHANNELS & MIN-K	11 12	302	47
7. INSTALL SHINGLES	4 5 6 7 8 9 11 12	678	482
8. INSTALL & RIG 32060 DOORS	11 12	148	104
9. INSTALL & RIG HATCHES	9 11 12	167	42
10. INSTALL STYROFOAM	3 7 8	82	30
11. INSTALL COLD PLATES & PLUMBING	4 7 8 9	198	194
12. INSTALL W/B IN EQUIPMENT BAYS	3 – 8	920	649
13. SPLICE THERMOCOUPLES & TEST	4 7 11 12	100	100
14. DITMCO	9	186	186
15. EQUIPMENT INSTALLATION (OTHER)	3 4 5 7 8 11 12	378	319
16. INSTALL STATIC SYSTEM	3 9	85	61
17. PRESSURE TEST STATIC SYSTEM	3 9	0	0
18. SST PHASE I	9	416	416
19. EQUIPMENT DOORS	7 8 9 11 12	58	55
20. EQUIPMENT INSTALLATION (CABIN)	9	648	494
21. SPLICE TEMP. SENSORS	4 5 7 8 9	74	74
22. MECHANICAL MATE	16	134	134
23. HEAT SHIELD INSTALLATION	10	222	208
24. E.O.P.O.	16	195	187

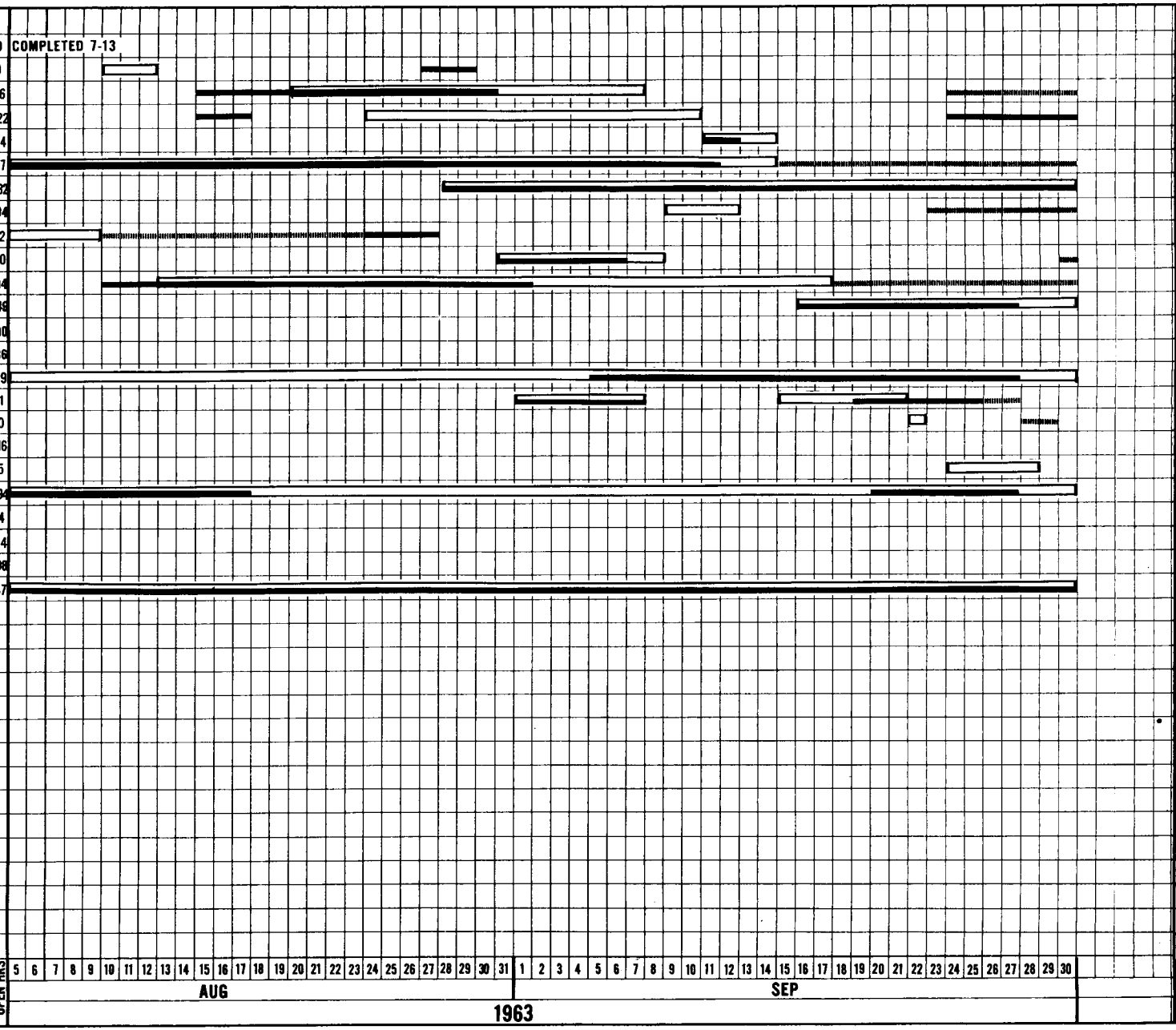

LEGEND:
- WORK PERIOD
- IN WORK
- EXTENDED WORK PERIOD

S C 2 WORK PLAN FINAL ASSY

	ZONE	TOTAL HRS.	OPEN HRS.
1. LARGE PRESSURE BULKHEAD	9	39	0
2. PRESSURE TEST	9	74	0
3. ECS INSTALLATION & PLUMBING	9	96	96
4. WIRE BUNDLES IN CABIN	9	452	422
5. PEDESTAL INSTALLATION	9	24	24
6. FIBERGLASS CHANNELS & MIN-K	11 12	302	47
7. INSTALL SHINGLES	4 8 5 9 6 11 7 12	678	482
8. INSTALL & RIG 32060 DOORS	11 12	148	102
9. INSTALL & RIG HATCHES	9 11 12	167	42
10. INSTALL STYROFOAM	3 7 8	82	30
11. INSTALL COLD PLATES & PLUMBING	4 7 8 9	198	194
12. INSTALL W/B IN EQUIPMENT BAYS	3 - 8	920	649
13. SPLICE THERMOCOUPLES & TEST	4 7 11 12	100	100
14. DITMCO	9	186	186
15. EQUIPMENT INSTALLATION (OTHER)	3 8 4 11 5 12 7	378	319
16. INSTALL STATIC SYSTEM	3 9	85	16
17. PRESSURE TEST STATIC SYSTEM	3 9	0	0
18. SST PHASE I	9	416	416
19. EQUIPMENT DOORS	7 11 8 12 9	58	55
20. EQUIPMENT INSTALLATION (CABIN)	9	648	494
21. SPLICE TEMP. SENSORS	4 8 5 9 7	74	74
22. MECHANICAL MATE	16	134	134
23. HEAT SHIELD INSTALLATION	10	222	208
24. E.O.P.O.	16	959	187

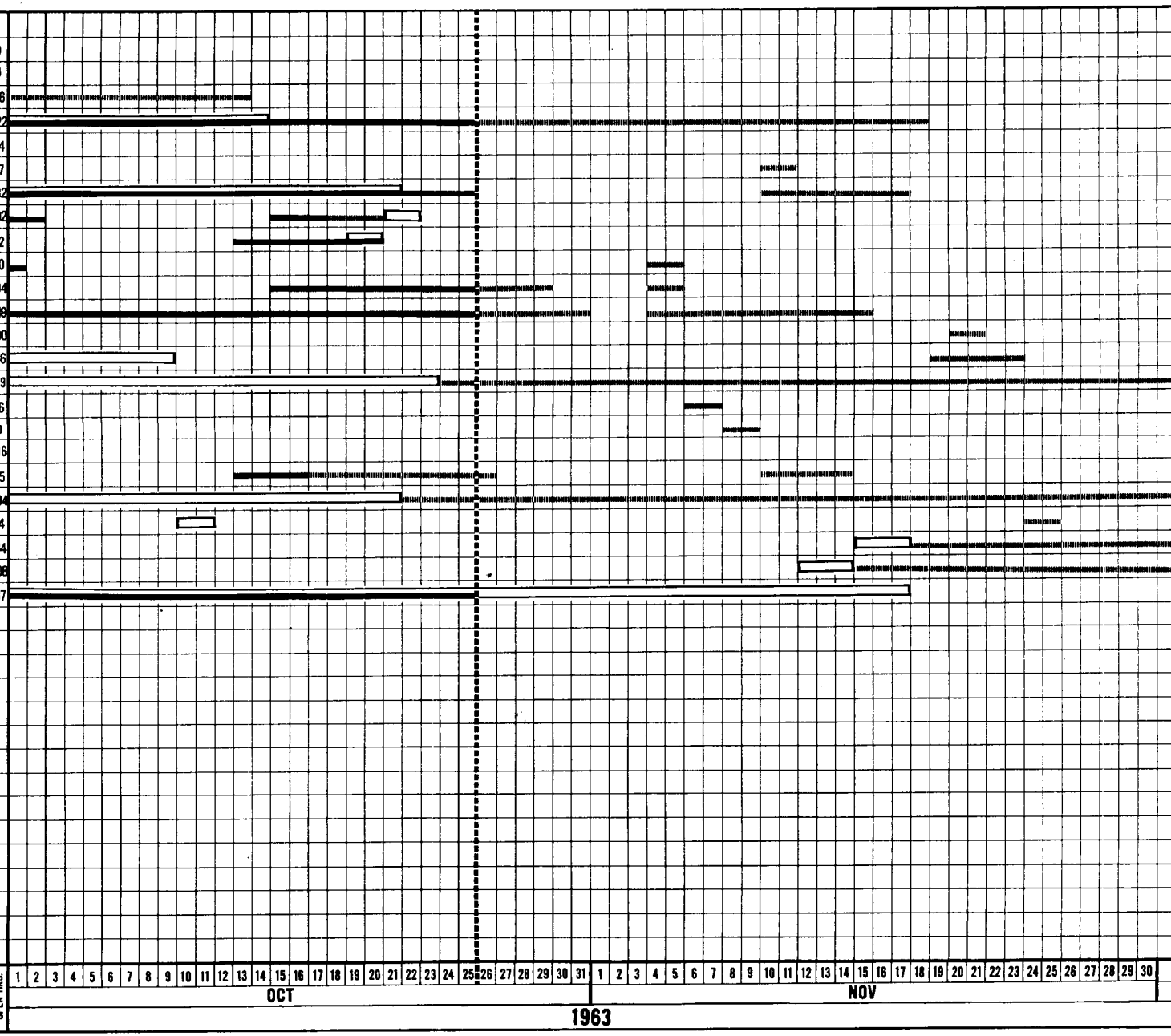

LEGEND:
- WORK PERIOD
- IN WORK
- EXTENDED WORK PERIOD

S C 2 WORK PLAN FINAL ASSY

	ZONE	TOTAL HRS.	OPEN HRS.
1. LARGE PRESSURE BULKHEAD	9	39	0
2. PRESSURE TEST	9	74	0
3. ECS INSTALLATION & PLUMBING	9	96	96
4. WIRE BUNDLES IN CABIN	9	452	422
5. PEDESTAL INSTALLATION	9	24	24
6. FIBERGLASS CHANNELS & MIN-K	11 12	382	47
7. INSTALL SHINGLES	4 5 6 7 8 9 11 12	678	482
8. INSTALL & RIG 32060 DOORS	11 12	148	104
9. INSTALL & RIG HATCHES	9 11 12	167	42
10. INSTALL STYROFOAM	3 7 8	82	30
11. INSTALL COLD PLATES & PLUMBING	4 7 8 9	198	194
12. INSTALL W/B IN EQUIPMENT BAYS	3 – 8	920	649
13. SPLICE THERMOCOUPLES & TEST	4 7 11 12	100	100
14. DITMCO	9	186	186
15. EQUIPMENT INSTALLATION (OTHER)	3 4 5 7 8 11 12	378	319
16. INSTALL STATIC SYSTEM	3 9	85	16
17. PRESSURE TEST STATIC SYSTEM	3 9	0	0
18. SST PHASE I	9	416	416
19. EQUIPMENT DOORS	7 8 9 11 12	58	55
20. EQUIPMENT INSTALLATION (CABIN)	9	648	494
21. SPLICE TEMP. SENSORS	4 5 7 8 9	74	74
22. MECHANICAL MATE	16	134	134
23. HEAT SHIELD INSTALLATION	10	222	206
24. E.O.P.O.	16	195	187
CREWMAN SIMULATOR			
K321 SIMULATOR CHECKOUT			
INSTALL & MATE IN CABIN			
DEI			

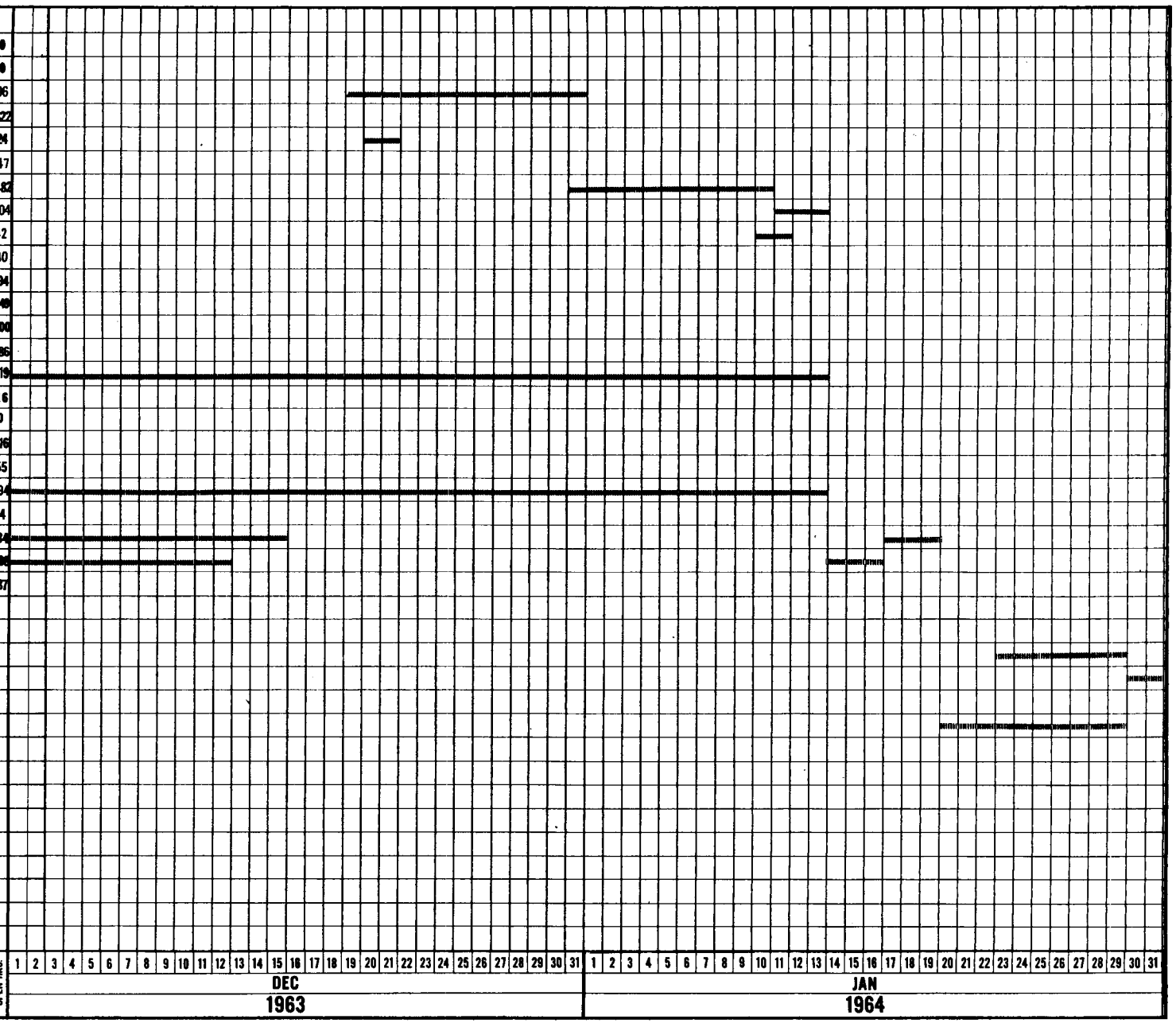

LEGEND:
- WORK PERIOD
- IN WORK
- EXTENDED WORK PERIOD

S/C NO. 2 SST PHASE 1

	R & R	
1.	SEQUENTIAL	A331
2.	MATE	
	RCS SECTION	
3.	RCS VALIDATION	B393
4.	MOVE TO HYPERGOLIC AREA	
5.	PRE-SERVICE	B391
6.	SERVICE	K505
7.	FIRING	B391
8.	DE-SERVICE	K505
9.	MOVE TO WHITE ROOM	
10.	MATE	
	CABIN SECTION	
11.	COOLANT SERVICING	K502
12.	COOLANT SYSTEM TEST	C385
13.	ECS	C381
14.	ELECT.	C311
15.	SEQUENTIAL	C331
16.	INSTR.	C321
17.	VSWR	K342
18.	COMM.	C341
19.	G & C, & HOR. SEN.	C311 & C351
20.	MATE	
	ADAPTER SECTION	
21.	MOVE TO WHITE ROOM	
22.	ECS CRYO.	D381
23.	CRYO SERVICING	K500
24.	RSS/FC GAS OPERATION	D312
25.	DE-SERVICE	K505
26.	FIRING	D391
27.	SERVICING	K505
28.	PRE-SERVICING	D391
29.	MOVE TO HYPERGOLIC AREA	
30.	ECS	D381
31.	ORMS VALIDATION	D393
32.	COMM, & VSWR	D341 & K342
33.	G & C	D311
34.	COOLANT SYSTEM	D385
35.	SEQUENTIAL	D381
36.	COOLANT SERVICING	K502
37.	LEAK TEST	D412

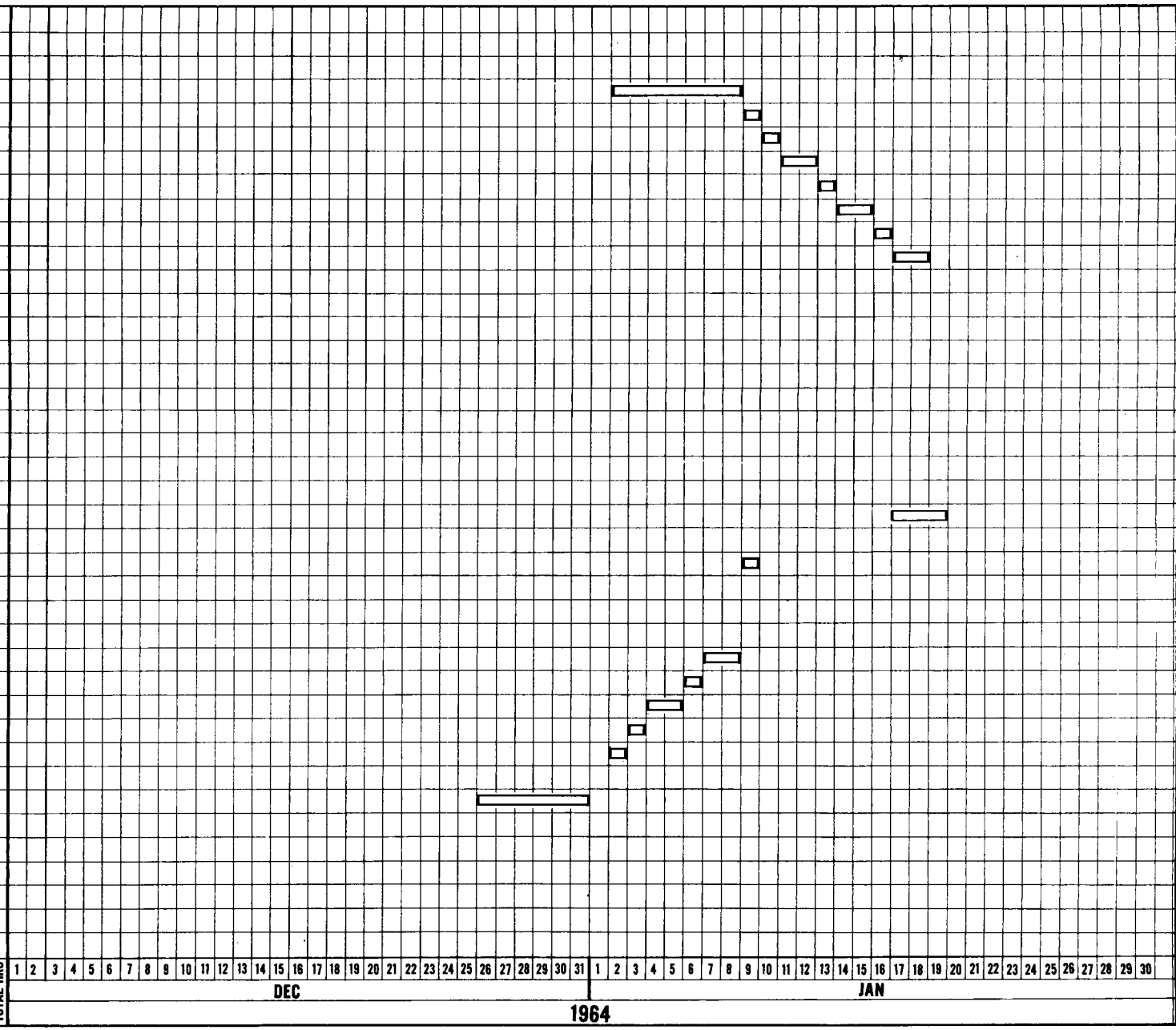

LEGEND:
- WORK PERIOD
- IN WORK
- EXTENDED WORK PERIOD

S C 2 WORK PLAN FINAL ASSY AND SST

1.	DEI		
2.	COOLANT SYSTEMS TEST	SEDR-H385	
3.	COOLANT SYSTEMS SERVICING	SEDR-K502	
4.	VSWR	SEDR-K342	
5.	ELECTRICAL SYSTEMS TEST	SEDR-H311	
6.	SEQUENTIAL SYSTEMS TEST	SEDR-H331	
7.	INSTRUMENTATION SYSTEM TEST	SEDR-H321	
8.	COMMUNICATIONS TEST	SEDR-H341	
9.	G & C TEST	SEDR-H371	
10	E C S TEST	SEDR-H381	
11.	RSS/FC VALIDATION	SEDR-D386	
12.	MOVE TO CRYO FACILITY		
13.	RSS/FC OPERATION	SEDR-D312	
14.	CRYO SERVICING	SEDR-K500	
15.	RSS/FC CRYO OPERATION	SEDR-D313	
16.	ECS TEST (CYRO) & DE-SERVICE	SEDR-D381	
	MOVE		
17.	PRE-VIBRATION SERVICING	SEDR-K506	
18.	VIBRATION	SEDR-H480	
19.	ECS HI PRESSURE O2	SEDR-H382	
20.	PRE-ALTITUDE SERVICING	SEDR-H388	
21.	CRYO SERVICING	SEDR-K500	
22.	ALTITUDE CHAMBER	SEDR-H383	
	MOVE TO WHITE ROOM		
23.	RCS - OAMS TEST	SEDR-H392	
24.	FINAL MANUFACTURING CLEAN UP		
25.	CONFIDENCE CHECKS	SEDR-H430	
26.	SIMULATED FLIGHT	SEDR-H431	

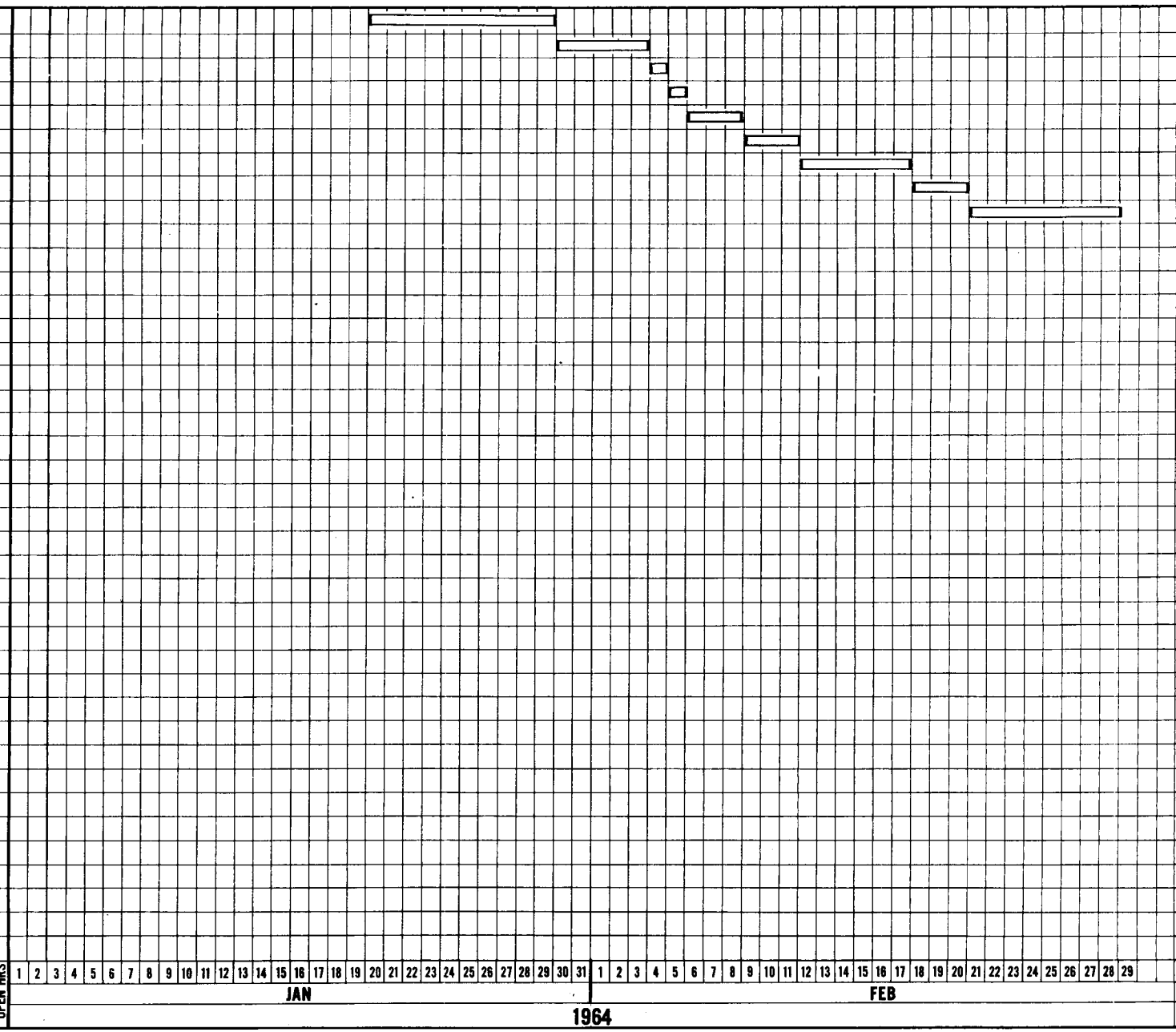

LEGEND:
- WORK PERIOD
- IN WORK
- EXTENDED WORK PERIOD

S C 2 WORK PLAN FINAL ASSY AND SST

1. DEI	
2. COOLANT SYSTEMS TEST	SEDR H385
3. COOLANT SYSTEMS SERVICING	SEDR-K502
4. VSWR	SEDR-K342
5. ELECTRICAL SYSTEMS TEST	SEDR-H311
6. SEQUENTIAL SYSTEMS TEST	SEDR-H311
7. INSTRUMENTATION SYSTEM TEST	SEDR-H321
8. COMMUNICATIONS TEST	SEDR-H341
9. G & C TEST	SEDR-H371
10. ECS TEST	SEDR-H381
11. RSS/FC FUNCTIONAL TEST	SEDR-D386
12. MOVE TO CRYO FACILITY	
13. RSS/FC OPERATION	SEDR D312
14. CRYO SERVICING	SEDR-K500
15. RSS/FC CRYO OPERATION	SEDR-D313
16. ECS TEST (CYRO) & DE-SERVICE	SEDR D381
MOVE	
17. PREVIBRATION SERVICING	SEDR-K506
18. VIBRATION	SEDR-H480
19. ECS HI PRESSURE O	SEDR-H382
20. PRE-ALTITUDE SERVICING	SEDR-H388
21. CRYO SERVICING	SEDR-K500
22. ALTITUDE CHAMBER	SEDR-H383
MOVE TO WHITE ROOM	
23. RCS - OAMS TEST	SEDR-H392
24. FINAL MANUF. CLEAN UP	
25. CONFIDENCE CHECKS	SEDR-H430
26. SIMULATED FLIGHT	SEDR-H431

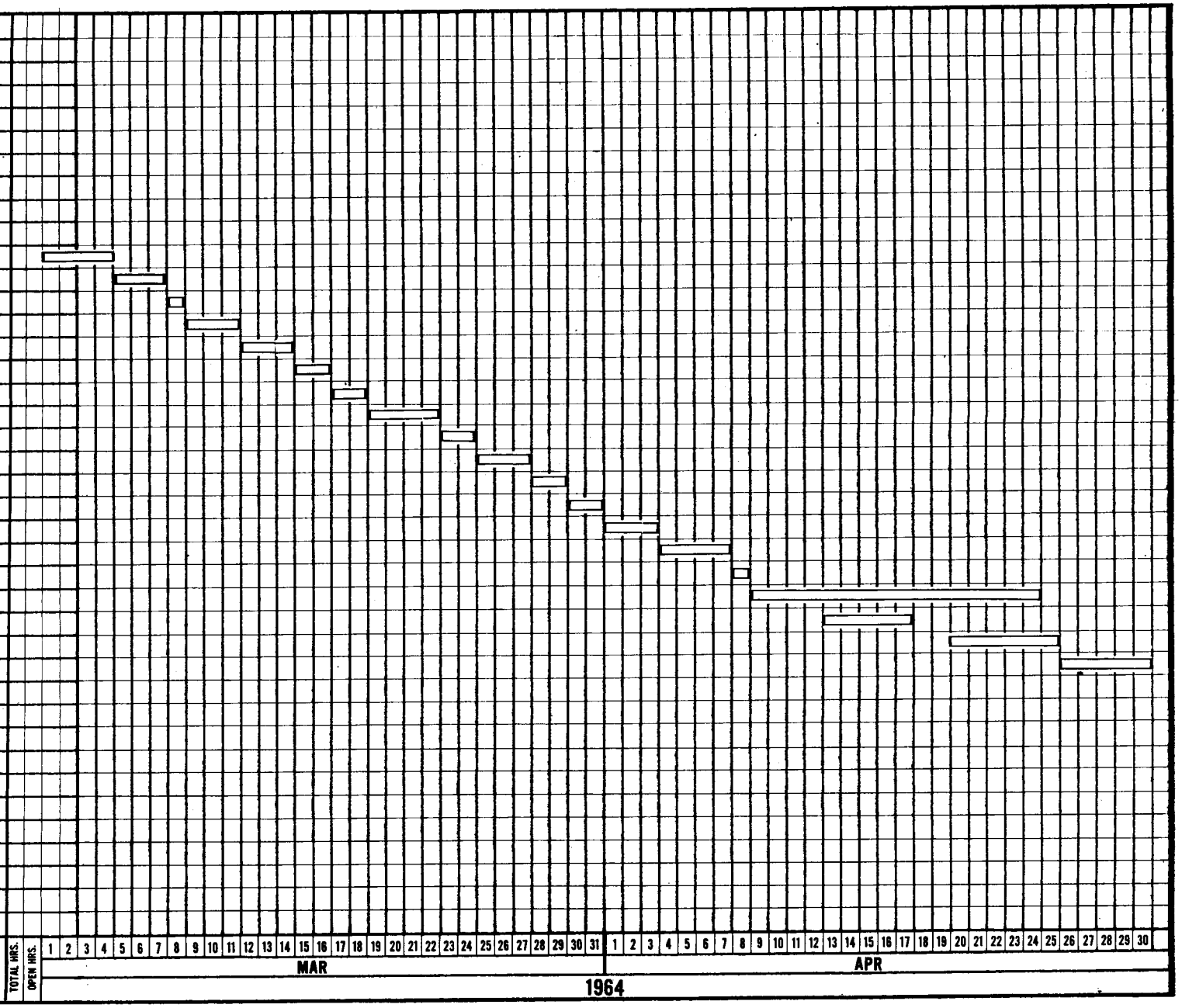

LEGEND:
- WORK PERIOD
- IN WORK
- EXTENDED WORK PERIOD

S C 2 WORK PLAN MODULE FINAL ASSY

		TOTAL HRS.	OPEN HRS.
RCS	2		
1. INSTALL PLUMBING & PRESSURE TEST		264	264
2. INSTALL W/B - T/C - T/S		204	192
3. FIBERGLASS CHANNELS - MIN - K - INSULATION		16	16
4. INSTALL EQUIP		160	105
5. INSTALL SHINGLES - RETAINERS		158	114
6. DITMCO - T/C - T/S TEST		107	107
7. S S T		104	104
8. INSTALL THRUST CHAMBERS		28	28
9. INSTALL STYROFOAM		11	11
10. NASA/MAC INSPECTION		45	45
R & R	1		
11. INSTALL W/B - T/C - T/S		88	88
12. FIBERGLASS CHANNELS - MIN - K - INSULATION		178	178
13. INSTALL EQUIP		122	80
14. INSTALL SHINGLES - RETAINERS		179	164
15. DITMCO - T/C - T/S TEST		80	80
16. S S T		12	4
17. NASA/MAC INSPECTION		12	12
ADAPTER	13		
18. INSTALL PLUMBING & PRESSURE TEST		266	266
19. INSTALL W/B - T/C - T/S		887	887
20. INSTALL EQUIPMENT		258	258
21. DTMCO - T/C - T/S TEST		96	96
22. S S T		101	101
23. NASA/MAC INSPECTION		66	66
24. INSTALL THRUST CHAMBERS			

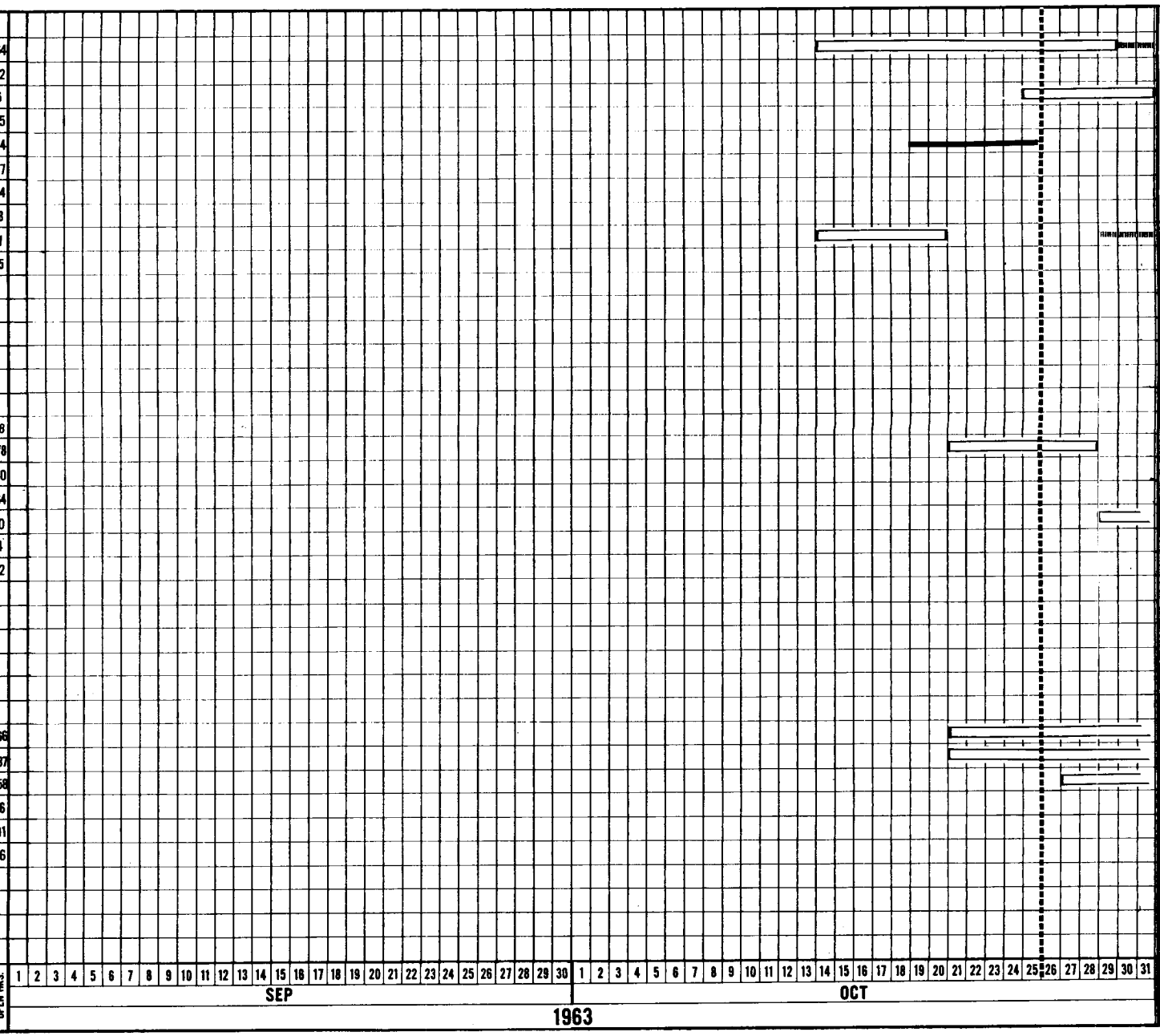

LEGEND: WORK PERIOD
IN WORK
EXTENDED WORK PERIOD

ZONE

S C 2 WORK PLAN MODULE FINAL ASSY

	ZONE	TOTAL HRS.	OPEN HRS.
RCS	2		
1. INSTALL PLUMBING & PRESSURE TEST		264	264
2. INSTALL W/B - T/C - T/S		204	192
3. FIBERGLASS CHANNELS - MIN - K - INSULATION		16	16
4. INSTALL EQUIP		160	105
5. INSTALL SHINGLES - RETAINERS		158	114
6. DITMCO - T/C - T/S TEST		107	107
7. S S T		104	104
8. INSTALL THRUST CHAMBERS		28	28
9. INSTALL STYROFOAM		11	11
10. NASA/MAC INSPECTION		4	5
R & R	1		
11. INSTALL W/B - T/C - T/S		88	88
12. FIBERGLASS CHANNELS - MIN - K - INSULATION		178	178
13. INSTALL EQUIP		122	80
14. INSTALL SHINGLES - RETAINERS		179	164
15. DITMCO - T/C - T/S TEST		80	80
16. S S T		12	4
17. NASA/MAC INSPECTION		12	12
ADAPTER	13		
18. INSTALL PLUMBING & PRESSURE TEST		266	266
19. INSTALL W/B - T/C - T/S		887	887
20. INSTALL EQUIPMENT		258	258
21. DTMCO - T/C - T/S TEST		96	96
22. S S T		101	101
23. NASA/MAC INSPECTION		66	66
24. INSTALL THRUST CHAMBERS			

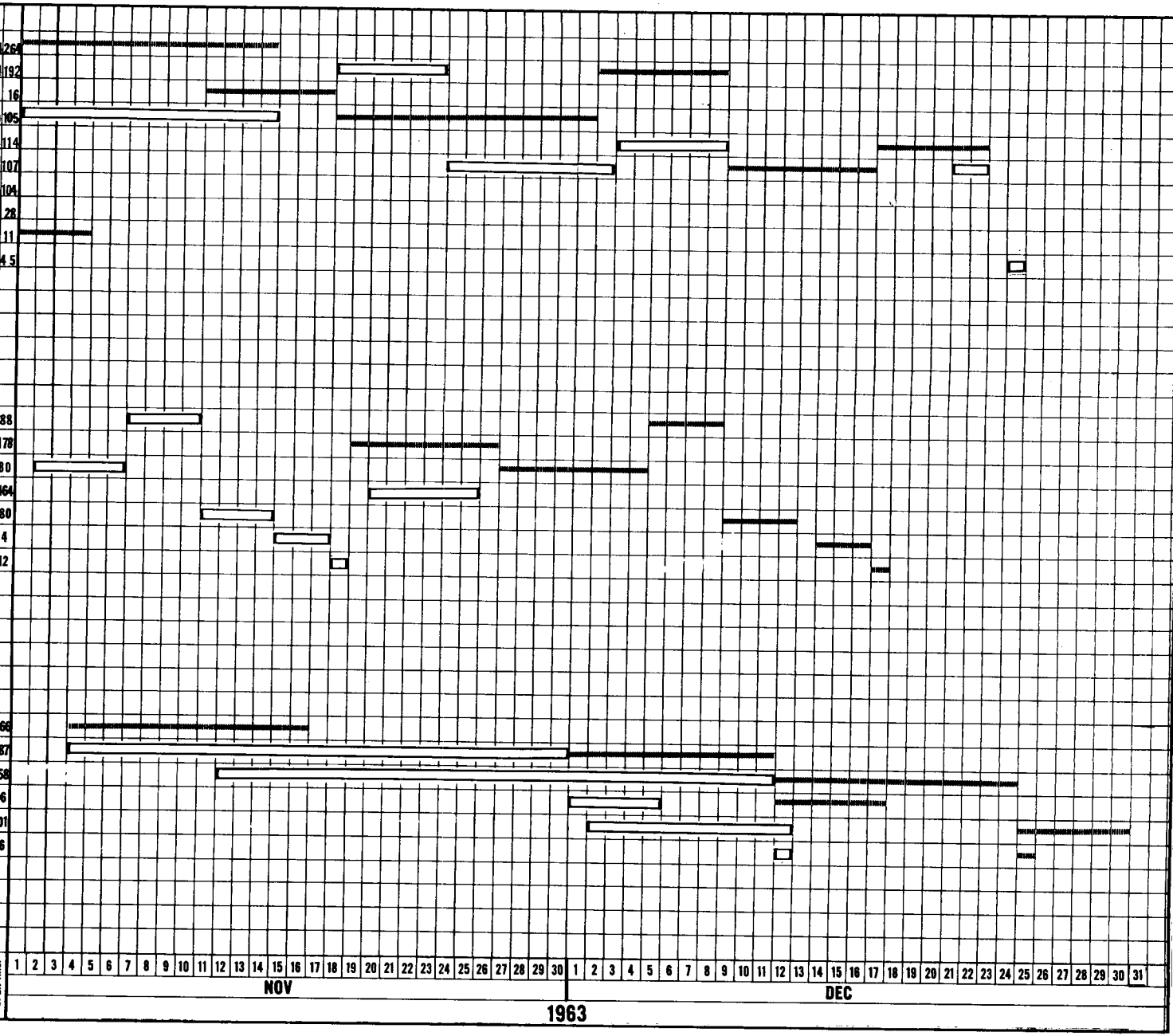

LEGEND:
- WORK PERIOD
- IN WORK
- EXTENDED WORK PERIOD

S C 2 WORK PLAN MODULE FINAL ASSY

		TOTAL HRS	OPEN HRS
RCS	2		
1. INSTALL PLUMBING & PRESSURE TEST		264	264
2. INSTALL W/B - T/C - T/S		204	192
3. FIBERGLASS CHANNELS - MIN - K - INSULATION		16	16
4. INSTALL EQUIP		160	105
5. INSTALL SHINGLES - RETAINERS		158	114
6. DITMCO - T/C - T/S TEST		107	107
7. S S T		104	104
8. INSTALL THRUST CHAMBERS		28	28
9. INSTALL STYROFOAM		11	11
10. NASA/MAC INSPECTION		45	45
R & R	1		
11. INSTALL W/B - T/C - T/S		88	88
12. FIBERGLASS CHANNELS - MIN - K - INSULATION		178	178
13. INSTALL EQUIP		122	80
14. INSTALL SHINGLES - RETAINERS		179	164
15. DITMCO - T/C - T/S TEST		80	80
16. S S T		12	4
17. NASA/MAC INSPECTION		12	12
ADAPTER	13		
18. INSTALL PLUMBING & PRESSURE TEST		266	266
19. INSTALL W/B - T/C - T/S		887	887
20. INSTALL EQUIPMENT		258	258
21. DTMCO - T/C - T/S TEST		96	96
22. S S T		101	101
23. NASA/MAC INSPECTION		66	66
24. INSTALL THRUST CHAMBERS			

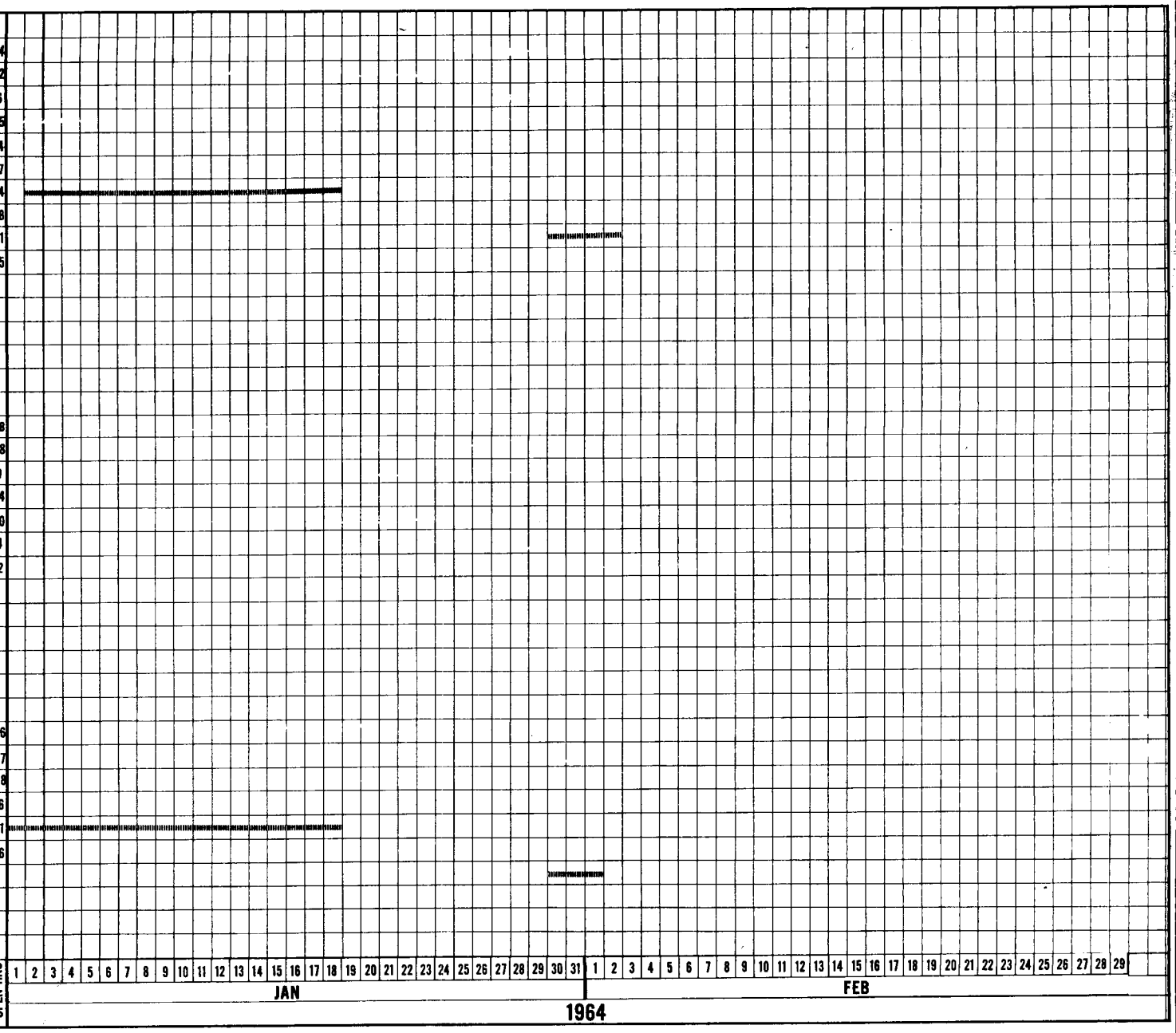

LEGEND:
- WORK PERIOD
- IN WORK
- EXTENDED WORK PERIOD

ZONE

SST FACILITIES
PROJECTED ACTIVATION SCHEDULE

10-25-63

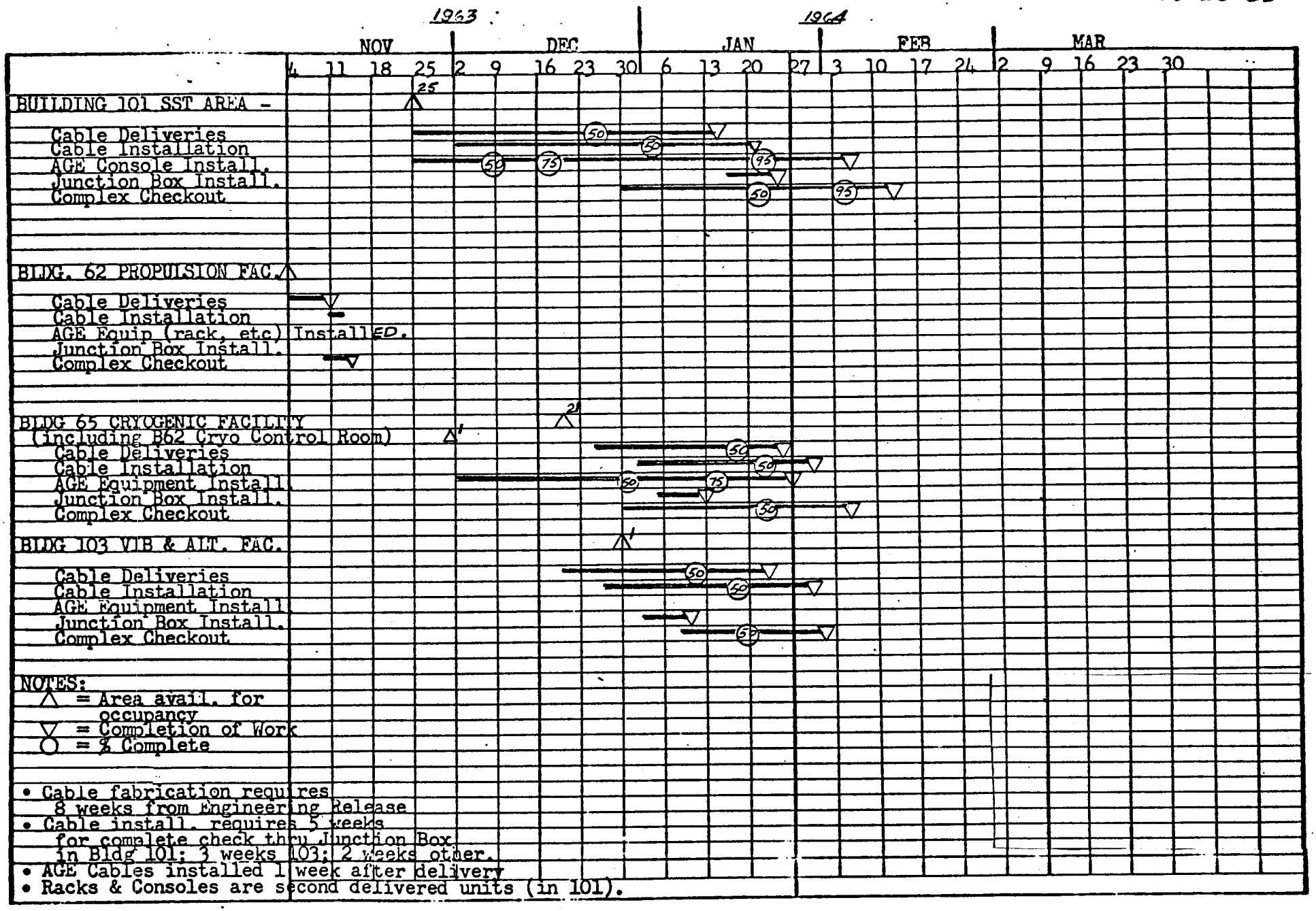

MAC 2276 (24 DEC 58)

PHASE I
SST S/C #2
SEDR'S & AGE AVAILABILITY

LEGEND: CAPE FAB - C; MAC FAB - M; -501 AVAIL - ▽; ECD DELIV - ◊; SCHED FAB - F; EED FAB - E; VENDOR FAB - P; -1 AVAIL - △; ECD INSTL - ▼

AS OF 10/25/63

S/C #2 SST
PHASE I

TEST TITLE: ADAPTER & RCS SECTION VALIDATION & FUNCTIONAL TEST

SEDR No.: 8393

DATE AVAILABLE: 11-20-63

START OF TEST: ADAPTER 12-26-63
RCS 1-2-64

AGE REQUIRED

PART No.	NAME	SLACK	
52E420006-1	C/O UNIT	+8.8 WKS	P
52E420007-3	CONTROL UNIT	+8.8 WKS	P
52E420007-1	C/O ADAPTER	+8.8 WKS	P

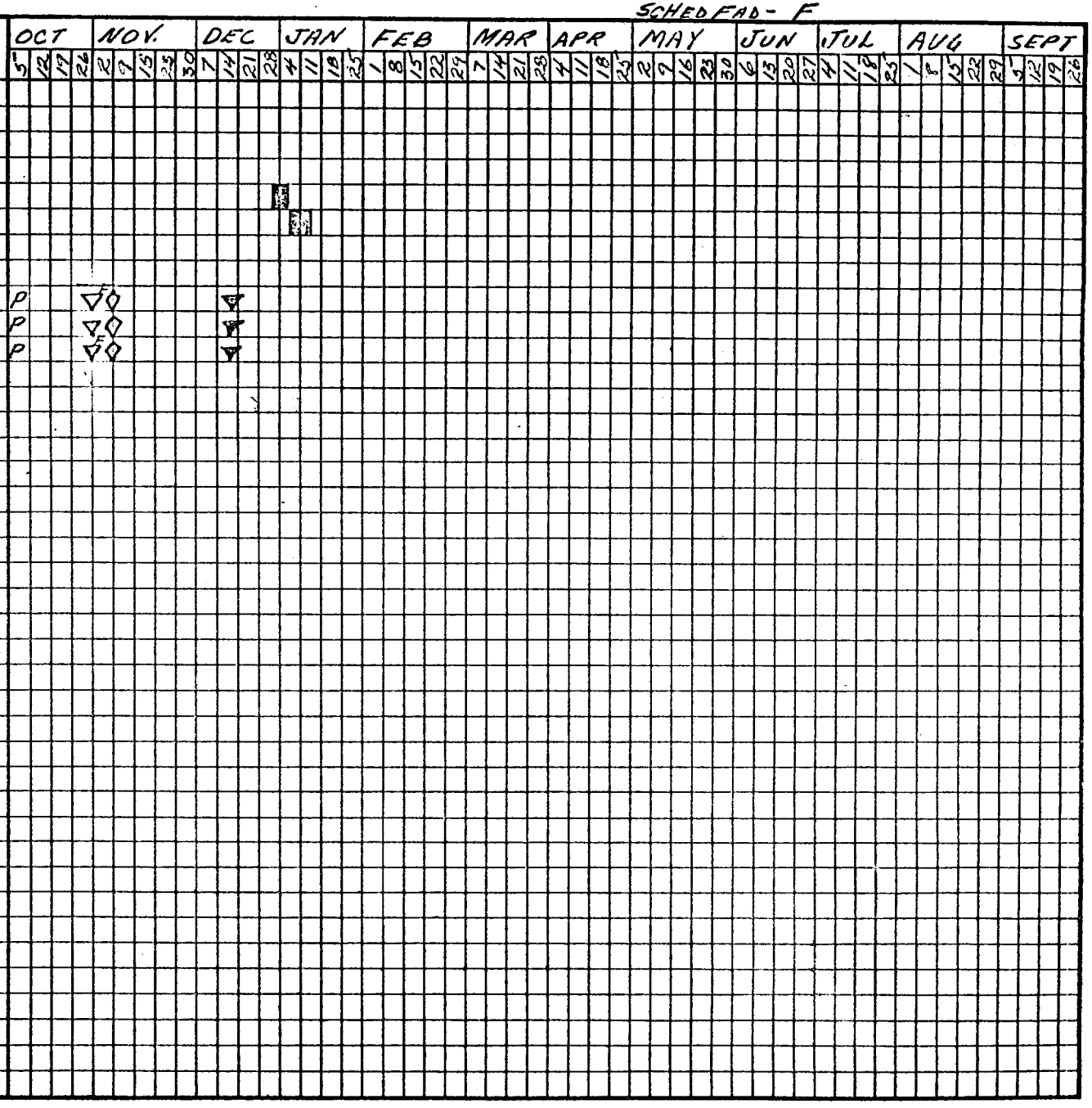

MAC 2274V (27 APR 59)

LEGEND: Cape Fab - C
Mac Fab - M
-50% Avail - ▽
ECD. Deliv - ◇
Schld FAD. - F
E.E.D. Fab - E
Vendor Fab - P
-1 Avail - Δ
ECD. Instl - ▼

PAGE 2. AS OF 10/25/63

S/C # 2 S.S.T.
Phase I

① TEST TITLE: CREWMAN SIMULATOR C/O
② INST. IN CABIN S' MATE

SEDR Nº: K321
Date Available: 11-27-63
Start of Test: 1-2-64

AGE. Required

Part Nº	Name	Slack	OCT 5	12	19	26	NOV 2	9	16	23	30	DEC 7	14	21	28	JAN 4	11	18	25	FEB 1	8	15	22	29	MAR 7	14	21	28	APR 4	11	18	25	MAY 2	9	16	23	30	JUNE 6	13	20	27	JULY 4	11	18	25	AUG 1	8	15	23	30	SEPT 5	12	19	26
52E 230005-1	POWER SYST	+2.0 WKS	E											▽	◇E	▽																																						
52E 230033-1	CONTROL BOX	+6.4 WKS	P							▽			◇	E▼																																								
52E 230038-1	POWER SUPPLY	+5.0 WKS	E									▽	◇F	▼																																								
52E 440027-1	GENERATOR-TIME	+11.2 WKS	P		▽								◇	▼																																								
52E 440033-1	HARNESS ASSY	+11.2 WKS	M		▽			F					◇	▽																																								
52E 440044-1	MONITOR SYS. TEMP.	+11.2 WKS	M		▽			F					◇	▼																																								
52E 440059-1	PALLET TSTR				NOT A NASA APPROVED ITEM																																																		
52E 440060-1	CABLES				NOT A NASA APPROVED ITEM																																																		

MAC 2274V (27 APR 59)

LEGEND: CAPE FAB - C EED FAB - E
MAC FAB - M VENDOR FAB - P
-501 AVAIL - ▽ -1 AVAIL - △
ECD DELIV - ◇ ECD INSTL - ▼
SCHED FAB - F

AS OF 10/25/63

S/C #2 SST
PHASE I

TEST TITLE: ADAPTER & RCS SECTION
PRE-SERVICING & STATIC FIRE
SEDR No: B391
DATE AVAILABLE: 11-29-63
START OF TEST: ADPTR P/SRV 1-3-64
ADPTR ST/FR 1-6-64
RCS P/SRV 1-10-64
RCS ST/FR 1-13-64

AGE REQUIRED

PART No.	NAME	SLACK	
52E420007-1	CONTROL UNIT	+2.0 WKS	M
52E420013-1	N. PRESS PANEL	+9.3 WKS	P
52E420014-1	NE PRESS PANEL	+9.3 WKS	P

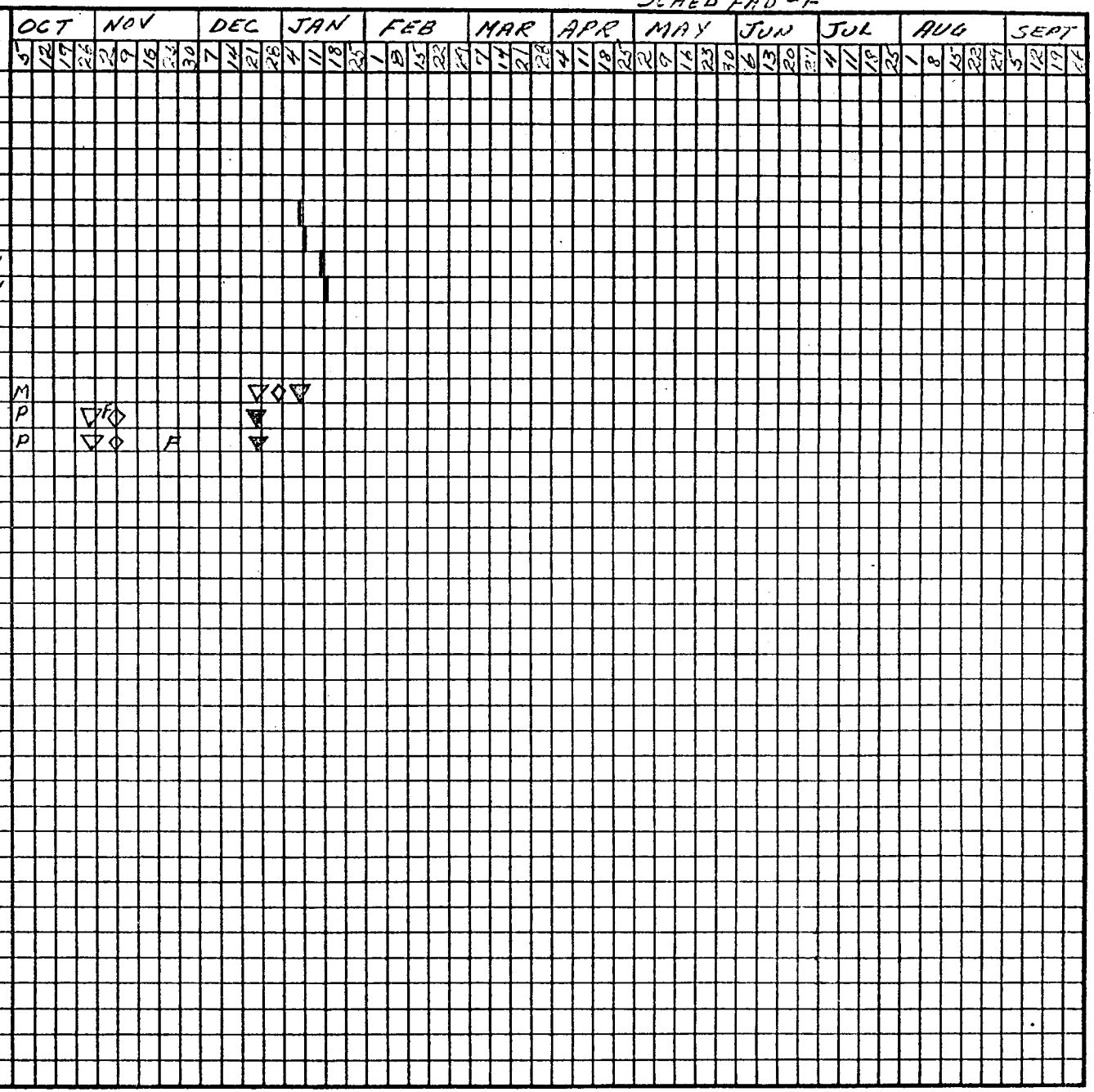

LEGEND: CAPE FAB - C, MAC FAB - M, -501 AVAIL - ▽, ECD DELIV - ◇, SCHED FAB - F, EED FAB - E, VENDOR FAB - P, -1 AVAIL - △, ECD INSTL - ▼

 AS OF 10/25/63

S/C #2 SST
PHASE I

TEST TITLE: ADAPTER & RCS SERVICING & DE-SERVICE
SEDR No.: K 505
DATE AVAILABLE: 11-23-63
START OF TEST: ADAPTR SRV 1-4-64
ADAPTR D/SRV 1-7-64
RCS SRV 1-11-64
RCS D/SRV 1-14-64

AGE REQUIRED

PART No.	NAME	SLACK	
52E420030-1	HOSE ASSY	+11.0 WKS	M
52E420033-1	HOSE ASSY	+11.0 WKS	M
52E420045-1	HOSE ASSY	+11.0 WKS	M
52E420048-1	FIXTURE	+5.0 WKS	M
52E420096-1	HOSE ASSY	+11.0 WKS	M
52E420124-1	HOSE ASSY	+8.6 WKS	M
52E420128-1	HOSE ASSY	+11.0 WKS	M
52E420130-1	HOSE ASSY	+11.0 WKS	M
52E420065-1	HOSE ASSY	+7.8 WKS	M
52E420127-1	HOSE ASSY	+11.0 WKS	M
52E420129-1	HOSE ASSY	+11.0 WKS	M
52E420064-1	HOSE ASSY	+7.8 WKS	M
52E420075-1	HOSE ASSY	+11.0 WKS	M
52E420039-1	HOSE ASSY	+11.0 WKS	M
52E420041-1	HOSE ASSY	+11.0 WKS	M
52E420044-1	HOSE ASSY	+11.0 WKS	M
52E420046-1	HOSE ASSY	+11.0 WKS	M
52E420063-1	HOSE ASSY	+10.0 WKS	M
52E420084-1	HOSE ASSY	+10.0 WKS	M

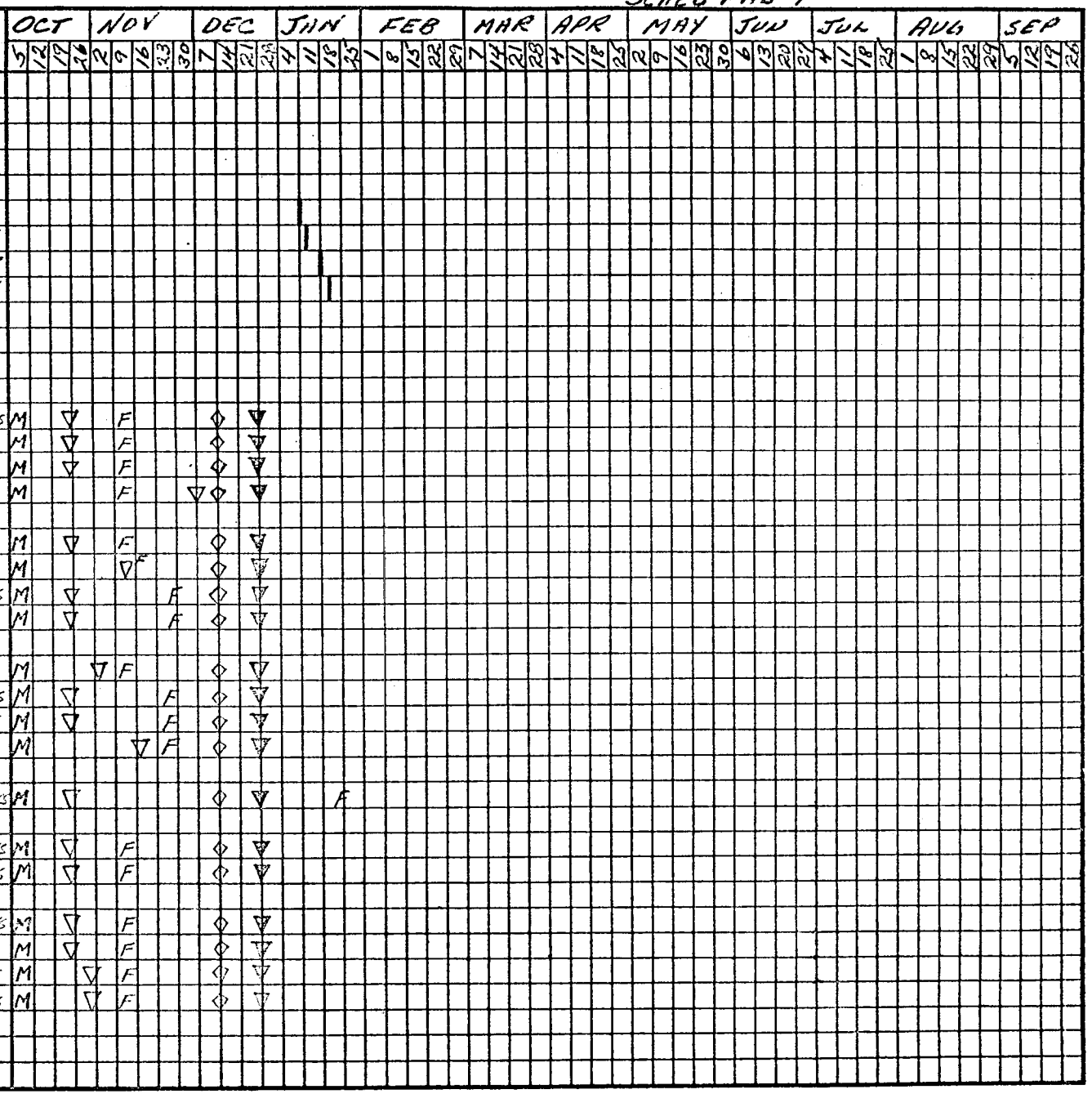

 AS OF 10/25/63

S/C #2 SST
PHASE I

TEST TITLE: ADAPTER & RCS SERVICING & DE-SERVICING
SEDR No.: K505
DATE AVAILABLE: 11-23-63
START OF TEST: ADPTR SRV 1-4-64
ADPTR D/SRV 1-7-64
RCS SRV 1-11-64
RCS D/SRV 1-14-64

AGE REQUIRED

PART No	NAME	SLACK		OCT 5	OCT 12	OCT 19	OCT 26	NOV 2	NOV 9	NOV 16	NOV 23	NOV 30	DEC 7	DEC 14	DEC 21	DEC 28	JAN 4	JAN 11	JAN 18	JAN 25	FEB 1	FEB 8	FEB 15	FEB 22	FEB 29	MAR 7	MAR 14	MAR 21	MAR 28	APR 4	APR 11	APR 18	APR 25	MAY 2	MAY 9	MAY 16	MAY 23	MAY 30	JUN 6	JUN 13	JUN 20	JUN 27	JUL 4	JUL 11	JUL 18	JUL 25	AUG 1	AUG 8	AUG 15	AUG 22	AUG 29	SEP 5	SEP 12	SEP 19	SEP 26
52E420090-1	HOSE ASSY	+11.0 WKS	M			▽			F					◇		▼																																							
52E420125-1	HOSE ASSY	+11.0 WKS	M			▽			F					◇		▼																																							
52E420012-1	METERING UNIT	+11.0 WKS	P			▽								◇		▼																																							
52E420013-1	PRES'N UNIT	+11.0 WKS	P			▽		F	◇							▼																																							
52E420091-1	HOSE ASSY	+11.0 WKS	M			▽			F					◇		▼																																							
52E420008-1	FLUSHING UNIT	+11.0 WKS	P			▽			F					◇		▼																																							
52E420016-1	DISPOSAL	+11.0 WKS	P			▽			F					◇		▼																																							
52E420153-1	HOSE ASSY	+11.0 WKS	M			▽								◇		▼				F																																			
52E420002-1	SRV UNIT OXID	+5.8 WKS	P								▽			◇		▼																																							
52E420007-1	CONTROL UNIT	+2.2 WKS	M												▽	◇	▼																																						
52E420128-3	HOSE ASSY	+11.0 WKS	M			▽					F			◇		▼																																							
52E420130-3	HOSE ASSY	+11.0 WKS	M			▽								◇		▼																																							
52E420154-1	HOSE ASSY	+11.0 WKS	M			▽								◇		▼				F																																			
52E420019-7	ADPTR KIT	+8.2 WKS	P						▽	F				◇		▼																																							
52E420019-9	ADPTR KIT	+8.2 WKS	P						▽	F				◇		▼																																							
52E420019-11	ADPTR KIT	+8.2 WKS	P						▽	F				◇		▼																																							
52E420029-1	HOSE ASSY	+11.0 WKS	M			▽					F			◇		▼																																							
52E420018-1	FIXTURE		M						F			▽		◇		▼																																							
52E420019-5	ADPTR KIT		P						▽	F				◇		▼																																							
52E420100-1	BTL-OXID SMAL	+11.0 WKS	C			▽			F					◇		▼																																							
52E420022-1	HOSE ASSY	+11.0 WKS	M			▽					F			◇		▼																																							
52E420025-1	HOSE ASSY	+11.0 WKS	M			▽			F					◇		▼																																							

PAGE 3 OF 3 AS OF 10/25/63

S/C #2 SST
PHASE I

TEST TITLE: ADAPTER & RCS SERVICING & DE-SERVICING
SEDR No.: K505
DATE AVAILABLE: 11-23-63
START OF TEST: ADPTR SERV 1-4-64
ADPTR DISERV 1-7-64
RCS SERV 1-11-64
RCS DISERV 1-14-64

AGE REQUIRED

PART No.	NAME	SLACK	OCT 5	12	19	26	NOV 2	9	16	23	30	DEC 7	14	21	28	JAN 4	11	18	25	FEB 1	8	15	22	29	MAR 7	14	21	28	APR 4	11	18	25	MAY 2	9	16	23	30	JUN 6	13	20	27	JUL 4	11	18	25	AUG 1	8	15	22	29	SEPT. 5	12	19	26
52E420024-1	FLUSHING UNIT	+5.8 WKS	P								▽		◇		▽																																							
52E420025-1	METERING UNIT	+11.0 WKS	P		▽								◇		▽																																							
52E420071-1	HOSE ASSY	+11.0 WKS	M		▽					F			◇		▽																																							
52E420077-1	HOSE ASSY	+11.0 WKS	M		▽			F					◇		▽																																							
52E420019-5	ADAPTER KIT	+8.0 WKS	P					▽	F				◇		▽																																							
52E420099-1	BTL-SPIRL	+11.0 WKS	C		▽			F					◇		▽																																							
52E420079-1	HOSE ASSY	+11.0 WKS	M		▽			F					◇		▽																																							
52E420081-1	HOSE ASSY	+11.0 WKS	M		▽			F					◇		▽																																							
52E420001-1	SERV UNIT	+6.0 WKS	P								▽		◇		▽																																							
52E420085-1	HOSE ASSY	+11.0 WKS	M		▽			F					◇		▽																																							
52E420086-1	HOSE ASSY	+11.0 WKS	M		▽			F					◇		▽																																							
52E420073-1	HOSE ASSY	+11.0 WKS	M		▽								◇		▽				F																																			
52E420065-1	DISPOSAL	+11.0 WKS	P		▽			F					◇		▽																																							
52E420074-1	HOSE ASSY	+11.0 WKS	M		▽			F					◇		▽																																							
52E420082-1	HOSE ASSY	+11.0 WKS	M		▽			F					◇		▽																																							
52E420092-1	HOSE ASSY	+11.0 WKS	M		▽			F					◇		▽																																							
52E420126-1	HOSE ASSY	+11.0 WKS	M		▽			F					◇		▽																																							
52E420066-1	DRY CHEM	+11.0 WKS	P		▽								◇		▽																																							
52E420140-1	HOSE ASSY	+9.4 WKS	M				▽	F					◇		▽																																							
52E420069-1	HOSE ASSY	+11.0 WKS	M		▽					F			◇		▽																																							
52E420070-1	HOSE ASSY	+11.0 WKS	M		▽					F			◇		▽																																							

MAC 2274V (27 APR 59)

LEGEND: CAPE FAB - C; MAC FAB - M; -501 AVAIL - ▽; ECD DEL - ◇; SCHED FAD - F; EED FAB - E; VENDOR FAB - P; -1 AVAIL - △; ECD INSTL - ▼

1. PAGE 1 OF 2 AS OF 10-25-63

S/C #2 SST PHASE II

TEST TITLE: COOLANT SYSTEMS TEST

SEDR No.: H385

DATE AVAILABLE: 12-20-63

START OF TEST: 1-30-64

ALE REQUIRED

PART NO	NAME	SLACK		OCT 5	OCT 12	OCT 19	OCT 26	NOV 2	NOV 9	NOV 16	NOV 23	NOV 30	DEC 7	DEC 14	DEC 21	DEC 28	JAN 4	JAN 11	JAN 18	JAN 25	FEB 1	FEB 8	FEB 15	FEB 22	FEB 29	MAR 7	MAR 14	MAR 21	MAR 28	APR 4	APR 11	APR 18	APR 25	MAY 2	MAY 9	MAY 16	MAY 23	MAY 30	JUN 6	JUN 13	JUN 20	JUN 27	JUL 4	JUL 11	JUL 18	JUL 25	AUG 1	AUG 8	AUG 15	AUG 22	AUG 29	SEPT 5	SEPT 12	SEPT 19	SEPT 26
NOTE: SEDR H385 IS A COMBINATION OF SEDR'S C385 & D385 LESS 52E180109-1																																																								
52E180004-1	COOLANT SERV.	+14.0 WKS	P				▽			F							◇		▼																																					
52E180014-1	ECS C/O CNSL.	+1.8 WKS	M																▽◇		▼																																			
52E180017-1	COOLING UNIT	+14.0 WKS	P				▽			F							◇		▼																																					
52E180027-1	LEAKAGE TSTR.	+14.0 WKS	P				▽				F						◇		▼																																					
52E180057-1	HOSE ASSY	+14.0 WKS	M				▽								F		◇		▼																																					
52E180181-3	HOSE ADAPTER	+7.0 WKS	M											▽			◇		▼																																					
52E180076-1	ECS CONSOLE	+11.6 WKS	P						▽								◇		▼																																					
52E180097-1	HOSE ASSY	+14.0 WKS	M				▽								F		◇		▼																																					
52E180098-1	HOSE ASSY	+14.0 WKS	M				▽								F		◇		▼																																					
52E180103-1	HOSE ASSY	+14.0 WKS	M				▽		F								◇		▼																																					
52E180107-1	HOSE ASSY	+14.0 WKS	M				▽								F		◇		▼																																					
52E010016-3	TRAILER	+14.0 WKS	P				△										◇		▼																																					
52E010022-1	HANDLE ASSY		ON STOP ORDER - PENDING CANCELLATION																																																					
52E010052-1	HATCH EDGE CVR	+14.0 WKS	M				△										◇		▼																																					
52E010060-1	HATCH-LH FRAME	+7.8 WKS	M										▽	F			◇		▼																																					
52E010060-2	HATCH-RH FRAME	+7.8 WKS	M										▽	F			◇		▼																																					
52E180038-13	TERM BOX	+13.0 WKS	C					▽									◇		▼																																					
52E180038-49	TERM BOX	+13.0 WKS	C					▽									◇		▼																																					
52E180038-65	TERM BOX	+13.0 WKS	C					▽									◇		▼																																					
52E180038-71	TERM BOX	+13.0 WKS	C					▽									◇		▼																																					

MAC 2274V (27 APR 59)

1A) PAGE 2 OF 2 AS OF 10/25/63

S/C #2 SST
PHASE II

PART Nº.	NAME	SLACK	OCT	NOV	DEC	JAN	FEB	MAR	APR	MAY	JUN	JUL	AUG	SEP
52E 180038-73	TERM BOX	+13.0 WKS	C	▽		◊ ▽								
52E 180038-75	TERM BOX	+13.0 WKS	C	▽		◊ ▽								
52E 180038-77	TERM BOX	+13.0 WKS	C	▽		◊ ▽								
52E 180038-79	TERM BOX	+13.0 WKS	C	▽		◊ ▽								
52E 180038-81	TERM BOX	+13.0 WKS	C	▽		◊ ▽								
52E 180038-83	TERM BOX	+13.0 WKS	C	▽		◊ ▽								
52E 180038 87	TERM BOX	+13.0 WKS	C	▽		◊ ▽								

MAC 2274V (27 APR 59)

LEGEND: CAPE FAB – C; MAC FAB – M; -501 AVAIL – ▽; ECD DELIV – ◊; SCHED FAB – F; EED FAB – E; VENDOR FAB – P; -1 AVAIL – △; ECD INSTL – ▼

10/25/63

S/C #2 SST PHASE II

TEST TITLE: COOLANT SYSM. SERV.

SEDR No.: K502
DATE AVAILABLE: 12-24-63
START OF TEST: 2-5-64

AGE REQUIRED

PART No	NAME	SLACK	OCT 5	OCT 12	OCT 19	OCT 26	NOV 2	NOV 9	NOV 16	NOV 23	NOV 30	DEC 7	DEC 14	DEC 21	DEC 28	JAN 4	JAN 11	JAN 18	JAN 25	FEB 1	FEB 8	FEB 15	FEB 22	FEB 29	MAR 7	MAR 14	MAR 21	MAR 28	APR 4	APR 11	APR 18	APR 25	MAY 2	MAY 9	MAY 16	MAY 23	MAY 30	JUN 6	JUN 13	JUN 20	JUN 27	JUL 4	JUL 11	JUL 18	JUL 25	AUG 1	AUG 8	AUG 15	AUG 22	AUG 29	SEP 5	SEP 12	SEP 19	SEP 26
52E 180004-1	COOLANT SERV. UNIT	+15.0 WKS	P			▽			F							◊		▼																																				
180017-1	COOLING UNIT,	+15.0 WKS	P			▽			F							◊		▼																																				
180057-1	HOSE PUMP OUT.	+15.0 WKS	M			▽								F		◊		▼																																				
52E 180072-1	HOSE, COOL'T-EXCH.		CANCELLED CR #577																																																				
180096-1	BOTTLE COOL'T-SAMP.		NOT A [illegible] ITEM																																																				
230005-1	CONSOLE, CONTROL	+6.6 WKS	E											▽			◊		▼	F																																		

MAC 2274V (27 APR 59)

LEGEND: CAPE FAB —C EED FAB —E
MAC FAB —M VENDOR FAB—P
-501 AVAIL —▽ -1 AVAIL —△
ECD DELIV—◊ ECD INSTL —▼
SCHED FAD —F

3. 10/25/63

S/C #2 SST
PHASE II

TEST TITLE: ELECTRICAL SYSM. TEST

SEDR No: H-311
DATE AVAILABLE: 12-27-63
START OF TEST: 2-6-64

AGE REQUIRED

PART No.	NAME	SLACK	
52E 200004-1	TSTR-UMBIL. CBL.	+13.0 WKS	M
52E 200012-109	J. BOX - SST	+3.8 WKS	M
52E 230005-1	POWER SYSM	+6.8 WKS	E
52E 230008-1	POWER SUPLY	+10.8 WKS	E
52E 230012-1	CONSOLE	+10.8 WKS	E
52E 230038-1	POWER SUPLY	+9.8 WKS	E
52E 230004-1	CNSL. SEQ.	+5.4 WKS	E
52E 040010-1	SIMULATOR ADPTR	+7.8 WKS	M

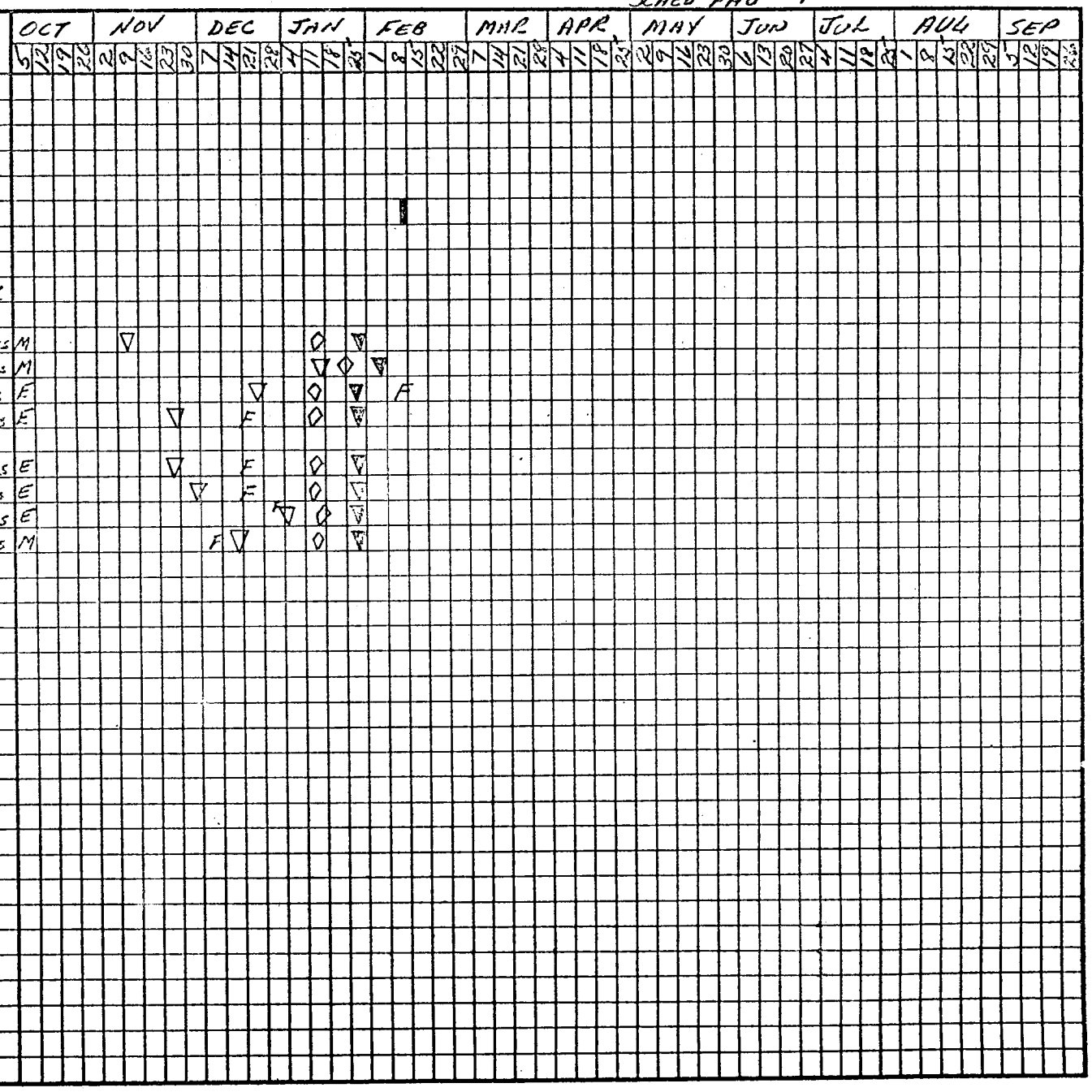

MAC 2274V (27 APR 59)

LEGEND: CAPE FAB – C; MAC FAB – M; –501 AVAIL – ▽; ECD DELIV – ◊; SCHED FAB – F; EED FAB – E; VENDOR FAB – P; –1 AVAIL – △; ECD INSTL – ▼

4. 10/25/63

S/C #2 SST PHASE II

TEST TITLE: SEQUENTIAL SYSM. TEST

SEDR NO: H331
DATE AVAILABLE: 12-30-63
START OF TEST: 2-9-63

AGE REQUIRED

PART NO.	NAME	SLACK	
32E040010-1	SIMULATOR-ADPTR.	+8.2 WKS	M
52E200004-1	TSTR-UMBL. CBL	+13.4 WKS	M
52E200012-109	J. BOX-SST	+4.0 WKS	M
52E230002-1	RECORDER	+9.8 WKS	E
52E230004-1	CONSOLE	+5.8 WKS	E
52E230005-1	POWER SYSTEM	+7.2 WKS	E
52E230008-1	POWER SUPPLY	+11.0 WKS	E
52E230012-1	CONSOLE	+11.0 WKS	E
52E230038-1	POWER SUPPLY	+10.2 WKS	E
52E360013-1	TESTER AIR DATA	+10.0 WKS	M

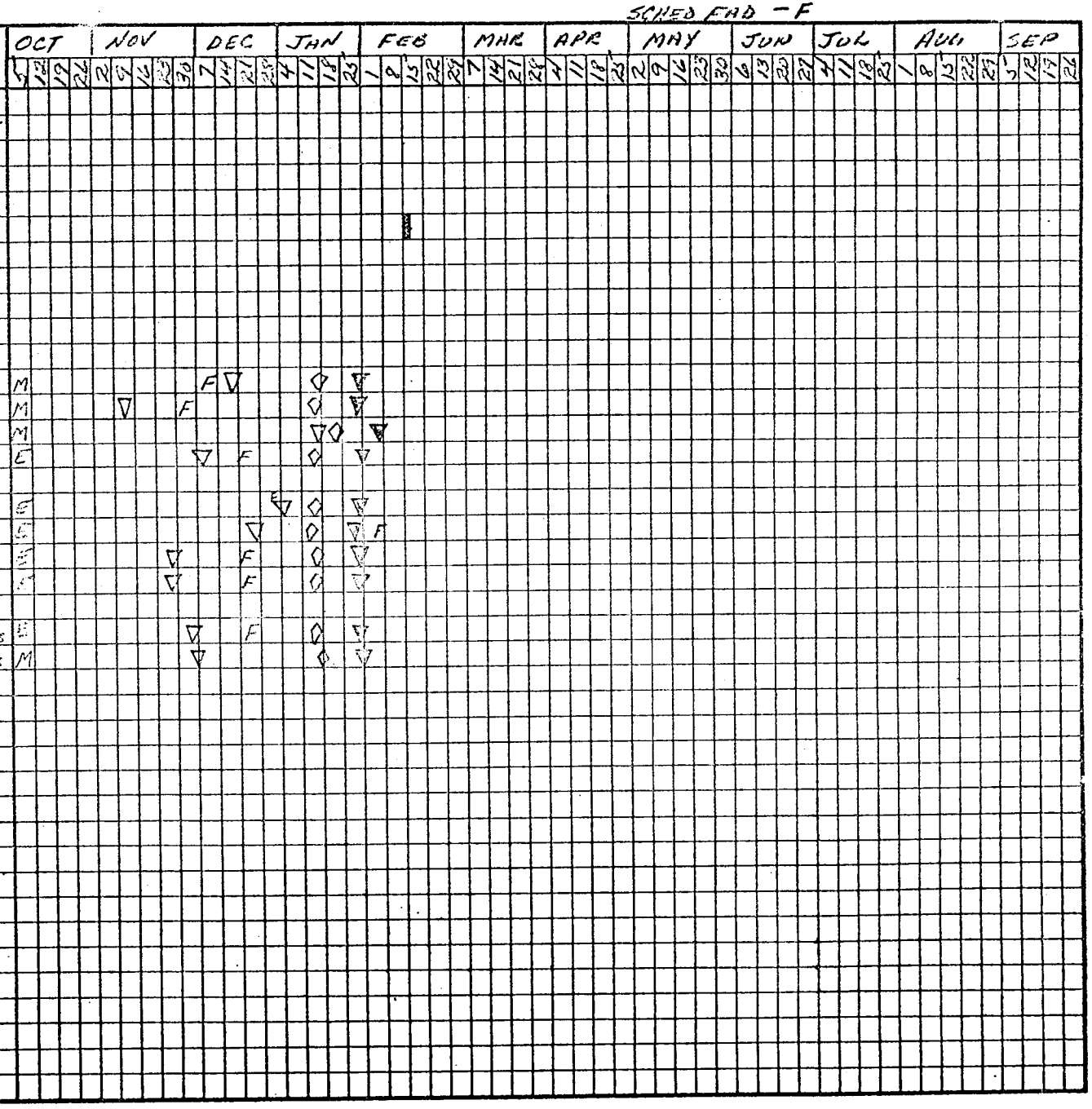

MAC 2274V (27 APR 59)

LEGEND: CAPE FAB -C | EED FAB -E
MAC FAB -M | VENDOR FAB -P
-501 AVAIL -▽ | -1 AVAIL -△
ECD DELIV -◇ | ECD INSTL -▼
SCHED FAB -F

5. 10/25/63

S/C #2 SST
PHASE II

TEST TITLE: INSTRUMENTATION SYSM. TEST

SEDR No.: H321
DATE AVAILABLE: 1-2-64
START OF TEST: 2-12-64

AGE REQUIRED

PART No.	NAME	SLACK		OCT 5	12	19	26	NOV 2	9	16	23	30	DEC 7	14	21	28	JAN 4	11	18	25	FEB 1	8	15	22	29	MAR 7	14	21	28	APR 4	11	18	25	MAY 2	9	16	23	30	JUN 6	13	20	27	JUL 4	11	18	25	AUG 1	8	15	22	29	SEP 5	12	19	26
52E360013-1	TESTER	+10.4 WKS	M										▽					◇			▼																																			
52E440011-1	PCM GRD. STA.	+15.4 WKS	P				▽											◇			▼																																			
52E440011-3	TELEMETRY C/O	+9.4 WKS	P											▽				◇			▼																																			
52E440027-1	GENERATOR	+15.8 WKS	P				▽											◇			▼																																			
52E440033-1	HARNESS ASSY	+15.8 WKS	M				▽		F									◇			▼																																			
52E440044-1	MONITOR SYST.	+15.8 WKS	M				▽		F									◇			▼																																			
52E440047-1	C/O BOX	+15.8 WKS	M				▽					F						◇			▼																																			
52E440053-1	CONTROL CONSOLE	+12.6 WKS	M							▽								◇			▼																																			
52E180076-1	CONSOLE, ECS	+13.4 WKS	P						▽								◇		▽																																					

MAC 2274V (27 APR 59)

LEGEND: CAPE FAB - C; MAC FAB - M; -501 AVAIL - ▽; ECD DELIV - ◇; SCHED FAB - F; EED FAB - E; VENDOR FAB - P; -1 AVAIL - △; ECD INSTL - ▼

6. 10/25/63

S/C #2 SST
PHASE II

TEST TITLE: ADAPTER/CABIN SECTION V.S.W.R.
SEDR No.: K342-2
DATE AVAILABLE: AVAILABLE
START OF TEST: 2-18-64

AGE REQUIRED

PART No.	NAME	SLACK	OCT 5	OCT 12	OCT 19	OCT 26	NOV 2	NOV 9	NOV 16	NOV 23	NOV 30	DEC 7	DEC 14	DEC 21	DEC 28	JAN 4	JAN 11	JAN 18	JAN 25	FEB 1	FEB 8	FEB 15	FEB 22	FEB 29	MAR 7	MAR 14	MAR 21	MAR 28	APR 4	APR 11	APR 18	APR 25	MAY 2	MAY 9	MAY 16	MAY 23	MAY 30	JUN 6	JUN 13	JUN 20	JUN 27	JUL 4	JUL 11	JUL 18	JUL 25	AUG 1	AUG 8	AUG 15	AUG 22	AUG 29	SEP 5	SEP 12	SEP 19	SEP 26
52E 190004-1	COMM TEST STN	+16.2 WKS	P			▽			F									◇		▽																																		
190015-1	ACCESSORIES	+16.2 WKS	M			▽			F									◇		▽																																		

MAC 2274V (27 APR 59)

7. 10/25/63

LEGEND: CAPE FAB - C, MAC FAB - M, -501 AVAIL - ▽, ECD DELIV - ◇, SCHED FAB - F, EED FAB - E, VENDOR FAB - P, -1 AVAIL - △, ECD INSTL - ▼

S/C #2 SST
PHASE II

TEST TITLE: COMMUNICATION TEST

SEDR No.: H341
DATE AVAILABLE: 1-8-64
START OF TEST: 2-19-64

AGE REQUIRED

PART No.	NAME	SLACK		OCT	NOV	DEC	JAN	FEB	MAR	APR	MAY	JUN	JUL	AUG	SEP
52E190004-1	COMM TEST STN	+16.8 WKS	P	▽	F		◇	▼							
190007-1	HEAD SET	+16.8 WKS	M	▽	F			◇ ▼							
190011-1	PROBE	+16.8 WKS	P	▽	F			◇ ▼							
190015-1	KIT	+16.8 WKS	M	▽	F		◇	▼							
190019-1	MONITOR	+16.8 WKS	P	▽	F			◇ ▼							
190020-1	TEST SET	+16.8 WKS	P	▽	F			◇ ▼							

MAC 2274V (27 APR 59)

LEGEND: CAPE FAB – C; MAC FAB – M; -501 AVAIL – ▽; ECD DELIV – ◇; SCHED FAB – F; EED FAB – E; VENDOR FAB – P; -1 AVAIL – △; ECD AVAIL – ▼

8. 10/25/63

S/C #2 SST PHASE II

TEST TITLE: G & C TEST

SEDR No.: H371

DATE AVAILABLE: 1-11-64

START OF TEST: 2-22-64

AGE REQUIRED

PART No.	NAME	SCHED		OCT 5	OCT 12	OCT 19	OCT 26	NOV 2	NOV 9	NOV 16	NOV 23	NOV 30	DEC 7	DEC 14	DEC 21	DEC 28	JAN 4	JAN 11	JAN 18	JAN 25	FEB 1	FEB 8	FEB 15	FEB 22	FEB 29	MAR 7	MAR 14	MAR 21	MAR 28	APR 4	APR 11	APR 18	APR 25	MAY 2	MAY 9	MAY 16	MAY 23	MAY 30	JUN 6	JUN 13	JUN 20	JUN 27	JUL 4	JUL 11	JUL 18	JUL 25	AUG 1	AUG 8	AUG 15	AUG 22	AUG 29	SEPT 5	SEPT 12	SEPT 19	SEPT 26
52E270003-1	CONSOLE, TST, CONTLR.	+17.0 WKS	P				▽			F											◇		▼																																
270008-1	PANEL	+17.4 WKS	P				▽				F										◇		▼																																
270010-1	KIT	+17.4 WKS	M				▽														◇		▼					F																										
52E270014-1	HORIZ, SIM.	+17.4 WKS	P				▽			F											◇		▼																																
270015-1	MONITOR PANEL	+17.4 WKS	P				▽			F											◇		▼																																
270036-1	DOLLY	+17.4 WKS	P				▽			F											◇		▼																																
52E270037-1	TEST CONSOLE	+17.2 WKS	P				▽	F													◇		▼																																
270039-1	SIMU., G & C	+17.4 WKS	P												▽	F					◇		▼																																
270042-1	TEST CONSOLE	+17.2 WKS	P				▽														◇		▼															F																
52E270054-1	CABLE SET	+17.2 WKS	P				▽		F												◇		▼																																
270062-1	RECORDER	+5.4 WKS	M																	▽	F ◇		▼																																
270024-1	RADAR TEST SET	+13.2 WKS	P								F ▽										◇		▼																																
52E270018-1	RIST	+17.0 WKS	P				▽				F										◇		▼																																

LEGEND: CAPE FAB -C, MAC FAB -M, -501 AVAIL -▽, ECD DELIV -◇, SCHED FAB -F, EED FAB -E, VENDOR FAB -P, -1 AVAIL -△, ECD INSTL -▼

9. 10/25/63

S/C #2 SST
PHASE II

TEST TITLE: ECS TEST

SEDR: H381
DATE AVAILABLE: 1-18-64
START OF TEST: 3-1-64

AGE REQUIRED

PART NO.	NAME	SLACK		OCT 5	12	19	26	NOV 2	9	16	23	30	DEC 7	14	21	28	JAN 4	11	18	25	FEB 1	8	15	22	29	MAR 7	14	21	28	APR 4	11	18	25	MAY 2	9	16	23	30	JUN 6	13	20	27	JUL 4	11	18	25	AUG 1	8	15	22	29	SEP 5	12	19	26
52E180003-1	SERV. UNIT	+18.0 WKS	M				▽				F											◇		▼																																
180004-1	SERV. UNIT	+18.0 WKS	P				▽			F								◇		▽																																				
180014-1	C/O UNIT	+16.0 WKS	M																	▽	◇	▽																																		
52E 180027-1	TESTER	+18.0 WKS	P				▽				F							◇		▽																																				
180033-1	TOOLS	+18.0 WKS	M				▽	F														◇		▽																																
180038-13	TERM. BOX	+17.6 WKS	C				▽											◇		▽																																				
52E 180038-49	TERM. BOX	+17.6 WKS	C				▽											◇		▽																																				
180038-65	TERM. BOX	+17.6 WKS	C				▽											◇		▽																																				
180038-71	TERM. BOX	+17.6 WKS	C				▽											◇		▽																																				
52E 180038-73	TERM. BOX	+17.6 WKS	C				▽											◇		▼																																				
180038-75	TERM. BOX	+17.6 WKS	C				▽											◇		▼																																				
180038-77	TERM. BOX	+17.6 WKS	C				▽											◇		▽																																				
52E 180038-79	TERM. BOX	+17.6 WKS	C				▽											◇		▽																																				
180038-81	TERM. BOX	+17.6 WKS	C				▽											◇		▽																																				
180038-83	TERM. BOX	+17.6 WKS	C				▽											◇		▽																																				
52E 180038-87	TERM. BOX	+17.6 WKS	C				▽											◇		▽																																				
180046-1	HOSE & ADAPTER (-3 -5)	+16.2 WKS	M						▽													◇		▼																																
180057-1	HOSE ASSY.	+18.0 WKS	M				▽								F			◇		▼																																				
52E 180076-1	TEST CONSOLE	+16.2 WKS	P						▽									◇		▽																																				
180097-1	HOSE ASSY.	+18.0 WKS	M				▽								F			◇		▽																																				
180106-1	HOSE ASSY.	+16.6 WKS	M						▽						F							◇		▽																																
52E 180120-1	HOSE ASSY.	+17.4 WKS	M					▽			F											◇		▼																																
180121-1	HOSE ASSY.	+17.4 WKS	M					▽			F											◇		▼																																
420031-65	TERM. BOX	+17.4 WKS	C					▽														◇		▼																																

MAC 2274V (27 APR 59)

LEGEND: Cape Fab - C; Mac Fab - M; -501 Avail - ▽; ECD. Deliv - ◇; Schld FAD. - F; E.E.D. Fab - E; Vendor Fab - P; -1 Avail - △; ECD. Instl - ▼

10. 10/25/63

S/C # 2 S.S.T.
PHASE II

TEST TITLE: RSS/FC FUNCTIONAL TEST

SEDR. No: D386
Date Available: 1-27-64
Start of Test: 3-6-64

Part No	Name	Slack	OCT 5	OCT 12	OCT 19	OCT 26	NOV 2	NOV 9	NOV 16	NOV 23	NOV 30	DEC 7	DEC 14	DEC 21	DEC 28	JAN 4	JAN 11	JAN 18	JAN 25	FEB 1	FEB 8	FEB 15	FEB 22	FEB 29	MAR 7	MAR 14	MAR 21	MAR 28	APR 4	APR 11	APR 18	APR 25	MAY 2	MAY 9	MAY 16	MAY 23	MAY 30	JUNE 6	JUNE 13	JUNE 20	JUNE 27	JULY 4	JULY 11	JULY 18	JULY 25	AUG 1	AUG 8	AUG 15	AUG 22	AUG 29	SEPT 5	SEPT 12	SEPT 19	SEPT 26
	AGE. Required																																																					
52E180016-1	SERV. UNIT	+19.0 WKS	P			▽				F											◇		▼																														
52E180038-1	TERM BOX	+18.0 WKS	C				▽									◇		▼																																			
52E230069-1	CONSOLE	+6.0 WKS	M																▽		◇		▼																													
52E420013-1	PRES. UNIT	+19.0 WKS	P			▽	F														◇		▼																													
52E420015-1	PRES. UNIT	+19.0 WKS	P			▽		F													◇		▼																													
52E420029-1	HOSE - N2	+19.0 WKS	M			▽				F											◇		▼																													
52E420030-1	HOSE - HE	+19.0 WKS	M			▽		F													◇		▼																													
52E420042-1	SERV. UNIT-HE	+19.0 WKS	C			▽															◇		▼															F														
52E420043-1	HOSE - HE	+19.0 WKS	M			▽															◇		▼															F														
52E180038-13	TERM BOX	+18.4 WKS	C				▽									◇		▼																																			
52E180038-49	TERM BOX	+18.4 WKS	C				▽									◇		▼																																			
52E180038-65	TERM BOX	+18.4 WKS	C				▽									◇		▼																																			
52E180038-71	TERM BOX	+18.4 WKS	C				▽									◇		▼																																			
52E180038-73	TERM BOX	+18.4 WKS	C				▽									◇		▼																																			
52E180038-75	TERM BOX	+18.4 WKS	C				▽									◇		▼																																			
52E180038-77	TERM BOX	+18.4 WKS	C				▽									◇		▼																																			
52E180038-79	TERM BOX	+18.4 WKS	C				▽									◇		▼																																			
52E180038-81	TERM BOX	+18.4 WKS	C				▽									◇		▼																																			
52E180038-83	TERM BOX	+18.4 WKS	C				▽									◇		▼																																			
52E180038-87	TERM BOX	+18.4 WKS	C				▽									◇		▼																																			

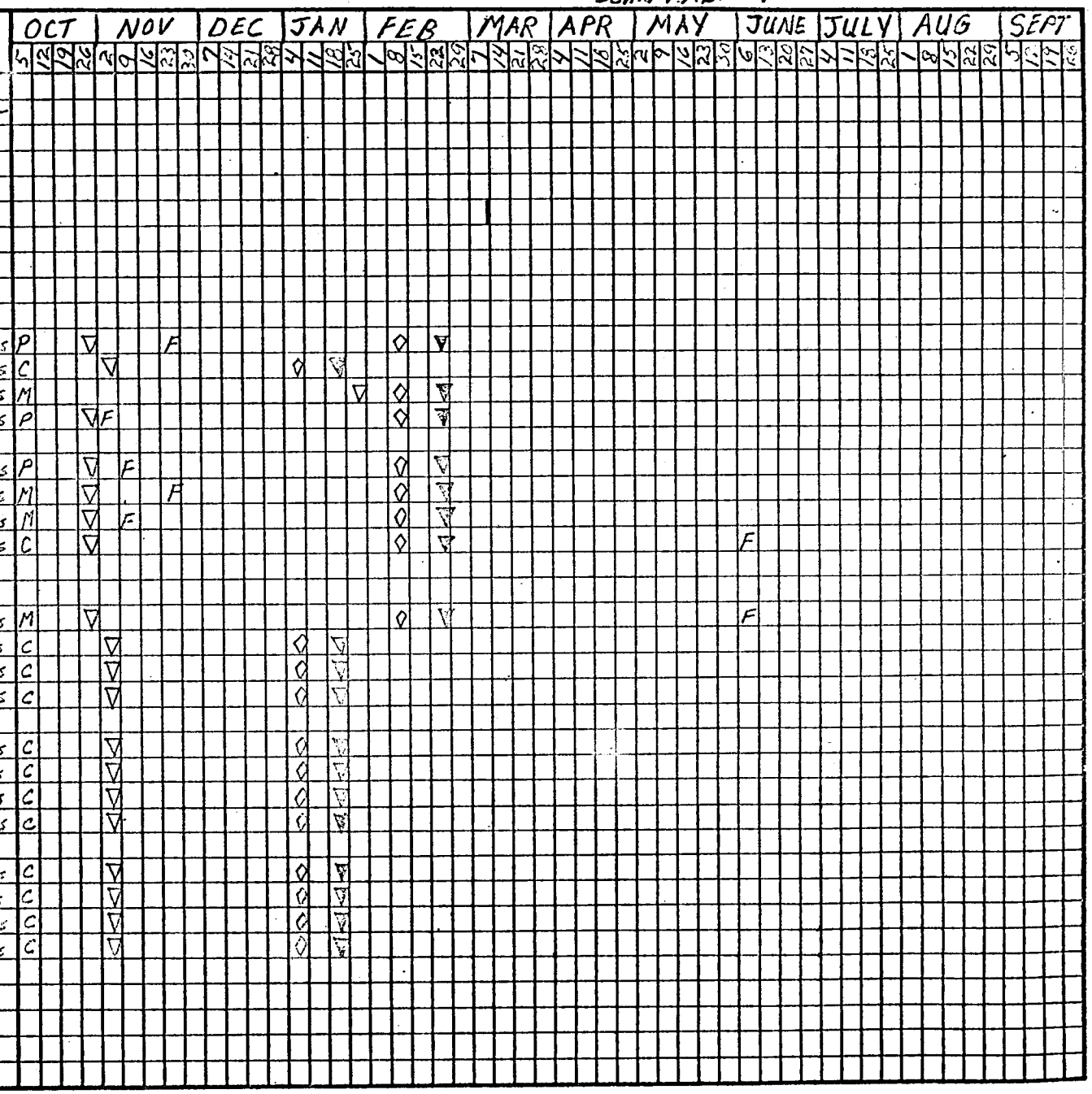

MAC 2274V (27 APR 59)

LEGEND: Cape Fab - C, Mac Fab - M, -501 Avail - ▽, ECD. Deliv - ◇, Schld FAD - F, EED. Fab - E, Vendor Fab - P, -1 Avail - △, ECD. Instl - ▼

11-16-64 PAGE 1 OF 2

S/C #2 SST
PHASE II

TEST TITLE: CRYO. SERVICING

SEDR No : K500
Date Available: 2-3-64
Start of Test: 3-9-64
3-28-64
A.G.E. Required

Part No.	Name	Stack		OCT 5	12	19	26	NOV 2	9	16	23	30	DEC 7	14	21	28	JAN 4	11	18	25	FEB 1	8	15	22	29	MAR 7	14	21	28	APR 4	11	18	25	MAY 2	9	16	23	30	JUNE 6	13	20	27	JULY 4	11	18	25	AUG 1	8	15	22	29	SEPT 5	12	19	26
52E 180016-1	SERV. UNIT	+19.6 WKS	P			▽					F												◇		▽																													
180035-1	LOX UNIT	+15.2 WKS	P									▽											◇		▽																													
180042-1	HOSE	+13.2 WKS	P											▽									◇		▽	F																												
180053-1	UPPER CNTRL UNIT	+16.4 WKS	P							▽													▽		▽													F																
180060-3	HOSE	+14.4 WKS	P									▽											◇		▽													F																
180071-1	CONSOLE	+12.3 WKS	P											▽									◇		▽																													
180095-1	BOTTLE	+19.0 WKS	M				▽								F								◇		▽																													
180099-1	HOSE	+12.8 WKS	P											▽									◇		▽													F																
180132-1	HOSE	+12.8 WKS	P											▽									◇		▽													F																
180058-3	HOSE	+19.6 WKS	M				▽								F								◇		▽																													
180100-1	HOSE	+13.0 WKS	P											▽									◇		▽													F																
180101-1	HOSE	+13.0 WKS	P											▽									◇		▽													F																
230017-1	SERV. UNIT	+19.6 WKS	P				▽																◇		▽																													
230025-1	VAPOR DTCTR (DM 74711)	+19.6	P				▽																◇		▽																													
230028-1	HOSE	+16.0 WKS	P								▽												◇		▽																													
230031-1	HOSE	+14.2 WKS	P										▽		F								◇		▽																													
230032-1	HOSE	+14.2 WKS	P										▽		F								◇		▽																													
230033-1	CONTROL BOX	+16.2 WKS	P								▽					F							◇		▽																													
230036-1	HOSE	+16.2 WKS	P								▽												◇		▽																													
230039-1	BOTTLE	+19.6 WKS	M				▽						F										◇		▽																													
230040-1	HOSE			CANCELLED																																																	
230041-1	HOSE			NOT 1																																																	
230060-1	CONTROL CNSL.	+16.0 WKS	P								▽												◇		▽													F																
230062-3	HOSE	+14.2 WKS	P										▽										◇		▽													F																

MAC 2274V (27 APR 59)

11A 10/20/63 PAGE 2 OF 2

S/C #2 SST
PHASE II

PART Nº	NAME	SLACK	OCT 5	12	19	26	NOV 2	9	16	23	30	DEC 7	14	21	28	JAN 4	11	18	25	FEB 1	8	15	22	29	MAR 7	14	21	28	APR 4	11	18	25	MAY 2	9	16	23	30	JUN 6	13	20	27	JUL 4	11	18	25	AUG 1	8	15	22	29	SEP 5	12	19	26
53E230063-1	TERM BX	+16.0 WKS	P							▽												◇		▽																															
230065-1	HOSE	+14.2 WKS	P									▽										◇		▽															F																
230066-1	HOSE	+16.0 WKS	P							▽												◇		▽																															
420056-1	REGULATOR	+17.6 WKS	M					▽														◇		▽															F																
420136-1	REGULATOR	+18.6 WKS	M				▽															◇		▽															F																

MAC 2274V (27 APR 59)

LEGEND: Cape Fab - C
Mac Fab - M
-501 Avail - ▽
ECD Deliv - ◇
Schld FAD - F
E.E.D. Fab - E
Vendor Fab - P
-1 Avail - △
ECD Instl - ▼

12. 10/[illegible]

S/C # 2 SST
PHASE II

TEST TITLE: RSS/FG FUNCTIONAL TEST

SEDR Nº: D313
Date Available: 2-6-64
Start of Test: 3-12-64

A.G.E. Required

Part Nº	Name	Slack	OCT 5	OCT 12	OCT 19	OCT 26	NOV 2	NOV 9	NOV 16	NOV 23	NOV 30	DEC 7	DEC 14	DEC 21	DEC 28	JAN 4	JAN 11	JAN 18	JAN 25	FEB 1	FEB 8	FEB 15	FEB 22	FEB 29	MAR 7	MAR 14	MAR 21	MAR 28	APR 4	APR 11	APR 18	APR 25	MAY 2	MAY 9	MAY 16	MAY 23	MAY 30	JUNE 6	JUNE 13	JUNE 20	JUNE 27	JULY 4	JULY 11	JULY 18	JULY 25	AUG 1	AUG 8	AUG 15	AUG 23	AUG 30	SEPT 5	SEPT 12	SEPT 19	SEPT 26
52E 010011-1	DOLLY-ADPTR.	+17.0 WKS	M					F	▽														◇		▼																													
52E 180016-1	LOX SERV. UNIT	+20.0 WKS	P			▽				F												◇		▼																													
52E 180035-1	LOX TERM BOX	+15.0 WKS	P								▽												◇		▼																												
52E 180053-1	LOX CNTRL UNIT	+16.6 WKS	P							▽													◇		▼														F														
52E 180036-1	TERM BOX LH_2		CANCELLED CR 442																																																			
52E 180038-1	TERM BOX, N_2	+19.0 WKS	C				▽															◇		▼																													
52E 180041-1	BOTTLE-O_2	+19.0 WKS	C				▽						F										◇		▼																												
52E 180071-1	CONSOLE-CONT.	+13.0 WKS	P										▽										◇		▼																												
52E 180095-1	BOTTLE-LO_2	+20.0 WKS	M			▽								F									◇		▼																												
52E 230017-1	SERV. UNIT-LH_2	+14.6 WKS	P									▽											◇		▼																												
52E 230025-1	DETECTOR-H_2	+20.0 WKS	P			▽																	◇		▼																												
52E 230026-1	CONSOLE	+7.6 WKS	M																▽				◇		▼																												
52E 230033-1	PANEL-LH_2	+16.4 WKS	P							▽				F									◇		▼																												
52E 230035-1	BOTTLE-LH_2	+20.0 WKS	M			▽					F												◇		▼																												
52E 420013-1	PRES. UNIT N_2	+20.0 WKS	P			▽	F															◇		▼																													
52E 420056-1	REGULATOR N_2	+18.0 WKS	M					▽														◇			▼														F														
52E 420015-1	PRES. UNIT-HE	+20.0 WKS	P			▽		F														◇		▼																													
52E 420042-1	SERV. UNIT-HE	+20.0 WKS	C			▽																◇		▼														F															
52E 230056-1	CONTROL PANEL LH_2		CANCELLED - CR 602																																																			

MAC 2274V (27 APR 59)

LEGEND: Cape Fab - C
Mac Fab - M
-501 Avail - ▽
ECD. Deliv - ◇
Schld FAD - F
E.E.D. Fab - E
Vendor Fab - P
-1 Avail - △
ECD. Instl - ▼

13.10/25/63

S/C #2 S.S.T.
Phase II

TEST TITLE: PREVIBRATION SERVICING

SEDR Nº: K506
Date Available: 2-14-64
Start of Test: 3-19-64

A.G.E. Required

Part No.	Name	Stock	OCT 5	OCT 12	OCT 19	OCT 26	NOV 2	NOV 9	NOV 16	NOV 23	NOV 30	DEC 7	DEC 14	DEC 21	DEC 28	JAN 4	JAN 11	JAN 18	JAN 25	FEB 1	FEB 8	FEB 15	FEB 22	FEB 29	MAR 7	MAR 14	MAR 21	MAR 28	APR 4	APR 11	APR 18	APR 25	MAY 2	MAY 9	MAY 16	MAY 23	MAY 30	JUNE 6	JUNE 13	JUNE 20	JUNE 27	JULY 4	JULY 11	JULY 18	JULY 25	AUG 1	AUG 8	AUG 15	AUG 23	AUG 30	SEPT. 5	SEPT. 12	SEPT. 19	SEPT. 26
52E180015-1	GOX CART	+21.4 WKS	C		▽						F		◇																																								
52E180028-1	CONVERTER, LG	+20.4 WKS	P			▽	F	◇																																													
52E180030-135	PANEL PRES. REG	+16.2 WKS	M						▽					F		◇																																					
52E420013-1	PRES UNIT, HE	+21.4 WKS	P		▽	◇																																															
52E420014-1	PRESS UNIT, HE	+21.4 WKS	P		▽	◇				F																																											
52E420042-1	SERV. UNIT, HE	+20.4 WKS	C			▽		◇																														F															

MAC 2274V (27 APR 59)

LEGEND: CAPE FAB - C; MAC FAB - M; -501 AVAIL. - ▽; E.C.D. DELIV. - ◇; SCHED. FAD - F; E.E.D. FAB. - E; VENDOR FAB - P; -1 AVAIL. - △; E.C.D. INSTL. - ▼

14. 10/[illegible]

S/C #2 SST
PHASE II

TEST TITLE: VIBRATION

SEDR No: H480
Date Available: 2-17-64
Start of Test: 3-21-64

A.G.E. Required

Part No.	Name	Stock	OCT 5	OCT 12	OCT 19	OCT 26	NOV 2	NOV 9	NOV 16	NOV 23	NOV 30	DEC 7	DEC 14	DEC 21	DEC 28	JAN 4	JAN 11	JAN 18	JAN 25	FEB 1	FEB 8	FEB 15	FEB 22	FEB 29	MAR 7	MAR 14	MAR 21	MAR 28	APR 4	APR 11	APR 18	APR 25	MAY 2	MAY 9	MAY 16	MAY 23	MAY 30	JUNE 6	JUNE 13	JUNE 20	JUNE 27	JULY 4	JULY 11	JULY 18	JULY 25	AUG. 1	AUG. 8	AUG. 15	AUG. 22	AUG. 29	SEPT 5	SEPT 12	SEPT 19	SEPT 26
52E 040010-1	SIMULATOR	+14.2 WKS	M									F	▽				◇		▽																																	
52E 180004-1	SERV. UNIT	+21.0 WKS	P			▽			F							◇		▽																																	
52E 190011-1	PROBE	+21.0 WKS	P			▽			F										◇		▽																														
52E 190015-1	KIT	+21.0 WKS	M			▽			F									◇		▽																															
52E 190019-1	MONITOR	+21.0 WKS	P			▽			F										◇		▽																														
52E 190020-1	TEST SET	+21.0 WKS	P			▽			F										◇		▽																														
52E 200004-1	TESTER	+19.4 WKS	M					▽									◇		▽																																
52E 200012-109	J. BOX-SST	+10.2 WKS	M														▽	◇		▽																															
52E 200017-3	J. BOX	+[illegible]	M															▽		F			◇		▽																										
52E 230003-1	RECORDER	+15.[illegible]	E									▽		F				◇		▽																															
52E 230004-1	CONSOLE	+10.8 WKS	E														▽	◇	▽																																
52E 230005-1	POWER SYSM	+8.0 WKS	E											▽			◇		▽		F																														
52E 230008-1	POWER SUPPLY	+12.[illegible]	E							▽				F			◇																																		
52E 230012-1	CONSOLE	+11.[illegible]	E							▽				F			◇																																		
52E 230038-1	POWER SUPPLY	+16.0 WKS	E								▽			F			◇																																		
52E 360013-1	TSTR-AIR DATA	+16.0 WKS	M								▽						◇		▽																																
52E 440011-3	TELEMENTRY C/O	+15.0 WKS	P									▽						◇		▽																															

MAC 2274V (27 APR 59)

LEGEND: Cape Fab - C; Mac Fab - M; -501 Avail - ▽; E.C.D. Deliv ◇; Sched FAD - F; E.E.D. Fab - E; Vendor Fab - P; -1 Avail - △; E.C.D. Instl - ▼

15. 10/Page-3

S/C #2 S.S.T.
PHASE II

TEST TITLE: ECS HIGH PRESSURE

S.E.D.R. Nº H382
Date Available: 2-20-64
Start of Test: 3-24-64

A.G.E. Required

Part Nº	Name	Slack	
52E 180007-1	DOOR	+21.6 WKS	M
52E 180016-1	SERV. UNIT	+21.6 WKS	P
52E 180016-3	SERV. UNIT	+18.2 WKS	P
52E 180028-1	CONVERTER	+21.2 WKS	P
52E 180028-3	CONVERTER	+21.2 WKS	P
52E 180038-25	TERM BOX	+21.2 WKS	C
52E 180038-75	TERM BOX	+21.2 WKS	C
52E 180038-77	TERM BOX	+21.2 WKS	C
52E 180038-79	TERM BOX	+21.2 WKS	C
52E 180038-81	TERM BOX	+21.2 WKS	C
52E 180038-83	TERM BOX	+21.2 WKS	C
52E 180038-87	TERM BOX	+21.2 WKS	C
52E 180042-1	HOSE	+15.0 WKS	P
52E 180046-3	HOSE & ADAPTER	+19.6 WKS	M
52E 180052-1	HOSE ASSY	+16.4 WKS	M
52E 180053-1	UPPER CONT.	+19.4 WKS	P
52E 180058-1	HOSE	+21.6 WKS	M
52E 180058-3	HOSE	+21.6 WKS	M
52E 180060-1	HOSE	+18.6 WKS	P
52E 180105-1	HOSE	+21.6 WKS	M

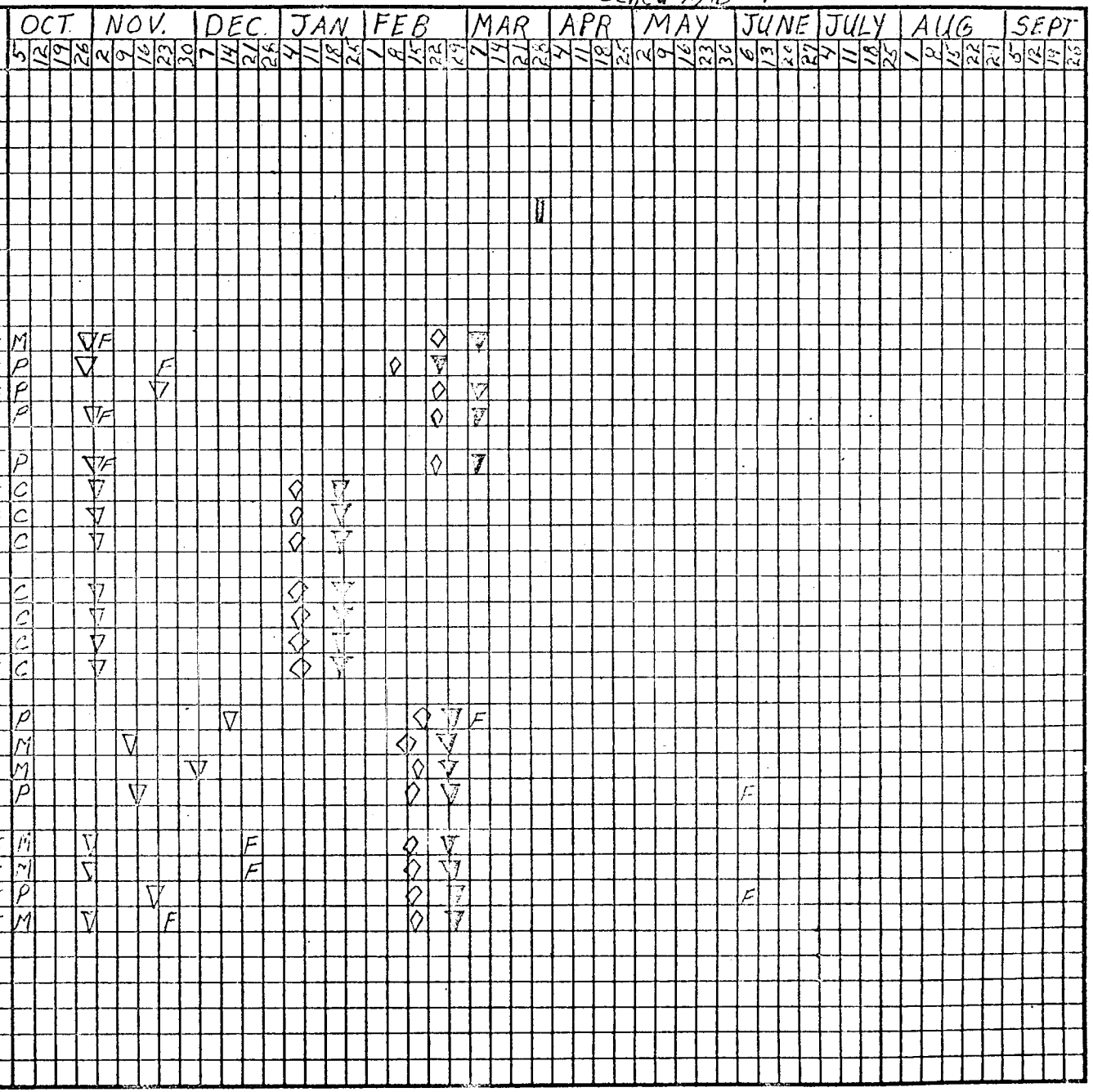

MAC 2274V (27 APR 59)

LEGEND: CAPE FAB -C EED FAB -E
MAC FAB -M VENDOR FAB-P
-501 AVAIL-▽ -1 AVAIL -△
ECD DELIV-◇ ECD INSTL -▽
SCHED FAD-F

16. 10/[illegible]

S/C #2 SST PHASE II	OCT				NOV					DEC				JAN				FEB					MAR				APR				MAY					JUN				JUL				AUG					SEP			
	5	12	19	26	2	9	16	23	30	7	14	21	28	4	11	18	25	1	8	15	22	29	7	14	21	28	4	11	18	25	2	9	16	23	30	6	13	20	27	4	11	18	25	1	8	15	22	29	5	12	19	26
TEST TITLE : PRE-ALTITUDE SERVICING																																																					
SEDR No. : H388																																																					
DATE AVAILABLE : 2-22-64																																																					
START OF TEST : 3-26-64																																																					
AGE REQUIRED																																																					
PART No. NAME SLACK																																																					
52E 180015-1 GOX CART +22.0 WKS	C			▽					F												◇		▽																													
180028-1 CONVERTER L TO G +19.6 WKS	P				F	▽															◇		▽																													
180030-135 PANEL-REGUL. +19.0 WKS	M						▽					F									◇		▽																													

MAC 2274V (27 APR 59)

LEGEND: CAPE FAB – C; MAC FAB – M; – SCI AVAIL – ▽; ECD DELIV – ◇; SCHED FAD – F; EED FAB – E; VENDOR FAB – P; – 1 AVAIL – △; ECD INSTL – ◈

17.10/22-1/2-2

S/C #2 SST
PHASE II

TEST TITLE : ALTITUDE CHAMBER

SEDR No. : H383
DATE AVAILABLE : 2-27-64
START OF TEST : 3-31-64

AGE REQUIRED

PART No.	NAME	SLACK	
52E 010003-1	SLING, HOIST	+22.4 WKS	M
010022-1	HANDLE, CABIN		M
010040-1	SHIELD, HA.-SIL.	+22.4 WKS	M
52E 040010-1	SIMULATOR	+15.2 WKS	M
180003-1	SERV. UNIT H2O	+22.4 WKS	M
180004-1	SERV. UNIT, COOL.	+22.4 WKS	P
52E 180007-1	DOOR, ECS	+22.4 WKS	M
180015-1	CART	+22.4 WKS	C
180016-1	SERV. UNIT LOX	+20.0 WKS	P
52E 180017-1	COOLING UNIT	+22.4 WKS	P
180018-1	COVER, SNORKEL	+22.4 WKS	M
180026-1	ABSORBER, SEAT	+21.4 WKS	P
52E 180027-1	LEAK TSTR	+22.4 WKS	P
180033-1	TOOL, REGULTR.	+22.4 WKS	M
180048-1	HOSE ASSY	+20.8 WKS	M
52E 180076-1	COUPLING, SUIT	+21.4 WKS	P
180113-1	KIT ANALYZER	+14.2 WKS	M
180145-1	POWER SUPPLY	+16.2 WKS	M
52E 200004-1	TERM. BOX	+20.8 WKS	M
200012-109	J-BOX	+11.2 WKS	M
200017-3	RECORDER	+10.8 WKS	M
52E 230003-1	RECORDER	+16.8 WKS	E
230004-1	CONSOLE	+11.8 WKS	E
230005-1	POWER SYS	+12.4 WKS	E

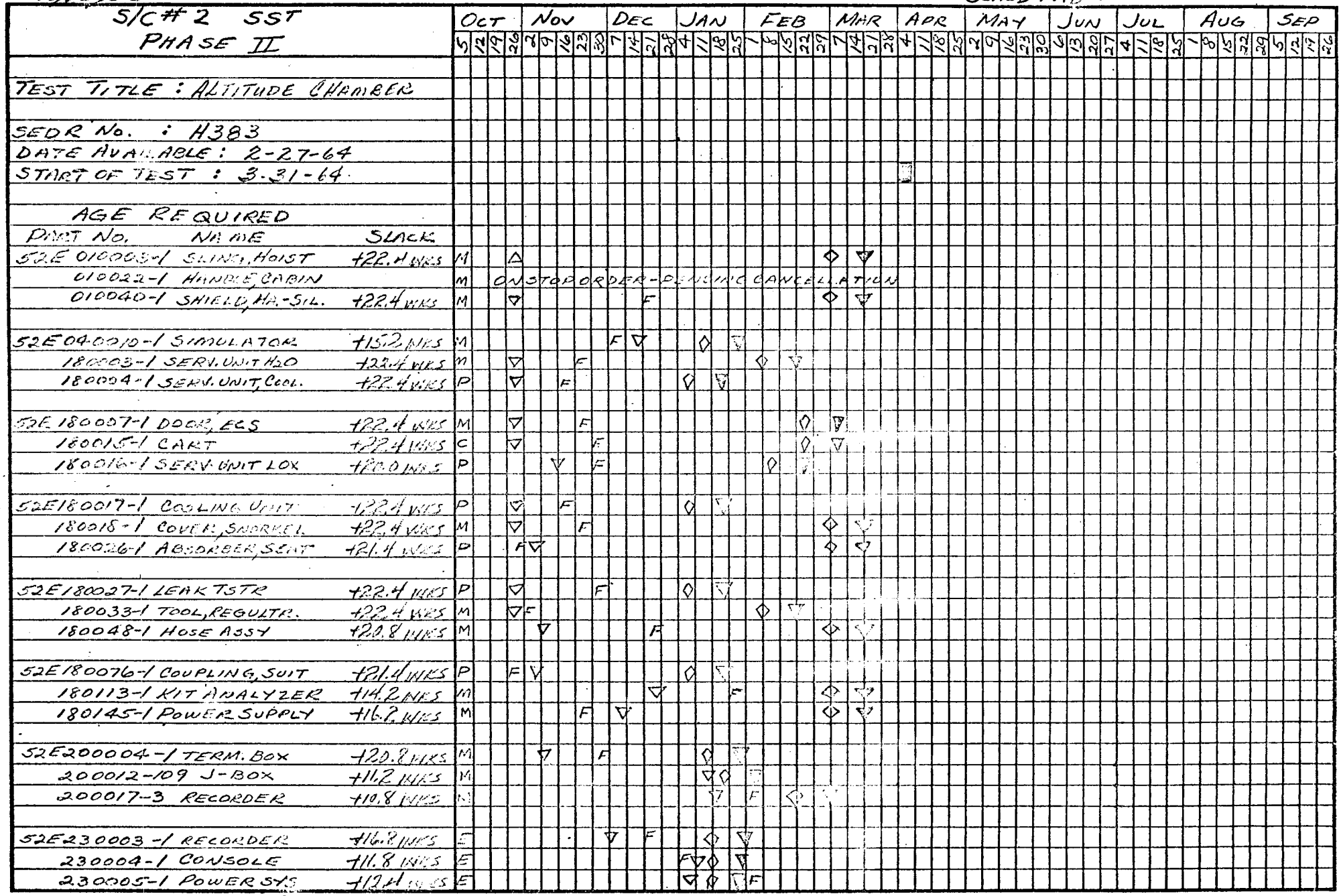

MAC 2274V (27 APR 59)

LEGEND: SEE PAGE 1

MA 10/25/63

S/C #2 SST
PHASE II

TEST TITLE: ALTITUDE CHAMBER

SEDR No. : H383
DATE AVAILABLE: 2-27-64
START OF TEST : 3-31-64

AGE REQUIRED

PART No.	NAME	SLACK	
52E230008-1	PWR SUP.	+18.4 WKS	E
230012-1	CONSOLE	+18.4 WKS	E
230038-1	PWR SUP.	+17.4 WKS	E
52E230049-1	BATT. RACK	+21.4 WKS	C
230058-1	BATT. RACK	+18.0 WKS	M
270008-1	PANEL	+22.4 WKS	P
52E270010-1	KIT	+22.4 WKS	C
270014-1	HORIZ. SIM.	+22.4 WKS	P
270015-1	MONITOR PANEL	+22.4 WKS	P
52E270039-1	SIMULATOR	+14.6 WKS	P

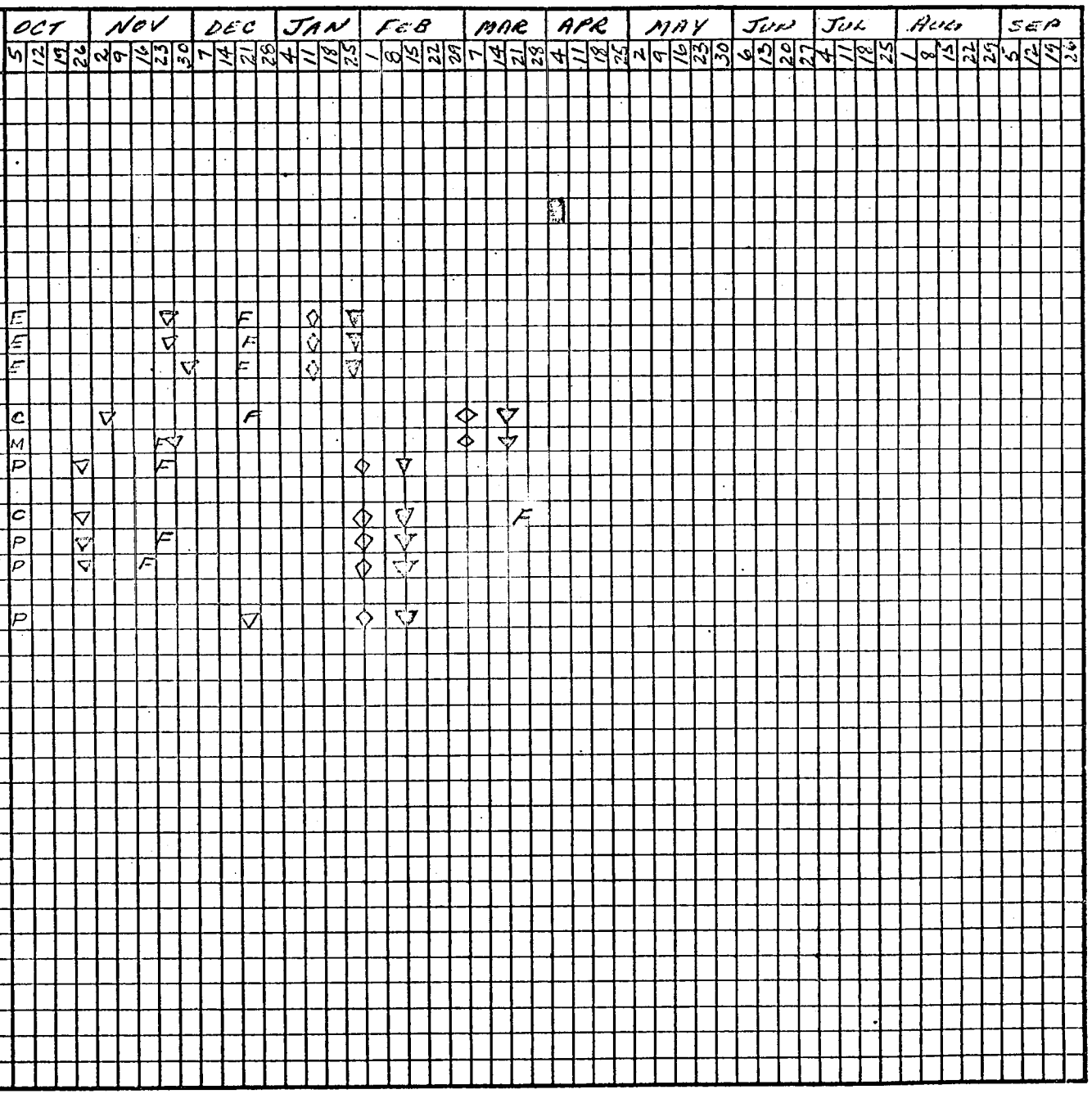

LEGEND: CAPE FAB - C; MAC FAB - M; -501 AVAIL - ▽; ECD DELIV - ◇; SCHED FAD - F; EED [illegible]B - E; VENDOR FAB - P; -1 AVAIL - △; ECD INSTL - ▼

18. 10/25/63

S/C #2 SST PHASE II

TEST TITLE : RCS-OMAS TEST

SEDR No. : H392

DATE AVAILABLE : 3-3-64

START OF TEST : 4-5-64

AGE REQUIRED

PART No.	NAME	SLACK	OCT 5	OCT 12	OCT 19	OCT 26	NOV 2	NOV 9	NOV 16	NOV 23	NOV 30	DEC 7	DEC 14	DEC 21	DEC 28	JAN 4	JAN 11	JAN 18	JAN 25	FEB 1	FEB 8	FEB 15	FEB 22	FEB 29	MAR 7	MAR 14	MAR 21	MAR 28	APR 4	APR 11	APR 18	APR 25	MAY 2	MAY 9	MAY 16	MAY 23	MAY 30	JUN 6	JUN 13	JUN 20	JUN 27	JUL 4	JUL 11	JUL 18	JUL 25	AUG 1	AUG 8	AUG 15	AUG 22	AUG 29	SEP 5	SEP 12	SEP 19	SEP 26
52E 420006-1	CONTROL UNIT	+23.4 WKS	P	F		▽																				◇		▼																										
52E 420007-1	CONTROL UNIT	+15.2 WKS	M											▽	◇	▽																																						
52E 420009-1	ADAPTER UNIT	+22.0 WKS	P	F			▽																			◇		▼																										
52E 420013-1	PRESS. UNIT	+23.4 WKS	P			▽				F												◇		▽																														
52E 420014-1	PRESS. UNIT	+23.4 WKS	P			▽				F													◇		▽																													

MAC 2274V (27 APR 59)

LEGEND: CHPE FAB -C, MAC FAB -M, -501 AVAIL ▽, ECD DELIV -◇, SCHED FAB -F, EED FAB -E, VENDOR FAB -P, -1 AVAIL -△, ECD INSTA -▼

19. 10/[illegible]

S/C #2 SST
PHASE II

TEST TITLE: CONFIDENCE CHECK

SEAR No. : H430
DATE AVAILABLE: 3-13-64
START OF TEST : 4-15-64

ALE REQUIRED

PART No.	NAME	SCHED	OCT 5	OCT 12	OCT 19	OCT 26	NOV 2	NOV 9	NOV 16	NOV 23	NOV 30	DEC 7	DEC 14	DEC 21	DEC 28	JAN 4	JAN 11	JAN 18	JAN 25	FEB 1	FEB 8	FEB 15	FEB 22	FEB 29	MAR 7	MAR 14	MAR 21	MAR 28	APR 4	APR 11	APR 18	APR 25	MAY 2	MAY 9	MAY 16	MAY 23	MAY 30	JUN 6	JUN 13	JUN 20	JUN 27	JUL 4	JUL 11	JUL 18	JUL 25	AUG 1	AUG 8	AUG 15	AUG 22	AUG 29	SEP 5	SEP 12	SEP 19	SEP 26
52E010076-1	PLUG STAT. POINT.	+24.6 WKS	M			▽								◇		▼																																							
040010-1	SIMULATOR	+17.6 WKS	M									F	▽				◇		▼																																			
190004-1	TEST STA.	+24.6 WKS	P			▽			F									◇		▼																																			
52E190007-1	HEADSET	+24.6 WKS	M			▽							F						◇		▽																																	
190011-1	PROBE	+24.6 WKS	P			▽			F										◇		▽																																	
190012-1	PROBE	+24.6 WKS	P			▽			F										◇		▽																																	
52E190015-1	KIT	+24.6 WKS	M			▽				F								◇		▽																																	
190019-1	MONIT. DIG. COMP.	+24.6 WKS	P			▽	F												◇		▽																																	
190020-1	TEST SET	+24.6 WKS	P			▽	F												◇		▽																																	
52E200004-1	TEST	+23.0 WKS	M					▽		F							◇		▽																																			
200012-109	J-BOX	+13.6 WKS	M														▽	◇		▽																																		
230003-1	RECORDER	+13.8 WKS	E									▽		F			◇		▽																																			
52E230004-1	CONSOLE	+14.0 WKS	E													F	▽	◇		▽																																		
230005-1	POWER SYS.	+14.4 WKS	E														▽	◇		▽	F																																	
230008-1	POWER SUP.	+20.6 WKS	E							▽				F				◇		▽																																		
52E230012-1	CONSOLE	+20.6 WKS	E							▽				F			◇		▽																																			
230038-1	POWER SUP	+17.6 WKS	E								▽			F			◇		▽																																			
270003-1	CONSOLE COMP.	+24.0 WKS	P				▽		F										◇		▽																																	
52E270008-1	PANEL	+24.6 WKS	P			▽				F									◇		▽																																	
270010-1	KIT	+24.6 WKS	C			▽													◇		▽																																	
270014-1	HORIZ. SIM.	+24.6 WKS	P			▽				F									◇		▽																																	
52E270015-1	MONITOR PANEL	+24.6 WKS	P			▽			F										◇		▽																																	
270018-1	RIST	+19.4 WKS	P							F	▽								◇		▽																																	
270024-1	RADAR TESTR	+20.6 WKS	P							F▽									◇		▽																																	

LEGEND: SEE PAGE 1

19A. 10/25/63

S/C #2 SST
PHASE II

TEST TITLE : CONFIDENCE CHECK

SEDR No. : H430
DATE AVAILABLE : 3-13-64
START OF TEST : 4-15-64

AGE REQUIRED

PART No.	NAME	SLACK	OCT 5	12	19	26	NOV 2	9	16	23	30	DEC 7	14	21	28	JAN 4	11	18	25	FEB 1	8	15	22	29	MAR 7	14	21	28	APR 4	11	18	25	MAY 2	9	16	23	30	JUN 6	13	20	27	JUL 4	11	18	25	AUG 1	8	15	22	29	SEP 5	12	19	26
52E 270036-1	DOLLY	+24.0 WKS	P		F	▽														◇		▽																																		
270037-1	CONSOLE, ACME	+24.0 WKS	P			▽	F													◇		▽																																		
270042-1	CONSOLE, IMU	+24.0 WKS	P			▽														◇		▽															F																		
52E 270054-1	CABLES, PLAT.	+24.0 WKS	P			▽	F													◇		▽																																		
270062-1	RECORD. G&C	+13.0 WKS	M											F				▽		◇		▽																																		
360013-1	TESTER	+20.2 WKS	M							F▽							◇			▽																																				
52E 360005-1	SIMULATOR		P		NOT AN APPROVED ITEM																																																				

MAC 2274V (27 APR 59)

LEGEND: CAPE FAB -C, EED FAB -E, MAC FAB -M, VENDOR FAB -P, -501 AVAIL -▽, -1 AVAIL -△, ECO DELIV -◇, ECO INSTL -▼, SCHED FAB -F

20. 10/25/63

S/C #2 SST
PHASE II

TEST TITLE: SIMULATED FLIGHT

SEDR No.: H431
DATE HARDWARE: 3-17-64
START OF TEST: 4-22-64

AGE REQUIRED

PART No.	NAME	SLACK		OCT 5	OCT 12	OCT 19	OCT 26	NOV 2	NOV 9	NOV 16	NOV 23	NOV 30	DEC 7	DEC 14	DEC 21	DEC 28	JAN 4	JAN 11	JAN 18	JAN 25	FEB 1	FEB 8	FEB 15	FEB 22	MAR 7	MAR 14	MAR 21	MAR 28	APR 4	APR 11	APR 18	APR 25	MAY 2	MAY 9	MAY 16	MAY 23	MAY 30	JUN 6	JUN 13	JUN 20	JUN 27	JUL 4	JUL 11	JUL 18	JUL 25	AUG 1	AUG 8	AUG 15	AUG 22	AUG 29	SEP 5	SEP 12	SEP 19	SEP 26
52E 040010-1	SIMULATOR	+19.0 WKS	M										F	▽				◇		▽																																		
52E 190004-1	TST STATION	+26.0 WKS	P				▽			F										◇		▽																																
52E 190007-1	HEAD SET	+26.0 WKS	M				▽							F						◇		▽																																
52E 190014-1	PROBE	+26.0 WKS	P				▽			F										◇		▽																																
52E 190012-1	PROBE	+26.0 WKS	P				▽			F										◇		▽																																
52E 190015-1	KIT	+26.0 WKS	M				▽				F									◇		▽																																
52E 190019-1	MONITOR	+26.0 WKS	P				▽	F												◇		▽																																
52E 190020-1	TEST SET	+26.0 WKS	P				▽	F												◇		▽																																
52E 190025-1	CONTROL	+26.0 WKS	P				▽													◇		▽																																
52E 200004-1	TESTER	+24.0 WKS	M						▽			F						◇		▽																																		
52E 200012-109	J.BOX-SST	+15.0 WKS	M															▽	◇		▽																																
52E 230003-1	RECORDER	+21.0 WKS	E									▽			F				◇		▽																																
52E 230004-1	CONSOLE	+15.0 WKS	E														F	▽	◇		▽																																
52E 230005-1	POWER SYSTEM	+16.0 WKS	E														▽		◇		▽	F																															
52E 230008-1	POWER SUPPLY	+22.0 WKS	E								▽				F				◇		▽																																
52E 230012-1	CONSOLE	+22.0 WKS	E								▽				F				◇		▽																																
52E 230038-1	POWER SUPPLY	+21.0 WKS	E									▽			F				◇		▽																																
52E 270008-1	PANEL	+26.0 WKS	P				▽			F										◇			▽																														
52E 270010-1	KIT	+26.0 WKS	C				▽													◇			▽				F																										
52E 270014-1	HORIZON SIMUL.	+26.0 WKS	P				▽			F										◇			▽																														
																				◇			▽																														
52E 270015-1	MONITOR PANEL	+26.0 WKS	P				▽			F										◇			▽																														
52E 270036-1	DOLLY	+26.0 WKS	P		F	▽														◇			▽																														
52E 360013-1	TESTER	+21.0 WKS	M									▽							◇		▽																																
52E 360005-1	SIMULATOR				NOT AN APPROVED ITEM																																																

GEMINI ZONE CHART

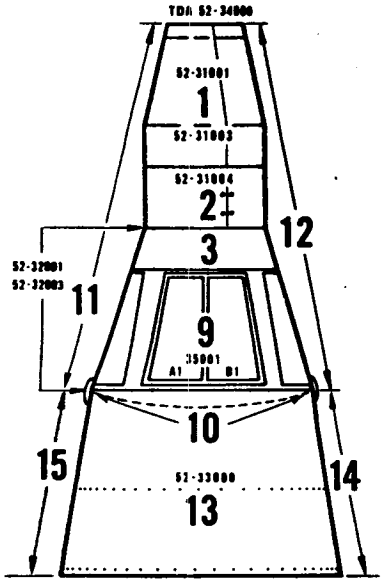

TOP VIEW

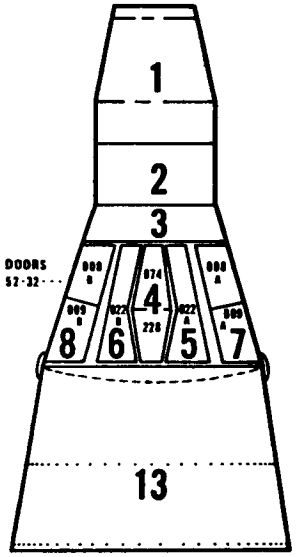

BOTTOM VIEW

1. RENDEZVOUS AND RADAR MODULE
2. RE-ENTRY RCS MODULE
3. FORWARD AREA CONE
4. CENTER EQUIPMENT BAY
5. L/H LANDING GEAR BAY
6. R/H LANDING GEAR BAY
7. L/H EQUIPMENT BAY
8. R/H EQUIPMENT BAY
9. CREW PRESSURIZED AREA
10. EXTERIOR AREA OF LARGE PRESS. BULKHEAD
11. SPACECRAFT EXTERIOR L/H
12. SPACECRAFT EXTERIOR R/H
13. INTERNAL ADAPTER AREA
14. R/H EXTERNAL ADAPTER AREA
15. L/H EXTERNAL ADAPTER AREA
16. ZONE FOR ENTIRE SPACECRAFT

GEMINI SPACECRAFT NO. 2

ZONE NO. 1

TOTAL EQUIPMENT REQUIRED 19

EQUIPMENT ON HAND 15

EQUIPMENT TO SCHEDULE 4

EQUIPMENT LATE 0

PART NO.	PART NAME	NORM. INST.	SLACK	DEF. INST.	SLACK	HOURS TO INSTALL

GEMINI ZONE CHART

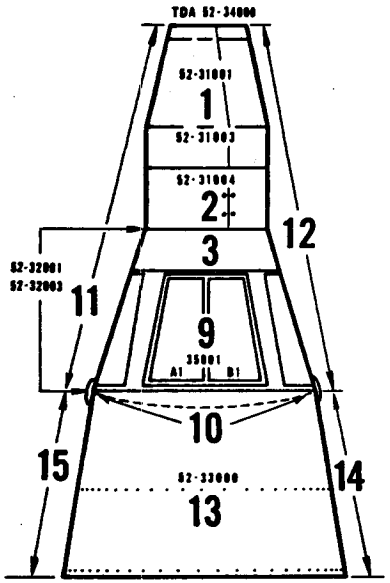

TOP VIEW

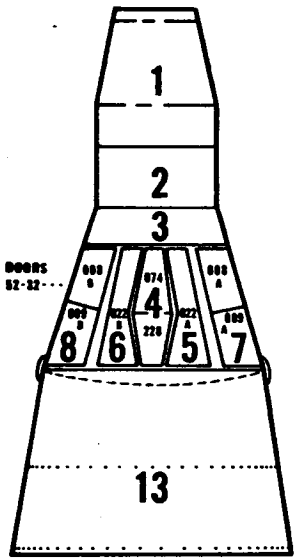

BOTTOM VIEW

1. RENDEZVOUS AND RADAR MODULE
2. RE-ENTRY RCS MODULE
3. FORWARD AREA CONE
4. CENTER EQUIPMENT BAY
5. L/H LANDING GEAR BAY
6. R/H LANDING GEAR BAY
7. L/H EQUIPMENT BAY
8. R/H EQUIPMENT BAY
9. CREW PRESSURIZED AREA
10. EXTERIOR AREA OF LARGE PRESS. BULKHEAD
11. SPACECRAFT EXTERIOR L/H
12. SPACECRAFT EXTERIOR R/H
13. INTERNAL ADAPTER AREA
14. R/H EXTERNAL ADAPTER AREA
15. L/H EXTERNAL ADAPTER AREA
16. ZONE FOR ENTIRE SPACECRAFT

GEMINI SPACECRAFT NO. 2

ZONE NO. 2

TOTAL EQUIPMENT REQUIRED 60

EQUIPMENT ON HAND 21

EQUIPMENT TO SCHEDULE 23

EQUIPMENT LATE 16

	PART NO.	PART NAME	NORM. INST.	SLACK	DEF. INST.	SLACK	HOURS TO INSTALL
52	52700-189	THRUST CHAMBER (16)	31002 A2	-20	00006 A2	0	32

GEMINI ZONE CHART

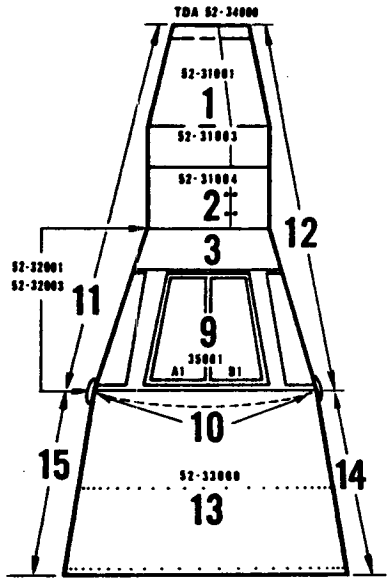

TOP VIEW

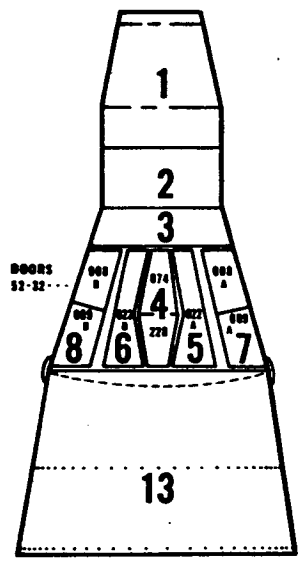

BOTTOM VIEW

1. RENDEZVOUS AND RADAR MODULE
2. RE-ENTRY RCS MODULE
3. FORWARD AREA CONE
4. CENTER EQUIPMENT BAY
5. L/H LANDING GEAR BAY
6. R/H LANDING GEAR BAY
7. L/H EQUIPMENT BAY
8. R/H EQUIPMENT BAY
9. CREW PRESSURIZED AREA
10. EXTERIOR AREA OF LARGE PRESS. BULKHEAD
11. SPACECRAFT EXTERIOR L/H
12. SPACECRAFT EXTERIOR R/H
13. INTERNAL ADAPTER AREA
14. R/H EXTERNAL ADAPTER AREA
15. L/H EXTERNAL ADAPTER AREA
16. ZONE FOR ENTIRE SPACECRAFT

GEMINI SPACECRAFT NO. 2

ZONE NO. 3

TOTAL EQUIPMENT REQUIRED 24

EQUIPMENT ON HAND 20

EQUIPMENT TO SCHEDULE 1

EQUIPMENT LATE 3

	PART NO.	PART NAME	NORM. INST.	SLACK	DEF. INST.	SLACK	HOURS TO INSTALL
52	72714-7	Switch Body (1)	00005 A4	-19	00005 A3	0	2
	72711-3	Actuator Housing (1)	00005 A4	-18	00005 A3	0	2
	72711-9	Cartridge Housing (1)	00005 A4	-18	00005 A3	0	2

GEMINI ZONE CHART

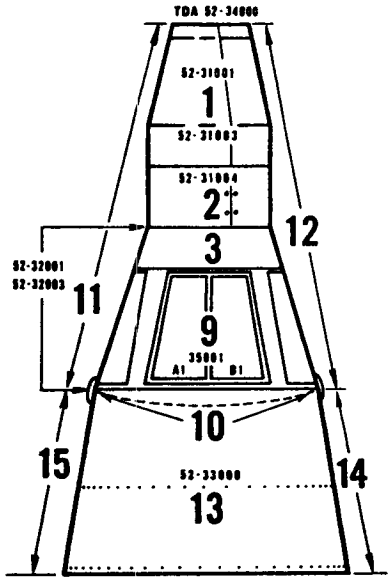

TOP VIEW

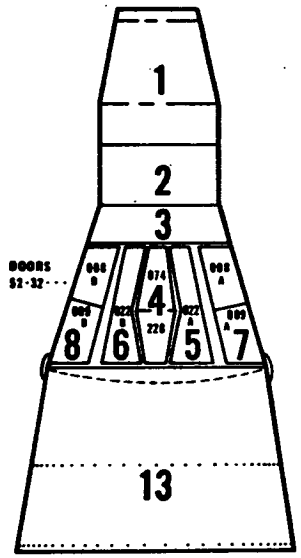

BOTTOM VIEW

1. RENDEZVOUS AND RADAR MODULE
2. RE-ENTRY RCS MODULE
3. FORWARD AREA CONE
4. CENTER EQUIPMENT BAY
5. L/H LANDING GEAR BAY
6. R/H LANDING GEAR BAY
7. L/H EQUIPMENT BAY
8. R/H EQUIPMENT BAY
9. CREW PRESSURIZED AREA
10. EXTERIOR AREA OF LARGE PRESS. BULKHEAD
11. SPACECRAFT EXTERIOR L/H
12. SPACECRAFT EXTERIOR R/H
13. INTERNAL ADAPTER AREA
14. R/H EXTERNAL ADAPTER AREA
15. L/H EXTERNAL ADAPTER AREA
16. ZONE FOR ENTIRE SPACECRAFT

GEMINI SPACECRAFT NO. 2

ZONE NO. 4

TOTAL EQUIPMENT REQUIRED 10

EQUIPMENT ON HAND 8

EQUIPMENT TO SCHEDULE 0

EQUIPMENT LATE 2

	PART NO.	PART NAME	NORM. INST.	SLACK	DEF. INST.	SLACK	HOURS TO INSTALL
52	88721-69	Temp Sensor (1)	00005 E4E1	-6	00005 A3	0	3
	83725-9	Cold Plate (1)	00005 A4	* *	00005 A3	0	2

(** Vendor W/S 10-18-3)
Plate to be inspected at MAC prior to installation.

GEMINI ZONE CHART

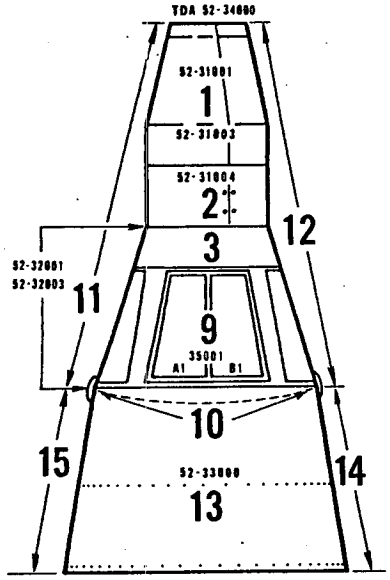

TOP VIEW

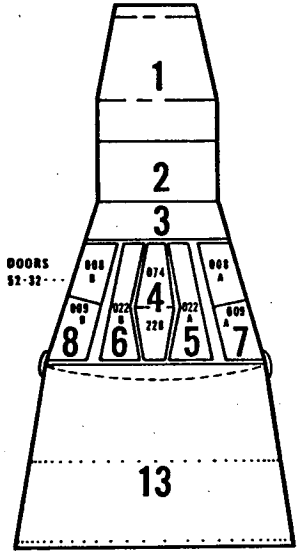

BOTTOM VIEW

1. RENDEZVOUS AND RADAR MODULE
2. RE-ENTRY RCS MODULE
3. FORWARD AREA CONE
4. CENTER EQUIPMENT BAY
5. L/H LANDING GEAR BAY
6. R/H LANDING GEAR BAY
7. L/H EQUIPMENT BAY
8. R/H EQUIPMENT BAY
9. CREW PRESSURIZED AREA
10. EXTERIOR AREA OF LARGE PRESS. BULKHEAD
11. SPACECRAFT EXTERIOR L/H
12. SPACECRAFT EXTERIOR R/H
13. INTERNAL ADAPTER AREA
14. R/H EXTERNAL ADAPTER AREA
15. L/H EXTERNAL ADAPTER AREA
16. ZONE FOR ENTIRE SPACECRAFT

GEMINI SPACECRAFT NO. 2

ZONE NO. 5

TOTAL EQUIPMENT REQUIRED 10

EQUIPMENT ON HAND 5

EQUIPMENT TO SCHEDULE 0

EQUIPMENT LATE 5

	PART NO.	PART NAME	NORM. INST.	SLACK	DEF. INST.	SLACK	HOURS TO INSTALL
52	85713-85	Multiplexer L.L. (1)	00005 A4	-29	00002 A2	+5	2

GEMINI ZONE CHART

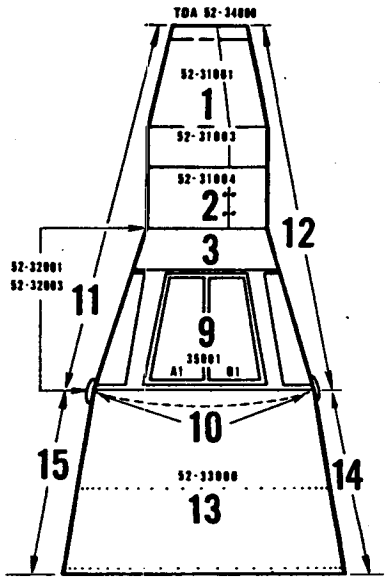

TOP VIEW

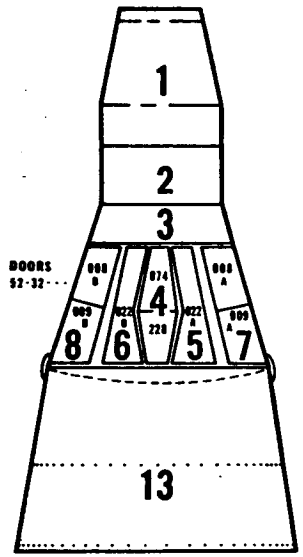

BOTTOM VIEW

1. RENDEZVOUS AND RADAR MODULE
2. RE-ENTRY RCS MODULE
3. FORWARD AREA CONE
4. CENTER EQUIPMENT BAY
5. L/H LANDING GEAR BAY
6. R/H LANDING GEAR BAY
7. L/H EQUIPMENT BAY
8. R/H EQUIPMENT BAY
9. CREW PRESSURIZED AREA
10. EXTERIOR AREA OF LARGE PRESS. BULKHEAD
11. SPACECRAFT EXTERIOR L/H
12. SPACECRAFT EXTERIOR R/H
13. INTERNAL ADAPTER AREA
14. R/H EXTERNAL ADAPTER AREA
15. L/H EXTERNAL ADAPTER AREA
16. ZONE FOR ENTIRE SPACECRAFT

GEMINI SPACECRAFT NO. 2

ZONE NO. 6

TOTAL EQUIPMENT REQUIRED 7

EQUIPMENT ON HAND 5

EQUIPMENT TO SCHEDULE 2

EQUIPMENT LATE 0

PART NO.	PART NAME	NORM. INST.	SLACK	DEF. INST.	SLACK	HOURS TO INSTALL

GEMINI ZONE CHART

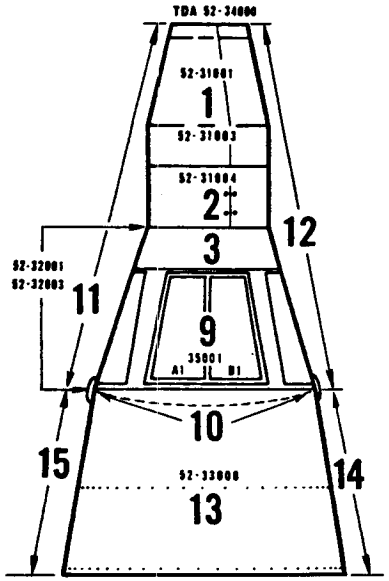

TOP VIEW

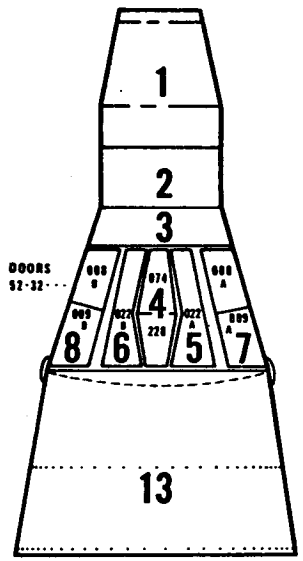

BOTTOM VIEW

1. RENDEZVOUS AND RADAR MODULE
2. RE-ENTRY RCS MODULE
3. FORWARD AREA CONE
4. CENTER EQUIPMENT BAY
5. L/H LANDING GEAR BAY
6. R/H LANDING GEAR BAY
7. L/H EQUIPMENT BAY
8. R/H EQUIPMENT BAY
9. CREW PRESSURIZED AREA
10. EXTERIOR AREA OF LARGE PRESS. BULKHEAD
11. SPACECRAFT EXTERIOR L/H
12. SPACECRAFT EXTERIOR R/H
13. INTERNAL ADAPTER AREA
14. R/H EXTERNAL ADAPTER AREA
15. L/H EXTERNAL ADAPTER AREA
16. ZONE FOR ENTIRE SPACECRAFT

GEMINI SPACECRAFT NO. 2

ZONE NO. 7

TOTAL EQUIPMENT REQUIRED 27

EQUIPMENT ON HAND 20

EQUIPMENT TO SCHEDULE 1

EQUIPMENT LATE 6

	PART NO.	PART NAME	NORM. INST.	SLACK	DEF. INST.	SLACK	HOURS TO INSTALL
52	72714-9	Switch Body (2)	00005 A4	-19	00005 A3	0	3
	87717-17	Inertial Plate form (1)	00005 A4	-27	00005 A1	0	3
	79700-5	Fuel Cell Mont Unit (1)	00005 A3	-26	00002 A2	+1	4
	87723-5	Aux. Pow Unit (1)	00005 A3	-22	00005 A2	+9	4
	83736-13	Cold Plate (1)	00005 A4	**	00005 A3	0	2

(** Vendor W/S 10-18-3)
Plate to be inspected at MAC prior to installation.

GEMINI ZONE CHART

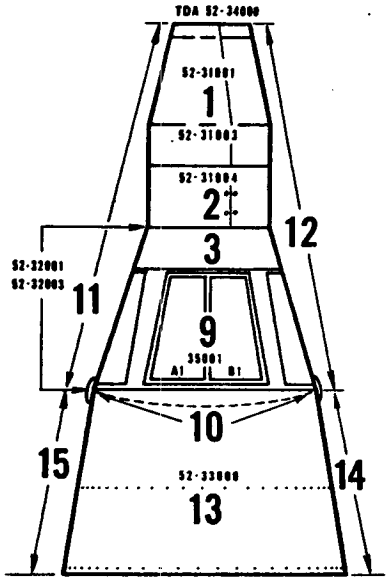

TOP VIEW

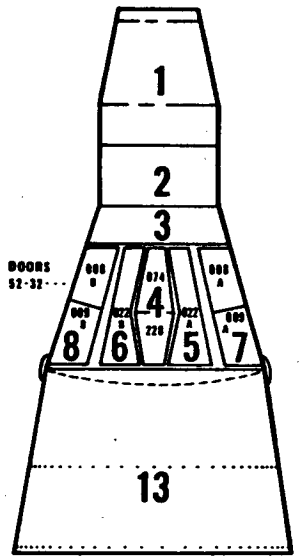

BOTTOM VIEW

1. RENDEZVOUS AND RADAR MODULE
2. RE-ENTRY RCS MODULE
3. FORWARD AREA CONE
4. CENTER EQUIPMENT BAY
5. L/H LANDING GEAR BAY
6. R/H LANDING GEAR BAY
7. L/H EQUIPMENT BAY
8. R/H EQUIPMENT BAY
9. CREW PRESSURIZED AREA
10. EXTERIOR AREA OF LARGE PRESS. BULKHEAD
11. SPACECRAFT EXTERIOR L/H
12. SPACECRAFT EXTERIOR R/H
13. INTERNAL ADAPTER AREA
14. R/H EXTERNAL ADAPTER AREA
15. L/H EXTERNAL ADAPTER AREA
16. ZONE FOR ENTIRE SPACECRAFT

GEMINI SPACECRAFT NO. 2

ZONE NO. 8

TOTAL EQUIPMENT REQUIRED 35

EQUIPMENT ON HAND 22

EQUIPMENT TO SCHEDULE 1

EQUIPMENT LATE 12

	PART NO.	PART NAME		NORM. INST.	SLACK	DEF. INST.	SLACK	HOURS TO INSTALL
52	83731-5	Cold Plate	(1)	00005 A4	*	00005 A3	0	2
	72714-9	Switch Body	(3)	00005 A4	-19	00005 A3	0	2
	72714-7	Switch Body	(3)	00005 A4	-19	00005 A3	0	2
	85713-65	H.F. Transmitter	(1)	00005 A3	-29	00002 A2	+6	2
	85713-183	Programmer	(1)	00005 A3	-29	00002 A2	+4	2
	85713-67	L.F. Transmitter	(1)	00005 A3	-27	00002 A2	0	2
	85713-185	L.L. Multiplexer	(1)	00005 A3	-29	00002 A2	+4	2
	85713-187	H.L. Multiplexer	(1)	00005 A3	-29	00002 A2	+4	2

* Plate now in MAC X-Ray Inspection

GEMINI ZONE CHART

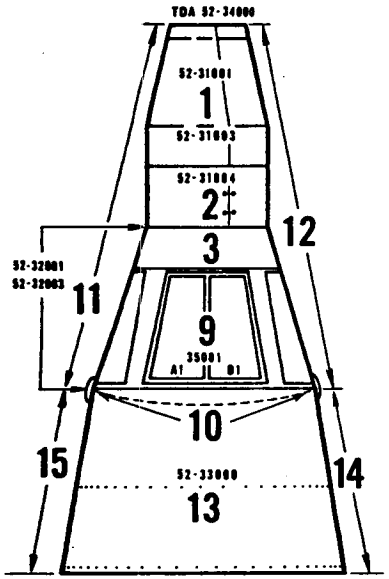

TOP VIEW

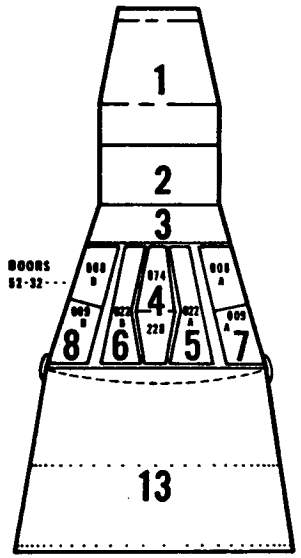

BOTTOM VIEW

1. RENDEZVOUS AND RADAR MODULE
2. RE-ENTRY RCS MODULE
3. FORWARD AREA CONE
4. CENTER EQUIPMENT BAY
5. L/H LANDING GEAR BAY
6. R/H LANDING GEAR BAY
7. L/H EQUIPMENT BAY
8. R/H EQUIPMENT BAY
9. CREW PRESSURIZED AREA
10. EXTERIOR AREA OF LARGE PRESS. BULKHEAD
11. SPACECRAFT EXTERIOR L/H
12. SPACECRAFT EXTERIOR R/H
13. INTERNAL ADAPTER AREA
14. R/H EXTERNAL ADAPTER AREA
15. L/H EXTERNAL ADAPTER AREA
16. ZONE FOR ENTIRE SPACECRAFT

GEMINI SPACECRAFT NO. 2

ZONE NO. 9

TOTAL EQUIPMENT REQUIRED 72

EQUIPMENT ON HAND 59

EQUIPMENT TO SCHEDULE 9

EQUIPMENT LATE 4

	PART NO.	PART NAME	NORM. INST.	SLACK	DEF. INST.	SLACK	HOURS TO INSTALL
52	83700-915	Cabin Heat Exch (1)	00005 A4	-27	00005 A2	0	5
	88721-69	Temp Sensor (3)	00005 E4E1	-6	00005 A3	0	2

GEMINI ZONE CHART

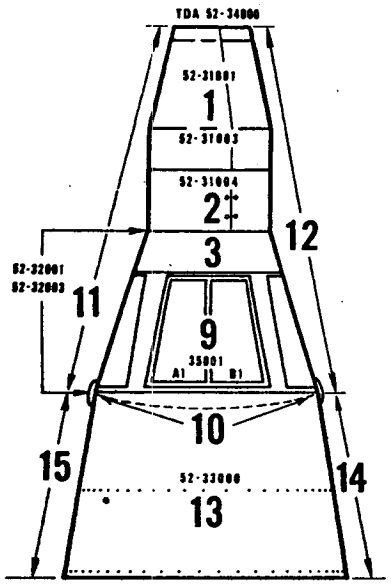

TOP VIEW

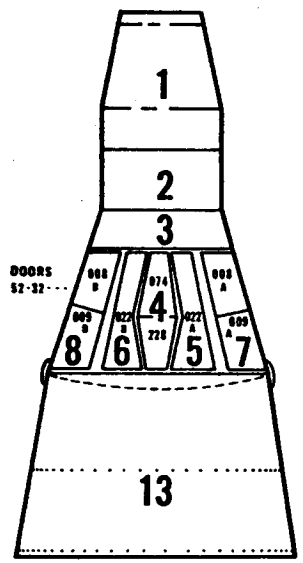

BOTTOM VIEW

1. RENDEZVOUS AND RADAR MODULE
2. RE-ENTRY RCS MODULE
3. FORWARD AREA CONE
4. CENTER EQUIPMENT BAY
5. L/H LANDING GEAR BAY
6. R/H LANDING GEAR BAY
7. L/H EQUIPMENT BAY
8. R/H EQUIPMENT BAY
9. CREW PRESSURIZED AREA
10. EXTERIOR AREA OF LARGE PRESS. BULKHEAD
11. SPACECRAFT EXTERIOR L/H
12. SPACECRAFT EXTERIOR R/H
13. INTERNAL ADAPTER AREA
14. R/H EXTERNAL ADAPTER AREA
15. L/H EXTERNAL ADAPTER AREA
16. ZONE FOR ENTIRE SPACECRAFT

GEMINI SPACECRAFT NO. 2

ZONE NO. PALLET "A" L.H

TOTAL EQUIPMENT REQUIRED 7

EQUIPMENT ON HAND 4

EQUIPMENT TO SCHEDULE 3

EQUIPMENT LATE 0

PART NO.	PART NAME	NORM. INST.	SLACK	DEF. INST.	SLACK	HOURS TO INSTALL

GEMINI ZONE CHART

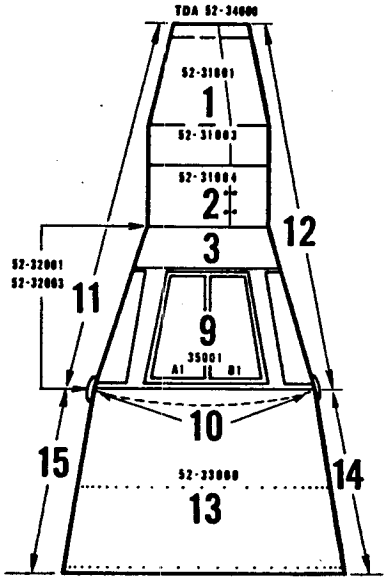

TOP VIEW

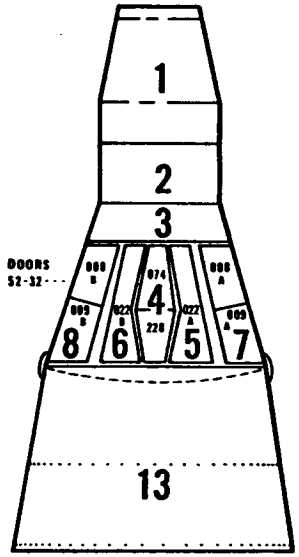

BOTTOM VIEW

1. RENDEZVOUS AND RADAR MODULE
2. RE-ENTRY RCS MODULE
3. FORWARD AREA CONE
4. CENTER EQUIPMENT BAY
5. L/H LANDING GEAR BAY
6. R/H LANDING GEAR BAY
7. L/H EQUIPMENT BAY
8. R/H EQUIPMENT BAY
9. CREW PRESSURIZED AREA
10. EXTERIOR AREA OF LARGE PRESS. BULKHEAD
11. SPACECRAFT EXTERIOR L/H
12. SPACECRAFT EXTERIOR R/H
13. INTERNAL ADAPTER AREA
14. R/H EXTERNAL ADAPTER AREA
15. L/H EXTERNAL ADAPTER AREA
16. ZONE FOR ENTIRE SPACECRAFT

GEMINI SPACECRAFT NO. 2

ZONE NO. PALLET "A" RH

TOTAL EQUIPMENT REQUIRED 8

EQUIPMENT ON HAND 7

EQUIPMENT TO SCHEDULE 1

EQUIPMENT LATE 0

PART NO.	PART NAME	NORM. INST.	SLACK	DEF. INST.	SLACK	HOURS TO INSTALL

GEMINI ZONE CHART

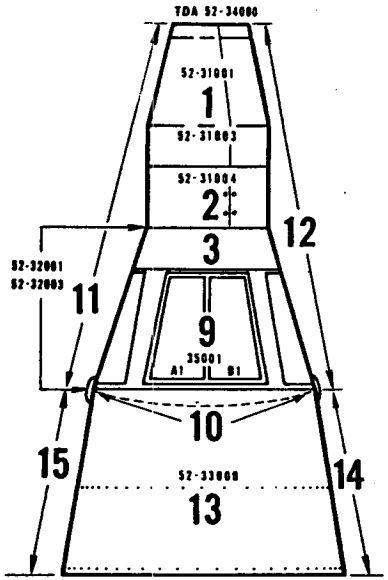

TOP VIEW

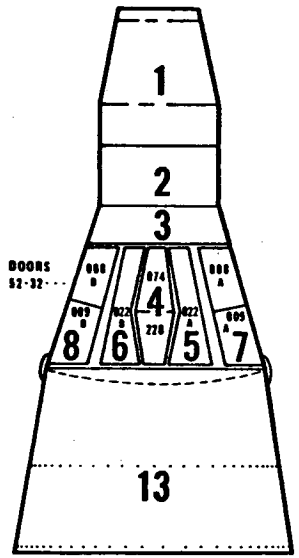

BOTTOM VIEW

1. RENDEZVOUS AND RADAR MODULE
2. RE-ENTRY RCS MODULE
3. FORWARD AREA CONE
4. CENTER EQUIPMENT BAY
5. L/H LANDING GEAR BAY
6. R/H LANDING GEAR BAY
7. L/H EQUIPMENT BAY
8. R/H EQUIPMENT BAY
9. CREW PRESSURIZED AREA
10. EXTERIOR AREA OF LARGE PRESS. BULKHEAD
11. SPACECRAFT EXTERIOR L/H
12. SPACECRAFT EXTERIOR R/H
13. INTERNAL ADAPTER AREA
14. R/H EXTERNAL ADAPTER AREA
15. L/H EXTERNAL ADAPTER AREA
16. ZONE FOR ENTIRE SPACECRAFT

GEMINI SPACECRAFT NO. 2

ZONE NO. PALLET "B" L H

TOTAL EQUIPMENT REQUIRED 13

EQUIPMENT ON HAND 6

EQUIPMENT TO SCHEDULE 6

EQUIPMENT LATE 1

	PART NO.	PART NAME	NORM. INST.	SLACK	DEF. INST.	SLACK	HOURS TO INSTALL
52	88106-5	INSTRUMENTATION ASSY	80103 501	-1	00035 A1	+.0	3

GEMINI ZONE CHART

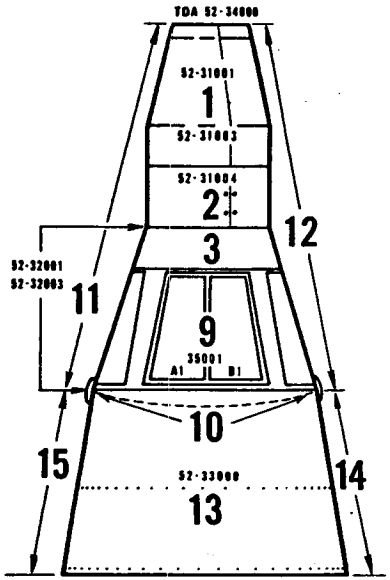

TOP VIEW

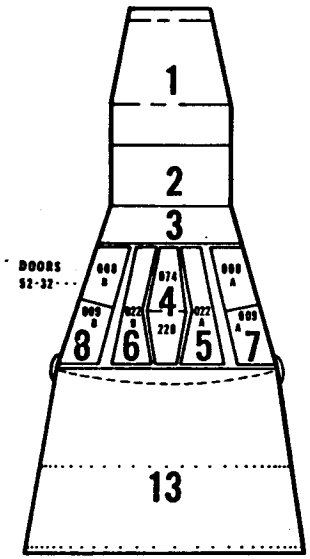

BOTTOM VIEW

1. RENDEZVOUS AND RADAR MODULE
2. RE-ENTRY RCS MODULE
3. FORWARD AREA CONE
4. CENTER EQUIPMENT BAY
5. L/H LANDING GEAR BAY
6. R/H LANDING GEAR BAY
7. L/H EQUIPMENT BAY
8. R/H EQUIPMENT BAY
9. CREW PRESSURIZED AREA
10. EXTERIOR AREA OF LARGE PRESS. BULKHEAD
11. SPACECRAFT EXTERIOR L/H
12. SPACECRAFT EXTERIOR R/H
13. INTERNAL ADAPTER AREA
14. R/H EXTERNAL ADAPTER AREA
15. L/H EXTERNAL ADAPTER AREA
16. ZONE FOR ENTIRE SPACECRAFT

GEMINI SPACECRAFT NO. 2

ZONE NO. PALLET "B" RH

TOTAL EQUIPMENT REQUIRED 9

EQUIPMENT ON HAND 3

EQUIPMENT TO SCHEDULE 6

EQUIPMENT LATE 0

PART NO.	PART NAME	NORM. INST.	SLACK	DEF. INST.	SLACK	HOURS TO INSTALL

GEMINI ZONE CHART

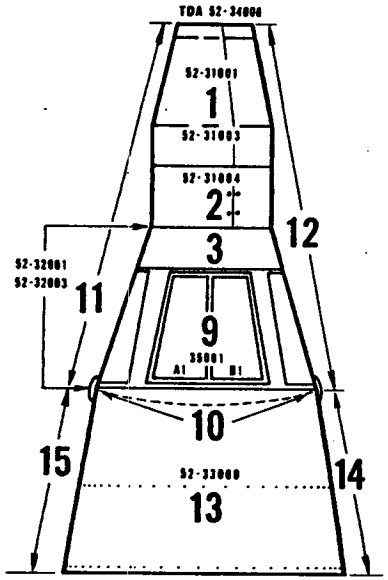

TOP VIEW

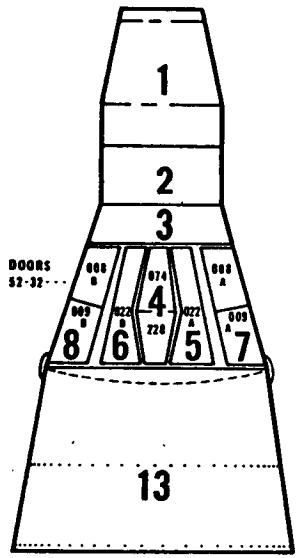

BOTTOM VIEW

1. RENDEZVOUS AND RADAR MODULE
2. RE-ENTRY RCS MODULE
3. FORWARD AREA CONE
4. CENTER EQUIPMENT BAY
5. L/H LANDING GEAR BAY
6. R/H LANDING GEAR BAY
7. L/H EQUIPMENT BAY
8. R/H EQUIPMENT BAY
9. CREW PRESSURIZED AREA
10. EXTERIOR AREA OF LARGE PRESS. BULKHEAD
11. SPACECRAFT EXTERIOR L/H
12. SPACECRAFT EXTERIOR R/H
13. INTERNAL ADAPTER AREA
14. R/H EXTERNAL ADAPTER AREA
15. L/H EXTERNAL ADAPTER AREA
16. ZONE FOR ENTIRE SPACECRAFT

GEMINI SPACECRAFT NO. 2

ZONE NO. LOWER MAIN INSTRUMENT PANEL

TOTAL EQUIPMENT REQUIRED 27

EQUIPMENT ON HAND 27

EQUIPMENT TO SCHEDULE 0

EQUIPMENT LATE 0

PART NO.	PART NAME	NORM. INST.	SLACK	DEF. INST.	SLACK	HOURS TO INSTALL

GEMINI ZONE CHART

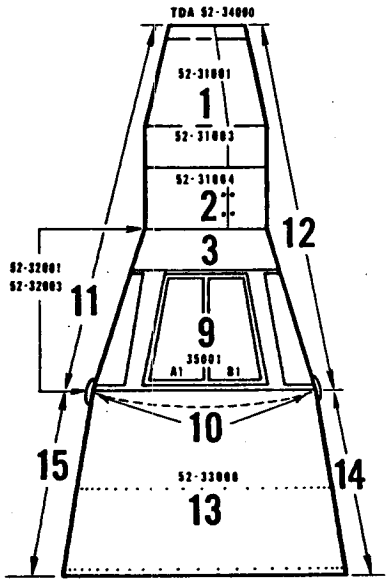

TOP VIEW

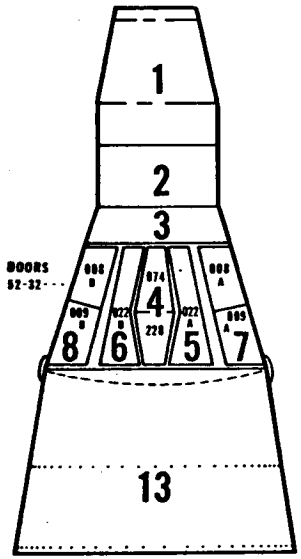

BOTTOM VIEW

1. RENDEZVOUS AND RADAR MODULE
2. RE-ENTRY RCS MODULE
3. FORWARD AREA CONE
4. CENTER EQUIPMENT BAY
5. L/H LANDING GEAR BAY
6. R/H LANDING GEAR BAY
7. L/H EQUIPMENT BAY
8. R/H EQUIPMENT BAY
9. CREW PRESSURIZED AREA
10. EXTERIOR AREA OF LARGE PRESS. BULKHEAD
11. SPACECRAFT EXTERIOR L/H
12. SPACECRAFT EXTERIOR R/H
13. INTERNAL ADAPTER AREA
14. R/H EXTERNAL ADAPTER AREA
15. L/H EXTERNAL ADAPTER AREA
16. ZONE FOR ENTIRE SPACECRAFT

GEMINI SPACECRAFT NO. 2

ZONE NO. 9 UPPER MAIN INST PANEL

TOTAL EQUIPMENT REQUIRED 46

EQUIPMENT ON HAND 41

EQUIPMENT TO SCHEDULE 5

EQUIPMENT LATE 0

PART NO.	PART NAME	NORM. INST.	SLACK	DEF. INST.	SLACK	HOURS TO INSTALL

GEMINI ZONE CHART

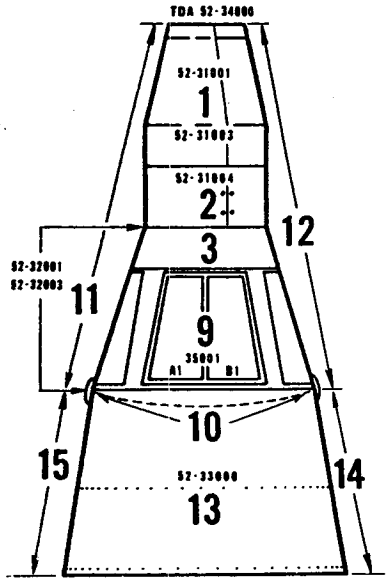

TOP VIEW

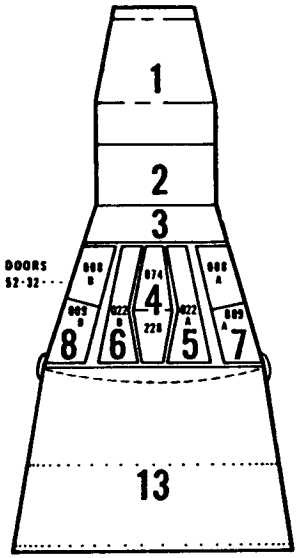

BOTTOM VIEW

1. RENDEZVOUS AND RADAR MODULE
2. RE-ENTRY RCS MODULE
3. FORWARD AREA CONE
4. CENTER EQUIPMENT BAY
5. L/H LANDING GEAR BAY
6. R/H LANDING GEAR BAY
7. L/H EQUIPMENT BAY
8. R/H EQUIPMENT BAY
9. CREW PRESSURIZED AREA
10. EXTERIOR AREA OF LARGE PRESS. BULKHEAD
11. SPACECRAFT EXTERIOR L/H
12. SPACECRAFT EXTERIOR R/H
13. INTERNAL ADAPTER AREA
14. R/H EXTERNAL ADAPTER AREA
15. L/H EXTERNAL ADAPTER AREA
16. ZONE FOR ENTIRE SPACECRAFT

GEMINI SPACECRAFT NO. 2

ZONE NO. 9 L.H MAIN INST. PANEL

TOTAL EQUIPMENT REQUIRED 23

EQUIPMENT ON HAND 13

EQUIPMENT TO SCHEDULE 7

EQUIPMENT LATE 3

PART NO.	PART NAME	NORM. INST.	SLACK	DEF. INST.	SLACK	HOURS TO INSTALL
52 81702-3	LINER ACCELMTER IND (1)	81000 501-2	-11	33005 A2	+0	4
81701-3	ALTIMETER IND (1)	"	-9	"	+2	2
87712-5	INCREMENT VEL IND (1)	"	-11	"	+0	2

GEMINI ZONE CHART

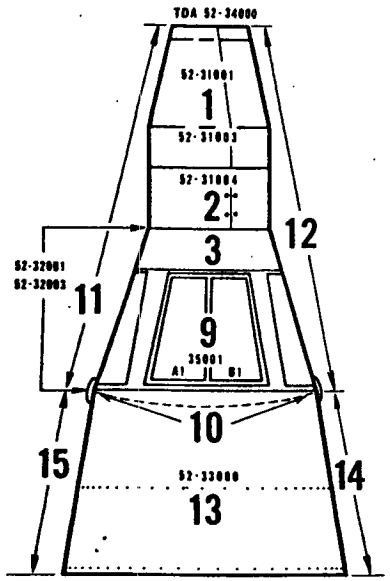

TOP VIEW

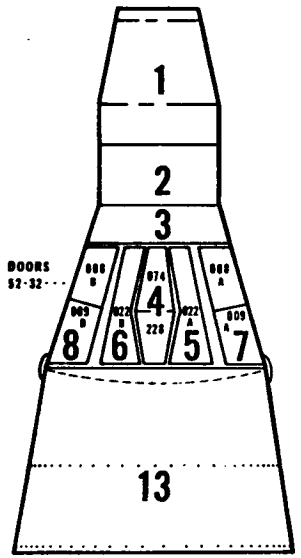

BOTTOM VIEW

1. RENDEZVOUS AND RADAR MODULE
2. RE-ENTRY RCS MODULE
3. FORWARD AREA CONE
4. CENTER EQUIPMENT BAY
5. L/H LANDING GEAR BAY
6. R/H LANDING GEAR BAY
7. L/H EQUIPMENT BAY
8. R/H EQUIPMENT BAY
9. CREW PRESSURIZED AREA
10. EXTERIOR AREA OF LARGE PRESS. BULKHEAD
11. SPACECRAFT EXTERIOR L/H
12. SPACECRAFT EXTERIOR R/H
13. INTERNAL ADAPTER AREA
14. R/H EXTERNAL ADAPTER AREA
15. L/H EXTERNAL ADAPTER AREA
16. ZONE FOR ENTIRE SPACECRAFT

GEMINI SPACECRAFT NO. 2

ZONE NO. R/H INSTRUMENT PANEL

TOTAL EQUIPMENT REQUIRED 23

EQUIPMENT ON HAND 19

EQUIPMENT TO SCHEDULE 2

EQUIPMENT LATE 2

PART NO.	PART NAME	NORM. INST.	SLACK	DEF. INST.	SLACK	HOURS TO INSTALL
52-87713-7	MANU. DATA KEY BOARD	81000-502-2	-26	00005 A1	+1	4
87713-9	MANU. DATA READOUT	81000-502-2	-26	00005 A1	+1	2

GEMINI ZONE CHART

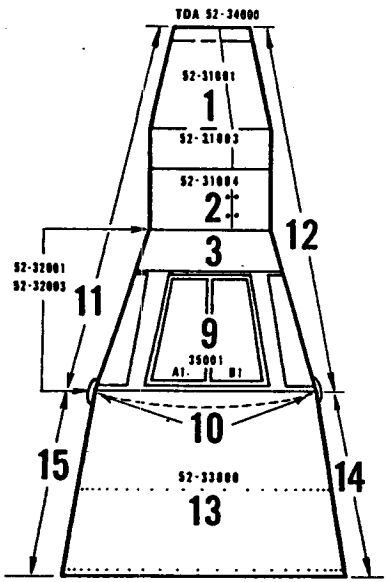

TOP VIEW

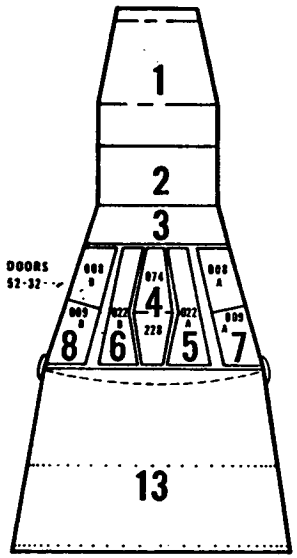

BOTTOM VIEW

1. RENDEZVOUS AND RADAR MODULE
2. RE-ENTRY RCS MODULE
3. FORWARD AREA CONE
4. CENTER EQUIPMENT BAY
5. L/H LANDING GEAR BAY
6. R/H LANDING GEAR BAY
7. L/H EQUIPMENT BAY
8. R/H EQUIPMENT BAY
9. CREW PRESSURIZED AREA
10. EXTERIOR AREA OF LARGE PRESS. BULKHEAD
11. SPACECRAFT EXTERIOR L/H
12. SPACECRAFT EXTERIOR R/H
13. INTERNAL ADAPTER AREA
14. R/H EXTERNAL ADAPTER AREA
15. L/H EXTERNAL ADAPTER AREA
16. ZONE FOR ENTIRE SPACECRAFT

GEMINI SPACECRAFT NO. 2

ZONE NO. 9 PEDESTAL

TOTAL EQUIPMENT REQUIRED 15

EQUIPMENT ON HAND 10

EQUIPMENT TO SCHEDULE 1

EQUIPMENT LATE 4

	PART NO.	PART NAME	NORM. INST.	SLACK	DEF. INST.	SLACK	HOURS TO INSTALL
52	91002-11	PANEL TEMP SUIT (1)	81002 501	-7	00005 A2	0	1
	83156-1	TEMP CNTL SUITCABIN (1)	"	-7	"	0	1
	83722-13	COLD PLATE (1)	"	-8	"	0	1
	83175-1	PULLEY ASSY (1)	"	-7	"	0	1

GEMINI ZONE CHART

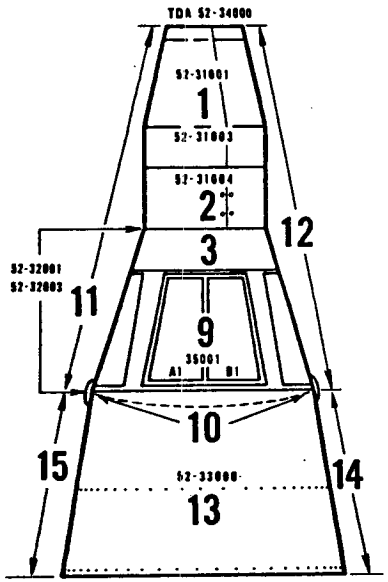

TOP VIEW

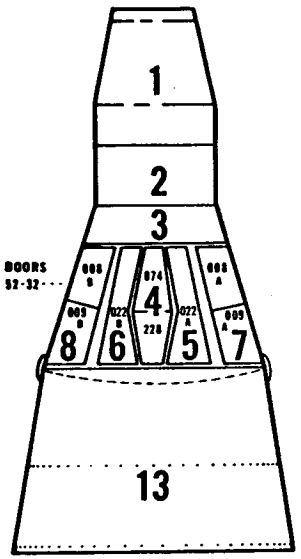

BOTTOM VIEW

1. RENDEZVOUS AND RADAR MODULE
2. RE-ENTRY RCS MODULE
3. FORWARD AREA CONE
4. CENTER EQUIPMENT BAY
5. L/H LANDING GEAR BAY
6. R/H LANDING GEAR BAY
7. L/H EQUIPMENT BAY
8. R/H EQUIPMENT BAY
9. CREW PRESSURIZED AREA
10. EXTERIOR AREA OF LARGE PRESS. BULKHEAD
11. SPACECRAFT EXTERIOR L/H
12. SPACECRAFT EXTERIOR R/H
13. INTERNAL ADAPTER AREA
14. R/H EXTERNAL ADAPTER AREA
15. L/H EXTERNAL ADAPTER AREA
16. ZONE FOR ENTIRE SPACECRAFT

GEMINI SPACECRAFT NO. 2

ZONE NO. 13

TOTAL EQUIPMENT REQUIRED 51

EQUIPMENT ON HAND 30

EQUIPMENT TO SCHEDULE 5

EQUIPMENT LATE 16

	PART NO.	PART NAME	NORM. INST.	SLACK	DEF. INST.	SLACK	HOURS TO INSTALL
52	52701-225	THRUST CHAMBER (6)	33000 A3	-22	00005 A2	+2	12
	52701-221	THRUST CHAMBER (8)	33000 A3	-22	00005 A2	+2	16
	52701-223	THRUST CHAMBER (2)	33000 A3	-22	00005 A2	+2	4

GEMINI ZONE CHART

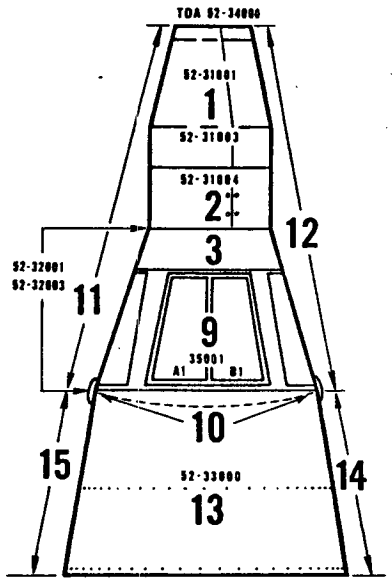

TOP VIEW

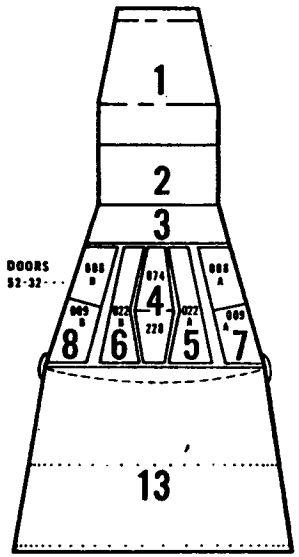

BOTTOM VIEW

1. RENDEZVOUS AND RADAR MODULE
2. RE-ENTRY RCS MODULE
3. FORWARD AREA CONE
4. CENTER EQUIPMENT BAY
5. L/H LANDING GEAR BAY
6. R/H LANDING GEAR BAY
7. L/H EQUIPMENT BAY
8. R/H EQUIPMENT BAY
9. CREW PRESSURIZED AREA
10. EXTERIOR AREA OF LARGE PRESS. BULKHEAD
11. SPACECRAFT EXTERIOR L/H
12. SPACECRAFT EXTERIOR R/H
13. INTERNAL ADAPTER AREA
14. R/H EXTERNAL ADAPTER AREA
15. L/H EXTERNAL ADAPTER AREA
16. ZONE FOR ENTIRE SPACECRAFT

GEMINI SPACECRAFT NO. 2

ZONE NO. ECS O2 MODULE

TOTAL EQUIPMENT REQUIRED 20

EQUIPMENT ON HAND 5

EQUIPMENT TO SCHEDULE 10

EQUIPMENT LATE 5

	PART NO.	PART NAME	NORM. INST.	SLACK	DEF. INST.	SLACK	HOURS TO INSTALL
52	83700-195	H_2O_2 EVAP (1)	MOD INSTL	-21	33000 A1	0	2
	-157	POWER SUPPLY (4)	"	-16	00005 A3	0	8

GEMINI ZONE CHART

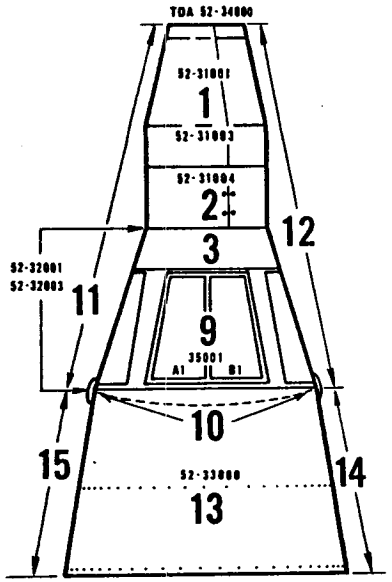

TOP VIEW

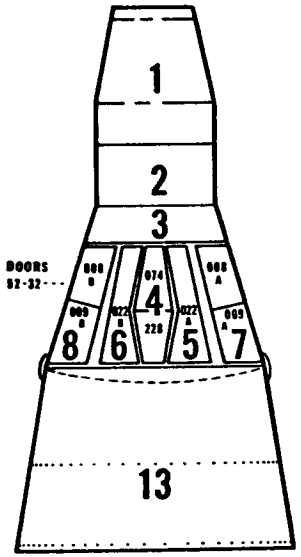

BOTTOM VIEW

1. RENDEZVOUS AND RADAR MODULE
2. RE-ENTRY RCS MODULE
3. FORWARD AREA CONE
4. CENTER EQUIPMENT BAY
5. L/H LANDING GEAR BAY
6. R/H LANDING GEAR BAY
7. L/H EQUIPMENT BAY
8. R/H EQUIPMENT BAY
9. CREW PRESSURIZED AREA
10. EXTERIOR AREA OF LARGE PRESS. BULKHEAD
11. SPACECRAFT EXTERIOR L/H
12. SPACECRAFT EXTERIOR R/H
13. INTERNAL ADAPTER AREA
14. R/H EXTERNAL ADAPTER AREA
15. L/H EXTERNAL ADAPTER AREA
16. ZONE FOR ENTIRE SPACECRAFT

GEMINI SPACECRAFT NO. 2

ZONE NO. ECS O2 COOLANT

TOTAL EQUIPMENT REQUIRED 5

EQUIPMENT ON HAND 2

EQUIPMENT TO SCHEDULE 3

EQUIPMENT LATE 0

PART NO.	PART NAME	NORM. INST.	SLACK	DEF. INST.	SLACK	HOURS TO INSTALL

26 OCT 63

GEMINI ZONE CHART

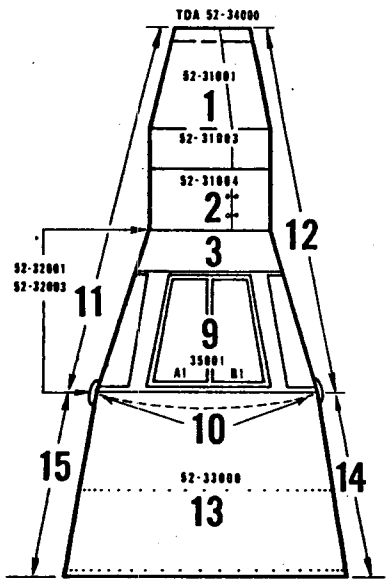

TOP VIEW

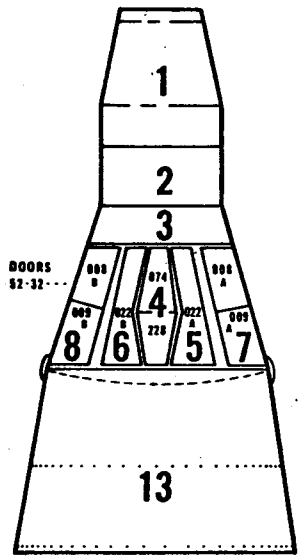

BOTTOM VIEW

1. RENDEZVOUS AND RADAR MODULE
2. RE-ENTRY RCS MODULE
3. FORWARD AREA CONE
4. CENTER EQUIPMENT BAY
5. L/H LANDING GEAR BAY
6. R/H LANDING GEAR BAY
7. L/H EQUIPMENT BAY
8. R/H EQUIPMENT BAY
9. CREW PRESSURIZED AREA
10. EXTERIOR AREA OF LARGE PRESS. BULKHEAD
11. SPACECRAFT EXTERIOR L/H
12. SPACECRAFT EXTERIOR R/H
13. INTERNAL ADAPTER AREA
14. R/H EXTERNAL ADAPTER AREA
15. L/H EXTERNAL ADAPTER AREA
16. ZONE FOR ENTIRE SPACECRAFT

GEMINI SPACECRAFT NO. 2

ZONE NO. ELECTRONIC MODULE

TOTAL EQUIPMENT REQUIRED 21

EQUIPMENT ON HAND 11

EQUIPMENT TO SCHEDULE 6

EQUIPMENT LATE 4

PART NO.	PART NAME	NORM. INST.	SLACK	DEF. INST.	SLACK	HOURS TO INSTALL
52 85713-63	MID. FREQ TELE XFORMER (1)	MOD INSTL	-21	00005 A1	0	4
-87	HILEV MULTIPLEXER (2)	"	-29	00002 A2	0	1
A050006	DC TO DC CONVERTER (1)	"	-16	83000 A3	0	4

GEMINI ZONE CHART

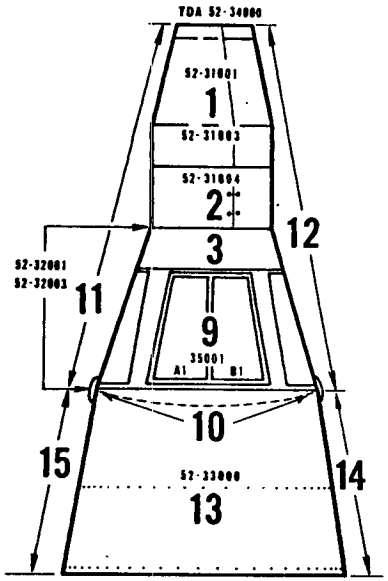

TOP VIEW

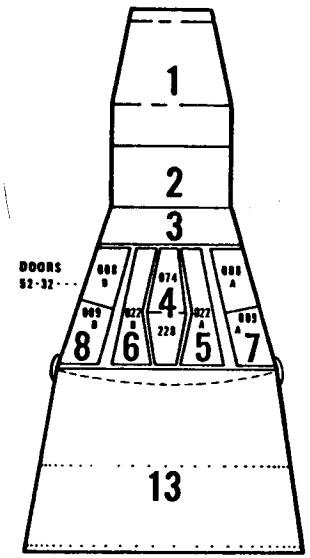

BOTTOM VIEW

1. RENDEZVOUS AND RADAR MODULE
2. RE-ENTRY RCS MODULE
3. FORWARD AREA CONE
4. CENTER EQUIPMENT BAY
5. L/H LANDING GEAR BAY
6. R/H LANDING GEAR BAY
7. L/H EQUIPMENT BAY
8. R/H EQUIPMENT BAY
9. CREW PRESSURIZED AREA
10. EXTERIOR AREA OF LARGE PRESS. BULKHEAD
11. SPACECRAFT EXTERIOR L/H
12. SPACECRAFT EXTERIOR R/H
13. INTERNAL ADAPTER AREA
14. R/H EXTERNAL ADAPTER AREA
15. L/H EXTERNAL ADAPTER AREA
16. ZONE FOR ENTIRE SPACECRAFT

GEMINI SPACECRAFT NO. 2

ZONE NO. OAMS MOD

TOTAL EQUIPMENT REQUIRED 21

EQUIPMENT ON HAND 13

EQUIPMENT TO SCHEDULE 7

EQUIPMENT LATE 1

	PART NO.	PART NAME	NORM. INST.	SLACK	DEF. INST.	SLACK	HOURS TO INSTALL
52	88705-37	PRESSURE TRANSDUCER	MOD INSTL	-18	33000 A2	+0	

26 OCT 63

GEMINI ZONE CHART

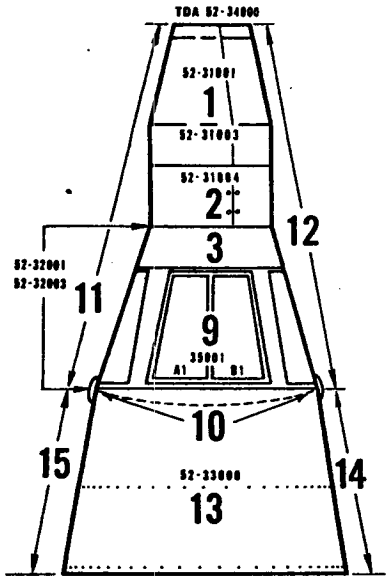

TOP VIEW

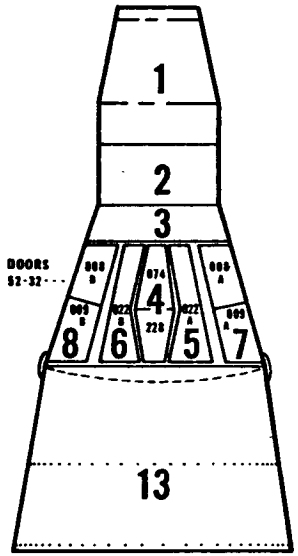

BOTTOM VIEW

1. RENDEZVOUS AND RADAR MODULE
2. RE-ENTRY RCS MODULE
3. FORWARD AREA CONE
4. CENTER EQUIPMENT BAY
5. L/H LANDING GEAR BAY
6. R/H LANDING GEAR BAY
7. L/H EQUIPMENT BAY
8. R/H EQUIPMENT BAY
9. CREW PRESSURIZED AREA
10. EXTERIOR AREA OF LARGE PRESS. BULKHEAD
11. SPACECRAFT EXTERIOR L/H
12. SPACECRAFT EXTERIOR R/H
13. INTERNAL ADAPTER AREA
14. R/H EXTERNAL ADAPTER AREA
15. L/H EXTERNAL ADAPTER AREA
16. ZONE FOR ENTIRE SPACECRAFT

GEMINI SPACECRAFT NO. 2

ZONE NO. FUEL CELL

TOTAL EQUIPMENT REQUIRED 35

EQUIPMENT ON HAND 12

EQUIPMENT TO SCHEDULE 16

EQUIPMENT LATE 7

	PART NO.	PART NAME	NORM. INST.	SLACK	DEF. INST.	SLACK	HOURS TO INSTALL
52	79700-9	FUEL CELL (2)	MOD INST	-26	00002 A2	+2	4
	83701-77	HYD SUB ASSY (1)	"	-25	00005 A1	+0	3
	83700-141	TEMP CONTROL (2)	"	-20	33000 A1	+0	4
	83701-99	VALVE (2)	"	-16	00002 A2	+0	2

[redacted]

GEMINI MANUFACTURING WORK PLAN—SPACECRAFT NO. 3A

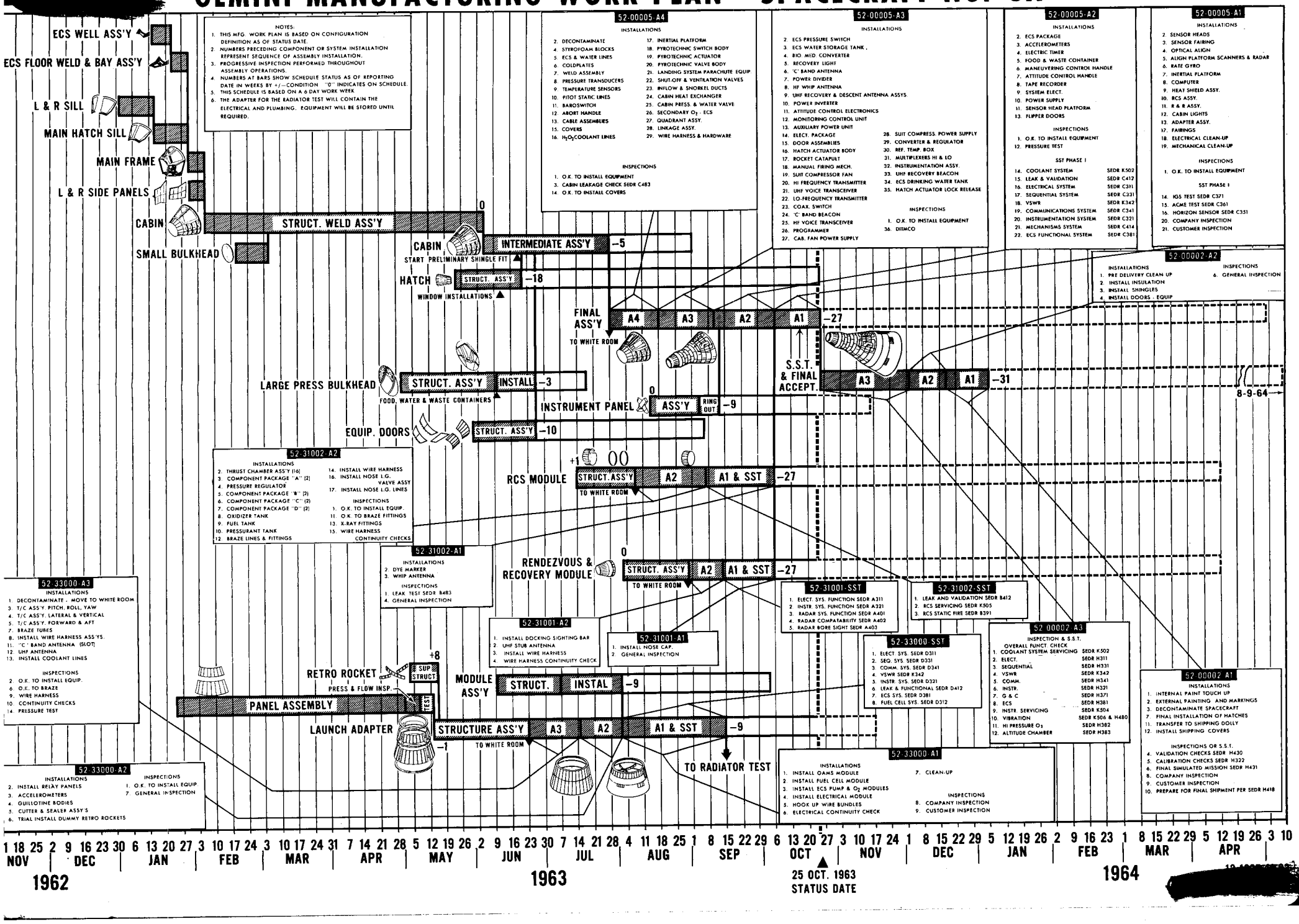

NOTES:
1. THIS MFG. WORK PLAN IS BASED ON CONFIGURATION DEFINITION AS OF STATUS DATE.
2. NUMBERS PRECEDING COMPONENT OR SYSTEM INSTALLATION REPRESENT SEQUENCE OF ASSEMBLY INSTALLATION.
3. PROGRESSIVE INSPECTION PERFORMED THROUGHOUT ASSEMBLY OPERATIONS.
4. NUMBERS AT BARS SHOW SCHEDULE STATUS AS OF REPORTING DATE IN WEEKS BY +/— CONDITION. "0" INDICATES ON SCHEDULE.
5. THIS SCHEDULE IS BASED ON A 6 DAY WORK WEEK.
6. THE ADAPTER FOR THE RADIATOR TEST WILL CONTAIN THE ELECTRICAL AND PLUMBING. EQUIPMENT WILL BE STORED UNTIL REQUIRED.

52-00005-A4

INSTALLATIONS
2. DECONTAMINATE
4. STYROFOAM BLOCKS
5. ECS & WATER LINES
6. COLDPLATES
7. WELD ASSEMBLY
8. PRESSURE TRANSDUCERS
9. TEMPERATURE SENSORS
10. PITOT STATIC LINES
11. BAROSWITCH
12. ABORT HANDLE
13. CABLE ASSEMBLIES
15. COVERS
16. H_2O_2 COOLANT LINES
17. INERTIAL PLATFORM
18. PYROTECHNIC SWITCH BODY
19. PYROTECHNIC ACTUATOR
20. PYROTECHNIC VALVE BODY
21. LANDING SYSTEM PARACHUTE EQUIP.
22. SHUT-OFF & VENTILATION VALVES
23. INFLOW & SNORKEL DUCTS
24. CABIN HEAT EXCHANGER
25. CABIN PRESS. & WATER VALVE
26. SECONDARY O_2 - ECS
27. QUADRANT ASSY.
28. LINKAGE ASSY.
29. WIRE HARNESS & HARDWARE

INSPECTIONS
1. O.K. TO INSTALL EQUIPMENT
3. CABIN LEAKAGE CHECK SEDR C483
14. O.K. TO INSTALL COVERS

52-00005-A3

INSTALLATIONS
2. ECS PRESSURE SWITCH
3. ECS WATER STORAGE TANK
4. BIO. MED. CONVERTER
5. RECOVERY LIGHT
6. "C" BAND ANTENNA
7. POWER DIVIDER
8. HF WHIP ANTENNA
9. UHF RECOVERY & DESCENT ANTENNA ASSYS.
10. POWER INVERTER
11. ATTITUDE CONTROL ELECTRONICS
12. MONITORING CONTROL UNIT
13. AUXILIARY POWER UNIT
14. ELECT. PACKAGE
15. DOOR ASSEMBLIES
16. HATCH ACTUATOR BODY
17. ROCKET CATAPULT
18. MANUAL FIRING MECH.
19. SUIT COMPRESSOR FAN
20. HI FREQUENCY TRANSMITTER
21. UHF VOICE TRANSCEIVER
22. LO-FREQUENCY TRANSMITTER
23. COAX. SWITCH
24. "C" BAND BEACON
25. HF VOICE TRANSCEIVER
26. PROGRAMMER
27. CAB. FAN POWER SUPPLY
28. SUIT COMPRESS. POWER SUPPLY
29. CONVERTER & REGULATOR
30. REF. TEMP. BOX
31. MULTIPLEXERS HI & LO
32. INSTRUMENTATION ASSY.
33. UHF RECOVERY BEACON
34. ECS DRINKING WATER TANK
35. HATCH ACTUATOR LOCK RELEASE

INSPECTIONS
1. O.K. TO INSTALL EQUIPMENT
36. DITMCO

52-00005-A2

INSTALLATIONS
2. ECS PACKAGE
3. ACCELEROMETERS
4. ELECTRIC TIMER
5. FOOD & WASTE CONTAINER
6. MANEUVERING CONTROL HANDLE
7. ATTITUDE CONTROL HANDLE
8. TAPE RECORDER
9. SYSTEM ELECT.
10. POWER SUPPLY
11. SENSOR HEAD PLATFORM
13. FLIPPER DOORS

INSPECTIONS
1. O.K. TO INSTALL EQUIPMENT
12. PRESSURE TEST

SST PHASE I

14.	COOLANT SYSTEM	SEDR K502
15.	LEAK & VALIDATION	SEDR C412
16.	ELECTRICAL SYSTEM	SEDR C311
17.	SEQUENTIAL SYSTEM	SEDR C331
18.	VSWR	SEDR K342
19.	COMMUNICATIONS SYSTEM	SEDR C341
20.	INSTRUMENTATION SYSTEM	SEDR C321
21.	MECHANISMS SYSTEM	SEDR C414
22.	ECS FUNCTIONAL SYSTEM	SEDR C381

52-00005-A1

INSTALLATIONS
2. SENSOR HEADS
3. SENSOR FAIRING
4. OPTICAL ALIGN
5. ALIGN PLATFORM SCANNERS & RADAR
6. RATE GYRO
7. INERTIAL PLATFORM
8. COMPUTER
9. HEAT SHIELD ASSY.
10. RCS ASSY.
11. R & R ASSY.
12. CABIN LIGHTS
13. ADAPTER ASSY.
17. FAIRINGS
18. ELECTRICAL CLEAN-UP
19. MECHANICAL CLEAN-UP

INSPECTIONS
1. O.K. TO INSTALL EQUIPMENT

SST PHASE I
14. KGS TEST SEDR C371
15. ACME TEST SEDR C361
16. HORIZON SENSOR SEDR C351
20. COMPANY INSPECTION
21. CUSTOMER INSPECTION

52-00002-A2

INSTALLATIONS
1. PRE DELIVERY CLEAN UP
2. INSTALL INSULATION
3. INSTALL SHINGLES
4. INSTALL DOORS - EQUIP

INSPECTIONS
6. GENERAL INSPECTION

52-31002-A2

INSTALLATIONS
2. THRUST CHAMBER ASS'Y (16)
3. COMPONENT PACKAGE "A" (2)
4. PRESSURE REGULATOR
5. COMPONENT PACKAGE "B" (2)
6. COMPONENT PACKAGE "C" (2)
7. COMPONENT PACKAGE "D" (2)
8. OXIDIZER TANK
9. FUEL TANK
10. PRESSURANT TANK
12. BRAZE LINES & FITTINGS
14. INSTALL WIRE HARNESS
16. INSTALL NOSE L.G. VALVE ASSY
17. INSTALL NOSE L.G. LINES

INSPECTIONS
1. O.K. TO INSTALL EQUIP.
11. O.K. TO BRAZE FITTINGS
13. X-RAY FITTINGS
15. WIRE HARNESS CONTINUITY CHECKS

52-31002-A1

INSTALLATIONS
2. DYE MARKER
3. WHIP ANTENNA

INSPECTIONS
1. LEAK TEST SEDR B483
4. GENERAL INSPECTION

52-33000-A3

INSTALLATIONS
1. DECONTAMINATE - MOVE TO WHITE ROOM
3. T/C ASS'Y PITCH, ROLL, YAW
4. T/C ASS'Y LATERAL & VERTICAL
5. T/C ASS'Y FORWARD & AFT
7. BRAZE TUBES
8. INSTALL WIRE HARNESS ASS'YS.
11. "C" BAND ANTENNA (SLOT)
12. UHF ANTENNA
13. INSTALL COOLANT LINES

INSPECTIONS
2. O.K. TO INSTALL EQUIP.
6. O.K. TO BRAZE
9. WIRE HARNESS
10. CONTINUITY CHECKS
14. PRESSURE TEST

52-31001-A2

1. INSTALL DOCKING SIGHTING BAR
2. UHF STUB ANTENNA
3. INSTALL WIRE HARNESS
4. WIRE HARNESS CONTINUITY CHECK

52-31001-A1

1. INSTALL NOSE CAP.
2. GENERAL INSPECTION

52-31001-SST

1. ELECT. SYS. FUNCTION SEDR A311
2. INSTR. SYS. FUNCTION SEDR A321
3. RADAR SYS. FUNCTION SEDR A401
4. RADAR COMPATABILITY SEDR A402
5. RADAR BORE SIGHT SEDR A403

52-31002-SST

1. LEAK AND VALIDATION SEDR B412
2. RCS SERVICING SEDR K505
3. RCS STATIC FIRE SEDR B391

52-33000-SST

1. ELECT. SYS. SEDR D311
2. SEQ. SYS. SEDR D331
3. COMM. SYS. SEDR D341
4. VSWR SEDR K342
5. INSTR. SYS. SEDR D321
6. LEAK & FUNCTIONAL SEDR D412
7. ECS SYS. SEDR D381
8. FUEL CELL SYS. SEDR D312

52-00002-A3

INSPECTION & S.S.T.
OVERALL FUNCT. CHECK

1.	COOLANT SYSTEM SERVICING	SEDR K502
2.	ELECT.	SEDR H311
3.	SEQUENTIAL	SEDR H331
4.	VSWR	SEDR K342
5.	COMM.	SEDR H341
6.	INSTR.	SEDR H321
7.	G & C	SEDR H371
8.	ECS	SEDR H381
9.	INSTR. SERVICING	SEDR K504
10.	VIBRATION	SEDR K506 & H480
11.	HI PRESSURE O_2	SEDR H382
12.	ALTITUDE CHAMBER	SEDR H383

52-00002-A1

INSTALLATIONS
1. INTERNAL PAINT TOUCH UP
2. EXTERNAL PAINTING AND MARKINGS
3. DECONTAMINATE SPACECRAFT
7. FINAL INSTALLATION OF HATCHES
11. TRANSFER TO SHIPPING DOLLY
12. INSTALL SHIPPING COVERS

INSPECTIONS OR S.S.T.
4. VALIDATION CHECKS SEDR H430
5. CALIBRATION CHECKS SEDR H322
6. FINAL SIMULATED MISSION SEDR H431
8. COMPANY INSPECTION
9. CUSTOMER INSPECTION
10. PREPARE FOR FINAL SHIPMENT PER SEDR H418

52-33000-A2

INSTALLATIONS
2. INSTALL RELAY PANELS
3. ACCELEROMETERS
4. GUILLOTINE BODIES
5. CUTTER & SEALER ASSY'S
6. TRIAL INSTALL DUMMY RETRO ROCKETS

INSPECTIONS
1. O.K. TO INSTALL EQUIP.
7. GENERAL INSPECTION

52-33000-A1

INSTALLATIONS
1. INSTALL OAMS MODULE
2. INSTALL FUEL CELL MODULE
3. INSTALL ECS PUMP & O_2 MODULES
4. INSTALL ELECTRICAL MODULE
5. HOOK UP WIRE BUNDLES
6. ELECTRICAL CONTINUITY CHECK
7. CLEAN-UP

INSPECTIONS
8. COMPANY INSPECTION
9. CUSTOMER INSPECTION

[redacted]

GEMINI SPACECRAFT NO. 3A
EQUIPMENT STUDY

LEGEND
- ⇩ ACTUAL SCHEDULED INSTALLATION POINT
- ▽ EQUIPMENT AVAILABLE THROUGH P.I.A. AT MAC.

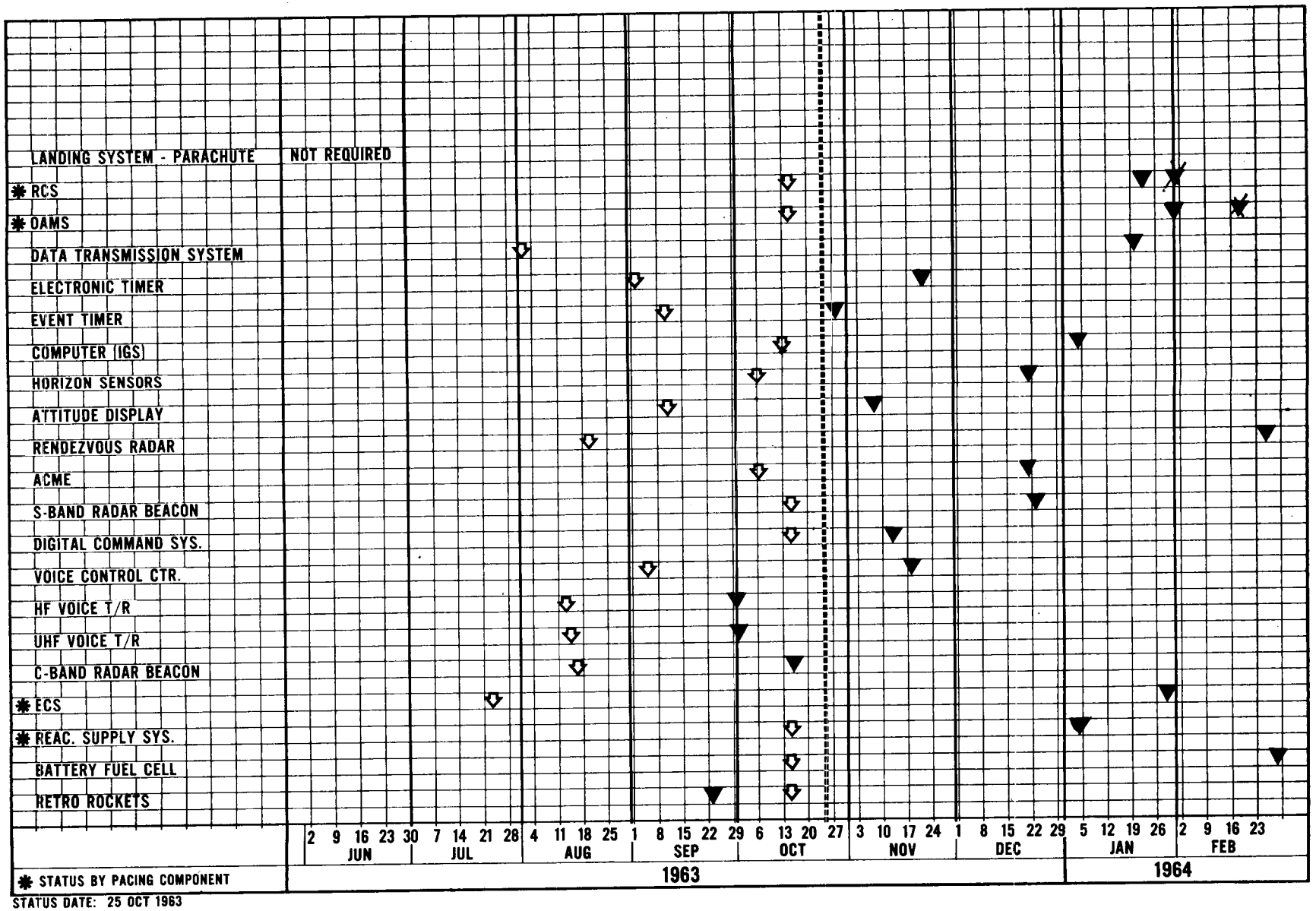

✱ STATUS BY PACING COMPONENT

STATUS DATE: 25 OCT 1963

S C 3A WORK PLAN FINAL ASSY

	ZONE	TOTAL HRS.	OPEN HRS.
1. STRUCTURAL E.O. INCORP.	16	1016	243
2. PRESSURE TEST (CABIN 5LB)	9	77	0
3. ECS INSTALL - PLUMBING	9	115	115
4. W/B IN CABIN	9	179	179
5. PEDESTAL INSTALLATION	9		
6. FIBERGLASS CHANNELS & MIN-K	11 12	337	7
7. INSTALL SHINGLES	11 12	808	522
8. INSTALL & RIG HATCHES	11 12	148	8
9. INSTALL & RIG 52-32060 DOORS	5 6	138	112
10. INSTALL STYROFOAM	3 7 8	111	55
11. INSTALL COLD PLATES & PLUMBING	3 7 8	187	131
12. INSTALL WIRE BUNDLES IN EQUIP. BAYS	3 7 8	653	620
13. SPLICE THERMO COUPLES & TEST	9 11 12	60	57
14. INSTALL STATIC SYSTEM	3	77	69
15. PRESSURE TEST (STATIC SYSTEM)	3		
16. INSTALL EQUIP (CABIN)	9	308	229
17. INSTALL EQUIP (OTHER THAN CABIN)	7 8	476	455
18. DITMCO	16	207	207
19. SPLICE TEMP. SENSORS	9 11 12	12	12
20. SST PHASE I	9	408	390
21. INSTALL HEAT SHIELD	10	20	20
22. MECHANICAL MATE	10 14 15	130	130

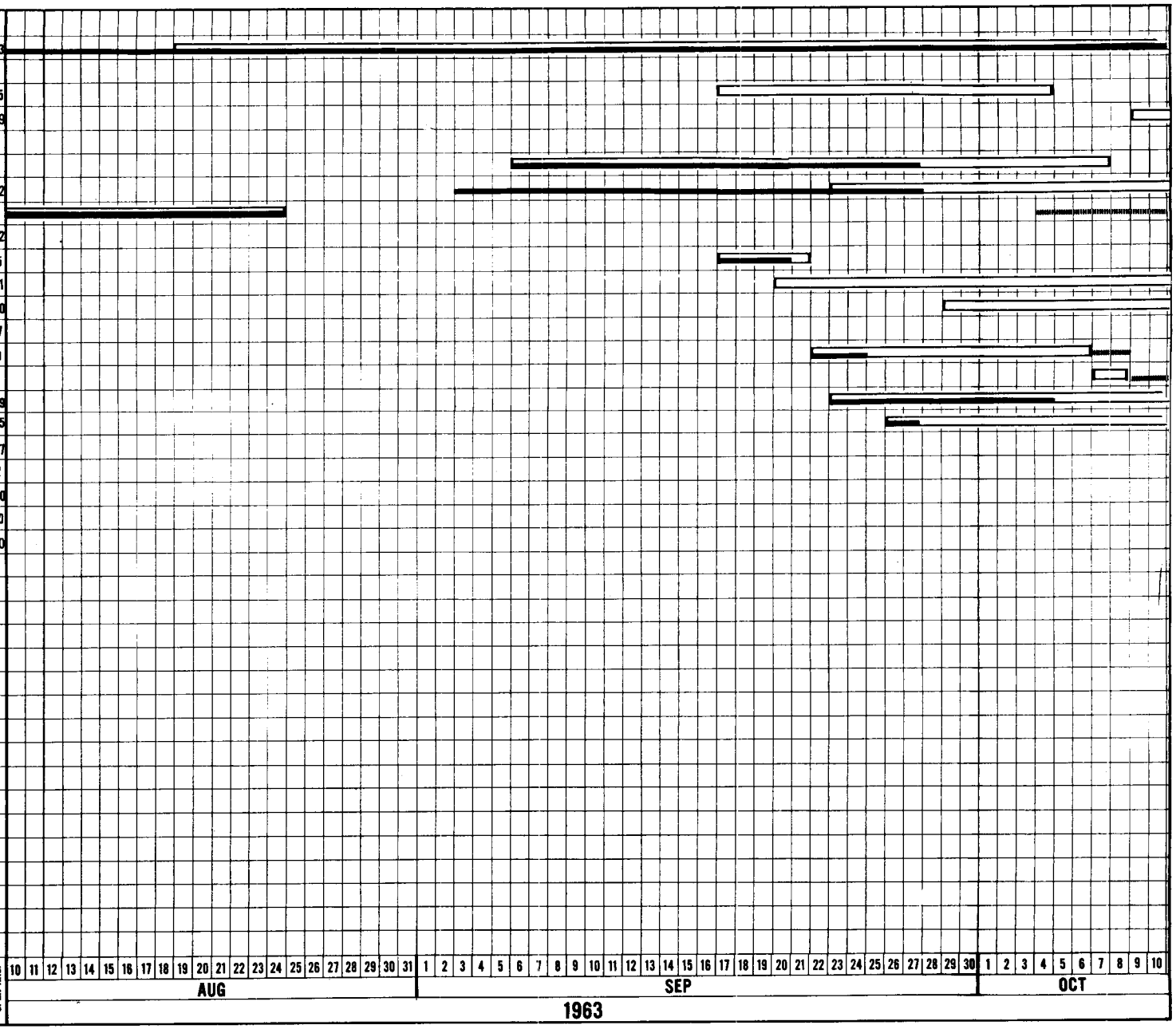

LEGEND:
- WORK PERIOD
- IN WORK
- EXTENDED WORK PERIOD

S C3A WORK PLAN FINAL ASSY

1. E.O.P.O.	16
2. PRESSURE TEST	9
3. ECS INSTALLATION & PLUMBING	9
4. WIRE BUNDLES IN CABIN	9
5. PEDESTAL INSTALLATION	9
6. FIBERGLASS CHANNELS & MIN-K	11 12
7. INSTALL SHINGLES	11 12
8. INSTALL & RIG HATCHES	11 12
9. INSTALL & RIG 32060 DOORS	5 6
10. INSTALL STYROFOAM	3 7 8
11. INSTALL COLD PLATES & PLUMBING	3 7 8
12. INSTALL W/B IN EQUIPMENT BAYS	3 7 8
13. SPLICE THERMOCOUPLES & TEST	9 11 12
14. INSTALL STATIC SYSTEM	3
15. PRESSURE TEST STATIC SYSTEM	3
16. EQUIPMENT INSTALLATION (CABIN)	9
17. EQUIPMENT INSTALLATION (OTHER)	7 8
18. DITMCO	16
19. SPLICE TEMP. SENSORS	9 11 12
20. SST PHASE I	9
21. HEAT SHIELD INSTALLATION	10
22. MECHANICAL MATE	10 14 15

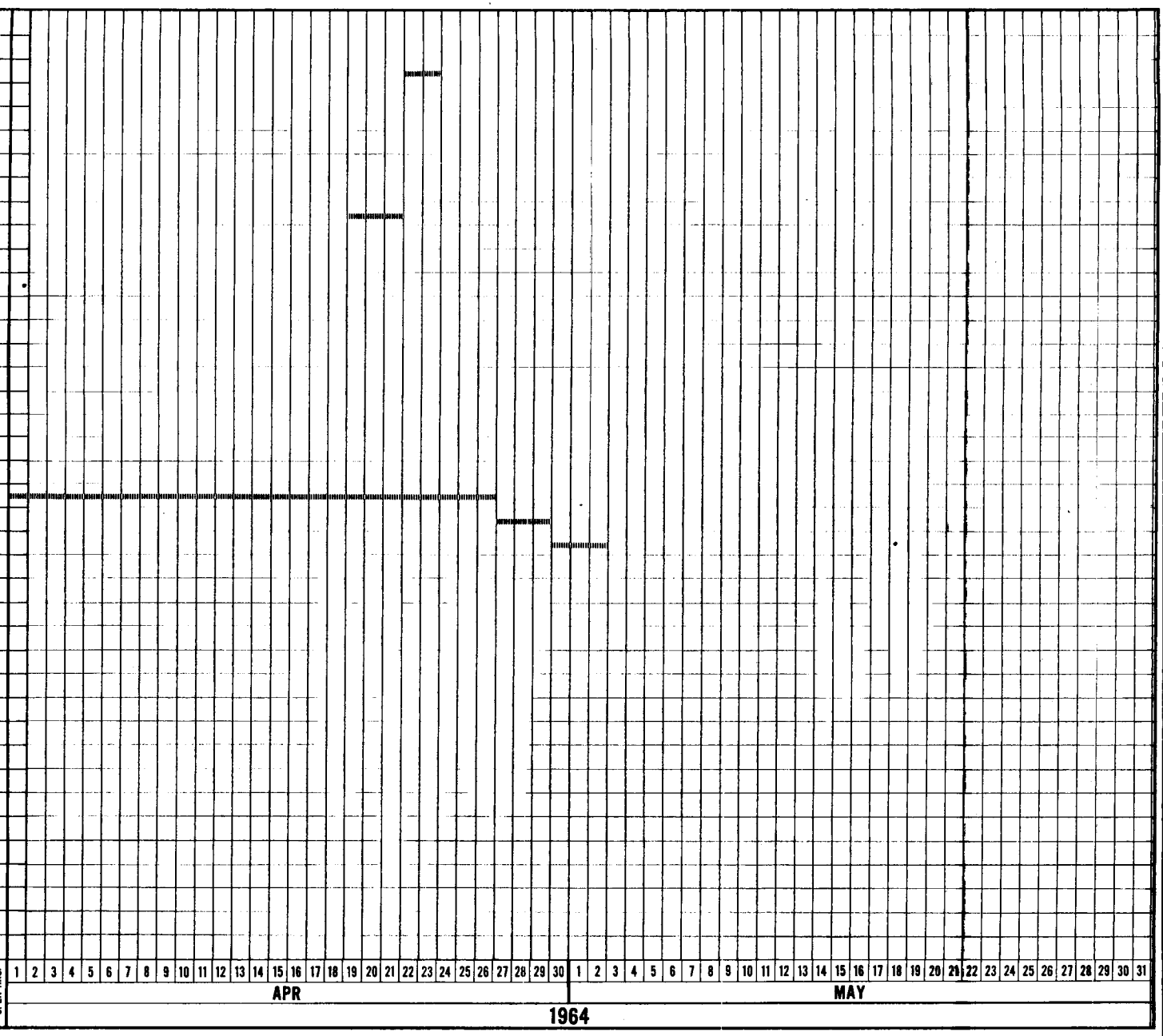

LEGEND:
- WORK PERIOD
- IN WORK
- EXTENDED WORK PERIOD

ZONE

TOTAL HRS.

OPEN HRS.

S C3A WORK PLAN FINAL ASSY

		TOTAL HRS.	OPEN HRS.
1. E.O.P.O.	16		
2. PRESSURE TEST	9		
3. ECS INSTALLATION & PLUMBING	9		
4. WIRE BUNDLES IN CABIN	9		
5. PEDESTAL INSTALLATION	9		
6. FIBERGLASS CHANNELS & MIN-K	11 12		
7. INSTALL SHINGLES	11 12		
8. INSTALL & RIG HATCHES	11 12		
9. INSTALL & RIG 32080 DOORS	5 6		
10. INSTALL STYROFOAM	3 7 8		
11. INSTALL COLD PLATES & PLUMBING	3 7 8		
12. INSTALL W/B IN EQUIPMENT BAYS	3 7 8		
13. SPLICE THERMOCOUPLES & TEST	9 11 12		
14. INSTALL STATIC SYSTEM	3		
15. PRESSURE TEST STATIC SYSTEM	3		
16. EQUIPMENT INSTALLATION (CABIN)	9		
17. EQUIPMENT INSTALLATION (OTHER)	7 8		
18. DITMCO	16		
19. SPLICE TEMP. SENSORS	9 11 12		
20. SST PHASE I	9		
21. HEAT SHIELD INSTALLATION	10		
22. MECHANICAL MATE	10 11 12		

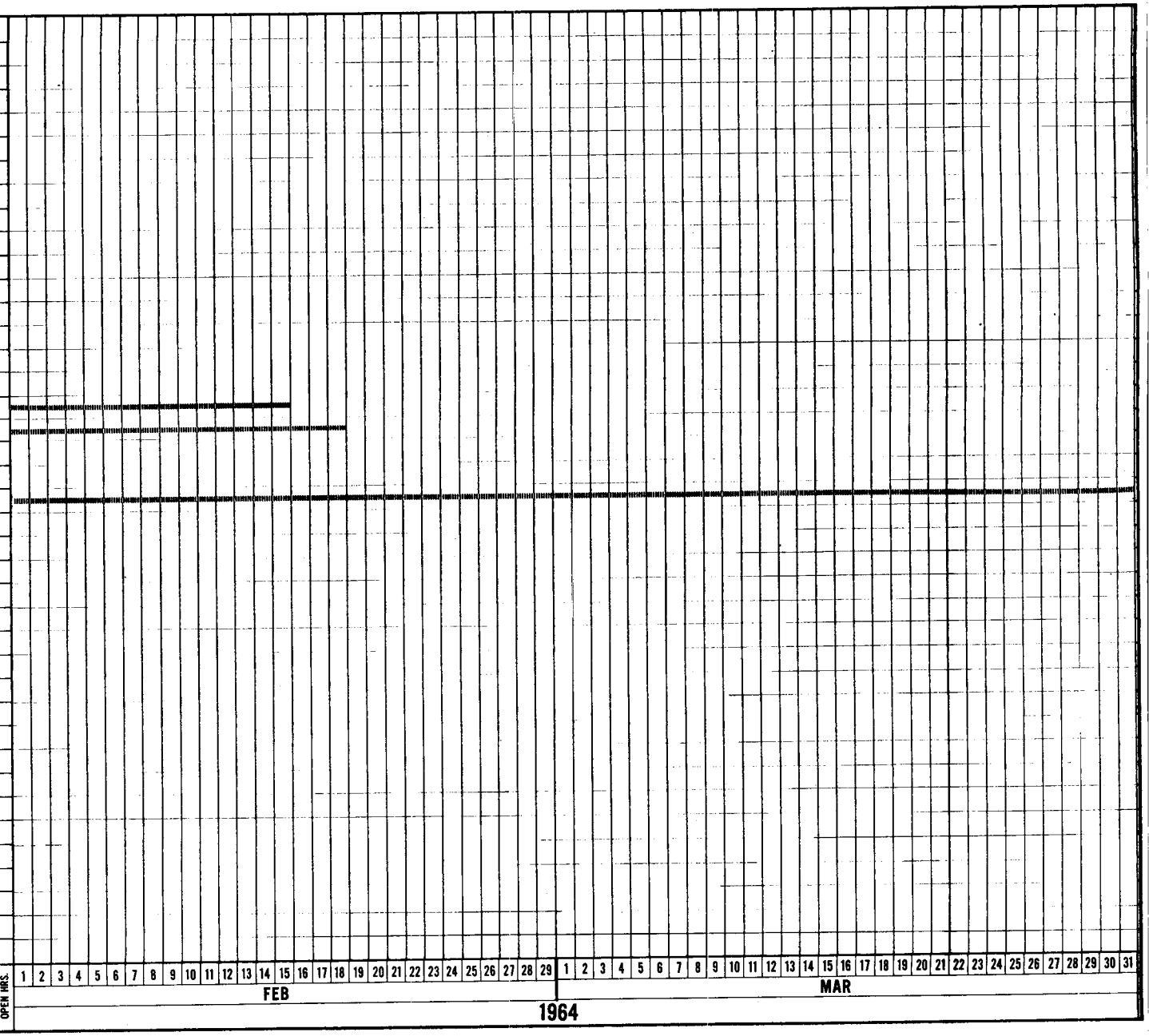

LEGEND:
- WORK PERIOD
- IN WORK
- EXTENDED WORK PERIOD

ZONE

S C 3A WORK PLAN FINAL ASSY AND SST

	ZONE	TOTAL HRS.	OPEN HRS.
1. STRUCTURAL E.O. INCORP.	16	1016	243
2. PRESSURE TEST (CABIN 5LB)	9	77	0
3. ECS INSTALL - PLUMBING	9	115	115
4. W/B IN CABIN	9	179	179
5. PEDESTALL INSTALLATION	9		
6. FIBERGLASS CHANNELS & MIN - K	11 12	337	7
7. INSTALL SHINGLES	11 12	808	522
8. INSTALL & RIG HATCHES	11 12	148	8
9. INSTALL & RIG 32060 DOORS	5 6	138	112
10. INSTALL STYROFOAM	3 7 8	111	55
11. INSTALL COLD PLATES & PLUMBING	3 7 8	187	131
12. INSTALL W/B IN EQUIPMENT BAYS	3 7 8	653	620
13. SPLICE THERMO COUPLES & TEST	9 11 12	60	57
14. INSTALL STATIC SYSTEM	3	77	69
15. PRESSURE TEST (STATIC SYSTEM)	3		
16. INSTALL EQUIP (CABIN)	9	308	229
17. INSTALL EQUIP (OTHER THAN CABIN)	7	476	455
18. DITMCO	16	207	207
19. SPLICE TEMP. SENSORS	9 11 12	12	12
20. S S T PHASE I	9	408	390
21. INSTALL HEAT SHIELD	10	20	20
22. MECHANICAL MATE	10 14 15	130	130

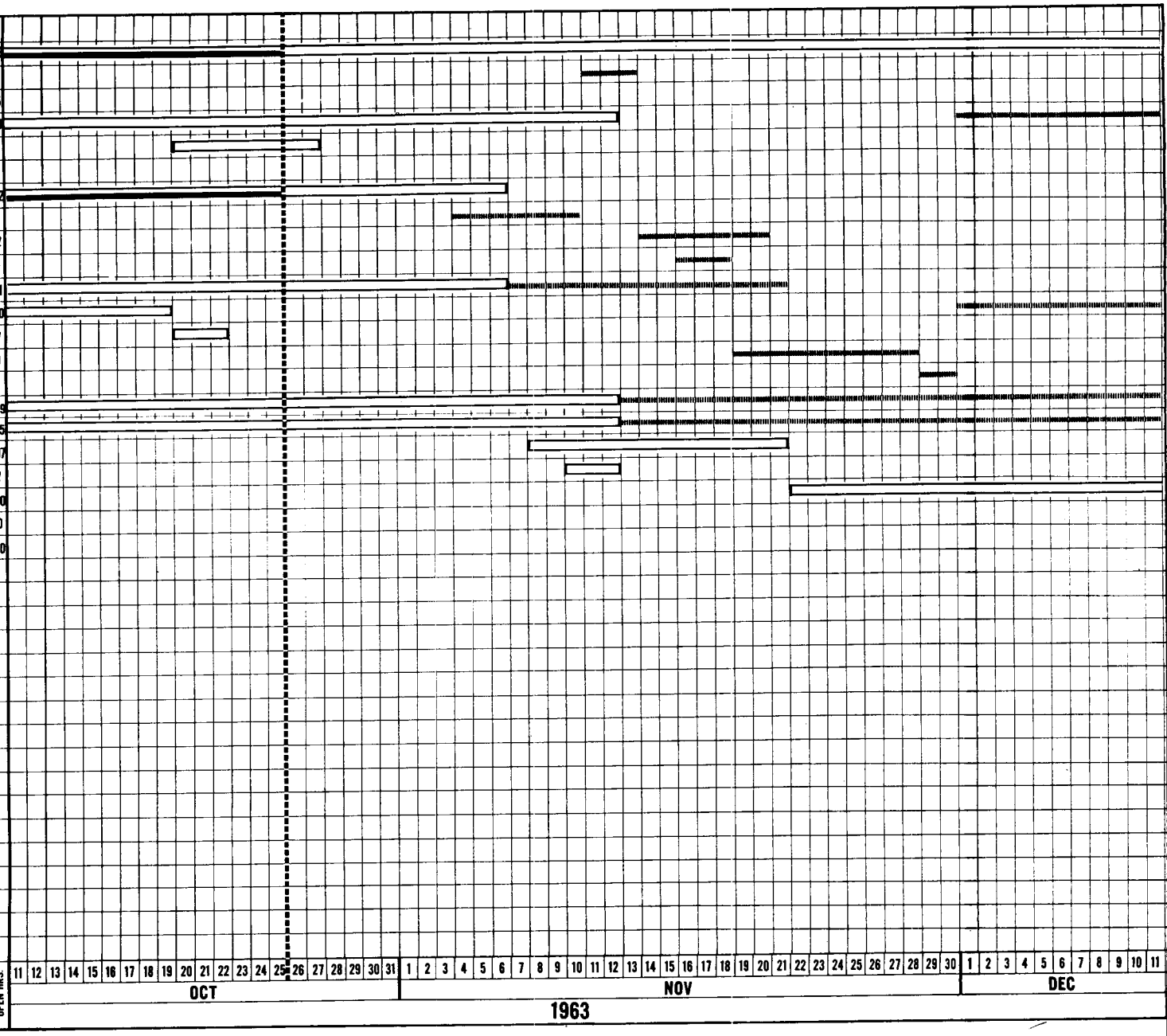

S C 3A WORK PLAN FINAL ASSY AND SST

	ZONE	TOTAL HRS.	OPEN HRS.
1. STRUCTURAL EOPO INCORPORATION	16		
2. PRESSURE TEST 5#	9		
3. ECS INSTALLATION & PLUMBING	9		
4. WIRE BUNDLES IN CABIN	9		
5. PEDESTAL INSTALLATION	9		
6. FIBERGLASS CHANNELS & MIN-K	11 12		
7. INSTALL SHINGLES	11 12		
8. INSTALL & RIG HATCHES	11 12		
9. INSTALL & RIG 32060 DOORS	5 6		
10. INSTALL STYROFOAM	3 7 8		
11. INSTALL COLDPLATES & PLUMBING	3 7 8		
12. INSTALL WIRE BUNDLES IN EQUIP BAYS	3 7 8		
13. SPLICE THERMOCOUPLES & TEST	9 11 12		
14. INSTALL STATIC SYSTEM	2		
15. STATIC SYSTEM PRESSURE TEST	3		
16. INSTALL EQUIPMENT-CABIN	9		
17. INSTALL EQUIPMENT-OTHER	7 8		
18. DITMCO	16		
19. SPLICE TEMP. SENSORS	9 11 12		
20. SST-PHASE I	9	408	408
21. HEATSHIELD INSTALLATION	10	20	20
22. MECHANICAL MATE	10 14 15	125	125

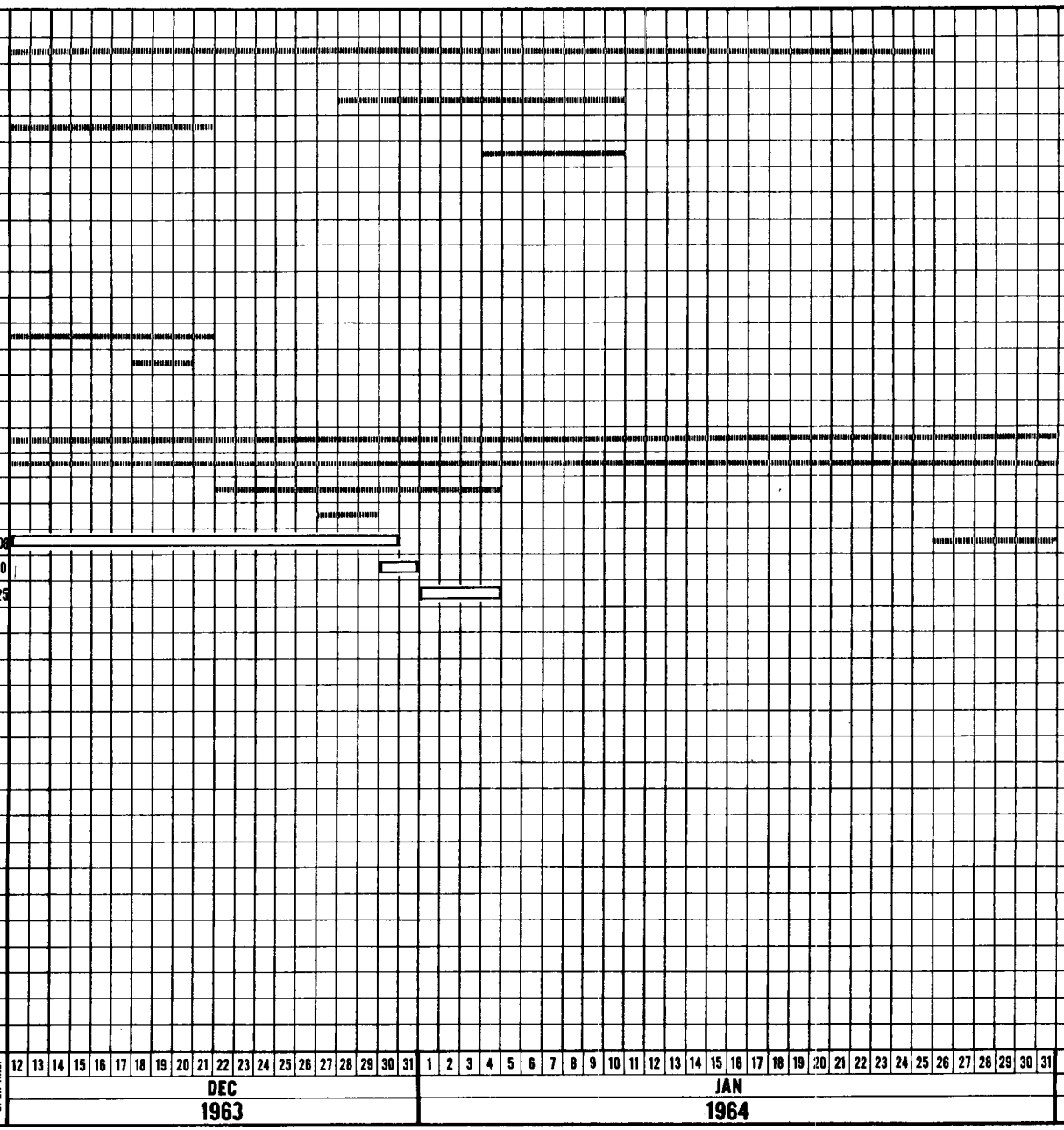

LEGEND:
- WORK PERIOD
- IN WORK
- EXTENDED WORK PERIOD

S C 3A WORK PLAN MODULE FINAL ASSY

RCS	2		
1. INSTALL PLUMBING & PRESSURE TEST			
2. INSTALL W/B - T/C - T/S			
3. FIBERGLASS CHANNELS - MIN - K - INSULATION			
4. INSTALL EQUIP			
5. INSTALL SHINGLES - RETAINERS			
6. DITMCO - T/C - T/S TEST			
7. S S T			
8. INSTALL THRUST CHAMBERS			
9. INSTALL STYROFOAM			
10. NASA/MAC INSPECTION			
R & R	1		
11. INSTALL W/B - T/C - T/S			
12. FIBERGLASS CHANNELS - MIN - K - INSULATION			
13. INSTALL EQUIP			
14. INSTALL SHINGLES - RETAINERS			
15. DITMCO - T/C - T/S TEST			
16. S S T			
17. NASA/MAC INSPECTION			
ADAPTER	13		
18. INSTALL PLUMBING & PRESSURE TEST			
19. INSTALL W/B - T/C - T/S			
20. INSTALL EQUIPMENT			
21. DTMCO - T/C - T/S TEST			
22. S S T			
23. NASA/MAC INSPECTION			

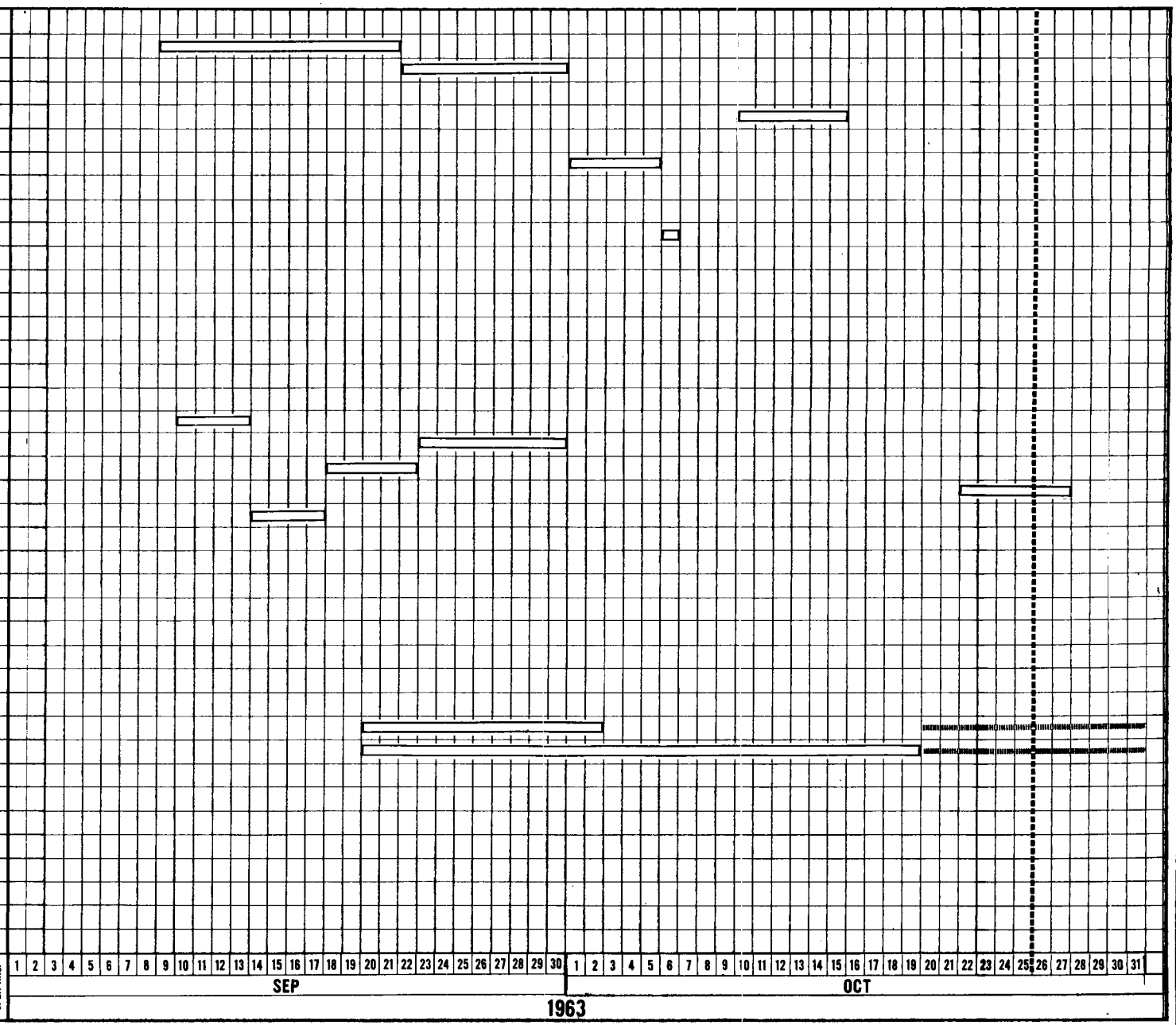

LEGEND:
- WORK PERIOD
- IN WORK
- EXTENDED WORK PERIOD

ZONE | TOTAL HRS. | OPEN HRS.

S C 3A WORK PLAN MODULE FINAL ASSY

	ZONE
RCS	2
1. INSTALL PLUMBING & PRESSURE TEST	
2. INSTALL W/B - T/C - T/S	
3. FIBERGLASS CHANNELS - MIN - K - INSULATION	
4. INSTALL EQUIP	
5. INSTALL SHINGLES - RETAINERS	
6. DITMCO - T/C - T/S TEST	
7. S S T	
8. INSTALL THRUST CHAMBERS	
9. INSTALL STYROFOAM	
10. NASA/MAC INSPECTION	
R & R	1
11. INSTALL W/B - T/C - T/S	
12. FIBERGLASS CHANNELS - MIN - K - INSULATION	
13. INSTALL EQUIP	
14. INSTALL SHINGLES - RETAINERS	
15. DITMCO - T/C - T/S TEST	
16. S S T	
17. NASA/MAC INSPECTION	
ADAPTER	13
18. INSTALL PLUMBING & PRESSURE TEST	
19. INSTALL W/B - T/C - T/S	
20. INSTALL EQUIPMENT	
21. DTMCO - T/C - T/S TEST	
22. S S T	
23. NASA/MAC INSPECTION	

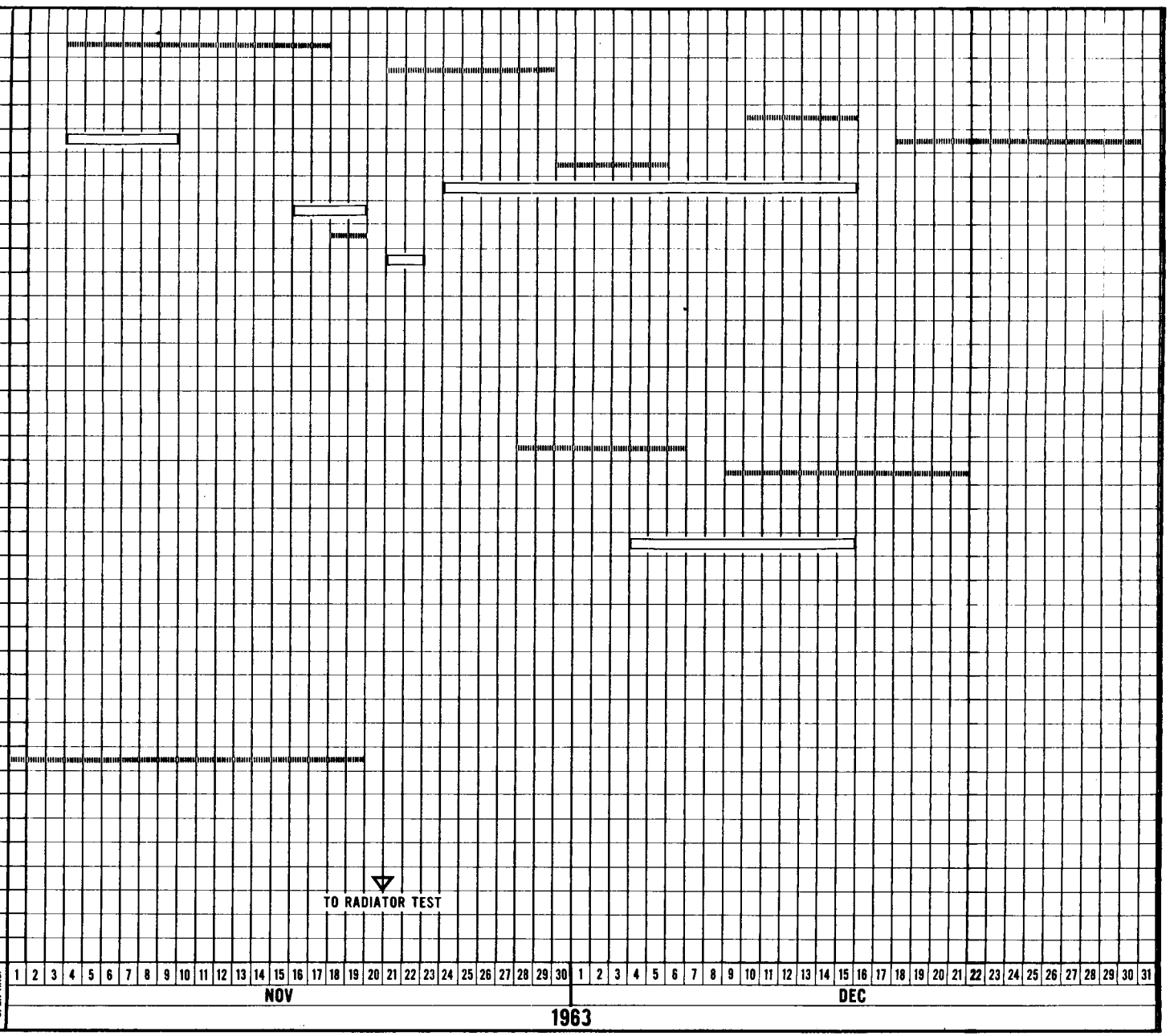

LEGEND:
- WORK PERIOD
- IN WORK
- EXTENDED WORK PERIOD

TOTAL HRS.
OPEN HRS.

S C 3A WORK PLAN MODULE FINAL ASSY

RCS	2
1. INSTALL PLUMBING & PRESSURE TEST	
2. INSTALL W/B - T/C - T/S	
3. FIBERGLASS CHANNELS - MIN - K - INSULATION	
4. INSTALL EQUIP	
5. INSTALL SHINGLES - RETAINERS	
6. DITMCO - T/C - T/S TEST	
7. S S T	
8. INSTALL THRUST CHAMBERS	
9. INSTALL STYROFOAM	
10. NASA/MAC INSPECTION	
R & R	1
11. INSTALL W/B - T/C - T/S	
12. FIBERGLASS CHANNELS - MIN - K - INSULATION	
13. INSTALL EQUIP	
14. INSTALL SHINGLES - RETAINERS	
15. DITMCO - T/C - T/S TEST	
16. S S T	
17. NASA/MAC INSPECTION	
ADAPTER	13
18. INSTALL PLUMBING & PRESSURE TEST	
19. INSTALL W/B - T/C - T/S	
20. INSTALL EQUIPMENT	
21. DTMCO - T/C - T/S TEST	
22. S S T	
23. NASA/MAC INSPECTION	
LEGEND: WORK PERIOD / IN WORK / EXTENDED WORK PERIOD	ZONE

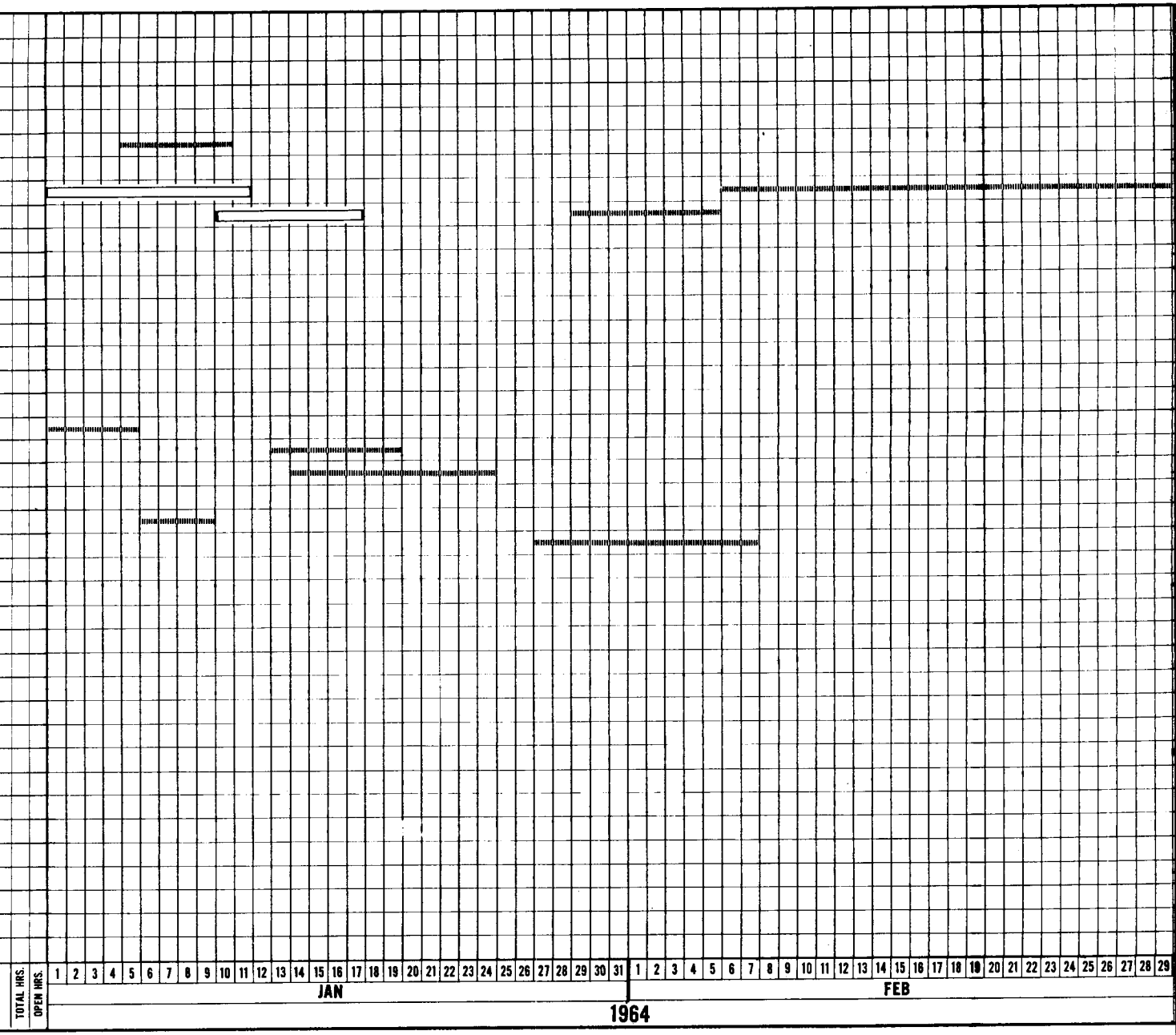

GEMINI ZONE CHART

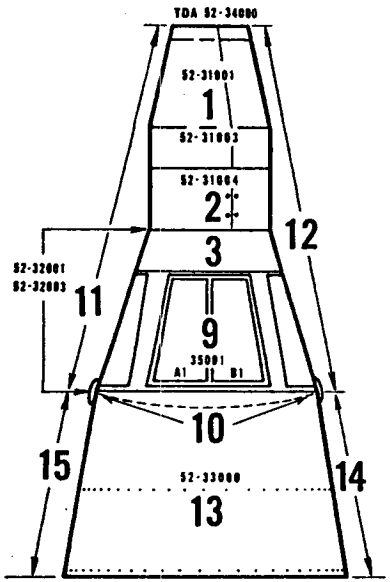

TOP VIEW

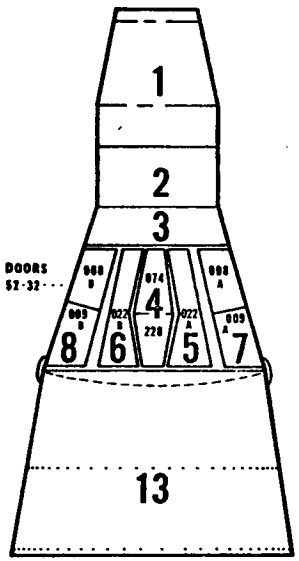

BOTTOM VIEW

1. RENDEZVOUS AND RADAR MODULE
2. RE-ENTRY RCS MODULE
3. FORWARD AREA CONE
4. CENTER EQUIPMENT BAY
5. L/H LANDING GEAR BAY
6. R/H LANDING GEAR BAY
7. L/H EQUIPMENT BAY
8. R/H EQUIPMENT BAY
9. CREW PRESSURIZED AREA
10. EXTERIOR AREA OF LARGE PRESS. BULKHEAD
11. SPACECRAFT EXTERIOR L/H
12. SPACECRAFT EXTERIOR R/H
13. INTERNAL ADAPTER AREA
14. R/H EXTERNAL ADAPTER AREA
15. L/H EXTERNAL ADAPTER AREA
16. ZONE FOR ENTIRE SPACECRAFT

GEMINI SPACECRAFT NO. 3A

ZONE NO. 1

TOTAL EQUIPMENT REQUIRED 23

EQUIPMENT ON HAND 10

EQUIPMENT TO SCHEDULE 13

EQUIPMENT LATE 0

PART NO.	PART NAME	NORM. INST.	SLACK	DEF. INST.	SLACK	HOURS TO INSTALL

GEMINI ZONE CHART

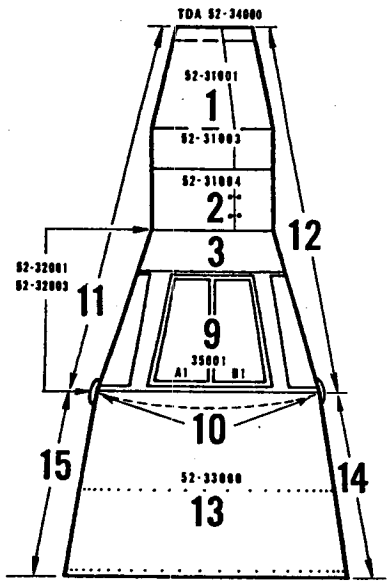

TOP VIEW

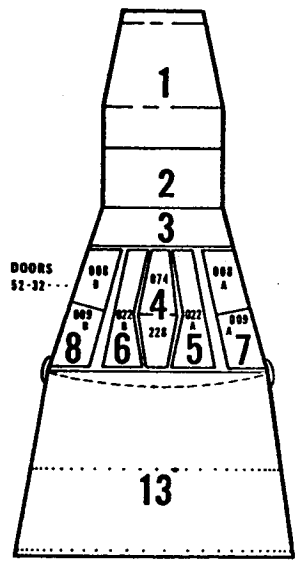

BOTTOM VIEW

1. RENDEZVOUS AND RADAR MODULE
2. RE-ENTRY RCS MODULE
3. FORWARD AREA CONE
4. CENTER EQUIPMENT BAY
5. L/H LANDING GEAR BAY
6. R/H LANDING GEAR BAY
7. L/H EQUIPMENT BAY
8. R/H EQUIPMENT BAY
9. CREW PRESSURIZED AREA
10. EXTERIOR AREA OF LARGE PRESS. BULKHEAD
11. SPACECRAFT EXTERIOR L/H
12. SPACECRAFT EXTERIOR R/H
13. INTERNAL ADAPTER AREA
14. R/H EXTERNAL ADAPTER AREA
15. L/H EXTERNAL ADAPTER AREA
16. ZONE FOR ENTIRE SPACECRAFT

GEMINI SPACECRAFT NO. 3A

ZONE NO. 2

TOTAL EQUIPMENT REQUIRED 47

EQUIPMENT ON HAND 6

EQUIPMENT TO SCHEDULE 41

EQUIPMENT LATE 0

PART NO.	PART NAME	NORM. INST.	SLACK	DEF. INST.	SLACK	HOURS TO INSTALL

GEMINI ZONE CHART

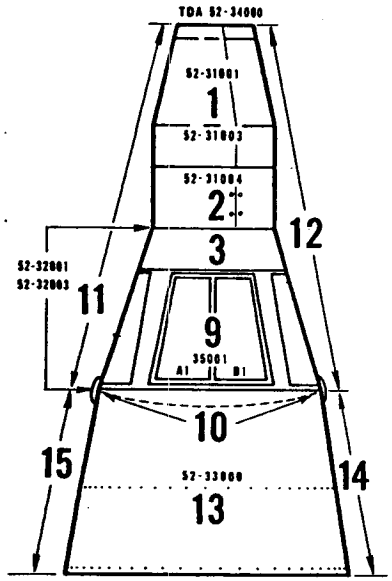

TOP VIEW

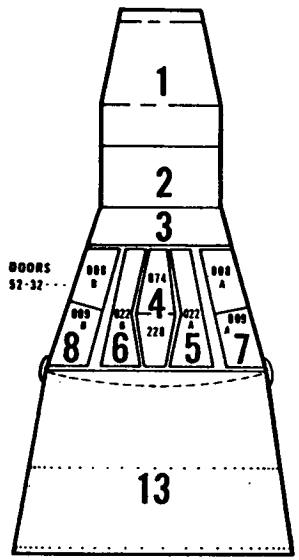

BOTTOM VIEW

1. RENDEZVOUS AND RADAR MODULE
2. RE-ENTRY RCS MODULE
3. FORWARD AREA CONE
4. CENTER EQUIPMENT BAY
5. L/H LANDING GEAR BAY
6. R/H LANDING GEAR BAY
7. L/H EQUIPMENT BAY
8. R/H EQUIPMENT BAY
9. CREW PRESSURIZED AREA
10. EXTERIOR AREA OF LARGE PRESS. BULKHEAD
11. SPACECRAFT EXTERIOR L/H
12. SPACECRAFT EXTERIOR R/H
13. INTERNAL ADAPTER AREA
14. R/H EXTERNAL ADAPTER AREA
15. L/H EXTERNAL ADAPTER AREA
16. ZONE FOR ENTIRE SPACECRAFT

GEMINI SPACECRAFT NO. 3A

ZONE NO. 3

TOTAL EQUIPMENT REQUIRED 34

EQUIPMENT ON HAND 3

EQUIPMENT TO SCHEDULE 31

EQUIPMENT LATE 0

PART NO.	PART NAME	NORM. INST.	SLACK	DEF. INST.	SLACK	HOURS TO INSTALL

GEMINI ZONE CHART

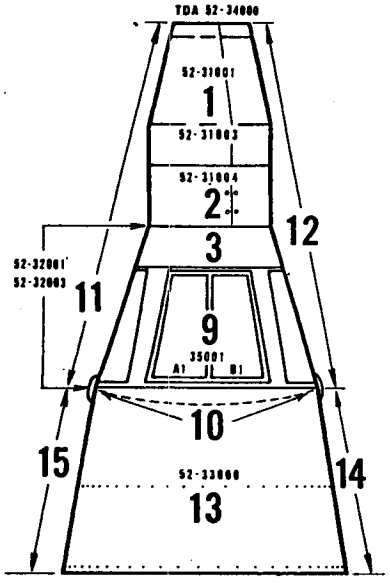

TOP VIEW

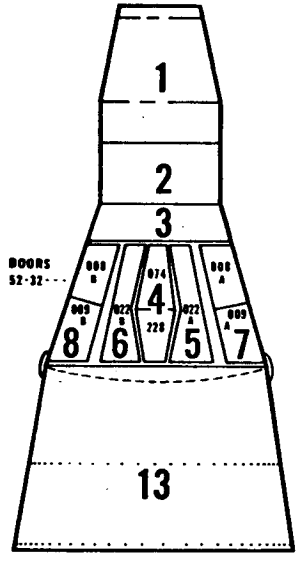

BOTTOM VIEW

1. RENDEZVOUS AND RADAR MODULE
2. RE-ENTRY RCS MODULE
3. FORWARD AREA CONE
4. CENTER EQUIPMENT BAY
5. L/H LANDING GEAR BAY
6. R/H LANDING GEAR BAY
7. L/H EQUIPMENT BAY
8. R/H EQUIPMENT BAY
9. CREW PRESSURIZED AREA
10. EXTERIOR AREA OF LARGE PRESS. BULKHEAD
11. SPACECRAFT EXTERIOR L/H
12. SPACECRAFT EXTERIOR R/H
13. INTERNAL ADAPTER AREA
14. R/H EXTERNAL ADAPTER AREA
15. L/H EXTERNAL ADAPTER AREA
16. ZONE FOR ENTIRE SPACECRAFT

GEMINI SPACECRAFT NO. 3A

ZONE NO. 4

TOTAL EQUIPMENT REQUIRED 30

EQUIPMENT ON HAND 25

EQUIPMENT TO SCHEDULE 5

EQUIPMENT LATE 0

PART NO.	PART NAME	NORM. INST.	SLACK	DEF. INST.	SLACK	HOURS TO INSTALL

GEMINI ZONE CHART

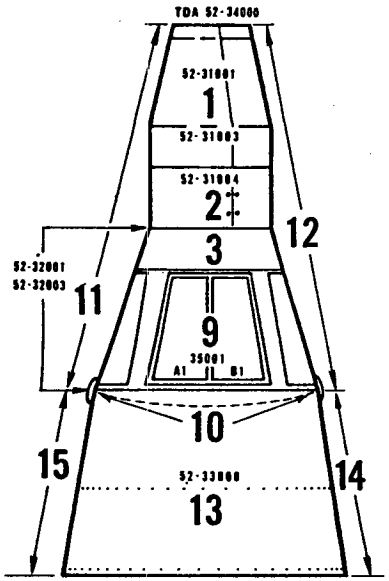

TOP VIEW

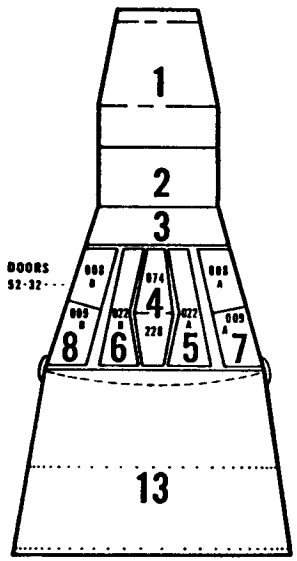

BOTTOM VIEW

1. RENDEZVOUS AND RADAR MODULE
2. RE-ENTRY RCS MODULE
3. FORWARD AREA CONE
4. CENTER EQUIPMENT BAY
5. L/H LANDING GEAR BAY
6. R/H LANDING GEAR BAY
7. L/H EQUIPMENT BAY
8. R/H EQUIPMENT BAY
9. CREW PRESSURIZED AREA
10. EXTERIOR AREA OF LARGE PRESS. BULKHEAD
11. SPACECRAFT EXTERIOR L/H
12. SPACECRAFT EXTERIOR R/H
13. INTERNAL ADAPTER AREA
14. R/H EXTERNAL ADAPTER AREA
15. L/H EXTERNAL ADAPTER AREA
16. ZONE FOR ENTIRE SPACECRAFT

GEMINI SPACECRAFT NO. 3A

ZONE NO. 7

TOTAL EQUIPMENT REQUIRED 41

EQUIPMENT ON HAND 3

EQUIPMENT TO SCHEDULE 38

EQUIPMENT LATE 0

PART NO.	PART NAME	NORM. INST.	SLACK	DEF. INST.	SLACK	HOURS TO INSTALL

GEMINI ZONE CHART

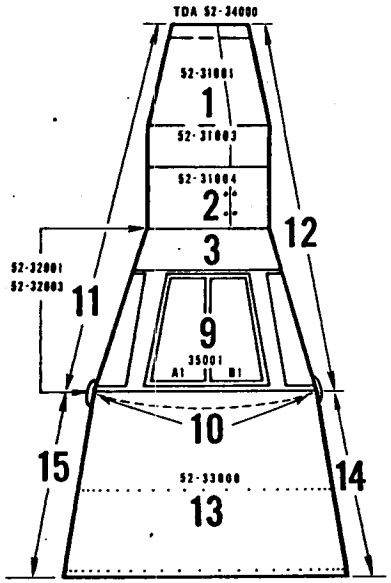

TOP VIEW

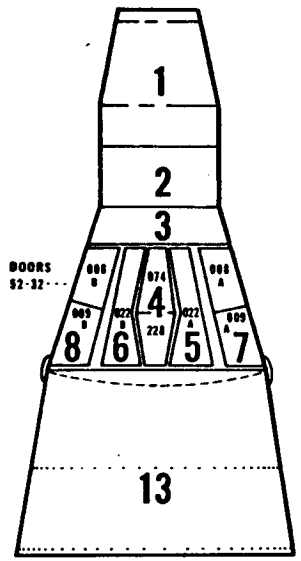

BOTTOM VIEW

1. RENDEZVOUS AND RADAR MODULE
2. RE-ENTRY RCS MODULE
3. FORWARD AREA CONE
4. CENTER EQUIPMENT BAY
5. L/H LANDING GEAR BAY
6. R/H LANDING GEAR BAY
7. L/H EQUIPMENT BAY
8. R/H EQUIPMENT BAY
9. CREW PRESSURIZED AREA
10. EXTERIOR AREA OF LARGE PRESS. BULKHEAD
11. SPACECRAFT EXTERIOR L/H
12. SPACECRAFT EXTERIOR R/H
13. INTERNAL ADAPTER AREA
14. R/H EXTERNAL ADAPTER AREA
15. L/H EXTERNAL ADAPTER AREA
16. ZONE FOR ENTIRE SPACECRAFT

GEMINI SPACECRAFT NO. 3A

ZONE NO. 8

TOTAL EQUIPMENT REQUIRED 82

EQUIPMENT ON HAND 46

EQUIPMENT TO SCHEDULE 36

EQUIPMENT LATE 0

PART NO.	PART NAME	NORM. INST.	SLACK	DEF. INST.	SLACK	HOURS TO INSTALL

GEMINI ZONE CHART

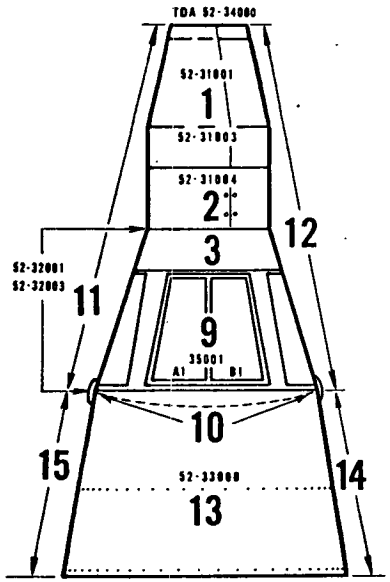

TOP VIEW

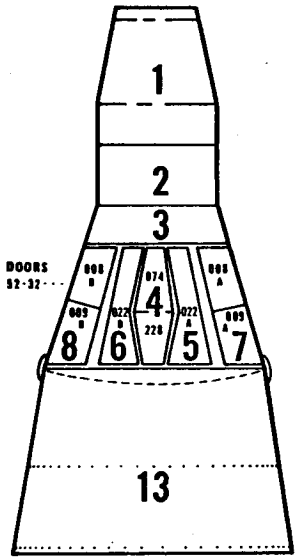

BOTTOM VIEW

1. RENDEZVOUS AND RADAR MODULE
2. RE-ENTRY RCS MODULE
3. FORWARD AREA CONE
4. CENTER EQUIPMENT BAY
5. L/H LANDING GEAR BAY
6. R/H LANDING GEAR BAY
7. L/H EQUIPMENT BAY
8. R/H EQUIPMENT BAY
9. CREW PRESSURIZED AREA
10. EXTERIOR AREA OF LARGE PRESS. BULKHEAD
11. SPACECRAFT EXTERIOR L/H
12. SPACECRAFT EXTERIOR R/H
13. INTERNAL ADAPTER AREA
14. R/H EXTERNAL ADAPTER AREA
15. L/H EXTERNAL ADAPTER AREA
16. ZONE FOR ENTIRE SPACECRAFT

GEMINI SPACECRAFT NO. 3A

ZONE NO. 9

TOTAL EQUIPMENT REQUIRED 91

EQUIPMENT ON HAND 22

EQUIPMENT TO SCHEDULE 69

EQUIPMENT LATE 0

PART NO.	PART NAME	NORM. INST.	SLACK	DEF. INST.	SLACK	HOURS TO INSTALL

GEMINI ZONE CHART

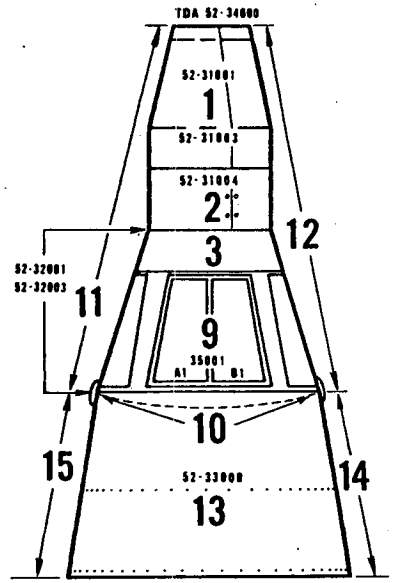

TOP VIEW

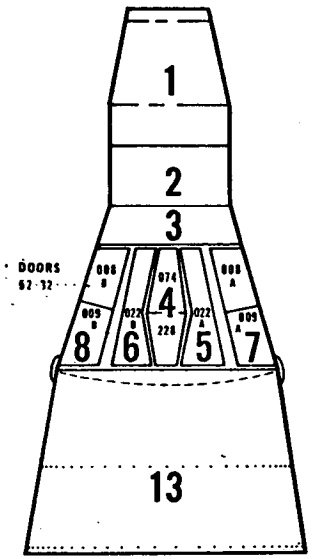

BOTTOM VIEW

1. RENDEZVOUS AND RADAR MODULE
2. RE-ENTRY RCS MODULE
3. FORWARD AREA CONE
4. CENTER EQUIPMENT BAY
5. L/H LANDING GEAR BAY
6. R/H LANDING GEAR BAY
7. L/H EQUIPMENT BAY
8. R/H EQUIPMENT BAY
9. CREW PRESSURIZED AREA
10. EXTERIOR AREA OF LARGE PRESS. BULKHEAD
11. SPACECRAFT EXTERIOR L/H
12. SPACECRAFT EXTERIOR R/H
13. INTERNAL ADAPTER AREA
14. R/H EXTERNAL ADAPTER AREA
15. L/H EXTERNAL ADAPTER AREA
16. ZONE FOR ENTIRE SPACECRAFT

GEMINI SPACECRAFT NO. 3A

ZONE NO. 13

TOTAL EQUIPMENT REQUIRED 49

EQUIPMENT ON HAND 8

EQUIPMENT TO SCHEDULE 41

EQUIPMENT LATE 0

PART NO.	PART NAME	NORM. INST.	SLACK	DEF. INST.	SLACK	HOURS TO INSTALL

GEMINI ZONE CHART

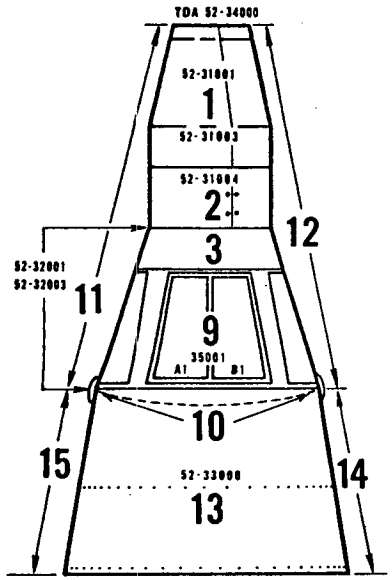

TOP VIEW

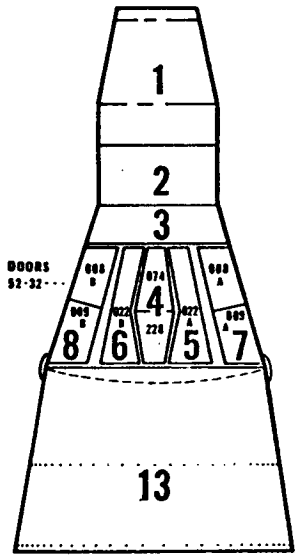

BOTTOM VIEW

1. RENDEZVOUS AND RADAR MODULE
2. RE-ENTRY RCS MODULE
3. FORWARD AREA CONE
4. CENTER EQUIPMENT BAY
5. L/H LANDING GEAR BAY
6. R/H LANDING GEAR BAY
7. L/H EQUIPMENT BAY
8. R/H EQUIPMENT BAY
9. CREW PRESSURIZED AREA
10. EXTERIOR AREA OF LARGE PRESS. BULKHEAD
11. SPACECRAFT EXTERIOR L/H
12. SPACECRAFT EXTERIOR R/H
13. INTERNAL ADAPTER AREA
14. R/H EXTERNAL ADAPTER AREA
15. L/H EXTERNAL ADAPTER AREA
16. ZONE FOR ENTIRE SPACECRAFT

GEMINI SPACECRAFT NO. 3A

ZONE NO. OAMS MODULE

TOTAL EQUIPMENT REQUIRED 19

EQUIPMENT ON HAND 8

EQUIPMENT TO SCHEDULE 0

EQUIPMENT LATE 11

	PART NO.	PART NAME	NORM. INST.	SLACK	DEF. INST.	SLACK	HOURS TO INSTALL
52	52700-175	"B" PKG (1)	MOD. INSTL	-17	OCOD A4	0	2
	52701-171	"C" PKG (1)	"	-16	"	0	2
	52701-173	"D" PKG (1)	"	-16	"	0	2
	52700-151	"A" PKG (1)	"	-17	"	0	2
	52701-205	"E" PKG (1)	"	-20	"	0	2
	52701-11	FUEL TANK (1)	"	-17	"	0	4
	52701-179	OXYDIZER (1)	"	-16	"	0	4
	52701-169	PRESS TANK (1)	"	-19	"	0	4
	52701-187	S/O VALVE (2)	"	-16	"	0	4
	52700-177	PRESS REGULATOR (1)	"	-16	"	0	2

GEMINI ZONE CHART

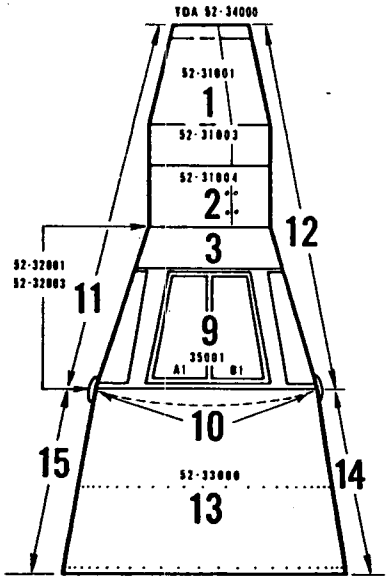

TOP VIEW

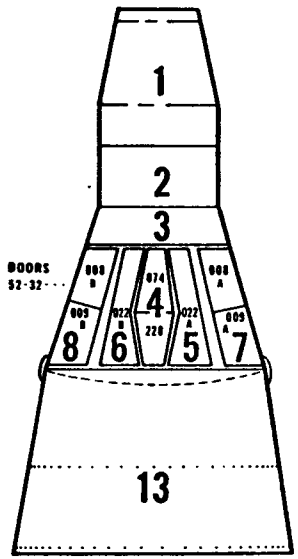

BOTTOM VIEW

1. RENDEZVOUS AND RADAR MODULE
2. RE-ENTRY RCS MODULE
3. FORWARD AREA CONE
4. CENTER EQUIPMENT BAY
5. L/H LANDING GEAR BAY
6. R/H LANDING GEAR BAY
7. L/H EQUIPMENT BAY
8. R/H EQUIPMENT BAY
9. CREW PRESSURIZED AREA
10. EXTERIOR AREA OF LARGE PRESS. BULKHEAD
11. SPACECRAFT EXTERIOR L/H
12. SPACECRAFT EXTERIOR R/H
13. INTERNAL ADAPTER AREA
14. R/H EXTERNAL ADAPTER AREA
15. L/H EXTERNAL ADAPTER AREA
16. ZONE FOR ENTIRE SPACECRAFT

GEMINI SPACECRAFT NO. 3A

ZONE NO. ELECTRONIC MODULE

TOTAL EQUIPMENT REQUIRED 16

EQUIPMENT ON HAND 2

EQUIPMENT TO SCHEDULE 13

EQUIPMENT LATE 1

PART NO.	PART NAME	NORM. INST.	SLACK	DEF. INST.	SLACK	HOURS TO INSTALL
52 8770-19	OAME (1)	MOD INSTL	-16	00002 A2	+1	

GEMINI ZONE CHART

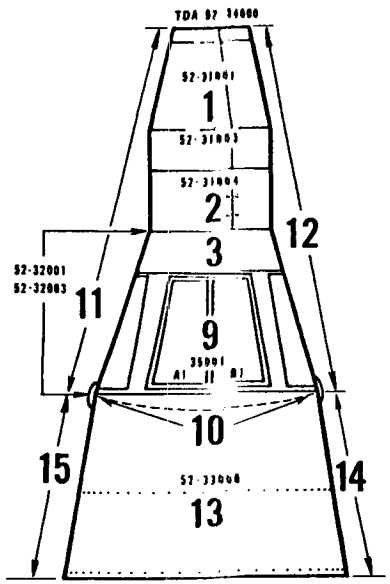

TOP VIEW

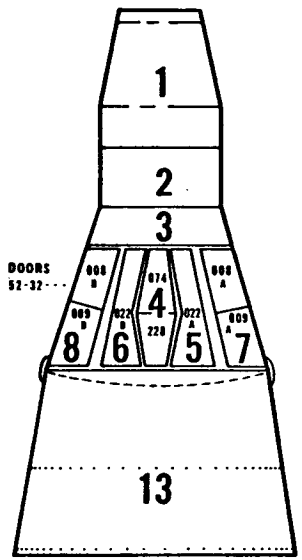

BOTTOM VIEW

1. RENDEZVOUS AND RADAR MODULE
2. RE-ENTRY RCS MODULE
3. FORWARD AREA CONE
4. CENTER EQUIPMENT BAY
5. L/H LANDING GEAR BAY
6. R/H LANDING GEAR BAY
7. L/H EQUIPMENT BAY
8. R/H EQUIPMENT BAY
9. CREW PRESSURIZED AREA
10. EXTERIOR AREA OF LARGE PRESS. BULKHEAD
11. SPACECRAFT EXTERIOR L/H
12. SPACECRAFT EXTERIOR R/H
13. INTERNAL ADAPTER AREA
14. R/H EXTERNAL ADAPTER AREA
15. L/H EXTERNAL ADAPTER AREA
16. ZONE FOR ENTIRE SPACECRAFT

GEMINI SPACECRAFT NO. 3A

ZONE NO. ECS O_2

TOTAL EQUIPMENT REQUIRED 4

EQUIPMENT ON HAND 0

EQUIPMENT TO SCHEDULE 4

EQUIPMENT LATE 0

PART NO.	PART NAME	NORM. INST.	SLACK	DEF. INST.	SLACK	HOURS TO INSTALL

GEMINI ZONE CHART

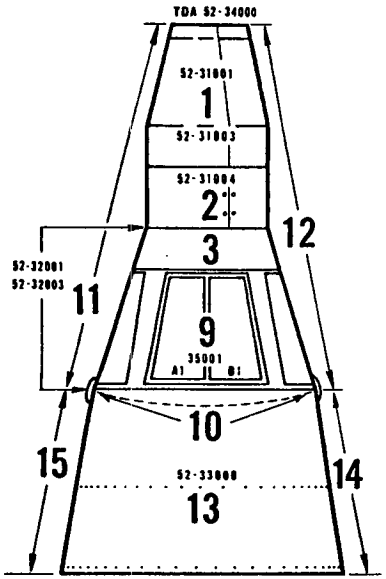

TOP VIEW

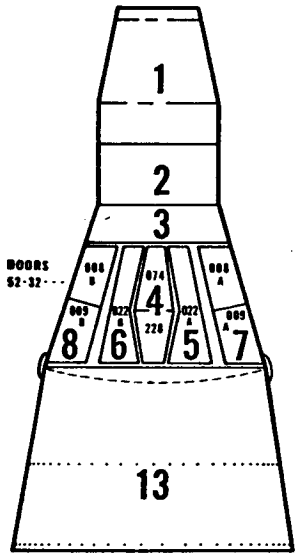

BOTTOM VIEW

1. RENDEZVOUS AND RADAR MODULE
2. RE-ENTRY RCS MODULE
3. FORWARD AREA CONE
4. CENTER EQUIPMENT BAY
5. L/H LANDING GEAR BAY
6. R/H LANDING GEAR BAY
7. L/H EQUIPMENT BAY
8. R/H EQUIPMENT BAY
9. CREW PRESSURIZED AREA
10. EXTERIOR AREA OF LARGE PRESS. BULKHEAD
11. SPACECRAFT EXTERIOR L/H
12. SPACECRAFT EXTERIOR R/H
13. INTERNAL ADAPTER AREA
14. R/H EXTERNAL ADAPTER AREA
15. L/H EXTERNAL ADAPTER AREA
16. ZONE FOR ENTIRE SPACECRAFT

GEMINI SPACECRAFT NO. 3A

ZONE NO. FUEL CELL

TOTAL EQUIPMENT REQUIRED 10

EQUIPMENT ON HAND 9

EQUIPMENT TO SCHEDULE 0

EQUIPMENT LATE 1

	PART NO.	PART NAME	NORM. INST.	SLACK	DEF. INST.	SLACK	HOURS TO INSTALL
52	83701-81	HYDROGEN BOTTLE	MOO INSTL	-21	00005 -A4	0	4

GEMINI ZONE CHART

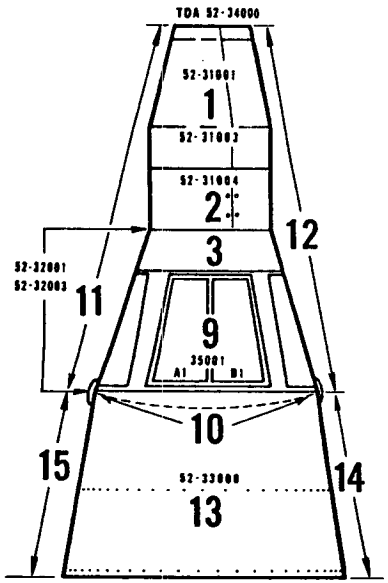

TOP VIEW

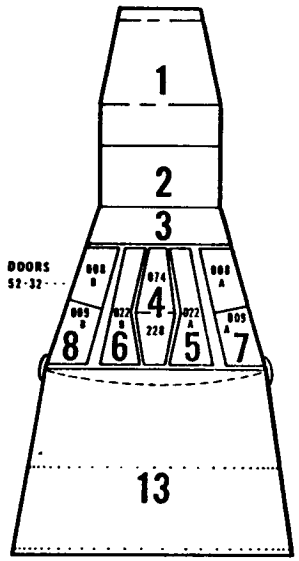

BOTTOM VIEW

1. RENDEZVOUS AND RADAR MODULE
2. RE-ENTRY RCS MODULE
3. FORWARD AREA CONE
4. CENTER EQUIPMENT BAY
5. L/H LANDING GEAR BAY
6. R/H LANDING GEAR BAY
7. L/H EQUIPMENT BAY
8. R/H EQUIPMENT BAY
9. CREW PRESSURIZED AREA
10. EXTERIOR AREA OF LARGE PRESS. BULKHEAD
11. SPACECRAFT EXTERIOR L/H
12. SPACECRAFT EXTERIOR R/H
13. INTERNAL ADAPTER AREA
14. R/H EXTERNAL ADAPTER AREA
15. L/H EXTERNAL ADAPTER AREA
16. ZONE FOR ENTIRE SPACECRAFT

GEMINI SPACECRAFT NO. 3A

ZONE NO. ECS COOLANT

TOTAL EQUIPMENT REQUIRED 17

EQUIPMENT ON HAND 1

EQUIPMENT TO SCHEDULE 15

EQUIPMENT LATE 1

PART NO.	PART NAME	NORM. INST.	SLACK	DEF. INST.	SLACK	HOURS TO INSTALL
52 83700-265	PUMP ASSY (1)	MOD INST.	-22	00005 A4	0	2

25 October 1963

SUBJECT: GEMINI STATUS REPORT FOR THE PERIOD 28 SEPTEMBER THRU 25 OCTOBER 1963. SPACECRAFT NUMBER THREE A.

1. RECAPITULATION

The Cabin Assembly for this Spacecraft is in the White Room where final assembly operations and tests are in progress. Final fit of shingles is being accomplished on the Cabin and equipment doors. Fiberglass Channels and Min-"K" are in work. Reworked equipment doors were received 9 October and fitting to the Spacecraft is being accomplished.

The Adapter for this unit was received in the White Room on 19 October and wire bundle build up started on 22 October.

2. FORECAST

New Hatches are to be available for installation the first part of the month. These will be installed and rigged. The five pound Cabin Pressure Test will be worked after hatch rigging. Coldplates and plumbing will be installed this month. The remaining styrofoam in the Z160 bay will be installed. The Static System and pressure will also be accomplished. Wire bundle installation in the Cabin and equipment bays will begin the latter part of the month.

The wire bundles, temperature sensors, and thermocouples will be installed in the Adapter. The Adapter will be available for radiator test 21 November 1963.

Installation of fiberglass channels and Min-"K" will begin late November on the [illegible] Module. [illegible]

GEMINI MANUFACTURING WORK PLAN – SPACECRAFT NO. 3

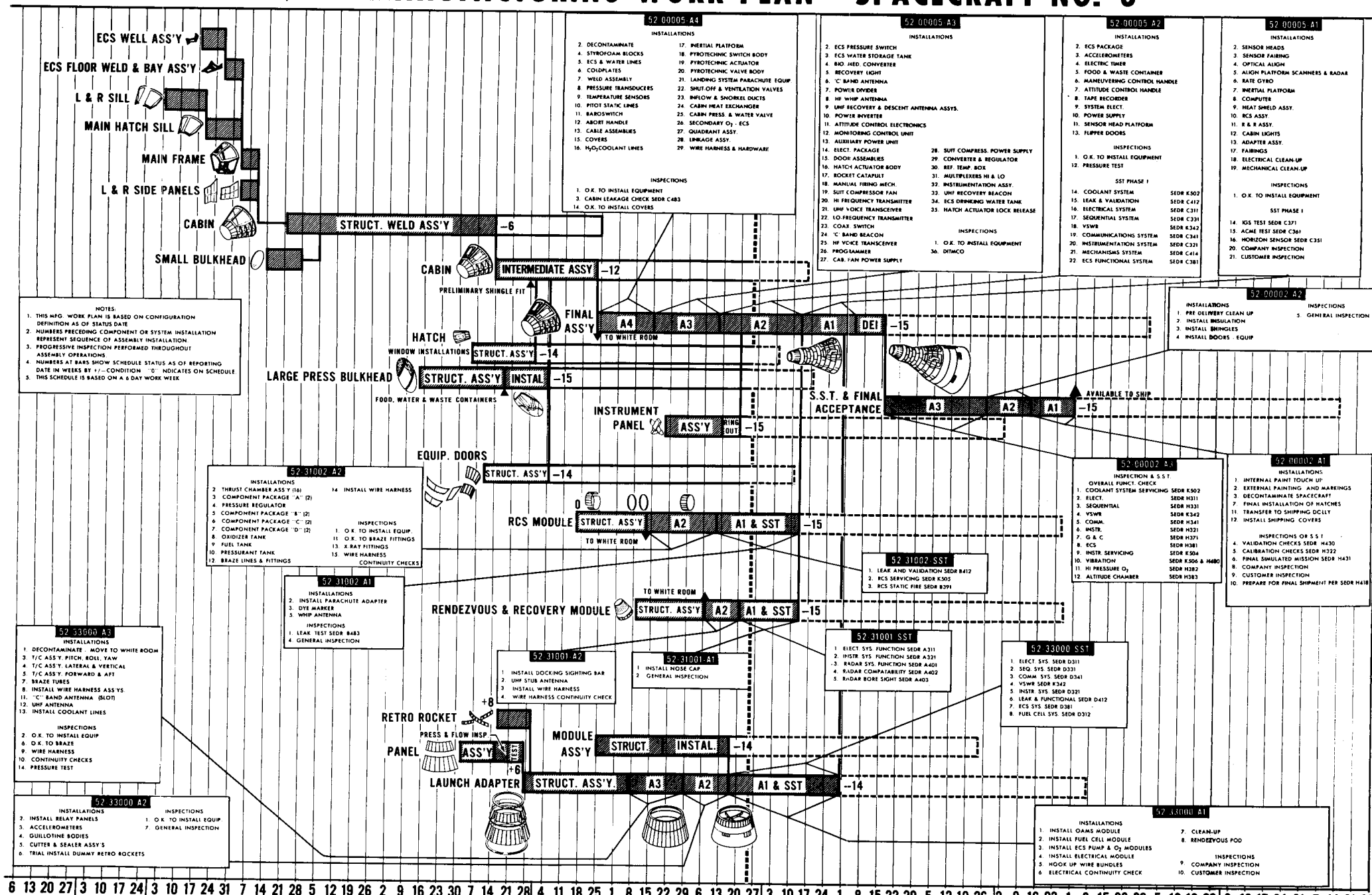

NOTES:
1. THIS MFG. WORK PLAN IS BASED ON CONFIGURATION DEFINITION AS OF STATUS DATE
2. NUMBERS PRECEDING COMPONENT OR SYSTEM INSTALLATION REPRESENT SEQUENCE OF ASSEMBLY INSTALLATION
3. PROGRESSIVE INSPECTION PERFORMED THROUGHOUT ASSEMBLY OPERATIONS
4. NUMBERS AT BARS SHOW SCHEDULE STATUS AS OF REPORTING DATE IN WEEKS BT +/– CONDITION "0" INDICATES ON SCHEDULE
5. THIS SCHEDULE IS BASED ON A 6 DAY WORK WEEK

52 00005 A4

INSTALLATIONS
2. DECONTAMINATE
4. STYROFOAM BLOCKS
5. ECS & WATER LINES
6. COLDPLATES
7. WELD ASSEMBLY
8. PRESSURE TRANSDUCERS
9. TEMPERATURE SENSORS
10. PITOT STATIC LINES
11. BAROSWITCH
12. ABORT HANDLE
13. CABLE ASSEMBLIES
15. COVERS
16. H_2O_2 COOLANT LINES
17. INERTIAL PLATFORM
18. PYROTECHNIC SWITCH BODY
19. PYROTECHNIC ACTUATOR
20. PYROTECHNIC VALVE BODY
21. LANDING SYSTEM PARACHUTE EQUIP
22. SHUT-OFF & VENTILATION VALVES
23. INFLOW & SNORKEL DUCTS
24. CABIN HEAT EXCHANGER
25. CABIN PRESS. & WATER VALVE
26. SECONDARY O_2 - ECS
27. QUADRANT ASSY.
28. LINKAGE ASSY.
29. WIRE HARNESS & HARDWARE

INSPECTIONS
1. O.K. TO INSTALL EQUIPMENT
3. CABIN LEAKAGE CHECK SEDR C483
14. O.K. TO INSTALL COVERS

52 00005 A3

INSTALLATIONS
2. ECS PRESSURE SWITCH
3. ECS WATER STORAGE TANK
4. BIO. MED. CONVERTER
5. RECOVERY LIGHT
6. 'C' BAND ANTENNA
7. POWER DIVIDER
8. HF WHIP ANTENNA
9. UHF RECOVERY & DESCENT ANTENNA ASSYS.
10. POWER INVERTER
11. ATTITUDE CONTROL ELECTRONICS
12. MONITORING CONTROL UNIT
13. AUXILIARY POWER UNIT
14. ELECT. PACKAGE
15. DOOR ASSEMBLIES
16. HATCH ACTUATOR BODY
17. ROCKET CATAPULT
18. MANUAL FIRING MECH.
19. SUIT COMPRESSOR FAN
20. HI FREQUENCY TRANSMITTER
21. UHF VOICE TRANSCEIVER
22. LO-FREQUENCY TRANSMITTER
23. COAX. SWITCH
24. 'C' BAND BEACON
25. HF VOICE TRANSCEIVER
26. PROGRAMMER
27. CAB. FAN POWER SUPPLY
28. SUIT COMPRESS. POWER SUPPLY
29. CONVERTER & REGULATOR
30. REF. TEMP. BOX
31. MULTIPLEXERS HI & LO
32. INSTRUMENTATION ASSY.
33. UHF RECOVERY BEACON
34. ECS DRINKING WATER TANK
35. HATCH ACTUATOR LOCK RELEASE

INSPECTIONS
1. O.K. TO INSTALL EQUIPMENT
36. DITMCO

52 00005 A2

INSTALLATIONS
2. ECS PACKAGE
3. ACCELEROMETERS
4. ELECTRIC TIMER
5. FOOD & WASTE CONTAINER
6. MANEUVERING CONTROL HANDLE
7. ATTITUDE CONTROL HANDLE
8. TAPE RECORDER
9. SYSTEM ELECT.
10. POWER SUPPLY
11. SENSOR HEAD PLATFORM
13. FLIPPER DOORS

INSPECTIONS
1. O.K. TO INSTALL EQUIPMENT
12. PRESSURE TEST

SST PHASE I
14. COOLANT SYSTEM SEDR K502
15. LEAK & VALIDATION SEDR C412
16. ELECTRICAL SYSTEM SEDR C311
17. SEQUENTIAL SYSTEM SEDR C331
18. VSWR SEDR K342
19. COMMUNICATIONS SYSTEM SEDR C341
20. INSTRUMENTATION SYSTEM SEDR C321
21. MECHANISMS SYSTEM SEDR C414
22. ECS FUNCTIONAL SYSTEM SEDR C381

52 00005 A1

INSTALLATIONS
2. SENSOR HEADS
3. SENSOR FAIRING
4. OPTICAL ALIGN
5. ALIGN PLATFORM SCANNERS & RADAR
6. RATE GYRO
7. INERTIAL PLATFORM
8. COMPUTER
9. HEAT SHIELD ASSY.
10. RCS ASSY.
11. R & R ASSY.
12. CABIN LIGHTS
13. ADAPTER ASSY.
17. FAIRINGS
18. ELECTRICAL CLEAN-UP
19. MECHANICAL CLEAN-UP

INSPECTIONS
1. O.K. TO INSTALL EQUIPMENT

SST PHASE I
14. IGS TEST SEDR C371
15. ACME TEST SEDR C361
16. HORIZON SENSOR SEDR C351
20. COMPANY INSPECTION
21. CUSTOMER INSPECTION

52 00002 A2

INSTALLATIONS
1. PRE DELIVERY CLEAN UP
2. INSTALL INSULATION
3. INSTALL SHINGLES
4. INSTALL DOORS - EQUIP

INSPECTIONS
5. GENERAL INSPECTION

52 31002 A2

INSTALLATIONS
2. THRUST CHAMBER ASS'Y (16)
3. COMPONENT PACKAGE "A" (2)
4. PRESSURE REGULATOR
5. COMPONENT PACKAGE "B" (2)
6. COMPONENT PACKAGE "C" (2)
7. COMPONENT PACKAGE "D" (2)
8. OXIDIZER TANK
9. FUEL TANK
10. PRESSURANT TANK
12. BRAZE LINES & FITTINGS
14. INSTALL WIRE HARNESS

INSPECTIONS
1. O.K. TO INSTALL EQUIP.
11. O.K. TO BRAZE FITTINGS
13. X RAY FITTINGS
15. WIRE HARNESS CONTINUITY CHECKS

52 31002 A1

INSTALLATIONS
2. INSTALL PARACHUTE ADAPTER
3. DYE MARKER
5. WHIP ANTENNA

INSPECTIONS
1. LEAK TEST SEDR B483
4. GENERAL INSPECTION

52 31002 SST

1. LEAK AND VALIDATION SEDR B412
2. RCS SERVICING SEDR K305
3. RCS STATIC FIRE SEDR B391

52 00002 A3

INSPECTION & S.S.T.
OVERALL FUNCT. CHECK
1. COOLANT SYSTEM SERVICING SEDR K502
2. ELECT. SEDR H311
3. SEQUENTIAL SEDR H331
4. VSWR SEDR K342
5. COMM. SEDR H341
6. INSTR. SEDR H321
7. G & C SEDR H371
8. ECS SEDR H381
9. INSTR. SERVICING SEDR K504
10. VIBRATION SEDR K506 & H480
11. HI PRESSURE O_2 SEDR H382
12. ALTITUDE CHAMBER SEDR H383

52 00002 A1

INSTALLATIONS
1. INTERNAL PAINT TOUCH UP
2. EXTERNAL PAINTING AND MARKINGS
3. DECONTAMINATE SPACECRAFT
7. FINAL INSTALLATION OF HATCHES
11. TRANSFER TO SHIPPING DCLLY
12. INSTALL SHIPPING COVERS

INSPECTIONS OR S.S.T.
4. VALIDATION CHECKS SEDR H430
5. CALIBRATION CHECKS SEDR H322
6. FINAL SIMULATED MISSION SEDR H431
8. COMPANY INSPECTION
9. CUSTOMER INSPECTION
10. PREPARE FOR FINAL SHIPMENT PER SEDR H418

52 33000 A3

INSTALLATIONS
1. DECONTAMINATE - MOVE TO WHITE ROOM
3. T/C ASS'Y. PITCH, ROLL, YAW
4. T/C ASS'Y. LATERAL & VERTICAL
5. T/C ASS'Y. FORWARD & AFT
7. BRAZE TUBES
8. INSTALL WIRE HARNESS ASS'YS.
11. 'C' BAND ANTENNA (SLOT)
12. UHF ANTENNA
13. INSTALL COOLANT LINES

INSPECTIONS
2. O.K. TO INSTALL EQUIP
6. O.K. TO BRAZE
9. WIRE HARNESS
10. CONTINUITY CHECKS
14. PRESSURE TEST

52 31001 A2

1. INSTALL DOCKING SIGHTING BAR
2. UHF STUB ANTENNA
3. INSTALL WIRE HARNESS
4. WIRE HARNESS CONTINUITY CHECK

52 31001 A1

1. INSTALL NOSE CAP
2. GENERAL INSPECTION

52 31001 SST

1. ELECT. SYS. FUNCTION SEDR A311
2. INSTR. SYS. FUNCTION SEDR A321
3. RADAR SYS. FUNCTION SEDR A401
4. RADAR COMPATABILITY SEDR A402
5. RADAR BORE SIGHT SEDR A403

52 33000 SST

1. ELECT. SYS. SEDR D311
2. SEQ. SYS. SEDR D331
3. COMM. SYS. SEDR D341
4. VSWR SEDR K342
5. INSTR. SYS. SEDR D321
6. LEAK & FUNCTIONAL SEDR D412
7. ECS SYS. SEDR D381
8. FUEL CELL SYS. SEDR D312

52 33000 A2

INSTALLATIONS
2. INSTALL RELAY PANELS
3. ACCELEROMETERS
4. GUILLOTINE BODIES
5. CUTTER & SEALER ASSY'S
6. TRIAL INSTALL DUMMY RETRO ROCKETS

INSPECTIONS
1. O.K. TO INSTALL EQUIP.
7. GENERAL INSPECTION

52 33000 A1

INSTALLATIONS
1. INSTALL OAMS MODULE
2. INSTALL FUEL CELL MODULE
3. INSTALL ECS PUMP & O_2 MODULES
4. INSTALL ELECTRICAL MODULE
5. HOOK UP WIRE BUNDLES
6. ELECTRICAL CONTINUITY CHECK
7. CLEAN-UP
8. RENDEZVOUS POD

INSPECTIONS
9. COMPANY INSPECTION
10. CUSTOMER INSPECTION

GEMINI SPACECRAFT NO. 3
EQUIPMENT STUDY

LEGEND

⇩ ACTUAL SCHEDULED INSTALLATION POINT

▽ EQUIPMENT AVAILABLE THROUGH P.I.A. AT M.A.C.

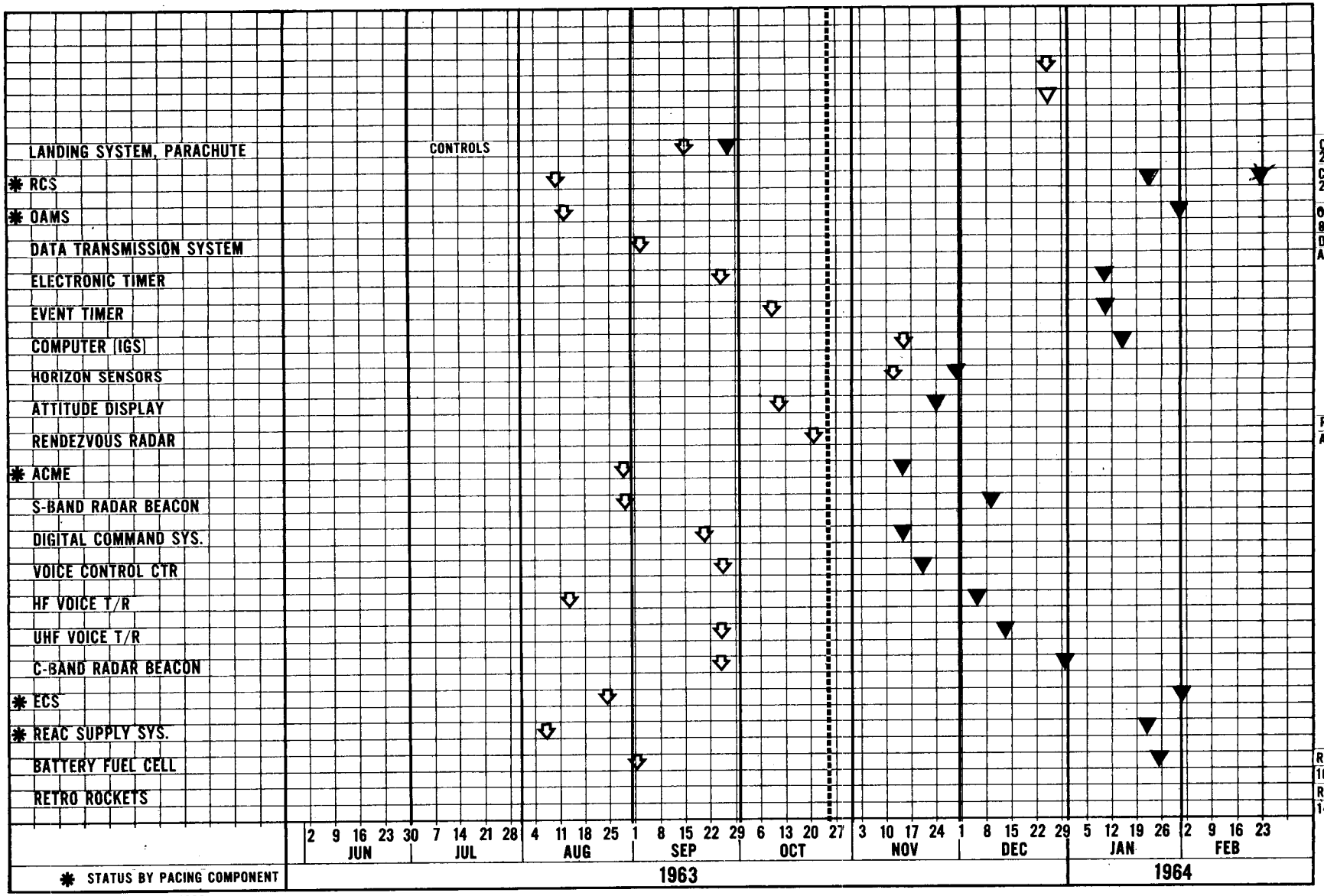

✱ STATUS BY PACING COMPONENT

STATUS DATE: 25 OCTOBER 1963

S C 3 WORK PLAN FINAL ASSY

1. STRUCTURAL EOPO INCORP	
2. PRESSURE TEST	9
3. ECS INSTALLATION & PLUMBING	9
4. WIRE BUNDLES IN CABIN	9
5. PEDESTAL INSTALLATION	9
6. FIBERGLASS CHANNELS & MIN-K	4 5 6 7 8 11 12
7. INSTALL SHINGLES	3 4 5 7 8 11 12
8. INSTALL & RIG HATCHES	11 12
9. INSTALL & RIG 32060 DOORS	5 6
10. INSTALL STYROFOAM	3 7 8
11. INSTALL COLD PLATES & PLUMBING	3 7 8
12. INSTALL W/B IN EQUIPMENT BAYS	3 7 8
13. SPLICE THERMOCOUPLES & TEST	9 11 12
14. INSTALL STATIC SYSTEM	3
15. PRESSURE TEST STATIC SYSTEM	3
16. EQUIPMENT INSTALLATION (CABIN)	9
17. EQUIPMENT INSTALLATION (OTHER)	7 8
18. DITMCO	16
19. SPLICE TEMP. SENSORS	9 11 12
20. SST PHASE I	9
21. HEAT SHIELD INSTALLATION	10
22. MECHANICAL MATE	10 14 15

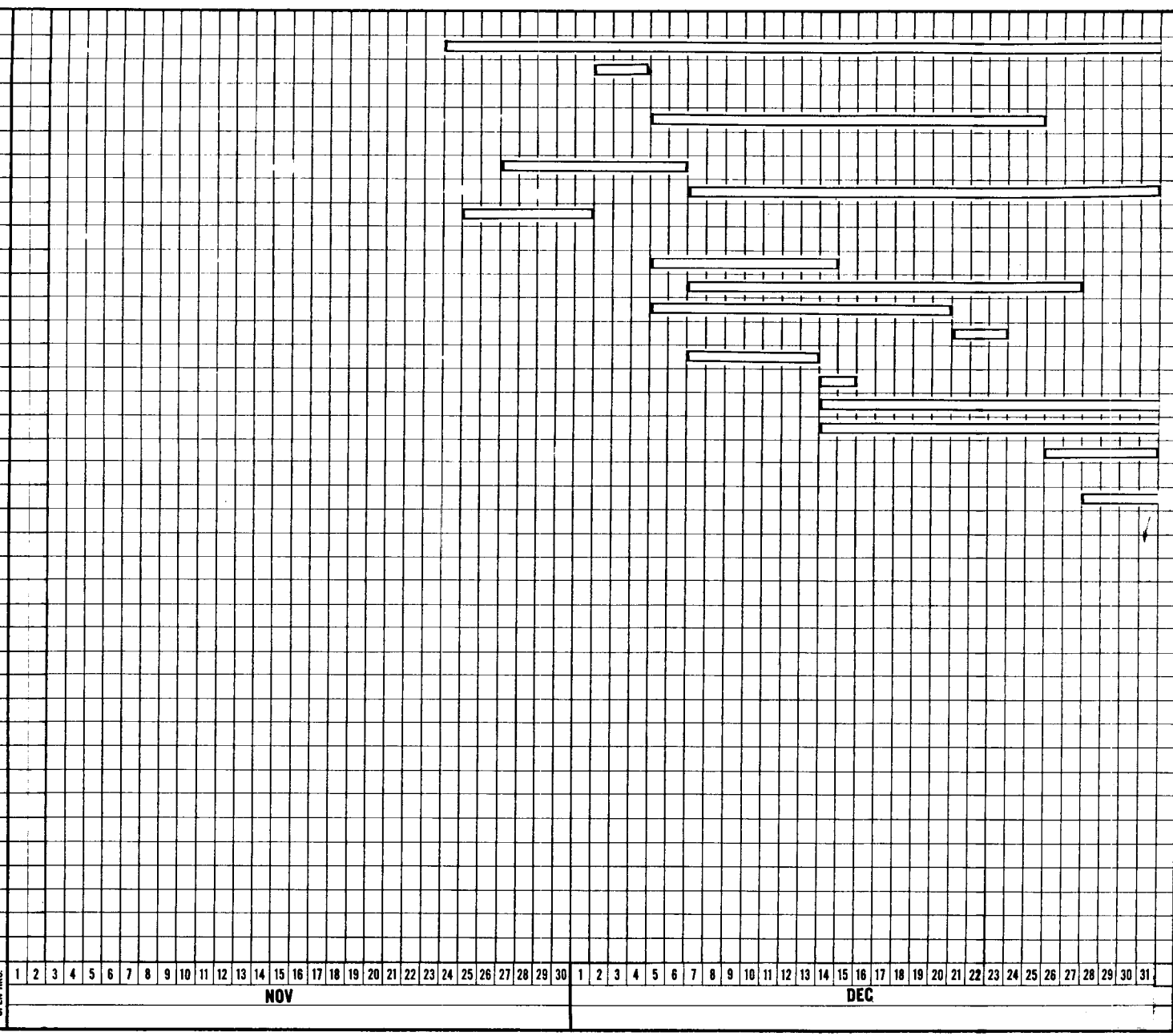

LEGEND:
- WORK PERIOD
- IN WORK
- EXTENDED WORK PERIOD

ZONE | TOTAL HRS. | OPEN HRS.

S C 3 WORK PLAN FINAL ASSY

1. STRUCTURAL EOPO INCORP	
2. PRESSURE TEST	9
3. ECS INSTALLATION & PLUMBING	9
4. WIRE BUNDLES IN CABIN	9
5. PEDESTAL INSTALLATION	9
6. FIBERGLASS CHANNELS & MIN-K	3 4 5 6 7 8 11 12
7. INSTALL SHINGLES	3 4 5 6 7 8 11 12
8. INSTALL & RIG HATCHES	11 12
9. INSTALL & RIG 32060 DOORS	5 6
10. INSTALL STYROFOAM	3 7 8
11. INSTALL COLD PLATES & PLUMBING	3 7 8
12. INSTALL W/B IN EQUIPMENT BAYS	3 7 8
13. SPLICE THERMOCOUPLES & TEST	9 11 12
14. INSTALL STATIC SYSTEM	3
15. PRESSURE TEST STATIC SYSTEM	3
16. EQUIPMENT INSTALLATION (CABIN)	9
17. EQUIPMENT INSTALLATION (OTHER)	7 8
18. DITMCO	16
19. SPLICE TEMP. SENSORS	9 11 12
20. SST PHASE I	9
21. HEAT SHIELD INSTALLATION	10
22. MECHANICAL MATE	10 14 15

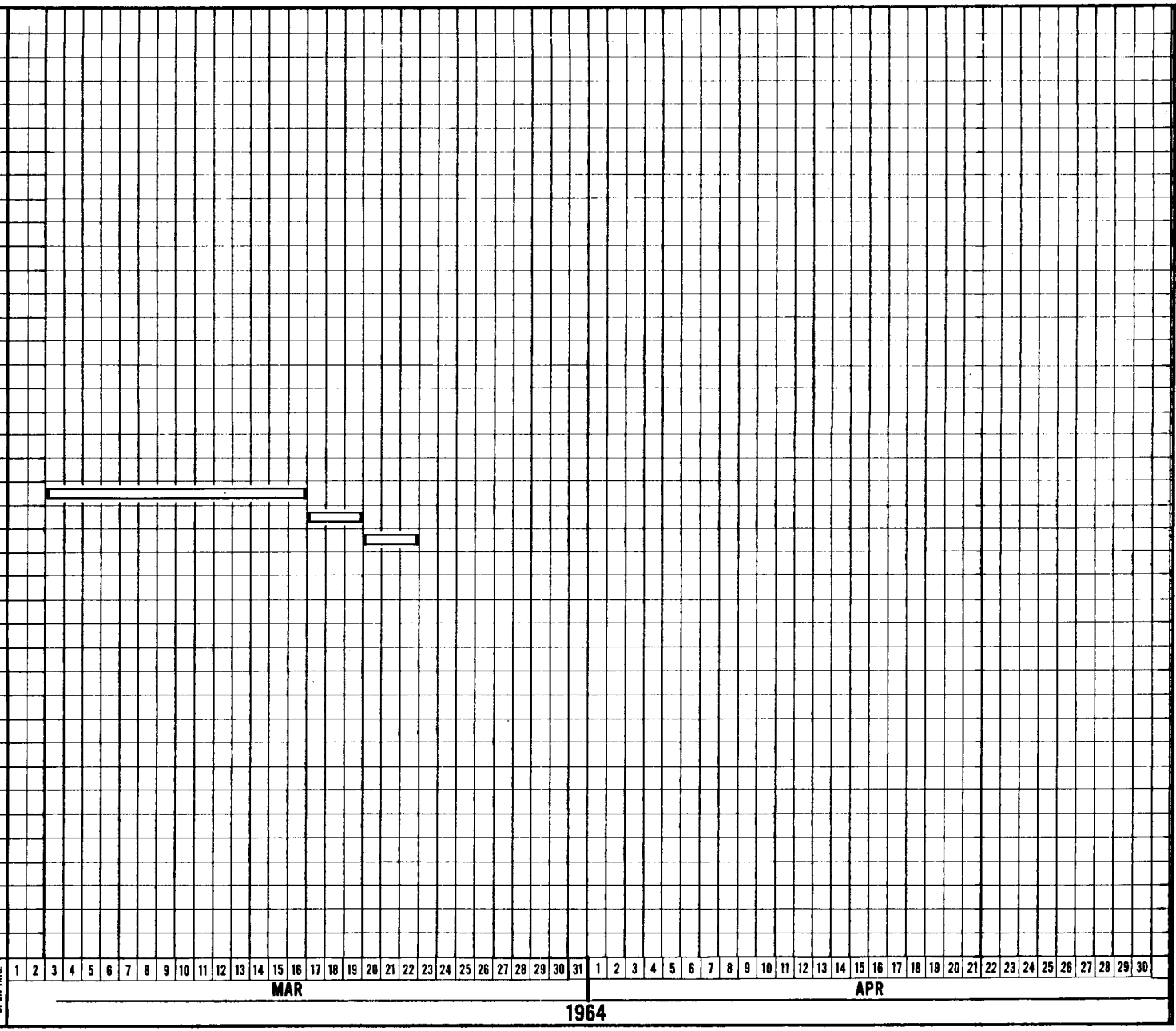

LEGEND:
- WORK PERIOD
- IN WORK
- EXTENDED WORK PERIOD

ZONE | TOTAL HRS. | OPEN HRS.

S C 3 WORK PLAN FINAL ASSY AND SST

1. STRUCTURAL E.O. INCORP.	16		
2. PRESSURE TEST (CABIN 5 LB)	9		
3. ECS INSTALL. - PLUMBING	9		
4. W/B IN CABIN	9		
5. PEDESTAL INSTALLATION	9		
6. FIBERGLASS CHANNELS & MIN-K	3 4 5 6 7 8 11 12		
7. INSTALL SHINGLES	3 4 5 6 7 8 11		
8. INSTALL & RIG HATCHES	11 12		
9. INSTALL & RIG 32060 DOORS	5 6		
10. INSTALL STYROFOAM	3 7 8		
11. INSTALL COLD PLATES & PLUMBING	3 7 8		
12. INSTALL W/B IN EQUIPMENT BAYS	3 7 8		
13. SPLICE THERMO COUPLES & TEST	9 11 12		
14. INSTALL STATIC SYSTEM	3		
15. PRESSURE TEST (STATIC SYSTEM)	3		
16. INSTALL EQUIP (CABIN)	9		
17. INSTALL EQUIP (OTHER THAN CABIN)	7 8		
18. DITMCO	16		
19. SPLICE TEMP. SENSORS	9 11 12		
20. SST PHASE I	9		
21. HEAT SHIELD INSTALLATION	10		
22. MECHANICAL MATE	10 14 15		

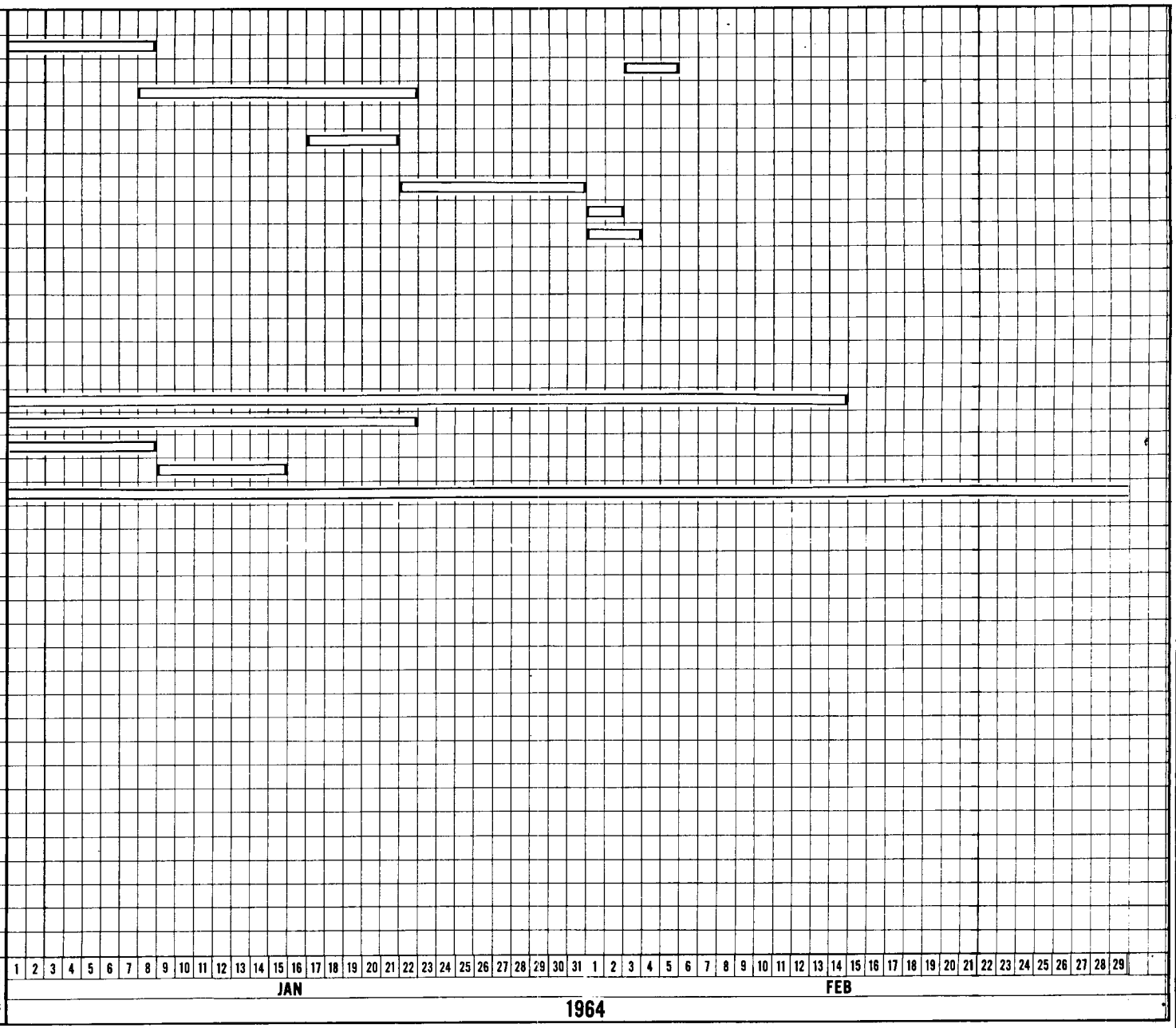

LEGEND:
- WORK PERIOD
- IN WORK
- EXTENDED WORK PERIOD

ZONE | TOTAL HRS. | OPEN HRS.

S C 3 WORK PLAN MODULE FINAL ASSY

RCS	2		
1. INSTALL PLUMBING & PRESSURE TEST			
2. INSTALL W/B - T/C - T/S			
3. FIBERGLASS CHANNELS - MIN - K - INSULATION			
4. INSTALL EQUIP			
5. INSTALL SHINGLES - RETAINERS			
6. DITMCO - T/C - T/S TEST			
7. S S T			
8. INSTALL THRUST CHAMBERS			
9. INSTALL STYROFOAM			
10. NASA/MAC INSPECTION			
R & R	1		
11. INSTALL W/B - T/C - T/S			
12. FIBERGLASS CHANNELS - MIN - K - INSULATION			
13. INSTALL EQUIP			
14. INSTALL SHINGLES - RETAINERS			
15. DITMCO - T/C - T/S TEST			
16. S S T			
17. NASA/MAC INSPECTION			
ADAPTER	13		
18. INSTALL PLUMBING & PRESSURE TEST			
19. INSTALL W/B - T/C - T/S			
20. INSTALL EQUIPMENT			
21. DTMCO - T/C - T/S TEST			
22. S S T			
23. NASA/MAC INSPECTION			
24. INSTALL THRUST CHAMBERS			

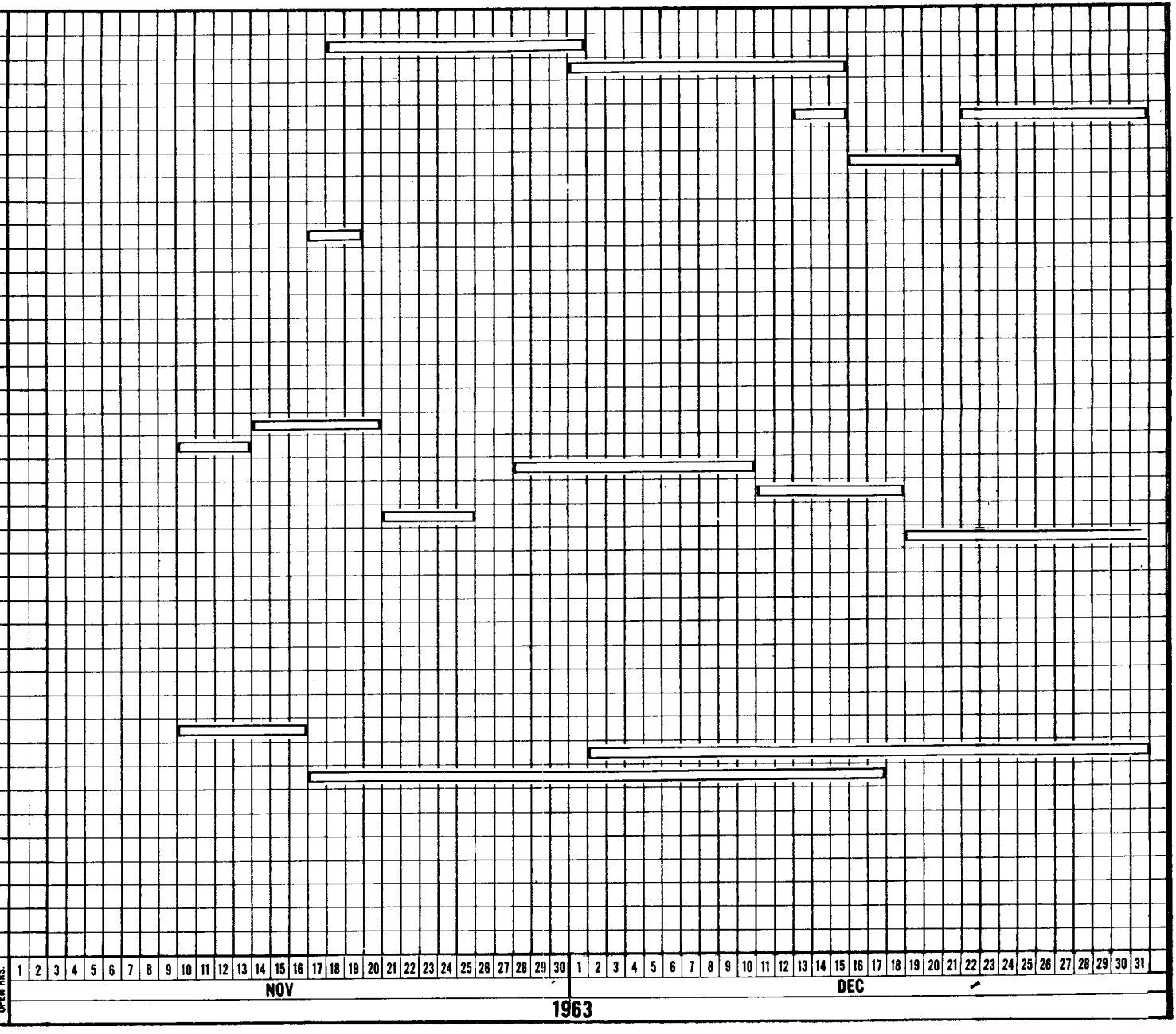

LEGEND:
- WORK PERIOD
- IN WORK
- EXTENDED WORK PERIOD

ZONE | TOTAL HRS. | OPEN HRS.

S C 3 WORK PLAN MODULE FINAL ASSY

RCS	2
1. INSTALL PLUMBING & PRESSURE TEST	
2. INSTALL W/B - T/C - T/S	
3. FIBERGLASS CHANNELS - MIN - K - INSULATION	
4. INSTALL EQUIP	
5. INSTALL SHINGLES - RETAINERS	
6. DITMCO - T/C - T/S TEST	
7. S S T	
8. INSTALL THRUST CHAMBERS	
9. INSTALL STYROFOAM	
10. NASA/MAC INSPECTION	
R & R	1
11. INSTALL W/B - T/C - T/S	
12. FIBERGLASS CHANNELS - MIN - K - INSULATION	
13. INSTALL EQUIP	
14. INSTALL SHINGLES - RETAINERS	
15. DITMCO - T/C - T/S TEST	
16. S S T	
17. NASA/MAC INSPECTION	
ADAPTER	13
18. INSTALL PLUMBING & PRESSURE TEST	
19. INSTALL W/B - T/C - T/S	
20. INSTALL EQUIPMENT	
21. DTMCO - T/C - T/S TEST	
22. S S T	
23. NASA/MAC INSPECTION	

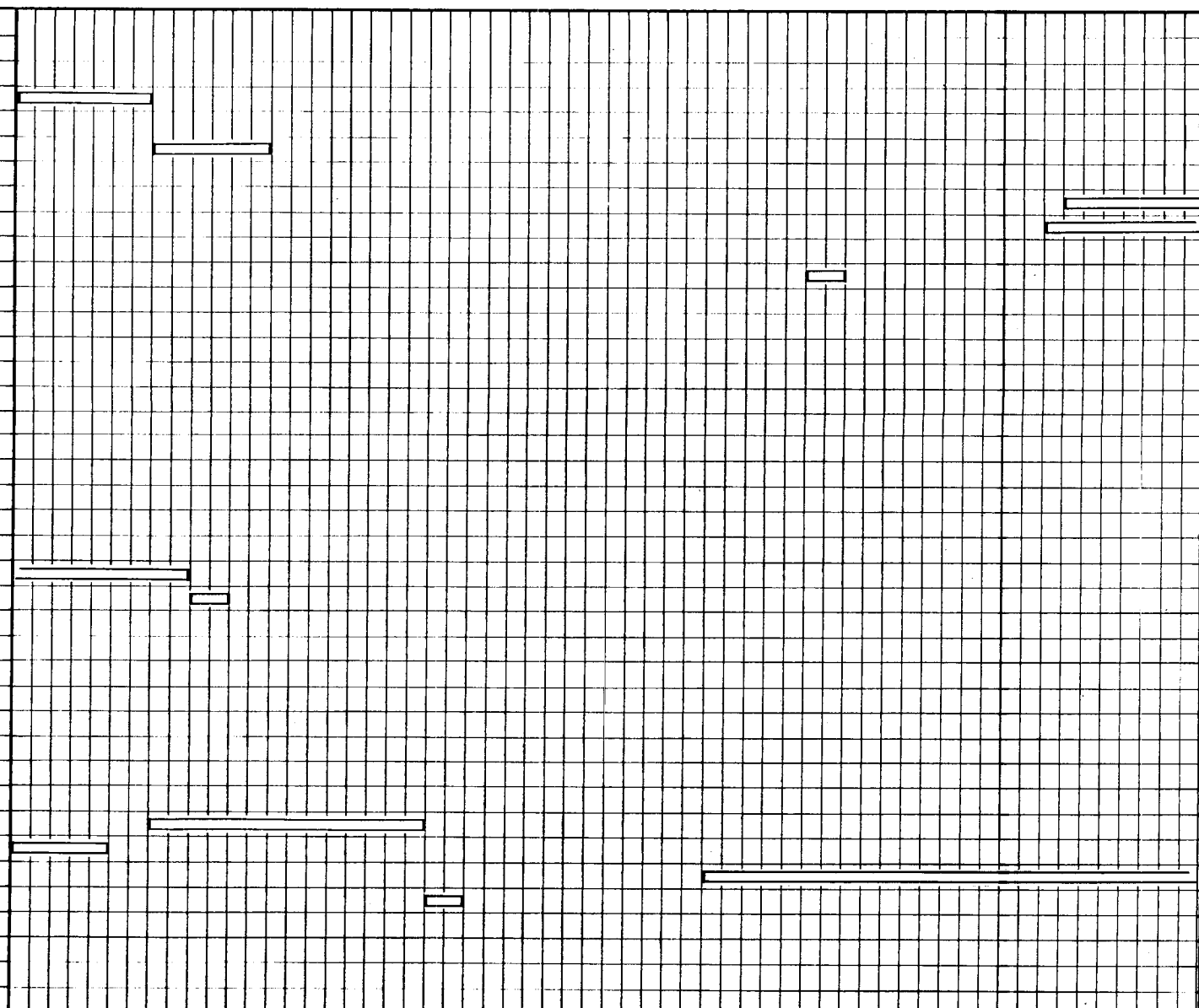

LEGEND: WORK PERIOD; IN WORK; EXTENDED WORK PERIOD

ZONE | TOTAL HRS. | OPEN HRS.

S C 3 WORK PLAN MODULE FINAL ASSY

RCS	2		
1. INSTALL PLUMBING & PRESSURE TEST			
2. INSTALL W/B - T/C - T/S			
3. FIBERGLASS CHANNELS - MIN - K - INSULATION			
4. INSTALL EQUIP			
5. INSTALL SHINGLES - RETAINERS			
6. DITMCO - T/C - T/S TEST			
7. S S T			
8. INSTALL THRUST CHAMBERS			
9. INSTALL STYROFOAM			
10. NASA/MAC INSPECTION			
R & R	1		
11. INSTALL W/B - T/C - T/S			
12. FIBERGLASS CHANNELS - MIN - K - INSULATION			
13. INSTALL EQUIP			
14. INSTALL SHINGLES - RETAINERS			
15. DITMCO - T/C - T/S TEST			
16. S S T			
17. NASA/MAC INSPECTION			
ADAPTER	13		
18. INSTALL PLUMBING & PRESSURE TEST			
19. INSTALL W/B - T/C - T/S			
20. INSTALL EQUIPMENT			
21. DTMCO - T/C - T/S TEST			
22. S S T			
23. NASA/MAC INSPECTION			
24. INSTALL THRUST CHAMBERS			

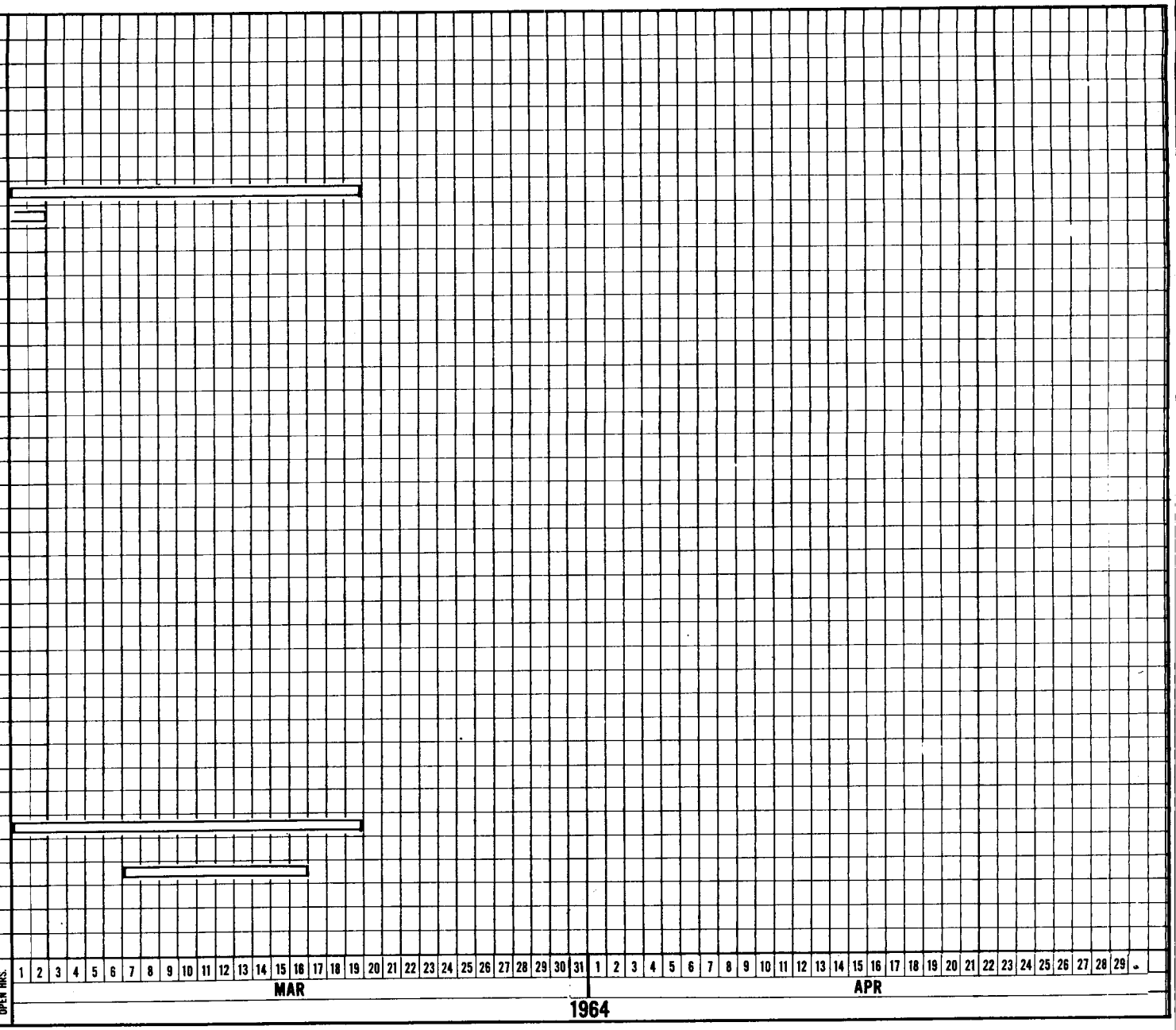

LEGEND:
- WORK PERIOD
- IN WORK
- EXTENDED WORK PERIOD

ZONE | TOTAL HRS. | OPEN HRS.

GEMINI ZONE CHART

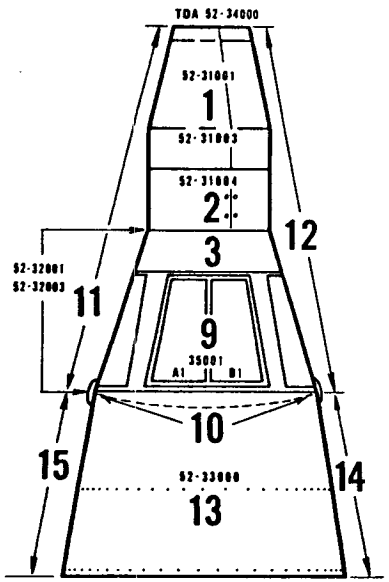

TOP VIEW

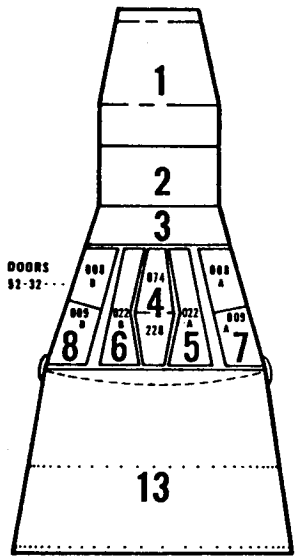

BOTTOM VIEW

1. RENDEZVOUS AND RADAR MODULE
2. RE-ENTRY RCS MODULE
3. FORWARD AREA CONE
4. CENTER EQUIPMENT BAY
5. L/H LANDING GEAR BAY
6. R/H LANDING GEAR BAY
7. L/H EQUIPMENT BAY
8. R/H EQUIPMENT BAY
9. CREW PRESSURIZED AREA
10. EXTERIOR AREA OF LARGE PRESS. BULKHEAD
11. SPACECRAFT EXTERIOR L/H
12. SPACECRAFT EXTERIOR R/H
13. INTERNAL ADAPTER AREA
14. R/H EXTERNAL ADAPTER AREA
15. L/H EXTERNAL ADAPTER AREA
16. ZONE FOR ENTIRE SPACECRAFT

GEMINI SPACECRAFT NO. 3

ZONE NO. 1

TOTAL EQUIPMENT REQUIRED 17

EQUIPMENT ON HAND 4

EQUIPMENT TO SCHEDULE 13

EQUIPMENT LATE 0

PART NO.	PART NAME	NORM. INST.	SLACK	DEF. INST.	SLACK	HOURS TO INSTALL

GEMINI ZONE CHART

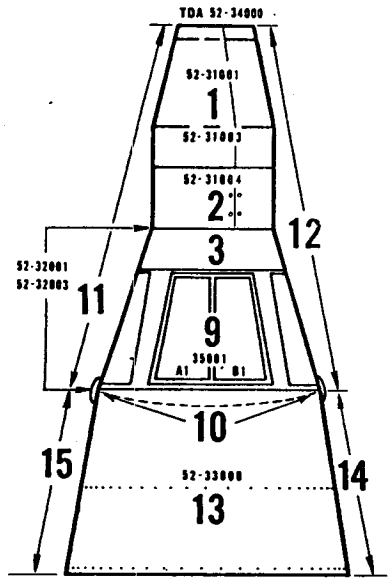

TOP VIEW

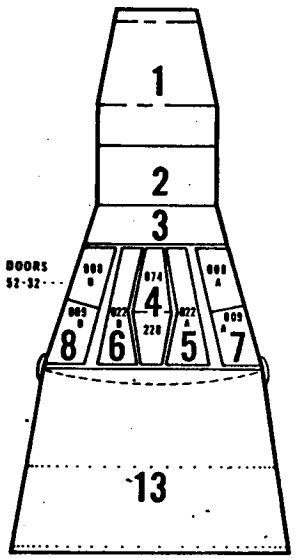

BOTTOM VIEW

1. RENDEZVOUS AND RADAR MODULE
2. RE-ENTRY RCS MODULE
3. FORWARD AREA CONE
4. CENTER EQUIPMENT BAY
5. L/H LANDING GEAR BAY
6. R/H LANDING GEAR BAY
7. L/H EQUIPMENT BAY
8. R/H EQUIPMENT BAY
9. CREW PRESSURIZED AREA
10. EXTERIOR AREA OF LARGE PRESS. BULKHEAD
11. SPACECRAFT EXTERIOR L/H
12. SPACECRAFT EXTERIOR R/H
13. INTERNAL ADAPTER AREA
14. R/H EXTERNAL ADAPTER AREA
15. L/H EXTERNAL ADAPTER AREA
16. ZONE FOR ENTIRE SPACECRAFT

GEMINI SPACECRAFT NO. 3

ZONE NO. 2

TOTAL EQUIPMENT REQUIRED 54

EQUIPMENT ON HAND 12

EQUIPMENT TO SCHEDULE 26

EQUIPMENT LATE 16

PART NO.	PART NAME	NORM. INST.	SLACK	DEF. INST.	SLACK	HOURS TO INSTALL
52-52700-189	THRUST CHAMBER (16)	31002 92	-20	31002 -A1	0	32

GEMINI ZONE CHART

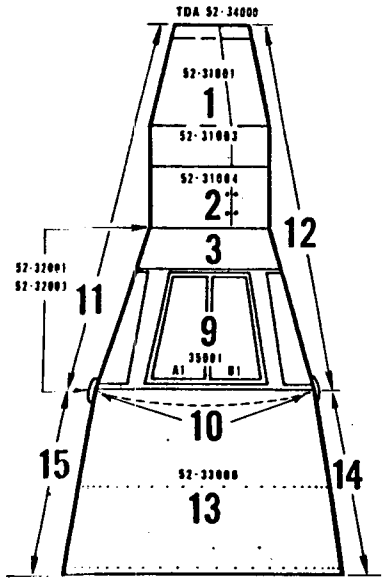

TOP VIEW

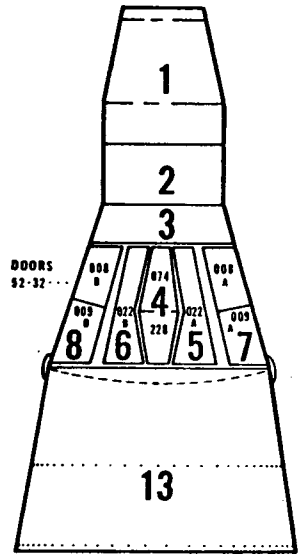

BOTTOM VIEW

1. RENDEZVOUS AND RADAR MODULE
2. RE-ENTRY RCS MODULE
3. FORWARD AREA CONE
4. CENTER EQUIPMENT BAY
5. L/H LANDING GEAR BAY
6. R/H LANDING GEAR BAY
7. L/H EQUIPMENT BAY
8. R/H EQUIPMENT BAY
9. CREW PRESSURIZED AREA
10. EXTERIOR AREA OF LARGE PRESS. BULKHEAD
11. SPACECRAFT EXTERIOR L/H
12. SPACECRAFT EXTERIOR R/H
13. INTERNAL ADAPTER AREA
14. R/H EXTERNAL ADAPTER AREA
15. L/H EXTERNAL ADAPTER AREA
16. ZONE FOR ENTIRE SPACECRAFT

GEMINI SPACECRAFT NO. 3

ZONE NO. 3

TOTAL EQUIPMENT REQUIRED 13

EQUIPMENT ON HAND 7

EQUIPMENT TO SCHEDULE 6

EQUIPMENT LATE 0

PART NO.	PART NAME	NORM. INST.	SLACK	DEF. INST.	SLACK	HOURS TO INSTALL

GEMINI ZONE CHART

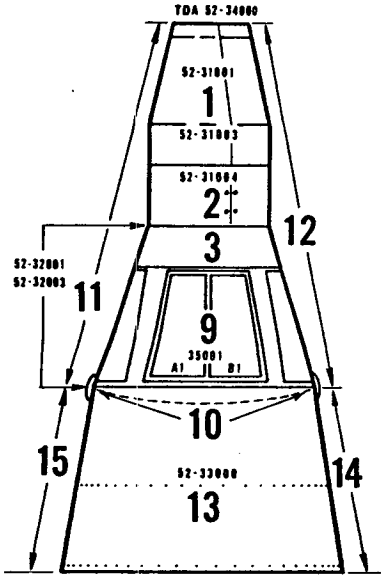

TOP VIEW

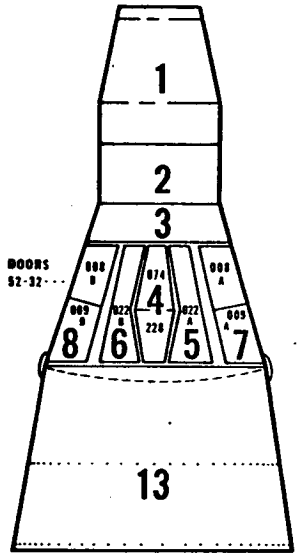

BOTTOM VIEW

1. RENDEZVOUS AND RADAR MODULE
2. RE-ENTRY RCS MODULE
3. FORWARD AREA CONE
4. CENTER EQUIPMENT BAY
5. L/H LANDING GEAR BAY
6. R/H LANDING GEAR BAY
7. L/H EQUIPMENT BAY
8. R/H EQUIPMENT BAY
9. CREW PRESSURIZED AREA
10. EXTERIOR AREA OF LARGE PRESS. BULKHEAD
11. SPACECRAFT EXTERIOR L/H
12. SPACECRAFT EXTERIOR R/H
13. INTERNAL ADAPTER AREA
14. R/H EXTERNAL ADAPTER AREA
15. L/H EXTERNAL ADAPTER AREA
16. ZONE FOR ENTIRE SPACECRAFT

GEMINI SPACECRAFT NO. 3

ZONE NO. 4

TOTAL EQUIPMENT REQUIRED 22

EQUIPMENT ON HAND 3

EQUIPMENT TO SCHEDULE 19

EQUIPMENT LATE 0

PART NO.	PART NAME	NORM. INST.	SLACK	DEF. INST.	SLACK	HOURS TO INSTALL

GEMINI ZONE CHART

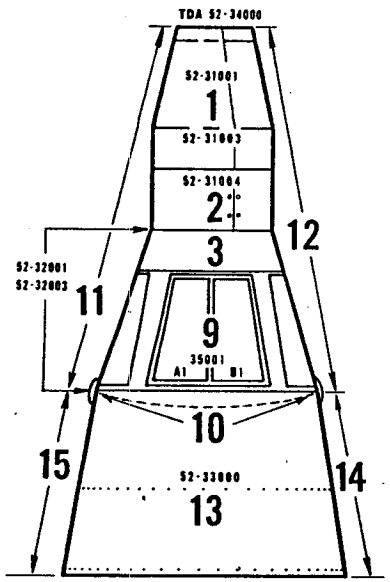

TOP VIEW

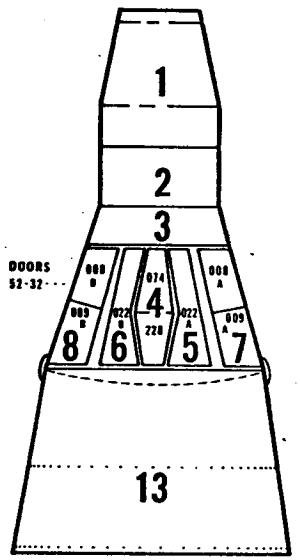

BOTTOM VIEW

1. RENDEZVOUS AND RADAR MODULE
2. RE-ENTRY RCS MODULE
3. FORWARD AREA CONE
4. CENTER EQUIPMENT BAY
5. L/H LANDING GEAR BAY
6. R/H LANDING GEAR BAY
7. L/H EQUIPMENT BAY
8. R/H EQUIPMENT BAY
9. CREW PRESSURIZED AREA
10. EXTERIOR AREA OF LARGE PRESS. BULKHEAD
11. SPACECRAFT EXTERIOR L/H
12. SPACECRAFT EXTERIOR R/H
13. INTERNAL ADAPTER AREA
14. R/H EXTERNAL ADAPTER AREA
15. L/H EXTERNAL ADAPTER AREA
16. ZONE FOR ENTIRE SPACECRAFT

GEMINI SPACECRAFT NO. 3

ZONE NO. 7

TOTAL EQUIPMENT REQUIRED 41

EQUIPMENT ON HAND 9

EQUIPMENT TO SCHEDULE 32

EQUIPMENT LATE 0

PART NO.	PART NAME	NORM. INST.	SLACK	DEF. INST.	SLACK	HOURS TO INSTALL

GEMINI ZONE CHART

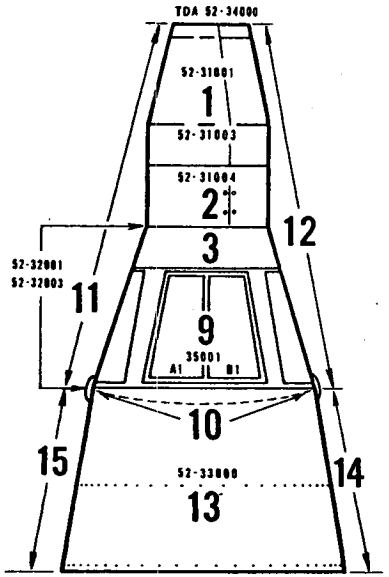

TOP VIEW

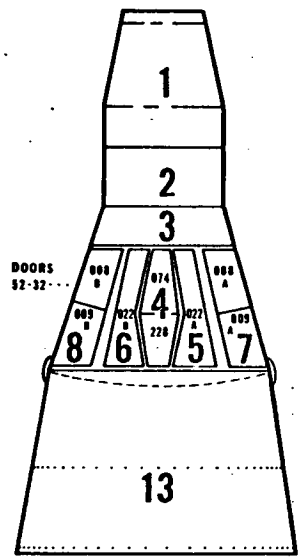

BOTTOM VIEW

1. RENDEZVOUS AND RADAR MODULE
2. RE-ENTRY RCS MODULE
3. FORWARD AREA CONE
4. CENTER EQUIPMENT BAY
5. L/H LANDING GEAR BAY
6. R/H LANDING GEAR BAY
7. L/H EQUIPMENT BAY
8. R/H EQUIPMENT BAY
9. CREW PRESSURIZED AREA
10. EXTERIOR AREA OF LARGE PRESS. BULKHEAD
11. SPACECRAFT EXTERIOR L/H
12. SPACECRAFT EXTERIOR R/H
13. INTERNAL ADAPTER AREA
14. R/H EXTERNAL ADAPTER AREA
15. L/H EXTERNAL ADAPTER AREA
16. ZONE FOR ENTIRE SPACECRAFT

GEMINI SPACECRAFT NO. 3

ZONE NO. 8

TOTAL EQUIPMENT REQUIRED 78

EQUIPMENT ON HAND 13

EQUIPMENT TO SCHEDULE 62

EQUIPMENT LATE 3

	PART NO.	PART NAME	NORM. INST.	SLACK	DEF. INST.	SLACK	HOURS TO INSTALL
52	85713-83	PROGRAMMER (1)	00005 A3	-24	00005 A1	+3	2
	85713-85	L.L. MULTIPLEXER (1)	00005 A3	-24	00005 A1	+3	2
	85713-87	H.L. MULTIPLEXER (1)	00005 A3	-24	00005 A1	+3	2

GEMINI ZONE CHART

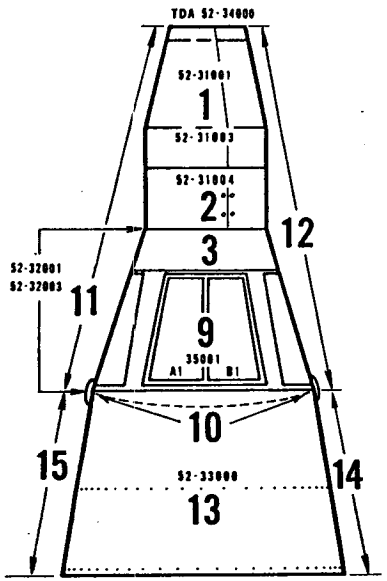

TOP VIEW

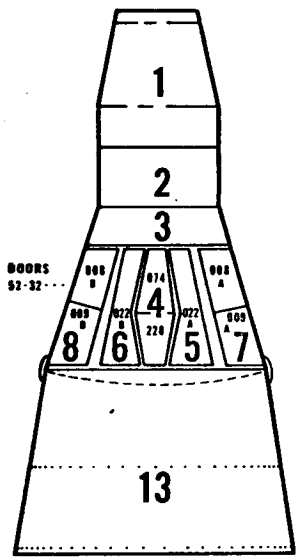

BOTTOM VIEW

1. RENDEZVOUS AND RADAR MODULE
2. RE-ENTRY RCS MODULE
3. FORWARD AREA CONE
4. CENTER EQUIPMENT BAY
5. L/H LANDING GEAR BAY
6. R/H LANDING GEAR BAY
7. L/H EQUIPMENT BAY
8. R/H EQUIPMENT BAY
9. CREW PRESSURIZED AREA
10. EXTERIOR AREA OF LARGE PRESS. BULKHEAD
11. SPACECRAFT EXTERIOR L/H
12. SPACECRAFT EXTERIOR R/H
13. INTERNAL ADAPTER AREA
14. R/H EXTERNAL ADAPTER AREA
15. L/H EXTERNAL ADAPTER AREA
16. ZONE FOR ENTIRE SPACECRAFT

GEMINI SPACECRAFT NO. 3

ZONE NO. 9

TOTAL EQUIPMENT REQUIRED 76

EQUIPMENT ON HAND 24

EQUIPMENT TO SCHEDULE 51

EQUIPMENT LATE 1

	PART NO.	PART NAME	NORM. INST.	SLACK	DEF. INST.	SLACK	HOURS TO INSTALL
52	85713-31	TAPE RECORDER (1)	00003 A2	-31	00002 A2	0	12

GEMINI ZONE CHART

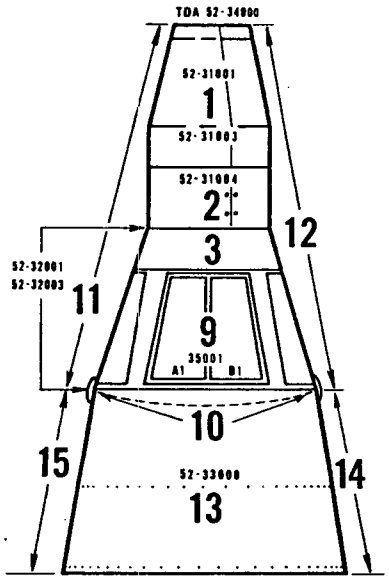

TOP VIEW

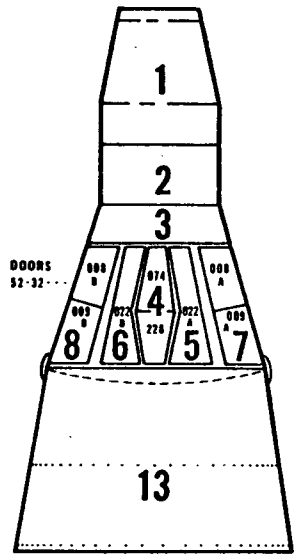

BOTTOM VIEW

1. RENDEZVOUS AND RADAR MODULE
2. RE-ENTRY RCS MODULE
3. FORWARD AREA CONE
4. CENTER EQUIPMENT BAY
5. L/H LANDING GEAR BAY
6. R/H LANDING GEAR BAY
7. L/H EQUIPMENT BAY
8. R/H EQUIPMENT BAY
9. CREW PRESSURIZED AREA
10. EXTERIOR AREA OF LARGE PRESS. BULKHEAD
11. SPACECRAFT EXTERIOR L/H
12. SPACECRAFT EXTERIOR R/H
13. INTERNAL ADAPTER AREA
14. R/H EXTERNAL ADAPTER AREA
15. L/H EXTERNAL ADAPTER AREA
16. ZONE FOR ENTIRE SPACECRAFT

GEMINI SPACECRAFT NO. 3

ZONE NO. 13

TOTAL EQUIPMENT REQUIRED 37

EQUIPMENT ON HAND 19

EQUIPMENT TO SCHEDULE 18

EQUIPMENT LATE 0

PART NO.	PART NAME	NORM. INST.	SLACK	DEF. INST.	SLACK	HOURS TO INSTALL

GEMINI ZONE CHART

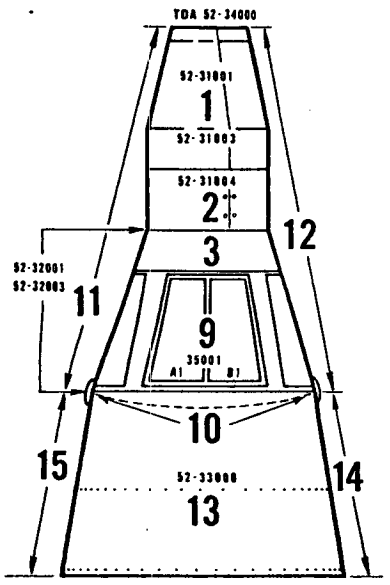

TOP VIEW

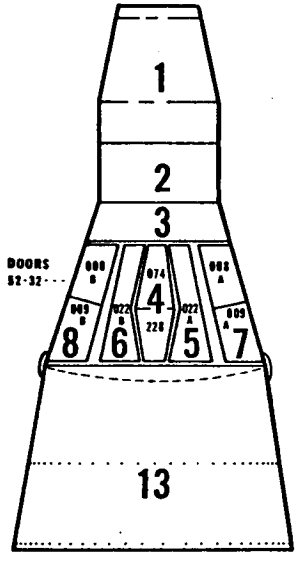

BOTTOM VIEW

1. RENDEZVOUS AND RADAR MODULE
2. RE-ENTRY RCS MODULE
3. FORWARD AREA CONE
4. CENTER EQUIPMENT BAY
5. L/H LANDING GEAR BAY
6. R/H LANDING GEAR BAY
7. L/H EQUIPMENT BAY
8. R/H EQUIPMENT BAY
9. CREW PRESSURIZED AREA
10. EXTERIOR AREA OF LARGE PRESS. BULKHEAD
11. SPACECRAFT EXTERIOR L/H
12. SPACECRAFT EXTERIOR R/H
13. INTERNAL ADAPTER AREA
14. R/H EXTERNAL ADAPTER AREA
15. L/H EXTERNAL ADAPTER AREA
16. ZONE FOR ENTIRE SPACECRAFT

GEMINI SPACECRAFT NO. 3

ZONE NO. PEDESTAL

TOTAL EQUIPMENT REQUIRED 13

EQUIPMENT ON HAND 2

EQUIPMENT TO SCHEDULE 11

EQUIPMENT LATE 0

PART NO.	PART NAME	NORM. INST.	SLACK	DEF. INST.	SLACK	HOURS TO INSTALL

GEMINI ZONE CHART

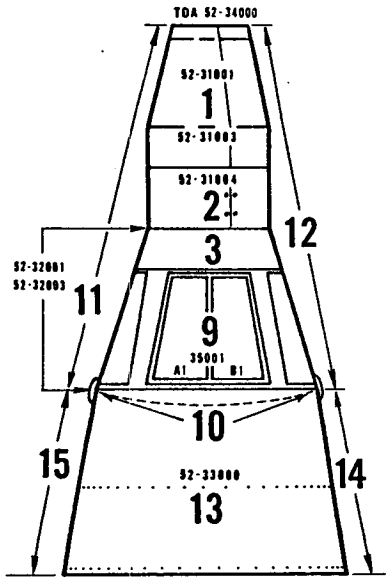

TOP VIEW

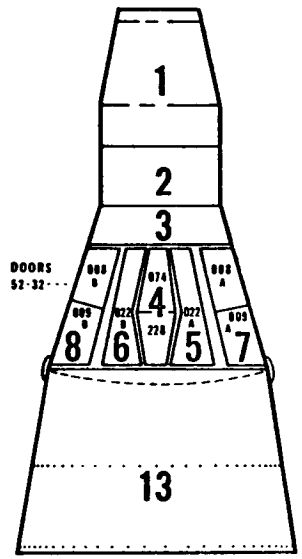

BOTTOM VIEW

1. RENDEZVOUS AND RADAR MODULE
2. RE-ENTRY RCS MODULE
3. FORWARD AREA CONE
4. CENTER EQUIPMENT BAY
5. L/H LANDING GEAR BAY
6. R/H LANDING GEAR BAY
7. L/H EQUIPMENT BAY
8. R/H EQUIPMENT BAY
9. CREW PRESSURIZED AREA
10. EXTERIOR AREA OF LARGE PRESS. BULKHEAD
11. SPACECRAFT EXTERIOR L/H
12. SPACECRAFT EXTERIOR R/H
13. INTERNAL ADAPTER AREA
14. R/H EXTERNAL ADAPTER AREA
15. L/H EXTERNAL ADAPTER AREA
16. ZONE FOR ENTIRE SPACECRAFT

GEMINI SPACECRAFT NO. 3

ZONE NO. L/H MAIN INSTRUMENT PANEL

TOTAL EQUIPMENT REQUIRED 19

EQUIPMENT ON HAND 9

EQUIPMENT TO SCHEDULE 9

EQUIPMENT LATE 1

	PART NO.	PART NAME	NORM. INST.	SLACK	DEF. INST.	SLACK	HOURS TO INSTALL
52-	87701-17	RANGE & RATE IND.	$1000-501-3	-23	00005 A1	0	4

GEMINI ZONE CHART

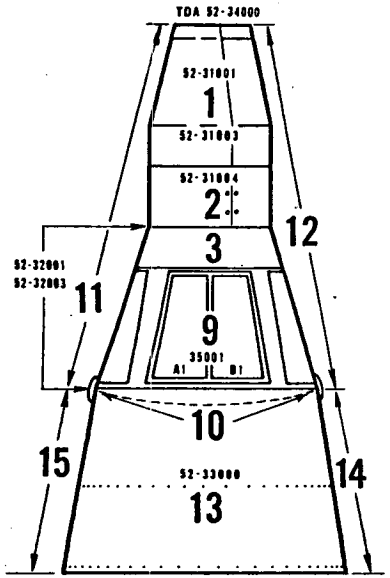

TOP VIEW

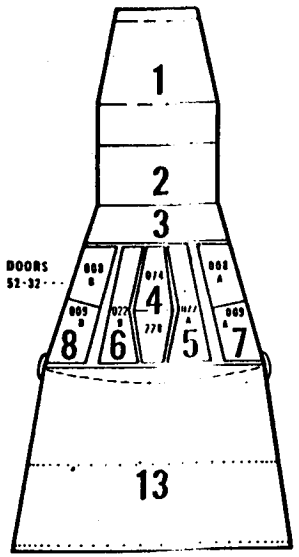

BOTTOM VIEW

1. RENDEZVOUS AND RADAR MODULE
2. RE-ENTRY RCS MODULE
3. FORWARD AREA CONE
4. CENTER EQUIPMENT BAY
5. L/H LANDING GEAR BAY
6. R/H LANDING GEAR BAY
7. L/H EQUIPMENT BAY
8. R/H EQUIPMENT BAY
9. CREW PRESSURIZED AREA
10. EXTERIOR AREA OF LARGE PRESS. BULKHEAD
11. SPACECRAFT EXTERIOR L/H
12. SPACECRAFT EXTERIOR R/H
13. INTERNAL ADAPTER AREA
14. R/H EXTERNAL ADAPTER AREA
15. L/H EXTERNAL ADAPTER AREA
16. ZONE FOR ENTIRE SPACECRAFT

GEMINI SPACECRAFT NO. 3

ZONE NO. LOWER MAIN INSTRUMENT PANEL

TOTAL EQUIPMENT REQUIRED 26

EQUIPMENT ON HAND 26

EQUIPMENT TO SCHEDULE

EQUIPMENT LATE 0

PART NO.	PART NAME	NORM. INST.	SLACK	DEF. INST.	SLACK	HOURS TO INSTALL

GEMINI ZONE CHART

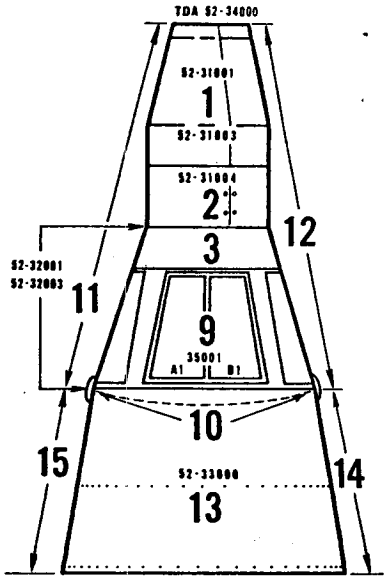

TOP VIEW

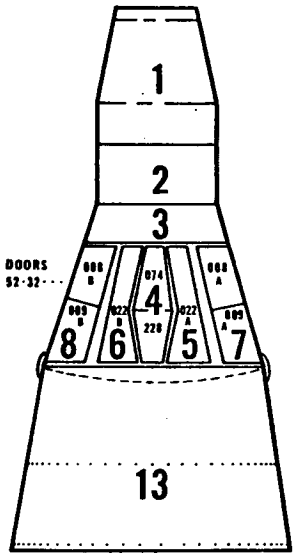

BOTTOM VIEW

1. RENDEZVOUS AND RADAR MODULE
2. RE-ENTRY RCS MODULE
3. FORWARD AREA CONE
4. CENTER EQUIPMENT BAY
5. L/H LANDING GEAR BAY
6. R/H LANDING GEAR BAY
7. L/H EQUIPMENT BAY
8. R/H EQUIPMENT BAY
9. CREW PRESSURIZED AREA
10. EXTERIOR AREA OF LARGE PRESS. BULKHEAD
11. SPACECRAFT EXTERIOR L/H
12. SPACECRAFT EXTERIOR R/H
13. INTERNAL ADAPTER AREA
14. R/H EXTERNAL ADAPTER AREA
15. L/H EXTERNAL ADAPTER AREA
16. ZONE FOR ENTIRE SPACECRAFT

GEMINI SPACECRAFT NO. 3

ZONE NO. UPPER MAIN INSTRUMENT PANEL

TOTAL EQUIPMENT REQUIRED 47

EQUIPMENT ON HAND 38

EQUIPMENT TO SCHEDULE 9

EQUIPMENT LATE 0

PART NO.	PART NAME	NORM. INST.	SLACK	DEF. INST.	SLACK	HOURS TO INSTALL

GEMINI ZONE CHART

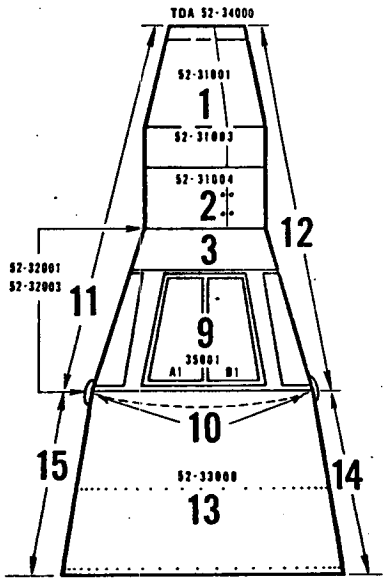

TOP VIEW

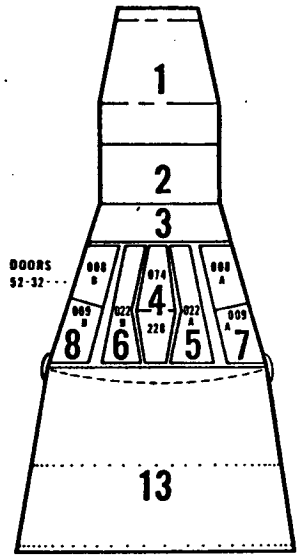

BOTTOM VIEW

1. RENDEZVOUS AND RADAR MODULE
2. RE-ENTRY RCS MODULE
3. FORWARD AREA CONE
4. CENTER EQUIPMENT BAY
5. L/H LANDING GEAR BAY
6. R/H LANDING GEAR BAY
7. L/H EQUIPMENT BAY
8. R/H EQUIPMENT BAY
9. CREW PRESSURIZED AREA
10. EXTERIOR AREA OF LARGE PRESS. BULKHEAD
11. SPACECRAFT EXTERIOR L/H
12. SPACECRAFT EXTERIOR R/H
13. INTERNAL ADAPTER AREA
14. R/H EXTERNAL ADAPTER AREA
15. L/H EXTERNAL ADAPTER AREA
16. ZONE FOR ENTIRE SPACECRAFT

GEMINI SPACECRAFT NO. 3

ZONE NO. R.H MAIN INSTRUMENT PANEL

TOTAL EQUIPMENT REQUIRED 20

EQUIPMENT ON HAND 15

EQUIPMENT TO SCHEDULE 5

EQUIPMENT LATE 0

PART NO.	PART NAME	NORM. INST.	SLACK	DEF. INST.	SLACK	HOURS TO INSTALL

GEMINI ZONE CHART

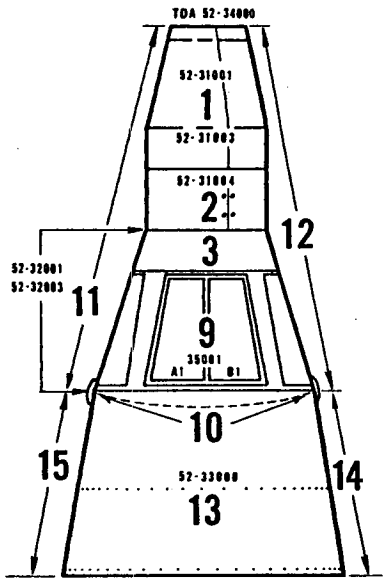

TOP VIEW

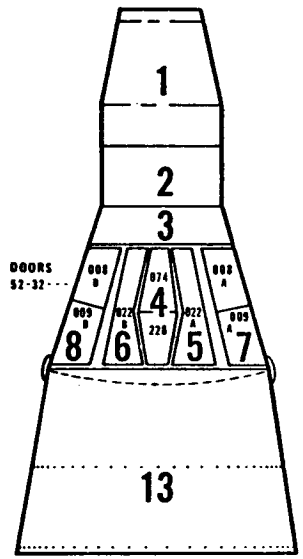

BOTTOM VIEW

1. RENDEZVOUS AND RADAR MODULE
2. RE-ENTRY RCS MODULE
3. FORWARD AREA CONE
4. CENTER EQUIPMENT BAY
5. L/H LANDING GEAR BAY
6. R/H LANDING GEAR BAY
7. L/H EQUIPMENT BAY
8. R/H EQUIPMENT BAY
9. CREW PRESSURIZED AREA
10. EXTERIOR AREA OF LARGE PRESS. BULKHEAD
11. SPACECRAFT EXTERIOR L/H
12. SPACECRAFT EXTERIOR R/H
13. INTERNAL ADAPTER AREA
14. R/H EXTERNAL ADAPTER AREA
15. L/H EXTERNAL ADAPTER AREA
16. ZONE FOR ENTIRE SPACECRAFT

GEMINI SPACECRAFT NO. 3

ZONE NO. ECS O_2

TOTAL EQUIPMENT REQUIRED 5

EQUIPMENT ON HAND 3

EQUIPMENT TO SCHEDULE 2

EQUIPMENT LATE 1

PART NO.	PART NAME	NORM. INST.	SLACK	DEF. INST.	SLACK	HOURS TO INSTALL
52-83700-429	OXY. BOTTLE '	MOD INSTL.	-17	00005 A4	0	4

GEMINI ZONE CHART

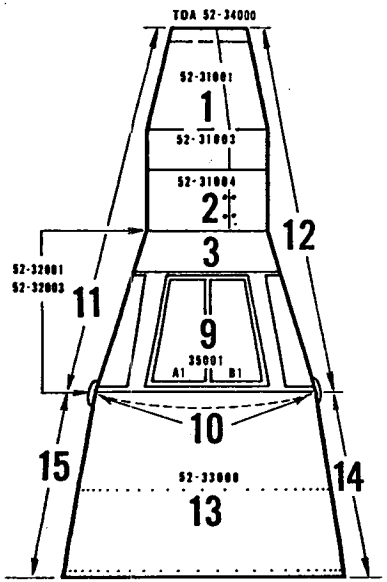

TOP VIEW

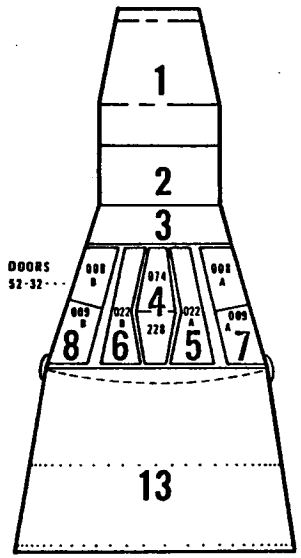

BOTTOM VIEW

1. RENDEZVOUS AND RADAR MODULE
2. RE-ENTRY RCS MODULE
3. FORWARD AREA CONE
4. CENTER EQUIPMENT BAY
5. L/H LANDING GEAR BAY
6. R/H LANDING GEAR BAY
7. L/H EQUIPMENT BAY
8. R/H EQUIPMENT BAY
9. CREW PRESSURIZED AREA
10. EXTERIOR AREA OF LARGE PRESS. BULKHEAD
11. SPACECRAFT EXTERIOR L/H
12. SPACECRAFT EXTERIOR R/H
13. INTERNAL ADAPTER AREA
14. R/H EXTERNAL ADAPTER AREA
15. L/H EXTERNAL ADAPTER AREA
16. ZONE FOR ENTIRE SPACECRAFT

GEMINI SPACECRAFT NO. 3

ZONE NO. OAMS

TOTAL EQUIPMENT REQUIRED 12

EQUIPMENT ON HAND 0

EQUIPMENT TO SCHEDULE 10

EQUIPMENT LATE 2

PART NO.	PART NAME	NORM. INST.	SLACK	DEF. INST.	SLACK	HOURS TO INSTALL
52 52700-151	'A' PKg.	Mod Inst'l	-19	00005 A3	0	2
52701-169	Press Tank	"	-13	00005 A4	0	2

GEMINI ZONE CHART

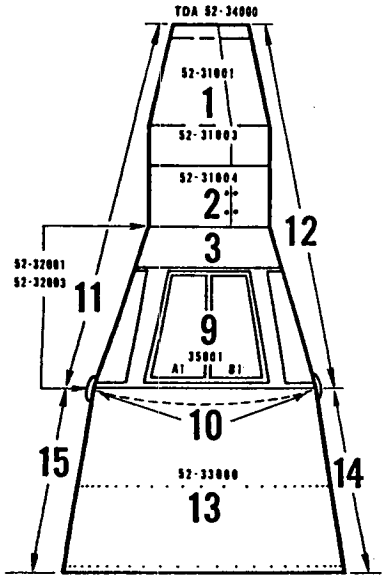

TOP VIEW

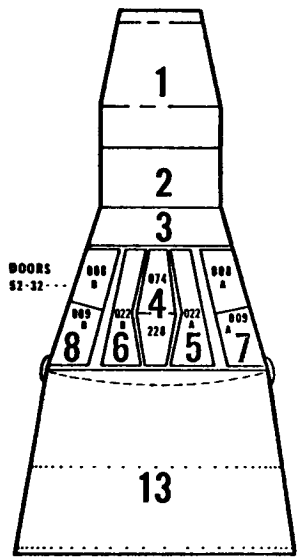

BOTTOM VIEW

1. RENDEZVOUS AND RADAR MODULE
2. RE-ENTRY RCS MODULE
3. FORWARD AREA CONE
4. CENTER EQUIPMENT BAY
5. L/H LANDING GEAR BAY
6. R/H LANDING GEAR BAY
7. L/H EQUIPMENT BAY
8. R/H EQUIPMENT BAY
9. CREW PRESSURIZED AREA
10. EXTERIOR AREA OF LARGE PRESS. BULKHEAD
11. SPACECRAFT EXTERIOR L/H
12. SPACECRAFT EXTERIOR R/H
13. INTERNAL ADAPTER AREA
14. R/H EXTERNAL ADAPTER AREA
15. L/H EXTERNAL ADAPTER AREA
16. ZONE FOR ENTIRE SPACECRAFT

GEMINI SPACECRAFT NO. 3

ZONE NO. ECS 02 COOLANT

TOTAL EQUIPMENT REQUIRED 20

EQUIPMENT ON HAND 0

EQUIPMENT TO SCHEDULE 0

EQUIPMENT LATE 20

	PART NO.	PART NAME	NORM. INST.	SLACK	DEF. INST.	SLACK	HOURS TO INSTALL
52	83700-265	Pump Assy (2)	Mod Inst'l	-18	00005 A4	+2	6
	" -143	Valve (2)	"	-16	33000 A2	0	2
	" -145	Water Evaporator (1)	"	-17	33000 A3	0	2
	" -147	Temp Valve (2)	"	-16	33000 A2	0	2
	" -151	Heat Exchanger (2)	"	-14	33000 A3	0	2
	" -283	Pow. Supply (4)	"	-17	33000 A2	0	2
	" -23	Grd. Cooling HE (1)	"	-12	33000 A3	0	2
	" -153	Valve (2)	"	-14	33000 A2	0	1
	83721-25	Temp Sensor (2)	"	-14	33000 A3	0	2
	83740-13	Cold Plate (1)	"	-16	33000 A2	0	2
	" -15	Cold Plate (1)	"	-16	33000 A2	0	2

GEMINI ZONE CHART

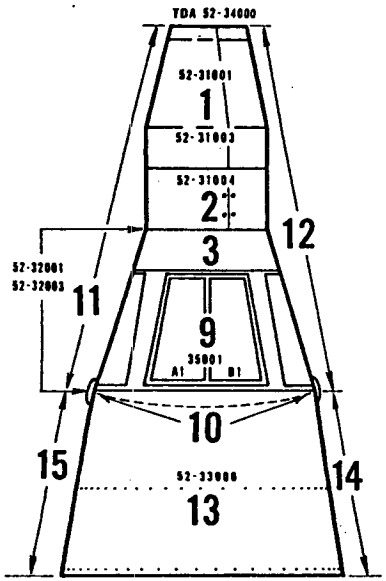

TOP VIEW

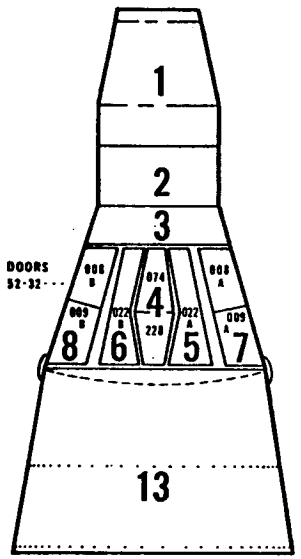

BOTTOM VIEW

1. RENDEZVOUS AND RADAR MODULE
2. RE-ENTRY RCS MODULE
3. FORWARD AREA CONE
4. CENTER EQUIPMENT BAY
5. L/H LANDING GEAR BAY
6. R/H LANDING GEAR BAY
7. L/H EQUIPMENT BAY
8. R/H EQUIPMENT BAY
9. CREW PRESSURIZED AREA
10. EXTERIOR AREA OF LARGE PRESS. BULKHEAD
11. SPACECRAFT EXTERIOR L/H
12. SPACECRAFT EXTERIOR R/H
13. INTERNAL ADAPTER AREA
14. R/H EXTERNAL ADAPTER AREA
15. L/H EXTERNAL ADAPTER AREA
16. ZONE FOR ENTIRE SPACECRAFT

GEMINI SPACECRAFT NO. 3

ZONE NO. Elec. Mod

TOTAL EQUIPMENT REQUIRED 13

EQUIPMENT ON HAND 7

EQUIPMENT TO SCHEDULE 1

EQUIPMENT LATE 5

	PART NO.	PART NAME	NORM. INST.	SLACK	DEF. INST.	SLACK	HOURS TO INSTALL
52	83741-9	Cold Plate	Mod Inst'l	-18	00005 A3	0	2
	85713-85	L.L. Multiplexer	"	-23	00005 A1	0	1
	" -87	H.L. Multiplexer	"	-23	00005 A1	0	1
	88101-3	Instrumentation PKg.	"	-23	00005 A2	0	2
	77618-305	Oams Panel	"	-18	00005 A3	0	8

GEMINI ZONE CHART

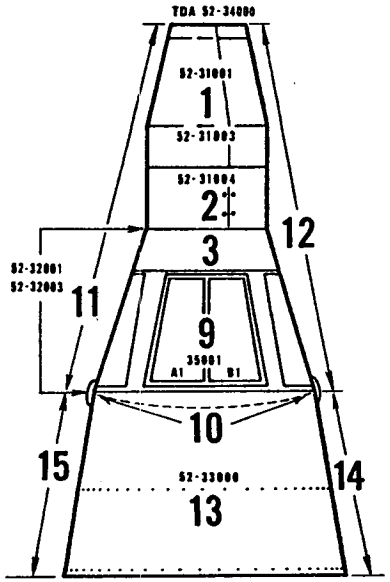

TOP VIEW

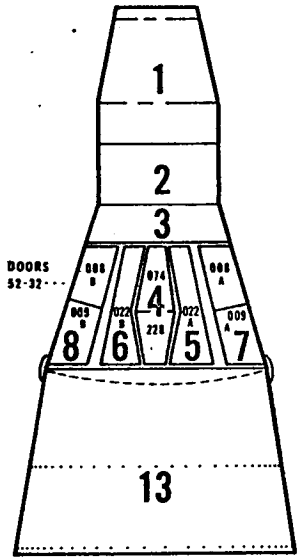

BOTTOM VIEW

1. RENDEZVOUS AND RADAR MODULE
2. RE-ENTRY RCS MODULE
3. FORWARD AREA CONE
4. CENTER EQUIPMENT BAY
5. L/H LANDING GEAR BAY
6. R/H LANDING GEAR BAY
7. L/H EQUIPMENT BAY
8. R/H EQUIPMENT BAY
9. CREW PRESSURIZED AREA
10. EXTERIOR AREA OF LARGE PRESS. BULKHEAD
11. SPACECRAFT EXTERIOR L/H
12. SPACECRAFT EXTERIOR R/H
13. INTERNAL ADAPTER AREA
14. R/H EXTERNAL ADAPTER AREA
15. L/H EXTERNAL ADAPTER AREA
16. ZONE FOR ENTIRE SPACECRAFT

GEMINI SPACECRAFT NO. 3

ZONE NO. Fuel Cell Mod.

TOTAL EQUIPMENT REQUIRED 45

EQUIPMENT ON HAND 1

EQUIPMENT TO SCHEDULE 35

EQUIPMENT LATE 9

PART NO.	PART NAME	NORM. INST.	SLACK	DEF. INST.	SLACK	HOURS TO INSTALL
52 83701-73	O_2 Sub Assy (1)	MOS Inst'l.	-17	00005 A4	0	3
" -77	Hydrogen Sub Assy (1)	"	-18	00005 A3	0	3
" -19	Heat Exchanger (1)	"	-18	33000 A2	0	3
" -23	Valve, Press Reg. (1)	"	-18	33000 A2	0	2
" -21	Valve, Press Reg. (1)	"	-18	33000 A2	0	2
" -117	Heat Exchanger (1)	"	-18	33000 A2	0	3
88721-9	Temp Sensor (1)	"	-16	00005 A4	0	2
" -109	Temp Sensor (2)	"	-18	33000 A2	0	2

SUBJECT: GEMINI STATUS REPORT FOR THE PERIOD 28 SEPTEMBER THRU 25 OCTOBER 1963 - SPACECRAFT NUMBER THREE.

1. RECAPITULATION

The Cabin Assembly for this unit is located in the structure area and installed on the line dolly.

Trial fitting of shingles on the left and right hand equipment Bay Doors was in work on 25 October as well as MWR's on the side panel patch repair and left hand seat rail. Trial fit of the pedestal was completed on 18 October and the unit returned to the sub-assembly area for completion.

The Hatches were delivered to the Spacecraft and an attempt made to Pressure Test the unit. This was not successful due to amount of rigging of Hatches required and the Hatches were returned to the Hatch assembly area for completion.

All Doors for this unit are in final Cleanup status and Doors 32008 and 32009 have been delivered to the assembly area for final fit.

The R & F Section is in final cleanup status and Min-"K" is now being installed. Fiberglass channel installation was completed on 19 October. The Shingle attach holes were drilled complete on 14 October 1963.

Jig work is being accomplished on the PCS Section for this Spacecraft. It is estimated that the unit will be removed from the jig during the week of 28 October and final assembly cleanup be started. This is a replacement unit inasmuch as the original unit was transferred to the Rocketdyne test unit.

The Adapter for this Spacecraft is located in the structure area where final assembly clean up is in progress. Delivery of the complete unit to the X-ray area is forecast for 26 October.

2. FORECAST

The following major events are scheduled for accomplishment during the next 30 day period; delivery of Adapter to White Room, delivery of Cabin to White Room, delivery of R & R and FCS to White Room, start of White Room operations.

GEMINI MANUFACTURING WORK PLAN – SPACECRAFT NO. 4

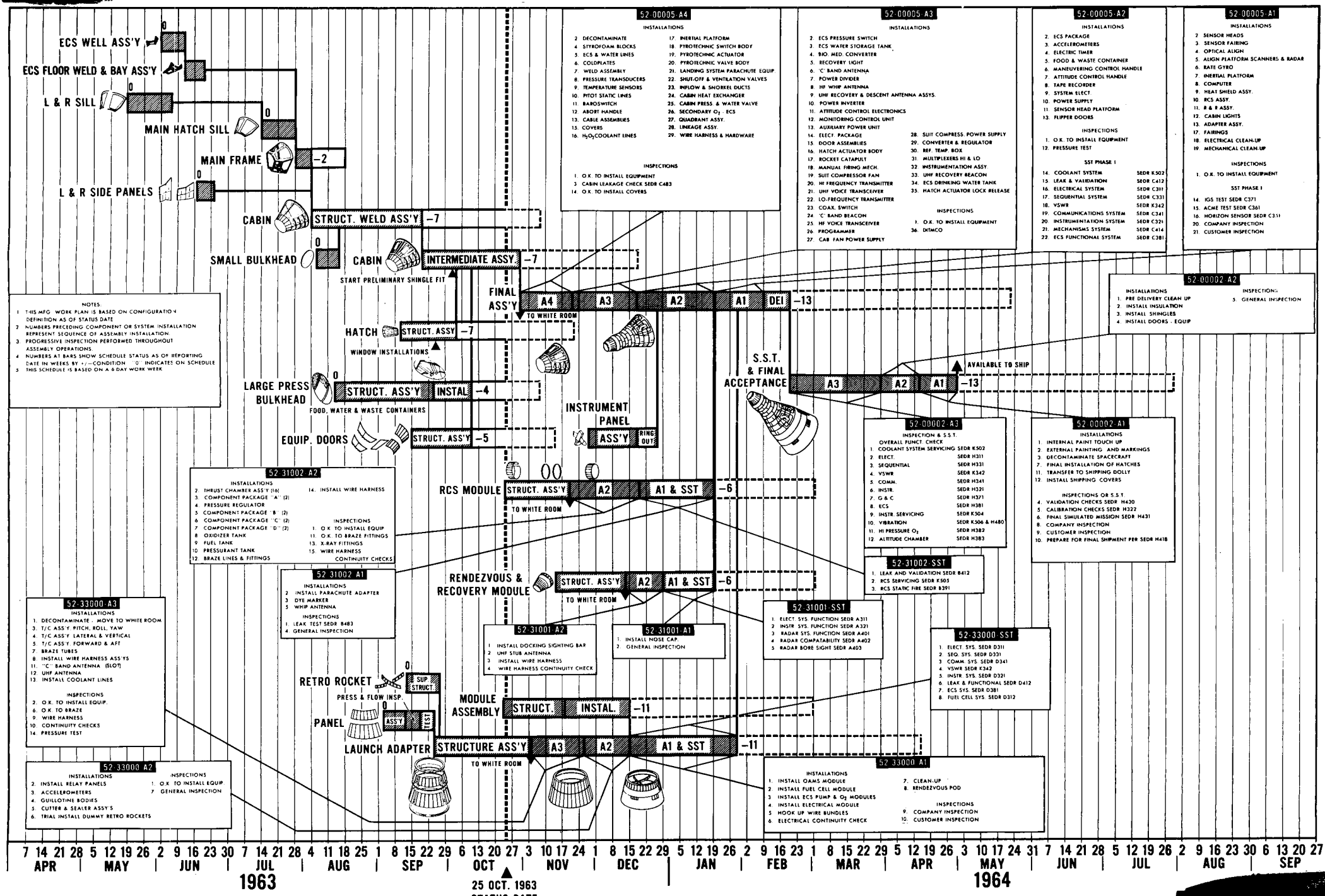

NOTES

1. THIS MFG. WORK PLAN IS BASED ON CONFIGURATION DEFINITION AS OF STATUS DATE
2. NUMBERS PRECEDING COMPONENT OR SYSTEM INSTALLATION REPRESENT SEQUENCE OF ASSEMBLY INSTALLATION.
3. PROGRESSIVE INSPECTION PERFORMED THROUGHOUT ASSEMBLY OPERATIONS.
4. NUMBERS AT BARS SHOW SCHEDULE STATUS AS OF REPORTING DATE IN WEEKS BY +/– CONDITION. "0" INDICATES ON SCHEDULE
5. THIS SCHEDULE IS BASED ON A 6 DAY WORK WEEK

52-00005-A4

INSTALLATIONS

2. DECONTAMINATE
4. STYROFOAM BLOCKS
5. ECS & WATER LINES
6. COLDPLATES
7. WELD ASSEMBLY
8. PRESSURE TRANSDUCERS
9. TEMPERATURE SENSORS
10. PITOT STATIC LINES
11. BAROSWITCH
12. ABORT HANDLE
13. CABLE ASSEMBLIES
15. COVERS
16. H_2O_2 COOLANT LINES
17. INERTIAL PLATFORM
18. PYROTECHNIC SWITCH BODY
19. PYROTECHNIC ACTUATOR
20. PYROTECHNIC VALVE BODY
21. LANDING SYSTEM PARACHUTE EQUIP.
22. SHUT-OFF & VENTILATION VALVES
23. INFLOW & SNORKEL DUCTS
24. CABIN HEAT EXCHANGER
25. CABIN PRESS. & WATER VALVE
26. SECONDARY O_2 : ECS
27. QUADRANT ASSY.
28. LINKAGE ASSY.
29. WIRE HARNESS & HARDWARE

INSPECTIONS

1. O.K. TO INSTALL EQUIPMENT
3. CABIN LEAKAGE CHECK SEDR C483
14. O.K. TO INSTALL COVERS

52-00005-A3

INSTALLATIONS

2. ECS PRESSURE SWITCH
3. ECS WATER STORAGE TANK
4. BIO. MED. CONVERTER
5. RECOVERY LIGHT
6. "C" BAND ANTENNA
7. POWER DIVIDER
8. HF WHIP ANTENNA
9. UHF RECOVERY & DESCENT ANTENNA ASSYS.
10. POWER INVERTER
11. ATITUDE CONTROL ELECTRONICS
12. MONITORING CONTROL UNIT
13. AUXILIARY POWER UNIT
14. ELECT. PACKAGE
15. DOOR ASSEMBLIES
16. HATCH ACTUATOR BODY
17. ROCKET CATAPULT
18. MANUAL FIRING MECH.
19. SUIT COMPRESSOR FAN
20. HI FREQUENCY TRANSMITTER
21. UHF VOICE TRANSCEIVER
22. LO-FREQUENCY TRANSMITTER
23. COAX. SWITCH
24. "C" BAND BEACON
25. HF VOICE TRANSCEIVER
26. PROGRAMMER
27. CAB. FAN POWER SUPPLY
28. SUIT COMPRESS. POWER SUPPLY
29. CONVERTER & REGULATOR
30. REF. TEMP. BOX
31. MULTIPLEXERS HI & LO
32. INSTRUMENTATION ASSY.
33. UHF RECOVERY BEACON
34. ECS DRINKING WATER TANK
35. HATCH ACTUATOR LOCK RELEASE

INSPECTIONS

1. O.K. TO INSTALL EQUIPMENT
36. DITMCO

52-00005-A2

INSTALLATIONS

2. ECS PACKAGE
3. ACCELEROMETERS
4. ELECTRIC TIMER
5. FOOD & WASTE CONTAINER
6. MANEUVERING CONTROL HANDLE
7. ATTITUDE CONTROL HANDLE
8. TAPE RECORDER
9. SYSTEM ELECT.
10. POWER SUPPLY
11. SENSOR HEAD PLATFORM
13. FLIPPER DOORS

INSPECTIONS

1. O.K. TO INSTALL EQUIPMENT
12. PRESSURE TEST

SST PHASE I

14. COOLANT SYSTEM — SEDR K502
15. LEAK & VALIDATION — SEDR C412
16. ELECTRICAL SYSTEM — SEDR C311
17. SEQUENTIAL SYSTEM — SEDR C331
18. VSWR — SEDR K342
19. COMMUNICATIONS SYSTEM — SEDR C341
20. INSTRUMENTATION SYSTEM — SEDR C321
21. MECHANISMS SYSTEM — SEDR C414
22. ECS FUNCTIONAL SYSTEM — SEDR C381

52-00005-A1

INSTALLATIONS

2. SENSOR HEADS
3. SENSOR FAIRING
4. OPTICAL ALIGN
5. ALIGN PLATFORM SCANNERS & RADAR
6. RATE GYRO
7. INERTIAL PLATFORM
8. COMPUTER
9. HEAT SHIELD ASSY.
10. RCS ASSY.
11. R & R ASSY.
12. CABIN LIGHTS
13. ADAPTER ASSY.
17. FAIRINGS
18. ELECTRICAL CLEAN-UP
19. MECHANICAL CLEAN-UP

INSPECTIONS

1. O.K. TO INSTALL EQUIPMENT

SST PHASE I

14. IGS TEST SEDR C371
15. ACME TEST SEDR C361
16. HORIZON SENSOR SEDR C351
20. COMPANY INSPECTION
21. CUSTOMER INSPECTION

52-00002-A2

INSTALLATIONS

1. PRE DELIVERY CLEAN UP
2. INSTALL INSULATION
3. INSTALL SHINGLES
4. INSTALL DOORS : EQUIP

INSPECTIONS

5. GENERAL INSPECTION

52-00002-A3

INSPECTION & S.S.T.

OVERALL FUNCT. CHECK

1. COOLANT SYSTEM SERVICING — SEDR K502
2. ELECT. — SEDR H311
3. SEQUENTIAL — SEDR H331
4. VSWR — SEDR K342
5. COMM. — SEDR H341
6. INSTR. — SEDR H321
7. G & C — SEDR H371
8. ECS — SEDR H361
9. INSTR. SERVICING — SEDR K504
10. VIBRATION — SEDR K506 & H480
11. HI PRESSURE O_2 — SEDR H382
12. ALTITUDE CHAMBER — SEDR H383

52-00002-A1

INSTALLATIONS

1. INTERNAL PAINT TOUCH UP
2. EXTERNAL PAINTING AND MARKINGS
3. DECONTAMINATE SPACECRAFT
7. FINAL INSTALLATION OF HATCHES
11. TRANSFER TO SHIPPING DOLLY
12. INSTALL SHIPPING COVERS

INSPECTIONS OR S.S.T.

4. VALIDATION CHECKS SEDR H430
5. CALIBRATION CHECKS SEDR H322
6. FINAL SIMULATED MISSION SEDR H431
8. COMPANY INSPECTION
9. CUSTOMER INSPECTION
10. PREPARE FOR FINAL SHIPMENT PER SEDR H418

52-31002-A2

INSTALLATIONS

2. THRUST CHAMBER ASS'Y (16)
3. COMPONENT PACKAGE "A" (2)
4. PRESSURE REGULATOR
5. COMPONENT PACKAGE "B" (2)
6. COMPONENT PACKAGE "C" (2)
7. COMPONENT PACKAGE "D" (2)
8. OXIDIZER TANK
9. FUEL TANK
10. PRESSURANT TANK
12. BRAZE LINES & FITTINGS
14. INSTALL WIRE HARNESS

INSPECTIONS

1. O.K. TO INSTALL EQUIP.
11. O.K. TO BRAZE FITTINGS
13. X-RAY FITTINGS
15. WIRE HARNESS CONTINUITY CHECKS

52-31002-A1

INSTALLATIONS

2. INSTALL PARACHUTE ADAPTER
3. DYE MARKER
5. WHIP ANTENNA

INSPECTIONS

1. LEAK TEST SEDR B483
4. GENERAL INSPECTION

52-31002-SST

1. LEAK AND VALIDATION SEDR B412
2. RCS SERVICING SEDR K505
3. RCS STATIC FIRE SEDR B391

52-31001-SST

1. ELECT. SYS. FUNCTION SEDR A311
2. INSTR. SYS. FUNCTION SEDR A321
3. RADAR SYS. FUNCTION SEDR A401
4. RADAR COMPATABILITY SEDR A402
5. RADAR BORE SIGHT SEDR A403

52-31001-A2

1. INSTALL DOCKING SIGHTING BAR
2. UHF STUB ANTENNA
3. INSTALL WIRE HARNESS
4. WIRE HARNESS CONTINUITY CHECK

52-31001-A1

1. INSTALL NOSE CAP.
2. GENERAL INSPECTION

52-33000-SST

1. ELECT. SYS. SEDR D311
2. SEQ. SYS. SEDR D331
3. COMM. SYS. SEDR D341
4. VSWR SEDR K342
5. INSTR. SYS. SEDR D321
6. LEAK & FUNCTIONAL SEDR D412
7. ECS SYS. SEDR D381
8. FUEL CELL SYS. SEDR D312

52-33000-A3

INSTALLATIONS

1. DECONTAMINATE : MOVE TO WHITE ROOM
3. T/C ASS'Y PITCH, ROLL, YAW
4. T/C ASS'Y LATERAL & VERTICAL
5. T/C ASS'Y FORWARD & AFT
7. BRAZE TUBES
8. INSTALL WIRE HARNESS ASS'YS
11. "C" BAND ANTENNA (SLOT)
12. UHF ANTENNA
13. INSTALL COOLANT LINES

INSPECTIONS

2. O.K. TO INSTALL EQUIP.
6. O.K. TO BRAZE
9. WIRE HARNESS
10. CONTINUITY CHECKS
14. PRESSURE TEST

52-33000-A2

INSTALLATIONS

2. INSTALL RELAY PANELS
3. ACCELEROMETERS
4. GUILLOTINE BODIES
5. CUTTER & SEALER ASSY'S
6. TRIAL INSTALL DUMMY RETRO ROCKETS

INSPECTIONS

1. O.K. TO INSTALL EQUIP.
7. GENERAL INSPECTION

52-33000-A1

INSTALLATIONS

1. INSTALL OAMS MODULE
2. INSTALL FUEL CELL MODULE
3. INSTALL ECS PUMP & O_2 MODULES
4. INSTALL ELECTRICAL MODULE
5. HOOK UP WIRE BUNDLES
6. ELECTRICAL CONTINUITY CHECK
7. CLEAN-UP
8. RENDEZVOUS POD

INSPECTIONS

9. COMPANY INSPECTION
10. CUSTOMER INSPECTION

[illegible]

SUBJECT: GEMINI STATUS REPORT FOR THE PERIOD 28 SEPTEMBER THRU 25 OCTOBER [illegible]

1. RECAPITULATION

The Cabin Assembly for this unit is located in the structure area where jig work is in progress. Hatch fitting setup is in work as well as landing gear fittings and coldplate structure. Pressure vessel welding clean up was completed on 11 October and the structure installed in the assembly fixture for jig station work.

Final Assembly cleanup is in progress on the R & B Section and Fiberglass (hanna) installation was completed on 24 October. Jig work was completed on 11 October.

Jig work is in progress on the RCS Section for this Spacecraft. It is estimated that final assembly cleanup will start during the week of 28 October.

Sub-Assembly of the Quarter Panels is in work for the Adapter. The retro-rocket beam was removed from the jig on 24 October and Final Assembly operations started.

2. FORECAST

The following major events are scheduled for accomplishment during the next 30 day period: delivery of RCS to White Room, delivery of Adapter to White Room, completion of Hatches and Large Pressure Bulkhead and installation of Cabin in Line Dolly for assembly operations.

GEMINI MANUFACTURING WORK PLAN – SPACECRAFT NO. 5

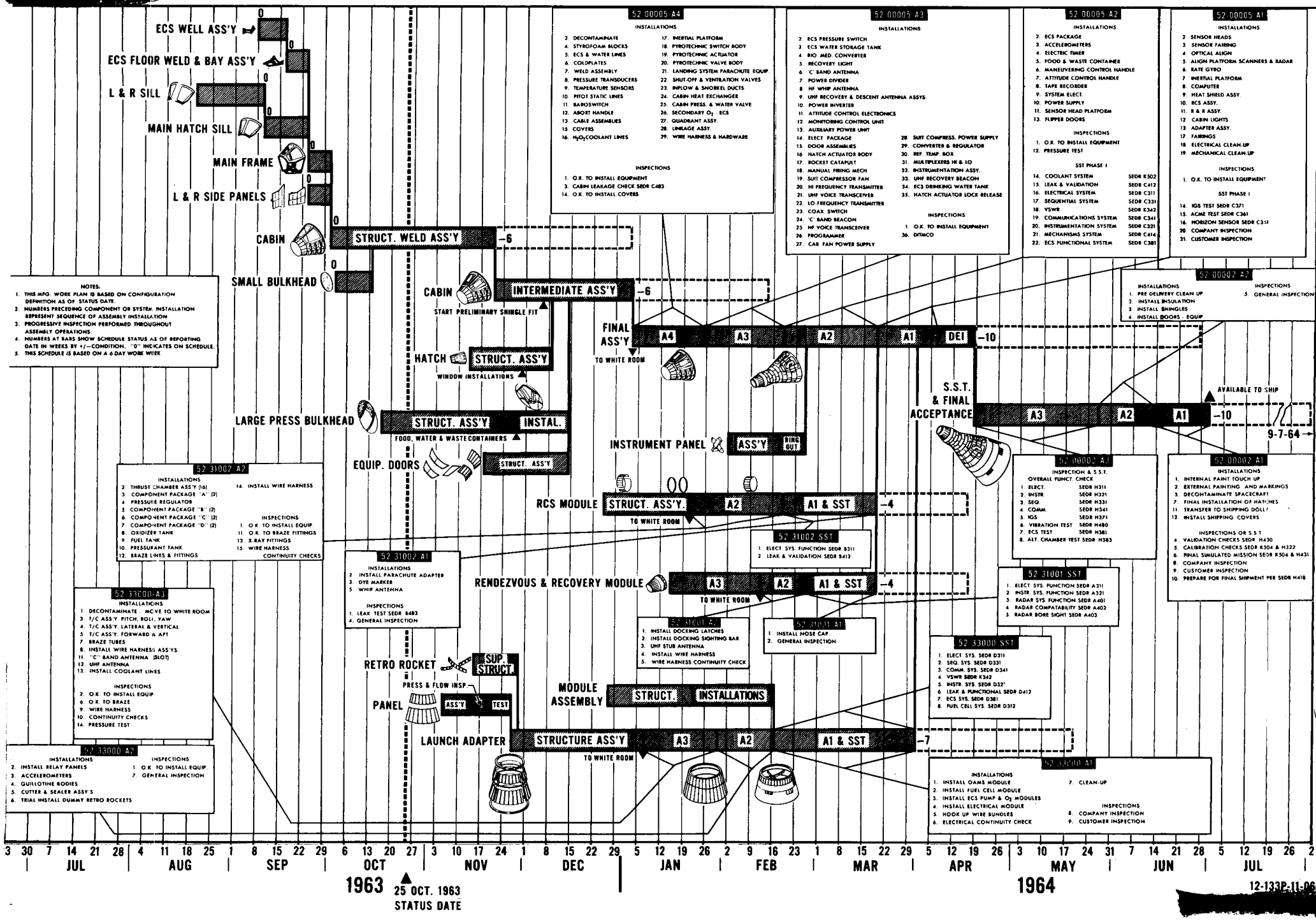

NOTES:

1. THIS MFG. WORK PLAN IS BASED ON CONFIGURATION DEFINITION AS OF STATUS DATE.
2. NUMBERS PRECEDING COMPONENT OR SYSTEM. INSTALLATION REPRESENT SEQUENCE OF ASSEMBLY INSTALLATION.
3. PROGRESSIVE INSPECTION PERFORMED THROUGHOUT ASSEMBLY OPERATIONS.
4. NUMBERS AT BARS SHOW SCHEDULE STATUS AS OF REPORTING DATE IN WEEKS BY +/–CONDITION. "0" INDICATES ON SCHEDULE.
5. THIS SCHEDULE IS BASED ON A 6 DAY WORK WEEK

52 00005 A4

INSTALLATIONS

2. DECONTAMINATE
4. STYROFOAM BLOCKS
5. ECS & WATER LINES
6. COLDPLATES
7. WELD ASSEMBLY
8. PRESSURE TRANSDUCERS
9. TEMPERATURE SENSORS
10. PITOT STATIC LINES
11. BAROSWITCH
12. ABORT HANDLE
13. CABLE ASSEMBLIES
15. COVERS
16. H_2O_2 COOLANT LINES
17. INERTIAL PLATFORM
18. PYROTECHNIC SWITCH BODY
19. PYROTECHNIC ACTUATOR
20. PYROTECHNIC VALVE BODY
21. LANDING SYSTEM PARACHUTE EQUIP.
22. SHUT-OFF & VENTILATION VALVES
23. INFLOW & SNORKEL DUCTS
24. CABIN HEAT EXCHANGER
25. CABIN PRESS. & WATER VALVE
26. SECONDARY O_2 ECS
27. QUADRANT ASSY.
28. LINKAGE ASSY.
29. WIRE HARNESS & HARDWARE

INSPECTIONS

1. O.K. TO INSTALL EQUIPMENT
3. CABIN LEAKAGE CHECK SEDR C483
14. O.K. TO INSTALL COVERS

52 00005 A3

INSTALLATIONS

2. ECS PRESSURE SWITCH
3. ECS WATER STORAGE TANK
4. BIO. MED. CONVERTER
5. RECOVERY LIGHT
6. 'C' BAND ANTENNA
7. POWER DIVIDER
8. HF WHIP ANTENNA
9. UHF RECOVERY & DESCENT ANTENNA ASSYS.
10. POWER INVERTER
11. ATTITUDE CONTROL ELECTRONICS
12. MONITORING CONTROL UNIT
13. AUXILIARY POWER UNIT
14. ELECT. PACKAGE
15. DOOR ASSEMBLIES
16. HATCH ACTUATOR BODY
17. ROCKET CATAPULT
18. MANUAL FIRING MECH.
19. SUIT COMPRESSOR FAN
20. HI FREQUENCY TRANSMITTER
21. UHF VOICE TRANSCEIVER
22. LO FREQUENCY TRANSMITTER
23. COAX. SWITCH
24. 'C' BAND BEACON
25. HF VOICE TRANSCEIVER
26. PROGRAMMER
27. CAB. FAN POWER SUPPLY
28. SUIT COMPRESS. POWER SUPPLY
29. CONVERTER & REGULATOR
30. REF. TEMP. BOX
31. MULTIPLEXERS HI & LO
32. INSTRUMENTATION ASSY.
33. UHF RECOVERY BEACON
34. ECS DRINKING WATER TANK
35. HATCH ACTUATOR LOCK RELEASE

INSPECTIONS

1. O.K. TO INSTALL EQUIPMENT
36. DITMCO

52 00005 A2

INSTALLATIONS

2. ECS PACKAGE
3. ACCELEROMETERS
4. ELECTRIC TIMER
5. FOOD & WASTE CONTAINER
6. MANEUVERING CONTROL HANDLE
7. ATTITUDE CONTROL HANDLE
8. TAPE RECORDER
9. SYSTEM ELECT.
10. POWER SUPPLY
11. SENSOR HEAD PLATFORM
13. FLIPPER DOORS

INSPECTIONS

1. O.K. TO INSTALL EQUIPMENT
12. PRESSURE TEST

SST PHASE I

14. COOLANT SYSTEM	SEDR K502
15. LEAK & VALIDATION	SEDR C412
16. ELECTRICAL SYSTEM	SEDR C311
17. SEQUENTIAL SYSTEM	SEDR C331
18. VSWR	SEDR K342
19. COMMUNICATIONS SYSTEM	SEDR C341
20. INSTRUMENTATION SYSTEM	SEDR C321
21. MECHANISMS SYSTEM	SEDR C414
22. ECS FUNCTIONAL SYSTEM	SEDR C381

52 00005 A1

INSTALLATIONS

2. SENSOR HEADS
3. SENSOR FAIRING
4. OPTICAL ALIGN
5. ALIGN PLATFORM SCANNERS & RADAR
6. RATE GYRO
7. INERTIAL PLATFORM
8. COMPUTER
9. HEAT SHIELD ASSY.
10. RCS ASSY.
11. R & R ASSY.
12. CABIN LIGHTS
13. ADAPTER ASSY.
17. FAIRINGS
18. ELECTRICAL CLEAN-UP
19. MECHANICAL CLEAN-UP

INSPECTIONS

1. O.K. TO INSTALL EQUIPMENT

SST PHASE I

14. IGS TEST SEDR C371
15. ACME TEST SEDR C361
16. HORIZON SENSOR SEDR C351
20. COMPANY INSPECTION
21. CUSTOMER INSPECTION

52 00002 A2

INSTALLATIONS

1. PRE DELIVERY CLEAN UP
2. INSTALL INSULATION
3. INSTALL SHINGLES
4. INSTALL DOORS – EQUIP.

INSPECTIONS

5. GENERAL INSPECTION

52 00002 A3

INSPECTION & S.S.T.

OVERALL FUNCT. CHECK

1. ELEC.	SEDR H311
2. INSTR.	SEDR H321
3. SEQ.	SEDR H331
4. COMM.	SEDR H341
5. IGS	SEDR H371
6. VIBRATION TEST	SEDR H480
7. ECS TEST	SEDR H381
8. ALT. CHAMBER TEST	SEDR H383

52 00002 A1

INSTALLATIONS

1. INTERNAL PAINT TOUCH UP
2. EXTERNAL PAINTING AND MARKINGS
3. DECONTAMINATE SPACECRAFT
7. FINAL INSTALLATION OF HATCHES
11. TRANSFER TO SHIPPING DOLLY
12. INSTALL SHIPPING COVERS

INSPECTIONS OR S.S.T.

4. VALIDATION CHECKS SEDR H430
5. CALIBRATION CHECKS SEDR K504 & H322
6. FINAL SIMULATED MISSION SEDR K504 & H431
8. COMPANY INSPECTION
9. CUSTOMER INSPECTION
10. PREPARE FOR FINAL SHIPMENT PER SEDR H418

52 31002 A2

INSTALLATIONS

2. THRUST CHAMBER ASS'Y (16)
3. COMPONENT PACKAGE "A" (2)
4. PRESSURE REGULATOR
5. COMPONENT PACKAGE "B" (2)
6. COMPONENT PACKAGE "C" (2)
7. COMPONENT PACKAGE "D" (2)
8. OXIDIZER TANK
9. FUEL TANK
10. PRESSURANT TANK
12. BRAZE LINES & FITTINGS
14. INSTALL WIRE HARNESS

INSPECTIONS

1. O.K. TO INSTALL EQUIP.
11. O.K. TO BRAZE FITTINGS
13. X-RAY FITTINGS
15. WIRE HARNESS CONTINUITY CHECKS

52 31002 A1

INSTALLATIONS

2. INSTALL PARACHUTE ADAPTER
3. DYE MARKER
5. WHIP ANTENNA

INSPECTIONS

1. LEAK TEST SEDR B483
4. GENERAL INSPECTION

52 31002 SST

1. ELECT. SYS. FUNCTION SEDR B311
2. LEAK & VALIDATION SEDR B412

52 31001 SST

1. ELECT. SYS. FUNCTION SEDR A311
2. INSTR. SYS. FUNCTION SEDR A321
3. RADAR SYS. FUNCTION SEDR A401
4. RADAR COMPATABILITY SEDR A402
5. RADAR BORE SIGHT SEDR A403

52 31001 A2

1. INSTALL DOCKING LATCHES
2. INSTALL DOCKING SIGHTING BAR
3. UHF STUB ANTENNA
4. INSTALL WIRE HARNESS
5. WIRE HARNESS CONTINUITY CHECK

52 31001 A1

1. INSTALL NOSE CAP.
2. GENERAL INSPECTION

52 33000 SST

1. ELECT. SYS. SEDR D311
2. SEQ. SYS. SEDR D331
3. COMM. SYS. SEDR D341
4. VSWR SEDR K342
5. INSTR. SYS. SEDR D321
6. LEAK & FUNCTIONAL SEDR D412
7. ECS SYS. SEDR D381
8. FUEL CELL SYS. SEDR D312

52 33000 A3

INSTALLATIONS

1. DECONTAMINATE – MOVE TO WHITE ROOM
3. T/C ASS'Y. PITCH, ROLL, YAW
4. T/C ASS'Y. LATERAL & VERTICAL
5. T/C ASS'Y. FORWARD & AFT
7. BRAZE TUBES
8. INSTALL WIRE HARNESS ASS'YS.
11. "C" BAND ANTENNA (SLOT)
12. UHF ANTENNA
13. INSTALL COOLANT LINES

INSPECTIONS

2. O.K. TO INSTALL EQUIP.
6. O.K. TO BRAZE
9. WIRE HARNESS
10. CONTINUITY CHECKS
14. PRESSURE TEST

52 33000 A2

INSTALLATIONS

2. INSTALL RELAY PANELS
3. ACCELEROMETERS
4. GUILLOTINE BODIES
5. CUTTER & SEALER ASSY'S
6. TRIAL INSTALL DUMMY RETRO ROCKETS

INSPECTIONS

1. O.K. TO INSTALL EQUIP.
7. GENERAL INSPECTION

52 33000 A1

INSTALLATIONS

1. INSTALL OAMS MODULE
2. INSTALL FUEL CELL MODULE
3. INSTALL ECS PUMP & O_2 MODULES
4. INSTALL ELECTRICAL MODULE
5. HOOK UP WIRE BUNDLES
6. ELECTRICAL CONTINUITY CHECK
7. CLEAN-UP

INSPECTIONS

8. COMPANY INSPECTION
9. CUSTOMER INSPECTION

[illegible]

SUBJECT: GEMINI STATUS REPORT FOR THE PERIOD 28 SEPTEMBER THRU [illegible] 1965 - SPACECRAFT FORMER [illegible]

1. RECAPITULATION

The Cabin Assembly for this unit is located in the structure area. Spotwelding of details to the Earth Skill was completed on 23 October and spotwelding of the upper and lower panel assemblies started 26 October. Spotwelding of the main frame has been completed.

2. FORECAST

The following major events are [illegible] for accomplishment during the next 30 day period: completion of [illegible] start of intermediate assembly on Cabin Structure, [illegible] of equipment doors, start of structure assembly of Adapter, [illegible] of Hatch sub-assemblies and completion of Large Pressure Bulkhead.

GEMINI MANUFACTURING WORK PLAN—SPACECRAFT NO. 6

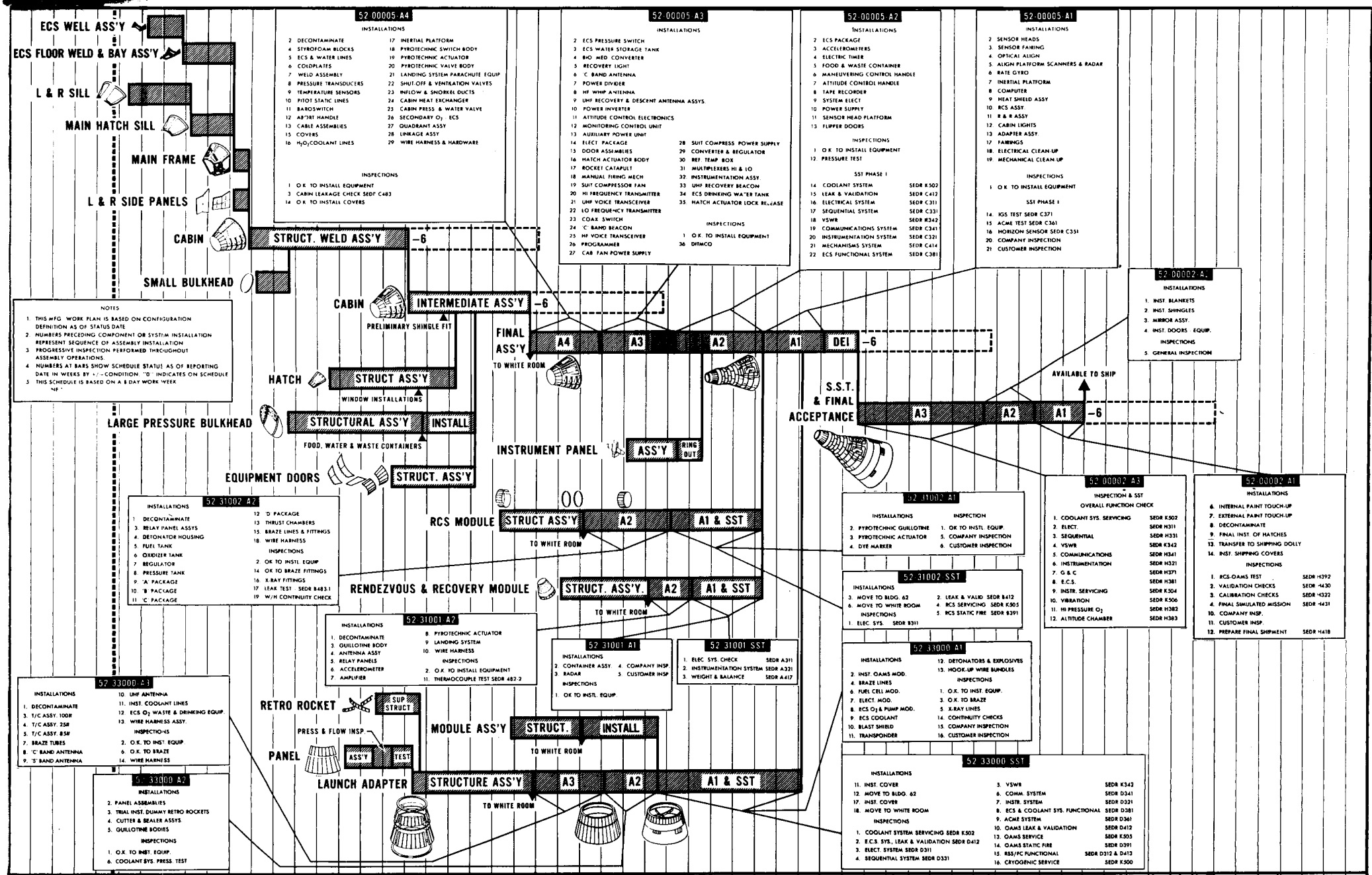

GEMINI SPACECRAFT
MANUFACTURING WORK PLAN AND TEST
STATIC ARTICLE NO. 2

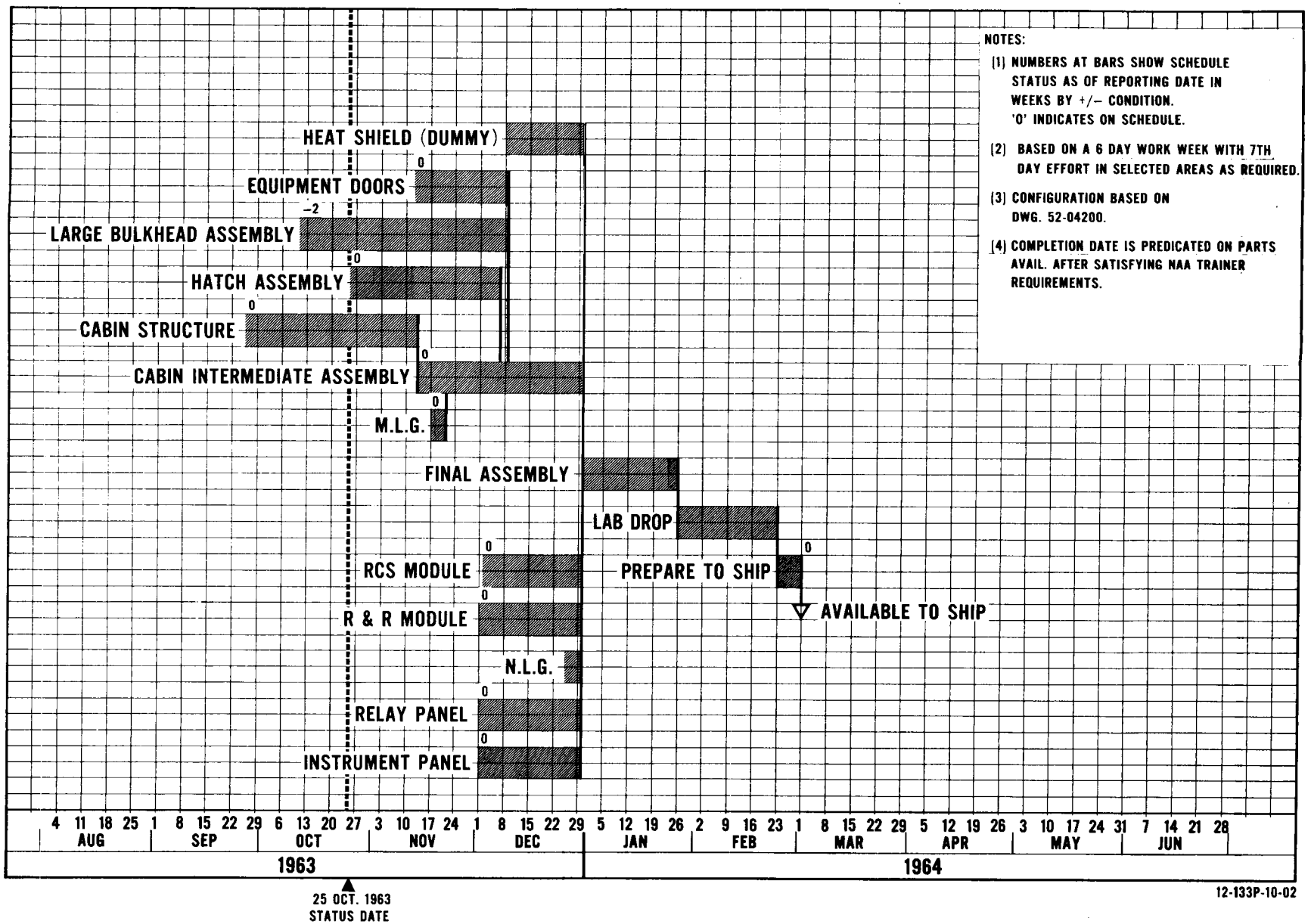

NOTES:

(1) NUMBERS AT BARS SHOW SCHEDULE STATUS AS OF REPORTING DATE IN WEEKS BY +/– CONDITION. '0' INDICATES ON SCHEDULE.

(2) BASED ON A 6 DAY WORK WEEK WITH 7TH DAY EFFORT IN SELECTED AREAS AS REQUIRED.

(3) CONFIGURATION BASED ON DWG. 52-04200.

(4) COMPLETION DATE IS PREDICATED ON PARTS AVAIL. AFTER SATISFYING NAA TRAINER REQUIREMENTS.

12-133P-10-02

GEMINI SPACECRAFT
MANUFACTURING WORK PLAN AND TEST
STATIC ARTICLE NO. 4

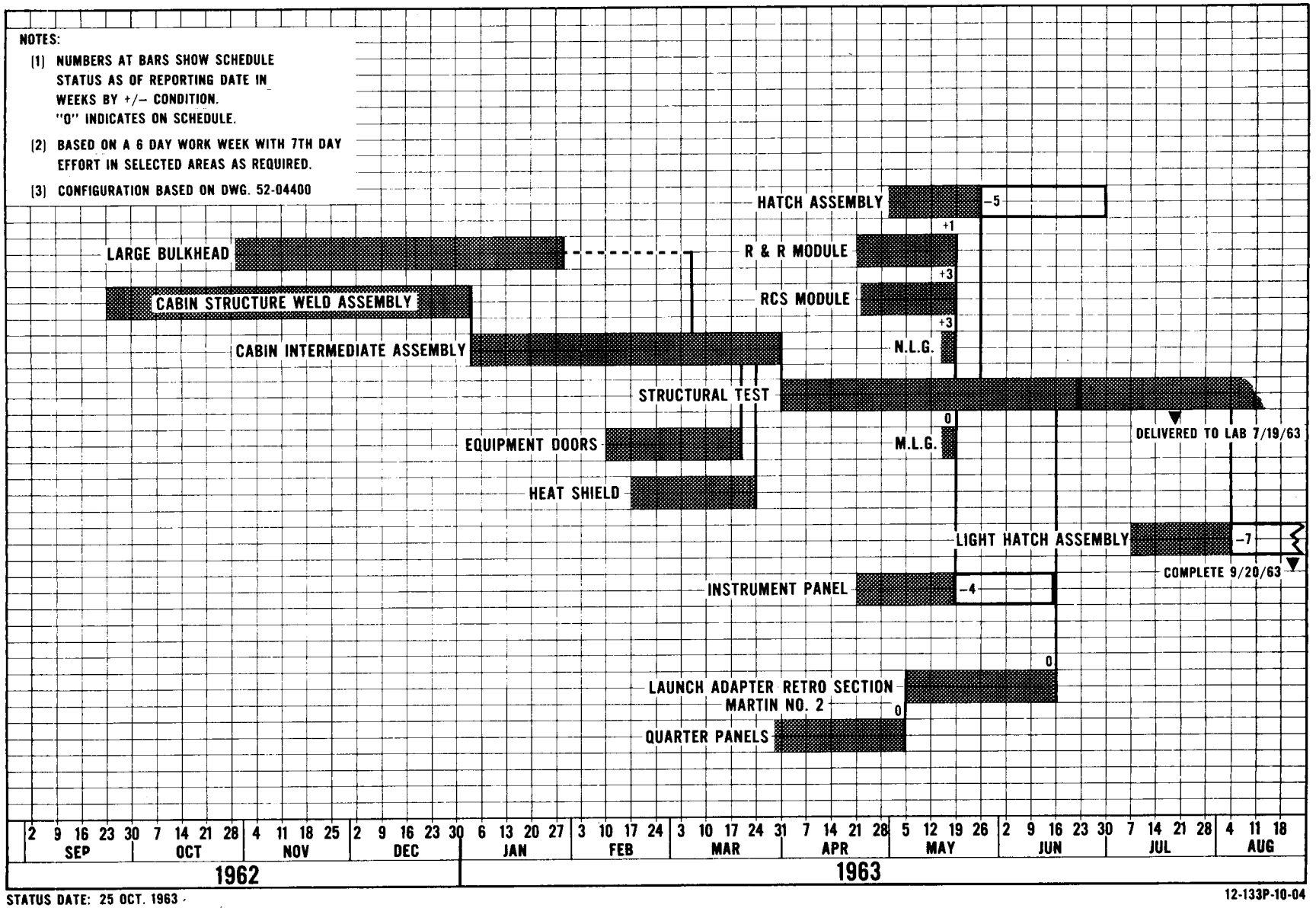

STATUS DATE: 25 OCT. 1963

12-133P-10-04

GEMINI SPACECRAFT
MANUFACTURING WORK PLAN
STATIC ARTICLE NO. 5

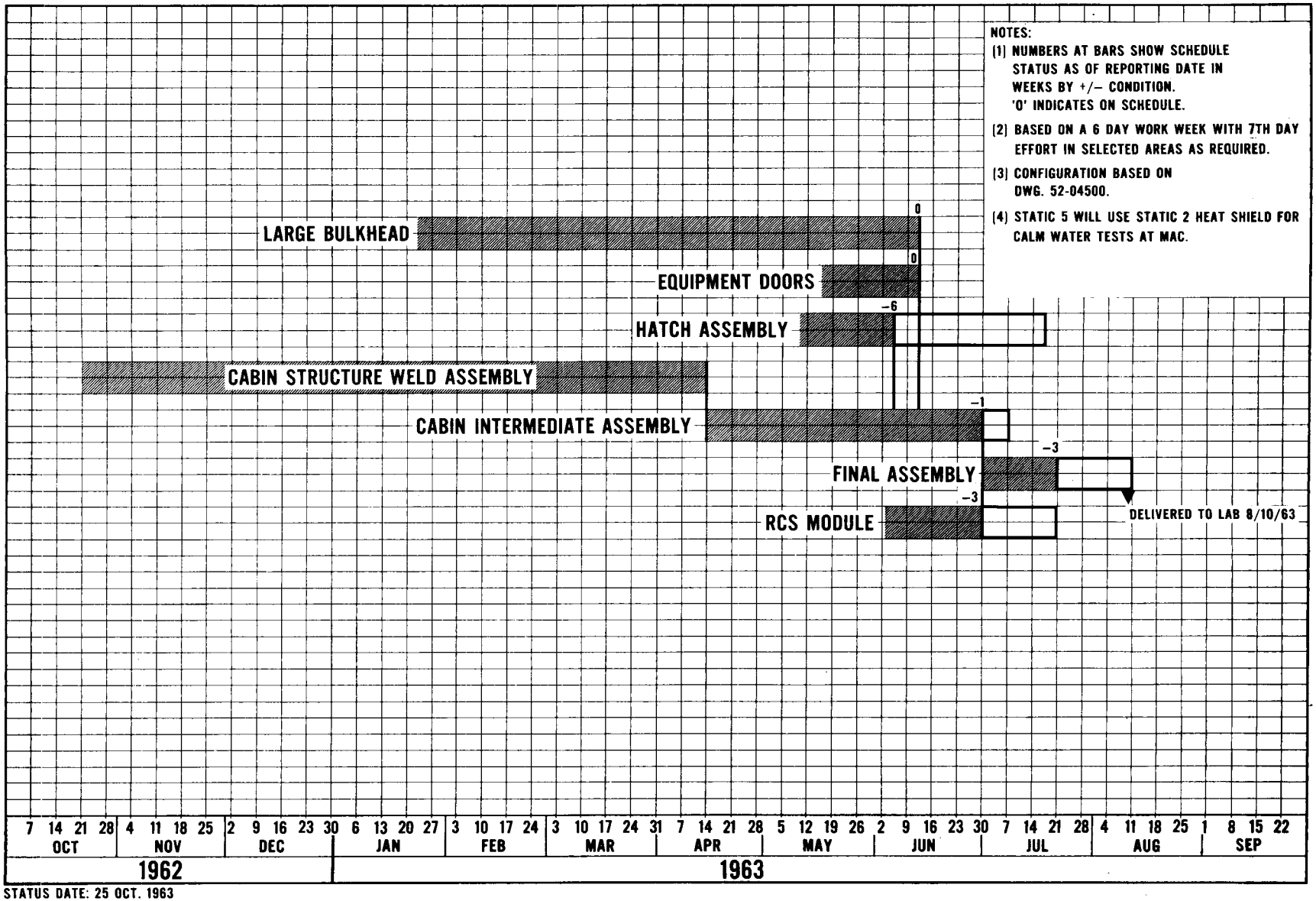

STATUS DATE: 25 OCT. 1963

12-133P-10-05

25 October 1963

SUBJECT: GEMINI STATUS REPORT FOR THE PERIOD 28 SEPTEMBER 25 OCTOBER 1963 - STATIC NUMBER FIVE MODIFICATION

1. RECAPITULATION

Mod 301 Cat 5 is in work in the Structure Area. A preliminary Pressure Test was made on 24 October and leak repairs are now in work. Installation of dummy parts and styrofoam will start upon completion of leak repairs. Rework of the ECS Section is now being accomplished. Hatches have been installed and rigged sufficient to conduct the Pressure Test. The ECS System and wire bundles are being assembled in the White Horn.

2. FORECAST

Completion of modification of delivery of Spacecraft on 1 December 1963.

GEMINI SPACECRAFT
MANUFACTURING WORK PLAN
STATIC ARTICLE NO.7

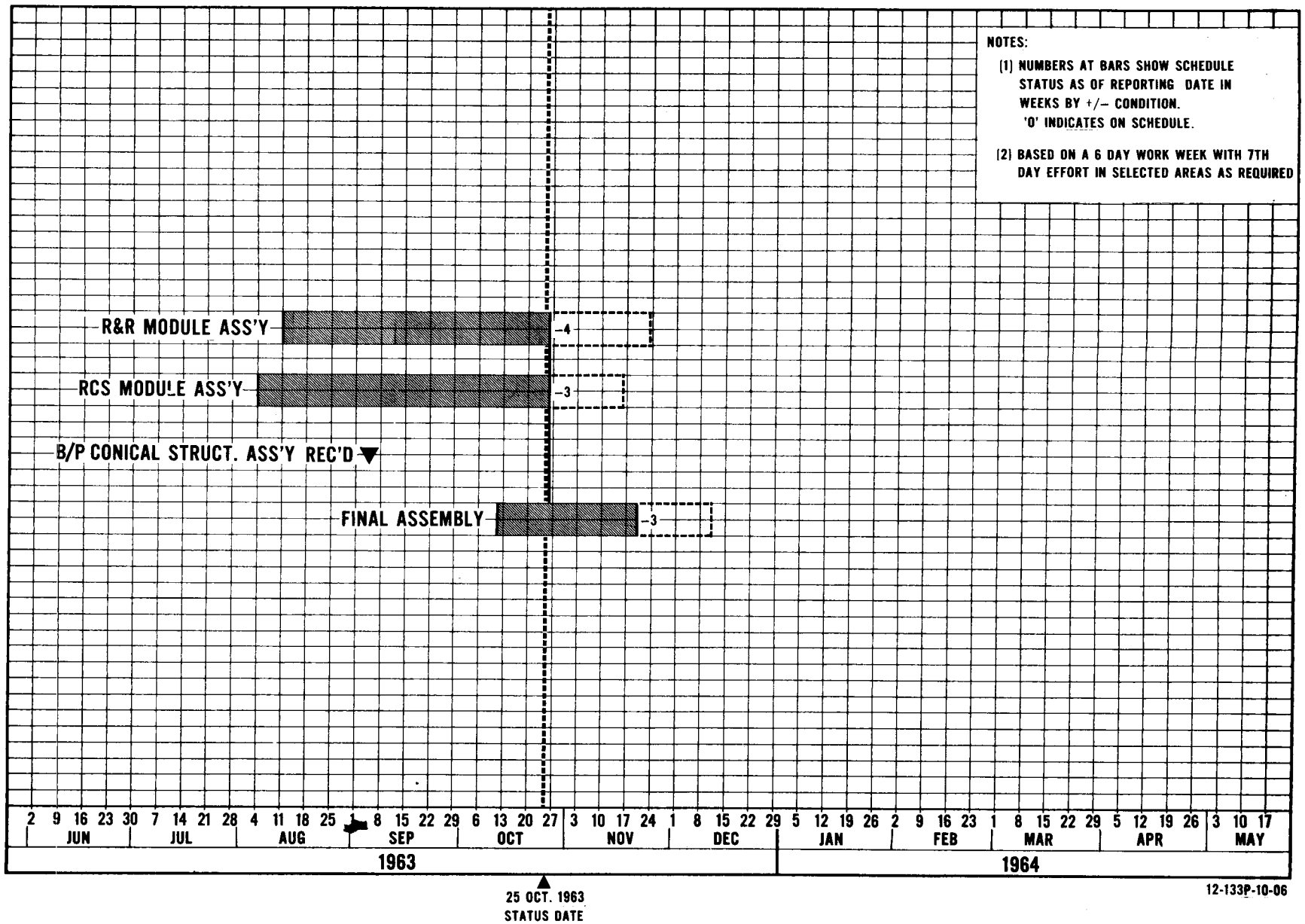

12-133P-10-06

GEMINI SPACECRAFT
MANUFACTURING WORK PLAN
TARGET DOCKING ADAPTER

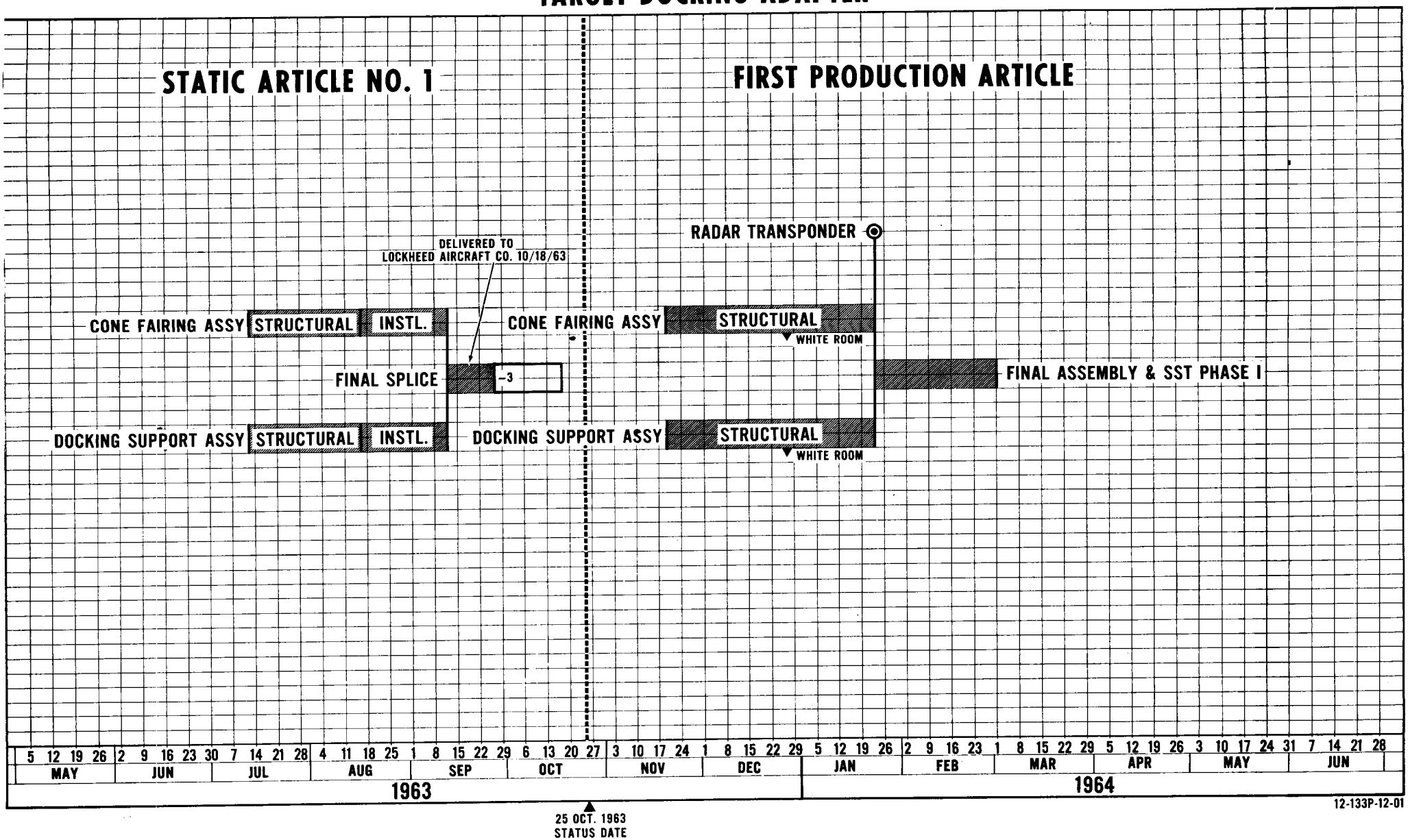

12-133P-12-01

[illegible]

GEMINI AGE, MAC IN-HOUSE SUMMARY
Updated 25 October 1963

1. Number of units scheduled to [illegible] Assembly by [illegible]

2. Number of units which started Assembly by 25 October 1963 - [illegible]

3. Number of units scheduled to have completed Assembly by

   25 October 1963 - 917.

   140 of the 917 are fabricated by [illegible] 930 [illegible].

4. Number of units which [illegible] Assembly by

   25 October 1963 - 614.

   57 of the 614 were fabricated by [illegible] 930 [illegible].

5. Number of units which [illegible] by 25 October 1963 - 153.

   4 of the 153 units were fabricated [illegible]

6. Number of units [illegible] 25 October 1963 [illegible]

   162 of the [illegible] units [illegible]

   10 of the [illegible] units [illegible]

7. Number of [illegible]

8. Number of [illegible] 25 October 1963 [illegible]

   5 of the [illegible] units [illegible]

9. [illegible]

10. [illegible]

    [illegible]

11. [illegible]

    [illegible]

III. AGE FOR CAPE HANGAR: S/C No. 2

Last item required for Hangar usage forecast availability 3 January 1964. Expect no delay to launch schedule.

IV. AGE FOR SST: S/C No. 2

PHASE I:

Present estimated completion dates indicate all items will be available by need date.

PHASE II:

Present estimated completion dates indicate all items will be available by need dates.

CONTRACT NAS 9-1[illegible]
Actual Engineering Manhours

MAC Cost Item No.	Description of Work	Week Ended 9/29/63 Total Hours	Week Ended 10/6/63 Total Hours	Week Ended 10/13/63 Total Hours	Week Ended 10/20/63 Total Hours
	SPACE VEHICLE SYSTEM				
01	Flight Technology and Mission Planning	1,516	1,639	1,439	[illegible]
02	Flight Simulation Trainers & Training Aids	12,613	12,625	12,267	[illegible]
03	Personnel Training	203	146	174	[illegible]
04	Ground Test Program	3,064	3,74[illegible]	3,635	2,889
05	Project Orbit Tests	2,017	2,04[illegible]	1,818	1,829
06	Spacecraft Systems Tests	3,971	3,389	3,022	2,742
07	Launch Operations	-0-	3	6	2
08	Publications	2,841	3,233	2,982	2,78[illegible]
09	Spare Parts	6	18	12	26
11	Aerospace Ground Equipment	8,247	10,787	10,317	8,512
12	Maintenance, Repair and Support	-0-	13	13	2
13	Specifications, Reports & Documentation	1,358	1,435	1,284	1,326
	RE-ENTRY MODULE				
21	Space Frame, Re-entry Module Fabrication & Structural Assembly	6,491	6,679	7,069	[illegible]
22	Space Frame, Re-entry Module Installation & Final Assembly	292	269	298	[illegible]
23	Inteial Guidance System	2,234	2,375	2,317	[illegible]
24	Attitude Control System	1,149	1,237	1,458	[illegible]
25	Electrical System	4,356	4,[illegible]	5,298	[illegible]
26	Communication System	1,705	1,720	1,726	[illegible]
27	Instrumentation & Recording	3,624	3,807	4,521	[illegible]
28	Re-entry Reaction Control System	1,230	1,26[illegible]	1,031	[illegible]
29	Landing System - Paraglider	1,317	1,260	1,310	[illegible]
30	Landing System - Recovery Chute	515	570	496	[illegible]
31	Post Landing & Survival Systems	16	2[illegible]	12	[illegible]
32	Crew Systems, Displays, Instruments	1,033	1,241	[illegible]	[illegible]
33	Ejection Seats	849	763	985	[illegible]
34	Time Reference System	776	90[illegible]	1,00[illegible]	[illegible]
35	Pyrotechnics & Release Mechanisms	741	947	1,147	[illegible]
36	Environmental Control System	2,960	2,785	3,[illegible]	[illegible]
37	Ablation Shield	264	324	337	[illegible]
38	Landing System - Parasail	504	180	524	[illegible]
54	Rendezvous Radar	477	487	418	[illegible]
57	Horizon Sensors	204	247	196	[illegible]
	ADAPTER MODULE				
[illegible]	Space Frame, Adapter Module Fabrication	2,3[illegible]	2,4[illegible]	2,6[illegible]	[illegible]
[illegible]	Space Frame, Adapter Module Installation & Final Assembly	[illegible]	18[illegible]	1[illegible]5	[illegible]

MAC Cost Item No.	Description of Work	Week Ended 9/29/63 Total Hours	Week Ended 10/6/63 Total Hours	Week Ended 10/13/63 Total Hours	Week Ended 10/20/63 Total Hours
	ADAPTER MODULE (Continued)				
53	Battery Fuel Cell	191	209	260	[illegible]
54	Reactant Supply System	283	325	278	[illegible]
55	Adapter Propulsion System	728	825	835	[illegible]
59	Retrograde Rocket	210	231	1,006	[illegible]
61	Adapter Environmental Control System	1,614	1,836	1,852	[illegible]
62	Adapter - Electrical & Misc. Electronics	465	654	513	[illegible]
71	Target Vehicle Docking Adapter	555	685	567	[illegible]
	TOTALS	73,169	78,038	78,559	[illegible]

INDEX

CHART	SYSTEM	VENDOR	LOCATION	SCD
01	OAMS	Rocketdyne	Canoga Park, Calif.	52-52701
02	RCS	Rocketdyne	Canoga Park, Calif.	52-52700
03	Retro Rockets	Thiokol	Elkton, Md.	52-50702
04	IGS	I.B.M.	Owego, N.Y.	52-87710
05	IMU	Honeywell-St.Pete	St. Petersburg, Fla.	52-87717
06	ACME	Honeywell-Minn.	Minneapolis, Minn.	52-87700
07	Horizon Sensors	Adv. Tech. Lab.	Mountainview, Calif.	52-87703
08	Fuel Cell	General Electric	Lynn, Mass.	52-79700
09	Reactant Supply	AiResearch	Torrance, Calif.	52-83701
10	ECS	AiResearch	Torrance, Calif.	52-83700
11	Attitude Display	Lear-Siegler	Grand Rapids, Mich.	52-87702
12	Heat Shield	McDonnell E.E.D.	St. Louis, Mo.	
13	UHF Voice T/R	Collins Radio	Cedar Rapids, Iowa	52-85709
14	HF Voice T/R	Collins Radio	Cedar Rapids, Iowa	52-85710
15	Voice Control Cntr.	Collins Radio	Cedar Rapids, Iowa	52-55718
16	Digital Command	Motorola	Scottsdale, Ariz.	52-85714
17	S-Band Radar	ACF Industries	Paramus, N.J.	52-85712
18	C-Band Radar	ACR Industries	Paramus, N.J.	52-85707
19	Rendezvous Radar	Westinghouse	Baltimore, Md.	52-87701
20	Landing System	Northrop-Ventura	Van Nuys, Calif.	52-41703
21	Event Timer	McDonnell E.E.D.	St. Louis, Mo.	SCR 8668
22	Electronic Timer	McDonnell E.E.D.	St. Louis, Mo.	SCR 8669
23	Data Transmission	Electro-Mechanical Research	Sarasota, Fla.	52-85713
24	Ejection Seat	Weber Aircraft	Burbank, Calif.	52-[illegible]

GEMINI SPACECRAFT
CONTRACT NO. NAS 9-170

SYSTEM QUALIFICATION

STATUS CHART

REPORT NO. 8580-1-33
LAST PROGRAM SCHEDULE CHANGE: 1 APRIL 1963
STATUS AS OF: 25 OCTOBER 1963

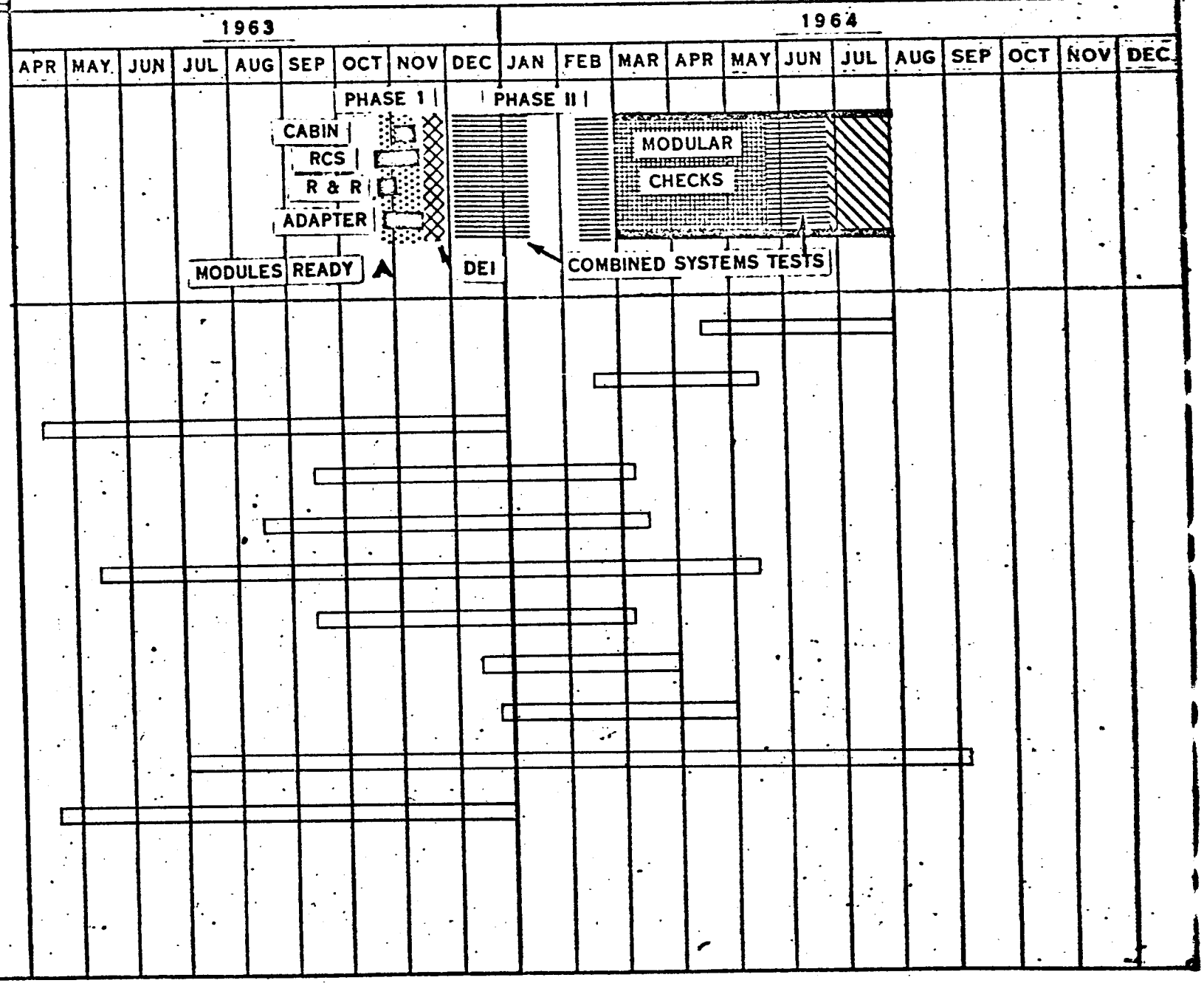

GEMINI SPACECRAFT
CONTRACT NO. NAS 9-170

SYSTEM QUALIFICATION

STATUS CHART

REPORT NO. 8580-1-33
LAST PROGRAM SCHEDULE CHANGE: 1 APRIL 1963
STATUS AS OF: 25 OCTOBER 1963

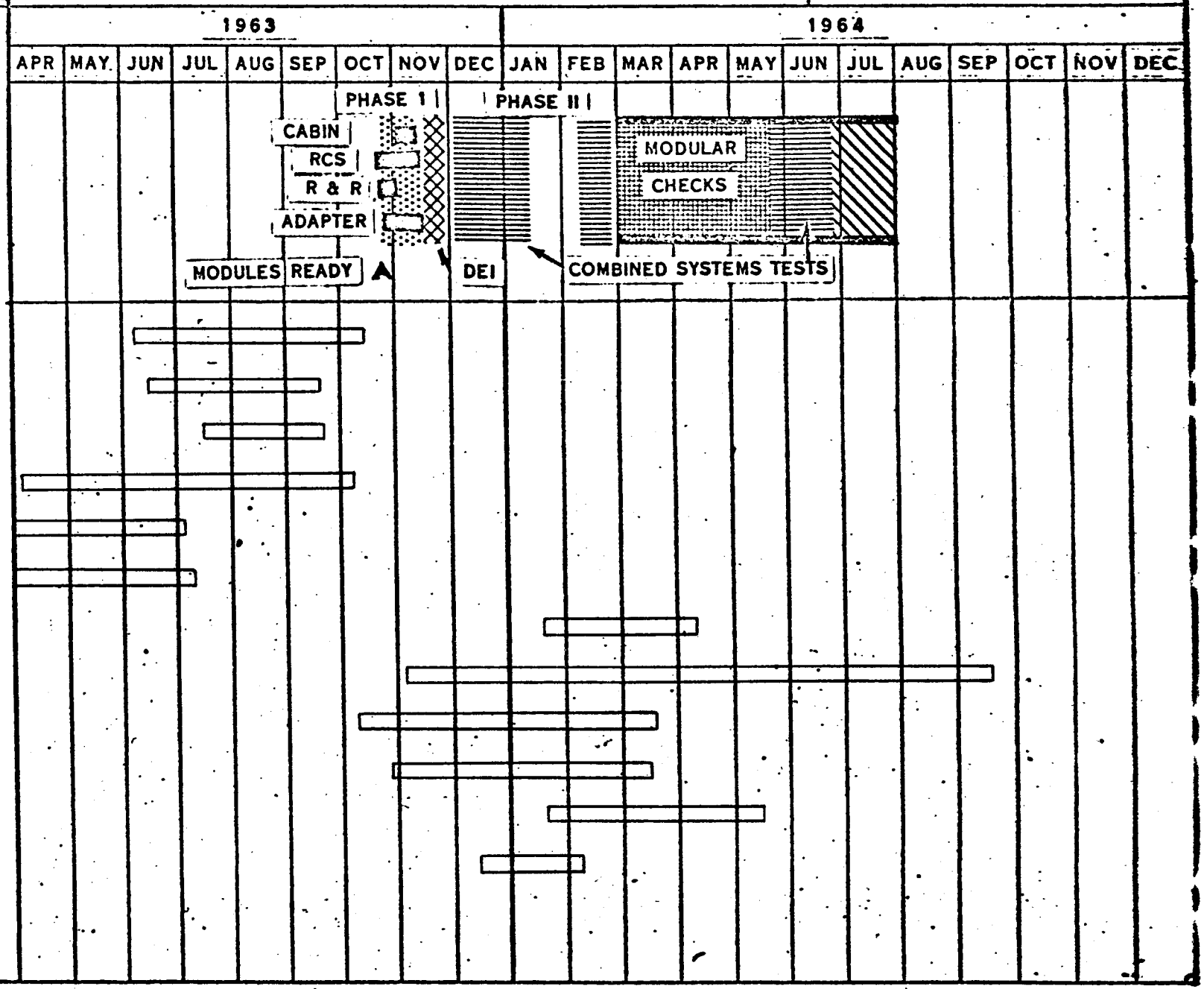

MONTHLY SUMMARY

SYSTEM: RCS and OAMS
SUBSYSTEM:
VENDOR: Rocketdyne
Canoga Park, California
DATE: 25 October 1963

ENGINEERING STATUS

Rocketdyne and MAC engineers reviewed the entire OAMS-RCS test program at MAC during the month of October. As yet, Rocketdyne has neither formally submitted any test procedures, nor submitted an updated test schedule. The schedules contained in this report are the best estimates MAC can make at this time.

Rocketdyne and MAC engineers met 17 October 1963 at MAC and discussed bladder shedding and cycling problems. An expanded bladder test program will be proposed, the data from which will be used to evaluate overall tank design adequacy. No progress on this subject has been reported by Rocketdyne to date.

To date nine completed and accepted latest configuration 25# RCS injectors have been delivered to department 505 at Rocketdyne for final assembly. Five additional pieces are complete through calibration and hot fire, and are in final machining. In addition, two more pieces have passed calibration and are ready for hot fire. Investigation by Rocketdyne has revealed that the high rejection rate of the injectors at calibration is caused primarily by weld drop-through, and slight radial rotation of the plug manifold. Remedial action has been taken on the subsequent batch of twelve pieces and these should reach calibration by 29 October 1963. Will advise on results. Although Rocketdyne is making no forecast on TCA shipment as yet, MAC feels that with a good effort by Rocketdyne the 25# RCS TCA's for S/C-2 should ship by the end of November 1963.

Rocketdyne has been given go-ahead on the use of hog-outs or forgings in "C" and "D" packages to correct leakage.

PROCUREMENT

25# OAMS shells have not been delivered to Rocketdyne by their suppliers. This is becoming a critical area for the OAMS TCA production.

Although Rocketdyne reports sufficient detail parts on hand to establish and sustain a short term production flow of 25# RCS TCA's, the exact status of TCA final assembly is unknown due to Rocketdyne's failure to make slight changes in status charts as verbally agreed to with MAC system analysts.

While Rocketdyne is experiencing some difficulties in assembling the 25# and 85# OAMS TCA prop. valves, it appears that purchased detail parts are being received in sufficient quantities. The Los Angeles Division of North American is assembling the 25# RCS and 100# OAMS prop. valves and is progressing satisfactorily.

ASSEMBLY AND DELIVERY STATUS

C.T.U.

A. RCS - All items have been shipped to MAC.

B. OAMS- All items with the following exceptions have been shipped:

1. One Package "B": Package was completed and shipped to MAC on 10 September 1963. However, it was found to have a ruptured burst diaphram and has been returned to Rocketdyne for rework. Estimate will-ship to MAC 31 October 1963.

2. One Oxidizer Tank: Unit accepted by MAC QC and estimate will-ship 25 October 1963.

3. Eight-25# TCA: 1 Unit shipped 1 October 1963. Seven units were either unacceptable or scrapped and require replacement. Requirements for and configuration of these units are being reviewed at the present time. No estimate on availability can be made until review is completed.

4. Two-85# TCA: One unit shipped 25 September 1963. Second unit same as 25# TCA above.

5. Six-100# TCA: Four units have been received at MAC. Two remaining units same as 25# TCA above.

S/C-2

A. RCS

1. Three-Pkg. "A": Three units have been shipped

2. Three-Pkg. "B": One unit shipped 22 October 1963. Two units delayed for replacement of check valves. Estimate will-ship 4 November 1963.

3. Two-Pkg. "C": One unit accepted on MRR and estimate will-ship 25 October 1963. Second unit delayed for valve replacement and estimate will-ship 11 November 1963.

4. Two-Pkg."D": Both units shipped.

5. Two-Pressurant Tanks: Both units shipped.

6. Two-Fuel Tanks: One unit shipped 24 October 1963. Second unit accepted by MAC QC and estimate will-ship 25 October 1963.

7. Two-Oxidizer Tanks: One unit shipped 24 October 1963. Second unit accepted by MAC QC and estimate will-ship 25 October 1963.

8. Sixteen-25# TCA's: TCA's are in assembly. MAC estimates that the TCA's should be shipped by 29 November 1963.

9. Ten-Cartridges: Parts will be available to Rocketdyne 15 November 1963 and estimate will-ship 22 November 1963.

10. Three-Pressure Regulators: Two units shipped 11 September 1963. The third unit has been delayed because of internal leakage and weld drop and requires rework. Estimate will-ship 8 November 1963.

11. One-P.T. Indicator - Unit shipped on 16 October 1963.

B. OAMS

1. One-Pkg. "C": Unit has been accepted on NRR and estimate will-ship 25 October 1963.

2. One-Pkg. "D": Unit shipped on 22 October 1963.

3. One-Pkg. "E": Package delayed because of rework required for hole and tube location discrepancy. Estimate will-ship 8 November 1963.

4. One-Pressurant Tank: Delivery of this unit delayed because of leakage in tank weld. Replacement tank required is expected at Rocketdyne 29 October 1963 and estimate will-ship 11 November 1963.

5. One-Oxidizer Tank: Unit shipped 22 October 1963.

6. One-Fuel Tank: Unit is in acceptance test and estimate will-ship 28 October 1963.

7. Eight-25# TCA: Production hold order on all OAMS TCA's is still in effect at Rocketdyne pending final design. Rocketdyne has not made any forecast when TCA's will be shipped. NAC estimates will-ship by 17 January 1964.

8. Two-85# TCA, Six-100# TCA: Same as 25# TCA above.

9. Two-Motor Operated S.O. Valves: Both units shipped 10 September 1963.

10. One-Cartridge: Part will be available to Rocketdyne 15 November 1963 and estimate will-ship 22 November 1963.

TEST STATUS

The following hot fire tests were conducted on flight weight thrust chambers from last report through 25 October 1963.

Thrust & Type	Date	Injector		Wrap		Manifold		%	O/F	Test Type		Burn Time (Sec)	Mt'l	
		006	Con	Hi-Temp	Low	Old	New	C		MDC	SS		H	R
25# RCS	9/26		x		x	x		88.0	1.3	x		284		x
25# RCS	9/26-10/1	x		x		x		90.5	1.3	x		123		x
25# RCS	10/10	x		x		x		93.5	1.3	x		162		x
25# OAMS	9/25	x		x		x		93.3	1.3	x		188		x
25# OAMS (Split Ring)	10/8	x		x		x		92.0	1.3	x		185		x
25# OAMS	10/10	x			x	x		93.0	1.28	x		143	x	
100# OAMS	9/24	x			x	x		91.0	1.6		x	534		x
100# OAMS (Split Ring)	10/3	x		x		x		92.0	1.6	AFT		550		x
100# OAMS	10/8	x		x		x		90.2	1.6	AFT		549		x

DAT AND RAT:

Rocketdyne has not yet formerly submitted any test procedures or an updated test schedule. Test status charts submitted with this report were made to the best information available. See Engineering Status.

DEVELOPMENT TESTING:

It is estimated by MAC that Rocketdyne is 45% complete with their overall development test program.

AGE

1. The following AGE items from Rocketdyne are outstanding:

PART NAME	MAC P/N	USAGE	UNIT NO.	W/S	SHIP TO
Prop Syst C/O Unit	52E420006-1	Hgr	3	11-12-63	St. Louis
Prop Syst Cont Unit	52E420007-3	PAD	3	11-22-63	
Prop Syst Cont Unit	52E420007-3	Hgr	4	11-27-63	
Prop Syst Cont Unit	52E420007-3	Hgr	5	12-02-63	
Prop Syst Cont Unit	52E420007-3	Hgrs	6	12-20-63	
Prop Syst C/O Adptr Kit	52E420009-1	Hgrs	2	11-01-63	St. Louis
Prop Syst C/O Adptr Kit	52E420009-1	Hgrs	3	11-21-63	St. Louis
Fuel Metering Unit	52E420012-1	PAD	2	12-01-63	
N_2 Press Unit	52E420013-1	Hgrs	5	11-08-63	St. Louis
N_2Press Unit	52E420013-1	Hgrs	6	11-15-63	St. Louis
H_2 Press Unit	52E420014-1	Hgrs	5	11-08-63	St. Louis
H_2 Press Unit	52E420014-1	Hgrs	6	11-15-63	St. Louis
RCS Disposal Syst	52E420015-1	PAD	3	11-22-63	
RCS Disposal Syst	52E420015-1	PAD	4	11-22-63	
OAMS Disposal Syst	52E420016-1	PAD	2	11-22-63	Cape
Prop Svcng Adptr Kit	52E420019-1	SST	1	10-28-63	St. Louis
Prop Svcng Adptr Kit	52E420019-1	PAD	2	11-15-63	St. Louis
Prop Svcng Adptr Kit	52E420019-1	Hgrs	3	12-06-63	St. Louis
Prop Svcng Adptr Kit	52E420019-1	Hgrs	4	12-06-63	St. Louis
Oxidizer Mtrng Unit	52E420025-1	PAD	2	12-01-63	St. Louis

GEMINI SPACECRAFT

CONTRACT NO. NAS 9-170

ORBIT ATTITUDE MANEUVER SYSTEM

(VENDOR: ROCKETDYNE)

STATUS CHART

REPORT NO. 8580-1-33

LAST PROGRAM SCHEDULE CHANGE: 1 APRIL 1963

STATUS AS OF: 25 OCTOBER 1963

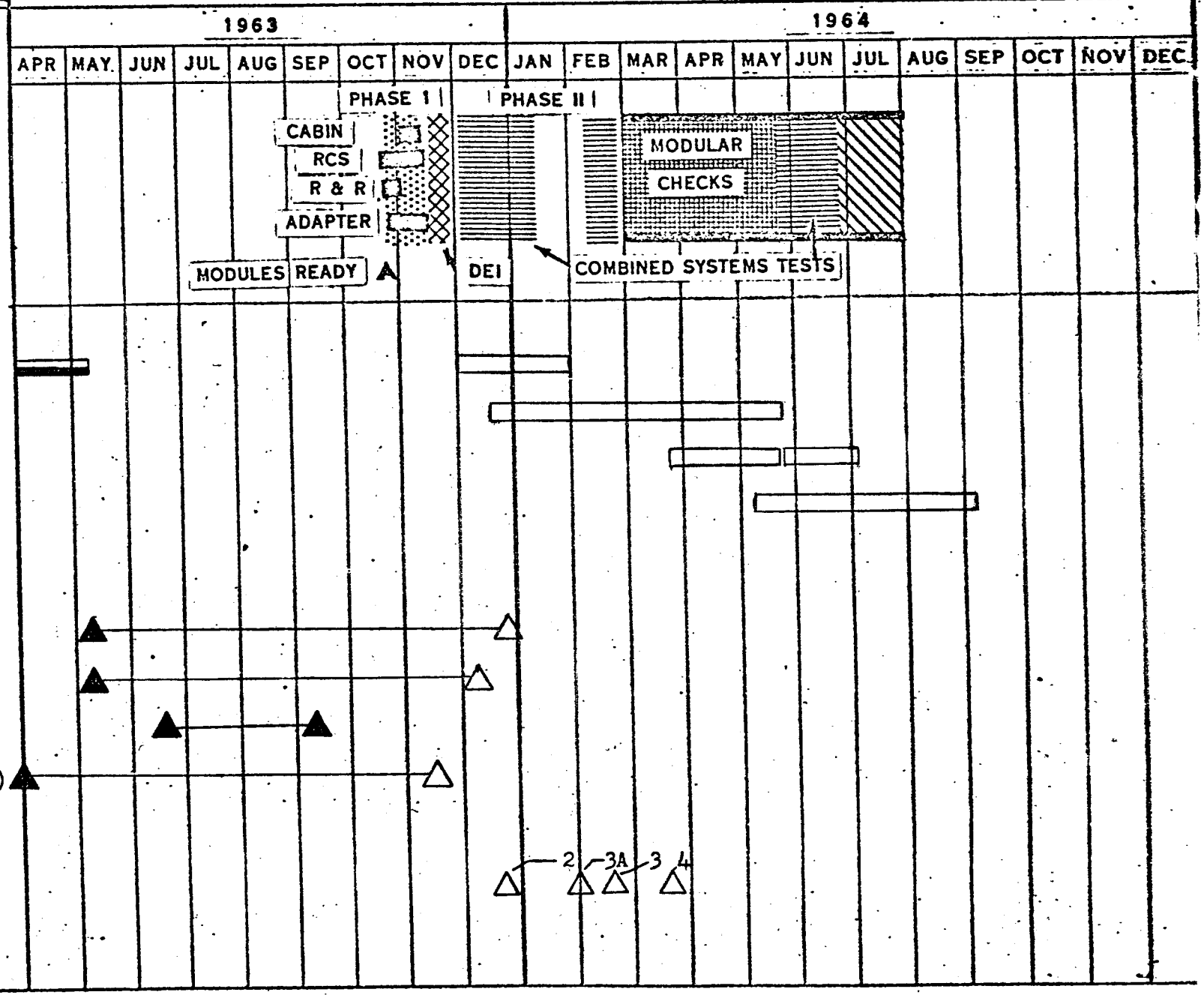

QUALIFICATION TEST STATUS
ORBIT ATTITUDE AND MANEUVER SYSTEM - COMPONENTS
ROCKETDYNE - SCD 52-52701

25 OCTOBER 1963

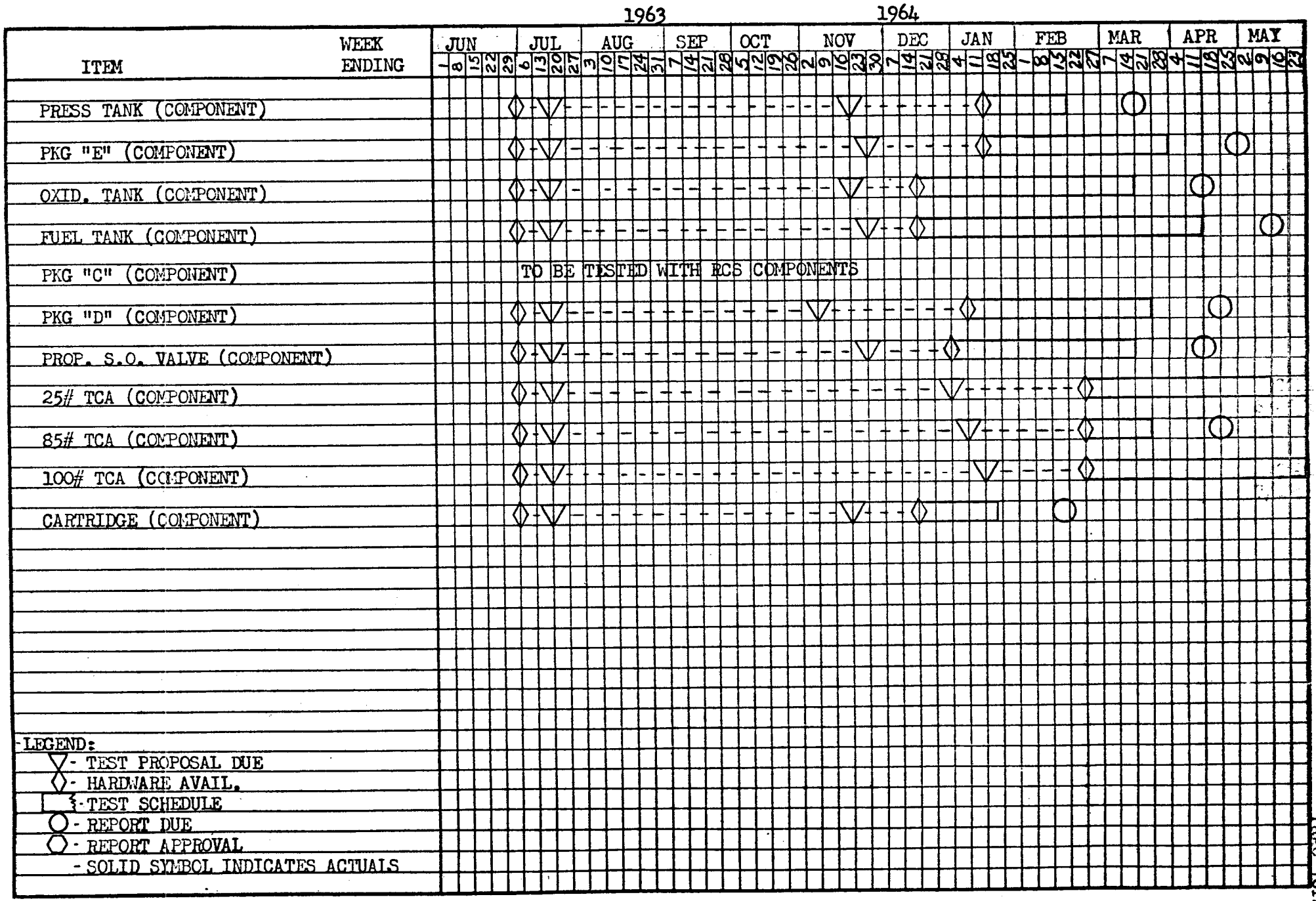

MAC 2274V (27 APR 59)

QUALIFICATION TEST STATUS
ORBIT ATTITUDE AND MANEUVER SYSTEM
ROCKETDYNE SCB-52-52701

25 OCTOBER 1963

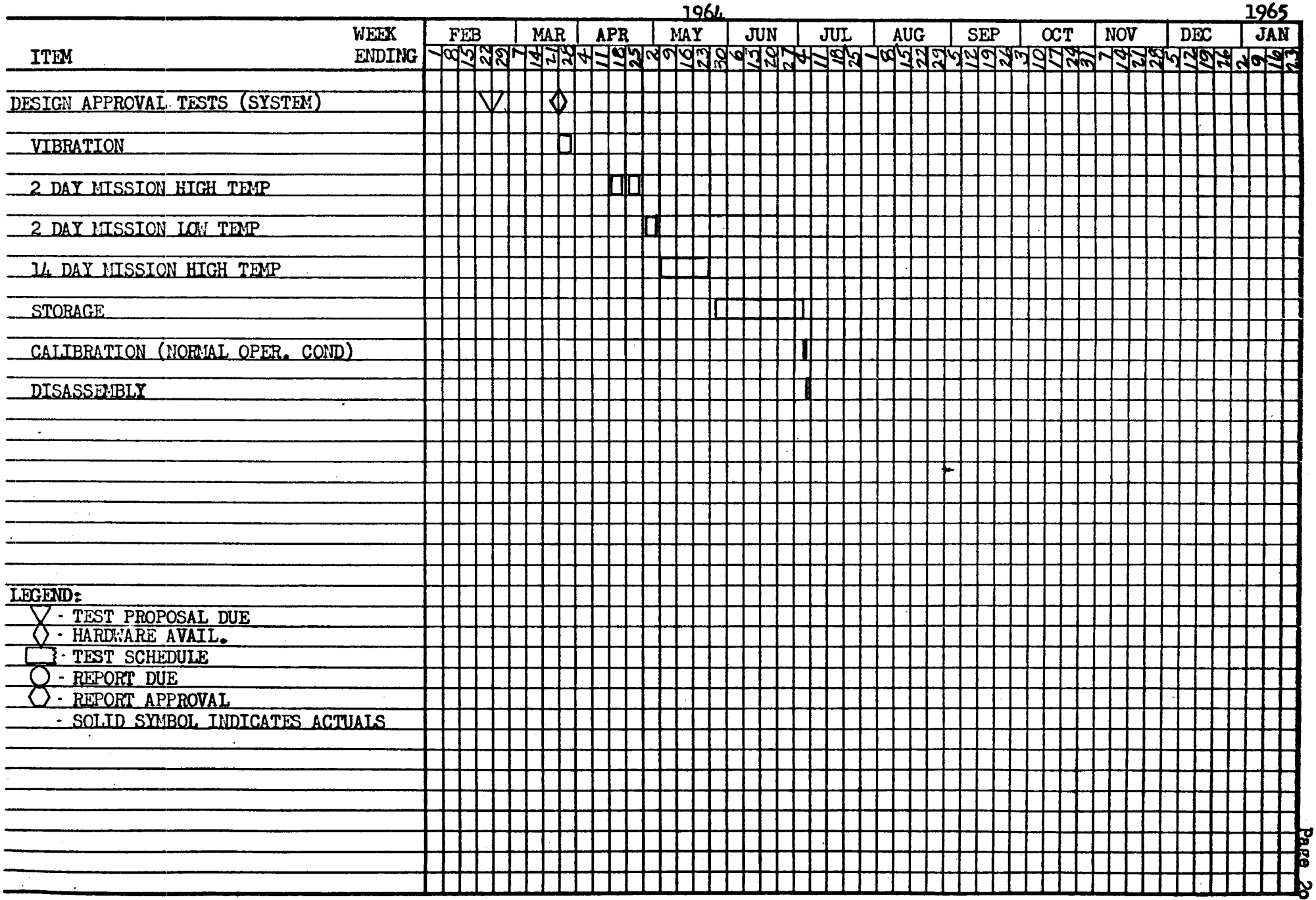

AC 2274V (27 APR 59)

VENDOR DELIVERY STATUS REPORT
ORBIT ATTITUDE MANEUVER SYSTEM
ROCKETDYNE

CHART NO: 01-C

25 OCTOBER 1963

UNIT NO	TYPE	USAGE	COMPONENT	VENDOR W/S	AVAIL FOR INSTL	REQ'D FOR INSTL	SLACK
1	EP-1	VENDR	DEVELOPMENT			A08-21-63	
2	PARTL	CTU	ELECTRICAL ONLY			A02-23-63	
3	EP-2	VENDR'	DEVELOPMENT			A05-01-63	
4	PARTL	SC-1	-157 TCA 25#			A06-23-63	
4	PARTL	SC-1	-159 TCA 85#			A07-23-63	
4	PARTL	SC-1	-161 TCA 100#		IN REVW	IN REVW	
6	PARTL	CTU	-163 TCA 25#	IN REVW		06-10-63	
6	PARTL	CTU	-165 TCA 85#	IN REVW		06-10-63	
6	PARTL	CTU	-167 TCA 100#	IN REVW		06-10-63	
6	PARTL	CTU	-123 COMP PKG E			A06-10-63	
6	PARTL	CTU	-99 COMP PKG D			A06-10-63	
6	PARTL	CTU	-91 COMP PKG C			A06-10-63	
6	PARTL	CTU	-83 PRESS TANK		11-01-63	A06-10-63	
6	PARTL	CTU	-67 OXIDZ TNK	10-25-63	11-01-63	06-10-63	-20
6	PARTL	CTU	-75 FUEL TANK	A10-24-63	10-31-63	06-10-63	-20
7	PARTL	VENDR	EP TANK MODULE			IN REVW	
8	PP-1	SC-2	-197 PKG C	10-25-63	12-24-63	07-11-63	-23
8	PP-1	SC-2	-195 COMP PKG D	A10-22-63	12-24-63	07-11-73	-23
8	PP-1	SC-2	-121 COMP PKG E	11-08-63	12-24-63	07-11-73	-23
8	PP-1	SC-2	-221 TCA 25#	12-16-63	12-24-63	07-11-63	-23
8	PP-1	SC-2	-233 TCA 85#	12-16-63	12-24-63	07-11-63	-23
8	PP-1	SC-2	-225 TCA 100#	12-16-63	12-24-63	07-11-63	-23
8	PP-1	SC-2	-217 PRESS TANK	11-11-63	12-24-63	07-11-63	-23
8	PP-1	SC-2	-215 OXIDIZ TNK	A10-22-63	12-24-63	07-11-73	-23
8	PP-1	SC-2	-219 FUEL TANK	10-28-63	12-24-63	07-11-63	-23
8	PP-1	SC-2	-155 S O VALVE	ACTUAL	12-24-63	07-11-63	-23
8	PP-1	SC-2	-233 CARTRIDGE	11-22-63	11-29-63	02-28-64	+13
9	PP-2	SC-3A	-171 COMP PKG C	11-08-63	01-17-64	10-15-63	-13
9	PP-2	SC-3A	-173 COMP PKG D	11-08-63	01-17-64	10-15-63	-13
9	PP-2	SC-3A	-205 COMP PKG E	12-07-63	01-17-64	10-15-63	-13
9	PP-2	SC-3A	-221 TCA 25#	01-22-64	01-31-64	10-15-63	-15
9	PP-2	SC-3A	-233 TCA 85#	01-22-64	01-31-64	10-15-63	-15
9	PP-2	SC-3A	-225 TCA 100#	01-22-64	01-31-64	10-15-63	-15
9	PP-2	SC-3A	-169 PRESS TANK	12-13-63	01-17-64	10-15-63	-13
9	PP-2	SC-3A	-177 OXIDIZ TNK	10-30-63	01-17-64	10-15-63	-13
9	PP-2	SC-3A	-211 FUEL TANK	11-15-63	01-17-64	10-15-63	-13
9	PP-2	SC-3A	-187 S O VALVE	11-08-63	01-17-64	10-15-63	-13
9	PP-2	SC-3A	-233 CARTRIDGE	11-22-63	01-17-64	10-15-63	-13
10	PP-3	SC-3	END ITEM	02-07-64	02-17-64	08-12-63	-27
11	PARTL	VENDR	QUAL-COMPONENTS		IN REVW	IN REVW	
12	PARTL	VENDR	OSR-COMPONENTS		IN REVW	IN REVW	
13	PP-4	VENDR	QUAL-SYSTEM		IN REVW	12-15-63	
14	PA-1	SC-4	END ITEM	03-10-64	03-20-64	11-19-63	-17

VENDOR AGE STATUS REPORT
RCS & OAMS
ROCKETDYNE

CHART NO: 01-D and 02-D
25 OCTOBER 1963

PART NO.	NOMENCLATURE	UNIT NO	VENDOR W/S	AVAIL FOR USAGE	REQD FOR USAGE	SLACK
			(SPACECRAFT SYSTEM TEST)			
E420006-1	PROP CK-OUT UT	1	ACTUAL			
E420007-3	PROP CONTROL UT	1	ACTUAL			
E420007-3	PROP CONTROL UT	2	ACTUAL			
E420009-1	CK-OUT ADP KIT	1	ACTUAL			
E420013-1	N2 PRESS UNIT	2	ACTUAL			
E420013-1	N2 PRESS UNIT	3	ACTUAL			
E420014-1	HE PRESS UNIT	2	ACTUAL			
E420014-1	HE PRESS UNIT	3	ACTUAL			
E420019-1	PROP SVG ADP KIT	1	10-28-63	11-04-63	10-01-63	-5
			(HANGAR)			
E420006-1	PROP CK-OUT UT	2	ACTUAL			
E420006-1	PROP CK-OUT UT	3	11-12-63	11-19-63	10-18-63	-4
E420007-3	PROP CONTROL UT	4	11-27-63	12-04-63	8-30-63	-13
E420007-3	PROP CONTROL UT	5	12-02-63	12-09-63	9-19-63	-12
E420007-3	PROP CONTROL UT	6	12-20-63	12-27-63	12-13-63	-2
E420009-1	CK-OUT ADP KIT	2	11-01-63	11-08-63	10-11-63	-4
E420009-1	CK-OUT ADP KIT	3	11-21-63	11-28-63	10-11-63	-7
E420010-1	PIA CONSOLE	2	ACTUAL			
E420011-1	PROP COM C/O KIT	2	ACTUAL			
E420012-1	FUEL METER UNIT	1	ACTUAL			
E420013-1	N2 PRESS UNIT	4	ACTUAL			
E420013-1	N2 PRESS UNIT	5	11-08-63	11-15-63	9-07-63	-10
E420013-1	N2 PRESS UNIT	6	11-15-63	11-22-63	9-19-63	-8
E420014-1	HE PRESS UNIT	4	ACTUAL			
E420014-1	HE PRESS UNIT	5	11-08-63	11-15-63	10-21-63	-3
E420014-1	HE PRESS UNIT	6	11-15-63	11-22-63	10-21-63	4
E420015-1	RCS DISP SYST	1	ACTUAL			
E420015-1	RCS DISP SYST	2	ACTUAL			
E420016-1	OAMS DISP SYST	1	ACTUAL			
E420019-1	PROP SVG ADP KIT	3	12-06-63	12-13-63	10-11-63	-9
E420019-1	PROP SVG ADP KIT	4	12-06-63	12-13-63	10-16-63	-8
			(PAD)			
E420007-3	PROP CONTROL UT	3	11-22-63	11-29-63	8-01-63	-17
E420012-1	FUEL METER UNIT	2	12-01-63	12-08-63	12-20-63	+2
E420013-1	N2 PRESS UNIT	1	ACTUAL			
E420014-1	HE PRESS UNIT	1	ACTUAL			
E420015-1	RCS DISP SYST	3	11-22-63	11-29-63	12-20-63	+3
E420015-1	RCS DISP SYST	4	11-22-63	11-29-63	12-20-63	+3
E420016-1	OAMS DISP SYST	2	11-22-63	11-29-63	12-20-63	+3
E420019-1	PROP SVG ADP KIT	2	11-15-63	11-22-63	12-20-63	+4
E420025-1	OXID METER UNIT	2	12-01-63	12-08-63	12-20-63	+2
			(PIA)			
E420010-1	PIA CONSOLE	1	ACTUAL	12-16-63		
E420011-1	PROP COM C/O KIT	1	ACTUAL	12-16-63		
E420025-1	OXID METER UNIT	1	ACTUAL	12-16-63		

GEMINI SPACECRAFT

ONTRACT NO. NAS 9-170

REACTION CONTROL SYSTEM (VENDOR: ROCKETDYNE)

STATUS CHART

REPORT NO. 8580-1-33

LAST PROGRAM SCHEDULE CHANGE: 1 APRIL 1963

STATUS AS OF: 25 OCTOBER 1963

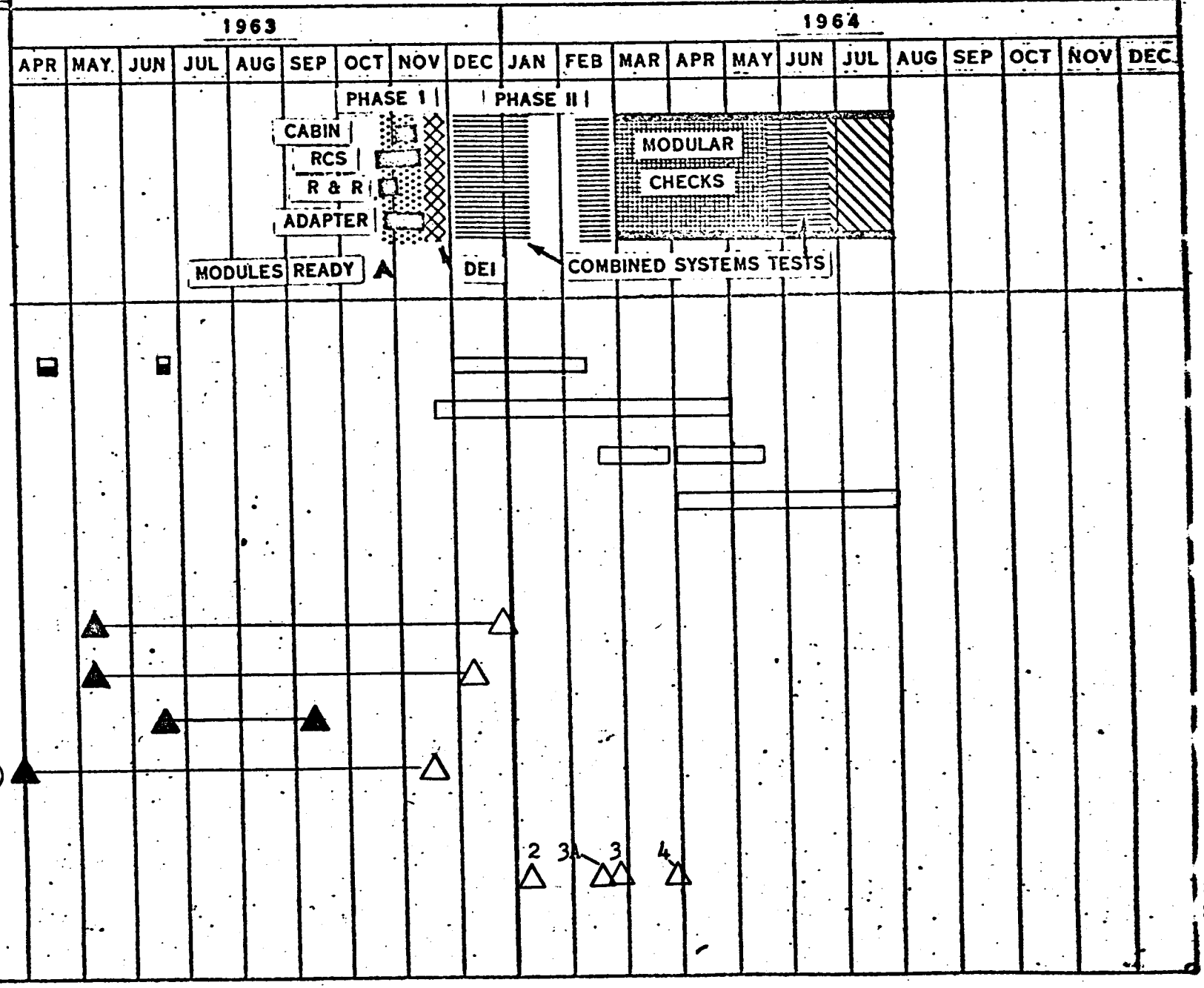

QUALIFICATION TEST STATUS
RE-ENTRY CONTROL SYSTEM-COMPONENTS
ROCKETDYNE - SCD 52-52700

25 OCTOBER 1963

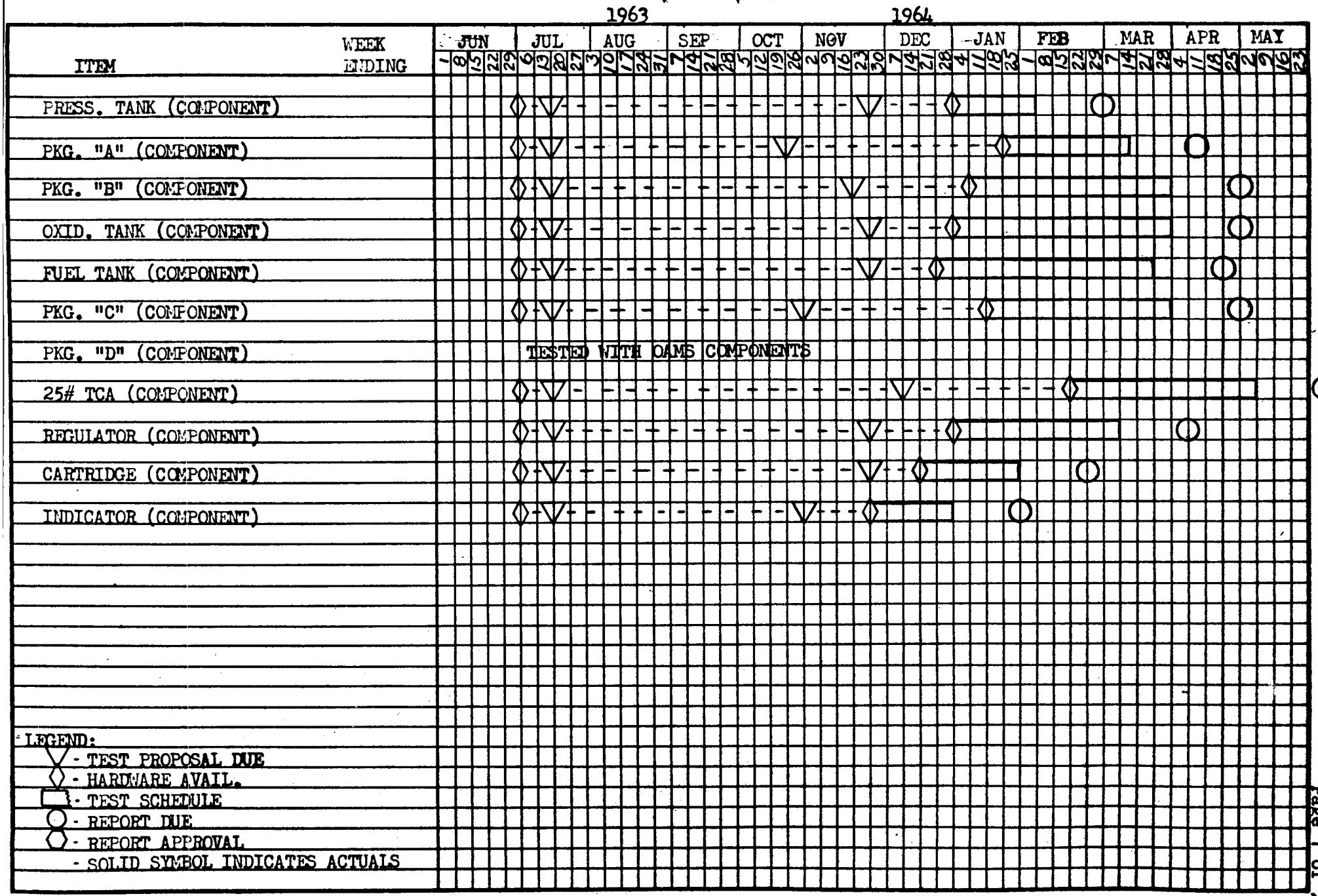

2-B
Page 1 of 2

MAC 2274V (27 APR 59)

QUALIFICATION TEST STATUS
RE-ENTRY CONTROL SYSTEM
ROCKETDYNE - SCD 52-52700

25 OCTOBER 1963

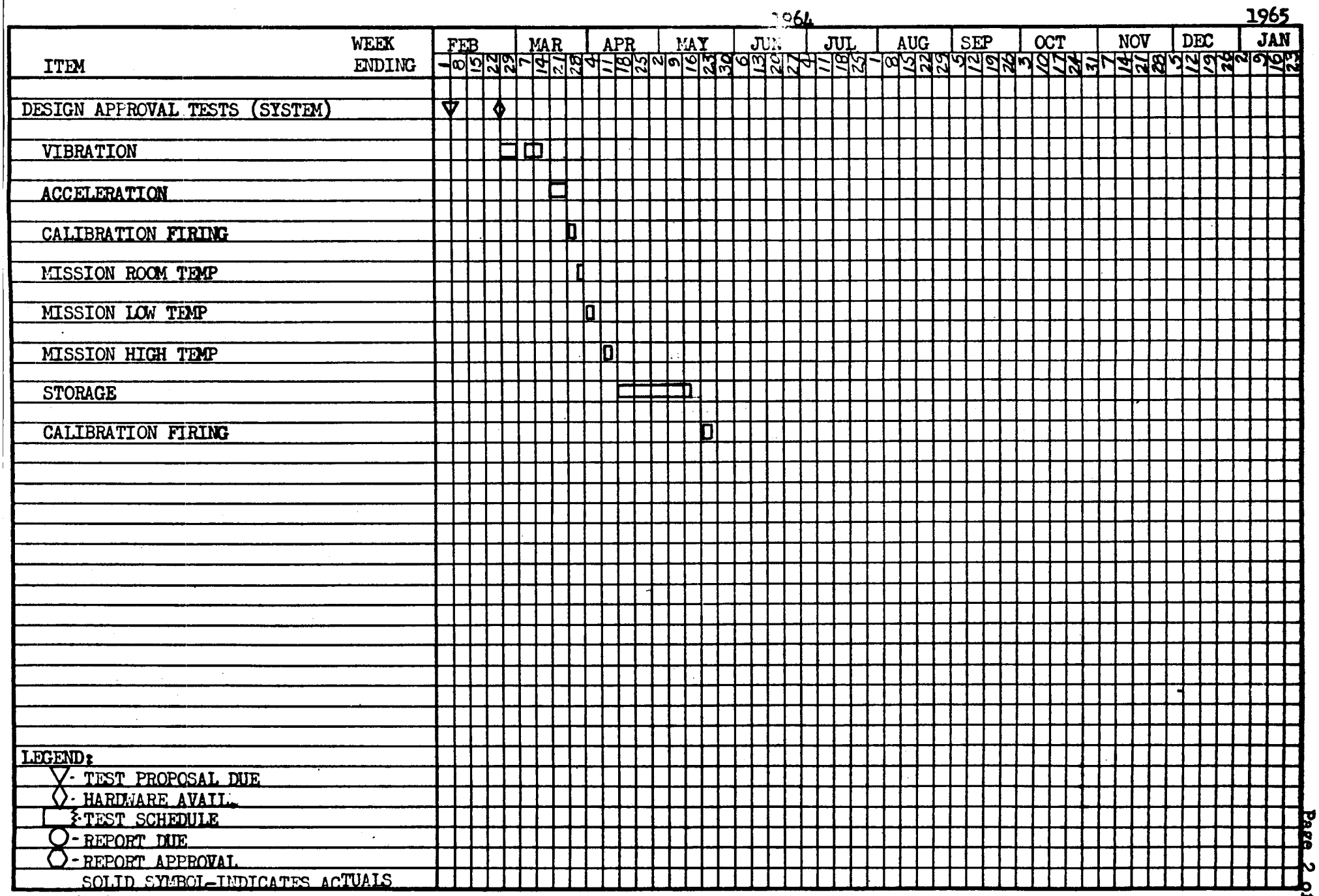

MAC 2274V (27 APR 59)

2-B

VENDOR DELIVERY STATUS REPORT
REACTION CONTROL SYSTEM
ROCKETDYNE

CHART NO: 02-0
25 OCTOBER 1963

UNIT NO	TYPE	USAGE	COMPONENT	VENDOR W/S	AVAIL FOR INSTL	REQ'D FOR INSTL	SLACK
1	EP-1	VENDR	DEVELOPMENT			A08-15-63	
2	EP-2	VENDR	DEVELOPMENT			A12-15-63	
3	PARTL	CTU	ELECTRICAL ONLY			A02-29-63	
4	PARTL	CTU	-31 TCA 25#			A06-10-63	
4	PARTL	CTU	-39 COMP PKG A			A05-20-63	
4	PARTL	CTU	-103 COMP PKG B			A06-10-63	
4	PARTL	CTU	-63 COMP PKG C			A05-20-63	
4	PARTL	CTU	-81 OXID TANK			A05-20-63	
5	EP-3	VENDR	DEVELOPMENT		IN REVW	IN REVW	
6	EP-4	VENDR	DEVELOPMENT		IN REVW	IN REVW	
7	PP-1	SC-2	-171 COMP PKG A	A10-09-63	01-09-64	07-08-63	-26
7	PP-1	SC-2	-173 COMP PKG B	11-04-63	01-09-64	07-08-63	-26
7	PP-1	SC-2	-169 COMP PKG C	11-11-63	01-09-64	07-08-63	-26
7	PP-1	SC-2	-167 COMP PKG D	A10-22-63	01-09-64	07-08-63	-26
7	PP-1	SC-2	-189 TCA 25#	11-29-63	01-09-64	07-08-63	-26
7	PP-1	SC-2	-187 PRESS TANK	A10-10-63	01-09-64	07-08-63	-26
7	PP-1	SC-2	-181 OXID TANK	10-25-63	01-09-64	07-08-63	-26
7	PP-1	SC-2	-179 FUEL TANK	10-25-63	01-09-64	07-08-63	-26
7	PP-1	SC-2	-145 REGULATOR	11-08-63	01-09-64	07-08-63	-26
7	PP-1	SC-2	-21 INDICATOR	A10-16-63	01-09-64	07-08-63	-26
7	PP-1	SC-2	-201 CARTRIDGE	11-22-63	11-29-63	02-28-64	+13
8	PP-2	SC-3A	-151 COMP PKG A	11-22-63	01-31-64	08-06-63	-25
8	PP-2	SC-3A	-175 COMP PKG B	11-15-63	01-31-64	08-06-63	-25
8	PP-2	SC-3A	-153 COMP PKG C	11-22-63	01-31-64	08-06-63	-25
8	PP-2	SC-3A	-155 COMP PKG D	11-15-63	01-31-64	08-06-63	-25
8	PP-2	SC-3A	-189 TCA 25#	02-07-64	02-15-64	08-06-63	-27
8	PP-2	SC-3A	-149 PRESS TANK	11-15-63	01-31-64	08-06-63	-25
8	PP-2	SC-3A	-185 OXID TANK	11-01-63	01-31-64	08-06-63	-25
8	PP-2	SC-3A	-183 FUEL TANK	11-15-63	01-31-64	08-06-63	-25
8	PP-2	SC-3A	-177 REGULATOR	11-08-63	01-31-64	08-06-63	-25
8	PP-2	SC-3A	-199 INDICATOR	A10-16-63	01-31-64	08-06-63	-25
9	PP-3	SC-3	END ITEM-TCA	02-23-64	02-27-64	08-10-63	-28
10	PARTL	VENDR	QUAL-COMP ONLY	IN REVW		09-15-63	
11	PARTL	VENDR	OSR-COMP ONLY	IN REVW		11-01-63	
12	PA-1	SC-4	END ITEM	03-26-64	03-29-64	11-17-63	-19

System: Rocket System
Subsystem: Retro [illegible]
Vendor: Thiokol
Date: 25 Oct. 1963

MONTHLY SUMMARY

ENGINEERING STATUS

1. The design used in "pop gun" phase II has been approved for resumption of motor development testing.

2. Wind tunnel "pop gun jr." test results were discussed 23 & 24 Oct. 1963 at a meeting between MAC and NASA personnel. It was decided that no further pop gun tests would be required.

PROCUREMENT

1. Thiokol is working with a sub-vendor to obtain the die forgings required by NCI #84738.

A SEMBLY & DELIVERY STATUS

1. The MAC O.K. to resume testing contains a constraining restriction for Thiokol. Only 50% of the motor development testing can use the readily available ring forgings. The remaining tests, and all production units, must be made from die forgings.

2. It is anticipated that availability of rockets made from die forging will still be available as previously scheduled. However, it will be necessary to produce and deliver, prior to completion of the qual tests.

TEST STATUS

1. The second phase of "pop gun" testing, abort firing, was performed at AEDC on 4 Oct. 1963. Since all four rockets fired successfully, the third phase has been deleted.

2. MAC notified Thiokol via NCI #84725 and NCI #84738 to proceed with motor development tests. Prior to commencement, Thiokol must submit their test program to MAC.

3. Motor Development
Thiokol estimates that sufficient hardware will be available, and testing can be resumed 5 Nov. The tentative completion date is 13 Jan. (Ref. Line #7)

4. Initiator Qual
Testing remains in progress and is scheduled to be complete by 6 Nov. (Ref. Line 25). MAC furnished twenty additional wire bundles per Thiokol's request. Pyrogen qual will be conducted upon completion of this test, and accomplished by 7 Jan. 1964.

5. Motor Qual
Testing will begin after motor development completion. The tentative dates are 21 January start and 20 April completion. (Ref Line 9).

GEMINI SPACECRAFT

CONTRACT NO. NAS 9-170

RETRO-ROCKETS (VENDOR: THIOKOL)

STATUS CHART

REPORT NO. 8580-1 -33

LAST PROGRAM SCHEDULE CHANGE: 1 APRIL 1963

STATUS AS OF: 25 OCTOBER 1963

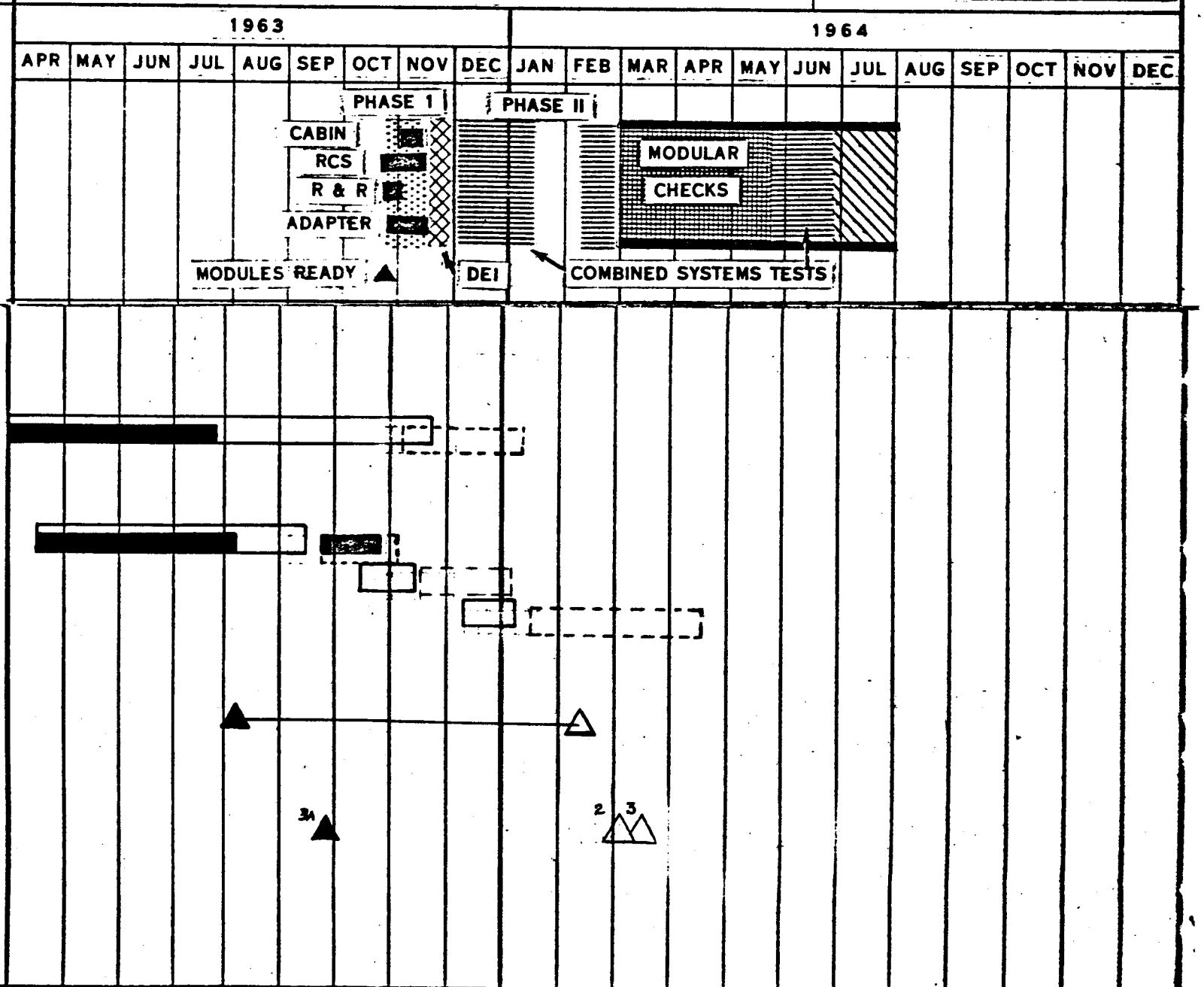

LEGEND
- ▽ Test Proposal Due
- ◊ Hardware Available
- ▭ Test Activity
- ○ Report Due
- ☆ Report Approved

SOLID INDICATES ACTUALS

QUALIFICATION & DEV. TEST STATUS
RETRO ROCKETS
THIOKOL CHEMICAL CORP. 52-50702

25 Oct. 1963.
REV A.

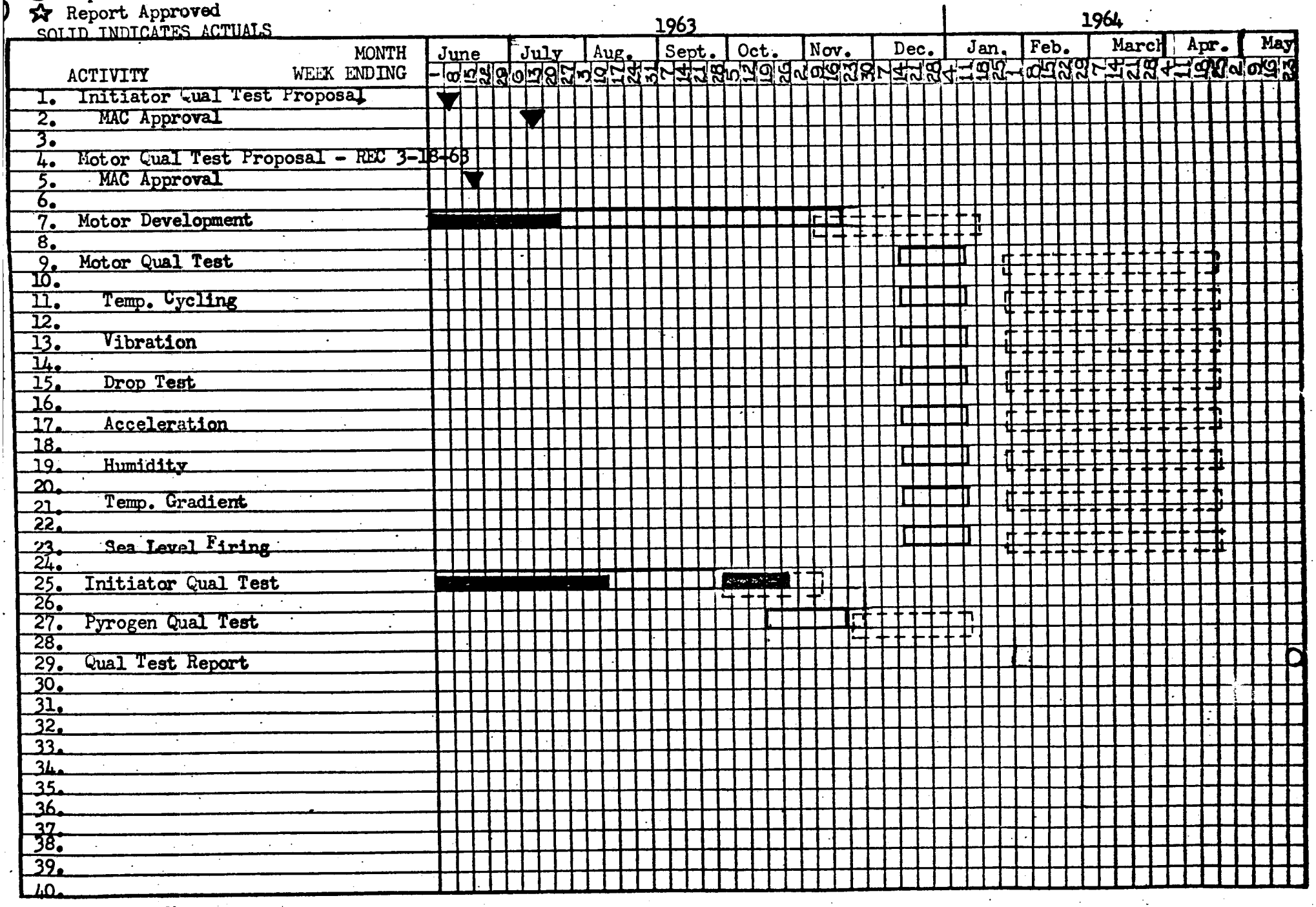

MAC 2274V (27 APR 59)

VENDOR DELIVERY STATUS REPORT

RETROGRADE ROCKETS — CHART NO: 03-C

THIOKOL — 25 OCTOBER 1963

UNIT NO	TYPE	USAGE	COMPONENT	VENDOR W/S	AVAIL FOR INSTL	REQD FOR INSTL	SLACK
1-19	EP 1-19	VENDR	DEVELOPMENT			A 3-13-63	
20-60	PP 1-40	VENDR	QUALIFICATION		11-06-63	11-06-63	0
1-19	EMPT 1-4	CTU	EMPTY ROCKETS			A 7-01-63	
1-19	INRT 1-4	SC-3A	INERT ROCKETS		A 9-23-63	10-15-63	
61-64	PA 1-4	SC-2		2-05-64	3-05-64	3-17-64	+12
65	PA-5	SPARE	1 PIECE	2-05-64	3-05-64	3-30-64	+25
66-69	PA 6-9	SC 3		2-14-64	3-14-64	5-16-64	+59
70-72	PA 10-12	AD-13		2-28-64	3-28-64	4-27-64	+30
73-76	PA 13-16	SC-4		3-15-64	4-15-64	7-21-64	+114
77-79	PA 17-19	SPARE	3 PIECES	6-01-64	7-01-64	7-31-64	+30
80-83	PA 20-23	SC-5		7-28-64	8-28-64	8-28-64	0
4-87	PA 24-27	SC-6		9-28-64	10-28-64	10-28-64	0
88-91	PA 28-31	SC-7		11-27-64	12-27-64	12-27-64	0
92-95	PA32-35	SC-8		1-25-65	2-25-65	2-25-65	0
96-99	PA 36-39	SC-9		3-29-65	4-29-65	4-29-65	0
100-103	PA 40-43	SC-10		5-28-65	6-28-65	6-28-65	0
104-107	PA 44-47	SC-11		7-28-65	8-28-65	8-28-65	0
108-111	PA 48-51	SC-12		9-28-65	10-28-65	10-28-65	0
112-115	PA 52-55	AD-14		11-28-65	12-28-65	12-28-65	0
116-119	PA 56-59	AD-15		1-28-66	2-28-66	2-28-66	0

VENDOR AGE STATUS REPORT

RETRO ROCKETS — CHART NO: 03-D

THIOKOL — 25 OCTOBER 1963

PART NO.	NOMENCLATURE	UNIT NO.	W/S DATE	AVAIL FOR USAGE	REQD FOR INSTL	SLACK
			(HANGAR)			
E400012-1	SLING RETRO RD	1		A 8-09-63		
E400012-1	SLING RETRO RD	2		A 8-09-63		
E400013-1	DOLLY RETRO RD	1		A 8-09-63		
E400014-1	EMPTY RETRO RD	2	2-01-64	2-07-64	2-07-64	0
E400014-1	EMPTY RETRO RD	1	2-01-64	2-07-64	2-07-64	0

MONTHLY SUMMARY

System: Guidance & Control
Subsystem: I.G.S.
Vendor: I.B.M.
Date: 25 Oct. 1963

ENGINEERING STATUS

1. A logic design change was made in the computer/radar interface on computer #7 and will be incorporated in the latter units. The effect on schedule is shown in the Assembly & Delivery section of this report.

2. A second stage engine cut off relay was found to be generating noise. A temporary capacitance fix was installed on computer #7 and a permanent fix is being investigated. This fix will be incorporated on latter units.

3. A meeting is planned for 28 Oct. between IBM and MAC to discuss the technical status of the computers.

PROCUREMENT

1. IBM presently has a complete IMU system for use in IGS SC 2 SST. The Inertial Platform and System Electronics were shipped to IBM from MAC on the 19 Oct. The IGS Power Supply for this system was received by IBM from Honeywell on 24 Oct.

ASSEMBLY & DELIVERY

IGS #5 Exploratory Qual
Computer #5 started vibration test 13 Sept., however, malfunctions occurred during vibration of this unit. A failure was encountered upon vibration at 50% + 75% power. Monitoring lines were added, a circuit module was replaced and the computer was reassembled. On 4 Oct, the computer failed to function when IBM attempted to load diagnostic program. It was found that three pins were bent on one of the edge connectors. This was corrected and the diagnostic program was loaded and verified. However, upon vibration at .1 power in the vertical plane, the computer again malfunctioned. The computer was disassembled and it was discovered that the 25 volt bus bar terminal on panel A4 was loose. This was corrected. Upon vibration, the computer malfunctioned at 10% power showing input output errors. Also the TLA 2 output was going to zero under vibration. On 14 Oct., the computer completed 30 seconds of vertical vibration at 100% power without malfunction with the TLA 2 latch ourput and DACD grounded. However, a failure was encountered in major horizontal vibration. An instrumentation wire was repaired and major and minor vibration at 100% power was performed with the TLA 2 on panel 2 and the DACD grounded. Presently, IBM is investigating the cause of intermittents experienced when the TLA 2 is not grounded.

IGS #4 SC 2 SST
Estimated will ship 17 Nov. This unit slipped two weeks since the last report. This slippage is the result of the late delivery of the IMU and rework required on the computer. Rework was performed on panel #1 of the computer and trimpot adjustments were required to get the proper schmoo curve. It was also discovered that a 960 MFD capacitor was wired

across the 27.2 Volt input in place of a 430 MFD capacitor. This was corrected. The computer started formal acceptance testing 23 Oct.

IGS #6 Formal Qual
Estimated start of Formal Qual 24 Nov. The reason for slippage in this unit is rework performed on the MIB Boards.

IGS #7 SC 2 Fly
Estimated will ship 21 Dec. This unit slipped two weeks since the last report. The reason for this slippage is the addition of a capacitor across the second stage engine cut off relay, rework on MIB Boards, insertion of epoxy into all adapters to prevent intermittence, and a design change to the computer/radar interface.

IGS #8 SC 3
Estimated will ship 1 Jan. 1964. Principal reasons for slippage of this unit is incorporation of the logic design change in the computer/radar interface.

TEST STATUS

Qual 1 IGS #4
The computer started Exploratory Qual 13 Sept. Due to malfunctions which occurred during vibration testing Qual Testing will end the first week of February.

Qual 2 IGS #6
Expected start date of Formal Qual is 24 Nov. 1963.

The start of OSR is constrained by the completion of Formal Qual Test. The expected start of OSR is 7 March 1964.

ACE

1. No ACE has been shipped since the last report.

2. Test console computer system #2, expected to be shipped 4 Oct., was delayed due to problems involved in the 12V Power Supply Circuit. It is expected to be shipped 30 Oct. 1963.

GEMINI SPACECRAFT

CONTRACT NO. NAS 9-170

INERTIAL GUIDANCE SYSTEM - (VENDOR: I.B.M.)

STATUS CHART

REPORT NO. 8580-1 -33

LAST PROGRAM SCHEDULE CHANGE: 1 APRIL 1963

STATUS AS OF: 25 OCT. 1963

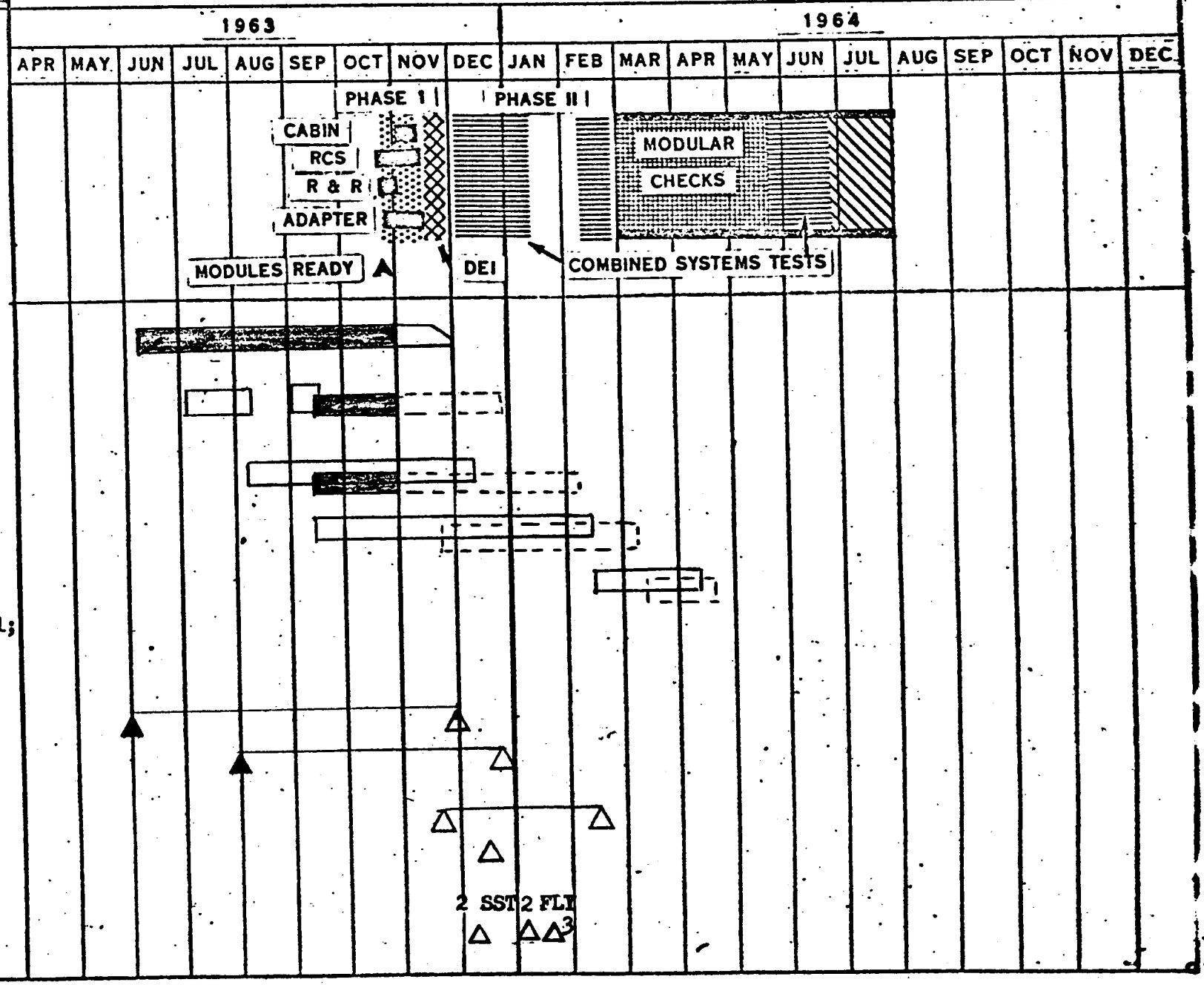

LEGEND
▽ Test Proposal Due
◊ Hardware Available
▭ Test Schedule
○ Report Due
☆ Report Approved
SOLID INDICATES ACTUAL

QUALIFICATION AND DEVELOPMENT TEST STATUS
INERTIAL GUIDANCE SYSTEM
IBM

SCD 52-87710 COMPUTER
SCD 52-87712 INCREMENTAL VELOCITY IND
SCD 52-87713 MANUAL DATA INSERTION UNIT

Date: 25 Oct. 1963

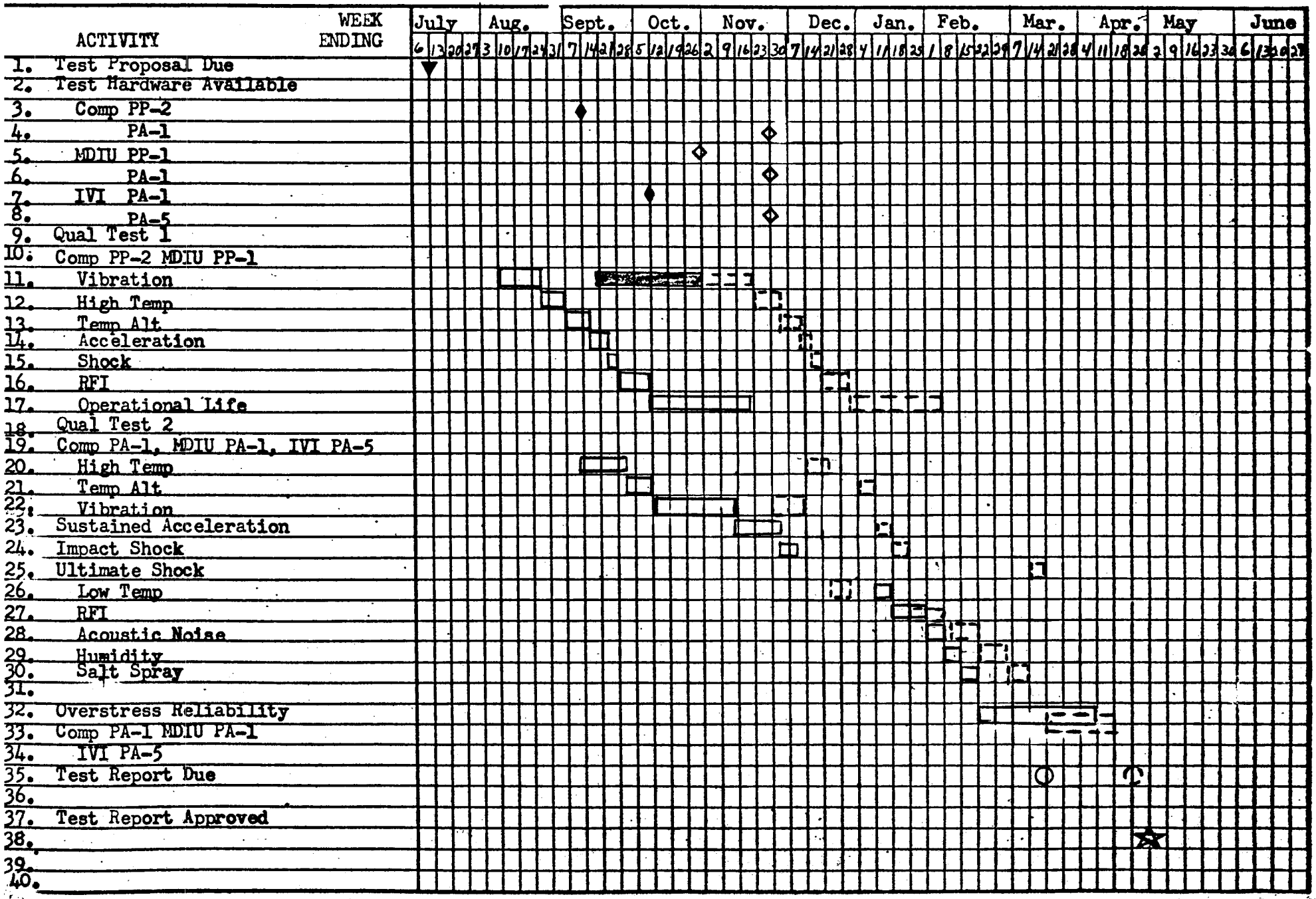

VENDOR DELIVERY STATUS REPORT

SYSTEM: [illegible] G S. CHART NO. 04 [illegible]

VENDOR: I B M 25 OCTOBER 19[illegible]

UNIT NO.	TYPE	USAGE	COMPONENT	VENDOR W/S	AVAIL FOR INSTL	REQD FOR INSTL	SLACK
1	EP-1	ESTU				A 5-21-63	
2	EP-2	CCTU				A 8-01-63	
3	EP-3	CTU				A 7-22-63	
5	PP-2	VENDR	EXPLOR QUAL		A 9-13-63	7-27-63	- 7 2
4	PARTL	SPARE	SST		[illegible]-30-63	9-30-63	- 8
4	PP-1	SC-2 SST		11-17-63	12-08-63	5-11-63	[illegible]
4	PP-1	SC-3A			[illegible]-04-64	10-15-63	-16
6	PA-1	VENDR	FORML/QUAL OSR		[illegible]-24-63	9-07-63	[illegible]
7	PA-2	SC-2	FLY	12-21-63	[illegible]-04-64	10-14-63	[illegible]2
8	PA-3	SC-3		1-01-64	[illegible]-15-64	11-15-63	- 9
9	PA-4	VENDR	MISS ENVIR-CCTU		12-12-63	11-15-63	- 4
10	PA-5	SC-4		[illegible]-02-64	[illegible]-16-64	12-22-63	- 4
11	PA-6	SPARE		1-15-64	1-22-64	11-30-63	- 5
12	PA-7	SC-5		2-14-64	2-28-64	2-23-64	[illegible]
13	PA-8	SPARE		3-13-64	3-20-64	3-30-64	[illegible]
14	PA-9	SC-6		4-13-64	4-27-64	4-24-64	[illegible]
15	PA-10	SC-7		5-15-64	5-29-64	6-27-64	+ 5
16	PA-11	SC-8		6-12-64	6-26-64	8-29-64	+ 9
17	PA-12	SC-9		7-13-64	7-27-64	10-20-64	+12
18	PA-13	SC10		8-14-64	8-28-64	12-12-64	+[illegible]
19	PA-14	SC-11		9-14-64	9-28-64	2-19-65	+20
20	PA-15	SC-12		10-14-64	10-28-64	4-19-65	+23

VENDOR AGE STATUS REPORT

INERTIAL GUIDANCE SYSTEM — CHART NO. 04-D

VENDOR: I.B.M. — 25 OCTOBER 1963

PART NO.	NOMENCLATURE	UNIT QTY.	W/S DATE	AVAIL FOR USAGE	REQD FOR USAGE	SLACK
	(SPACECRAFT SYSTEM TEST)					
52-270003-1	COMP TEST CONSOLE	1		A 8-01-63		
52-270003-1	COMP TEST CONSOLE	2	10-31-63	11-14-63	9-01-63	-13
52-270039-1	G+CS SIMULATOR	2	12-10-63	12-24-63	9-01-63	-16
52-270051-1	COMP HDL DOLLY	1		A 9-01-63		
	(HANGAR)					
52-270003-1	COMP TEST CONS	3	11-07-63	11-21-63	10-14-63	-5
52-270003-1	COMP TEST CONS	5	1-01-64	1-15-64	01-03-64	-11.8
52-270023-1	MEMORY LOADER	2	2-01-64	2-15-64	11-24-63	-12
52-270023-5	TEST PROGRAM CONS	2	2-01-64	2-15-64	11-24-63	-12
52-270023-7	BENCH TEST EQUIP	2	2-01-64	2-15-64	11-25-63	-12
52-270050-1	COMP DOLLY BTE	2	2-01-64	2-15-64	11-22-63	-12
52-270034-1	MDIU IVI TESTER	1	2-01-64	2-15-63	9-27-63	-23
52-270039-1	G+CS SIMULATOR	2	1-20-64	2-03-64	10-23-63	-13.2
52-270051-1	COMP HDL DOLLY	4	12-24-63	1-07-63	11-22-63	-6
52-270051-1	COMP HDL DOLLY	3	11-31-63	12-14-63	11-22-63	-3.4
	(PRE-INSTALLATION ACCEPTANCE)					
52-270023-3	MEMORY LOADER	1	A 5-25-63	12-01-63		
52-270023-7	BENCH TEST EQUIP	1	11-07-63	12-01-63	9-12-63	-12
52-270050-1	COMP DOLLY BTE	1	11-07-63	11-31-63	9-01-63	-13
52-270034-1	MDIU IVI TESTER	1		A 6-01-63		
52-270051-1	COMP HDL DOLLY	2		A 5-30-63		
52-270023-5	TEST PROGRAM CONS	1		A 6-01-63		
	(PAD)					
52-270003-1	COMP TEST CONSOLE		12-01-63	12-15-63	11-31-63	2

System: Guidance & Control
Subsystem: Inertial Measuring Unit
Vendor: Minneapolis-Honeywell St. Petersburg
Date: 25 Oct. 1963

MONTHLY SUMMARY

ENGINEERING STATUS

1. Tests were performed at MAC using SC 2 SST IMU and a breadboard high frequency pulse width regulator. Enough data was received from these tests to prove out the basic design of a new Power Supply.

2. Honeywell is having high contact bearings placed in the rotary components and is applying stiffeners with epoxy to these components. This is believed to be the solution to the vibration problem that was encountered. If this approach does not work, the gimbles may be weakened to reduce the energy input on the gyros or shock mounts may be placed on the fourth gimble.

PROCUREMENT

1. A strike has occurred at Clifton Precision Products, supplier of rotary components. Presently there is no affect on the IMU program as Honeywell has sufficient rotary components for platforms through Production Article 8.

ASSEMBLY & DELIVERY

Production Article 1 SC 2 SST
This system was shipped to MAC 8 Oct. (see Engineering section of this report). Upon running tests with this system, a malfunction occurred in the IGS Power Supply. It alone was returned to Honeywell and the system electronics and inertial platform was shipped to IBM from MAC on 19 Oct. An IGS Power Supply was shipped to IBM from Honeywell 24 Oct.

Production Article 2 Exploratory Qual
This system will start Qual test 7 Nov. The slippage of this system is a result of a failure encountered in the static inverter and delays due to malfunctions in E.S. Level Test Station.

Production Article 3 SC 2 Fly
Estimated will ship 8 Nov. The slippage of this unit is a result of incorporation of a fix in the Power Supply to solve an oscillation problem and malfunctions in E.S. Level Test Station.

The inertial platform of this system is not a flyable platform due to the fact that vibration fixes are not incorporated in this unit. Also the IGS Power Supply does not have high frequency pulse regulators in it. A decision regarding retrofitting of these items or replacement of the entire system is expected shortly.

Production Article 4 SC 3 Fly
Estimated will ship 22 Nov. A similar situation exists with this system in that it also does not have a flyable platform and a new designed Power Supply.

A decision regarding retrofitting or replacement of the entire system is expected shortly.

AGE

1. No items were shipped since the last report. All shipments of AGE were held pending receipt of revised SCD's. The revision is specifically directed at nameplate and identification of MAC-Minneapolis-Honeywell AGE. These units are expected to be shipped 15 Nov. 1963.

TEST STATUS

Qual 1 PA 2
This unit is expected to start Exploratory Qual 4 Nov. 1963.

Qual 2 PA 5
Formal Qual test is expected to start 7 Dec. 1963.

OSR
This system, consisting of a Power Supply and System Electronics is expected to start OSR test 30 Oct. 1963.

GEMINI SPACECRAFT

CONTRACT NO. NAS 9-170

INERTIAL MEASURING UNIT
(VENDOR: MINNEAPOLIS HONEYWELL)
STATUS CHART

REPORT NO. 8580-1 -33
LAST PROGRAM SCHEDULE CHANGE: 1 APRIL 1963
STATUS AS OF: 25 OCT. 1963

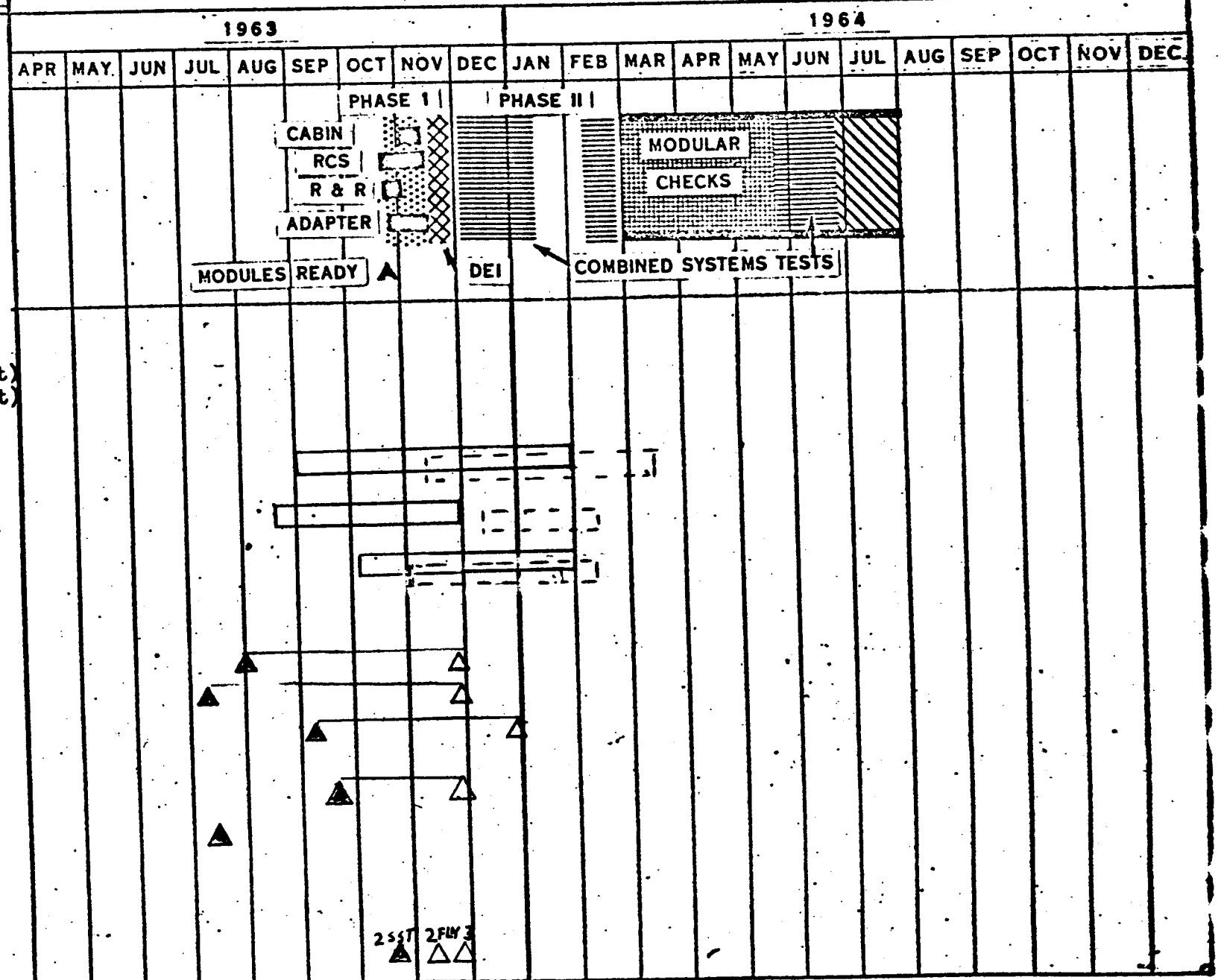

LEGEND
- ▽ Test Proposal Due
- ◇ Hardware Available
- ▭ Test Schedule
- ○ Report Due
- ☆ Report Approved

QUALIFICATION AND DEVELOPMENT TEST STATUS
INERTIAL MEASUREMENT UNIT
MINNEAPOLIS HONEYWELL
SCD 52-87717

DATE: 25 Oct. 1963

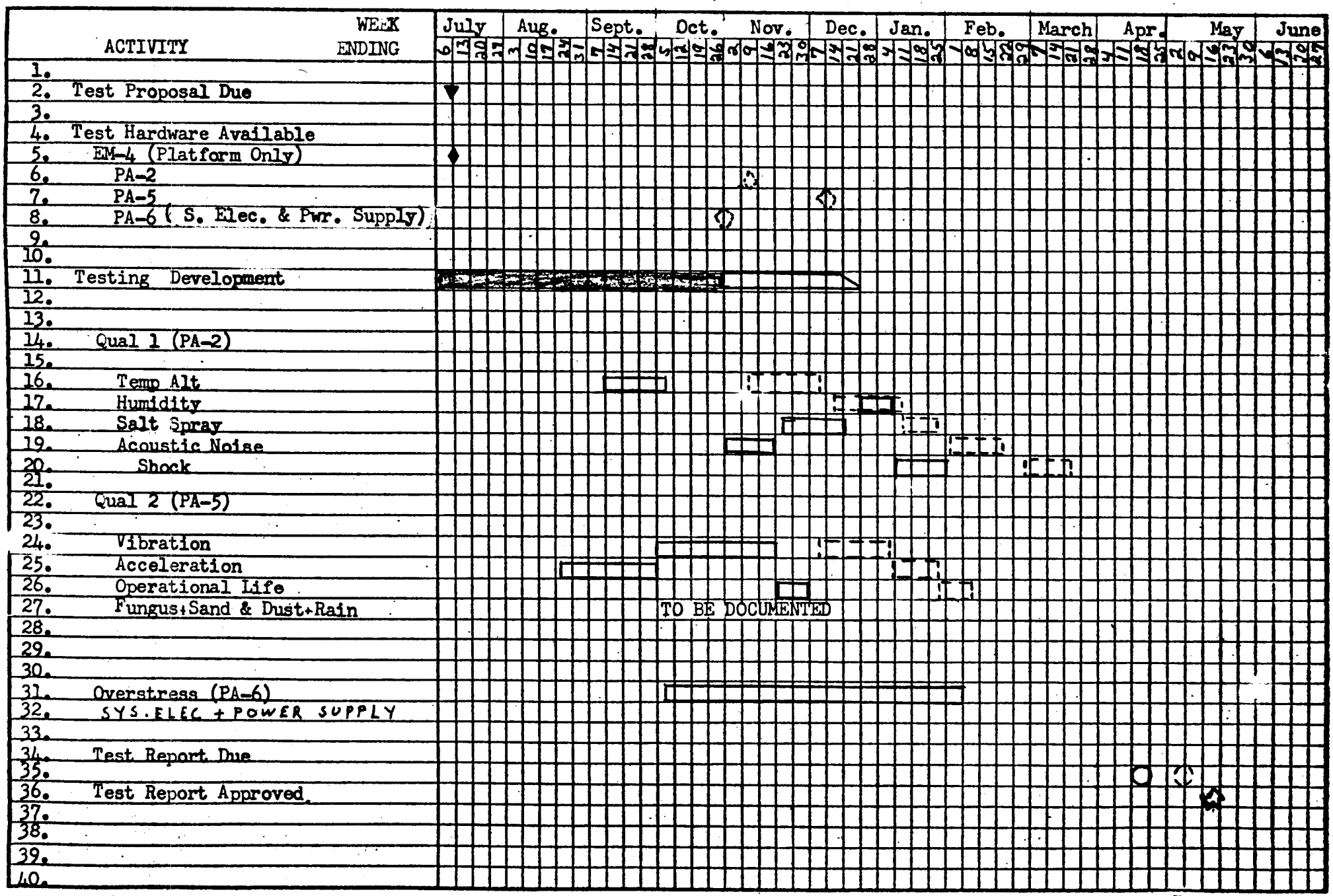

MAC 2274V (27 APR 59)

VENDOR DELIVERY STATUS REPORT
SYSTEM - INERTIAL MEASURING UNIT
VENDOR - MINNEAPOLIS-HONEYWELL-ST. PETE

CHART NO. [illegible]

25 OCTOBER 1963

UNIT NO	TYPE	USAGE	COMPONENTS	VENDOR V/S	AVAIL. FOR INSTL.	REQ'D FOR INSTL.	SLACK
1	BB-1	VENDR	DEVELOPMENT			A08-15-62	
2	BB-2	VENDR	DEVELOPMENT			A09-01-62	
3	EP-1	ESTU				A03-10-63	
4	EP-2	VENDR	CCTU MAC-IBM			A05-13-63	
5	EP-3	CTU				A06-17-63	
6	EP-5	VENDR	DEVELOPMENT			A08-01-63	
7	PA-1	SC-2 SST			A10-24-63	09-01-63	-8
7	PA-1	SC-3A			01-04-64	10-15-63	-12
8	PA-2	VENDR	QUAL TEST-1		11-04-63	07-25-63	-14
9	PA-3	SC-2	FLY	11-08-63	11-12-63	10-19-63	-4
10	PA-4	SC-3		11-22-63	11-26-63	11-01-63	-4
11	PA-5	VENDR	QUAL TEST-2		12-07-63	08-31-63	-13
12	PA-6	VENDR	OSR		10-30-63	09-26-63	-5
13	PA-7	SPARE	SST	01-12-64	01-19-64	09-30-63	-16
14	PA-8	SPARE		02-02-64	02-09-64	11-30-63	-11
15	PA-9	SC-4		02-23-64	03-06-64	12-22-63	-10
16	PA-10	SPARE		03-15-64	03-22-64	01-31-64	-9
17	PA-11	SC-5		04-03-64	04-16-64	02-23-64	-8
18	PA-12	SPARE		04-24-64	05-01-64	03-31-64	-5
19	PA-13	SC-6		05-15-64	05-28-64	04-24-64	-4
20	PA-14	SC-7		06-05-64	06-18-64	05-27-64	+2
21	PA-15	SC-8		06-26-64	07-08-64	08-29-64	+8
22	PA-16	SC-9		07-17-64	07-30-64	10-20-64	+12
23	PA-17	SC-10		08-07-64	08-20-64	12-12-64	+16
24	PA-18	SC-11		08-28-64	09-10-64	02-19-65	+24
25	PA-19	SC-12		09-28-64	10-10-64	04-19-65	+27

VENDOR AGE STATUS REPORT
IMU
MINNEAPOLIS HONEYWELL

DATE: 10-25-6[illegible]

PART NUMBER	COMPONENT	UNIT NO.	VENDOR W/S	AVAIL. FOR USAGE	REQ'D FOR USAGE	STATUS
		PRE INSTALLATION ACCEPTANCE				
52E270007-1	ADAPTER KIT	1		A09-01-63		
52E270020-1	TEST CONSOLE PLAT	1		A08-01-63		
52E270032-1	TEST CONSOLE IMU PLA	1	A07-20-63	12-01-63		
52E270053-1	IMU TEST CABLE SET	1	A07-05-63	12-01-63		
		SPACECRAFT SYSTEM TEST				
52E270008-1	TEST PT. PANEL	1	A07-05-63			
52E270036-1	3 AXIS DOLLY	1	SHIPPED CONSIGNMENT MAC-CAN BE USED FOR PIA IF NEEDED			
52E270036-1	3 AXIS DOLLY	2	11-15-63	11-29-63	09-01-63	-1[illegible]
52E270042-1	TEST CONSOLE	1	A07-26-63			
52E270042-1	TEST CONSOLE IMU SYSTEMS	2	11-15-63	11-29-63	07-06-63	[illegible]
52E270054-1	PLAT EXT CABLE SET	1	A07-26-63			
52E270054-1	PLAT EXT CABLE SET	2	11-15-63	11-29-63	09-01-63	-12
52E270006-1	MT. REF	1	11-15-63	11-29-63	09-15-63	-1[illegible]
		HANGAR				
52E270006-1	MT REF	2	11-25-63	12-08-63	10-11-63	-8
52E270007-1	ADAPTER KIT	2	11-15-63	11-29-63	10-11-63	-9
52E270008-1	TEST PT. PANEL	3	11-15-63	11-29-63	12-30-63	+[illegible]
52E270020-1	TEST CONSOLE	2	11-15-63	11-29-63	09-16-63	10
52E270032-1	TEST CONSOLE	2	11-15-63	11-29-63	10-04-63	[illegible]
52E270036-1	3 AXIS DOLLY	4	11-15-63	11-29-63	9-12-63	-11
52E270036-1	3 AXIS DOLLY	5	11-22-63	12-06-63	9-12-63	-12
52E270042-3	TEST CONSOLE	1	A09-09-63			
52E270042-3	TEST CONSOLE IMU	2	12-15-63	12-29-63	12-03-63	-[illegible]
52E270053-1	IMU TEST	2	11-15-63	11-30-63	10-25-63	-[illegible]
52E270054-1	PLAT EXT CABLE SET	3	11-15-63	11-29-63	12-31-63	+[illegible]
52E270059-1	2 AXIS DOLLY	2	11-15-63	11-29-63	10-01-63	-8
		PAD				
52E270008-1	TEST PT. PANEL	2	A09-20-63			
52E270042-1	TEST CONSOLE IMU SYSTEMS	3	11-15-63	11-29-63	10-25-63	-[illegible]
		TBM				
52E270036-1	3 AXIS DOLLY	5	SHIPPED CONSIGNMENT MAC			

MONTHLY SUMMARY

[illegible]
[illegible]
Vendor: [illegible]
Date: 25 Oct. 1963

ENGINEERING STATUS

1. All power sypply capacitors will be changed to a value of [illegible] UF with 90 volts DC working voltage at 35 degrees C. The reason for this change is to eliminate an overstress application on [illegible] supply capacitors. This change will not affect delivery of the units.

2. The minimum pulse generator was redesigned to eliminate the [illegible] capacitor CI and pulse transformer TI. The minimum pulse generator formerly designed was susceptable to inadvertent [illegible] as a result of transients on the input which cause ringing [illegible] secondary of the input transformer. This change will not [illegible] delivery of the units.

PROCUREMENT

1. Production of rate gyros at Minneapolis-Honeywell's Boston plant is on schedule and no problem is anticipated in this area.

ASSEMBLY & DELIVERY

1. The delivery schedule has slipped because of design changes and test equipment modification. The overall program delivery schedule has been stretched out from 9-30-64 to 6-15-65 by Minneapolis-Honeywell. These new delivery dates are given in the Vendor Delivery Status Report.

2. Only the power inverter has been shipped for S/C 3. The other S/C 3 units have slipped approximately two (2) weeks from dates given in the last monthly report.

TEST STATUS

Qual #1
The start of low temperature tests (Line 15) was delayed to 12 Oct because two modulator modules had to be replaced. During low temperature testing, two rings and two load wires were noted to be [illegible]. These workmanship errors were corrected and testing was resumed. The test is expected to be completed prior to 12 Nov.

Qual #2
The performance test (Line 26) was completed on [illegible] Oct. [illegible] and electronic interference tests (Line 27) have started and [illegible] pre radio frequency interference tests. The pitch primary [illegible] scanner was inoperative on the ACE unit. [illegible] was traced [illegible] transistor and the module will be replaced [illegible] to 26 Oct. [illegible] cause of the failure has not been [illegible].

OSR
Start of [illegible] because of the [illegible]

AGE

1. The only P.I.A. tester available at Minneapolis-Honeywell for post-delivery acceptance testing is down for retrofitting. It is not expected to be available for use before 28 Oct. This is causing a large backlog of equipment to build up which requires over 200 hours of PIA test time to recover.

2. No AGE equipment was shipped since the last report but all AGE equipment is expected to be shipped before the end of this year.

GEMINI SPACECRAFT

CONTRACT NO. NAS 9-170

ATTITUDE CONTROL AND MANEUVER ELECTRONICS

VENDOR: MINNEAPOLIS-HONEYWELL

STATUS CHART

REPORT NO. 8580-1 -33

LAST PROGRAM SCHEDULE CHANGE: 1 APRIL 1963

STATUS AS OF: 25 OCT. 1963

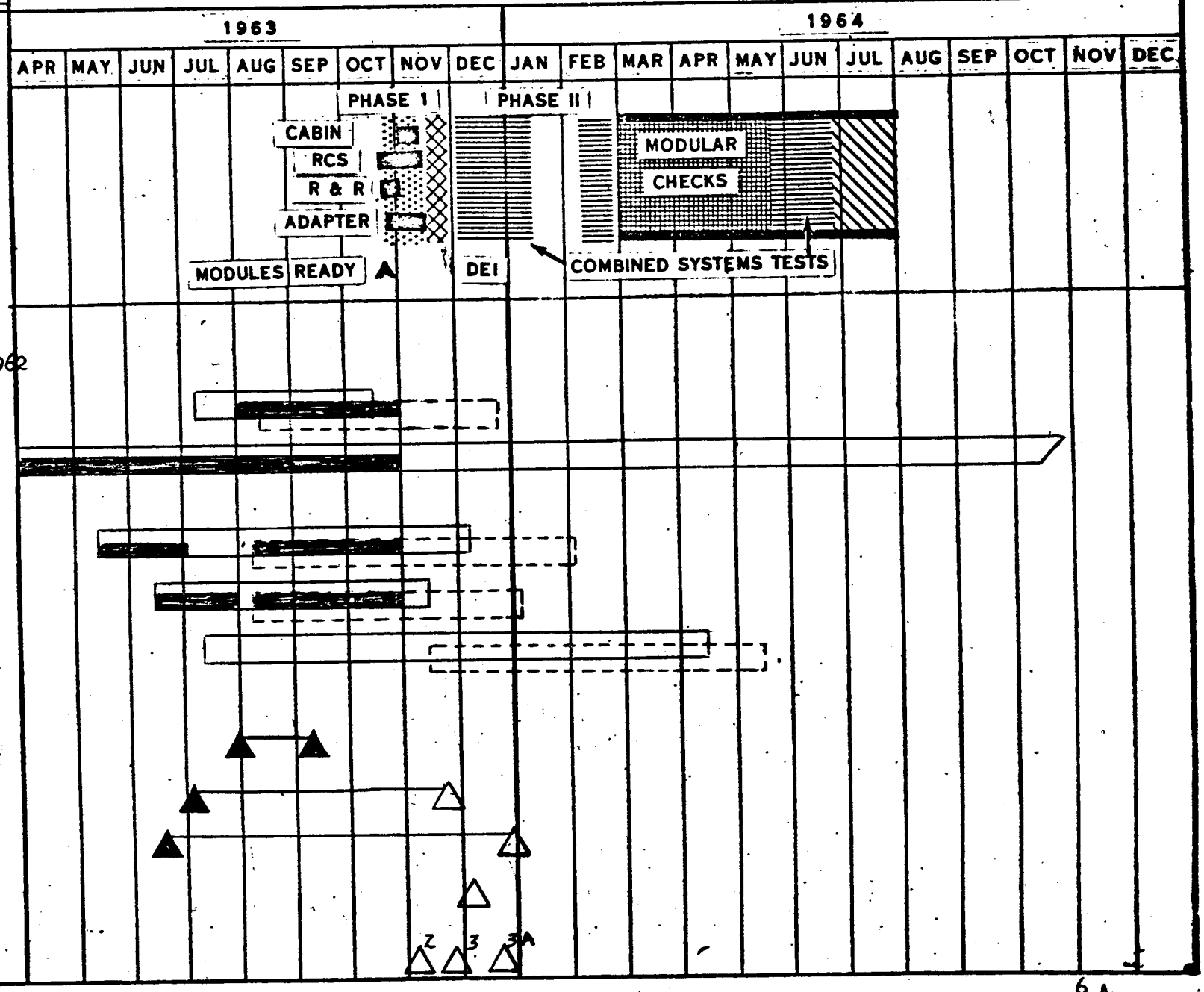

MAJOR TESTS

1. ESTU - Compl. Oct. 1962
2. CTU
3. VENDOR DEVELOPMENT

QUALIFICATION TESTS

4. UNIT 1
5. UNIT 2
6. OSR

AGE

7. PIA
8. SST
9. CAPE - HANGAR
10. CAPE - PAD

FLIGHT HARDWARE

11. AFI

LEGEND
- ▽ Test Proposal Due
- ◊ Hardware Available
- ▭ Test Schedule
- ○ Report Due
- ★ Report Approved

Solid Indicates Actuals

QUALIFICATION AND DEVELOPMENT TEST STATUS
ATTITUDE CONTROL AND MANEUVER ELECTRONICS
MINNEAPOLIS-HONEYWELL
SCD 52-87700

Chart No. 06-B
Rev. A: 27 Sept. 1963
Rev. B: 25 Oct. 1963

ACTIVITY	WEEK ENDING
1. Test Proposal	3/15
2.	
3. Test Hardware Available	
4. Breadboard	5/8/62
5. PA-1	
6. PA-2	
7. PA-4	
8. Testing	
9. Development (Breadboard)	
10.	
11. Qual. 1(PA-1)	
12. Pre Qual. Accep.	
13. Performance	
14. High Temp. / Alt.	
15. Low Temp.	
16. Vibration	
17. Acceleration	
18. Acoustic Noise	
19. Salt Fog	
20. Performance	
21. Pre Qual Accep.	
22. 44 7 G Shock	
23.	
24. Qual. 2 (PA-2)	
25. Pre Qual Accep.	
26. Performance	
27. E And E Interference (RFI)	
28. Humidity	
29. Performance	
30. POA	
31.	
32. Overstress Reliability (PA-4)	
33.	
34. Test Report Due	
35.	
36. Test Report Approved	
37.	
38.	
39.	
40.	

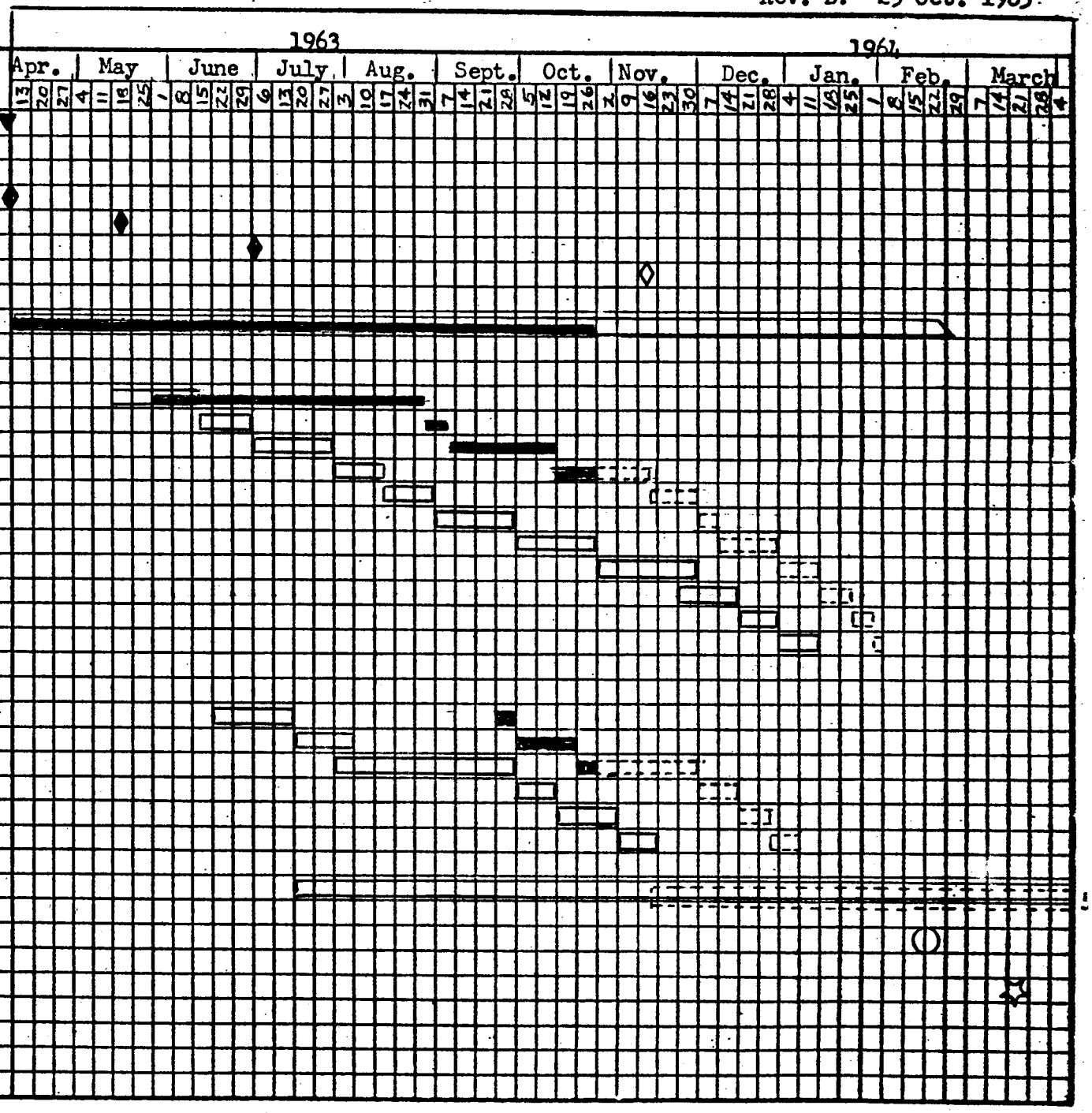

MAC 2274V (27 APR 59)

VENDOR DELIVERY STATUS REPORT
SYSTEM - ACME
VENDOR - MINNEAPOLIS-HONEYWELL MINN.

25 OCTOBER 1963

UNIT NO	TYPE	USAGE	COMPONENT	VENDOR W/S	AVAIL. FOR INSTL.	REQ'D FOR INSTL.	SLACK
1	EP-1	LSTU				A10-22-62	
2	EP-2	TEST	3 AXIS DYNAMIC			A11-07-62	
3	PA-1	VENDR	QUAL-1			A05-15-63	
4	PA-2	VENDR	QUAL-2 LIFE			A07-01-63	
5	PA-3	CTU				A08-08-63	
5	PA-3	SC-3A			12-21-63	10-15-63	10
6	PA-4		OSR		11-13-63	10-15-63	[illegible]
7	PA-5	SC-2	-19 OAME	A09-20-63	11-02-63		
7	PA-5	SC-2	-21 ACE	A09-20-63	11-06-63		
7	PA-5	SC-2	-17 RATE GYRO	A09-13-63	11-01-63		
7	PA-5	SC-2	-29 PWR INVR	A08-27-63	10-26-63		
8	PA-6	SC-3	-19 OAME	11-06-63	11-15-63	08-28-63	[illegible]
8	PA-6	SC-3	-25 ACE	11-13-63	11-21-63	11-12-63	[illegible]
8	PA-6	SC-3	-17 RATE GYRO	11-20-63	11-28-63	11-12-63	[illegible]
8	PA-6	SC-3	-29 PWR INVR	A09-30-63	11-12-63		
9	PA-7	STA 2	-23 ACE	12-03-63	12-11-63	12-01-63	[illegible]
9	PA-7	STA 2	-29 PWR INV	12-05-63	12-13-63	12-01-63	2
10	PA-8	SC-4	-19 OAME	12-17-63	12-26-63	11-18-63	[illegible]
10	PA-8	SC-4	-25 ACE	01-29-64	02-06-64	01-20-64	[illegible]
10	PA-8	SC-4	-17 RATE GYRO	01-23-64	01-31-64	01-20-64	2
10	PA-8	SC-4	-29 PWR INVR	01-30-64	02-07-64	01-20-64	[illegible]
11	PA-9	SC-5		01-30-64	02-07-64	01-23-64	[illegible]
12	PA-10	SPARE	SST	02-20-64	02-28-64	09-30-63	22
13	PART'L	AD-13	-19 OAME	03-09-64	03-18-64	02-01-64	[illegible]
14	PA-11	SC-6		03-25-64	04-02-64	02-29-64	[illegible]
15	PA-12	SPARE	SST	04-10-64	04-18-64	11-30-63	[illegible]
16	PA-13	SC-7		05-05-64	05-14-64	04-30-64	[illegible]
17	PA-14	SPARE	HGR	06-11-64	06-20-64	11-30-63	[illegible]
18	PA-15	SC-8		05-21-64	05-30-64	06-26-64	[illegible]
19	PA-16	SC-9		06-29-64	07-08-64	05-22-64	[illegible]
20	PA-17	SPARE	SST	08-15-64	08-23-64	01-31-64	[illegible]
21	PA-19	SC-10		10-03-64	10-11-64	10-28-64	[illegible]
22	PA-18	SPARE	HGR	10-10-64	10-18-64	01-31-64	[illegible]
23	PA-20	SC-11		12-08-64	12-16-64	12-30-64	[illegible]
24	PA-21	SPARE	HGR	12-20-64	12-28-64	03-31-64	[illegible]
25	PA-22	SC-12		02-06-65	02-14-65	02-27-65	[illegible]
26	PART'L	AD-14	-19 OAME	04-06-65	04-14-65	04-25-65	[illegible]
27	PART'L	AD-15	-19 OAME	06-06-65	06-14-65	06-16-65	[illegible]

VENDOR AGE STATUS REPORT

SYSTEM - ACME

25 OCTOBER 1963

VENDOR: HONEYWELL-Minneapolis

PART NO.	NOMENCLATURE	UNIT NO	VENDOR W/S	AVAIL FOR USAGE	REQD FOR USAGE	SLACK
			(PRE-INSTALLATION ACCEPTANCE)			
52E270009-1	BOX TEST POINT	1		A 7-30-63		
52E270002-1	TEST CONSOLE	1		A 9-23-63		
			(SPACECRAFT SYSTEM TESTS)			
52E270037-901	TEST CONSOLE	1		A 7-03-63		
52E270009-1	BOX TEST POINT	2		A 8-17-63		
52E270037-1	TEST CONSOLE	1		A 9-20-63		
52E270037-1	TEST CONSOLE	2	11-15-63	11-22-63	9-15-63	[illegible]
			(HANGAR)			
52E270019-1	ADAPT RATE	1		A6-18-63		
52E270019-1	ADAPT RATE	2		A6-18-63		
52E270009-1	BOX TEST POINT	3	12-01-63	12-09-63	12-30-63	[illegible]
52E270002-1	TEST CONSOLE	2	11-29-63	12-06-63	9-09-63	[illegible]
52E270037-1	TEST CONSOLE	4	12-31-63	1-07-64	12-06-63	[illegible]
52E270037-1	TEST CONSOLE	5	1-17-64	1-24-64	12-20-63	5
52E270009-1	BOX TEST POINT	4	12-01-63	12-08-63	2-03-64	[illegible]
			(PAD)			
52E270037-1	TEST CONSOLE	3	11-30-63	12-05-63	9-16-63	[illegible]

[illegible] SUMMARY

[illegible]
Subsystem: [illegible]
Vendor: ATL
Date: 25 Oct. 1963

ENGINEERING STATUS

1. The positor assembly fix is being evaluated. This positor assembly fix will be incorporated into the production units by 18 Dec. Retrofitting of previous units will be made in between the production of succeeding units after 18 Dec.

PROCUREMENT

1. No procurement problems exist at this time

ASSEMBLY & DELIVERY STATUS

1. The unit for SC 2, serial number 101, was shipped on 15 Oct. and is expected to be available for usage on 27 Oct.

2. To meet the schedule now given by ATL quality problems will have to be resolved. Some sensor head castings show signs of leaching and non-compliance with Quality Control Standards is evident. On the positive side, equipment used for positor alignment was moved into a semi-clean room atmosphere. Also base plate castings were found to be misdrilled, but six base castings were air shipped as a back up in event the misdrilled castings are rejected. In addition, ATL has hired an additional quality control engineer.

3. The delivery of later units have slipped for the following reasons

   a. Two shift operation on mechanical assembly of the sensor head was not possible until the night shift man was first trained by the day shift man. This factor is also slowing up the assembly of the electronics box.

   b. Fit of the filters in the telescopes was too tight and had to be modified.

   c. Rework on the first unit necessitated pulling the only trained personnel off of work on the second and third units.

   d. Clearance in the positor mounting holes was not enough to allow bringing it into alignment. The reason for this is being investigated - at a considerable cost in time.

   e. Two holes for screws holding a module on the base plate are out of position by .050". The holes and corresponding counterbores can be elongated [illegible] but will require [illegible] action.

   f. Experience on the first unit [illegible] that the [illegible] bearing had to be [illegible]

   g. The [illegible] modified for [illegible]

[illegible]

MAC to eliminate the number of retrofits to the sensor heads. This action will reduce the number of retrofits from eight (8) to five (5).

TEST STATUS

Qual #1
Qual Test #1 will start on 30 Oct. which is approximately a two (2) week slip. This slippage is due to the reasons stated in paragraph three (3) under Assembly & Delivery Status. Also the Qual test has been lengthened about nine (9) weeks because of the positor assembly fix.

Qual Life
Qual Life will start on 11 Nov., which is approximately a two (2) week slip. The reason for slippage is the same as about in Qual #1. This test also has been lengthened because of the positor assembly fix

AGE

1. No AGE units were shipped since the last report, but all AGE equipment is expected to be shipped prior to the end of the year.

GEMINI SPACECRAFT

CONTRACT NO. NAS 9-170

HORIZON SENSOR

VENDOR: ADVANCED TECHNOLOGY LABORATORIES

STATUS CHART

REPORT NO. 8580-1 -33

LAST PROGRAM SCHEDULE CHANGE: 1 APRIL 1963

STATUS AS OF: 25 OCT. 1963

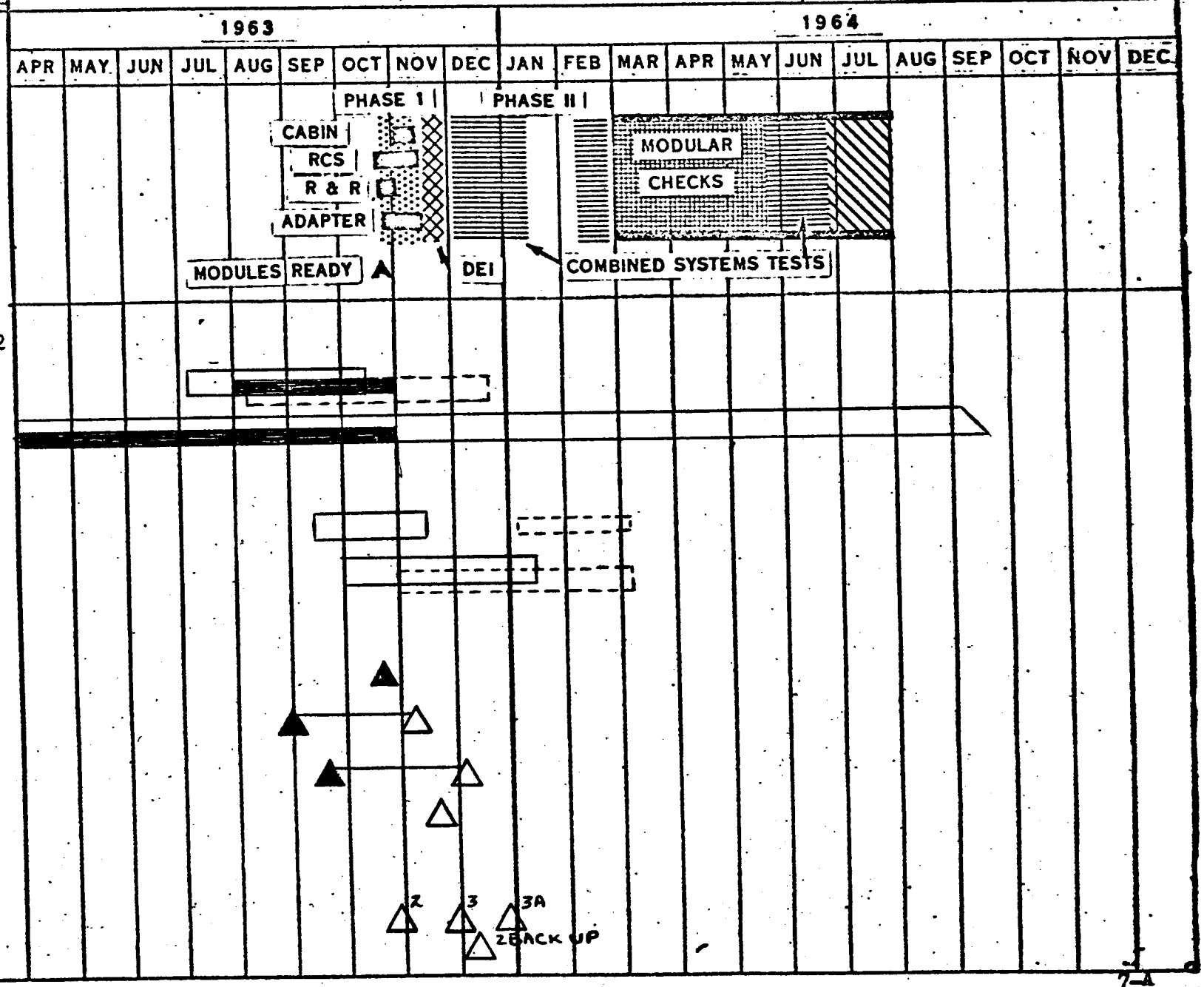

LEGEND
- ▽ Test Proposal Due
- ◊ Hardware Available
- ▭ Test Schedule
- ○ Report Due
- ★ Report Approved

QUALIFICATION AND DEVELOPMENT TEST STATUS
HORIZON SENSOR SYSTEM
ADVANCE TECHNOLOGY LABS
SCD 52-87703

Rev. B: 25 Oct. 1963
Chart No. 07-B
Page 1 of 1
Rev. A: 27 Sept. 1963

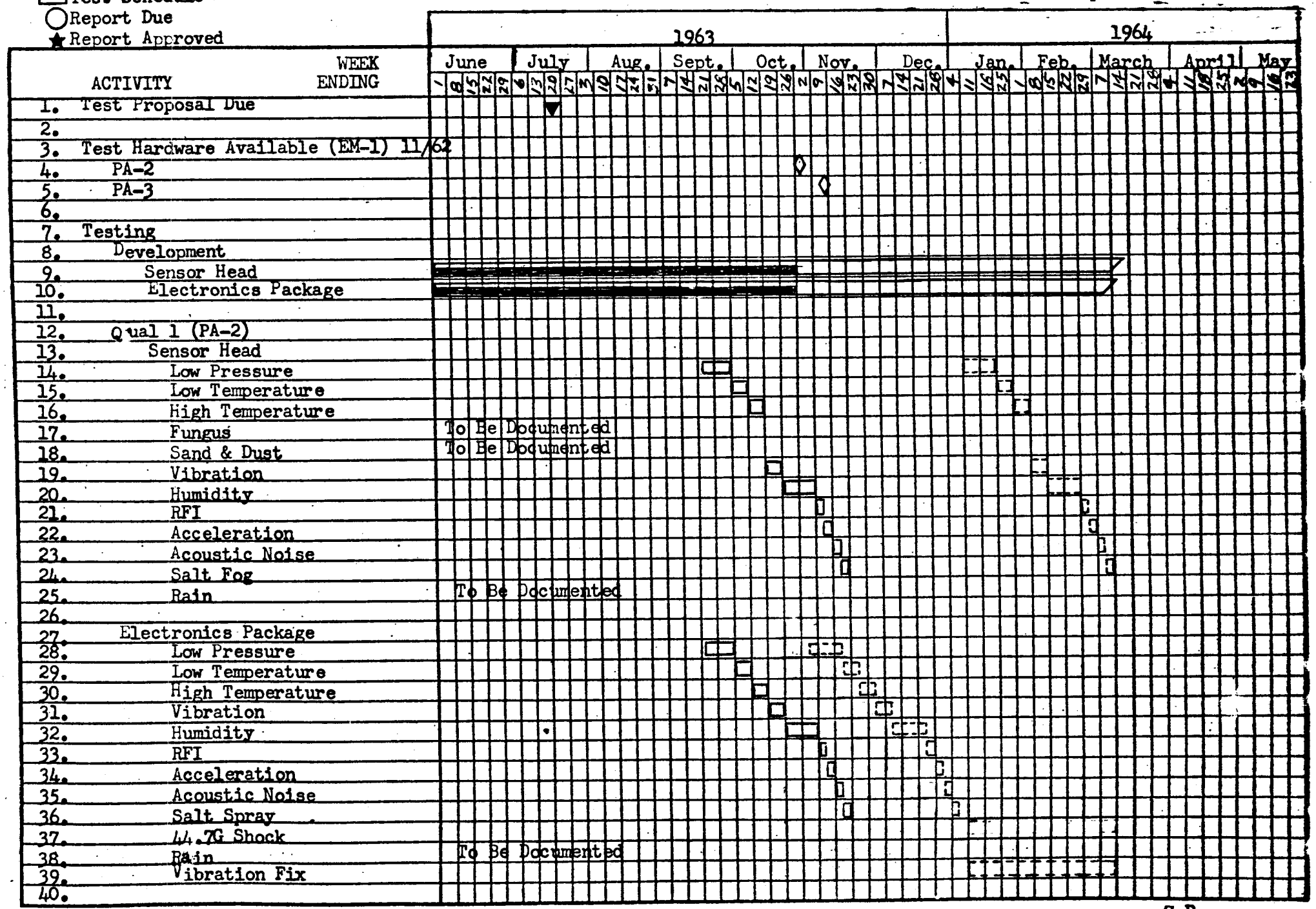

MAC 2274V (27 APR 59)

QUALIFICATION AND DEVELOPMENT TEST STATUS
HORIZON SENSOR SYSTEM
ADVANCE TECHNOLOGY LAB
SCD 52-87703

Rev. B: 25 O[illegible] 1963
Chart No. 07-[illegible]
Page 2 of 2
Rev. A: 27 Sept. 1963

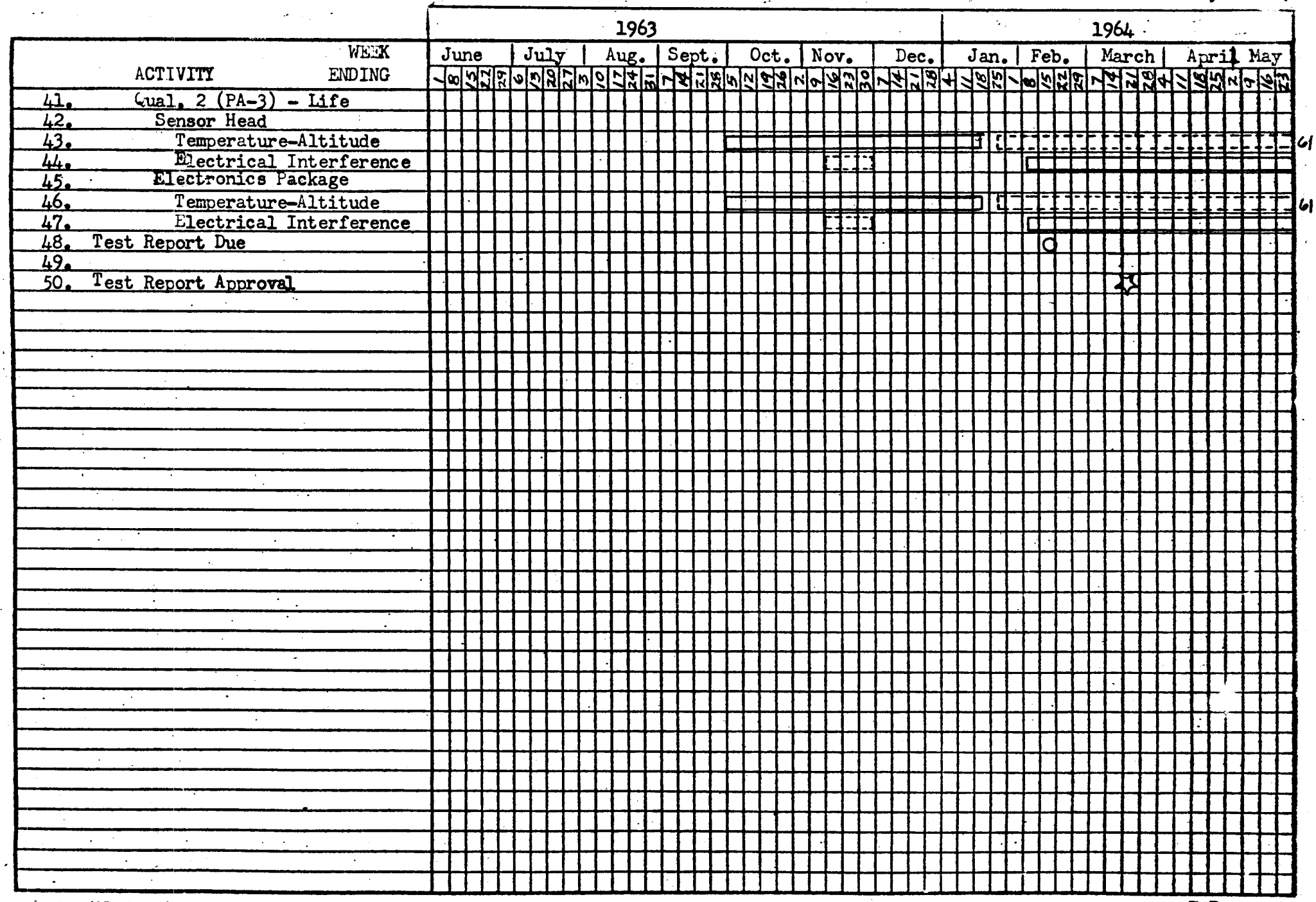

MAC 2274V (27 APR 59)

VENDOR DELIVERY STATUS REPORT
SYSTEM - HORIZON SENSORS
VENDOR - ATL

CHART NO. 7-C

25 OCTOBER 1963

UNIT NO	TYPE	USAGE	COMPONENT	VENDOR W/S	AVAIL. FOR INSTL.	REQ'D FOR INSTL.	SLACK
1	EP-1	VENDR	DYNAMIC TEST			A09-28-62	
2	EP-2	ESTU				A11-22-62	
3	PP-1	CTU				A06-24-63	
3	PP-1	SC-3A			12-21-63	10-15-63	-10
4	PA-1	SC-2		A10-15-63	10-27-63		
5	PA-2	VENDR	QUAL #1		10-30-63	09-11-63	- 9
6	PA-3	VENDR	QUAL LIFE		11-08-63	09-25-63	- 7
7 & 8	PA-4-5	SC-3		11-21-63	11-30-63	11-12-63	- 1
9	PA-6	SC-2	BACK UP	11-27-63	12-06-63	09-18-63	-11
10	PA-7	SPARE	SST	12-05-63	12-14-63	10-15-63	- 9
11	PA-8	SPARE		12-11-63	12-20-63	11-30-63	- 3
12 & 13	PA-9-10	SC-4		01-10-64	01-19-64	01-19-64	0
14	PA-11	SPARE		01-24-64	02-02-64	01-31-64	0
15 & 16	PA-12-13	SC-5		02-21-64	03-01-64	03-18-64	+ 2
17	PA-14	SPARE		03-06-64	03-15-64	03-31-64	+ 2
18 & 19	PA-15-16	SC-6		04-03-64	04-12-64	05-13-64	+ 4
20 & 21	PA-17-18	SC-7		05-01-64	05-10-64	07-10-64	+ 9
22 & 23	PA-19-20	SC-8		05-29-64	06-07-64	09-04-64	+13
24 & 25	PA-21-22	SC-9		06-26-64	07-05-64	11-04-64	+17
26 & 27	PA-23-24	SC-10		07-24-64	08-02-64	01-05-65	+22
28 & 29	PA-25-26	SC-11		08-21-64	08-30-64	03-02-65	+26
30 & 31	PA-27-28	SC-12		09-18-64	09-27-64	05-03-65	+31

VENDOR AGE STATUS REPORT

SYSTEM - HORIZON SENSORS CHART: 07-D

VENDOR: A.T.L. 25 OCTOBER 1963

PART NO.	NOMENCLATURE	UNIT NO	VENDOR W/S DATE	AVAIL FOR USAGE	REQD FOR USAGE	SLACK
			(PRE-INSTALLATION ACCEPTANCE)			
52E270016-1	HORIZON SIMULATOR	1		A10-25-63		
52E270021-1	TESTER H/S	1		A10-25-63		
			(SPACECRAFT SYSTEM TESTS)			
52E270015-1	MONITOR PANEL H/S	1		A 1-02-63		
52E270014-1	HORIZON SIMULATOR	1		A 9-03-63		
52E270005-1	FIXTURE H/S ALIGN	1		A 8-30-63		
52E270015-1	MONITOR PANEL H/S	2		A 9-06-63		
52E270014-1	HORIZON SIMULATOR	2	10-28-63	11-05-63	9-08-63	- 8
			(HANGAR)			
52E270005-1	FIXTURE H/S ALIGN	2		A 9-20-63		
52E270021-1	TESTER H/S	2	11-29-63	12-07-63	9-20-63	-11
52E270015-1	MONITOR PANEL H/S	3	11-13-63	11-21-63	10-14-63	- 6
52E270016-1	HORIZON SIMULATOR	2	11-04-63	11-12-63	11-15-63	+ 1
52E270014-1	HORIZON SIMULATOR	4	11-25-63	12-03-63	12-23-63	+ 3
52E270015-1	MONITOR PANEL H/S	5	11-15-63	11-23-63	12-23-63	+ 4
			(PAD)			
52E270014-1	HORIZON SIMULATOR	3	11-11-63	11-29-63	12-23-63	+ 5
52E270015-1	MONITOR PANEL	4	11-13-63	11-20-63	12-23-63	+ 5

SYSTEM: Fuel Cell 08
SUBSYSTEM:
VENDOR: General Electric
West Lynn, Mass.
DATE: 25 October 1963

MONTHLY SUMMARY

ENGINEERING STATUS

MAC Engineering has given approval to use non-latching valves on Sections 3B and 501. Sections 502 and up will be required to have latching type valves.

Development test equipment was used in lieu of AGE to check Section 501. AGE is in process of being updated to conform to Fuel Cell configuration.

PROCUREMENT

Valcor was to ship latching type valves for Section 502 on 29 October, however, military intermediate type inspection requirements could hold-up shipment. Tear-down of presently constructed valves for dimensional inspection would necessitate a breaking of welds and valves being scrapped. Probable two month slip in delivery if currently built-up valves are scrapped.

Raycem is to provide 1230 type harness wiring in lieu of 1220 wiring. 1230 wiring will meet MIL specifications flammability test where as type 1220 will not.

ASSEMBLY AND DELIVERY STATUS

Section 3B has completed low temperature tests and Section 501 has completed development tests. Both sections are scheduled to be shipped on 28 October 1963 for Power Systems Tests.

Stacks 107 and 108 have completed acceptance test and are awaiting an additional stack for Section 502 build-up.

Stacks 113, 114, 115 and 116 build-ups have been completed and are scheduled for acceptance tests on 26, 27 and 28 October.

Faulty electrical switch shorted out and destroyed Stack 112.

TEST STATUS

Stack 49B now undergoing development tests and has completed 580 hours of testing (4.66 volts at 4.0 amperes).

Stacks 50, 52, 55, 57 and 59 have been completed and are awaiting test facilities.

Stacks 109, 110, 111 currently undergoing acceptance tests.

AGE

The three E230001-1 Test Set Fuel Cell AGE benches, at G. E., are undergoing modifications to increase purge rate and coolant pressure flow.

GEMINI SPACECRAFT

CONTRACT NO. NAS 9-170

BATTERY FUEL CELL

VENDOR: GENERAL ELECTRIC

STATUS CHART

REPORT NO. 8580-1 -33

LAST PROGRAM SCHEDULE CHANGE: 1 April 1963

STATUS AS OF: 25 October 1963

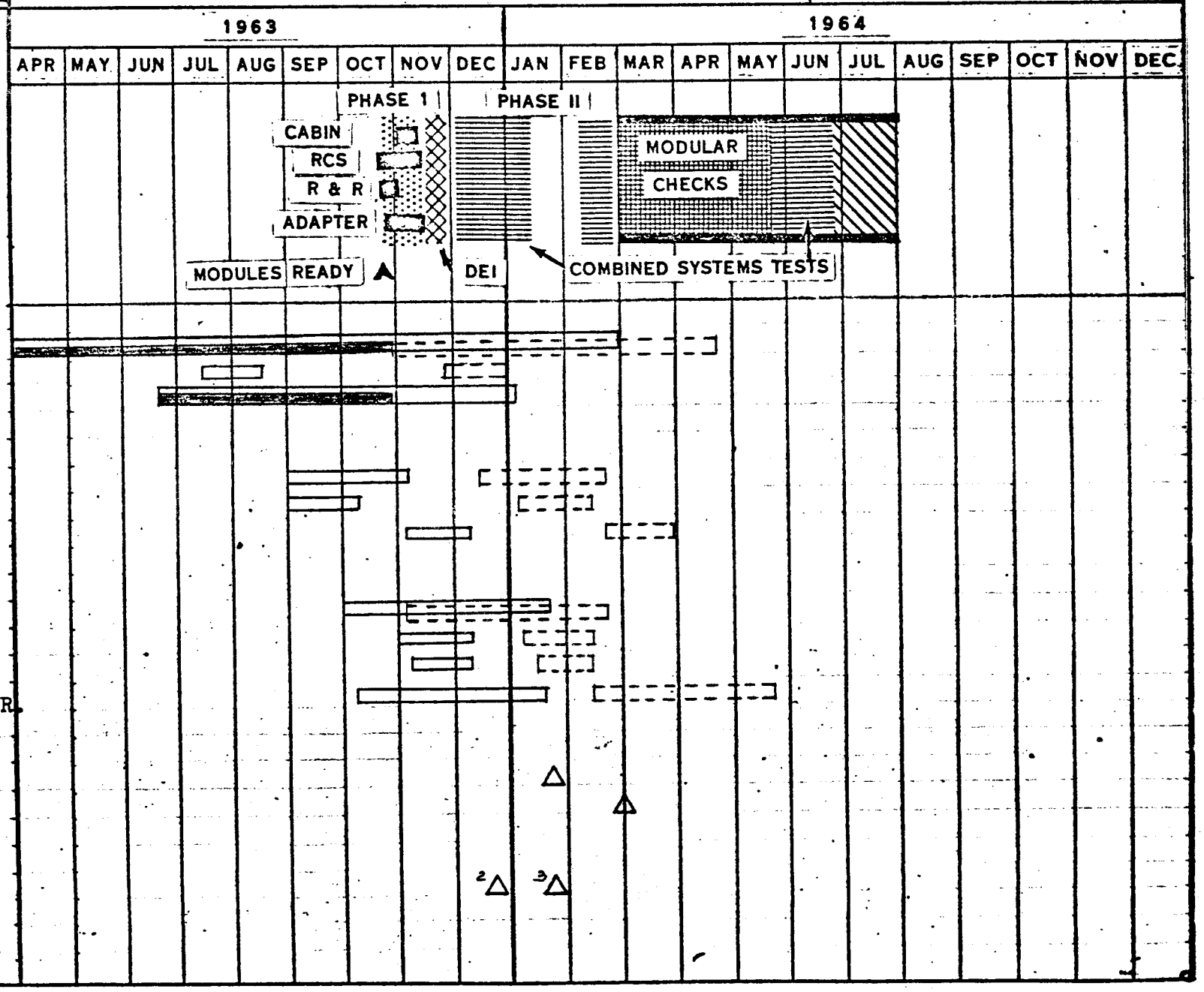

LEGEND

- ▽ TEST PROPOSAL DUE
- ◊ HARDWARE AVAILABLE
- ▭ TEST SCHEDULE
- ○ REPORT DUE

SYSTEM DETAIL TEST CHART

BATTERY FUEL CELL SCD 52-79000

GENERAL ELECTRIC

REPORT NO. 8580-1 -39

LAST PROGRAM

SCHEDULE CHANGE: 4-1-63

STATUS AS OF: 10-25-63

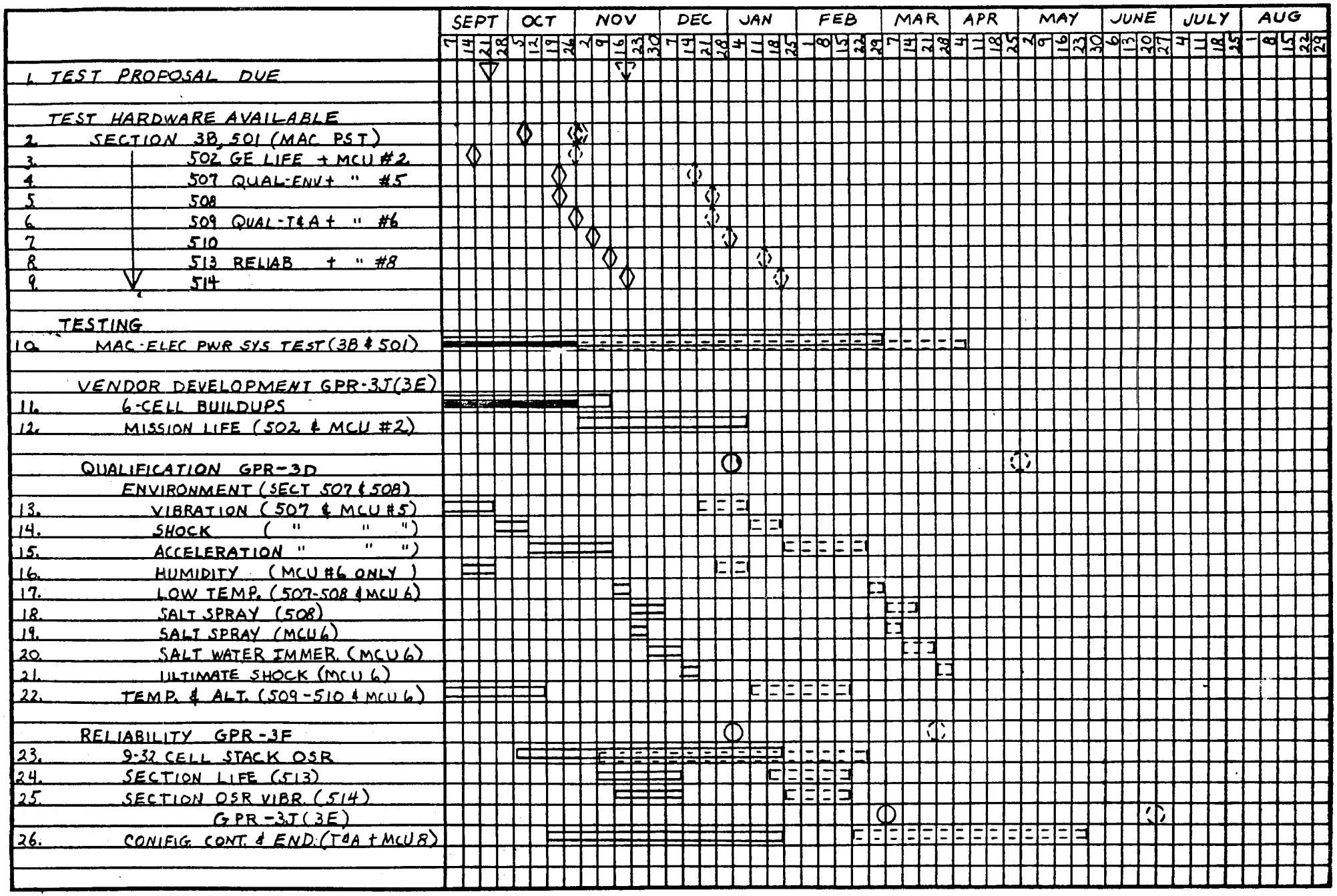

MAC 2274V (27 APR 59)

VENDOR DELIVERY STATUS REPORT
FUEL CELL
GENERAL ELECTRIC

CHART NO. 08 0

Date: 10-25-63

UNIT NO.	TYPE	USAGE	COMPONENT	VENDOR W/S	AVAIL. FOR INSTL	REQ. FOR INSTL	SLACK
1	EP-1	TEST	SECT 1 EVAL			A 2-15-63	
2	EP-2	VENDR	SECT 2 DEVL			A 4-15-63	
3	EP-4	VENDR	SECT 4 VIBR			A 7-06-63	
4	EP-3B	TEST	SECT 3-B FC/RSS	10-28-63	10-30-63	7-03-63	-18
5	PP-1	TEST	SECT 501 FC/RSS	10-28-63	10-30-63	7-03-63	-17
6	PP-2	VENDR	SECT 502 LIFE		11-09-63	7-12-63	-17
7	PP-3	CTU	SECT 503-504	11-30-63	12-07-63	7-15-63	-21
8	PP-4	SC-2	SECT 505-506	1-06-64	1-21-64	8-10-63	-23
9	PP-5	VENDR	QUAL 507-508		1-21-64	9-01-63	-20
10	PP-6	VENDR	QUAL 509-510		1-28-64	9-01-63	-21
11	PP-7	SC-3	SECT 511-512	1-11-64	1-28-64	9-02-63	-21
12	PP-8	VENDR	OSR 513-514		2-05-64	11-01-63	-23
13	PP-9	SPARE	SECT 515-516	2-01-64	2-15-64	9-30-63	-20
14	PP-10	SC-4	SECT 517-518	2-08-64	2-22-64	12-15-63	-10
15	PP-11	SC-3A	SECT 519-520	2-15-64	2-29-64	12-15-63	-11
16	PP-12	SPARE	SECT 521-522	2-29-64	3-14-64	11-30-63	-15
17	PA-1	SC-5	SECT 523-524	3-14-64	3-28-64	1-30-64	- 8
18	PA-2	AD-13	SECT 525-526	3-28-64	4-11-64	2-10-64	- 9
19	PA-3	SC-6	SECT 527-528	4-04-64	4-18-64	2-17-64	- 9
20	PA-4	SC-7	SECT 529-530	4-11-64	4-25-64	4-23-64	- 1
21	PA-5	SC-8	SECT 531-532	4-25-64	5-09-64	6-21-64	+ 6
22	PA-6	SC-9	SECT 533-534	5-02-64	5-16-64	8-17-64	+13
23	PA-7	SC-10	SECT 535-536	5-09-64	5-23-64	10-18-64	+21
24	PA-8	SC-11	SECT 537-538	5-16-64	5-30-64	12-20-64	+30
25	PA-9	SC-12	SECT 539-540	5-30-64	6-13-64	2-26-65	+36
26	PA-10	AD-14	SECT 541-542	6-06-64	6-20-64	6-12-65	+51
27	PA-11	AD-15	SECT 543-544	6-13-64	6-27-64	8-12-65	+59
28		SPARE	CONTROL UNIT -5	NOT P.O.		1-30-64	

VENDOR AGE STATUS REPORT

CHART NO. 06 D

FUEL CELL

DATE: 10-25-6[illegible]

GENERAL ELECTRIC

PART NUMBER	NOMENCLATURE	UNIT NO.	VENDOR W/S	AVAIL. FOR USAGE	REQ'D. FOR USAGE	[illegible]
			PRE-INSTALLATION ACCEPTANCE			
E2[illegible]0001-1	T SET FUEL CELL	1	01-01-64	02-01-64	10-01-63	[illegible]
			HANGAR			
E2[illegible]0001-1	TEST SET FUEL CELL	2	02-16-64	03-01-64	10-07-63	[illegible]

SYSTEM: Reactant Supply System
SUBSYSTEM:
VENDOR: AiResearch
Torrance, California
DATE: 25 October 1963

MONTHLY SUMMARY

ENGINEERING STATUS

The completion of the (-71, -73) long and short mission O2 subsystems have been delayed due to contamination of the fibreglass pads and Mylar insulation of the (-13, -15) containers. Problem resolved by using a higher processing temperature during the evacuation process. Rejection of inner spheres has also caused delay. Defective sensor line seals have also caused delay in the (-15) container. Preprocessing of seals prior to installation should correct this situation.

The completion of the (-77, -81) long and short mission H2 subsystems have been delayed due to defective sensor line seals and leakage through the titanium to stainless steel braze joint in the heater and sensor boss after heat treat in the (-11, -9) containers. The problem has been eliminated by redesign of the boss so that the joint is made after heat treat.

Part numbers were changed as follows: -141 to -71 and -143 to -73 on S/C 2 and up.

The completion of the (-21, -23) hydrogen and oxygen relief valves have been delayed due to redesign of the valve seat. The original valve seat configuration failed to meet leakage requirements during acceptance testing. The redesign consisted of changing the valve seat material and adjusting tolerances to reduce friction.

ASSEMBLY AND DELIVERY STATUS

-57 Valve, Vent, Quick Discon. H2 (FCC) second unit shipped 10 October 1963; (CTU) first unit shipped 10 October 1963 and second unit shipped 23 October 1963.
-59 Valve, Vent, Quick Discon. O2 (FCC) second unit shipped 15 October 1963; (CTU) first unit shipped 15 October 1963, second unit to ship 26 October 1963.

Following are pacing components that have slipped:

-81 H2 L/M (FCC) from 28 November 1963,(TWX #15) to 2 December 1963.
-77 H2 S/M (CTU) from 27 November 1963 (TWX #15) to 2 December 1963.
-77 H2 S/M (S/C 2) from 5 December 1963 (TWX #14) to 20 December 1963.
-71 O2 L/M (S/C 3A) from 27 October 1963 (monthly summary of 27 September 1963) to 30 December 1963.

-135 Valve, Solenoid S/O H.P. (FCC and S/C 2) will not be shipped until 5 November 1963. Delay is due to rework of the electrical wiring to reverse the polarity of the valve.
-95, -97 Oxygen and Hydrogen Check Valves (CTU) are in assembly and test and are to ship 1 November 1963; and (S/C 2) 8 November 1963.
-17, -19 Hydrogen and Oxygen Heat Exchangers (S/C 2, S/C 3A, and S/C 3) are to ship 8 November 1963.
-21 Hydrogen Relief Valve (FCC, CTU and S/C 2) is to ship 8 November 1963; (S/C 3A) is to ship 22 November 1963; and (S/C 3) is to ship 29 November 1963.
-23 Oxygen Relief Valve (FCC, CTU, S/C 2, S/C 3A and S/C 3) is to ship 8 November 1963.

TEST STATUS

-121 Indicator, Qty and Press. H2 (FCC) has been acceptance tested, and delivery will be made with the cryogenic container.

AGE

One E230027-1 RSS PIA Bench was not shipped as reported. Unit to ship 1 November 1963. Delay caused by rust between the table top and instrument panel joint.

Two E230054-1 Dolly RSS O2 and two E230055-1 Dolly RSS H2 were shipped. One E230055-1 Dolly RSS H2 being retained by AiResearch for in house testing.

GEMINI SPACECRAFT

CONTRACT NO. NAS 9-170

REACTANT SUPPLY SYSTEM (VENDOR: AIRESEARCH)

STATUS CHART

REPORT NO. 8580-1 -33

LAST PROGRAM SCHEDULE CHANGE: 1 APRIL 1963

STATUS AS OF: 25 OCTOBER 1963

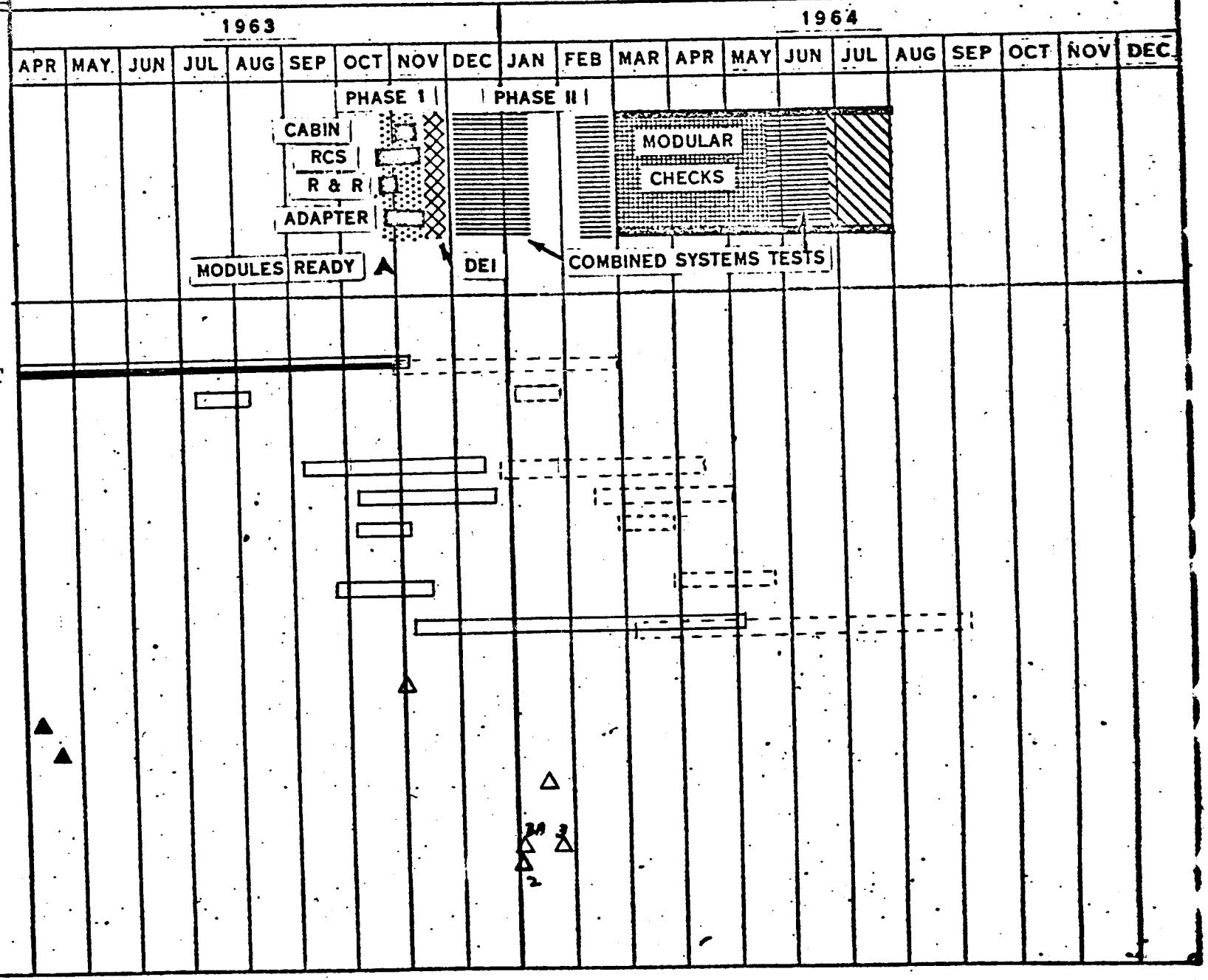

◇ H_2 SUBSYS AVAIL
△ O_2 SUBSYS AVAIL
□ TEST SCHEDULE
○ REPORT DUE

SYSTEM DETAIL TEST CHART
REACTANT SUPPLY SYSTEM
(AIRESEARCH MFG)
SCD 52-83701

REPORT NO. 858[illegible]1-33
LAST PROGRAM [illegible]
SCHED. CHANGE: 4-1-63
STATUS AS OF : 10-25-63

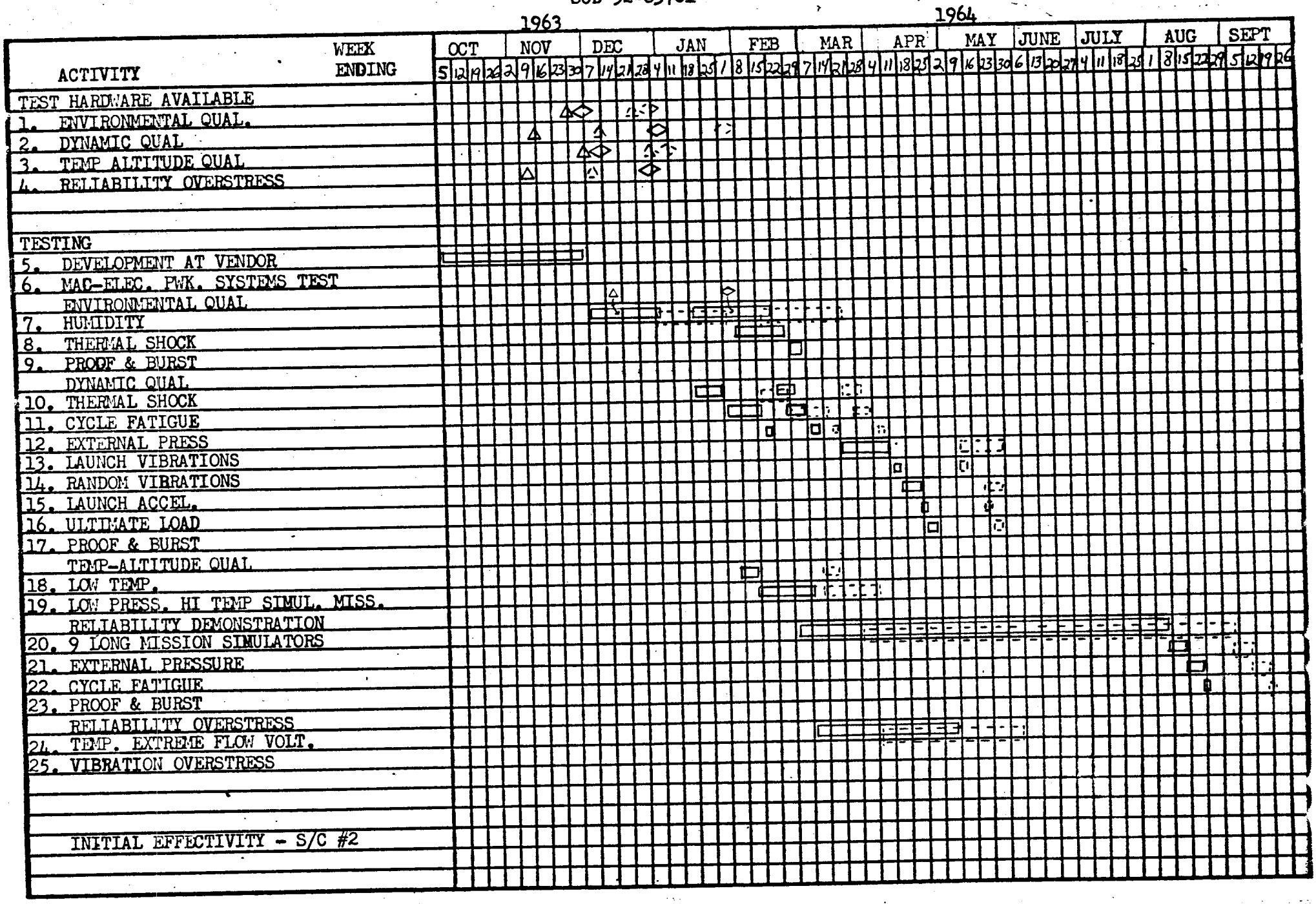

VENDOR DELIVERY STATUS REPORT

REACTANT SUPPLY
AIRESEARCH

CHART: 09-C (Pg 1 of 2)
25 OCTOBER 1963

UNIT NO	TYPE	USAGE	COMPONENT	VENDOR W/S	AVAIL FOR USAGE	REQD FOR USAGE	SLACK
1	PP-1	PST	-71 O2 SUB-LM		A 9-27-63	8-16-63	
1	PP-1	PST	-81 H2 SUB-LM	12-02-63	12-14-63	8-16-63	-17
1	PP-1	PST	-91 HT XCHGR		11-20-63	6-01-63	-25
			-17 H2 HT XCHGR	A 8-02-63			
			-21 PRESS REL VAL	11-08-63			
			-37 TEMP SENSOR	A 6-05-63			
1	PP-2	PST	-93 HT EXCHNGR		11-20-63	6-01-64	-25
			-19 O2 HT XCHGR	A 6-05-63			
			-23 VAL PRESS REG	11-08-63			
			-37 TEMP SENSOR	A 6-05-63			
2	PP-2	CTU	-73 O2 SUB-SM		A 9-20-63	5-20-63	
2	PP-2	CTU	-77 H2 SUB-SM	12-02-63	12-14-63	5-20-63	[illegible]
2	PP-2	CTU	-91 HT XCHGR		11-20-63	5-20-63	-27
			-17 H2 HT XCHGR	A 8-02-63			
			-21 PRESS REL VAL	11-08-63			
			-37 TEMP SENSOR	A 8-02-63			
2	PP-2	CTU	-93 HT XCHGR		11-20-63	5-20-63	-27
			-19 O2 HT XCHGR	A 6-05-63			
			-23 VAL PRESS REG	11-08-63			
			-37 TEMP SENSOR	A 8-02-63			
3	PP-3	VENDR	QUAL-ENVIRON	12-28-63	12-28-63	9-07-63	-16
4	PP-4	VENDR	QUAL-DYNAMIC	2-12-64	2-12-64	10-11-63	-18
5	PP-5	VENDR	QUAL-TEMP & ALT	2-29-64	2-29-64	10-04-63	-21
5	PP-5	VENDR	SMR REFUR T & A	3-07-64	3-07-64	11-02-63	-18
6	PP-6	VENDR	OSR	3-29-64	3-29-64	9-14-63	-28
7	PA-1	SC-2	-73 O2 SUB-SM	12-13-63	12-26-63	7-14-63	-24
7	PA-1	SC-2	-77 H2 SUB-SM	12-20-63	1-04-64	7-14-63	-25
7	PA-1	SC-2	-91 HT XCHGR		12-20-63	7-14-63	-19
			-17 H2 HT XCHGR	11-08-63			
			-21 PRESS REL VAL	11-08-63			
			-37 TEMP SENSOR	10-29-63			
7	PA-1	SC-2	-93 HT XCHGR		12-20-63	7-14-63	-19
			-19 O2 HT XCHGR	11-08-63			
			-23 VAL PRESS REG	11-08-63			
			-37 TEMP SENSOR	10-29-63			
8	PA-2	SC-3A	-71 O2 SUB-LM	12-30-63	1-13-64	10-15-63	-[illegible]
8	PA-2	SC-3A	-81 H2 SUB-LM	12-20-63	1-04-64	10-15-63	-[illegible]2
8	PA-2	SC-3A	-91 HT XCHGR			7-07-63	-[illegible]
			-21 PRESS REL VAL	11-22-63	12-23-63		
			-37 TEMP SENSOR	10-29-63			
			-33 H2 HT XCHGR	11-08-63			
8	PA-2	SC-3A	-93 HT XCHGR			7-07-63	[illegible]
			-19 O2 HT XCHGR	11-08-63	12-23-63		
			-23 VAL PRESS REG	11-08-63			
			-37 TEMP SENSOR	10-29-63			

UNIT NO	TYPE	USAGE	COMPONENT	VENDOR W/S	AVAIL FOR USAGE	REQD FOR USAGE	SLACK
9	PA-3	SC-3	-73 O2 SUB-SM	12-23-63	1-06-64	8-07-63	-21
9	PA-3	SC-3	-77 H2 SUB-SM	1-10-64	1-22-64	8-07-63	-24
9	PA-3	SC-3	-119 HT XCHGR		12-26-63	8-07-63	-18
			-21 PRESS REL VAL	11-29-63			
			-37 TEMP SENSOR	11-01-63			
			-117 H2 HT XCHGR	11-08-63			
9	PA-3	SC-3	-93 HT XCHGR		12-26-63	8-07-63	-15
			-19 O2 HT XCHGR	11-08-63			
			-23 VAL PRESS REG	11-08-63			
			-37 TEMP SENSOR	11-01-63			
10	PA-4	SC-4		1-20-64	2-01-64	11-26-63	-10
11	PA-5	SPARE	COMPONENTS	2-04-64	2-16-64	11-30-63	-11
12	PA-6	AD-13		12-15-63	12-22-63	12-22-63	
13	PA-7	SC-5		2-01-64	2-13-64	1-29-64	-2
14	PA-8	SPARE	COMPONENTS	4-04-64	4-16-64	1-31-64	-9
15	PA-9	SC-6		3-09-64	3-21-64	3-28-64	+1
16	PA-10	SC-7		5-11-64	5-23-64	5-28-64	+1
17	PA-11	SC-8		7-10-64	7-22-64	7-27-64	+1
18	PA-12	SC-9		9-04-64	9-16-64	9-22-64	+1
19	PA-13	SC-10		10-02-64	10-14-64	11-24-64	+6
20	PA-14	SC-11		11-01-64	11-13-64	1-27-65	+10
21	PA-15	SC-12		12-01-64	12-13-64	3-24-65	+1
22	PA-16	AD-14		2-27-65	3-10-65	6-12-65	+12
23	PA-17	AD-15		5-27-65	6-09-65	8-12-65	+8

VENDOR AGE STATUS REPORT

CHART NO. 9-D

RSS

25 OCTOBER 1963

VENDOR: AIRESEARCH

PART NUMBER	NOMENCLATURE	UNIT NO	VENDOR W/S	AVAIL. FOR USAGE	REQ'D FOR USAGE	SLACK
			PRE-INSTALLATION ACCEPTANCE			
E230027-1	RSS PIA BENCH	1	11-01-63	12-15-63	08-15-63	-20
			HANGAR			
E230054-1	DOLLY RSS O2	3		A	11-02-63	- 0
E230055-1	DOLLY RSS H2	5		A	11-02-63	- 0
E230055-1	DOLLY RSS H2	4		A	11-02-63	- 0
E230054-1	DOLLY RSS O2	4		A	11-02-63	- 0
E230027-1	RSS PIA LH2	2	01-17-64	01-25-64	12-06-63	7
			MANUFACTURING			
E230055-1	DOLLY RSS H2	3		A *	08-01-63	- 0
E230055-1	DOLLY RSS H2	2		A	09-13-63	- 0
E230054-1	DOLLY RSS O2	1		A	09-13-63	- 0
E230055-1	DOLLY RSS H2	1		A	09-13-63	- 0
E230054-1	DOLLY RSS O2	2		A	09-13-63	- 0

* Unit to be retained by AiResearch for In-House Testing.

MONTHLY SUMMARY

SYSTEM: L.C.S.
SUBSYSTEM:
VENDOR: AiResearch
Canoga Park, California
DATE: 25 October 1963

ENGINEERING STATUS

N.C.I. requirements this past month have caused major slippages in will ship date on several key subsystems and components. Drawing changes, hardware revisions and new test information are affecting:

1. MAC-457 Power Supply Pumps S/C 2 up.
2. MAC-253 Suit Subsystem S/C 2 and up.
3. MAC-265 Pump Unit and MAC-241 Reservoir S/C 2 up.
4. MAC-407 Launch Coolant HT EXCH. S/C 3A up.
5. MAC-443 and -444 Egress O2 Kits S/C 3A and up.

MAC Engineering has been expediting ATP's both here and at AiResearch with 5 or 6 in process now. AiResearch has promised to clean up open ATP's by 4 November then process tentative approval test instructions. Heat Transfer Data and MCS 198 Coolant readings are presently involved. Visits of AiResearch personnel to MAC to coordinate changes and resolve problems have taken place this month. W/A on results.

PROCUREMENT

Updating of revisions per N.C.I.'s and ATP's being processed. Further changes required in spares program being reviewed and updated with concerned personnel.

ASSEMBLY AND DELIVERY STATUS

Deliveries to MAC during October were:

MAC-27 Butterfly Valves for B/P 2 - CTU - S/C 2.
MAC-55 Power Supply Pump for S/C 2.
MAC-275 Secondary O2 S/C 2 and 3A.
MAC-277 Secondary O2 S/C 2.
MAC-151 Regen. HT Exch. S/C 2 and 3A.*

Manufacturing problems are delaying MAC-127 and -429 cryogenic containers for both 2 day and 14 day missions. Valve tolerances and leakage problems are a continuing factor in will ship dates, that are being gradually solved but causing slippage. Sub-vendors deliveries and test failures accentuate this situation with better controls and expediting needed.

Both B/P 2 and CTU still lack MAC-145 Heat Exchanger and power supply pumps. Both are in AiResearch's manufacturing responsibility area to bring up to specifications. Test failures and rework are slipping delivery to antestimate of 8 November. For S/C 2 these units are expected to ship about 22 November.

Revision of S/C 3A and up schedule has occured in order to concentrate on assembly and shipping of B/P 2, CTU and S/C 2 subsystems. The Primary O2 (-429) subsystem delivery date slipped a month due to cryogenic container failures of ceramic seals and contamination of fibreglass pads. Unit for S/C 2 started 150 hour AGE Test at Boron 21 October. Redesign of MAC-265 Pump Units for S/C 2 and up and Egress O2 Kits for S/C 3A and up have slipped will ship date to end of November for S/C 2 Pump Unit and middle January for S/C 3A Egress Unit.

MAC 192 Coolant requirements has resulted in rework of some valves th[illegible] pacing components. Several power supply pumps have failed High-Pressure Bench Test. MAC-233 Heat Exchangers have passed performance Map Test but heat transfer data from Acoustica needed before they can be released.

*Late information shows item shipped 25 October 1963.

TEST STATUS

Development -	MAC-147 Temp. Control Valve failed test because of calibration. New housings and valve sleeve replacements being inspected prior to retest for tolerances and finish. Total development testing is approximately 85 to 90 percent complete. Trying to get a list of untested parts from AiResearch with time estimate to complete testing.
Qual - Environmental	MAC-5 and -93 valves completed test. MAC-15, -89 and -95 valves and MAC -67 Power Supply failed humidity test and must be rerun.
Qual - Dynamic	MAC-5, -85, -81, -89, -93, -95, -245 valves have completed test.
Temp. Alt. & OSR	No Qual or Reliability testing has been performed on units to date. Expect test to start early in December.
	Scarcity of units available for testing due to manufacturing difficulties accounts for limited testing to date on Qual. items. Investigating methods to improve reporting of test status by AiResearch.

AGE

All AGE equipment for manufacturing is available for use. All PIA AGE equipment has been delivered. Interim AGE for the Hi-Pressure Bench will be available early in November. This equipment will meet approximately 65% of the firm AGE requirements. Facilities has been the main delay for availability of PIA AGE.

GEMINI SPACECRAFT

CONTRACT NO. NAS 9-170

ENVIRONMENTAL CONTROL (VENDOR: AIRESEARCH)

STATUS CHART

REPORT NO. 8580-1-33

LAST PROGRAM SCHEDULE CHANGE: 1 APRIL 1963

STATUS AS OF: 25 October 1963

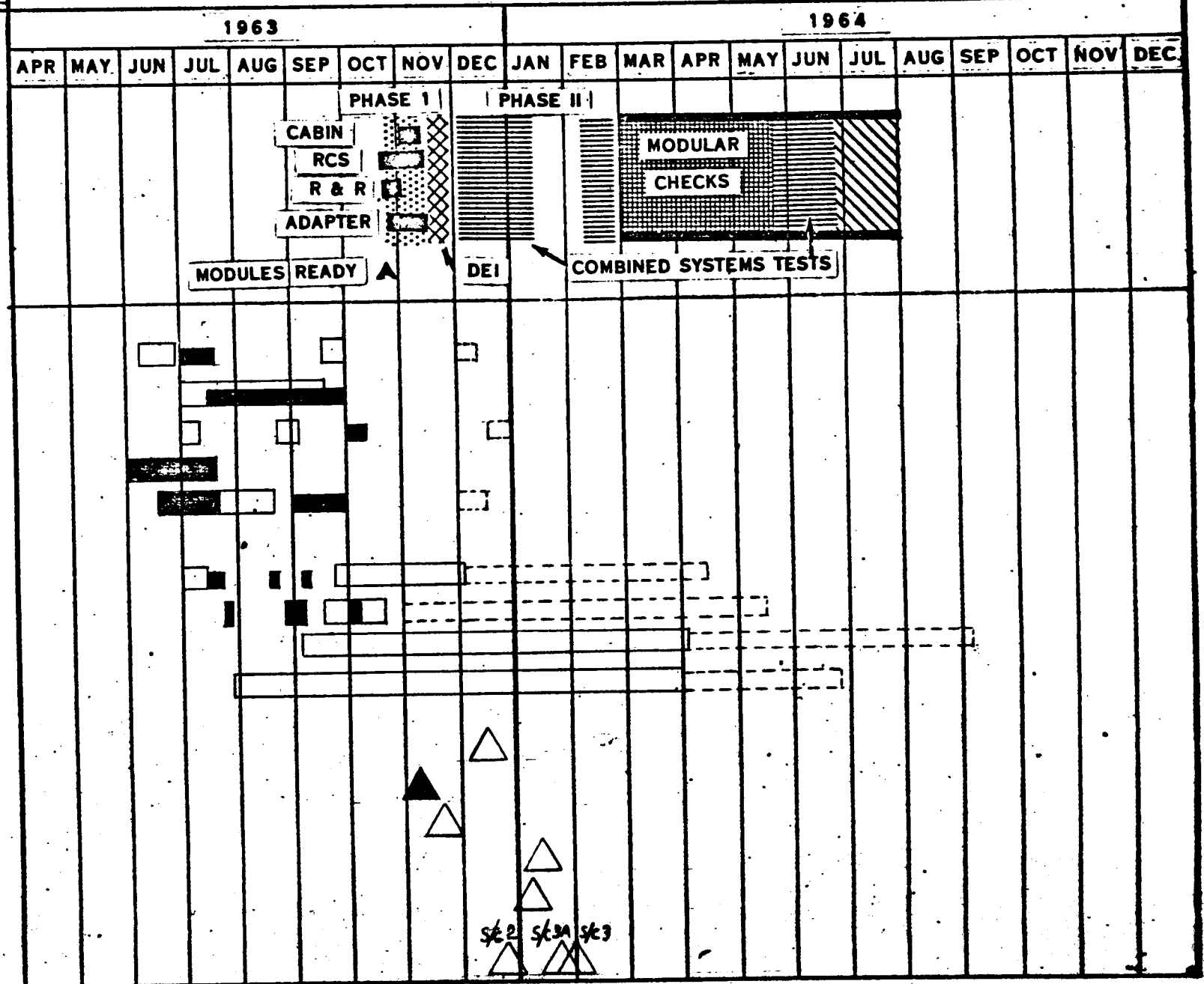

1. TEST STATUS
2. DEVELOPMENT
3. B/P 2 ALT. UNMANNED
4. B/P 2 ALT. MANNED
5. CTU
6. ALT. COMPATIBILITY
7. DYNAMIC
8. QUALIFICATION
9. ENVIRONMENTAL QUAL.
10. DYNAMIC QUAL.
11. TEMP.-ALT. QUAL.
12. RELIABILITY-OVERSTRESS
13. AGE AVAILABILITY
14. PIA
15. MFG.
16. SST
17. HGR
18. PAD
19. FLIGHT HARDWARE AVAIL.
20. AFI

1D

TEST PROPOS[illegible] DUE
HARDWARE AVA[illegible]L.
TEST SCHEDULE
REPORT DUE
REPORT APPROVED

SOLID INDICATES ACTUALS

QUALIFICATION & DEV. & RELI. TEST STATUS
ENVIRONMENTAL CONTROL SYSTEM
(AIRESEARCH)
SCD 52-83700

DATE:
25 OCTOBER 1963

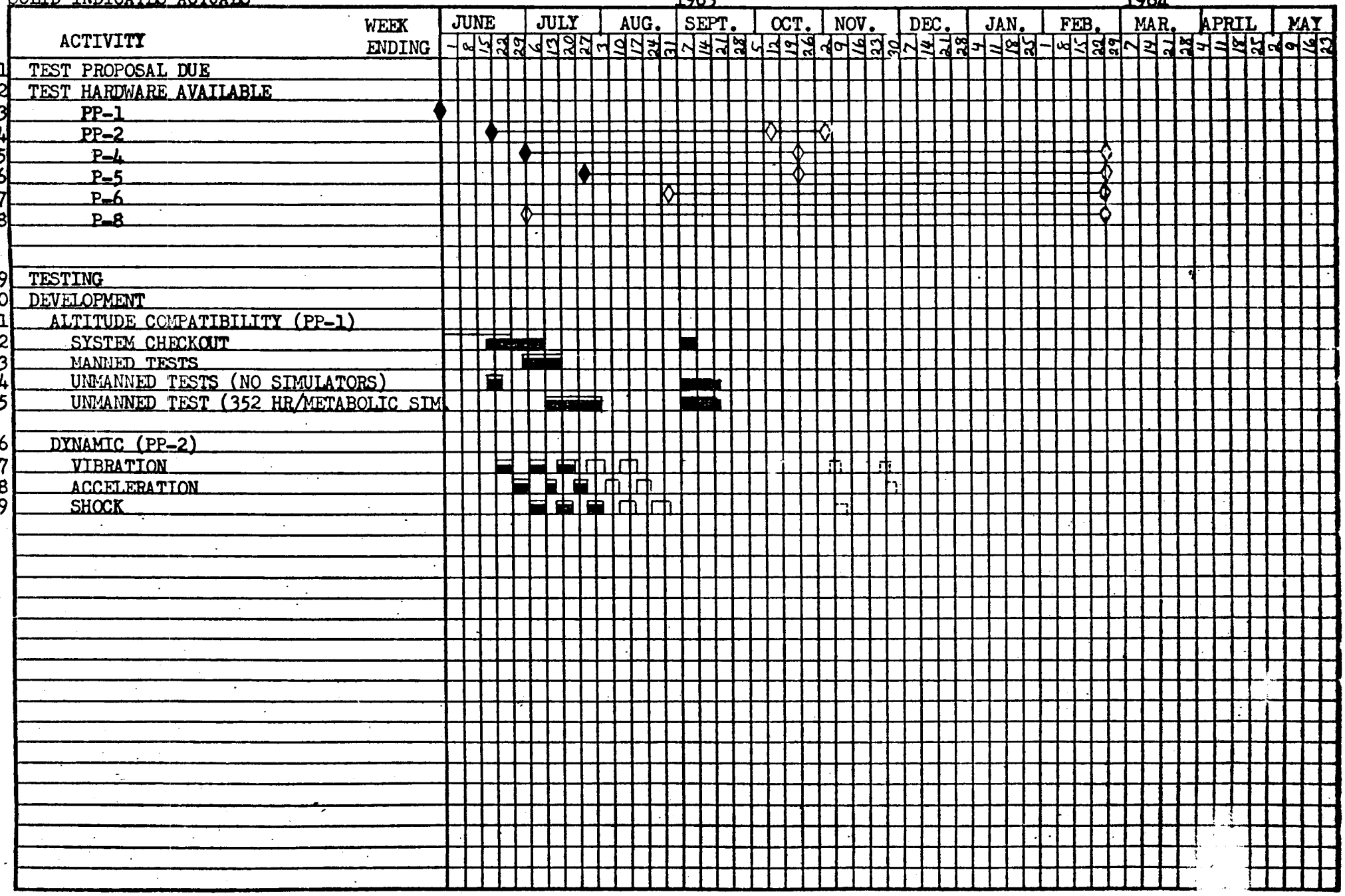

MAC 2274V (27 APR 59)

1D

TEST PROPOS[illegible] DUE
HARDWARE AVAIL.
TEST SCHEDULE
REPORT DUE
REPORT APPROVED

SOLID INDICATES ACTUALS

QUALIFICATION & DEV. & RELI. TEST STATUS
ENVIRONMENTAL CONTROL SYSTEM
(AIRESEARCH)
SCD 52-83700

SHEET [illegible] 2

DATE:
25 OCTOBER 1963

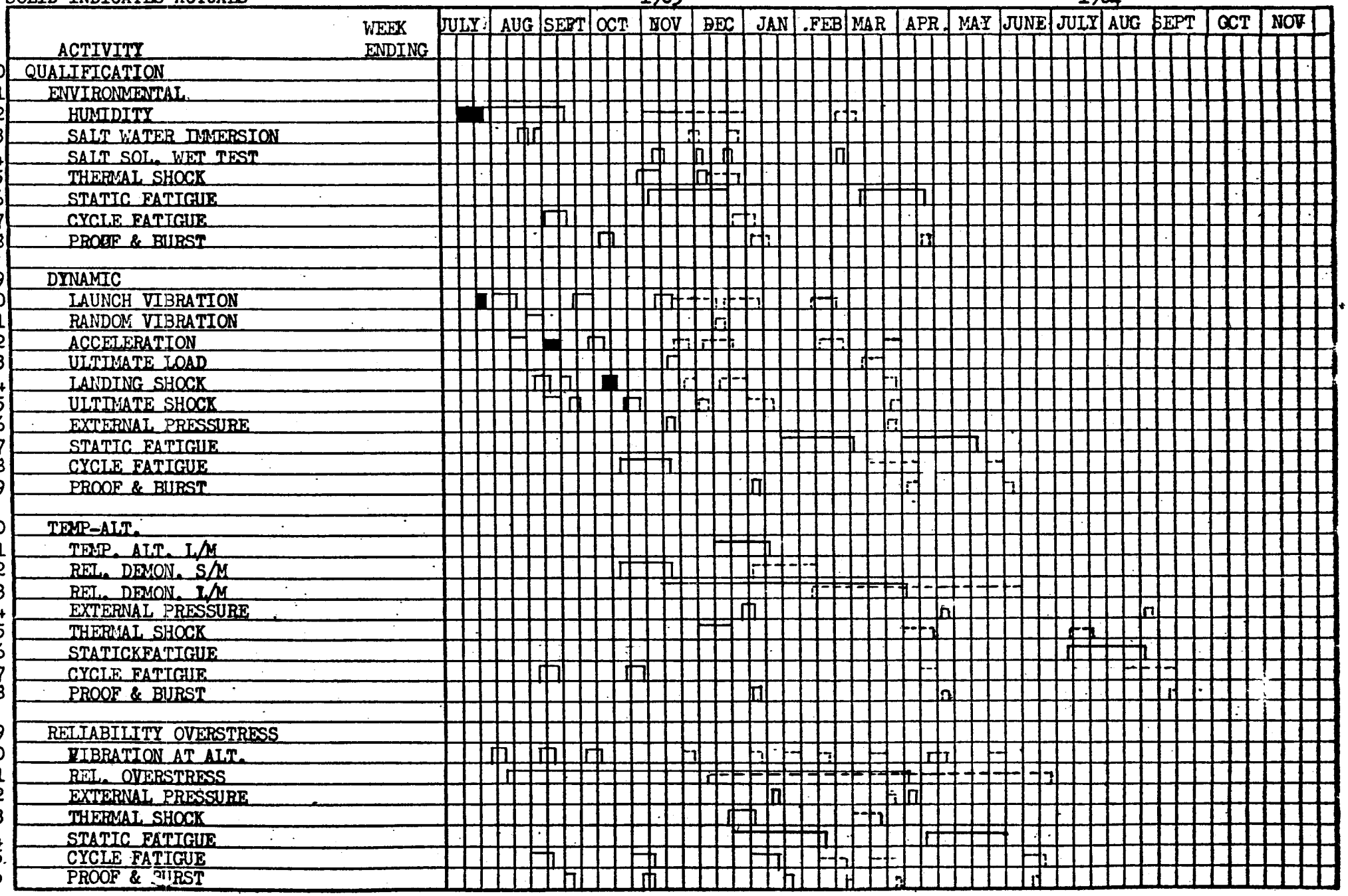

MAC 2274V (27 APR 59)

VENDOR DELIVERY STATUS REPORT
ENVIRONMENTAL CONTROL
AIRESEARCH

CHANGE NO [illegible]

25 [illegible] 1963

UNIT NO	TYPE	USAGE	COMPONENT	VENDOR W/S	AVAIL. FOR INSTL	REQ. FOR INSTL	STATUS
1	BP-1	BP-2	EGRESS O2			A05-21-63	
1	PP-1	BP-2	SCNDRY O2			A05-21-63	
1	PP-1	BP-2	-087 PUMP UNIT			A10-04-63	
1	PP-1	BP-2	-103 VALV TEMP			A09-18-63	
1	PP-1	BP-2	-125 SUIT LOOP			A06-29-63	
1	PP-1	BP-2	-127 PRIM O2			A06-01-63	
1	PP-1	BP-2	-145 H-X LCH CL	11-01-63	12-20-63	06-01-63	-29
1	PP-1	BP-2	-233 HT SCHNGR			A08-03-63	
1	PP-1	BP-2	-913 PUMP PWR	11-15-63	12-22-63	06-01-63	-29
2	PP-2	CTU	-027 BTRFLY VAL			A10-09-63	
2	PP-2	CTU	-087 PUMP UNIT			A10-04-63	
2	PP-2	CTU	-103 VALVE TEMP			A08-25-63	
2	PP-2	CTU	-145 H-X LCH CL	11-08-63	12-20-63	06-23-63	-26
2	PP-2	CTU	-163 PRIMARY O2			A08-01-63	
2	PP-2	CTU	-215 SUIT LOOP			A08-14-63	
2	PP-2	CTU	-233 HT SCHNGR			A08-01-63	
2	PP-2	CTU	-283 PWR SUP PP	11-15-63	12-22-63	06-23-63	-26
2	PP-2	CTU	-291 SCNDRY O2			A09-15-63	
2	PP-2	CTU	-907 IGR O2			A07-21-63	
1	PA-1	SC-2	EGRESS O2	A08-01-63	12-27-63	07-16-63	-28
1	PA-1	SC-2	-027 BTRFLY VAL		A10-02-63	06-16-63	-16
1	PA-1	SC-2	-055 PWR SUP	A10-15-63	12-26-63	08-01-63	-21
1	PA-1	SC-2	-145 H-X LCH CL	11-22-63	12-20-63	08-09-63	-20
1	PA-1	SC-2	-151 HT REG	10-25-63	12-20-63	08-01-63	-19
1	PA-1	SC-2	-233 HT EXCHER	11-10-63	12-26-63	08-09-63	-21
1	PA-1	SC-2	-253 SUIT LOOP	11-10-63	11-27-63	09-03-63	-32
1	PA-1	SC-2	-255 TEMP VALV	11-01-63	12-20-63	08-09-63	-19
1	PA-1	SC-2	-265 PUMP UNIT	11-15-63	12-26-63	08-22-63	-13
1	PA-1	SC-2	-275 SCNDRY O2	A10-08-63	12-26-63	07-11-63	-24
1	PA-1	SC-2	-277 SCNDRY O2	A10-09-63	12-26-63	07-11-63	-24
1	PA-1	SC-2	-415 CABIN COOL	10-31-63	12-26-63	06-16-63	-27
1	PA-1	SC-2	-429 PRIMARY O2	11-07-63	11-27-63	08-09-63	-11
1	PA-1	SC-2	-457 PWR SUP PP	11-29-63	12-22-63	06-16-63	-27
2	PA-3	SC-3A	-027 BTRFLY VAL	11-01-63	11-15-63	07-28-63	-17
2	PA-3	SC-3A	-127 PRIMARY O2	11-19-63	11-27-63	08-02-63	-[illegible]
2	PA-3	SC-3A	-151 H.X. REG	10-25-63	12-20-63	08-01-63	-20
2	PA-3	SC-3A	-233 HT EXCHER	10-25-63	12-26-63	08-02-63	-21
2	PA-3	SC-3A	-253 SUIT LOOP	11-15-63	11-27-63	09-08-63	-32
2	PA-3	SC-3A	-255 TEMP VALV	11-01-63	12-20-63	08-09-63	-19
2	PA-3	SC-3A	-265 PUMP UNIT	11-29-63	12-26-63	08-22-63	-26
2	PA-3	SC-3A	-275 SCNDRY O2	A10-15-63	12-26-63	07-28-63	-22
2	PA-3	SC-3A	-277 SCNDRY O2	10-25-63	12-26-63	07-28-63	-22
2	PA-3	SC-3A	-407 H-X LCH CL	12-15-63	12-27-63	08-03-63	-21
2	PA-3	SC-3A	-415 CABIN COOL	11-01-63	12-26-63	07-28-63	-22
2	PA-3	SC-3A	-443 EGRESS O2	01-23-64	01-23-64	07-28-63	-33
2	PA-3	SC-3A	-444 EGRESS O2	01-23-64	01-23-64	07-28-63	-33
2	PA-3	SC-3A	-457 PWR SUP PP	12-25-63	01-07-64	07-28-63	-3[illegible]
3	PA-7	SC-3	-027 BTRFLY VALV	11-01-63	11-15-63	07-25-63	-16
3	PA-7	SC-3	-055 PWR SUP	11-29-63	12-26-63	09-01-63	-17
3	PA-7	SC-3	-151 H.X. REG	11-01-63	12-20-63	09-01-63	-16
3	PA-7	SC-3	-233 HT XCHNGR	11-15-63	12-26-63	09-01-63	-17

UNIT NO	TYPE	USAGE	COMPONENT	VENDOR R/S	AVAIL. FOR INSTL	REQ. FOR INSTL	SLACK
3	PA-7	SC-3	-255 TEMP VALV	11-10-63	12-20-63	09-03-63	-16
3	PA-7	SC-3	-265 PUMP UNIT	12-13-63	12-26-63	09-01-63	-17
3	PA-7	SC-3	-275 SCNDRY 02	11-04-63	12-26-63	08-25-63	-18
3	PA-7	SC-3	-277 SCNDRY 02	11-04-63	12-26-63	08-25-63	-18
3	PA-7	SC-3	-401 SUIT LOOP	12-01-63	12-13-63	10-12-63	- 9
3	PA-7	SC-3	-407 H-X LCH CL	12-15-63	12-26-63	09-03-63	-17
3	PA-7	SC-3	-415 CABIN COOL	11-22-63	12-21-63	09-03-63	-15
3	PA-7	SC-3	-429 PRIMARY 02	12-25-63	01-07-64	09-03-63	-18
3	PA-7	SC-3	-443 EGRESS 02	01-23-64	01-31-64	08-25-63	-19
3	PA-7	SC-3	-444 EGRESS 02	01-23-64	01-31-64	08-25-63	-19
4	*PA-4	VENDR	ENVIRONMTL QUAL		02-24-64	07-01-63	-34
5	*PA-5	VENDR	DYN QUAL		02-24-64	08-01-63	-30
6	*PA-6	VENDR	TEMP + ALT QUAL		02-24-64	09-07-63	-27
8	*PA-8	VENDR	OSR		02-24-64	07-27-63	-30
9	PA-9	SC-4		02-17-64	02-26-64	11-03-63	-13
	PARTL	SPARE	COMPONENTS	02-20-64	02-27-64	11-30-63	-13
	PARTL	AD-13		12-15-63	01-15-64	12-22-63	- 7
10	PA-10	SC-5		03-17-64	03-26-64	01-11-64	-10
	PARTL	SPARE	COMPONENTS	03-20-64	03-27-64	01-31-64	- 8
11	PA-11	SC-6		04-17-64	04-26-64	03-21-64	- 5
12	PA-12	SC-7		05-17-64	05-26-64	05-15-64	- 2
13	PA-13	SC-8		06-17-64	06-26-64	07-25-64	+ 4
14	PA-14	SC-9		07-17-64	07-26-64	09-07-64	+ 7
15	PA-15	SC-10		08-17-64	08-26-64	11-09-64	+11
16	PA-16	SC-11		09-17-64	09-26-64	01-11-65	+15
17	PA-17	SC-12		10-17-64	10-26-64	03-15-65	+22
	PARTL	AD-14		03-12-64	04-12-64	05-15-65	+57
	PARTL	AD-15		03-12-64	06-12-64	07-15-65	+57

* VENDOR NUMBERS

VENDOR ACE STATUS REPORT
E.C.S.
AIRESEARCH

YEAR TO DATE

25 October 1963

PART NO.	NOMENCLATURE	UNIT NO.	VENDOR W/S	AVAIL FOR USAGE	REQ'D FOR USAGE	SLACK
			MANUFACTURING			
E180021-1	DOLLY ECS PKG	1	ACTUAL	ACTUAL		
E180021-1	DOLLY ECS PKG	2	ACTUAL	ACTUAL		
E180066-1	DOLLY ECS CRYO	1	ACTUAL	ACTUAL		
E180066-1	DOLLY ECS CRYO	2	ACTUAL	ACTUAL		
			PRE-INSTALLATION ACCEPTANCE			
E180011-1	HI PRESS BENCH	1	ACTUAL	12-16-63		
E180010-1	LO PRESS BENCH	1	ACTUAL	11-01-63		
E180012-1	CRYO BENCH	1	ACTUAL	11-21-63		
E180013-1	COOL BENCH	1	ACTUAL	12-16-63		
			SPACECRAFT SYSTEM TEST			
E180004-1	SERV UNIT S/C	1	ACTUAL	11-13-63		
E180027-1	TEST S/C LEAK	1	ACTUAL	11-26-63		
E180027-1	TEST S/C LEAK	2	ACTUAL	11-26-63		
E180004-1	SERV UNIT S/C	2	ACTUAL	11-13-63		
E180026-1	CO2 ABSORBER	1	11-01-63	11-15-63	8-15-63	[illegible]
E180076-1	TEST CON S/C	2	11-01-63	11-15-63	8-15-63	[illegible]
E180004-3	SERV UNIT S/C	1	11-01-63	11-25-63	8-21-63	14
E180026-1	CO2 ABSORBER	2	11-01-63	11-15-63	9-01-63	[illegible]
E180076-1	TEST CON S/C	1	11-01-63	11-15-63	9-15-63	[illegible]
E180126-1	CO2 ABSORBER	1	10-18-63	11-01-63	11-01-63	0
E180126-1	CO2 ABSORBER	2	11-01-63	11-15-63	12-15-63	[illegible]
			HANGAR			
E180027-1	TEST S/C LEAK	3	11-15-63	11-29-63	9-03-63	[illegible]
E180021-1	DOLLY ECS PKG	3	ACTUAL	10-15-63	12-03-63	[illegible]
E180013-1	ECS PIA BENCH	2	12-20-63	1-03-64	11-04-63	[illegible]
E180010-1	ECS PIA BENCH	2	12-15-63	12-29-63	11-04-63	[illegible]
E180011-1	ECS PIA BENCH	2	12-15-63	1-04-64	12-09-63	[illegible]
E180066-1	DOLLY ECS CRYO	4	10-15-63	10-29-63	12-16-63	[illegible]
E180066-1	DOLLY ECS CRYO	3	10-15-63	10-25-63	12-16-63	[illegible]
E180012-1	ECS PIA BENCH	2	12-30-63	1-14-64	11-16-63	[illegible]
E180004-3	SER UT SC COOL	4	2-01-64	2-08-64	9-03-63	23
E180004-3	SER UT SC COOL	5	1-01-64	1-08-64	1-06-64	0
E180076-1	TEST CONS ECS	3	11-01-63	11-08-63	12-07-63	[illegible]
E180076-1	TEST CONS ECS	4	11-01-63	11-08-63	12-16-63	[illegible]
E180026-1	CO2 ABSORBER	4	11-01-63	11-08-63	12-09-63	[illegible]
E180126-1	CO2 ABSORBER	4	12-23-63	1-07-63	1-01-64	[illegible]
E180126-1	CO2 ABSORBER	5	12-23-63	1-07-63	1-01-64	[illegible]
E180126-1	CO2 ABSORBER	6	12-23-63	1-07-63	1-01-64	[illegible]
			PAD			
E180004-3	SERV UNIT S/C	2	12-01-63	12-08-63	1-27-64	[illegible]
E180027-1	TEST S/C LEAK	4	11-22-63	12-06-63	10-18-63	[illegible]
E180021-3	DOLLY ECS PKG	1	ACTUAL	10-29-63		
E180021-3	DOLLY ECS PKG	2	ACTUAL	10-01-63		
E180021-3	DOLLY ECS PKG	3	ACTUAL	10-08-63		
E180026-1	CO2 ABSORBER	3	11-01-63	11-08-63	3-06-64	[illegible]
E180021-3	DOLLY ECS PKG	4	ACTUAL	10-29-63		
E180126-1	CO2 ABSORBER	3	1-01-64	1-08-64	1-01-64	[illegible]

System: Guidance & Control
Subsystem: Attitude Display
Vendor: Lear Siegler
Date: 25 Oct. 1963

MONTHLY SUMMARY

ENGINEERING STATUS

1. Basically, there are no engineering problems for the indicators and/or controllers for SC 2 and 3A. However, there is an engineering change, which is pending, modifying the needle sensitivity, in the GT-3, on the indicators for SC 3 through 12. This change is expected to be approved on or before 1 Nov. 1963.

2. No engineering change anticipated for the controllers for SC 3.

ASSEMBLY & DELIVERY STATUS

1. SC #2 - Controllers
One controller was shipped 17 Oct. 1963. The other controller will be shipped 28 Oct. 1963. Slippage in W/S dates from reported W/S dates, dated 27 Sept. 1963, was due to minor rework. The controller, for S/C #2 , shipped 17 Oct., may be utilized on S/C #3A and the controller for S/C 3A which will be shipped 28 Oct. 1963, will be utilized in its place. Reason being, that the controller for S/C #2 has had more extensive rework than the controller for S/C 3A.

Indicators
One of the indicators has been received. The other indicator has been rejected twice during this month:
2 Oct. 1963 - rejected for excessive leakage
26 Oct. 1963 - rejected for non-smooth needle operation during vibration test.

Rejection problem is under investigation; the new W/S date is now 28 Oct. 1963.

2. S/C 3A - Controllers
These controllers are in the process of being reworked due to the replacing of a leaky oil module. One of these controllers will ship 28 Oct. 1963 and the other will ship 1 Nov. 1963.

Indicators
Both indicators have slipped the last reported W/S date by approximately three weeks. One of the indicators had to be completely reworked due to excessive vibration. The other indicators face plate had out of tolerance dimensions and also slipped its sphere halves. Due to this slippage, the unit had to be re-opened and the slippage corrected. Revised W/S dates are now 28 Oct. 1963 and 1 Nov. 1963.

3. Due to the indicator sensitivity change concerning S/C 3 through 12, it is felt that a slippage in the W/S dates, reported in the Vendor Status Report dated 27 Sept. 1963, will occur. When revised W/S dates are confirmed, MAC will advise.

TEST STATUS

1. Test failures as indicated in "Monthly Summary," dated 27 Sept. 1963, have been corrected.

2. Test rescheduling is as indicated on "Qualification and Development Test Status", dated 25 Oct. 1963.

AGE

1. All PIA Equipment will be available by 25 Oct. 1963.

GEMINI SPACECRAFT

CONTRACT NO. NAS 9-170

ATTITUDE DISPLAY- (VENDOR: LEAR-SIEGLER)

STATUS CHART

REPORT NO. 8580-1-33

LAST PROGRAM SCHEDULE CHANGE: 1 APRIL 1963

STATUS AS OF: 25 OCTOBER 63

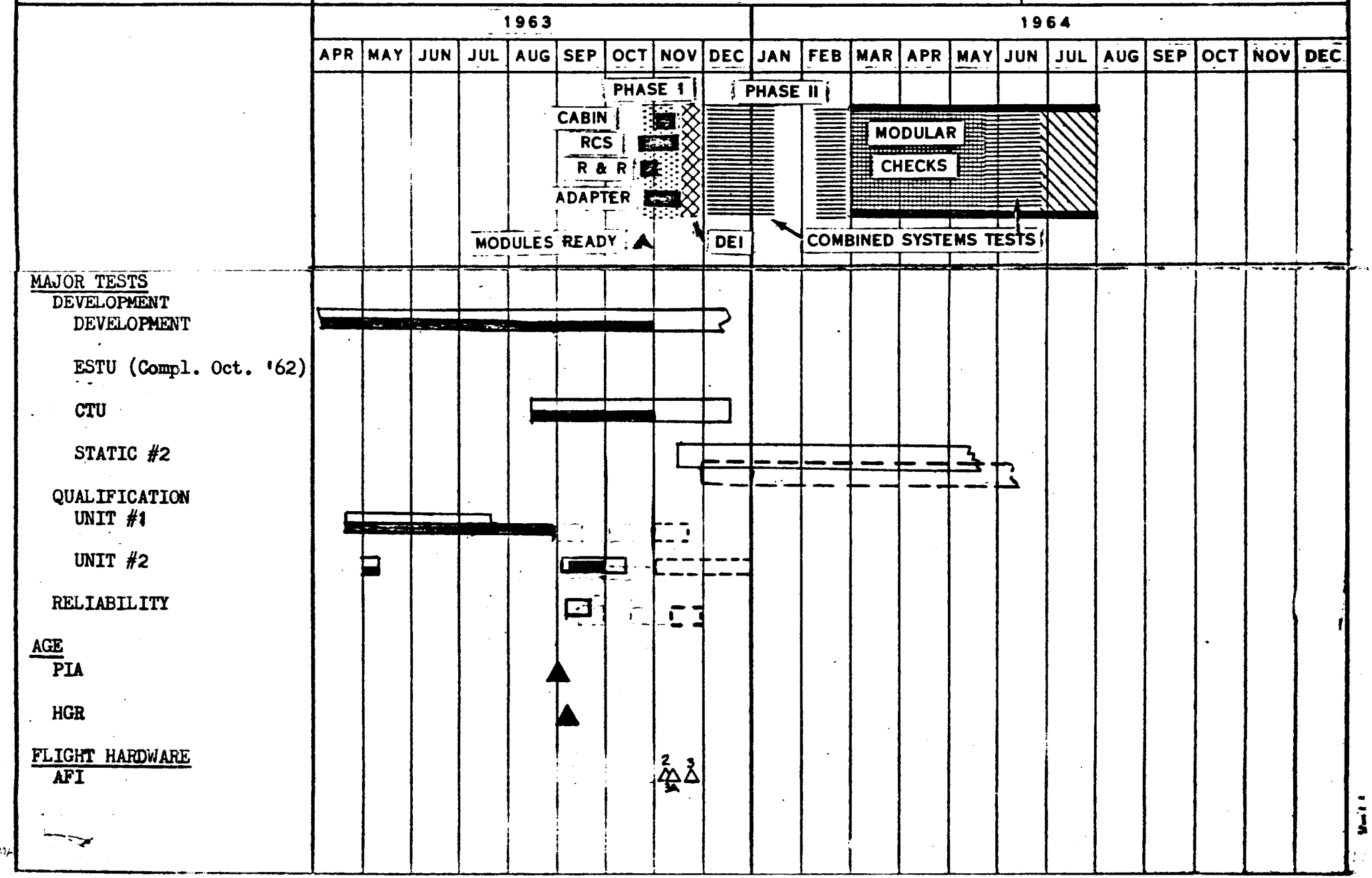

LEGEND
- ▽ Test Proposal Due
- ◇ Hardware Available
- □ Test Schedule
- O Report Due
- ✩ Report Approved

SOLID INDICATES ACTUALS

QUALIFICATION AND DEVELOPMENT TEST STATUS
ATTITUDE DISPLAY GROUP
LEAR SIEGLER, INC.
SCD 52-87702

Date: 25 Oct. 1963

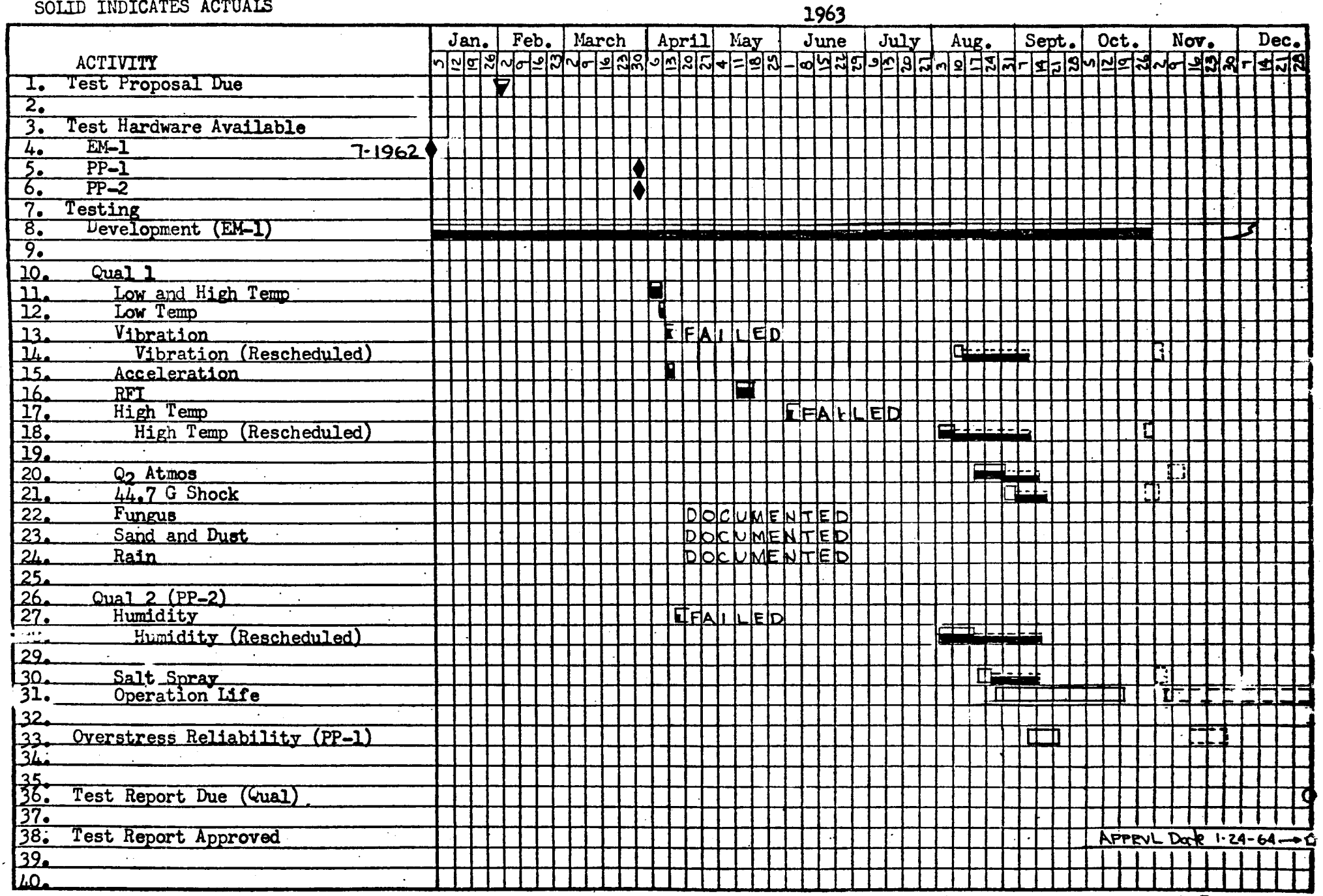

MAC 2274V (27 APR 59)

VENDOR DELIVERY STATUS REPORT
ATTITUDE DISPLAY
LEAR SIEGLER

CHART NO 11 C

25 OCTOBER 1963

UNIT NO	TYPE	USAGE	COMPONENT	VENDOR W/S	AVAIL. FOR INSTL.	REQ'D FOR INSTL.	SLACK
1	EP-1-2	ESTU				A10-08-62	
1.5	EP-3	IBM				A11-10-62	
2	PP-1-2	VEND	QUAL.			A05-01-63	
3	PA-1-2	CTU				A02-25-63	
4	PA-3	ST 2	INDICATORS		A08-26-63	12-15-63	+16
	PA-4	ST 2	INDICATORS		A08-26-63	12-15-63	+16
5	PA-3	SC-2	CONTROLLER	A10-17-63	11-06-63	09-10-63	- 8
	PA-4	SC-2	CONTROLLER	10-28-63	11-06-63	09-10-63	- 8
6	PA-5	SC-2	INDICATOR	A10-07-63	11-06-63	08-08-63	-12
	PA-6	SC-2	INDICATOR	10-28-63	11-06-63	08-08-63	-12
7	PA-5	SC-3A	CONTROLLER	10-28-63	11-06-63	10-06-63	- 4
	PA-6	SC-3A	CONTROLLER	11-01-63	11-10-63	10-06-63	- 5
8	PA-7	SC-3A	INDICATOR	10-28-63	11-06-63	09-11-63	- 8
	PA-8	SC-3A	INDICATOR	11-01-63	11-10-63	09-11-63	- 9
9	PA-7	SC-3	CONTROLLER	11-15-63	11-24-63	11-12-63	- 2
	PA-8	SC-3	CONTROLLER	11-15-63	11-24-63	11-12-63	- 2
10	PA-9	SC-3	INDICATOR	11-15-63	11-24-63	10-11-63	- 6
	PA-10	SC-3	INDICATOR	11-15-63	11-24-63	10-11-63	- 6
11	PA-11	SPARE	SST	11-15-63	11-24-63	10-15-63	- 6
12	PA-12	SC-4	CONTROLLER	11-30-63	12-09-63	11-30-63	- 1
13	PA-13	SC-4	INDICATOR	11-30-63	12-09-63	10-30-63	- 6
14	PA-14	SPARE	CONTROLLER	12-15-63	12-24-63	11-30-63	- 3
15	PA-15	SPARE	IND & CONT.	12-15-63	12-24-63	01-31-64	+ 3
16	PA-16-17	SC-5		01-02-64	01-11-64	02-06-64	+ 4
17	PA-18-19	SC-6		02-01-64	02-10-64	04-09-64	+ 8
18	PA-20-21	SC-7		02-29-64	03-09-64	06-11-64	+13
19	PA-22-23	SC-8		03-31-64	04-09-64	08-09-64	+17
20	PA-24-25	SC-9		04-30-64	05-09-64	10-03-64	+21
21	PA-26-27	SC-10		05-30-64	06-08-64	12-06-64	+26
22	PA-28-29	SC-11		06-30-64	07-09-64	02-12-65	+32
23	PA-30-31	SC-12		07-30-64	08-08-64	04-17-65	+37

VENDOR AGE STATUS REPORT
ATTITUDE DISPLAY
LEAR SIEGLER

CHART NO. 11 D

DATE: 10-25-63

PART NUMBER	NOMENCLATURE	UNIT NO.	VENDOR W/S	AVAIL. FOR USAGE	REQ'D FOR USAGE	SLACK
			PRE-INSTALLATION ACCEPTANCE			
52-E270035-1	PIA-CONSOL. ATT	1		A10-25-63		
52-E270047-1	TEMPLATE ATT	1		A10-25-63		
			SPACECRAFT SYSTEM TEST			
52E270047-1	TEMPLATE ATT	3		A09-24-63		
			HANGAR			
52-E270047-1	TEMPLATE ATT	2		A09-24-63		
52-E270035-1	PIA CONSOLE	2		A09-24-63		
			PAD			
52-E370001-1	CAMRA CNTRS	1		A07-26-63		

MONTHLY SUMMARY

System: Spacecraft Structure
Subsystem: Heat Shield
Vendor: McDonnell E.E.D.
Date: 25 October 1963

1. Production work on Heat Shields has remained static for the major portion of the month of October. The only production progress being made was the start of a replacement shield for Spacecraft No. 2, which was held up during ring bonding stage by MRR 103AA79. Disposition received in bonding room 25 October 1963 on this MRR and work has resumed on this assembly only. Several additional MRR's are outstanding on Static No. 4-2, Static No. 3-2, Spacecraft No. 3 with dispositions forth coming in the very near future. Discrepant vendor furnished items are causing further delays in production. Discrepant batches of D-5 material were received which did not meet viscosity requirements and contained contaminated catalyst Also the latest shipment of honeycomb core material (for Spacecraft No. 2R) has failed lab tests. Additional delays have been encountered in excessive time required to make and evaluate lab tests and time required to process MRR's.

2. A review of MAC process spec. 14050 is being conducted and spec. is being updated to include process specifications for nine (9) pound honeycomb core material with alterations in test programs. Curing ovens are being reworked to add additional vacuum lines and manometers to maintain a closer control of vacuum on Heat Shields during entire curing cycle.

VENDOR DELIVERY STATUS REPORT

SYSTEM: HEAT SHIELD CHART NO.: 12-C

VENDOR: MCDONNELL AIRCRAFT 25 October 1963

UNIT NO.	TYPE	USAGE	COMPONENT	VENDOR W/S	AVAIL FOR INSTL.	REQ'D FOR INSTL	SLACK
1	PP-1	MAC	Development			A 3-01-62	
2	PP-2	MAC	Development			A 2-13-62	
3	PA-1	STATIC-4				A 3-22-63	
4	PA-2	STATIC-3				A 5-10-63	
5	PA-3	SC-1				A 6-22-63	
6	PA-4	SC-2			12-01-63	12-01-63	
7	PA-5	STATIC-4(2)			01-15-64	01-15-64	0
8	PA-6	STATIC-3 (2)			11-16-63	11-16-63	
9	PA-7	SC-3			1-02-64	1-02-64	0
10	PA-8	SC-4			2-07-64	2-07-64	0
11	PA-9	SC-5			3-20-64	3-20-64	0
12	PA-10	SC-6			5-05-64	5-05-64	0
13	PA-11	SC-7			7-07-64	7-07-64	0
14	PA-12	SC-8			9-02-64	9-02-64	0
15	PA-13	SC-9			10-31-64	10-31-64	0
16	PA-14	SC-10			1-03-65	1-03-65	0
17	PA-15	SC-11			3-04-65	3-04-65	0
18	PA-16	SC-12			5-08-65	5-08-65	0

Static 5 and Static 2 to use aluminum shield (52-04212)
S/C 2 Heat Shield complete but not usable, replacement in work.

MONTHLY SUMMARY

System: Communications
Subsystem: UHF Voice T/R
Vendor: Collins Radio
Date: 25 October 1963

ENGINEERING STATUS

During October the following significant problems occurred on the UHF VOICE T/R:

1. The Pencil Triode (8185) tubes cracked when heated because the foam left no room for tube expansion. This problem was solved by the use of a rubber buffer to allow for this expansion.

2. The Pencil Triode (8185) tubes had a low power output problem caused by "tube slump." The 8185 tube is put through a burn-in in Class A by Collins' vendor. However, Collins must operate this tube as a Class C amplifier. To solve this problem Collins is making a special 100-Hour burn-in on this module with the tube in Class C operation to prove its capability. The UHF Voice T/R then receives another 50-hour and 25-hour burn-in prior to the PDA Acceptance Test.

ASSEMBLY AND DELIVERY STATUS

1. The Pencil Triode tube problem, discussed above, caused approximately a two-week delay to Production Articles 1 and up for study of problems.

2. Detuning of transmitters during foaming and other minor initial production assembly problems resulted in approximately a two-week delay in production articles 1 and up.

TEST STATUS (SEE "DETAIL TEST CHART")

1. The Salt Water Immersion (PP-4) was completed 10/12. (Line 28)

2. The Shock (PP-4) was completed 10/14. (Line 29)

3. All Qualification Tests are now complete.

4. The Reliability Assurance Test (PP-3) was run 10/5 to 10/22 but a rerun was necessary because of a mistake in the test procedure which required that the reference data be taken at a temperature below the design limit of the UHF Voice T/R. The rerun of the low temperature (PP-3) portion is scheduled to start on 10/28 (Line 32). The Reliability Assurance (PP-2) (Temperature Portion) and Reliability Assurance (PP-4) (Vibration Portion) Tests are scheduled for 10/30 through 11/8.

5. Because of a CTU schedule change the test on the UHF was not performed. (Line 4, Summary Status Chart)

AGE

The UHF PIA Bench was shipped from Collins Radio Co. on 16 October. The Unit has been calibrated and checked-out; it is now ready for PIA production articles.

GEMINI SPACECRAFT

CONTRACT NO. NAS 9-170

UHF VOICE T/R (VENDOR: COLLINS RADIO)

STATUS CHART

REPORT NO. 8580-1 -33

LAST PROGRAM SCHEDULE CHANGE: 1 APRIL 1963

STATUS AS OF: 25 Oct. 1963

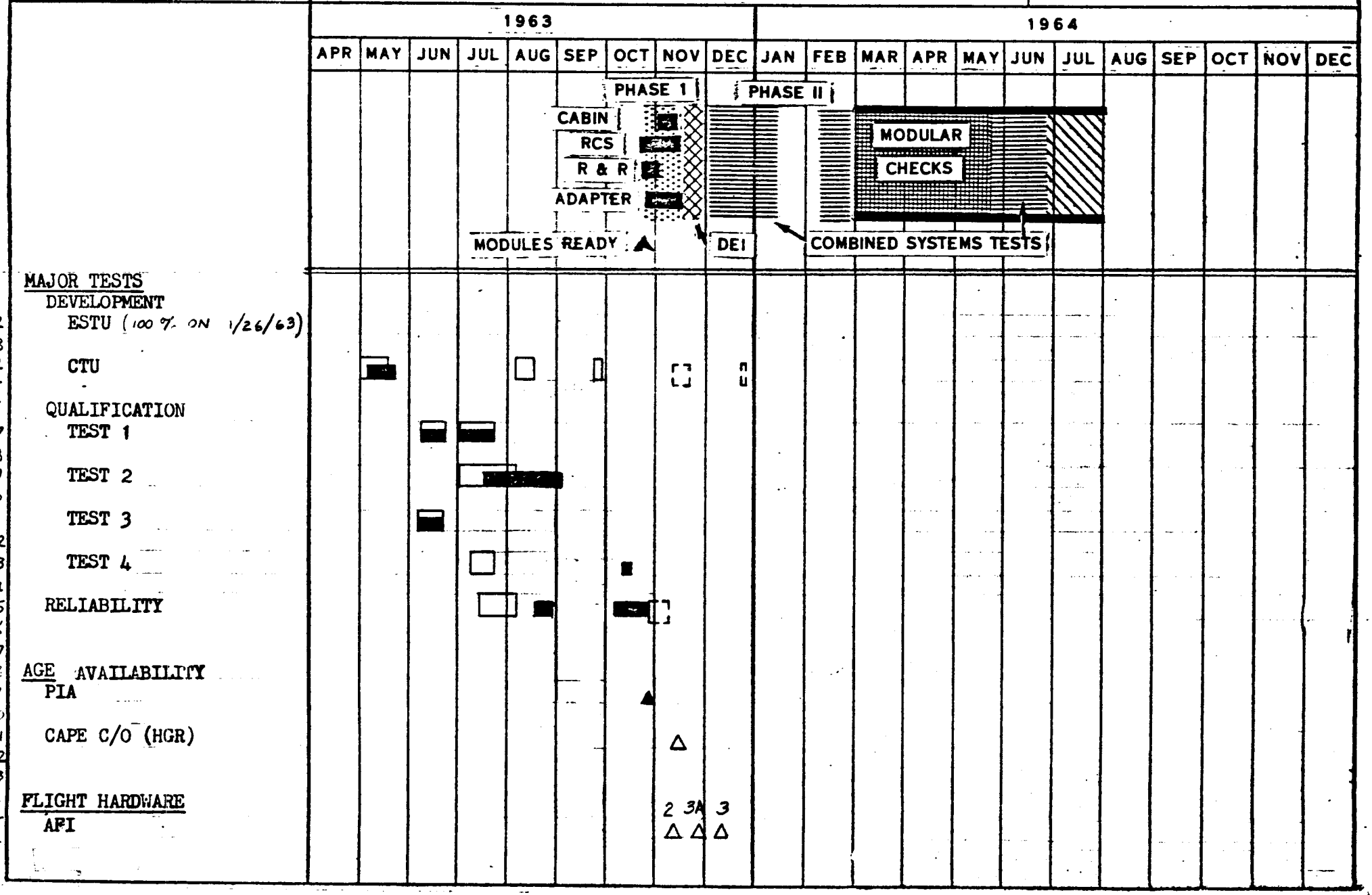

LEGEND

- ▽ TEST PROPOSAL DUE
- ◊ HARDWARE AVAIL.
- ▭ TEST SCHEDULE
- ○ REPORT DUE
- ☆ REPORT APPROVED

SOLID INDICATES ACTUAL

QUALIFICATION AND DEV. TEST STATUS
UHF VOICE T/R
COLLINS RADIO CO.
SCD 52-85709

REV. D 25 OCT. '63

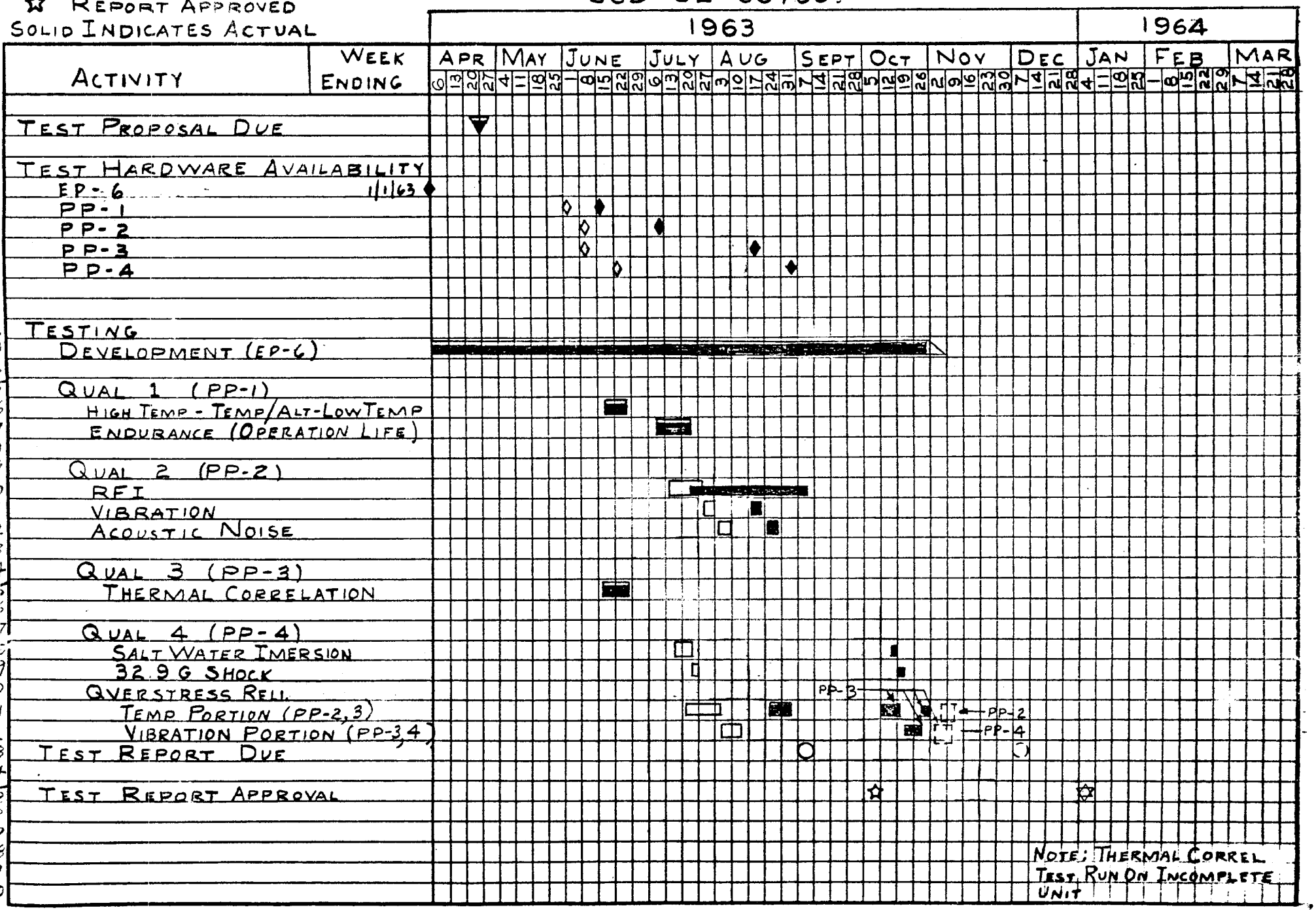

NOTE: THERMAL CORREL. TEST RUN ON INCOMPLETE UNIT

MAC 2274V (27 APR 59)

VENDOR DELIVERY STATUS REPORT
UHF VOICE T/R
COLLINS RADIO

CHART NO. 13 C

DATE: 10-25-63

UNIT NO.	TYPE	USAGE	COMPONENT	VENDOR W/S	AVAIL. FOR INSTL	REQ. FOR INSTL	SLACK
1	EP-1	ESTU				A 3-01-63	
2	EP-2	ESTU				A 3-01-63	
3	EP-3	CTU				A 4-26-63	
4	EP-4	CTU				A 4-26-63	
5	EP-5	ST 5				A 6-30-63	
6	PP-1	VENDR QUAL				A 6-03-63	
7	PP-2	VENDR QUAL				A 8-01-63	
8	PP-3	VENDR QUAL				A 8-13-63	
9	PP-4	VENDR QUAL				A 8-29-63	
10	PP-5	ST-5		A 9-20-63	11-06-63	9-16-63	-7
11	PA-1	SC-2		10-30-63	11-08-63	7-19-63	-16
12	PA-2	SC-2		11-01-63	11-11-63	7-19-63	-16
13	PA-3	SC-3A		11-15-63	11-22-63	8-15-63	-14
14	PA-4	SC-3A		11-22-63	11-29-63	8-15-63	-15
15	PA-5	SC-3		11-29-63	12-06-63	9-25-63	-10
16	PA-6	SC-3		12-06-63	12-13-63	9-25-63	-11
17	PA-7	SPARE SST		12-13-63	12-20-63	9-30-63	-12
18	PA-8	ST-2		12-20-63	12-27-63	10-12-63	-11
19	PA-9	ST-2		12-27-63	1-03-64	10-12-63	-12
20	PA-10	SC-4		1-03-64	1-10-64	11-29-63	- 6
21	PA-11	SC-4		1-10-64	1-17-64	11-29-63	- 7
22	PA-12	SPARE SST		1-17-64	1-24-64	11-30-63	- 8
23	PA-13	SPARE HGR		1-24-64	1-31-64	11-30-63	- 9
24	PA-14	SPARE SST		1-31-64	2-07-64	01-31-64	- 1
25	PA-15	SPARE HGR		2-07-64	2-14-64	01-31-64	- 2
26	PA-16	SC-5		2-14-64	2-21-64	01-31-64	- 3
27	PA-17	SC-5		2-21-64	2-28-64	01-31-64	- 4
28	PA-18	SPARE HGR		3-06-64	3-13-64	03-30-64	+ 2
29	PA-19	SC-6		3-13-64	3-20-64	04-03-64	+ 2
30	PA-20	SC-6		3-20-64	3-27-64	04-03-64	+ 1
31	PA-21	SC-7		3-27-64	4-03-64	06-11-64	+10
32	PA-22	SC-7		4-03-64	4-10-64	06-11-64	+ 9
33	PA-23	SC-8		4-10-64	4-17-64	08-09-64	+16
34	PA-24	SC-8		4-17-64	4-24-64	08-09-64	+15
35	PA-25	SC-9		4-24-64	5-01-64	10-03-64	+22
36	PA-26	SC-9		5-01-64	5-08-64	10-03-64	+21
37	PA-27	SC-10		5-08-64	5-15-64	12-06-64	+29
38	PA-28	SC-10		5-15-64	5-22-64	12-06-64	+28
39	PA-29	SC-11		5-22-64	5-29-64	02-12-65	+37
40	PA-30	SC-11		5-29-64	6-05-64	02-12-65	+36
41	PA-31	SC-12		6-05-64	6-12-64	04-12-65	+43
42	PA-32	SC-12		6-12-64	6-17-64	04-12-65	+42

VENDOR AGE STATUS REPORT

CHART NO. 13, 14, 15 D

COMMUNICATION SYSTEM

COLLINS

DATE: 10-25-63

PART NUMBER	NOMENCLATURE	UNIT NO.	VENDOR W/S	AVAIL. FOR USAGE	REQ.D FOR USAGE	SLACK
			PRE-INSTALLATION ACCEPTANCE			
E190002-1	PIA BENCH UHF	1		A10-25-63		
E190001-1	PIA BENCH HF	1	10-29-63	11-19-63	8-25-63	-12
E190001-1	PIA BENCH VCC	1	11-19-63	12-01-63	8-25-63	-14
			HANGAR			
E190028-1	TB-HF/UHF/VCC PIA	1	11-22-63	12-13-63	11-29-63	[illegible] 2

MONTHLY SUMMARY

System: Communications
Subsystem: HF VOICE T/R
Vendor: Collins Radio
Date: 25 October 1963

PROCUREMENT

During October Production articles 3 and up were affected by a delay in Collins' receipt of crystal filters from their Vendor. Many filters have been rejected at CRC for extensive center frequency shift over the temperature range. Collins has expedited good crystal filters and no further delay is anticipated.

ASSEMBLY AND DELIVERY STATUS

1. PA-1 (SC-2) was shipped from Collins on 17 October.

2. PA-2 (SC-2) was shipped from Collins on 25 October.

3. PA-3 (SC-3A) was delayed 3 weeks because of crystal filter shortages and minor problems associated with manufacturing start-up. Collins says these latter problems do not cause extensive delays by themselves, but when added up, are responsible for delays in delivery.

4. PA-4 (SC-3A) was delayed 3 weeks by lack of crystal filters and because of noise in the receiver. The noise problem is not consistant on all units, and the cause is under investigation.

5. PA-5 (SC-3) was delayed 4 weeks because there was a delay in Collins' receipt of crystal filters.

6. PA-6 (SC-3) was delayed one week because manpower scheduled to accomplish this activity was assigned to the final test of the first 4 production units.

TEST STATUS (SEE "DETAIL TEST CHART")

1. All Qualification Tests are complete.

2. The Overstress Reliability (PP-3) (PP-4), both Temperature and Vibration, tests are complete.

3. Because of a CTU schedule change the test on the HF Voice T/R was not performed. (Line 4, Summary Status Chart)

AGE

The HF PIA Bench is still scheduled for shipment on 29 October.

GEMINI SPACECRAFT

CONTRACT NO. NAS 9-170

HF VOICE T/R (VENDOR: COLLINS RADIO)

STATUS CHART

REPORT NO. 8580-1 -33

LAST PROGRAM SCHEDULE CHANGE: 1 APRIL 1963

STATUS AS OF: 25 Oct. 1963

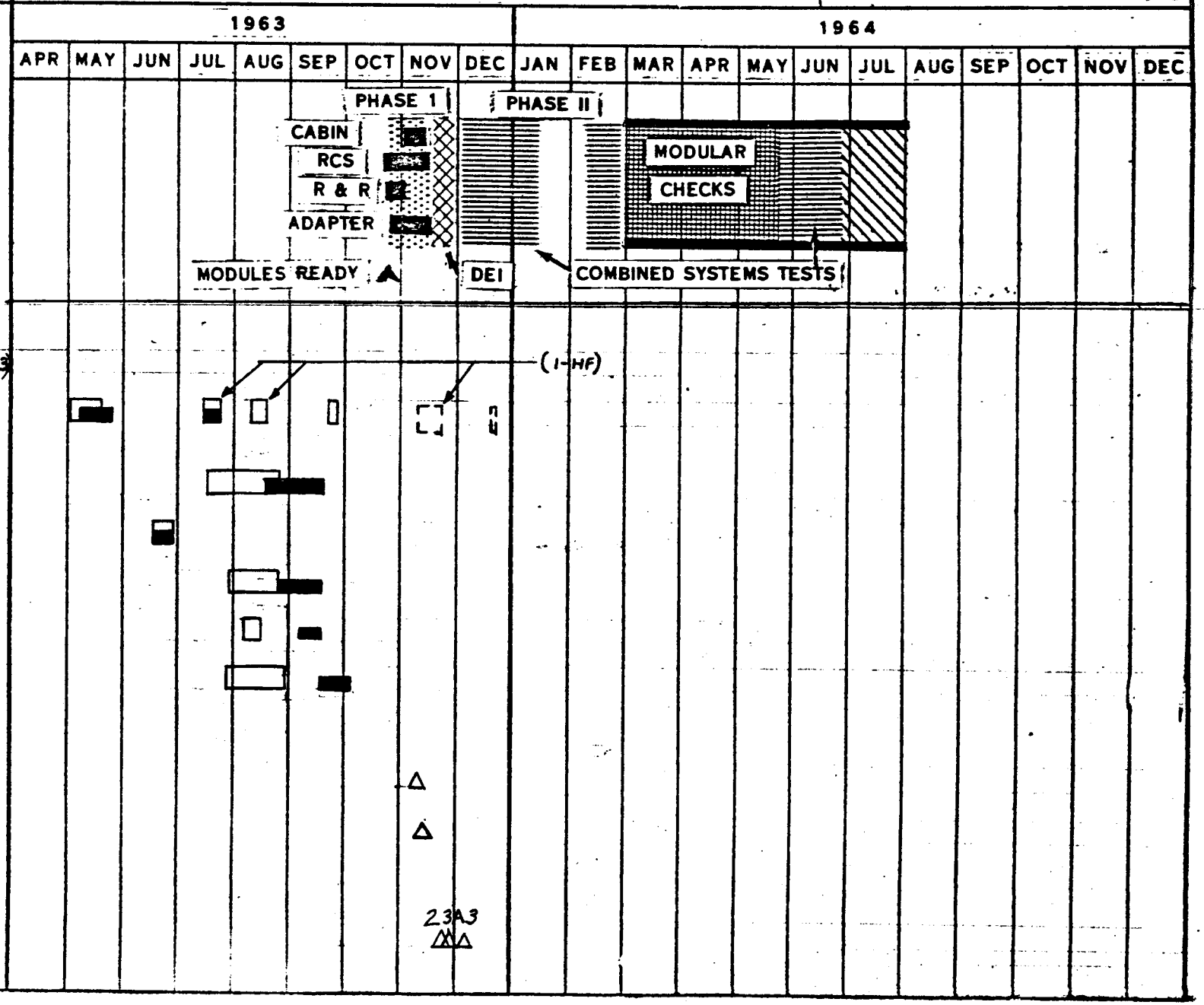

LEGEND
- ▽ TEST PROPOSAL DUE
- ◊ HARDWARE AVAIL
- ▭ TEST SCHEDULE
- ○ REPORT DUE
- ☆ REPORT APPROVED

SOLID INDICATES ACTUAL

QUALIFICATION AND DEV. TEST STATUS
H F VOICE T/R
COLLINS RADIO CO.
SCD 52-85710

REV D 25 OCT., '63

	ACTIVITY	WEEK ENDING
1		
2	TEST PROPOSAL DUE	
3		
4	TEST HARDWARE AVAILABLE	
5	EP-5	11/1/62
6	PP-1	
7	PP-2	
8	PP-3	
9	PP-4	
10		
11		
12	TESTING	
13	DEVELOPMENT (EP-5)	
14		
15	QUAL. 1 (PP-1)	
16	HIGH TEMP-TEMP./ALT-LOW TEMP	
17	ENDURANCE (OPERATION LIFE)	
18	ACCOUSTIC NOISE	
19		
20	QUAL. 2 (PP-2)	
21	THERMAL CORRELATION	
22		
23	QUAL. 3 (PP-3)	
24	RFI	
25	VIBRATION	
26		
27	QUAL 4 (PP-4)	
28	SALT WATER IMERSION & SHOCK	
30	OVERSTRESS (PP-3, PP-4)	
31	TEMP PORTION (PP-3) (PP-4)	
32	VIBRATION PORTION (PP-3) (PP-4)	
33		
34	TEST REPORT DUE (QUAL.)	
35		
36	TEST REPORT APPROVED	
37		
38		
39		
40		

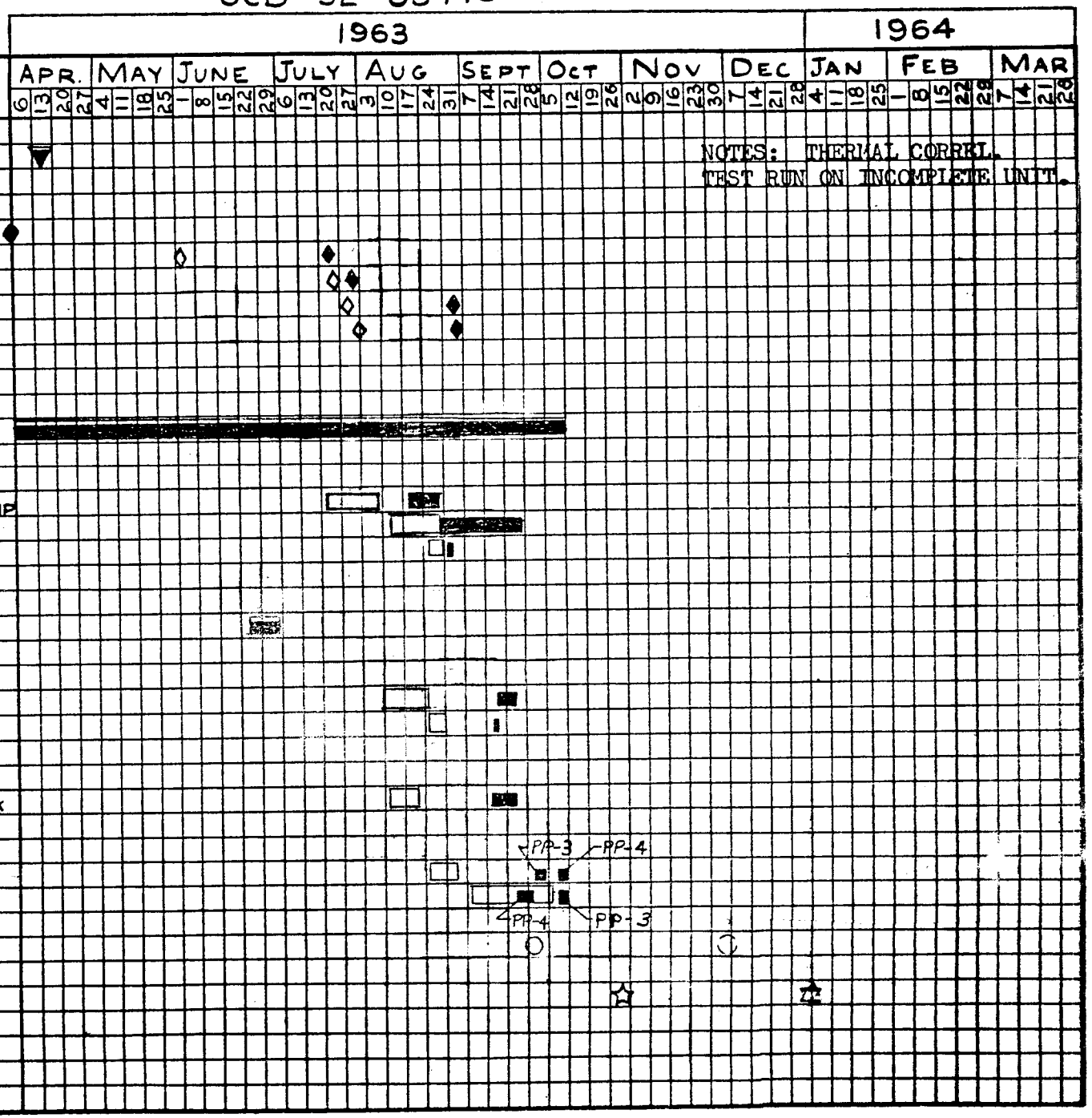

MAC 2274V (27 APR 59)

VENDOR DELIVERY STATUS REPORT
HF VOICE T/R
COLLINS RADIO

CHART NO. [illegible]

DATE: 10-25-63

UNIT NO.	TYPE	USAGE	COMPONENT	VENDOR W/S	AVAIL. FOR INSTL	REQ. FOR INSTL	SLACK
1-2	EP-1+2	ESTU				A12-07-62	
3-4	EP-3+4	CTU				A 4-08-63	
5	pp-1	VENDR QUAL				A 8-12-63	
6	PP-2	VENDR QUAL				A 8-21-63	
7	PP-3	VENDR QUAL				A 8-29-63	
8	PP-4	VENDR QUAL				A 8-29-63	
9	PP-5	ST-5		A 8-30-63	11-05-63	9-16-63	- 7
10	PA-1	SC-2		A10-17-63	11-21-63	7-22-63	-17
11	PA-2	SC-2		A10-25-63	11-25-63	7-22-63	-18
12	PA-3	SC-3A		11-05-63	11-27-63	8-13-63	-15
13	PA-4	SC-3A		11-08-63	11-29-63	10-15-63	- 7
14	PA-5	SC-3		11-15-63	12-03-63	8-13-63	-16
15	PA-6	SC-3		11-22-63	12-05-63	9-23-63	-10
16	PA-7	SPARE SST		11-29-63	12-09-63	9-30-63	-10
17	PA-8	SC-4		12-06-63	12-13-63	11-30-63	- 2
18	PA-9	SC-4		12-13-63	12-20-63	11-30-63	- 3
19	PA-10	SPARE-HGR		12-20-63	12-27-63	11-30-63	- 4
20	PA-11	SPARE-SST		12-27-63	1-03-64	11-30-63	- 5
21	PA-12	SPARE-HGR		1-03-64	1-10-64	1-30-64	+ 3
22	PA-13	SPARE-SST		1-10-64	1-17-64	1-30-64	+2
23	PA-14	SC-5		1-17-64	1-24-64	2-01-64	+ 1
24	PA-15	SC-5		1-24-64	1-31-64	2-01-64	0
25	PA-16	AD-13		1-31-64	2-07-64	1-27-64	- 2
26	PA-17	SC-6		2-07-64	2-14-64	3-13-64	+ [illegible]
27	PA-18	SC-6		2-14-64	2-21-64	3-13-64	+ [illegible]
28	PA-19	SPARE-HGR		2-21-64	2-28-64	3-30-64	+ [illegible]
29	PA-20	SC-7		2-28-64	3-06-64	5-03-64	+ [illegible]
30	PA-21	SC-7		3-06-64	3-13-64	5-03-64	+ [illegible]
31	PA-22	SC-8		3-13-64	3-20-64	7-02-64	+ [illegible]
32	PA-23	SC-8		3-20-64	3-27-64	7-02-64	+[illegible]
33	PA-24	SC-9		3-27-64	4-03-64	8-30-64	+21
34	PA-25	SC-9		4-03-64	4-10-64	8-30-64	+20
35	PA-26	SC-10		4-10-64	4-17-64	11-02-64	+28
36	PA-27	SC-10		4-17-64	4-24-64	11-02-64	+29
37	PA-28	SC-11		4-24-64	5-01-64	1-08-65	+36
38	PA-29	SC-11		5-1 -64	5-08-64	1-08-65	+35
39	PA-30	SC-12		5-8 -64	5-15-64	3-06-65	+42
40	PA-31	SC-12		5-15-64	5-22-64	3-06-65	+41
41	PA-32	AD-14		5-22-64	5-29-64	6-08-65	+54
42	PA-33	AD-15		5-29-64	6-05-64	8-08-65	+63

MONTHLY SUMMARY

[illegible]
[illegible]
Vendor: Collins Radio
Date: 2[illegible] October [illegible]

ASSEMBLY AND DELIVERY STATUS

1. PA-1 (SC-3A) was shipped [illegible] and was received at NAC on [illegible]

2. PA-2 (SC-3) was delayed one week because a defective [illegible] on the test bench damaged the mating [illegible] of the VCC. This unit [illegible] repaired and is scheduled for PPA testing 20 October. Minor [illegible] problems also caused a [illegible] delay.

3. A two week delay occurred on [illegible] and up [illegible]

   (a) There was a revision on the UHF/[illegible] [illegible] in panel and frame module. A [illegible] of [illegible] parts, necessitated by this revision, [illegible]

   (b) Because of [illegible] the MIC, AMP, [illegible] and Headset [illegible] test [illegible]

   (c) The Alarm Tone [illegible] Test [illegible] on MIC, AMP, Module Test [illegible] AMP, Module Test [illegible] test bench was operative.

TEST STATUS (SEE "Detail Test Chart")

1. The Shock Test (PP-[illegible]) [illegible] (Line [illegible])

2. The [illegible] (Line [illegible])

3. The [illegible] 11 October. (Line [illegible])

4. All [illegible] successfully [illegible]

5. Because of a CTU schedule [illegible] was not performed (see Line [illegible] Chart).

AGE

[illegible]

GEMINI SPACECRAFT

CONTRACT NO. NAS 9-170

VOICE CONTROL CENTER (VENDOR: COLLINS RADIO)

STATUS CHART

REPORT NO. 8580-1 -33

LAST PROGRAM SCHEDULE CHANGE: 1 APRIL 1963

STATUS AS OF: 25 Oct. 1963

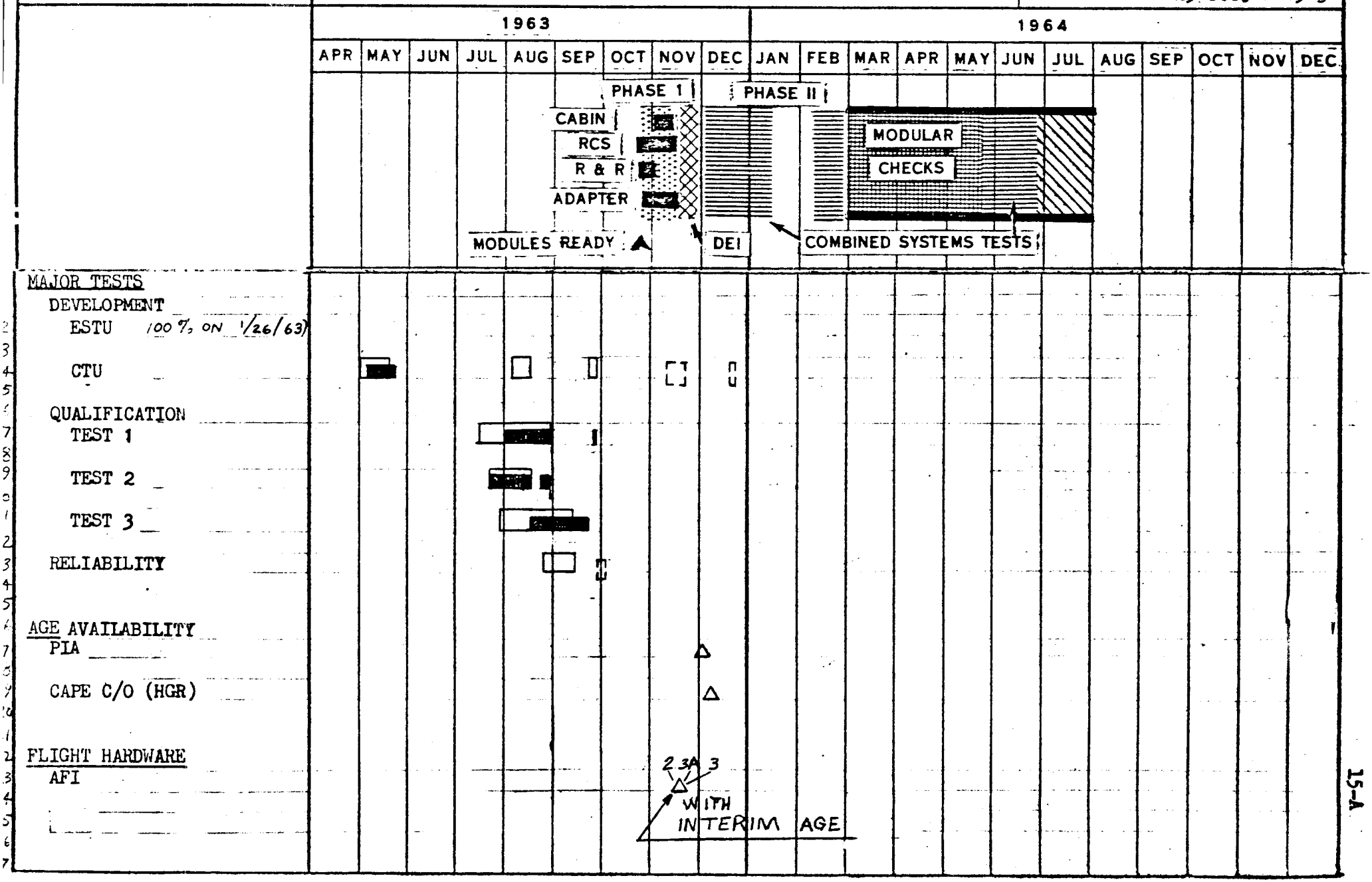

15-B

LEGEND

- ▽ TEST PROPOSAL DUE
- ◊ HARDWARE AVAIL.
- ▭ TEST SCHEDULE
- ○ REPORT DUE
- ★ REPORT APPROVED

SOLID INDICATES ACTUAL

QUALIFICATION AND DEV. TEST STATUS
VOICE CONTROL CENTER
COLLINS RADIO CO.
SCD 52-85712

REV.D 25 OCT., '63

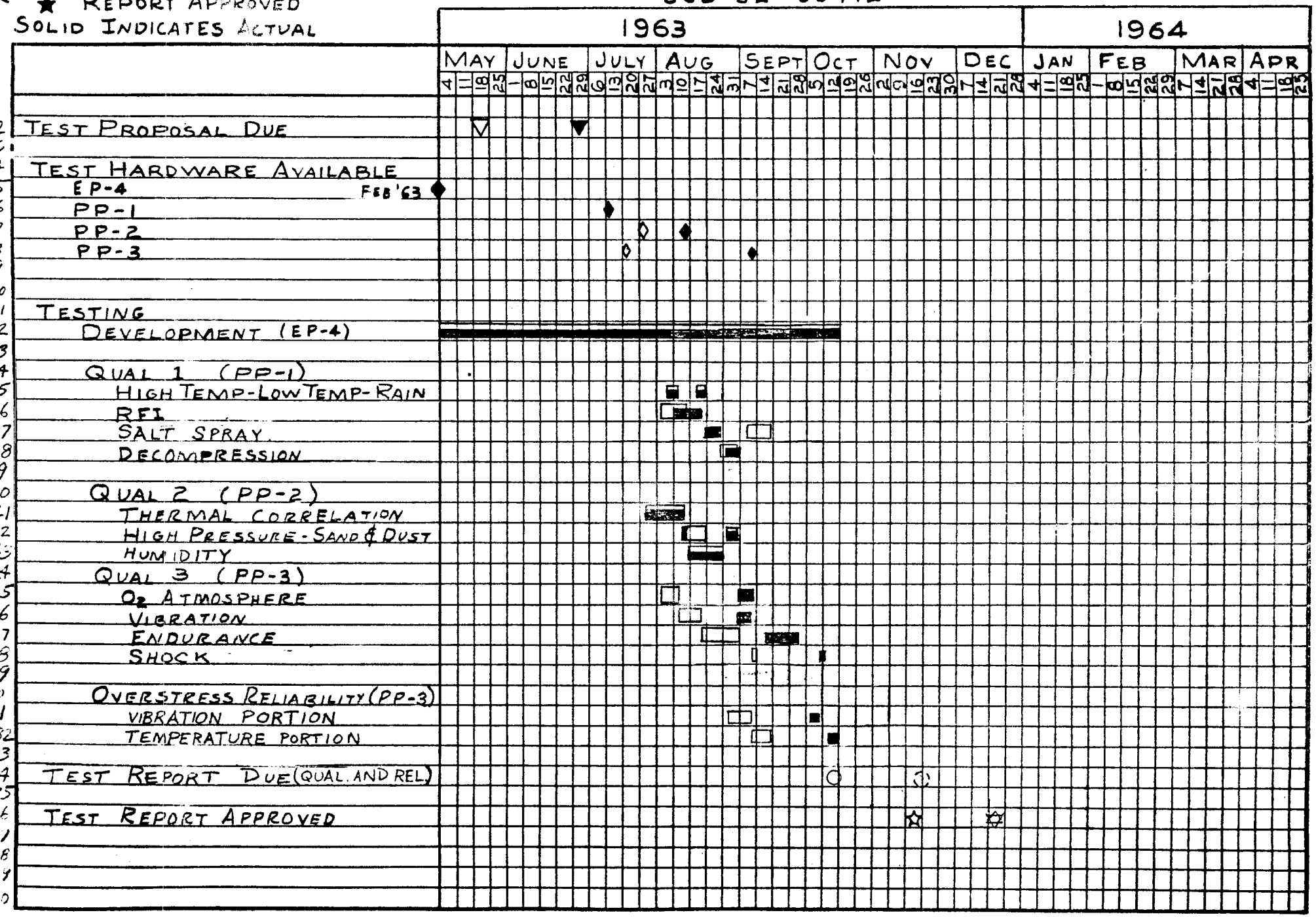

MAC 2274V (27 APR 59)

VENDOR DELIVERY STATUS REPORT
VOICE CONTROL CENTER
COLLINS RADIO

CHART NO. 150

DATE: 10-[illegible]

UNIT NO.	TYPE	USAGE	COMPONENT	VENDOR W/S	AVAIL. FOR INSTL	REQ. FOR INSTL.	SLACK
1	EP-1	ESTU				A 1-23-63	
2	EP-4	VENDR	ENGR QUAL			A 1-24-63	
3	EP-2	CTU				A 4-15-63	
4	EP-3	ST-5			**11-13-63	6-30-63	
5	PP-1	VENDR	QUAL			A 7-29-63	
6	PP-2	VENDR	QUAL			A 8-08-63	
7	PP-3	VENDR	QUAL			A 9-05-63	
8	PP-4	SC-2		A08-30-63	*12-03-63	8-10-63	[illegible]
9	PA-1	SC-3A		A10-01-63	12-05-63	9-05-63	[illegible]
10	PA-2	SC-3		10-30-63	12-09-63	9-26-63	[illegible]
11	PA-3	ST-2	SPARE PARC7B	11-07-63	12-11-63	9-30-63	-10
12	PA-4	SPARE	SST	11-21-63	12-13-63	9-30-63	-11
13	PA-5	SPARE	SST	12-05-63	12-17-63	11-30-63	-7
14	PA-6	SC-4		12-19-63	12-26-63	11-30-63	-4
15	PA-7	SPARE	HGR	1-02-64	1-09-64	11-30-63	-6
16	PA-8	SPARE	HGR	1-16-64	1-23-64	1-31-64	+1
17	PA-9	SC-5		1-30-64	2-06-64	2-06-64	0
18	PA-10	SC-6		2-06-64	2-13-64	4-09-64	[illegible]
19	PA-11	SC-7		2-13-64	2-20-64	6-11-64	[illegible]
20	PA-12	SC-8		2-20-64	2-27-64	8-09-64	[illegible]
21	PA-13	SC-9		2-27-64	3-05-64	10-03-64	[illegible]
22	PA-14	SC-10		3-05-64	3-12-64	12-06-64	[illegible]
23	PA-15	SC-11		3-12-64	3-19-64	2-12-65	[illegible]
24	PA-16	SC-12		3-19-64	3-26-64	4-12-65	[illegible]

* Using Interim Age AFI will be 11-15-63

** Using Interim Age

MONTHLY SUMMARY

System: Communications
Subsystem: Digital Command
Vendor: Motorola
Date: 25 October 1965

ASSEMBLY AND DELIVERY STATUS

1. No spacecraft hardware was delivered to MAC in October.
2. There were some minor problems with the test equipment hook-up which delayed completion of the Pre-PDA of PA-1 (SC-2). Also the receiver of PA-1 was replaced because a noise problem developed during low temperature operation of this test. The noise was caused by a bad filter. These problems amounted to a two week delay in the first half of October.
3. PA-1 (SC-2) has been ready for shipment for several weeks but is held up at Motorola because the Air Force Quality Control Representative found some areas where Motorola has not complied with the purchase order and MQA-171. Noncompliance is reported to be in the following areas:
   (a) Certain suppliers whose hardware was used on the project were not surveyed and / or approved by Motorola Quality Assurance.
   (b) Motorola has failed to satisfy the MQA-171 requirement of chemical and physical analysis of raw materials used on the project.
   (c) Motorola has used unauthorized sampling plans without MAC Quality Assurance approval.
4. At the present time MAC Quality Control is awaiting Motorola's intended corrective action and documentation that will assure compliance with the purchase order.
5. Shipment of PA-2 (SC-3A) and up will be restrained because of this Quality Assurance problem.

TEST STATUS (SEE DETAIL TEST CHART)

1. The Acceleration Test (PP-3) was completed on 27 September. (Line 11)
2. The Overstress Reliability Test (Acceleration Portion) was completed on 1 October. (Line 33)
3. Repairs on the Altitude Test Chamber held up the Low Temp. and High Voltage (PP-3) Test and Alt. High Temp. and High Voltage (PP-3) Test for 3 weeks. The test was begun 25 October. (Lines 30 & 31)
4. Installation of a new harness on PP-4 caused a 3 week delay of the Overstress Reliability (Vibration) Test. (Line 32)
5. All Qualification Tests are now complete.
6. Because of a CTU schedule change the test on the Digital Command System were not performed (Line 4, "Summary Status Chart").

ACE

The following ACE was shipped from Motorola on 14 October to the following destinations:

MAC		CAFE	
52-19E0019-1	SN-3	52-19E0019-1	SN-2
52-19E0020-1	SN-3	52-19E0020-1	SN-4
		52-19E0023-1	SN-2
		52-19E0025-1	SN-2
		52-19E0020-301	
		52-19E0025-301	

All Motorola ACE items have now been shipped.

GEMINI SPACECRAFT

CONTRACT NO. NAS 9-170

DIGITAL COMMAND SYSTEM - (VENDOR: MOTOROLA)

STATUS CHART

REPORT NO. 8580-1 -33

LAST PROGRAM SCHEDULE CHANGE: 4-1-63

STATUS AS OF: 25 Oct. 1963

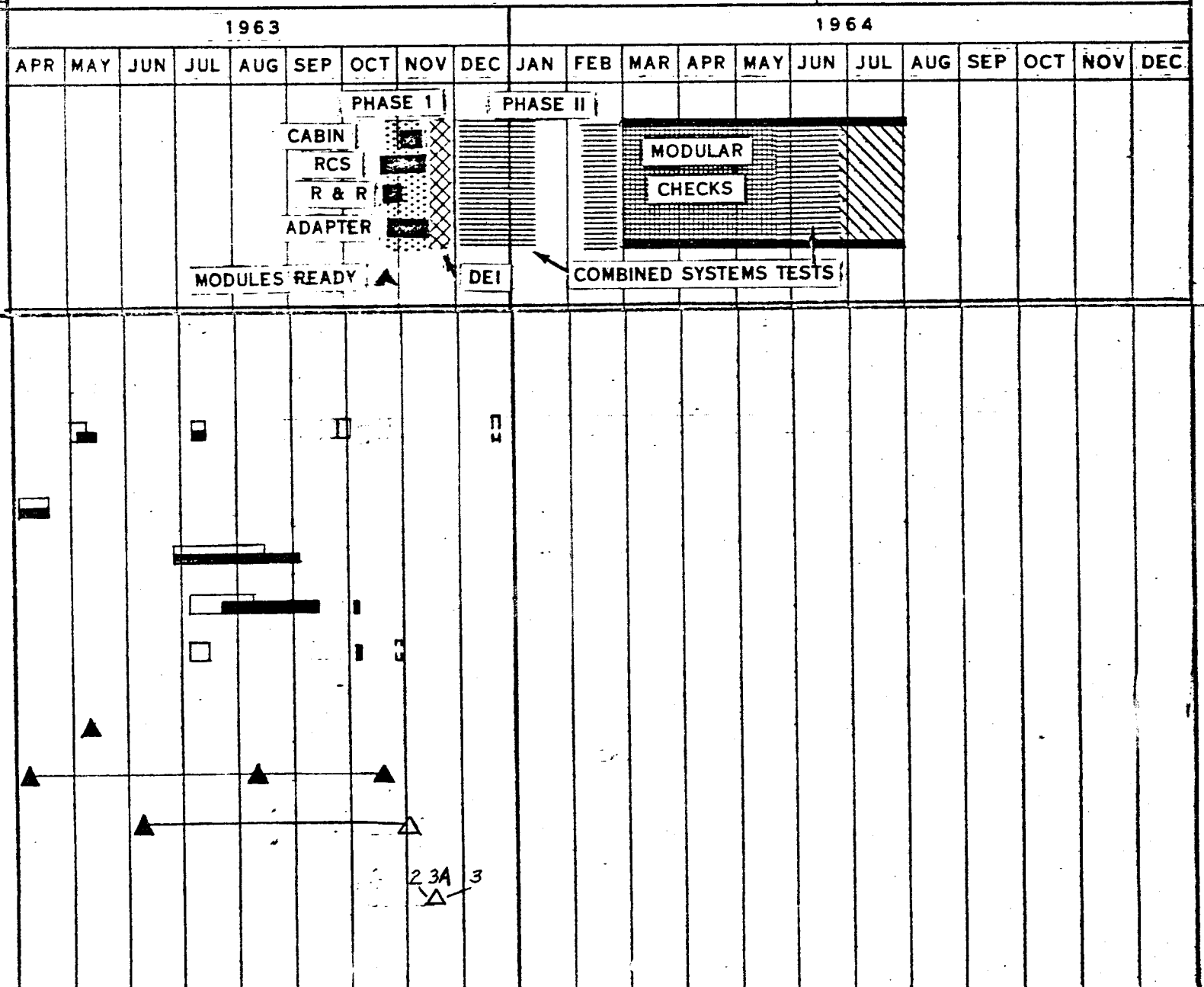

LEGEND

- ▽ TEST PROPOSAL DUE
- ◊ HARDWARE AVAIL
- ▭ TEST SCHEDULE
- ○ REPORT DUE
- ☆ REPORT APPROVED
- SOLID INDICATES ACTUAL

QUALIFICATION AND DEV TEST STATUS
DIGITAL COMMAND SYSTEM
MOTOROLA, INC.
SCD 52-85714

REV.D 25 OCT., 1963

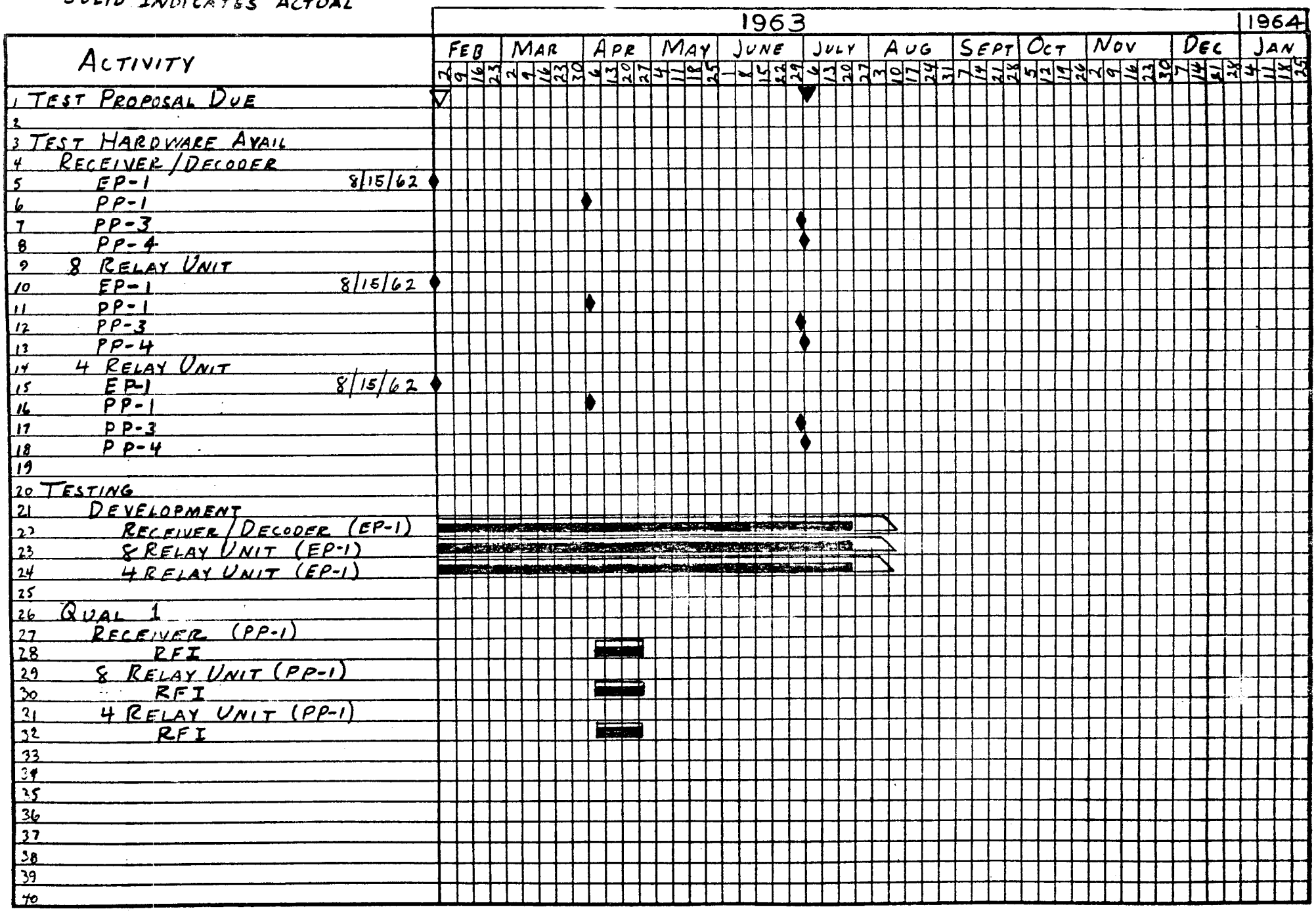

MAC 2274V (27 APR 59)

LEGEND

- ▽ Test Proposal Due
- ◊ Hardware Avail
- ▭ Test Schedule
- ⊙ Report Due
- ☆ Report Approved

Solid Indicates Actual

Qualification And Dev Test Status
Digital Command System
Motorola, Inc.
SCD 52-85714

REV'D 25 OCT., 1963

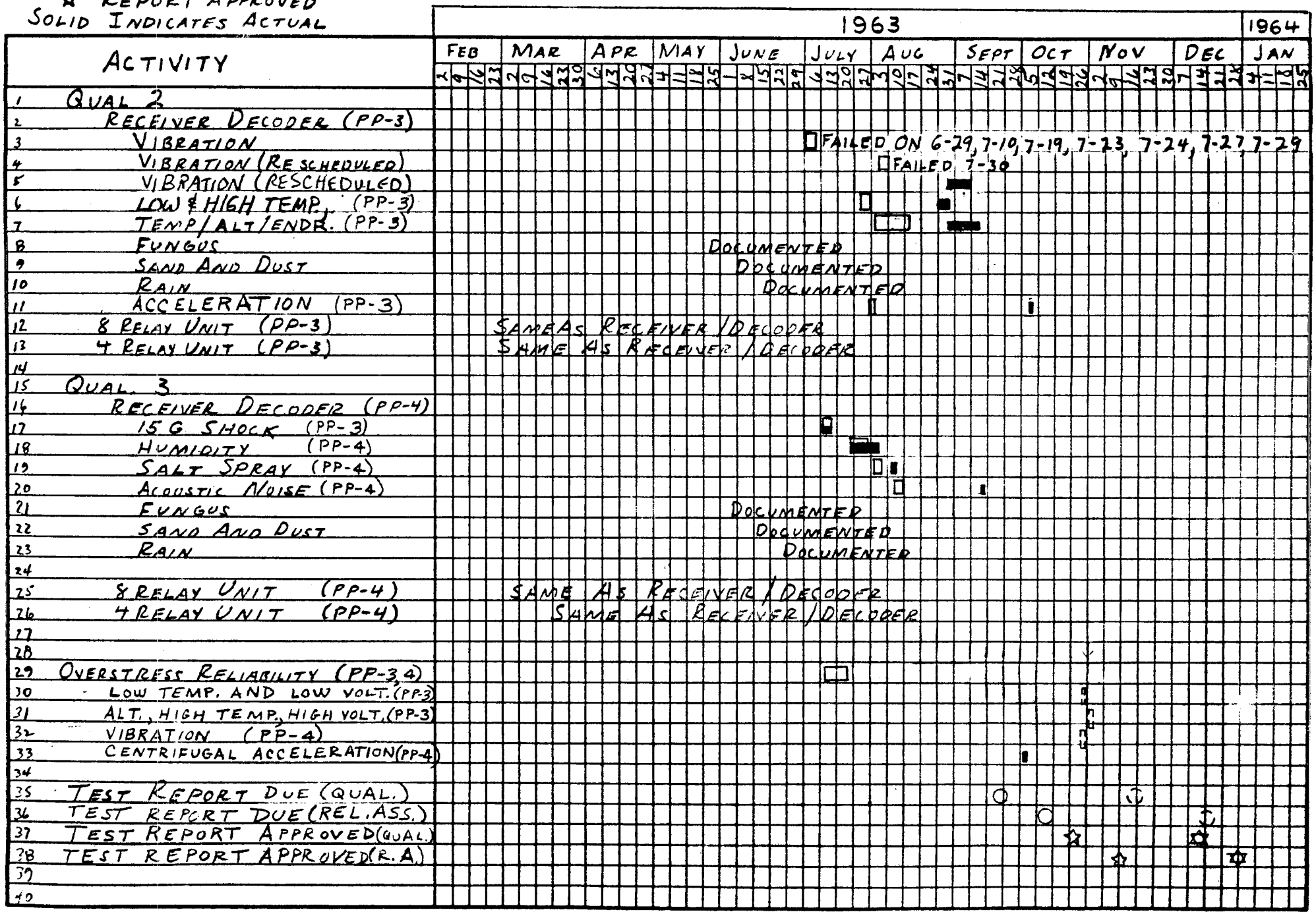

MAC 2274V (27 APR 59)

VENDOR DELIVERY STATUS REPORT

CHART NO. [illegible]

DIGITAL COMMAND

MOTOROLA

DATE: 25 Oct. 1963

UNIT NO.	TYPE	USAGE	COMPONENT	VENDOR W/S	AVAIL. FOR INSTL	REQ. FOR INSTL	SLACK
1	EP-1	ESTU				A11-09-62	
2	EP-2	NASA	FLYOVER -1			A 1-26-63	
3	PP-2	CTU				A 5-22-63	
4	PP-1	NASA	FLYOVER -2			A 5-22-63	
5	PP-3	VENDR	QUALIFICATION			A 6-28-63	
6	PP-4	VENDR	QUAL-QSR			A 6-29-63	
7	PA-1	SC-2		11-08-63	11-16-63	8-05-63	[illegible]
8	PA-2	SC-3A		11-08-63	11-16-63	10-15-63	[illegible]
9	PA-3	SC-3		11-08-63	11-16-63	9-20-63	[illegible]
10	PA-4	SPARE	SST	12-11-63	12-18-63	9-30-63	[illegible]
11	PA-5	SC-4		12-25-63	1-02-64	11-21-63	[illegible]
12	PA-6	SPARE	HGR	1-04-64	1-11-64	11-30-63	[illegible]
13	PA-7	AD-13		1-18-64	1-25-64	1-27-64	[illegible]
14	PA-8	SC-5		2-01-64	2-08-64	1-27-64	[illegible]
15	PA-9	SPARE	HGR	2-15-64	2-22-64	1-31-64	[illegible]
16	PA-10	SC-6		3-07-64	3-14-64	3-27-64	[illegible]
17	PA-11	SC-7		3-20-64	3-27-64	6-02-64	[illegible]
18	PA-12	SC-8		5-22-64	5-29-64	7-31-64	[illegible]
19	PA-13	SC-9		7-21-64	7-28-64	9-21-64	[illegible]
20	PA-14	SC-10		9-15-64	9-22-64	11-21-64	[illegible]
21	PA-15	SC-11		11-19-64	11-26-64	12-22-64	[illegible]
22	PA-16	SC-12		1-22-65	2-22-65	4-25-65	[illegible]
23	PA-17	AD-14		5-25-65	6-25-65	6-25-65	[illegible]
24	PA-18	AD-15		7-25-63	8-25-65	8-25-65	[illegible]

VENDOR AGE STATUS REPORT
DIGITAL COMMAND SYSTEM
MOTOROLA

CHART NO. 46 D

DATE [illegible]

PART NUMBER	NOMENCLATURE	UNIT NO.	VENDOR W/S	AVAIL. FOR USAGE	REQ'D FOR USAGE	[illegible]
			PRE-INSTALLATION ACCEPTANCE			
E190023-1	ADP-DCS MODULE TST.	1		A08-15-63		
			SPACECRAFT SYSTEM TEST			
E190004-1	TEST STA-S/C COMM.	1		A04-06-63		
E190004-1	TEST STA-S/C COMM.	2		A05-03-63		
E190020-1	TEST PIA-DCS	1		A05-16-63		
E190025-1	DCS TST SET TAPE	1		A10-25-63		
E190019-1	MONITOR -DCS	1		A08-26-63		
E190020-1	TEST PIA-DCS	2		A10-25-63		
			HANGAR			
E190004-301	TEST STA-S/C COMM.	1		A06-17-63		
E190004-301	TEST STA-S/C COMM.	2		A08-14-63		
E190023-1	ADP-DCS MODULE TST	2	A10-14-63	11-01-63		
E190025-1	TEST SET TAPE DCS	2	A10-14-63	11-01-63		
E190020-1	TEST PIA-DCS	3	A10-14-63	11-01-63		
E190019-1	MONIT-DCS	3	A10-14-63	11-01-63		
E190020-1	TEST PIA-DIG. COMM.	4	A10-14-63	11-01-63		
			PAD			
E190004-303	TEST STA-S/C COMM.	1		A07-09-63		
E190020-301	TEST PIA-DCS	1	A10-14-63	11-01-63		
E190019-1	MONITOR-DCS	2	A10-14-63	11-01-63		
E190025-301	DCS TST SET TAPE	1	A10-14-63	11-01-63		
			ORBIT			
E190004-1	TEST STA-S/C COMM.	3	A08-22-63	12-01-63		

MONTHLY SUMMARY

System: Communications
Subsystem: C & S Band Radar Beacons
Vendor: ACF
Date: 25 October 1963

ENGINEERING STATUS

1. During the month of October ACF completed drawing changes to incorporate the Power Supply Overstressed Capacitor Fix.

2. ACF's Qual Test Report is currently under analysis by MAC Systems Engineering.

ASSEMBLY AND DELIVERY STATUS

1. No deliveries were made to MAC during October.

2. The Vendor Delivery Status Report (17-C & 18-C) now shows firm Vendor ship dates rather than the estimated dates shown previously.

3. Fabrication of the redesigned power supply for the C-Band Radar Beacon was completed. This power supply is being installed in SN-103 (PA-4) which is scheduled for PDA Testing on 29 October 1963. This unit will be shipped directly to the Cape for installation in SC-1.

4. Fabrication of the redesigned S-Band Radar Beacon power supply is in progress.

5. Deliveries of C & S Band Radar Beacons are scheduled for November 1963 (See Vendor Delivery Status Report).

TEST STATUS (See "Detail Test Chart")

1. The Overstress Reliability (PP-1) is now scheduled for 20 November thru 27 December 1963 on the C & S Band Radar Beacons. (Line 30 & 32)

2. Because of a change in the CTU schedule the test on the C-Band Radar Beacon was not performed. (Line 5 "Summary Status Chart")

AGE

1. The C & S Band Radar Beacon PIA Test Bench was received at MAC on 7 October and is now available for use. The antenna probes 52E190011-1 and 52E190012-1 are available for use. The only AGE still needed from ACF is the 2nd 52E19003-1 C & S Band Beacon PIA Test Bench for the Cape.

GEMINI SPACECRAFT

CONTRACT NO. NAS 9-170

S-BAND RADAR BEACON - (VENDOR: ACF INDUSTRIES)

STATUS CHART

REPORT NO. 8580-1 -33

LAST PROGRAM SCHEDULE CHANGE: 1 APRIL 1963

STATUS AS OF: 25 Oct. 1963

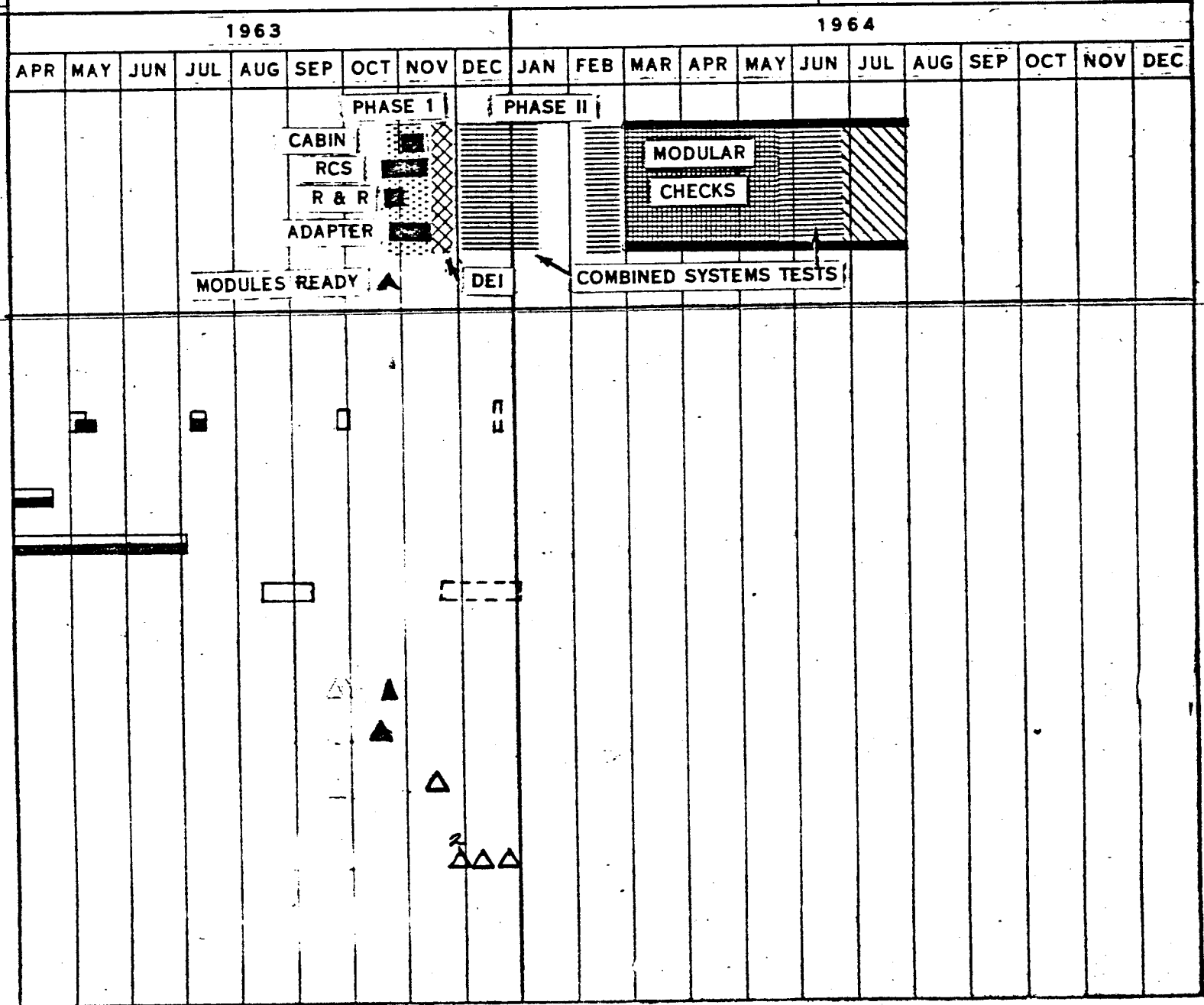

LEGEND

- ▽ TEST PROPOSAL DUE
- ◊ HARDWARE AVAIL.
- ▭ TEST SCHEDULE
- ○ REPORT DUE
- ☆ REPORT APPROVED

SOLID INDICATES ACTUAL

QUALIFICATION AND DEVELOPMENT TEST STATUS
S-BAND RADAR BEACON
ACF ELECTRONICS
SCD 52-85715

25 OCT., 1963

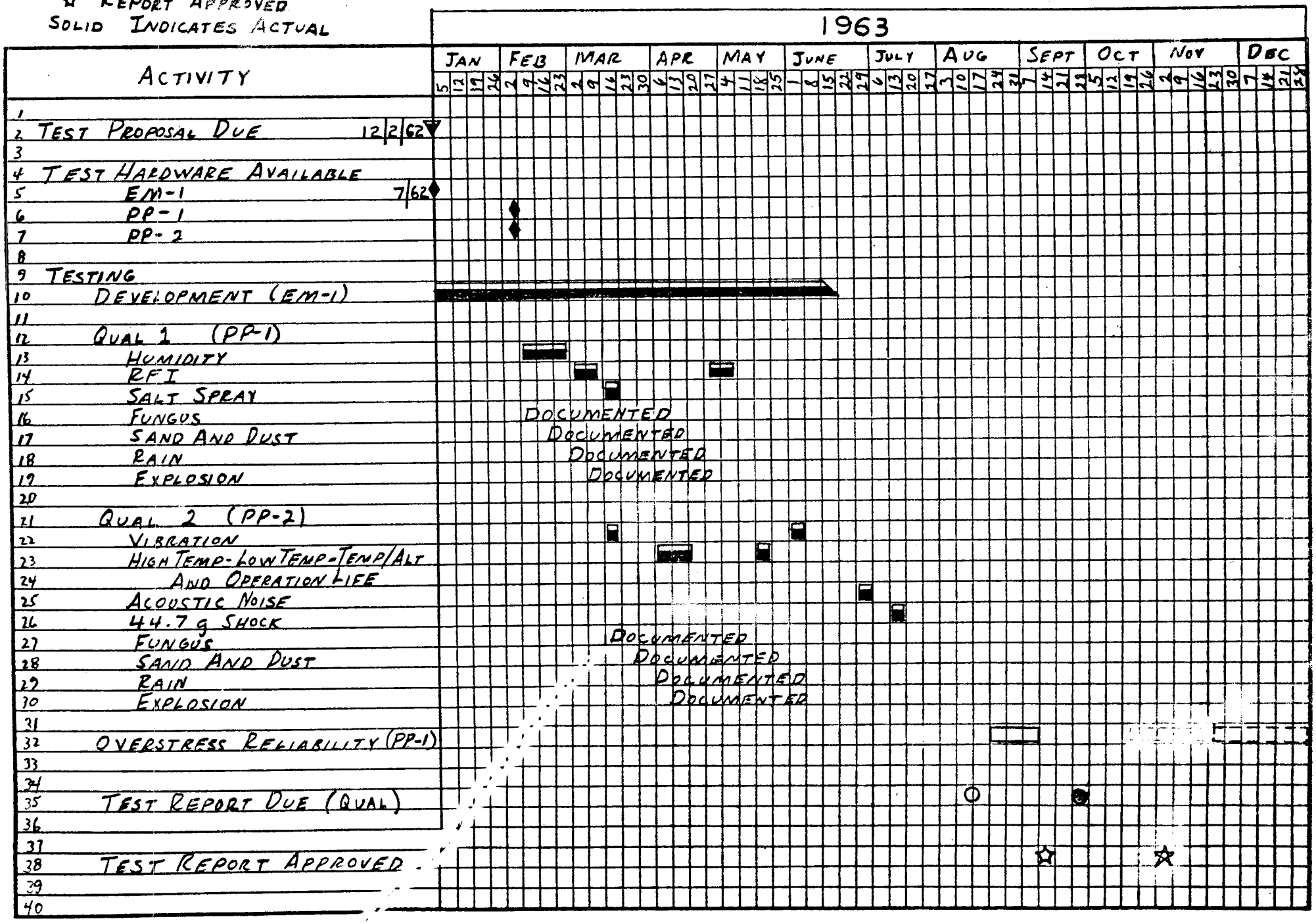

MAC 2274V (27 APR 59)

VENDOR DELIVERY STATUS REPORT
S-BAND RADAR BEACON
ACF INDUSTRIES

CHART NO. 17 C

DATE: 10-25-63

UNIT NO.	TYPE	USAGE COMPONENT	VENDOR W/S	AVAIL. FOR INSTL	REQ. FOR INSTL	SLACK
1	EP-1	ESTU			A 9-22-62	
2	PP-1	VENDR QUAL-RELIAB			A12-15-62	
3	PP-2	VENDR QUAL-RELIAB			A 3-22-63	
4	PA-1	CTU			A 4-18-63	
5	PA-4	SC-2	* 11-18-63	11-25-63	7-8-63	[illegible]
6	PA-5	SC-3	* 12-02-63	12-09-63	8-29-63	[illegible]
7	PA-6	SC-3A	12-16-63	12-23-63	10-15-63	[illegible]
8	PA-7	SPARE-SST	1-06-64	1-13-64	9-30-63	[illegible]
9	PA-8	SC-4	1-20-64	1-27-64	12-[illegible]-63	[illegible]
10	~~AD-13~~	AD-13	2-03-64	2-10-64	1-27-64	[illegible]
11	PA-10	SPARE-SST	2-17-64	2-24-64	11-30-63	[illegible]
12	PA-11	SPARE-HGR (CAPE)	3-02-64	3-09-64	11-30-63	[illegible]
13	PA-12	SC-5	3-16-64	3-23-64	2-03-64	[illegible]
14	PA-13	SC-6	3-30-64	4-6-64	4-02-64	[illegible]
15	PA-14	SPARE-HGR (CAPE)	4-13-64	4-20-64	1-31-64	[illegible]
16	PA-15	SC-7	5-12-64	5-19-64	6-01-64	[illegible]
17	PA-16	SC-8	7-13-64	7-20-64	8-03-64	[illegible]
18	PA-17	SC-9	9-11-64	9-18-64	10-02-64	[illegible]
19	PA-18	SC-10	11-11-64	11-18-64	12-02-64	[illegible]
20	PA-19	SC-11	1-11-65	1-18-65	2-02-65	[illegible]
21	PA-20	SC-12	3-11-65	3-18-65	4-02-65	[illegible]
22	PA-2	AD-14	5-11-65	5-18-65	6-02-65	[illegible]
23	PA-3	AD-15	7-12-65	7-19-65	8-02-65	[illegible]

*PA-2 and PA-3 containing overstressed capacitors were shipped to MAC on 6-19-63 and 7-[illegible]
To be used as SST Units as req'd. and later retrofitted.

Allocation is estimated and unapproved.

VENDOR AGE STATUS REPORT

C & S BAND RADAR

ACF

CHART NO. 17, 18 D

DATE: 10-25-63

PART NUMBER	NOMENCLATURE	UNIT NO.	VENDOR W/S	AVAIL. FOR USAGE	REQ.D FOR USAGE	SLACK
			PRE-INSTALLATION ACCEPTANCE			
E190003-1	PIA BENCH C & S BCN.	1		A10-25-63		
			SPACECRAFT SYSTEM TEST			
E190012-1	PROBE C-BAND ANT.	1		A 9-02-63		
E190011-1	PROBE C & S ANT.	1		A 9-02-63		
E190011-1	PROBE ASY C & S ANT.	2		A10-15-63		
E190012-1	PROBE C-BAND ANT.	4		A10-15-63		
			HANGAR			
E190012-1	PROBE C-BAND ANT.	2		A10-15-63		
E190012-1	PROBE-C-BAND ANT.	3		A10-15-63		
E190011-1	PROBE-C & S ANT.	3		A10-15-63		
E190011-1	PROBE-C & S ANT.	4		A10-15-63		
E190003-1	PIA BENCH C&S BCN.	2	11-06-63	11-20-63	9-21-63	

GEMINI SPACECRAFT

CONTRACT NO. NAS 9-170

C-BAND RADAR BEACON - (VENDOR: ACF INDUSTRIES)

STATUS CHART

REPORT NO. 8580-1 - -33

LAST PROGRAM SCHEDULE CHANGE: 1 APRIL 1963

STATUS AS OF: 25 Oct. 1963

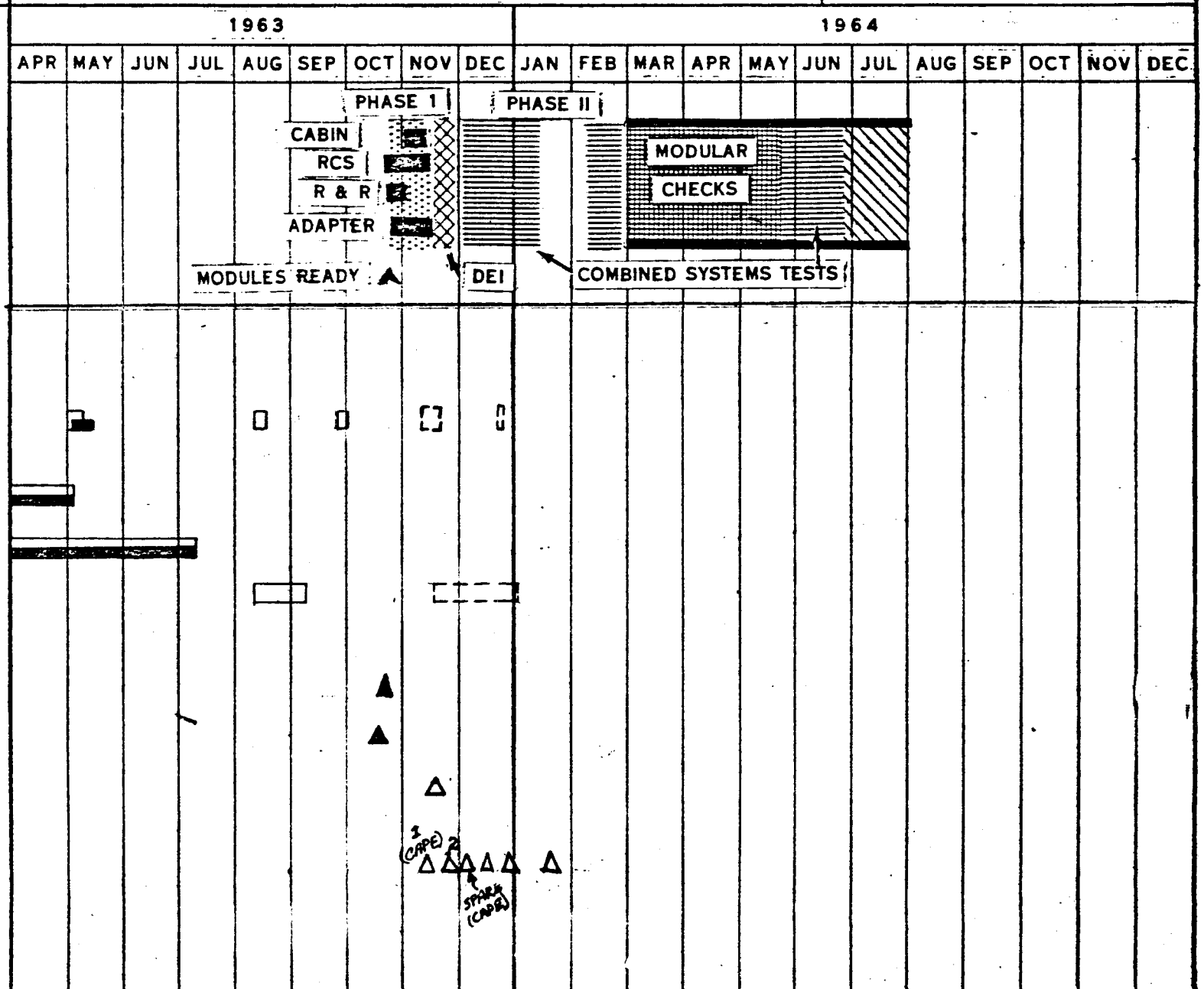

LEGEND

- ▽ TEST PROPOSAL DUE
- ◊ HARDWARE AVAIL
- ▭ TEST SCHEDULE
- ○ REPORT DUE
- ☆ REPORT APPROVED

SOLID INDICATES ACTUAL

QUALIFICATION AND DEV. TEST STATUS
C-BAND RADAR BEACON
ACF ELECTRONICS
SCD 52-85707

25 OCT., 19

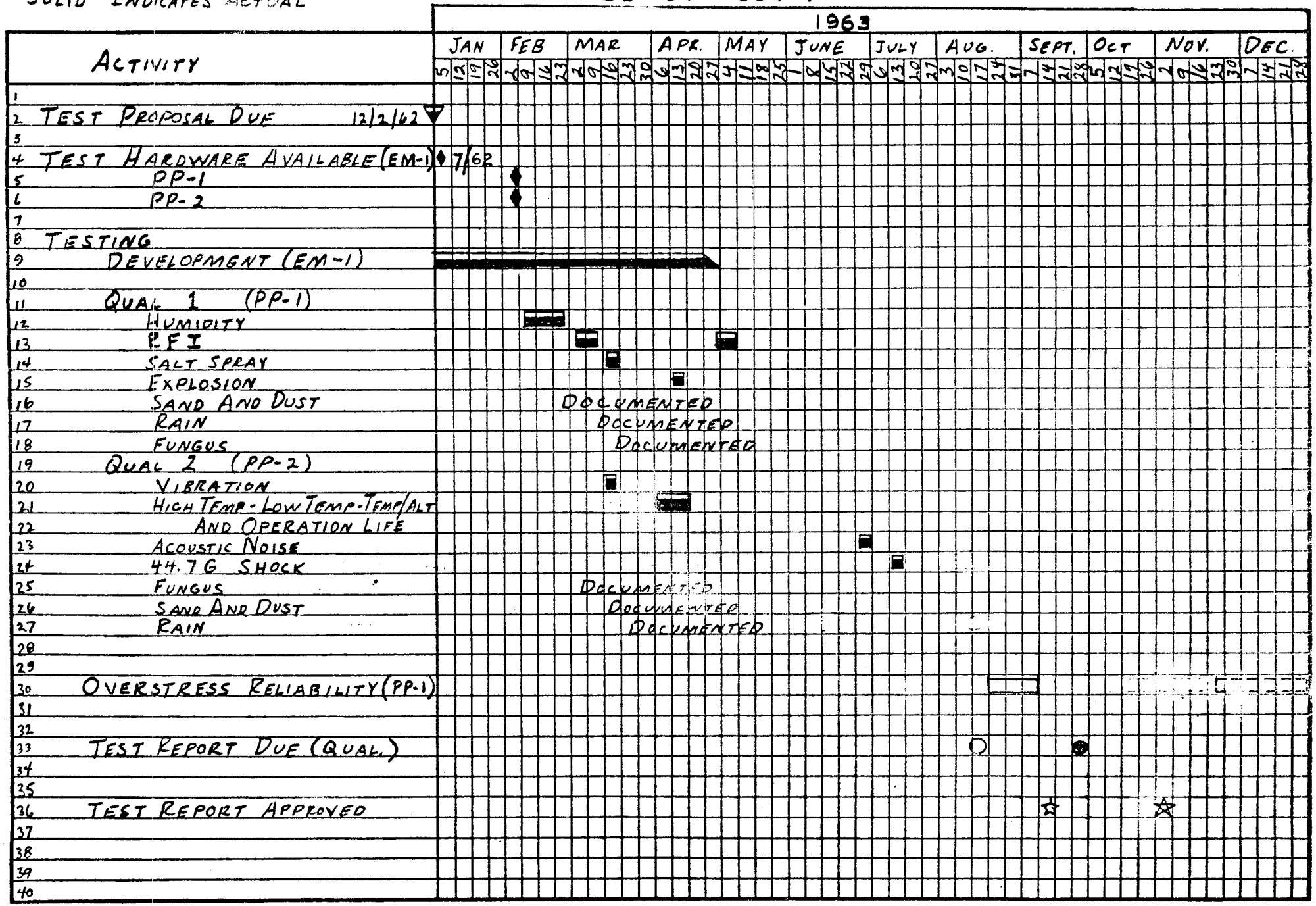

MAC 2274V (27 APR 59)

VENDOR DELIVERY STATUS REPORT
C-BAND RADAR BEACON
A.C.F. INDUSTRIES

CHART NO. 18 C

DATE: 10-25-63

UNIT NO.	TYPE	USAGE	COMPONENT	VENDOR W/S	AVAIL. FOR INSTL	REQ. FOR INSTL	SLACK
1	EP-1	ESTU				A 9-26-62	
2	PP-1	VENDOR	QUAL			A12-14-62	
3	PP-2	VENDOR	QUAL			A 3-04-63	
4	PA-1	CTU				A 4-26-63	
5	PA-4	SC-1 (CAPE)		*11-04-63	11-11-63	6-17-63	-21
6	PA-5	SC-2		**11-18-63	11-25-63	7-25-63	-17
7	PA-6	SPARE-HGR (CAPE)		11-25-63	12-02-63	7-30-63	-18
8	PA-7	SC-1A		12-09-63	12-16-63	12-01-63	- 2
9	PA-8	SC-3A		12-23-63	12-30-63	8-16-63	-19
10	PA-9	SC-3		1-13-64	1-20-64	9-25-63	-18
11	PA-10	SPARE-SST		1-27-64	2-03-64	9-30-63	-18
12	PA-11	SC-4		2-10-64	2-17-64	11-21-63	-12
13	PA-12	SPARE-SST		2-24-64	3-01-64	11-30-63	-13
14	PA-13	SPARE-HGR (CAPE)		3-09-64	3-16-64	11-30-63	-15
15	PA-14	SC-5		3-23-64	3-30-64	1-24-64	- 9
16	PA-15	SC-6		4-06-64	4-13-64	3-25-64	- 3
17	PA-16	SC-7		5-06-64	5-13-64	5-27-64	+ 2
18	PA-17	SC-8		7-06-64	7-13-64	7-26-64	+ 2
19	PA-18	SC-9		8-31-64	9-07-64	9-21-64	+ 2
20	PA-19	SC-10		11-05-64	11-12-64	11-26-64	+ 2
21	PA-2	SC-11		1-11-65	1-18-65	1-31-65	+ 2
22	PA-3	SC-12		3-12-65	3-19-65	4-02-65	+ 2

* PA-2 Containing overstressed capacitors was installed 7-24-63 in S/C-1 for SST use. To be retrofitted later.

PA-3 Containing overstressed capacitors was avail. at NAC 7-29-63 for SST use. To be retrofitted later.

Allocation is estimated and unapproved

MONTHLY SUMMARY

System: Guidance [illegible]
Subsystem: Rendezvous Radar
Vendor: Westinghouse
Date: 25 Oct. 1963

ENGINEERING STATUS

1. The following design problems were illuminated during engineering evaluation tests:

UNIT	FAILURE
a. Radar Video Package	False triggering due to inadequate grounding.
b. Radar Digital Package	Marginal case of triggering on noise.
c. Radar Coat Cabling	Antennas not properly phased.

2. The following action was taken regarding the above failures:

UNIT	FAILURE
a. Radar Video Package	Redesign of three modules.
b. Radar Digital Package	Redesign of one module.
c. Radar Coat Cabling	Development of new coax cable lengths.

PROCUREMENT

The four most critical purchased parts on the radar are the (1) Librascope Encoder, (2) The Electro Lab printed Circuit boards, (3) The LEL receiver and (4) The Sage rotary joint.

1. Librascope Encoder - Six pieces have been received and accepted. Librascope notified WEC on 17 Oct. that all pieces were bad. Librascope had screened the commutator incorrectly. Four pieces were rejected back to Librascope on 18 Oct. Librascope plans to ship the following:
   a. Four pieces on 28 Oct.
   b. Four pieces on 4 Nov.
   c. Fourteen pieces on 2 Dec.
   d. Twelve pieces on 7 Dec.

2. Electro Lab printed circuit boards - This problem appears to be solved. The black and white masters and tapes have been updated to produce the proper spacing between circuit paths.

3. LEL receivers - Three receivers have been accepted by WEC. One receiver at WEC had an electrical intermittent. WEC is performing special tests on the receiver to cause the intermittent to reappear.

4. Sage rotary joint - All but four rotary joints have been returned to Sage for modification. All the returned units will be shipped back to WEC by 15 Nov. 1963.

ASSEMBLY & DELIVERY

1. Additional schedule slippage has been experienced in flight hardware from Westinghouse as a result of procured parts problems especially the electroleb printed circuit boards (see procurement #2) and a lag in manufacturing buildup.

2. A MAC evaluation team is going to Westinghouse 28 Oct. 1963 to evaluate production status and determine solutions for potential problem areas.

TEST STATUS

1. The following test schedules have been slipped due to the unavailability of the necessary hardware:

TEST	FROM	TO
CTU	10-01-63	12-01-63
Qual Test #1	12-13-63	01-24-64
Qual Test #2	12-27-63	02-07-64
Reliability	02-21-64	04-10-64
Operation Life	02-07-64	04-10-64

AGE

1. The AGE Equipment has experienced an additional slippage since last month due to updating the equipment to facilitate testing of the modified radar and transponder.

GEMINI SPACECRAFT

CONTRACT NO. NAS 9-170

RENDEZVOUS RADAR - (VENDOR: WESTINGHOUSE)

STATUS CHART (52-87701)

REPORT NO. 8580-1-33

LAST PROGRAM SCHEDULE CHANGE: 1 APRIL 1963

STATUS AS OF: 25 OCT. 1963

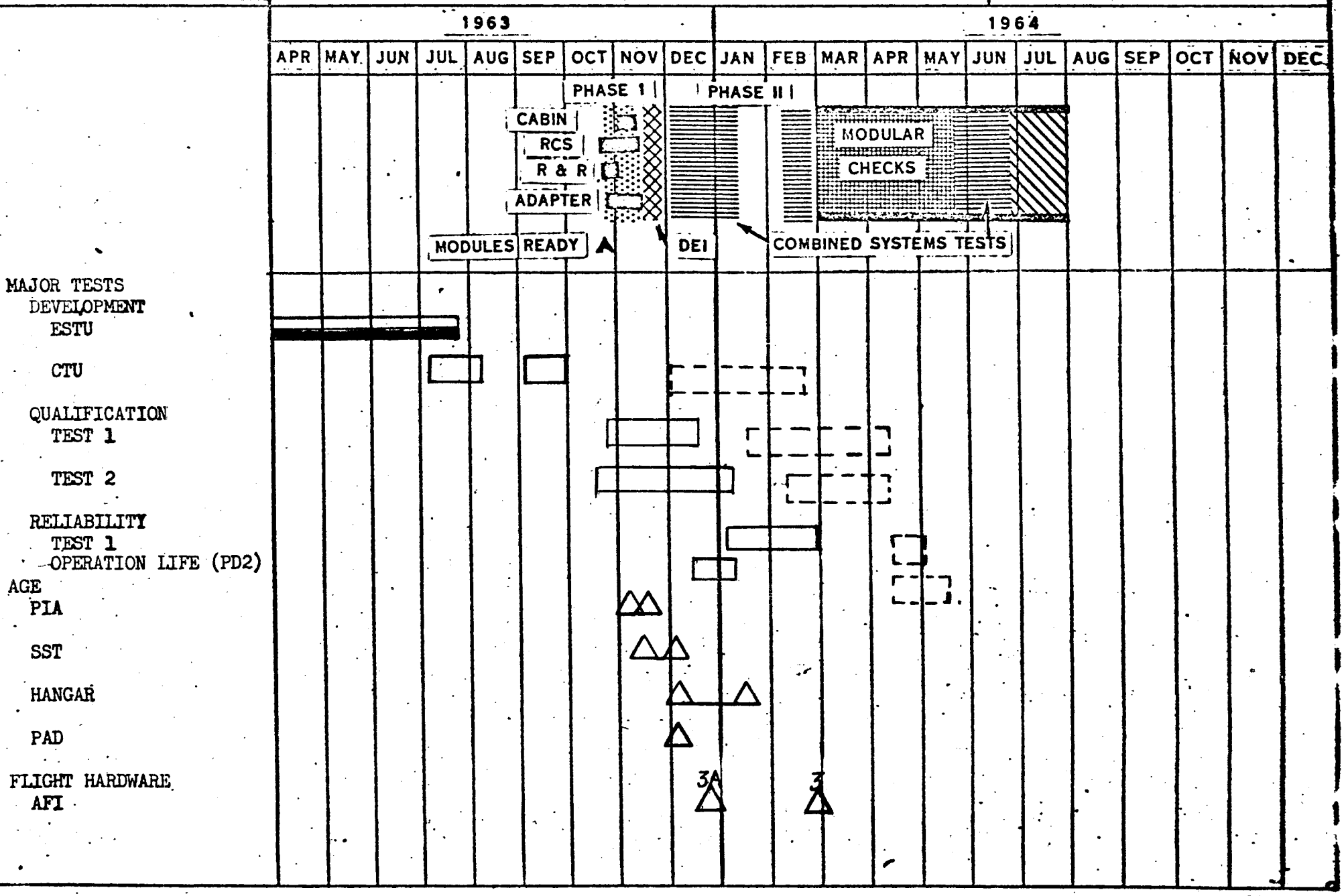

LEGEND
- ▽ Test Proposal Due
- ◊ Hardware Available
- □ Test Schedule
- ○ Report Due
- ☆ Report Approved

SOLID INDICATES ACTUAL

QUALIFICATION AND DEV. TEST STATUS
RENDEZVOUS RADAR
WESTINGHOUSE ELECTRIC CO.
SCD 52-87701

D: 25 Oct. 1963
C: 27 Sept. 1963
B: 3 Sept. 1963
Rev A: 2 Aug. 1963

ACTIVITY	WEEK ENDING
1. Test Proposal Due	
2.	
3. Test Hardware Available	
4. Radar	
5. EP-3	3-29-63
6. PP-2	
7. PP-3	
8. Indicator - EP-4	10-25-62
9. PP-5	
10. PP-6	
11. PP-7	
12. PP-8	
13. Encoder EM-1	
14. PP-2	
15.	
16. Testing	
17. Development	
18. Radar (EP-3)	
19. Indicator (EP-4)	
20. Encoder (EM-1)	
21.	
22. Qual 1	
23. Radar (PP-2)	
24. ~~Low Temp~~ Acceleration	
25. Vibration	
26. Low Press - Temp.Alt	
27. Acoustic	
28.	
29. Indicator (PP-5)	
30. High Temp - Low Temp	
31. Salt Fog	
32. Vibration	
33. Decompression	
34.	
35. Radar Mock Up	
36. #2 High Temp	
37. #1 Salt Fog	
38.	
39.	
40.	

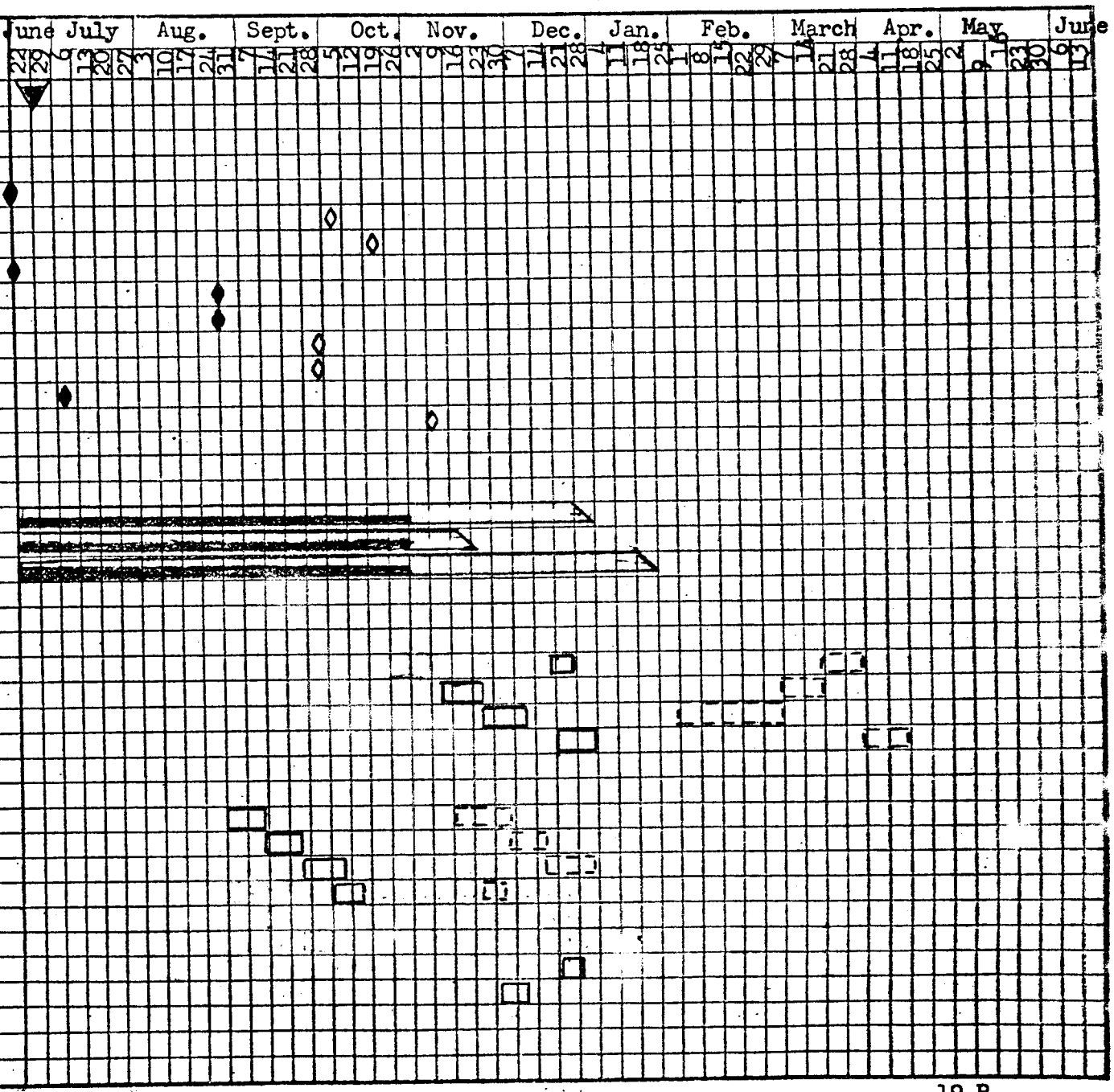

MAC 2274V (27 APR 59)

LEGEND
- Test Proposal Due
- Hardware Available
- Test Schedule
- Report Due
- Report Approved (Solid Indicates Actuals)

QUALIFICATION AND DEV. TEST STATUS
RENDEZVOUS RADAR
WESTINGHOUSE ELECTRIC CO.
SCD 52-87701

D: 25 [illegible]t. 1963
C: 27 Sept. 1963
B: 3 Sept. 1963
Rev. A: 2 Aug. 1963

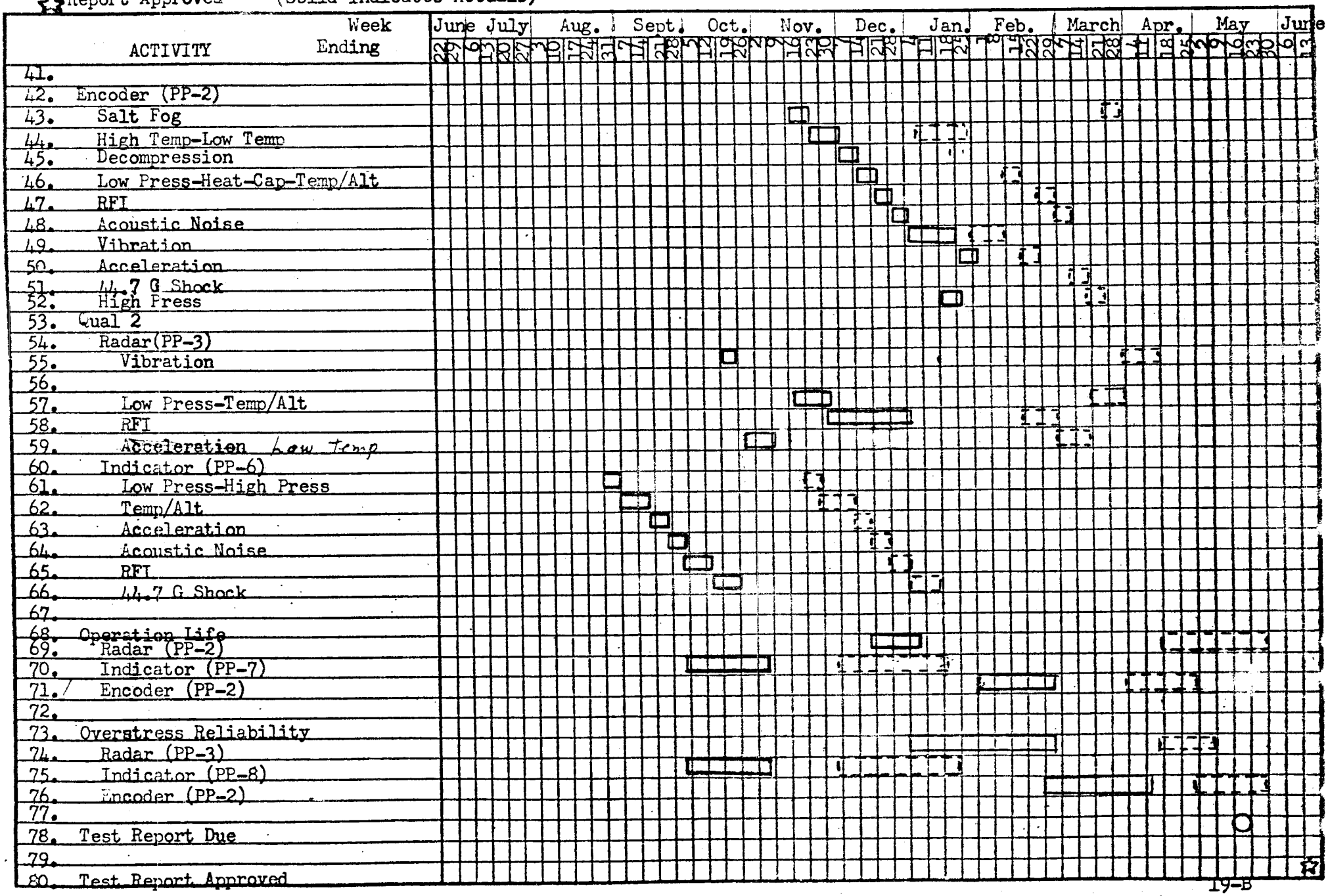

MAC 2274V (27 APR 59)

VENDOR DELIVERY STATUS REPORT

SYSTEM: RENDEZVOUS RADAR CHART NO: 19-C

VENDOR: WESTINGHOUSE 25 OCTOBER 1963

UNIT NO	TYPE	USAGE	COMPONENT	VENDOR W/S	AVAIL FOR INSTL	REQD FOR INSTL	SLACK
1	EP-1	ESTU	AND 3 AXIS TABL			A 2-15-63	
2	EP-2	VENDR	ELECTRICAL E VAL			A 5-10-63	
3	EP-3	VENDR	MECHANICAL EVAL			A 6-30-63	
4	PP-1	CTU		11-22-63	12-02-63	8-20-63	-15
5	PP-1	SC-3A			12-21-63	10-15-63	-10
6	PP-2	VENDR	QUAL/LIFE		1-10-64	9-15-63	-18
5	PP-3	VENDR	QUAL/LIFE		2-07-64	8-15-63	-25
7	PP-4	SC-3		2-28-64	3-09-64	9-20-63	-24
8	PA-1	SPARE		3-20-64	3-27-63	10-01-63	-26
9	PA-2	SC-4		4-10-64	4-19-64	12-29-63	-16
10	PA-3	SPARE		5-01-64	5-08-64	11-30-63	-22
11	PA-4	SC-5		5-22-64	6-01-64	2-26-64	-14
12	PA-5	SC-7		6-12-64	6-21-64	4-01-64	-12
13	PA-6	SPARE		7-03-64	7-10-64	1-31-64	-23
14	PA-7	SC-8		7-24-64	8-04-64	6-01-64	-9
15	PA-8	SPARE		8-15-64	8-22-64	3-31-64	-21
16	PA-9	SC-9		9-15-64	9-24-64	10-06-64	+12
17	PA-10	SC-10		10-15-64	10-24-64	12-08-64	+6
18	PA-11	SC-11		11-15-64	11-24-64	2-06-65	+11
19	PA-12	SC-12		12-15-64	12-24-64	4-06-65	+12

VENDOR AGE STATUS REPORT

CHART NO. 19 b

SYSTEM - RENDEZVOUS RADAR

DATE: 10-25-63

VENDOR - WESTINGHOUSE

PART NUMBER	NOMENCLATURE	UNIT NO.	VENDOR W/S	AVAIL. FOR USAGE	REQ'D FOR USAGE	SLACK
			PRE INSTALLATION ACCEPTANCE			
52E270018-1	TEST RADAR INS	1	11-08-63	12-01-63	07-15-63	-20
52E270025-1	PIA CONSOLE RD	1	A 9-30-63	12-01-63		
52E270052-1	DOLLY RADAR	1	11-15-63	11-29-63	09-09-63	-12
52E270018-401	CAL-KIT-RIST	1	11-08-63	11-22-63	01-17-64	+ [illegible]
			SPACECRAFT SYSTEM TEST			
52E270018-1	TEST RADAR INS	3	12-05-63	12-19-63	09-15-63	-14
52E270024-1	TEST RADAR INS	1	11-15-63	11-29-63	09-15-63	-12
52E270018-1	TEST RADAR INS	2	11-15-63	12-09-63	09-16-63	-12
52E270024-1	TEST RADAR INS	2	12-06-63	12-20-63	10-01-63	-12
			HANGAR			
52E270024-1	TEST RADAR INS	4	12-27-63	01-10-64	01-17-64	+ 1
52E270052-1	DOLLY RADAR	2	12-15-63	12-30-63	02-17-64	+ 7
52E270018-1	TEST RADAR INS	4	12-05-63	12-19-63	01-17-64	+ 4
52E270018-1	TEST RADAR INS	6	12-12-63	12-26-63	01-17-64	+ 3
52E270024-1	TEST RADAR INS	5	01-17-64	01-31-64	02-29-64	+ [illegible]
52E270018-401	CAL-KIT-RIST	2	12-12-63	12-26-63	01-17-64	+ [illegible]
			PAD			
52E270024-1	TEST CONSOLE	3	12-06-63	12-20-63	11-30-63	[illegible]
52E270018-1	TEST RADAR INS	5	12-05-63	12-19-63	1-17-64	+ [illegible]

System: [illegible]
Subsystem: Landing [illegible]
Vendor: Northrop [illegible]
Date: 25 Oct. 1963

MONTHLY SUMMARY

ENGINEERING STATUS

1. A meeting was held at NASA on 30 Sept. to determine which of the two concepts of high altitude redesign to incorporate. It was decided to employ the auxiliary drogue chute. A second meeting held on 14 Oct. 1963, to determine which of the various sequence arrangements would be most suitable. Of the three methods presented, the "Tandem Deployment" method was the one selected. [illegible] EJS 2445, which incorporates the high altitude drogue chute redesign is now in the process of being approved.

2. A meeting is scheduled with Northrop on the 29th and 30th of Oct. to discuss incorporating the high altitude drogue chute changes to the Landing System.

ASSEMBLY & DELIVERY

1. The requirement to incorporate certain parts into Main and Bridle Disconnect Assemblies caused a change in the Available for Installation dates for SC 4 and up. Refer to the Vendor Delivery Status section of this report.

2. If the proposed addition of a high altitude drogue is approved for SC 2 & up, the AFI dates for SC 2, 3A and 3 will slip to either 7 Dec. 1963 or 3 Jan. 1964 depending on whether the mortar assembly breech is reworked or redesigned. In either case, AFI dates for SC 4 and up will slip to 1 Feb. 1964.

TEST STATUS

Development Tests (Bridle Disconnect)

1. Development tests on the bridle disconnect began on 3 Oct. 1963 and were expected to be completed by 18 Oct. 1963. After a number of tests, the correct amount of propellant required to perform its specific function was determined but the piston was not retained. This failure necessitates a minor change in the piston. After this change was incorporated, the piston was retained and the tests were completed on 24 Oct. 1963. (Ref. Line 43)

2. Drogue and Pilot Tandem Deployment (Ref. Line 6)

Due to the proposed addition of a high altitude drogue chute, a series of development tests must be performed. A test-time schedule has been drawn up which indicated a start date of [illegible] Dec. 1963, and a completion date of 31 Jan. 1964 for drogue and pilot tandem deployment development using B/P 6.

3. High Altitude Drogue Chute Bomb Drops (Ref. Line 3)

A tentative schedule has also been drawn up for 20 high altitude drogue chute bomb drops. The estimated start and completion dates for these drops are 1 Jan. 1964 to 15 July 1964.

Qual Tests

4. A series of 10 cold firings and 5 hot firings were performed under drogue mortar verification tests prior to drogue mortar qual testing. These tests were completed on 24 Oct. 1963. The results are being evaluated.

5. Recovery System

Fourteen Recovery System drop tests using Static #7 are tentatively scheduled to start 15 April 1964 and be completed by 15 Sept. 1964. (Ref. Line 12)

6. Complete System

Two complete system drop tests using Static #4 are tentatively scheduled for the last two weeks in July of '64. (Ref. Line 16)

AGE

1. Nothing has been shipped during this reporting period. The packing boxes for the main and drogue chute, which were to be shipped on 1 Nov. 1963, will not be delivered until 2 Dec. 1963 due to the delay in performing FAD at El Centro.

GEMINI SPACECRAFT

CONTRACT NO. NAS 9-170

LANDING CHUTE - (VENDOR: NORTHROP-VENTURA)

STATUS CHART

REPORT NO. 8580-1-33

LAST PROGRAM SCHEDULE CHANGE: 1 APRIL 1963

STATUS AS OF: 25 OCTOBER 1963

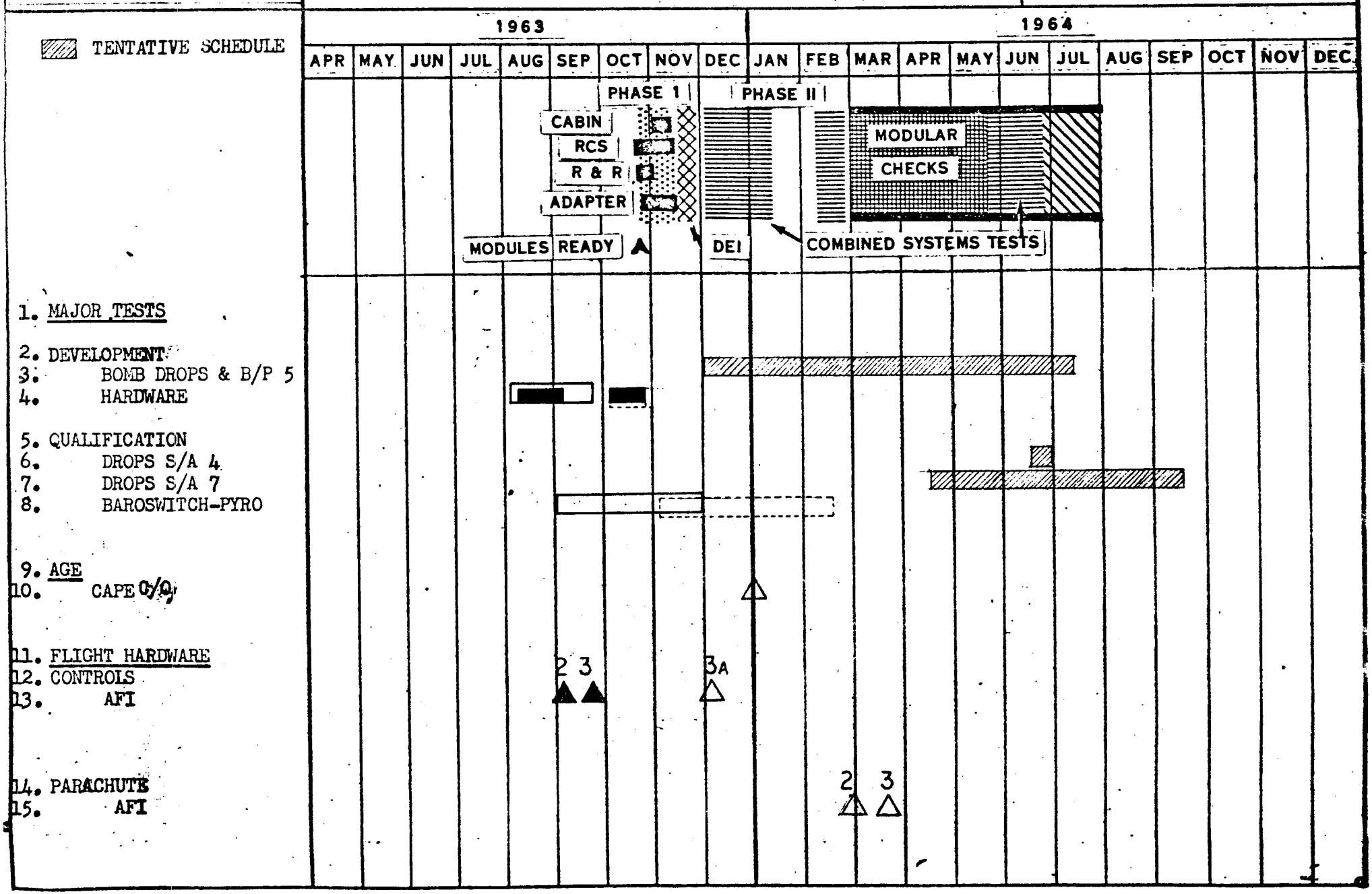

20-B

LEGEND
▽ Test Proposal Due
◊ Hardware Available
▭ Test Activity
○ Report Due
Report Approved
SOLID INDICATES ACTUALS

(TENTATIVE SCHEDULE)
GEMINI LANDING SYSTEM
PARACHUTE QUALIFICATION AND DEVELOPMENT TESTS
SCD NO. 52-41703

Rev. B: 27 Sept. 1963
Rev. C: 25 Oct. 1963

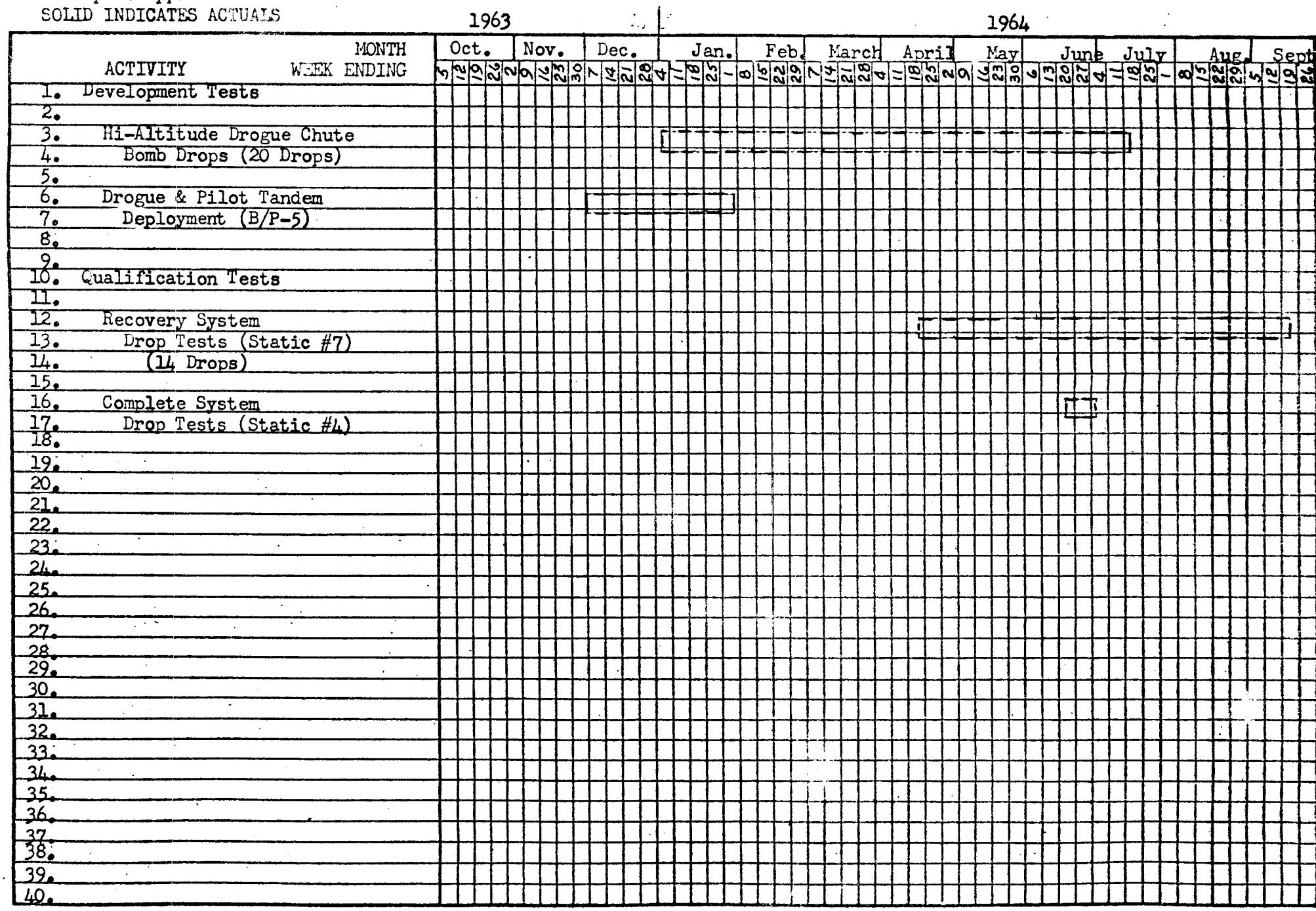

MAC 2274V (27 APR 59)

20-B

LEGEND
- ▽ Test Proposal Due
- ◊ Hardware Available
- ▭ Test Activity
- ○ Report Due
- ☆ Report Approved

SOLID INDICATES ACTUALS

GEMINI LANDING SYSTEM
HARDWARE QUALIFICATION AND DEVELOPMENT TESTS
SCD NO. 52-41703

REV. C 25 OCT. 63

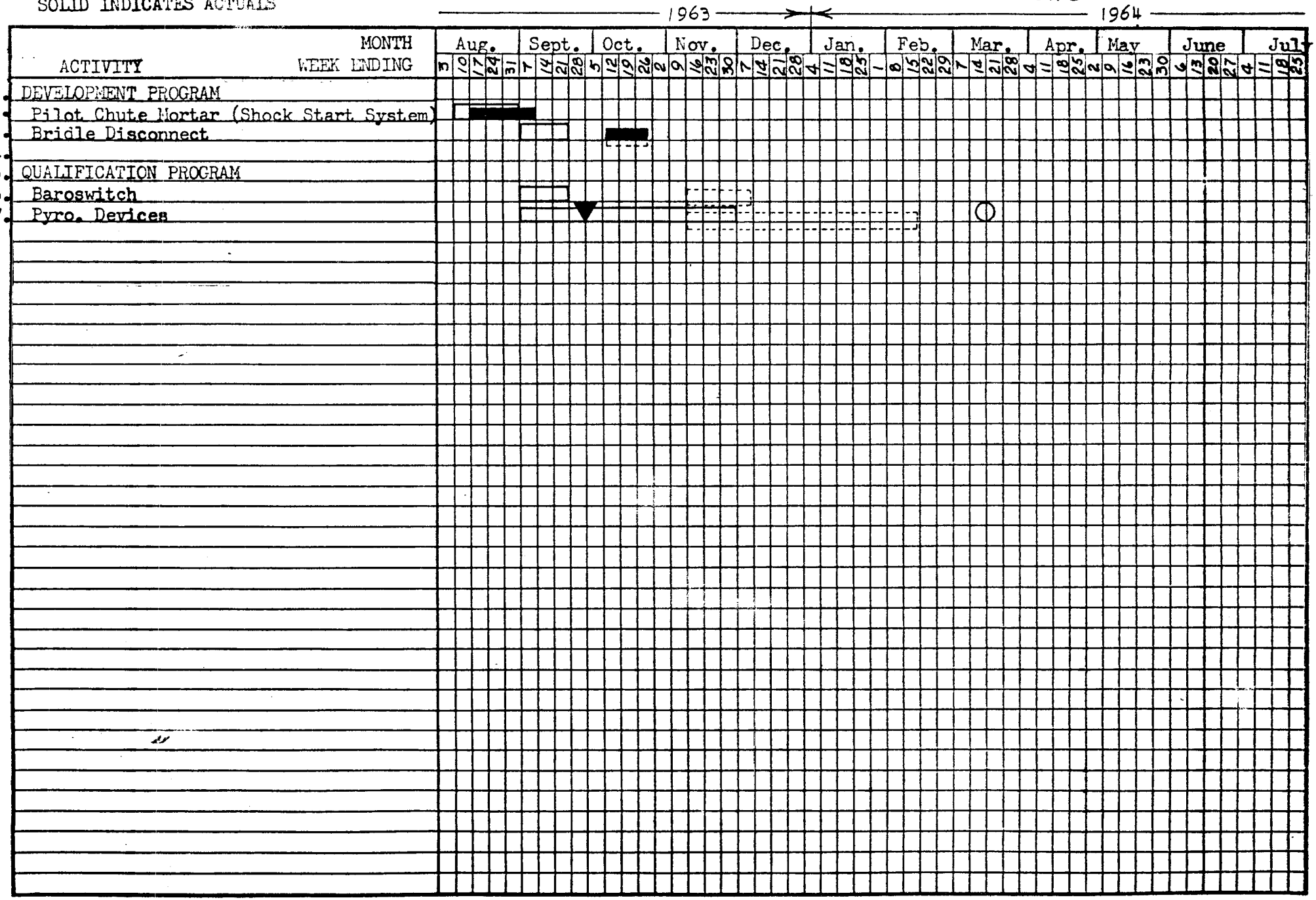

MAC 2274V (27 APR 59)

Date: 25 Dec. 1963

VENDOR DELIVERY STATUS REPORT
LANDING CHUTE
NORTHROP VENTURA

UNIT NO.	TYPE	USAGE	COMPONENT	VENDOR W/S	AVAIL. FOR INSTL.	REQ'D. FOR INSTL.	SLACK
1	PA-1	SC-2	CONTROLS *		A09-04-63	08-15-63	- 3.0
2	PA-2	SC-3A	CONTROLS	11-30-63	12-07-63	07-28-63	-18.[illegible]
3	PA-3	SC-3	CONTROLS *		A09-27-63	08-24-63	- 5.0
4	PA-4	SPARE	CONTROLS	02-01-64	02-08-64	11-30-63	-10.[illegible]
5	PA-5	SC-4	CONTROLS	02-01-64	02-08-64	10-30-63	-14.0
6	PA-6	SC-5	CONTROLS	02-01-64	02-08-64	01-03-64	- 5.0
7	PA-7	SC-6	CONTROLS	02-01-64	02-08-64	03-02-64	+ 3.[illegible]
1	PA-1	SC-2	PARACHUTE	02-07-64	02-28-64	02-28-64	0
2	PA-2	SPARE	PARACHUTE	02-21-64	03-06-64	02-28-64	- 1.0
3	PA-3	SPARE	PARACHUTE	04-30-64	05-14-64	04-28-64	- 2.[illegible]
4	PA-4	SC-3	PARACHUTE	03-06-64	03-20-64	04-28-64	+ 5.[illegible]
5	PA-5	SC-4	PARACHUTE	04-30-64	05-14-64	06-30-64	+ 6.[illegible]
6	PA-6	SC-5	PARACHUTE	06-30-64	07-14-64	08-31-64	+ 6.[illegible]
7	PA-7	SC-6	PARACHUTE	08-31-64	09-14-64	10-31-64	+ 6.[illegible]

* Unqualified Baroswitch and Mortar Assembly prior to high altitude Drogue Chute Redesign.

Chart No. 20-D

VENDOR AGE STATUS REPORT

Date: 25 Oct. 1963

SYSTEM - LANDING

VENDOR - NORTHROP VENTURA

PART NUMBER	NOMENCLATURE	UNIT NO.	W/S DATE	AVAIL. FOR USAGE	REQ'D. FOR USAGE	SLACK
		(HANGAR)				
R6275	PKG BOX DROG CHT	1	12-02-63	01-02-64	02-24-64	+ 7.7
R6275	PKG BOX DROG CHT	2	12-02-63	01-02-64	02-24-64	+ 7.7
R6275	PKG BOX DROG CHT	3	12-02-63	01-02-64	02-24-64	+ 7.7
R6276	PKG BOX MAIN CHT	2	12-02-63	01-02-64	02-24-64	+ 7.7
R6276	PKG BOX MAIN CHT	3	12-02-63	01-02-64	02-24-64	+ 7.7
R6276	PKG BOX MAIN CHT	1	12-02-63	01-02-64	02-24-64	+ 7.7

MONTHLY SUMMARY

System: Time Reference System
Subsystem: Electronic & Event Timer
Vendor: McDonnell E.E.D.
Date: 25 October 1963

ENGINEERING STATUS

ELECTRONIC TIMER

1. Regarding the TRS-Radar Interface problem, EED has measured the jitter of the zero pulse to be as much as 130 nanoseconds at 8 cps while Westinghouse requires a maximum of 50 nanoseconds at 8 cps. The pulse spacing between the zero and one pulse in different units could vary as much as 10% with the present design. The Westinghouse requirement is a variance of not more than one per-cent between units. This interface problem is still under investigation.
2. A meeting is scheduled in St. Louis on 28 October to discuss the Data Transmission System-Electronic Timer interface problem. Representatives from EMR, EED and MAC engineering will attend this meeting. The interface document will be reviewed at this meeting and ways to eliminate the 51.2 kc ripple on the DTS request line to the Electronic Timer will be investigated.

EVENT TIMER

1. In response to NASA's RFA on the Toggle Switch Handles, EED is investigating the size of the Toggle Switches used on the Event Timer. As soon as EED completes their investigation of this problem and submits possible solutions, the results will be forwarded to NASA.

PROCUREMENT (ELECTRONIC AND EVENT TIMER)

1. Partial shipment of IRC resistors was received 25 October 1963. This delivery is approximately 12 days ahead of schedule. IRC has indicated that the remainder of the resistors will be delivered on schedule. The partial shipment received 25 October is of insufficient quantity to improve the delivery dates presented in this report.
2. There are no outstanding procurement problems at this time.

ASSEMBLY AND DELIVERY STATUS

ELECTRONIC TIMER

1. EP-2 was delivered to IBM for the in-loop-mission simulation test on 30 September 1963.
2. PP-2 was shipped to Goddard AFB on 3 October for the NASA Fly-Over Test.
3. No other units were delivered during this reporting period.

EVENT TIMER

1. The only Event Timer completed during this reporting period was PP-2 on 11 October 1963. This unit started in Qual Test (RFI) on 16 October 1963.

ELECTRONIC AND EVENT TIMER

1. All scheduled delivery dates are shown on the Vendor Delivery Status Report, Charts 21 C and 22 C.

TEST STATUS

ELECTRONIC TIMER

QUAL

1. PP-5 is scheduled to begin Qual Testing, RFI only, on 28 October.

CTU

1. During CTU testing the Electronic Timer has been interfaced with the computer and the DTS PCM. Data from these tests are being compiled.

ELECTRONIC & EVENT TIMER SUMMARY

NASA FLY-OVER

1. The TRS-Digital Command System interface offered no problems. The Electronic Timer was also interfaced with the Computer Simulator. Several problems existed in the Computer-TRS interface. All of these problems were corrected during the test.

TEST STATUS

EVENT TIMER

QUAL

1. RFI Test began on 16 October and was completed on 25 October. Data from this test are being analyzed at this time.

CTU

1. PP-2 is scheduled to begin testing in CTU on 1 November 1963.

AGE

ELECTRONIC AND EVENT TIMER

1. All AGE items are scheduled to be delivered before 1 November 1963.
2. EED has experienced problems in PIA Testing, which has to date been accomplished on a factory test console. Delays in deliveries have been caused by this console failing during testing. It is anticipated delays of this type will be reduced to a minimum when the PIA Console (Part No. 52E270012-1) is available.

GEMINI SPACECRAFT

CONTRACT NO. NAS 9-170

EVENT TIMER - (MCDONNELL E.E.D.)

STATUS CHART (Report 8664)

REPORT NO. 8580-1 -33

LAST PROGRAM SCHEDULE CHANGE: 1 April 1963

STATUS AS OF: 25 October 1963

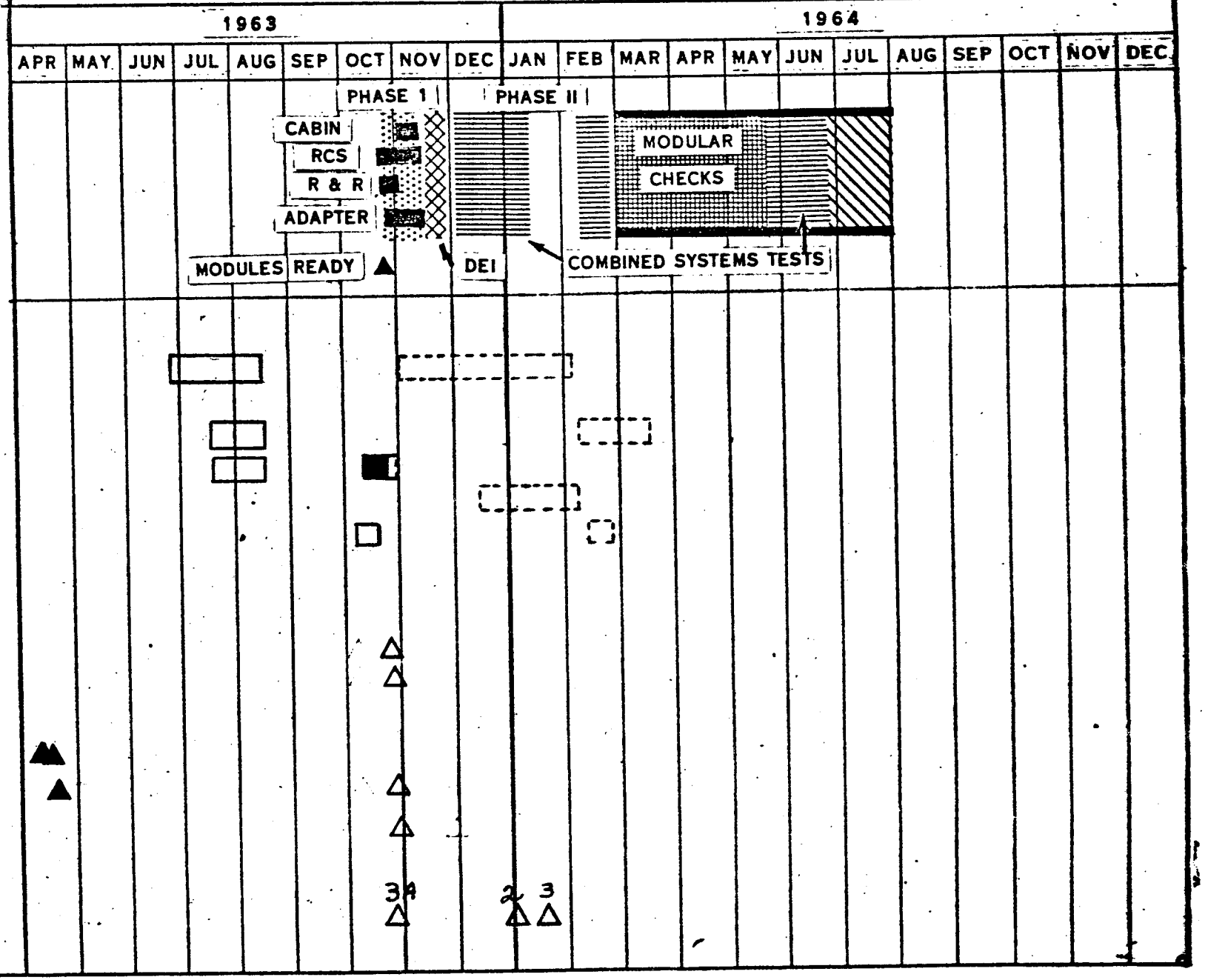

LEGEND
- ▽ TEST PROPOSAL DUE
- ◊ HARDWARE AVAIL
- □ TEST SCHEDULE
- ○ REPORT DUE
- ◇ REPORT APPROVED

SOLID INDICATES ACTUAL

QUALIFICATION AND DEVELOPMENT TEST STATUS

EVENT TIMER

10-25-63

M.A.C. ELECTRONIC ENGINEERING DIVISION

M.A.C. REPORT 8664

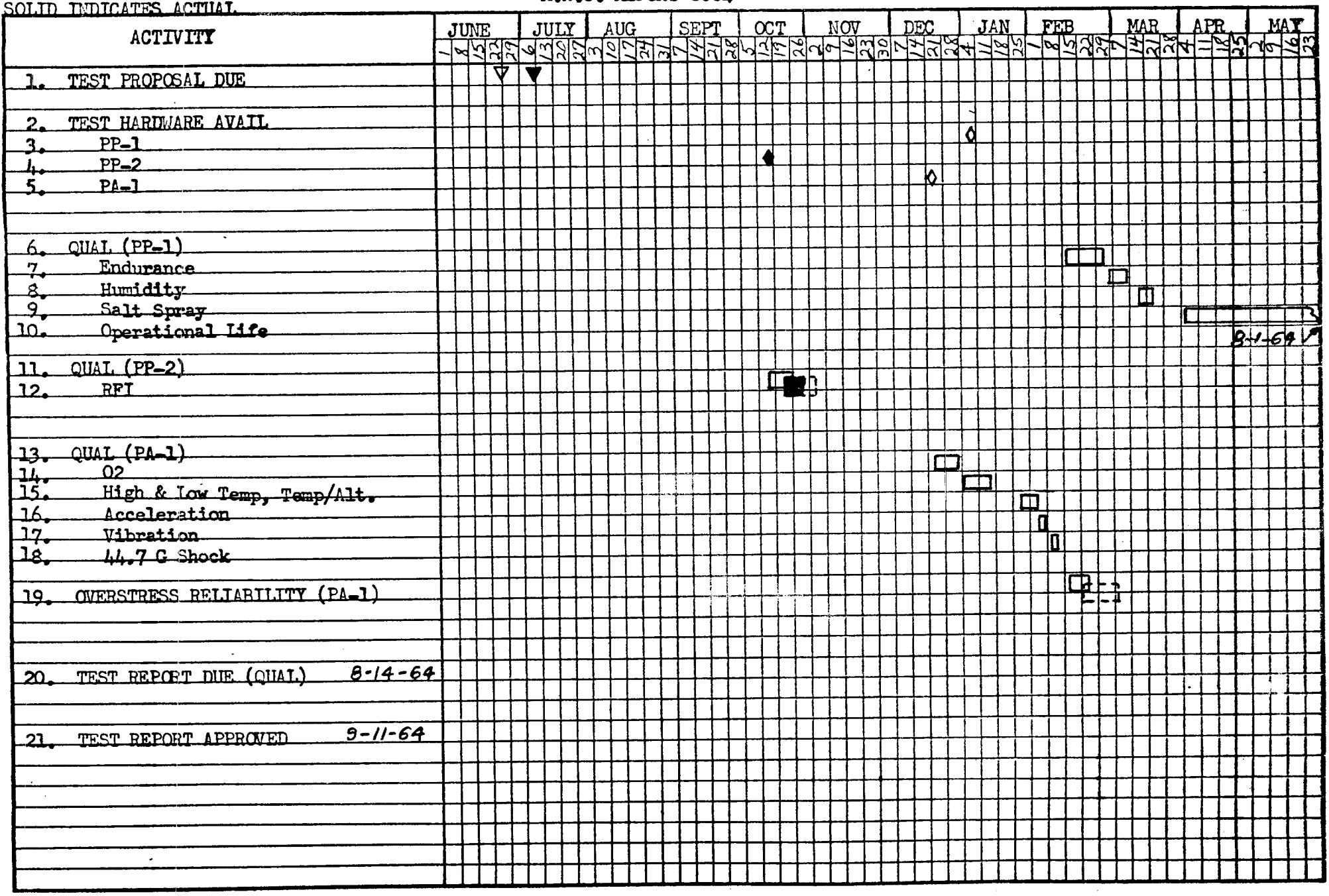

MAC 2274V (27 APR 59)

VENDOR DELIVERY STATUS REPORT

EVENT TIMER

CHART NO: 2: C

MCDONNELL - E.E.D.

25 October 1963

UNIT NO.	TYPE	USAGE	VENDOR W/S	AVAIL FOR INSTL	READY FOR INSTL	SLACK
2	EP-2	Development Testing			A 5-15-63	
2	EP-2	Chance-Vought Test	11-26-63	11-29-63		
3	PP-1	SC-2 SST	10-28-63	10-28-63	8-03-63	-12
3	PP-1	Qual		1-02-63	7-15-63	-24
4	PP-2	Qual.			A10-11-63	
4	PP-2	CTU	11-01-63	11-01-63	6-24-63	-18
5	PP-3	SC-3A	10-29-63	10-29-63	9-10-63	-7
6	PA-1	Qual		12-16-63	7-15-63	-22
7	PA-2	SC-2	12-31-63	12-31-63	8-03-63	-21
8	PA-3	SC-3	1-10-64	1-10-64	10-10-63	-13
9	PA-4	SC-4	1-21-64	1-21-64	11-19-63	-9
10	PA-5	SC-5	1-31-64	1-31-64	1-30-64	0
11	PA-6	Spare SST	2-12-64	2-12-64	9-30-64	-19
12	PA-7	Spare	2-21-64	2-21-64	11-30-63	-12
13	PA-8	Spare	3-04-63	3-04-64	1-31-64	-3
14	PA-9	SC-6	3-13-64	3-13-64	4-02-64	+3
15	PA-10	SC-7	4-01-64	4-01-64	6-04-64	+9
16	PA-11	SC-8	5-28-64	5-28-64	8-06-64	+10
17	PA-12	SC-9	7-29-64	7-29-64	10-23-64	+12
18	PA-13	SC-10	9-28-64	9-28-64	12-01-64	+9
19	PA-14	SC-11	11-16-64	11-16-64	2-01-65	+11
20	PA-15	SC-12	1-18-65	1-18-65	4-01-65	+11

VENDOR AGE STATUS REPORT

CHART NO. 21, 22 D

TIME REFERENCE SYSTEM

(E.E.D.)

DATE: 10-25-63

PART NUMBER	NOMENCLATURE	UNIT NO.	VENDOR W/S	AVAIL. FOR USAGE	REQ'D FOR USAGE	SLACK
			PRE-INSTALLATION ACCEPTANCE			
52E270012-1	PIA CONSOLE	1	10-28-63	10-28-63	5-15-63	-24
			SPACECRAFT SYSTEM TEST			
52E270048-1	CONTROL PANEL	1		A 4-16-63		
E270048-1	CONTROL PANEL	1		A 4-16-63		
			HANGAR			
52E270048-1	CONTROL PANEL	1		A 4-27-63		
E270048-1	CONTROL PANEL	1	10-30-63	11-6-63	11-01-63	0
E270012-1	PIA CONSOLE	1	10-29-63	11-5-63	9-20-63	-5
			PAD			
52E270048-1	CONTROL PANEL	1	10-31-63	11-07-63	12-23-63	+7

GEMINI SPACECRAFT

CONTRACT NO. NAS 9-170

ELECTRONIC TIMER - (MCDONNELL E.E.D.)

STATUS CHART (Report 8664)

REPORT NO. 8580-1 -33

LAST PROGRAM SCHEDULE CHANGE: 1 April 1963

STATUS AS OF: 25 October 1963

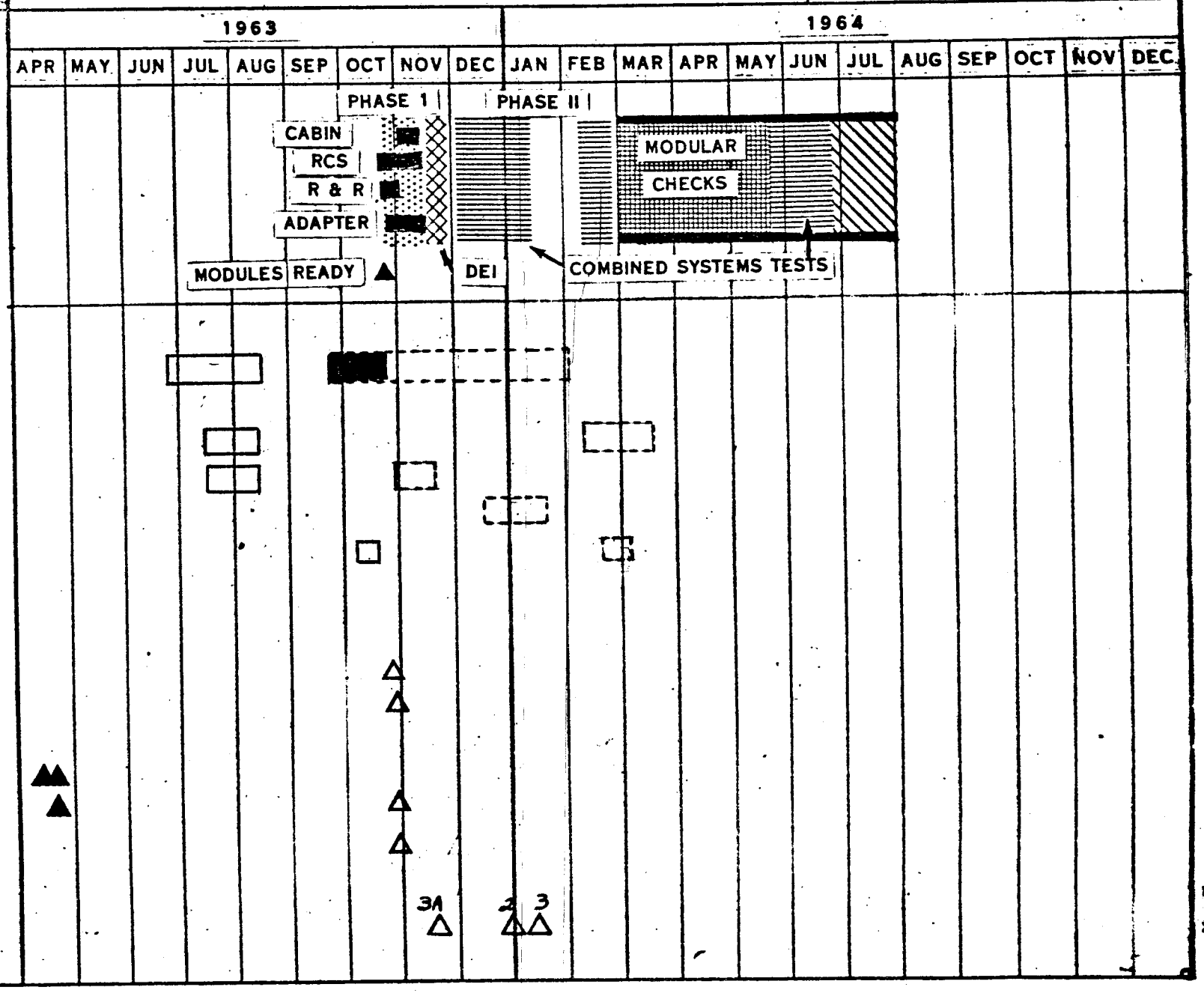

LEGEND
- ▽ TEST PROPOSAL DUE
- ◊ HARDWARE AVAIL
- □ TEST SCHEDULE
- ○ REPORT DUE
- ◇ REPORT APPROVED

SOLID INDICATES ACTUAL

QUALIFICATION AND DEVELOPMENT TEST STATUS

ELECTRONIC TIMER

M.A.C. ELECTRONIC ENGINEERING DIVISION

M.A.C. REPORT 8664

10-25-63

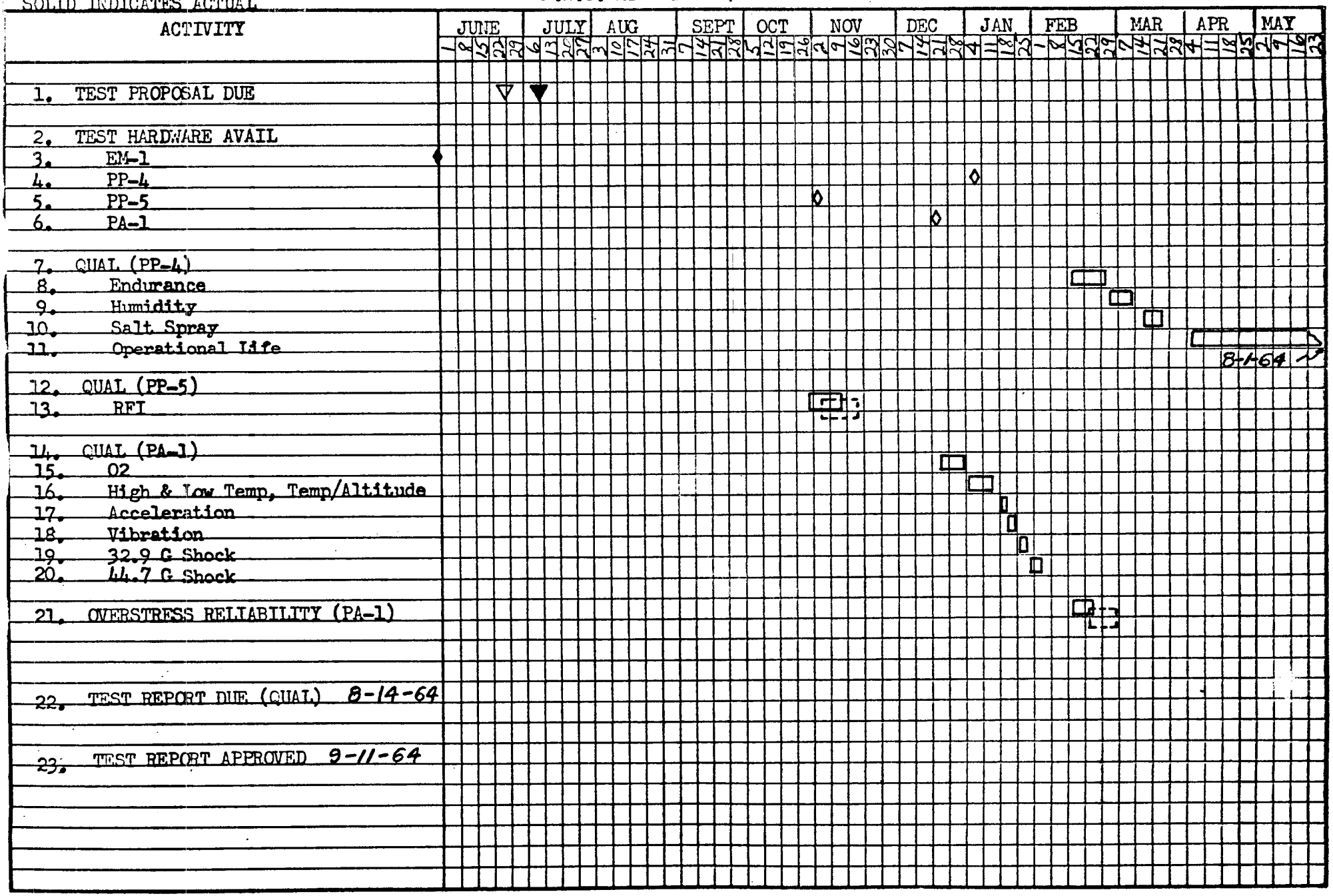

MAC 2274V (27 APR 59)

VENDOR DELIVERY STATUS REPORT
ELECTRONIC TIMER
MAC-FED

CHART NO. 22 C

DATE: 10-25-63

CHART NO.	TYPE	USAGE	COMPONENT	VENDOR W/S	AVAIL. FOR INSTL	REQ. FOR INSTL	SLACK
1	EP-1	ESTU				A11-25-62	
2	EP-2	DEVELOPMENT TESTING				A 9-01-62	
2	EP-2	IN-LOOP TEST-IBM				A 9-30-63	
3	PP-1	CTU				A 9-23-63	
4	PP-2	NASA FIX-OVER 1				A10-10-63	
5	PP-3	NASA FIX-OVER 2		11-26-63	12-03-63	12-31-63	+ 4
6	PP-4	SC 2 SST		11-01-63	11-01-63	8-03-63	-13
6	PP-4	QUAL			1-02-64	7-15-63	-24
7	PP-5	QUAL			10-28-63	7-15-63	-15
7	PP-5	SC 3A		11-21-63	11-21-63	9-03-63	-11
8	PA-1	QUAL			12-16-63	7-15-63	-32
9	PA-2	SC 2		12-31-63	12-31-63	8-03-63	-21
10	PA-3	SC 3		1-10-64	1-10-64	9-25-63	-15
11	PA-4	SC 4		1-21-64	1-21-64	11-19-63	- 9
12	PA-5	SC 5		1-31-64	1-31-64	1-17-64	- 2
13	PA-6	SPARE SST		2-12-64	2-12-64	9-30-63	-19
14	PA-7	SPARE		2-21-64	2-21-64	11-30-63	-12
15	PA-8	SPARE		3-04-64	3-04-64	1-31-64	- 5
16	PA-9	SC 6		3-13-64	3-13-64	4-02-64	[illegible]
17	PA-10	SC 7		4-01-64	4-01-64	6-04-64	+ 9
18	PA-11	SC 8		5-28-64	5-28-64	8-06-64	+10
19	PA-12	SC 9		7-29-64	7-29-64	10-23-64	+12
20	PA-13	SC 10		9-28-64	9-28-64	12-01-64	+ 7
21	PA-14	SC 11		11-16-64	11-16-64	2-01-65	+11
22	PA-15	SC 12		1-18-65	1-18-65	4-01-65	+11

n'thly Summary

System: Instrumentation
Subsystem: Data Transmission
Vendor: Electro-Mechanical Research
Date: 25 October 1963

ENGINEERING STATUS (Airborne Equipment)

A. PCM

1. The interface problem with the time reference system is still being studied by EMR.
2. The low level problem remains the gating factor in PCM Status. The investigation of this problem has precipitated the following changes in design.
   a. Provided accurate signal simulation
   b. Provided circuit shielding to reduce noise
   c. Derived a method of equalizing dynamic impedances
   d. Derived an improved method of switch testing
   e. Provided module shielding to reduce noise in critical areas

   However, there still remains the 2% - 3% rather than 1% out of tolerance off-sets in the low level multiplexer circuits.

B. TAPE RECORDER

RCA presented the following modifications on the tape recorder design as the solution to the vibration problem.

a. Vibration isolators (ball & socket)
b. Modified case and cover
c. Laminated Motor board
d. Dual Capstan tape drive system
e. Moving pressure belt
f. Modified tape path
g. New Tuning Fork
h. New Detection system (one-shot multivibrator)
i. Optimization of bearing loading reels, converters, rollers, etc.
j. Modification of speed converter
   1. Increased shaft sizes

A modified engineering model of the tape recorder was tested and the results showing the jitter encountered as a function of the vibration frequency were presented to the group.

Because of the successful control of vibration at the tape drive mechanism the need for a phase locked oscillator (P.L.O.) detection system no longer exists. This allows the use of a one-shot multivibrator type of detection system which may allow bit jitter in excess of that permitted by the P.L.O. system, but guarantees no bit drop-out.

C. TRANSMITTER

RCA has tried two possible fixes to eliminate the vibration problem in the transmitters with marginal results. The first alternative was the [illegible] bracing of the board structure. The second possibility was using foamed polyurethane. This fix caused a power loss in the coils and capacitors because of a change in the dielectric constant.

The fix they are now investigating to reduce the vibration is bonding a beefed-up cover to the "Times 12" board with four posts.

PROCUREMENT (Airborne Systems)

1. The printed circuit boards which were expected to be the gating item in the production system assemblies have started coming in. It is expected that by 11-15-63 enough boards will be at EMR so the anticipated delay will

2. [illegible] diode [illegible] has [illegible] or yet, for [illegible] successful [illegible] testing.

ASSEMBLY AND DELIVERY STATUS (Airborne [illegible])

1. No hardware has been delivered [illegible].
2. [illegible] 11-21, [illegible] 12-30-63 respectively. The [illegible] will depend upon [illegible] of the engineering problem in the [illegible] because [illegible] for investigation [illegible] only if [illegible] in the system [illegible] has occurred [illegible]. No decision on the acceptability of the [illegible] been reached.

[illegible] (Ground Equipment)

1. [illegible]

   The Qual Test schedule of the [illegible] has slipped from 11-15-63 to [illegible] during the past month because of [illegible] parts shortages and the low [illegible] problems.

2. TAPE RECORDER

   Due to the recent resolution of the vibration problem involving a [illegible] in the tape recorder, drawings [illegible] be revised and new parts [illegible] chased. The time required to acquire the parts, revise the drawings and assemble a new tape recorder for Qual Test has necessitated a [illegible] start of the test from 11-16-63 to 2-10-64.

3. TRANSMITTER

   1. The [illegible] portion of qual was completed 10-7-63.
   2. Because of the difficulties found in the transmitter [illegible] during the vibration test, all other testing has been halted until an acceptable fix can be found. A meeting where [illegible] the solution of the problem to [illegible] and [illegible] has been [illegible] scheduled for 10-31-63. If the solution is acceptable, [illegible] resume the qualification testing 11-2-63 and will follow [illegible] schedule on 23 B (page 2 of 3) providing that the previous [illegible] not invalidated by the design change.

[illegible]

GROUND STATIONS

1. The remaining 3 racks of Oil-1 ground stations scheduled to be [illegible] 10-21-63 has slipped to the first part of November (no exact [illegible]). Of the many discrepancies found in these racks, which originally [illegible] their shipment in September, all but two (1. Display [illegible] not interchangeable 2. Discrete function recorder transistor [illegible]) have been cleared up or accepted as is. A possibility [illegible] is to ship the racks to St. Louis and retrofit [illegible] parts are available.
2. A new delivery schedule was issued to [illegible] on the remaining [illegible]

Station	[illegible] Est. Del. Date
Oil-3	11-29-64
Oil-6	1-10-64
Oil-5	1-22-64
[illegible]	[illegible]
[illegible]	[illegible]

B. C&O TEST SET

A design review meeting between EMR and MAC was held [illegible] during the week of 10-13-63. The primary reason for the [illegible] review exactly the full scope of the changes MAC had directed EMR [illegible] incorporate in the test set at a previous meeting (8-22-63) [illegible]

a. Computer Word Test Provision
b. Overvoltage Programming Revision
c. Worst Case Accuracy Programming
d. Common Mode Rejection Programming Revision
e. Bi-Level Input to Interface
f. Time Reference System Interface
g. Use of SCD Components for Internal PCM's.

will cause a slip in the delivery schedule of the test set. [illegible] estimated delivery of the first C&O-3 for [illegible] in St. [illegible] the second C&O-3 to the Cape on 5-15-63. EMR, however, has not [illegible] released their official estimated delivery dates.

GEMINI SPACECRAFT

CONTRACT NO. NAS 9-170

DATA TRANSMISSION SYSTEM

(VENDOR: ELECTRO-MECHANICAL RESEARCH, INC.)

STATUS CHART

REPORT NO. 8580-1 -33

LAST PROGRAM SCHEDULE CHANGE: 1 APRIL 1963

STATUS AS OF: 25 Oct. 1963

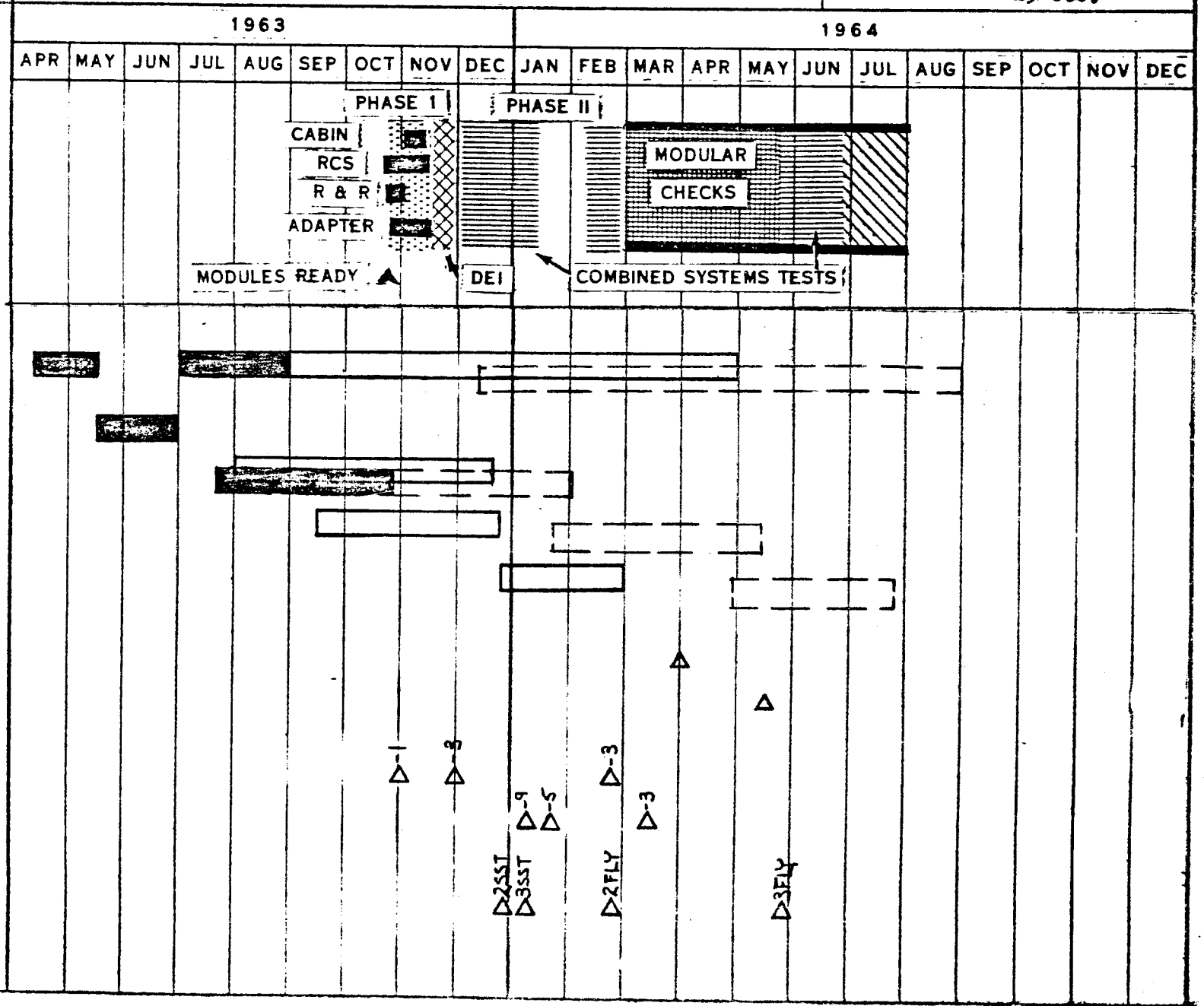

LEGEND
- ▽ TEST PROCEDURE APPROVED
- ◇ HARDWARE AVAILABLE
- □ TEST SCHEDULE
- ○ REPORT DUE
- ✿ REPORT APPROVED

QUALIFICATION AND DEVELOPEMENT TEST STATUS

25 Oct 1963

DTS TAPE RECORDER
(EMR-RCA)

SCD 52-85713

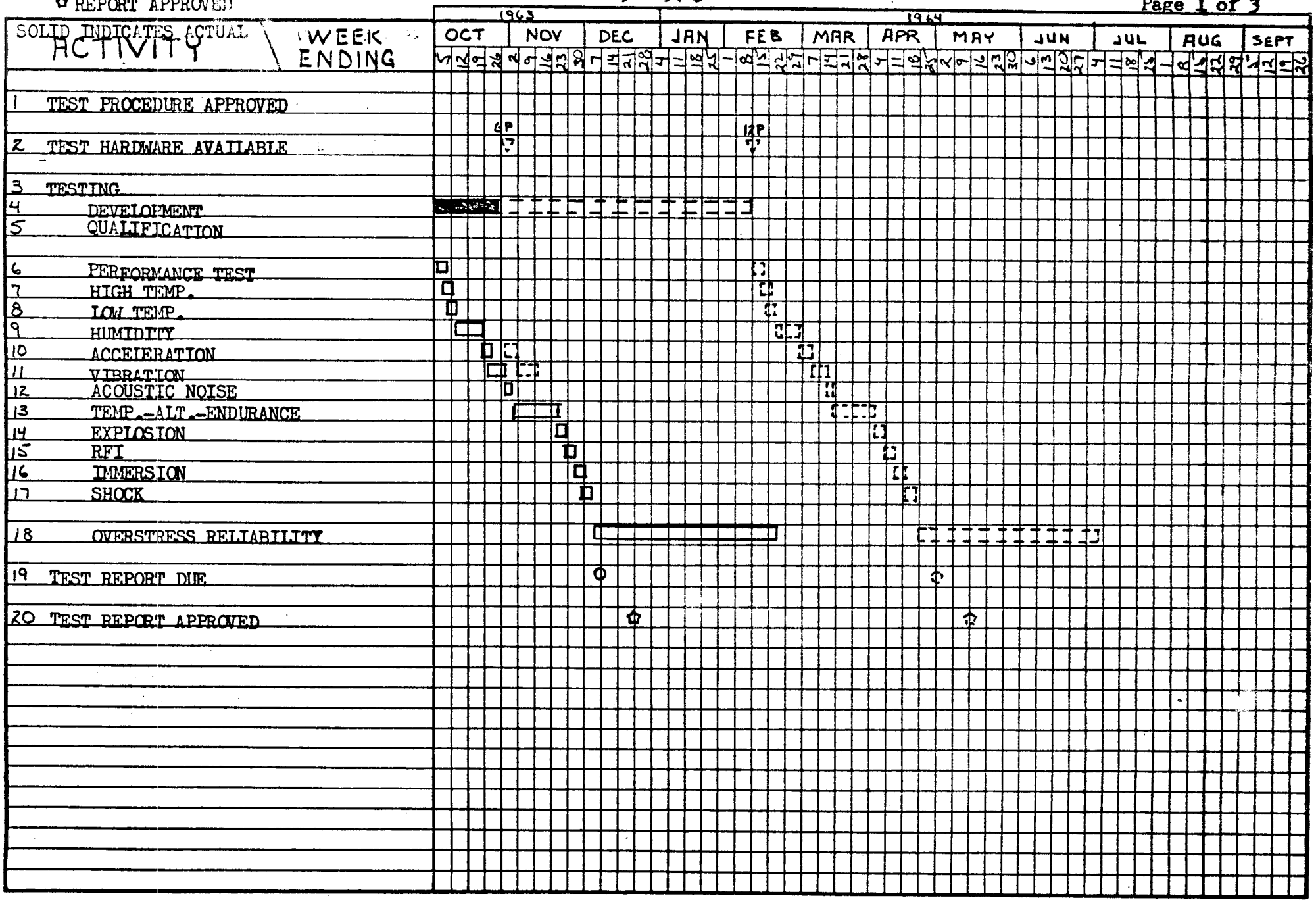

MAC 2274V (27 APR 59)

LEGEND:
- ▽ PROCEDURE APPROVED
- ◊ HARDWARE AVAILABLE
- ▭ TEST SCHEDULE
- O REPORT DUE
- ☆ REPORT APPROVED
- SOLID INDICATES ACTUAL

QUALIFICATION & DEV TEST STATUS
DTS TRANSMITTERS
EMR-RCA
SCD 52-85713

25 OCT. 1963

P2 of 3

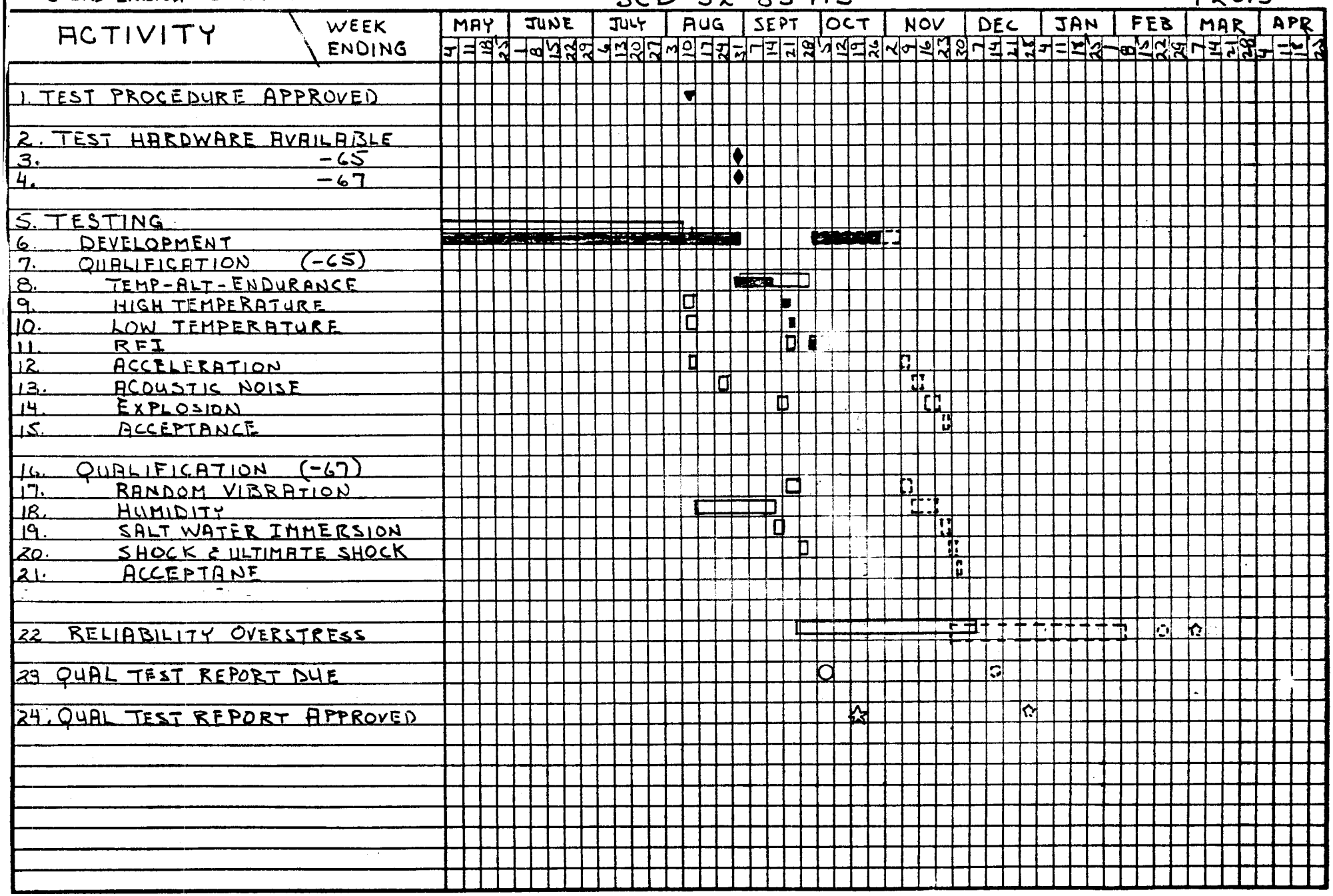

MAC 2274V (27 APR 59)

23-B

LEGEND:

- ▽ TEST PROCEDURE APPROVED
- ◇ HARDWARE AVAILABLE
- □ TEST SCHEDULE
- ○ REPORT DUE
- ✿ REPORT APPROVED

SOLID INDICATES ACTUAL

QUALIFICATION AND DEVELOPMENT TEST STATUS

DATA TRANSMISSION SYSTEM-PCM

(ELECTRO-MECHANICAL RESEARCH)
SCD 52-85713

25 Oct. 1[illegible]

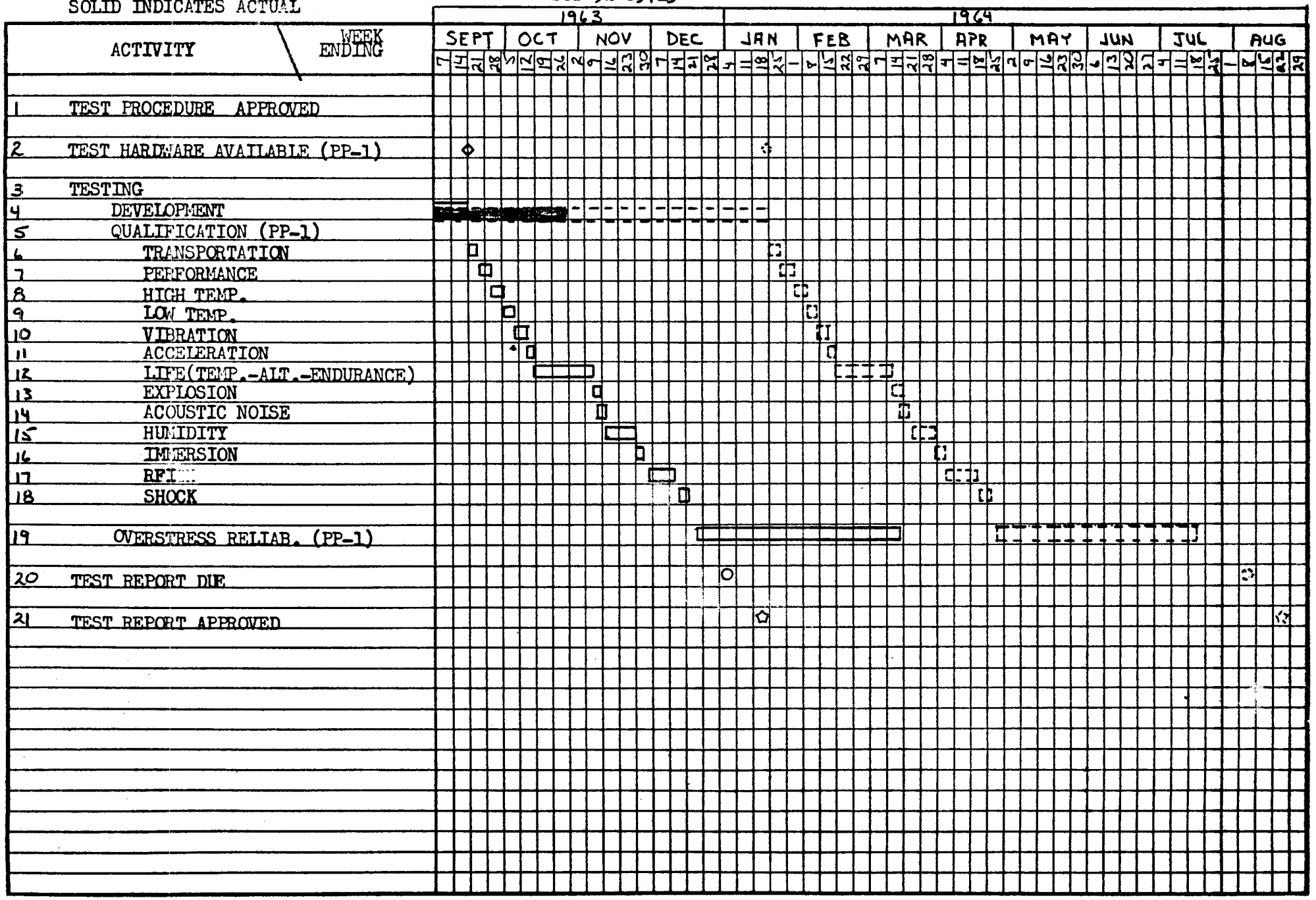

MAC 2274V (27 APR 59)

VENDOR DELIVERY STATUS REPORT
DATA TRANSMISSION
(ELECTRO-MECHANICAL RESEARCH)

CHART NO. [illegible]

DATE: [illegible]

UNIT NO.	TYPE	USAGE	COMPONENT	VENDOR W/S (1)	AVAIL FOR INSTL	REQ. FOR INSTL	SLACK
1	BB-1	VENDR	DEVELOPEMENT			A12-27-62	
2	BB-2	ESTU	CIMU THEN GMS			A 4-11-63	
3	EP-1	CTU	PCM 1-E83, 2-E85, 2-E87			A 7-02-63	
			TR: 1-31			A 3-21-63	
			XMTR: 1-E63, 1-E65, 1E-67			A 6-20-63	
4	PARTL	SC-1	XMTR: 1-E63, 1-E-65, 1-E67			A 6-20-63	
5	PPP-1	FC-1	PCM A/B 2			A 9-17-63	
			1-183, 2-185, 2-187				
			TR: 1-31			A 7-31-63	
			XMTR: 1-E63, 1-E67			A 7-31-63	
6	PPP-2	CIMU	PCM A/B 3	11-21-63	12-12-63	7-13-63	[illegible]
			1-183, 2-185, 2-187				
			TR: 1-35	12-14-63	12-24-63	7-13-63	[illegible]
			XMTR: 1-63, 1-E65, 1-67	12-02-63	**12-09-63	7-13-63	[illegible]
7	PPP-3	SST	PCM A/B 4 (FOR SC-2)	12-04-63	12-26-63	7-04-63	[illegible]
			1-183, 3-185, 2-187				
			TR: 1-31		A 9-09-63	8-08-63	[illegible]
			XMTR: 1-65*, 1-67	12-16-63	**12-23-63	7-04-63	[illegible]
7	PPP-3	FC-2	PCM A/B 4 (AFTER SC-2 SST)		2-21-64	12-01-63	[illegible]
			1-183, 3-185, 2-187				
			TR: 1-31		11-27-63	12-01-63	[illegible]
			XMTR: 1-63, 1-67		1-29-64	12-01-63	[illegible]
8	PPP-4	SST	PCM A/B 5 (FOR SC-3)	12-19-63	1-09-64	7-26-63	[illegible]
			1-183, 2-185, 2-187				
			TR: 1-35	11-24-63	12-03-63	10-11-63	[illegible]
			XMTR: 1-63, 1-65, 1-67	12-16-63	**12-23-63	7-26-63	[illegible]
8	PPP-4	IMCC-(ISC)	PCM A/B 5 (AFTER SC-3 SST)		3-20-64	2-23-64	[illegible]
			1-183, 2-185, 2-187				
			TR: 1-35		5-26-64	2-23-64	[illegible]
			XMTR: 1-63, 1-65, 1-67		2-29-64	2-23-64	[illegible]
9	PPP-5	SC-3A	PCM A/B 6	12-30-63	1-20-64	6-24-63	[illegible]
			1-183, 2-185, 2-187				
			TR: 1-35	11-30-63	12-10-63	9-11-63	[illegible]
			XMTR: 1-63, 1-65, 1-67	12-22-63	12-29-63	6-24-63	[illegible]
[illegible]	PPP	QUAL	PCM A/B 7		1-17-64		
			2-83, 2-85, 2-87				
			TR: 1-37		2-10-64		
			XMTR: 1-65, 1-67	SCRAPPED	2-28-64		

PRODUCT NO.	TYPE	USAGE	COMPONENT	VENDOR W/S	AVAIL. FOR INSTL	[illegible] TEST	[illegible]
11	PP-2	SC-2	PCM A/B 8 1-83, 1-85, 2-87	1-31-64	2-21-64	[illegible]	[illegible]
			TR: 1-35	11-16-63	11-26-63	[illegible]	[illegible]
			XMTR: 1-65*, 1-67	1-22-64	2-01-64	[illegible]	[illegible]
	PARTL	SC-2	1-85 (FOR [illegible] PATENT)	1-31-64	2-21-64	[illegible]	[illegible]
12	PP-3	SPR-SST	PCM A/B 9 1-83, 2-85, 2-87	2-14-64	3-02-64	[illegible]	[illegible]
			TR: 1-35	1-06-64	1-14-64	[illegible]	[illegible]
			XMTR: 1-63, 1-65, 1-67	1-22-64	2-03-64	[illegible]	[illegible]
13	PP-4	SC-3	PCM A/B 10 1-83, 2-85, 2-87	2-28-64	3-20-64	2-20-64	
			TR: 1-37	3-09-64	3-30-64	[illegible]	[illegible]
			XMTR: 1-63, 1-65, 1-67	2-28-64	3-3-64	2-27-64	[illegible]
14	PP-5	GES-2	PCM A/B 11 1-83, 2-85, 2-87	2-13-64	4-13-64	3-01-64	[illegible]
15	PP-6	SC-4	PCM A/B 12 1-83, 2-85, 2-87	[illegible]	4-17-64	11-06-63	[illegible]
			TR: 1-37	3-26-64	4-09-64	12-10-63	[illegible]
			XMTR: 1-63, 1-65, 1-67	[illegible]	2-03-64	11-26-63	[illegible]
16	[illegible]	ADAP 13	PCM: 1-85, 1-87	3-27-64	4-30-64	[illegible]	[illegible]
			XMTR: 1-63	2-27-64	3-03-64	[illegible]	[illegible]
17	PP-7	SPR CAPE	PCM A/B 13 1-83, 2-85, 2-87	[illegible]	[illegible]	[illegible]	[illegible]
			TR: 1-37	[illegible]	[illegible]	[illegible]	[illegible]
			XMTR: 1-63, 1-65, 1-67	[illegible]	[illegible]	[illegible]	[illegible]
18	PP-8	SC-5	PCM A/B 14 1-83, 2-85, 2-87	[illegible]	[illegible]	[illegible]	[illegible]
			TR: 1-37	[illegible]	[illegible]	[illegible]	[illegible]
			XMTR: 1-63, 1-65, 1-67	[illegible]	[illegible]	[illegible]	[illegible]
19	PP-9	SPR-SST	PCM A/B 15 1-83, 1-85, 1-87	[illegible]	[illegible]	[illegible]	[illegible]
			TR: 1-37	[illegible]	[illegible]	[illegible]	[illegible]
			XMTR: 1-63, 1-65, 1-67	[illegible]	[illegible]	[illegible]	[illegible]
[illegible]	[illegible]	[illegible]	PCM A/B 16 1-83, [illegible], 1-87	[illegible]	[illegible]	[illegible]	[illegible]
			TR: 1-37	[illegible]	[illegible]	[illegible]	[illegible]
			XMTR: 1-63, 1-65, 1-67	[illegible]	[illegible]	[illegible]	[illegible]
[illegible]	[illegible]	[illegible]	PCM A/B 17 1-83, 2-85, 1-87	[illegible]	[illegible]	[illegible]	[illegible]
			TR: 1-37	[illegible]	[illegible]	[illegible]	[illegible]
			XMTR: [illegible]	[illegible]	[illegible]	[illegible]	[illegible]

DATA TRANSMISSION

UNIT NO.	TYPE	USEGE	COMPONENT	VENDOR W/S	AVAIL. FOR INSTL	REQ. FOR INSTL
22	PA-3	SC-7	PCM A/B 18 1-83, 2-85, 2-87	6-26-64	7-10-64	4-17-64
			TR: 1-37	8-03-64	8-13-64	6-24-64
			XMTR: 1-63, 1-65, 1-67	5-22-64	6-02-64	4-17-64
23	PA-4	SC-8	PCM A/B 19 1-83, 2-85, 2-87	7-10-64	7-24-64	6-13-64
			TR: 1-37	8-24-64	9-03-64	8-22-64
			XMTR: 1-63, 1-65, 1-67	6-22-64	7-02-64	[illegible]
24	PA-5	SC-9	PCM A/B 20 1-83, 2-85, 2-87	7-24-64	8-07-64	[illegible]
			TR: 1-37	9-14-64	9-24-64	[illegible]
			XMTR: 1-63, 1-65, 1-67	7-24-64	8-04-64	[illegible]
25	PA-6	SC-10	PCM A/B 21 1-83, 2-85, 2-87	8-07-64	8-21-64	10-13-64
			TR: 1-37	10-05-64	10-15-64	[illegible]
			XMTR: 1-63, 1-65, 1-67	7-24-64	8-04-64	[illegible]
26	PA-7	SC-11	PCM A/B 22 1-83, 2-85, 2-87	8-21-64	9-04-64	12-1[illegible]
			TR: 1-37	10-26-64	11-04-64	[illegible]
			XMTR: 1-63, 1-65, 1-67	8-21-64	8-31-64	[illegible]
27	PA-8	SC-12	PCM A/B 23 1-83, 2-85, 2-87	9-04-64	9-18-64	[illegible]
			TR: 1-37	11-16-64	11-26-64	[illegible]
			XMTR: 1-63, 1-65, 1-67	8-21-64	8-31-64	[illegible]
28	PARTL	ADAP 14	PCM: 1-85, 1-87	8-21-64	9-04-64	[illegible]
			XMTR: 1-63	8-21-64	8-31-64	[illegible]
29		ADAP 15	DELETED			

* TO BE USED IN SC-2 FLY

** SHIP DATES ARE DEPENDENT ON EMR AND MAC ACCEPTING VIBRATION FIX DURING THE [illegible] 27 OCT. 1963.

(1) THE VENDOR W/S DATES ARE BASED UPON THE VENDOR'S ANTICIPATED PRODUCTION [illegible] RATHER THAN THE VENDOR'S RELEASED SCHEDULE DATES.

VENDOR AGE STATUS HISTORY

DATA TRANSMISSION

EMR

PART NUMBER	NOMENCLATURE	UNIT NO.	VENDOR W/S	AVAIL. FOR USAGE	ASSIGN FOR USAGE	[illegible]
			PRE-INSTALLATION ACCEPTANCE			
52E440040-3	TEST SET S/C INS	11	4-01-64	4-08-64	10-27-63	[illegible]
			SPACECRAFT SYSTEM TESTS			
52E440011-3	GND STA PCM	2	2-21-64	2-28-64	8-19-63	[illegible]
E440011-3	GND STA PCM	1	11-29-63	12-06-63	8-19-63	[illegible]
E440011-1	GND STA PCM *	1	11-01-63	11-07-63	10-15-63	[illegible]
			HANGAR			
52E440011-9	GND STA PCM	1	1-10-64	1-17-64	08-23-63	[illegible]
E440040-3	TEST SET S/C INS	12	5-15-64	5-22-64	09-12-63	[illegible]
E440011-3	GND STA PCM	3	3-13-64	3-20-64	12-10-63	[illegible]
			PAD			
52E440011-5	GND STA PCM	1	1-22-64	1-29-64	[illegible]	[illegible]

* Last 3 racks only (3, 4, & 5)

MONTHLY SUMMARY

[illegible]
Subsystem: Escape System
Vendor: [illegible]
Date: [illegible]

ENGINEERING STATUS

1. 52 82153 SCD Revision "A" covering "[illegible]" [illegible] released effective SC 3A & up and estimated [illegible] seat delivery.

2. EJS's 52-727 (Rev. B), 2020 (Rev. A), 20[illegible], 2079, 20[illegible], 20[illegible], 2085, and 2087 have been reviewed and estimated that [illegible] of EJS's will have no affect on schedule at Weber.

3. It has been recommended to NASA by [illegible] be incorporated into space suits to eliminate [illegible] astronauts during seat ejection.

ASSEMBLY & DELIVERY

1. Seats No's 35 and 36 [illegible] pectively.

2. Delivery of seats PA-3-4 (No's 103 & 104) is now [illegible] delayed to approximately 11 Nov. due to [illegible] restraint design at Weber [illegible] will ship date was 28 Oct. [illegible] more feasible to incorporate [illegible] rather than by retrofit. The above seats were originally [illegible] to SC-3A but can now be allocated to SC [illegible] seats shall not be provided at [illegible] GSM-10-252, CFE 53066-5).

3. NCI #66737 has been issued to Weber Aircraft [illegible] of six (6) ejection seats [illegible] These seats were ordered for use in Escape System [illegible] Weber Aircraft is [illegible] of improving delivery schedule.

TEST STATUS

1. Development
   a. Sled Test #5 (Ref. [illegible]) [illegible]

   b. Sled Test #6 (Ref. [illegible]) [illegible]

2. Qualification

   a. [illegible]

completions as follows:
(1) by 8 Nov. and (2) by 15 Nov. Previous estimates were:
(1) by 15 Oct. and (2) [illegible]
detail [illegible]

The delivery on balance of (10) seats [illegible]
(2) on [illegible], (2) on 15 Nov., (2) [illegible], (2) [illegible]
(2) on 25 Jan. 1965. Previous report estimated [illegible]
seats on 25 Oct. Normal fabrication problems [illegible]
slippage.

2. 52E130002-1 Sling Assembly
Final design was received by [illegible] on 8 Oct. [illegible]
delivery of (7) units on order [illegible]
(4) on 30 Oct. and (3) [illegible].

3. 52M660005-1 Fixture, [illegible] Locating
Weber design received by MAC on 25 Sept. and [illegible] in [illegible]
check group. MAC engineering estimates design will be [illegible]
by 22 Nov. Weber's preliminary estimate for delivery [illegible]
on order is approximately (12) weeks after design [illegible]

24-A

GEMINI SPACECRAFT

CONTRACT NO. NAS 9-170

ESCAPE SYSTEM - (VENDOR: WEBER AIRCRAFT)

STATUS CHART

REPORT NO. 8580-1 -33

LAST PROGRAM SCHEDULE CHANGE: 1 APRIL 1963

STATUS AS OF: 25 Oct. 1963

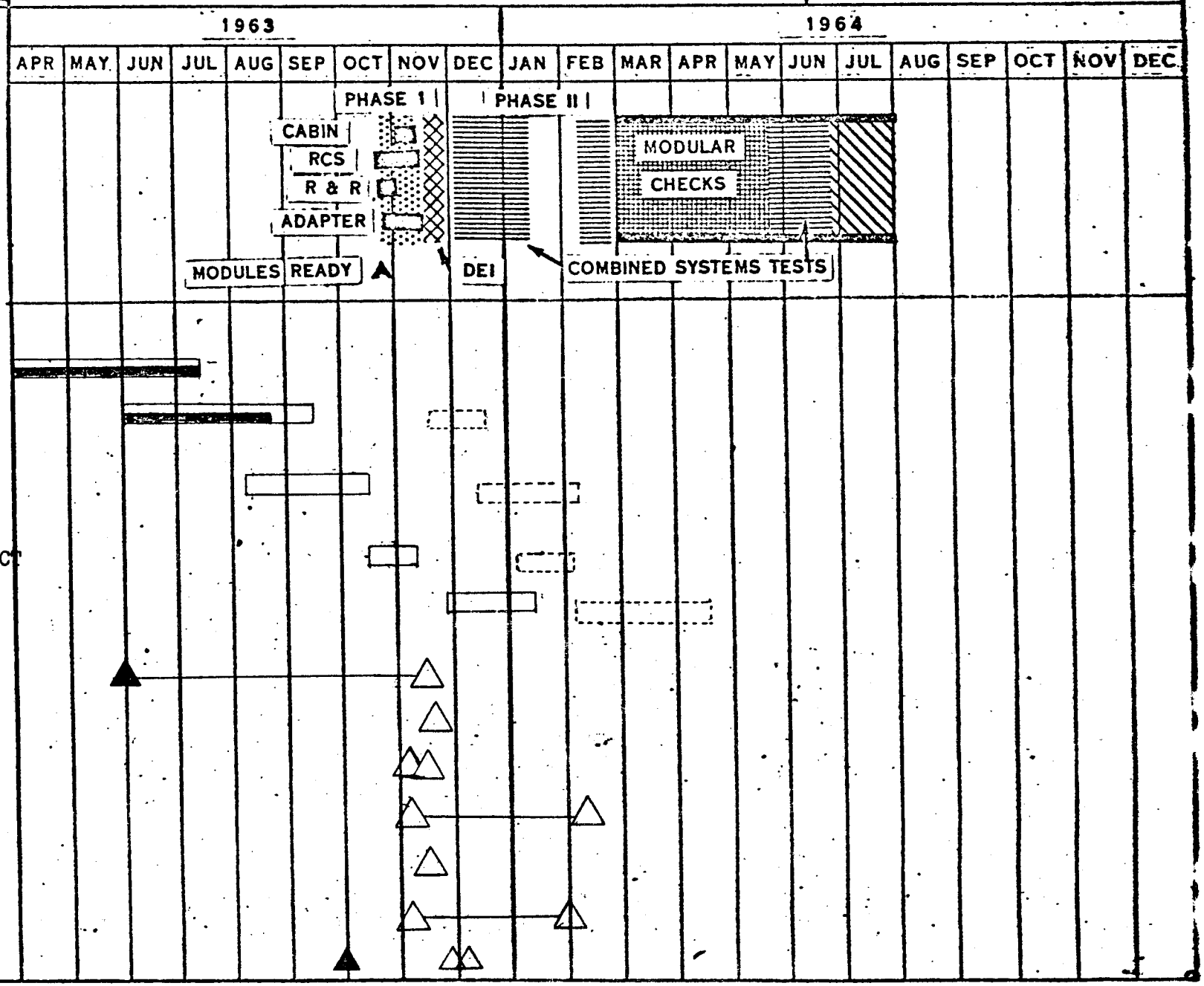

24-B

LEGEND

- ▽ Test Proposal Due
- ◊ Hardware Available
- ▭ Test Schedule
- o Report Due

SOLID INDICATES ACTUALS

QUALIFICATION & DEV. TEST STATUS
GEMINI EJECTION SEAT SYSTEM
(WEBER AIRCRAFT)
WORK STATEMENT 8802

REV. R

DATE: 25 OCT. 196

	ACTIVITY	Test No.	Test Seat No.
1	Development Testing:		
2	Pad Ejection Test	9	25
3		9A	26
4		10	29
5		10	30
6		11	25
7		11	28
8			
9	Sled Test	2	27
10		2	28
11		3	29
12		3	30
13		5	32
14		5	31
15		4	28
16		4	30
17			
18	Qualification Testing:		
19	Environmental Test		51
20	Vibration Test		52
21	Structural Test		55
22	Impact Test		56
23	Continue Environmental Test		59
24			
25	Dynamic Testing:		
26	SOPE Qual. Test	1	53
27		1	54
28		2	57
29		2	58
30			
31	Sled Test	1	60
32		1	61
33		2	62
34		2	63
35		3	64
36		3	65
37		4	55
38		4	56
39			
40	B/P 3A Del. From MAC		

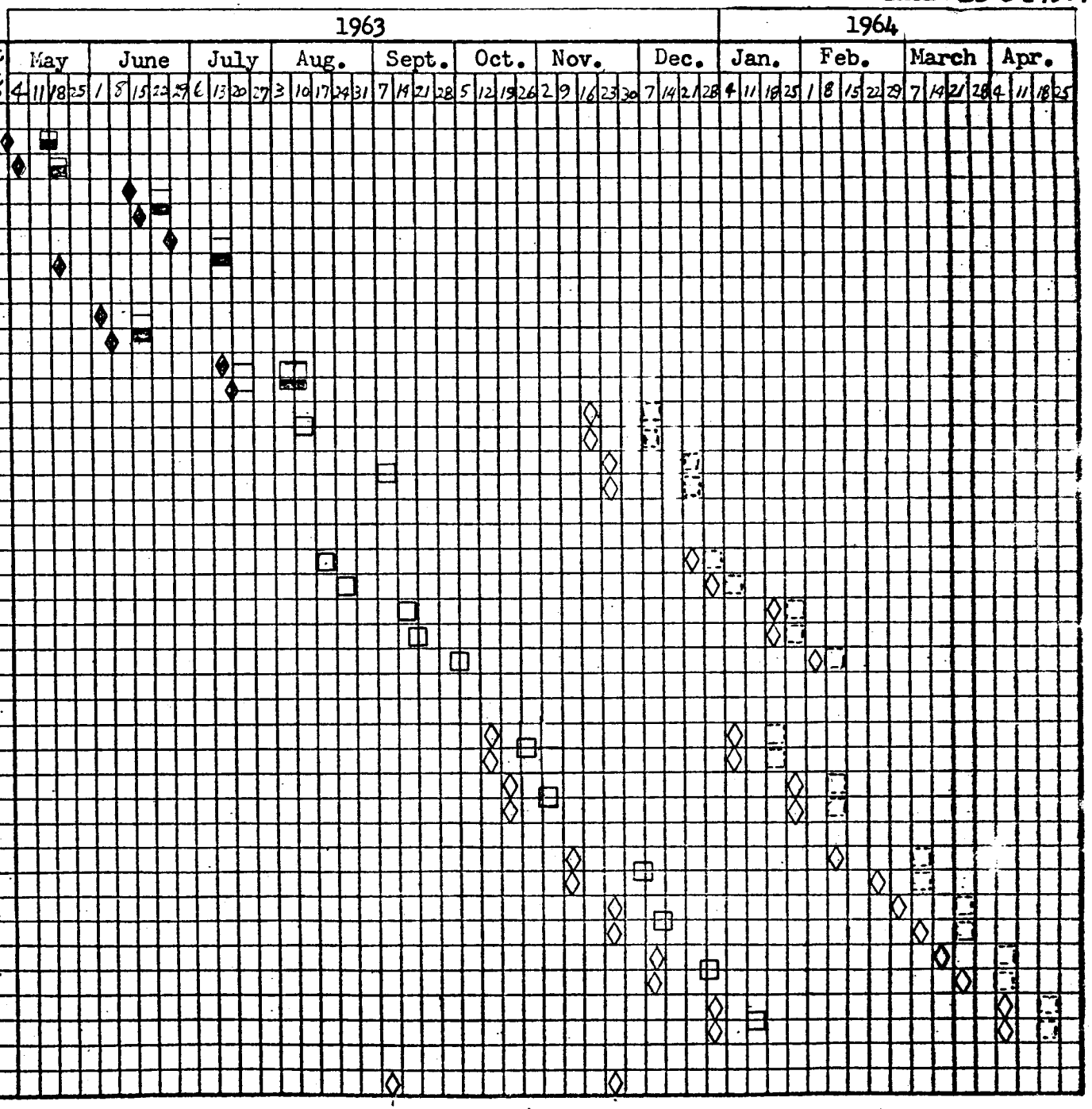

MAC 2274V (27 APR 59)

INITIAL EFFECTIVITY S/C 2

VENDOR DELIVERY STATUS REPORT

EJECTION SEAT — CHART NO. [illegible]

WEBER AIRCRAFT — 28 OCTOBER 1964

UNIT NO.	TYPE	USAGE	COMPONENT	VENDOR W/S	AVAIL FOR INSTL	REQD FOR INSTL	[illegible]
1-2	PP-1-2	S/A-5	FLOTATION		A 9-30-63	9-23-63	[illegible]
3-4	PP-3-4	SC-2	QUALIFIABLE		A 9-30-63	8-20-63	[illegible]
5-6	PA-3-4	SC-3	QUALIFIABLE	11-11-63	11-25-63	10-07-63	[illegible]
7-8	PA-5-6	SC-4	QUALIFIABLE	11-22-63	12-06-63	12-16-63	[illegible]
9-10	PA-7-8	S/A-2	QUALIFIABLE	12-06-63	12-20-63	1-02-64	[illegible]
11-12	PA-9-10	SC-5	QUALIFIABLE	12-13-63	12-27-63	2-17-64	[illegible]
13-14	PA-11-12	SC-6	QUALIFIABLE	2-19-64	3-04-64	4-08-64	[illegible]
15-16	PA-13-14	SC-7	QUALIFIABLE	4-06-64	4-20-64	6-10-64	[illegible]
17-18	PA-15-16	SPARES	QUALIFIED	6-01-64	6-15-64	6-10-64	[illegible]
19-20	PA-17-18	SC-8	QUALIFIED	7-13-64	7-27-64	8-07-64	[illegible]
21-22	PA-19-20	SC-9	QUALIFIED	8-24-64	9-07-64	10-02-64	[illegible]
23-24	PA-21-22	SC-10	QUALIFIED	10-05-64	10-19-64	12-08-64	[illegible]
25-26	PA-23-24	SC-11	QUALIFIED	11-16-64	11-30-64	02-11-65	[illegible]
27-28	PA-25-26	SC-12	QUALIFIED	12-28-64	1-11-65	4-13-65	[illegible]

NOTE: FLIGHT TYPE PILOT SEATS SHALL NOT BE PROVIDED AT THIS TIME FOR SC-3A (REF. TWX GSM-10-252 GPO-53066-5).

[illegible]
[illegible]
[illegible]

PART NUMBER	NOMENCLATURE	UNIT NO	[illegible]	[illegible]	[illegible]
			NORTH AMERICAN AVIATION		
52E180002-1	SLING ASSY. EJC	7	10-30-63	11-06-63	[illegible]
52E180002-1	SLING ASSY. EJC	6	10-30-63	11-06-63	[illegible]
52E010041-1	SEAT SER S/C	13	01-25-64	02-01-64	[illegible]
52E010041-1	SEAT SER S/C	14	01-25-64	02-01-64	[illegible]
			MANUFACTURING		
52E010041-1	SEAT SER S/C	2	A04-08-63	[illegible]	
52E010041-1	SEAT SER S/C	1	A04-08-63	11-08-63	
52E180002-1	SLING ASSY. EJC	2	10-30-63	11-06-63	[illegible]
			SPACECRAFT SYSTEM TEST		
52E010041-1	SEAT SER S/C	3	A04-08-63	11-15-63	
52E010041-1	SEAT SER S/C	4	A04-08-63	11-15-63	
52E010041-1	SEAT SER S/C	5	10-30-63	11-06-63	[illegible]
52E010041-1	SEAT SER S/C	6	10-30-63	11-06-63	[illegible]
			ORBIT		
52E010041-1	SEAT SER S/C	8	11-15-63	11-22-63	[illegible]
52E010041-1	SEAT SER S/C	7	11-15-63	11-22-63	[illegible]
			HANGAR		
52E180002-1	SLING ASSY. EJC	3	10-30-63	11-06-63	[illegible]
52E180002-1	SLING ASSY. EJC	5	11-08-63	11-15-63	[illegible]
52E010041-1	SEAT SER S/C	9	12-03-63	12-10-63	[illegible]
52E010041-1	SEAT SER S/C	10	12-03-63	12-10-63	[illegible]
52E060005-1	FLT. C.G. LOCATING	1	02-03-64	02-10-64	[illegible]
52E010041-1	SEAT SER S/C	11	12-09-63	12-16-63	[illegible]
52E010041-1	SEAT SER S/C	12	12-09-63	12-16-63	[illegible]
			PAD		
52E180002-1	SLING ASSY. EJC	4	11-08-63	11-15-63	[illegible]