[redacted]

MAC
Control No. C-98972

PROJECT GEMINI

PROGRAM PROGRESS REPORT [redacted]

14 AUGUST 1964

REPORT 8580-1-42
CONTRACT NAS 9-170

Group 4
Downgraded at 3 Year Intervals
Declassified After 12 Years

[redacted]

THIS MATERIAL CONTAINS INFORMATION AFFECTING THE NATIONAL [redacted] STATES WITHIN THE MEANING OF THE ESPIONAGE LAWS [redacted] TIONS 793 AND 794. THE TRANS[redacted] OR REVELATION OF WHICH IN [redacted] MANNER TO AN UNAUTHORIZED PERSON IS PROHIBITED BY LAW

[redacted]

[redacted] U. S. Government Contractors Only

C65-10027

MAC.
WASH. 5636-2
NO. C

INDEX

I. SCHEDULES

SUMMARY SCHEDULE
PRODUCTION SCHEDULE
TEST PLAN SCHEDULE
SIMULATORS AND TRAINER SCHEDULE
ENGINEERING STATUS REPORT GENERAL INFORMATION

II. WORK PLANS

SPACECRAFT MANUFACTURING
EQUIPMENT STUDY
SUPPLEMENTARY WORK PLANS
ZONE STATUS CHARTS
NARRATIVE
STATIC ARTICLES
TARGET VEHICLE DOCKING ADAPTER
MISCELLANEOUS

III. MAN-HOURS

ENGINEERING

IV. VENDOR STATUS

ENGINEERING INFORMATION
NARRATIVE
QUALIFICATION AND DEVELOPMENT TESTS
SYSTEM DELIVERY STATUS
A.G.E. DELIVERY STATUS

CHANGES INCORPORATED IN 8580-1.42

Schedules:

Updated to latest actuals.

Work Plans:

1 - Updated to latest planning.
2 - Included TVDA.
3 - Deleted supplementary plans on S/C 2.
4 - Included Zone Charts and Supplementary Work Plan for S/C 4.

Vendor Status

Updated to latest actuals and "will ship" information.

GEMINI SPACECRAFT MASTER SUMMARY SCHEDULE

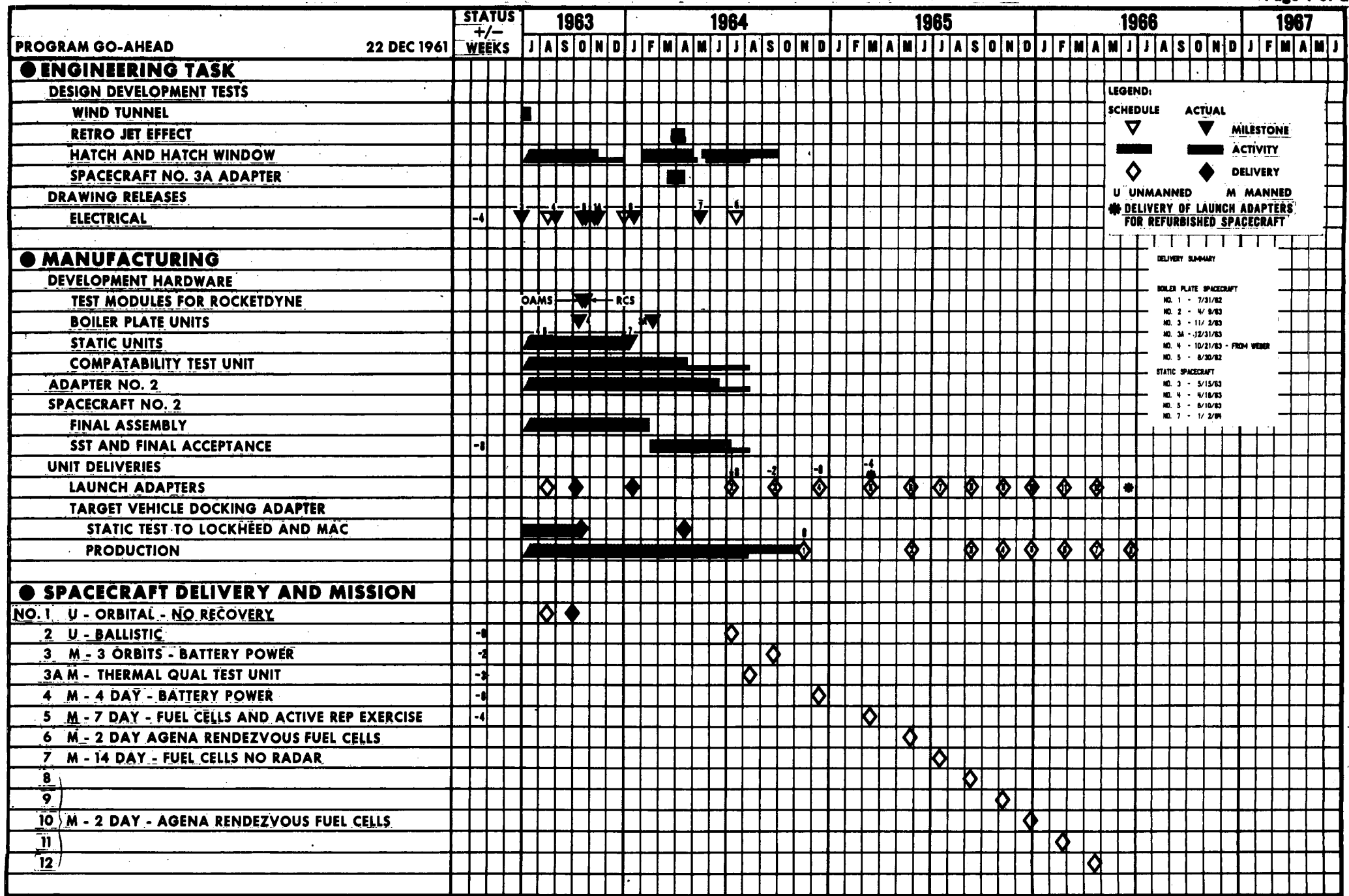

STATUS AS OF 7 AUG. 1964

[redacted]

12-133P-01-01

[redacted]

GEMINI SPACECRAFT MASTER SUMMARY SCHEDULE

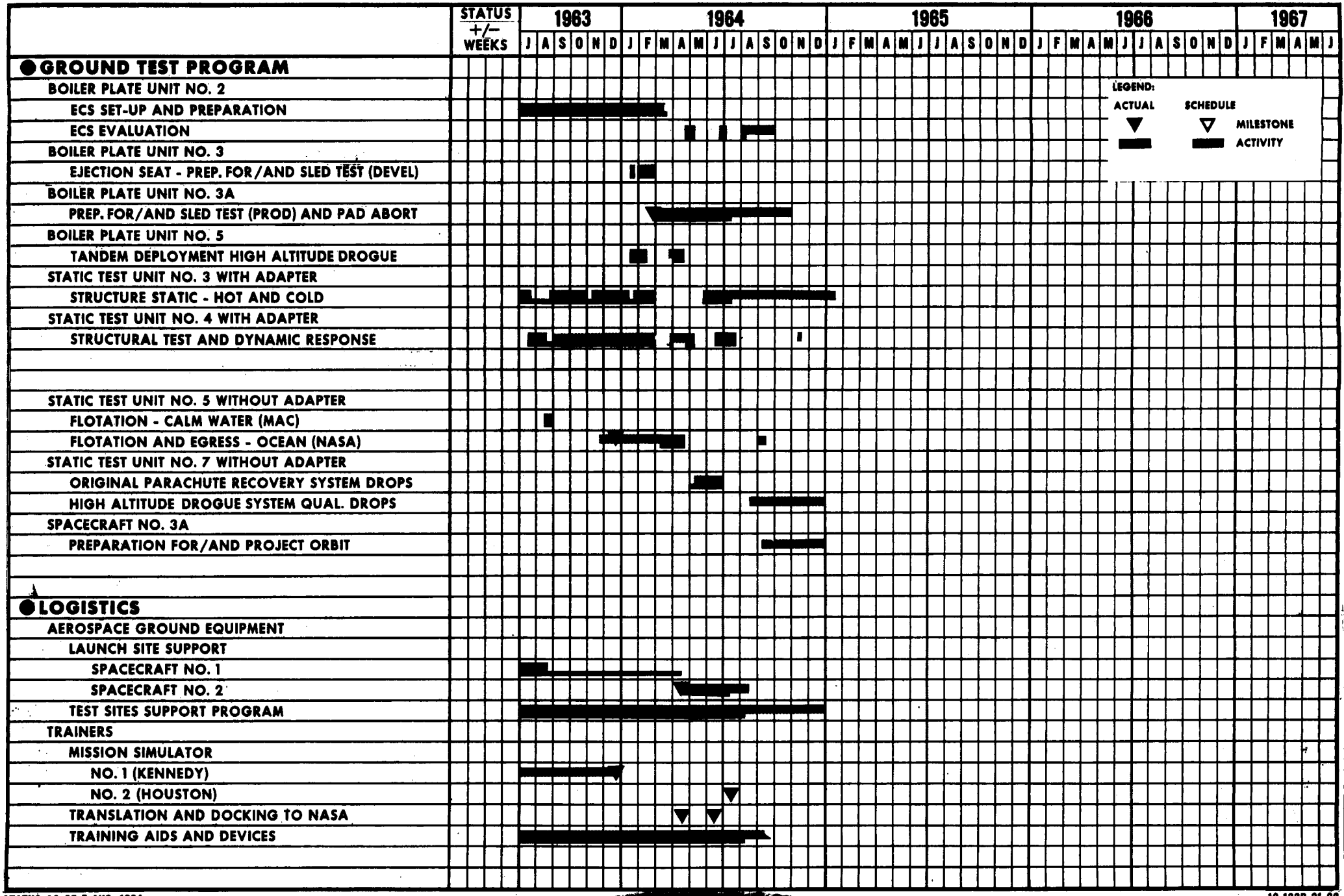

STATUS AS OF 7 AUG. 1964

[redacted]

12-133P-01-02

[redacted]

GEMINI SPACECRAFT PRODUCTION SCHEDULE

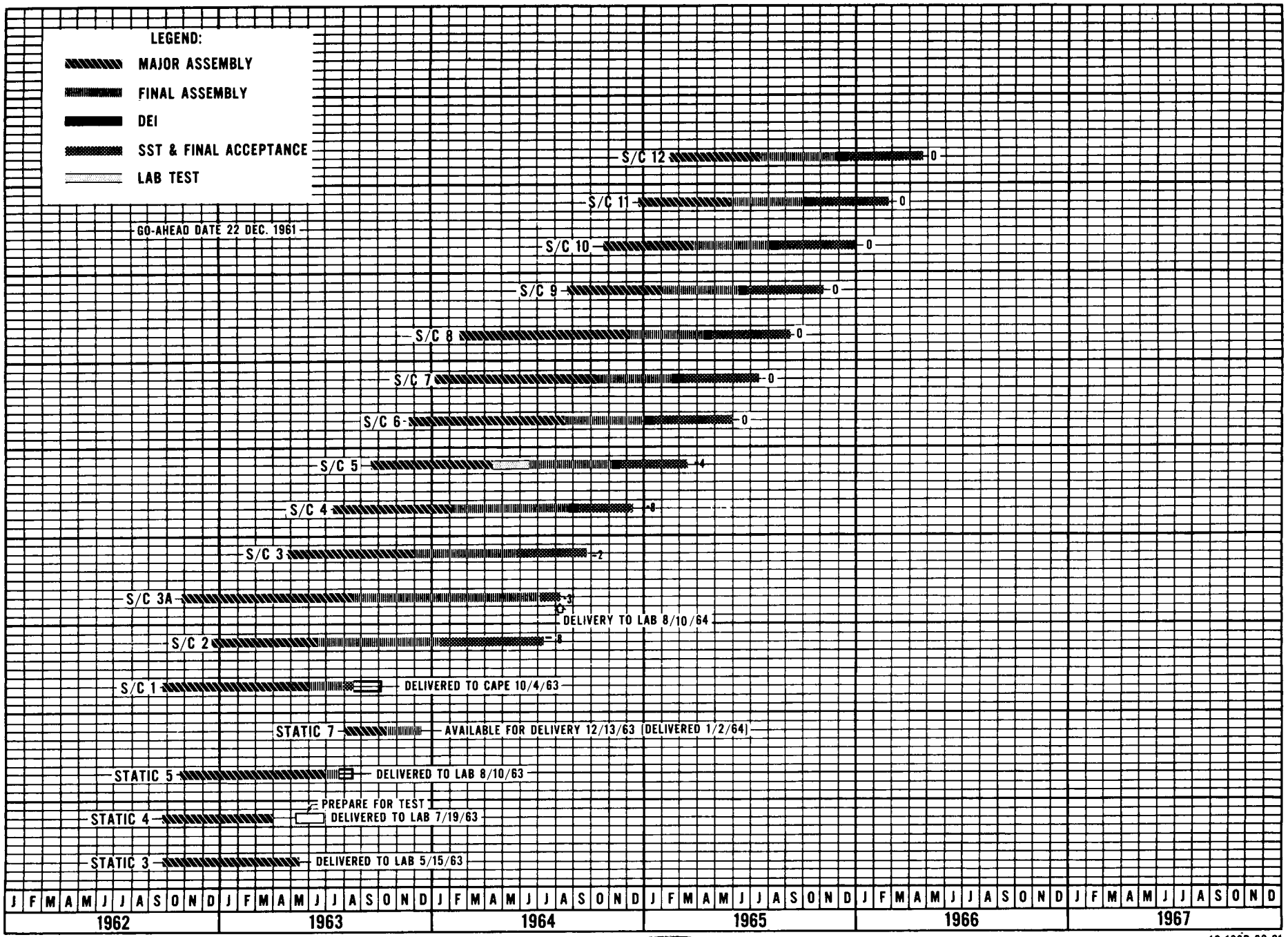

STATUS AS OF 7 AUG. 1964

[redacted]

12-133P-02-01

GEMINI TEST PLAN SCHEDULE INDEX

WIND TUNNEL TESTS
- Aerodynamic Tests — Page 2
- Thermodynamic Tests — Page 3
- Structural Dynamic Tests — Page 3
- Propulsion Tests — Page 3

RECOVERY SYSTEMS
- Parachute — Page 4
- Flotation and Egress — Page 5
- Water Drops — Page 5
- Skid Landing Gear — Page 6
- Paraglider — Page 6
- Hatch — Page 7
- Ejection Seat Development — Page 9
- Ejection Seat Qualification — Page 10
- Heat Shield — Page 11

PROPULSION SYSTEMS — Page 12

MATERIALS AND PROCESSES — Page 12

DOCKING SYSTEMS — Page 13

RELEASE MECHANISM — Page 15

STRUCTURAL TESTS
- R & R-RCS — Page 17
- Spacecraft 5 Structural Assembly — Page 17
- Static No. 3 Adapter — Page 18
- Miscellaneous Structural Tests — Page 18
- D.O.D. Experiments — Page 18
- Static Article No. 3 — Page 19
- Static Article No. 4 — Page 20

DATA ACQUISITION SYSTEM — Page 21

ANTENNA SYSTEMS — Page 22

ELECTRONICS SYSTEMS TEST UNIT — Page 23

GUIDANCE AND CONTROL SIMULATION — Page 23

ELECTRICAL COMPONENTS TEST — Page 24

COMPATIBILITY TEST UNIT — Page 24

ELECTRICAL POWER SYSTEM COMPATIBILITY — Page 25

SPACECRAFT SYSTEMS TESTS — Page 25

ENVIRONMENTAL CONTROL — Page 26

THERMAL QUALIFICATION — Page 27

DATE [illegible] JANUARY 1962

REVISED 7 AUG 1964 (REV. W)

REVISED

MCDONNELL

ST. LOUIS, MISSOURI

PAGE 2

REPORT

MODEL

GEMINI TEST PLAN SCHEDULE

	Test Req. NO. 52..	ACTIVITY	1964 J	F	M	A	M	J	J	A	S	O	N	D	1965 J	F	M	A	M	J	SLACK	COMMENTS
1		WIND TUNNEL TESTS:																				
2		AERODYNAMIC TESTS																				
3	41.02	6% LAUNCH CONFIG. - STATIC STAB. & PRESSURE (AMES UNITARY - LOW)																				TEST COMPLETED JUNE '62
4	41.16	6% LAUNCH CONFIG. - STATIC STAB. & PRESSURE (LEWIS 10' - HIGH)																				TEST COMPLETED SEPT '62
5	41.04	10% REENTRY MODULE & ABORT CONFIG. - STATIC STAB. (MAC PSWT)																				TEST COMPLETED JUNE '62
6	41.03	1.925% REENTRY MODULE & ABORT CONFIG.-STATIC STAB. (LANGLEY 11')																				TEST COMPLETED JAN '63
7	41.06	9% REENTRY MODULE - STATIC STABILITY (MAC HIT)																				TEST COMPLETED JUNE '62
8	41.11	10% REENTRY MODULE & ABORT CONFIG.DYN. STAB.(LANGLEY 8'& UNITARY)																				TEST COMPLETED NOV '62
9	41.14	REENTRY MODULE - DYNAMIC STAB. (AMES S.S. FREE FLT.)																				TEST COMPLETED DEC '62
10	41.01	20% SEAT - STATIC STAB. & PRESSURES (MAC PSWT)																				TEST COMPLETED APRIL '63
11	41.12	10% JET/HATCH EFFECTS, EJECTION SEAT - STATIC STAB. (MAC PSWT)																				TEST COMPLETED OCT '62
12	41.07	10% REENTRY MODULE - PRESSURE & HATCH HINGE MOMENTS (MAC PSWT)																				TEST COMPLETED JULY '62
13	41.05	30% LANDING CONFIG. - STATIC STAB. & PRESSURE (MAC LSWT)																				TEST COMPLETED MAY '62
14	41.15	5% REENTRY MODULE - SPIN (LANGLEY SPIN)																				TEST COMPLETED JAN '63
15	41.19	FULL SCALE - BALLUTE (MAC LSWT)																				TEST COMPLETED JULY '63
16	41.20	FULL SCALE - 18.2' DIA. PILOT CHUTE (AMES) - NASA TEST																				TEST COMPLETED NOV '63
17																						
			J	F	M	A	M	J	J	A	S	O	N	D	J	F	M	A	M	J		
			1964												1965							

LEGEND:

TESTS: ③ ① ② ③

HDW. DEL. ◊

① PLANNED

② CURRENT EST.

③ ACTUAL

DATE 22 JANUARY 1962
REVISED 7 AUG. 1964 (REV. W)
REVISED

MCDONNELL
ST. LOUIS, MISSOURI

PAGE 3
REPORT
MODEL

GEMINI TEST PLAN SCHEDULE

	Test Req. NO. 52..	ACTIVITY	1964 J	F	M	A	M	J	J	A	S	O	N	D	1965 J	F	M	A	M	J	SLACK	COMMENTS
1		WIND TUNNEL TESTS:																				
2		THERMODYNAMIC TEST																				
3	41.08	10% REENTRY MODULE & LAUNCH CONFIG.-PRESS. & HEAT (AEDC)																				TEST COMPLETED OCT '62
4	41.09	10% REENTRY MOD. & LAUNCH CONFIG. PRESS. & HEAT (LANGLEY UNITARY)																				TEST COMPLETED NOV '62
5		7% REENTRY MODULE - HEAT TRANSFER (CAL)																				TEST COMPLETED OCT '62
6																						
7																						
8		STRUCTURAL DYNAMIC TESTS:																				
9	41.17	10% LAUNCH CONFIG. - DYN. PRESS. (AMES 11' - 14' & 9' X 7')																				TEST COMPLETED DEC '62
10																						
11																						
12		PROPULSION:																				
13	41.21	RETRO ABORT ROCKET JET FLOW EFFECTS (AT AEDC)																				TEST COMPLETED APRIL '64
14																						
15																						
16																						
17																						
			J	F	M	A	M	J	J	A	S	O	N	D	J	F	M	A	M	J		
			1964												1965							

LEGEND:
TESTS: ③ ① ② ③
HDW. DEL.
① PLANNED
② CURRENT EST.
③ ACTUAL

DATE JANUARY 1962
REVISED 17 AUG. 1964 (REV. W)
REVISED

MCDONNELL
ST. LOUIS, MISSOURI

PAGE 4
REPORT
MODEL

GEMINI TEST PLAN SCHEDULE

	Test Req. NO. 52..	ACTIVITY	1964 J F M A M J J A S O N D	1965 J F M A M J	SLACK	COMMENTS
1		RECOVERY SYSTEMS DEVELOPMENT & QUALIFICATION				
2		PARACHUTE - NORTHROP-VENTURA				
3		BOMB DROPS - DROGUE DEVELOPMENT				(4) DROPS TEST COMPLETED SEPT '62
4		BOMB DROPS - MAIN CHUTE & DROGUE CHUTE DEVELOPMENT				(16) DROPS - AT EL CENTRO TEST COMPLETED FEB '63
5		MAC DELIVERY - BOILERPLATE 5				B/P 5 DELIVERY AUG '62
6		COMPLETE SYSTEM DROPS (BOILER-PLATE 5)				TEST COMPLETED SEPT '63
7		BOILERPLATE 5 TO NORTH AMERICAN AVIATION PROGRAM				DELIVERED SEPT '63
8		NAA DROP TESTS (B/P 5)				TEST COMPLETED DEC. '63
9		MAC DELIVERY - STATIC 7				DELIVERED JAN '64
10		COMPLETE SYSTEM DROPS (STATIC 7) (SINGLE 18 FT. DROGUE)		S/C # 2		3 DROPS TEST COMPLETED JUN '6
11		TANDEM DEPLOYMENT OF 18 FT. PILOT & 8.3 FT. DROGUE CHUTES (B/P 5)				5 DROPS COMPLETED APR '64
12		BOMB DROPS - 8.3 FT. DROGUE CHUTE DEVELOPMENT		S/C # 3	-8	25 DROPS
13		RECOVERY SYSTEM QUAL. DROPS (STATIC 7& 4A) (DOUBLE DROGUE)		S/C # 3	-8	14 DROPS
14						
15						
16						
17						

LEGEND:
TESTS:
HDW. DEL.
① PLANNED
② CURRENT EST.
③ ACTUAL

DATE 22 JANUARY 1962

REVISED 7 AUG 1964 (REV. W)

REVISED

MCDONNELL

LOUIS, MISSOURI

PAGE 5

REPORT

MODEL

GEMINI TEST PLAN SCHEDULE

	Test Req. NO. 52..	ACTIVITY	1964 J	F	M	A	M	J	J	A	S	O	N	D	1965 J	F	M	A	M	J	SLACK	COMMENTS
1		FLOTATION & EGRESS																				
2	43.02	FLOTATION STABILITY, 1/4 SCALE MODEL																				TEST COMPLETED MAR '63
3		FLOTATION, CALM WATER, STATIC 5																				TEST COMPLETED AUG '63
4		FLOTATION & EGRESS QUAL., STATIC 5 (NASA TEST)																S/C #3			-5	DELIVERED DEC '63
5																						
6																						
7																						
8		WATER DROPS																				
9		BOILERPLATE 4 - DELIVERED FROM WEBER TO MAC																				DELIVERED OCT. '63
10		B/P 4 MOD. FOR DROP RIG																				COMPLETED FEB '64
11		SET-UP AND CHECK-OUT DROPS (AMF RIG)																				COMPLETED DEC '63
12	52.32.01	B/P 4 WATER DROPS (PARKS WATER SITE)																				TEST COMPLETED APRIL '64
13																						
14																						
15																						
16																						
17																						
			J	F	M	A	M	J	J	A	S	O	N	D	J	F	M	A	M	J		
			1964												1965							

LEGEND:

TESTS:

HDW. DEL.

1 PLANNED

2 CURRENT EST.

3 ACTUAL

DATE 2[illegible] JANUARY 1962

REVISED 7 AUG. 1964 (REV. W.)

REVISED

MCDONNELL
ST. LOUIS, MISSOURI

PAGE 6

REPORT

MODEL

GEMINI TEST PLAN SCHEDULE

	Test Req. NO. 52..	ACTIVITY	1964 J	F	M	A	M	J	J	A	S	O	N	D	1965 J	F	M	A	M	J	SLACK	COMMENTS
1		SKID LANDING GEAR																				
2	42.02, .09 &.10	1/4 SCALE MODEL DROPS - GEAR DEVELOPMENT																				TEST COMPLETED JULY '63
3	42.05	JIG DROPS - METERING TUBE EVALUATION - NOSE LANDING GEAR																				TEST COMPLETED AUG '63
4	42.04	JIG DROPS - METERING TUBE EVALUATION - L/H MAIN LANDING GEAR																				TEST COMPLETED NOV '63
5		DELIVERY & SET-UP OF LANDING SIMULATION APPARATUS - BY AMF																				PROGRAM STOPPED, NASA TWX, GPO-54374, NOV '63
6	42.06	FUNCTIONAL & DROP TESTS - PROD. GEAR EVAL. - B/P 4																				
7	52.18	DROP TESTS - LANDING GEAR CHECK-OUT - STATIC 2																				
8	69.13	MAIN LANDING GEAR ACTUATOR (6 SEPARATIONS)																				
9	69.11	NOSE LANDING GEAR DEPLOY																				
10	69.13	MAIN LANDING GEAR DOOR SPECIMEN SILL (4 SEPARATIONS)																				
11		MAIN LANDING GEAR DOOR (2 SEP)																				
12	69.20	MAIN LANDING GEAR DOOR & GEAR EXTENSION (UNDERWATER)																				
13		PARAGLIDER TESTS																				
14	52.29	PARAGLIDER SUPPORT STRUCTURE NOSE GEAR INTERFACE																				
15	52.29	PARAGLIDER AFT PITCH FITTING																				
16	52.29	PARAGLIDER ROLL FITTING																				
17	52.23	LANDING IMPACT - PARAGLIDER																				
			J	F	M	A	M	J	J	A	S	O	N	D	J	F	M	A	M	J		
			1964												1965							

LEGEND:

TESTS: ③ ① ② ③

HDW. DEL.

① PLANNED
② CURRENT EST.
③ ACTUAL

DATE 22 JANUARY 1962

REVISED 7 AUG 1964 (REV. W)

REVISED

MCDONNELL

LOUIS, MISSOURI

PAGE 7

REPORT

MODEL

GEMINI TEST PLAN SCHEDULE

	Test Req. NO. 52..	ACTIVITY	1964 J	F	M	A	M	J	J	A	S	O	N	D	1965 J	F	M	A	M	J	SLACK	COMMENTS
1	HATCH	DEVELOPMENT-QUALIFICATION TESTS																				
2	51.01.01	MODEL TESTS - SEAL DEVELOPMENT																				TESTS COMPLETED JUNE '62
3		SPECIMEN HATCH REWORK COMPLETE																				
4	45.02	DETERMINE HATCH LEAK RATE																				COMPLETED JAN '64
5	45.02	HATCH PRESSURIZATION & ACTUATION																				TEST COMPLETED FEB. '64
6	58.16	SPECIAL HATCH VIBRATION																				TEST COMPLETED MAR '64
7		MANUF. INSTALL "BUMP" HATCH																			-3	
8	45.02	ULT. STRENGTH TEST (8 PSIG) R.H.																			-4	
9	45.02	FUNCTIONAL (100 CYCLE) TEST																				
10	45.02	UNDERWATER LEAK CHECK																			-2	
11	45.02	CHAMBER ENVIRONMENTAL TESTING																			-8	
12	45.02	"BUMP" HATCH CYCLE TEST																			-8	
13	45.02	NEW MECHANISM ULT. STRENGTH TEST																			-8	
14	52.51	ULT. PRESS. TEST "BUMP" HATCH																				
15	45.04	B/P 3A HATCH ACTUATION - AT MAC																				TESTS COMPLETED FEB. '64
16	45.01	HATCH PRESS. DISTRIBUTION AND AIRLOADS - B/P 3 (AT WEBER)																				TESTS COMPLETED FEB. '64
17																						
			J	F	M	A	M	J	J	A	S	O	N	D	J	F	M	A	M	J		
			1964												1965							

LEGEND:

TESTS: ① ② ③

HDW. DEL.

① PLANNED

② CURRENT EST.

③ ACTUAL

DATE 22 JANUARY 1962

REVISED AUG 1964 (REV. W)

REVISED

MCDONNELL

ST. LOUIS, MISSOURI

PAGE 8

REPORT

MODEL

GEMINI TEST PLAN SCHEDULE

	Test Req. NO. 52..	ACTIVITY	1964 J	F	M	A	M	J	J	A	S	O	N	D	1965 J	F	M	A	M	J	SLACK	COMMENTS
1		WINDOW STRUCTURE																				
2	58.04 58.10	WINDOW VIBRATION AND ACOUSTIC TESTS		(1)																		(1) ACOUSTIC TESTS AT MARTIN TESTS COMPLETED APR '64
3	52.30	TEMPERATURE, SHOCK, & PRESSURE WINDOW STRUCTURE																			-21	
4																						
5																						
6																						
7																						
8																						
9																						
10																						
11																						
12																						
13																						
14																						
15																						
16																						
17																						
			J	F	M	A	M	J	J	A	S	O	N	D	J	F	M	A	M	J		
			1964												1965							

LEGEND:

TESTS: ③ ① ② ③

HDW. DEL.

① PLANNED

② CURRENT EST.

③ ACTUAL

DATE 22 JANUARY 1962

REVISED 7 AUG. 1964 (REV. W)

REVISED

MCDONNELL

ST. LOUIS, MISSOURI

PAGE 9

REPORT

MODEL

GEMINI TEST PLAN SCHEDULE

	Test Req. NO. 52..	ACTIVITY	1964 J	F	M	A	M	J	J	A	S	O	N	D	1965 J	F	M	A	M	J	SLACK	COMMENTS
1		EJECTION SEAT DEVELOPMENT TESTS																				
2		SUSTAINER ROCKET TESTS, STATIC FIRING - AT RPI																				TESTS COMPLETED SEPT '63
3		SUSTAINER ROCKET TESTS PLUME INVESTIGATION AT ALT. - AT AEDC																				TESTS COMPLETED OCT '62
4	60.06.01	SLUMP TEST, DUMMY - AT ACEL																				TEST COMPLETED MAR '63
5	60.06	SLUMP TEST, HUMAN - AT ACEL																				TEST COMPLETED AUG '63
6	60.09	SEAT MECHANISMS FUNCTIONAL TEST																				TEST COMPLETED APRIL '63
7	58.13	SEAT VIBRATION TEST																				TEST COMPLETED MAY '63
8		SEAT-MAN SEPARATION TESTS - AT WEBER																				TESTS COMPLETED JAN '63
9		HORIZONTAL TRACK FIRING - AT RPI																				TEST COMPLETED APRIL '63
10		SOPE TESTS, SEAT DEVELOPMENT																				(11 TESTS) TEST COMPLETED JULY '63
11		MAC DELIVERY - BOILERPLATE 3 TO WEBER																				DELIVERED JULY '62
12	45.01	SLED TESTS, SEAT DEVELOPMENT (DRAG RUN TEST FIRST) B/P 3																				(5 RUNS) TESTS COMPLETED FEB '64
13																						
14																						
15																						
16																						
17																						
			J	F	M	A	M	J	J	A	S	O	N	D	J	F	M	A	M	J		
			1964												1965							

LEGEND:

TESTS: ③ ① ② ③

HDW. DEL.

① PLANNED

② CURRENT EST.

③ ACTUAL

DATE 22 JANUARY 1962
REVISED AUG. 1964 (REV. W)
REVISED

MCDONNELL
ST. LOUIS, MISSOURI

PAGE 10
REPORT
MODEL

GEMINI TEST PLAN SCHEDULE

	Test Req. NO. 52..	ACTIVITY	1964 J	F	M	A	M	J	J	A	S	O	N	D	1965 J	F	M	A	M	J	SLACK	COMMENTS
1		EJECTION SEAT QUALIFICATION TESTS																				
2		MAC DELIVERY - BOILERPLATE 3A TO WEBER																				DELIVERED FEB '64
3	58.06	SEAT QUALIFICATION SLED RUNS:																				REF. WEBER SCHED, 20 APR '64
4		TEST #6 (15° YAW, NOSE LEFT, 0° PITCH, NON-EJECTION) q = 740																				TEST COMPLETED 4 JUNE '64
5		TEST #7 (180° YAW, 0° PITCH)																S/C	#	3		
6		TEST #8 (15° YAW, NOSE LEFT, 0° PITCH) q = 740 psf																			-9	
7		TEST #9 (0° YAW, 0° PITCH) q = 920																			-9	
8		TEST #10 (0° YAW, -15° PITCH, NOSE DOWN)																			-9	
9																						
10		SIMULATED OFF-PAD EJECTION TESTS:																				
11		S.O.P.E. TEST #1																			-8	
12		S.O.P.E. TEST #2																			-8	
13		SEAT STATIC & ENVIRONMENTAL TESTS - AT WEBER																				
14	58.12.01	SEAT VIBRATION QUAL. TEST (SEAT #38 WITH COMPLETE EQUIP.)																S/C	#	3	-16	
15																						
16																						
17																						

LEGEND:
TESTS:
HDW. DEL.

① PLANNED
② CURRENT EST.
③ ACTUAL

DATE 22 JANUARY 1962

REVISED 7 AUG 1964 (REV. W)

REVISED

MCDONNELL
ST. LOUIS, MISSOURI

PAGE 11

REPORT

MODEL

GEMINI TEST PLAN SCHEDULE

	Test Req. NO. 52..	ACTIVITY	1964 J	F	M	A	M	J	J	A	S	O	N	D	1965 J	F	M	A	M	J	SLACK	COMMENTS
1		HEAT SHIELD DEVELOPMENT & QUALIFICATION																				
2	51.03.05 & .03.06	ABLATION MATERIAL SELECTION - PLASMA JET																				TESTS COMPLETED JUNE '62
3	51.03.08 51.10	SPECIMEN TESTING OF SELECTED ABLATION MATERIAL																				TESTS COMPLETED JAN '63
4	51.03.01 & .03.02	ADHESIVE DEVELOPMENT																				TESTS COMPLETED MARCH '62
5	51.05, 51.11	STRUCT. & THERMAL SHOCK - PROTO BACKUP STRUCTURE																				TESTS COMPLETED JULY '62
6		MFG. DELIVERY - PROTO HEAT SHIELD																				DELIVERED FEB '63
7	51.12 & .01, 51.18	STRENGTH, TEMPERATURE & ENVIRONMENT - PROTO SHIELD SPECIMENS																				TESTS COMPLETED JUNE '63
8	52.32	LANDING IMPACT - WATER DROPS																S/C	#	2		TESTS COMPLETED JULY '64 REF: PAGE 19 LINE 12
9	51.12.02	CONTINUED HEAT SHIELD QUAL. TESTS - BOND LINES																				TEST COMPLETED JUNE '64 STATIC #4, -1 HEAT SHIELD
10																						
11																						
12																						
13																						
14																						
15																						
16																						
17																						
			J	F	M	A	M	J	J	A	S	O	N	D	J	F	M	A	M	J		
			1964												1965							

LEGEND:

TESTS: ③ ① ② ③

HDW. DEL.

① PLANNED
② CURRENT EST.
③ ACTUAL

DATE 2[illegible]ANUARY 1962
REVISED 7 AUG. 1964 (REV. W)
REVISED

MC[illegible]ONNELL
ST. LOUIS, MISSOURI

PAGE 12
REPORT
MODEL

GEMINI TEST PLAN SCHEDULE

	Test Req. NO. 52..	ACTIVITY	1964 J F M A M J J A S O N D	1965 J F M A M J	SLACK	COMMENTS
1		PROPULSION SYSTEMS				
2	14.01 14.01.XX	COMPATIBILITY TESTS PROPELLANT/MATERIAL				TESTING AS REQUIRED
3	70.01	RETROROCKET ABORT SEPARATION, FULL SCALE - AT AEDC				TEST COMPLETED JULY '63
4		B/P TEST ARTICLE DELIVERY TO AEDC				DELIVERED SEPT '63
5	70.01.01	RETROROCKET ABORT SEPARATION - (SALVO) - POP GUN II				TEST COMPLETED OCT '63
6	41.21	RETRO ABORT ROCKET JET FLOW EFFECTS				TESTS COMPLETED APRIL '64
7						
8						
9						
10						
11						
12		MATERIALS & PROCESSES DEVELOPMENT				
13	44.02, 60.02, 68.01&.18	MATERIAL SELECTION				TESTING AS REQUIRED
14	14.XX 15.XX	FABRICATION & ASSEMBLY PROCESSES				TESTING AS REQUIRED
15	17.XX	MATERIAL THERMAL & ENVIRONMENTAL CHARACTERISTICS				TESTING AS REQUIRED
16						
17						

LEGEND:
TESTS:
HDW. DEL.

① PLANNED
② CURRENT EST.
③ ACTUAL

DATE 28 JANUARY 1962

REVISED 27 AUG 1964 (REV. W)

REVISED

MCDONNELL

ST. LOUIS, MISSOURI

PAGE 13

REPORT

MODEL

GEMINI TEST PLAN SCHEDULE

	Test Req. NO. 52..	ACTIVITY	COMMENTS	SLACK
1		DOCKING SYSTEM DEVELOPMENT AND QUAL.		
2		1/4 SCALE DESIGN CONCEPT MODEL DEVELOPMENT	TESTS COMPLETED JULY '62	
3	44.05	1/4 SCALE DYNAMIC MODEL TESTS DOCKING DEVELOPMENT	TESTS COMPLETED JUNE '63	
4	44.04.01	TRANSLATOR & DOCKING TRAINER DOCKING SIMULATOR TESTS	TESTS COMPLETED APRIL '64	
5		MAC DELIVERY DOCKING TRAINER TO HOUSTON FOR NASA TESTS	DELIVERED MAY '64	
6	44.08	DAMPER ORIFICE DEVELOPMENT TESTS	TEST COMPLETED JUNE '64	
7	44.08	DAMPER ORIFICE QUALIFICATION TESTS		-13
8	58.34	DOCKING DAMPER VIBRATION TEST		-4
9	52.16	DOCKING CONE IMPACT TEST	TEST COMPLETED MAY '63	
10	52.40	DOCKING CONE DEFLECTION TEST	TEST COMPLETED SEPT. '63	
11		MAC DELIVERY - TARGET DOCKING ADAPTER (TDA) ST. #1 TO LMSC	DELIVERED OCT. '63	
12		LMSC LAUNCH & INSERTION PHASE STRUCTURAL TESTS	TESTS COMPLETED APRIL '64	
13		MOD TDA STATIC #1 (FUNCTIONAL REWORK		-2
14		SET-UP & INSTR. FOR TR 52-44.07		
15	44.07	LATCH FUNCTIONAL TESTS (CYCLE ROOM TEMP)	TDA ST. #1 & ST. #4 R & R	
16	44.07	LATCH FUNCTIONAL TESTS (CYCLE COLD TEMP)		
17	44.07	LATCH FUNCTIONAL TESTS (CYCLE HOT & COLD TEMP)		-2

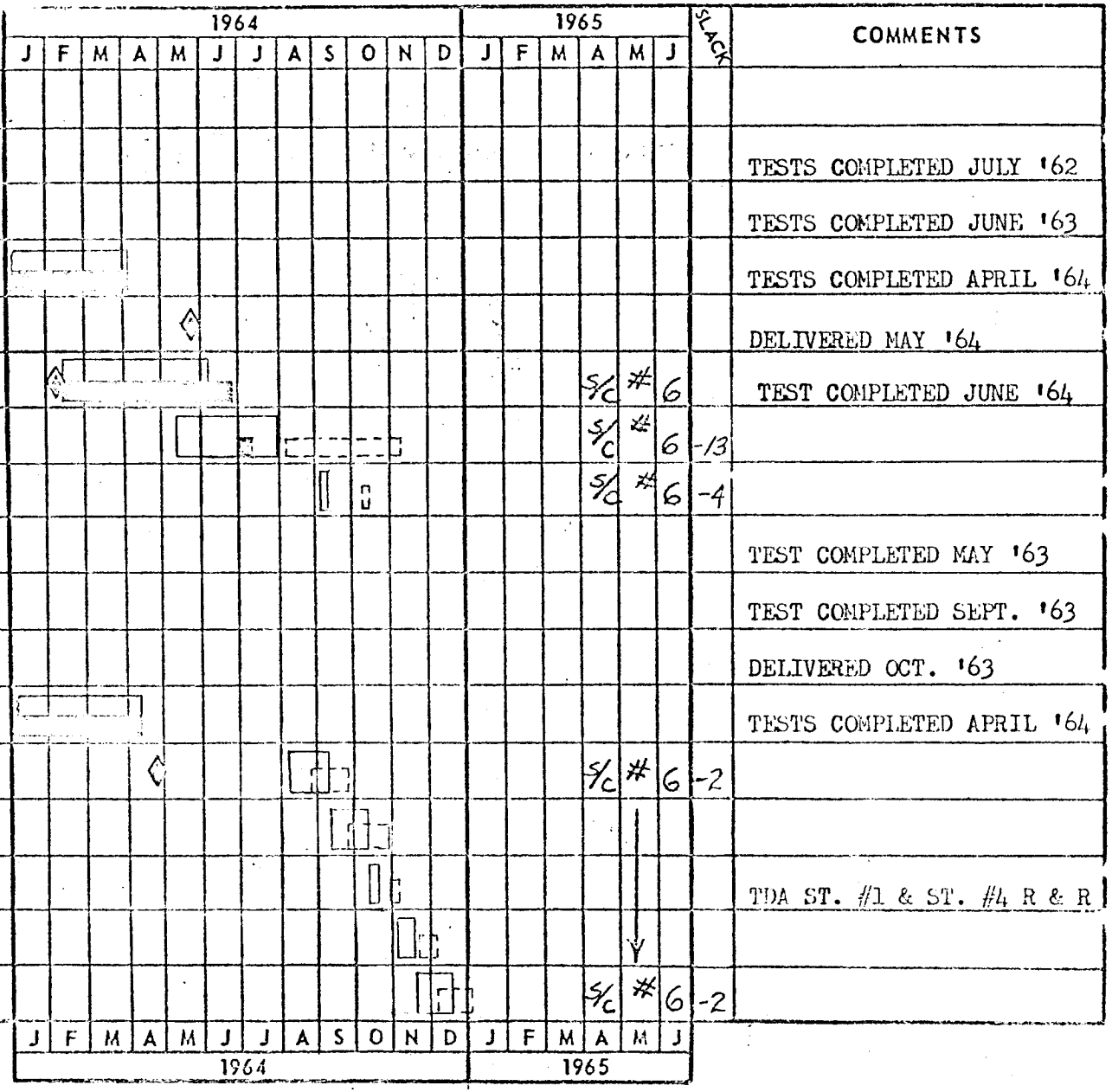

LEGEND:

TESTS:

HDW. DEL.

1 PLANNED

2 CURRENT EST.

3 ACTUAL

DATE JANUARY 1962
REVISED 17 AUG. 1964 (REV. W)
REVISED
REVISED

MCDONNELL
ST. LOUIS, MISSOURI

PAGE 14
REPORT
MODEL

GEMINI TEST PLAN SCHEDULE

	Test Req. No. 52--	ACTIVITY	SLACK	COMMENTS
1		DOCKING SYSTEM CONTINUED		
2		MFG. DELIVERY TDA ST. #2 TO LAB		DELIVERED APRIL '64
3	052.47	TDA STIFFNESS TEST	-2	
4		MOD. TDA ST. #2 FOR DYN. RESP.	-4	
5		MOD. ST. #4 R & R FOR DYN. RESP.	-2	
6		MOD. MARTIN I ADAPT. FOR DYN. RESP.		
7		MOD. ST. #4 FOR DYN. RESP.		
8		SET-UP & INSTR. FOR DYN. RESP.	-1	
9	44.06	TDA DYNAMIC RESPONSE - STRUCTURE (DOCKED CONFIGURATION)	-1	TDA ST-2, ST-4 & MARTIN I
10		COMPLETE DESIGN & FAB TEST HDWE. FOR DYNAMIC SHOCK TEST		
11		SET-UP & INSTR. FOR TR 52-44.09		
12	44.09	DYNAMIC SHOCK - FULL SCALE DOCKING		TDA ST. #2 & 52-31503-13 R&R
13		SET-UP & INSTR. FOR TR 52-52.27		
14	52.27	ULTIMATE STATIC TEST GEMINI/AGENA MANEUVERING		52-04300-13 R&R-RCS, TDA ST. #2-
15				
16	80.03.03	MFG. DELIVERY TDA P.A. #1 TO LAB FOR SST VIBRATION TEST	-11	
17		MAC DELIVERY TDA P.A. #1 TO LMSC (AGENA ENGINE OPER. & ENVIR. TESTS)	-10	

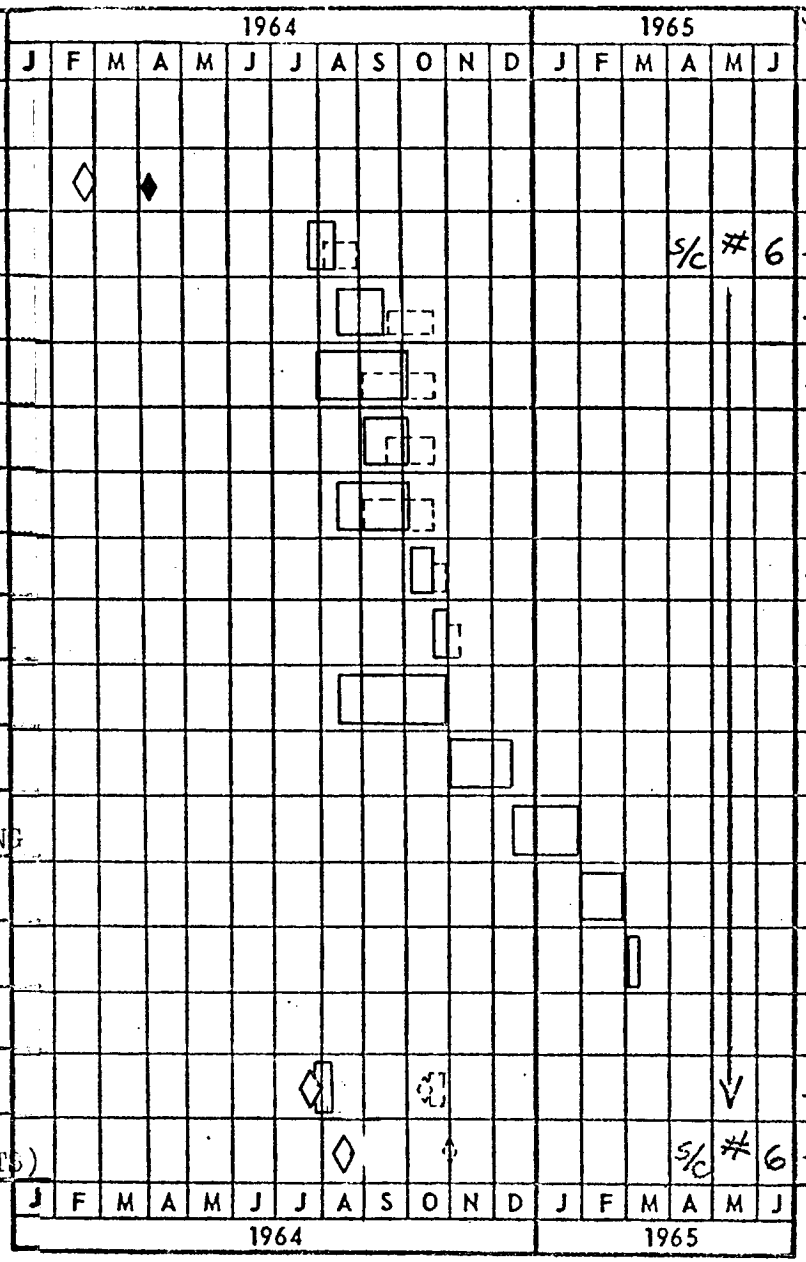

LEGEND:
TESTS: ① ② ③
HDW. DEL: ① ② ③

① PLANNED
② CURRENT EST.
③ ACTUAL

DATE 22 JANUARY 1962

REVISED AUG. 1964 (REV. W)

REVISED

MCDONNELL

ST. LOUIS, MISSOURI

PAGE 15

REPORT

MODEL

GEMINI TEST PLAN SCHEDULE

	Test Req. NO. 52..	ACTIVITY	1964 J	F	M	A	M	J	J	A	S	O	N	D	1965 J	F	M	A	M	J	STACK	COMMENTS
1		RELEASE MECHANISMS																				
2	69.01,.02 .03 &.18	DEVELOPMENT TESTS, EXPLOSIVE SEPARATION CONFIGURATIONS																				TESTING AS REQUIRED
3	69.03 & 69.16	EVALUATION, FLSC BLAST EFFECTS (FULL SCALE)																				TESTS COMPLETED JUNE '63
4																						
5		ADAPTER DEMONSTRATION TESTS - RELEASE MECHANISMS:																				
6	58.18	DYNAMIC SHOCK -Z13 PYROS (EQUIP. SECTION ST. 4 ADAPTER)																				TEST COMPLETED DEC '63
7	69.12	BOOSTER/ADAPTER (Z13) (PARTIAL SPECIMEN) STRUCT. (5 SEPAR.)																S/C	#	2	-22	
8	69.12	EQUIP/RETRO SEC. (Z69) (PARTIAL SPECIMEN) STRUCT (5 SEPAR.)																S/C	#	2	-21	
9	69.10	REENTRY SECTION/RETRO SECTION (Z100) (5 SEPARATION TESTS)																S/C	#	2	-24	
10	69.10 69.12	Z13,Z69,Z100 ELV. TEMP.-FULL ADAPTER (1 SEPARATION EACH)																S/C	#	2	-15	STATIC 3 ADAPTER
11																						
12																						
13																						
14		REENTRY MODULE DEMONSTRATION TESTS - RELEASE MECHANISMS:																				
15	45.04	HATCH ACTUATOR (HATCH STRUCTURAL DYNAMICS) (2 SEPAR. TESTS)B/P 3A																				TESTS COMPLETED FEB '64
16		HATCH ACTUATOR (SEAT QUAL PROGRAM) (14 SEPARATION TESTS) B/P 3A																			-9	REF: PAGE 10, LINES 4-8
17																						

LEGEND:

TESTS: ③ ① ② ③

HDW. DEL.

① PLANNED

② CURRENT EST.

③ ACTUAL

DATE 22 JANUARY 1962
REVISED 7 AUG 1964 (REV. W)
REVISED

MCDONNELL
ST. LOUIS, MISSOURI

REPORT
MODEL

GEMINI TEST PLAN SCHEDULE

	Test Req. NO. 52..	ACTIVITY	1964 J	F	M	A	M	J	J	A	S	O	N	D	1965 J	F	M	A	M	J	SLACK	COMMENTS
1		REENTRY MODULE DEMONSTRATION TESTS – RELEASE MECHANISMS (CONT.):																				
2	69.13	CREWMAN SIMULATOR (5 SEPAR.)																				TESTS COMPLETED FEB '64 TUBE & CABLE MOCK-UP
3	69.13	AFT RECOVERY HOIST LOOP DOOR (6 SEPAR.) PARACHUTE CONFIG.																S/C	#	2		S/C 5, REF: PAGE 17, LINE 14 TEST COMPLETED JUN '6
4	69.13	HORIZON SCANNER FAIRING & HOR. SCAN. RELEASE SYSTEM (6 SEPAR.)																S/C	#	2		S/C 5, REF: PAGE 17, LINE 13 TEST COMP. JUN '64
5																						
6	69.11	R & R SECTION & RCS AVAILABLE				①		②													-7	① R&R SEC. AVAIL. APR '64 ② MOD. COMPLETE
7	69.11	R & R MODULE RELEASE & RADAR COVER RELEASE (SINGLE DROGUE)																S/C	#	2	-12	
8	69.11.02	R & R MODULE RELEASE & RADAR COVER RELEASE (DOUBLE DROGUE)																S/C	#	3	-10	
9																						
10																						
11																						
12																						
13																						
14	69.14	EMERGENCY DOCKING RELEASE																				SCHEDULE LATER
15	69.14	DOCKING INDEXING BAR																				SCHEDULE LATER
16																						
17																						

LEGEND:
TESTS:
HDW. DEL.

① PLANNED
② CURRENT EST.
③ ACTUAL

DATE 22 JANUARY 1962

REVISED 7 AUG. 1964 (REV. W)

REVISED

MCDONNELL

ST. LOUIS, MISSOURI

PAGE 17

REPORT

MODEL

GEMINI TEST PLAN SCHEDULE

	Test Req. NO. 52..	ACTIVITY	1964 J	F	M	A	M	J	J	A	S	O	N	D	1965 J	F	M	A	M	J	SLACK	COMMENTS
1		STRUCTURAL TEST PROGRAM																				
2		R & R-RCS SECTION (STRUCTURE TEST UNITS)																				TEST COMPLETED JULY '63
3	52.20	PARACHUTE SUPPORT FITTINGS (2 FORWARD POINTS ONLY)																				TEST COMPLETED JULY '63
4	52.11	RADAR SUPPORT STRUCTURE																				TEST COMPLETED JULY '63
5	52.22	HOISTING PROVISIONS																				TEST COMPLETED JULY '63
6	52.12	NOSE LAUNCH FAIRING (SINGLE DROGUE)																				TEST COMPLETED AUG '63
7	52.10	REENTRY HEATING DROGUE CHUTE SUPPORT STRUCT. (SINGLE DROGUE)																				TEST COMPLETED APRIL '64
8	52.12.01	NOSE LAUNCH FAIRING (DOUBLE DROGUE)																S/C	#	3	-4	
9	52.07.01	DROGUE CHUTE MORTAR (DOUBLE DROGUE)																S/C	#	3	-4	
10	52.10.01	RE-ENTRY HEATING DROGUE CHUTE SUPPORT STRUCTURE (DOUBLE DROGUE)																S/C	#	3	-4	
11		SPACECRAFT 5 STRUCTURAL ASSEMBLY																				
12		S/C 5 STRUCT. DEL. TO LAB																				DELIVERED APRIL '64
13	69.13	HORIZON SCANNER & HORIZON SCANNER FAIRING PYRO DEMO. (5 SEPAR.)																S/C	#	2		TESTS COMPLETED JUN '64
14	69.13	AFT HOIST LOOP PYRO DEMOS.																S/C	#	2		TESTS COMPLETED JUN '64
15	69.13	ENVIRONMENTAL FIRING, HOR. SCAN., H.S. FAIRING, & AFT HOIST LOOP																S/C	#	2		TESTS COMPLETED JUN '64
16	58.22	HORIZON SCANNER DYNAMIC RESPONSE																S/C	#	2		TESTS COMPLETED JULY '64
17																						

LEGEND:

TESTS: ③ ① ② ③

HDW. DEL.

① PLANNED

② CURRENT EST.

③ ACTUAL

DATE 20 JANUARY 1962
REVISED 17 AUG 1964 (REV. W)
REVISED

MCDONNELL
ST. LOUIS, MISSOURI

REPORT
MODEL

GEMINI TEST PLAN SCHEDULE

	Test Req. NO. 52..	ACTIVITY	1964 J	F	M	A	M	J	J	A	S	O	N	D	1965 J	F	M	A	M	J	SLACK	COMMENTS
1		STRUCTURAL TEST PROGRAM (CONT.)																				
2		STATIC 3 ADAPTER																				
3	52.34	EQUIPMENT MOUNTS																				TEST COMPLETED JULY '63
4	52.08 52.39	RETRO STRUCTURES																				TEST COMPLETED JULY '63
5	52.35	ADAPTER HOT LAUNCH																				TEST COMPLETED JAN '64
6		MISCELLANEOUS STRUCTURAL ARTICLES																				
7		HORIZON SCANNER FAIRING, SLED "q" LOADING (B/P 3 & B/P 3A)							(SEE QUAL. SLED RUNS REF: P.10, LINES 6,7,8)									S/C	#	2		B/P 3 TEST COMPLETED FEB '64
8	58.14	SPACECRAFT #1 SEAT PALLET - DYN. RESPONSE																				TEST COMPLETED AUG '63
9	58.15	SPACECRAFT #2 SEAT PALLET - DYN. RESPONSE																				TEST COMPLETED APRIL '64
10	52.42 55.06	UMBILICAL DISCONNECT ELECTRICAL & GROUND COOLING																				TESTS COMPLETED JAN '64 MARTIN 2 ADAPTER
11	52.34.01	STATIC TEST OF BLAST SHIELD DOOR																				TEST COMPLETED MAR '64 MARTIN 2 ADAPTER
12	52.50	STATIC TEST OF BATTERY MODULE																S/C	#	3	-29	MARTIN I ADAPTER
13		D.O.D. EXPERIMENTS																				
14	258.01	DYNAMIC RESPONSE OF GEMINI ADAPTER WITH DOD EXP. EQUIP.																S/C	#	2	-7	MARTIN 2 ADAPTER
15	255.01	DOD EXP. MECH. FUNCTIONAL TEST																S/C	#	5	-5	MARTIN 2 ADAPTER
16																						
17																						
			J	F	M	A	M	J	J	A	S	O	N	D	J	F	M	A	M	J		
			1964												1965							

LEGEND:
TESTS: ① ② ③
HDW. DEL.

① PLANNED
② CURRENT EST.
③ ACTUAL

DATE 22 JANUARY 1962
REVISE 7 AUG 1964 (REV. W)
REVISED

MCDONNELL
ST. LOUIS, MISSOURI

PAGE 19
REPORT
MODEL

GEMINI TEST PLAN SCHEDULE

	Test Req. NO. 52..	ACTIVITY	1964 J F M A M J J A S O N D	1965 J F M A M J	SLACK	COMMENTS
1		STRUCTURAL TEST PROGRAM (CONT.)				
2		STATIC ARTICLE NO. 3 (REENTRY SECT PARACH. CONF. - LANDING GEAR)				DELIVERED MAY '63
3	52.03	SPACECRAFT LANDING CONDITION				TEST COMPLETED JULY '63
4	52.20	PARACHUTE SUPPORT FITTING (AFT POINT)				TEST COMPLETED JUNE '63
5		INSTRUMENTATION FOR TEST				COMPLETED JULY '63
6		INSTALL SHINGLES				COMPLETED SEPT '63
7	52.06	SPACECRAFT LAUNCH CONDITIONS				TEST COMPLETED NOV '63
8	52.19.02	REENTRY LOADS				TEST COMPLETED FEB '64
9	52.45	REENTRY ELECTRICAL UMBILICAL DISCONNECT				TEST COMPLETED FEB '64
10		MOD. TO 04300-5 CONFIG.				COMPLETED MAR '64
11	52.14	CHUTE DEPLOY, HOT		S/C # 2		TEST COMPLETED JULY '64
12	52.19.01	SPACECRAFT REENTRY CONDITIONS		S/C # 2	-9	
13		MOD. TO 04300-11 CONFIG.			-10	
14	52.26	AFT HOIST LOOP & SUPPORT STRUCTURE		S/C # 3	-7	RETEST FROM PAGE 20, LINE 7
15	52.36	SPACECRAFT ABORT CONDITIONS		S/C # 3	-10	MARTIN 2 ADAPTER
16						
17						

LEGEND:
TESTS:
HDW. DEL.

① PLANNED
② CURRENT EST.
③ ACTUAL

DATE 22 JANUARY 1962

REVISED AUG 1964 (REV. W)

REVISED

MCDONNELL

ST. LOUIS, MISSOURI

PAGE 20

REPORT

MODEL

GEMINI TEST PLAN SCHEDULE

	Test Req. NO. 52..	ACTIVITY	COMMENTS	SLACK
1		STATIC #4 STRUCTURAL TEST PROGRAM		
2	52.21	SEAT BACKUP (SEE LINE 11)	ST. 4 DELIVERED MAR '63 TESTS COMPLETED JUNE '63	
3	58.03	DYNAMIC RESPONSE TESTS (ABORT, REENTRY, LAUNCH)	TESTS COMPLETED SEPT '63	
4		LIGHT HATCHES - INSTALL & RIG	COMPLETED NOV '63	
5	52.24	PRESSURIZATION-CYCLING AND ULTIMATE	TESTS COMPLETED JAN '64	
6	52.49	HATCH OPERATION - SIMULATED MISSION, PHASE I	TESTS COMPLETED JAN '64	
7	52.26	AFT HOIST LOOP AND SUPPORT STRUCTURE	HOIST LOOP FAILED	
8	52.33	HATCH BACKUP - R/H FLIPPER DOOR	TEST COMPLETED MAR '64	
9		REPAIR STATIC #4 STRUCTURE	COMPLETED MAR '64	
10	52.33	HATCH BACKUP - (R/H HATCH ULT.) (L/H & R/H HATCH)	TEST COMPLETED MAY '64	
11		MOD TO -11 & -17 CONFIGURATION (BALLAST, HEAT SHIELD, & E.O.'S)	COMPLETED JUNE '64	
12	52.32	WATER LANDING IMPACT (PARACHUTE CONFIG)	TESTS COMPLETED JULY '64 2 TEST CONDITIONS	
13	52.49	HATCH OPERATION - SIMULATED MISSION, PHASE III	TESTS COMPLETED JULY '64	
14	52.49	HATCH OPERATION - SIMULATED MISSION, PHASE II	REF. PAGE 14 LINE 9	-24
15				
16				
17				

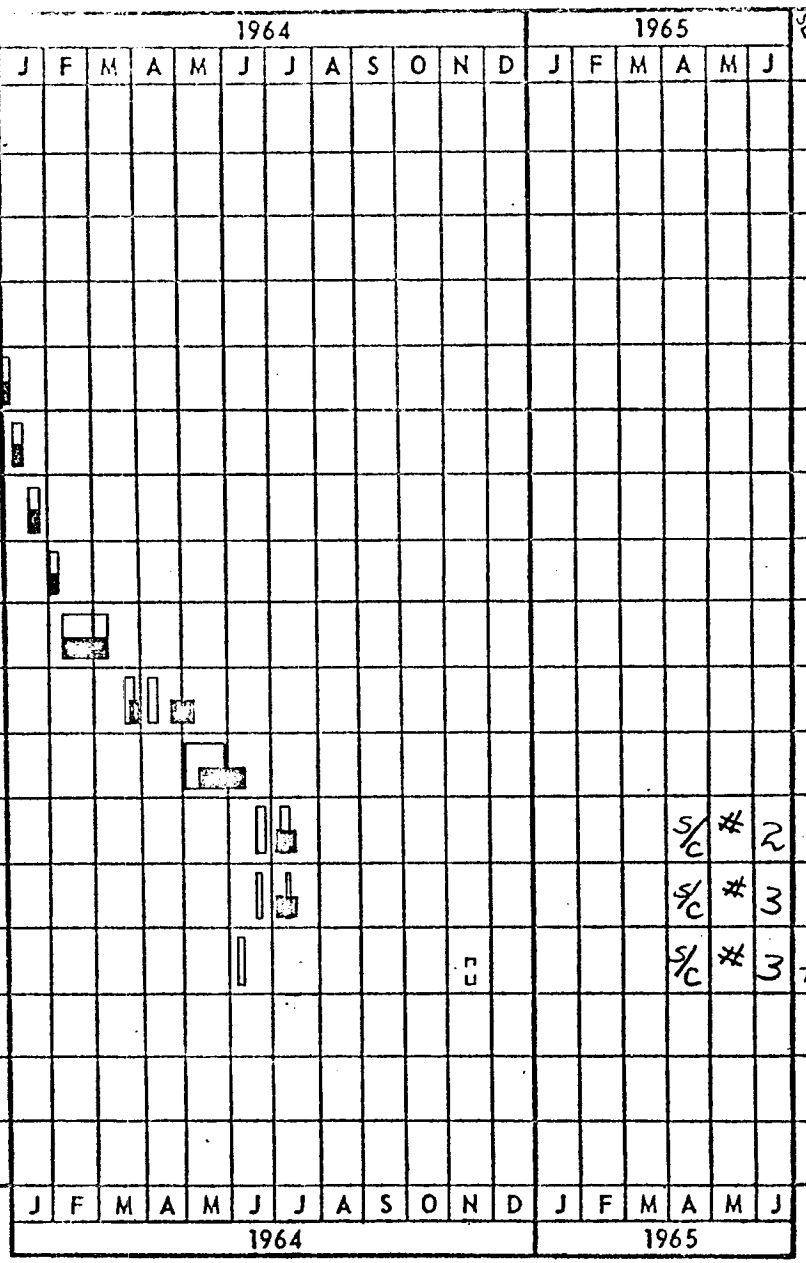

LEGEND:

TESTS:

HDW: DEL.

① PLANNED

② CURRENT EST.

③ ACTUAL

DATE 22 JANUARY 1962
REVISED 27 AUG. 1964 (REV. W)
REVISED

MCDONNELL
ST. LOUIS, MISSOURI

PAGE 21
REPORT
MODEL

GEMINI TEST PLAN SCHEDULE

	Test Req. NO. 52..	ACTIVITY	1964 J	F	M	A	M	J	J	A	S	O	N	D	1965 J	F	M	A	M	J	SLACK	COMMENTS
1		DATA ACQUISITION SYSTEM																				
2		SIGNAL COND. VIBRATION TEST																				TEST COMPLETED AUG '62
3		SIGNAL COND. DESIGN VERIFICATION																				TESTS COMPLETED JUNE '63
4	64.08	SINGAL COND. QUAL. TEST																S/C	*	2	-9	
5	64.09	SINGAL COND. ASSURANCE TEST																S/C	*	2	-11	
6																						
7		COMPLETE INSTR. MOCKUP (CIMU)																				
8	64.03	SIGNAL COND. HEAT TRANSFER																				TEST COMPLETED JAN '63
9		PCM BREADBOARD AVAIL.																				DELIVERED APRIL '63
10	64.05	TEST BENCH COMPATIBILITY																				TESTING COMPLETED FEB '63
11	64.03	PCM EVALUATION																				TEST COMPLETED MAY '63
12	64.03	SIGNAL COND./PCM COMPATIBILITY																				TEST COMPLETED MAY '63
13	64.03	EFFECT OF POWER BUSS VARIATION																				TEST COMPLETED MAY '63
14	64.11 & 11.01	VOLT CONT. OSCILLATOR DEV. TEST																				TEST COMPLETED JULY '63
15																						
16																						
17																						
			J	F	M	A	M	J	J	A	S	O	N	D	J	F	M	A	M	J		
			1964												1965							

LEGEND:
TESTS:
HDW. DEL.

① PLANNED
② CURRENT EST.
③ ACTUAL

DATE 2[illegible] JANUARY 1962
REVISED 7 AUG. 1964 (REV. W)
REVISED

MCDONNELL
ST. LOUIS, MISSOURI

PAGE 22
REPORT
MODEL

GEMINI TEST PLAN SCHEDULE

	Test Req. NO. 52..	ACTIVITY	1964 J	F	M	A	M	J	J	A	S	O	N	D	1965 J	F	M	A	M	J	SLACK	COMMENTS
1		ANTENNA SYSTEMS																				
2		UHF NOSE STUB, DESCENT & RECOVERY ANTENNAS																				
3	063.02.01	RADIATION PATTERNS - IMPEDANCE MATCHING																				TEST COMPLETED SEPT '62
4	063.19	QUALIFICATION TESTS (NOSE STUB)																				TEST COMPLETED FEB '64
5	063.19	QUALIFICATION TESTS (DESCENT)																S/C	*	2	-22	
6		HF WHIP ANTENNA (DE HAVILLAND A/C)																				
		VENDOR DEVELOPMENT (MECHANICAL)																				
7		ENGR. EVALUATION & IMPEDANCE MATCHING																				TEST COMPLETED NOV '62
8		QUALIFICATION TESTS																				TESTS COMPLETED NOV '63
9		C-BAND ANTENNAS (RADCOM - EMERTRON)																				
10		VENDOR DEVELOPMENT, ENGR. EVALUATION QUAL. TESTS																				TESTS COMPLETED JUNE '63
11		UHF ADAPTER ANTENNAS (DE HAVILLAND A/C)																				
12		VENDOR DEVELOPMENT, ENGR. EVALUATION & QUAL. TESTS																				TEST COMPLETED SEPT. '63
13		C & S BAND SLOT ANTENNAS (ADAPTER) (RANTEC CORP.)																				
14		VENDOR DEVELOPMENT, ENGR. EVAL. & QUALIFICATION TESTS																				TESTS COMPLETED JUNE '63
15		UHF MULTIPLEXERS (RANTEC CORP.)																				
16		VENDOR DEVELOPMENT, ENGR. EVAL., & QUALIFICATION TESTS																				TESTS COMPLETED APRIL '63
17		COAXIAL SWITCHES - VENDOR DEVEL., ENGR. EVAL. & QUAL. TESTS																				TESTS COMPLETED APRIL '63
			J	F	M	A	M	J	J	A	S	O	N	D	J	F	M	A	M	J		
			1964												1965							

LEGEND:
TESTS:
HDW. DEL.

① PLANNED
② CURRENT EST.
③ ACTUAL

DATE 22 JANUARY 1962
REVISED 27 AUG 1964 (REV. W)
REVISED

MCDONNELL
ST. LOUIS, MISSOURI

REPORT
MODEL

GEMINI TEST PLAN SCHEDULE

	Test Req. NO. 52..	ACTIVITY	1964 J	F	M	A	M	J	J	A	S	O	N	D	1965 J	F	M	A	M	J	SLACK	COMMENTS
1		ELECTRONIC SYSTEMS TEST UNIT (ESTU)																				
2		INDIVIDUAL ENGINEERING PROTOTYPE SYSTEMS TESTS																				TESTING FROM SEPT '62 THRU MAY '63
3		ESTU INTEGRATION PROGRAM																				TESTING FROM NOV '62 THRU JULY '63
4		ESTU/CIMU INTEGRATION																				TESTING JUNE & JULY '63
5	62.18	IMU TESTS ON THE ESTU																				TEST COMPLETED FEB '64
6	62.11	ACME AIR BEARING TEST																S/C	#	3	-10	
7	62.19	COMPUTER/RADAR INTEGRATED TEST																S/C	#	5	-12	
8	55.04	MANEUVER CONTROLLER QUAL. TEST																S/C	#	3	-6	
9	55.05	ATT. HAND CONTROLLER - QUAL. TEST																S/C	#	2	-9	
10		GUIDANCE & CONTROL SIMULATION TEST (ANALOG)																				
11		AVAILABILITY - THREE (3) AXIS MOTION TABLE & ESTU																				3 AXIS TABLE DEL. NOV '62
12	59.02	ATTITUDE MANEUVERING MODE																				TESTING COMPLETED NOV '63
13	59.01	IN-FLIGHT PLATFORM ALIGNMENT																				TESTING COMPLETED MAR '64
14	59.03	FLIGHT COMPUTER EVALUATION																				TESTS COMPLETED JAN '64
15	59.04	3-AXIS MOTION TABLE MISC. TESTS																				TESTS COMPLETED MAY '64
16																						
17	55.08	ABORT CONTROLLER - QUAL. TEST																				

LEGEND:
TESTS:
HDW. DEL.
① PLANNED
② CURRENT EST.
③ ACTUAL

DATE 22 JANUARY 1962
REVISED [illegible] AUG 1964 (REV. W)
REVISED

MCDONNELL
ST. LOUIS, MISSOURI

PAGE 24
REPORT
MODEL

GEMINI TEST PLAN SCHEDULE

	Test Req. NO. 52..	ACTIVITY	1964 J	F	M	A	M	J	J	A	S	O	N	D	1965 J	F	M	A	M	J	SLACK	COMMENTS
1		ELECTRICAL COMPONENTS TEST																				
2	066.03.02	RELAY - HARD MOUNTED VIB. INVESTIGATION																				TEST HELD UP PENDING RESULTS OF TR 052-066.03.04
3	066.10	ELECT. CONNECTOR TEST (PTXXCP)																				CONNECTOR FAILED TO PASS DIELECTRIC & INSUL. RESIS.
4	066.10.02	PTXXCP CONNECTORS MOD. PROCESS SPEC.																				TESTS COMPLETED MAR '64
5																						
6	066.18	EVAL. OF S/C WIRE HIGH TEMP. & LOW PRESS.																S/C	#	2	-14	
7																						
8																						
9																						
10																						
11																						
12	61.00 THRU .06	COMPATABILITY TEST UNIT (CTU)			①																	① TESTING STOPPED UNTIL CTU REWIRE TO S/C 3 CONFIG.
13	68.47 68.41	COOLANT SYSTEM SERVICING																				TEST COMPLETED APRIL '64
14	61.08	IGS SYSTEM RETEST																				TEST COMPLETED FEB '64
15																						
16																						
17																						

LEGEND:
TESTS:
HDW. DEL.

① PLANNED
② CURRENT EST.
③ ACTUAL

DATE 22 JANUARY 1962

REVISED 31 AUG. 1964 (REV. W)

REVISED

MCDONNELL

ST. LOUIS, MISSOURI

PAGE 25

REPORT

MODEL

GEMINI TEST PLAN SCHEDULE

	Test Req. NO. 52..	ACTIVITY	1964 J	F	M	A	M	J	J	A	S	O	N	D	1965 J	F	M	A	M	J	SLACK	COMMENTS
1		ELECTRICAL POWER SYSTEM COMPATIBILITY TESTING																				
2	66.02	ELECTRICAL POWER DISTRIBUTION SYS. FUNCTIONAL TESTS																				TESTS COMPLETED SEPT. '63
3		RECEIVE FUEL CELLS			◇					◇											-23	
4		POWER SYSTEM BUILD UP																S/C	*	5	-21	
5		POWER SYSTEM LEAK TEST																				
6		POWER SYSTEM GASEOUS OPERATION																				
7		POWER SYSTEM CRYO OPERATION																				
8		POWER SYSTEM CRYO TEMP. AND ALT. TEST																				
9		POWER SYSTEM VIBRATION TEST																S/C	#	5	-21	
10																						
11																						
12																						
13																						
14																						
15																						
16		PRODUCTION SPACECRAFT SYSTEMS TESTS																				
17																						
			J	F	M	A	M	J	J	A	S	O	N	D	J	F	M	A	M	J		
			1964												1965							

LEGEND:

TESTS: ③ ① ②

HDW. DEL. ◇

① PLANNED

② CURRENT EST.

③ ACTUAL

DATE 22 JANUARY 1962

REVISED 7 AUG 1964 (REV. W)

REVISED

MCDONNELL

ST. LOUIS, MISSOURI

PAGE 26

REPORT

MODEL

GEMINI TEST PLAN SCHEDULE

	Test Req. NO. 52..	ACTIVITY	1964 J	F	M	A	M	J	J	A	S	O	N	D	1965 J	F	M	A	M	J	SLACK	COMMENTS
1		ENVIRONMENTAL CONTROL																				
2		EQUIPMENT COOLING																				
3	68.02.01& .04,68.05	ALTITUDE TESTS - COLD PLATE DEVELOPMENT																				TEST COMPLETED NOV '62
4	68.01.02	MODEL TESTS - RADIATOR HEAT & PRESSURE																				TEST COMPLETED NOV '62
5	68.06	ALTITUDE & TEMP ENVIR. - RADIATOR (THERMAL BALANCE)																				TEST COMPLETED APRIL '64
6		BOILERPLATE NO. 2																				
7		MFG. DELIVERY - BOILERPLATE NO. 2 TO LAB																				DELIVERED MAR '63
8		CABIN & SUIT CIRCUIT DELIVERY																				DELIVERED JUNE '63
9	68.04	CABIN & SUIT CIRCUIT ALTITUDE TESTS - UNMANNED																				TESTS COMPLETED JULY '63
10	68.04	CABIN & SUIT CIRCUIT ALTITUDE TESTS - MANNED																				TESTS COMPLETED OCT '63
11		COMPLETE ECS SYSTEM DELIVERY																				
12	68.04.02	ALTITUDE TESTS - UNMANNED																				TESTING COMPLETED MAY '64
13	68.04.02	ALTITUDE TESTS - MANNED					①											S/C	#	3		① HEAT EXCHANGER FAILED. TESTS COMPLETED AUG '64
14	68.68	ASTRONAUT QUICK INSERTION TEST																				[illegible]
15	68.04.01	14-DAY UNMANNED TEST																S/C	#	3	-20	
16	68.09	EGRESS SYSTEM EVALUATION																S/C	#	3		CONTINGENT ON AVAILABILITY OF EGRESS KIT
17		DELIVER BOILERPLATE NO. 2 TO MSC																			-20	
			J	F	M	A	M	J	J	A	S	O	N	D	J	F	M	A	M	J		
			1964												1965							

LEGEND:

TESTS: ① ② ③

HDW: DEL.

① PLANNED

② CURRENT EST.

③ ACTUAL

DATE 22 JANUARY 1962

REVISED [illegible] AUG. 1964 (REV. W)

REVISED [illegible]

MCDONNELL

ST. LOUIS, MISSOURI

PAGE 27

REPORT

MODEL

GEMINI TEST PLAN SCHEDULE

	Test Req. NO. 52..	ACTIVITY	1964 J	F	M	A	M	J	J	A	S	O	N	D	1965 J	F	M	A	M	J	SLACK	COMMENTS
1	072 072.01	THERMAL QUALIFICATION TEST																				
2	58.03.01	SPACECRAFT VIBRATION TEST (NOT THERMAL BALANCE TEST)																				VIBR. TEST TO BE PERFORMED ON S/C 2 DURING SST
3	072.01	S/C 3A RECEIVED FROM MFG.								◊	○										-3	
4		SPECIAL INSTRUMENTATION INSTALLATION																			-3	
5		HARDLINE CONTROL INSTALLED																			-3	
6		SPECIAL TEST EQUIPMENT INSTALLED & COMBINED SYSTEMS CHECKOUT																			-3	
7		SYSTEM SERVICING																			-3	
8		MISSIONS																				
9		MINIMUM INTERNAL HEATING ONE LOOP, ONE PUMP																S/C	*	3	-1	
10		MAXIMUM INTERNAL HEATING, ONE LOOP, TWO PUMPS																S/C	*	4	-1	
11		MAXIMUM INTERNAL HEATING, TWO LOOPS, ONE PUMP PER LOOP																S/C	*	4	-1	
12		DATA COMPUTATION & REPORT																S/C	*	4	-1	
13																						
14																						
15																						
16																						
17																						
			J	F	M	A	M	J	J	A	S	O	N	D	J	F	M	A	M	J		
			1964												1965							

LEGEND:

TESTS: ③ ① ② ③

HDW. DEL. ◊

① PLANNED

② CURRENT EST.

③ ACTUAL

GROUND TEST SUMMARY

MAJOR TEST SPECIMENS

STATIC 3

1. Elevated temperature Chute Deploy Test re-run conducted 29 July 1964. Test set up in process for Re-entry Heating Load Tests.

2. 30 Day Forecast - Test run scheduled to start 14 August, and complete 1 September 1964. Unit will then be returned to manufacturing for 52-04300-11 Modification.

STATIC 4

1. Second Water Drop, with specimen in nose first attitude, conducted 13 July 1964. Test was successful. Cabin pressure drop in 30 minutes was from 5.01 to 1.96 PSI before test, and from 5.01 to .09 PSI after test. Unit sustained slight damage to Main Landing Gear Door, Forward Equipment Door, and ECS Door. Unit was subjected to 36 hour immersion, and leakage was negligible. Static 4 returned to manufacturing for 52-04400-21 Modification on 5 August 1964.

2. 30 Day Forecast - Manufacturing Modification to extend thru September 1964.

STATIC 7

1. Modification and set up for Double Drogue Chute Qual Drops delayed due to shortage of Relay Panels and Tyres.

GROUND TEST SUMMARY

2. 30 Day Forecast - Anticipate drop program to start 21 August 1964, contingent upon receipt of Pyros.

BOILERPLATE 2

1. 11 Hour and 14 Hour manned runs conducted on 17 July and 3 August. Tests were conducted with varied vernatherm settings and gas and liquid loads to determine proper flow and temperature of coolant to obtain acceptable cabin temperature. Set up in process for Astronaut Quick Insertion Test.
2. 30 Day Forecast - Insertion Test to be conducted on 11 August 1964. Set up and check out for 14 Day Unmanned Test to follow. Anticipate test run to start about 1 September 1964.

SPECIMEN HATCH

1. No test activity during this reporting period.
2. 30 Day Forecast - Specimen Hatch to be returned to Test Lab by manufacturing on 11 August 1964. Test program to be resumed upon return. Test sequence to be Simulated Pyro Actuation of R. H. Hatch, Functional Test L. H. Hatch, Under Water Leak check, Leakage Test 200°F at 800,000 ft, Leakage Test 0°F at 800,000 ft, Hatch Cycling 0°F at 800,000 ft, and Leakage Test 0°F at 800,000 ft. Tests to extend through mid-November 1964.

GROUND TEST SUMMARY

TARGET DOCKING ADAPTER

1. Set up in process for TDA Stiffness Test.

2. 30 Day Forecast - Stiffness Test with TDA Static 2 to start 11 August 1964. Manufacturing Modification of TDA Static 1 scheduled to start 24 August 1964. Chamber preparation and set up in process for Docking Damper Qual Tests. Anticipate tests to start about mid-August 1964.

MISCELLANEOUS TEST ACTIVITY

STRUCTURAL

1. Window Qualification - Test results evaluated mid-way through test program. Further testing suspended for revision of TR. Anticipate testing to be resumed by mid-August 1964.

PYROTECHNICS

1. Z100 Boilerplate - As a result of Heat Shield damage sustained in pyro firing, a special test was conducted using Martin 1 Adapter. Test was conducted on 3 August 1964 in 18 foot chamber. Separation was satisfactory with no damage to Heat Shield. Z100 Boilerplate was repaired by manufacturing and returned to Test Lab 4 August 1964. Set up in process for continuation of Z100 pyro firings.

GROUND TEST SUMMARY

2. Z13 and Z69 - Pyro testing held for Pyros. Test activity depends upon receipt of Pyros, currently scheduled for mid-August 1964.

3. Hatch Actuation - First of four remaining development shots conducted 21 July 1964. Modified actuating rod end failed. Rod end re-designed and two additional tension shots successfully conducted. Set up in process for Compression Test, which will complete development phase of testing. Qualification Tests to follow.

ELECTRICAL

1. Relay Panels - Qualification testing of Spacecraft 2 and Spacecraft 3 Relay Panels continues.

2. Signal Conditioner - Unit failed Acoustic Test at 155 db. Units modified, retested and passed test. Further testing held for evaluation of tests to date and of modified test unit for possible design change.

3. Wire Evaluation - Vibration run conducted 29 July 1964. Specimen sustained damage due to method of mounting instrumentation. Damaged wires replaced and test to continue with altitude immersion phase.

GROUND TEST SUMMARY

MATERIALS AND PROCESSES

1. Urine Disposal - 84 lbs. of urine successfully dumped through heated tapered bore tube. An additional run to be conducted at request of NASA to check ice formation at exit point.
2. Radiator Compression Fittings - Test specimens received as scheduled but deferred to production for Spacecraft installation. Replacement specimens ordered. Receipt scheduled for week of 17 August 1964. Testing to be resumed upon receipt.
3. Cold Plates - Testing of MAC made Cold Plates started 7 August 1964. 3 of 8 specimens tested leaked in internal leak check. External leak check now in process.
4. Chute Material - Set up in process to test effect of fireball radiation and opening shock on chute materials. Test run scheduled to start 1 September 1964.

DOD EXPERIMENT

1. Martin II Adapter Shell Mode Vibration Test started on 23 July 1964. Testing satisfactory to date.

GEMINI MISSION SIMULATOR
SUMMARY SCHEDULE

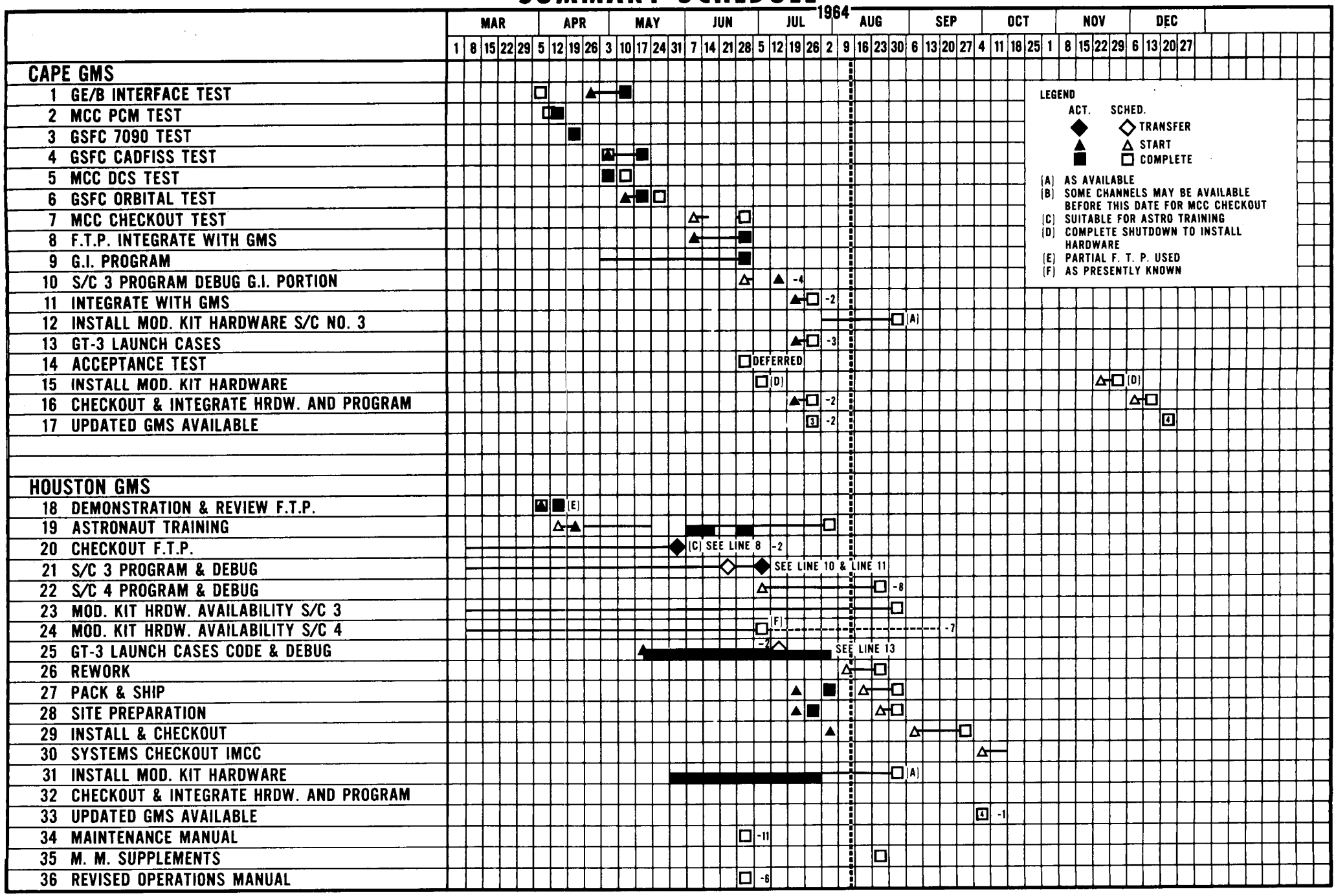

STATUS AS OF 7 AUG. 1964

MONTHLY SUMMARY

SYSTEM: Gemini Mission Simulator
VENDOR: E.S.O., St. Louis
DATE: 7 August 1964

1. GMS No. 2 Shipment - The final shipment, the computer complex, of GMS No. 2 to Houston has been completed. Installation and checkout are presently being performed.

2. GT-3 Launch Case Simulations - The analysis, coding and debugging of the first six cases was completed prior to the shutdown of the GMS No. 2 computer complex in St. Louis on 20 July 1964. Coding and debugging of the next ten cases are 70% and 40% complete, respectively. Integration of the launch cases is presently being done at the Cape with the GMS S/C 3 Ascent Guidance computer program.

3. Computer Program - Since the shutdown of the No. 2 GMS in St. Louis, the computer program (software) effort has been transferred to the Cape.

4. Final Report - Since both GMS have been shipped from St. Louis and remaining efforts at the Cape and Houston are under the direct cognizance of MSC, this is the final progress report on this item.

GEMINI LOADS

1. REPORTS - Work is continuing on preparation of loads data covering GT-2 and up for incorporation in the next revision of MAC Report 9030, "Structural Design Loads for Gemini Spacecraft".

2. MISCELLANEOUS LOADS WORK - Work was initiated on a NASA requested study to determine Gemini landing gear loads for a parasail landing system. Estimated design loads for installation of Gemini ejection seat in F-106 Aircraft for ejection tests. Prepared and released revised maneuver-in-orbit loads for the Spacecraft and docking adapter (TDA) to incorporate new Agena inertia data and the results of a more refined analysis.

   The accelerations measured on the Gemini Static Vehicle No. 4 water drops Nos. 5A and 6A have been analyzed. The results show that the load factors experienced on the full scale vehicle are larger than the values being used. The revised values have been released and will be incorporated in the next revision of MAC Report 8616, "Structural Design Criteria - Gemini Spacecraft". Work was initiated on re-evaluation of ejection hatch loads as a result of an inconsistency revealed by hatch pressure data measured during a Gemini Boiler Plate #3 sled test. The possible reasons for the discrepancy being studied are (1) sled/ground interference and (2) cumulative changes in hatch configuration since the model tests. Work continues on the correlation of GT-1 flight measured data with design loading conditions.

ENGINEERING PROCUREMENT SERVICES

1. Supplied technical evaluations, established Engineering position and participated in 4 negotiations with subcontracotrs. Issued price negotiation memos for the Purchase Order File covering 2 SCD systems involving 24 changes and/or overruns. Completed technical evaluations of 4 additional systems involving 37 changes and/or overruns. Initiated technical evaluations on 8 systems which involved 43 changes and/or overruns and an SCD revision. Released For Procurement Action to obtain quotations based on SCD 52-83775, Cryogenic System Manual Shutoff Valves and requested Procurement Action on SCD 52-82706, Parachute Riser Retractors. Issued Work Statement for Teledyne Field Support and revised Honeywell, St. Petersburg's, Field Support Work Statement. Reviewed and approved 23 SCD's and/or DCN's.

THERMODYNAMICS

1. Heat Transfer

1.1 Structural Temperatures - Re-Entry temperatures were computed for the MDF ring during the GT-2 mission both with and without the additional Min-K insulation which has been added in the area on orbital spacecraft. A peak temperature of 229°F was obtained without this insulation while a value of 110°F was computed on the ring with the additional heat protection.

Launch temperatures on the Z16 pyrotechnic ring were revised based on the heating correlations obtained from GT-1 measured temperature data. The new peak temperature of 228°F replaces the pre-GT-1 data estimate of 260°F.

The GT-2 afterbody temperature report has been completed and submitted for approval.

Temperature calculations have been made on the docking light fairing assuming it is constructed of cast aluminum of three thicknesses to obtain an optimum value.

Production EJS 52-3117 will provide additional thermal protection for the main parachute as requested by Memo 242-2791.

1.2 Heat Shield - The present condition of S/C 4 heat shield is thermally unacceptable. Many voids have been repaired but roughly 200 voids remain which cannot be repaired using present methods. These voids are located along a honeycomb splice line that has unbonded honeycomb nodes. Thermodynamic TN 110 has been written and submitted for approval. This analysis simulated the high heat flux Plasmadyne test conditions in which the S-3 ablator experienced considerable surface recession. NASA (MSC) requested this study.

1.3 Space Radiator - Data reduction is continuing in the radiator test program (TR 052-068.06).

The initial evaluation of the applied external heat fluxes is 85% completed. It has been found that on some parts of the adapter the test simulation is higher than the theoretical values and on some other parts lower.

1.4 Aerodynamic Heating - Additional analysis of Gemini wind tunnel data has been made refining methods of calculating local heating on the heat shield.

1.5 Orbital Heating - Analysis of cabin energy balance in orbit is continuing for S/C #3 in order to determine the resulting cabin temperature as a function of several mission variables. Present emphasis is concerned with the heat shield and hatch surface.

2 Equipment Temperature Control

2.1 Passive - Correlation of calculated transient temperatures with the results of the radiator test indicates that the method of analysis is valid. This method is now being applied to the actual spacecraft configuration to determine the effects of changing the properties of the various surfaces that control adapter equipment temperature. Results from this parametric study will define the limits of acceptable surface coatings and pinpoint any questionable areas.

2.2 Active - Evaluation of the required heat transfer for equipment coldplates has shown that in many cases the required dimensions of the equipment result in an extra large coldplate. In these cases it becomes near impossible to build a coldplate with insufficient heat transfer capability. In the interest of economy it is being recommended that only those coldplates that have a definite possibility of failing to meet the heat transfer requirements, be selected for heat transfer tests. All other coldplates would be qualified for heat transfer by similarity of our design concept.

2.3 Target Docking Adapter - The final paint pattern around the transponder radiator is expected to be near a 9 inch wide border of radiator paint. Maximum temperatures of 114°F and a minimum temperature of -6°F have been calculated with this configuration. It is desirable to lower the maximum temperature to about 105°F to provide a margin of safety. MAC has requested that the transponder demonstrate the capability of turn on and warm up from temperatures below +20°F. To date Westinghouse has not agreed to perform such tests. The amount of power to maintain the transponder at or above +20°F will be calculated as soon as the final paint pattern has been established.

2.4 In Flight Experiments - Preliminary definition of the thermal environment for the Astronaut Maneuvering unit has been provided for Ling Tempco Vought. The low light level TV experiment equipment and the meteorite collection experiment will require coldplates. Various materials are being evaluated to provide passive temperature control for the radiometers and interferometers of experiments D4 and D7.

AERODYNAMICS

1. RE-ENTRY DYNAMICS - Aerodynamics Information Note (AIN) 70, the six degree of freedom orbit re-entry study was released and transmitted to NASA GPO. Work continues on the abort configuration dynamic study.

2. SPACECRAFT ESCAPE STUDIES - MODE II - Continued work on updating of the Mode II status report.

   The Mode I - Mode II crossover study has been completed, and indications are that the Mode II abort region can be lowered to 64,000 ft for GT-3.

   A joint MAC, MMB, Aerospace, and NASA meeting was held at MAC on 24 July to formulate the analysis program for the Mode I-II "Ride It Out" (RIO) abort technique. Results of this meeting including the ground rules and run schedules to be employed in the study are being transmitted to NASA.

3. SPACECRAFT SEPARATION STUDIES - MAC presented results of recent S/C - GLV separation analysis at the 1 July 1964 meeting at SSD. Based on GT-1 data, MMB calculations show residual vehicle rates can be as high as 2.2°/sec at separation (SECO + 20 seconds). The original separation procedure now becomes unacceptable because it was established for substantially lower residual rates. The MAC recommendation (with NASA concurrance) is that OAMS damping be eliminated for the first 2 seconds during separation. This permits separation without recontact for residual rates on the order of 30°/second. This change has been incorporated into the GT-2 mission automatic sequence system. For manned missions GT-3 and up, only astronaut procedures need be defined to accomplish recontact-free separation. No hardware changes are required. Trajectories of ground test antenna cover separations have been analysed. System performance is acceptable for in-flight jettison (BECO + 45 seconds).

4. MISSION PLANNING AND ANALYSIS - Formulation of the IMCC ground based computer program is continuing. The program has been simulated on the computer, and a study of the program variables is being made to determine the accuracy limits.

Work is continuing on the Mode III and IV abort technique status report. The spacecraft re-entry temperature boundaries have been defined for lower altitudes to enable analysis of the one orbit (Mode IV) re-entry capability.

DURING NEXT REPORTING PERIOD

Complete formulation of the IMCC program, and continue the check out and accuracy determination.

5. RANGE SAFETY - Published Aerodynamics Information Note #89 - GT-2 impact dispersion boundaries of MAC hardware items, post injection spacecraft sequencing, and descriptions of the abort and recovery systems. This AIN was transmitted to the NASA GPO and MMB for inclusion in the Martin GT-2 Range Safety Report. The second and final GT-2, AFMTC range safety trajectory tape and printout has been completed and is being prepared for transmittal.

DURING NEXT REPORTING PERIOD

Transmit final AFMTC Range Safety trajectory for GT-2. Continue GT-3 range safety analysis.

RELIABILITY

A study, analyzing the reliability of the Rendezvous Radar as it is affected by "on-off" cycling, was completed 16 July. Recommendations regarding use of the available redundancy in the Data Transmission System were released 29 June. A reliability evaluation of the CO_2 Partial Pressure Sensor System will be completed by 7 August 1964. Rocketdyne was visited on 16-17 July 1964. MAC was informed that Rocketdyne has established the required supplier surveillance as requested by MAC. Additional failure reporting requirements have been imposed on sub-tier suppliers for mission critical components. The entire failure reporting/failure analysis program at Rocketdyne is being changed to comply with MAC requirements. Corporate policy is still hindering rapid progress in regards to the latter. Several of the previous Qualification Test failures at Ordnance Associates were resolved but testing is still being plagued by failures causing schedules for testing and deliveries to slip. Fairchild Controls Division of Fairchild Camera and Instrument Corporation has re-evaluated its failure analysis obligations and has decided that additional activity is required. S/C 3 Single Point Failure Analysis is being completed. The reliability review (CCP 8) of the electrical schematics for S/C 5 has been completed. The review for S/C 6 is in progress. A reliability coordination visit was made to G.E. for failure analysis of Fuel Cell Section 511.

GEMINI ELECTRONICS

1. GUIDANCE AND CONTROL

1.1 SYSTEMS INTEGRATION

The following tasks were performed by the Guidance and Control Integration Group:

a) Analog interface documents 9733-10 (Radar-ADG) and 9733-13 (Computer Data Acquisition System) were completed and released.

b) Digital interface document 9314-6 (Computer-Radar) was revised and re-released.

c) G&C flight hardware and SST equipment allocation for S/C 2, 3, 3A and 4 were verified and reported.

d) Directed special DTS-Computer interface tests which were conducted by EMR. Need for additional tests is being evaluated.

e) Prepared and submitted Proposed Specification change for correction of S/C 2 GLV-Gemini interface drawings.

f) Submitted a Design Note indicating the extent of voltage and frequency stability testing that has been done on G&C equipment.

g) Prepared a study EJS to investigate additional inductive loading on the IGS static power supply.

h) Prepared an EJS for S/C 3A wiring modifications to insure adequate G&C performance during thermal qualification tests.

i) Assisted in IGS static power supply malfunction determination at IBM.

j) Started an investigation to determine a means to protect the ACPU connector pins which have voltage on them at alltimes.

k) Started an investigation to determine a method to monitor ACPU battery charge.

l) Observed PDA tests on S/C 2 ACPU.

m) Coordinated and observed qualification testing on ECS power supplies.

n) Resolved a potential quality control problem related to the 2.5 VA power supply for the Quality Gaging System.

o) Provided engineering assistance for special MAC tests on the ECS suit compressor system. These tests are continuing.

p) Provided engineering assistance for the determination of ECS coolant pump requirements for parallel pump operation. When pump requirements are established the power supply will be evaluated for compatibility.

q) Integrated MAC (St. Louis) objectives into proposed GLV-Gemini (Cape) EEI tests.

r) Conducted special EEI test at MAC on computer-GLV interface. Test results are being evaluated.

2. COMMUNICATIONS

2.1 ACQUISITION AID BEACON

RFI studies have been completed. Changes which have eliminated case and power line radiation problems will be incorporated in all future flight hardware.

2.2 ANTENNAS

HF Whip Antenna redesign complete and production units received for Static #5 and S/C 3. UHF Nose Stub Antenna for S/C 3 configuration design complete and first production unit PIAed. Qualification tests on the above two items to be completed during the next reporting period. Coax Switch connector breakdown at C-Band frequency has been found and is being evaluated. S/C #2 C-Band Switch has been treated with G300 and is satisfactory for flight. S/C 3 C-Band Switch is undergoing G300 application. C-Band Switches for S/C 4 and up disposition is not made at this time.

SCD for Antenna Support Boom DOD D-14 has been completed and discussed with DeHavilland and DOD representatives. Contractual go-ahead to DeHavilland is anticipated during the next reporting period.

2.3 ELECTRONIC RECOVERY AIDS

UHF Recovery Beacon - A failure mode of the regulator in the beacon indicates possible catestrophic failure of this device, under power interruption conditions. Further investigation and resolution is anticipated during the next reporting period.

Descent Antenna redesign is in progress and should be complete during the next reporting period.

2.4 SYSTEM INTEGRATION

The following tasks were performed by the Communications Integration Group:

a) Prepared a list of Guard Bands for the protection of communications receiver frequencies during Gemini missions.

b) Attended the following meetings:

1) Franklin Institute, Philidelphia: Discussion of RF hazards to pyrotechnics.

2) Westinghouse, Baltimore: RFI test procedure for the Rendezvous Radar and Transponder.

c) Reviewed proposed changes to the susceptibility limits in ISCD-1.

d) Preparations are being made to conduct additional RF compatibility tests at the antenna tower. Results should be available during the next reporting period.

e) Prepared Memo No. 411A-133-4651 on Static #3 Adapter Separation Test. This memo defines the test configuration and procedure for the communications system during this test.

f) Insulation strips were added to the bottom of the case of the 5015A Time Stability tester to prevent shorting of components to the case. Work was done per Corrective Action Request No. 10364N.

INSTRUMENTATION SYSTEM

1. Design

1.1 A orifice has been added to the 52-88705-431 pressure transducer to limit flow in case of transducer bellows failure; primarily on the coolant pump differential pressure installation. The unit has been redesigned as -437.

1.2 Released the following new drawings:

1.2.1 Spacecraft equipment

52-88650, Dynaplex multicoder mounting adapter.

1.2.2 AGE

52E440068, Test set electronic unit, Experiment 4 and 9.
52E440069, Experiment test set tape recorder.
52D440346, Tape recorder test set harness assembly.
52D440347, Tape recorder test set.
52D440348, Electronic unit, Experiment-test set.
52D440349, Time ref. system simulator assembly.
52D440350, Electronic unit, Experiment-test set.
52D440351, Cable entry box-telemetry ground support.
52D440352, Timing distribution system.

1.3 Released the following changes against spacecraft equipment:

EO vs 52-88102, Incorporates signal conditioner for suppression of noise introduced by the calibration signal.

EO vs 52-88311, Incorporates printed circuit assemblies for noise suppressor signal conditioners.

EO vs 52-88101,
EO vs 52-88102
EO vs 52-88252
Removes superflous material from around threaded inserts of Becon connectors, eliminating possible source of electrical failure.

2. CIMU

2.1 The capability of the FTD ground station to synchronize on master frame data with inputs to the bio-med channels open was checked. Synchronization was satisfactory due to noise causing transitions in the open channels. If no transitions occur, sync is inadequate.

2.3 The reason for faulty or inadequate synchronization on delayed time formats is under investigation.

3. PIA

3.1 Revised edition of SEDR PIA 320 distributed with PCN 1 through 51 incorporated.

3.2 Released PCN 52 and 53 for incorporation to SEDR PIA 320 with the following procedures and revisions enclosed.

52-88721-3, -13, -17, -23, -33, -41, -45, -49, -51, -53, -55, -57, -59, -67 temperature sensors (revised to incorporate weight changes)

52-88226-11 Relay spike suppressors.

3.3 Released SEDR PIA 322 (Instrumentation system for the DOD/NASA Gemini Experiments) for NAC/NASA approval. The following test procedures have been incorporated:

3.3.1 Experiments D4 and D7.

AF68004 Electronic unit, AF68012 Tape transport, AF68011 Record Electronics

3.3.2 Experiments D1, D2 and D6.

52-88118 Questar lens, 52-88121 telescope, 52-88119 - 200mm lens.
52-88119 Nikkor 200mm F/40 lens.
52-88117 35mm single lens reflex camera.
52-88118 1400mm Questar lens.

3.3.3 Experiment D8

AVCO tissue equivalent ionization chamber (model 453)

3.4 A total 112 items of flight hardware were tested this reporting period. 105 items successfully passed PIA and 11 items rejected.

3.5 Prepared and completed readiness tests on the 52E440069 tape recorder test set, and the 52E440068-1 electronics unit test set required for the DOD/NASA Experiments.

4. Experiments D-1, D-2 and D-6.

4.1 The following hardware has been received, but is not yet modified:

5 Nikkor 200mm lenses.
4 Zeiss [illegible] lenses.
10 Zeiss [illegible] lenses.

4.2 All engineering, except for a periscope redesign is complete. The periscope drawings are expected to be released by 6 August.

STRENGTH

PROGRESS - Laboratory study of titanium cracks continued per T.R. 052-017.44 - cracks were successfully produced adjacent to seam welds - application to Gemini program being evaluated...Completed redesign of thermal curtain for aft end of adapter...Initiated tests for adapter shell dynamic response and measurement of stresses due to dynamic loads...Study of methods to improve OAMS module back-up structure in its vibration environment was completed - changes are deferred subject to results of additional testing...Radiographic inspection was deleted from P.S. 22607 (In-Place Brazing of Tubes) - pressure test of in-process control specimens was added...Tests verified that flared 5052 SO lines in coolant system are unaffected by Invelo 33F lubricant applied to the B nut threads prior to torque...Completed studies mounting sunshade and re-locating docking cone lights to TDA...Released TDA damper drawings for corrected metering characteristics as result of development tests...Test set-up and instrumentation for TDA stiffness test practically completed...Sled shot #7 (re-entry ejection condition) successfully run...Initiated detail design of ballute load support sling...Released elbow support structure...Completed structural coordination with AMAL and release of adapter drawings for centrifuge trainer...Redesigned and released control mechanism for cabin air recirculation valve to reduce pilot effort and improve structural integrity.

PROBLEMS ENCOUNTERED - Inspection of the titanium and stainless steel braze joint in the RCS/OAMS system revealed penetrant indications in the braze fillet - fillet being reworked to remove indications - problem under investigation...Cracks were sustained in the heat shield upon test of pyrotechnic separation of re-entry module and adapter - Initial evaluation concluded that sufficient force was generated by pyrotechnics to drive the adapter ring vertical flange, locally, against shield - flange will be locally removed and the test re-run.

PYROTECHNICS

A. SEPARATION ASSY FLSC

1. During Report Period - Completed development testing on new shaped boosters for the -141 assy and redesigned the end seals of the shaped charges. Resumed qualification testing on the -141 assy on 24 July.
   Conducted similar development tests on boosters for the -107 assy. Flat boosters appear to be better than the shaped boosters in the -107 assy. Changed the two end detonators on the -141 & -107 assy to single circuit detonators & eliminated the machining on unused keyways.
2. Problems Encountered - Encountered autoignition problem during soldering end caps on explosive interconnects. Changed solder. New solder has a slightly lower melting point which allows them to solder with less chance of autoigniting the interconnect.

B. ROCKET CATAPULT

1. During Report Period - Investigation of shear pin failure and corrective action. TWX to proceed with qual test. S.C.D. initiation requirements revised to include high pressure initiation firings.

C. Z100.75 SEPARATION ASSY

1. During Report Period - Solved problem on cartridge failure due to vibration. Installing phenolic pin to support ignition mix disc thus eliminating vibration problems. Completed fabrication of cutter assys for qual test. Fired five shots prior to failure of mid span bolts & end bolt. Informed O.A. that the machining of the unused keyways shall be eliminated on detonators instead of crimping them.
2. Problems Encountered - The mid span bolts & end bolt failed in test at MAC, O.A. trying to simulate failure to determine cause. Ran four tests on cutters with no failure on bolts.

D. R & R SEPARATION ASSY

1. During Report Period - Investigating H.T. Failure. H.T. requirements revised.

E. WIRE BUNDLE GUILLOTINE

1. During Report Period - Investigating vibration failure and proposed means to prevent ignition mix disc movement by incorporating a phenolic pin. Initiated action to incorporate single circuit, single bridge wire cartridges.

F. M.D.F. INITIATION SYSTEM

1. During Report Period - The entire system was installed and fired on Sled #7 to activate the entire abort sequency. Added a plug to replace the electrical detonator. The -5 manual firing mechanism has been broken down for installation and shipment into an interconnect manifold and a manual initiator.

G. LANDING GEAR SYSTEM PYRO DEVICES

1. During Report Period -

(a) JOS 306-5-4 dated 7/7/64 authorized stop work on all paraglider pyro devices except for items to be shipped to NASA.

(b) O.E.A. proceeding with work only on the units to be shipped to NASA.

H. HORIZON SCANNER RELEASE ASSY

1. During Report Period - Problem of time delay burn through resolved & hardware (cartridges) being fabricated for qual and delivery. Single circuit cartridges in work.

I. HORIZON SCANNER FAIRING RELEASE ASSY

1. During Report Period - Qual report submitted and approved by MAC. Re-designed actuator housing is in fabrication. Single circuit cartridge is in work at OEA.

GEMINI GUIDANCE AND CONTROL MECHANICS

1. ATTITUDE CONTROL: An analog computer study of attitude control system tolerance effects on the S/C-2 mission was performed. It was shown that present Spacecraft System Tests will assure satisfactory attitude control performance. The retrograde attitude - hold task was simulated for evaluation by Astronauts Grissom, Stafford, and Young. Good capability was demonstrated and these results will be included in a summary design note of retro attitude hold studies. The results of 3-axis table tests of the inertial platform response to transients were summarized in Design Note 197. It was shown that for transient inputs far in excess of those expected during launch guidance switchover, the inertial element remains undisturbed.

2. ASCENT GUIDANCE: A hybrid digital-analog simulation of the ascent phase was partially checked out. Interfacing of the Manual Data Insertion Unit and Incremental Velocity Indicator with the digital computer is the most significant remaining task.

   The ability of the IGS to control the launch vehicle during and after guidance switchover is being studied by an all-digital simulation of combined RGS-IGS guidance. Times of switchover were established by simulating GIV gyro drift rates in conjunction with switchover boundaries specified by Martin - Marietta. It is now planned to continue the switchover studies using these initial conditions.

   Modifications to the existing launch guidance deck were completed in order to evaluate the new orbit adjust routine specified in computer Math Flow 6.

3. RE-ENTRY: A "Constant bank angle" guidance sensitivity study was initiated to determine how closely the closed-loop system follows open-loop bank angle profiles. Several targets are being examined.

A GT-3 orbital ephemeris was generated along with the retrograde times required to land in the three designated landing areas at the end of the first, second and third orbits. Data are currently being obtained to establish target locations such that a constant roll rate will not be commanded until late in the re-entry. The production runs on the hybrid re-entry simulation were completed and a summary of the results is in preparation.

PROPULSION SYSTEM

1. SOLID PROPELLANT ROCKET MOTORS

Hatch Actuator - Design of the backup breech-grain assembly has been completed and metal parts fabrication initiated. Ballistic characterization of the propellant (TP-L-3014A) will be concluded during the next report period. Hatch actuator tests, incorporating the analytically determined optimum orifice configuration and the backup breech-grain assembly, will follow ballistic characterization.

AGE

PROGRESS

1. EO extension drawing prepared and released modifying the pallet weld assy of 52E040087-1 ejection seat c/o fixture. This is part of the effort to simplify the design of the fixture to expedite manufacturing and reduce cost.
2. The rod end design of 52E400015-1 S/C hatch support was changed making it compatible with the S/C hatch fitting.
3. The design effort on 52E040094-1 hatch actuator test fixture was continued. The layout for the high pressure suit case was completed and the detail drawings started.

PROBLEMS

1. Recent changes to the ejection seat catapult end cap necessitate that a mod kit be provided to update the 52E180023-1 catapult guide tools already delivered.
2. Additional special spark-proof safety tools must be made part of the 52E400003-1 pyro safety tool kit. The existing kit cannot accommodate all ejection seat pyrotechnics.

GEMINI MANUFACTURING WORK PLAN - SPACECRAFT NO. 2

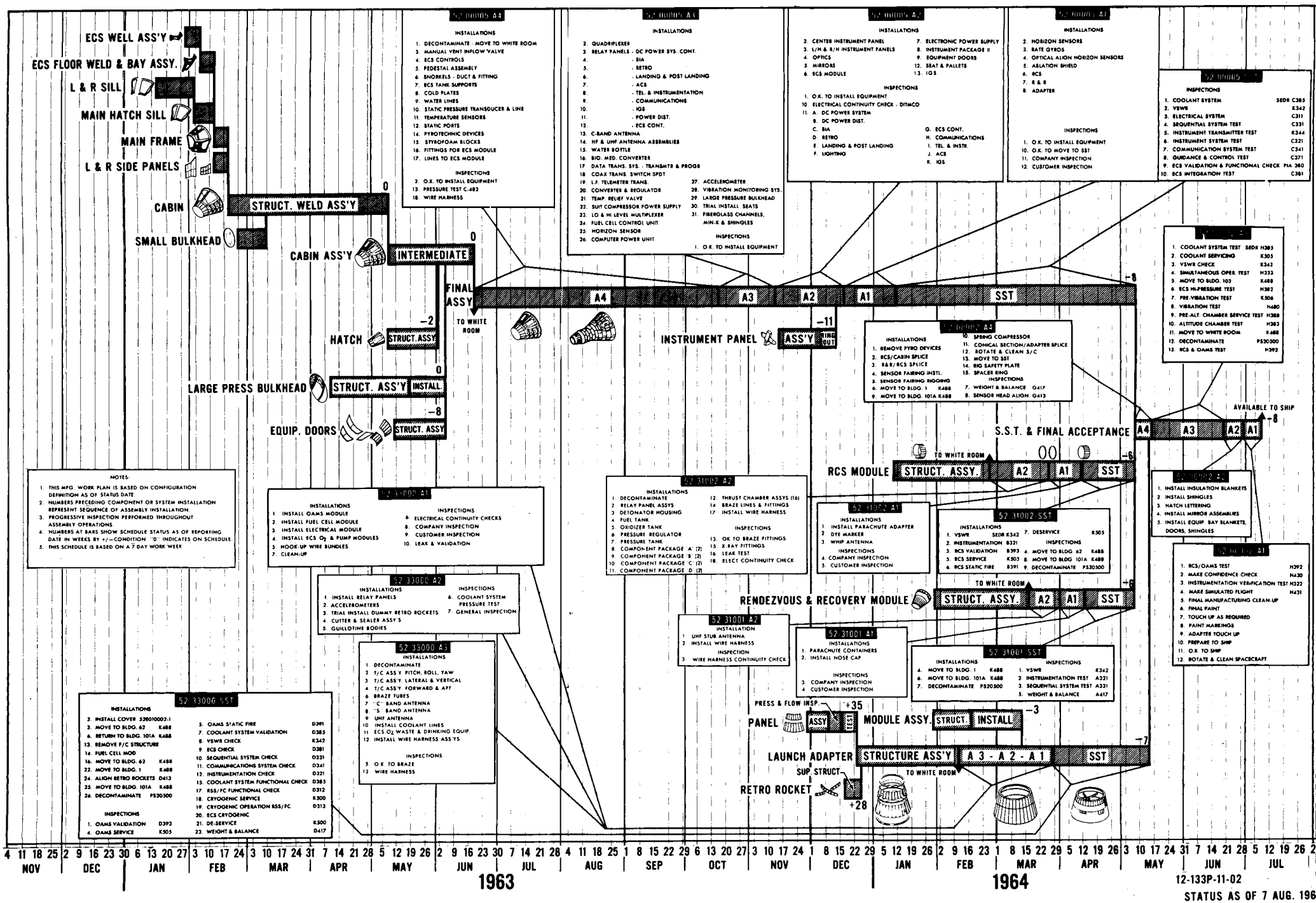

12-133P-11-02

STATUS AS OF 7 AUG. 196

SPACECRAFT 2

EQUIPMENT STUDY

LEGEND: ▽ WILL SHIP
▼ ACTUAL SHIPPED

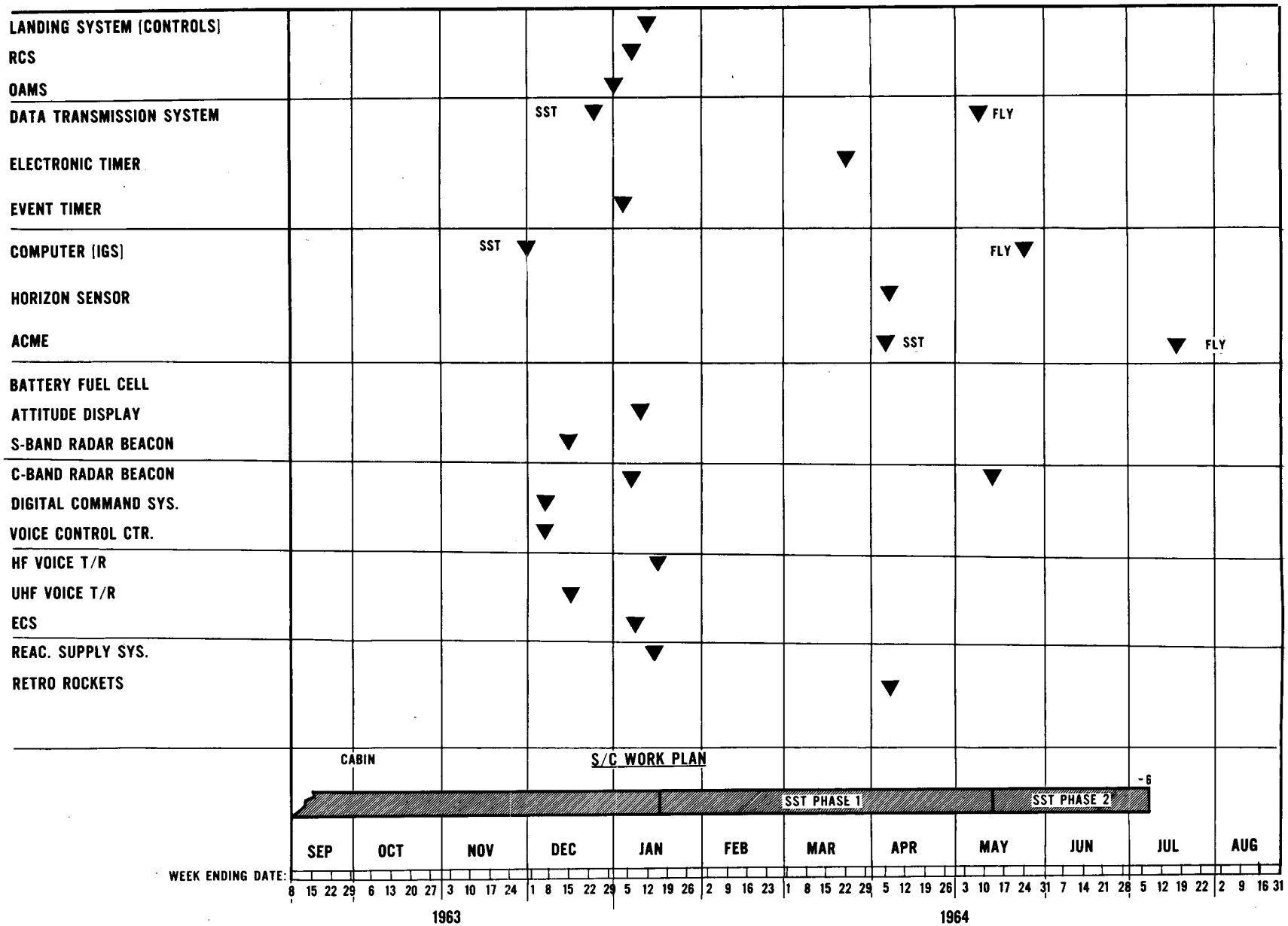

STATUS AS OF 7 AUG. 1964

S/C 2 SCHEDULE
MATE TO DELIVERY

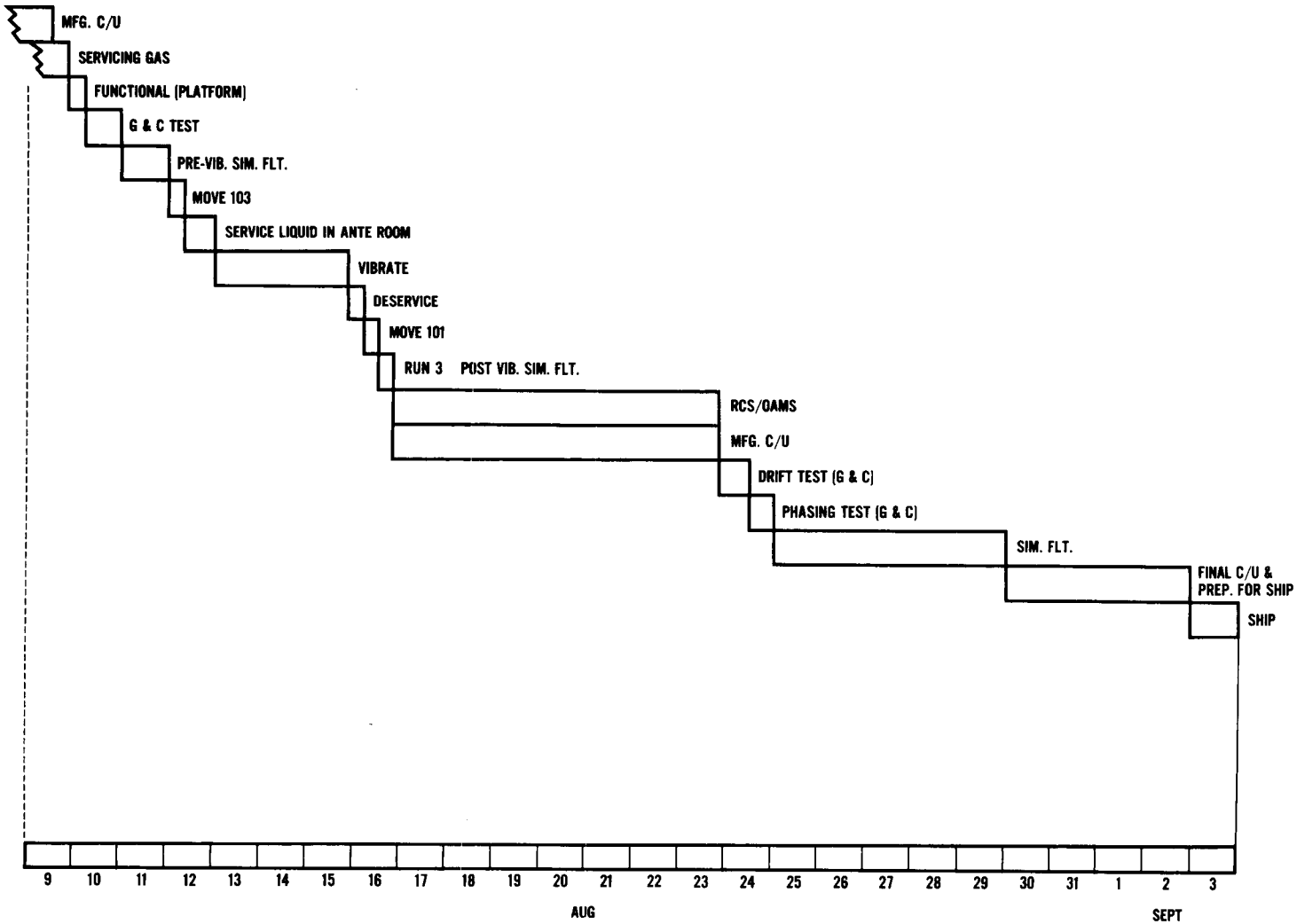

STATUS AS OF 7 AUG 1964

S/C-2 SCHEDULE
CAPE OPERATION

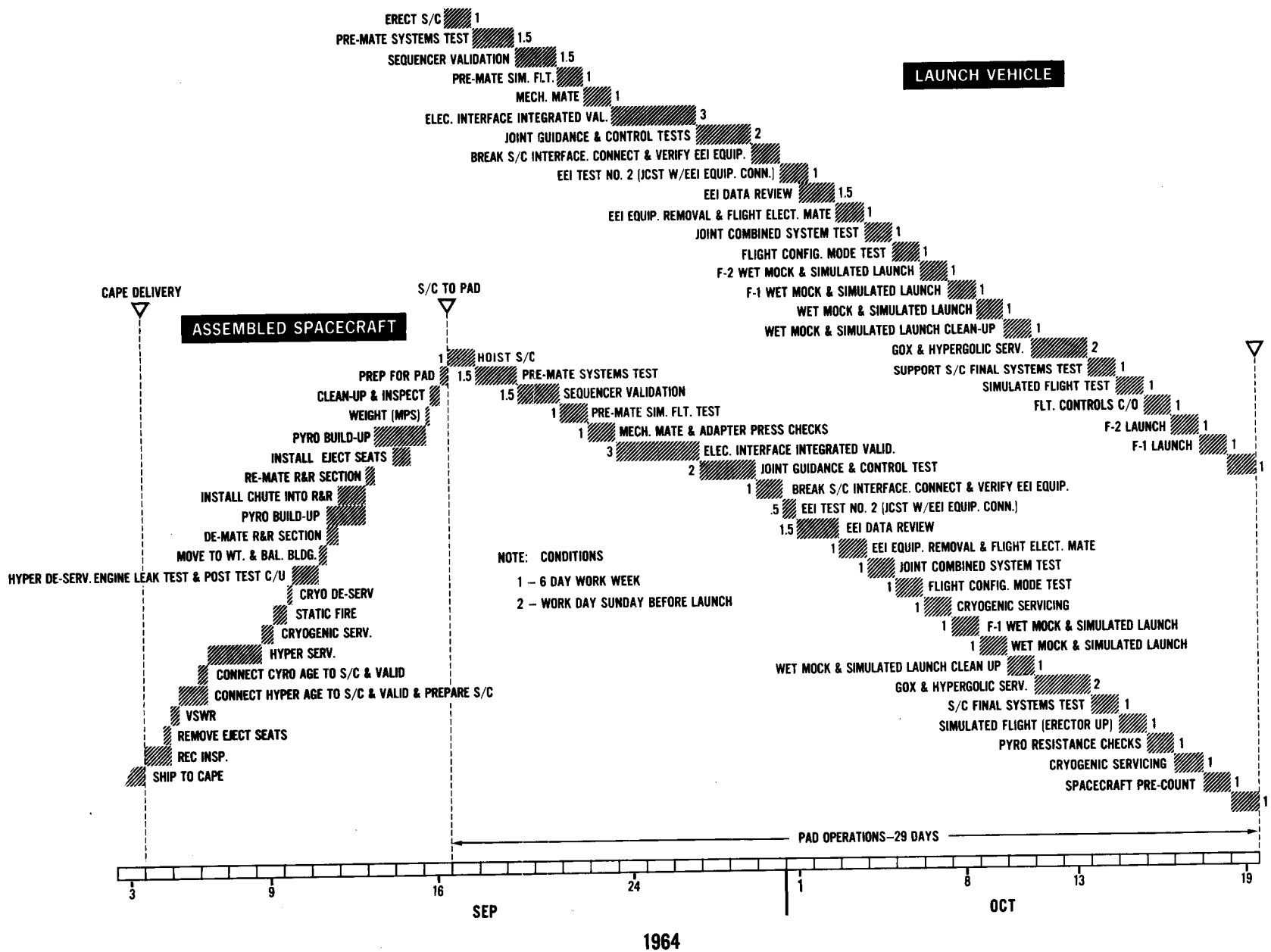

STATUS AS OF 7 AUG. 1964

SPACECRAFT NUMBER TWO

SUBJECT: GEMINI STATUS REPORT FOR THE PERIOD FROM 11 JULY 1964 THRU 7 AUGUST 1964

RECAPITULATION

ASSEMBLED SPACECRAFT

SCREEN ROOM

1. Separation rate control relay panel and wiring incorporated (EJS 3138)
2. Mounting screws changed in rate Gyro Packages.
3. Horizon Sensor PIA'ed and installed.
4. Test vibration pick ups (Culton) removed.
5. Cable-up and run simultaneous operations (SEDR H 433-2) complete and accepted.
6. Inlet snorkel deactivation complete and accepted.
7. Female cartridge threads inspected for being oversize on all 72706 Guillotines and accepted.
8. Hydrogen control valve replaced on Fuel Cell Module and accepted
9. Cutter Sealer 72712-6-10 installed and accepted.
10. Identification of adapter doors per EJS 3057 complete and accepted
11. Deactivation of telelights complete and accepted.
12. Flight pellet installation complete and accepted.
13. ACE and OAME replaced and accepted.
14. Ballast change R/H Gear Well and R & R Module complete and accepted.
15. Outflow snorkel deactivation complete and accepted.
16. Safety Pin storage (EJS 2977) complete and accepted.
17. Flight computer installation complete and accepted after the unit was returned to vendor for repair.
18. Squib Simulators installed and accepted.
19. Powered Commutator sandal number 2 installed and accepted
20. Fuel Cell Dummy Load panel per EJS 3152 complete and accepted.

SPACECRAFT NUMBER TWO

SUBJECT: GEMINI STATUS REPORT FOR THE PERIOD FROM 11 JULY 1964 THRU 7 AUGUST 1964

21. Integrated Systems Test per SEDR 495-2 runs one and two completed.

22. Auxiliary Computer Power Unit serial number 100 with Babcock relay modification installed and accepted.

23. Chute can modification per EJS 3004 complete and accepted.

24. Guidance and Control (SEDR H 371-2) complete less retest for Incremental Velocity Indicators and Inertial Platform problems.

25. Inertial Platform returned to vendor for rework.

26. Integrated Systems Test per SEDR 495-2 run five completed.

27. Decable, move to White Room and go vertical complete.

WHITE ROOM

1. Demate R & R.

2. Jumper Bundle installed and accepted.

3. Inversion Bridle installed and accepted.

4. Umbilical water proofing complete and accepted.

5. Instrumentation cards replaced in Instrumentation Packages Number One and Number Two.

6. Flipper Doors installed.

7. Rip out covers installed and accepted.

8. Functional check of hoist loop and flashing light complete and accepted.

9. Green Pot Thrust Chamber Assembling per EJS 3007 installed and accepted.

10. Tip Plug installed per EJS 2975 and accepted.

11. Shield Squib Wire Bundle installation per EJS 3169 complete and accepted.

SPACECRAFT NUMBER TWO

SUBJECT: GEMINI STATUS REPORT FOR THE PERIOD FROM 11 JULY 1964 THRU 7 AUGUST 1964

SUMMARY OF SCHEDULE POSITION

1. The assembled spacecraft is eight (8) weeks behind schedule due to equipment failures during testing.

FORECAST

The following events are scheduled for accomplishment during the next thirty day period:

ASSEMBLED SPACECRAFT

WHITE ROOM

1. Big flipper doors; mate R & R.
2. Install shingles, doors and thermocouples on cabin and RCS Modules
3. Cabin Valve and Leak Check.
4. Mate R & R Module.
5. Complete EJS 3170 insulation on MDF Ring.
6. Install shingles and thermocouple on RCS Module.

SCREEN ROOM

1. Complete Guidance and Control upon receipt of Inertial Platform.
2. Integrated Systems Test runs three and four.
3. Move to Building 103
4. SEDR K 506-2 previbration servicing.
5. SEDR K 490-2 vibration.
6. Cabling and Integrated Systems Test per SEDR 495-2 run three
7. SEDR K 392-2 RCS/OAMS Test.
8. Guidance and Control Mating test.
9. SEDR K 341 Simulated Flight.
10. Final clean-up and preparation for shipment.

CONSTRAINING PART SHORTAGES AND POTENTIAL PROBLEM AREAS

1. No [illegible]

GEMINI MANUFACTURING WORK PLAN—SPACECRAFT NO. 3

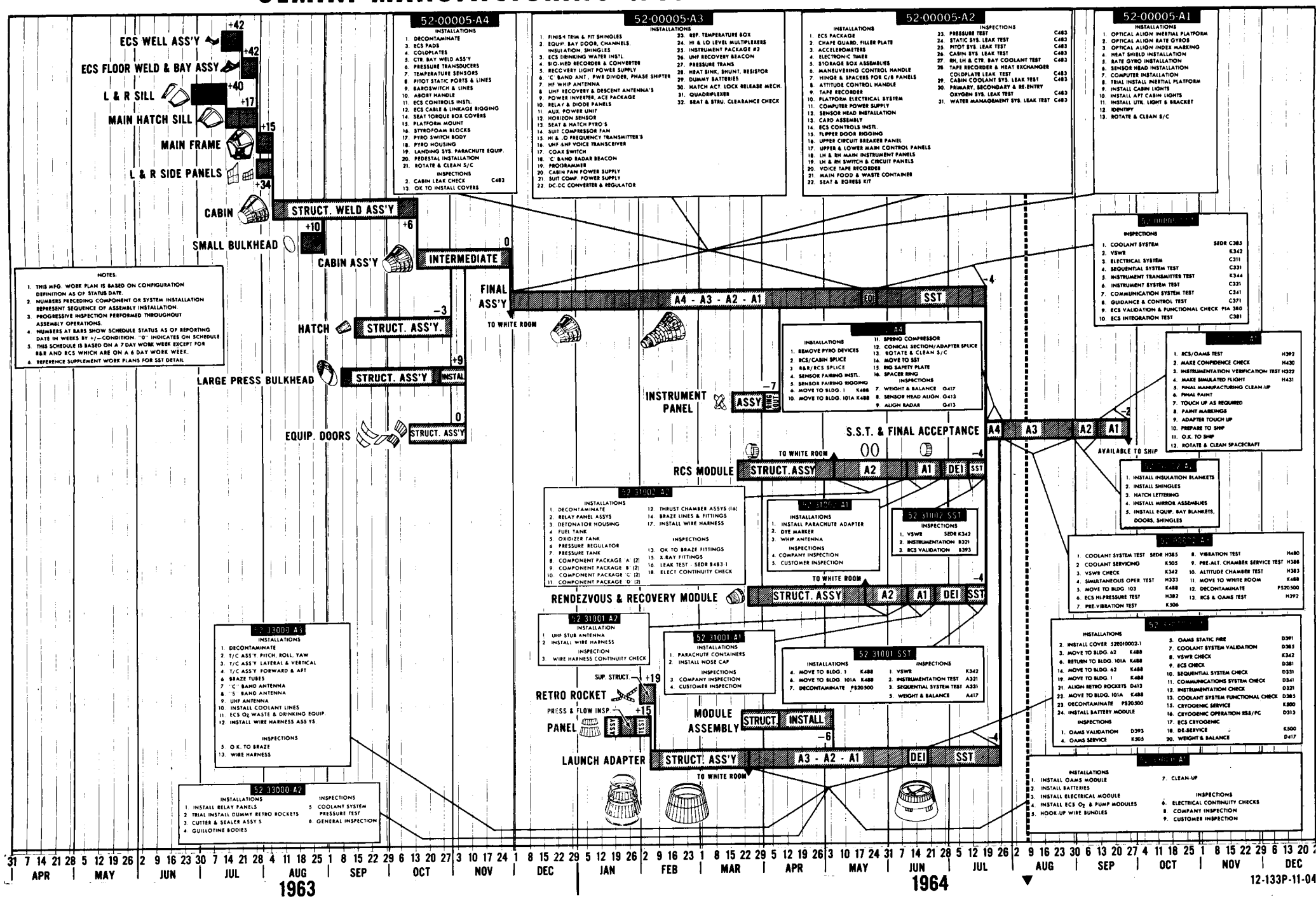

GEMINI SPACECRAFT NO. 3
EQUIPMENT STUDY

LEGEND: ▽ WILL SHIP
▼ ACTUAL SHIP

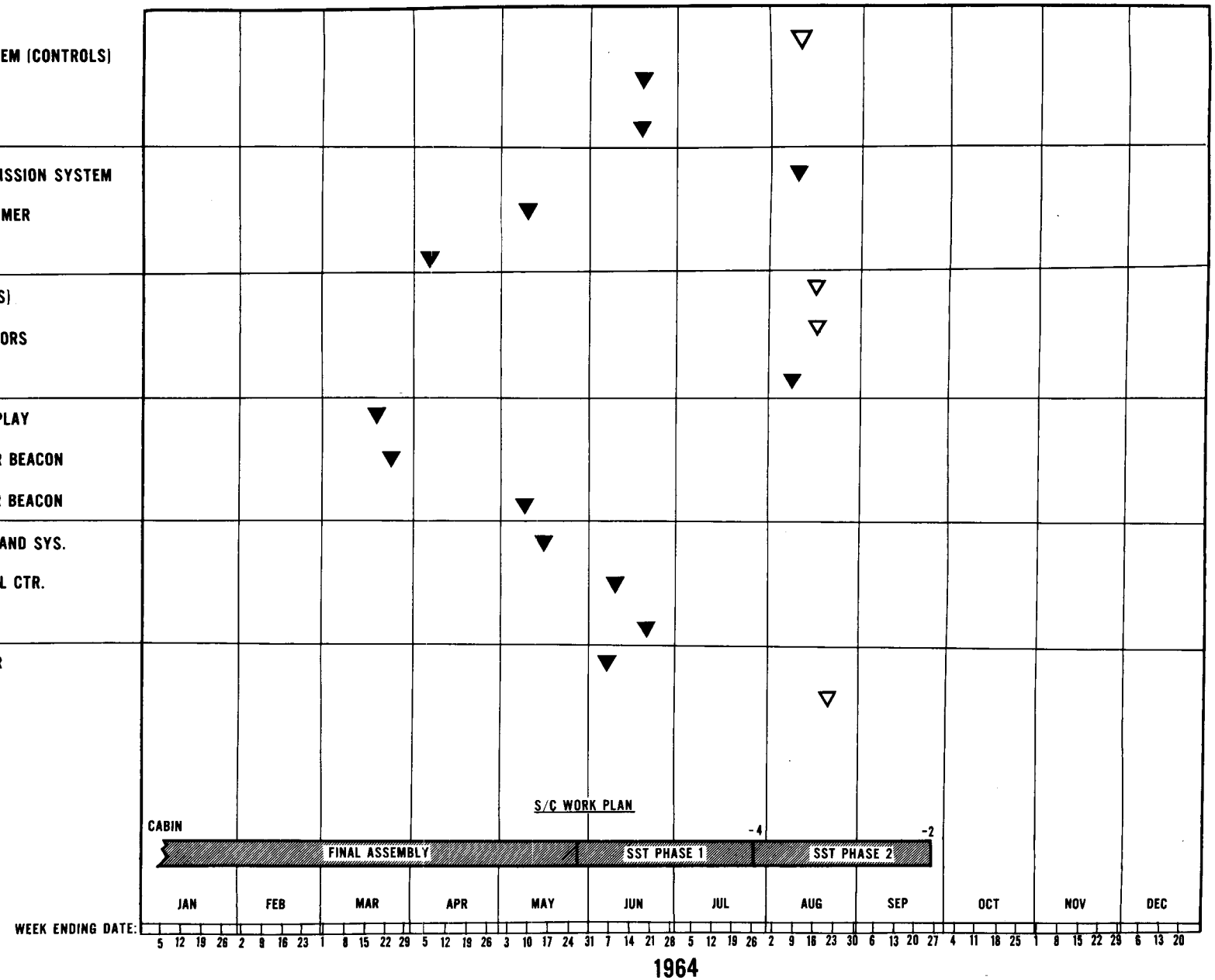

STATUS AS OF 7 AUG. 1964

S/C 3 SCHEDULE

SST TO DELIVERY

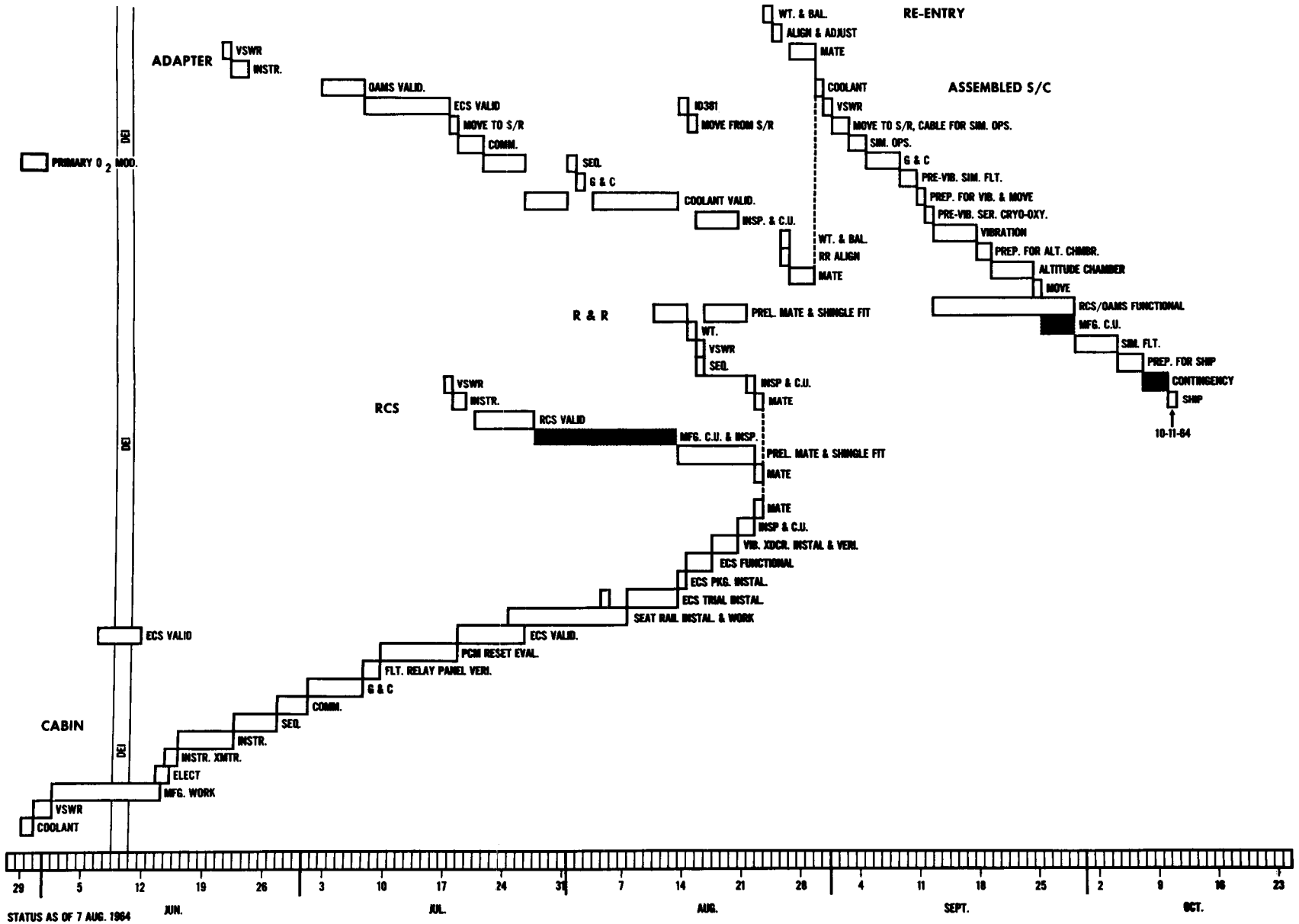

S/C 3 SCHEDULE

CAPE OPERATION

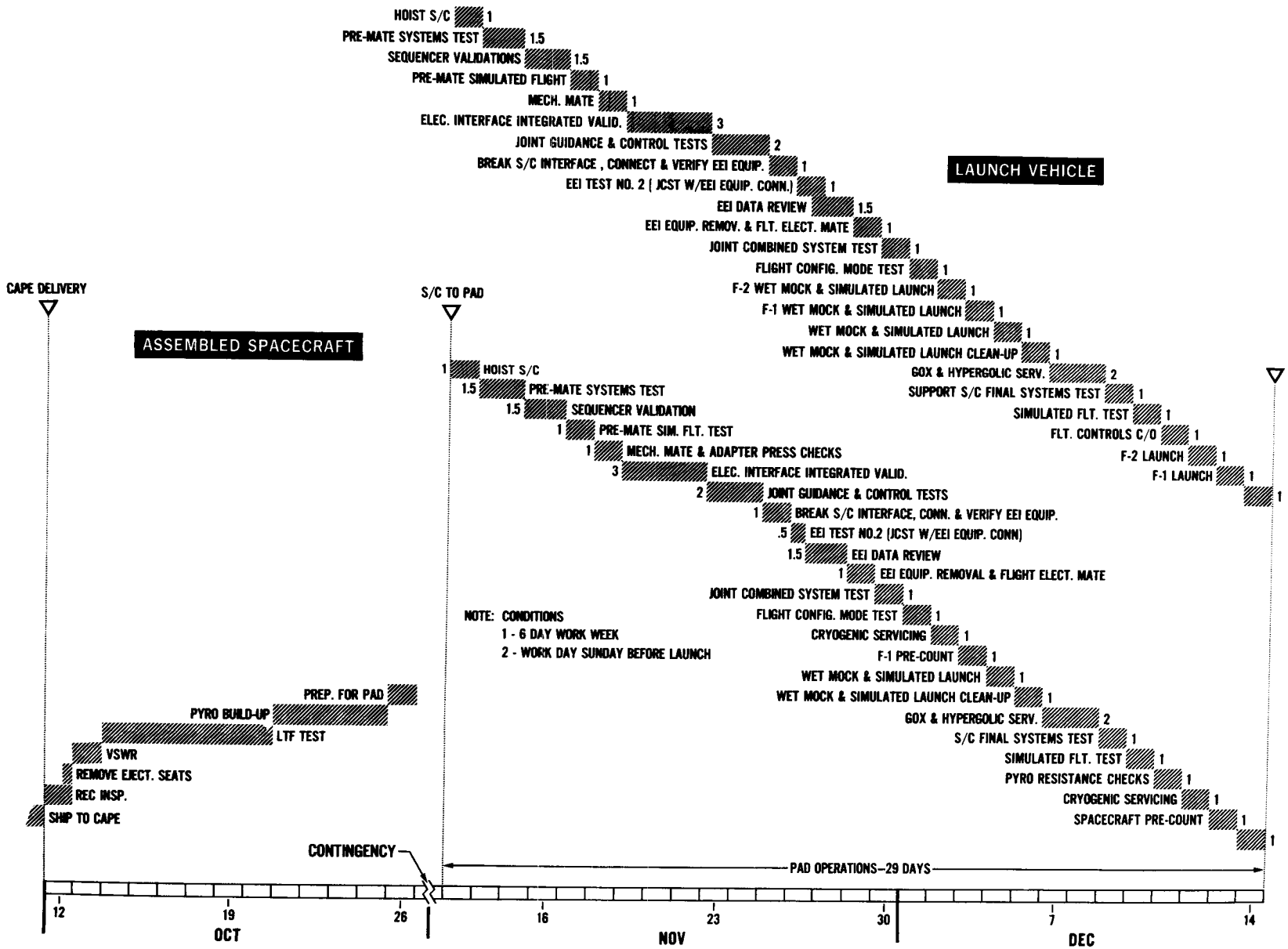

STATUS AS OF 7 AUGUST 1964

S/C NO. 3 WORK PLAN FINAL ASSEMBLY

1964

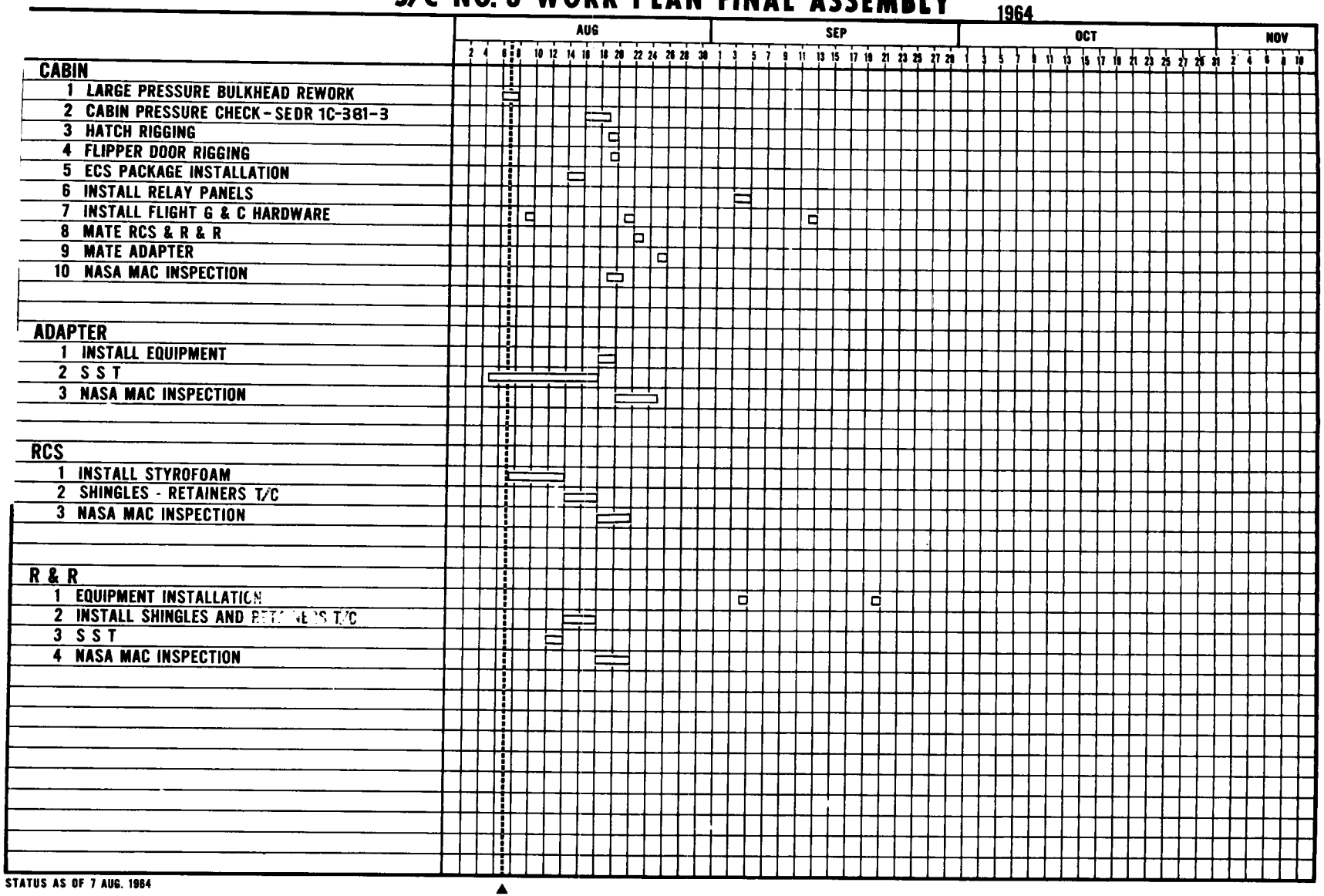

STATUS AS OF 7 AUG. 1964

GEMINI ZONE CHART

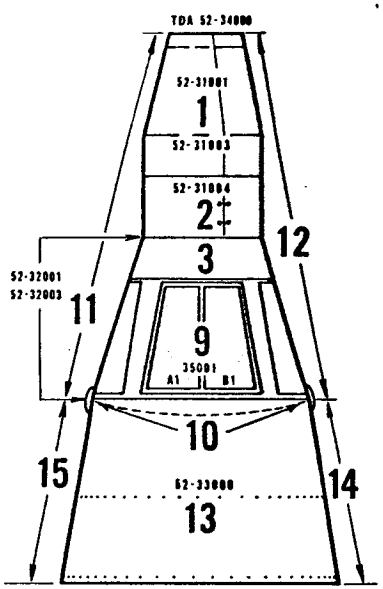

TOP VIEW

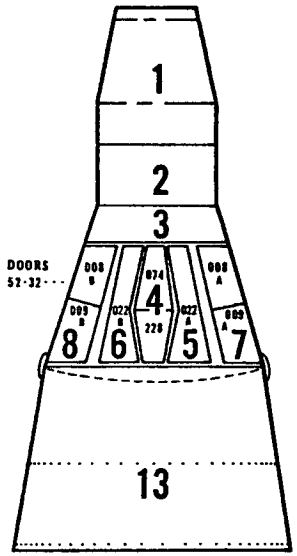

BOTTOM VIEW

1. RENDEZVOUS AND RADAR MODULE
2. RE-ENTRY RCS MODULE
3. FORWARD AREA CONE
4. CENTER EQUIPMENT BAY
5. L/H LANDING GEAR BAY
6. R/H LANDING GEAR BAY
7. L/H EQUIPMENT BAY
8. R/H EQUIPMENT BAY
9. CREW PRESSURIZED AREA
10. EXTERIOR AREA OF LARGE PRESS. BULKHEAD
11. SPACECRAFT EXTERIOR L/H
12. SPACECRAFT EXTERIOR R/H
13. INTERNAL ADAPTER AREA
14. R/H EXTERNAL ADAPTER AREA
15. L/H EXTERNAL ADAPTER AREA
16. ZONE FOR ENTIRE SPACECRAFT

GEMINI SPACECRAFT NO. 3

ZONE NO. 9

TOTAL EQUIPMENT REQUIRED 123

EQUIPMENT ON HAND 112

EQUIPMENT TO SCHEDULE 0

EQUIPMENT LATE 11

PART NO.	PART NAME	NORM. INST.	SLACK	DEF. INST.	SLACK	HOURS TO INSTALL
82320-603	BACKBOARD (2)	00005 -A2	-7	00002 -A3	0	16
87717-33	STATIC POWER	00005 -A2	-7	00002 -A3	0	2
CBS HRS 200	VOICE TAPE REC.	00005 -A3	-7	00005 -SST	0	2
87713-9	MANUAL DATA READ.	00005 -A3	-14	00002 -A3	0	2
87723-9	AUX. COMPUTER	00005 -A3	-14	00002 -A3	0	6
87713-7	MANUAL DATA KEY.	00005 -A3	-14	00002 -A3	0	2
87712-9	INCREMENT VEL. IND.	00005 -A3	-14	00002 -A3	0	2
82044-307-3	L/H EGRESS KIT	00005 -A2	-7	00002 -A3	0	8
82044-308-3	R/H EGRESS KIT	00005 -A2	-7	00002 -A3	0	8
61365-309	ATT. CONT. HND.	00005 -A2	-5	00005 -SST	0	3

GEMINI ZONE CHART

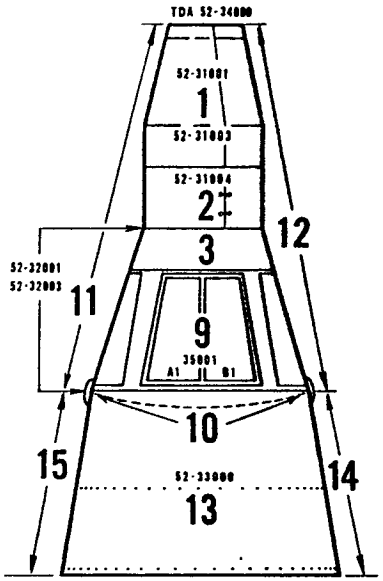

TOP VIEW

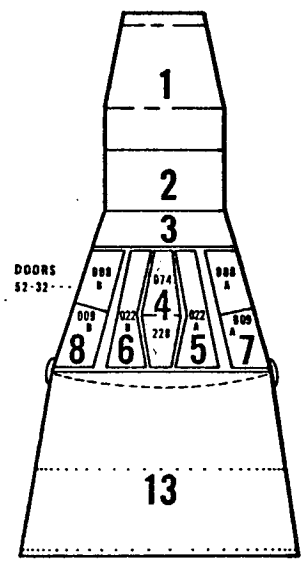

BOTTOM VIEW

1. RENDEZVOUS AND RADAR MODULE
2. RE-ENTRY RCS MODULE
3. FORWARD AREA CONE
4. CENTER EQUIPMENT BAY
5. L/H LANDING GEAR BAY
6. R/H LANDING GEAR BAY
7. L/H EQUIPMENT BAY
8. R/H EQUIPMENT BAY
9. CREW PRESSURIZED AREA
10. EXTERIOR AREA OF LARGE PRESS. BULKHEAD
11. SPACECRAFT EXTERIOR L/H
12. SPACECRAFT EXTERIOR R/H
13. INTERNAL ADAPTER AREA
14. R/H EXTERNAL ADAPTER AREA
15. L/H EXTERNAL ADAPTER AREA
16. ZONE FOR ENTIRE SPACECRAFT

GEMINI SPACECRAFT NO. 3

ZONE NO. 4

TOTAL EQUIPMENT REQUIRED 32

EQUIPMENT ON HAND 32

EQUIPMENT TO SCHEDULE 0

EQUIPMENT LATE 0

PART NO.	PART NAME	NORM. INST.	SLACK	DEF. INST.	SLACK	HOURS TO INSTALL

GEMINI ZONE CHART

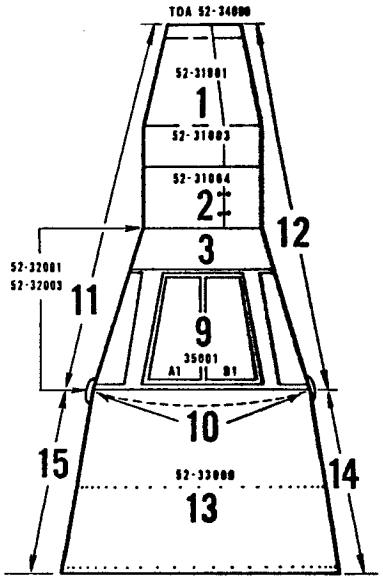

TOP VIEW

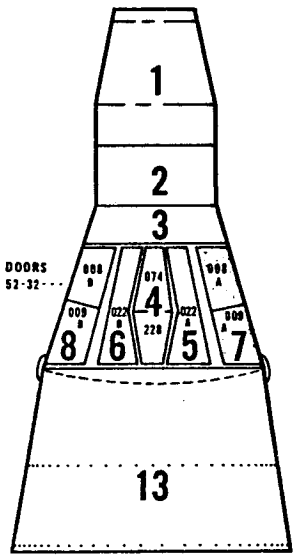

BOTTOM VIEW

1. RENDEZVOUS AND RADAR MODULE
2. RE-ENTRY RCS MODULE
3. FORWARD AREA CONE
4. CENTER EQUIPMENT BAY
5. L/H LANDING GEAR BAY
6. R/H LANDING GEAR BAY
7. L/H EQUIPMENT BAY
8. R/H EQUIPMENT BAY
9. CREW PRESSURIZED AREA
10. EXTERIOR AREA OF LARGE PRESS. BULKHEAD
11. SPACECRAFT EXTERIOR L/H
12. SPACECRAFT EXTERIOR R/H
13. INTERNAL ADAPTER AREA
14. R/H EXTERNAL ADAPTER AREA
15. L/H EXTERNAL ADAPTER AREA
16. ZONE FOR ENTIRE SPACECRAFT

GEMINI SPACECRAFT NO. 3

ZONE NO. 7

TOTAL EQUIPMENT REQUIRED 47

EQUIPMENT ON HAND 42

EQUIPMENT TO SCHEDULE 0

EQUIPMENT LATE 5

PART NO.	PART NAME	NORM. INST.	SLACK	DEF. INST.	SLACK	HOURS TO INSTALL
87703-313	ELECT. POWER	00005 -A3	-9	00002 -A3	0	2
87710-7	COMPUTER	00005 -A1	-9	00002 -A3	0	2
87717-25	INERT. PLATFORM	00005 -A1	-9	00002 -A3	0	2
87717-31	GIMBAL ELECT.	00005 -A2	-12	00002 -A3	0	3
87717-13	SYS. ELECT.	00005 -A2	-14	00002 -A3	0	2

GEMINI ZONE CHART

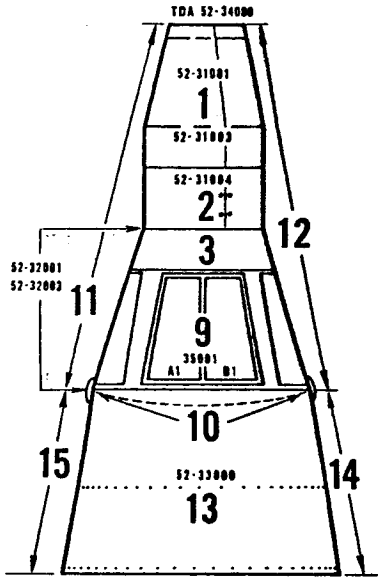

TOP VIEW

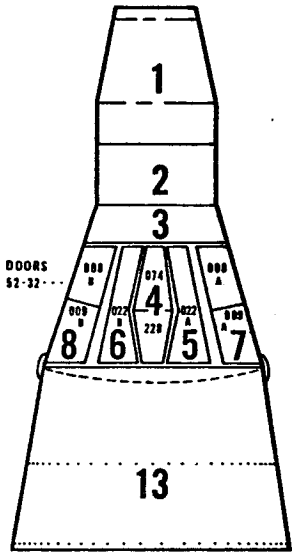

BOTTOM VIEW

1. RENDEZVOUS AND RADAR MODULE
2. RE-ENTRY RCS MODULE
3. FORWARD AREA CONE
4. CENTER EQUIPMENT BAY
5. L/H LANDING GEAR BAY
6. R/H LANDING GEAR BAY
7. L/H EQUIPMENT BAY
8. R/H EQUIPMENT BAY
9. CREW PRESSURIZED AREA
10. EXTERIOR AREA OF LARGE PRESS. BULKHEAD
11. SPACECRAFT EXTERIOR L/H
12. SPACECRAFT EXTERIOR R/H
13. INTERNAL ADAPTER AREA
14. R/H EXTERNAL ADAPTER AREA
15. L/H EXTERNAL ADAPTER AREA
16. ZONE FOR ENTIRE SPACECRAFT

GEMINI SPACECRAFT NO. 3

ZONE NO. 11

TOTAL EQUIPMENT REQUIRED 2

EQUIPMENT ON HAND 1

EQUIPMENT TO SCHEDULE 0

EQUIPMENT LATE 1

PART NO.	PART NAME	NORM. INST.	SLACK	DEF. INST.	SLACK	HOURS TO INSTALL
87703-311	HORIZON SENSOR (1)	00005 -A1	-6	00002 -A3	0	2

GEMINI ZONE CHART

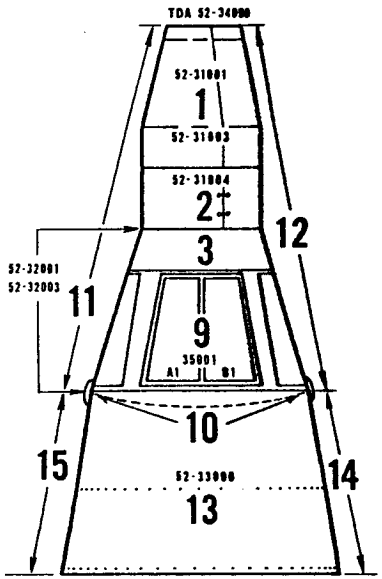

TOP VIEW

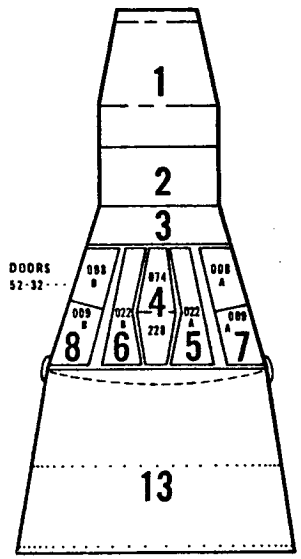

BOTTOM VIEW

1. RENDEZVOUS AND RADAR MODULE
2. RE-ENTRY RCS MODULE
3. FORWARD AREA CONE
4. CENTER EQUIPMENT BAY
5. L/H LANDING GEAR BAY
6. R/H LANDING GEAR BAY
7. L/H EQUIPMENT BAY
8. R/H EQUIPMENT BAY
9. CREW PRESSURIZED AREA
10. EXTERIOR AREA OF LARGE PRESS. BULKHEAD
11. SPACECRAFT EXTERIOR L/H
12. SPACECRAFT EXTERIOR R/H
13. INTERNAL ADAPTER AREA
14. R/H EXTERNAL ADAPTER AREA
15. L/H EXTERNAL ADAPTER AREA
16. ZONE FOR ENTIRE SPACECRAFT

GEMINI SPACECRAFT NO. 3

ZONE NO. 3

TOTAL EQUIPMENT REQUIRED 44

EQUIPMENT ON HAND 44

EQUIPMENT TO SCHEDULE 0

EQUIPMENT LATE 0

PART NO.	PART NAME	NORM. INST.	SLACK	DEF. INST.	SLACK	HOURS TO INSTALL

GEMINI ZONE CHART

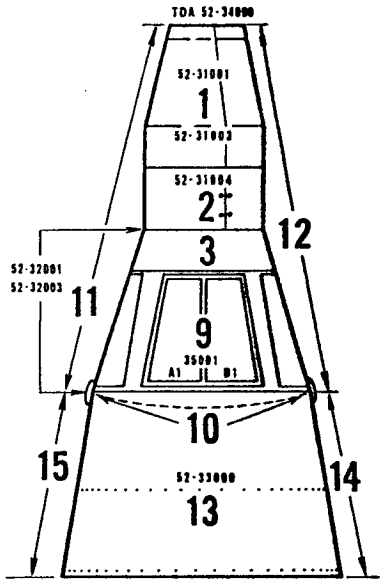

TOP VIEW

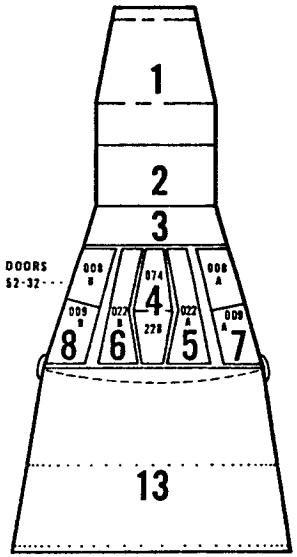

BOTTOM VIEW

1. RENDEZVOUS AND RADAR MODULE
2. RE-ENTRY RCS MODULE
3. FORWARD AREA CONE
4. CENTER EQUIPMENT BAY
5. L/H LANDING GEAR BAY
6. R/H LANDING GEAR BAY
7. L/H EQUIPMENT BAY
8. R/H EQUIPMENT BAY
9. CREW PRESSURIZED AREA
10. EXTERIOR AREA OF LARGE PRESS. BULKHEAD
11. SPACECRAFT EXTERIOR L/H
12. SPACECRAFT EXTERIOR R/H
13. INTERNAL ADAPTER AREA
14. R/H EXTERNAL ADAPTER AREA
15. L/H EXTERNAL ADAPTER AREA
16. ZONE FOR ENTIRE SPACECRAFT

GEMINI SPACECRAFT NO. 3

ZONE NO. 13

TOTAL EQUIPMENT REQUIRED 149

EQUIPMENT ON HAND 147

EQUIPMENT TO SCHEDULE 0

EQUIPMENT LATE 2

PART NO.	PART NAME	NORM. INST.	SLACK	DEF. INST.	SLACK	HOURS TO INSTALL
52-33137-9	THERMAL COVER	33000 -A1	-2	00002 -A3	0	4
72708-3-10	CUTTER SEALER	33000 -A2	-4	00002 -A3	0	4

GEMINI ZONE CHART

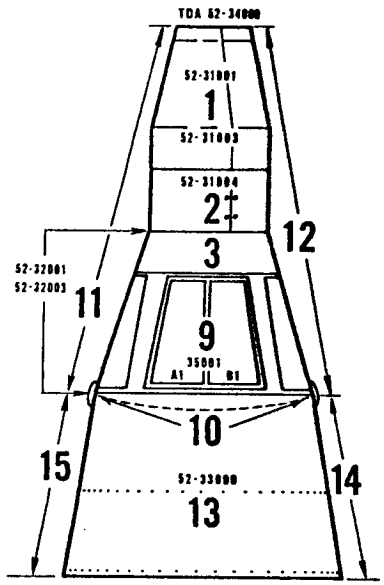

TOP VIEW

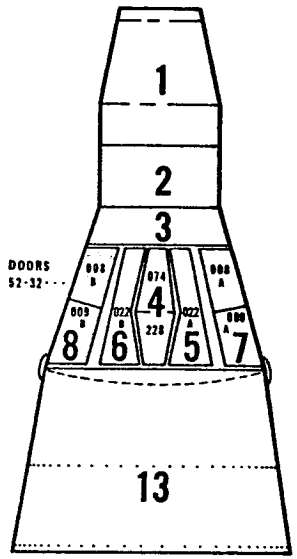

BOTTOM VIEW

1. RENDEZVOUS AND RADAR MODULE
2. RE-ENTRY RCS MODULE
3. FORWARD AREA CONE
4. CENTER EQUIPMENT BAY
5. L/H LANDING GEAR BAY
6. R/H LANDING GEAR BAY
7. L/H EQUIPMENT BAY
8. R/H EQUIPMENT BAY
9. CREW PRESSURIZED AREA
10. EXTERIOR AREA OF LARGE PRESS. BULKHEAD
11. SPACECRAFT EXTERIOR L/H
12. SPACECRAFT EXTERIOR R/H
13. INTERNAL ADAPTER AREA
14. R/H EXTERNAL ADAPTER AREA
15. L/H EXTERNAL ADAPTER AREA
16. ZONE FOR ENTIRE SPACECRAFT

GEMINI SPACECRAFT NO. 3

ZONE NO. 8

TOTAL EQUIPMENT REQUIRED 75

EQUIPMENT ON HAND 75

EQUIPMENT TO SCHEDULE 0

EQUIPMENT LATE 0

PART NO.	PART NAME	NORM. INST.	SLACK	DEF. INST.	SLACK	HOURS TO INSTALL

GEMINI ZONE CHART

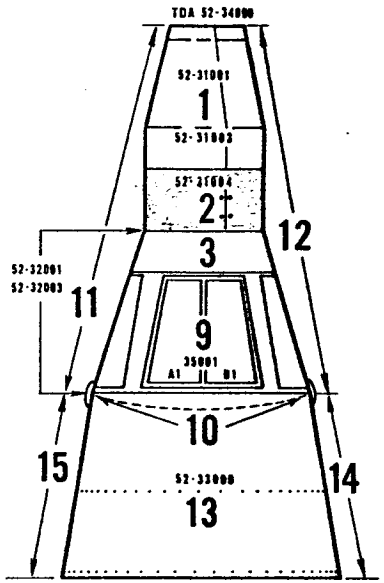

TOP VIEW

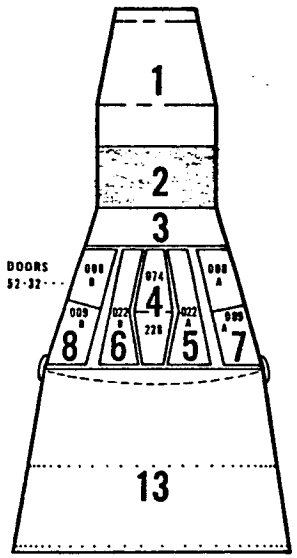

BOTTOM VIEW

1. RENDEZVOUS AND RADAR MODULE
2. RE-ENTRY RCS MODULE
3. FORWARD AREA CONE
4. CENTER EQUIPMENT BAY
5. L/H LANDING GEAR BAY
6. R/H LANDING GEAR BAY
7. L/H EQUIPMENT BAY
8. R/H EQUIPMENT BAY
9. CREW PRESSURIZED AREA
10. EXTERIOR AREA OF LARGE PRESS. BULKHEAD
11. SPACECRAFT EXTERIOR L/H
12. SPACECRAFT EXTERIOR R/H
13. INTERNAL ADAPTER AREA
14. R/H EXTERNAL ADAPTER AREA
15. L/H EXTERNAL ADAPTER AREA
16. ZONE FOR ENTIRE SPACECRAFT

GEMINI SPACECRAFT NO. 3

ZONE NO. 2

TOTAL EQUIPMENT REQUIRED 47

EQUIPMENT ON HAND 47

EQUIPMENT TO SCHEDULE 0

EQUIPMENT LATE 0

PART NO.	PART NAME	NORM. INST.	SLACK	DEF. INST.	SLACK	HOURS TO INSTALL

GEMINI ZONE CHART

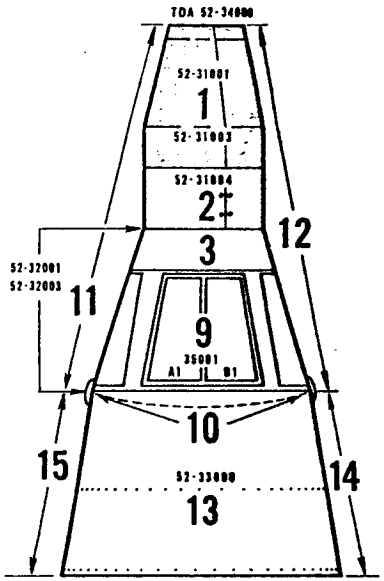

TOP VIEW

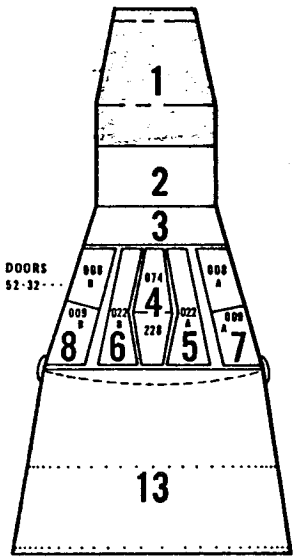

BOTTOM VIEW

1. RENDEZVOUS AND RADAR MODULE
2. RE-ENTRY RCS MODULE
3. FORWARD AREA CONE
4. CENTER EQUIPMENT BAY
5. L/H LANDING GEAR BAY
6. R/H LANDING GEAR BAY
7. L/H EQUIPMENT BAY
8. R/H EQUIPMENT BAY
9. CREW PRESSURIZED AREA
10. EXTERIOR AREA OF LARGE PRESS. BULKHEAD
11. SPACECRAFT EXTERIOR L/H
12. SPACECRAFT EXTERIOR R/H
13. INTERNAL ADAPTER AREA
14. R/H EXTERNAL ADAPTER AREA
15. L/H EXTERNAL ADAPTER AREA
16. ZONE FOR ENTIRE SPACECRAFT

GEMINI SPACECRAFT NO. 3

ZONE NO. 1

TOTAL EQUIPMENT REQUIRED 12

EQUIPMENT ON HAND 8

EQUIPMENT TO SCHEDULE 0

EQUIPMENT LATE 4

PART NO.	PART NAME	NORM. INST.	SLACK	DEF. INST.	SLACK	HOURS TO INSTALL
72706-71	-141(3) GUILL. BODY	31001 -A1	-14	00002 -A3	0	2
72706-79	-140(1) GUILL. BODY	31001 -A1	-14	00002 -A3	0	2

SPACECRAFT NUMBER THREE

SUBJECT: GEMINI STATUS REPORT FOR PERIOD FROM 11 JULY 1964 THRU 7 AUGUST 1964

RECAPITULATION

CABIN

WHITE ROOM

1. SEDR IC 311-3 and IC 331 were rerun to check discrepancies found in the original run.

2. The rework of the Large Pressure Bulkhead has been completed It was necessary to replace the R/H Outboard Seat Rail part number 52-32048-10 because of misalignment with seat ref. EJS 52-3006.

3. Water System 52-83103-533B has been installed and Water Management Test is scheduled for check-out per SEDR 483-3.

4. ECS Suit Loop Package part number 52-83190-21 has been built-up PLA'ed per SEDR IK 380 and a trial fit has been made prior to final installation.

ADAPTER

WHITE ROOM

1. SEDR ID 331-3, ID 341-3, ID 171-3 completed.

2. EJS 52-3088 compression fittings completed.

3. All equipment installed except 83770-3 Regulator and 72703-3-10 Cutter Sealer.

RCS

WHITE ROOM

1. Began Phase I SSI with all equipment installed.

2. Pressure Test and X Ray completed

3. SEDR's ID 221-3 and I-398-3 completed

R & R

WHITE ROOM

1. Preliminary fitting of shingles completed.

2. EJS 52-3070, EJS 52-3071, EJS 52-1455 are in work and EJS 52-31.69 has been approved for incorporation prior to mate.

SPACECRAFT NUMBER ONEE

SUBJECT: GEMINI STATUS REPORT FOR PERIOD FROM 11 JULY 1964 THRU 7 AUGUST 1964

SUMMARY OF SCHEDULE POSITION

1. The Cabin is still on a rigid schedule. Time was lost because of the necessity of replacing the seat rail due to discrepancy found at the completion of the Large Pressure Bulkhead rework ref. EJS 52-3006. Firm approval of EJS 52-3090 for the rework of the snorkel system installation could delay mate.

2. The Adapter is progressing satisfactorily in relation to the re-entry and will be ready for mate without any delays.

3. The RCS and R & R are on a rigid schedule and will be ready for mate with re-entry.

FORECAST

The following events are scheduled for accomplishment during the next thirty day period:

CABIN

WHITE ROOM

1. Complete manufacturing clean-up prior to Mate and Phase I SST

2. Start Phase II SST.

ADAPTER

WHITE ROOM

1. Complete Phase I SST and Mate.

2. Begin Phase II SST.

RCS

WHITE ROOM

1. Complete manufacturing clean-up.

2. Mate and start Phase II SST.

R & R

WHITE ROOM

1. Complete manufacturing clean up

SPACECRAFT NUMBER THREE

SUBJECT: GEMINI STATUS REPORT FOR PERIOD FROM 11 JULY 1964 THRU 7 AUGUST 1964

2. Accomplish SEDR's IK 342-3 and IA 321.

3. Mate and start Phase II SST.

CONSTRAINING PART SHORTAGES AND POTENTIAL PROBLEM AREAS

CABIN

1. Firm Snorkel rework incorporation prior to mate.

2. 52-87703-309 Electronics Power.

3. 52-87723-9 Auxiliary Computer.

4. 52-87710-7 Computer.

5. 52-87712-9 IVI.

6. 52-87713-7 Manual Data Keyboard

7. 52-87713-9 Manual Data Readout.

8. 52-82[illegible]-603 Backboard.

9. 52-83700-743 ECS Egress O_2.

10. 52-83700-744 ECS Egress O_2

11. 52-81720-3 Flight Display Indicator.

ADAPTER

1. 52-33137 Thermal Cover.

2. 52-72708-3-10 Cutter.

RCS

1. No shortages affecting delivery of this module on schedule.

R & R

1. 52-72706-79-140 Guillotine Body

2. 52-72706-71-141 Guillotine Body

GEMINI MANUFACTURING WORK PLAN - SPACECRAFT NO. 3A

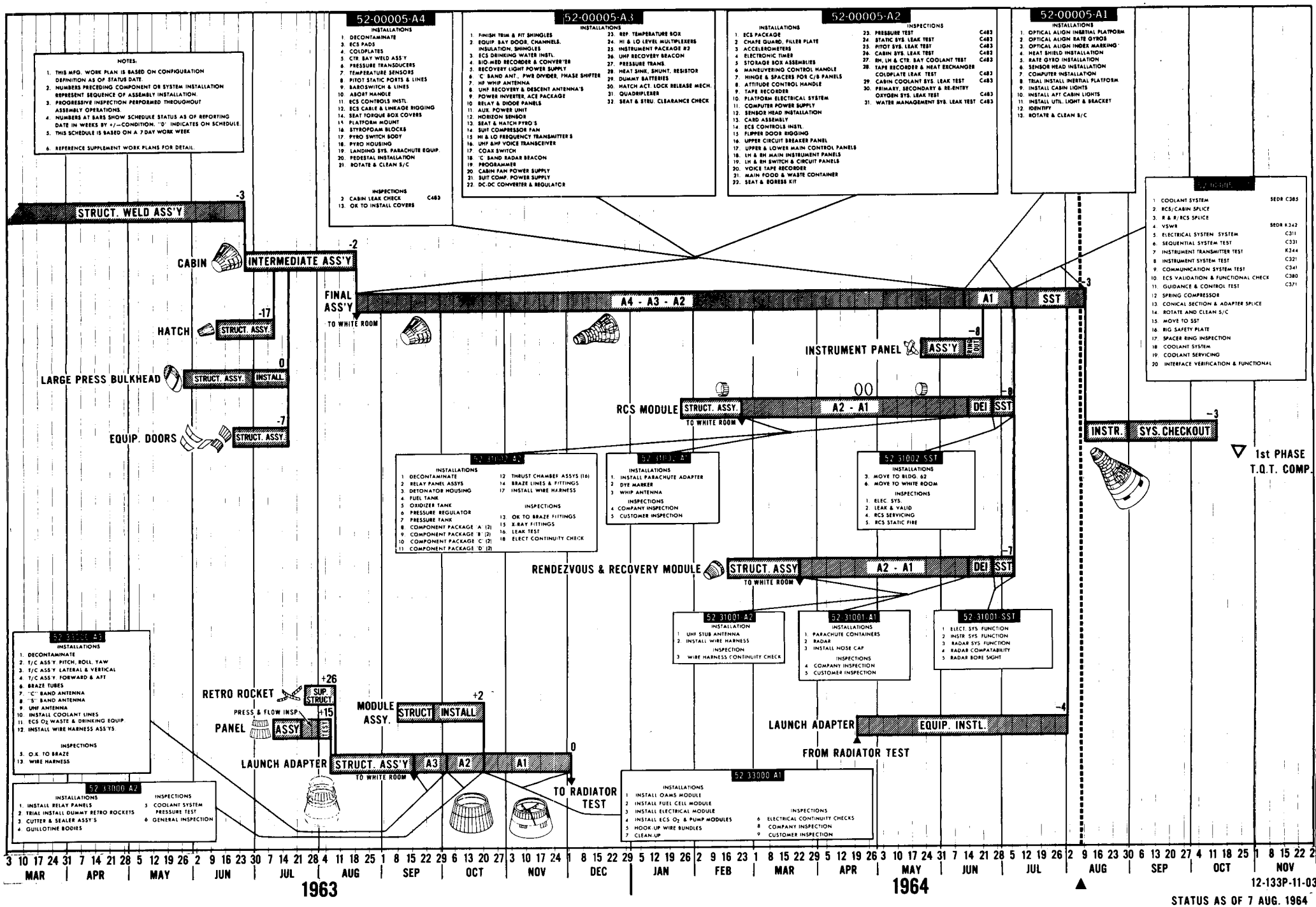

S C 3A WORK PLAN MODULE FINAL ASSY

	ZONE	TOTAL HRS.	OPEN HRS.
RCS	2		
1. INSTALL PLUMBING & PRESSURE TEST		407	104
2. INSTALL W/B - T/C - T/S		195	16
3. FIBERGLASS CHANNELS - MIN - K - INSULATION		18	7
4. INSTALL EQUIP		358	132
5. INSTALL SHINGLES - RETAINERS		46	12
6. DITMCO - T/C - T/S TEST		108	25
7. S S T		159	68
8. INSTALL THRUST CHAMBERS		20	4
9. INSTALL STYROFOAM			
10. NASA/MAC INSPECTION		143	137
R & R	1		
11. INSTALL W/B - T/C - T/S		86	14
12. FIBERGLASS CHANNELS - MIN - K - INSULATION		10	10
13. INSTALL EQUIP		141	44
14. INSTALL SHINGLES - RETAINERS		12	11
15. DITMCO - T/C - T/S TEST		78	4
16. S S T			
17. NASA/MAC INSPECTION		17	17
ADAPTER	13		
18. INSTALL PLUMBING & PRESSURE TEST		315	113
19. INSTALL W/B - T/C - T/S		407	58
20. INSTALL EQUIPMENT		591	95
21. DTMCO - T/C - T/S TEST			
22. S S T		517	425
23. NASA/MAC INSPECTION		62	34

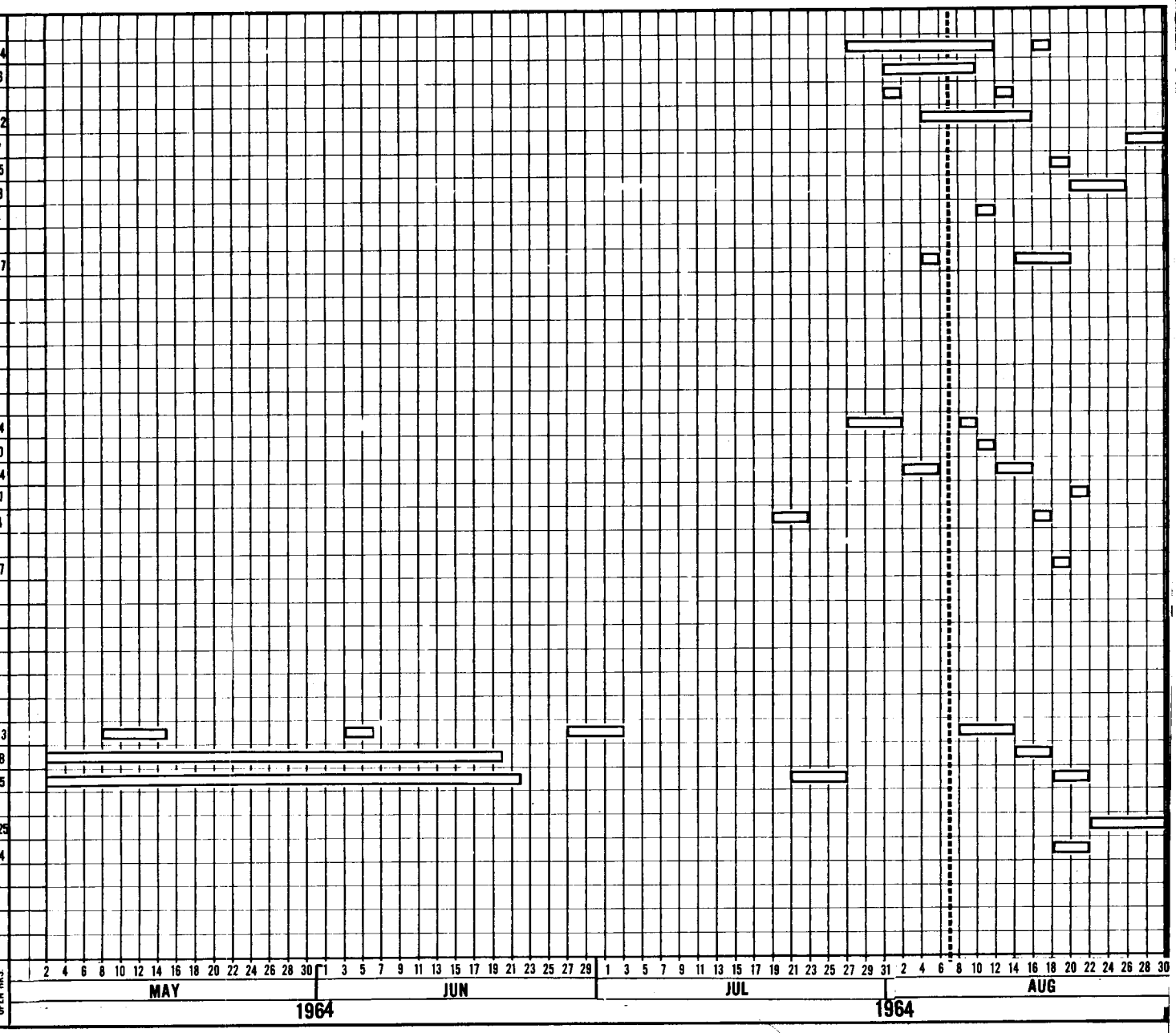

LEGEND: WORK PERIOD

STATUS AS OF 7 AUG. 1964

GEMINI SPACECRAFT NO. 3A
EQUIPMENT STUDY

LEGEND:

▽ WILL SHIP

▼ ACTUAL SHIPPED

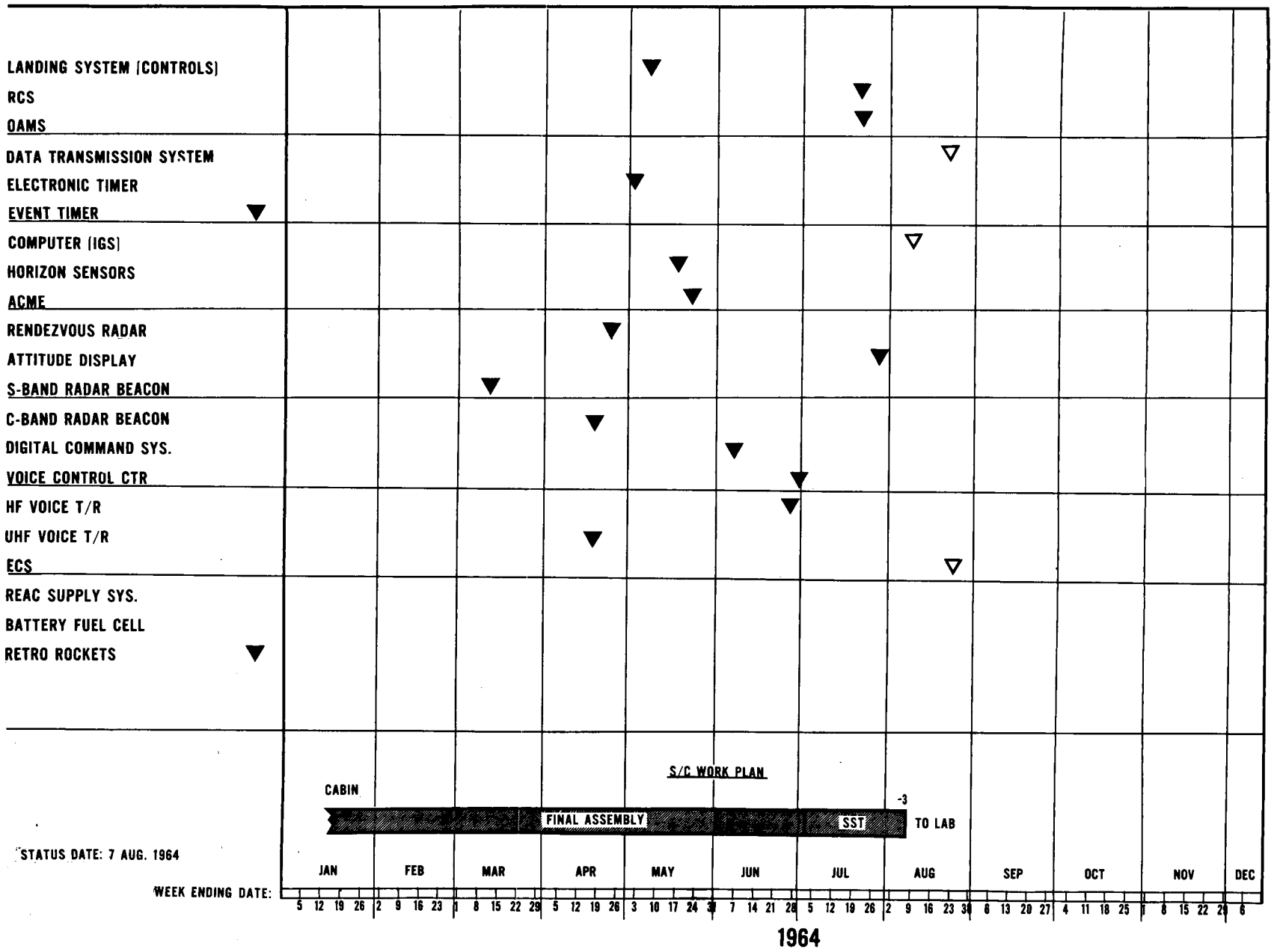

S/C-3A WORK PLAN FINAL ASSY AND SST

	ZONE	TOTAL HRS.	OPEN HRS.
1. STRUCTURAL EOPO INCORPORATION	16	278	104
2. PRESSURE TEST 5#	9	88	2
3. ECS INSTALLATION & PLUMBING	9	358	42
4. WIRE BUNDLES IN CABIN	9	342	
5. PEDESTAL INSTALLATION	9		
6. FIBERGLASS CHANNELS & MIN-K	11 12	369	28
7. INSTALL SHINGLES	11 12	816	2
8. INSTALL & RIG HATCHES	11 12		
9. INSTALL & RIG 32060 DOORS	5 6	68	60
10. INSTALL STYROFOAM	3 7 8		
11. INSTALL COLDPLATES & PLUMBING	3 7 8		
12. INSTALL WIRE BUNDLES IN EQUIP BAYS	3 7 8	1066	
13. SPLICE THERMOCOUPLES & TEST	9 11 12	93	38
14. INSTALL STATIC SYSTEM	3		
15. STATIC SYSTEM PRESSURE TEST	3		
16. INSTALL EQUIPMENT-CABIN	9	853	181
17. INSTALL EQUIPMENT-OTHER	7 8	774	200
18. DITMCO			
19. SPLICE TEMP. SENSORS		19	19
20. SST-PHASE I	9	720	534
21. HEATSHIELD INSTALLATION	10	132	126

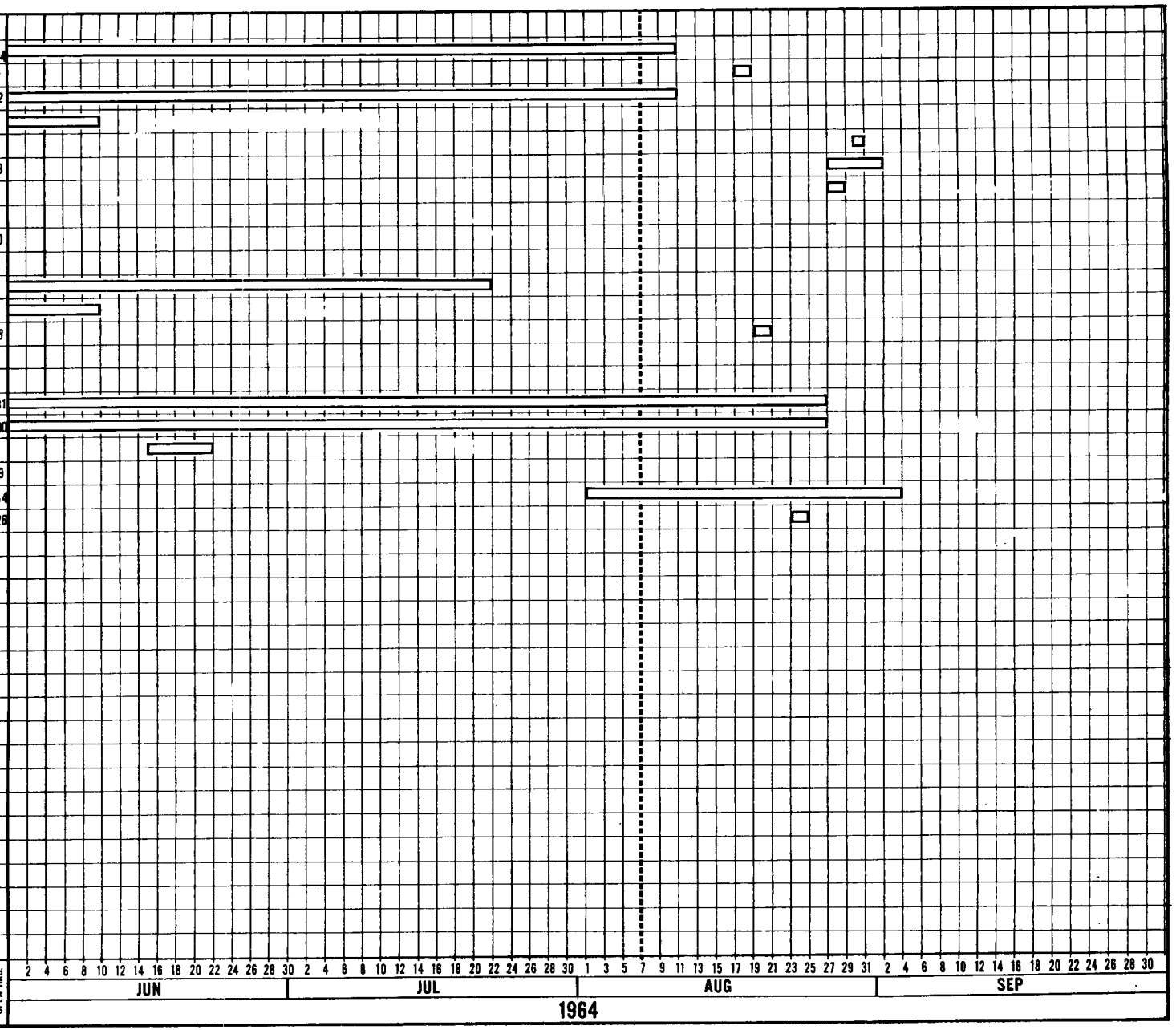

LEGEND: WORK PERIOD

STATUS AS OF 7 AUG. 1964

GEMINI ZONE CHART

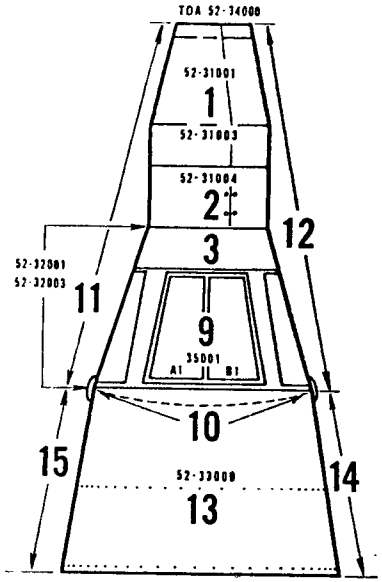

TOP VIEW

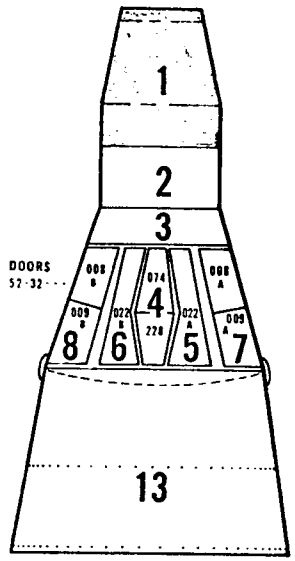

BOTTOM VIEW

1. RENDEZVOUS AND RADAR MODULE
2. RE-ENTRY RCS MODULE
3. FORWARD AREA CONE
4. CENTER EQUIPMENT BAY
5. L/H LANDING GEAR BAY
6. R/H LANDING GEAR BAY
7. L/H EQUIPMENT BAY
8. R/H EQUIPMENT BAY
9. CREW PRESSURIZED AREA
10. EXTERIOR AREA OF LARGE PRESS. BULKHEAD
11. SPACECRAFT EXTERIOR L/H
12. SPACECRAFT EXTERIOR R/H
13. INTERNAL ADAPTER AREA
14. R/H EXTERNAL ADAPTER AREA
15. L/H EXTERNAL ADAPTER AREA
16. ZONE FOR ENTIRE SPACECRAFT

GEMINI SPACECRAFT NO. 3A

ZONE NO. 1

TOTAL EQUIPMENT REQUIRED 40

EQUIPMENT ON HAND 40

EQUIPMENT TO SCHEDULE 0

EQUIPMENT LATE 0

PART NO.	PART NAME	NORM. INST.	SLACK	DEF. INST.	SLACK	HOURS TO INSTALL

3-7-4

GEMINI ZONE CHART

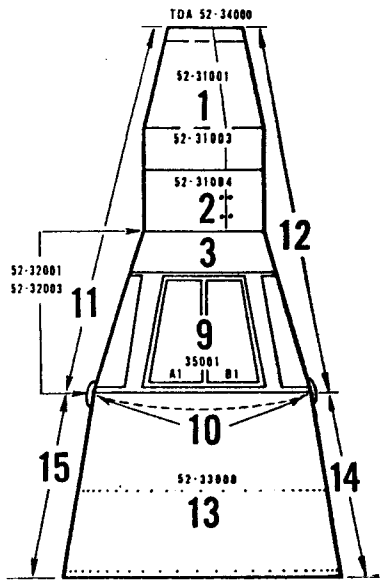

TOP VIEW

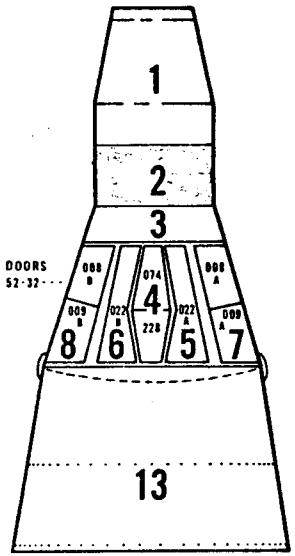

BOTTOM VIEW

1. RENDEZVOUS AND RADAR MODULE
2. RE-ENTRY RCS MODULE
3. FORWARD AREA CONE
4. CENTER EQUIPMENT BAY
5. L/H LANDING GEAR BAY
6. R/H LANDING GEAR BAY
7. L/H EQUIPMENT BAY
8. R/H EQUIPMENT BAY
9. CREW PRESSURIZED AREA
10. EXTERIOR AREA OF LARGE PRESS. BULKHEAD
11. SPACECRAFT EXTERIOR L/H
12. SPACECRAFT EXTERIOR R/H
13. INTERNAL ADAPTER AREA
14. R/H EXTERNAL ADAPTER AREA
15. L/H EXTERNAL ADAPTER AREA
16. ZONE FOR ENTIRE SPACECRAFT

GEMINI SPACECRAFT NO. 3A.

ZONE NO. 2

TOTAL EQUIPMENT REQUIRED 77

EQUIPMENT ON HAND 77

EQUIPMENT TO SCHEDULE 0

EQUIPMENT LATE 0

PART NO.	PART NAME	NORM. INST.	SLACK	DEF. INST.	SLACK	HOURS TO INSTALL

8-7-4

GEMINI ZONE CHART

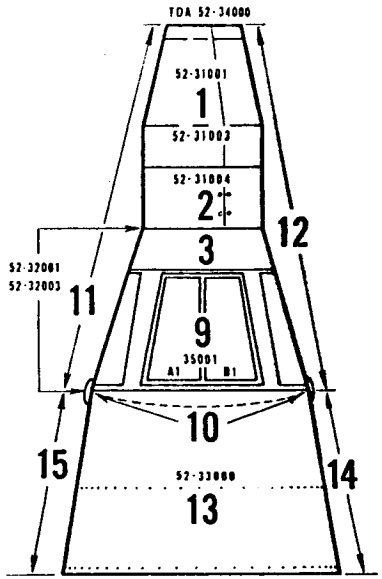

TOP VIEW

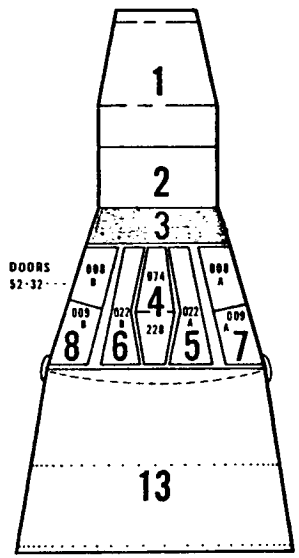

BOTTOM VIEW

1. RENDEZVOUS AND RADAR MODULE
2. RE-ENTRY RCS MODULE
3. FORWARD AREA CONE
4. CENTER EQUIPMENT BAY
5. L/H LANDING GEAR BAY
6. R/H LANDING GEAR BAY
7. L/H EQUIPMENT BAY
8. R/H EQUIPMENT BAY
9. CREW PRESSURIZED AREA
10. EXTERIOR AREA OF LARGE PRESS. BULKHEAD
11. SPACECRAFT EXTERIOR L/H
12. SPACECRAFT EXTERIOR R/H
13. INTERNAL ADAPTER AREA
14. R/H EXTERNAL ADAPTER AREA
15. L/H EXTERNAL ADAPTER AREA
16. ZONE FOR ENTIRE SPACECRAFT

GEMINI SPACECRAFT NO. 3A

ZONE NO. 3

TOTAL EQUIPMENT REQUIRED 53

EQUIPMENT ON HAND 52

EQUIPMENT TO SCHEDULE 0

EQUIPMENT LATE 1

PART NO.	PART NAME	NORM. INST.	SLACK	DEF. INST.	SLACK	HOURS TO INSTALL
52-7767-315	Relay Panel (1)	00005 A3	-34	00002 A2	0	2

8-7-1

GEMINI ZONE CHART

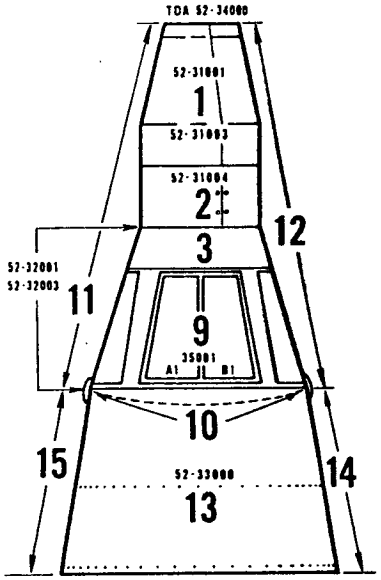

TOP VIEW

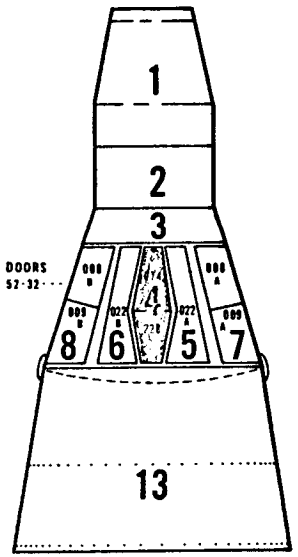

BOTTOM VIEW

1. RENDEZVOUS AND RADAR MODULE
2. RE-ENTRY RCS MODULE
3. FORWARD AREA CONE
4. CENTER EQUIPMENT BAY
5. L/H LANDING GEAR BAY
6. R/H LANDING GEAR BAY
7. L/H EQUIPMENT BAY
8. R/H EQUIPMENT BAY
9. CREW PRESSURIZED AREA
10. EXTERIOR AREA OF LARGE PRESS. BULKHEAD
11. SPACECRAFT EXTERIOR L/H
12. SPACECRAFT EXTERIOR R/H
13. INTERNAL ADAPTER AREA
14. R/H EXTERNAL ADAPTER AREA
15. L/H EXTERNAL ADAPTER AREA
16. ZONE FOR ENTIRE SPACECRAFT

GEMINI SPACECRAFT NO. 3A

ZONE NO. 4

TOTAL EQUIPMENT REQUIRED 32

EQUIPMENT ON HAND 32

EQUIPMENT TO SCHEDULE 0

EQUIPMENT LATE 0

PART NO.	PART NAME	NORM. INST.	SLACK	DEF. INST.	SLACK	HOURS TO INSTALL

8-7-4

GEMINI ZONE CHART

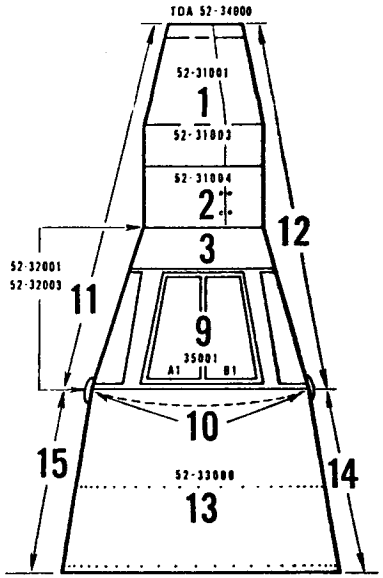

TOP VIEW

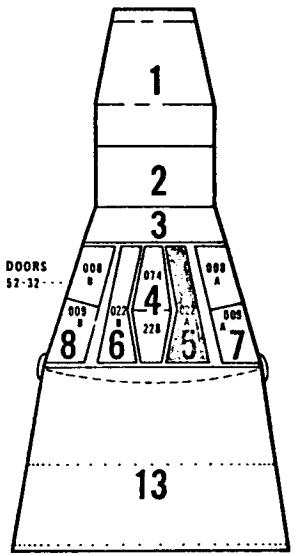

BOTTOM VIEW

1. RENDEZVOUS AND RADAR MODULE
2. RE-ENTRY RCS MODULE
3. FORWARD AREA CONE
4. CENTER EQUIPMENT BAY
5. L/H LANDING GEAR BAY
6. R/H LANDING GEAR BAY
7. L/H EQUIPMENT BAY
8. R/H EQUIPMENT BAY
9. CREW PRESSURIZED AREA
10. EXTERIOR AREA OF LARGE PRESS. BULKHEAD
11. SPACECRAFT EXTERIOR L/H
12. SPACECRAFT EXTERIOR R/H
13. INTERNAL ADAPTER AREA
14. R/H EXTERNAL ADAPTER AREA
15. L/H EXTERNAL ADAPTER AREA
16. ZONE FOR ENTIRE SPACECRAFT

GEMINI SPACECRAFT NO. 3A

ZONE NO. 5

TOTAL EQUIPMENT REQUIRED 3

EQUIPMENT ON HAND 0

EQUIPMENT TO SCHEDULE 0

EQUIPMENT LATE 3

PART NO.	PART NAME	NORM. INST.	SLACK	DEF. INST.	SLACK	HOURS TO INSTALL
52-[illegible]3-3	Synchro Repeaters (3)	00005 A3	-12	00002 A2	0	4

8-7-4

GEMINI ZONE CHART

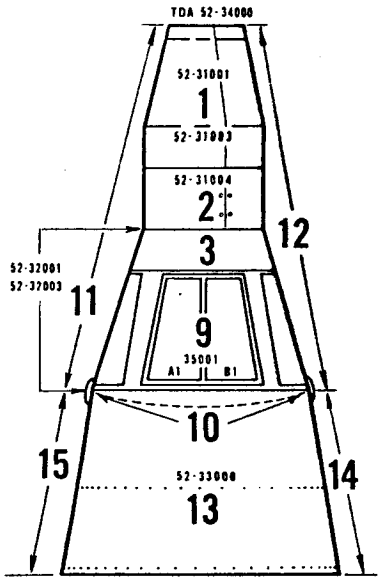

TOP VIEW

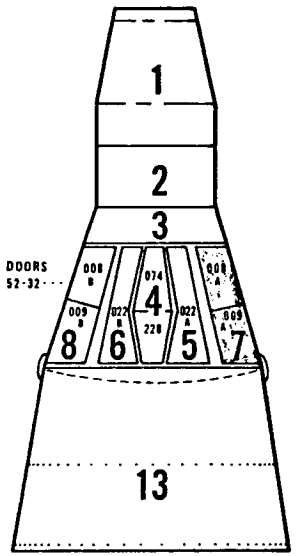

BOTTOM VIEW

1. RENDEZVOUS AND RADAR MODULE
2. RE-ENTRY RCS MODULE
3. FORWARD AREA CONE
4. CENTER EQUIPMENT BAY
5. L/H LANDING GEAR BAY
6. R/H LANDING GEAR BAY
7. L/H EQUIPMENT BAY
8. R/H EQUIPMENT BAY
9. CREW PRESSURIZED AREA
10. EXTERIOR AREA OF LARGE PRESS. BULKHEAD
11. SPACECRAFT EXTERIOR L/H
12. SPACECRAFT EXTERIOR R/H
13. INTERNAL ADAPTER AREA
14. R/H EXTERNAL ADAPTER AREA
15. L/H EXTERNAL ADAPTER AREA
16. ZONE FOR ENTIRE SPACECRAFT

GEMINI SPACECRAFT NO. 3A

ZONE NO. 7

TOTAL EQUIPMENT REQUIRED 61

EQUIPMENT ON HAND 59

EQUIPMENT TO SCHEDULE 0

EQUIPMENT LATE 3

PART NO.	PART NAME	NORM. INST.	SLACK	DEF. INST.	SLACK	HOURS TO INSTALL
52-17611-329	Relay Panel (1)	00005 A3	-40	00002 A2	0	4
87723-11	Aux. Computer (1)	"	-35	"	0	6
87717-99	Power Supply (1)	00005 A2	-16	"	0	3

GEMINI ZONE CHART

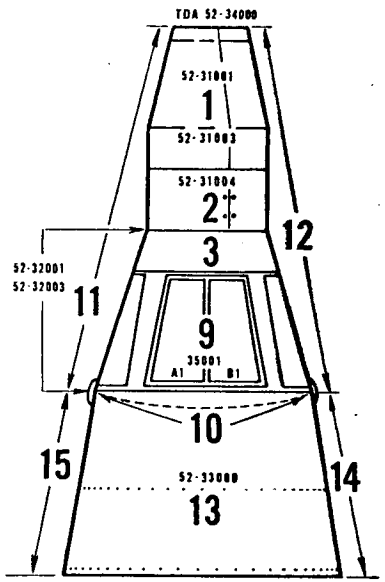

TOP VIEW

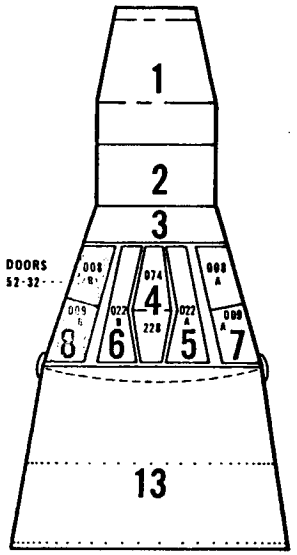

BOTTOM VIEW

1. RENDEZVOUS AND RADAR MODULE
2. RE-ENTRY RCS MODULE
3. FORWARD AREA CONE
4. CENTER EQUIPMENT BAY
5. L/H LANDING GEAR BAY
6. R/H LANDING GEAR BAY
7. L/H EQUIPMENT BAY
8. R/H EQUIPMENT BAY
9. CREW PRESSURIZED AREA
10. EXTERIOR AREA OF LARGE PRESS. BULKHEAD
11. SPACECRAFT EXTERIOR L/H
12. SPACECRAFT EXTERIOR R/H
13. INTERNAL ADAPTER AREA
14. R/H EXTERNAL ADAPTER AREA
15. L/H EXTERNAL ADAPTER AREA
16. ZONE FOR ENTIRE SPACECRAFT

GEMINI SPACECRAFT NO. 3A

ZONE NO. 8

TOTAL EQUIPMENT REQUIRED 85

EQUIPMENT ON HAND 82

EQUIPMENT TO SCHEDULE 0

EQUIPMENT LATE 3

PART NO.	PART NAME	NORM. INST.	SLACK	DEF. INST.	SLACK	HOURS TO INSTALL
52-85713-83	Programmer (1)	00005 A3	-34	00002 A2	0	2
" -85	L.L. Multiplexer (1)	"	-34	"	0	2
" -87	H.L. " (1)	"	-34	"	0	2

GEMINI ZONE CHART

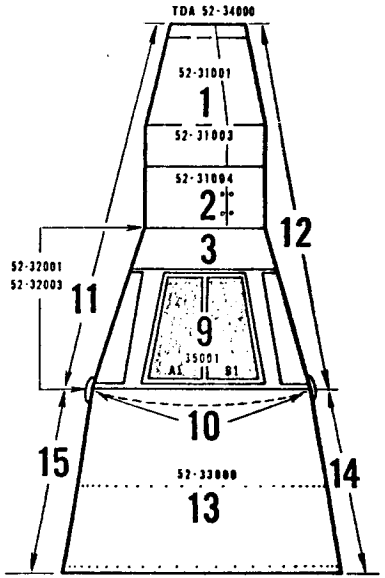

TOP VIEW

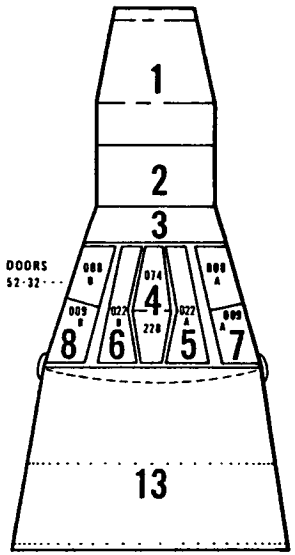

BOTTOM VIEW

1. RENDEZVOUS AND RADAR MODULE
2. RE-ENTRY RCS MODULE
3. FORWARD AREA CONE
4. CENTER EQUIPMENT BAY
5. L/H LANDING GEAR BAY
6. R/H LANDING GEAR BAY
7. L/H EQUIPMENT BAY
8. R/H EQUIPMENT BAY
9. CREW PRESSURIZED AREA
10. EXTERIOR AREA OF LARGE PRESS. BULKHEAD
11. SPACECRAFT EXTERIOR L/H
12. SPACECRAFT EXTERIOR R/H
13. INTERNAL ADAPTER AREA
14. R/H EXTERNAL ADAPTER AREA
15. L/H EXTERNAL ADAPTER AREA
16. ZONE FOR ENTIRE SPACECRAFT

GEMINI SPACECRAFT NO. 3A

ZONE NO. 9

TOTAL EQUIPMENT REQUIRED 146

EQUIPMENT ON HAND 140

EQUIPMENT TO SCHEDULE 0

EQUIPMENT LATE 6

PART NO.	PART NAME	NORM. INST.	SLACK	DEF. INST.	SLACK	HOURS TO INSTALL
A05F0016	Bio Med. Cont. (1)	00005 A3	-30	00002 A2	0	6
596-9971	Bio Med Recorder (1)	"	-30	"	0	3
CBS-MRS-200	Voice Tape Recorder (1)	"	-30	"	0	3
72707-23	Manv. Firing Mech. (2)	"	-40	"	0	4
83133-25	ECS Package (1)	00005 A2	-20	"	0	6

8-7-4

GEMINI ZONE CHART

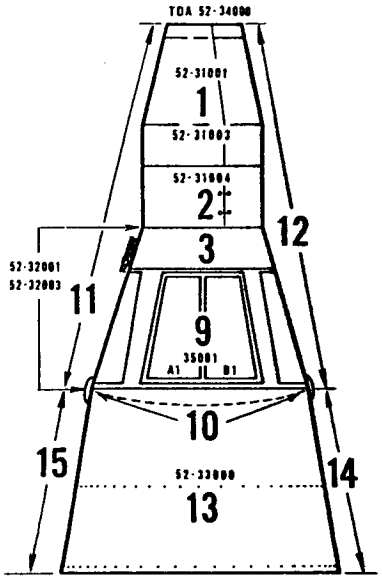

TOP VIEW

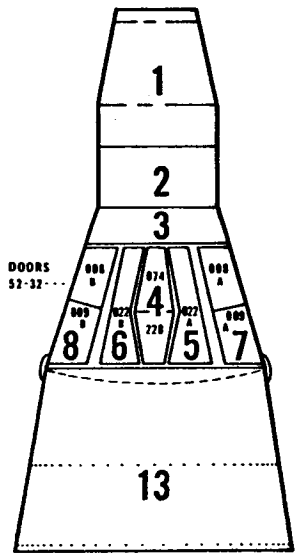

BOTTOM VIEW

1. RENDEZVOUS AND RADAR MODULE
2. RE-ENTRY RCS MODULE
3. FORWARD AREA CONE
4. CENTER EQUIPMENT BAY
5. L/H LANDING GEAR BAY
6. R/H LANDING GEAR BAY
7. L/H EQUIPMENT BAY
8. R/H EQUIPMENT BAY
9. CREW PRESSURIZED AREA
10. EXTERIOR AREA OF LARGE PRESS. BULKHEAD
11. SPACECRAFT EXTERIOR L/H
12. SPACECRAFT EXTERIOR R/H
13. INTERNAL ADAPTER AREA
14. R/H EXTERNAL ADAPTER AREA
15. L/H EXTERNAL ADAPTER AREA
16. ZONE FOR ENTIRE SPACECRAFT

GEMINI SPACECRAFT NO. 3A

ZONE NO. 11

TOTAL EQUIPMENT REQUIRED 2

EQUIPMENT ON HAND 2

EQUIPMENT TO SCHEDULE 0

EQUIPMENT LATE 0

PART NO.	PART NAME	NORM. INST.	SLACK	DEF. INST.	SLACK	HOURS TO INSTALL

8-7-4

GEMINI ZONE CHART

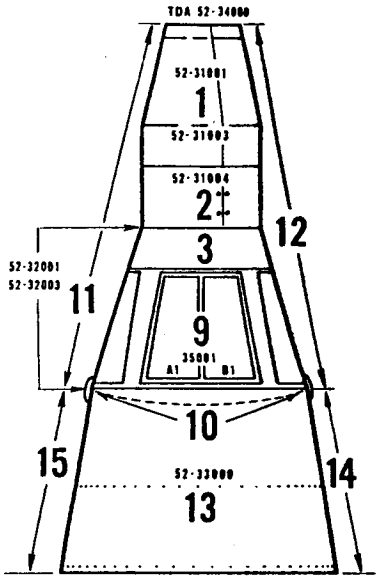

TOP VIEW

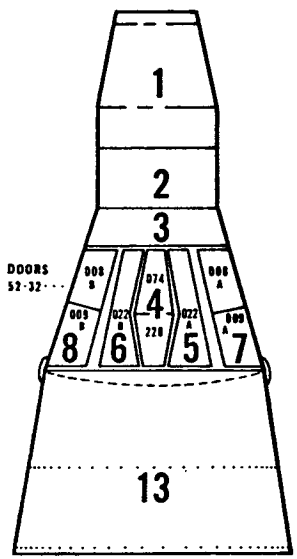

BOTTOM VIEW

1. RENDEZVOUS AND RADAR MODULE
2. RE-ENTRY RCS MODULE
3. FORWARD AREA CONE
4. CENTER EQUIPMENT BAY
5. L/H LANDING GEAR BAY
6. R/H LANDING GEAR BAY
7. L/H EQUIPMENT BAY
8. R/H EQUIPMENT BAY
9. CREW PRESSURIZED AREA
10. EXTERIOR AREA OF LARGE PRESS. BULKHEAD
11. SPACECRAFT EXTERIOR L/H
12. SPACECRAFT EXTERIOR R/H
13. INTERNAL ADAPTER AREA
14. R/H EXTERNAL ADAPTER AREA
15. L/H EXTERNAL ADAPTER AREA
16. ZONE FOR ENTIRE SPACECRAFT

GEMINI SPACECRAFT NO. 3A

ZONE NO. 81000-502 R/H Main

TOTAL EQUIPMENT REQUIRED 19

EQUIPMENT ON HAND 18

EQUIPMENT TO SCHEDULE 0

EQUIPMENT LATE 1

PART NO.	PART NAME	NORM. INST.	SLACK	DEF. INST.	SLACK	HOURS TO INSTALL
J05A0002	Clock	81000 502	-19	00002 A2	0	2

8-7-4

GEMINI ZONE CHART

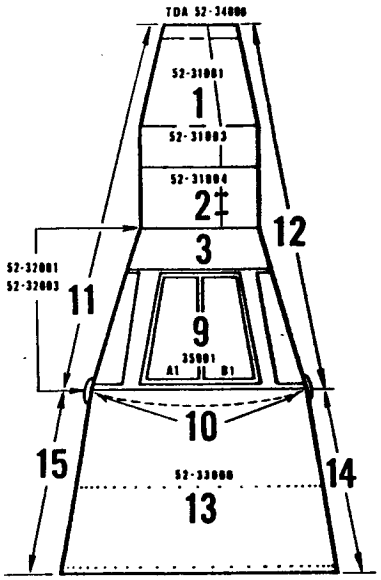

TOP VIEW

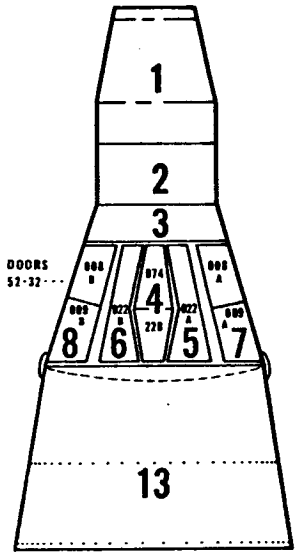

BOTTOM VIEW

1. RENDEZVOUS AND RADAR MODULE
2. RE-ENTRY RCS MODULE
3. FORWARD AREA CONE
4. CENTER EQUIPMENT BAY
5. L/H LANDING GEAR BAY
6. R/H LANDING GEAR BAY
7. L/H EQUIPMENT BAY
8. R/H EQUIPMENT BAY
9. CREW PRESSURIZED AREA
10. EXTERIOR AREA OF LARGE PRESS. BULKHEAD
11. SPACECRAFT EXTERIOR L/H
12. SPACECRAFT EXTERIOR R/H
13. INTERNAL ADAPTER AREA
14. R/H EXTERNAL ADAPTER AREA
15. L/H EXTERNAL ADAPTER AREA
16. ZONE FOR ENTIRE SPACECRAFT

GEMINI SPACECRAFT NO. 3A

ZONE NO. 13

TOTAL EQUIPMENT REQUIRED 88

EQUIPMENT ON HAND 88

EQUIPMENT TO SCHEDULE 0

EQUIPMENT LATE 0

PART NO.	PART NAME	NORM. INST.	SLACK	DEF. INST.	SLACK	HOURS TO INSTALL

8-7-4

GEMINI ZONE CHART

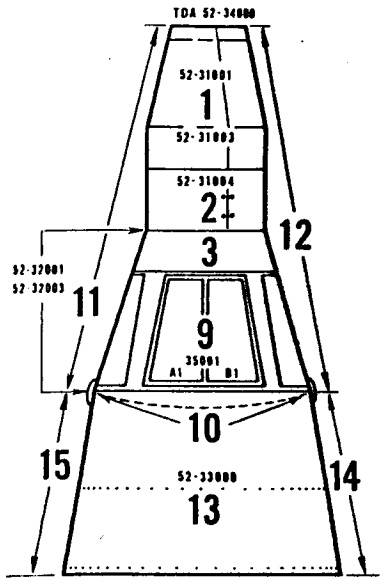

TOP VIEW

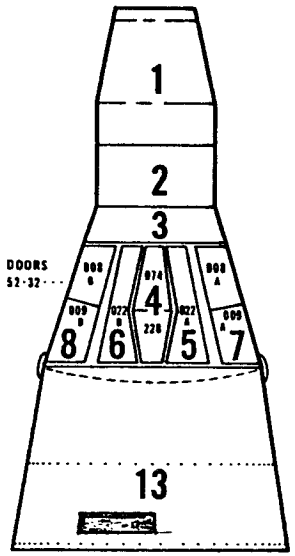

BOTTOM VIEW

1. RENDEZVOUS AND RADAR MODULE
2. RE-ENTRY RCS MODULE
3. FORWARD AREA CONE
4. CENTER EQUIPMENT BAY
5. L/H LANDING GEAR BAY
6. R/H LANDING GEAR BAY
7. L/H EQUIPMENT BAY
8. R/H EQUIPMENT BAY
9. CREW PRESSURIZED AREA
10. EXTERIOR AREA OF LARGE PRESS. BULKHEAD
11. SPACECRAFT EXTERIOR L/H
12. SPACECRAFT EXTERIOR R/H
13. INTERNAL ADAPTER AREA
14. R/H EXTERNAL ADAPTER AREA
15. L/H EXTERNAL ADAPTER AREA
16. ZONE FOR ENTIRE SPACECRAFT

GEMINI SPACECRAFT NO. 3A

ZONE NO. BATT MOD

TOTAL EQUIPMENT REQUIRED 18

EQUIPMENT ON HAND 18

EQUIPMENT TO SCHEDULE 0

EQUIPMENT LATE 0

PART NO.	PART NAME	NORM. INST.	SLACK	DEF. INST.	SLACK	HOURS TO INSTALL

8-7-4

GEMINI ZONE CHART

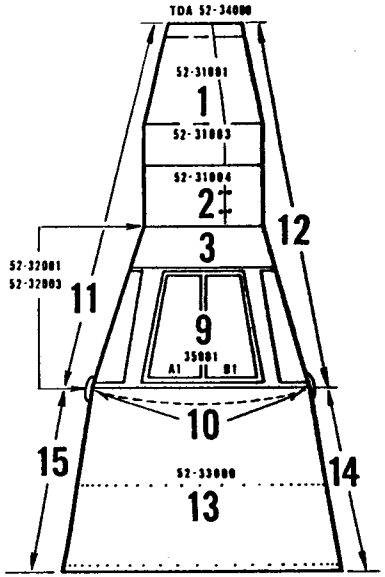

TOP VIEW

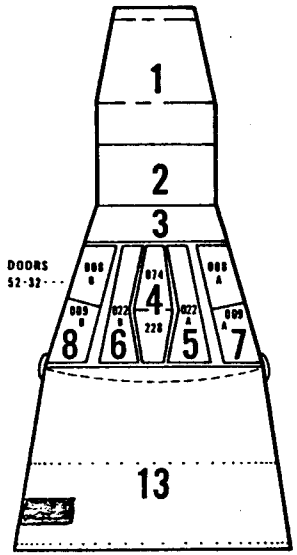

BOTTOM VIEW

1. RENDEZVOUS AND RADAR MODULE
2. RE-ENTRY RCS MODULE
3. FORWARD AREA CONE
4. CENTER EQUIPMENT BAY
5. L/H LANDING GEAR BAY
6. R/H LANDING GEAR BAY
7. L/H EQUIPMENT BAY
8. R/H EQUIPMENT BAY
9. CREW PRESSURIZED AREA
10. EXTERIOR AREA OF LARGE PRESS. BULKHEAD
11. SPACECRAFT EXTERIOR L/H
12. SPACECRAFT EXTERIOR R/H
13. INTERNAL ADAPTER AREA
14. R/H EXTERNAL ADAPTER AREA
15. L/H EXTERNAL ADAPTER AREA
16. ZONE FOR ENTIRE SPACECRAFT

GEMINI SPACECRAFT NO. 3A

ZONE NO. ECS PUMP

TOTAL EQUIPMENT REQUIRED 27

EQUIPMENT ON HAND 26

EQUIPMENT TO SCHEDULE 0

EQUIPMENT LATE 1

PART NO.	PART NAME	NORM. INST.	SLACK	DEF. INST.	SLACK	HOURS TO INSTALL
83700-715	WATER EVAPORATOR	83305 A2A1	-2	00003 SST	0	2

8-7-4

GEMINI ZONE CHART

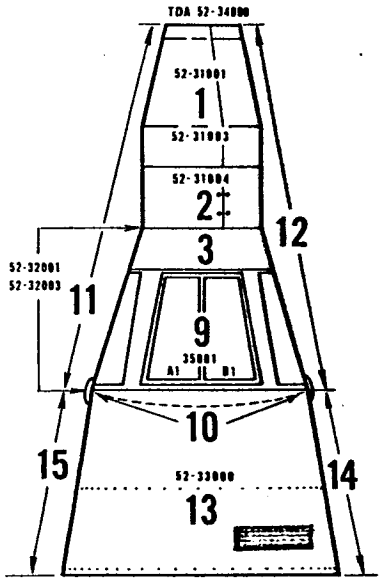

TOP VIEW

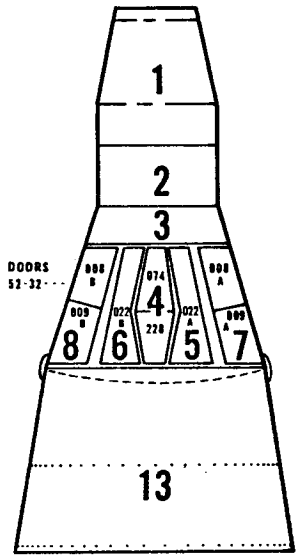

BOTTOM VIEW

1. RENDEZVOUS AND RADAR MODULE
2. RE-ENTRY RCS MODULE
3. FORWARD AREA CONE
4. CENTER EQUIPMENT BAY
5. L/H LANDING GEAR BAY
6. R/H LANDING GEAR BAY
7. L/H EQUIPMENT BAY
8. R/H EQUIPMENT BAY
9. CREW PRESSURIZED AREA
10. EXTERIOR AREA OF LARGE PRESS. BULKHEAD
11. SPACECRAFT EXTERIOR L/H
12. SPACECRAFT EXTERIOR R/H
13. INTERNAL ADAPTER AREA
14. R/H EXTERNAL ADAPTER AREA
15. L/H EXTERNAL ADAPTER AREA
16. ZONE FOR ENTIRE SPACECRAFT

GEMINI SPACECRAFT NO. 3A

ZONE NO. ELEC MOD

TOTAL EQUIPMENT REQUIRED 17

EQUIPMENT ON HAND 17

EQUIPMENT TO SCHEDULE 0

EQUIPMENT LATE 0

PART NO.	PART NAME	NORM. INST.	SLACK	DEF. INST.	SLACK	HOURS TO INSTALL

3-7-64

GEMINI ZONE CHART

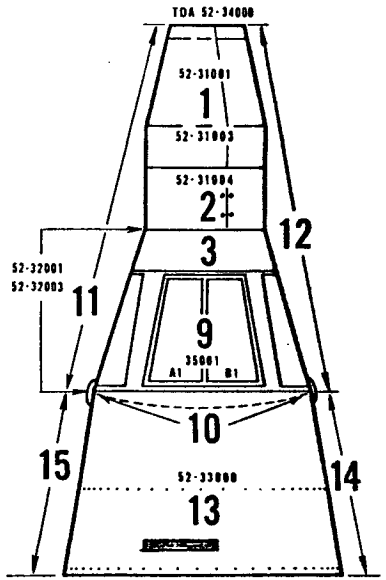

TOP VIEW

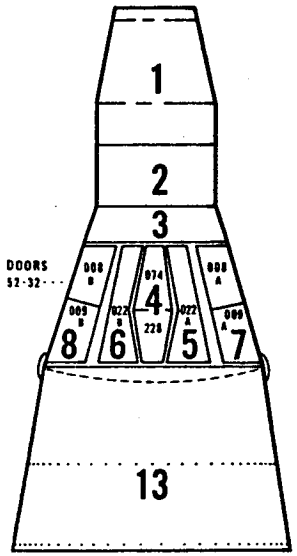

BOTTOM VIEW

1. RENDEZVOUS AND RADAR MODULE
2. RE-ENTRY RCS MODULE
3. FORWARD AREA CONE
4. CENTER EQUIPMENT BAY
5. L/H LANDING GEAR BAY
6. R/H LANDING GEAR BAY
7. L/H EQUIPMENT BAY
8. R/H EQUIPMENT BAY
9. CREW PRESSURIZED AREA
10. EXTERIOR AREA OF LARGE PRESS. BULKHEAD
11. SPACECRAFT EXTERIOR L/H
12. SPACECRAFT EXTERIOR R/H
13. INTERNAL ADAPTER AREA
14. R/H EXTERNAL ADAPTER AREA
15. L/H EXTERNAL ADAPTER AREA
16. ZONE FOR ENTIRE SPACECRAFT

GEMINI SPACECRAFT NO. 3A

ZONE NO. OAMS MOD

TOTAL EQUIPMENT REQUIRED 21

EQUIPMENT ON HAND 21

EQUIPMENT TO SCHEDULE 0

EQUIPMENT LATE 0

PART NO.	PART NAME	NORM. INST.	SLACK	DEF. INST.	SLACK	HOURS TO INSTALL

8-7-4

GEMINI ZONE CHART

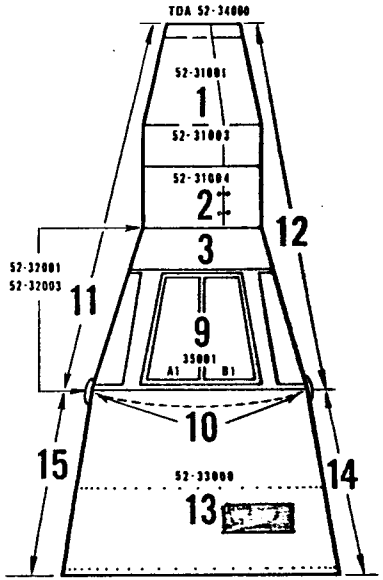

TOP VIEW

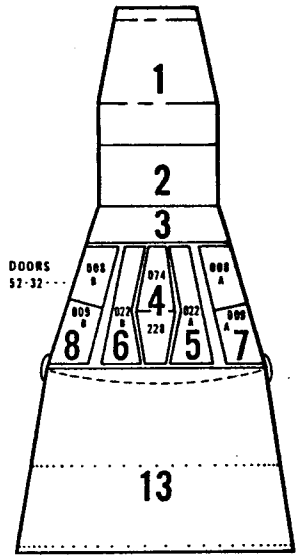

BOTTOM VIEW

1. RENDEZVOUS AND RADAR MODULE
2. RE-ENTRY RCS MODULE
3. FORWARD AREA CONE
4. CENTER EQUIPMENT BAY
5. L/H LANDING GEAR BAY
6. R/H LANDING GEAR BAY
7. L/H EQUIPMENT BAY
8. R/H EQUIPMENT BAY
9. CREW PRESSURIZED AREA
10. EXTERIOR AREA OF LARGE PRESS. BULKHEAD
11. SPACECRAFT EXTERIOR L/H
12. SPACECRAFT EXTERIOR R/H
13. INTERNAL ADAPTER AREA
14. R/H EXTERNAL ADAPTER AREA
15. L/H EXTERNAL ADAPTER AREA
16. ZONE FOR ENTIRE SPACECRAFT

GEMINI SPACECRAFT NO. 3A

ZONE NO. 02 MOD

TOTAL EQUIPMENT REQUIRED 3

EQUIPMENT ON HAND 3

EQUIPMENT TO SCHEDULE 0

EQUIPMENT LATE 0

PART NO.	PART NAME	NORM. INST.	SLACK	DEF. INST.	SLACK	HOURS TO INSTALL

8-7-4

SPACECRAFT NUMBER THREE A

SUBJECT: GEMINI STATUS REPORT FOR THE PERIOD 31 JULY 1964 THRU 7 AUGUST 1964

RECAPITULATION

CABIN

WHITE ROOM

1. Coolant Pressure Drop Test completed R/H and L/H Bays.
2. Manufacturing Cabin Coolant Test run.
3. Manufacturing H_2O Management Test run.
4. Center Main Instrument Panel installed.
5. Upper Main Instrument Panel installed.
6. Attitude control handle installed.
7. Computer installed in Zone 7.
8. Suit Power Supply installed in Zone 8.
9. Switch bodies installed in Zones 7 and 8.
10. UHF Transceiver installed in Zone 8.
11. Power Inverter installed in Zone 4.
12. ACE Package installed in Zone 4.
13. VSWR K 342 completed.

WORK IN PROGRESS

1. R/H and L/H Instrument Panels in final assembly.
2. Balance of inert pyrotechniques in final installation.
3. Installing balance of major equipment items.
4. SST Phase I SEDR C 385 in work.

RCS

WHITE ROOM

1. Pyrotechnic Equipment (inert) installation 90% complete.
2. External hatch handle and Associated Hardware installed.

SPACECRAFT NUMBER THREE A

SUBJECT: GEMINI STATUS REPORT FOR THE PERIOD 11 JULY 1964 THRU 7 AUGUST 1964

RCS

WHITE ROOM

3. Fuel and Oxidizer Manifolds installed.

4. Connecting lines to thruster, A, B, C, D, Packages, Tanks and Regulators installed.

5. "B" Packages installed.

6. Thrust chambers installed.

7. Wire bundle and temperature sensor installations complete.

WORK IN PROGRESS

1. Hooking up of line connection in fuel and oxidizer systems.

2. Inspection of brazing on plumbing installations.

R & R

WHITE ROOM

1. Wire bundles and relay panel installed.

2. Pyrotechnic equipment installations 60% complete.

WORK IN PROGRESS

1. Installation of balance of pyrotechnic equipment.

ADAPTER

WHITE ROOM

1. Leak Test of coolant lines complete.

2. 100#, 85#, and 25# Thrust Chambers installed.

3. Relay panels installed

4. Battery Module installed.

5. Electronics Module installed.

6. All temperature sensors installed.

7. VSWR of SST completed.

SPACECRAFT NUMBER THREE A

SUBJECT: GEMINI STATUS REPORT FOR THE PERIOD 11 JULY 1964 THRU 7 AUGUST 1964

WORK IN PROGRESS

1. Installation of equipment modules.

2. Connecting of lines and wiring hook ups between modules and adapter.

BATTERY MODULE

1. Assembly of module completed.

2. Module installed in adapter.

O_2 MODULE

1. Assembly of module completed.

ECS COOLANT MODULE

1. Ground Coolant Heat Exchanger installed.

2. Regenerative Heat Exchanger installed.

3. Temperature sensors installed.

4. Lines and fittings installed.

5. Coolant Leak Test completed.

6. Module 95% complete.

WORK IN PROGRESS

1. Installation of water evaporator.

CONS MODULE

1. Fuel and oxidizer lines, tanks, and A, B, C, D and E Packages installed.

2. Module 90% complete.

WORK IN PROGRESS

1. Brazing of line connection and fittings.

ELECTRONICS MODULE

1. Module assembly completed.

2. Module installed in Spacecraft.

SPACECRAFT NUMBER THREE A

SUBJECT: GEMINI STATUS REPORT FOR THE PERIOD 31 JULY 1964 THRU 7 AUGUST 1964

SUMMARY OF SCHEDULE POSITION

ADAPTER, ECS, R & R (WHITE ROOM)

1. The above are approximately four (4) weeks behind schedule.

CABIN

1. Cabin approximately seven (7) weeks behind schedule.

FORECAST

The following events are scheduled for accomplishment during the next thirty day period:

CABIN

WHITE ROOM

1. Instrument panels to be installed.

2. Balance of major equipment items to be installed.

3. SEDR G 385 Coolant Line Test to be run.

4. SEDR G 380 ECS Package to be PTA'ed.

5. SEDR H 403 ECS Package to be installed.

6. SEDR G 381 ECS Validation to be made.

7. Cabin Pressure Test to be run.

8. Heat Shield to be installed.

9. Cabin to be mated with ECS, R & R and Adapter.

10. VSWR K 342 in mated condition to be run.

11. SEDR H 311 System Power Verification in mated condition to be run.

12. SEDR H 341 ECS Validation in mated condition to be run.

13. SEDR H 502 Coolant Servicing in mated condition to be run.

14. Spacecraft to be delivered to Lab for Thermal Qual Tests.

SPACECRAFT NUMBER THREE A

SUBJECT: GEMINI STATUS REPORT FOR THE PERIOD 31 JULY 1964 THRU 7 AUGUST 1964

RCS

WHITE ROOM

1. Balance of pyrotechnic equipment to be installed.

2. Fuel and oxidizer tanks and connecting lines to be installed.

3. Manifold (Fuel and Oxidizer) Leak Tests to be performed.

4. Balance of heater assemblies, temperature sensors and thermocouples to be installed.

5. Validation and functional SST to be performed.

6. Blankets and shingles to be installed.

7. Flotation ball assembly to be installed.

8. RCS to be mated to Re-entry Module.

R & R

WHITE ROOM

1. Balance of pyrotechnic equipment to be installed.

2. Radar to be installed.

3. Chute container to be installed.

4. R & R to be mated with ICS Section.

ADAPTER

WHITE ROOM

1. Pyrotechnic equipment installation to be completed.

2. CMS, EWS Coolant, O_2 Modules to be installed.

3. Plumbing lines and wiring connections between adapter and modules to be completed.

4. SST SEDM's to be performed.

5. Adapter to be mated with Re-entry Module.

RCS COOLANT MODULE

1. Water evaporator to be installed.

SPACEGRAM NUMBER THREE A

SUBJECT: GEMINI STATUS REPORT FOR THE PERIOD 31 JULY 1964 THRU 7 AUGUST 1964

ECS COOLANT MODULE

2. Line assembly connecting to water evaporator to be installed.

CAMS MODULE

1. Balance of fuel line to be installed.

2. Line fittings and hardware to be installed.

3. Balance of temperature sensors to be installed.

4. Leak Test to be performed.

5. MAC/NASA Inspection to be performed.

CONSTRAINING PART SHORTAGES

CABIN

1. 88723-3 Synchro Repeater.

2. 87723-11 Aux. Computer.

3. 87717-49 Power Supply.

4. 85713-83 Programmer.

5. 85713-85 Low Level Multiplexer.

6. 85713-87 High Level Multiplexer.

7. 596-9971 Bio-Med Recorder.

8. 77607, 77613 Delay Panels.

ADAPTER, ECS, R & R, ECS COOLANT MODULE, CAMS MODULE

1. No part shortages or problem areas at present time.

GEMINI MANUFACTURING WORK PLAN–SPACECRAFT NO. 4

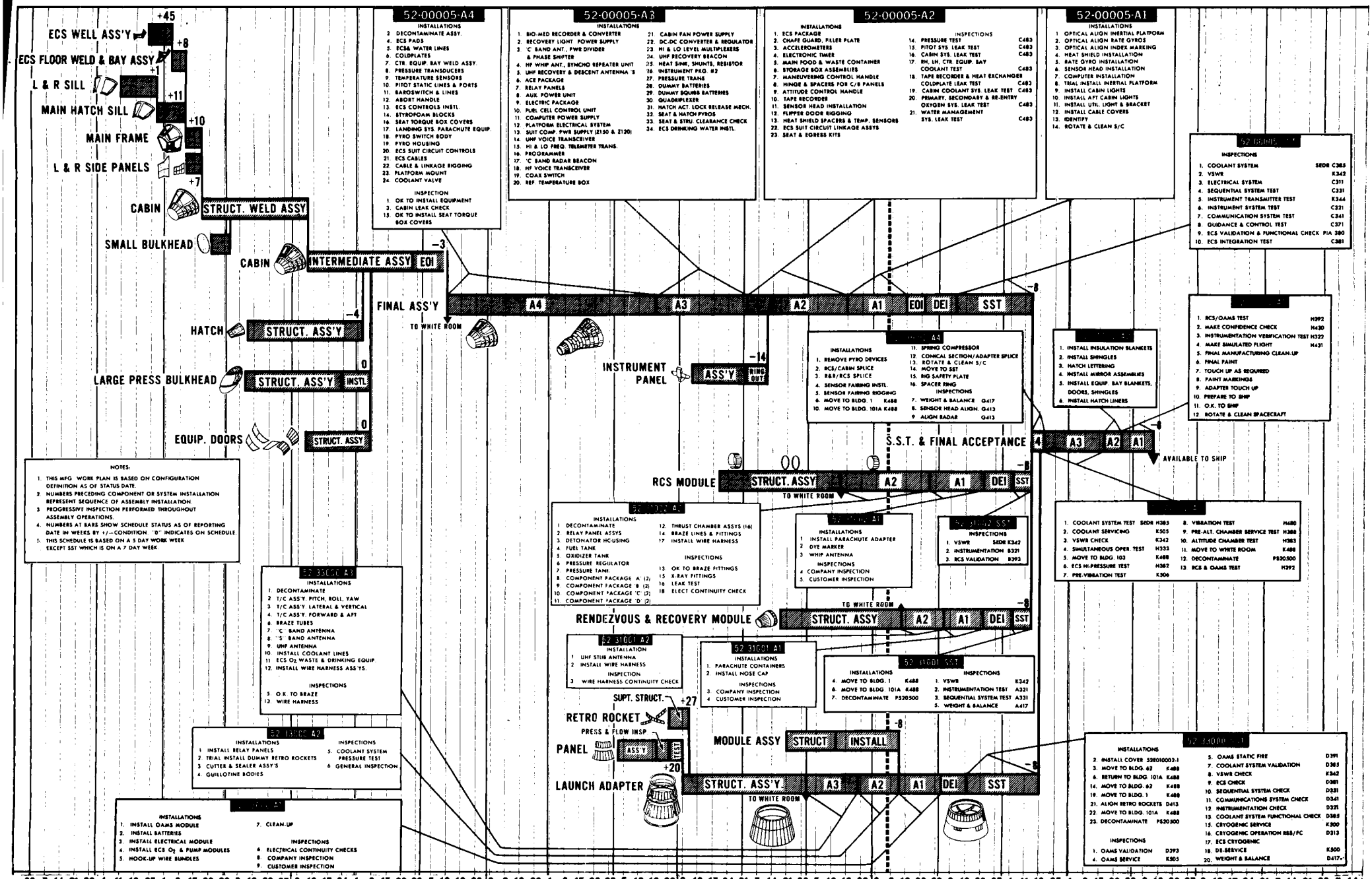

52-00005-A4

INSTALLATIONS
2. DECONTAMINATE ASSY.
4. ECS PADS
5. ECSS WATER LINES
6. COLDPLATES
7. CTR. EQUIP. BAY WELD ASSY.
8. PRESSURE TRANSDUCERS
9. TEMPERATURE SENSORS
10. PITOT STATIC LINES & PORTS
11. BAROSWITCH & LINES
12. ABORT HANDLE
13. ECS CONTROLS INSTL.
14. STYROFOAM BLOCKS
16. SEAT TORQUE BOX COVERS
17. LANDING SYS. PARACHUTE EQUIP.
18. PYRO SWITCH BODY
19. PYRO HOUSING
20. ECS SUIT CIRCUIT CONTROLS
21. ECS CABLES
22. CABLE & LINKAGE RIGGING
23. PLATFORM MOUNT
24. COOLANT VALVE

INSPECTION
1. OK TO INSTALL EQUIPMENT
3. CABIN LEAK CHECK
15. OK TO INSTALL SEAT TORQUE BOX COVERS

52-00005-A3

INSTALLATIONS
1. BIO-MED RECORDER & CONVERTER
2. RECOVERY LIGHT POWER SUPPLY
3. 'C' BAND ANT., PWR DIVIDER & PHASE SHIFTER
4. HF WHIP ANT., SYNCHO REPEATER UNIT
5. UHF RECOVERY & DESCENT ANTENNA 'S
6. ACE PACKAGE
7. RELAY PANELS
8. AUX. POWER UNIT
9. ELECTRIC PACKAGE
10. FUEL CELL CONTROL UNIT
11. COMPUTER POWER SUPPLY
12. PLATFORM ELECTRICAL SYSTEM
13. SUIT COMP. PWR SUPPLY (Z150 & Z120)
14. UHF VOICE TRANSCEIVER
15. HI & LO FREQ. TELEMETER TRANS.
16. PROGRAMMER
17. 'C' BAND RADAR BEACON
18. HF VOICE TRANSCEIVER
19. COAX SWITCH
20. REF. TEMPERATURE BOX
21. CABIN FAN POWER SUPPLY
22. DC-DC CONVERTER & REGULATOR
23. HI & LO LEVEL MULTIPLEXERS
24. UHF RECOVERY BEACON
25. HEAT SINK, SHUNTS, RESISTOR
26. INSTRUMENT PKG. #2
27. PRESSURE TRANS
28. DUMMY BATTERIES
29. DUMMY SQUIBS BATTERIES
30. QUADRIPLEXER
31. HATCH ACT. LOCK RELEASE MECH.
32. SEAT & HATCH PYROS
33. SEAT & STRU. CLEARANCE CHECK
34. ECS DRINKING WATER INSTL.

52-00005-A2

INSTALLATIONS
1. ECS PACKAGE
2. CHAFE GUARD, FILLER PLATE
3. ACCELEROMETERS
4. ELECTRONIC TIMER
5. MAIN FOOD & WASTE CONTAINER
6. STORAGE BOX ASSEMBLIES
7. MANEUVERING CONTROL HANDLE
8. HINGE & SPACERS FOR C/B PANELS
9. ATTITUDE CONTROL HANDLE
10. TAPE RECORDER
11. SENSOR HEAD INSTALLATION
12. FLIPPER DOOR RIGGING
13. HEAT SHIELD SPACERS & TEMP. SENSORS
22. ECS SUIT CIRCUIT LINKAGE ASSYS
23. SEAT & EGRESS KITS

INSPECTIONS
14. PRESSURE TEST C483
15. PITOT SYS. LEAK TEST C483
16. CABIN SYS. LEAK TEST C483
17. RH, LH, CTR. EQUIP. BAY COOLANT TEST C483
18. TAPE RECORDER & HEAT EXCHANGER COLDPLATE LEAK TEST C483
19. CABIN COOLANT SYS. LEAK TEST C483
20. PRIMARY, SECONDARY & RE-ENTRY OXYGEN SYS. LEAK TEST C483
21. WATER MANAGEMENT SYS. LEAK TEST C483

52-00005-A1

INSTALLATIONS
1. OPTICAL ALIGN INERTIAL PLATFORM
2. OPTICAL ALIGN RATE GYROS
3. OPTICAL ALIGN INDEX MARKING
4. HEAT SHIELD INSTALLATION
5. RATE GYRO INSTALLATION
6. SENSOR HEAD INSTALLATION
7. COMPUTER INSTALLATION
8. TRIAL INSTALL INERTIAL PLATFORM
9. INSTALL CABIN LIGHTS
10. INSTALL AFT CABIN LIGHTS
11. INSTALL UTIL. LIGHT & BRACKET
12. INSTALL CABLE COVERS
13. IDENTIFY
14. ROTATE & CLEAN S/C

52-00005-[illegible]

INSPECTIONS
1. COOLANT SYSTEM SEDR C385
2. VSWR K342
3. ELECTRICAL SYSTEM C311
4. SEQUENTIAL SYSTEM TEST C331
5. INSTRUMENT TRANSMITTER TEST K344
6. INSTRUMENT SYSTEM TEST C321
7. COMMUNICATION SYSTEM TEST C341
8. GUIDANCE & CONTROL TEST C371
9. ECS VALIDATION & FUNCTIONAL CHECK PIA 380
10. ECS INTEGRATION TEST C381

[illegible] A4

INSTALLATIONS
1. REMOVE PYRO DEVICES
2. RCS/CABIN SPLICE
3. R&R/RCS SPLICE
4. SENSOR FAIRING INSTL.
5. SENSOR FAIRING RIGGING
6. MOVE TO BLDG. 1 K488
10. MOVE TO BLDG. 101A K488
11. SPRING COMPRESSOR
12. CONICAL SECTION/ADAPTER SPLICE
13. ROTATE & CLEAN S/C
14. MOVE TO SST
15. RIG SAFETY PLATE
16. SPACER RING

INSPECTIONS
7. WEIGHT & BALANCE Q417
8. SENSOR HEAD ALIGN. Q413
9. ALIGN RADAR Q413

[illegible]

1. INSTALL INSULATION BLANKETS
2. INSTALL SHINGLES
3. HATCH LETTERING
4. INSTALL MIRROR ASSEMBLIES
5. INSTALL EQUIP. BAY BLANKETS, DOORS, SHINGLES
6. INSTALL HATCH LINERS

[illegible]

1. RCS/OAMS TEST H392
2. MAKE CONFIDENCE CHECK H430
3. INSTRUMENTATION VERIFICATION TEST H322
4. MAKE SIMULATED FLIGHT H431
5. FINAL MANUFACTURING CLEAN-UP
6. FINAL PAINT
7. TOUCH UP AS REQUIRED
8. PAINT MARKINGS
9. ADAPTER TOUCH UP
10. PREPARE TO SHIP
11. O.K. TO SHIP
12. ROTATE & CLEAN SPACECRAFT

[illegible]

1. COOLANT SYSTEM TEST SEDR H385
2. COOLANT SERVICING K505
3. VSWR CHECK K342
4. SIMULTANEOUS OPER. TEST H333
5. MOVE TO BLDG. 103 K488
6. ECS HI-PRESSURE TEST H382
7. PRE-VIBRATION TEST K306
8. VIBRATION TEST H480
9. PRE-ALT. CHAMBER SERVICE TEST H388
10. ALTITUDE CHAMBER TEST H383
11. MOVE TO WHITE ROOM K488
12. DECONTAMINATE PS20500
13. RCS & OAMS TEST H392

[illegible] A2

INSTALLATIONS
1. DECONTAMINATE
2. RELAY PANEL ASSYS
3. DETONATOR HOUSING
4. FUEL TANK
5. OXIDIZER TANK
6. PRESSURE REGULATOR
7. PRESSURE TANK
8. COMPONENT PACKAGE 'A' (2)
9. COMPONENT PACKAGE 'B' (2)
10. COMPONENT PACKAGE 'C' (2)
11. COMPONENT PACKAGE 'D' (2)
12. THRUST CHAMBER ASSYS (16)
14. BRAZE LINES & FITTINGS
17. INSTALL WIRE HARNESS

INSPECTIONS
13. OK TO BRAZE FITTINGS
15. X-RAY FITTINGS
16. LEAK TEST
18. ELECT CONTINUITY CHECK

[illegible] A1

INSTALLATIONS
1. INSTALL PARACHUTE ADAPTER
2. DYE MARKER
3. WHIP ANTENNA

INSPECTIONS
4. COMPANY INSPECTION
5. CUSTOMER INSPECTION

[illegible] SST

INSPECTIONS
1. VSWR SEDR K342
2. INSTRUMENTATION B321
3. RCS VALIDATION B393

52-33C00-A3

INSTALLATIONS
1. DECONTAMINATE
2. T/C ASS'Y. PITCH, ROLL, YAW
3. T/C ASS'Y. LATERAL & VERTICAL
4. T/C ASS'Y. FORWARD & AFT
6. BRAZE TUBES
7. 'C' BAND ANTENNA
8. 'S' BAND ANTENNA
9. UHF ANTENNA
10. INSTALL COOLANT LINES
11. ECS O_2 WASTE & DRINKING EQUIP.
12. INSTALL WIRE HARNESS ASS'YS.

INSPECTIONS
5. O.K. TO BRAZE
13. WIRE HARNESS

52-31C01-A2

INSTALLATION
1. UHF STUB ANTENNA
2. INSTALL WIRE HARNESS

INSPECTION
3. WIRE HARNESS CONTINUITY CHECK

52-31C01-A1

INSTALLATIONS
1. PARACHUTE CONTAINERS
2. INSTALL NOSE CAP

INSPECTIONS
3. COMPANY INSPECTION
4. CUSTOMER INSPECTION

52-31C01-SST

INSTALLATIONS
4. MOVE TO BLDG. 1 K488
6. MOVE TO BLDG. 101A K488
7. DECONTAMINATE PS20500

INSPECTIONS
1. VSWR K342
2. INSTRUMENTATION TEST A321
3. SEQUENTIAL SYSTEM TEST A331
5. WEIGHT & BALANCE A417

52-[illegible] A2

INSTALLATIONS
1. INSTALL RELAY PANELS
2. TRIAL INSTALL DUMMY RETRO ROCKETS
3. CUTTER & SEALER ASSY'S
4. GUILLOTINE BODIES

INSPECTIONS
5. COOLANT SYSTEM PRESSURE TEST
6. GENERAL INSPECTION

[illegible] A1

INSTALLATIONS
1. INSTALL OAMS MODULE
2. INSTALL BATTERIES
3. INSTALL ELECTRICAL MODULE
4. INSTALL ECS O_2 & PUMP MODULES
5. HOOK-UP WIRE BUNDLES
7. CLEAN-UP

INSPECTIONS
6. ELECTRICAL CONTINUITY CHECKS
8. COMPANY INSPECTION
9. CUSTOMER INSPECTION

52-[illegible]

INSTALLATIONS
2. INSTALL COVER 52E010002-1
3. MOVE TO BLDG. 62 K488
6. RETURN TO BLDG. 101A K488
14. MOVE TO BLDG. 62 K488
19. MOVE TO BLDG. 1 K488
21. ALIGN RETRO ROCKETS D413
22. MOVE TO BLDG. 101A K488
23. DECONTAMINATE PS20500
5. OAMS STATIC FIRE D391
7. COOLANT SYSTEM VALIDATION D385
8. VSWR CHECK K342
9. ECS CHECK D381
10. SEQUENTIAL SYSTEM CHECK D331
11. COMMUNICATIONS SYSTEM CHECK D341
12. INSTRUMENTATION CHECK D321
13. COOLANT SYSTEM FUNCTIONAL CHECK D385
15. CRYOGENIC SERVICE K500
16. CRYOGENIC OPERATION RSS/FC D313
17. ECS CRYOGENIC
18. DE-SERVICE K500
20. WEIGHT & BALANCE D417

INSPECTIONS
1. OAMS VALIDATION D393
4. OAMS SERVICE K505

NOTES:
1. THIS MFG. WORK PLAN IS BASED ON CONFIGURATION DEFINITION AS OF STATUS DATE.
2. NUMBERS PRECEDING COMPONENT OR SYSTEM INSTALLATION REPRESENT SEQUENCE OF ASSEMBLY INSTALLATION.
3. PROGRESSIVE INSPECTION PERFORMED THROUGHOUT ASSEMBLY OPERATIONS.
4. NUMBERS AT BARS SHOW SCHEDULE STATUS AS OF REPORTING DATE IN WEEKS BY +/–CONDITION. "0" INDICATES ON SCHEDULE.
5. THIS SCHEDULE IS BASED ON A 5 DAY WORK WEEK EXCEPT SST WHICH IS ON A 7 DAY WEEK.

STATUS AS OF 7 AUG. 1964

GEMINI SPACECRAFT NO. 4
EQUIPMENT STUDY

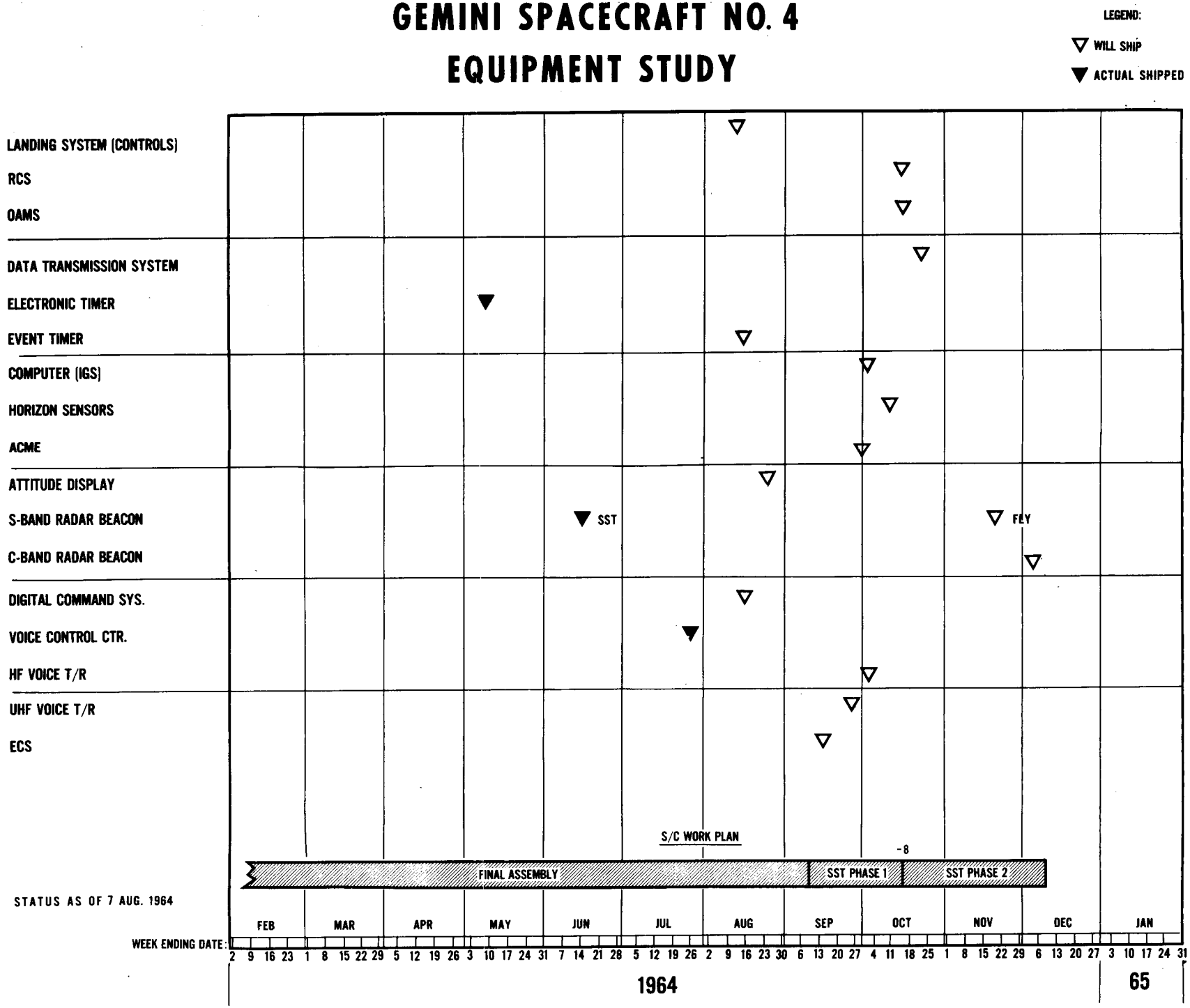

S/C 4 SCHEDULE

SST TO DELIVERY

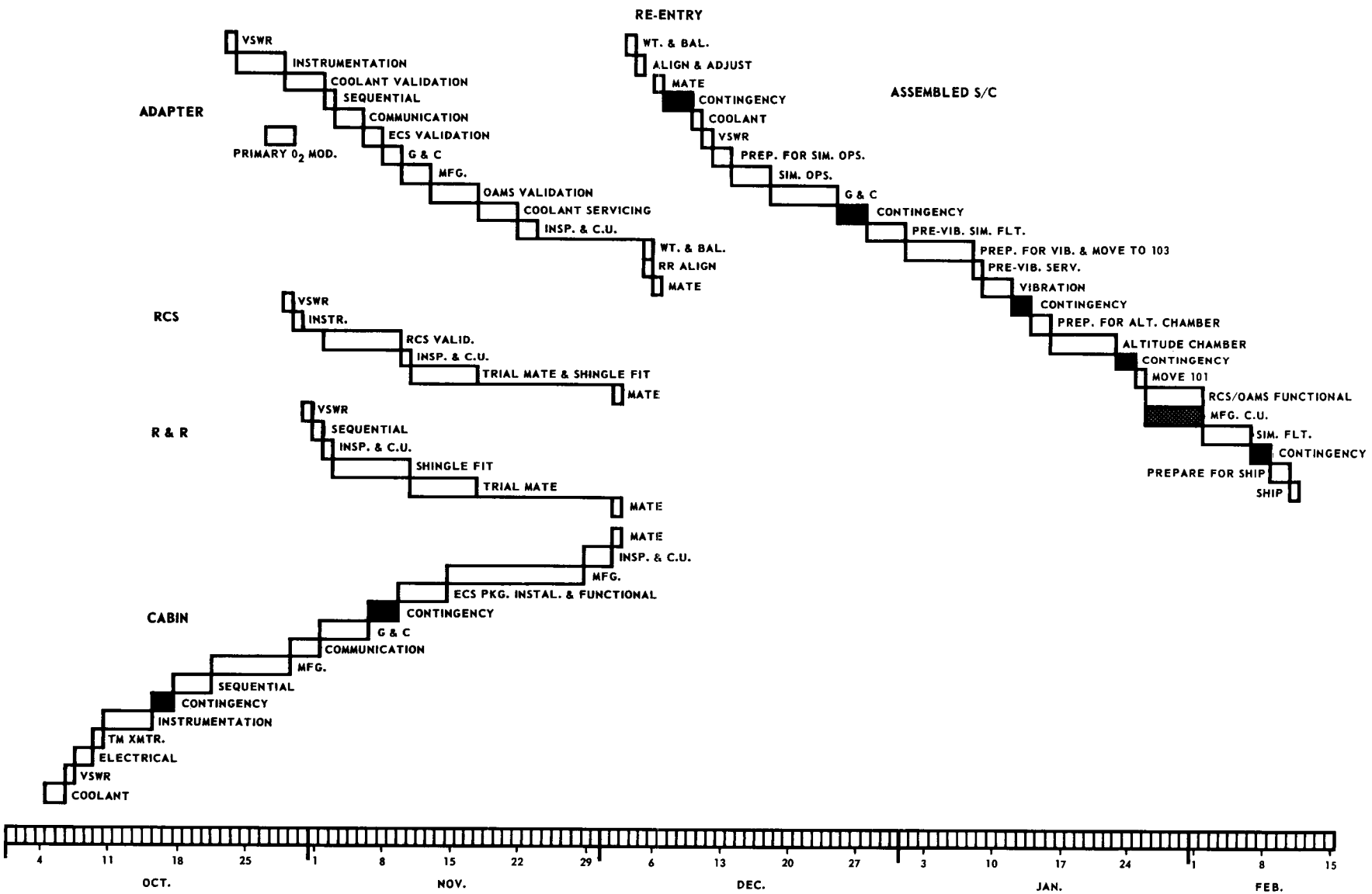

S/C 4 WORK PLAN FINAL ASSY

	ZONE	TOTAL HRS.	OPEN HRS.
1. STRUCTURAL EOPO INCORP		1858	386
2. PRESSURE TEST	9	102	27
3. ECS INSTALLATION & PLUMBING	9	194	124
4. WIRE BUNDLES IN CABIN	9	315	74
5. PEDESTAL INSTALLATION	9	24	24
6. FIBERGLASS CHANNELS & MIN-K	4 5 6 7 8 11 12	0	0
7. INSTALL SHINGLES	3 4 5 7 8 11	90	90
8. INSTALL & RIG HATCHES	11 12	99	85
9. INSTALL & RIG 32060 DOORS	5 6	130	130
10. INSTALL STYROFOAM	3 7 8	81	0
11. INSTALL COLD PLATES & PLUMBING	3 7 8	195	113
12. INSTALL W/B IN EQUIPMENT BAYS	3 7 8	847	386
13. SPLICE THERMOCOUPLES & TEST	9 11 12	107	83
14. INSTALL STATIC SYSTEM	3	64	28
15. PRESSURE TEST STATIC SYSTEM	3	22	22
16. EQUIPMENT INSTALLATION (CABIN)	9	510	432
17. EQUIPMENT INSTALLATION (OTHER)	7	309	289
18. DITMCO	16	186	186
19. SPLICE TEMP. SENSORS	9 12	0	0
20. SST PHASE I		436	436
21. HEAT SHIELD INSTALLATION	10	168	168
22. MECHANICAL MATE RCS & RR	1 2 9	0	0
23. MECHANICAL MATE ADAPTER	10 14 15	0	0

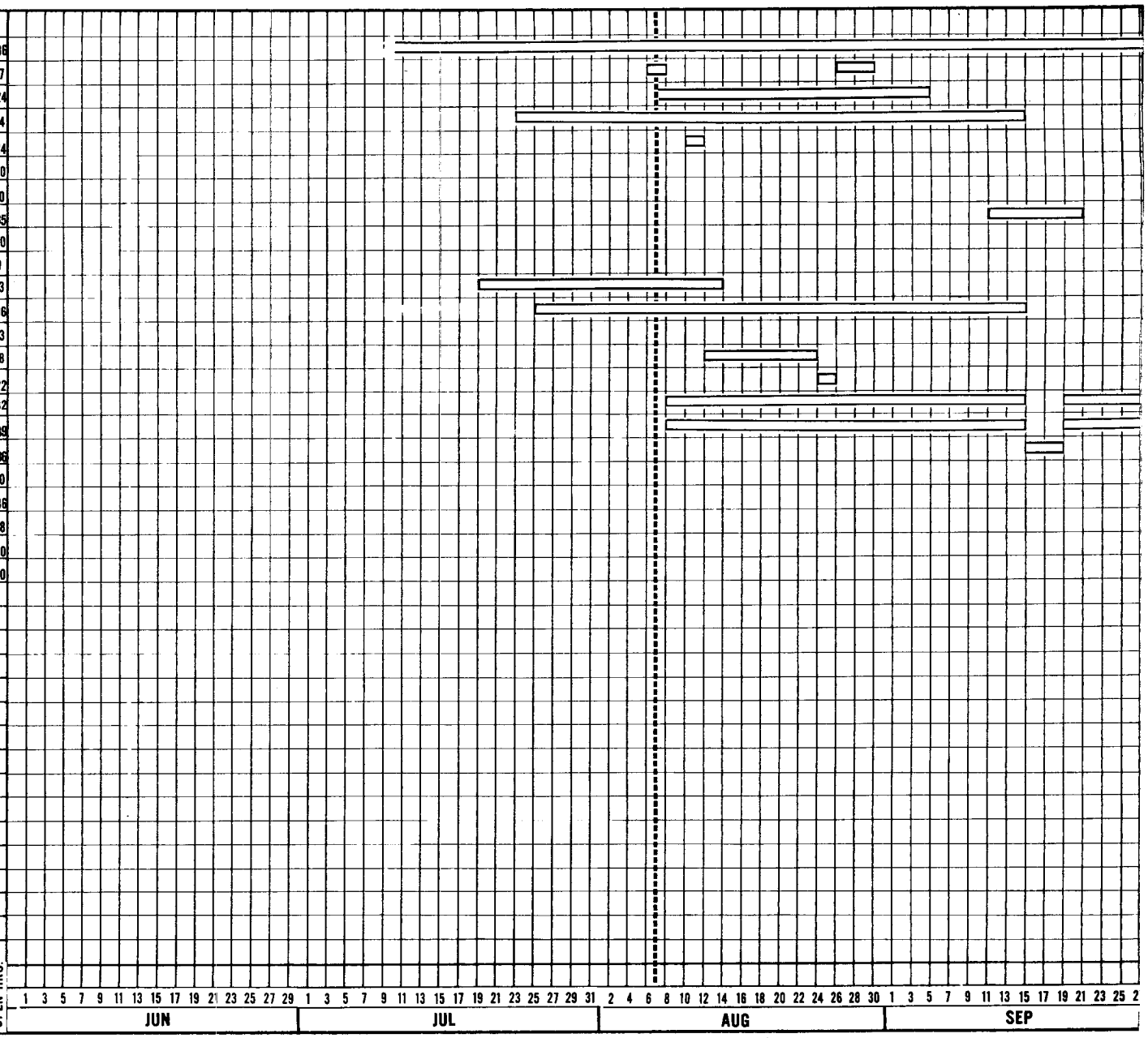

LEGEND: WORK PERIOD

STATUS AS OF 7 AUG. 1964

S C 4 WORK PLAN FINAL ASSEMBLY

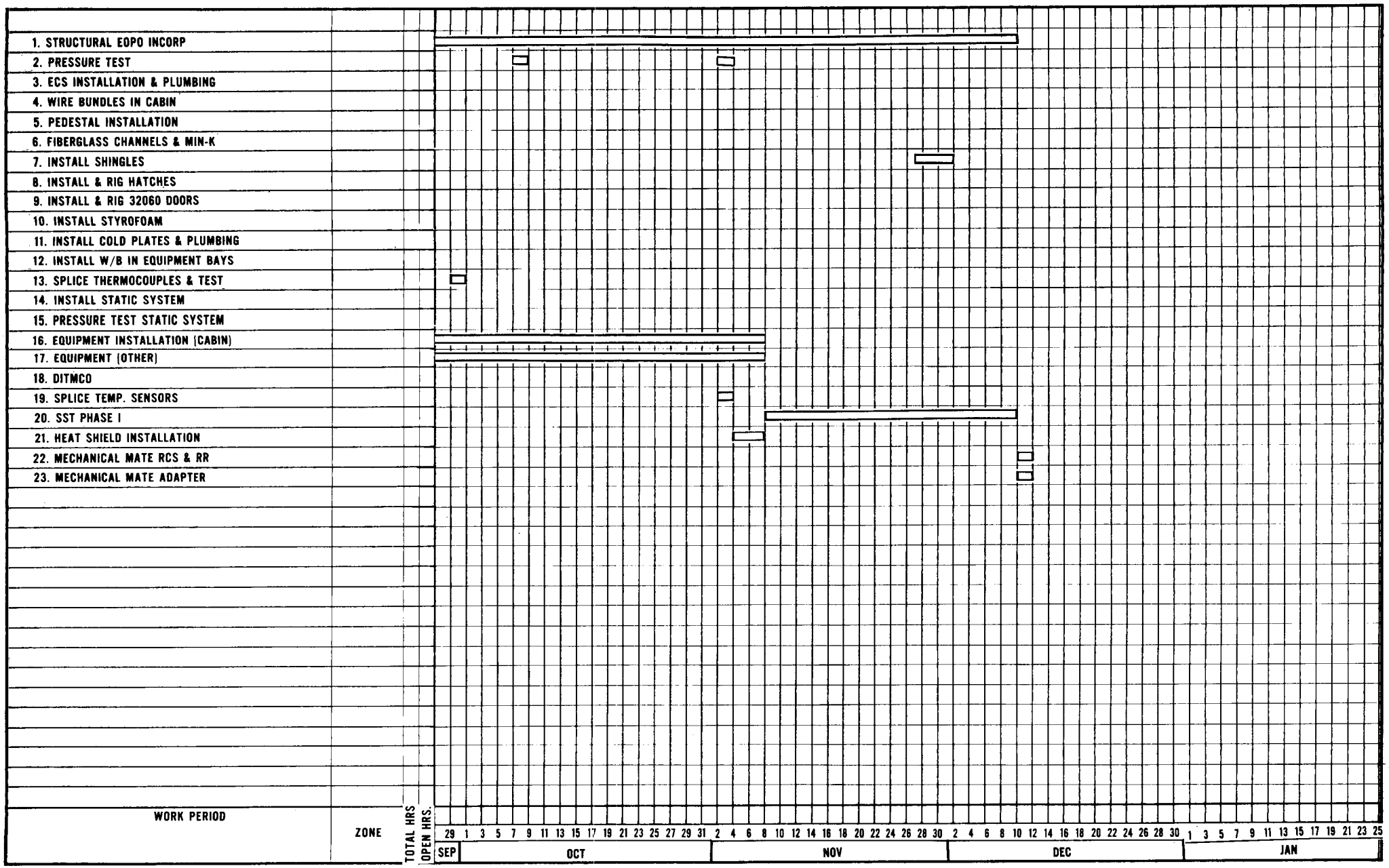

STATUS AS OF 7 AUG. 1964

GEMINI ZONE CHART

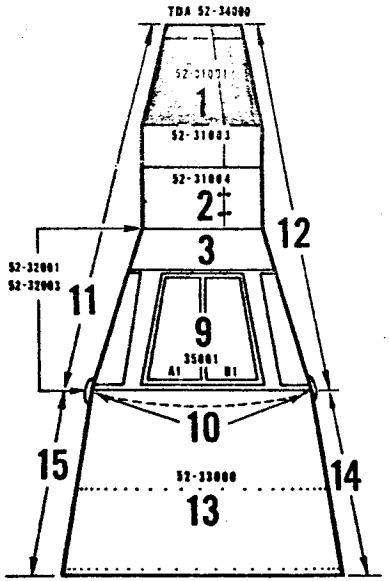

TOP VIEW

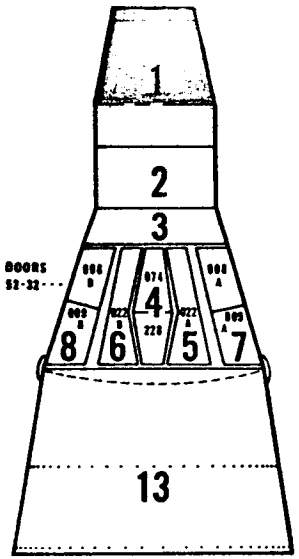

BOTTOM VIEW

1. RENDEZVOUS AND RADAR MODULE
2. RE-ENTRY RCS MODULE
3. FORWARD AREA CONE
4. CENTER EQUIPMENT BAY
5. L/H LANDING GEAR BAY
6. R/H LANDING GEAR BAY
7. L/H EQUIPMENT BAY
8. R/H EQUIPMENT BAY
9. CREW PRESSURIZED AREA
10. EXTERIOR AREA OF LARGE PRESS. BULKHEAD
11. SPACECRAFT EXTERIOR L/H
12. SPACECRAFT EXTERIOR R/H
13. INTERNAL ADAPTER AREA
14. R/H EXTERNAL ADAPTER AREA
15. L/H EXTERNAL ADAPTER AREA
16. ZONE FOR ENTIRE SPACECRAFT

GEMINI SPACECRAFT NO. 4

ZONE NO. 1

TOTAL EQUIPMENT REQUIRED 17

EQUIPMENT ON HAND 0

EQUIPMENT TO SCHEDULE 17

EQUIPMENT LATE 0

PART NO.	PART NAME	NORM. INST.	SLACK	DEF. INST.	SLACK	HOURS TO INSTALL

GEMINI ZONE CHART

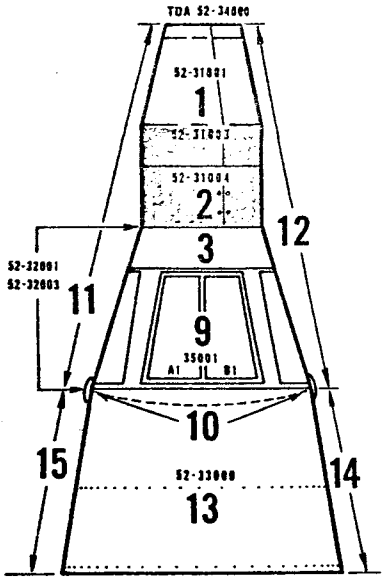

TOP VIEW

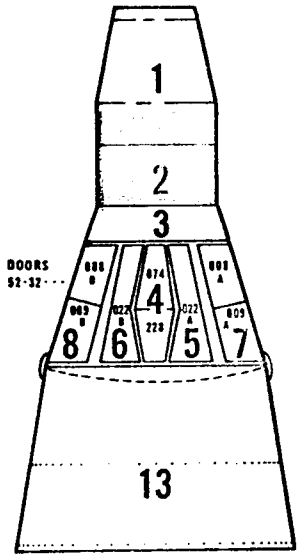

BOTTOM VIEW

1. RENDEZVOUS AND RADAR MODULE
2. RE-ENTRY RCS MODULE
3. FORWARD AREA CONE
4. CENTER EQUIPMENT BAY
5. L/H LANDING GEAR BAY
6. R/H LANDING GEAR BAY
7. L/H EQUIPMENT BAY
8. R/H EQUIPMENT BAY
9. CREW PRESSURIZED AREA
10. EXTERIOR AREA OF LARGE PRESS. BULKHEAD
11. SPACECRAFT EXTERIOR L/H
12. SPACECRAFT EXTERIOR R/H
13. INTERNAL ADAPTER AREA
14. R/H EXTERNAL ADAPTER AREA
15. L/H EXTERNAL ADAPTER AREA
16. ZONE FOR ENTIRE SPACECRAFT

GEMINI SPACECRAFT NO. 4

ZONE NO. 2

TOTAL EQUIPMENT REQUIRED 50

EQUIPMENT ON HAND 28

EQUIPMENT TO SCHEDULE 22

EQUIPMENT LATE 0

PART NO.	PART NAME	NORM. INST.	SLACK	DEF. INST.	SLACK	HOURS TO INSTALL

GEMI ZONE CHART

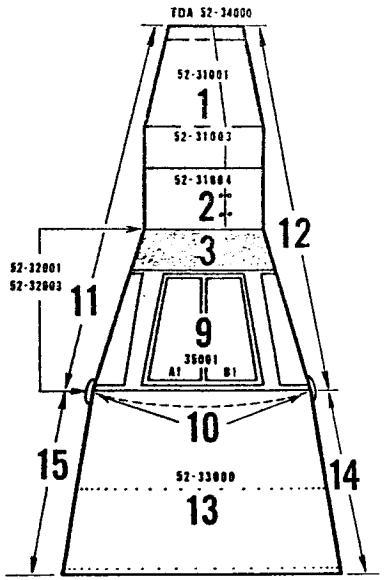

TOP VIEW

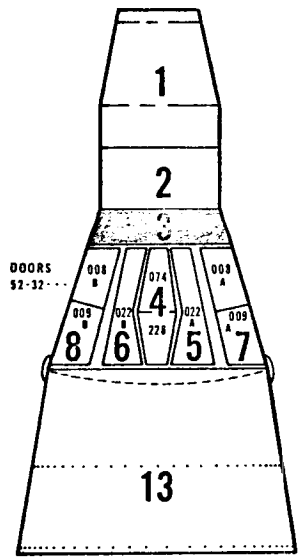

BOTTOM VIEW

1. RENDEZVOUS AND RADAR MODULE
2. RE-ENTRY RCS MODULE
3. FORWARD AREA CONE
4. CENTER EQUIPMENT BAY
5. L/H LANDING GEAR BAY
6. R/H LANDING GEAR BAY
7. L/H EQUIPMENT BAY
8. R/H EQUIPMENT BAY
9. CREW PRESSURIZED AREA
10. EXTERIOR AREA OF LARGE PRESS. BULKHEAD
11. SPACECRAFT EXTERIOR L/H
12. SPACECRAFT EXTERIOR R/H
13. INTERNAL ADAPTER AREA
14. R/H EXTERNAL ADAPTER AREA
15. L/H EXTERNAL ADAPTER AREA
16. ZONE FOR ENTIRE SPACECRAFT

GEMINI SPACECRAFT NO. 4

ZONE NO. 3

TOTAL EQUIPMENT REQUIRED 48

EQUIPMENT ON HAND 32

EQUIPMENT TO SCHEDULE 14

EQUIPMENT LATE 2

PART NO.	PART NAME	NORM. INST.	SLACK	DEF. INST.	SLACK	HOURS TO INSTALL
72714-7-124	SWITCH BODY	00005 A4	-8	00005 A2	0	2
83153-9	S/O VALVE FLOAT	0005 A4	-8	00005 A2	0	3

GEMINI ZONE CHART

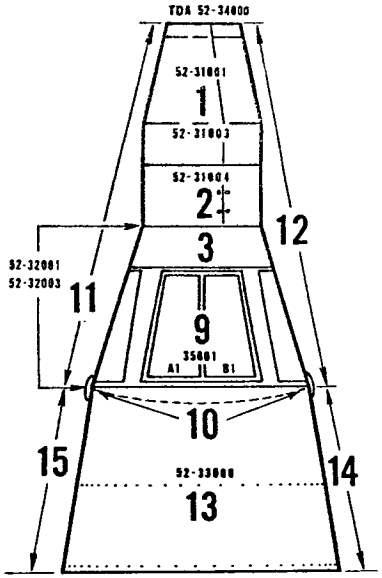

TOP VIEW

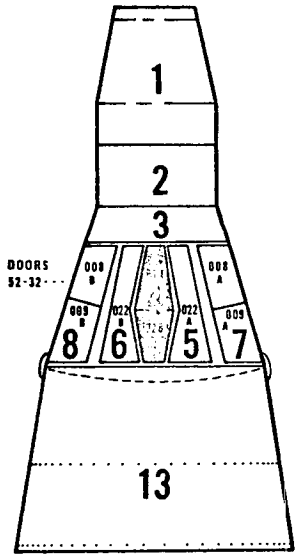

BOTTOM VIEW

1. RENDEZVOUS AND RADAR MODULE
2. RE-ENTRY RCS MODULE
3. FORWARD AREA CONE
4. CENTER EQUIPMENT BAY
5. L/H LANDING GEAR BAY
6. R/H LANDING GEAR BAY
7. L/H EQUIPMENT BAY
8. R/H EQUIPMENT BAY
9. CREW PRESSURIZED AREA
10. EXTERIOR AREA OF LARGE PRESS. BULKHEAD
11. SPACECRAFT EXTERIOR L/H
12. SPACECRAFT EXTERIOR R/H
13. INTERNAL ADAPTER AREA
14. R/H EXTERNAL ADAPTER AREA
15. L/H EXTERNAL ADAPTER AREA
16. ZONE FOR ENTIRE SPACECRAFT

GEMINI SPACECRAFT NO. 4

ZONE NO. 4

TOTAL EQUIPMENT REQUIRED 32

EQUIPMENT ON HAND 26

EQUIPMENT TO SCHEDULE 4

EQUIPMENT LATE 2

PART NO.	PART NAME	NORM. INST.	SLACK	DEF. INST.	SLACK	HOURS TO INSTALL
83713-3	(2) VALVES	00005 A4	-8	00005 A2	+3	3

GEMINI ZONE CHART

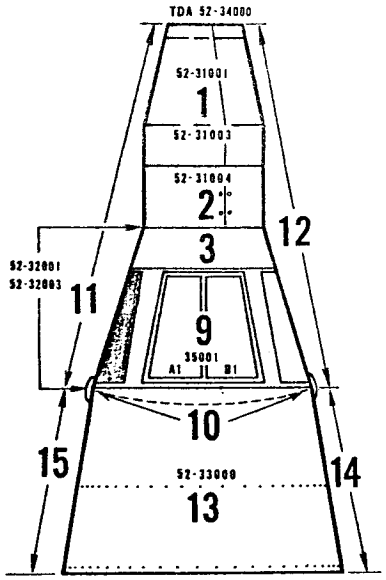

TOP VIEW

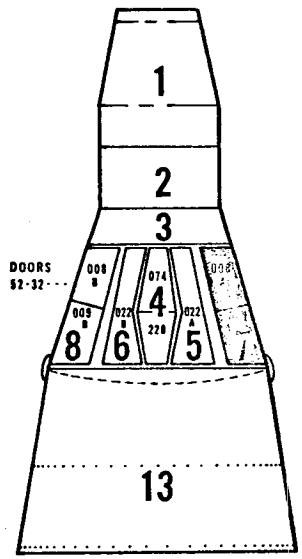

BOTTOM VIEW

1. RENDEZVOUS AND RADAR MODULE
2. RE-ENTRY RCS MODULE
3. FORWARD AREA CONE
4. CENTER EQUIPMENT BAY
5. L/H LANDING GEAR BAY
6. R/H LANDING GEAR BAY
7. L/H EQUIPMENT BAY
8. R/H EQUIPMENT BAY
9. CREW PRESSURIZED AREA
10. EXTERIOR AREA OF LARGE PRESS. BULKHEAD
11. SPACECRAFT EXTERIOR L/H
12. SPACECRAFT EXTERIOR R/H
13. INTERNAL ADAPTER AREA
14. R/H EXTERNAL ADAPTER AREA
15. L/H EXTERNAL ADAPTER AREA
16. ZONE FOR ENTIRE SPACECRAFT

GEMINI SPACECRAFT NO. 4

ZONE NO. 7

TOTAL EQUIPMENT REQUIRED 57

EQUIPMENT ON HAND 23

EQUIPMENT TO SCHEDULE 11

EQUIPMENT LATE 3

PART NO.	PART NAME	NORM. INST.	SLACK	DEF. INST.	SLACK	HOURS TO INSTALL
72714-7 -123	SWITCH BODY (2)	00005 A4	-7	00005 A2	+4	3
87717-29	PLATFORM MOUNT	00005 A4	-7	00005 A2	+2	2

GEMINI ZONE CHART

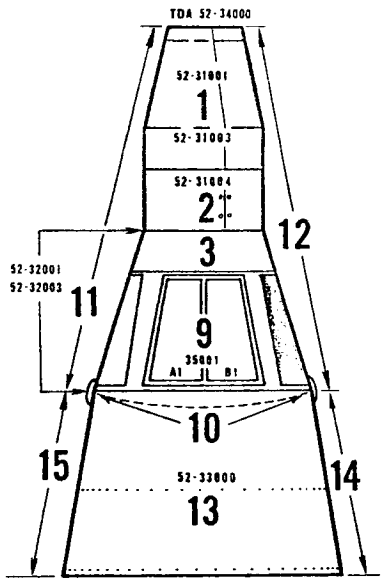

TOP VIEW

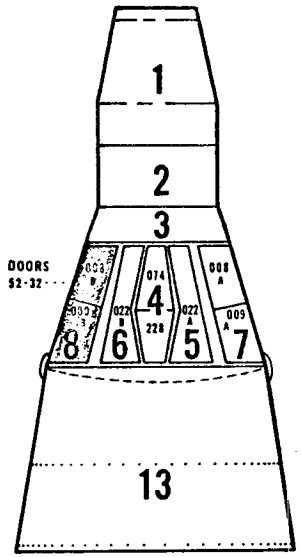

BOTTOM VIEW

1. RENDEZVOUS AND RADAR MODULE
2. RE-ENTRY RCS MODULE
3. FORWARD AREA CONE
4. CENTER EQUIPMENT BAY
5. L/H LANDING GEAR BAY
6. R/H LANDING GEAR BAY
7. L/H EQUIPMENT BAY
8. R/H EQUIPMENT BAY
9. CREW PRESSURIZED AREA
10. EXTERIOR AREA OF LARGE PRESS. BULKHEAD
11. SPACECRAFT EXTERIOR L/H
12. SPACECRAFT EXTERIOR R/H
13. INTERNAL ADAPTER AREA
14. R/H EXTERNAL ADAPTER AREA
15. L/H EXTERNAL ADAPTER AREA
16. ZONE FOR ENTIRE SPACECRAFT

GEMINI SPACECRAFT NO. 4

ZONE NO. 8

TOTAL EQUIPMENT REQUIRED 78

EQUIPMENT ON HAND 49

EQUIPMENT TO SCHEDULE 29

EQUIPMENT LATE 0

PART NO.	PART NAME	NORM. INST.	SLACK	DEF. INST.	SLACK	HOURS TO INSTALL

GEMINI ZONE CHART

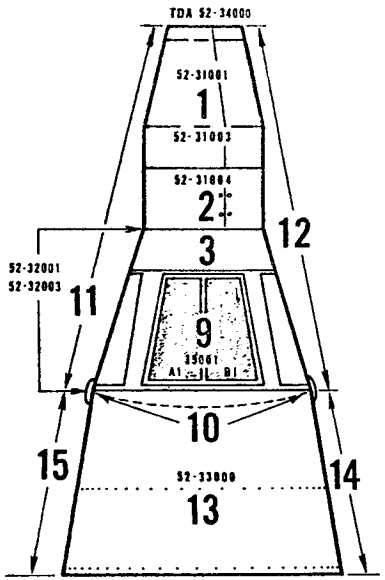

TOP VIEW

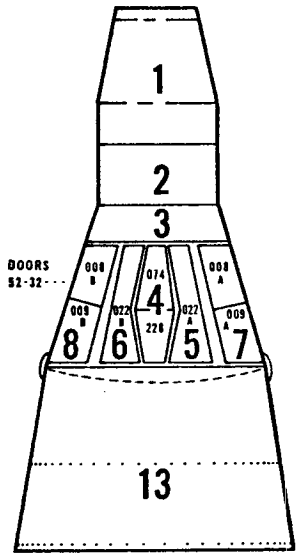

BOTTOM VIEW

1. RENDEZVOUS AND RADAR MODULE
2. RE-ENTRY RCS MODULE
3. FORWARD AREA CONE
4. CENTER EQUIPMENT BAY
5. L/H LANDING GEAR BAY
6. R/H LANDING GEAR BAY
7. L/H EQUIPMENT BAY
8. R/H EQUIPMENT BAY
9. CREW PRESSURIZED AREA
10. EXTERIOR AREA OF LARGE PRESS. BULKHEAD
11. SPACECRAFT EXTERIOR L/H
12. SPACECRAFT EXTERIOR R/H
13. INTERNAL ADAPTER AREA
14. R/H EXTERNAL ADAPTER AREA
15. L/H EXTERNAL ADAPTER AREA
16. ZONE FOR ENTIRE SPACECRAFT

GEMINI SPACECRAFT NO. 4

ZONE NO. 9

TOTAL EQUIPMENT REQUIRED 118

EQUIPMENT ON HAND 91

EQUIPMENT TO SCHEDULE 15

EQUIPMENT LATE 12

PART NO.	PART NAME	NORM. INST.	SLACK	DEF. INST.	SLACK	HOURS TO INSTALL
83700-723	MANUAL SHUT OFF VALVE	00005 A4	-8	00005 A2	+1	3
83700-277	E.C.S SECONDARY	00005 A4	-7	00005 A2	+2	2
41703-183-121	BRIDLE DISC ASSY	00005 A4	-6	00005 A2	+1	4
83162-15	BUTTERFLY S/O VALVE	00005 A4	-7	00005 A2	+1	2
83149-17	CABIN PRESS. VALVE	00005 A4	-7	00005 A2	+2	3
72714 -7-12.3	SWITCH BODY (2)	00005 A4	-6	00005 A2	0	3
72714 -9-12.3	SWITCH BODY (5)	00005 A4	-6	00005 A2	0	3

GEMINI ZONE CHART

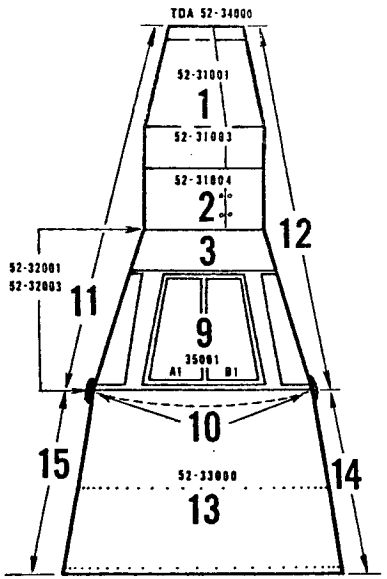

TOP VIEW

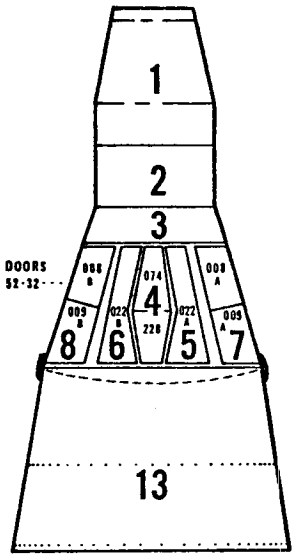

BOTTOM VIEW

1. RENDEZVOUS AND RADAR MODULE
2. RE-ENTRY RCS MODULE
3. FORWARD AREA CONE
4. CENTER EQUIPMENT BAY
5. L/H LANDING GEAR BAY
6. R/H LANDING GEAR BAY
7. L/H EQUIPMENT BAY
8. R/H EQUIPMENT BAY
9. CREW PRESSURIZED AREA
10. EXTERIOR AREA OF LARGE PRESS. BULKHEAD
11. SPACECRAFT EXTERIOR L/H
12. SPACECRAFT EXTERIOR R/H
13. INTERNAL ADAPTER AREA
14. R/H EXTERNAL ADAPTER AREA
15. L/H EXTERNAL ADAPTER AREA
16. ZONE FOR ENTIRE SPACECRAFT

GEMINI SPACECRAFT NO. 4

ZONE NO. 10

TOTAL EQUIPMENT REQUIRED 2

EQUIPMENT ON HAND 0

EQUIPMENT TO SCHEDULE 2

EQUIPMENT LATE 0

PART NO.	PART NAME	NORM. INST.	SLACK	DEF. INST.	SLACK	HOURS TO INSTALL

GEMINI ZONE CHART

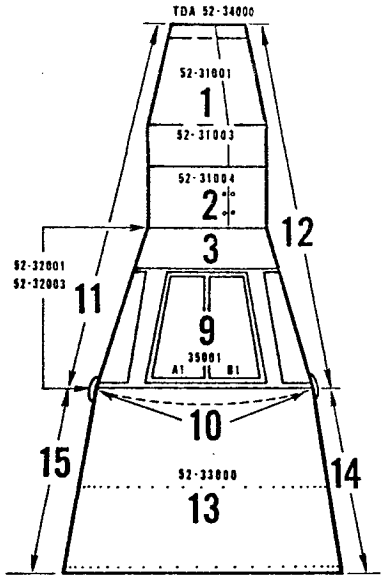

TOP VIEW

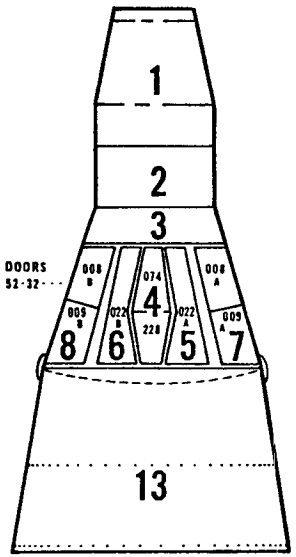

BOTTOM VIEW

1. RENDEZVOUS AND RADAR MODULE
2. RE-ENTRY RCS MODULE
3. FORWARD AREA CONE
4. CENTER EQUIPMENT BAY
5. L/H LANDING GEAR BAY
6. R/H LANDING GEAR BAY
7. L/H EQUIPMENT BAY
8. R/H EQUIPMENT BAY
9. CREW PRESSURIZED AREA
10. EXTERIOR AREA OF LARGE PRESS. BULKHEAD
11. SPACECRAFT EXTERIOR L/H
12. SPACECRAFT EXTERIOR R/H
13. INTERNAL ADAPTER AREA
14. R/H EXTERNAL ADAPTER AREA
15. L/H EXTERNAL ADAPTER AREA
16. ZONE FOR ENTIRE SPACECRAFT

GEMINI SPACECRAFT NO. 4

ZONE NO. 11

TOTAL EQUIPMENT REQUIRED 3

EQUIPMENT ON HAND 1

EQUIPMENT TO SCHEDULE 2

EQUIPMENT LATE 0

PART NO.	PART NAME	NORM. INST.	SLACK	DEF. INST.	SLACK	HOURS TO INSTALL

GEMI ZONE CHART

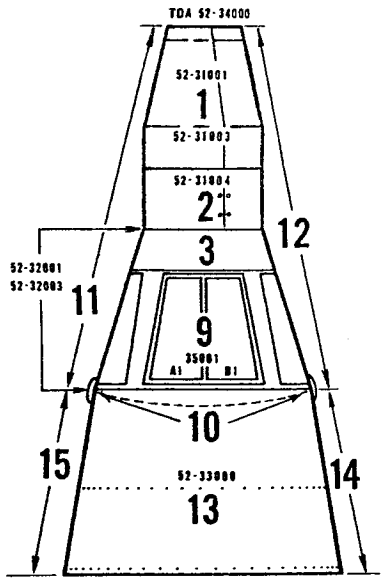

TOP VIEW

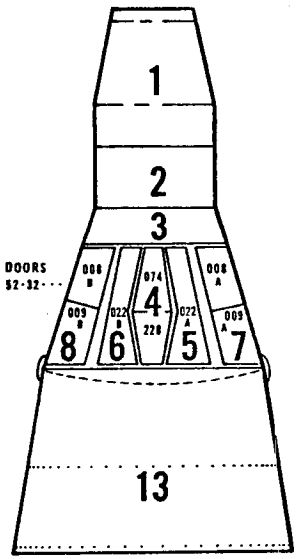

BOTTOM VIEW

1. RENDEZVOUS AND RADAR MODULE
2. RE-ENTRY RCS MODULE
3. FORWARD AREA CONE
4. CENTER EQUIPMENT BAY
5. L/H LANDING GEAR BAY
6. R/H LANDING GEAR BAY
7. L/H EQUIPMENT BAY
8. R/H EQUIPMENT BAY
9. CREW PRESSURIZED AREA
10. EXTERIOR AREA OF LARGE PRESS. BULKHEAD
11. SPACECRAFT EXTERIOR L/H
12. SPACECRAFT EXTERIOR R/H
13. INTERNAL ADAPTER AREA
14. R/H EXTERNAL ADAPTER AREA
15. L/H EXTERNAL ADAPTER AREA
16. ZONE FOR ENTIRE SPACECRAFT

GEMINI SPACECRAFT NO. 4

52-81000-501-4

CONTROL PANEL-L.H. MAIN

TOTAL EQUIPMENT REQUIRED 18

EQUIPMENT ON HAND 11

EQUIPMENT TO SCHEDULE 7

EQUIPMENT LATE 0

PART NO.	PART NAME	NORM. INST.	SLACK	DEF. INST.	SLACK	HOURS TO INSTALL

GEMINI ZONE CHART

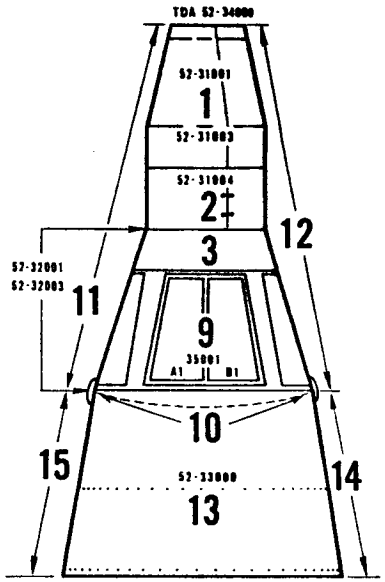

TOP VIEW

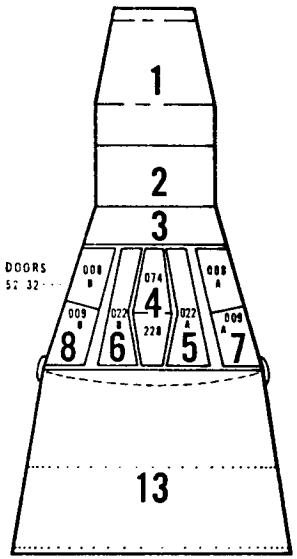

BOTTOM VIEW

1. RENDEZVOUS AND RADAR MODULE
2. RE-ENTRY RCS MODULE
3. FORWARD AREA CONE
4. CENTER EQUIPMENT BAY
5. L/H LANDING GEAR BAY
6. R/H LANDING GEAR BAY
7. L/H EQUIPMENT BAY
8. R/H EQUIPMENT BAY
9. CREW PRESSURIZED AREA
10. EXTERIOR AREA OF LARGE PRESS. BULKHEAD
11. SPACECRAFT EXTERIOR L/H
12. SPACECRAFT EXTERIOR R/H
13. INTERNAL ADAPTER AREA
14. R/H EXTERNAL ADAPTER AREA
15. L/H EXTERNAL ADAPTER AREA
16. ZONE FOR ENTIRE SPACECRAFT

GEMINI SPACECRAFT NO. 4

52-81000-502-4

[redacted] CONTROL PANEL-R.H. MAIN

TOTAL EQUIPMENT REQUIRED 20
EQUIPMENT ON HAND 15
EQUIPMENT TO SCHEDULE 5
EQUIPMENT LATE 0

PART NO.	PART NAME	NORM. INST.	SLACK	DEF. INST.	SLACK	HOURS TO INSTALL

GEMINI ZONE CHART

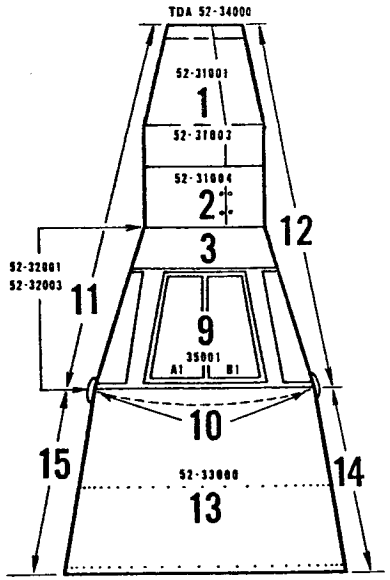

TOP VIEW

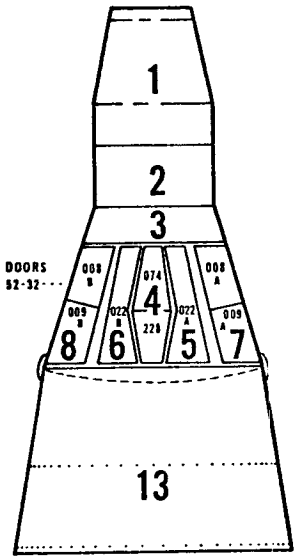

BOTTOM VIEW

1. RENDEZVOUS AND RADAR MODULE
2. RE-ENTRY RCS MODULE
3. FORWARD AREA CONE
4. CENTER EQUIPMENT BAY
5. L/H LANDING GEAR BAY
6. R/H LANDING GEAR BAY
7. L/H EQUIPMENT BAY
8. R/H EQUIPMENT BAY
9. CREW PRESSURIZED AREA
10. EXTERIOR AREA OF LARGE PRESS. BULKHEAD
11. SPACECRAFT EXTERIOR L/H
12. SPACECRAFT EXTERIOR R/H
13. INTERNAL ADAPTER AREA
14. R/H EXTERNAL ADAPTER AREA
15. L/H EXTERNAL ADAPTER AREA
16. ZONE FOR ENTIRE SPACECRAFT

GEMINI SPACECRAFT NO. 4

52-A1000-503-4

CONTROL PANEL-UPPER MAIN

TOTAL EQUIPMENT REQUIRED 55

EQUIPMENT ON HAND 49

EQUIPMENT TO SCHEDULE 6

EQUIPMENT LATE 0

PART NO.	PART NAME	NORM. INST.	SLACK	DEF. INST.	SLACK	HOURS TO INSTALL

GEMI ZONE CHART

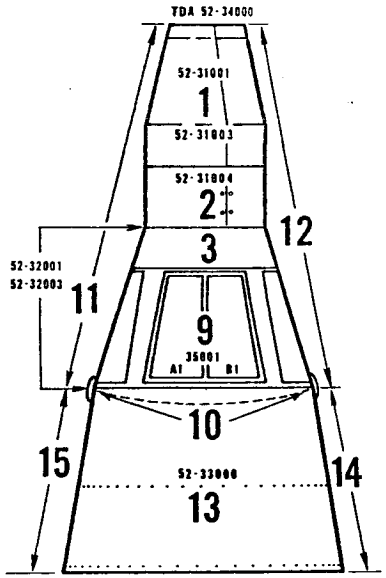

TOP VIEW

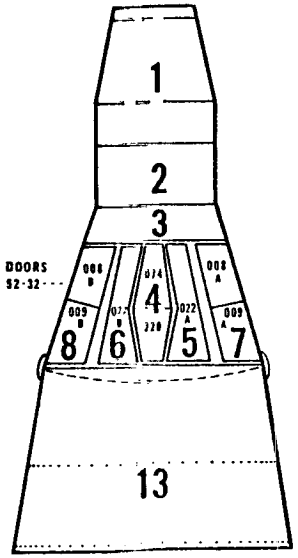

BOTTOM VIEW

1. RENDEZVOUS AND RADAR MODULE
2. RE-ENTRY RCS MODULE
3. FORWARD AREA CONE
4. CENTER EQUIPMENT BAY
5. L/H LANDING GEAR BAY
6. R/H LANDING GEAR BAY
7. L/H EQUIPMENT BAY
8. R/H EQUIPMENT BAY
9. CREW PRESSURIZED AREA
10. EXTERIOR AREA OF LARGE PRESS. BULKHEAD
11. SPACECRAFT EXTERIOR L/H
12. SPACECRAFT EXTERIOR R/H
13. INTERNAL ADAPTER AREA
14. R/H EXTERNAL ADAPTER AREA
15. L/H EXTERNAL ADAPTER AREA
16. ZONE FOR ENTIRE SPACECRAFT

GEMINI SPACECRAFT NO. 52-81000-505-4

CONTROL PANEL-LOWER MAIN

TOTAL EQUIPMENT REQUIRED 28
EQUIPMENT ON HAND 24
EQUIPMENT TO SCHEDULE 4
EQUIPMENT LATE 0

PART NO.	PART NAME	NORM. INST.	SLACK	DEF. INST.	SLACK	HOURS TO INSTALL

GEMI ZONE CHART

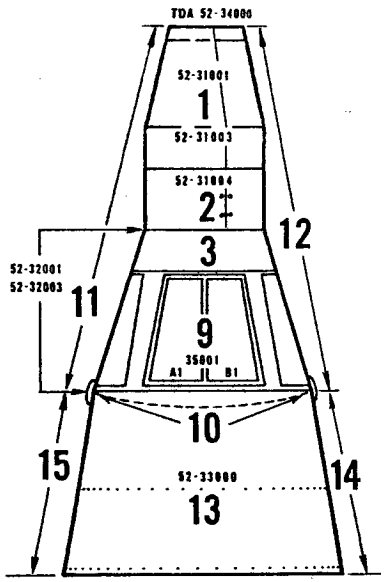

TOP VIEW

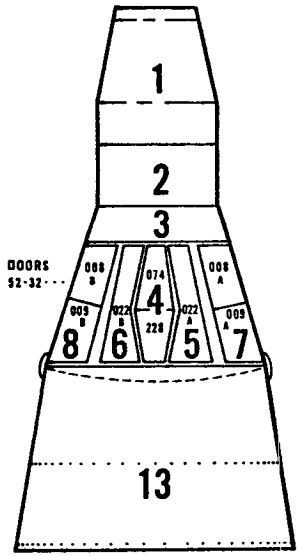

BOTTOM VIEW

1. RENDEZVOUS AND RADAR MODULE
2. RE-ENTRY RCS MODULE
3. FORWARD AREA CONE
4. CENTER EQUIPMENT BAY
5. L/H LANDING GEAR BAY
6. R/H LANDING GEAR BAY
7. L/H EQUIPMENT BAY
8. R/H EQUIPMENT BAY
9. CREW PRESSURIZED AREA
10. EXTERIOR AREA OF LARGE PRESS. BULKHEAD
11. SPACECRAFT EXTERIOR L/H
12. SPACECRAFT EXTERIOR R/H
13. INTERNAL ADAPTER AREA
14. R/H EXTERNAL ADAPTER AREA
15. L/H EXTERNAL ADAPTER AREA
16. ZONE FOR ENTIRE SPACECRAFT

GEMINI SPACECRAFT NO. 52-31000-507-4

CONTROL PANEL-L.H. CKT. BRKR.

TOTAL EQUIPMENT REQUIRED 41

EQUIPMENT ON HAND 37

EQUIPMENT TO SCHEDULE 4

EQUIPMENT LATE 0

PART NO.	PART NAME	NORM. INST.	SLACK	DEF. INST.	SLACK	HOURS TO INSTALL

GEMINI ZONE CHART

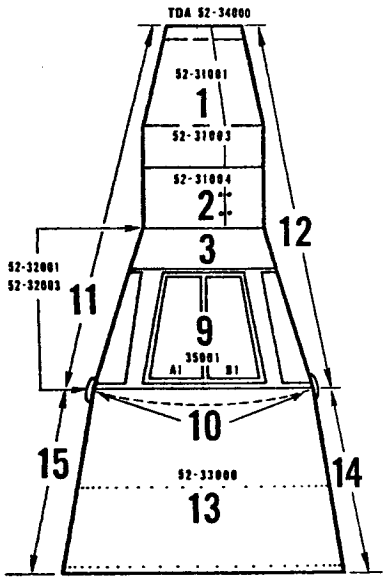

TOP VIEW

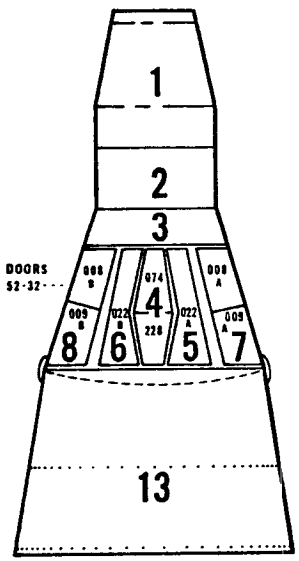

BOTTOM VIEW

1. RENDEZVOUS AND RADAR MODULE
2. RE-ENTRY RCS MODULE
3. FORWARD AREA CONE
4. CENTER EQUIPMENT BAY
5. L/H LANDING GEAR BAY
6. R/H LANDING GEAR BAY
7. L/H EQUIPMENT BAY
8. R/H EQUIPMENT BAY
9. CREW PRESSURIZED AREA
10. EXTERIOR AREA OF LARGE PRESS. BULKHEAD
11. SPACECRAFT EXTERIOR L/H
12. SPACECRAFT EXTERIOR R/H
13. INTERNAL ADAPTER AREA
14. R/H EXTERNAL ADAPTER AREA
15. L/H EXTERNAL ADAPTER AREA
16. ZONE FOR ENTIRE SPACECRAFT

GEMINI SPACECRAFT NO. 52-81000-508-4

[redacted] CONTROL PANEL-R.H. CKT. BRKR.

TOTAL EQUIPMENT REQUIRED 32

EQUIPMENT ON HAND 32

EQUIPMENT TO SCHEDULE 0

EQUIPMENT LATE 0

PART NO.	PART NAME	NORM. INST.	SLACK	DEF. INST.	SLACK	HOURS TO INSTALL

GEMI ZONE CHART

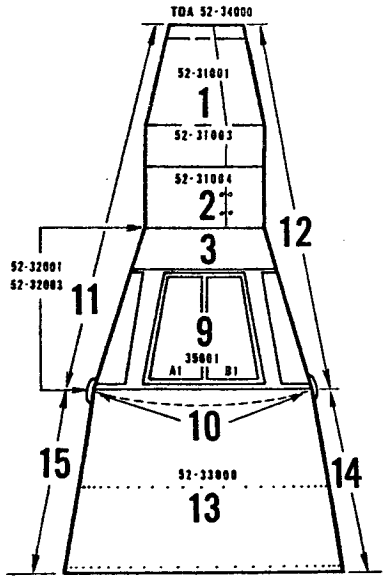

TOP VIEW

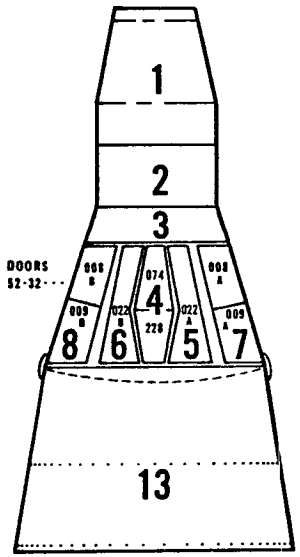

BOTTOM VIEW

1. RENDEZVOUS AND RADAR MODULE
2. RE-ENTRY RCS MODULE
3. FORWARD AREA CONE
4. CENTER EQUIPMENT BAY
5. L/H LANDING GEAR BAY
6. R/H LANDING GEAR BAY
7. L/H EQUIPMENT BAY
8. R/H EQUIPMENT BAY
9. CREW PRESSURIZED AREA
10. EXTERIOR AREA OF LARGE PRESS. BULKHEAD
11. SPACECRAFT EXTERIOR L/H
12. SPACECRAFT EXTERIOR R/H
13. INTERNAL ADAPTER AREA
14. R/H EXTERNAL ADAPTER AREA
15. L/H EXTERNAL ADAPTER AREA
16. ZONE FOR ENTIRE SPACECRAFT

GEMINI SPACECRAFT NO. 52-81000-509-4

[redacted] O'HD SWITCH & CKT BRKR CONTROL PANEL

TOTAL EQUIPMENT REQUIRED 65
EQUIPMENT ON HAND 65
EQUIPMENT TO SCHEDULE 0
EQUIPMENT LATE 0

PART NO.	PART NAME	NORM. INST.	SLACK	DEF. INST.	SLACK	HOURS TO INSTALL

GEMINI ZONE CHART

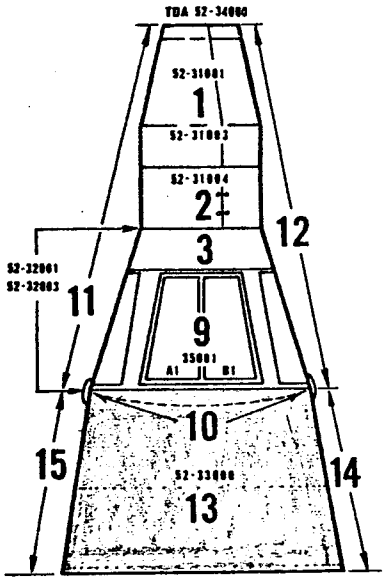

TOP VIEW

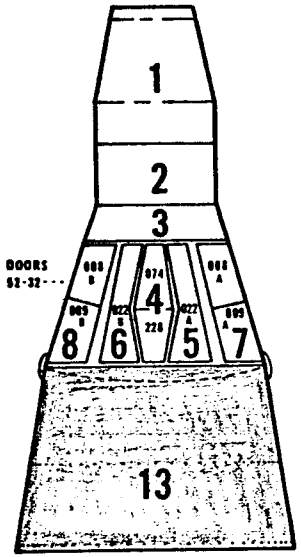

BOTTOM VIEW

1. RENDEZVOUS AND RADAR MODULE
2. RE-ENTRY RCS MODULE
3. FORWARD AREA CONE
4. CENTER EQUIPMENT BAY
5. L/H LANDING GEAR BAY
6. R/H LANDING GEAR BAY
7. L/H EQUIPMENT BAY
8. R/H EQUIPMENT BAY
9. CREW PRESSURIZED AREA
10. EXTERIOR AREA OF LARGE PRESS. BULKHEAD
11. SPACECRAFT EXTERIOR L/H
12. SPACECRAFT EXTERIOR R/H
13. INTERNAL ADAPTER AREA
14. R/H EXTERNAL ADAPTER AREA
15. L/H EXTERNAL ADAPTER AREA
16. ZONE FOR ENTIRE SPACECRAFT

GEMINI SPACECRAFT NO. 4

ZONE NO. 13

TOTAL EQUIPMENT REQUIRED 46

EQUIPMENT ON HAND 30

EQUIPMENT TO SCHEDULE 16

EQUIPMENT LATE 0

PART NO.	PART NAME	NORM. INST.	SLACK	DEF. INST.	SLACK	HOURS TO INSTALL

GEMINI ZONE CHART

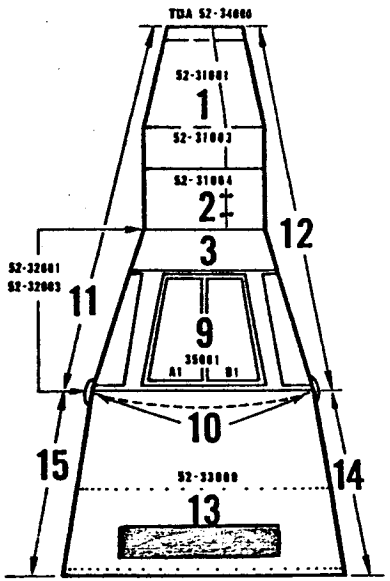

TOP VIEW

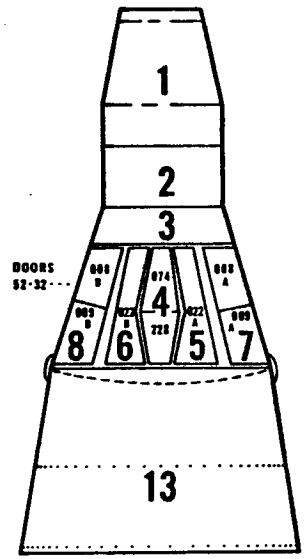

BOTTOM VIEW

1. RENDEZVOUS AND RADAR MODULE
2. RE-ENTRY RCS MODULE
3. FORWARD AREA CONE
4. CENTER EQUIPMENT BAY
5. L/H LANDING GEAR BAY
6. R/H LANDING GEAR BAY
7. L/H EQUIPMENT BAY
8. R/H EQUIPMENT BAY
9. CREW PRESSURIZED AREA
10. EXTERIOR AREA OF LARGE PRESS. BULKHEAD
11. SPACECRAFT EXTERIOR L/H
12. SPACECRAFT EXTERIOR R/H
13. INTERNAL ADAPTER AREA
14. R/H EXTERNAL ADAPTER AREA
15. L/H EXTERNAL ADAPTER AREA
16. ZONE FOR ENTIRE SPACECRAFT

GEMINI SPACECRAFT NO. 4

ZONE NO. OAMS MODULE

TOTAL EQUIPMENT REQUIRED 21

EQUIPMENT ON HAND 15

EQUIPMENT TO SCHEDULE 6

EQUIPMENT LATE 0

PART NO.	PART NAME	NORM. INST.	SLACK	DEF. INST.	SLACK	HOURS TO INSTALL

GEMINI ZONE CHART

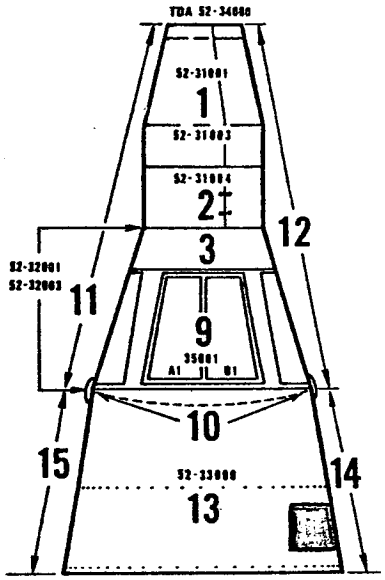

TOP VIEW

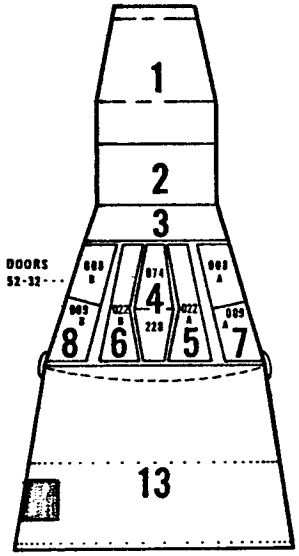

BOTTOM VIEW

1. RENDEZVOUS AND RADAR MODULE
2. RE-ENTRY RCS MODULE
3. FORWARD AREA CONE
4. CENTER EQUIPMENT BAY
5. L/H LANDING GEAR BAY
6. R/H LANDING GEAR BAY
7. L/H EQUIPMENT BAY
8. R/H EQUIPMENT BAY
9. CREW PRESSURIZED AREA
10. EXTERIOR AREA OF LARGE PRESS. BULKHEAD
11. SPACECRAFT EXTERIOR L/H
12. SPACECRAFT EXTERIOR R/H
13. INTERNAL ADAPTER AREA
14. R/H EXTERNAL ADAPTER AREA
15. L/H EXTERNAL ADAPTER AREA
16. ZONE FOR ENTIRE SPACECRAFT

GEMINI SPACECRAFT NO. 4

ZONE NO. ECS MODULE (PUMP)

TOTAL EQUIPMENT REQUIRED 25

EQUIPMENT ON HAND 18

EQUIPMENT TO SCHEDULE 7

EQUIPMENT LATE 0

PART NO.	PART NAME	NORM. INST.	SLACK	DEF. INST.	SLACK	HOURS TO INSTALL

GEMINI ZONE CHART

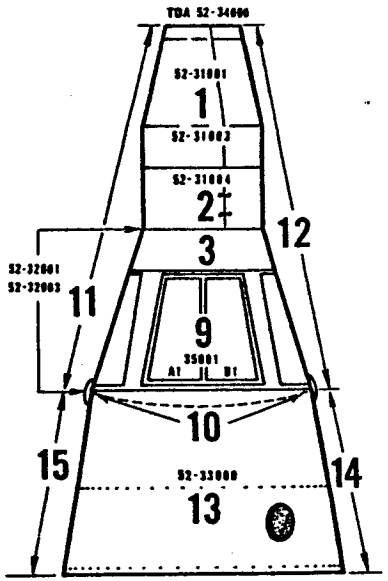

TOP VIEW

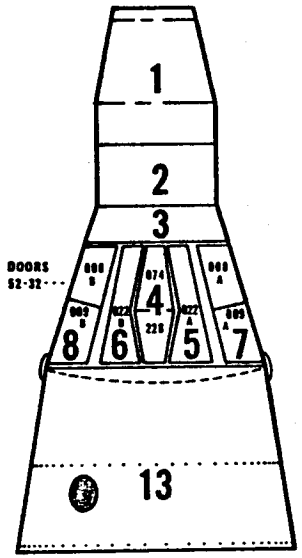

BOTTOM VIEW

1. RENDEZVOUS AND RADAR MODULE
2. RE-ENTRY RCS MODULE
3. FORWARD AREA CONE
4. CENTER EQUIPMENT BAY
5. L/H LANDING GEAR BAY
6. R/H LANDING GEAR BAY
7. L/H EQUIPMENT BAY
8. R/H EQUIPMENT BAY
9. CREW PRESSURIZED AREA
10. EXTERIOR AREA OF LARGE PRESS. BULKHEAD
11. SPACECRAFT EXTERIOR L/H
12. SPACECRAFT EXTERIOR R/H
13. INTERNAL ADAPTER AREA
14. R/H EXTERNAL ADAPTER AREA
15. L/H EXTERNAL ADAPTER AREA
16. ZONE FOR ENTIRE SPACECRAFT

GEMINI SPACECRAFT NO. 4

ZONE NO. ECS O_2 MODULE

TOTAL EQUIPMENT REQUIRED 5

EQUIPMENT ON HAND 1

EQUIPMENT TO SCHEDULE 4

EQUIPMENT LATE 0

PART NO.	PART NAME	NORM. INST.	SLACK	DEF. INST.	SLACK	HOURS TO INSTALL

GEMINI ZONE CHART

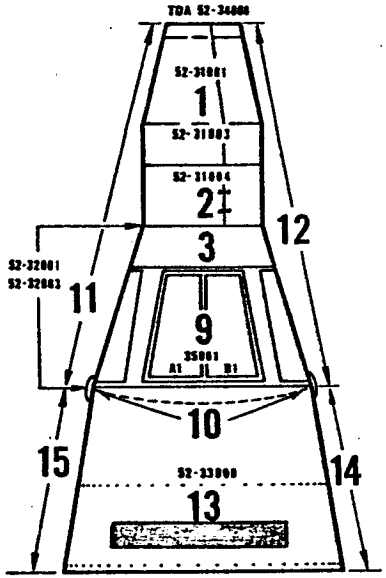

TOP VIEW

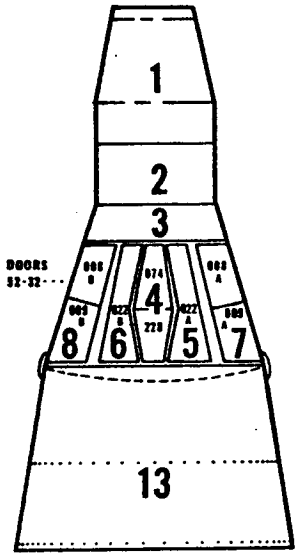

BOTTOM VIEW

1. RENDEZVOUS AND RADAR MODULE
2. RE-ENTRY RCS MODULE
3. FORWARD AREA CONE
4. CENTER EQUIPMENT BAY
5. L/H LANDING GEAR BAY
6. R/H LANDING GEAR BAY
7. L/H EQUIPMENT BAY
8. R/H EQUIPMENT BAY
9. CREW PRESSURIZED AREA
10. EXTERIOR AREA OF LARGE PRESS. BULKHEAD
11. SPACECRAFT EXTERIOR L/H
12. SPACECRAFT EXTERIOR R/H
13. INTERNAL ADAPTER AREA
14. R/H EXTERNAL ADAPTER AREA
15. L/H EXTERNAL ADAPTER AREA
16. ZONE FOR ENTIRE SPACECRAFT

GEMINI SPACECRAFT NO. 4

ZONE NO. BATTERY MODULE

TOTAL EQUIPMENT REQUIRED 25

EQUIPMENT ON HAND 19

EQUIPMENT TO SCHEDULE 6

EQUIPMENT LATE 0

PART NO.	PART NAME	NORM. INST.	SLACK	DEF. INST.	SLACK	HOURS TO INSTALL

GEMINI ZONE CHART

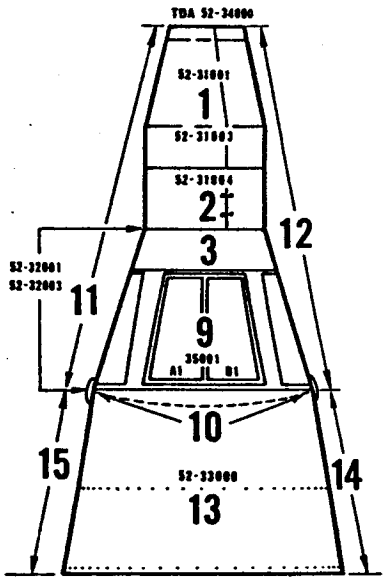

TOP VIEW

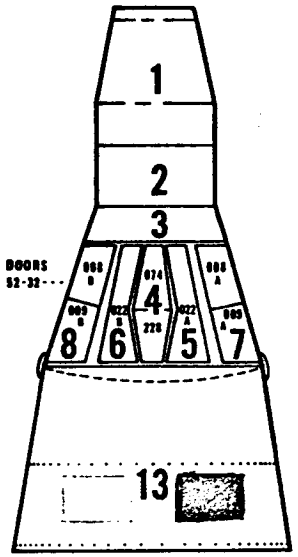

BOTTOM VIEW

1. RENDEZVOUS AND RADAR MODULE
2. RE-ENTRY RCS MODULE
3. FORWARD AREA CONE
4. CENTER EQUIPMENT BAY
5. L/H LANDING GEAR BAY
6. R/H LANDING GEAR BAY
7. L/H EQUIPMENT BAY
8. R/H EQUIPMENT BAY
9. CREW PRESSURIZED AREA
10. EXTERIOR AREA OF LARGE PRESS. BULKHEAD
11. SPACECRAFT EXTERIOR L/H
12. SPACECRAFT EXTERIOR R/H
13. INTERNAL ADAPTER AREA
14. R/H EXTERNAL ADAPTER AREA
15. L/H EXTERNAL ADAPTER AREA
16. ZONE FOR ENTIRE SPACECRAFT

GEMINI SPACECRAFT NO. 4

ZONE NO. ELECTRONICS MODULE

TOTAL EQUIPMENT REQUIRED 14

EQUIPMENT ON HAND 7

EQUIPMENT TO SCHEDULE 7

EQUIPMENT LATE 0

PART NO.	PART NAME	NORM. INST.	SLACK	DEF. INST.	SLACK	HOURS TO INSTALL

GEMINI ZONE CHART

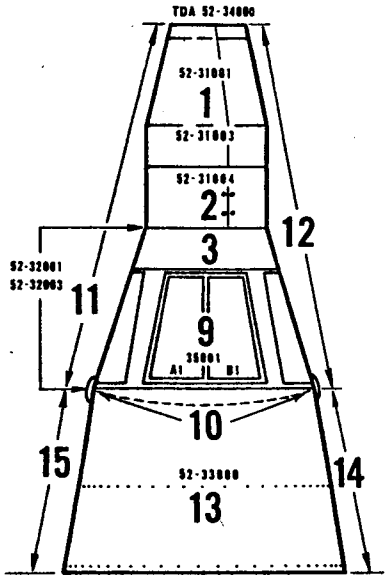

TOP VIEW

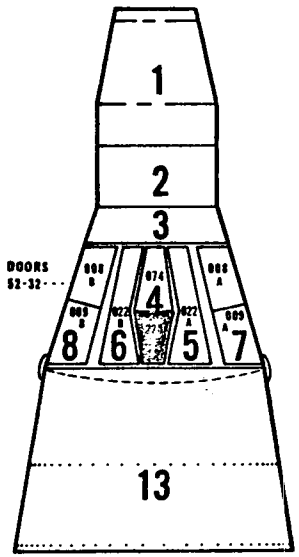

BOTTOM VIEW

1. RENDEZVOUS AND RADAR MODULE
2. RE-ENTRY RCS MODULE
3. FORWARD AREA CONE
4. CENTER EQUIPMENT BAY
5. L/H LANDING GEAR BAY
6. R/H LANDING GEAR BAY
7. L/H EQUIPMENT BAY
8. R/H EQUIPMENT BAY
9. CREW PRESSURIZED AREA
10. EXTERIOR AREA OF LARGE PRESS. BULKHEAD
11. SPACECRAFT EXTERIOR L/H
12. SPACECRAFT EXTERIOR R/H
13. INTERNAL ADAPTER AREA
14. R/H EXTERNAL ADAPTER AREA
15. L/H EXTERNAL ADAPTER AREA
16. ZONE FOR ENTIRE SPACECRAFT

GEMINI SPACECRAFT NO. 4

ZONE NO. ECS PACKAGE

TOTAL EQUIPMENT REQUIRED 27

EQUIPMENT ON HAND 25

EQUIPMENT TO SCHEDULE 2

EQUIPMENT LATE 0

PART NO.	PART NAME	NORM. INST.	SLACK	DEF. INST.	SLACK	HOURS TO INSTALL

SPACECRAFT BUNDLE FOUR

SUBJECT: GEMINI STATUS REPORT FOR THE PERIOD FROM 11 JULY 1964 THRU 7 AUGUST 1964

RECAPITULATION

CABIN

WHITE ROOM

1. Large Pressure Bulkhead rework completed.
2. Installation of Styrofoam completed.
3. Snorkel Duct installation completed.
4. Structure repair on Small Pressure Bulkhead completed.
5. Of a total of 17 Coldplates required 10 have been installed.
6. Coolant lines 75% installed.
7. Static lines installed on Z160 area.
8. Pedestal Assembly installed.
9. Twenty Wire (25) wire bundles installed in the L/H and R/H Bay, Cabin Pressure, Center Bay and Pumps Box areas.
10. Rework of the battery tracks bearing completion.

WORK IN PROGRESS

1. Removal of Dummy Coldplates and installation of Production Coldplates.
2. Line installation.
3. Wire Bundle installation.
4. EOPO Incorporation (Structural Modifications).

ADAPTER

STRUCTURE

1. Replacement of [illegible] completed.
2. [illegible]
3. [illegible]

SPACECRAFT NUMBER FOUR

SUBJECT: GEMINI STATUS REPORT FOR THE PERIOD FROM 11 JULY 1964 THRU 7 AUGUST 1964

ADAPTER

WORK IN PROGRESS

1. -33002-EOPO items near completion.

2. Interior taping of adapter in progress.

RCS

STRUCTURE

1. Riveting of inner skin complete.

2. All horizontal and vertical webs have been installed.

WORK IN PROGRESS

1. Installation of miscellaneous brackets in progress.

2. Installation of the -31[illegible] ring in progress.

R & R

STRUCTURE

1. S7-5 unit reallocated to Spacecraft No. 4.

2. Riveting of inner skin and stringers complete.

WORK IN PROGRESS

1. Work on the forward web in progress.

BATTERY MODULES

STRUCTURE

1. Unit returned from the Bond Room.

2. Structure build-up of units in [illegible] approved.

WORK IN PROGRESS

1. Structure Building [illegible]

ADAPTER MODULES [illegible]

ELECTRONIC [illegible]

1. [illegible]

SPACECRAFT NUMBER FOUR

SUBJECT: GEMINI STATUS REPORT FOR THE PERIOD FROM 11 JULY 1964 THRU 7 AUGUST 1964

ELECTRONIC MODULE

2. Relays installed but not bought off.

3. (1) one Coldplate installed, 50% complete

WORK IN PROGRESS

1. Installation of Coldplates and Lines.

2. Installation of Wire Bundles and Vumper Plugs.

3. Termination of Ground and Shield Wiring.

OAMS MODULES

1. "A" Package installed but not bought off.

2. Progress restricted by parts shortages.

WORK IN PROGRESS

1. Work held pending receipt of [illegible] parts shortages

ECS COOLANT (PUMP) MODULE

1. Structure available in white form, installation of plumbing proceeding.

2. Some major components installed but not bought off.

WORK IN PROGRESS

1. Installation of Coldplates and Tubing (Plumbing).

2. Installation of Regulator Heat Exchanger

ECS O_2 MODULE

1. Structure available in white form, installation of parts held due to parts shortages

WORK IN PROGRESS

1. [illegible]

SPACEGRAM NUMBER FOUR

SUBJECT: GEMINI STATUS REPORT FOR THE PERIOD FROM 31 JULY 1964 THRU 7 AUGUST 1964

SUMMARY OF SCHEDULE POSITION

CABIN

WHITE ROOM

1. Cabin approximately eight (8) weeks behind schedule. 00005-SST start now scheduled for 8 November 1964.

RCS

1. Structure Assembly is now approximately four weeks behind schedule.

R/R

1. Structure Assembly is now approximately two weeks behind schedule.

ADAPTER (STRUCTURE)

1. Approximately three (3) weeks behind schedule.

ADAPTER MODULES (WHITE ROOM)

ELECTRONIC MODULE

1. Approximately six (6) weeks behind schedule at this time.

CSMS MODULE

1. Approximately six (6) weeks behind schedule.

BATTERY MODULE

1. Approximately six (6) weeks behind schedule.

ECS (COOLANT (H2O)) MODULE

1. Approximately six (6) weeks behind schedule.

ECS (O_2) MODULE

1. Approximately [illegible] weeks behind schedule.

SPACECRAFT NUMBER FOUR

SUBJECT: GEMINI STATUS REPORT FOR THE PERIOD FROM 11 JULY 1964 THRU 7 AUGUST 1964

FORECAST

The following events are scheduled for accomplishment during the next thirty day period.

NOTE: Due to limited space available in White Room, Major Assemblies will be held in Structure Assembly Area pending space availability. As much work as possible (originally scheduled for White Room) will be accomplished in this area. NASA St. Louis is aware of this condition.

CABIN

WHITE ROOM

1. Install wire bundles L/H, R/H, Center Equipment Bays, Zone 160 and Cabin Pressure Area

2. Complete installation of Coldplates and Coolant Lines.

3. Rework of L/H and R/H Hatch Doors

4. Rework of Flipper doors

5. Relay panels to be installed.

6. Install major equipment items.

ADAPTER

STRUCTURE

1. Interior taping of adapter to be completed.

2. [illegible] items to be completed.

LCS

STRUCTURE

1. Installation of [illegible] and [illegible] to be completed.

2. Structure [illegible] to be completed.

SPACECRAFT NUMBER FORM

SUBJECT: GEMINI STATUS REPORT FOR THE PERIOD FROM 11 JULY 1964 THRU 7 AUGUST 1964

R & R

STRUCTURE

1. Structure Assembly to be completed.

BATTERY MODULE

STRUCTURE

1. Structure work will be completed.

ADAPTER MODULES

ELECTRONIC MODULE

1. Installation of Beacon, Multiplexers and Transmitters.

2. Installation of coldplates and plumbing.

OMS

1. Installation of A, B, C, D and E Packages.

2. Installation of plumbing and brazing of joints.

ECS COOLANT (PUMP) MODULE

1. Installation of Reservoir, Heat Exchanger, Pump Assemblies, Valves.

2. Installation of fittings and lines

ECS O_2 MODULE

1. Installation of O_2 Bottles, shut-off valve and pressure regulator

2. Installation of lines and fittings

CONSTRAINING PART SHORTAGES AND POTENTIAL PROBLEM AREAS

GAMIN

1. [illegible]

2. [illegible]

SPACECRAFT NUMBER FOUR

SUBJECT: GEMINI STATUS REPORT FOR THE PERIOD FROM 31 JULY 1964 THRU 7 AUGUST 1964

CONSTRAINING PART SHORTAGES AND POTENTIAL PROBLEM AREAS

CABIN

4. 83153-9 S/O Valve Float.

5. 83713-3 Valves.

6. 83700-723 Manual shut-off Valve.

7. 83700-277 EOS Secondary O_2 Bottle.

8. 83162-15 Butterfly S/O Valve.

9. 83149-17 Cabin Pressure Valve.

10. 85707-9 C Band Radar Beacon.

11. 85713-85 Lo Level Multiplexer.

12. 85713-87 Hi Level Multiplexer.

RCS MODULE

1. 52700-153 Fuel Tank.

2. 52700-217 Thrust Chambers.

3. 52700-243 Regulators.

4. 52703-5 Heaters.

R & R MODULE

1. No critical shortage apparent at this time.

ADAPTER

1. 52701-251 TCA (2#)

2. 52701-253 TCA (8#)

3. 52701-255 TCA (100#)

[illegible]

SUBJECT: GEMINI STATUS REPORT FOR THE PERIOD FROM 11 JULY 1964 TO 7 AUGUST 1964

ADAPTER MODULES

ELECTRONIC MODULE

1. 87700-35 CADE.

2. 85715-9 S Band Radar Beacon.

3. 85714-25 Digital Computer.

CASS

1. 52701-21[illegible] Tank.

2. 52701-25[illegible] Valve.

BATTERY MODULE

1. No apparent critical shortages.

[illegible] COOLANT [illegible] MODULE

1. No apparent critical shortages.

[illegible] O_2 MODULE

1. Critical shortage [illegible] delivery within near future.

GEMINI MANUFACTURING WORK PLAN—SPACECRAFT NO. 5

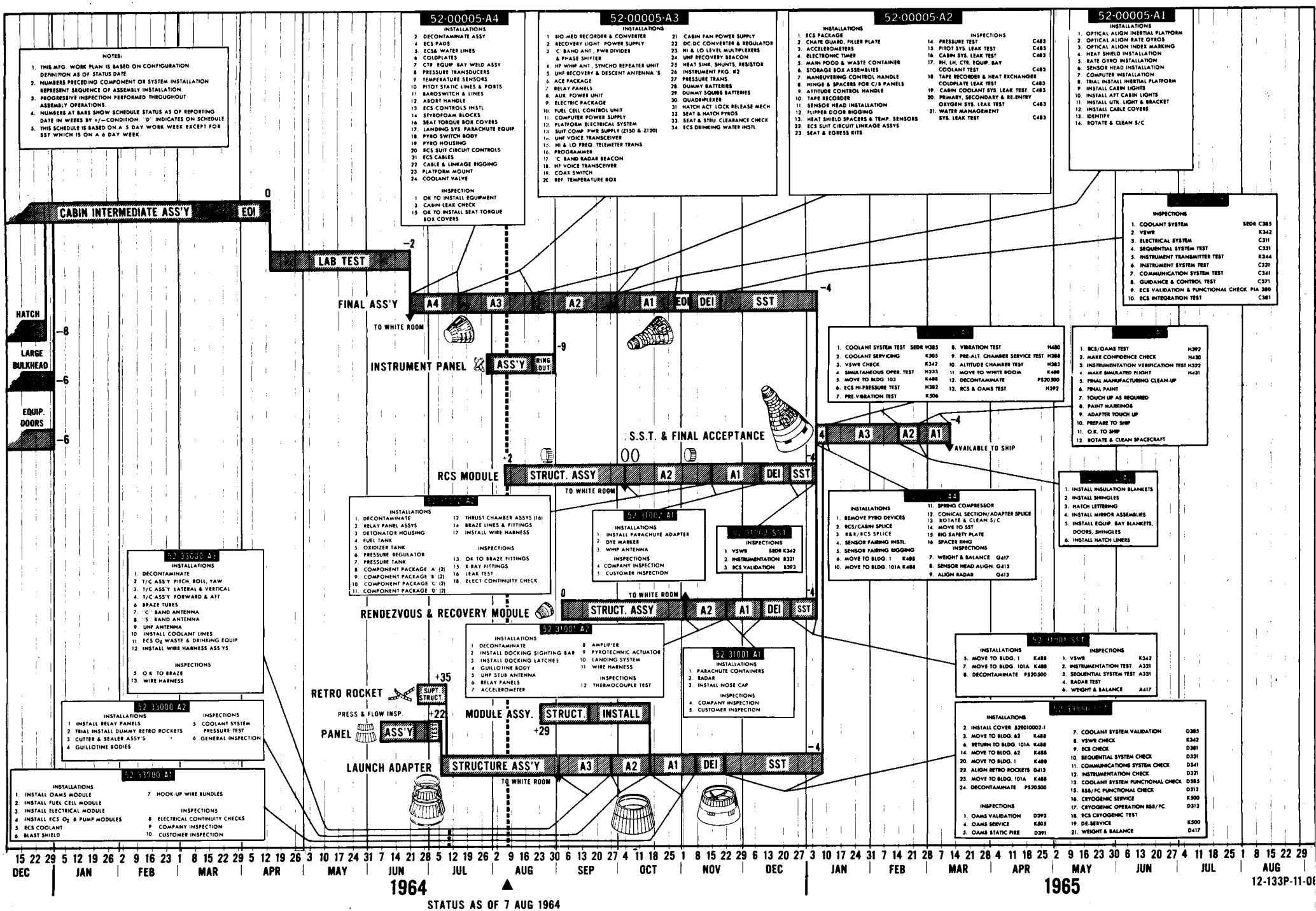

SPACECRAFT 5

EQUIPMENT STUDY

LEGEND:

▽ WILL SHIP

▼ ACTUAL SHIPPED

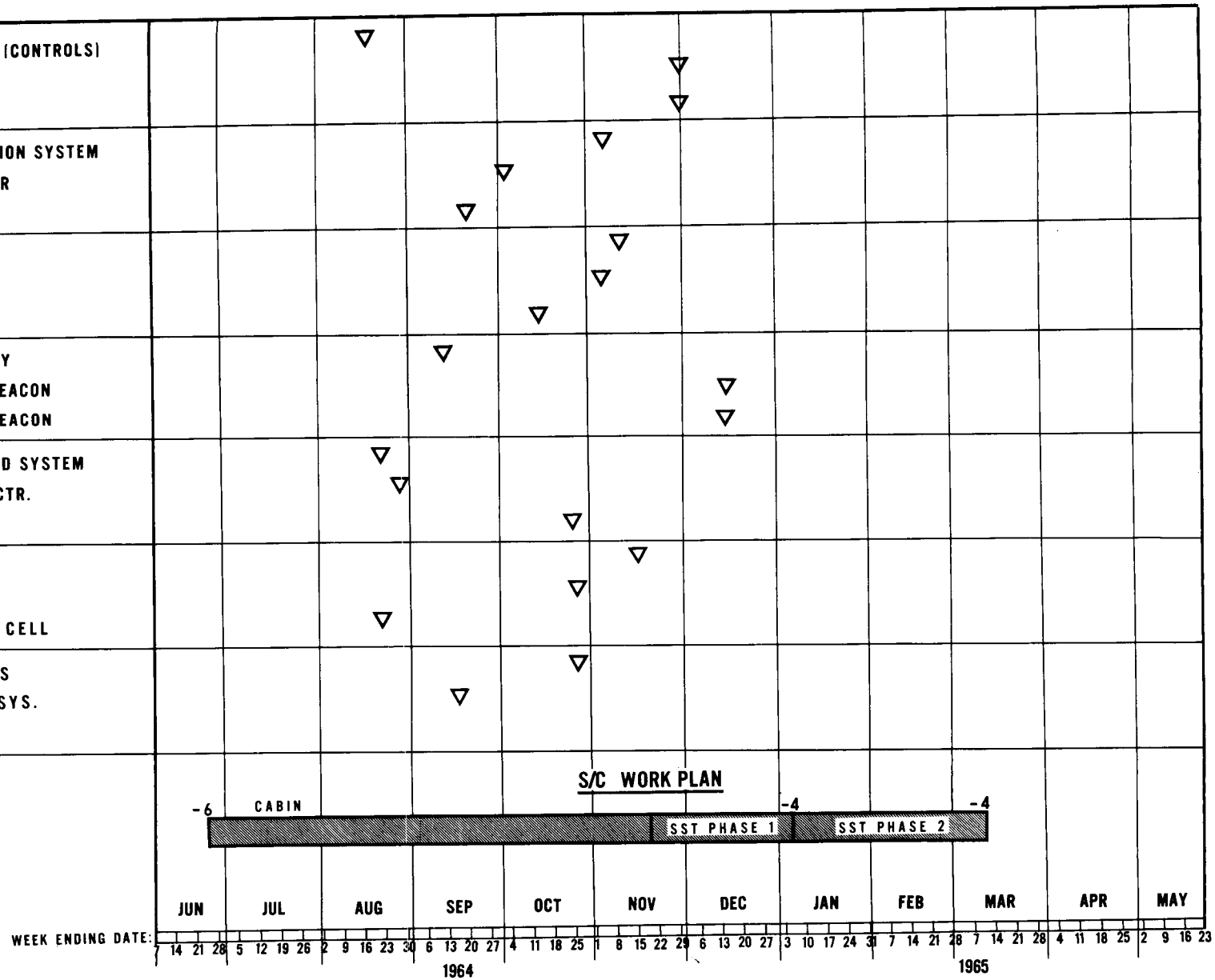

STATUS AS OF 7 AUG. 1964

SPACECRAFT NUMBER FIVE

SUBJECT: GEMINI STATUS REPORT FOR THE PERIOD FROM 11 JULY 1964 THRU 7 AUGUST 1964

RECAPITULATION

CABIN

STRUCTURE

1. 32001 EOPO has been completed
2. Rework of Large Pressure Bulkhead -32002 is complete
3. Pressure Test has been completed

WORK IN PROGRESS

1. 00005 EOPO is in work
2. Rework of Flipper Doors is progressing
3. Styrofoam is being installed
4. Torque Box and Hoist Loop Doors are in work

ADAPTER

STRUCTURE

1. Adapter is presently in the jig
2. -33118 Assembly Fixture for DOD Test Equipment Assembly has been completed

WORK IN PROGRESS

1. -33002 EOPO is in work
2. -33128 and -33127 engine mounts per EIS 3041 are in work
3. Two assemblies -33118 DOD for using out test equipment are installed. The remaining assembly is available to install upon completion of engine mounts

R & R

STRUCTURE

1. Unit scheduled to start 31 August 1964

RCS

STRUCTURE

[illegible]

[illegible] presently in [illegible]

WORK IN PROGRESS

1. Installing vertical and horizontal web

2. [illegible] and [illegible] Rings are in work

FORECAST

The following events are scheduled for accomplishment during the next thirty day period.

[illegible] The [illegible] Limited space available in the White Room Major Assemblies of the Spacecraft will [illegible] the Structure Assembly area until space becomes available. In the meantime [illegible] as much work as possible originally scheduled for White Room installations will be accomplished in the Structure Area [illegible] of this [illegible].

[illegible]

[illegible]

[illegible]

[illegible]

[illegible]

[illegible]

[illegible]

[illegible]

[illegible]

[illegible]

[illegible]

GEMINI MANUFACTURING WORK PLAN—SPACECRAFT NO. 6

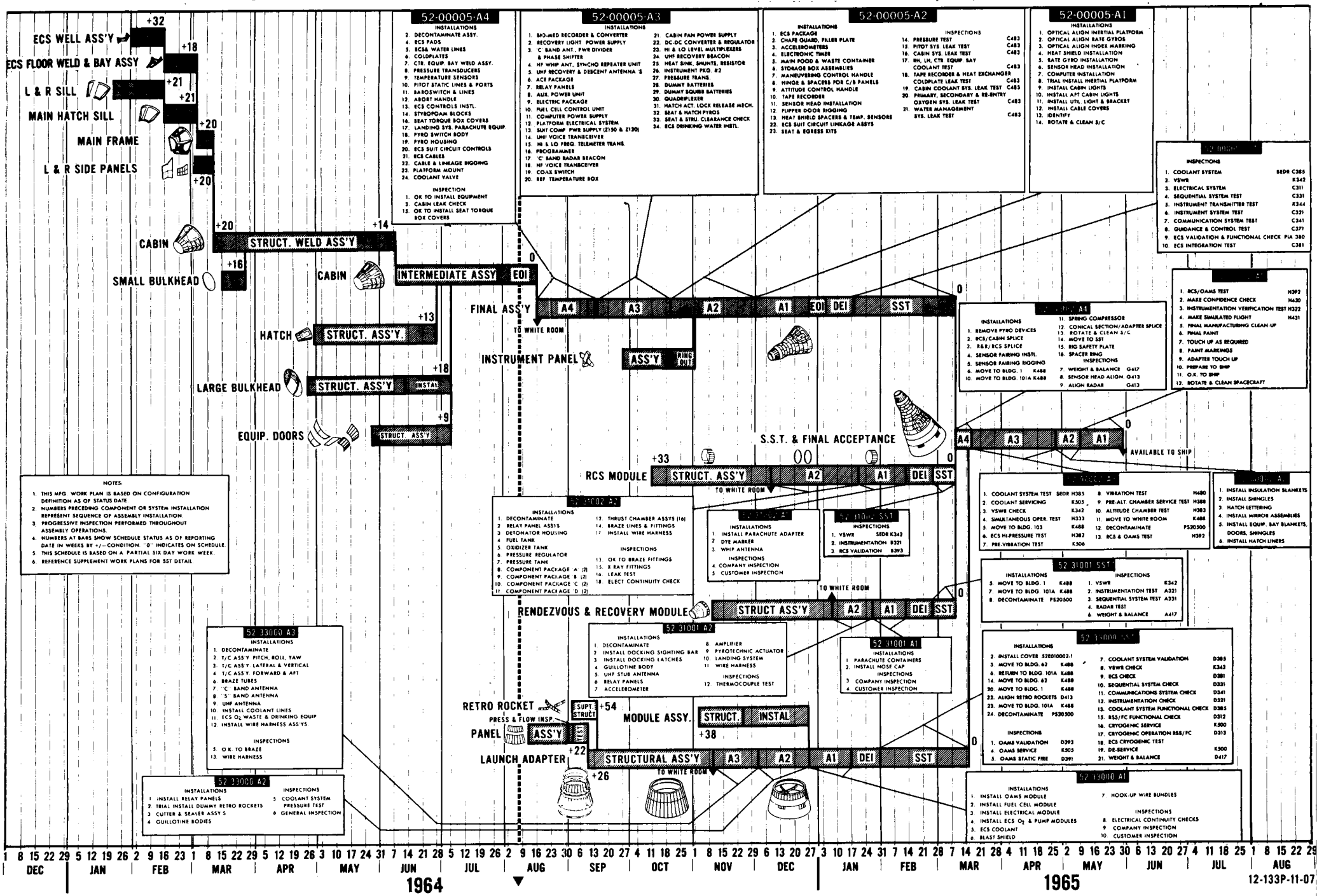

SPACECRAFT [illegible]

SUBJECT: GEMINI STATUS REPORT FOR THE PERIOD FROM 11 JULY 1961 THRU 7 AUGUST 1961

RECAPITULATION

CABIN

STRUCTURE

1 Pressure Test completed.

2 Alignment of the coldplates and horizon scanner completed

WORK IN PROGRESS

1 Reworking flipper doors.

2 Incorporating EOPO items.

3 Installation of styrofoam blocks

ADAPTER

STRUCTURE

1. Unit installed in jig

WORK IN PROGRESS

1 Incorporating EOPO items

2 Installing miscellaneous brackets and clips

SUMMARY OF SCHEDULE POSITION

1. All phases of this Spacecraft and its components are progressing satisfactorily to schedule

FORECAST

The following events are scheduled for accomplishment during the next thirty day period.

NOTE: Due to limited space available in the White Room, Major Assemblies will be held in the Structure Assembly Area depending upon space availability. As much work as possible (originally [illegible] for the White Room) will be accomplished in [illegible] area. [illegible] is aware of this condition.

CABIN

STRUCTURE

[illegible]

SPACECRAFT NUMBER [illegible]

SUBJECT: GEMINI STATUS REPORT FOR THE PERIOD FROM [illegible] JULY [illegible], THRU 7 AUGUST [illegible]

2. Completion of flipper door rework

ADAPTER

STRUCTURE

1. Incorporation of EJS [illegible] will begin

GEMINI SPACECRAFT
MANUFACTURING WORK PLAN
TARGET DOCKING ADAPTER

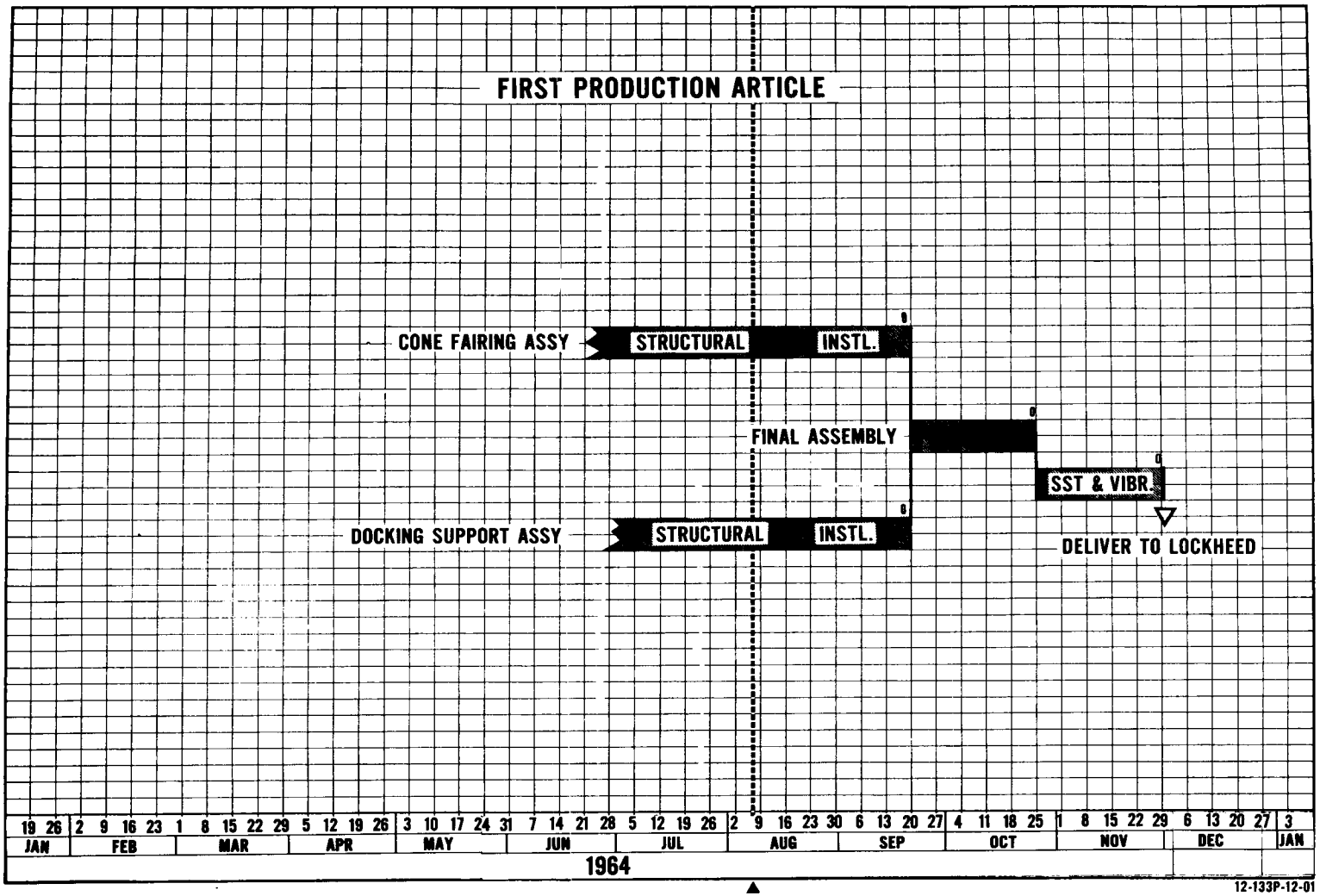

STATUS AS OF 7 AUG. 1964

TARGET DOCKING ADAPTER

SUBJECT: GEMINI STATUS REPORT FOR THE PERIOD FROM [illegible] JULY 196[illegible] THRU 7 AUGUST 196[illegible]

CONE FAIRING ASSEMBLY (STRUCTURE)

RECAPITULATION

1. The structure assembly of this unit is complete.

2. Final assembly installations are in progress

WORK IN PROGRESS

1. Final assembly operations are continuing on a limited basis due to 500 part shortages

SUMMARY OF SCHEDULE POSITION

1. This unit is progressing to schedule

FORECAST

The following events are scheduled for accomplishment during the next thirty day period:

1. Final Assembly operations will be completed

DOCKING SUPPORT ASSEMBLY (STRUCTURE)

RECAPITULATION

1. The structure assembly of this unit is complete.

2. Final assembly installations are in progress.

WORK IN PROGRESS

1. Final assembly operations are continuing on a limited basis due to 500 part shortages

SUMMARY OF SCHEDULE POSITION

1. This unit is progressing to schedule

FORECAST

The following events are scheduled for accomplishment during the next thirty day period:

PARGE [illegible] ADAPTER

SUBJECT: GEMINI STATUS REPORT FOR THE PERIOD FROM 31 JULY 196[illegible] THRU 7 AUGUST 196[illegible]

1. Final Assembly operations will continue.

FINAL ASSEMBLY - CONE & ADAPTER (STRUCTURE)

RECAPITULATION

1. No work has been accomplished in mating the Cone and Adapter Assemblies.

CONSTRAINING PART SHORTAGES AND POTENTIAL PROBLEM AREAS

The following parts are still short at this writing. These parts were noted as critical shortage items in MAC Bi-Daily Report No. 117 dated 27 May 1964 and 8580-1-41 dated 17 July 1964.

34700-3	Mooring Drive Gear	34360	Damper Assembly
34700-5	Flexible Drive	34300	Damper Assembly
34700-7	Flexible Drive	34702-3	Actuator
34700-9	Flexible Drive	87718-7	Antenna Room
34700-11	Modified S. Drive	87715-23	Dipole Antenna
34700-13	Mooring Drive Power Unit	87715-19	Transponder

HANGAR AF ACTIVATION SCHEDULE

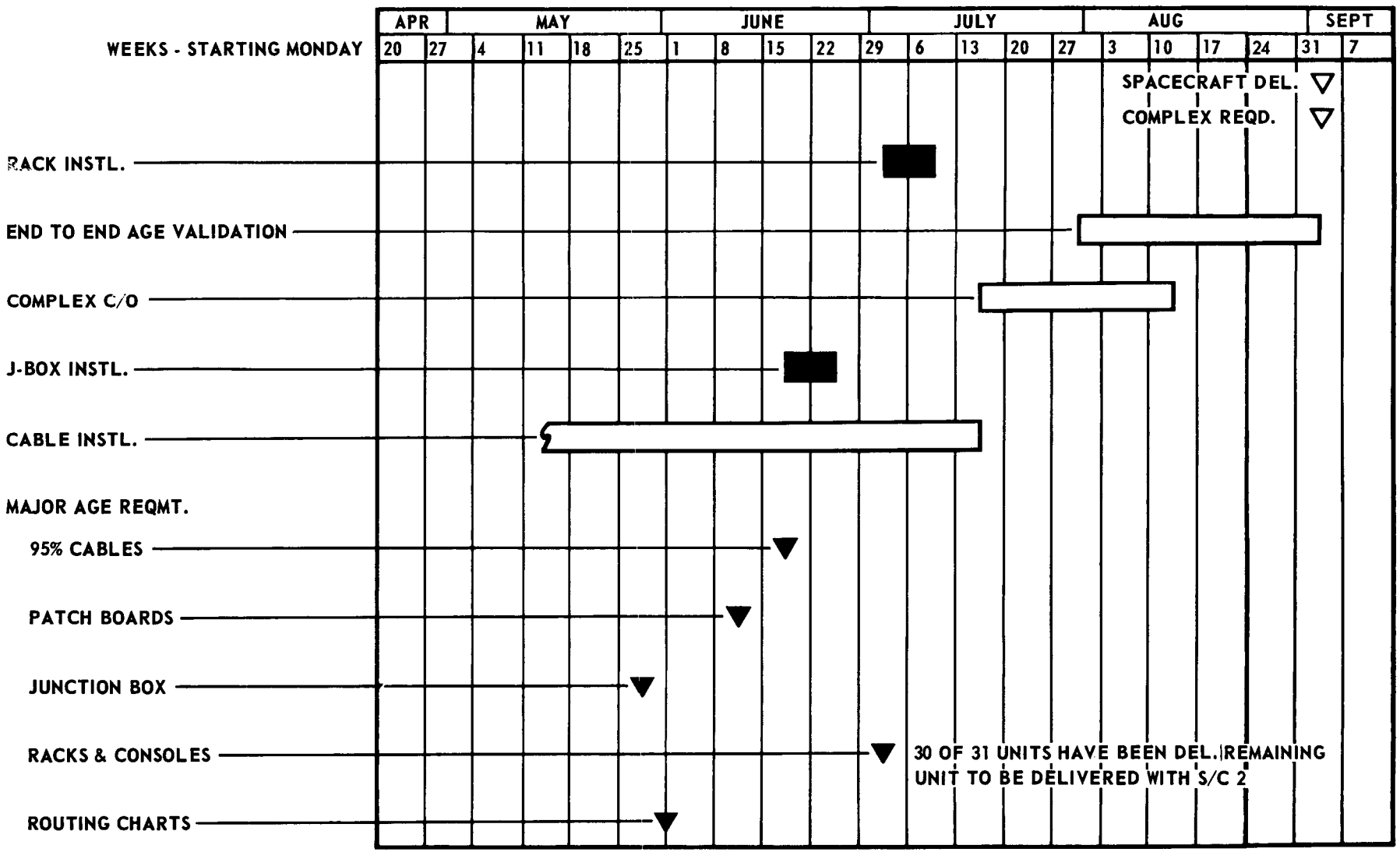

7 AUGUST 1964

FLUID TEST COMPLEX ACTIVATION SCHEDULE

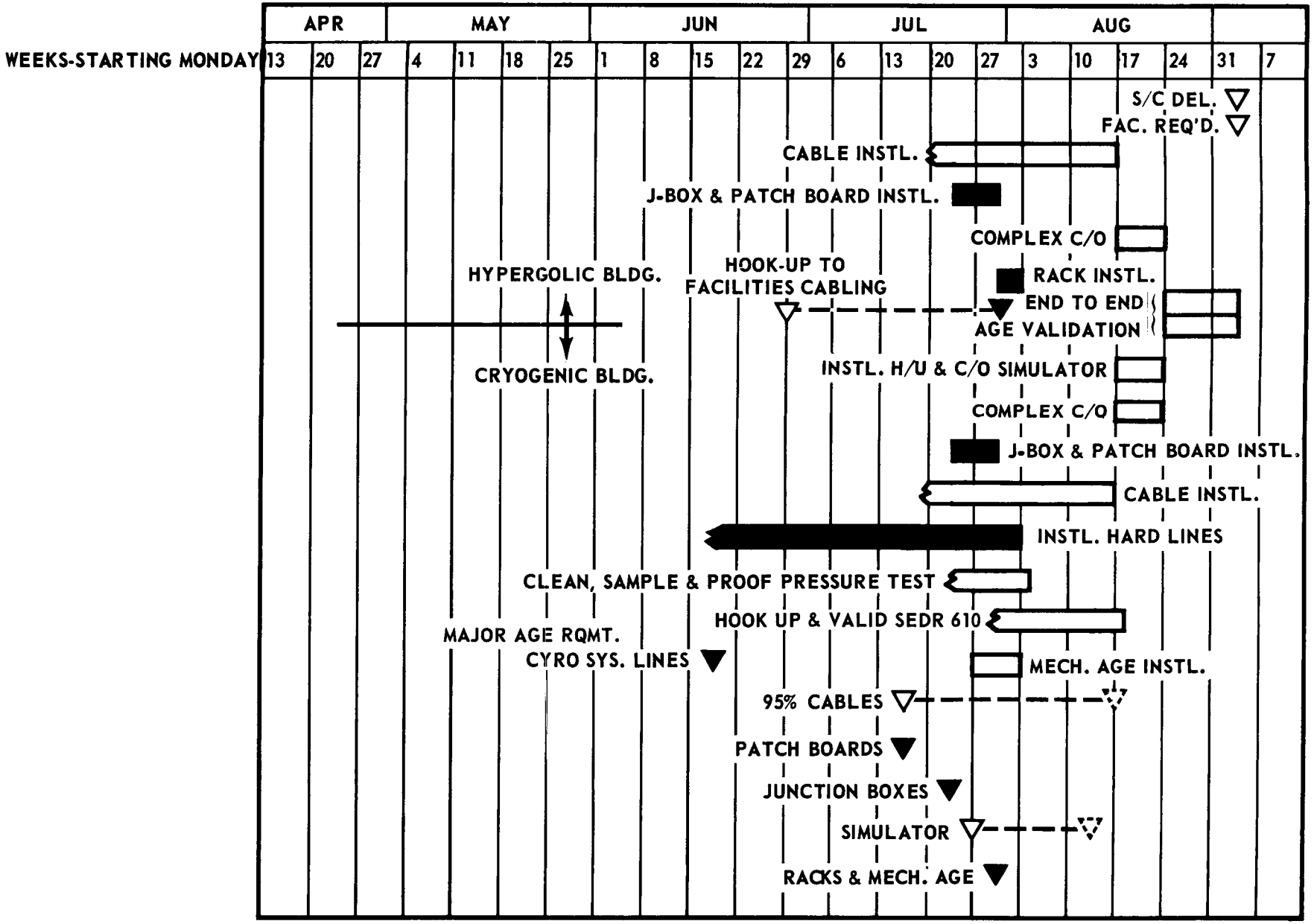

7 AUGUST 1964

COMPLEX 19 SCHEDULE

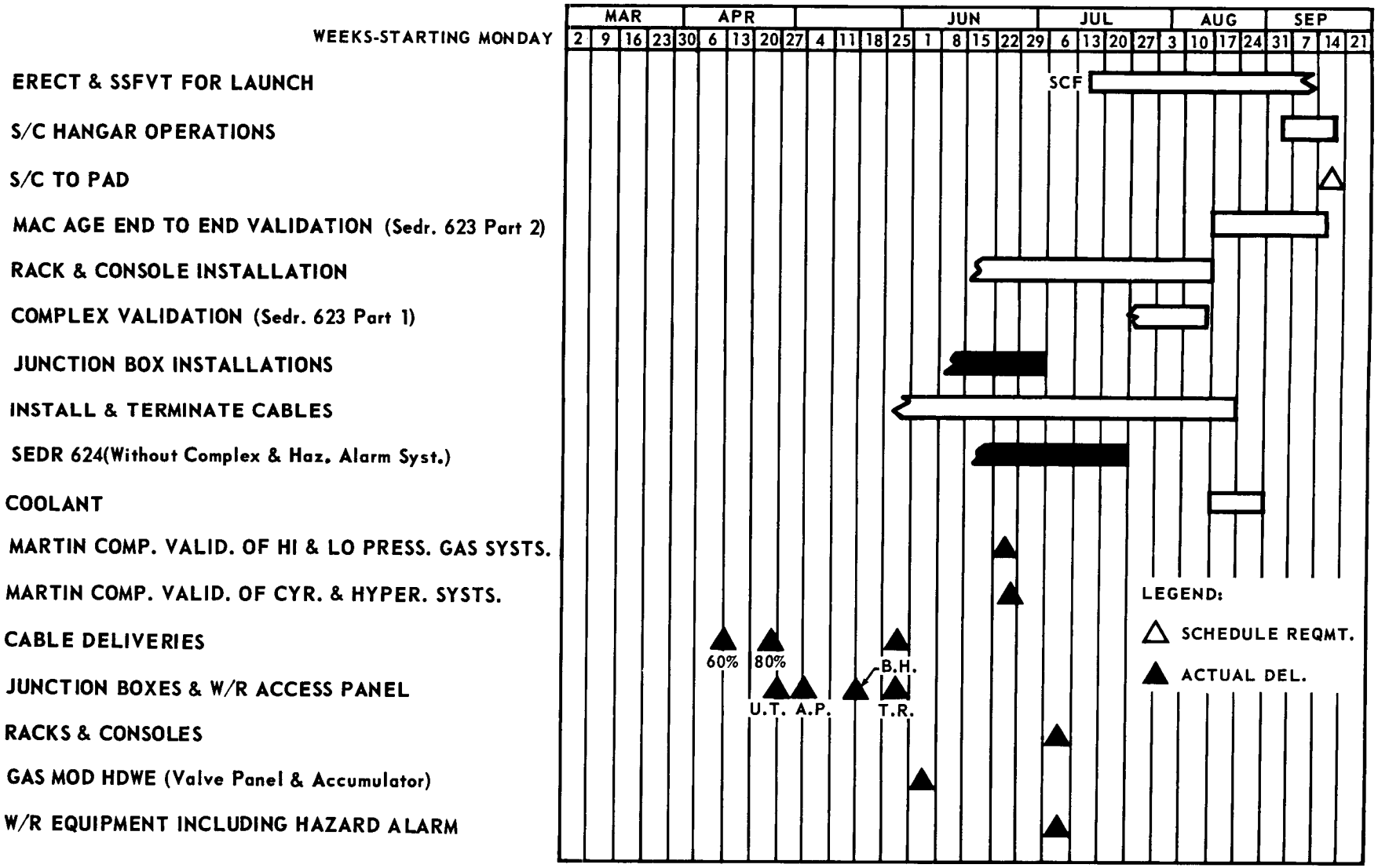

7 AUGUST 1964

[illegible]

SUBJECT: [illegible] STATUS REPORT FOR THE [illegible]
[illegible] AUGUST [illegible]

RECAPITULATION

CABIN (STRUCTURE)

1. Trial fit of available doors complete

2. Hatch rigging began 3 August 1964

WORK IN PROGRESS

1. Rigging of hatches continuing

2. Incorporation of ECPO items

3. Trial fitting of shingles continuing

HATCHES (STRUCTURE)

1. [illegible] completed [illegible] to Cabin

DOORS (STRUCTURE)

1. 52-[illegible] H/H Door [illegible] to [illegible]

2. 52-[illegible] replacement [illegible]

WORK IN PROGRESS

1. Build-up of the 52-[illegible] and [illegible] continuing

SUMMARY OF SCHEDULE POSITION

1. The Cabin is progressing to schedule

2. The Doors structure assembly is progressing to schedule

FORECAST

The following [illegible] for accomplishment during the next thirty day period:

CABIN (STRUCTURE)

1. [illegible]

2. [illegible]

SPACECRAFT WEEKLY REPORT

SUBJECT: GENERAL STATUS REPORT FOR THE PERIOD FROM 01 JULY 1965 THRU 7 AUGUST 1965

DOORS (STRUCTURE)

1. L/H and R/H 32022 Frames will be completed

2. Structure Build-up of the -32022 Doors will begin

[illegible]

[illegible] 1964
[illegible]

[illegible]

[illegible]

1. Installation of [illegible] and 19 Port Assemblies completed
2. Completed [illegible] Fitting (Torque Box Area)
3. Completed [illegible] Fitting
4. Static System Installation has been started
5. Trough installation [illegible] has been completed
6. Electrical Installation has been started

WORK IN PROGRESS

1. Static System Installation
2. Electrical Installation
3. Line Mock Up

RCS (STRUCTURE)

1. [illegible] Mod started [illegible] July 196[illegible]

WORK IN PROGRESS

1. Work is continuing on [illegible] mod

R & R (STRUCTURE)

1. Installation of Inner Skin and Stringers completed

WORK IN PROGRESS

1. [illegible] Mod started [illegible] August [illegible]
2. Forward Area webs and angles in work

SUMMARY OF SCHEDULE POSITION

1. The Cabin is progressing [illegible]
2. The [illegible] is [illegible]
3. [illegible]

[illegible]

[illegible] [illegible]
[illegible] AUGUST [illegible]

FORECAST

The following events are scheduled for accomplishment during the next thirty day period:

CABIN (STRUCTURE)

1. All work in progress will be completed and unit shipped

RCS (STRUCTURE)

1. Unit will be completed

R & P (STRUCTURE)

1. Unit will be completed

CONSTRAINING PART SHORTAGES AND POTENTIAL PROBLEM AREAS

1	[illegible]	Parachute Adapter
	[illegible]	Ring Assembly
	[illegible]	Gatorator Housing
	[illegible]	Wire Handle
	[illegible]	Wire Handle
	[illegible]	Wire Handle
	[illegible]	Wire Handle
	[illegible]	Mortar Assembly
	[illegible]	Mortar Assembly
	[illegible]	Guillotine Body
	[illegible]	Guillotine Body
	[illegible]	ADS Section
	[illegible]	R & P [illegible]
	[illegible]	Delay Panel

ACTUAL ENGINEERING MANHOURS

MAC Cost Item No.	Description of Work	7/5/64 Tot Hrs	7/12/64 Tot Hrs	7/19/64 Tot Hrs	[illegible]
	SPACE VEHICLE SYSTEM				
01	Flt. Tech. & Mission Planning	1,086	1,334	1,587	[illegible]
02	Flt. Sim. Tr. & Tr. Aids	3,763	5,636	5,921	[illegible]
03	Personnel Training	68	80	134	[illegible]
04	Ground Test Program	2,194	2,625	1,688	[illegible]
05	Project Orbit Tests	2,825	4,185	4,504	[illegible]
06	S/C Systems Tests	9,126	10,601	11,789	[illegible]
07	Launch Operations	210	125	270	[illegible]
08	Publications	2,887	3,742	4,007	[illegible]
09	Spare Parts	101	122	54	[illegible]
11	Aerospace Ground Equip.	4,202	5,423	5,767	[illegible]
12	Main., Repair & Support	259	470	280	[illegible]
13	Spec., Reports & Docum.	947	1,266	1,308	[illegible]
	RE-ENTRY MODULE				
21	Space Fr., Re-entry Mod. Fabr. & Str. Ass.	4,140	5,303	4,743	[illegible]
22	Space Fr., Re-entry Mod. Instr. & Fin Ass.	347	593	562	[illegible]
23	Inertial Guidance System	1,561	2,117	2,213	[illegible]
24	Attitude Control System	636	678	844	[illegible]
25	Electrical System	2,894	3,667	3,383	[illegible]
26	Communication System	1,054	1,140	1,040	[illegible]
27	Instrumentation & Recording	3,082	3,620	4,169	[illegible]
28	Re-entry Reac. Control Sys.	780	831	907	[illegible]
29	Landing Sys. - Paraglider	56	47	40	[illegible]
30	Landing Sys. - Recovery Chute	165	204	238	[illegible]
31	Post Land. & Survival Sys.	27	47	[illegible]	[illegible]
32	Crew Systems, Displays, Instr.	438	652	728	[illegible]
33	Ejection Seat	369	629	472	[illegible]
34	Time Reference System	214	309	446	[illegible]
35	Pyrotech. & Release Mech.	1,842	2,203	2,913	[illegible]
36	Environmental Control Sys.	3,297	2,940	4,091	[illegible]
37	Ablation Shield	96	125	[illegible]	[illegible]
56	Rendezvous Radar	434	513	479	[illegible]
57	Horizon Sensors	226	371	250	[illegible]
	ADAPTER MODULE				
51	Adapter Mod. Fabr., Space Frame	1,042	1,535	1,535	[illegible]
52	Adapter Mod. Inst., & Fin. Ass., Space Fr.	82	112	84	[illegible]
53	Battery Fuel Cell	91	163	172	[illegible]
54	Reactant Supply System	704	780	978	[illegible]
55	Adapter Prop. System	798	1,226	1,031	[illegible]
59	Retrograde Rocket	36	76	76	[illegible]
61	Adapter Environ. Control Sys.	569	619	718	[illegible]
62	Adapter - Elect. & Misc. Electronics	380	468	574	[illegible]
71	Target Vehicle Docking Adapter	465	682	710	[illegible]
	SUB-TOTAL	53,493	67,239	70,[illegible]	[illegible]
[illegible] 383	Gemini In-Flight Experiments	1,576	2,311	[illegible]	[illegible]
	GRAND TOTAL	55,069	69,550	74,[illegible]	[illegible]

INDEX

CHART	SYSTEM	VENDOR	LOCATION	SCD
01	OAMS	Rocketdyne	Canoga Park, Calif.	52-52701
02	RCS	Rocketdyne	Canoga Park, Calif.	52-52700
03	Retro Rockets	Thiokol	Elkton, Maryland	52-50702
04	IGS	I.B.M.	Owego, N.Y.	52-87710
05	IMU	Honeywell-St.Pete.	St. Petersburg, Fla.	52-87717
06	ACME	Honeywell-Minn.	Minneapolis, Minn.	52-87700
07	Horizon Sensors	Adv. Tech. Labs.	Mountainview, Calif.	52-87703
08	Fuel Cell	General Electric	Lynn, Mass.	52-79700
09	Reactant Supply	AiResearch	Torrance, Calif.	52-83701
10	ECS	AiResearch	Torrance, Calif.	52-83700
11	Attitude Display	Lear-Siegler	Grand Rapids, Mich.	52-87702
12	Heat Shield	McDonnell	St. Louis, Mo.	
13	UHF Voice T/R	Collins Radio	Cedar Rapids, Iowa	52-85709
14	HF Voice T/R	Collins Radio	Cedar Rapids, Iowa	52-85710
15	Voice Control Center	Collins Radio	Cedar Rapids, Iowa	52-85712
16	Digital Command	Motorola	Scottsdale, Ariz.	52-85714
17	S-Band Radar Beacon	ACF Industries	Paramus, N.J.	52-83715
18	C-Band Radar Beacon	ACF Industries	Paramus, N.J.	52-85707
19	Rendezvous Radar	Westinghouse	Baltimore, Md.	52-87701
20	Landing System	Northrop-Ventura	Van Nuys, Calif.	52-41703
21	Event Timer	McDonnell E.E.D.	St. Louis, Mo.	SCR 8664
22	Electronic Timer	McDonnell E.E.D.	St. Louis, Mo.	SCR 8664
23	Data Transmission	Electro-Mechanical Research	Sarasota, Fla.	52-85713
24	Ejection Seat	Weber Aircraft	Burbank, Calif.	52-82000
25	Greenwich Mean Time Clock	McDonnell E.E.D.	St. Louis, Mo.	SCR 8664

GEMINI
SPACECRAFT
CONTRACT NO. NAS 9-17

SYSTEM QUALIFICATION

STATUS CHART

REPORT NO. B550-1 -42
LAST PROGRAM SCHEDULE CHANGE: 24 April 1964
STATUS AS OF: 7 August 1964

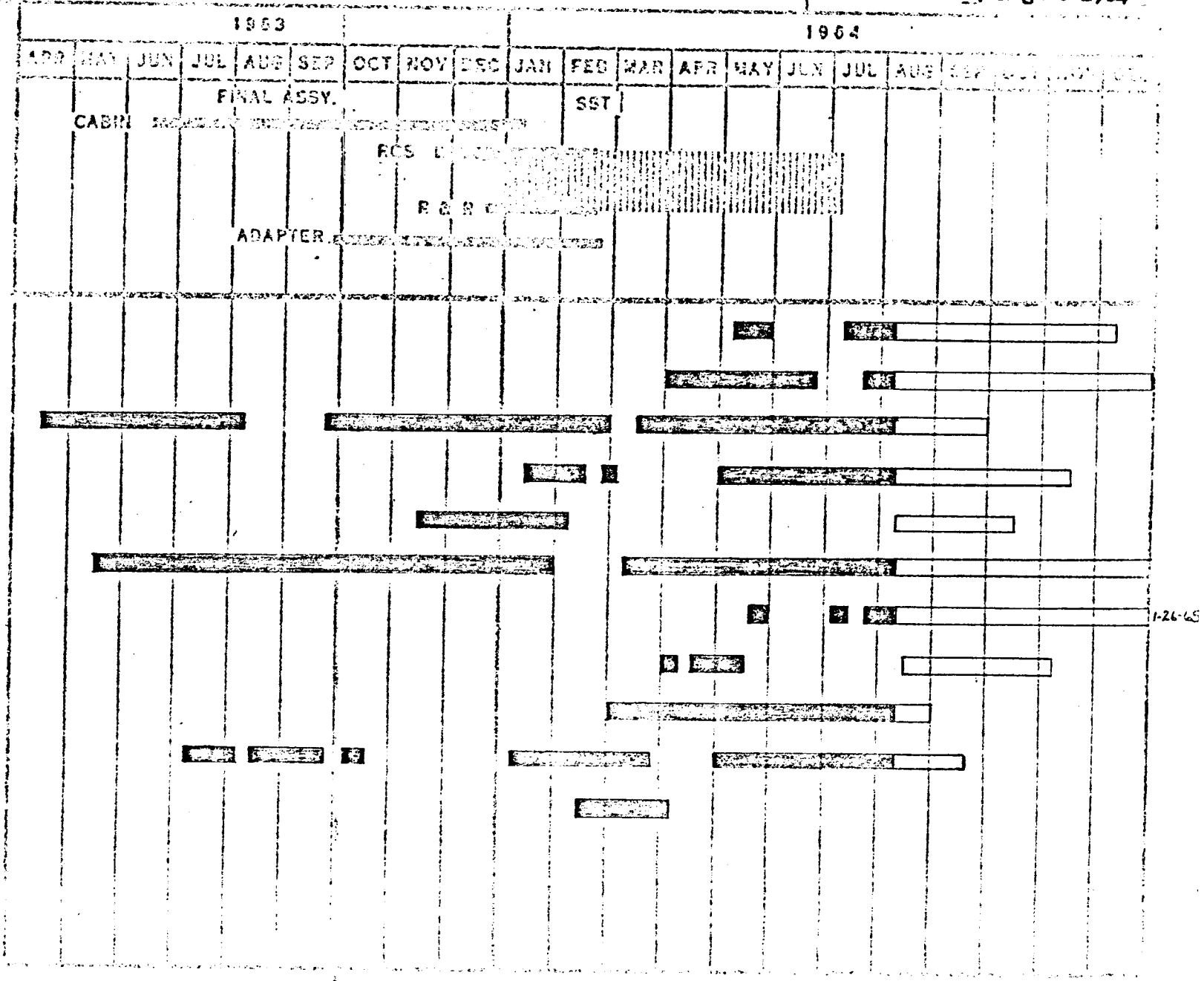

GEMINI
SPACECRAFT
CONTRACT NO. NAS 9-170

SYSTEM QUALIFICATION

STATUS CHART

REPORT NO. 65834 -42
LAST PROGRAM SCHEDULE CHANGE 24 April 1964
STATUS AS OF: 7 August 1964

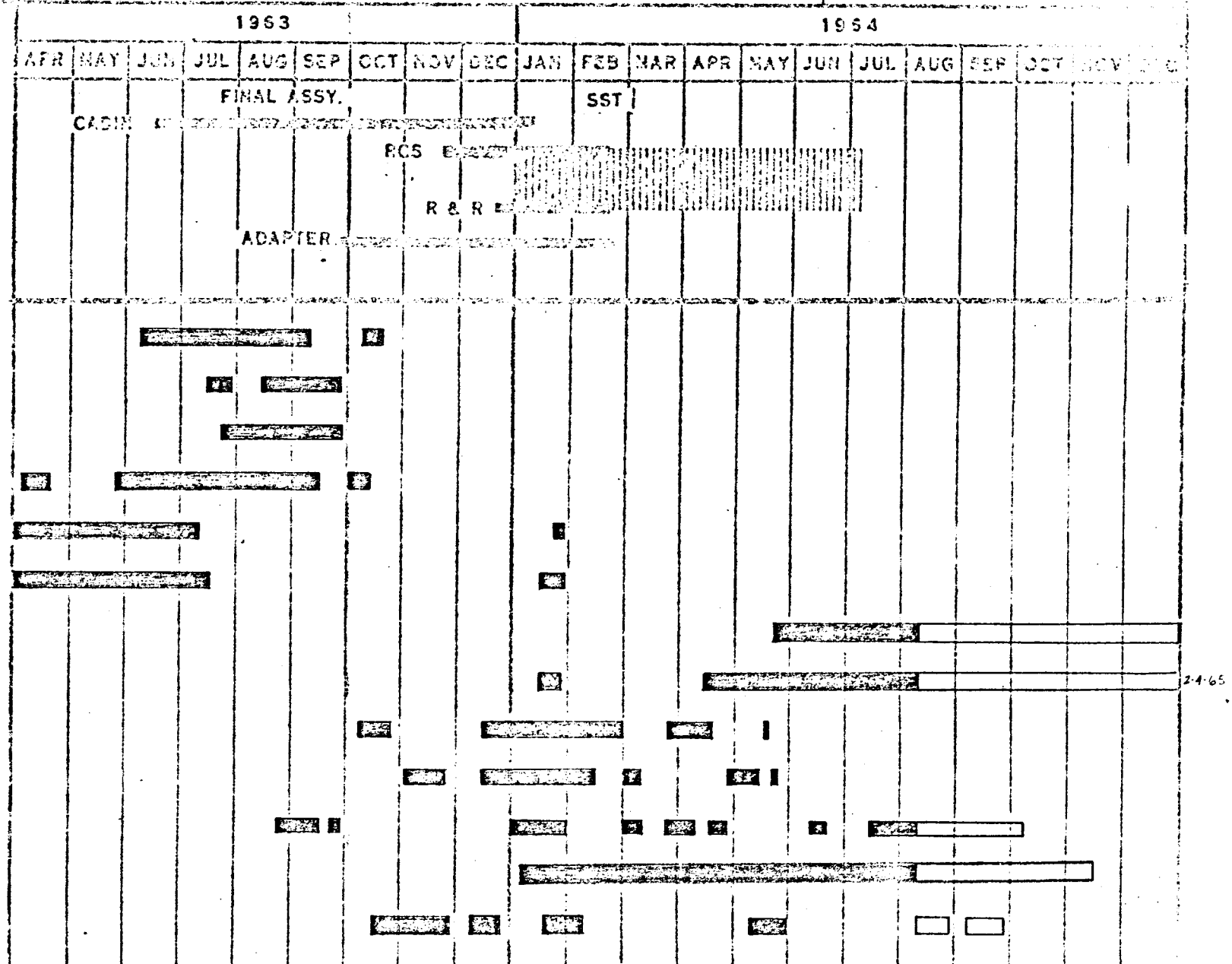

MONTHLY SUMMARY

SYSTEM: Propulsion
SUBSYSTEM: RCS and OAMS
VENDOR: Rocketdyne
DATE: 7 August 1964

ENGINEERING STATUS

OAMS AND RCS PROPELLANT SYSTEMS

1. The decontamination procedures used on the propulsion systems are currently being revised to incorporate Freon MF as the flush fluid. The new procedure, termed the mono-flush method, replaces the tri-flush method. This change was adopted after comparisons were made of the two methods. Tests were performed on the AGE Metering Units and the CTU OAMS. The reasons influencing this change were the cleanliness of Freon MF and the decrease in the time required for decontaminating the systems.

2. The OAMS and RCS TCA temperature sensor locations have been established as follows:

Spacecraft #2	RCS TCA #8	On injector head and oxidizer solenoid valve.
	OAMS TCA #9	On injector head.
Spacecraft #3	RCS TCA #8	Injector head and oxidizer solenoid valve.
	OAMS TCA #9	On oxidizer solenoid valve.
Spacecraft #4	RCS TCA #8	Injector head and oxidizer solenoid valve.
	OAMS TCA's #3 and #7	Oxidizer solenoid valves.
Spacecraft #5 and #6	OAMS TCA #10	Injector head.
Spacecraft #7	OAMS TCA'S #3 and #7	Injector heads.
Spacecraft #8	OAMS TCA #10	Injector head.

3. The acceptance, vibration and reacceptance test portions of the RCS and OAMS DAT procedures have been reviewed and approved with changes.

4. The following system tests have been completed. Test data is being reduced.

RCS S/N 003	Gas Calibration	R&D
	Installation and Checkout	R&D
	Hot-Fire Calibration	R&D
	Fill and Drain Evaluation	DIT
RCS S/N 004	DAT Type Acceptance	R&D
OAMS	Installation and Checkout	R&D
	Liquid Calibration	DIT
	Hot-Fire Calibration	R&D

5. The RCS DAT System has been assembled and is being visually inspected prior to acceptance test. The system will then be shipped to NASA/MSC for vibration testing.

6. The Storage Test on the RCS and OAMS have been deleted at the request of NASA. Mission duty cycle tests are also being reviewed as a result of NASA inputs.

7. Propulsion Information Note: 243-33 was transmitted along with the prototype Propellant Quantity Calculator to NASA/MSC in reply to NASA TWX 53263. The OAMS CTU module is presently being modified in preparation for propellant quantity gaging tests which are scheduled to start on 7 August 1964.

THRUST CHAMBER ASSEMBLIES

The following significant hot firings were conducted during the report period.

TCA Test Summary

T/C	Injector	C*	O/F	Burn Time	Remarks
25# RCS	006	94	1.33	216.5	6° Ablative DVT #4
25# OAMS	006	--	----	-----	Stuck Valve DIT #1
25# OAMS	006	95	1.29	168.0	High Temp Soak CDPA #8
25# OAMS	006	93	1.31	-----	Extremely Low Temp. DIT #2
85# OAMS	006	89	1.60	183.6	High Temp Soak CDPA #1
100# OAMS	006	86.9	1.2 & 1.6	3504.0	6° Ablative DVT #2
100# OAMS	006	----	1.6	25.0	Stuck Valve DIT #5
100# OAMS	006	92.5	1.6	398.0	MDC to Guar Life CDPA #8

8. RCS DAT TCA Unit #2 completed the temperature shock and valve functional tests. Both valves failed the function test. The oxidizer valve dropout time was 3 ms vs. the required 2 ms and the fuel valve showed no indication of closing. Both valves are in failure analysis. RCS DAT TCA Unit #4 has completed the salt spray test successfully. RCS DAT TCA #1 was subjected to a sinusoidal vibration test during the last report period. At the conclusion of the test a crack was observed near the inlet tube to valve weld. The TCA had completed 8 dwells in the "x" axis, 6 dwells in the "y" axis, and 10 dwells in the "z" axis for a total vibration time of 144 minutes at resonant frequencies. The SCD requirement is 6 dwells per axis. Rocketdyne and MAC had agreed to run the extra dwells. This test will be rerun using the new random vibration criteria.

6

A 100# BLC TCA Unit (S/C 6) that had been originally fired for 2000 seconds using Gemini MDC's was fired to three Apollo MDC's for an additional burn time of 336 seconds at an O/F = 1.2, and then at an O/F = 1.6 for 557 seconds steady state. In addition the TCA was fired to the OCM-202 MDC for 504 seconds. Test was stopped after 504 seconds of the 750 second MDC because the glass wrap temperature reached 620° F. No additional tests are planned on this unit. The Apollo MDC's were a NASA requirement and the OCM-202 MDC was part of the long life TCA development effort.

9. COMPONENTS

Propellant Tanks - The R&D vibration program and subsequent 15° F cycling tests have been completed. Every tank tested received 6 pre-vibration expulsions at low pressure before vibration. RCS tanks yielded a minimum of 50 expulsions at 15° F following vibration. OAMS tanks yielded from 3 to 7 expulsions at 15° F. The component DAT and RAT propellant tank programs have been redefined to test a total of nine tanks. Previous totals were first 26, then 19. Testing will include sequential testing, similar to the sequence of mission-imposed environments, plus compatibility and strength tests. The tank filling procedure is being changed to avoid placing an expulsion cycle on the tank bladder during servicing at the launch site. The tank bladder leak check technique has been revised to accept finite, measurable leakage indications, equivalent in magnitude to the predictable permeation rate. This increase, coupled with a refined test method, decreases the time required for performing the leak test.

Pressurant Tanks - The OAMS Pressurant Tank DAT has been successfully completed. The RCS Pressurant Tank DAT on Unit #2 has been restarted. The original sinusoidal vibration spectrum will be replaced by the presently approved random spectrum.

A Package - The DAT failures of the manual valves have been resolved and explained as improper seal retainer staking. The use of properly fabricated valves will be verified and DAT resumed.

B Package - Black, Sivalls and Bryson prototype burst discs have been successfully lot sampled (40 units) and evaluation at Rocketdyne is underway. Hy-Air burst discs are behind schedule approximately two weeks; parts have not been delivered to Rocketdyne for evaluation.

C & D Package - The DAT "C" Package sustained a failure at the weld between the tube stub and the package body during vibration test. Failure analysis is underway. DAT vibration of Package "D" is being delayed until the cause of failure is determined.

General - The DAT and RAT programs are being streamlined to effect cost and schedule economics. RAT tests are being reduced from two units to one unit in many cases.

10. Analysis is continuing on the problem of OAMS oxidizer valve freezing during extended non-firing periods. The 25 and 100 lb (lateral firing) OAMS are being studied with present emphasis on initial conditions associated with the S/C 3 flight.

PROCUREMENT STATUS

1. Based on the incorporation of the BS and B burst diaphragm in the B packages for S/C 4 and up, deliveries will commence in October 1964. The present MAC plan calls for installation of B packages less the burst diaphragm in S/C 4. The aforementioned B packages with burst diaphragms will be installed on a retrofit basis due to late delivery.

2. The failure analysis on the P.T. Indicator which failed the hermatic seal test is expected to be completed 10 August 1964. There is a possibility that the failure was the result of a crack in the indicator glass. Based on a present evaluation of the failure analysis, any foreseeable changes which are to be made on completed indicators, of which there are three, will be accomplished within three weeks.

3. Even though Rocketdyne believes that lubrication of regulator hinge pin is not necessary, National Waterlift will lubricate all future regulators.

ASSEMBLY AND DELIVERY STATUS

1. CTU

   A. RCS - All items have been shipped to MAC.

   B. OAMS - All items have been shipped except five (5) 25 lb TCA's which are not acceptable for flight and can be diverted from production hardware.

2. S/C 2

   A. RCS - All items have been shipped to MAC.

   B. OAMS - All items have been shipped to MAC.

3. S/C 3

   A. RCS - All items have been shipped to MAC.

   B. OAMS - All items have been shipped to MAC.

4. S/C 3A

   A. RCS - All items have been shipped to MAC except four (4) S.O. Valves which are not required until after thermal qual test.

   B. OAMS - All items have been shipped to MAC except one (1) cartridge which will be shipped direct to the Cape by 30 September 1964.

TEST STATUS

1. All CDPA Testing for S/C 3 configuration hardware has been completed except for the separate testing of the redesigned Burst Diaphragm and the hermetic seal leakage test associated with the P.T. Indicator.

2. Assembly of the OAMS Module for System Qual Test has been completed and should be ready to deliver to Houston by August 17, 1964. It is presently being subjected to a 'sniffer' test.

3. The RCS Module for System Qual Test was inspected by MAC Engineering and requires some additional rework resulting from the addition of the motor operated shutoff valves to the system. The predicted delivery date to Houston cannot be established now.

4. All reductions in the Qual Test Hardware due to the combining of tests on the same hardware units have been transmitted to Rocketdyne.

AGE

No AGE was shipped during this reporting period. The remaining 4 pieces of AGE are expected to be shipped during the next reporting period.

SPACECRAFT

CONTRACT NO. NAS 9-170

ORBIT ATTITUDE MANEUVER SYSTEM
(VENDOR: ROCKETDYNE)
STATUS CHART

REPORT NO. -42

LAST PROGRAM SCHEDULE CHG. 24 April 64

STATUS AS OF 17 Aug. 1964

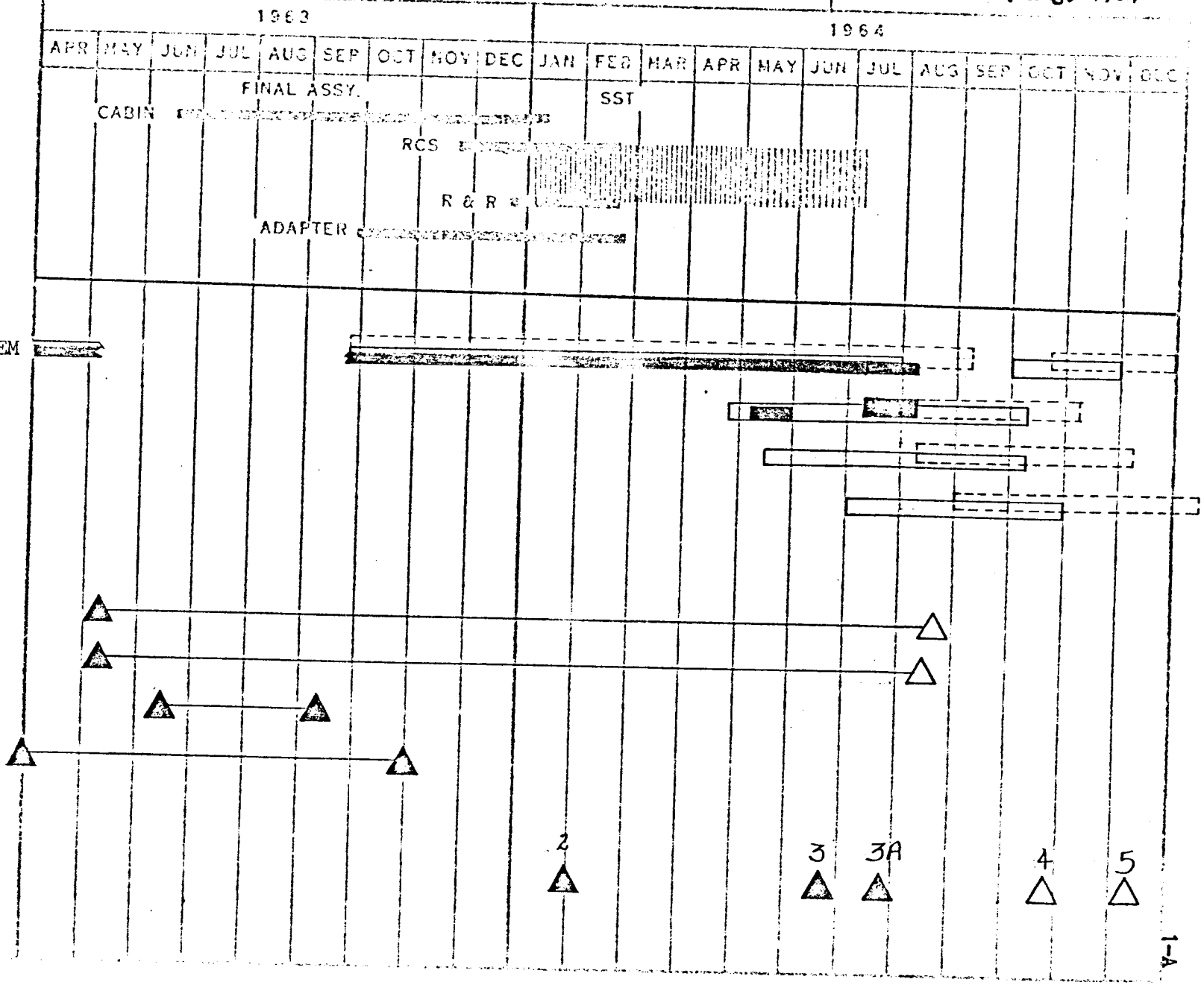

QUALIFICATION TEST STATUS
ORBIT ATTITUDE AND MANEUVER SYSTEM - COMPONENTS
ROCKETDYNE - SCD 52-52701

7 August 1964

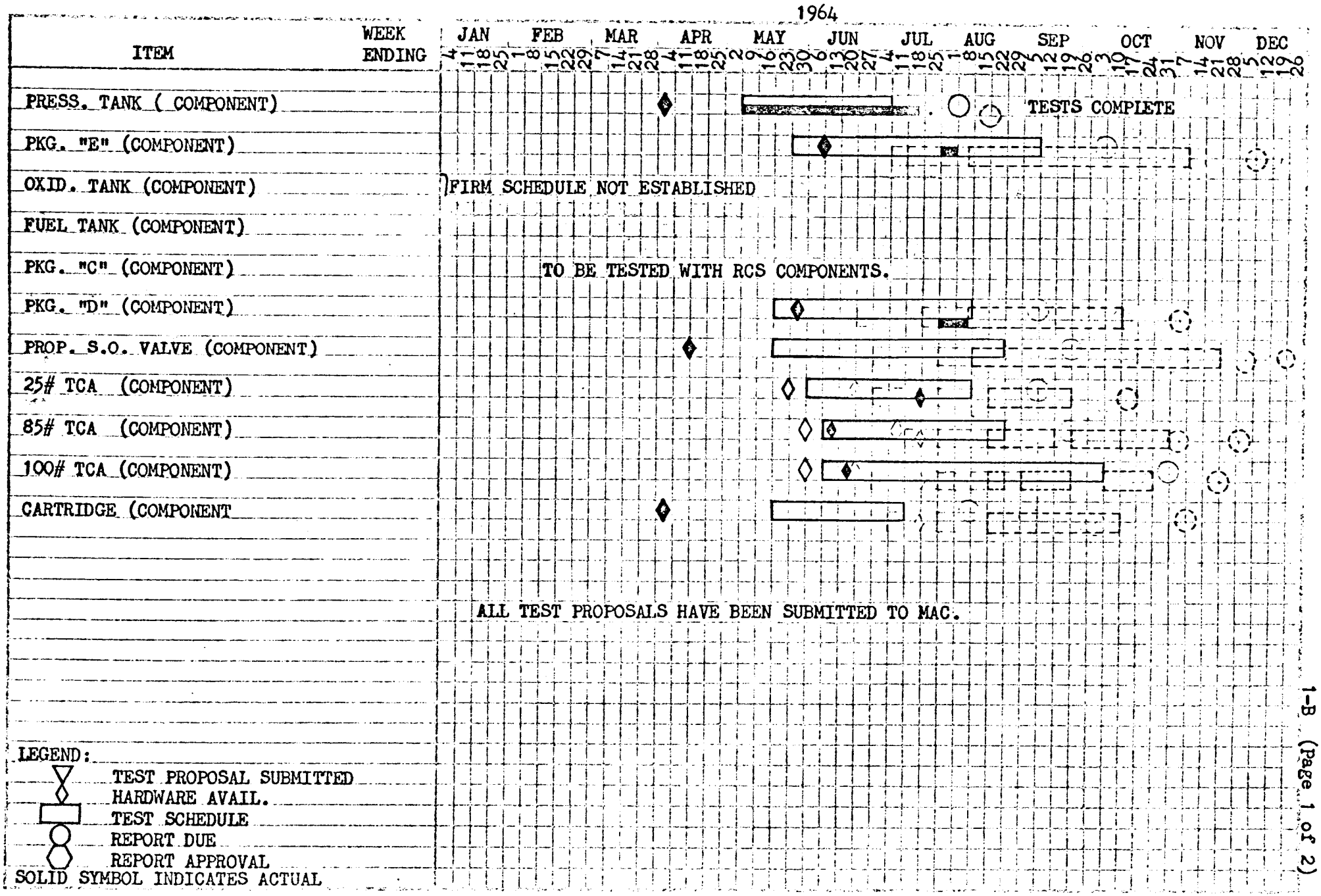

QUALIFICATION TEST STATUS
ORBIT ATTITUDE AND MANEUVER SYSTEM
ROCKETDYNE SCD 52-52701

7 August 1964

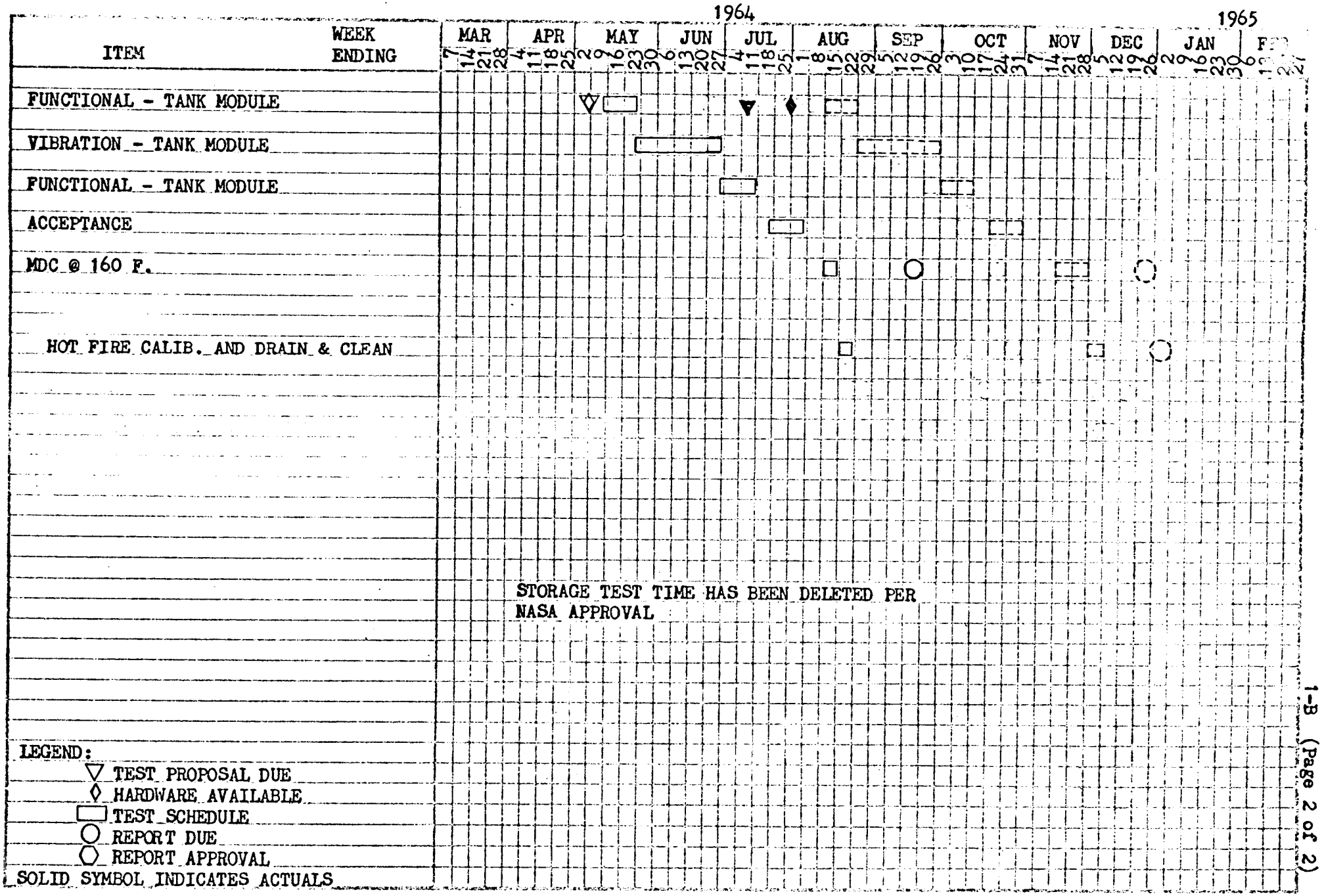

VENDOR DELIVERY STATUS REPORT
-ORBIT ATTITUDE MANEUVER SYSTEM-
ROCKETDYNE

CHART NO.: 1-C

DATE: 7 Aug '64

UNIT NO.	TYPE	USAGE	COMPONENT	VENDOR W/S	AVAIL FOR INSTL	REQ'D FOR INSTL	SLACK
8	PA-1	SC-2	-233 CARTRIDGE	A 6-12-64	ACTUAL	ACTUAL	
9	PA-2	SC-3	-151 COMP PKG A		ACTUAL	ACTUAL	
			-237 COMP PKG B		ACTUAL	ACTUAL	
			-171 COMP PKG C		ACTUAL	ACTUAL	
			-173 COMP PKG D		ACTUAL	ACTUAL	
			-175 COMP PKG E	ACTUAL	ACTUAL	ACTUAL	
			-265 TCA 25#		ACTUAL	ACTUAL	
			-267 TCA 85#	A 6-17-64	ACTUAL	ACTUAL	
			-287 TCA 100#	ACTUAL	ACTUAL	ACTUAL	
			-169 PRESS TANK		ACTUAL		
			-177 OXID TANK		ACTUAL	ACTUAL	
			-179 FUEL TANK		ACTUAL	ACTUAL	
			-187 S.O. VALVES	ACTUAL	ACTUAL	ACTUAL	
9	PA-2	SC-3	-233 CARTRIDGE	A 6-12-64	ACTUAL	ACTUAL	
10	PA-3	SC-3A	-151 COMP PKG A	A 1-25-64	ACTUAL	ACTUAL	
			-175 COMP PKG B	A 5-27-64	ACTUAL	ACTUAL	
			-171 COMP PKG C	A 1-06-64	ACTUAL	ACTUAL	
			-173 COMP PKG D	A 1-06-64	ACTUAL	ACTUAL	
			-175 COMP PKG E	A 7-17-64	ACTUAL	ACTUAL	
			-265 TCA 25#	A 7-18-64	ACTUAL	ACTUAL	
			-267 TCA 85#	A 7-08-64	ACTUAL	ACTUAL	
			-269 TCA 100#	A 7-10-64	ACTUAL	ACTUAL	
			-169 PRESS TANK	A12-19-63	ACTUAL	ACTUAL	
			-177 OXID TANK	A 7-16-64	ACTUAL	ACTUAL	
			-211 FUEL TANK	A 2-14-64	ACTUAL	ACTUAL	
			-257 S.O. VALVE	A 6-18-64	ACTUAL	ACTUAL	
10	PA-3	SC-3A	-233 CARTRIDGE	9-30-64	10-10-64	10-30-64	+ 3
11	PA-4	SC-4	-151-103 COMP PKG A	8-15-64	8-25-64	7-05-64	- 7
			-203 COMP PKG B	10-09-64	10-19-64	7-05-64	-14
			-235-103 COMP PKG C	9-18-64	9-28-64	7-05-64	-11
			-237-103 COMP PKG D	9-15-64	9-25-64	7-05-64	-11
			-175-104 COMP PKG E	8-28-64	9-07-64	7-05-64	- 8
			-251 TCA 25#	10-08-64	10-18-64	6-22-64	-16
			-253 TCA 85#	9-30-64	10-10-64	6-22-64	-15
			-255 TCA 100#	10-15-64	10-25-64	6-22-64	-17
			-169 PRESS TANK	A 2-28-64	ACTUAL	7-05-64	
			-177 OXID TANK	9-08-64	9-18-64	7-05-64	- 9
			-211 FUEL TANK	A 2-11-64	ACTUAL	7-05-64	
			-257 S.O. VALVE	10-12-64	10-22-64	7-05-64	-15
11	PA-4	SC-4	-233-104 CARTRIDGE	11-09-64	11-19-64	12-09-64	+ 3

UNIT NO.	TYPE	USAGE	COMPONENT	VENDOR W/S	AVAIL FOR INSTL	REQ'D FOR INSTL	SLACK
			S/C 2 - SST				
12	PA-5	SPARES	(1)-235-103 COMP PKG C	A 5-18-64	8-21-64	3-31-64	-20
			(1)-237-103 COMP PKG D	A 7-17-64	8-21-64	3-31-64	-20
			(1)-239-104 COMP PKG E	9-11-64	9-25-64	3-31-64	-25
			(2)-291 TCA 25#	9-07-64	9-21-64	3-31-64	-25
			(1)-289 TCA 85#	8-31-64	9-14-64	3-31-64	-24
			(2)-255 TCA 100#	9-15-64	9-29-64	3-31-64	-26
			(1)-169 PRESS TANK	A12-19-63	8-21-64	5-31-64	-12
			(1)-177 OXID TANK	8-14-64	8-28-64	3-31-64	-21
			(1)-179 FUEL TANK	8-29-64	9-12-64	3-31-64	-24
			(1)-257 S.O. VALVES	9-28-64	10-12-64	3-31-64	-29
12	PA-5	SPARES	(2)-233 CARTRIDGE	8-31-64	9-14-64	6-30-64	-11
			S/C 2 HANGAR				
12	PA-5	SPARES	(1)-235-103 COMP PKG C	8-11-64	8-25-64	6-30-64	- 8
			(1)-237-103 COMP PKG D	8-12-64	8-26-64	6-30-64	- 8
			(1)-239-104 COMP PKG E	9-15-64	9-29-64	6-30-64	-13
			(3)-291 TCA 25#	9-07-64	9-21-64	5-30-64	-16
			(1)-289 TCA 85#	8-31-64	9-14-64	6-30-64	-11
			(2)-255 TCA 100#	9-15-64	9-29-64	6-30-64	-13
			(1)-169 PRESS TANK	A12-19-63	8-21-64	6-30-64	- 7
			(1)-177 OXID TANK	8-28-64	9-11-64	6-30-64	-10
			(1)-179 FUEL TANK	9-07-64	9-21-64	6-30-64	-12
			(1)-257 S.O. VALVE	9-28-64	10-12-64	6-30-64	-15
12	PA-5	SPARES	(1)-233-104 CARTRIDGE	8-31-64	9-14-64	11-30-64	+11
13	PA-6	SC-5	-209-103 COMP PKG A	9-18-64	9-28-64	9-08-64	- 3
			-211 COMP PKG B	10-30-64	9-09-64	9-08-64	
			-235-103 COMP PKG C	10-25-64	11-04-64	9-08-64	- 8
			-237-103 COMP PKG D	10-23-64	11-02-64	9-08-64	- 8
			-239-104 COMP PKG E	10-20-64	10-30-64	9-08-64	- 7
			-281 TCA 25#	11-07-64	11-17-64	8-25-64	-12
			-253 TCA 85#	10-30-64	11-09-64	8-25-64	-11
			-255 TCA 100#	11-15-64	11-25-64	8-25-64	-13
			-169 PRESS TANK	8-14-64	8-24-64	9-08-64	+ 2
			-177 OXID TANK	10-23-64	11-02-64	9-08-64	- 8
			-211 FUEL TANK	10-30-64	11-09-64	9-08-64	- 9
			-257 S.O. VALVES	11-30-64	12-10-64	9-08-64	-13
13	PA-6	SC-5	-243-104 CARTRIDGE	2-08-65	2-18-65	3-08-65	+ 3

H

VENDOR AGE STATUS REPORT

RCS & OAMS

ROCKETDYNE

CHART NO.: 1-D
2-D

DATE: 7 Aug'64

PART NO.	NOMENCLATURE	UNIT NO	VENDOR W/S	AVAIL. FOR USAGE	REQ'D FOR USAGE	SLACK
			HANGAR			
E420007-3	PROP CONTROL UT	6	8-14-64	8-21-64	7-01-64	- 7
			PAD			
E420012-1	FUEL METER UNIT	2	8-08-64	8-15-64	6-29-64	- 7
E420019-1	PROP SVG ADP KIT	2	8-07-64	8-14-64	6-29-64	- 7
E420025-1	OXID METER UNIT	2	8-08-64	8-15-64	8-10-64	- 1

SPACECRAFT

CONTRACT NO. NAS 9-170

RE-ENTRY CONTROL SYSTEM (VENDOR: ROCKETDYNE)

STATUS CHART

-42

24 April 64

17 Aug. 1964

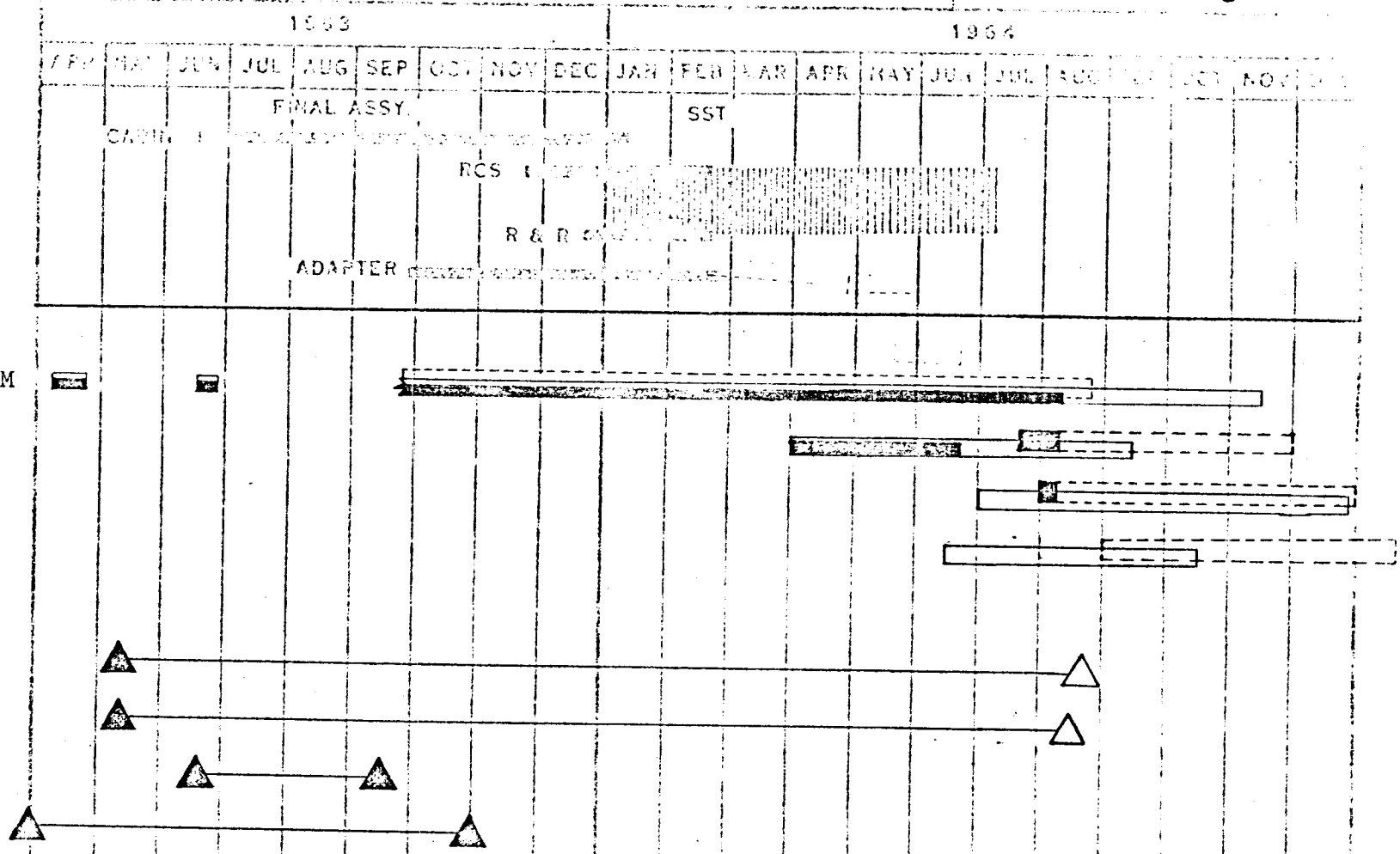

2-A

QUALIFICATION TEST STATUS
RE-ENTRY CONTROL SYSTEM - COMPONENTS
ROCKETDYNE - SCD 52-52700

7 August 1964

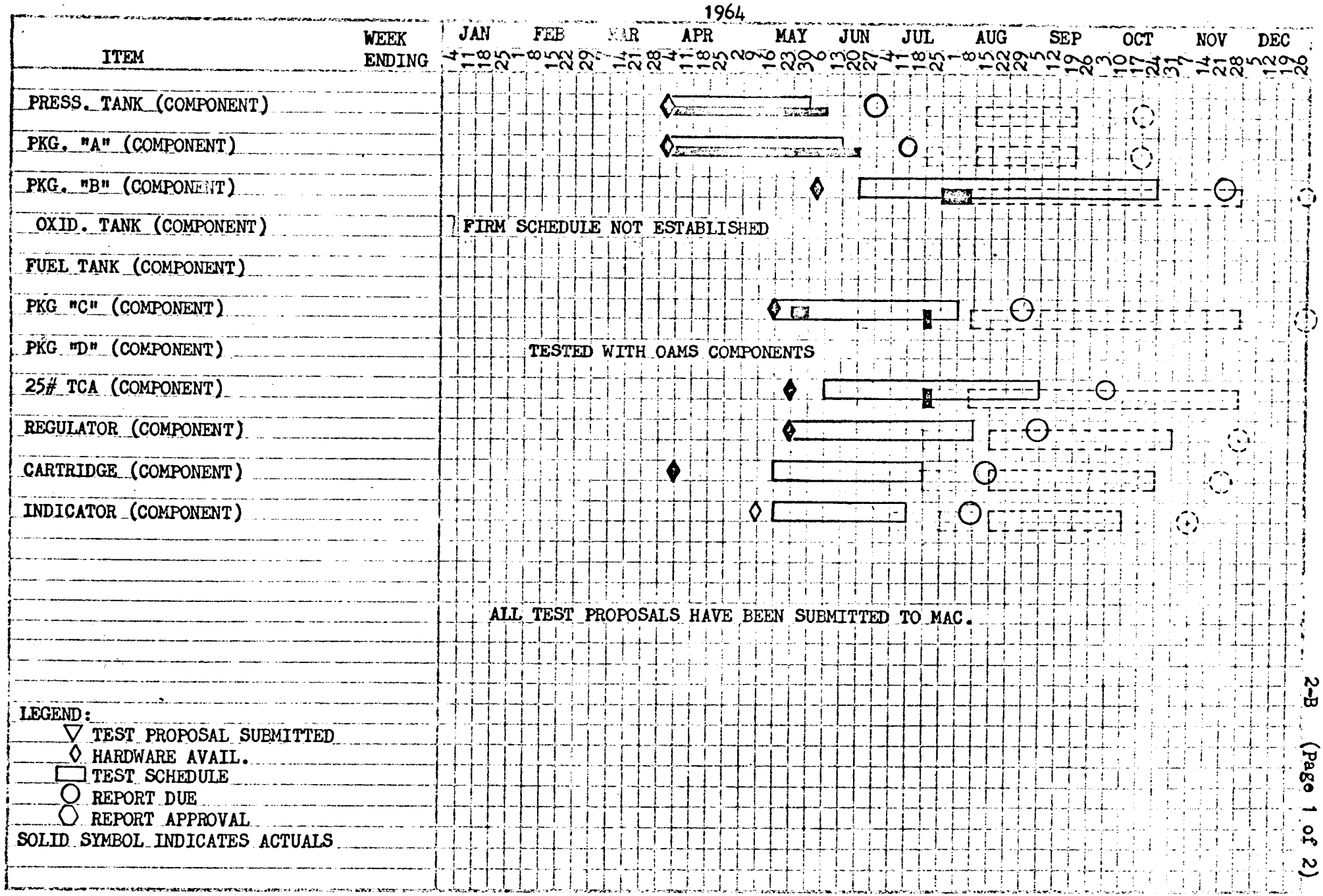

QUALIFICATION TEST STATUS
RE-ENTRY CONTROL SYSTEM
ROCKETDYNE - SCD 52-52700

7 August 1964

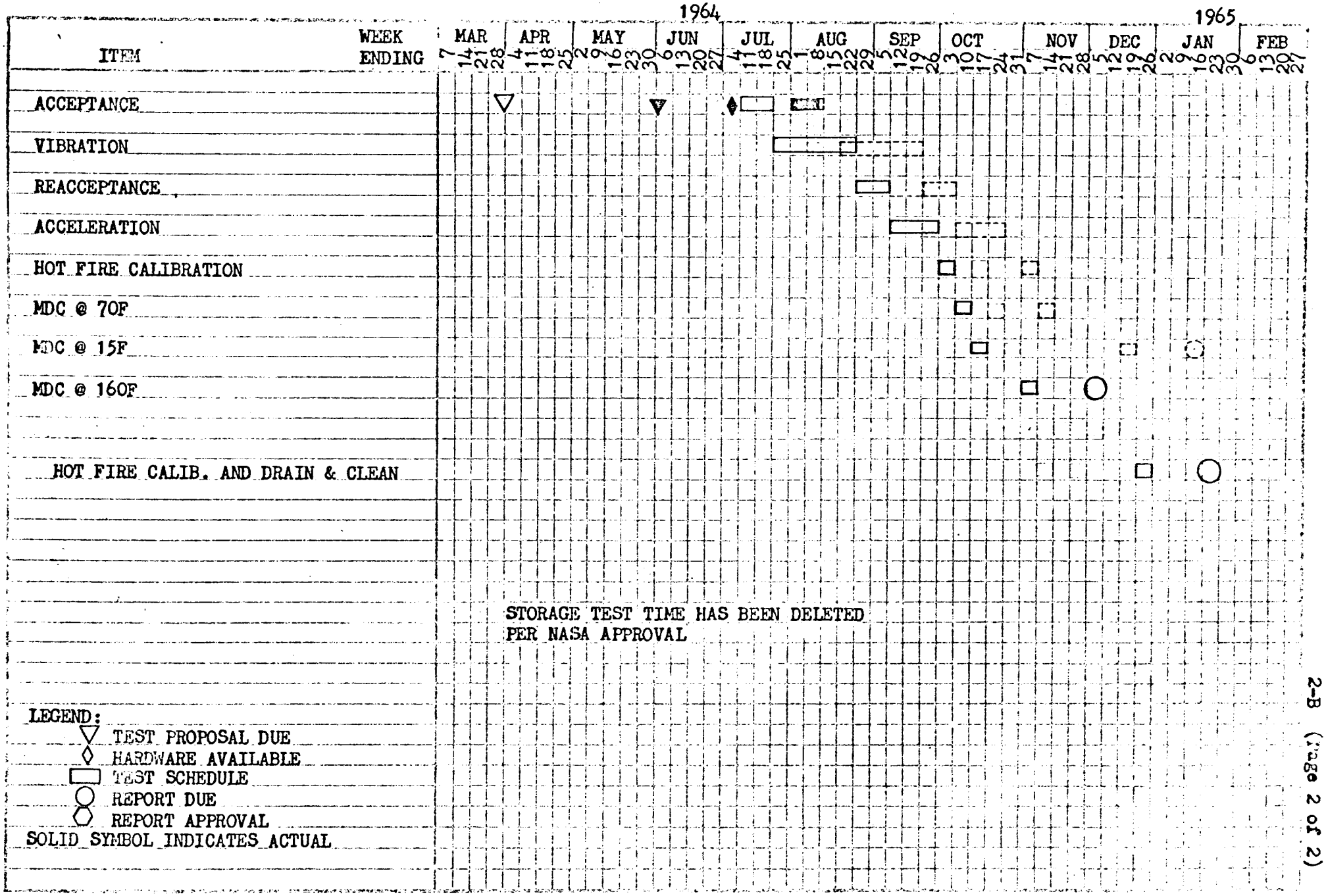

VENDOR DELIVERY STATUS REPORT
RE-ENTRY CONTROL SYSTEM
ROCKETDYNE

CHART NO: 2-C

DATE: 7 Aug. '64

UNIT NO.	TYPE	USAGE	QTY	COMPONENT	VENDOR W/S	AVAIL FOR INSTL	REQ'D FOR INSTL	SLACK
8	PA-2	SC-3		-151 COMP PKG A		ACTUAL		
				-237 COMP PKG B	A 6-18-64	ACTUAL	ACTUAL	
				-153 COMP PKG C		ACTUAL	ACTUAL	
				-205 COMP PKG C		ACTUAL	ACTUAL	
				-155 COMP PKG D		ACTUAL	ACTUAL	
				-217 TCA 25#		ACTUAL	ACTUAL	
				-149 PRESS TANK		ACTUAL	ACTUAL	
				-185 OXID TANK		ACTUAL	ACTUAL	
				-183 FUEL TANK		ACTUAL	ACTUAL	
				-231 PRESS REG	ACTUAL	ACTUAL	ACTUAL	
				-235 P.T. IND.	ACTUAL	ACTUAL	ACTUAL	
				-187 S.O. VALVE	ACTUAL	ACTUAL	ACTUAL	
8	PA-2	SC-3		-201 CARTRIDGE	ACTUAL	ACTUAL	ACTUAL	
9	PA-3	SC-3A		-151 COMP PKG A	A 3-06-64	ACTUAL	5-22-64	
				-175 COMP PKG B	A 7-22-64	8-21-64	5-22-64	-13
				-153 COMP PKG C	A 7-13-64	ACTUAL	ACTUAL	
				-155 COMP PKG D	A 1-25-64	ACTUAL	ACTUAL	
				-217 TCA 25#	A 7-22-64	ACTUAL	ACTUAL	
				-1[illegible] PRESS TANK	A12-16-63	ACTUAL	ACTUAL	
				-185 OXID TANK	A 3-12-64	ACTUAL	ACTUAL	
				-183 FUEL TANK	A 2-13-64	ACTUAL	ACTUAL	
				-231 PRESS REG	A 5-11-64	ACTUAL	ACTUAL	
				-213 P.T. IND.	A 6-22-64	ACTUAL	ACTUAL	
				*-257 S.O. VALVE				
9	PA-3	SC-3A		-201 CARTRIDGE	A 5-16-64	ACTUAL	CAPE	
10	PA-4	SC-4		-151-103 COMP PKG A	A 6-24-64	8-21-64	7-02-64	- 7
				-203 COMP PKG B	10-09-64	10-19-64	7-02-64	-16
				-205-103COMP PKG C	A 7-31-64	8-21-64	7-02-64	- 7
				-207-103 COMP PKG D	8-12-64	8-22-64	7-02-64	- 7
				-239 TCA 25#	9-08-64	9-18-64	7-02-64	-11
				-149 PRESS TANK	A 3-05-64	8-21-64	7-02-64	- 7
				-185 OXID TANK	A 4-30-64	8-21-64	7-02-64	- 7
				-183 FUEL TANK	9-07-64	9-17-64	7-02-64	-11
				-243 PRESS REG	9-30-64	10-10-64	7-02-64	-14
				-235 P.T. IND.	8-28-64	9-11-64	4-30-64	-10
				-257 S.O. VALVE	10-12-64	10-22-64	7-05-64	-15
				-201-103 CARTRIDGE	10-20-64	10-30-64	12-09-64	+ 6
10	PA-4	SC-4		-201-104 CARTRIDGE	10-20-64	10-30-64	12-09-64	+ 6
					S/C 2 - SST			
11	PA-5	SPARES	(1)	-209-103 COMP PKG A	A 3-05-64	ACTUAL	3-31-64	
			(1)	-211 COMP PKG B	10-16-64	10-26-64	3-31-64	-30
			(1)	-205-103 COMP PKG C	A 7-08-64	8-21-64	3-31-64	-20
			(1)	-207-103 COMP PKG D	A 5-22-64	8-21-64	3-31-64	-20
			(5)	-219 TCA 25#	10-02-64	10-16-64	3-31-64	-28
			(1)	-149 PRESS TANK	A12-16-64	ACTUAL	5-31-64	
			(1)	-185 OXID TANK	A 3-13-64	ACTUAL	3-31-64	
			(1)	- 183 FUEL TANK	8-14-64	8-28-64	3-31-64	-21
			(1)	-231 PRESS REG	9-14-64	9-28-64	3-31-64	-26
			(1)	-235 P.T. IND.	8-14-64	8-28-64	3-31-64	-21
11	PA-5	SPARES	(15)	-201 CARTRIDGE	8-31-64	9-14-64	6-30-64	-11

20

UNIT NO.	TYPE	USAGE	COMPONENT	VENDOR W/S	AVAIL FOR INSTL	REQ'D FOR INSTL	SLACK
11	PA-5	SPARES	-209-103 COMP PKG A	A 4-09-64	8-21-64	6-30-64	- 7
			-211 COMP PKG B	10-23-64	11-06-64	6-30-64	-18
			-205-103 COMP PKG C	A 7-13-64	8-21-64	6-30-64	- 7
			-207-103 COMP PKG D	A 7-27-64	8-21-64	6-30-64	- 7
			-219 TCA 25#	10-02-64	10-16-64	6-30-64	-14
			-149 PRESS TANK	A 1-17-64	8-21-64	6-30-64	- 7
			-185 OXID TANK	A 3-19-64	8-21-64	6-30-64	- 7
			-183 FUEL TANK	8-24-64	9-07-64	6-30-64	-10
			-231 PRESS REG	9-14-64	9-28-64	6-30-64	-13
			-235 P.T. IND.	8-21-64	9-04-64	6-30-64	- 9
			-201-103 CARTRIDGE	8-31-64	9-14-64	11-30-64	+11
11	PA-5	SPARES	-201-104 CARTRIDGE	8-31-64	9-14-64	11-30-64	+11
12	PA-6	SC-5	-209-103 COMP PKG A	9-30-64	10-10-64	9-29-64	- 2
			-211 COMP PKG B	11-13-64	11-23-64	9-29-64	- 8
			-205-103 COMP PKG C	9-15-64	9-25-64	9-29-64	+ 1
			-207-103 COMP PKG D	9-08-64	9-18-64	9-29-64	+ 1
			-219 TCA 25#	11-10-64	11-20-64	9-29-64	- 7
			-149 PRESS TANK	8-14-64	8-24-64	9-29-64	+ 4
			-185 OXID TANK	A 5-06-64	8-21-64	9-29-64	+ 5
			-183 FUEL TANK	10-30-64	11-09-64	9-29-64	- 6
			-243 PRESS REG	10-18-64	10-28-64	9-29-64	- 4
			-235 P.T. IND.	9-15-64	9-25-64	7-22-64	- 9
			-257 S.O. VALVE	11-30-64	12-10-64	9-08-64	-13
			-215-103 CARTRIDGE	2-08-65	2-18-65	3-08-65	+ 3
12	PA-6	SC-5	-215-104 CARTRIDGE	2-08-65	2-18-65	3-08-65	+ 3

* Not required until thermal qual test has been completed.

MONTHLY SUMMARY

SYSTEM: Rocket System
SUBSYSTEM: Retro Rockets
VENDOR: Thiokol
DATE: 7 August 1964

ENGINEERING STATUS

1. Attitude Control: The retro rocket disturbance torques for Mode II aborts using two and four rocket salvo firing was evaluated and the results presented to GPO for use in evaluating abort procedures.

2. Reliability: Thiokol was visited 8-9 June. Failure of the shipping containers to restrain and protect the retrograde rocket motors has been resolved. The qualification test program is 90% complete with the only problem encountered being dielectric breakdown of the initiators following humidity conditioning which was attributed to the test conditions.

ASSEMBLY AND DELIVERY STATUS

1. Six live production motors were shipped to MAC on 15 July. The container configuration was the type that had successfully passed two drop tests under the original failure conditions. Two of the motors were used to complete S/C 3 requirements and the remaining four will be used for spares. Two spares will be retained here at MAC and two will be sent to the Cape for backup there.

2. Thiokol has (8) motors assembled, mirror aligned, and available for packaging. Shipment is dependant upon evaluation results of the redesigned shipping container.

3. Initiators and pyrogens are required for S/C 2 at the Cape by 20 August. Delivery is dependant upon a waiver of initiator x-ray requirements. MAC is working in conjunction with Ohio State University on a promising neutron radiography technique to replace x-rays of the initiators for S/C 3 and up.

4. Fifty pyrogens have been assembled to the latest configuration initiators. Eighteen more remain to be assembled for the motor qual test requirements.

TEST STATUS

1. Spacecraft verification test firings of the -51 pyrogen igniter assembly were made on 16-17 July. The firings were witnessed by a joint MAC/NASA Engineering team. The team examined the x-rays and signed the test results.

2. MOTOR QUAL (Ref. Line 9)

   A. Test schedules were delayed during this period by the following reasons:

      (1) The altitude simulation test equipment for the motors and the pyrogens had to be redesigned. Two vacuum pumps were installed to replace one in use.

2. MOTOR QUAL (continued)

(2) The overlapping of motor and pyrogen qual testing to save time was deleted, since pyrogen qual testing was near completion.

(3) The availability of test facilities at AEDC delayed the starting of the high altitude firings.

B. Drop Test (Ref. Line 15)

All drop testing with the reworked containers has been successfully completed on 29 July. The reworked design relocated the motor's center of gravity relative to the shock mounts. Following eight drops made with inert motors, four drops were made with live motors at temperature extremes and at different attitudes.

C. Humidity (Ref. Line 19)

The humidity conditioned motor that evidenced a separation defect will be subjected to low temperatures and be x-rayed prior to firing, to determine if additional separation has occurrred.

D. Sea Level Firings (Ref. Line 23)

As required per SCD, pyrogen qual testing was completed prior to initiating motor qual testing. Sea level firings were started at Thiokol on 4 August.

E. Low Pressure Firings (Ref. Line 25)

Altitude soak pre-conditioning was started on 17 July. Nine of fifteen motors required have been pre-conditioned. Following altitude soak, the motors will be fired while the low pressure is maintained.

F. High Altitude Firings (Ref. Line 27)

Firings were commenced at AEDC on 24 July. All six motors were complete by 29 July. Two pyrogens were expelled by two motors due to an instrumentation failure. A burn thru was experienced in the area of the pressure tube to the lead cap joint. To prevent this in the remaining motor, a flight type pyrogen was used to replace the pressure tapped pyrogen. The test data will have to be evaluated to determine if additional firings will be required.

3. INITIATOR QUAL (Ref. Line 29)

The Hi Shear Company has completed all of their required work and they have now stopped all effort prior to qual testing as directed by MAC. If the need for a backup initiator should occur, Hi Shear could then be given go-ahead to resume.

3. INITIATOR QUAL (Continued)

A. Holex has completed all qual testing except for a repeat of the humidity and dielectric strength tests. This repeat testing is due to a dielectric failure of two units caused by a testing error.

B. A two week delay has been caused by the procurement of the wrong tubing for the cable assemblies. The new test completion date now is scheduled for 21 August.

4. PYROGEN QUAL (Ref. Line 31)

Thiokol assembled the pyrogen and initiators that were vibrated by the Aero Test Company and started qual test firings by 15 July. Twenty-two (22) assemblies were fired when the test equipment failed. The remaining twenty-five (25) were fired after the vacuum pump problem was solved. All firings were completed by 31 July to complete the pyrogen qual test program.

AGE STATUS

1. Thiokol shipped two empty motors, Part No. E16379, to the Cape on 14 July. Also, the last one of three mirror alignment fixtures, Part No. 52E060007-2, was shipped to the Cape on 18 July. The first two fixtures are in use at Thiokol and MAC. The delivery of all AGE equipment is now complete.

GEMINI
SPACECRAFT
CONTRACT NO. NAS 9-170

RETRO-ROCKETS (VENDOR: THIOKOL)

STATUS CHART

REPORT NO. 63804 - 42
LAST PROGRAM SCHEDULE CHANGE: 24 April 1964
STATUS AS OF: 7 August 1964

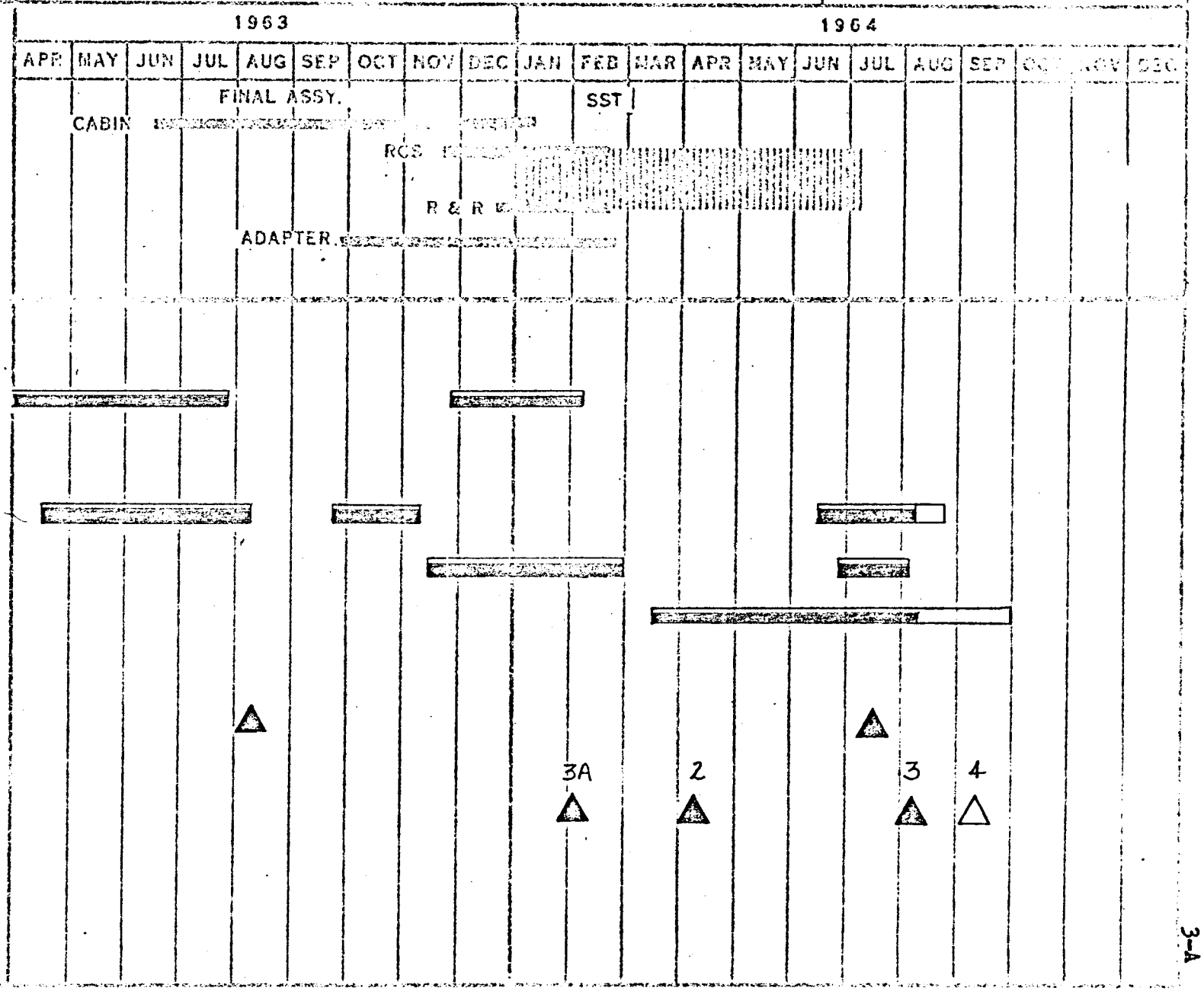

LEGEND:

- ▽ TEST PROPOSAL DUE
- ◇ HARDWARE AVAILABLE
- ▭ TEST ACTIVITY
- ○ REPORT DUE
- ⬡ REPORT APPROVED

SOLID INDICATES ACTUALS

QUALIFICATION & DEVELOPMENT TEST STATUS
RETRO ROCKETS
THIOKOL CHEMICAL CORP. 52-50702

7 August 1964

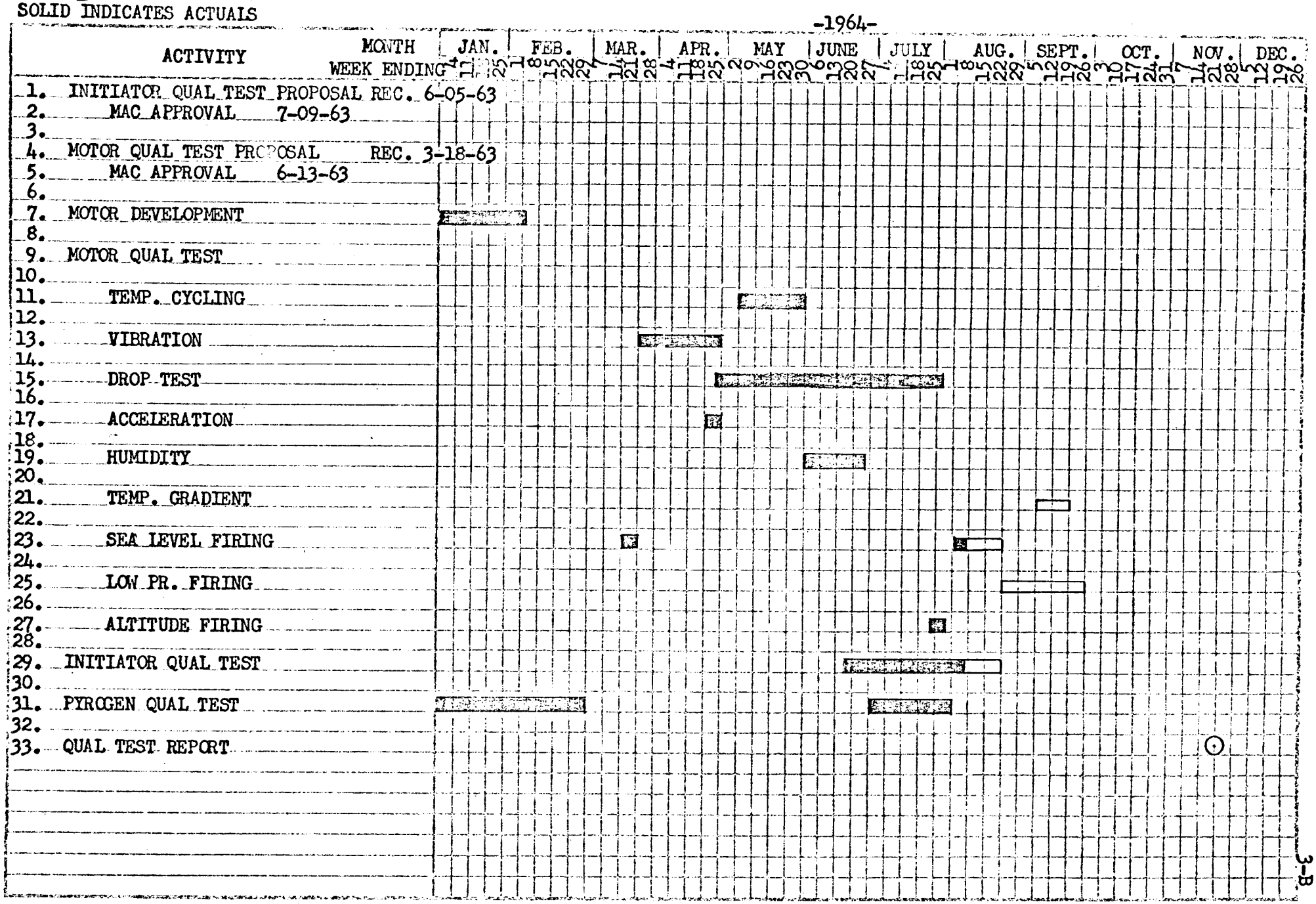

VENDOR DELIVERY STATUS REPORT
SYSTEM - RETROGRADE ROCKETS
VENDOR - THIOKOL

CHART NO: 03-C

DATE: 7 Aug.'64

UNIT NO.	TYPE	USAGE	COMPONENT	VENDOR W/S	AVAIL FOR INSTL	REQ'D FOR INSTL	SLACK
1-18	EP 1-18	VENDOR	DEVELOPMENT			A11-25-63	
19-38	PP 1-20	VENDOR	QUAL			A 3-27-64	
39-58	PA 1-20	VENDOR	QUAL			A 3-27-64	
1-18	EMPT 1-4	CTU	EMPTY MOTORS			A 7-01-63	
1-18	INERT 1-4	SC 3A	INERT MOTORS			A 2-03-64	
59-62	PA 21-24	SC 2	ROCKET MOTORS			A 6-26-64	
65-68	PA 27-30	SPARE	ROCKET MOTORS		A 8-06-64	8-10-64	0
63-64	PA 25-26	SC 3	ROCKET MOTORS		A 4-08-64	8-10-64	+18
69-70	PA 31-32	SC 3	ROCKET MOTORS		A 8-06-64	8-10-64	0
71-74	PA 33-36	SC 4	ROCKET MOTORS	8-26-64	9-09-64	11-10-64	+ 9
75-78	PA 37-40	SC 5	ROCKET MOTORS	10-28-64	11-11-64	11-18-64	+ 1
79-82	PA 41-44	SC 6	ROCKET MOTORS	1-05-65	1-19-65	1-26-65	+ 1
83-86	PA 45-48	AD 13	ROCKET MOTORS	1-25-65	2-08-65	2-15-65	+ 1
87-90	PA 49-52	SC 7	ROCKET MOTORS	2-22-65	3-08-65	3-15-65	+ 1
91-94	PA 53-56	SC 8	ROCKET MOTORS	4-19-65	5-03-65	5-10-65	+ 1
95-98	PA 57-60	SC 9	ROCKET MOTORS	6-14-65	6-28-65	7-05-65	+ 1
99-102	PA 61-64	SC 10	ROCKET MOTORS	8-04-65	8-18-65	8-25-65	+ 1
103-106	PA 65-68	SC 11	ROCKET MOTORS	10-04-65	10-18-65	10-25-65	+ 1
107-110	PA 69-72	SC 12	ROCKET MOTORS	11-26-65	12-10-65	12-17-65	+ 1
111-114	PA 73-76	AD 14	ROCKET MOTORS	1-19-66	2-02-66	2-09-66	+ 1
115-118	PA 77-80	AD 15	ROCKET MOTORS	3-15-66	3-29-66	4-05-66	+ 1

VENDOR AGE STATUS REPORT
SYSTEM - RETRO ROCKETS
VENDOR - THIOKOL

CHART NO: 03-D

DATE: 7 Aug '64

All AGE delivered. See previous 8580-1 report for delivery dates.

MONTHLY SUMMARY

SYSTEM: Guidance & Control
SUBSYSTEM: IGS
VENDOR: IBM
DATE: 7 August 1964

ENGINEERING STATUS

1. Math Flow 6 to be finalized during the week of 9 August. Availability of Math Flow for spacecraft usage is not expected until 15 January. Late date of math flow availability coupled with 10 week lag between hardware delivery and math flow delivery would indicate a decision would have to be made regarding whether math flow would be incorporated in S/C 5 or in a later vehicle. If the former alternative is decided more feasible, then the incorporation of the math flow will have to be made into the spacecraft after the hardware has been integrated into the spacecraft.

2. IBM has proven the polyprophylene clamp to be much better than Teflon. These clamps will be incorporated into SDC's as soon as practical after IBM receives orders from the vendor. The vendor will not make a larger clamp, therefore one clamp will remain Teflon - on logic panel A-1.

3. Test results of the IVI modules at Lear were inconclusive and Lear is continuing screen test transistors. Testing did indicate the encapsulant pressure was definitely causing shorts in some transistors due to the close proximity of the element and the case.

4. A slight warpage of panel 2 and panel 3 prevented alignment of the panels in the 707 computer logic sub-assembly. The warpage was in the nature of a bow (80 thousandths out of flatness). IBM removed this bow by a very low heat treat.

PROCUREMENT STATUS

1. Four Babcock BR-7 relays arrived at IBM 16 July and completed acceptance test 21 July. They were acceptable for use in computers 10, 11, 12, and 13.

ASSEMBLY & DELIVERY STATUS

S/C 2 SDC 8

1. S/C 2 developed a hard failure during testing on 22 July. The failure was traced back to a short in the TCCS Age equipment, resulting from a wiring error. Circuit modules were replaced after failure to get fine roll ladder outputs. Computer was returned to MAC 26 July. PIA was waived and computer was installed in the Spacecraft 27 July.

S/C 3 SDC 9

2. IMU Platform PA-7 arrived at IBM 20 July and was integrated with SDC 9. Functional tests began on 21 July. Acceptance test was completed 22 July and power build up completed 23 July. Due to emergency work on S/C 2 and power supply H/18 failure, 25 July, (see Honeywell S/C 3 Status) IGS acceptance test was not resumed until 1 August. Radar simulator problem was

resolved and currently IBM has completed approximately 40% of the IGS testing - specifically up to the computer accelerometer interface test.

Spare SDC 10

3. Computer 10 developed a warpage in the 707 computer logic sub-assembly. This warpage was resolved by a very low heat treat and began interior functional tests 29 July. The computer was delivered to reliability testing 29 July and during the check out a short occurred. A mounting screw was apparently acting as a conducter. This condition was corrected and returned to reliability 31 July. Due to temporary unavailability of the magnetic modulator, this computer is currently being subjected to an abbreviated life test.

S/C 4 SDC 11

4. The line stopper for spider build up of this unit was panel A-3. Work on this unit was held up because of limitation of assembly personnel for the previously mentioned emergency program. While mounted on spider and reliability testing area, short was found on panel 1. Continuity check out of this computer was accomplished 3 August. On 4 August it was noted that syllable 2 could not be verified following memory loading. Further investigation revealed that a MXS Circuit module was at fault. The computer is currently in manufacturing for replacement of failed circuit module.

TEST STATUS

1. Qual Test 1 - Qual Test 1 completed salt fog test 26 July. Results are not available because of the lack of a standard to base the validity of the test upon.

2. Qual Test 2 SDC 7 - Qual Test 2 completed vibration (24 June), shock (29 June), acceleration (30 June), and RFI (17 July) during this report period. Unavailability of AVCO labs for acoustic noise resulted in a week's delay of the start of this test. Test computer section of Qual Test to be completed by 1 September.

3. Qual Test 2 MDKU 101, IVI 106, MDRU 201 - These three items to be tested together. At the moment the MDKU is ahead of the other two units so immediate qual testing of this unit will stop awaiting the "catch up" of the other two.

   Completion of Qual 2 is now anticipated 15 Nov., but IBM believes it can shorten the test by one month (Oct. 15) if MAC allocates the IVI tester that is in St. Louis to IBM.

AGE STATUS

1. No AGE was shipped during the July reporting period.

   The Fixture Computer Adapter awaited procedural check off until 4 August. With this check off the unit is expected to be shipped by 8 August. This will leave two units of required AGE remaining.

SPACECRAFT

CONTRACT NO. NAS 9-170

INERTIAL GUIDANCE SYSTEM - (VENDOR: I.B.M.)

STATUS CHART

REPORT NO. -41

LAST PROGRESS SCHEDULE CHART 24 Apr. '64

STATUS AS OF 7 Aug. 1964

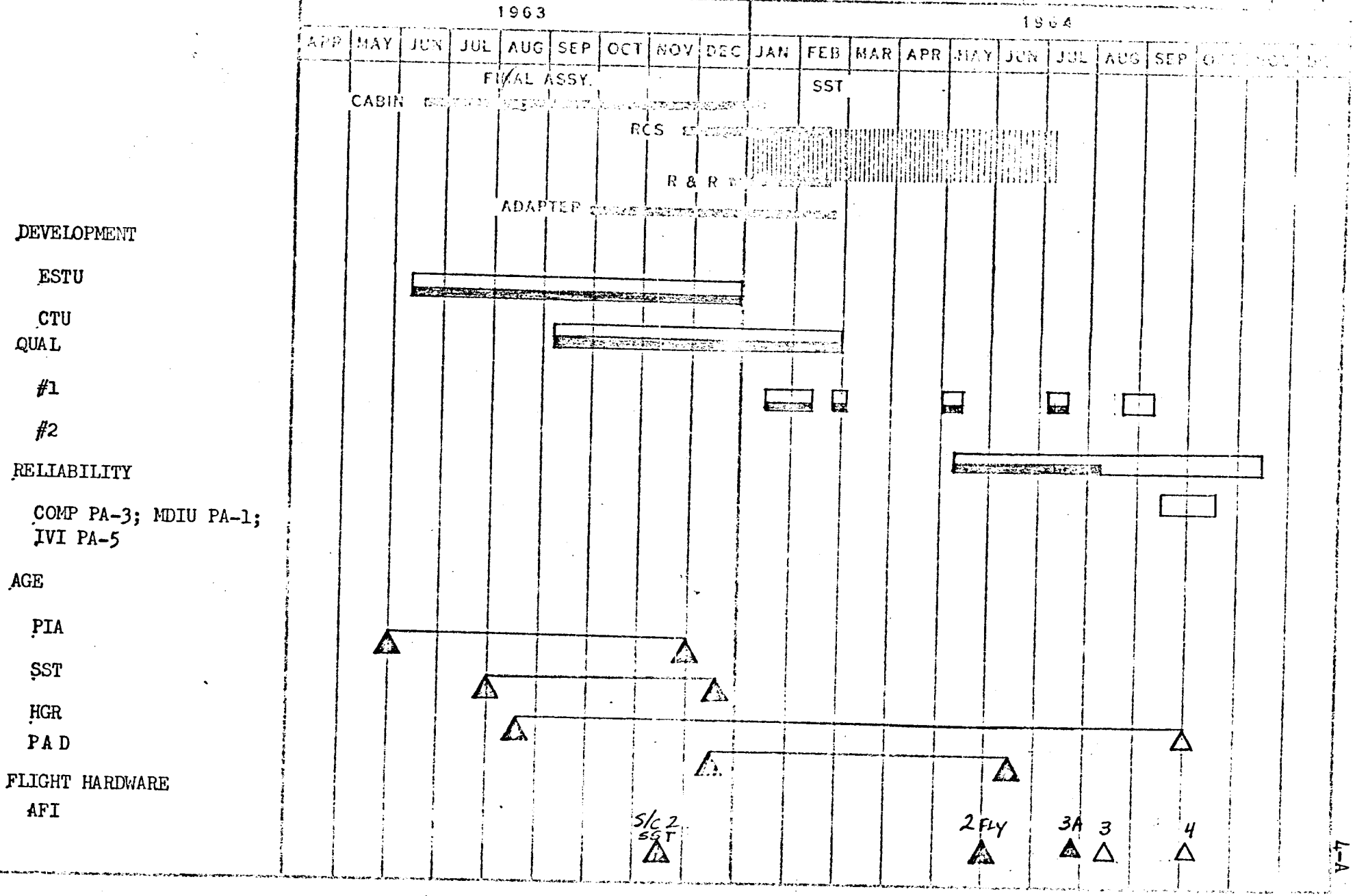

4-A

LEGEND
▽ Test Proposal Due
◊ Hardware Available
□ Test Schedule
○ Report Due
Report Approved
SOLID INDICATES ACTUAL

QUALIFICATION AND DEVELOPMENT TEST STATUS
INERTIAL GUIDANCE SYSTEM
VENDOR: I.B.M.
SCD 52-87710

Date: 7 August 1964
Page: 1 of 2

1964

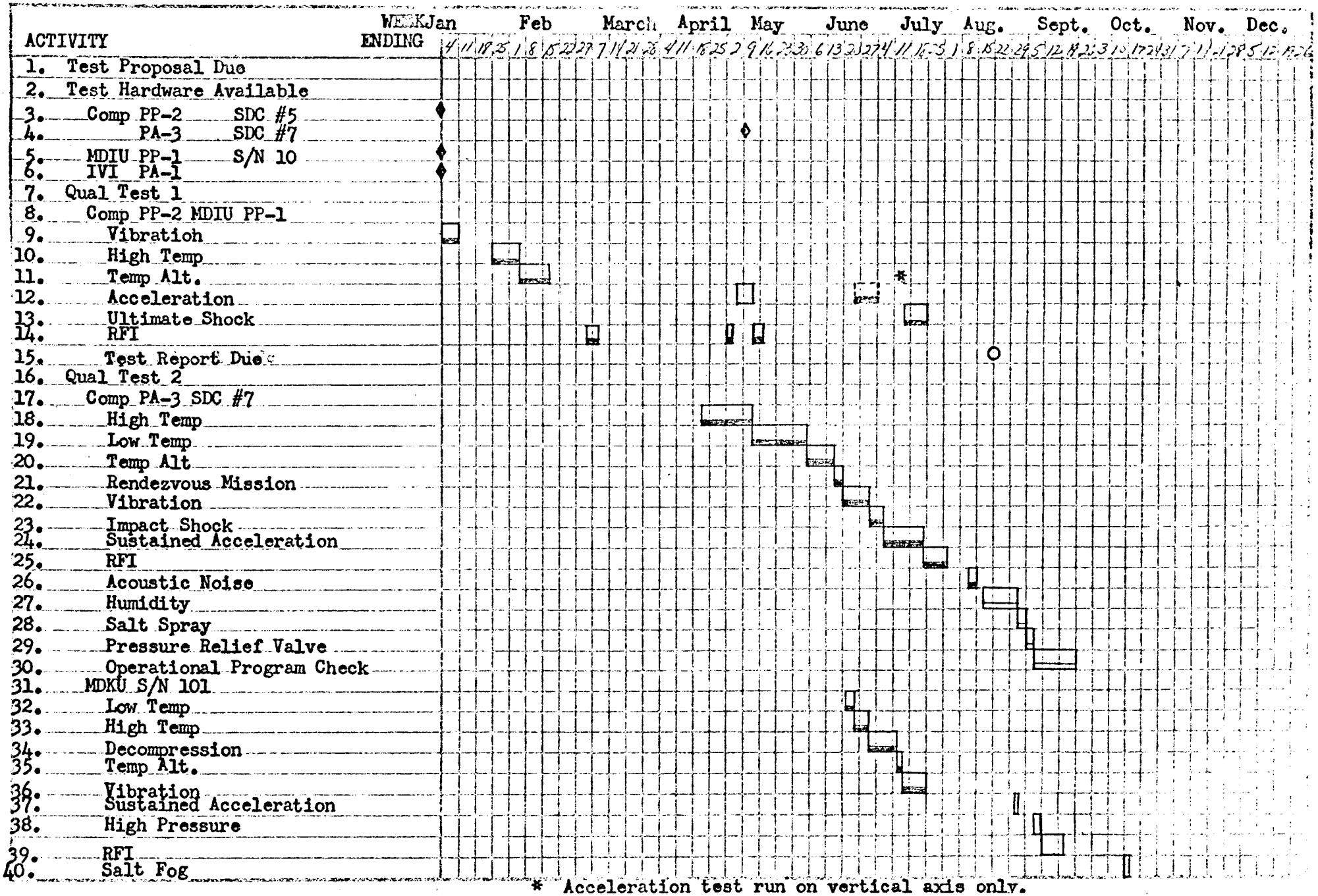

* Acceleration test run on vertical axis only.

LEGEND

Test Proposal Due
Hardware Available
Test Schedule
Report Due
Report Approved
SOLID INDICATES ACTUAL

QUALIFICATION AND DEVELOPMENT TEST STATUS
INERTIAL GUIDANCE SYSTEM
VENDOR: I.B.M.

Date: 7 Aug. 1964

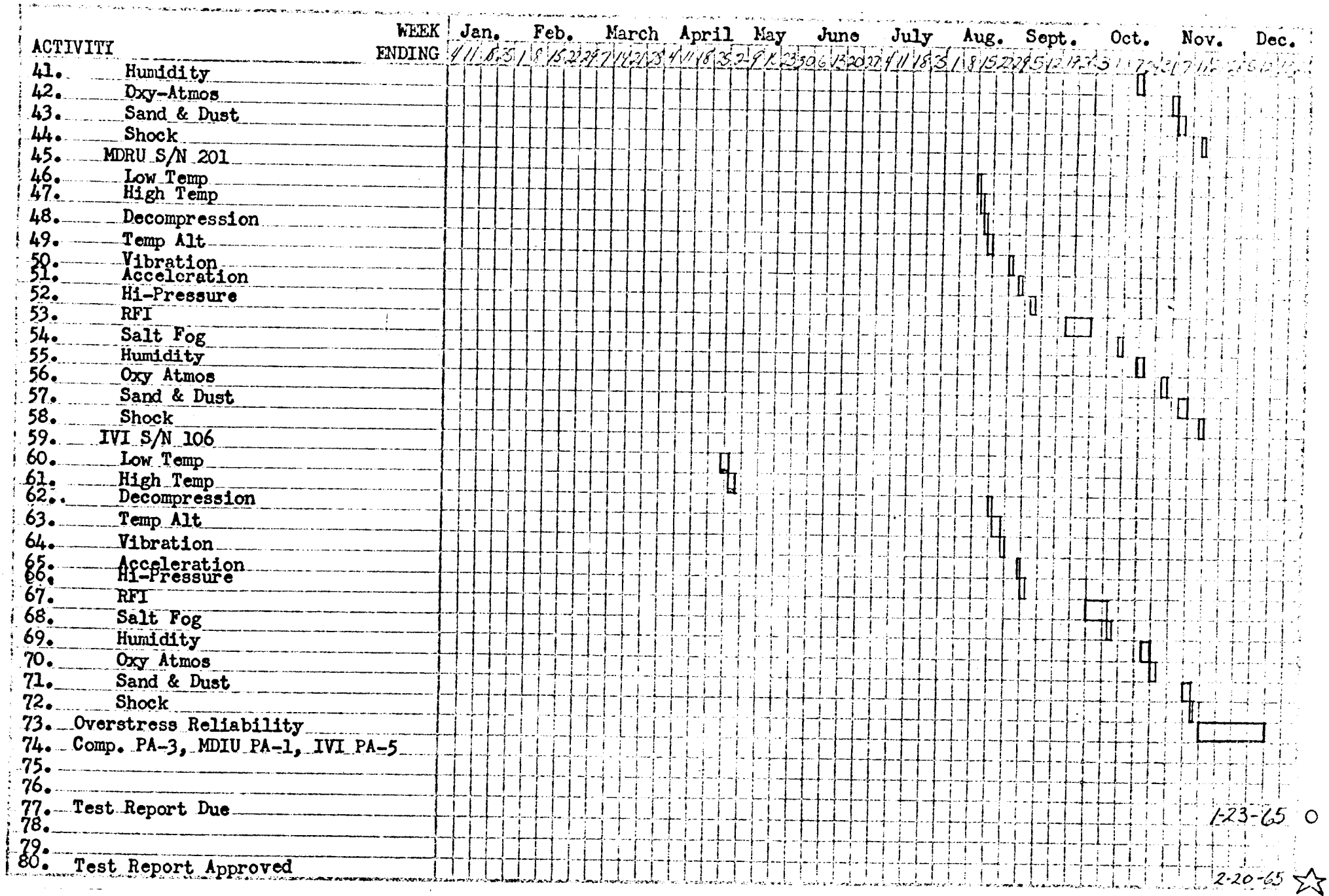

VENDOR DELIVERY STATUS REPORT

CHART NO: 4-C

SYSTEM - I.G.S.

DATE: 7 Aug. 1964

VENDOR - I.B.M.

UNIT NO.	TYPE	USAGE	VENDOR W/S	AVAIL. FOR INSTL.	REQ'D. FOR INSTL.	SLACK
1	EP-1	ESTU			A05-21-63	
2	EP-2	CCTU			A08-01-63	
3	EP-3	CTU			A07-22-63	
5	PP-2	QT-1			A09-13-63	
4		PARTIAL SPARE			A09-30-63	
4	PP-1	S/C 2 SST			A11-29-63	
4	PP-1	S/C 3A			A07-20-64	
6	PA-1	ENGRG TEST			A11-11-63	
8	PA-2	QT 2			A05-29-64	
7	PA-3	S/C 2 FLY			A06-04-64	
9	PA-4	S/C 3 FLY	08-12-64	08-15-64	04-22-64*	-16
6	PA-1	MISS ENVIR CCTU		A06-15-64		
10	PA-5	SPARE SST (2)	08-15-64	09-01-64	03-30-64	-21
[illegible]	PA-6	S/C 4	10-02-64	10-07-64**	07-21-64	-11
[illegible]	PA-7	SPARE HGR (2)	10-25-64	11-01-64	06-30-64	-17
13	PA-8	S/C 5	11-05-64	11-10-64	10-01-64	- 6
14	PA-9	S/C 6	11-20-64	12-01-64	11-28-64	0
15	PA-10	SPARE HGR (3)	12-15-64	12-20-64	08-31-64	-16
16	PA-11	S/C 7	01-30-65	02-05-65	01-19-65	- 3
17	PA-12	S/C 8	02-25-65	03-01-65	03-12-65	- 2
18	PA-13	S/C 9	03-20-65	03-25-65	05-12-65	+ 7
19	PA-14	S/C 10	04-22-65	04-25-65	07-01-65	+10
20	PA-15	S/C 11	05-20-65	05-25-65	08-30-65	+14
21	PA-16	S/C 12	06-20-65	06-25-65	10-27-65	+19

NOTES:

1. PA-5 and up AFI dates include PIA and IGS Integration Test Time.
2. It should also be noted that the AFI date also depends on the availability of the IMU.
3. PA-5 will be integrated at IBM with IMU.

* S/C 3 FLY - AFI Date does not include PIA time.

** Operational Program Check included on units 11 and up.

VENDOR AGE STATUS REPORT

CHART NO: 4-D

SYSTEM - IGS

DATE: 7 Aug. 1964

VENDOR - IBM

All AGE delivered except for the below noted items -

See previous 8580-1 Reports for delivery dates.

PART NO.	COMPONENT	UNIT NO.	VENDOR W/S	AVAIL. FOR INSTL.	REQ'D. FOR INSTL.	SLACK
		(CAPE KENNEDY HANGAR)				
52E270068-1	FIXTURE COMPUTER ADAPT.	1	08-03-64	08-15-64	07-17-64	- 4
52E270076-1	TEST BREAK OUT BOX	2	08-20-64	08-25-64	07-17-64	- 6
52E270003-401	CPEE	1	10-01-64	10-05-64	10-01-64	- 1

No IBM AGE was shipped during the July reporting period.

MONTHLY SUMMARY

SYSTEM: Guidance & Control
SUBSYSTEM: IMU
VENDOR: Honeywell, St. Pete
DATE: 7 Aug. 1964

ENGINEERING STATUS

1. Testing of 504/H-10 Platform mount for qual test 2 was interrupted by a contamination problem that apparently was caused by degradation of rubber hoses within the test fixture which allowed the freon fluid used to clean the mount to spray over the test equipment. All the contamination was removed and the source of the contamination has been corrected. This was one of a series of problems with the platform mounts. Mount 503/H-9 for S/C 4 failed silver nitrate pre-acceptance test on 27 July and the afore mentioned H/10 mount is currently being held up by pending MRR approval. A new cold plate from AVCO is being installed on Mount 9 and on mounts 13 and up. Preliminary testing indicates that this plate is superior to the previous type.

2. Slip Ring difficulties during the past few months have created the need for a new platform slip ring test. Specifications for the special slip ring test are being reviewed at MAC to be submitted to Honeywell for incorporation into acceptance test procedures.

3. Static Power Supply is the gating item for the next two units at Honeywell. Failure of the Power Supply caused a delay in the IGS testing of the system for S/C 3 and will cause a delay in the delivery of the next two PA units. (See IMU Procurement).

PROCUREMENT STATUS

1. Static Inverter 313/H-20, allocated currently for S/C 4 is expected to be delivered to Honeywell 10 August. This will cause a slip in the will ship date to MAC of the PA-9 system to 1 September.

2. Static Inverter 314/H-18, allocated currently for the PA-10 Spare, is expected to be delivered to Honeywell 20 August.

ASSEMBLY & DELIVERY STATUS

1. PA-5 S/C 2
Platform failed during testing 2 August. MAC allowed test to continue until 4 August when they shipped the platform to Honeywell. Torquing gimbals through 360 degrees improved accelerometer TCA outputs to within spec requirements. Honeywell would, however, like to change the E7 slip ring. A special slip ring test to insure confidence in the unit is currently being negotiated. Honeywell estimates that they will ship platform back to MAC 10 August.

PA-7 S/C 3
Acceptance test completed 17 July, MRR No. 55489 approved 18 July and platform shipped 19 July. IBM completed acceptance test 22 July. A malfunction occurred 25 July while running the frequency portion of the IGS test procedure. The problem was isolated to the power supply 311/H-18 which was sent back to Engineering Magnetics. While testing at Engineering Magnetics, the malfunction occurred again and the unit was deemed unacceptable. 312/H-19 allocated for PA-8 was sent to IBM on 30 July for use in the PA-7 system. IGS acceptance test was resumed 1 August and currently the test has completed up to the computer accelerometer interface test.

PA-8 Spare
PA-8 will be shipped to IBM for integration. With the re-allocation of the Power Supply 312/H-19 to PA-7, Honeywell expects to proceed with the IMU acceptance test using the 308/H-15. Upon completion of the test and upon receipt of power supply 313/H-20 (expected 3 August - available 10 August) the new power supply will be installed and an abbreviated acceptance test will be run. Will ship date currently 1 September.

PA-9 S/C 4
During final E.S. test of the platform H/14, it became apparent that the B1 synchro resolver would have to be changed. This was accomplished and a re-check of the platform was made. The re-check indicated that a replacement of the B1 synchro resolver was again necessary. Replacement was made and vibration was successfully completed 1 August. Unit level acceptance test completed 4 August at which time the B7 synchro output was out of spec. Honeywell feels this condition will be corrected before Engineering Magnetics delivers the Power Supply (15 August).

TEST STATUS

1. Qual 2
Qual Test 2 began acceptance test and integration 5 August. Vibration expected to begin 10 August. Expect to complete by 15 October.

OSR
OSR to begin 10 August with the Power Supply acceptance test. Expect to be complete by 21 September.

AGE STATUS

1. Six of seven units of 52E270053-1 were shipped to the Cape 29 July. Failure of vendor to salvage unit 7 created a need for a new unit to be manufactured. Unit 7 to be shipped 20 August.

SPACECRAFT
CONTRACT NO. NAS 9-170

INERTIAL MEASUREMENT UNIT
(VENDOR: HONEYWELL - ST. PETERSBURG)

STATUS CHART

REPORT NO. [illegible] -4[illegible]
LAST PROGRAM SCHEDULE CHANGE 24 Apr. '64
STATUS AS OF 7 Aug. 1964

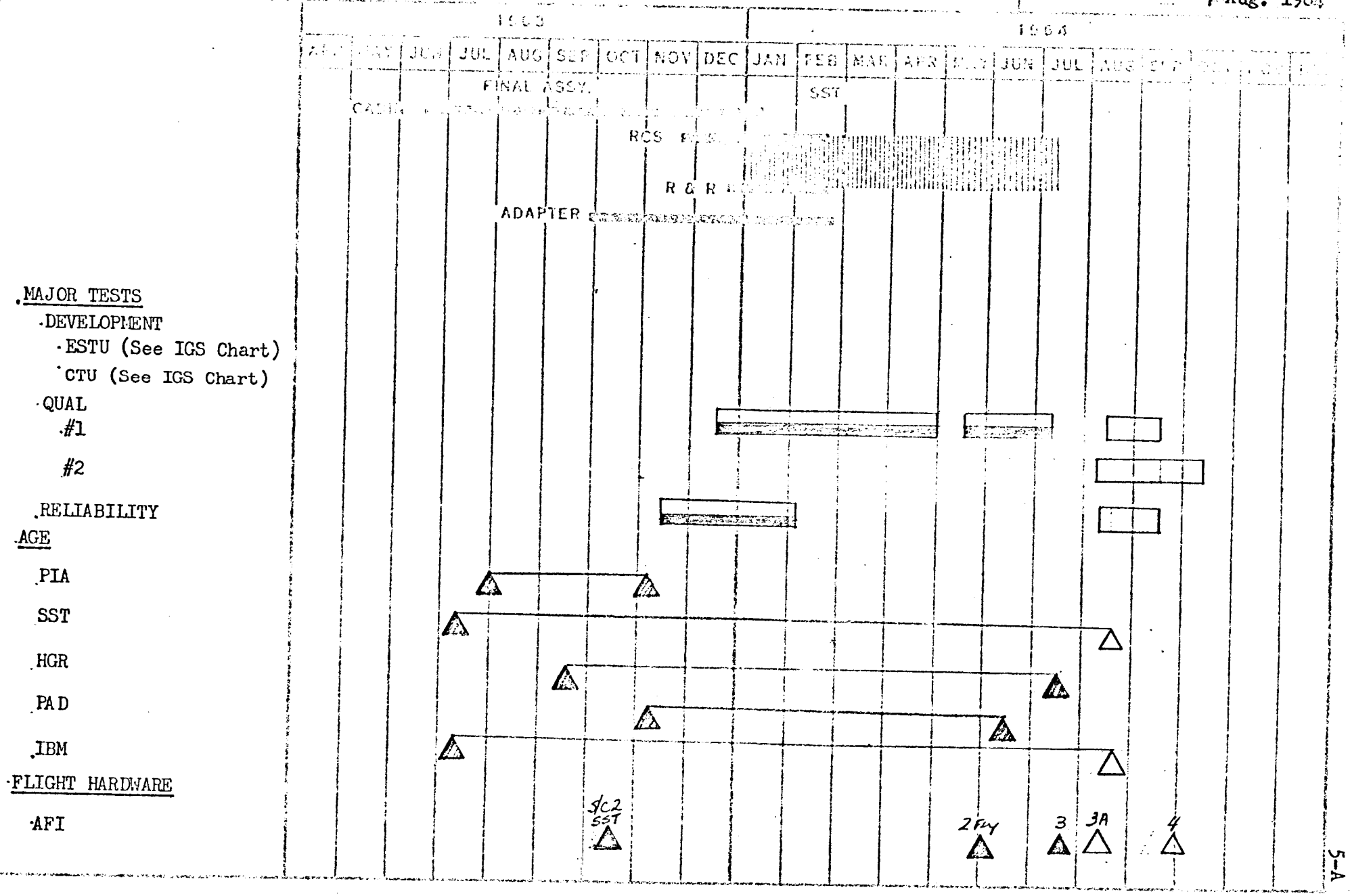

LEGEND
- ▽ Test Proposal Due
- ◊ Hardware Available
- □ Test Schedule
- O Report Due
- ☆ Report Approved

SOLID INDICATES ACTUAL

QUALIFICATION AND DEVELOPMENT TEST STATUS
INERTIAL MEASUREMENT UNIT
HONEYWELL - ST. PETE
SCD 52-87717

Date: 7 August 1964

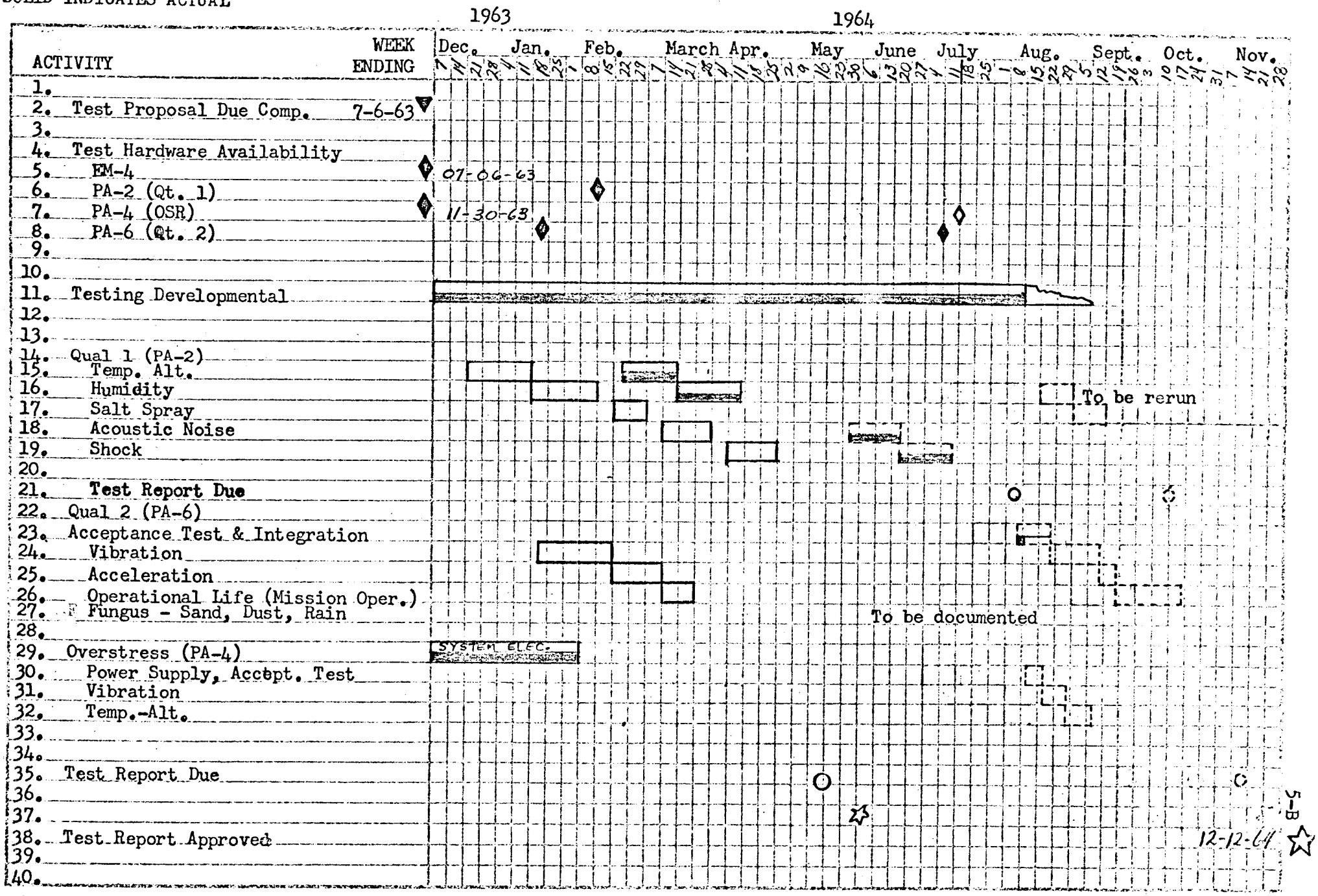

5-B

VENDOR DELIVERY STATUS REPORT

CHART NO: 5-C

SYSTEM - IMU

VENDOR - HONEYWELL, ST. PETERSBURG

DATE: 7 AUGUST 1964

UNIT NO.	TYPE	USAGE	VENDOR W/S	AVAIL. FOR INSTL.	REQ'D FOR INSTL.	SLACK
1	EP-1	ESTU			A03-10-63	
2	EP-2	CCTU			A05-13-63	
3	EP-3	CTU			A06-17-63	
4	EP-5	VENDOR			A08-01-63	
5	PA-1	S/C 2 SST			A10-24-63	
6	PA-1	S/C 3A	08-10-64	08-15-64	07-02-64	-6
7	PA-2	QUAL 1			A02-19-64	
9	PA-4	OSR		08-10-64		
10	PA-5	S/C 2			A05-29-64	
11	PA-6	QUAL 2			A08-05-64	
12	PA-7	S/C 3	A07-19-64	08-15-64	04-22-64*	-16
13	PA-8	SPARE SST (2)	08-19-64	09-01-64	03-31-64	-26
14	PA-9	S/C 4	09-01-64	09-07-64	07-21-64	-7
15	PA-10 (x)	SPARE HGR (2)	09-09-64	09-15-64	06-30-64	-11
8	PA-3	S/C 5	10-01-64	10-05-64	10-01-64	-1
16	PA-11	S/C 6	11-01-64	11-08-64	11-28-64	-3
	Platform	SPARE HGR (3)	11-15-64	11-20-64	08-31-64	-11
17	PA-12	SPARE HGR (4)	11-30-64	12-05-64	11-28-64	-1
18	PA-13	S/C 7	12-28-64	01-05-65	01-19-65	+2
19	PA-14	S/C 8	01-26-65	02-01-65	03-12-65	+6
20	PA-15	S/C 9	02-23-65	03-01-65	05-12-65	+10
21	PA-[illegible]	S/C 10	03-20-65	03-27-65	07-01-65	+14
22	PA-[illegible]	S/C 11	04-17-65	04-24-65	08-30-65	+18
23	PA-18	S/C 12	05-14-65	05-20-65	10-27-65	+22

NOTES:

1. PA-7 S/C 3 FLY and PA-8 SPARE - To be sent to I.B.M. for integration.
2. PA-8 and up S/C FLY Units reflect PIA and IGS Integration Test time. It should be noted that the AFI date also depends on the availability of the IGS.

* S/C 3 FLY - AFI Date does not include PIA time.

VENDOR AGE STATUS REPORT

CHART NO: 5-D

SYSTEM - IMU

DATE: 7 Aug. 1964

VENDOR - HONEYWELL, ST. PETERSBURG

All AGE delivered except for the below noted items -

See previous 8580-1 Reports for delivery dates.

PART NO.	COMPONENT	UNIT NO.	VENDOR W/S	AVAIL. FOR USAGE	REQ'D. FOR USAGE	SLACK
			(HANGAR)			
52E270053-1	IMU TEST CABLE***	7	08-20-64	08-25-64	05-11-64	-15
52E270036-1*	3 AXIS DOLLY	1	08-10-64	08-15-64	08-20-64	+ 1
52E270036-1**	3 AXIS DOLLY	3	09-16-64	09-20-64	09-25-64	+ 1

* Returned to Honeywell from MAC for retrofit.

** Returned to Honeywell from IBM for retrofit.

*** Unit #7 only. Other units shipped. See below.

The following shipped during July reporting period.

52E270053-	IMU TEST CABLE*	1-6	A07-29-64	08-01-64	05-11-64	-11

* Less Unit 7.

MONTHLY SUMMARY

SYSTEM: Guidance & Control
SUBSYSTEM: ACME
VENDOR: Honeywell, Minn.
DATE: 7 Aug. 1964

ENGINEERING STATUS

1. Reworked BR-7X relays will be used on S/C 2, S/C 3, SPARE SST, and SPARE HGR units (ACE and OAME). Honeywell is continuing qualification testing of relays for S/C 4 and up, to find the best relay, which may mean selection of a new vendor.

2. During testing of an ACE package Honeywell discovered that while using the RCS valve drivers it was possible to obtain re-triggering of the valve drivers. This triggering has been ascribed to a voltage spike which is coupled onto the output of the ACE demodulator when the jet current is interrupted. The spike energizes the low hysteresis switch which in turn cycles the minimum pulse generator. Engineering still has this problem under study.

PROCUREMENT STATUS

1. Honeywell has received a total of 163 reworked BR-7X relays from Babcock. Current plans are to install these relays in 4 ACME systems (see "Engineering Status"). The remaining 51 relays will be held as replacement parts. At this time it appears likely that Babcock will be the relay vendor for relays to be used on S/C 4 and up; they have promised delivery on 14 August.

2. Instead of shipping quarter amp circuit breakers on 24 July, Texas Instruments (Mass.) shipped, which turned out to be the wrong types of circuit breaker, on 28 July. Currently, both MAC and Honeywell are attempting to obtain more accurate shipping information. (See "Age Status").

3. Honeywell has found HF4C-112 diodes, T2661 transistors, and HA7661 transistors which are directly interchangeable with present parts. They are now qualifying these parts.

ASSEMBLY & DELIVERY STATUS

1. S/C 2 - Installation of reworked BR-7X relays in ACE PA-5 and OAME PA-5 was completed during week of 12 July. Both units were shipped to MAC on 17 July. Installation into S/C 2 was accomplished on 19 July. A complete ACME system (PA-5) has now been installed in S/C 2.

2. S/C 3 - Installation of reworked BR-7X relay in ACE PA-7 and OAME PA-7, PDA test of OAME was completed on 1 August, and unit was shipped on 6 August. During pre-PDA testing of ACE PA-7 on 31 July, a failure occurred. This failure was traced to the pitch attitude pre-amp module. The board which contained this module was replaced and PA-7 entered PDA testing on 4 August. PDA test was completed 5 August. The unit was shipped to MAC on 6 August.

3. S/C 3A - During this reporting period, the ACE (PA-3), rate gyro package (PA-3), and power inverter (PA-3) were installed in S/C 3A; this completes the ACME system for S/C 3A.

4. SPARE SST - Reworked BR-7X relays are available for ACE (PA-6) and OAME (PA-6). Card calibration and relay replacement are now being accomplished on the ACE unit. PDA test of ACE unit is scheduled for 14 August and delivery is scheduled for 21 August. The chassis of OAME is now in the final stage of assembly. PDA test is scheduled for 18 August and shipment to MAC on 21 August. Rate gyro package PA-6 is currently in burn-in. PDA testing should begin 11 August and delivery on 14 August.

5. LIFE - Modified BR-7X relays are the pacing items for both ACE PA-1 and OAME PA-1. The relays are due 14 August. PDA testing is scheduled for 28 August and delivery to Life program approximately 4 September. The power inverter has been built and is awaiting PDA test. The rate gyro package is currently in inspection, and PDA testing is scheduled to commence 14 August. Delivery of rate gyro package should be accomplished by 20 August.

6. Static 2 - ACE SN-109 and power inverter SN-330 and SN-331 have been placed on hold.

NAA PARAGLIDER PROGRAM

ACE units SN-111 and SN-112 have been placed on hold. Summary of deliveries is as follows:

COMPONENT	W/S DATE
-23 ACE	A10-17-63
-41 ACE	A01-08-64
-23 ACE	A02-12-64
-41 ACE	ON HOLD
-41 ACE	ON HOLD
-29 PWR. INVR.	A09-30-63
-29 PWR. INVR.	A09-30-63
-29 PWR. INVR.	A01-31-64
-29 PWR. INVR.	A03-11-64
-29 PWR. INVR.	A03-11-64
-29 PWR. INVR.	A03-11-64

TEST STATUS (SEE "DETAIL TEST CHART")

Qual 1 Test Program

1. Post qual acceptance tests on ACME system PA-2 were completed on 16 July with no problems. (Line 22).

2. Explosion test on OAME PA-2 was run on 25 July with no failures recorded. (Line 23).

3. Shock test on ACE PA-2, rate gyro package PA-2, and power inverter PA-2 was run three times during the period 27 July through 31 July. Reruns were

necessary because the first shock pulse waveform was not recorded, and the second run did not reach the proper shock "g" level. The third run was successful in all respects. (Line 24).

4. The Qual 1 and Qual 2 test programs are now complete. The test report is due at MAC on 31 August. (Line 33).

Qual 3 Test Program

1. High Temp/Altitude tests were run during the period 17 July through 27 July. Analysis of PA-4 revealed that some out-of-tolerance switching levels were present. Investigation of these levels is continuing; however, early estimates indicate that the spacecraft missions will not be affected and no corrective action is anticipated. (Line 38).

2. Low Temperature testing was performed during the period 28 July through 6 August. Out-of-spec conditions which occurred are as follows:

   A. The ACE pitch primary orbit mode electronics failed during the first hour of testing after stabilization. No voltage was available at pin 3PIFF which indicated a failure in the modulators.

   B. The times required for 10 pulses using the pitch secondary electronics was slightly low.

   C. The measured pulse width using the roll primary electronics in orbit mode was slightly high.

   D. The time required for 10 pulses using the roll secondary electronics in orbit mode was slightly low.

   E. The roll in phase SVD dropout time was a little high as were the dropout times of a few jets.

3. Voltage and Frequency Stability test is scheduled to commence 11 August on PA-4. This test has been scheduled ahead of the Acceleration test because the data is felt to be more important. (Lines 41 and 42).

AGE STATUS

1. Delivery of System Test Console, SN-4, to the Cape is scheduled for 14 Aug. This date is predicated on receipt of quarter amp circuit breaker from Texas Instruments by 11 August.

2. PIA Test Console (NAA), SN-5 has been placed on hold.

3. Honeywell shipped PIA Test Console, SN-2, directly to the Cape Hangar on 17 July.

GEMINI
SPACECRAFT
CONTRACT NO. NAS 9-170

ATTITUDE CONTROL AND MANEUVER ELECTRONICS
VENDOR: HONEYWELL-MINNEAPOLIS
STATUS CHART

REPORT NO. SECO-1 -42
LAST PROGRAM
SCHEDULE CHANGE: 24 April 64
STATUS AS OF: 7 Aug. 1964

1. ESTU - Compl. 10-1-62
2. CTU
3. VENDOR DEVELOPMENT

QUALIFICATION TESTS

4. QUAL I
5. QUAL II
6. QUAL III
7. OSR
8. OPER. LIFE

AGE

9. PIA
10. SST
11. CAPE - HANGAR
12. CAPE - PAD

FLIGHT HARDWARE

13. AFI

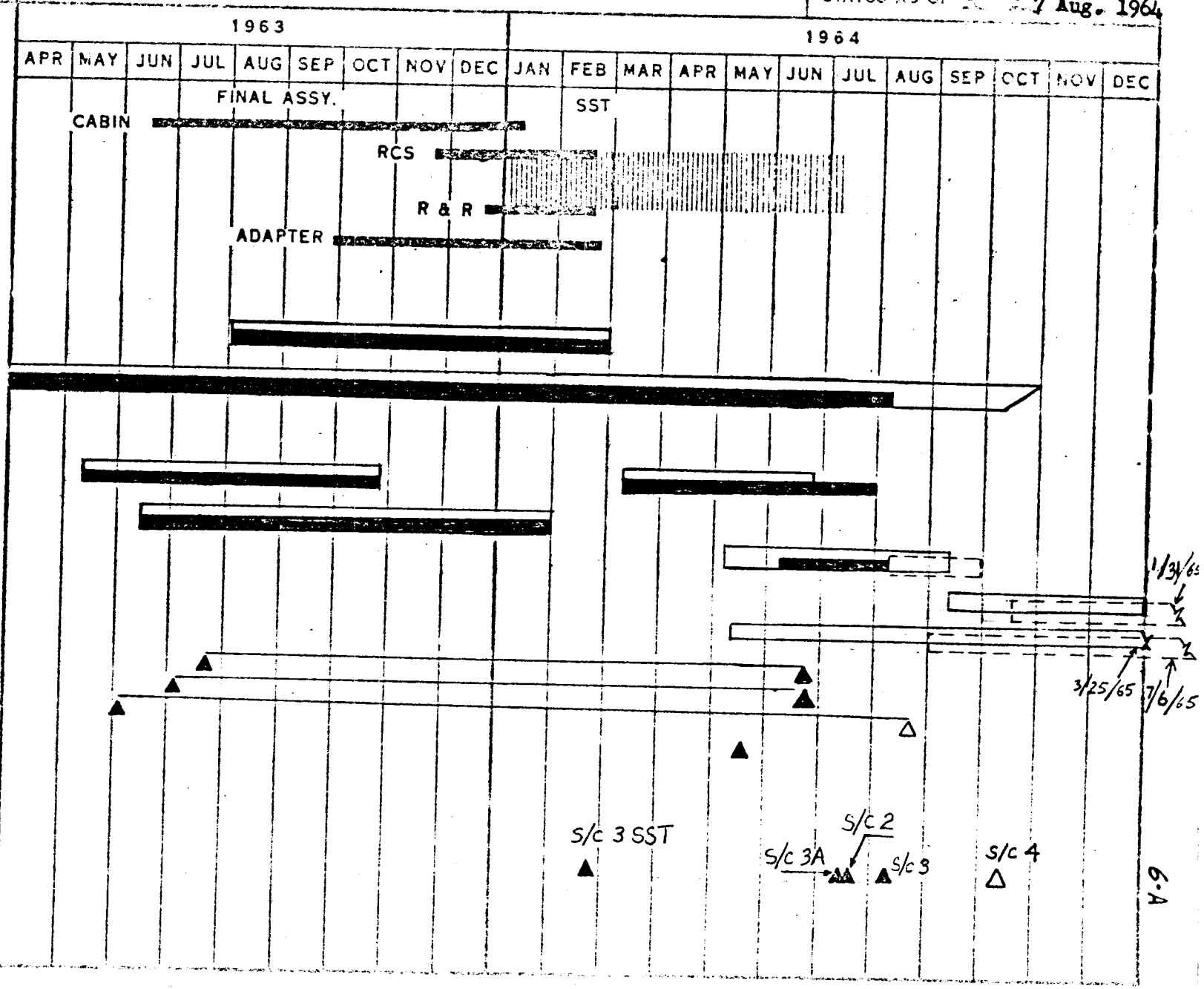

6-A

LEGEND
- ▽ Test Proposal Due
- ◊ Hardware Available
- □ Test Schedule
- o Report Due

SOLID INDICATES ACTUAL

QUALIFICATION AND DEVELOPMENT TEST STATUS
ATTITUDE CONTROL AND MANEUVER ELECTRONICS
HONEYWELL-MINNEAPOLIS
SCD 52-87700

Date: 17 August 1964
Page: 1 of 2

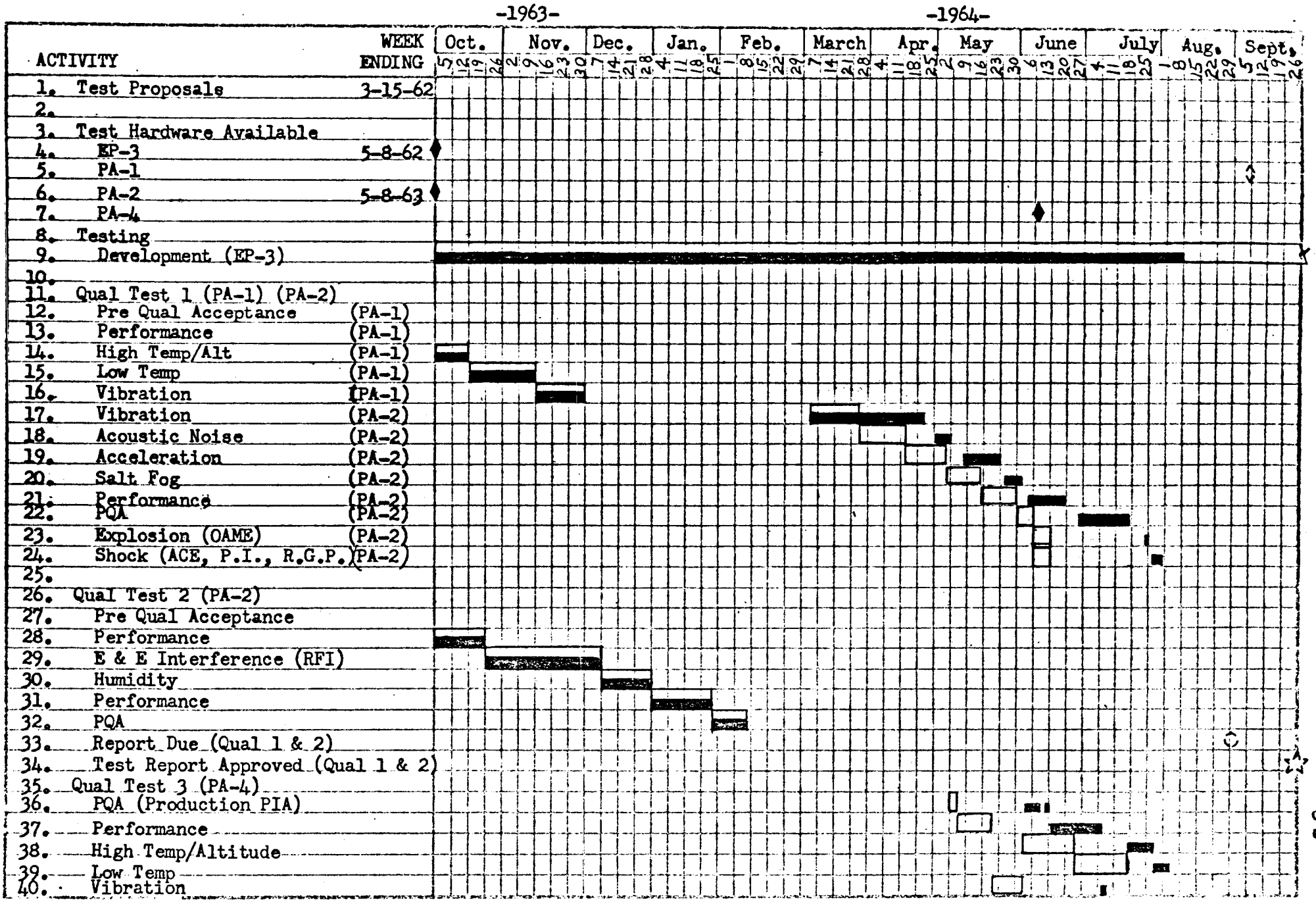

LEGEND
▽ Test Propo[illegible] Due
◇ Hardware Available
▭ Test Schedule
○ Report Due
☆ Report Approved

QUALIFICATION AND DEVELOPMENT TEST STATUS
ATTITUDE CONTROL AND MANEUVER ELECTRONICS
HONEYWELL-MINNEAPOLIS

Date: 7 August 1964
Page: 2 of 2

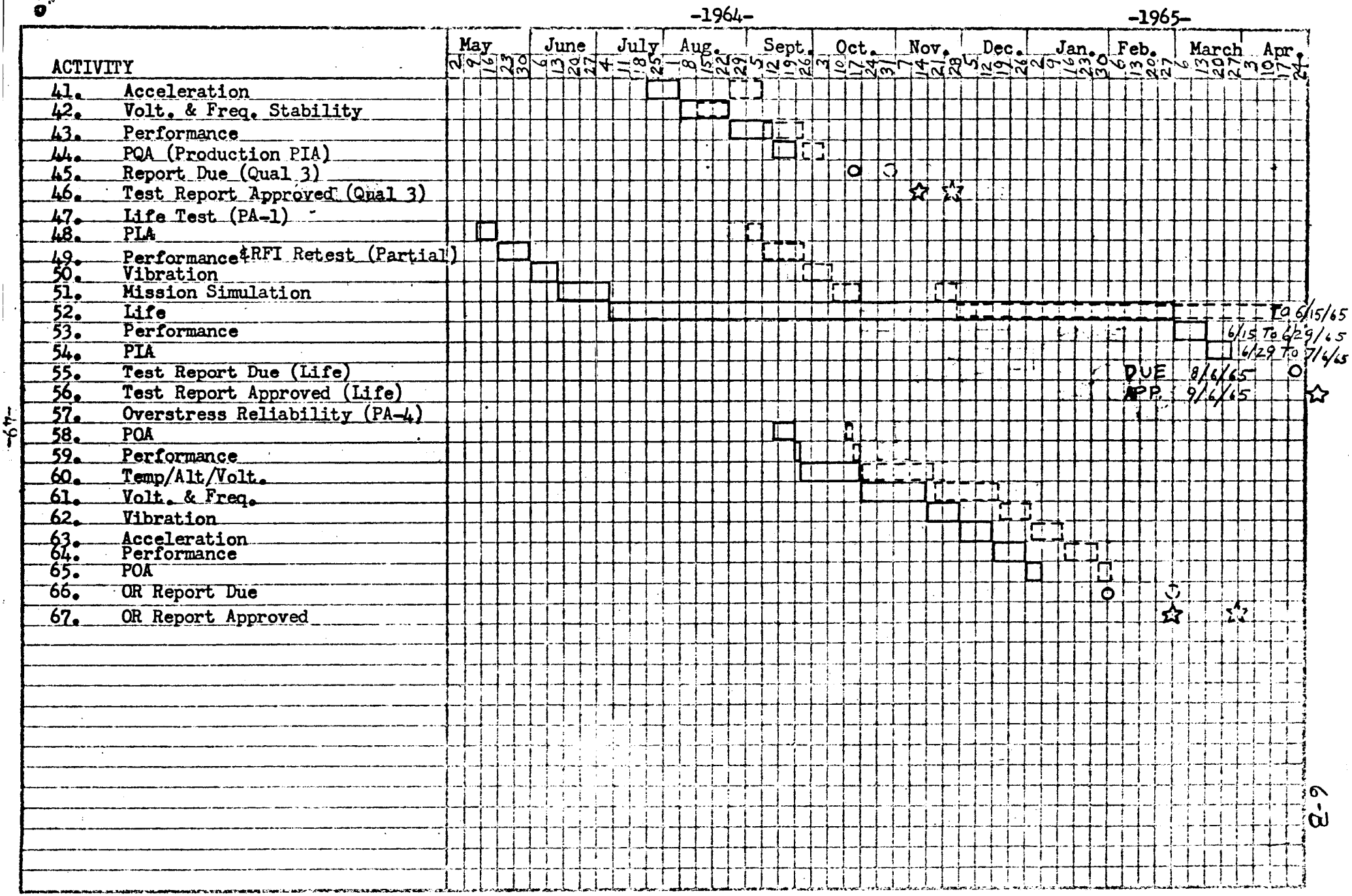

6-3

VENDOR DELIVERY STATUS REPORT

SYSTEM - ACME

VENDOR - HONEYWELL, MINNEAPOLIS

CHART NO: 6-C

DATE: 7 Aug. 1964

UNIT NO.	TYPE	USAGE	VENDOR W/S	AVAIL. FOR INSTL.	REQ'D. FOR INSTL.	SLACK
1	EP-1	ESTU			A10-22-62	
2	EP-2	3 AXIS DYNAMIC TEST			A11-07-62	
3	EP-3	VENDOR DEVELOPMENT			A05-08-62	
4	PA-2	QUAL 1 & 2			A02-27-64	
5	PA-4	QUAL 3 & OSR+			A06-08-64	
6	PA-3	S/C 3A -25 ACE++			A07-24-64	
6	PA-3	S/C 3A -19 OAME++			A06-24-64	
6	PA-3	S/C 3A PWR. INV.++			A08-05-64	
6	PA-3	S/C 3A -17 RGP++			A07-15-64	
7	PA-5	S/C 2 -27 ACE			A07-19-64	
7	PA-5	S/C 2 -45 OAME			A07-19-64	
7	PA-5	S/C 2 -29 PWR INV			A06-15-64	
7	PA-5	S/C 2 -17 RGP			A02-22-64	
7	PA-5	S/C 2 -33 RGP			A06-10-64	
8	PA-7	S/C 3 -27 ACE**		A08-06-64		
8	PA-7	S/C 3 -45 OAME**		A08-06-64		
	PA-7	S/C 3 -29 PWR INV			A04-15-64	
8	PA-7	S/C 3 -33 RGP*			A06-15-64	
9	PA-6	SPARE SST -27 ACE	08-21-64	08-31-64	03-31-64	-22
9	PA-6	SPARE SST -45 OAME	08-21-64	08-31-64	03-31-64	-22
9	PA-6	SPARE SST -29 P.I.			A04-18-64	
9	PA-6	SPARE SST -33 RGP	08-14-64	08-24-64	03-31-64	-21
10	PA-1	LIFE -27 ACE+++		09-04-64	05-20-64	-15
10	PA-1	LIFE -45 OAME+++		09-03-64	05-20-64	-15
10	PA-1	LIFE -29 P.I.+++		08-19-64	05-20-64	-13
10	PA-1	LIFE -33 RGP+++		08-20-64	05-20-64	-13
11	PA-9	SPARE HGR -27 ACE	09-18-64	09-28-64	06-30-64	
11	PA-9	SPARE HGR -45 OAME	09-21-64	09-30-64	06-30-64	-13
11	PA-9	SPARE HGR -29 P.I.		A04-22-64		
11	PA-9	SPARE HGR -33 RGP	08-14-64	08-24-64	06-30-64	- 8
12	PA-8	S/C 4 -27 ACE	09-30-64	10-10-64	04-21-64	-25
12	PA-8	S/C 4 -45 OAME	09-30-64	10-10-64	06-22-64	-16
12	PA-8	S/C 4 -29 PWR INV		A04-18-64		
12	PA-8	S/C 4 -33 RGP*	08-30-64	09-10-64	07-21-64	- 7
13	PA-10	S/C 5 -27 ACE	10-15-64	10-25-64	07-15-64	-15
13	PA-10	S/C 5 -45 OAME	10-14-64	10-24-64	08-25-64	- 9
	PA-10	S/C 5 -29 P.I.		A04-22-64	07-15-64	
13	PA-10	S/C 5 -33 RGP*	09-15-64	09-25-64	10-01-64	+ 1

UNIT NO.	TYPE	USAGE	VENDOR W/S	AVAIL. FOR INSTL.	REQ'D. FOR INSTL.	SLACK
14	PA-11	SPARE SST -27 ACE	10-29-64	11-09-64	05-31-64	-23
14	PA-11	SPARE SST -45 OAME	11-02-64	11-12-64	05-31-64	-23
14	PA-11	SPARE SST -29 P.I.	08-15-64	08-25-64	05-31-64	-13
14	PA-11	SPARE SST -33 RGP	09-22-64	10-02-64	05-31-64	-18
15	PA-12	S/C 6 -27 ACE	11-13-64	11-23-64	09-17-64	-10
15	PA-12	S/C 6 -45 OAME	11-12-64	11-22-64	11-09-64	- 2
15	PA-12	S/C 6 -29 P.I.	09-01-64	09-11-64	09-17-64	+ 1
15	PA-12	S/C 6 -33 RGP*	10-15-64	10-25-64	11-28-64	+ 5
16	PART	AD-13 -45 OAME	11-26-64	12-06-64	11-19-64	- 2
17	PA-13	SPARE HGR -27 ACE	11-27-64	12-07-64	08-31-64	-15
17	PA-13	SPARE HGR -45 OAME	12-10-64	12-20-64	08-31-64	-17
17	PA-13	SPARE HGR -29 P.I.	08-22-64	09-02-64	08-31-64	0
17	PA-13	SPARE HGR -33 RGP	10-03-64	10-13-64	08-31-64	- 6
18	PA-14	S/C 7 -27 ACE	12-11-64	12-21-64	11-15-64	- 5
18	PA-14	S/C 7 -45 OAME	12-23-64	01-04-65	12-18-64	- 2
18	PA-14	S/C 7 -29 P.I.	09-15-64	09-25-64	11-15-64	+ 8
18	PA-14	S/C 7 -33 RGP*	11-15-64	12-05-64	01-19-65	+ 6
19	PA-15	S/C 8 *	12-31-64	01-11-65	01-04-65	- 1
20	PA-16	S/C 9*	01-21-65	02-01-65	03-03-65	+ 5
21	PA-17	SPARE SST*	02-01-65	02-11-65	03-31-65	+ 8
22	PA-18	S/C 10*	03-04-65	03-14-65	04-23-65	+ 7
23	PA-19	SPARE HGR*	03-25-65	04-05-65	06-30-65	+12
24	PA-20	S/C 11*	04-15-65	04-25-65	06-24-65	+ 9
25	PA-21	S/C 12*	05-06-65	05-16-65	08-19-65	+14
26	PART	AD-14 -45 OAME	05-16-65	05-26-65	11-15-65	+24
27	PART	AD-15 -45 OAME	05-28-65	06-07-65	01-13-66	+32
28	PART	STATIC 2	ON HOLD			

NOTE: On S/C 8 and up, only ACE delivery date is shown.

\+ Installation of BR-7X relays to be accomplished after completion of Qual 3 program (approx. 10-01-64).

++ S/C 3A units are from CTU Test.

+++ Rebuilt Qual 1 Unit.

* Two Rate Gyro Packages.

** ACE SN-113 and OAME SN-206 were used for SST at MAC and will be returned to Honeywell for retrofit.

VENDOR AGE STATUS REPORT

SYSTEM - ACME

VENDOR - HONEYWELL, MINNEAPOLIS

CHART NO: 6-D

DATE: 7 Aug. 1964

All AGE delivered except for the below noted items -

See previous 8580-1 Reports for delivery dates.

PART NO.	COMPONENT	UNIT NO.	VENDOR W/S	AVAIL. FOR USAGE	REQ'D. FOR USAGE	SLACK
		(HANGAR)				
52E270037-303	SYSTEM TEST CONSOLE	4	08-14-64	08-24-64	08-17-64	- 1
		(NORTH AMERICAN)				
52E270002-309	PIA TEST CONSOLE	5	O N H O L D			

The below AGE was shipped during this reporting period:

		(HANGAR)				
52E270002-309	PIA TEST CONSOLE	2	A07-17-64	08-11-64	06-22-64	- 7

MONTHLY SUMMARY

SYSTEM: Guidance & Control
SUBSYSTEM: Horizon Sensors
VENDOR: A.T.L.
DATE: 7 Aug. 1964

ENGINEERING STATUS

1. A study of pitch and roll scale factor variations with temperature has resulted in an increase of scale factor tolerance to ± 10%. Analysis has shown that the ± 10% tolerance can be achieved by tightening tolerances on certain individual modules in the sensor. Guidance and Control Mechanics has determined that this 3% increase produces only a minimal change in gyro-compassing accuracy. A design note will be written to summarize these scale factor studies.

2. PDA testing of Production Unit 102 revealed a problem in track acquisition. During search mode, the higher gains of the redesigned pre-amplifier and signal amplifier caused increased amplification of circuit noise and this amplified noise was sufficient to trigger the track circuit. The addition of active filters on the bolometer bias voltages reduced the noise to a safe level. The active filter has been designed into module form and is to be incorporated into the qual units and all flight units for S/C 3 and up. PDA testing of PU 102 (Qual.) and PU 106 (S/C 3) has verified the redesigned pre-amp. sig.-amp, drive amps, in addition to the active filters.

PROCUREMENT STATUS

1. Shipment of zener diodes, P/N 6693-528 from Continental Device Co. is expected on 12 August. These diodes affect the assembly of PA-5 (SPARE SST) and PA-3 (LIFE). ATL sent a representative to Continental Device Co., but he was unable to improve diode delivery date.

ASSEMBLY & DELIVERY STATUS

1. S/C 3 - Bolometer power supply module was installed in both PA-6 and PA-7. PA-6 entered PDA testing on 27 July and finished on 30 July. An MRR was submitted concerning its weight, and the unit was shipped on 31 July. Installation of PA-6 in S/C 3 is held up awaiting solution of bracket mount problem. QC rejection of wiring in trim module of PA-7 delayed start of PDA on PA-7 approximately one week. PDA testing of PA-7 commenced on 5 August and should be completed by 8 August. Shipment of PA-7 should be accomplished by 11 August.

2. S/C 3A - Electronic Package (PP-1) was installed in S/C 3A on 28 July after use in S/C 3 power build-up. Sensor Head (PP-1) will be installed prior to delivery of S/C 3A to the test area.

3. Configuration Control Unit - PA-4 is currently being reworked for use in checkout of Simulator-Horizon Systems Test. PA-4 should be completed about 15 August.

555

4. Qual 1 Test Unit – Bolometer power supply module was built and installed in PA-2. PDA testing of this unit was completed on 21 July and the unit was delivered to the qual test program the same day.

5. SPARE SST - Zener diode from Continental Device is pacing item for bolometer power supply module. Delivery has been promised on 12 August. ATL will then proceed on a 5 day per week - 2 shift per day basis until the unit is delivered. Estimated delivery date of PA-5 to MAC is 25 August.

6. Life Test Unit - Pacing item is zener diode for which delivery has been promised on 12 August. ATL will then proceed on a 5 day per week - 2 shifts per day basis until delivery of PA-3 on 3 September.

7. Spare Hgr - Pacing item is zener diode from Continental Device Co. as described in "Procurement" section. Delivery of unit is estimated on 10 Sept.

TEST STATUS (SEE "DETAIL TEST CHART")

Qual 1 Test Program

1. PDA test was successfully completed on 20 and 21 July on PA-2. (Line 13).

2. Fingerprint test on PA-2 was completed on 23 July. (Line 14).

3. Vibration Functional test commenced on 24 July. A failure of the output module, attributed to operator error while calibrating instrumentation, caused a delay of about 1½ shifts to replace the module and rerun a portion of the PDA test. Actual vibration test and Post-Vibration functional test were completed at Philco on PA-2 on 30 July and the unit returned to ATL. During non-operating vibration the electronics package cover attach screw adjacent to the connectors backed out. Corrective action was to safety wire all package cover attach screws. (Lines 20, 21, 22).

4. Acoustic Noise test on PA-2 was completed on 5 August at Rototest. Analysis of data is now being performed. (Lines 15, 16).

5. Acceleration testing on PA-2 at Rototest was completed 6 August and post functional on 7 August. (Lines 17, 18, 19).

6. Start of Temperature testing is scheduled for 23 August. This date is based on the following: A) completion of acceleration testing by 14 August, B) receipt of zener diodes by 12 August, and C) delivery of PA-2 from manufacturing by 22 August. Qual Test 1 interruption is to allow installation of bolometer power supply module in PA-2. (Lines 23, 24, 25).

7. RFI test on PA-3 is scheduled to begin 6 September at Philco after Fingerprint test (4, 5 Sept.). (Lines 33, 34, 35).

8. Estimated completion of Qual 1 Test Program is 17 October 1964.

LIFE TEST PROGRAM

1. Start of Life Test 500-hour burn-in (Part I) is scheduled for 13 September on PA-3. (Line 43).

2. Estimated completion of Life Test Program is 26 January 1965. (Line 47).

AGE STATUS

1. Simulator-Test Horizon (PIA), SN-2, is scheduled for shipment to Cape Hangar on 8 August. This unit has completed testing and is presently awaiting shipping containers for packaging.

2. The Umbilical Amplifier, SN-6, was shipped to MAC on 17 July for use in spacecraft systems testing.

3. Tester-Horizon Sensor, SN-3, was shipped on 21 July to the Cape Hangar.

4. Simulator-Horizon Systems Test, SN-1, is having vernier arm change incorporated prior to shipment which is now estimated for 24 August. SN-2 SN-3, and SN-4 will be returned to ATL for incorporation of vernier arm change as spacecraft testing schedules permit their return.

GEMINI
SPACECRAFT
CONTRACT NO. NAS 9-170

HORIZON SENSORS
(VENDOR: ADVANCED TECHNOLOGY LABORATORIES)

STATUS CHART

REPORT NO. 8580-1 -42
LAST PROGRAM SCHEDULE CHANGE 24 April 64
STATUS AS OF: 7 Aug. 1964

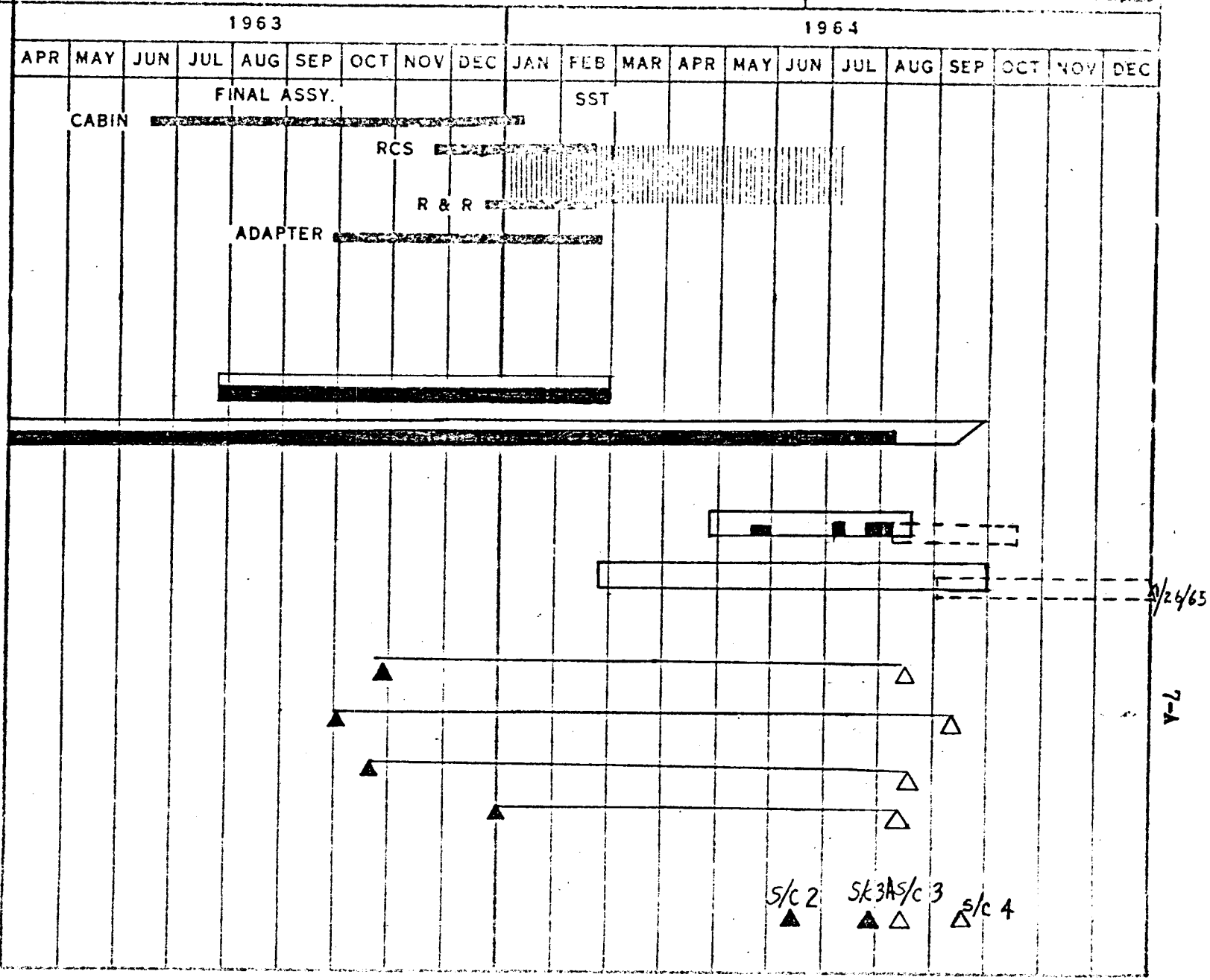

7-A

LEGEND
- ▽ Test Proposal Due
- ◆ Hardware Available
- ▭ Test Schedule
- O Report Due
- ☆ Report Approved

SOLID INDICATES ACTUAL

QUALIFICATION AND DEVELOPMENT TEST STATUS
HORIZON SENSOR SYSTEM
ADVANCE TECHNOLOGY LABS
SCD 52-87703

Date: 7 August 1964
Page: 1 of 2

-1964-

	ACTIVITY	WEEK ENDING
1.	Test Proposal Due	7-22-63
2.		
3.	Test Hardware Available (EP-3)	11/62
4.	PA-2	
5.	PA-3	
6.		
7.	Testing	
8.	Development	(EP-3)
9.	Sensor Head	
10.	Electronics Package	
11.		
12.	Qual 1 (PA-2)	
13.	PDA (ATL)	
14.	Fingerprint Test (ATL)	
15.	Functional (Rototest)	
16.	Acoustic Noise (Rototest)	
17.	Functional (Rototest)	
18.	Acceleration (Rototest)	
19.	Functional (Rototest)	
20.	Functional (Philco)	
21.	Vibration (Philco)	
22.	Functional (Philco)	
23.	Functional (ATL)	
24.	Temperature (ATL)	
25.	Functional (ATL)	
26.	Humidity (ATL)	
27.	Functional (ATL)	
28.	Functional (Dalmo)	
29.	Salt Spray (Dalmo)	
30.	Functional (Dalmo)	
31.	44.79 G Shock (Dummy Unit)	
32.	Fungus	
33.	Functional (Philco)	(PA-3)
34.	RFI (Philco)	(PA-3)
35.	Functional (Philco)	(PA-3)
36.		
37.		
38.		
39.		
40.		

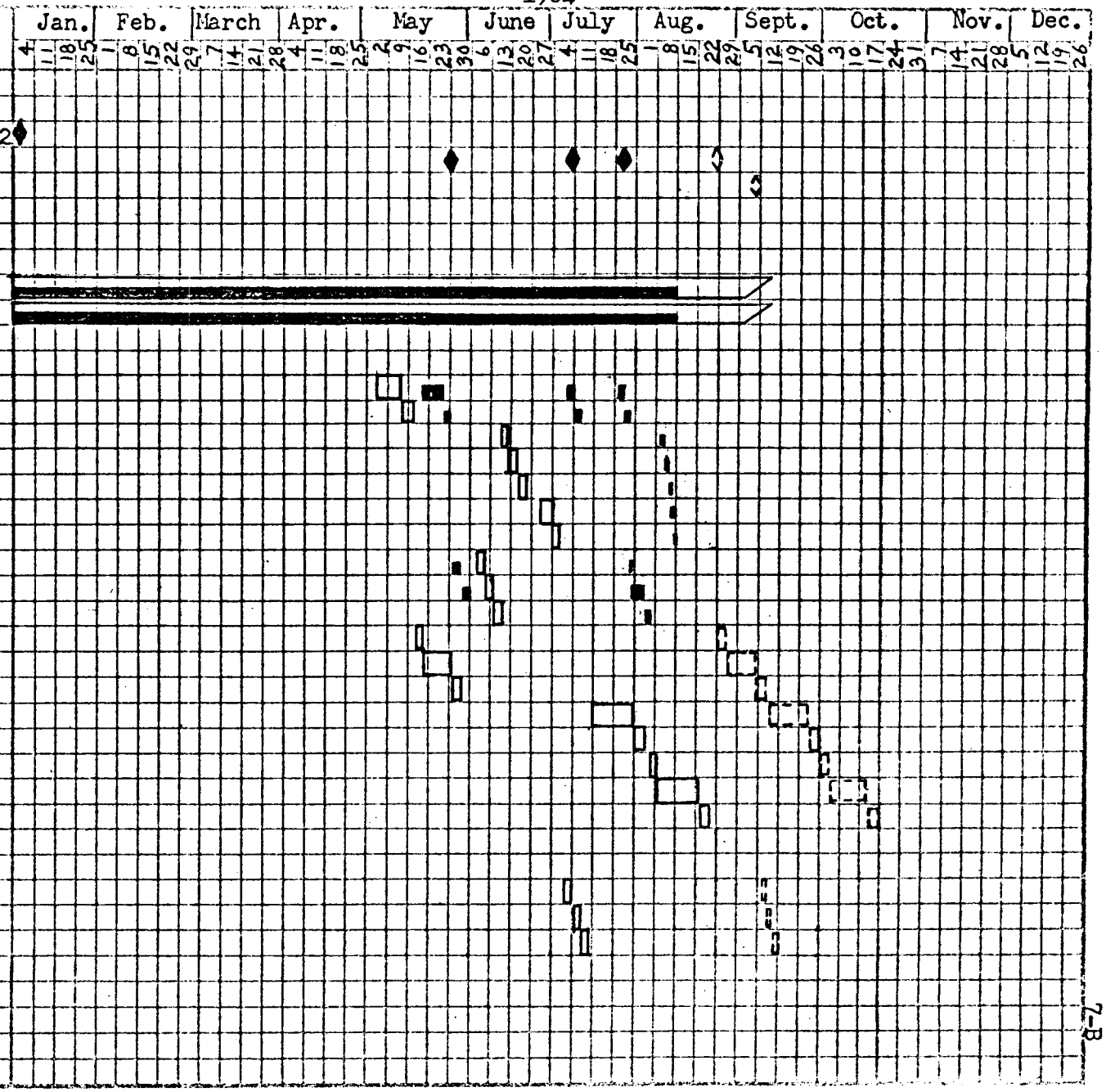

MAC 2274V (27 APR 53)

LEGEND
- ▽ Test Proposal Due
- ◊ Hardware Available
- ▭ Test Schedule
- ○ Report Due
- ☆ Report Approved

SOLID INDICATES ACTUAL

QUALIFICATION AND DEVELOPMENT TEST STATUS
HORIZON SENSOR SYSTEM
ADVANCE TECHNOLOGY LABS
SCD 52-87703

Date: 7 August 1964
Page: 2 of 2

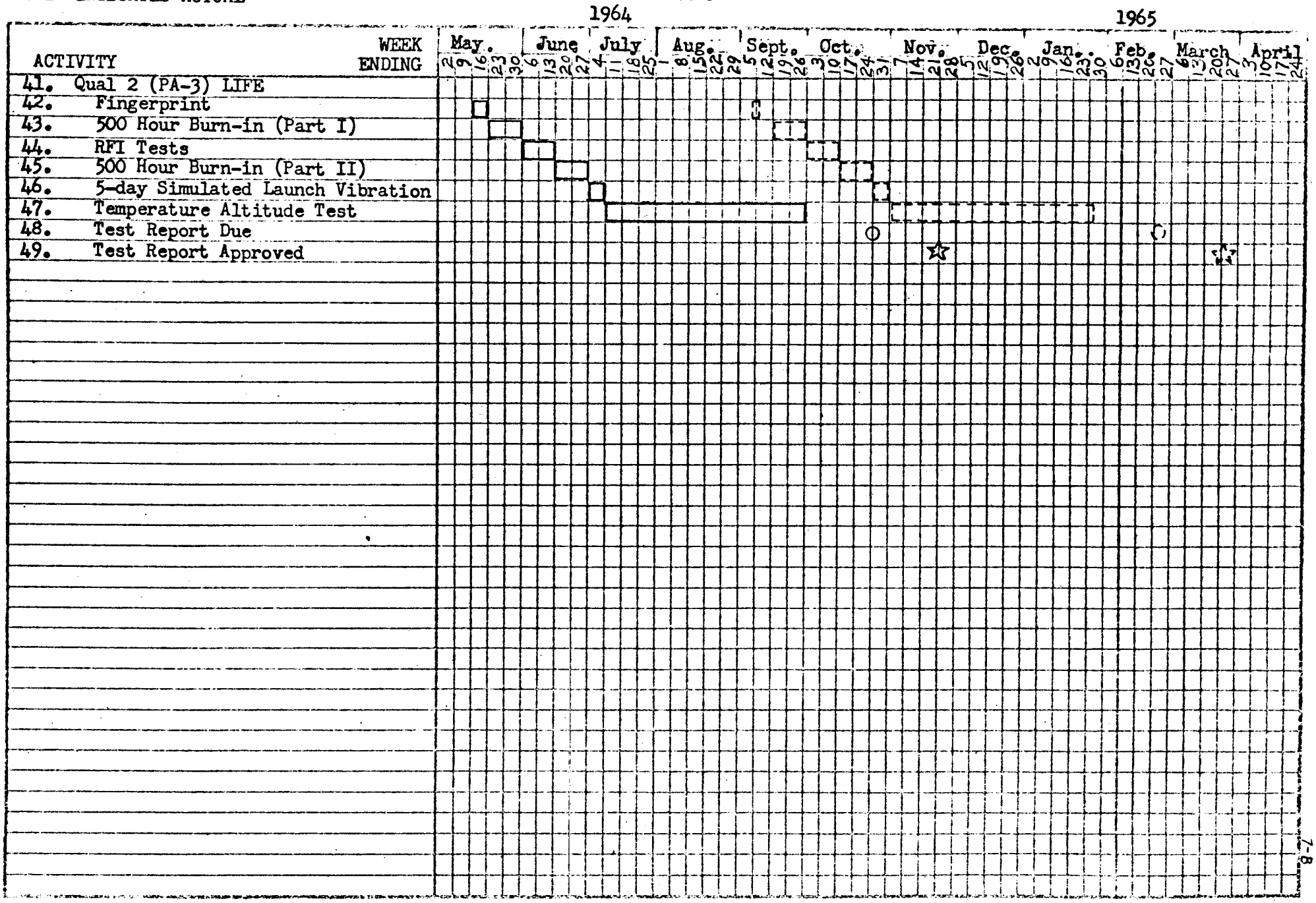

VENDOR DELIVERY STATUS REPORT

CHART NO: 7-C

SYSTEM - HORIZON SENSORS

DATE: 7 August 1964

VENDOR - A.T.L.

UNIT NO.	S/N	TYPE	USAGE	VENDOR W/S	AVAIL. FOR INSTL.	REQ'D FOR INSTL.	SLACK
1	1	EP-1	ESTU			A02-01-64	
2	2	EP-2	DYNAMICS			A02-11-64	
3	3	EP-3	VENDOR DEV.			A11-05-62	
4	11	PP-1	CTU			A06-24-64	
4	11	PP-1	S/C 3A*			A07-28-64	
5	104	PA-4	CONFIG.CONTROL		08-15-64		
6	101	PA-1	S/C 2			A07-02-64	
7	103	PA-3	VENDOR QUAL LIFE		09-03-64	04-15-64	-21
8	102	PA-2	VENDOR QUAL 1			A07-21-64	
9	106	PA-6	S/C 3		A08-01-64		
10	107	PA-7	S/C 3	08-11-64	08-12-64	02-26-64	-25
11	105	PA-5	SPARE SST (2)	08-25-64	09-05-64	03-31-64	-23
12	108	PA-8	SPARE HGR (2)	09-10-64	09-20-64	06-30-64	-12
13	109	PA-9	S/C 4	09-24-64	10-03-64	04-21-64	-24
14	110	PA-10	S/C 4	10-07-64	10-17-64	04-21-64	-26
15	111	PA-11	S/C 5	10-21-64	11-01-64	07-15-64	-15
16	112	PA-12	S/C 5	11-03-64	11-13-64	07-15-64	-18
17	113	PA-13	SPARE HGR(3)	11-17-64	11-27-64	08-31-64	-13
18	114	PA-14	S/C 6	12-01-64	12-11-64	09-17-64	-13
19	115	PA-15	S/C 6	12-15-64	12-25-64	09-17-64	-15
20	116	PA-16	S/C 7	12-29-64	01-09-65	11-15-64	-8
21	117	PA-17	S/C 7	01-12-65	01-22-65	11-15-64	-10
22	118	PA-18	SPARE HGR (4)	01-26-65	02-06-65	11-30-64	-10
23	119	PA-19	S/C 8	02-09-65	02-19-65	01-04-65	-6
24	120	PA-20	S/C 8	02-23-65	03-05-65	01-04-65	-8
25	121	PA-21	S/C 9	03-09-65	03-19-65	03-03-65	-2
26	122	PA-22	S/C 9	03-23-65	04-02-65	03-03-65	-4
27	123	PA-23	S/C 10	04-06-65	04-16-65	04-23-65	+1
28	124	PA-24	S/C 10	04-20-65	04-30-65	04-23-65	-1
29	125	PA-25	S/C 11	05-04-65	05-14-65	06-24-65	+6
30	126	PA-26	S/C 11	05-18-65	05-28-65	06-24-65	+4
31	127	PA-27	S/C 12	06-01-65	06-11-65	08-19-65	+10
32	128	PA-28	S/C 12	06-15-65	06-25-65	08-19-65	+8

* Electronic Package was installed 07-28-64. Sensor Head will be installed prior to delivery of S/C 3A to test area (during August).

VENDOR AGE STATUS REPORT

CHART NO: 7-D

SYSTEM - HORIZON SENSORS

DATE: 7 Aug. 1964

VENDOR - A.T.L.

PART NO.	NOMENCLATURE	UNIT NO.	VENDOR W/S	AVAIL. FOR USAGE	REQ'D. FOR USAGE	SLACK
All AGE delivered except for the below noted items -						
See previous 8580-1 Reports for delivery dates.						
(SPACECRAFT SYSTEMS TEST)						
52E270014-301	SIMULATOR-HORIZON SYSTEMS TEST	1	08-24-64	09-08-64	05-15-64	-15
(HANGAR)						
52E270016-301	SIMULATOR-TEST HORIZON (PIA)	2	08-08-64	08-18-64	06-22-64	- 8
The below AGE was shipped during this reporting period.						
(SPACECRAFT SYSTEMS TEST)						
52E270015-13	UMBILICAL AMPLIFIER	6	A07-17-64	08-18-64	06-15-64	- 9
(HANGAR)						
52E270021-301	TESTER-HORIZON SENSOR	3	A07-21-64	08-11-64	06-08-64	- 9

MONTHLY SUMMARY

SYSTEM: Electrical Power
SUBSYSTEM: Fuel Cell
VENDOR: General Electric
DATE: 7 August 1964

ENGINEERING STATUS

1. General Electric has been directed by MAC Engineering (SCIF #176) to assign section serial numbers after each particular section has completed its acceptance test and /or any deviation (MRR) has been approved by MAC and NASA. General Electric will initiate a system other than nameplate serial number for manufacturing control.

ASSEMBLY AND DELIVERY STATUS

1. Section Summary

Section 512 - (P3 Qual) MRR deviations were approved on 31 July. Section was delivered to test area at G.E. to be readied for Qual test.

513 - (P3 Qual) MRR has been received for MAC-NASA approval. Decision is expected by 10 August.

514 - (P3 FC/RSS power Sys.) presently in acceptance test and is expected to be complete 7 August. Delivery pending approval of MRR is expected approximately 17 August.

515 - (P3 FC/RSS Power Sys.) presently in section subassembly having H_2O separator leak check performed. Delivery is estimated for 24 August.

516 - (P3 Qual) in section subassembly having harness and bracket mounting assembly installed. Delivery estimated for 28 August.

517 - (P3 Qual) in section subassembly - estimated delivery scheduled for 28 August.

518 & 519 (P3-OSR) in section subassembly having coolant loops installed. Estimated delivery is 30 August.

520 - (P3 S/C 5) also in section subassembly having inner and outer coolant loops installed. Estimated delivery is 5 September.

2. Stack Summary

Stack 224 - Has completed green run and has been delivered to the reliability people at G.E. for overstress testing.

234 - Is in storage awaiting green run test. After acceptance test it will go into the reliability overstress tests.

2. Stack Summary (Continued)

Stack 262 - Is in storage awaiting green run, after which it will go into section assembly.

264 - Presently green run test and if successful will go into section assembly.

255, 237, 239 thru 241, 244, 249, 251, 255 thru 261, 263 and 265 - Are in various stages of assembly.

TEST STATUS

1. DEVELOPMENT TESTING

The following is the status of various build-ups, stacks and sections assigned to the G.E. development program.

B/U 60 - PE-24 (Hi-conductivity and Thermo Map Test) Build-up has been removed from test for diffusion check due to hot spot appearing on cell.

B/U 72 - PE-6 (Standard P3) is on mission life test and has been on gas a total of 350 hours.

B/U 73 - P3-12 (Optimum Quinone) on mission life test and has been on gas a total of 331 hours.

B/U 74 - P3-20 (Optimum Teflon) on mission life test and on gas a total of 311 hours.

B/U 76 -P3-15 (Purge Frequency) has been on gas a total of 31 hours.

Stack 43/
238 - P3-27 (Low Load) is on standby awaiting Engineering release to test area.

45 - P3-23 (Emer. Mode A) has been on life test and on gas for a total of 503 hours.

66 - P-3 (Inert & Coolant) on 13 day storage cycle with coolant flow at 785 CC per/min and coolant temp at 95 degrees F.

69 - P3-19 (15 amp 'C' stk) has been on life test and on gas a total of 291 hours.

78/
216 - PE-14 ('A' Stk. Life) on test and on gas a total of 693 hours.

79/
229 - P3-21 (5 amp 'C' Stk) on test and on gas a total of 652 hours.

65

1. DEVELOPMENT TESTING (Continued)

Section 511 - Failed during mission life cycle test, with 'B' position stack voltage decaying. It was thought that hydrogen starvation of stacks was at fault. Upon replacing the H2 control valve the 'B' position stack voltage continued to decay. To date this section has been torn down and the stacks have been resistance checked. G.E. is presently tearing down stacks for cell failure analysis. Personnel from G.E. Schenectedy, have been called in to support this analysis.

Section 7 - Successfully completed pre qual vibration test and was then put on a life test, where after approximately 255 hours on gas, voltage decayed. Section is presently in tear down for analysis.

With failure of Section 511, G.E. was directed by MAC Engineering (SCIF #G-177) to collect water samples from Section 7's flight simulation tests for analysis and test. All water not required for test purposes was to be collected serially in one (1) liter flasks and sent to NASA, Houston for animal test program. G.E. indicates that water was collected for both MAC-NASA tests prior to section failure.

2. QUALIFICATION TEST

Section 512 - (P3, Qual) is scheduled to begin qual tests at Raytheon, Sudbury, Mass., approximately 7 August. Random vibration will be first test run, with low temperature next followed by acceleration. Pending successful completion of these tests, Section 512 will then go into life test.

3. TEST EQUIPMENT

MAC Engineering (SCIF G-174) has authorized G.E. to retain and use the operable but below specification P2B Fuel Cell Section 503A for test stand and equipment checkout purposes.

AGE STATUS

1. 52E230001-1 Fuel Cell Test Set Serial No. 3 was delivered to MAC-St. Louis on 17 July. Installation is pending completion of facility to house this test equipment.

GEMINI SPACECRAFT

CONTRACT NO. NAS 9-17

BATTERY FUEL CELL

(VENDOR: GENERAL ELECTRIC)

STATUS CHART

PERIOD NO. STEP -42

LAST PROGRAM SCHEDULE CHART 24 April 64

STATUS AS OF 7 Aug. 1964

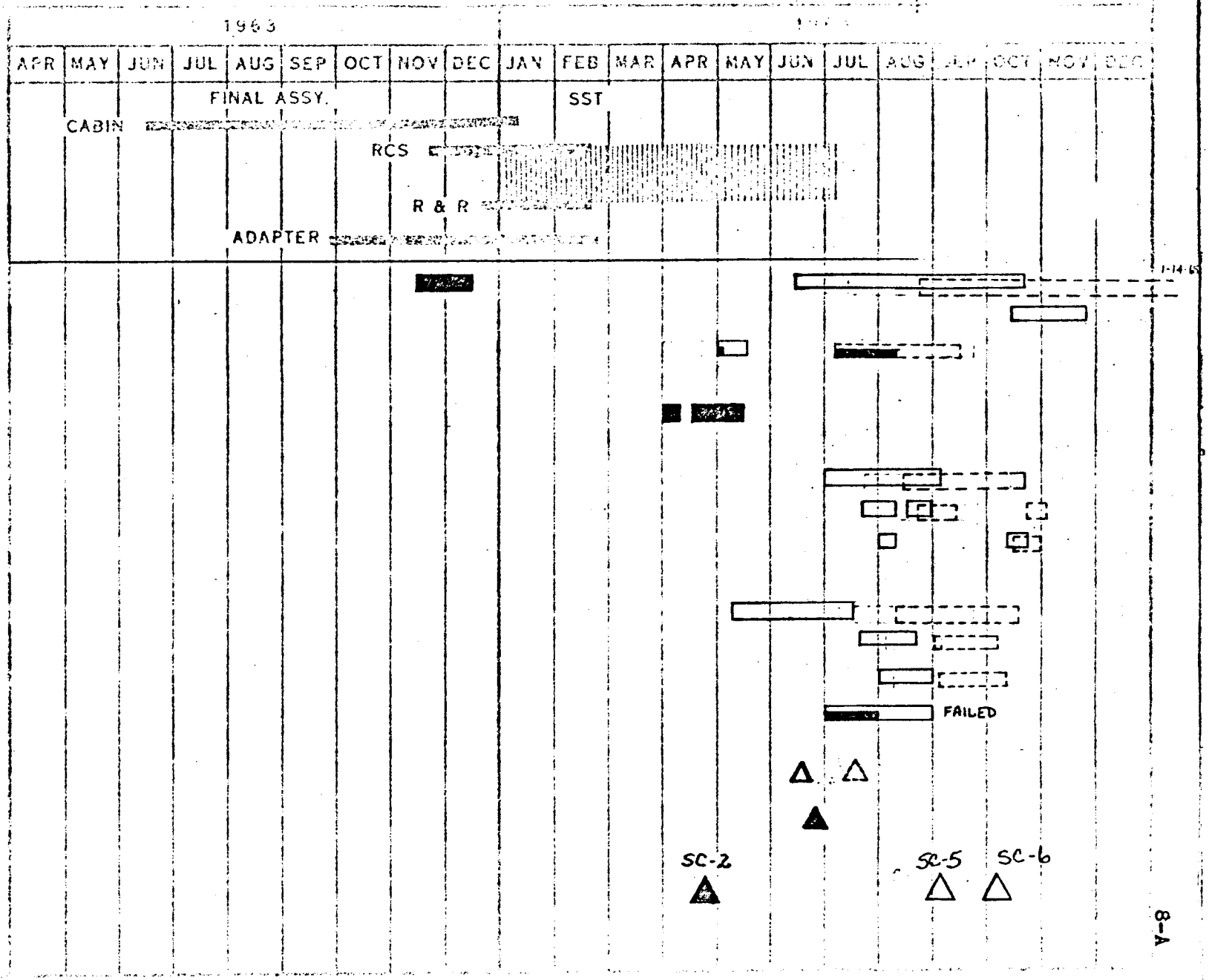

DEVELOPMENT

1. POWER SYSTEMS TEST
2. CTU
3. VENDOR DEVELOPMENT

P2B QUAL

4. VIBR., ACCEL., SHOCK

QUALIFICATION

5. VIBR. SHOCK, ACCEL.
6. TEMP. & ALTITUDE
7. SALT SPRAY

RELIABILITY

8. 9-32 CELL STACK OSR
9. SECTION LIFE
10. SECTION OSR VIBR.
11. ENDURANCE

AGE

12. PIA
13. CAPE CHECKOUT

FLIGHT HARDWARE

14. AFI

8-A

LEGEND:

◊ HARDWARE AVAILABLE

▭ TEST SCHEDULE

○ REPORT DUE

SYSTEM DETAIL TEST CHART
BATTERY FUEL CELL SCD 52-79700
GENERAL ELECTRIC

8580-1-42

7 Aug. 1964

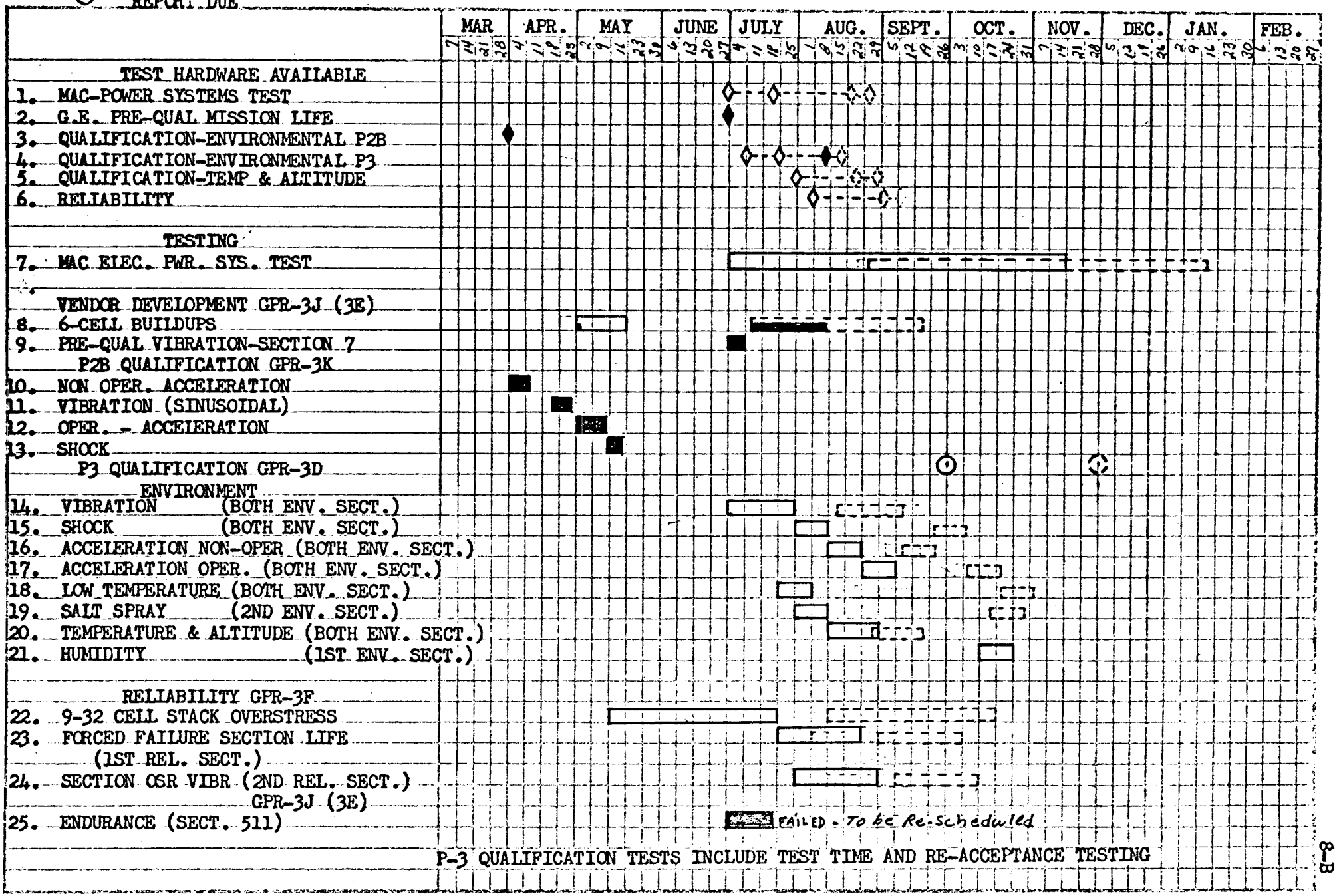

P-3 QUALIFICATION TESTS INCLUDE TEST TIME AND RE-ACCEPTANCE TESTING

8-B

VENDOR DELIVERY STATUS REPORT
FUEL CELL
GENERAL ELECTRIC

CHART NO: 8-C

DATE: 8-7-64

UNIT NO	TYPE	S/N	USAGE	VENDOR W/S	AVAIL FOR INSTL	REQ'D FOR INSTL	SLACK
8	PA-4	*505	S/C-2		***	A03-20-64	
9	PA-5	*506	QUAL			A03-25-64	
10	PA-6	*508	S/C-2		***	A04-21-64	
11	PA-7	*509	SPARE-SST			A05-19-64	
12	PA-8	*510	MISC		***	A06-22-64	
13	PA-9	**503A	MISC	In Storage at G.E. on MRR.			
14	PA-10	*507	MISC	In Storage at G.E. on MRR.			
15	PA-11	**502A	MISC	In Storage at G.E. on MRR.			
16	PA-12	511	VENDOR LIFE TEST (Failed)			A06-27-64	
17	PA-13	512	QUAL		A08-04-64		
18	PA-14	513	QUAL	08-10-64	08-10-64		
19	PA-15	514-515	FC/RSS PWR SYS.	08-24-64	09-07-64	07-15-64	- 8
20	PA-16	516-517	QUAL	08-28-64	08-28-64		
21	PA-17	518-519	OSR	08-30-64	08-30-64		
22	PA-18	520-521	S/C-5	09-05-64	09-15-64	09-08-64	- 1
23	PA-19	522-523	S/C-6	10-03-64	10-13-64	11-23-64	+ 6
24	PA-20	524	SPARE-SST	11-07-64	11-17-64	11-30-64	+ 4
25	PA-21	525-526	AD-13	12-12-64	12-22-64	12-02-64	- 3
26	PA-22	527-528	S/C-7	01-16-65	01-26-65	01-02-65	- 3
27	PA-23	529	SPARE-SST	02-13-65	02-23-65	01-31-65	- 3
28	PA-24	530-531	S/C-8	03-13-65	03-23-65	02-26-65	- 4
29	PA-25	532	SPARE-HGR	04-10-65	04-20-65	02-28-65	- 8
30	PA-26	533-534	S/C-9	05-08-65	05-18-65	04-26-65	- 3
31	PA-27	535	SPARE-HGR	06-05-65	06-15-65	04-30-65	- 7
32	PA-28	536	SPARE-HGR	07-03-65	07-13-65	06-30-65	- 2
33	PA-29	537-538	S/C-10	07-31-65	08-10-65	06-17-65	- 8
34	PA-30	539-540	S/C-11	08-28-65	09-07-65	08-14-65	- 4
35	PA-31	541-542	S/C-12	09-25-65	10-05-65	10-07-65	+ 1
36	PA-32	543-544	AD-14	10-30-65	11-09-65	11-29-65	+ 3

* - P2B Design Sections
** - P2B Design Sections Refurbished
*** - PIA waived. PDA accepted as PIA

VENDOR AGE STATUS REPORT
FUEL CELL
GENERAL ELECTRIC

CHART NO: 8-D

DATE: 8-7-64

PART NUMBER	NOMENCLATURE	UNIT NO	VENDOR W/S	AVAIL FOR USAGE	REQ'D FOR USAGE	SLACK
			PRE-INSTALLATION ACCEPTANCE			
E230001-1	TEST SET FUEL CELL	3	A 7-17-64	8-17-64	5-20-64	-13
			HANGAR			
E230001-1	TEST SET FUEL CELL	2		*A6-25-64	6-29-64	- 1

* Actual receipt at Cape for installation.

MONTHLY SUMMARY

SYSTEM: Electrical Power
SUBSYSTEM: Reactant Supply System
VENDOR: AiResearch
DATE: 7 August 1964

ENGINEERING STATUS

I. PROGRESS REPORT

A. Two 52-83701-129 regulators have been shipped from AiResearch, for qualification test.

B. SCD 52-83701 is presently being revised and the Rev. H redlines should be circulated for review during the first week of August.

C. The latest revisions of AiResearch acceptance test procedures SS-2095R and SS-2101R have been submitted for review.

D. A TR has been submitted to determine the capability of the ECS O_2 quantity and pressure indicators to also monitor RSS O_2 and H_2 parameters with the idea of eliminating two of the indicators to make available more instrument panel mounting space. A proposal was requested and received from AiResearch to determine correlation curves of the three cryogenic containers on one indicator while actually operating at supercritical conditions and with the RSS quantity gage controls recalibrated for best read out on the ECS indicators.

E. AiResearch has been running cycle tests for mating and demating of the cryogenic quick disconnects, 52-83701-149 and -161, and found the present valves good for 40 cycles reliability with some reaching 60 cycles before operational torque became excessive. A cycle consisted on engaging the two halves and rotation to the third detent with the S/C side at 1000psig and ambient pressure on the ground half. Liquid nitrogen was flowed for five minutes and the valves disconnected cold and at ambient pressure on both sides. A slight modification is underway on the cam ramp to further improve cycle life and delivery has been promised for no later than the second week of August.

II. PROBLEM AREAS

A. A meeting was held with Beech and MAC Cape Operations personnel to determine changes required to the cryogenic loading system prior to launch of S/C #2. It appears that several components of the mass quantity indication system in the LOX and LH_2 control consoles cause the system to operate improperly and must be replaced. The hardware is available and MAC will have Beech make the change.

B. 52E180095-1 &-3 Bottle-LOX & LN_2 Sampling. Continuing problems in obtaining samples; 1) difficulty in filling bottle and 2) freezing of the hand valves.

C. 52E230069-1 Test Console-RSS Fuel Cell. The low pressure relief valves and plumbing are undersize. The unit is being "kluged" for use on S/C #2 but must be analyzed and redesigned for use on S/C #5 and up.

D. 52E250013-1 Service Cart-High Vacuum Maintence. The unit does not seem to be capable of pumping a vacuum of one micron (or less) on the vacuum jacketed cryogenic flex hoses. An analysis of the unit will be made while Cape personnel continue in their attempts to use the units.

E. 52E230127-1 Servicing Unit-Liquid Neon. The fill and vent lines on the S/C liquid neon dewar are not insulated. This may present problems due to the amount of liquid neon required to get a fill indication in the AGE.

F. Remote control of the 10,000 psig cryogenic converters is not possible with the present configuration. A study is underway to determine the minimum changes necessary.

G. The present design of the ground half of the cryogenic disconnect cannot be disconnected when the AGE side is pressurized. A new design concept featuring a relief valve and a remotely operated dump valve is in the study stage and an SCD will be prepared.

III. AGE

A. The need for the cryogenic trailers (52E180016-1, -3 & 52E230017-1) to comply with I.C.C. regulations has been resolved by discussions with NASA and the GSO group. The units will have running lights that conform to the I.C.C. regulations and screens will be installed to protect the vaporizers. Other changes will not be made and the units will not be expected to meet the requirements of the I.C.C.

B. The hose safety lanyard problem has been resolved for hoses developing a thrust of 20 pounds, or more. A simulated burst test, which will resolve the problem for hoses developing less than 20 pounds, is expected to be completed by the middle of August.

C. 52E250018-1 Support/Scupper--S/C Cryogenic Couplings. Expect to release the design for a support/scupper for the present cryo couplings on 31 July.

D. 52E230141-1 Fuel Cell Vacuum Purge Assembly. Design is complete.

E. Further effort has been expended on preparation of Associated Equipment Lists and First Article Demonstrations (FAD) sheets for AGE.

F. The SCD's for RSS AGE are approximately 75 per cent updated as of 28 July.

ASSEMBLY AND DELIVERY STATUS

1. The temperature sensor failure problem has been resolved and the vendor has resumed deliveries to AiResearch. Seventeen (17) redesigned sensors were received at AiResearch by 29 July.

   Due to the shortage of sensors AiResearch reallocated -71 and -81 oxygen and hydrogen subsystem production spares to testing to expedite the temperature altitude qual test program.

   The temperature sensor was one of two factors delaying schedules this period. The second factor was the need for an approved acceptance test procedure. By 29 July, the new procedure was written and completed. It included temperature cycling shock tests at cryogenic temperatures for the temperature sensors.

   Based on the above two factors the following is the latest shipping schedule:

MAC 83701-81	Subsystem long mission for qual temp-altitude	W/S 8-11-64
MAC 83701-77	Subsystem short mission for MAC spares	W/S 8-21-64
MAC 83701-71	Subsystem long mission for qual temp-altitude	W/S 8-11-64
MAC 83701-73	Subsystem short mission for MAC spares	W/S 8-21-64

TEST STATUS

ENVIRONMENTAL QUAL

Humidity (Ref. line 7): Failure analysis of the MAC 83701-15 qual test container indicated that the vacuum loss was due to a minute leak over a period of months before a degradation of vented heat loss performance occurred. The container will be reevacuated for proof and burst pressure qual testing.

DYNAMIC QUAL

Thermal Shock, Cycle Fatigue, and External Pressure (Ref. lines 10, 11 & 12) The MAC 83701-9 and -13 hydrogen and oxygen long mission containers have completed thermal shock testing on 14 July at the Boron test facility. Cycle fatigue and external pressure testing was completed on 28 July at AiResearch.

Launch Vibration (Ref. line 13) Both the -73 and -77 oxygen and hydrogen short mission subsystems failed vibration testing but they were allowed to continue qual testing. The quantity indicators read low. Failure analysis on the gauging system will be run after the acceleration tests. The -73 in addition, experienced a vented weight loss problem. In order to continue qual testing additional weight loss tests were required. Failure analysis will be performed prior to proof and burst.

DYNAMIC QUAL (Continued)

Launch Acceleration and Ultimate Load (Ref. lines 15 & 16): The MAC 83701-73 and -77 oxygen and hydrogen short mission subsystems, together with the major components, completed both launch acceleration and ultimate load testing on 4 August. The associated components have not been tested.

Long Mission O_2 and H_2 Subsystem: One failure reported -121 indicator failed random vibration. Case leakage failure analysis in progress. The -9 and -13 containers have completed cycle fatigue and external pressure scheduled to start vibration on 7 August 1964. Associated components started launch acceleration 7 August 1964.

Short Mission O_2 and H_2 Subsystem: Associated components are scheduled for thermal shock 10 August and launch acceleration on 7 August 1964. Associated component failures are as follows:

MAC DASH #	TEST FAILED	FAILURE
-103	Vibration	Internal leakage
-129	Vibration	Press shifted to lower pressure
-135	Vibration	Internal leakage

The -11 container failed humidity when pinch-off tube cover fell off.

75

GEMINI
SPACECRAFT
CONTRACT NO. NAS 9-170

REACTANT SUPPLY SYSTEM (VENDOR: AIRESEARCH)

STATUS CHART

REPORT NO. 8580-1 -42
LAST PROGRAM SCHEDULE CHANGE: 24 April '64
STATUS AS OF: 7 Aug. '64

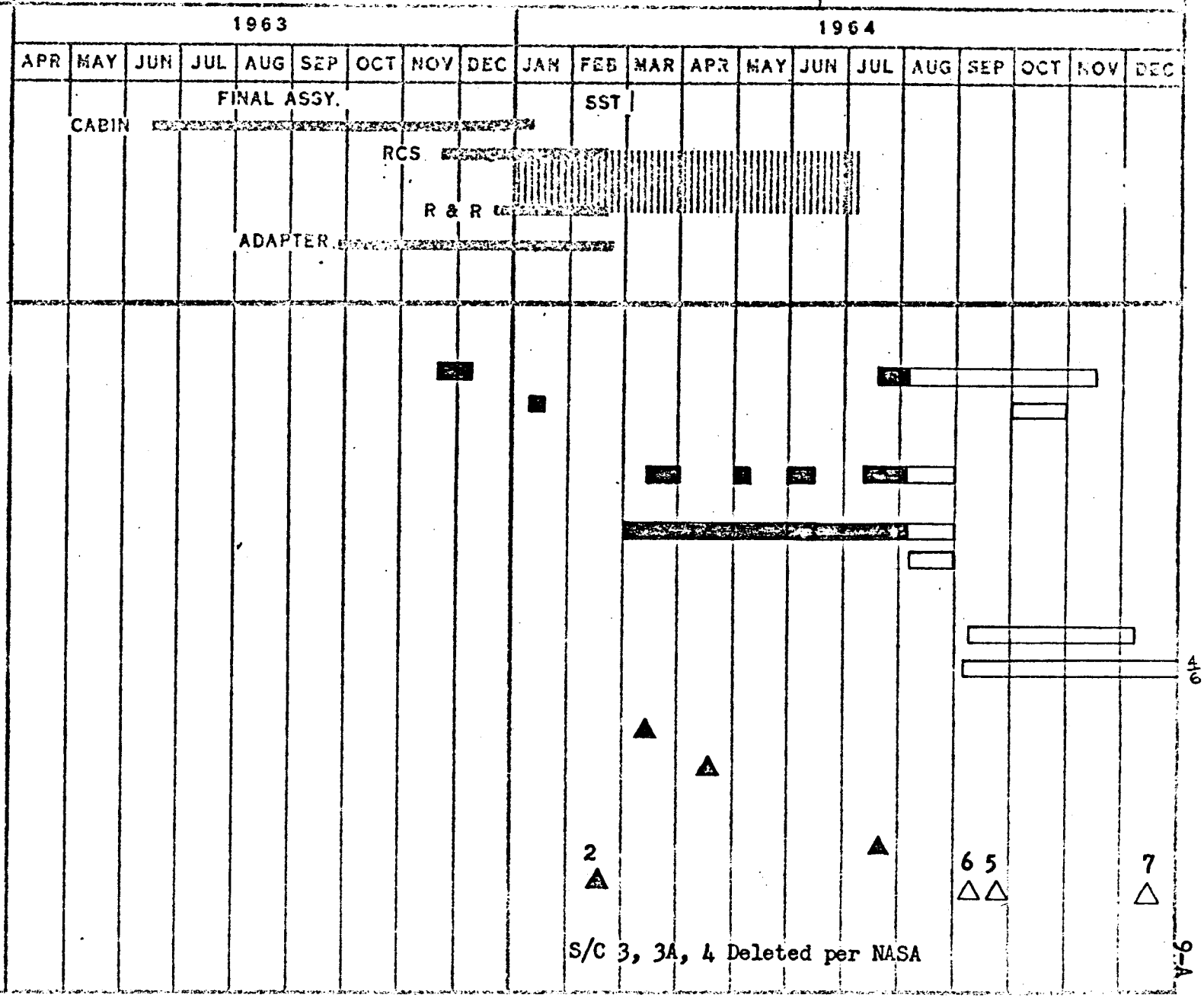

LEGEND:

◇ H_2 SUBSYS. AVAIL

△ O_2 SUBSYS. AVAIL

▭ TEST SCHEDULE REPORT DUE

SYSTEM DETAIL TEST CHART
REACTANT SUPPLY SYSTEM
SCD 52-83701
AIRESEARCH

7 August 1964

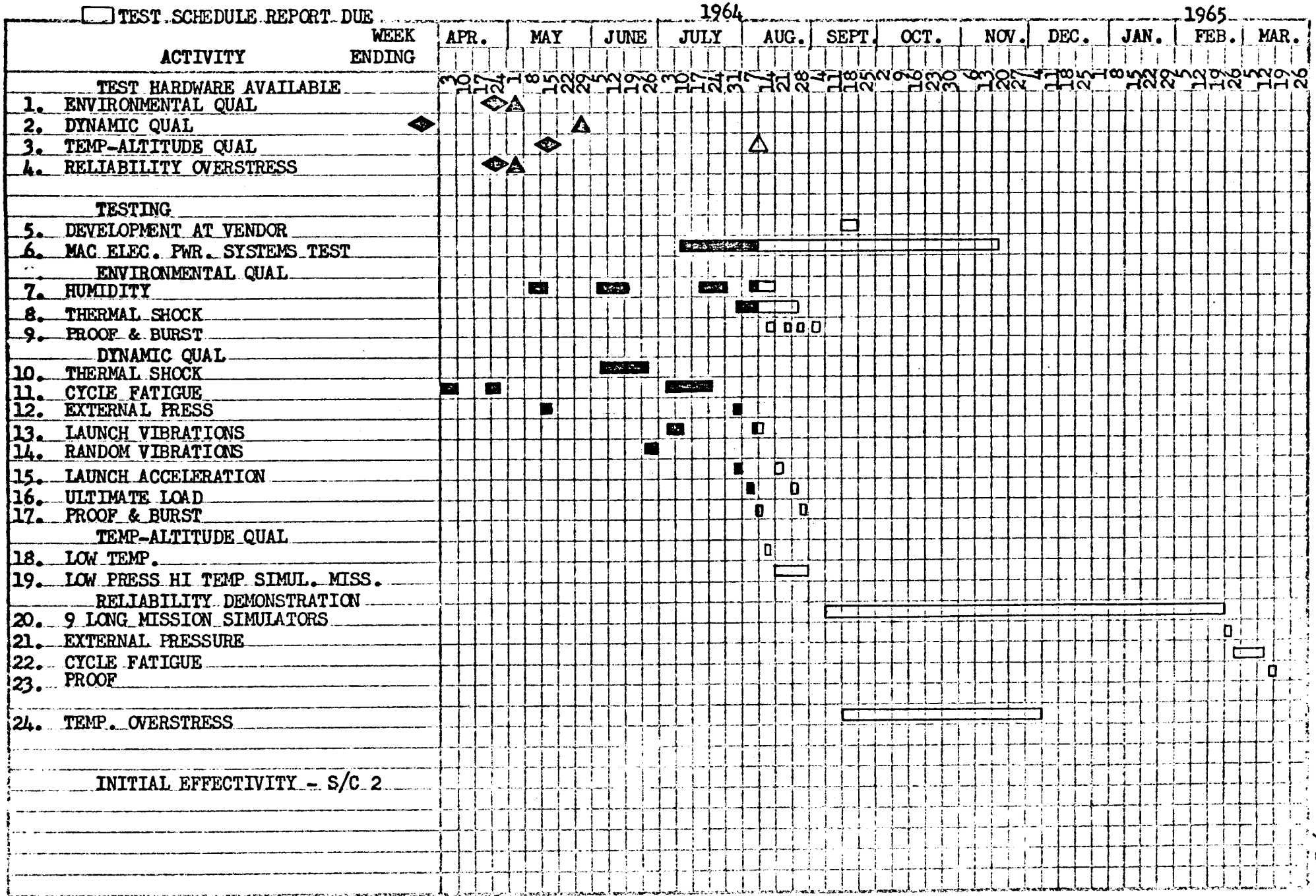

VENDOR DELIVERY STATUS REPORT
REACTANT SUPPLY SYSTEM
AIRESEARCH

CHART NO.: 09-C

DATE: 8-07-64

TYPE	USAGE	COMPONENT	VENDOR W/S	AVAIL FOR INSTL	REQ'D FOR INSTL	SLACK
PA-5	SC-3A	STOP				
PA-9	VENDOR QUAL TEMP & ALT					
		71 O_2 SUB-LM	08-11-64	08-14-64		
		81 H_2 SUB-LM	08-11-64	08-14-64		
PA-12	SPARE COMPONENTS	(SM - HGR)	08-21-64	08-28-64	06-30-64	- 9
		(LM - SST)	08-21-64	09-27-64	11-30-64	+10
PA-13	SC-5	-129 REG. DUAL	08-21-64	09-04-64	09-08-64	- 0
		- 71 O_2 SUB-LM	09-16-64	09-30-64	09-08-64	- 3
		- 81 H_2 SUB-LM	A05-06-64	08-18-64	09-08-64	+ 3
PA-14	SC-6	-129 REG. DUAL	08-21-64	09-04-64	11-23-64	+11
		73 O_2 SUB-SM	A02-14-64	08-24-64	11-23-64	+13
		21 PRESS REL VAL	A01-06-64	08-24-64	11-23-64	+13
		77 H_2 SUB-SM	A02-17-64	08-24-64	11-23-64	+13
		19 O_2 HT. XCHGR	A06-02-64	08-24-64	11-23-64	+13
		23 PRESS REL VAL	A06-22-64	08-24-64	11-23-64	+13
		37 TEMP SENSOR		A03-23-64	11-23-64	+35
		103 SOL. VALVE	A07-24-64	09-11-64	11-23-64	+10
PA-15	AD-13		10-26-64	11-11-64	12-02-64	+ 3
PA-16	SC-7	71 O_2 SUB-LM	11-25-64	12-09-64	01-02-65	+ 4
		81 H_2 SUB-LM	08-21-64	09-18-64	01-02-65	+15
		21 PRESS REL VAL	A01-06-64	09-25-64	01-02-65	+14
		19 O_2 HT. XCHGR	A06-02-64	09-25-64	01-02-65	+14
		23 PRESS REL VAL	A08-03-64	09-23-64	01-02-65	+15
		37 TEMP SENSOR		A06-03-64	01-02-65	+31
PA-17	SC-8		01-19-65	02-02-65	02-26-65	+ 4
PA-18	SC-9		03-19-65	04-02-65	04-26-65	+ 3
PA-19	SC-10		05-07-65	05-21-65	06-15-65	+ 3
PA-20	SC-11		07-02-65	07-16-65	08-14-65	+ 4
PA-21	SC-12		08-27-65	09-10-65	10-17-65	+ 5
PA-22	AD-14		10-22-65	11-05-65	11-29-65	+ 3
PA-23	AD-15		12-17-65	12-31-65	01-27-66	+ 4

VENDOR AGE STATUS REPORT
RSS
VENDOR - AIRESEARCH

CHART NO.: 09-D

DATE: 7 Aug. '64

All AGE delivered - See previous 8580-1 report for dates

ECS ENGINEERING INFORMATION

PROGRESS REPORT

A. SCD 52-83770 Regulator

Four (4) regulators are in-house and vendor is presently conducting qualification tests; vendor has been instructed to complete all qualification tests by 1 October 1964.

B. SCD 52-83771 Coolant Filter

Six (6) filter assemblies are in-house, vendor is presently conducting qualification tests at Garwood Laboratories; vendor has been instructed to complete all qualification tests by 1 October 1964.

C. 52-83775 (Cryogenic Shut Off Valve)

Cancelled 21 July 1964. All quoting vendors were notified of the cancellation.

IN PROGRESS

1. Lithium Hydroxide Cartridge in re-design to preclude loss of granules due to the vibration environment.

2. SCD 52-83700 Volume I, Revision "L" 70% complete.

3. AiResearch test procedures in review:

   (a) No. SS-2248
   (b) No. SS-2184, Rev. 1
   (c) No. SS-2177, Rev. 1
   (d) No. SS-2191

4. AiResearch Test Report No. SS-2186 in review.

COMPLETED

1. Cabin Pressure Relief Valve (-751) re-design complete.

2. V-band clamp re-design complete.

3. Absolute Pressure Switch (-759) design changes complete.

4. Suit demand regulator (-747) design changes complete.

SIGNIFICANT PROGRESS

1. First converter/dewar (52E180178) test run at Cape Kennedy using liquid nitrogen. The test was successful. Problems encountered were:

   (a) Liquid leak in jumper hose.
   (b) High pressure bleed valve froze open.

2. The rebid proposals were received and reviewed for the Liquid Neon Servicing Unit (52E230127). Accessory Products Co. was selected as the successful bidder and has been awarded the contract.

3. The hose safety lanyard problem has been resolved for hoses developing a thrust of 20 pounds, or more. A simulated burst test, which will resolve the problem for hoses developing less than 20 pounds, is expected to be completed by the middle of August.

4. 52E180185-1 Hardline Assy--R. F. Tower Ground Cooling. Tests were conducted to determine the suitability of Lexan plumbing in this application. Results were positive.

5. Further effort has been expended on preparation of Associated Equipment Lists and First Article Demonstrations (FAD) sheets for AGE.

6. The SCD's for ECS AGE is approximately 75 per cent updated as of 28 July.

7. Documentation (Change Recommendations) has been initiated for the following end items:

   (a) 52E180005-1 Cold Trap Assembly-S/C Coolant System Drying.
   (b) 52E180017-401 Cover, Protective-Ground Prelaunch Cooling Unit.
   (c) 52E180025-1 Balancing Unit-Flow, S/C Coolant Loop.
   (d) 52E180047-1 Hose Assy-Altitude Chamber Ground Cooling.
   (e) 52E180594-1 Fixture-Alignment & Drip Tray, LOX Jumper Tube.
   (f) 52E230507-1 Fixture-Alignment & Drip Tray, LH_2 Jumper Tube.

PROBLEM AREAS

1. A meeting was held with Beech and MAC Cape Operations personnel to determine changes required to the cryogenic loading system prior to launch of S/C #2. It appears that several components of the mass quantity indication system in the LOX and LH_2 control consoles cause the system to operate improperly and must be replaced. The hardware is available and MAC will have Beech make the change.

2. Duplicates of pad items for the Ground Cooling System for the Catastrophe Kit are being procured from the vendor. These items have been modified in-house by MAC. Coordination is now underway to ascertain that the vendor will supply units of the latest configuration. (including the MAC mods)

3. 52E180095-1 & -3 Bottle-LOX & LN_2 Sampling. Continuing problems in obtaining samples; 1) difficulty in filling bottle and 2) freezing of the hand valves.

4. 52E250013-1 Service Cart-High Vacuum Maintenance. The unit does not seem to be capable of pumping a vacuum of one micron (or less) on the vacuum jacketed cryogenic flex hoses. An analysis of the unit will be made while Cape personnel continue in their attempts to use the units.

5. 52E230127-1 Servicing Unit-Liquid Neon. The fill and vent lines on the S/C liquid neon dewar are not insulated. This may present problems due to the amount of liquid neon required to get a fill indication in the AGE.

6. Remote control of the 10,000 psig cryogenic converters is not possible with the present configuration. A study is underway to determine the minimum changes necessary.

7. The present design of the ground half of the cryogenic disconnect cannot be disconnected when the AGE side is pressurized. A new design concept featuring a relief valve and a remotely operated dump valve is in the study stage and an SCD will be prepared.

8. Configuration of 52E180003 Service Unit-S/C Water Tank, has not been thoroughly resolved due to the redesign of the S/C water management system.

9. Venting problems exist in the High and Low Pressure PIA Benches (52E180011-1) and (52E180010-1) which cause "pegging" of the low pressure differential and absolute pressure gages.

10. Problem exists on various items of AGE regarding proof pressure tests. Several drawings do not call out a proof pressure test and/or a proof test tag.

11. 52E180027-1 Tester-S/C Leakage. The leakage tester, as presently designed, can check cabin leakage up to approximately 1400 cc/minute. Since most S/C cabins will have an initial leak rate somewhat higher than that, probably 400 cc/minute, another flow section should be added in parallel with the existing one.

THERMODYNAMICS STATUS REPORT

1. Aerodynamic Heating - Additional analysis of Gemini wind tunnel data has been made refining methods of calculating local heating on the heat shield.

2. Orbital Heating - Analysis of cabin energy balance in orbit is continuing for S/C #3 in order to determine the resulting cabin temperature as a function of several mission variables. Present emphasis is concerned with the heat shield and hatch surfaces.

3. A summary of component pressure drop at various temperatures versus flow rate is being prepared to make available a current picture of the total system pressure drop.

4. Analysis of the parallel-flow suit/cabin heat exchanger coolant circuits has been completed and procedures have been written to provide proper coolant flow-split with the manual temperature control valves in the full-open position.

   A study of suit-circuit performance change with variations in suit compressor performance has been completed.

   Potential cryogenic heat exchanger freezing of the coolant circuit during high-flow conditions has been studied and reported in TN #108.

   TN #107 was released and reported on an analysis of the ECS capabilities during extravehicular activity. Studies are continuing in this area.

B/P-2 test results indicate excessive heat leak into the coolant line between the radiator and the suit heat exchanger, thereby degrading the suit heat exchanger thermal performance. Additional testing with proper coolant temperatures demonstrated improved thermal performance and EJS 52-3010 has been initiated to provide insulated to provide insulation on all affected coolant lines.

RELIABILITY

1. Gemini Reliability Information Notes are being prepared to document the reliability evaluation of the spacecraft during the various abort modes. MAC failure reporting, as defined in MAC Report 8392, is being discussed with AiResearch. The primary problem is that AiResearch takes exception to reporting failures during pre-delivery acceptance testing. AiResearch has been reporting Qualification failures by TWX and in failure reports.

MONTHLY SUMMARY

SYSTEM: Environmental Control
SUBSYSTEM: E.C.S.
VENDOR: AiResearch Mfg. Co.
DATE: 7 August 1964

ENGINEERING STATUS

Considerable effort was expended in monitoring testing and making necessary design changes to overcome failures or marginal results. Some of these resulted in retrofits and will affect hardware delivery.

Significant items are the MAC -751 Cabin Relief Valve involving 17 detail changes, and the MAC -747 Demand Regulator for the Suit Loop. Reviews of pressure drops at various ambients in component performance is being done and studies are in progress of Suit and Coolant circuit performance and temperature variations. Redesign of the Temp Sensors in Cryogenic Tanks due to a failure caused several weeks slippage.

ASSEMBLY AND DELIVERY

As forecast, past month was devoted primarily to expediting S/C 3A delinquent hardware for the Environmental Control System and incorporating retrofits and design changes.

This has been done with the exception of the MAC -751 Cabin Pressure Relief Valve. This is a major design change involving a number of components and drawing changes. It is estimated this will require several more weeks to accomplish, with delivery near the end of August. Present effectivity is for S/C 3 and S/C 3A as retrofits. Due to complexity of design change a potential slip in their delivery is possible.

Primary effort this coming month will be devoted to expediting shortages for S/C 4. A listing of these and report of status on each follows:

1. MAC -771 and MAC -772 Egress Kits. Estimated will ship 15 September 1964

   Due to continued production problems encountered at Weber and subcontractors in incorporating design changes, a firm date is not available at present. Welding and cleaning remain chief problem areas with numerous rejections and rework to overcome leakage and warpage. To date, AIRE has one tank in assembly for Qual Test, two other Qual Test tanks are being returned for impregnation, and two tanks earmarked for S/C 3 were received at AIRE 5 August 1964. Several more tanks for Qual Test and B/P 2 are promised from Weber this coming week. A coordination and expediting meeting will be held at Weber this coming week.

2. MAC -725 Suit Subsystem. Estimated will ship 25 August 1964

   Incorporation of design changes of the MAC -747 Demand Regulator and the MAC -725 Absolute Pressure Switch are constraining delivery of this subsystem, along with the new 7 day LIOH Cartridge. The last change requires drawings and new detail components for fabricating a new container grid bag and filter and rework of the screen assembly. Estimated shipping by 18 September 1964.

   Present planning calls for shipping the Suit Loop minus the LIOH Cartridge to permit buildup and testing, while awaiting retrofit of the cartridge. The original cartridge design was also modified to preclude loss of granules due to vibration mode. Hardware was allocated for a special test at AIRE to qualify the new cartridge.

85

3. MAC -127, Long Mission Primary O_2 Cryotank. Will ship 18 August 1964

This vessel is awaiting testing and installation of the newly redesigned Temperature Sensor Probe made necessary by a previous qual failure. Component testing is in process prior to container installation and ATP Testing. Production of Crygenic Tanks was delayed several weeks pending resolution of this problem. The MAC -279 Indicator will ship with this tank.

4. MAC -495 Water Tank. Will Ship 28 August 1964.

A redesign is in process to incorporate a mechanical bond between the tank and the outlet boss. Drawing release is this date with several weeks rework and ATP testing before shipping. Previously, the poppet valve had been redesigned and components are being fabricated incorporating Teflon.

5. MAC -733 Relief Valve. Will ship 10 August 1964.

One valve was shipped 5 August 1964 and other unit is due from Phoenix division 7 August 1964.

6. MAC -23 Ground Heat Exchanger. Will ship 14 August 1964.

While this unit has completed acceptance testing, shipment is delayed pending a special cleaning process to remove contamination.

7. MAC -741 Launch Cool Heat Exchanger. Will ship 20 August 1964.

New design change, to incorporate an electrically heated poppet and pressure switch problem has slipped this critical subsystem. Bench availability for a 50 hour test is also involved.

8. MAC -277 Secondary O_2 Subsystem. Will ship 10 August 1964.

This unit was shipped previously but was returned for overhaul and necessary repair due to a PIA failure.

9. MAC -751 Cabin Relief Valve. Will ship 31 August 1964.

Problems on this item were outlined in general comments and above date is an estimate pending further review of components involved in major design change improvement. As this is clarified date will be revised.

TEST STATUS

1. Qual Test Status

A. Cabin Cooling Unit Subsystem. Failure analysis is still in progress on the -101 fan failure. No change in salt solution wet test in ECS #4. Proof and Burst only test remaining in ECS #4. No change in ECS #5. ECS #6 Temp.-Alt. testing was started. ECS #8 simulated launch was started.

RL

B. Coolant Pump Unit Subsystem. ECS #4 completed. ECS #5 Acceleration started 23 July 1964. ECS #6 Temp.-Alt. testing was started. ECS #8 no change.

C. Suit Loop Package - Long Mission and Short Mission. -479 S/M failed humidity in ECS #4. Failure analysis is in progress. ECS #5 vibration completed, will start Acceleration on 10 August 1964. ECS #6 Temp.-Alt. S/M completed, will start 6 short missions on 10 August 1964. ECS #8 - no change.

-477 L/M ECS #5 failed vibration - redesign is complete and testing on long mission will be started upon completion of short mission testing. ECS #6 failed Low Temp (data bad). ECS #8 no change.

D. Primary O_2 S/M and L/M Systems

Short Mission:
ECS #4 and #5 are complete. ECS #6 Temp.-Alt. complete. Waiting on long mission Temp.-Alt. to be completed to continue test. ECS #8 no change.

Long Mission:
ECS #4 -129 Container completed Thermal Shock, will start Proof and Burst on 7 August 1964. ECS #5 - a failure after Acceleration was reported but not considered a failure. Qual test to continue in cycle fatigue on 7 August 1964. ECS #6 Low Temp. completed, Temp.-Alt. started 6 August 1964.

E. Water Management

-261 Water Tank. ECS #4 Proof and Burst remains, ECS #5 completed, ECS #6 started Temp.-Alt., ECS #8 no change.

-495 Water Tank. ECS #4 completed, ECS #5 started 6 August 1964, ECS #6 started Temp.-Alt., ECS #8 no change.

F. Egress O_2 L/H and R/H - No testing started.

G. Secondary O_2 L/M. ECS #4 completed except for Salt Solution Wet Test which the -3 valve failed and is in failure analysis. ECS #5 The -57 Regulator failed landing shock and is in failure analysis. -53 Tank completed static fatigue and started cycle fatigue on 23 July 1964. ECS #6 started Temp.-Alt., ECS #8 completed.

H. Associated Components:

The following failures have been reported:

Dash No.	Test Failed	Failure
-143	Humidity	Rust and external leakage
-85 (717)	Salt Sol. Wet	Leakage
-483	Temp.-Alt.	Bellows deformation
-279	Random Vibration	Case Leak
-709 (-67)	Humidity	No output voltage

I. Primary 02 Heat Exchanger

ECS #4 completed, ECS #5 -461 H.E. started Thermal Shock on 25 July 1964, ECS #6 Temp.-Alt. started, ECS #8 no change.

2. Test report on -411 and -449 composite disc cycle test has been received and in review. The -53 bottles have started Static Fatigue.

AGE

The 52E180013-1 PIA Bench is being held for new motor delivery estimated for 1 September 1964 shipment. The 52E18017-2 Refrigeration Service Units are expected to start shipment by 1 September 1964 and the 52E18004-3 Coolant Unit in use by AIRE should ship by then.

Other AGE except for subassemblies and special items have been shipped.

GEMINI
SPACECRAFT
CONTRACT NO. NAS 9-170

ENVIRONMENTAL CONTROL (VENDOR: AIRESEARCH)

STATUS CHART

REPORT NO. 8580-1 -42
LAST PROGRAM SCHEDULE CHANGE: 24 Apr. '64
STATUS AS OF: 7 Aug. '64

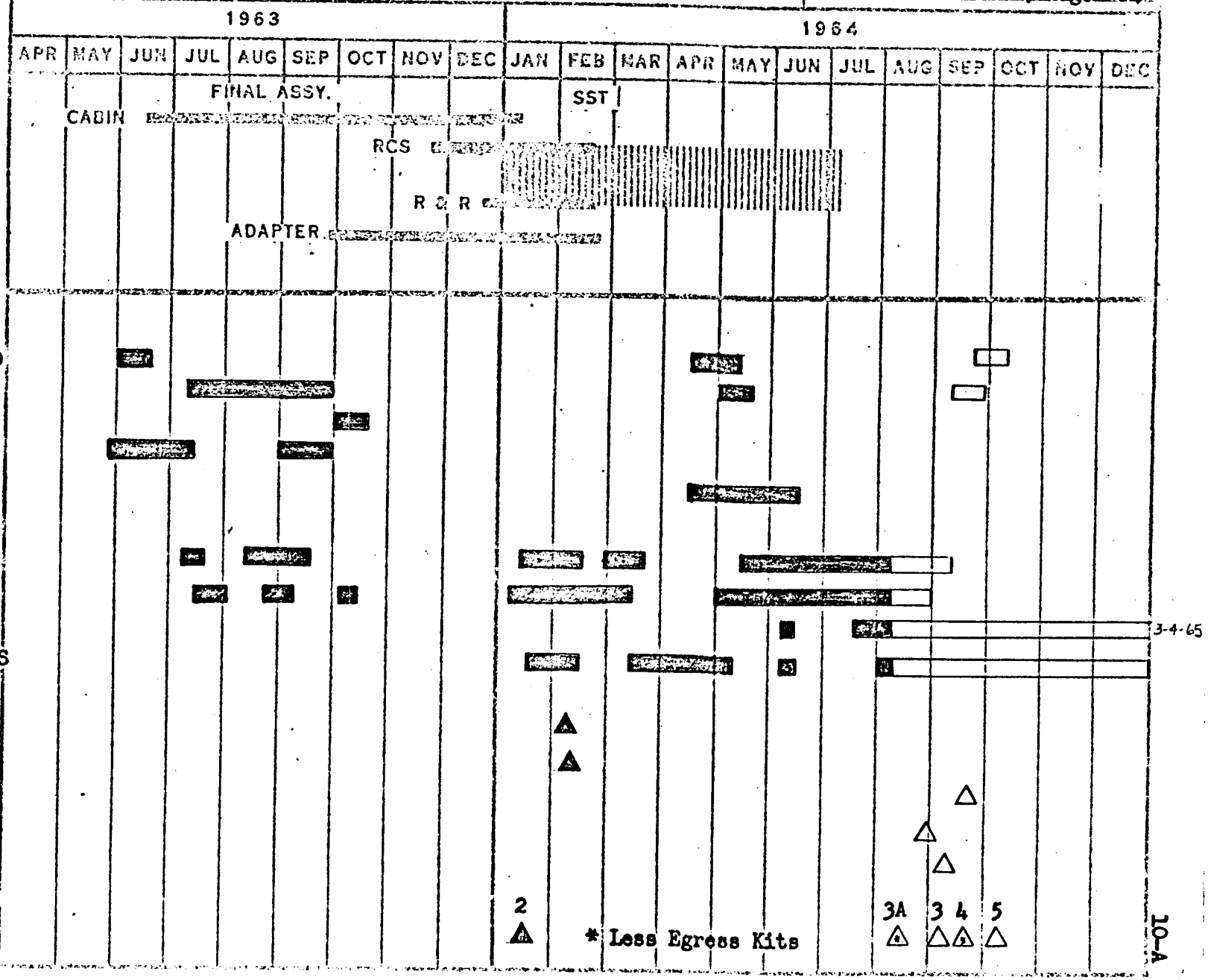

LEGEND:

△ HARDWARE AVAILABLE

▭ TEST SCHEDULE

▽ TEST COMPLETE

SYSTEM DETAIL TEST CHART
ENVIRONMENTAL CONTROL SYSTEM
SCD 52-83700
AIRESEARCH

7 AUGUST 1964

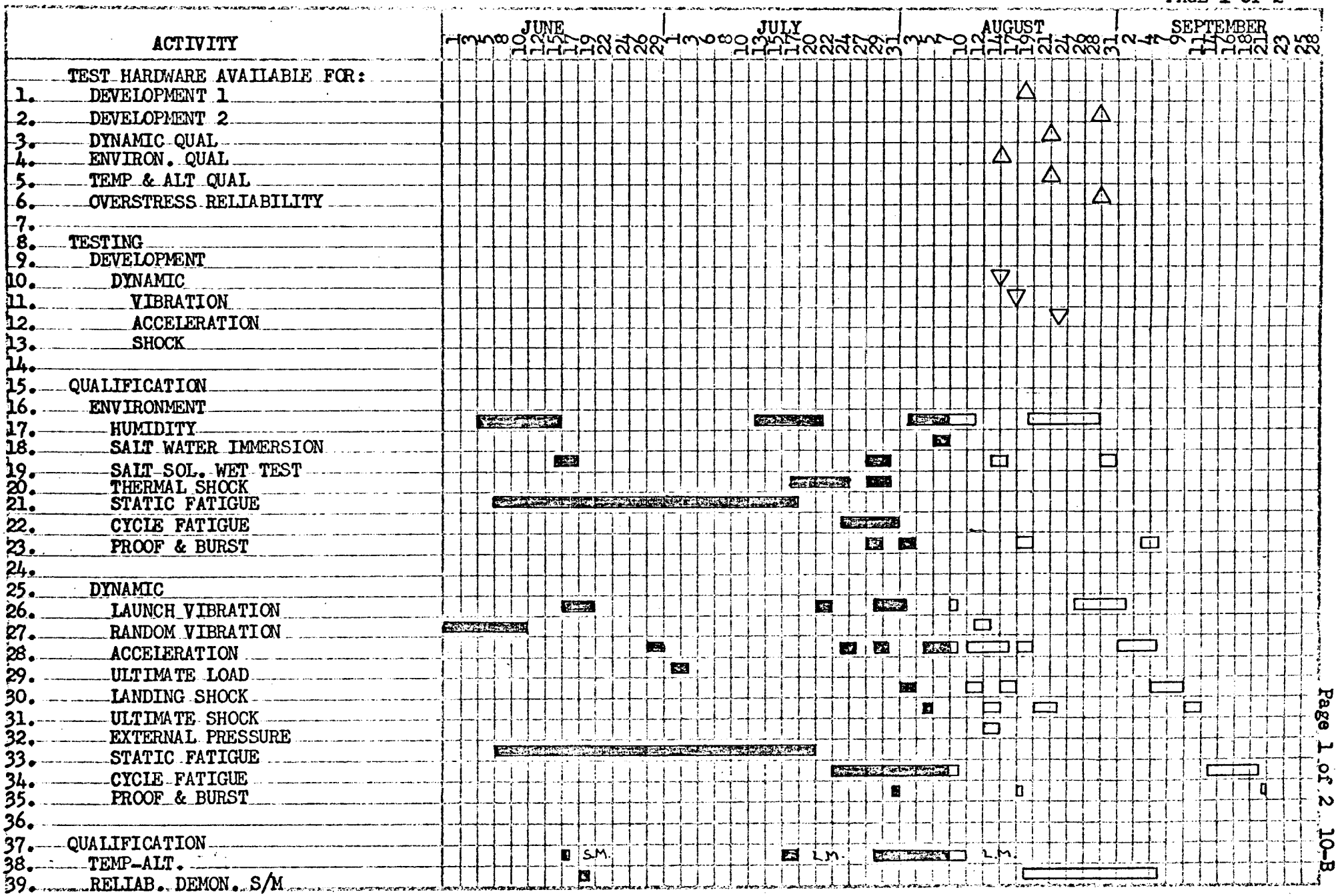

LEGEND:

HARDWARE AVAILABIE

TEST SCHEDULE

SYSTEM DETAIL TEST CHART
ENVIRONMENTAL CONTROL SYSTEM
SCD 52-83700
AIRESEARCH

7 August 1964

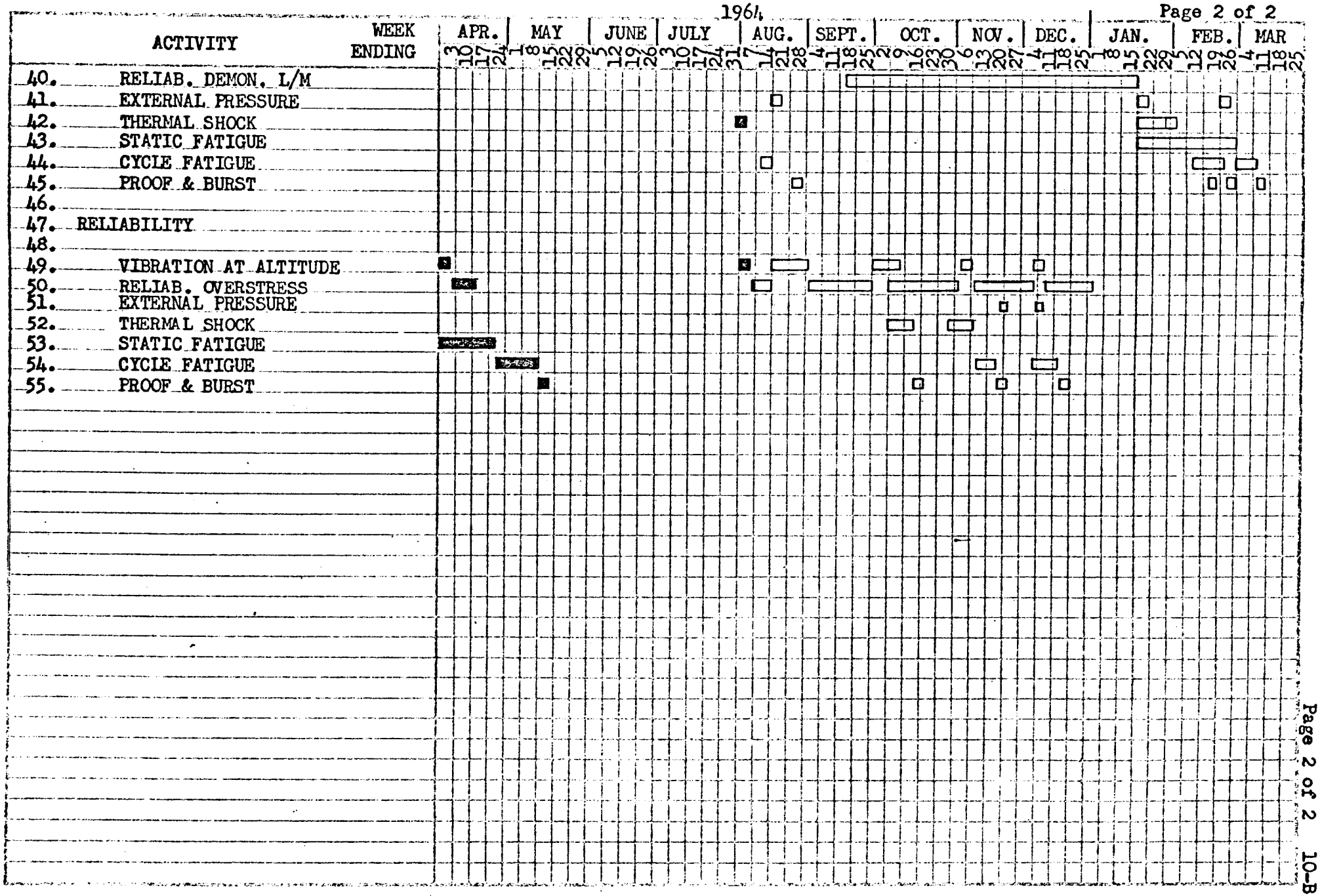

VENDOR DELIVERY STATUS REPORT
ENVIRONMENTAL CONTROL
AIRESEARCH

CHART NO: 10-C

DATE: 7 Aug '64

TYPE	USAGE	COMPONENT	VENDOR W/S	AVAIL FOR INSTL	REQ'D FOR INSTL	SLACK
PP-1	BP-2	C-771 Egress 02	8-28-64	9-10-64	4-01-64	-22
		C-772 Egress 02	8-28-64	9-10-64	4-01-64	-22
PP-2	VENDR DEV. 1					
		A-429 Pr. 02 Cont	8-18-64	8-28-64		
PP-2A	VENDR DEV. 2					
		C-161 Indicator	9-10-64	9-20-64		
		A-407 H.X. L/C	8-21-64	9-01-64		
		A-429 Pr. 02	9-10-64	9-20-64		
PA-1	SC-2			ACTUAL	4-02-64	
PA-2	SC-3	C-771 Egress 02	8-21-64	9-01-64	3-25-64	-23
		C-772 Egress 02	8-21-64	9-01-64	3-25-64	-23
PA-3	SC-3A	A-421 Reservoir	A 7-19-64	8-17-64	4-20-64	-16
		C-719 Temp Valve	A 7-10-64	8-17-64	5-08-64	-14
		A-457 Pwr. Sup		A 7-24-64	4-20-64	
		C-477 Suit Sub	A 7-29-64	8-17-64	5-08-64	-14
		C-751 Relief Valve	8-21-64	8-31-64	5-08-64	-16
		A-715 H.X. Lch Cl	A 8-01-64	8-17-64	4-20-64	-22
		A-733 Rel. Valve	A 6-29-64	8-17-64	4-20-64	-22
PA-4	VENDR ENV QUAL			8-14-64		
-5	DYN QUAL			8-21-64		
-6	T & A Qual			8-21-64		
-7	CSR			8-28-64		
PA-8	SC-4	C-277 Sundry 02	8-12-64	8-22-64	6-02-64	- 9
		A-457 Pwr. Sup.	A 7-24-64	8-17-64	7-05-64	- 5
		A-023 H.X. Grnd	8-14-64	8-24-64	7-05-64	- 6
		C-751 Val Rel	8-31-64	9-10-64	7-05-64	- 9
		A-127 Primary 02	8-18-64	8-28-64	7-05-64	- 6
		A-729 Val Sel	A 6-29-64	8-17-64	7-05-64	- 5
		A-491 Val Coolant	A 7-07-64	8-17-64	7-05-64	- 5
		C-201 Val Drk			A 5-05-64	
		A-463 Pr. 02 H.X.			A 5-06-64	
		C-725 Suit Sub	* 8-25-64	9-05-64	6-02-64	-13
		C-495 Wtr Tank	8-28-64	9-10-64	4-21-64	-19
		A-497 Pump Unit	A 8-07-64	8-17-64	7-05-64	- 6
		A-741 H.X. Lch Cl	8-20-64	8-30-64	7-05-64	- 7
		C-707 Cabin Cool			A 5-06-64	
		A-421 Reservoir	8-07-64	8-17-64	7-05-64	- 6
		C-771 Egress 02	** 9-15-64	9-25-64	6-02-64	-15
		C-772 Egress 02	** 9-15-64	9-25-64	6-02-64	-15

TYPE	USAGE	COMPONENT	VENDOR W/S	AVAIL FOR INSTL	REQ'D FOR INSTL	SLACK
PA-8	SC-4	C-709 Pwr. Sup.	A 7-29-64	8-19-64	4-21-64	- 16
		A-733 Relief Valve	8-10-64	8-20-64	7-05-64	- 7
		C-719 Temp Valve	A 7-13-64	8-17-64	6-05-64	- 9
PARTL	SPARE COMPONENTS (SC-2 SST)		8-14-64	8-14-64	3-31-64	-19
PARTL	AD-13 COMPONENTS		10-26-64	11-06-64	11-15-64	+ 1
PA-9	SC-5	A-023 Ht. Exchr	8-21-64	10-26-64	9-08-64	- 6
	LM	C-275 Scndry 02	A 1-24-64	8-15-64	6-20-64	- 7
		C-277 Scndry 02	10-15-64	10-25-64	6-20-64	-18
		A-127 Primary 02	10-24-64	11-06-64	9-08-64	- 8
		A-463 Ht. Exchr	A 7-25-64	8-17-64	9-08-64	+ 3
		C-725 Suit Loop	9-20-64	9-30-64	8-20-64	- 6
		A-497 Pump Unit	8-21-64	9-01-64	9-08-64	+ 1
		C-771 Egress 02	9-25-64	10-05-64	8-20-64	- 7
		C-772 Egress 02	9-25-64	10-05-64	8-20-64	- 7
		C-707 Cabin Cool	A 4-06-64	7-17-64	6-20-64	
		A-741 H.X. Lch Cl	9-04-64	9-15-64	9-08-64	- 1
		C-709 Pwr Sup	A 7-29-64	7-31-64	7-15-64	- 2
		A-421 Reservoir	8-21-64	9-02-64	9-08-64	+ 1
		C-495 Wtr Tank	8-31-64	9-12-64	7-15-64	- 8
		A-483 Wtr Reg	A 5-25-64	7-25-64	9-08-64	+ 6
PARTL	SPARE COMPONENTS (SC-2 CAPE)		9-07-64	9-17-64	4-30-64	-19
PA-10	SC-6	SYSTEM (SM)	10-23-64	11-06-64	11-30-64	+ 3
PA-11	SC-7	LM	12-20-64	1-05-65	1-30-65	+ 3
PA-12	SC-8		2-20-64	3-05-65	3-28-65	+ 3
PA-13	SC-9		3-25-65	4-05-65	5-30-65	+ 7
PA-14	SC-10		5-15-65	5-25-65	7-30-65	+ 8
PA-15	SC-11		7-20-65	7-31-65	9-30-65	+ 8
PA-16	SC-12		10-01-65	10-12-65	11-30-65	+ 7
PARTL	AD-14	COMPONENTS	12-20-65	12-30-65	1-31-66	+ 5
PARTL	AD-15		2-20-66	3-03-66	3-28-66	+ 7

* 7 Day LIOH Cartridge will be retrofit.

** Estimate pending firm dates.

VENDOR AGE STATUS REPORT

CHART NO: 10-D

E.C.S.

DATE: 7 Aug.'64

AIRESEARCH

All AGE delivered except for the below noted items - See previous 8580-1 report for delivery dates.

PART NUMBER	NOMENCLATURE	UNIT NO	VENDOR W/S	AVAIL FOR INSTL	REQ'D FOR INSTL	SLACK
			S.S.T.			
E180172	REFRIG. SERVICE UNIT	2	9-01-64	9-12-64	8-10-64	- 4
E180172	REFRIG. SERVICE UNIT	4	9-15-64	9-25-64	10-10-64	+ 2
E180172	REFRIG. SERVICE UNIT	5	9-25-64	10-05-64	12-05-64	+ 8
			HANGAR			
E180004-3	SER UT SC COOL*	3	A6-05-64	7-30-64*	6-01-64	- 8
E180013-1	ECS PIA BENCH	2	9-01-64	9-11-64**	8-10-64	- 4
E180172	REFRIG. SERVICE UNIT	1	9-01-64	9-11-64	9-01-64	- 2
E180172	REFRIG. SERVICE UNIT	3	9-10-64	9-20-64	9-01-64	- 3

* Being tested by AiResearch

** New pump on order

MONTHLY SUMMARY

SYSTEM: Guidance & Control
SUBSYSTEM: Attitude Display
VENDOR: Lear-Siegler
DATE: 7 Aug. 1964
PAGE: 1 of 2

ENGINEERING STATUS

1. During this reporting period no major engineering problems occurred.

2. Attitude Indicators SN's 106 and 111 will now be used in the mission simulator rather than returned to the vendor for updating (Ref. 8580-41).

3. During this reporting period Lear was shut down for a two week vacation.

ASSEMBLY & DELIVERY STATUS

1. S/C 2 Status
All hardware installed.

2. S/C 3A Status
(a) Attitude Indicator SN-101 (-17 type) completed rework and was returned to MAC 23 July. The unit is currently in PIA prior to installation.

(b) Attitude Indicator SN-102 (-17 type) completed ATP and was shipped to MAC 27 July. The unit is now in PIA.

(c) Attitude Controllers SN's 200 and 203 are in-house at MAC awaiting completion of indicator PIA prior to installation.

3. S/C 3 Status
(a) Attitude Indicators SN's 117 and 119 passed PIA and were installed 17 July.

(b) Attitude Controllers SN's 206 and 208 are installed in this S/C completing all requirements.

4. SST-01A Status
(a) Attitude Indicator SN-115 completed rework in order to correct problems encountered during vibration phase of acceptance testing. Testing was completed and the unit shipped to MAC 20 July.

(b) Attitude Controller SN-207 in-house at MAC.

5. S/C 4 Status
(a) Attitude Indicators SN's 118-120 are in final assembly. Expect shipment to MAC 25 August (delay due to plant shutdown).

(b) Attitude Controllers 210 and 211 in-house at MAC.

6. HGR-02A
(a) Attitude Indicator SN-116 was again marginal during vibration phase of acceptance testing and will be reworked and tested. Now estimate Will Ship 10 Sept.

(b) Attitude Controller SN-209 in-house at MAC.

7. S/C 5 Status
   (a) Attitude Indicator SN-121 completed assembly and passed ATP but was damaged in preparation for shipment. The unit will be reworked and tested. Now estimate Will Ship 10 Sept.

   (b) Attitude Indicator SN-122 is in build-up stage (see Vendor Status Chart for estimated delivery).

   (c) Controllers SN's 212 and 213 in-house at MAC.

8. S/C 6 Status
   (a) Attitude Indicators SN's 104 and 105 are currently at MAC but will be returned to Lear for update into the -25 configuration.

   (b) Controllers SN's 214 and 215 are in-house at MAC.

9. S/C 7 Status
   (a) Attitude Indicator SN-107 (same disposition as 8(a)).

   (b) Attitude Indicator SN-123 (same disposition as 7(b)).

   (c) Attitude Controllers 216 and 217 are in-house at MAC.

10. Houston Requirement
    Indicators 110-112 and Controllers 201 and 202 have been shipped to Houston.

11. Hangar
    (a) Attitude Indicator SN-108 (same disposition as 8(a)).

    (b) Attitude Controller SN-218 in-house at MAC.

TEST STATUS

1. All qual and reliability testing has been completed.

AGE STATUS

1. All AGE equipment has been delivered.

GEMINI SPACECRAFT
CONTRACT NO. NAS 9-170

ATTITUDE DISPLAY - (VENDOR: LEAR-SIEGLER)

STATUS CHART

REPORT NO. [illegible]-42
LAST PROGRAM SCHEDULE CHANGE: 24 April 1964
STATUS AS OF: 27 Aug. 1964

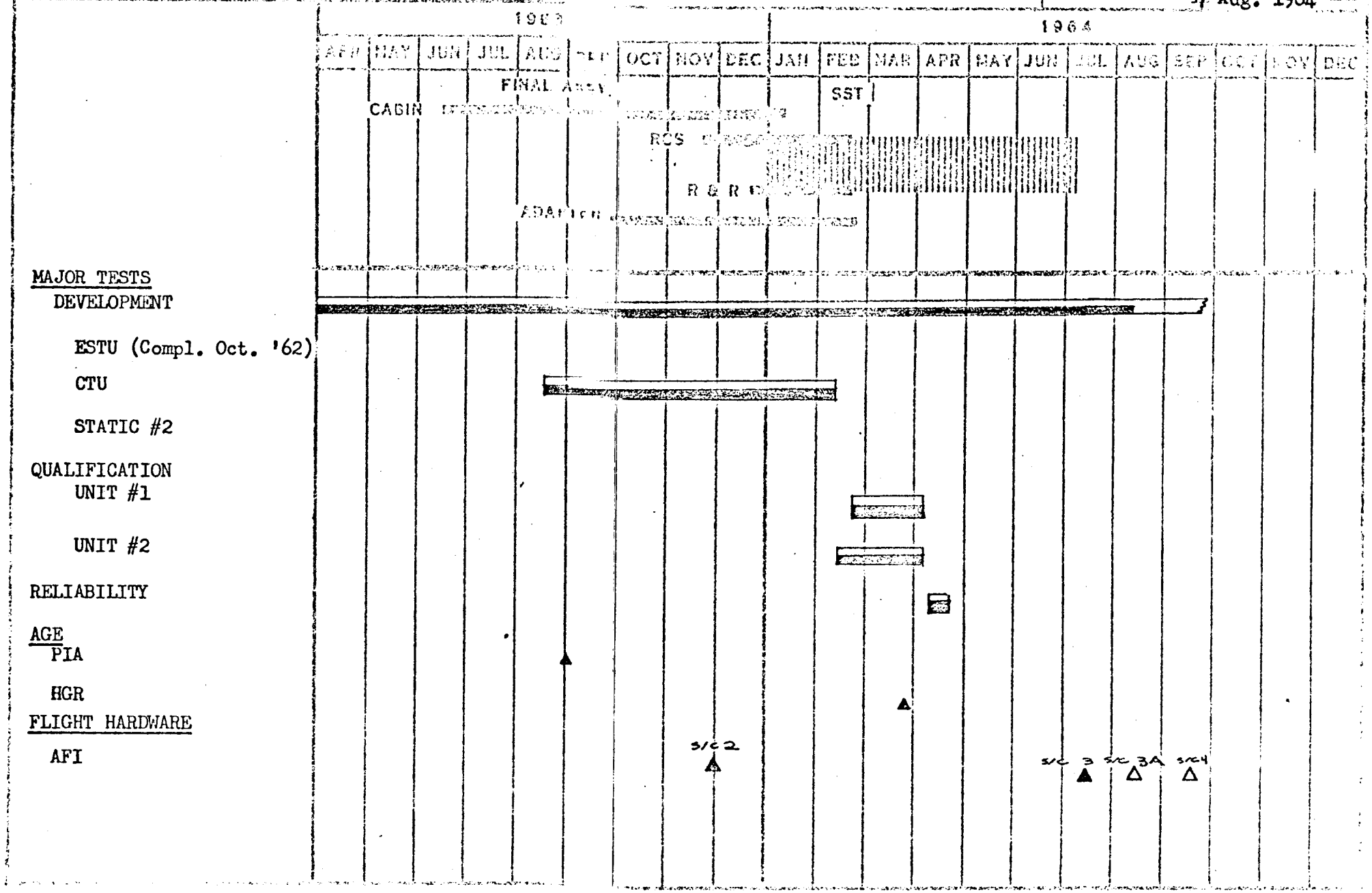

LEGEND
- ▽ Test Proposal Due
- ◊ Hardware Available
- □ Test Schedule
- ○ Report Due
- ☆ Report Approved

SOLID INDICATES ACTUAL

QUALIFICATION AND DEVELOPMENT TEST STATUS
ATTITUDE DISPLAY GROUP
LEAR-SIEGLER, INC.
SCD 52-87702

Date: 27 Aug. 1964

-1964-

ACTIVITY	WEEK ENDING
1. Test Proposal Due	7-63
2.	
3. Test Hardware Available	
4. EM-1	7-62
5. PP-1 (Reworked-Encapsulated Modules)	
6. PP-2 (Reworked-Encapsulated Modules)	
7. Testing	
8. Development (EM-1)	
9.	
10. Qual I (SN-001)	
11. Pressure	
12. Low Temp	
13. Vibration	
14. Acceleration	
15. RFI	
16. High Temp	
17. Humidity	
18. O_2 Atmos	
19. 44.7 G Shock	
20. Fungus	
21. Sand & Dust	
22. Rain	
23. Qual 2 (PP-2) (SN-005)	
24. Salt Spray	
25. Operation Life	
26.	
27. Overstress Reliability	
28.	
29.	
30. Test Report Due (Qual)	
31.	
32. Test Report Approved	

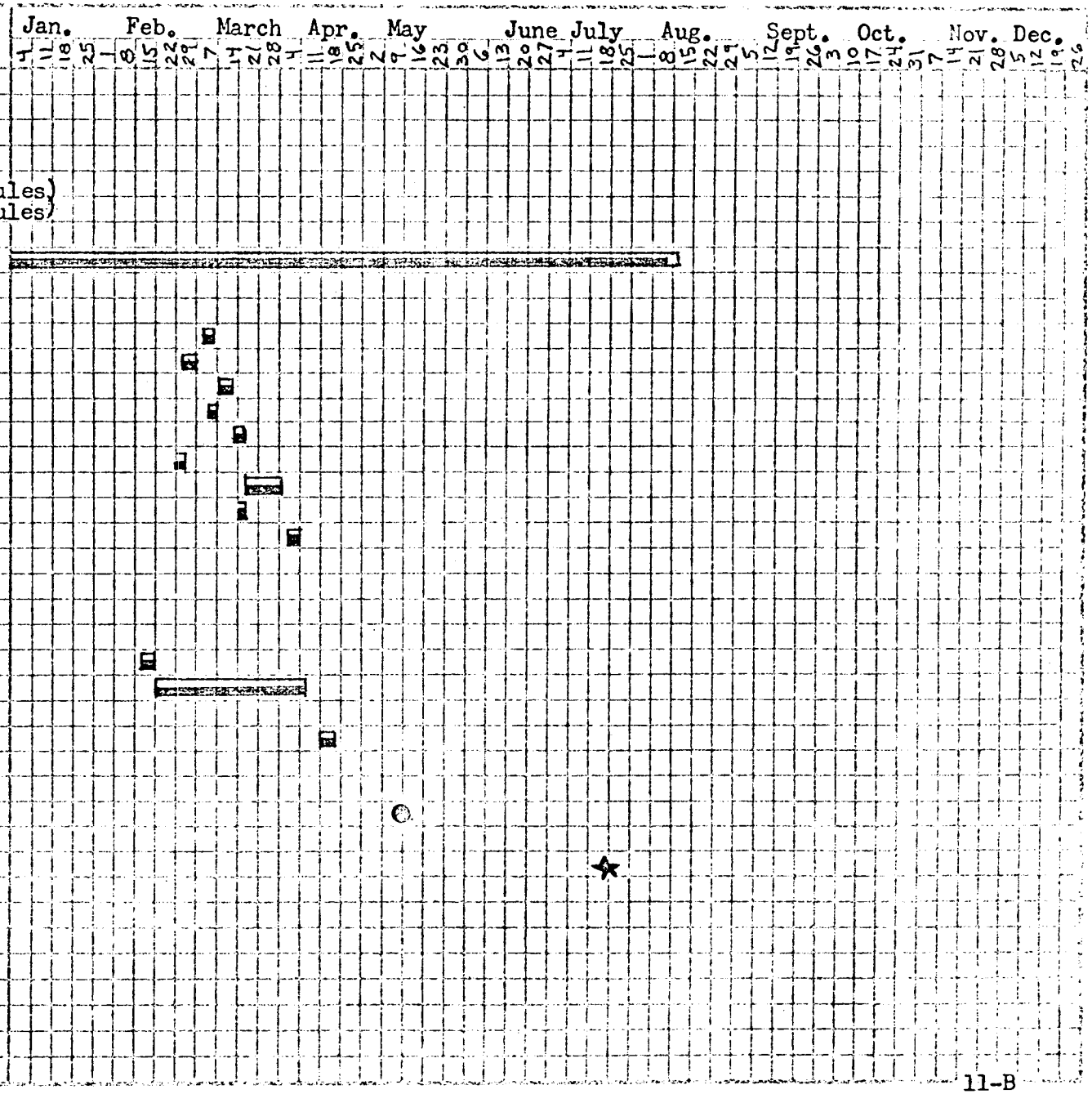

VENDOR DELIVERY STATUS REPORT

CHART NO: 11-C

SYSTEM - ATTITUDE DISPLAY

DATE: 7 August 1964

VENDOR - LEAR-SIEGLER

UNIT NO.	TYPE	USAGE	COMPONENT	VENDOR W/S	AVAIL. FOR INSTL.	REQ'D FOR INSTL.	SLACK
1-2	EP-1-2	ESTU	INDICATORS			A10-08-63	
3-4	EP-1-2	ESTU	CONTROLLERS			A10-08-63	
5	EP-3	IBM	INDICATOR			A11-10-63	
6	EP-3	IBM	CONTROLLER			A11-10-63	
7-8	PP-1-2	QUAL	CONTROLLERS			A02-11-63	
9-10	PP-2-4	CTU	INDICATORS			A02-25-64	
11-12	PP-3-4	CTU	CONTROLLERS			A02-25-64	
13-14	PP-1-3	ST-2	INDICATORS		A08-26-63		
15-16	PA-1-4	S/C 2	INDICATORS			A02-24-64	
17-18	PA-1-6	S/C 2	CONTROLLERS			A02-24-63	
19	PA-2	S/C 3A	INDICATOR	A07-23-64	08-10-64	05-08-64	-13
20	PA-3	S/C 3A	INDICATOR	A07-27-64	08-10-64	05-08-64	-13
21	PA-4	S/C 3A	CONTROLLER		A04-20-64	05-08-64	+3
22	PA-5	S/C 3A	CONTROLLER	A11-08-63	08-10-64	05-08-64	-13
23	PA-18	S/C 3	INDICATOR			A07-17-64	
24	PA-20	S/C 3	INDICATOR			A07-17-64	
25-26	PA-7-8	S/C 3	CONTROLLERS			A05-18-64	
27	PA-16	SST SPARE (2)	INDICATOR		A07-21-64	03-30-64	-17
28	PA-9	SST SPARE (2)	CONTROLLER		A03-25-64	03-30-64	0
[illegible]	PA-17	HGR SPARE (3)	INDICATOR	09-10-64	09-11-64	08-30-64	-2
30	PA-10	HGR SPARE (3)	CONTROLLER		A03-25-64	08-30-64	+23
31-32	PA-2-3	HOUSTON	CONTROLLERS		A12-30-63	04-30-64	+18
33-34	PA-11-13	HOUSTON	INDECATORS		A04-24-64	04-30-64	+1
35-36	PA-19-20	S/C 4	INDICATORS	08-25-64	09-08-64	06-02-64	-15
37-38	PA-11-12	S/C 4	CONTROLLER	A03-24-64	09-08-64	06-02-64	-15
39-40	PA-22-23	S/C 5	INDICATORS	09-10-64	09-24-64	08-20-64	-5
41-42	PA-13-14	S/C 5	CONTROLLERS	A03-24-64	09-24-64	08-20-64	-5
43	PA-9	HGR SPARE(4)	INDICATOR	10-30-64	11-02-64	11-30-64	+4
44	PA-19	HGR SPARE (4)	CONTROLLER		A05-08-64	11-30-64	+29
45-46	PA-5-6	S/C 6	INDICATORS	09-25-64	10-08-64	10-17-64	+1
47-48	PA-15-16	S/C 6	CONTROLLERS	A05-08-64	10-08-64	10-17-64	+1
49-50	PA-8-24	S/C 7	INDICATORS	10-30-64	11-13-64	12-09-64	+4
51-52	PA-17-18	S/C 7	CONTROLLERS	A03-31-64	11-13-64	12-09-64	+4
53-54	PA-10-25	S/C 8	INDICATORS	11-30-64	12-14-64	02-04-65	+7
55-56	PA-20-21	S/C 8	CONTROLLERS	09-15-64	12-14-64	02-09-65	+7
57-58	PA-7-26	S/C 9	INDICATORS	12-15-64	12-29-64	04-02-65	+14
59-60	PA-22-23	S/C 9	CONTROLLERS	09-15-64	12-29-64	04-02-65	+14
61-62	PA-28-14	S/C 10	INDICATORS	02-15-65	02-19-65	05-26-65	+13
63-64	PA-24-25	S/C 10	CONTROLLERS	11-15-64	02-19-65	05-26-65	+13
65-66	PA-15-29	S/C 11	INDICATORS	02-15-65	02-19-64	07-28-65	+21
67-68	PA-26-27	S/C 11	CONTROLLERS	01-15-65	02-19-65	07-28-65	+21
69-70	PA-30-31	S/C 12	INDICATORS	03-15-65	03-29-65	09-21-65	+25
71-72	PA-28-29	S/C 12	CONTROLLERS	03-15-65	03-29-65	09-21-65	+25

VENDOR AGE STATUS REPORT

SYSTEM - ATTITUDE DISPLAY

VENDOR - LEAR-SIEGLER

CHART NO: 11-D

DATE: 7 Aug. 1964

All AGE delivered - see previous 8580-1 Report for dates.

Chart No.: 12

MONTHLY SUMMARY

System: Spacecraft Structure
Subsystem: Heat Shield
Vendor: McDonnell E.E.D
Date: 7 August 1964

1. Production progress on Heat Shields for this reporting period is as follows:

SPACECRAFT NO. 5 - Final x-ray indicated numerous voids in the ablative fill of this Heat Shield. The filling of these voids is proceeding on a low priority basis. Estimated completion of this Shield 25 August 1964.

SPACECRAFT NO. 6 - Prefitting of Titanium and Fibrite Rings now in process with Ring Assembly and Bonding to follow.

VENDOR DELIVERY STATUS REPORT

CHART NO.: 12-C

SYSTEM: HEAT SHIELD

DATE: 8-07-64

VENDOR: MCDONNELL AIRCRAFT

Unit Number	Type	Usage	Component	Avail For Instl	Req'd For Instl	Slack
1	PP-1	MAC	Development		A08-01-62	
2	PP-2	MAC	Development		A02-13-63	
3	PA-1	STATIC -4			A03-22-63	
4	PA-2	STATIC -3			A05-10-63	
5	PA-3	SC-1			A06-22-63	
6	PA-4	SC-2R			A12-20-63	
7	PA-5	STATIC -4 (2)			A12-28-63	
8	PA-6	STATIC -3 (2)			A12-05-63	
9	PA-7	SC-3			A02-13-64	
10	PA-8	SC-4			A07-10-64	
11	PA-9	SC-5		08-25-64	10-06-64	+ 6
12	PA-10	SC-6		11-24-64	12-01-64	+ 1
13	PA-11	SC-7		01-12-65	01-19-65	+ 1
14	PA-12	SC-8		03-05-65	03-12-65	+ 1
15	PA-13	SC-9		05-04-65	05-11-65	+ 1
16	PA-14	SC-10		06-24-65	07-01-65	+ 1
17	PA-15	SC-11		08-24-65	08-31-65	+ 1
18	PA-16	SC-12		10-20-65	10-27-65	+ 1

Static 5 and Static 2 to use aluminum shield (52-04212)

MONTHLY SUMMARY

SYSTEM: Communications
SUBSYSTEM: UHF Voice T/R
VENDOR: Collins Radio, Cedar Rapids, Iowa
DATE: 7 August 1964

ENGINEERING STATUS

1. The changes in the UHF transmitter which are currently being tested are: (1) grounding the emitter rather than the base of transistor Q3 and (2) deleting resistor R9 and capacitor C21. Capacitor C44 will become selective in that it will be used only on transistors which exhibit excessive power output variations over the temperature range.

   (a) Resistor R18 is also being added across inductor L5 in the oscillator output of inductor L5 of the transmitter. The value will be selective with a nominal value of 3.3K OHMS. This circuit redesign has been incorporated in the driver stage preceding the output tubes.

   (b) MAC Engineering concurred with CRC that the UHF equipment changes do not affect the results of previous design approval tests. Therefore, a rerun will not be necessary on any portion of the DAT.

2. The four UHF transmitters which CRC modified in an effort to verify the performance of their proposed changes are continuing to operate in-spec.

   (a) CRC's believes that aging of the foam was a cause of the power output loss of the transmitters. The latest check, 6 August 1964, on the transmitters disclosed that although there has been a small loss of power output the transmitters have remained in spec. This indicates that partial selection of components is necessary to insure specified performance.

3. CRC's submittal of their vibration test procedure was received by MAC 5 August 1964.

   (a) CRC originally believed the test would be performed while the system was inoperative. A delay resulted when CRC received MAC's directive that the system would be required to be operating during vibration tests. MAC approval of the procedure is expected to be issued approximately 10 August 1964.

   (b) CRC completed fabrication of the vibration test fixture for the UHF radio the week of 27 July 1964.

4. The hold which had been in effect on the UHF radio due to the plating problem was removed 27 July 1964.

ASSEMBLY AND DELIVERY STATUS

1. There were no UHF Voice T/R deliveries during the reporting period. The incorporation of a fix on the transmitters, a delay in submitting their vibration test procedure, and problems encountered while scheduling equipment on the vibration table contributed to CRC's no delivery status the past month.

2. S/N -101 (-9) and S/N -103 (-11) were installed in the cabin of S/C 3A 29 July 1964.

3. S/N's 105, 106 and 107 have been foamed and are currently in final testing prior to vibration testing. The three units are scheduled to be vibrated 10 August 1964.

   (a) Their ATP schedules are as follows: SN-105 14 August, SN-106 20 August, and SN-107 27 August 1964.

4. CRC has also scheduled SN-108 for ATP 3 September 1964.

TEST STATUS

1. SN-12, has been foamed and is currently operating in spec. SN-12 is scheduled to begin its ATP 13 August 1964 following successful completion of its vibration test.

   (a) SN-12 will be held and begin the temperature portion of the overstress reliability with SN-13 the week of 24 August.

2. SN-13's transmitter is currently having the last of the fixes incorporated. After incorporation the unit will be foamed and its ATP will begin 20 August 1964.

   (a) SN-13 is expected to begin overstress reliability testing the week of 24 August 1964. Testing of SN-12 and -13 and their redesigned driver stage is expected to verify the adequacy of the redesign with respect to qualification testing.

3. SN-10 was PIA'd at MAC 14 July 1964 and hand carried to Houston for use in ST-5. SN-5 is currently in-house at CRC. This unit will be returned to MAC for disposition.

4. CRC's qualification test report is expected to be submitted to MAC during October 1964. The reliability test report is expected to be submitted November 1964.

5. A production prototype UHF radio is required for a Gemini immersion qualification test. This test will be performed at MAC St. Louis. At the present time there is no firm schedule for this test.

110

GEMINI SPACECRAFT
CONTRACT NO. NAS 9-170

UHF VOICE T/R (VENDOR: COLLINS RADIO)

STATUS CHART

REPORT NO. 8[illegible] -42
LAST [illegible]
SCHED 24 April 1964
STAT 7 August 1964

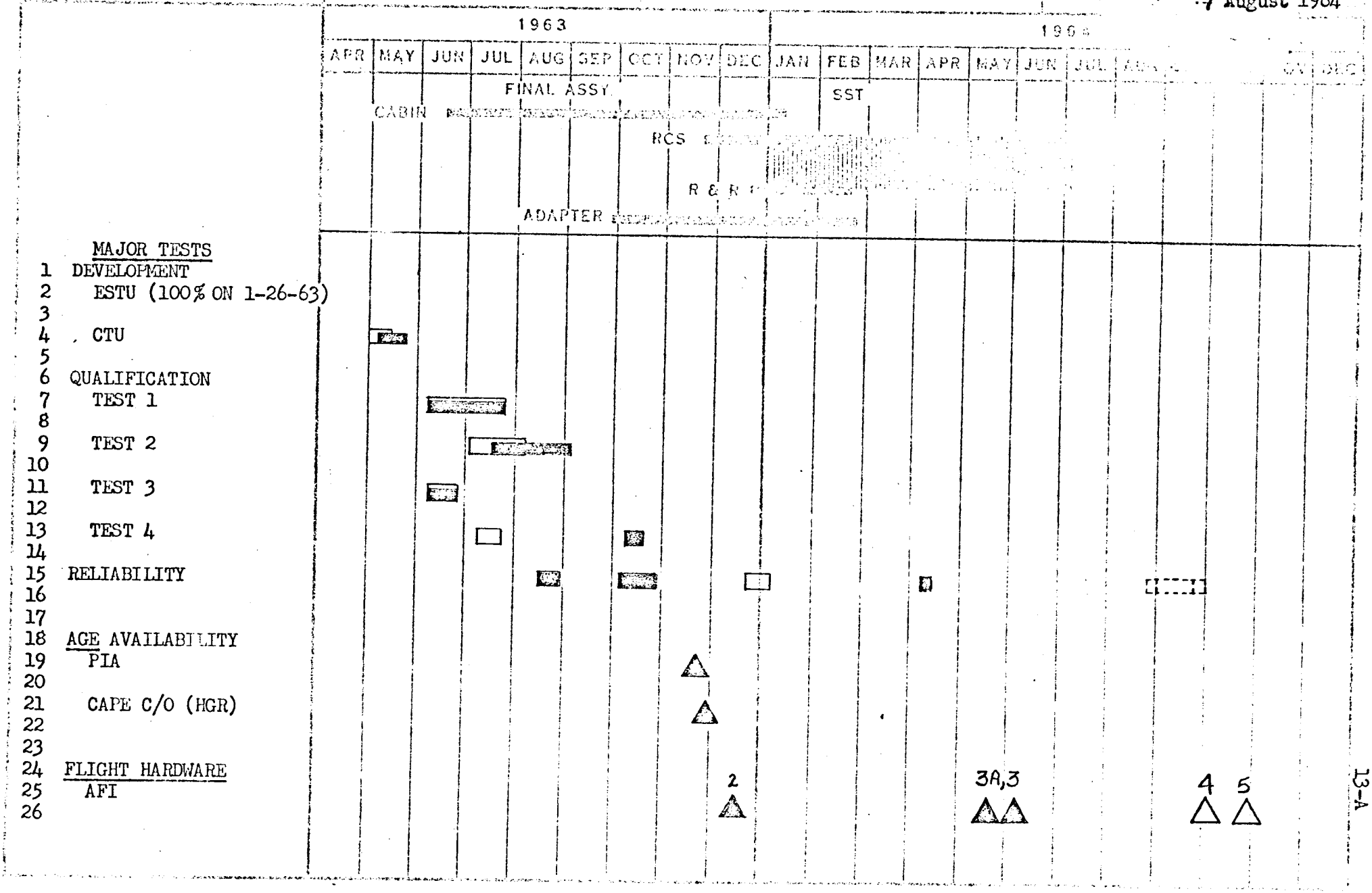

13-A

LEGEND:

- ▽ TEST PROPOSAL DUE
- ◊ HARDWARE AVAIL.
- ▭ TEST SCHEDULE
- ○ REPORT DUE
- ✡ REPORT APPROVED

SOLID INDICATES ACTUAL

QUALIFICATION AND DEVELOPMENT TEST STATUS

UHF VOICE T/R
COLLINS RADIO COMPANY
SCD 52-85709

7 August 1964

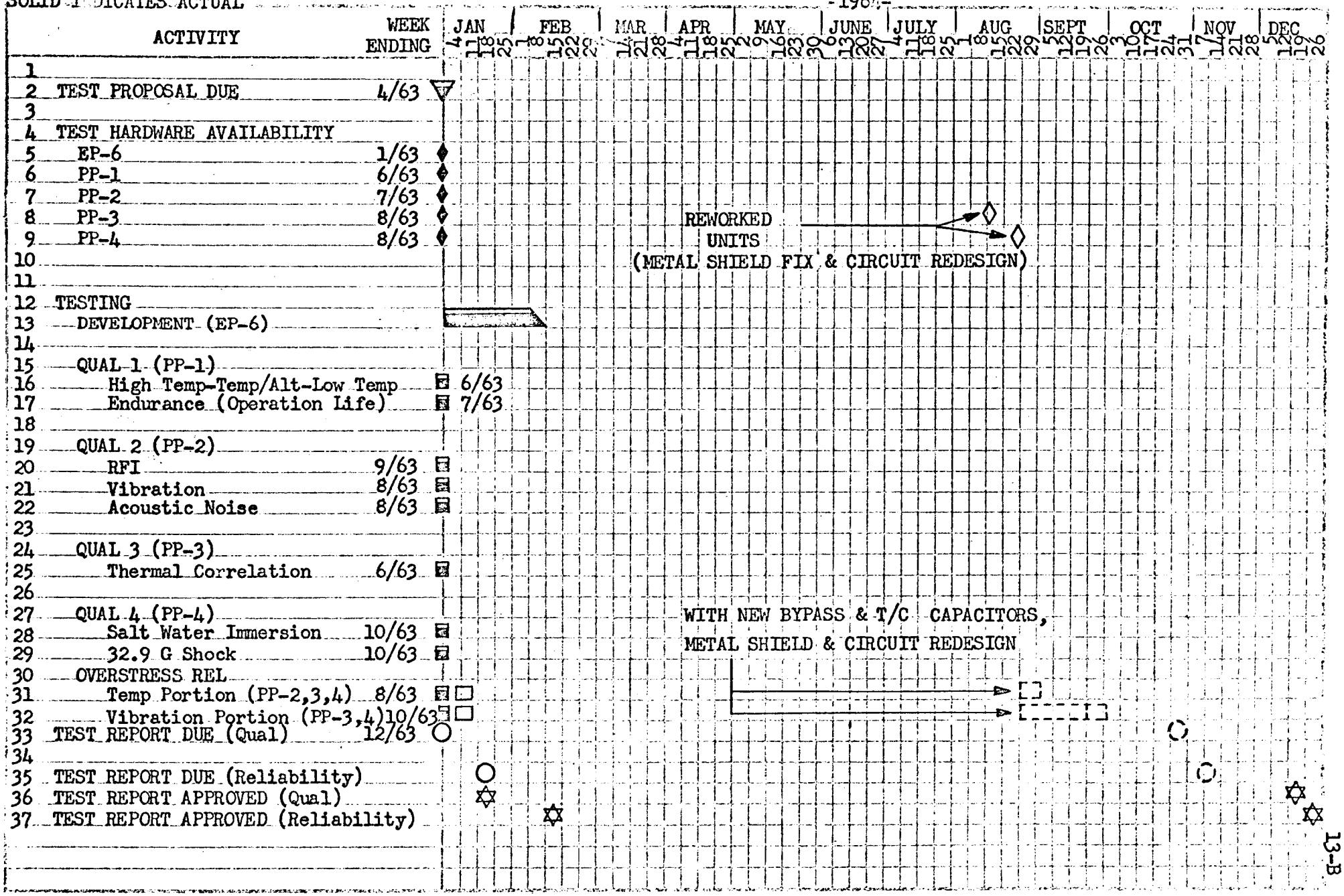

VENDOR DELIVERY STATUS REPORT
UHF VOICE T/R
COLLINS

CHART NO: 13-C

DATE: 8-07-64

UNIT NO.	TYPE	S/N	USAGE COMPONENT	VENDOR W/S	AVAIL FOR INSTL	REQ'D FOR INSTL	SLACK
1	EP-1	1	ESTU			A03-01-63	
2	EP-2	2	ESTU			A03-01-63	
3	EP-3	3	CTU			A04-26-63	
4	EP-4	4	CTU			A04-26-63	
5	EP-5	5	ST-5			A11-19-63	
6	PP-1	10	VENDOR QUAL (ST-5)	A07-14-64		A06-03-63	
7	PP-2	11	VENDOR QUAL			A08-01-63	
8	PP-3	12	VENDOR QUAL	*08-28-64		A08-13-63	
8	PP-3	12	VENDOR REL.			A12-22-63	
9	PP-4	13	VENDOR QUAL			A08-29-63	
9	PP-4	13	VENDOR REL.	*08-28-64		A12-22-63	
10	PP-5	14	ST-5			A11-29-63	
11	PA-1	100	SC-2			A12-15-63	
12	PA-3	102	SC-3			A03-23-64	
13	PA-5	104	SC-3			A06-27-64	
14	PA-2	101	SC-3A			A07-29-64	
15	PA-4	103	SC-3A			A07-29-64	
16	PA-6	105	SPARE (SST)	08-19-64	08-26-64	03-31-64	-21
17	PA-7	106	SPARE (HGR)	08-28-64	09-04-64	06-30-64	-11
18	PA-8	107	SC-4	09-11-64	09-18-64	04-21-64	-21
19	PA-9	108	SC-4	09-25-64	10-02-64	04-21-64	-23
20	PA-10	109	SC-5	10-09-64	10-16-64	07-15-64	-12
21	PA-11	110	SC-5	10-23-64	10-30-64	07-15-64	-15
22	PA-12	111	**SPARE (MACOIP)	11-06-64	11-13-64	04-30-64	-20
23	PA-13	112	SC-6	11-20-64	11-27-64	09-17-64	-10
24	PA-14	113	SC-6	12-04-64	12-11-64	09-17-64	-12
25	PA-15	114	SPARE (SST)	12-18-64	12-26-64	05-30-64	-26
26	PA-16	115	SC-7	01-06-65	01-13-65	11-14-64	- 8
27	PA-17	116	SC-7	01-15-65	01-22-65	11-14-64	-10
28	PA-18	117	SPARE (SST)	01-29-65	02-05-65	08-31-64	-23
29	PA-19	118	SPARE (HGR)	02-12-65	02-19-65	08-31-64	-25
30	PA-20	119	SC-8	02-26-65	03-05-65	01-04-65	- 9
31	PA-21	120	SC-8	03-12-65	03-19-65	01-04-65	-11
32	PA-22	121	SPARE (HGR)	03-26-65	04-02-65	11-30-64	-18
33	PA-23	122	SC-9	04-01-65	04-16-65	03-03-65	-10
34	PA-24	123	SC-9	04-23-65	04-30-65	03-03-65	- 6
35	PA-25	124	SC-10	05-05-65	05-12-65	04-23-65	- 3
36	PA-26	125	SC-10	05-14-65	05-21-65	04-23-65	- 4
37	PA-27	126	SC-11	05-26-65	06-02-65	06-24-65	+ 3
38	PA-28	127	SC-11	06-04-65	06-11-65	06-24-65	+ 2
39	PA-29	128	SC-12	06-16-65	06-23-65	08-19-65	+ 8
40	PA-30	129	SC-12	06-25-65	07-02-65	08-19-65	+ 6
41	PA-31	130	***ST-2	07-07-65	———	———	
42	PA-32	131	***ST-2	07-16-65	———	———	

*Rework to incorporate a metal shield in addition to bypass and T/C capacitors prior to Reliability Assurance Tests.
**ST-5 SPARE (Stocked at MAC St. Louis)
***ST-2 Currently on stop order.

VENDOR AGE STATUS REPORT
COMMUNICATION SYSTEM
COLLINS

CHART NO: 13,
14,
15-D
DATE: 8-7-64

ALL AGE DELIVERED - SEE PREVIOUS 8580-1-39 REPORT FOR DATES

MONTHLY SUMMARY

SYSTEM: Communications
SUBSYSTEM: HF Voice T/R
VENDOR: Collins Radio, Cedar Rapids, Iowa
DATE: 7 August 1964

ENGINEERING STATUS

1. The gold plating problem which developed on SN-106 has been analyzed by CRC and they are in the process of changing their method.

   (a) A cyanide copper strike will be used in place of the copper brightener previously used. This will give the area around the solder tear strips more ductility.

   (b) The problem was caused by contaminated plating solutions, grease from hands of personnel performing plating operations and excessive brightener applied to final solution. Controls are being incorporated to eliminate recurrence.

   (c) The hold which had been in effect was removed from the HF radio 27 July 1964.

2. CRC's vibration test procedure was received by MAC 5 August 1964. MAC is expected to approve the procedure approximately 10 August 1964.

ASSEMBLY AND DELIVERY STATUS

1. There were no HF radios delivered during the reporting period. This situation can be attributed to the plating problem and submittal of the vibration test procedure.

2. SN-106 is expected to be plated 7 August 1964. Following plating SN-106 will be held for vibration testing. The ATP for SN-106 is scheduled 14 August 1964.

3. SN-107 is currently in repair and is scheduled to begin ATP 20 August 1964.

4. SN's 108, 109 and 110 have been foamed and are presently in final testing prior to vibration testing and ATP. SN-108 is scheduled for ATP 27 August 1964, SN-109 3 September 1964 and SN-110 10 September 1964.

TEST STATUS

1. CRC expects to submit their HF Voice T/R qualification test report to MAC during October 1964. CRC's reliability test report is expected to be submitted in November 1964.

   (a) Both reports are currently in rough draft form.

2. CRC's ATP schedules are constrained by the availability of the vibration table for vibration tests.

   (a) HF Voice T/R units will be vibrated on a non-interference type schedule. They will be scheduled when they do not interfer with the program presently employing the vibration table.

3. A production prototype HF radio will be used in a Gemini immersion qualification test. Wiring diagrams are presently being drawn for this test but there is no firm test schedule.

116

CONTRACT NO. NAS 9-17

HF VOICE T/R - (VENDOR: COLLINS RADIO)

24 April 19

7 August 19

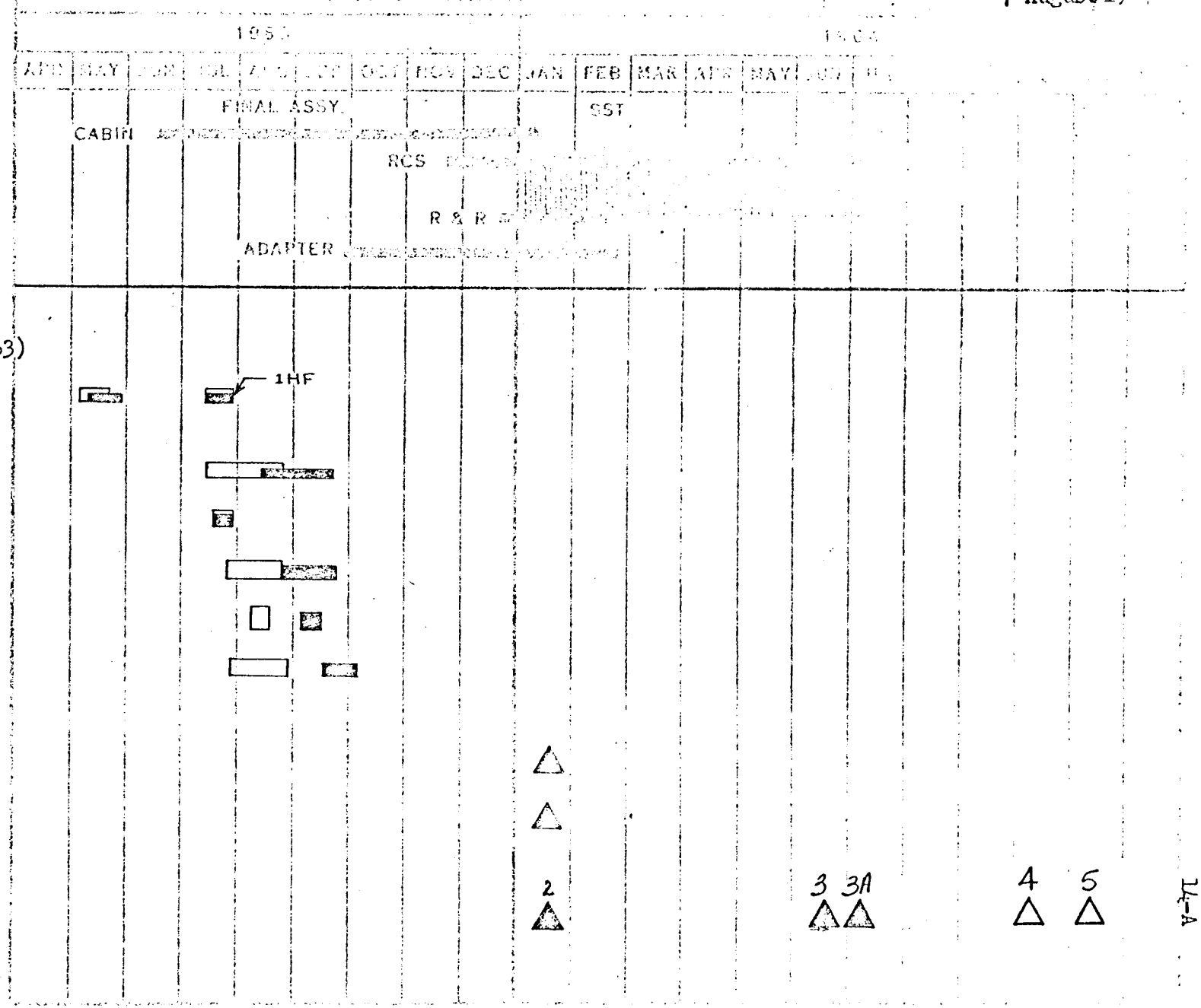

MAJOR TESTS

1 DEVELOPMENT
2 ESTU (100% ON 1-26-63)
3
4 CTU
5
6 QUALIFICATION
7 TEST 1
8
9 TEST 2
10
11 TEST 3
12
13 TEST 4
14
15 RELIABILITY
16
17
18 AGE AVAILABILITY
19 PIA
20
21 CAPE C/O (HGR)
22
23
24 FLIGHT HARDWARE
25 AFI
26

14-A

LEGEND
- ▽ TEST PROPOSAL DUE
- ◊ HARDWARE AVAIL.
- ▭ TEST SCHEDULE
- ○ REPORT DUE
- ✡ REPORT APPROVED

SOLID INDICATES ACTUAL

QUALIFICATION AND DEVELOPMENT TEST STATUS

HF VOICE T/R
COLLINS RADIO COMPANY
SCD 52-85710

8580-1-42
24 April 1964
7 Aug. 1964

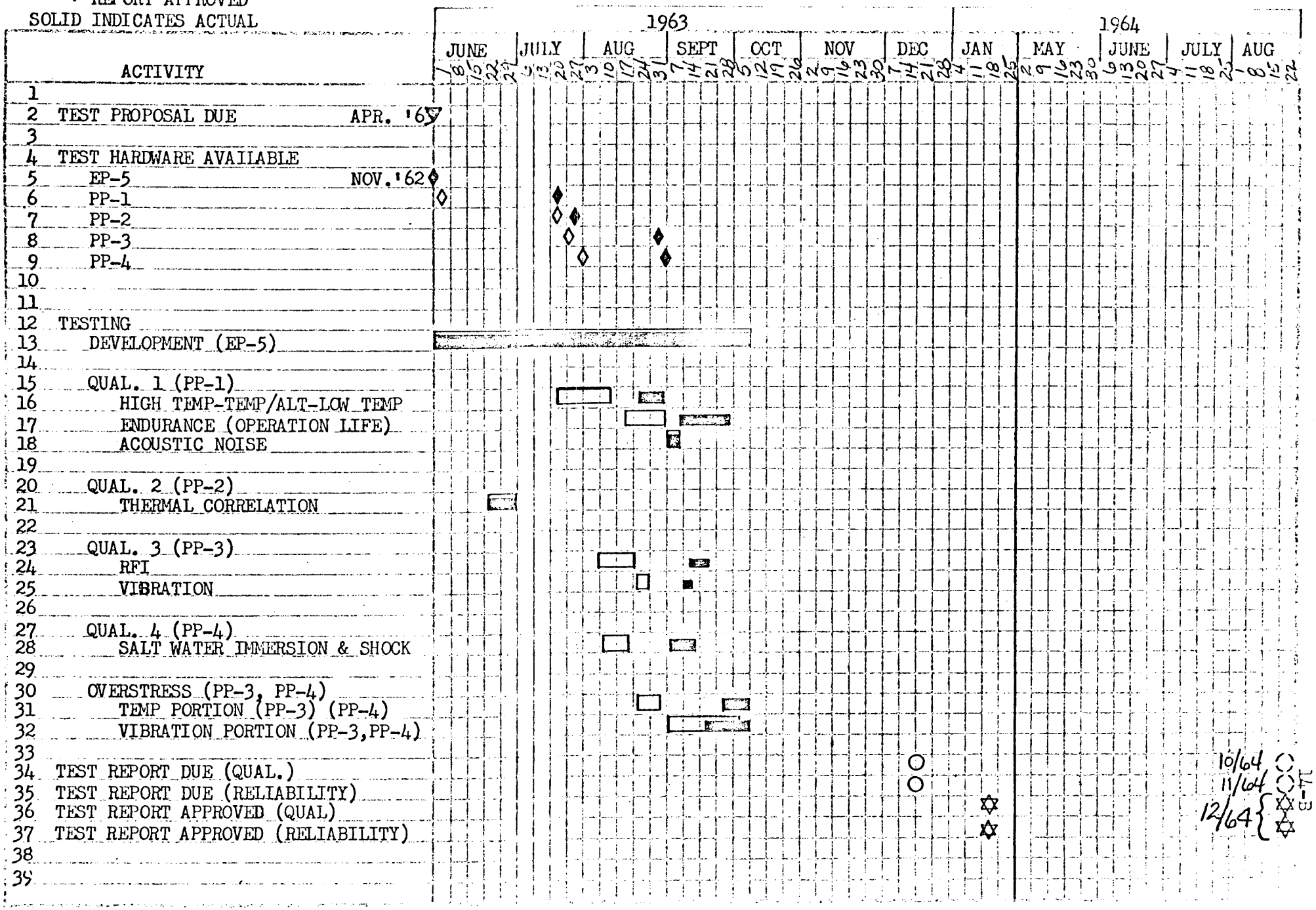

VENDOR DELIVERY STATUS REPORT
HF VOICE T/R
COLLINS

CHART NO: 14-C

DATE: 8-7-64

UNIT NO	TYPE	S/N	USAGE COMPONENT	VENDOR W/S	AVAIL FOR INSTL	REQ'D FOR INSTL	SLACK
1-2	EP-1+2	1-2	ESTU			A12-07-62	
3-4	EP-3+4	3-4	CTU			A04-08-63	
5	EP-5	5	VENDOR DEVELOPMENT			A04-15-63	
6	PP-1	10	VENDOR QUAL			A08-12-63	
7	PP-2	11	VENDOR QUAL			A08-21-63	
8	PP-3	12	VENDOR QUAL			A08-29-63	
9	PP-4	13	VENDOR QUAL			A08-29-63	
10	PP-5	14	ST-5			A11-19-63	
11	PA-3	102	SC-2			A02-06-64	
12	PA-1	*100	SPARE (HOU03E) ST-5			A02-27-64	
13	PA-2	101	SC-3			A06-09-64	
14	PA-5	104	SC-3 (AD)			A06-18-64	
15	PA-6	105	SC-3A			A07-03-64	
16	PA-4	103	SC-3A (AD)			A07-06-64	
17	PA-7	106	SPARE (SST)	08-21-64	08-28-64	03-31-64	-21
18	PA-8	107	SPARE (HGR)	09-04-64	09-11-64	06-30-64	-10
19	PA-9	108	SC-4	09-23-64	09-30-64	04-21-64	-23
20	PA-10	109	SC-4 (AD)	10-02-64	10-09-64	07-06-64	-14
21	PA-11	110	SC-5	10-16-64	10-23-64	07-15-64	-15
22	PA-12	111	SPARE (SST)	10-30-64	11-06-64	05-30-64	-23
23	PA-13	112	SC-5 (AD)	11-13-64	11-20-64	09-08-64	- 8
24	PA-14	113	SPARE (SST)	11-27-64	12-04-64	08-31-64	-13
25	PA-15	114	SPARE (HGR)	12-11-64	12-18-64	08-31-64	-15
[illegible]	PA-16	115	SC-6	12-24-64	12-31-64	09-17-64	-15
27	PA-17	116	SC-7	01-08-65	01-15-65	11-16-64	- 9
28	PA-18	117	SPARE (HGR)	01-22-65	01-29-65	11-30-64	- 9
29	PA-19	118	SC-6 (AD)	02-05-65	02-12-65	11-23-64	-11
30	PA-20	119	AD-13	02-19-65	02-26-65	12-02-64	-12
31	PA-21	120	SC-7 (AD)	03-05-65	03-12-65	01-02-65	-10
32	PA-22	121	SC-8	03-19-65	03-26-65	01-04-65	-12
33	PA-23	122	SC-8 (AD)	04-02-65	04-09-65	02-06-65	- 9
34	PA-24	123	SC-9	04-16-65	04-23-65	03-03-65	- 7
35	PA-25	124	SC-10	04-30-65	05-07-65	04-23-65	- 2
36	PA-26	125	SC-9 (AD)	05-14-65	05-21-65	04-26-65	- 4
37	PA-27	126	SC-10 (AD)	05-28-65	06-04-65	06-17-65	+ 2
38	PA-28	127	SC-11	06-09-65	06-16-65	06-24-65	+ 1
39	PA-29	128	SC-11 (AD)	06-18-65	06-25-65	08-14-65	+ 7
40	PA-30	129	SC-12	06-30-65	07-07-65	08-19-65	+ 6
41	PA-31	130	SC-12 (AD)	07-09-65	07-16-65	10-07-65	+12
42	PA-32	131	AD-14	07-21-65	07-28-65	11-29-65	+18
43	PA-33	132	MISCELLANEOUS	07-30-65	--------	--------	

AD - Adapter

* - Shipped to Houston as a back-up for ST-5

MONTHLY SUMMARY

SYSTEM: Communications
SUBSYSTEM: Voice Control Center
VENDOR: Collins Radio, Cedar Rapids, Iowa
DATE: 7 August 1964

ENGINEERING STATUS

1. MAC received CRC's proposed vibration test procedure 5 August 1964. MAC approval of the procedure is expected to be issued approximately 10 August 1964.

   (a) CRC completed fabrication of the vibration test fixture for the VCC the week of 27 July 1964.

ASSEMBLY AND DELIVERY STATUS

1. CRC shipped SN-102 (SC-4) to MAC 22 July 1964. SN-102 is expected to complete its PIA at MAC 8 August 1964.

2. SN-104 was returned to CRC for rework of the mode switch 16 July 1964. At present CRC has no tentative reship date for SN-104.

3. SN's 103, 105, and 107 were returned to CRC for rework prior to the reporting period. They have completed preliminary testing and are currently being held to begin vibration testing.

   (a) SN-103 is scheduled for ATP 14 August, SN-105 18 August and SN-107 20 August 1964.

4. Retrofit units SN-100 and SN-104 are also in-house at CRC. CRC does not have a tentative will ship date for either unit.

5. Following assembly completion of its mike amplifier module SN-109 will begin preliminary testing prior to vibration. SN-109 is scheduled for ATP 21 August 1964.

6. SN-110 is currently in preliminary testing prior to start of vibration testing. SN-110 is scheduled for ATP 25 August 1964.

7. SN-111 is presently in final assembly and is scheduled for ATP 14 September 1964.

TEST STATUS

1. VCC qualification test report is expected to be submitted to MAC the month of October 1964. VCC reliability test report is expected to be submitted in November 1964.

   (a) Both reports are presently in rough draft form.

121

GEMINI SPACECRAFT

CONTRACT NO. NAS 9-170

VOICE CONTROL CENTER (VENDOR: COLLINS RADIO)

STATUS CHART

REPORT NO. 8580-1 -42

LAST PROGRAM SCHEDULE CHANGE: 24 April 1964

STATUS AS OF: 7 August 1964

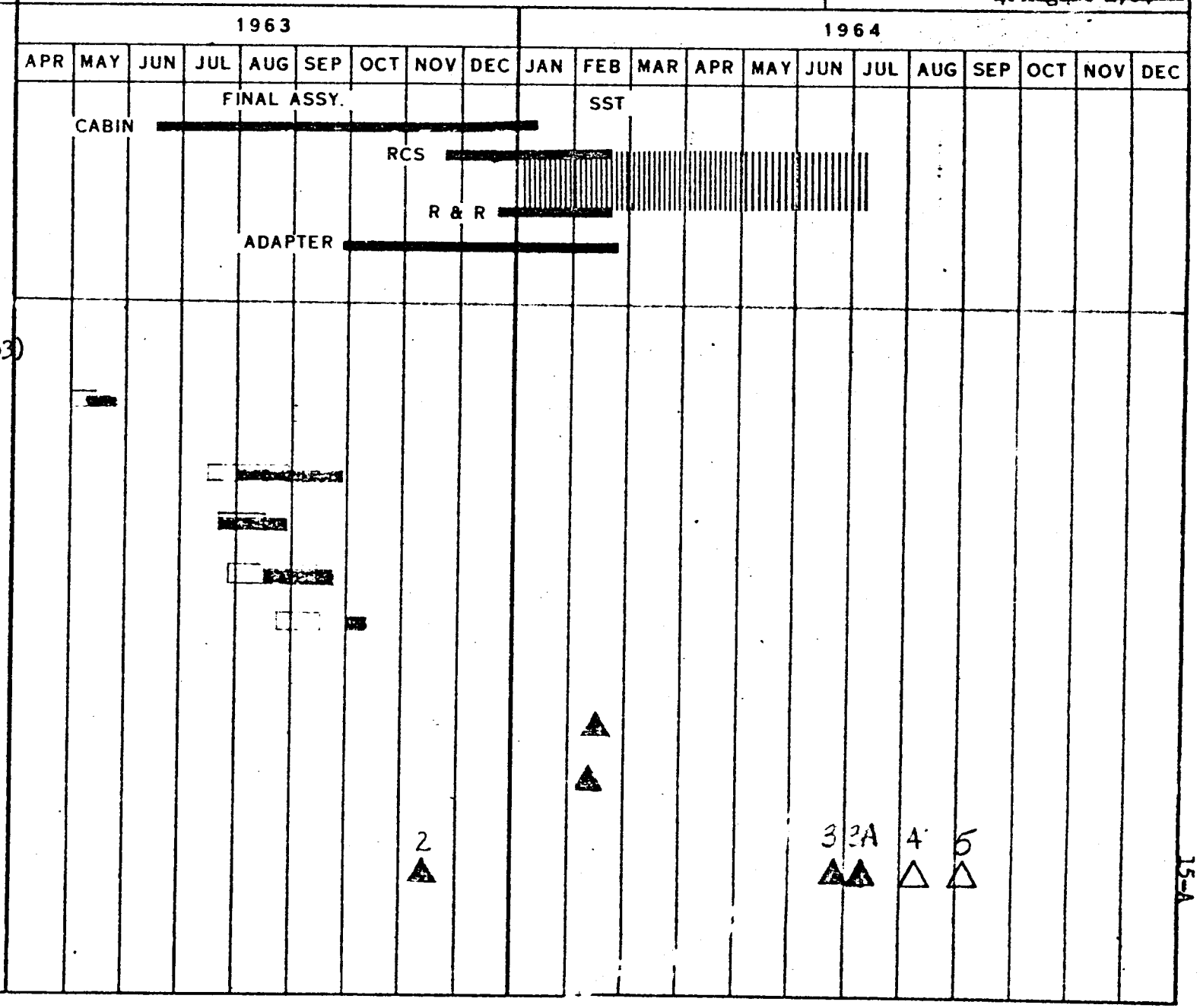

QUALIFICATION AND DEVELOPMENT TEST STATUS

VOICE CONTROL CENTER
COLLINS RADIO COMPANY
SCD 52-85712

8580-1-42
24 April 1964
7 August 1964

LEGEND
- ▽ TEST PROPOSAL DUE
- ◊ HARDWARE AVAIL.
- ▭ TEST SCHEDULE
- ○ REPORT DUE
- ✡ REPORT APPROVED

SOLID INDICATES ACTUAL

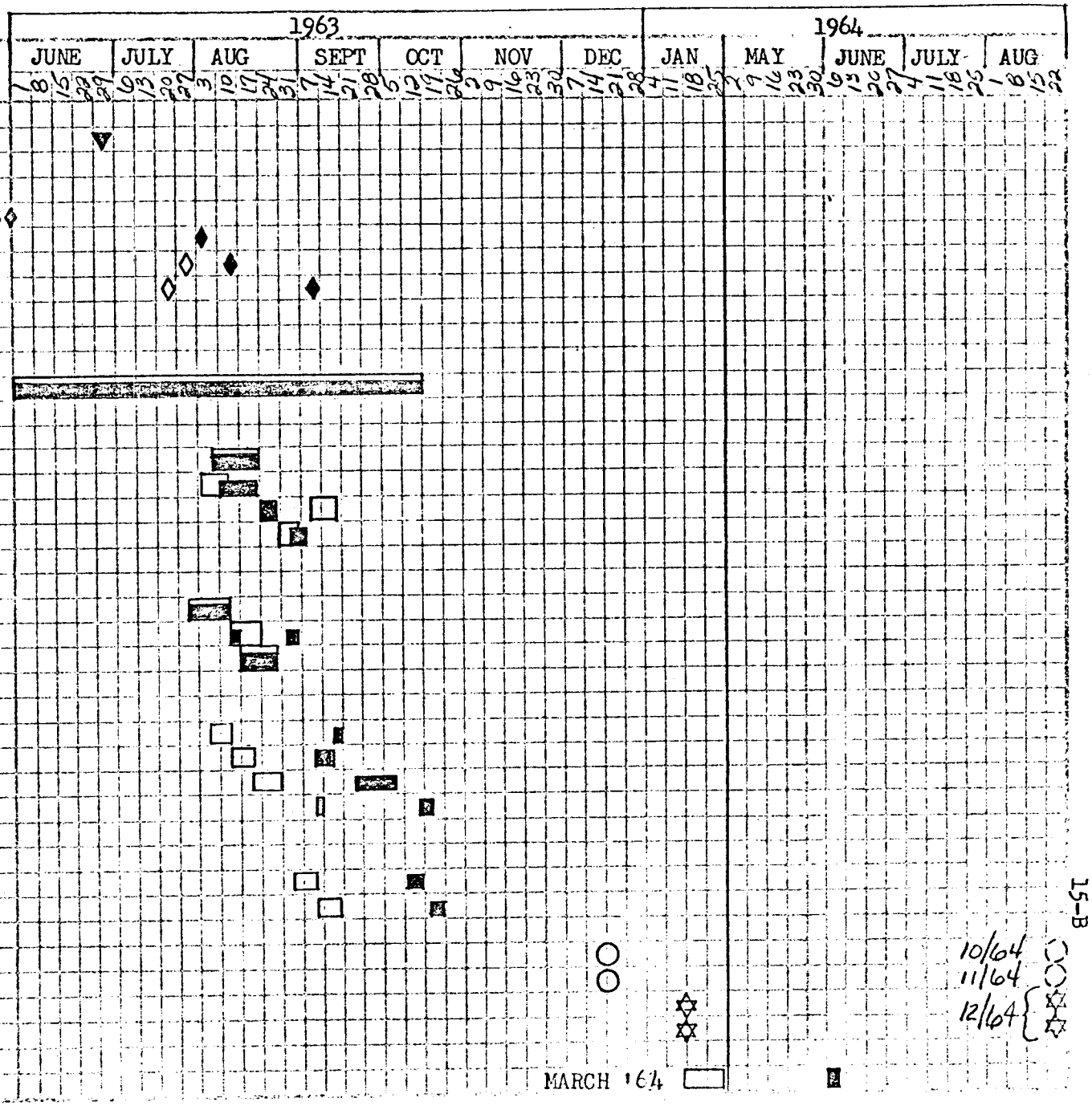

VENDOR DELIVERY STATUS REPORT
VOICE CONTROL CENTER
COLLINS

CHART NO: 15-C

DATE: 8-07-64

UNIT NO	TYPE	S/N	USAGE COMPONENT	VENDOR W/S	AVAIL FOR INSTL	REQ'D FOR INSTL	SLACK
1	EP-1	1	ESTU			A01-23-63	
2	EP-4	4	VENDOR ENGR. QUAL			A01-24-63	
3	EP-2	2	CTU			A04-15-63	
4	EP-3	3	ST-5			A11-13-63	
5	PP-1	10	VENDOR QUAL			A07-29-63	
6	PP-2	11	VENDOR QUAL			A08-08-63	
7	PP-3	12	VENDOR QUAL			A09-05-63	
8	PP-4	13	SC-2			A11-25-63	
9	PA-2	101	SC-3			A06-27-64	
10	PA-9	108	SC-3A			A07-10-64	
11	PA-7	106	SPARE (SST)			A07-02-64	
12	PA-3	102	SC-4	A07-22-64	A08-08-64	04-30-64	-14
13	PA-4	103	SPARE (SST)	08-21-64	08-28-64	03-31-64	-21
14	PA-6	105	SC-5	08-28-64	09-04-64	07-22-64	- 6
15	PA-8	107	SPARE (HGR)	09-02-64	09-09-64	06-30-64	-10
16	PA-10	109	SC-6	09-04-64	09-11-64	09-18-64	+ 1
17	PA-1	*100	SPARE (HGR)	09-18-64	09-25-64	08-31-64	- 3
18	PA-5	*104	SC-7	10-02-64	10-09-64	11-06-64	+ 4
19	PA-11	110	SC-8	10-16-64	10-23-64	01-05-65	+10
20	PA-12	111	SC-9	10-30-64	11-06-64	03-03-65	+16
21	PA-13	112	SC-10	11-13-64	11-20-64	04-23-65	+22
22	PA-14	113	SC-11	11-27-64	12-04-64	06-24-65	+28
23	PA-15	114	SC-12	12-11-64	12-18-64	08-19-65	+33
24	PA-16	115**	ST-2	12-24-64	12-31-64	———	

*Returned to Collins for repair (Rework of Astro Mode Switches & Knobs, also replacement of Transformers).

**ST-2 is currently on stop order.

MONTHLY SUMMARY

SYSTEM: Communication
SUBSYSTEM: Digital Command
VENDOR: Motorola
Scottsdale, Arizona
DATE: 7 August 1964

ENGINEERING STATUS

1. New power transistor modules were potted with a fresh supply of material, temperature cycle tested, and installed in DCS SN-108. There was no evidence of cracks in these modules.

ASSEMBLY AND DELIVERY STATUS

1. Motorola is expected to ship SN-108 (SC-4) to MAC 14 August 1964.

   A. SN-108's delivery delay is due to a problem of the receiver module fit. The power supply and receiver modules did not meet the .008 inch maximum tolerance for gap between mounting ears and case. The case for SN-109 was substituted.

   B. Motorola investigated their entire stock for additional defective cases but found that SN-108's original case was the only reject. The case is being scrapped.

   C. SN-108 successfully completed its ATP but is currently being delayed in shipping by Air Force inspection. They are requiring documentation on the interchangeable aspect of the DCS.

2. SN-102 (-15) was returned to Motorola for retrofit to the new (-25) configuration 20 July 1964. Motorola estimates the re-ship date of SN-102 for the week of 31 August 1964.

3. During the reporting period three spare allocations were made. SN-106 was shipped to the Hangar 23 July and SN-103 was shipped to the Hangar 29 July 1964. SN-107 was placed in the spare crib at MAC for use in SST 16 July 1964.

4. SN-109 (SC-5) is expected to be shipped to MAC approximately 22 August 1964. SN-109 has completed vibration testing and began room temperature testing 6 August 1964.

AGE STATUS

1. Motorola has been authorized to assemble two automatic module testers P/N 52E190023-41. One tester is complete and ready for acceptance testing. The second unit is expected to be available for testing approximately 7 August 1964.

   A. Test procedures have been submitted to MAC but have not yet been approved. The estimated ship date for these items is 15 August 1964.

GEMINI
SPACECRAFT
CONTRACT NO. NAS 9-170

DIGITAL COMMAND SYSTEM - (VENDOR: MOTOROLA)

STATUS CHART

REPORT NO. 8580-1 -4R

LAST PROGRAM SCHEDULE CHANGE: 24 April 1964

STATUS AS OF: 10 July, 1964

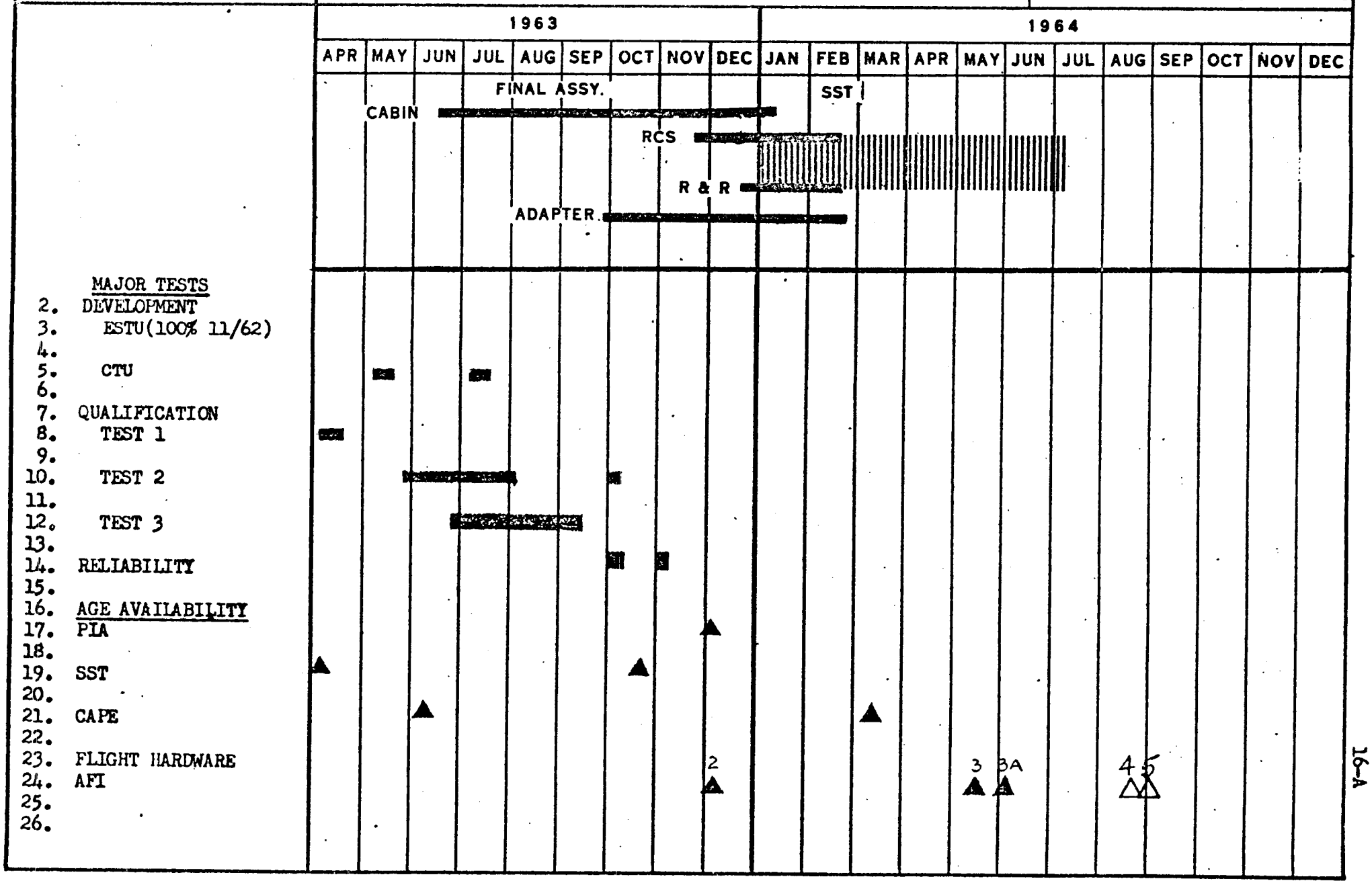

QUALIFICATION AND DEVELOPMENT TEST STATUS

DIGITAL COMMAND SYSTEM
MOTOROLA INC.
SCD 52-85714

7 August 1964

LEGEND

- ▽ TEST PROPOSAL DUE
- ◇ HARDWARE AVAILABLE
- ▭ TEST SCHEDULE
- ○ REPORT DUE
- ✡ REPORT APPROVED

SOLID INDICATES ACTUAL

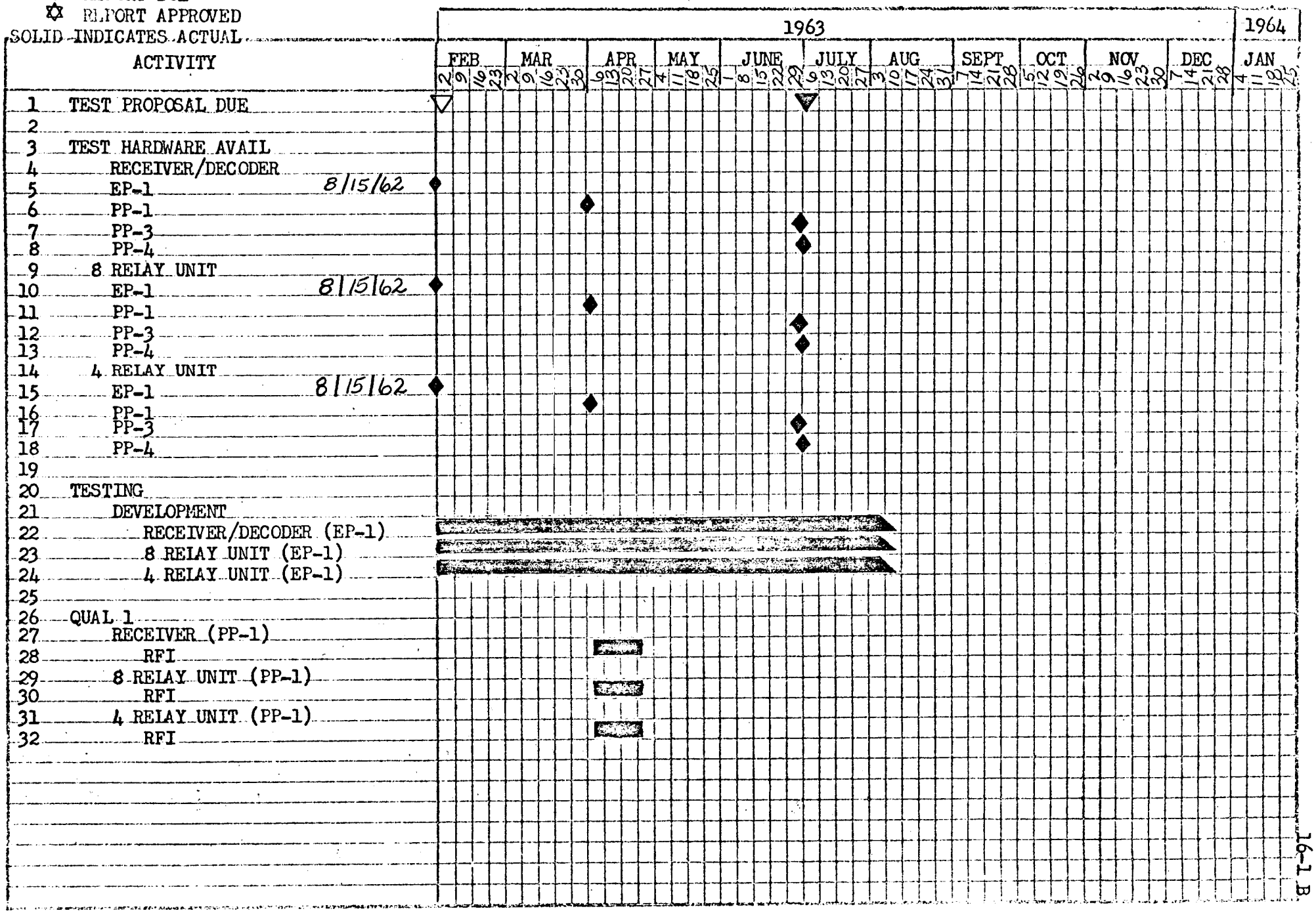

16-1 B

QUALIFICATION AND DEVELOPMENT TEST STATUS

DIGITAL COMMAND SYSTEM
MOTOROLA INC.
SCD 52-85714

7 Aug. 1964

LEGEND
- ▽ TEST PROPOSAL DUE
- ◇ HARDWARE AVAILABLE
- ▭ TEST SCHEDULE
- ○ REPORT DUE
- ✡ REPORT APPROVED

SOLID INDICATES ACTUAL

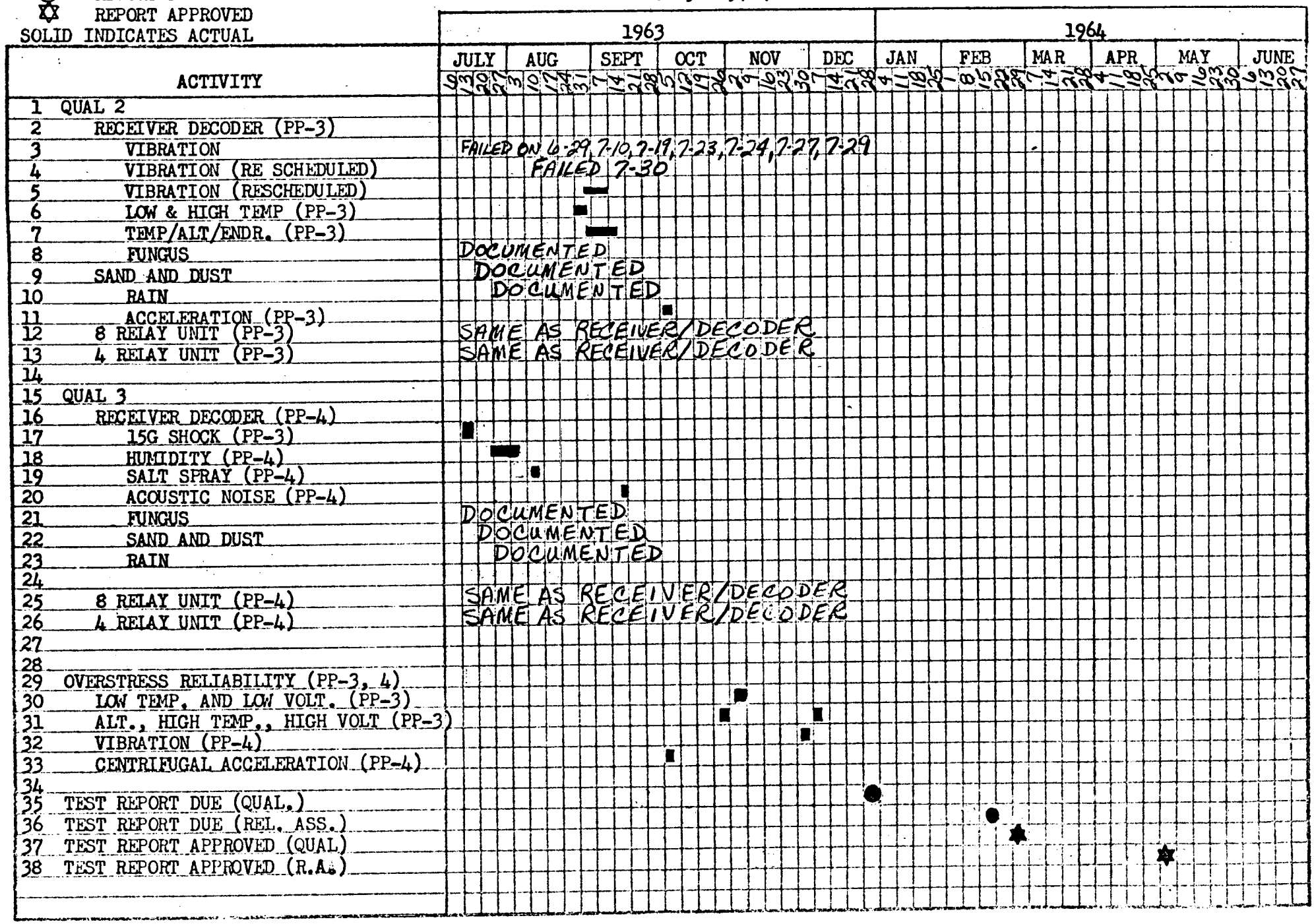

VENDOR DELIVERY STATUS REPORT
DIGITAL COMMAND SYSTEM
MOTOROLA, INC.

CHART NO: 16-C

DATE: 8-7-64

UNIT NO	TYPE	S/N	USAGE	VENDOR W/S	AVAIL FOR INSTL	REQ'D FOR INSTL	SLACK
1	EP-1	1	ESTU			A11-09-62	
2	EP-2	2	NASA FLY OVER-1			A01-26-63	
3	PP-2	12	CTU			A05-22-63	
4	PP-1	11	NASA FLY OVER-2			A05-22-63	
5	PP-3	13	VENDOR QUAL			A06-28-63	
6	PP-4	14	VENDOR QUAL OSR			A06-28-63	
7	PA-1	101	SC-2			A01-21-64	
8	PA-5	105	SC-3			A05-18-64	
9	PA-4	104	SC-3A			A07-06-64	
10	PA-7	107	SPARE SST			A07-16-64	
11	PA-6	106	SPARE HGR			A07-23-64	
12	PA-3	103	SPARE HGR	A07-13-64		A07-29-64	
13	PA-8	108	SC-4	08-14-64	08-21-64	07-06-64	- 8
14	PA-9	109	SC-5	08-22-64	09-01-64	09-08-64	+ 1
15*	PA-2	102	SC-6	09-04-64	09-14-64	11-23-64	+ 5
16	PA-10	110	AD-13	09-18-64	09-28-64	12-02-64	+10
17	PA-11	111	SC-7	10-02-64	10-12-64	01-02-65	+12
18	PA-12	112	SC-8	10-16-64	10-26-64	02-26-65	+ 7
19	PA-13	113	SC-9	11-04-64	11-14-64	04-26-65	+17
20	PA-14	114	SC-10	11-25-64	12-04-64	06-17-65	+28
21	PA-15	115	SC-11	12-16-64	12-26-64	08-14-65	+33
22	PA-16	116	SC-12	01-06-65	01-16-65	10-07-65	+38
23	PA-17	117	AD-14	01-27-65	02-05-65	11-29-65	+42
24	PA-18	118	MISC	02-27-65	02-27-65	———	—

* S/N 102 was returned to vendor 20 July 1964 for reconfiguration as -25 model with vendor will ship date as shown.

VENDOR AGE STATUS REPORT
DIGITAL COMMAND SYSTEM
MOTOROLA

CHART NO: 16-D

DATE: 8-7-64

ALL AGE DELIVERED - SEE PREVIOUS 8580-1-39 REPORT FOR DATES

MONTHLY SUMMARY

SYSTEM: Communications
SUBSYSTEM: C & S Band Beacon
VENDOR: ACF Industries
Paramus, New Jersey
DATE: 7 August 1964

ENGINEERING STATUS

1. ACF personnel are currently engaged in the preparation of a minimum work standard which will be employed on all flight C & S Band Beacons. Quality standards are also being revised and will be in effect on all flight units.

   A. ACF receipt of NCI-115 13 July 1964 initiated the above effort.

2. MAC issued a work copy of MAC work statement -133P-127 to the MAC Resident Engineer at ACF 10 July 1964. ACF personnel began preliminary work upon receipt of this copy.

   A. MAC formally issued WS-133P-127 to ACF in the form of NCI-116 13 July 1964.

3. A MAC Senior Engineer travelled to ACF 3 August 1964 to resolve the problem areas of the MAC work statement.

   A. ACF's rewritten form of the WS was unacceptable to MAC Engineering. A conferrence at ACF 3 and 4 August developed a compatible conception of the WS requirements between ACF personnel and MAC's Senior Engineer.

   B. MAC will prepare and issue to ACF a revision A of WS-133P-127. Revision A will contain the requirements which were mutually agreed on in the conference.

   C. The tentative issue date for Revision A is approximately 12 August 1964. This revision will pertain primarily to the Meca modules.

   D. A supplement to WS-133P-127 will also be issued as soon as possible to cover components other than the Meca modules.

4. ACF's firm budget submittal for Phase I is expected to be issued to MAC approximately 14 August 1964.

PROCUREMENT

1. NCI-115, issued on 9 July 1964, also authorized ACF to proceed with the procurement of component parts for thirty-six sets of Meca modules. This total will be reduced to 30 sets. (See Paragraph C)

   A. ACF's purchase orders for twelve sets of components for the Meca modules are expected to be issued the week of 7.August 1964.

   B. The purchase orders covering the additional eighteen sets are expected to be issued at a later date.

   C. Six sets of components will be bought under a separate spares contract and therefore were removed from the work statement.

ASSEMBLY AND DELIVERY STATUS

1. MAC issued NCI-117 to ACF 17 July 1964. NCI-117 allowed ACF to proceed with the fabrication and testing of SN-109 C & S Band Beacons.

   A. Following successful completion of its ATP, including an extended burn-in as specified in the MAC work statement, SN-109 C was hand carried to MAC by a MAC Senior Engineer 5 August 1964.

   B. SN-109 C Band will replace SN-107 in SC-2 following completion of a PIA test. SN-107 C failed in SST. The reason for the failure was that no voltage was being registered on the input power monitor test point.

   C. SN-107 will be returned to ACF for rework to incorporate the new Meca modules.

2. The delay caused due to ACF's misconception of the work statement will result in the first modified unit being shipped approximately 19 October 1964.

3. S-Band SN-109 has completed preliminary and pre-acceptance testing. SN-109 will be held in testing at a point prior to close up.

   A. If a spare is needed SN-109 can be expedited to MAC but present plans call for SN-109 S to be the initial unit with the new Meca modules installed.

4. SN-108 S Band was successfully PIA'd at MAC 5 August and replaced SN-101 in SC-3 6 August 1964.

   A. SN-101 was replaced because it had not been random vibrated.

GEMINI SPACECRAFT
CONTRACT NO. NAS 9-170

S-BAND RADAR BEACON - (VENDOR: ACF INDUSTRIES)

STATUS CHART

REPORT NO. 8580-1 -42
LAST PROGRAM SCHEDULE CHANGE 24 April 1964
STATUS AS OF: 18 Aug. 1964

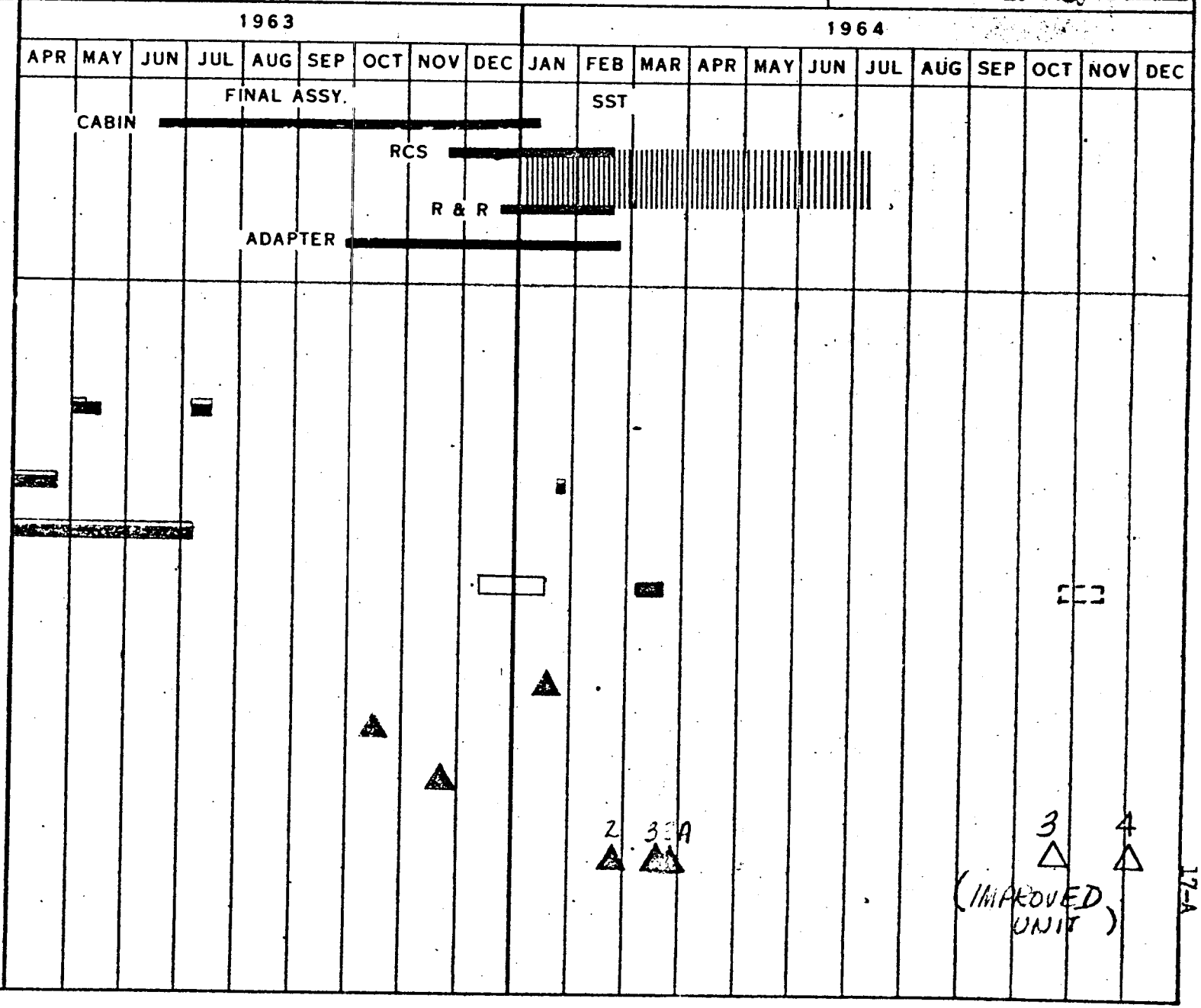

17-A

LEGEND
- ▽ TEST PROPOSAL DUE
- ◊ HARDWARE AVAIL.
- ▭ TEST SCHEDULE
- ○ REPORT DUE
- ✡ REPORT APPROVED

SOLID INDICATES ACTUAL

QUALIFICATION AND DEVELOPMENT TEST STATUS

S-BAND RADAR BEACON
ACF ELECTRONICS
SCD 52-85715

7 August 1964

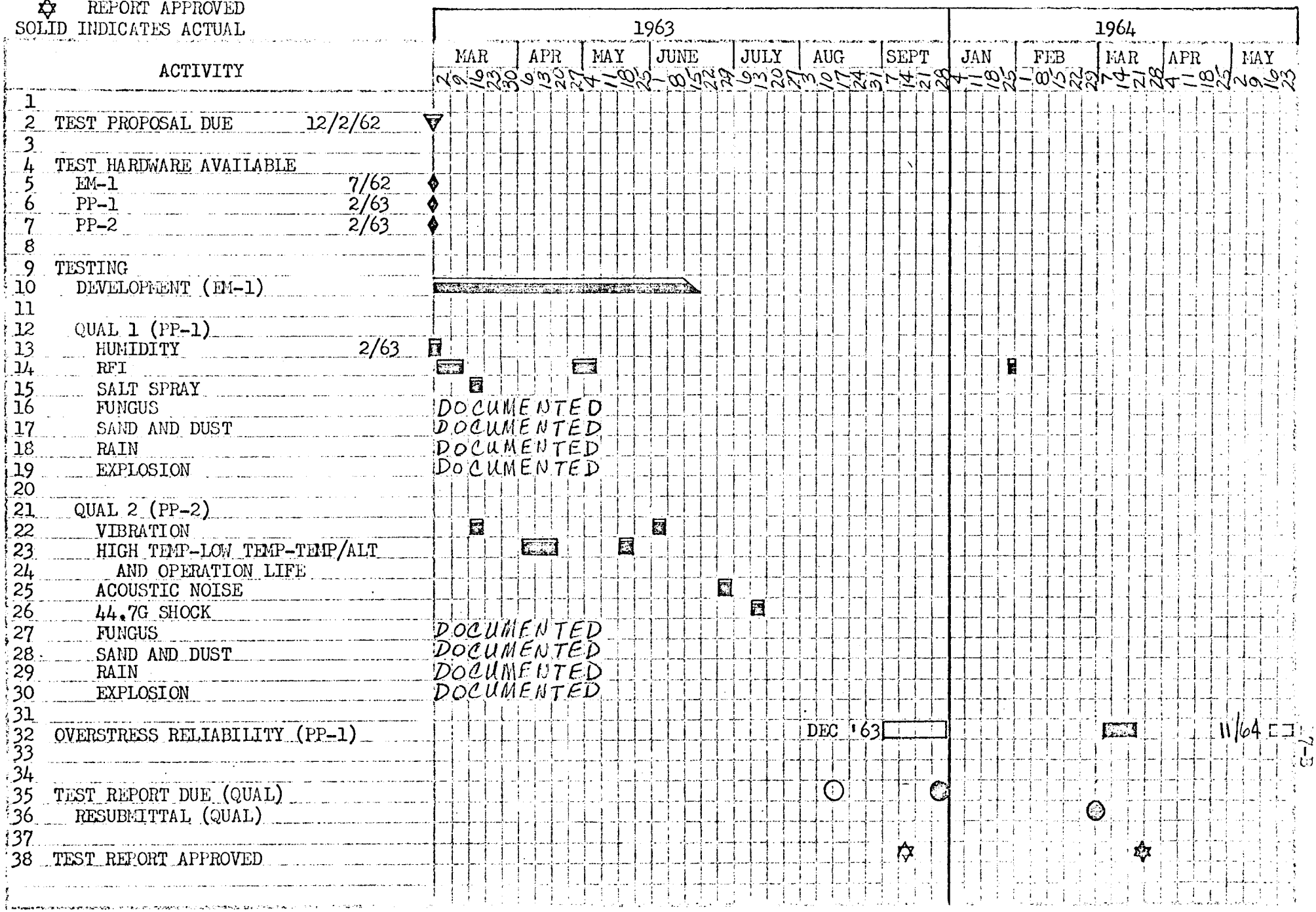

VENDOR DELIVERY STATUS REPORT
S-BAND RADAR BEACON
ACR INDUSTRIES

CHART NO: 17-C

DATE: 7 Aug. '64

UNIT NO	TYPE	S/N	USAGE COMPONENT	VENDOR W/S	AVAIL FOR INSTL	REQ'D FOR INSTL	SLACK
1	EP-1	1	ESTU			A09-22-62	
2	PP-1	10	VENDOR QUAL			A01-10-64	
2	PP-1	10	VENDOR REL.			A03-06-64	
3	PP-2	11	VENDOR QUAL			A03-22-63	
4	PA-1	100	CTU			A04-18-63	
5	PA-8	*107	SC-2			A06-01-64	
6	PA-2	101	SC-3	A06-19-64	A08-05-64	A08-06-64	
7	PA-6	105	SPARE (SST)			A04-25-64	
8	PA-5	104	SC-3A			A05-13-64	
9	PA-7	106	SPARE (HGR)			A06-03-64	
11	PA-10	**109	SC-3	10-19-64	10-23-64	——— ***	
12	PA-11	**110	SPARE (HGR)	11-02-64	11-11-64		
13	PA-12	**111	SC-4	11-23-64	12-02-64	07-06-64	-21
14	PA-13	**112	SPARE (SST)	12-14-64	12-23-64		
15	PA-14	**113	SC-5	01-08-65	01-20-65	09-08-64	-19
16	PA-15	**114	SPARE (SST)	01-29-65	02-10-65	05-30-64	-36
17	PA-16	**115	SC-6	02-19-65	03-03-65	11-23-64	-14
18	PA-6	**105	AD-13	03-12-65	03-24-65	12-02-64	-16
19	PA-7	**106	SPARE (HGR)	04-02-65	04-14-65	08-31-64	-32
20	PA-9	**108	SC-7	04-23-65	05-05-65	01-01-65	-17
[illegible]	PA-17	**116	SC-8	05-14-65	05-26-65	02-26-65	-13
[illegible]	PA-18	**117	SC-9	05-26-65	07-02-65	04-26-65	-10
23	PA-19	**118	SC-10	06-11-65	06-18-65	06-17-65	0
24	PA-20	**119	SC-11	06-23-65	06-30-65	08-14-65	+ 6
25	PA-2	**101	SC-12	07-02-65	07-09-65	10-07-65	+13
26	PA-4	**103	AD-14	07-14-65	07-21-65	11-29-65	+19

* Random Vibrated at ACF prior to replacing SN-102 in SC-2.
** Modules used in these units will be products of the Meca Module Program. (Improved units)
*** Out of station installation required.

SN-101 which was replaced by SN-108, will be returned to ACF approximately 19 August 1964.

SN-102 is currently in-house at ACF; non-flight unit unless reworked.

VENDOR AGE STATUS REPORT
C & S BAND RADAR
ACF INDUSTRIES

CHART NO: 17, 18-D
DATE: 8-7-64

ALL AGE DELIVERED - SEE PREVIOUS 8580-1-39 REPORT FOR DATES

GEMINI SPACECRAFT
CONTRACT NO. NAS 9-170

C-BAND RADAR BEACON - (VENDOR: ACF INDUSTRIES)

STATUS CHART

REPORT NO. 8580-1 -42
LAST PROGRAM SCHEDULE CHANGE: 24 April 1964
STATUS AS OF: 10 August 1964

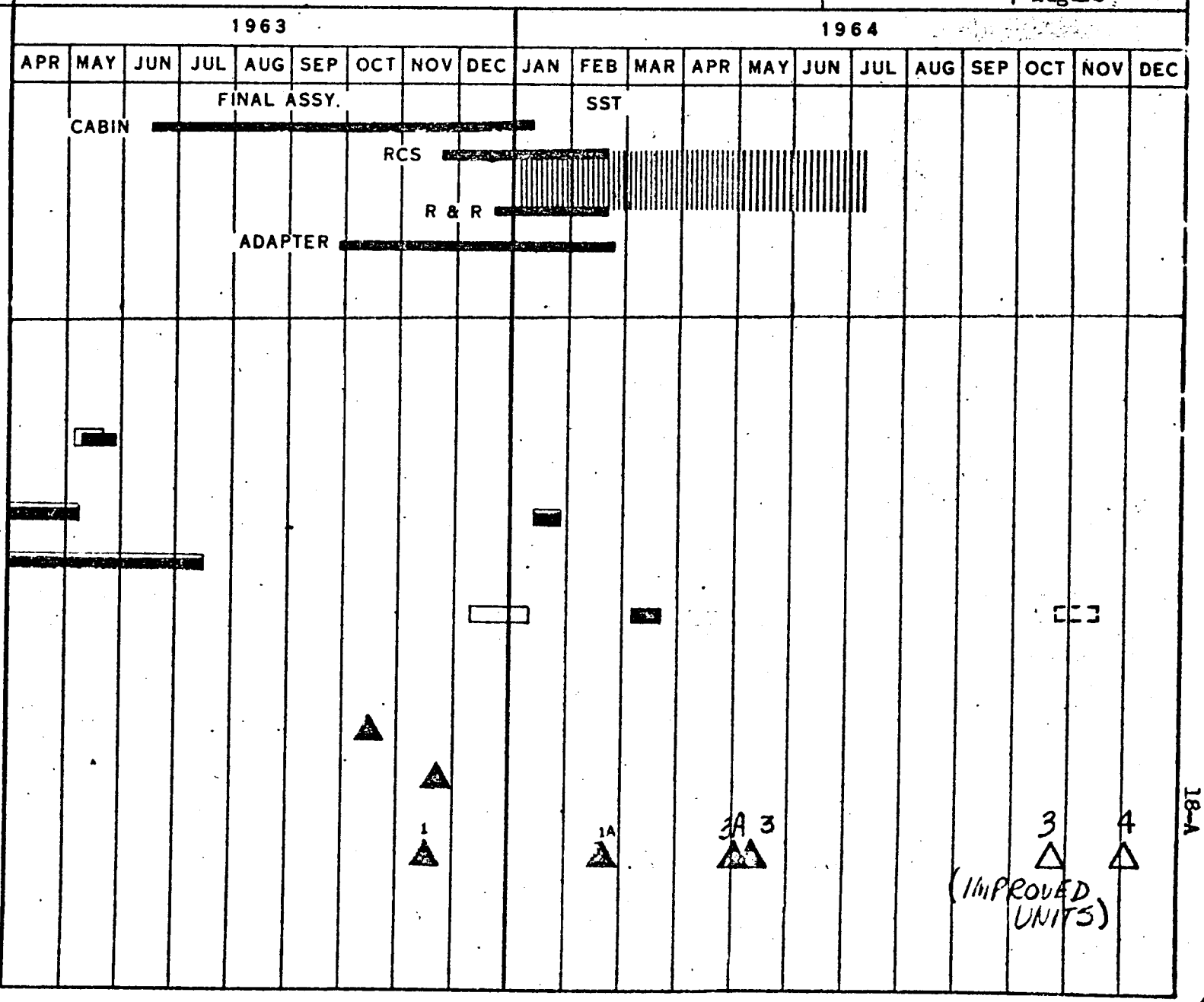

QUALIFICATION AND DEV. TEST STATUS

C-BAND RADAR BEACON
ACF ELECTRONICS
SCD 52-85707

7 August 1964

LEGEND
- ▽ TEST PROPOSAL DUE
- ◊ HARDWARE AVAIL.
- ▭ TEST SCHEDULE
- ○ REPORT DUE
- ✡ REPORT APPROVED

SOLID INDICATES ACTUAL

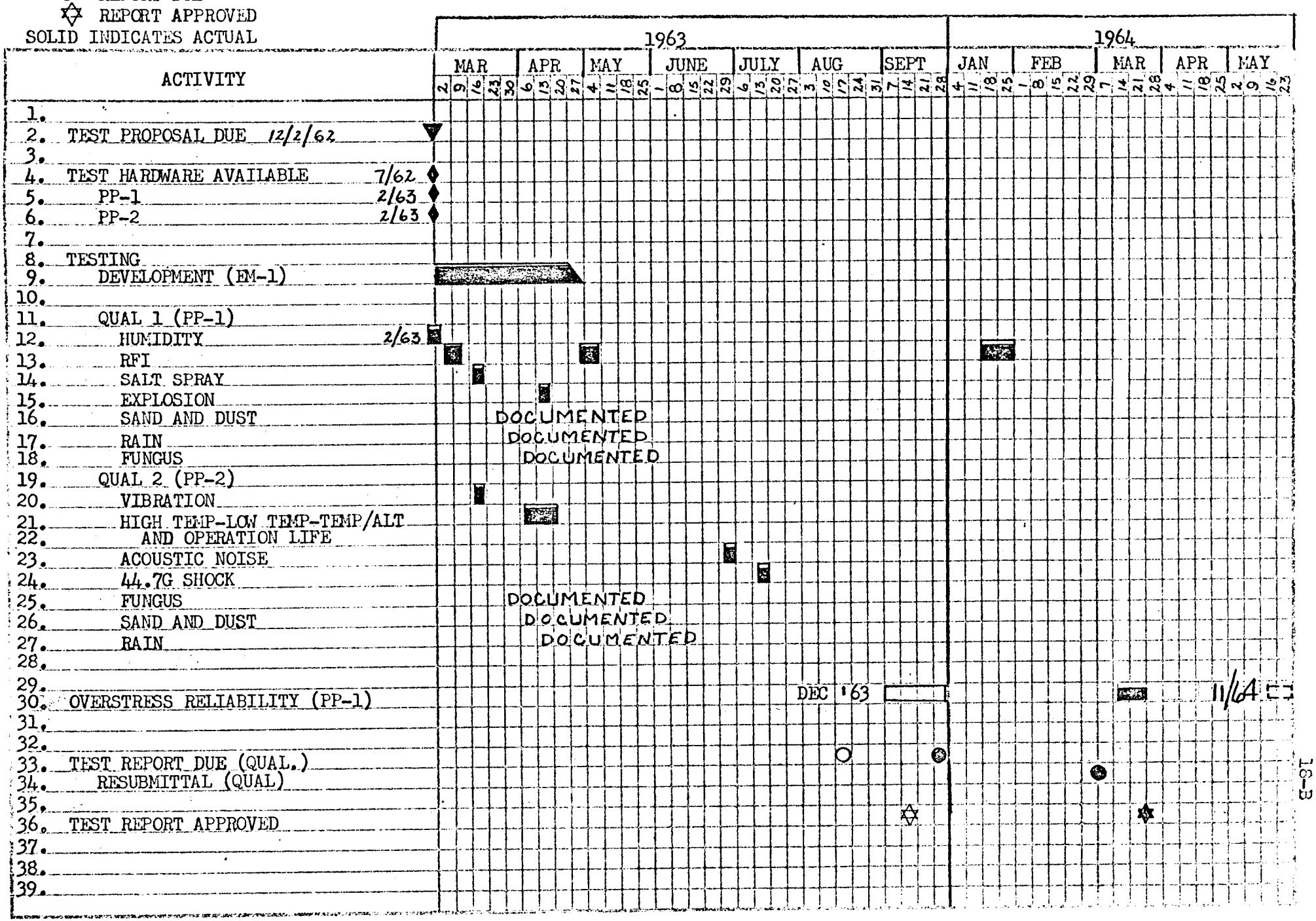

NAC 2274V (27 APR 59)

VENDOR DELIVERY STATUS REPORT
C-BAND RADAR BEACON
ACF INDUSTRIES

CHART NO: 18-C

DATE: 7 Aug. '64

UNIT NO	TYPE	S/N	USAGE COMPONENT	VENDOR W/S	AVAIL FOR INSTL	REQ'D FOR INSTL	SLACK
1	EP-1	1	ESTU			A09-22-62	
2	PP-1	10	VENDOR QUAL & REL (RFI RERUN)			A01-14-64	
3	PP-2	11	VENDOR QUAL			A03-04-63	
4	PA-1	100	CTU			A04-26-63	
5	PA-7	106	SC-1 (CAPE)			A03-13-64	
6	*PA-8	107	SC-2			A06-16-64	
6	PA-10	109	SC-2	A08-05-64	08-12-64		
7	PA-2	101	SC-3A			A06-11-64	
8	PA-9	108	SC-3			A05-14-64	
9	**PA-11	110	SC-3	10-19-64	10-23-64	***	
10	**PA-12	111	SPARE (SST)	11-02-64	11-11-64	03-31-64	-31
11	**PA-13	112	SC-4	11-23-64	12-02-64	04-21-64	-32
12	**PA-14	113	SPARE (HGR)	12-14-64	12-23-64	06-30-64	-25
13	**PA-15	114	SC-5	01-08-65	01-20-65	06-15-64	-31
14	**PA-16	115	SPARE (SST)	01-29-65	02-10-65	05-30-64	-37
15	**PA-17	116	SPARE (HGR)	02-19-65	03-03-65	08-31-64	-29
16	**PA-18	117	SC-6	03-12-65	03-24-65	09-17-64	-26
17	**PA-19	118	SC-7	04-02-65	04-14-65	11-16-64	-21
18	**PA-3	102	SC-8	04-23-65	05-05-65	01-04-65	-17
19	**PA-4	103	SC-9	05-14-65	05-26-65	03-03-65	-12
20	**PA-6	105	SC-10	06-04-65	06-16-65	04-23-65	- 8
21	**PA-9	108	SC-11	06-16-65	06-25-65	06-24-65	0
22	**PA-8	107	SC-12	06-28-65	07-05-65	08-19-65	+ 6

* SN-107 to be removed and returned to ACF.

** Modules used in these units will be products of the new Meca Module Program. (Improved units)
Will ship dates per MAC work statement requested dates.

*** Out of station installation required.

SN-104 currently in-house at ACF. (SN-104 will be non-flight unit unless reworked)

MONTHLY SUMMARY

SYSTEM: Guidance & Control
SUBSYSTEM: Rendezvous Radar
VENDOR: Westinghouse
DATE: 7 Aug. 1964

ENGINEERING STATUS

1. Gemini Design Note No. 198, "The Effect of Degraded Radar Performance upon Rendezvous Fuel Requirements" has been completed and is ready for release. The results show that the current relaxation of Radar Angular Measurements accuracy incurs a velocity penalty of 20 ft. per second or less, depending upon the mission plan employed.

2. Gemini Design Note No. 192, "Rendezvous Terminal Guidance Investigation of Data Sampling Techniques for Orbital Mechanics Guidance" was presented to NASA at the 20 July Rendezvous and re-entry guidance meeting. This note presents the basis for selection of the present data sampling techniques used in closed loop terminal guidance.

3. Analog computer studies of visual rendezvous techniques were continued. One method successfully demonstrated was the use of the platform to maintain an inertially fixed position while visually tracking the target. In effect, this is the "semi-optical" rendezvous method without benefit of a star field back ground.

ASSEMBLY & DELIVERY STATUS

1. Radar

   (a) PP-2 Radar for Qualification Test No. 2
   This unit has had a history of failures and re-test of which the latest was an intermittant during PDA. Since the intermittant condition could not be duplicated, Westinghouse has been authorized by McDonnell to proceed with PDA testing. This intermittant condition is not considered serious. Estimated completion date for acceptance testing is 7 Aug. 1964.

   (b) PA-1 Radar for S/C 5 - Has completed final assembly during the last reporting period and is in Westinghouse demo.

   (c) PA-2 Radar for S/C 5 Spare - Is through final assembly and is currently in circuit check. Unit currently lacking one spiral antenna.

   (d) PA-3 Radar for S/C 6 is near completion of final assembly. Unit now lacks spirals and one encapsulated module (part of digital pack).

2. Transponder

   (a) PP-4 Transponder for Qualification Test No. 2.
   This unit has completed Westinghouse Demonstration and is in customer pre-delivery acceptance testing in the pre-vibration phase. Estimated delivery date 8-14-64 - available for qual test 8-24-64.

   (b) PA-1 Transponder for S/C 5 and Rendezvous Evaluation Pod (REP) No. 1

has satisfactorily passed customer acceptance tests and is being assembled into the REP configuration. Estimated delivery date is 10 Oct. 1964.

(c) PA-2 Transponder for S/C 5 Spare and Rendezvous Evaluation Pod (REP) No. 2 has completed final assembly and satisfactorily passed customer acceptance testing. This unit will re-enter assembly the week of 10 Aug. 1964 to be fabricated into REP configuration. Estimated delivery date is 15 Nov. 1964.

(d) PA-3 Transponder for TDA #1 is having the antenna switching fix incorporated and is expected to enter pre-delivery acceptance testing the week of 10 Aug. 1964. This unit is being expedited per McDonnell request and the expected delivery date is 1 Sept. 1964.

3. Dipole Antenna

(a) Agena dipole antennae may become the gating item for the first two or three target docking adapters, since this item has experienced several Engineering changes which are now being incorporated.

(b) Eleven dipole antennae have been built, they must, however, be tested, foamed, and undergo post foaming tests before they will be acceptable for use.

(c) Four of the above eleven dipole antennae have been reworked per ECN's and are in pre-foam test.

(d) The first dipole for TDA #1 should be accepted by 23 Aug. and shipped to MAC 26 Aug. This unit is being expedited per MAC request. The two qual units are scheduled for completion 1 Sept.

(e) The new molds for foaming the Agena Dipole Antennae are being made and will be complete the week of 14 Aug. 1964.

(f) The REP Dipole antennae have been re-worked per Engineering changes and are currently in acceptance tests.

4. Range & Range Rate Indicators

(a) PA-1 (SN-105) for CTU and S/C 3A was delivered to MAC 17 July.

(b) PA-3 and 4 (SN's 108-109) are currently in qual tests at Weston.

(c) Customer demonstration of the following units began 30 July.

1. PA-5-6 (SN's 110-111) for vendor reliability).
2. PA-7-8 (SN's 112-113) for S/C 5 and Spare.

NOTE: See Vendor Delivery Status Chart for estimated delivery to MAC Also, Weston was closed for a two week vacation which delayed start of qual testing.

5. Spiral Antennas

   (a) All REP Spirals (-27's) are complete and available for installation into the REP configuration.

   (b) During this reporting period, Westinghouse shipped seven (7) Agena Type Spirals (-21's) to MAC fulfilling requirements for TDA #1 and #2 plus two spare requirements and one replacement unit for New Mexico.

   (c) Qual Testing is complete through vibration and acoustic noise phases.

6. Command Link Encoder

   (a) PP-2 for Qual Test
   During this reporting period the unit completed pre-foam electric test, the foaming operation, post form electrical test and vibration portion of Acceptance Test. Unit is currently in post-vibration demonstration. Unit expected to enter qual testing week of 10 Aug.

   (b) Westinghouse currently awaiting shipment of shift registers from AMP (expected to begin 8 August).

7. Boost Regulator

   (a) All REP type (-31's) are complete and available for installation into the REP configuration.

   (b) PA-3 for TDA #1 has completed assembly and is currently in pre-vibration demonstration.

   (c) PA-1 for Qual 1 was slightly damaged. (Unit was in qual test mated to PP-2 Transponder). Problem being reviewed by MAC Engineering.

8. Dipole Antenna Boom

   (a) During the last reporting period an unsuccessful attempt was made to conduct Qual Test Vibration. The mounting to which the boom will be mounted was not used and the results for Qual Vibration were unsatisfactory. To relieve this situation, the portion of the Agena target docking adapter to which the boom will be mounted, is being simulated and will be attached to the vibration table. When the TDA Simulator is complete the Vibration Phase will be run again. It should be noted that this is the only portion of Qual Test which remains unaccomplished. It is estimated that the qual test will be completed and the first production article shipped by 31 Aug. 1964.

   (b) There are several production articles completed and DeHavilland should complete shipment by late March next year.

TEST STATUS

1. Qualification Testing

   (a) PP-4 Radar for Qualification Test No. 1 is progressing per schedule.

Vibration is complete and the unit is being prepared to enter acceleration. There is no reason for this unit to fall behind.

(b) PP-2 Radar for Qualification Test No. 2 will be delivered to Qual Testing 10 Aug. 1964.

(c) PP-2 Transponder for Qualification Test No. 1 exploratory vibration, Acoustic Noise and 90% of E & EI. This unit is experiencing very satisfactory results and should complete Qual Testing on schedule.

(d) PP-4 Transponder for Qualification Test No. 2 - This unit is estimated to be delivered in place, 14 Aug. 1964 for Qualification Test.

(e) PP-1 Indicator SN-108 for Qualification Test No. 1 is undergoing preliminary bench test prior to entering formal qual test. This unit is scheduled to start vibration on 13 August 1964 with PP-2 indicator SN-109.

(f) PP-2 Indicator SN-109 for Qualification Testing No. 2 is undergoing preliminary bench test prior to start of formal qual test. This unit will enter pressure testing on 10 Aug. and terminate on 13 Aug. at which time it will enter vibration with PP-1 Indicator SN-108.

(g) PP-3 Spiral Antenna for qualification testing No. 1 completed the vibration and acoustic noise portion of qual on 11 July 1964.

2. NMSU Test

(a) McDonnell Engineering estimates completion of this portion of the program 8 Aug. 1964 or Monday 10 Aug. 1964 at the latest.

3. WSMR Testing

(a) The transponder for the flight test has been received by NASA, Houston, Texas.

(b) The Radar for the flight test is at Cape Kennedy Radar Range undergoing range qualification tests. This unit is expected to be shipped from the Cape around 22 August 1964 and will be available for testing at White Sands by 1 Sept. 1964.

AGE STATUS

1. During this reporting period, the following items were shipped:

(a) RSTC #2 was shipped to St. Louis.

(b) RIST #2 was shipped to Cape Kennedy.

(c) RIST #6 was shipped to Cape Kennedy.

(d) TSTC (52E270078-1) was shipped to Cape Kennedy 5 Aug.

146

(e) The video target simulator for use in the RSTC at New Mexico was shipped 5 August.

2. During this reporting period, the cal kit rist #1 was damaged at St. Louis and will be returned to Westinghouse for retrofit and repair. The unit will then be shipped to Cape Kennedy. Unit #2 will be shipped to St. Louis.

NOTE: A number of delays in AGE delivery have been caused by Engineering changes of Spacecraft hardware.

GEMINI SPACECRAFT

CONTRACT NO. NAS 9-170

RENDEZVOUS RADAR - (VENDOR: WESTINGHOUSE)

STATUS CHART

REPORT NO. 8580-1

LAST PROGRAM SCHEDULE CHANGE: 24 Apr. 1964

STATUS AS OF: 7 Aug. 1964

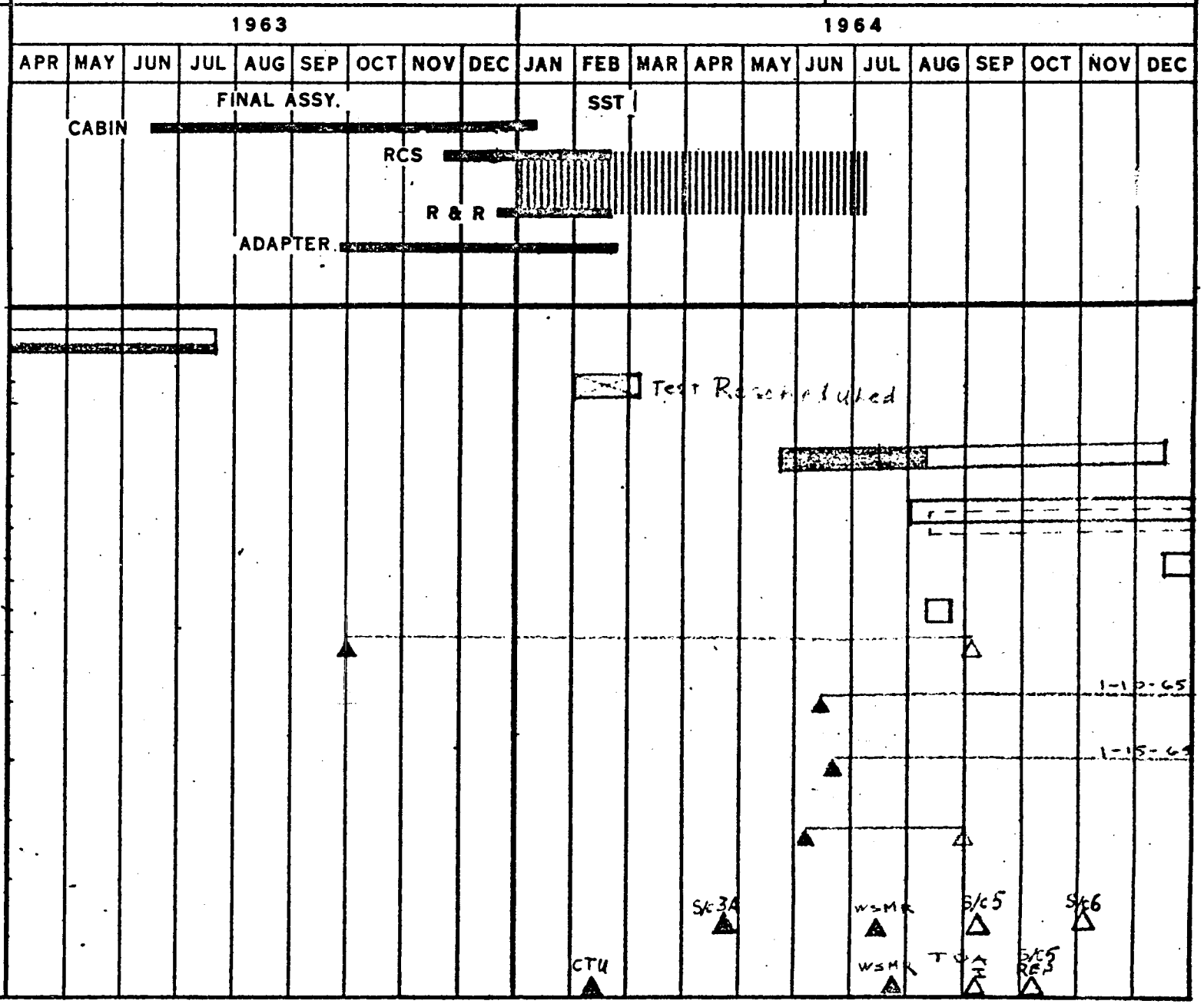

LEGEND

- ▽ Test Proposal Due
- ◊ Hardware Available
- □ Test Schedule
- ○ Report Due
- ☆ Report Approved
- ▨ Rework & Retest (SOLID INDICATES ACTUAL)

QUALIFICATION AND DEVELOPMENT TEST STATUS
RENDEZVOUS RADAR SYSTEM
WESTINGHOUSE ELECTRIC CO.

Date: 7 Aug. 1964

	ACTIVITY	WEEK ENDING
1.	Test Proposal Due	
2.		
3.	Test Hardware Available	
4.	Radar	
5.	EP-3 EP-3	3/29/64
6.	PP-4 PP-4	5/20/64
7.	PP-2 PP-2	
8.	Indicators	
9.	EP-4	
10.	PP-1 S/N 108	
11.	PP-2 S/N 109	
12.	Encoder	
13.	EM-1	7/4/63
14.	PP-2	
15.	Transponder	
16.	PP-2	5/19/64
17.	PP-4	
18.	Spiral Antenna	
19.	PP-3	6/20/64
20.	Dipole Antenna	
21.	PP-3	
22.		
23.	Testing	
24.	Development	
25.	Radar (EP-3)	
26.	Indicator (EP-4)	
27.	Encoder (EM-1)	
28.		
29.	Qual #1	
30.	Radar (PP-4)	
31.	Bench	
32.	Vibration	
33.	Acceleration	
34.	Low Temp	
35.	Low Press/Temp Alt & Heat Cap	
36.	Acoustic Noise	
37.		
38.	Qual #2	
39.	Radar PP-2	
40.	Bench	

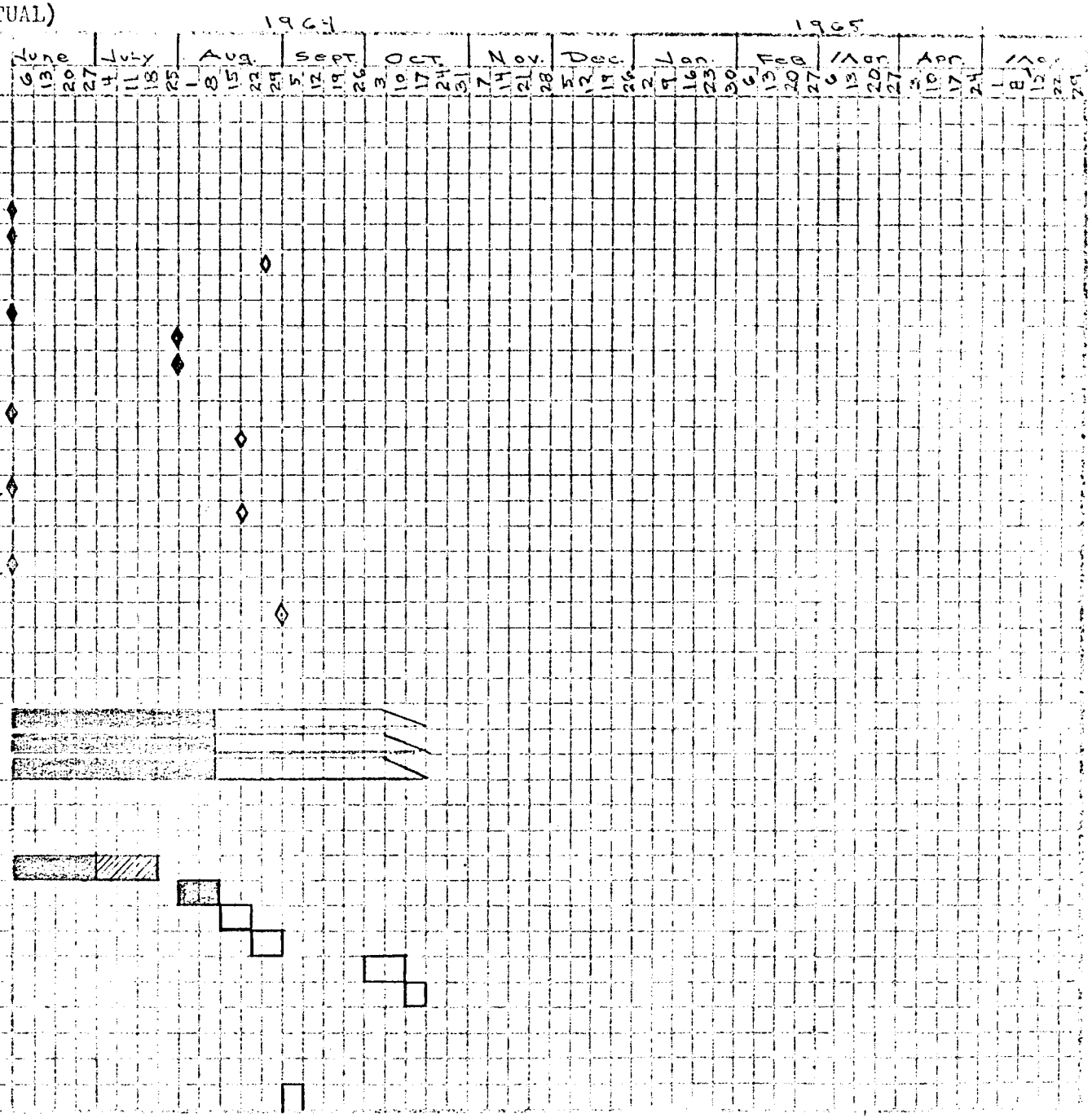

LEGEND
- ▽ Test Proposal Due
- ◊ Hardware Available
- □ Test Schedule
- O Report Due
- ☆ Report Approved
- ▨ Rework & Retest

SOLID INDICATES ACTUAL

QUALIFICATION AND DEVELOPMENT TEST STATUS
RENDEZVOUS RADAR SYSTEM
WESTINGHOUSE ELECTRIC CO.

Date: 7 Aug. 1964
Page: 2 of 3

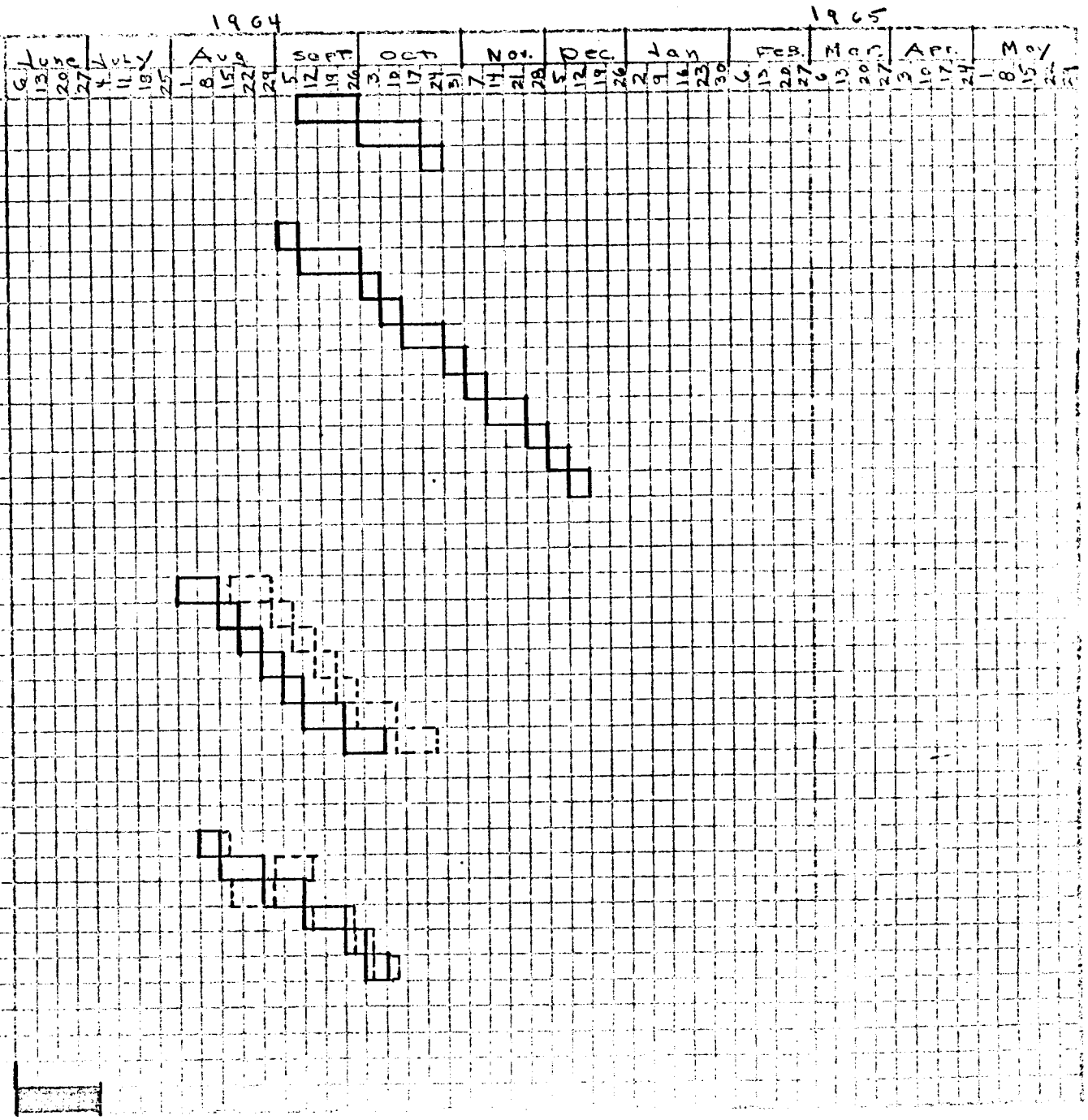

LEGEND
- ▽ Test Proposal Due
- ◊ Hardware Available
- □ Test Schedule
- ○ Report Due
- ☆ Report Approved
- ▨ Rework & Retest

SOLID INDICATES ACTUAL

QUALIFICATION AND DEVELOPMENT TEST STATUS
RENDEZVOUS RADAR SYSTEM
WESTINGHOUSE ELECTRIC CORP.

Date: 7 Aug. 1964
Page: 3 of 3

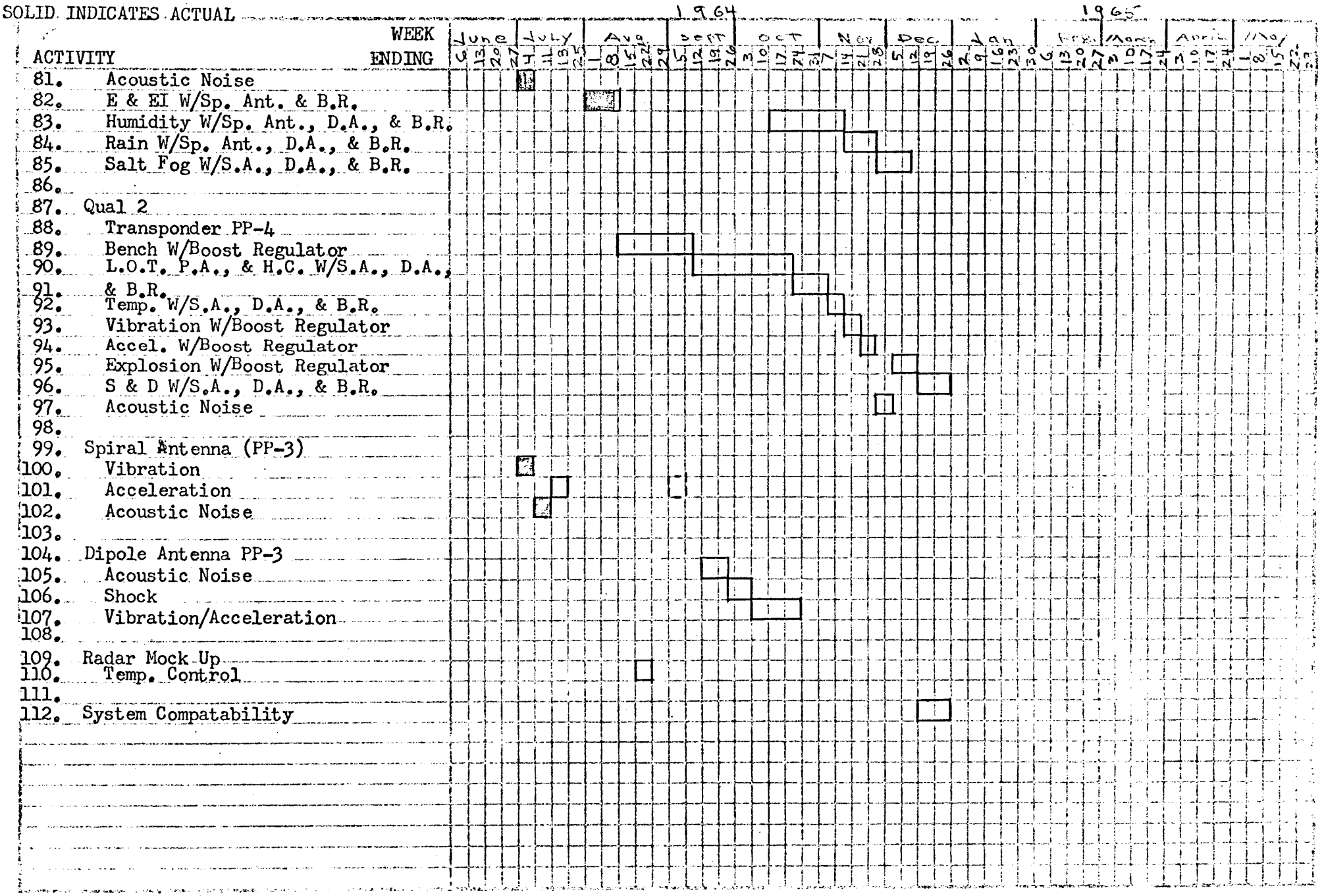

VENDOR DELIVERY STATUS REPORT

CHART NO: 19-1C

SYSTEM - RENDEZVOUS RADAR

DATE: 7 Aug. 1964

VENDOR - WESTINGHOUSE

UNIT NO.	USAGE	TYPE	DASH NO.	VENDOR W/S	AVAIL. FOR INSTL.	REQ'D. FOR INSTL.	SLACK
1	ESTU	EP-1	- 3			A02-15-63	
2	ELEC EVAL	EP-2	- 3			A05-10-63	
3	MECH EVAL	EP-3	- 3			A06-30-63	
4	CTU	PP-1	-23			A02-26-64	
4	S/C 3A	PP-1	-29		A04-22-64		
5	QUAL 2	PP-2	-27	08-10-64	08-21-64	03-28-64	-21
6	WSMR	PP-3	-35		A07-18-64	07-01-64	- 3
7	QUAL 1	PP-4	-25			A05-20-64	0
8	S/C 5*	PA-1	-21	09-04-64	10-02-64*	11-17-64	+ 7
9	SST SPARE (5)	PA-2	-21	10-09-64	10-16-64	11-30-64	+ 6
10	S/C 6*	PA-3	-21	11-23-64	12-21-64	02-10-65	+ 8
11	HGR SPARE (5)	PA-4	-21	01-05-65	01-12-65	02-28-65	+ 7
12	S/C 8*	PA-5	-21	02-12-65	03-12-65	05-05-65	+ 8
13	HGR SPARE (6)	PA-6	-21	03-20-65	03-27-65	04-30-65	+ 5
14	S/C 9*	PA-7	-21	05-02-65	05-30-65	06-30-65	+ 4
15	HGR SPARE (8)	PA-8	-21	06-12-65	06-18-65	08-30-65	+10
[illegible]	S/C 10*	PA-9	-21	07-20-65	08-17-65	08-20-65	0
17	S/C 11*	PA-10	-21	09-03-65	10-01-65	10-20-65	+ 3
18	S/C 12*	PA-11	-21	10-15-65	11-22-65	12-17-65	+ 4
19	SPARE**	PA-12	-21	11-15-65	11-27-65		

* Available for Installation date has been revised to include one week shipping time and three weeks pre-installation acceptance time on all Flight Hardware,

** This Spare is not ordered as a Spare. This unit became surplus when the requirement for S/C 4 was lifted and is carried as a Spare until further action can be taken as to its disposition.

VENDOR DELIVERY STATUS REPORT

CHART NO: 19-2C

SYSTEM - RENDEZVOUS RADAR TRANSPONDER

DATE: 7 Aug. 1964

VENDOR - WESTINGHOUSE

UNIT NO.	USAGE	TYPE	DASH NO.	VENDOR W/S	AVAIL. FOR INSTL. *	REQ'D. FOR INSTL.	SLACK
1	ESTU	EP-1	- 3			A07-11-63	
2	VEND DEV.	EP-2	- 3			A03-31-64	
3	VEND DEV.	EP-3	- 3			A05-14-63	
4	WSMR	PP-1	- 9	A07-16-64	A07-23-64		
5	QUAL 1	PP-2	-15			A05-19-64	
6	CTU	PP-3	-35			A02-25-64	
7	QUAL 2	PP-4	-17	08-14-64	08-24-64	06-15-64	-10
8	S/C 5	PA-1	-25	09-10-64	SEE REP # 1		
9	S/C 5 SST (REP) SPARE	PA-2	-25	10-15-64	SEE REP # 1		
10	TDA #1	PA-3	-19	09-01-64	09-13-64	06-16-64	-13
11	TDA #1 SST SPARE	PA-4	-19	12-10-64	12-17-64	09-30-64	-12
12	TDA #2	PA-5	-19	01-20-65	01-27-65	01-19-65	- 1
13	TDA #1 HGR SPARE	PA-6	-19	03-01-65	03-15-65	09-30-64	-25
14	TDA #3	PA-7	-19	04-13-65	04-27-65	03-08-65	- 7
15	TDA #4	PA-8	-19	05-25-65	06-08-65	04-29-65	- 6
16	TDA #5	PA-9	-19	07-03-65	07-17-65	06-28-65	- 3
17	TDA #6	PA-10	-19	08-15-65	08-29-65	08-17-65	- 2
18	TDA #7	PA-11	-19	09-27-65	10-11-65	10-14-65	0
19	TDA #8	PA-12	-19	10-25-65	11-08-65	12-10-65	+ 5
8	REP #1			10-10-64	10-20-64	09-04-64	- 7
9	REP #2			11-15-64	11-15-64	09-30-64	- 7

* Available for installation date has been revised to include one week shipping time and one week pre-installation acceptance time on all flight hardware.

VENDOR DELIVERY STATUS REPORT

CHART NO: 19-3C

COMMAND LINK ENCODER

DATE: 7 Aug. 1964

(52-87701)

USAGE	TYPE	DASH	S/N	VENDOR W/S	AVAIL. FOR INSTL.	REQ'D. FOR INSTL.	SLACK
VEND DEV.	EP-1	- 7				ACTUAL	
CTU & 3A	PP-1	-11				A07-02-64	
VEND QUAL	PP-2	-33			08-14-64		
S/C 6	PA-1	-19		09-11-64	09-19-64	02-10-65	+21
ESTU	PA-2	-19		10-09-64	10-17-64		
SST SPARE (6)	PA-3	-19		11-23-64	12-01-64	01-30-65	+ 8
S/C 8	PA-4	-19		01-05-65	01-13-65	05-05-65	+ 8
HGR SPARE (6)	PA-6	-19		02-12-65	02-20-65	04-30-65	+10
S/C 9	PA-6	-19		03-20-65	03-28-65	06-30-65	+13
HGR SPARE (8)	PA-7	-19		05-01-65	05-09-65	08-30-65	+16
S/C 10	PA-8	-19		06-12-65	06-20-65	08-20-65	+ 9
S/C 11	PA-9	-19		07-20-65	07-28-65	10-20-65	+15
S/C 12	PA-10	-19		09-03-65	09-11-65	12-17-65	+14

VENDOR DELIVERY STATUS REPORT

RANGE & RANGE RATE INDICATORS

(52-87701)

CHART NO: 19-4C

DATE: 7 Aug. 1964

USAGE	TYPE	DASH	S/N	VENDOR W/S	AVAIL. FOR INSTL.	REQ'D. FOR INSTL.	SLACK
VEND DEV.	EP-1	- 5				ACTUAL	
VEND DEV.	EP-2	- 5				ACTUAL	
TD	EP-3	- 5				ACTUAL	
TD	EP-4	- 5				ACTUAL	
ESTU	EP-5	- 5				ACTUAL	
CTU & 3A	PA-1	-31	105			A07-17-64	
VEND DEV	PA-2	-31	107			ACTUAL	
VEND QUAL	PA-3	-31	108		A07-02-64		
VEND QUAL	PA-4	-31	109		A07-02-64		
VEND REL	PA-5	-31	110	09-15-64	09-17-64		
VEND REL	PA-6	-31	111	09-15-64	09-17-64		
S/C 5	PA-7	-31	112	09-20-64	09-30-64	07-22-64	-10
SPARE (5)	PA-8	-31	113	10-15-64	10-22-64	11-30-64	+35
S/C 6	PA-9	-31	114	11-23-64	12-03-64	09-18-64	-11
HGR SPARE (6)	PA-10	-31	115	12-05-64	12-12-64	04-30-65	+18
S/C 8	PA-11	-31	116	01-05-65	01-15-65	01-05-65	- 2
HGR SPARE (8)	PA-12	-31	117	02-12-65	02-19-65	08-30-65	+27
S/C 9	PA-13	-31	118	03-10-65	03-20-65	03-03-65	- 2
S/C 10	PA-14	-31	119	04-15-65	04-25-65	04-23-65	- 1
S/C 11	PA-15	-31	120	05-06-65	05-16-65	06-24-65	+ 5
S/C 12	PA-16	-31	121	06-20-65	06-30-65	08-19-65	+ 6

VENDOR DELIVERY STATUS REPORT

CHART NO: 19-5C

AGENA BOOST REGULATOR

DATE: 7 Aug. 1964

(52-87715)

USAGE	TYPE	DASH	VENDOR W/S	AVAIL. FOR INSTL.	REQ'D. FOR INSTL.	SLACK
VEND DEV.	EM-1	-37			ACTUAL	
VEND QUAL	PA-1	-33			ACTUAL	
VEND QUAL	PA-2	-33			ACTUAL	
WSMR	(REP)	-31			ACTUAL	
S/C 5	(REP)	-31	10-10-64	10-20-64	08-25-64	- 8
SPARE (5)	(REP)	-31	11-15-64	11-25-64		
TDA-1	PA-3	-33	09-01-64	09-11-64	06-16-64	-12
SST SPARE-TDA 1	PA-4	-33	10-01-64	10-11-64	09-30-64	- 2
TDA-2	PA-5	-33	10-15-64	10-25-64	01-19-65	+12
HGR SPARE-TDA 1	PA-6	-33	10-29-64	11-08-64	09-30-64	- 6
TDA-3	PA-7	-33	11-12-64	11-22-64	03-08-65	+15
TDA-4	PA-8	-33	11-26-64	12-08-64	04-29-65	+20
TDA-5	PA-9	-33	12-10-64	12-20-64	06-28-65	+27
TDA-6	PA-10	-33	12-24-64	01-03-65	08-17-65	+32
TDA-7	PA-11	-33	01-06-65	01-16-65	10-14-65	+39
TDA-8	PA-12	-33	01-20-65	01-20-65	12-10-65	+46

VENDOR DELIVERY STATUS REPORT

TRANSPONDER ANTENNA BOOM

(52-87718) - DEHAVILLAND

CHART NO: 19-6C

DATE: 7 Aug. 1964

USAGE	TYPE	DASH	S/N	VENDOR W/S	AVAIL. FOR INSTL.	REQ'D. FOR INSTL.	SLACK
VEND DEV.	EP-1	- 3				ACTUAL	
QUAL 1	PP-1	- 5				ACTUAL	
QUAL 2	PP-2	- 5				ACTUAL	
CTU & 3A	PP-3	- 5		A07-31-64	08-10-64		
TDA #1	PA-1	- 7		08-31-64	09-08-64	06-16-64	-12
SST SPARE-TDA 1	PA-2	- 7		09-21-64	09-29-64	09-30-64	0
TDA-2	PA-3	- 7		10-11-64	10-19-64	01-19-65	+13
HGR SPARE-TDA 2	PA-4	- 7		11-02-64	11-10-64	09-30-64	- 5
TDA-3	PA-5	- 7		11-23-64	12-01-64	03-08-65	+13
TDA-4	PA-6	- 7		12-20-64	12-28-64	04-29-65	+18
TDA-5	PA-7	- 7		01-11-65	01-19-65	06-28-65	+24
TDA-6	PA-8	- 7		02-04-65	02-12-65	08-17-65	+27
TDA-7	PA-9	- 7		02-25-65	03-05-65	10-14-65	+33
TDA-8	PA-10	- 7		03-15-65	03-23-65	12-10-65	+38

VENDOR DELIVERY STATUS REPORT

CHART NO: 19-7C

DIPOLE ANTENNAS (AGENA)

DATE: 7 Aug. 1964

(52-87715)

USAGE	TYPE	DASH	VENDOR W/S	AVAIL. FOR INSTL.	REQ'D. FOR INSTL.	SLACK
VEND DEV.	EP-1	- 7			ACTUAL	
VEND DEV.	EP-2	- 7			ACTUAL	
ESTU	EP-3	- 7			ACTUAL	
BORESIGHT TEST NMSU	EP-4	- 7			ACTUAL	
VEND QUAL	PP-1	-13		08-31-64		
VEND QUAL	PP-2	-13		08-31-64		
CTU	PP-3	-13	08-31-64	09-10-64		
S/C 5	REP.	-29	10-10-64	10-20-64	08-25-64	- 8
SPARE (5)	REP	-29	11-15-64	11-25-64		
TDA-1	PA-1	-23	08-26-64	09-05-64	06-16-64	-12
SST SPARE-TDA 1	PA-2	-23	09-23-64	10-03-64	09-30-64	- 1
TDA-2	PA-3	-23	10-07-64	10-17-64	01-19-65	+13
HGR SPARE-TDA 1	PA-4	-23	10-21-64	10-31-64	09-30-64	- 4
TDA-3	PA-5	-23	11-04-64	11-14-64	03-08-65	+16
TDA-4	PA-6	-23	11-18-64	11-28-64	04-29-65	+22
TDA-5	PA-7	-23	12-02-64	12-12-64	06-28-65	+28
TD[illegible]	PA-8	-23	12-16-64	12-26-64	08-17-65	+33
TDA-7	PA-9	-23	12-30-64	01-10-65	10-14-65	+40
TDA-8	PA-10	-23	01-14-65	01-24-65	12-10-65	+46

VENDOR DELIVERY STATUS REPORT

CHART NO: 19-8C

SPIRAL ANTENNAS

DATE: 7 Aug. 1964

VENDOR - WESTINGHOUSE

USAGE	TYPE	DASH	S/N	VENDOR W/S	AVAIL. FOR INSTL.	REQ'D. FOR INSTL.	SLACK
VEND DEV.	EP-1-2	- 5*					ACTUAL
VEND DEV.	EP-3-4	- 5					ACTUAL
ESTU	EP-5-6	- 5					ACTUAL
NMSU	PP-1-2	-11					ACTUAL
VEND QUAL	PP-3-4	-39					ACTUAL
VEND QUAL	PP-5	-39					ACTUAL
VEND DEV.	PP-6	-39					ACTUAL
S/C 5	REP	-27		10-10-64	10-20-64	08-25-64	- 8
SPARE (5)	REP	-27		11-15-64	11-25-64		
CTU	PA-1	-21					ACTUAL
TDA-1	PA-2-3	-21		A07-29-64	08-08-64	06-16-64	- 8
SST SPARE-TDA 1	PA-4	-21			A08-01-64	09-30-64	+ 9
TDA-2	PA-5-6	-21		A07-29-64	08-08-64	01-19-65	+23
HGR SPARE-TDA 1	PA-7	-21			A08-01-64	09-30-64	+ 9
NMSU**	PA-8	-21		A07-29-64	08-08-64		
TDA-3	PA-9-10	-21		09-15-64	09-25-64	03-08-65	+24
TDA-4	PA-11-12	-21		10-13-64	10-23-64	04-29-65	+26
TDA-5	PA-13-14	-21		11-10-64	11-20-64	06-28-65	+31
TDA-6	PA-15-16	-21		12-08-64	12-18-64	08-17-65	+34
TDA-7	PA-17-18	-21		01-06-65	01-16-65	10-14-65	+39
TDA-8	PA-19-20	-21		02-03-65	02-13-65	12-10-65	+43

* All - 5 units out of program.

** Replacement for -11 unit.

VENDOR AGE STATUS REPORT

SYSTEM - RENDEZVOUS RADAR

VENDOR - WESTINGHOUSE

CHART NO: 19-D

DATE: 7 Aug. 1964

PART NO.	COMPONENT	UNIT NO.	VENDOR W/S	AVAIL. FOR USAGE	REQ'D. FOR USAGE	SLACK
	(PRE-INSTALLATION ACCEPTANCE)					
52E270025-1	PIA CONSOLE	1			A09-30-63	
52E270018-1	TEST RADAR INS	5			A03-31-64	0
52E270018-401	CAL KIT RIST	1**			A03-31-64	0
52E270052-1	DOLLY RADAR	1			A06-17-64	0
52E270056-001	PRESS LEAK INDICATOR	1	09-01-64	09-15-64	06-30-64	-12
	(SPACECRAFT SYSTEM TEST)					
52E270024-1	TEST RADAR INSTRUMENT	1			A06-13-64	0
52E270018-1	TEST RADAR INSTRUMENT	3			A06-17-64	0
52E270018-1	TEST RADAR INSTRUMENT	4 *	01-10-65	01-24-65	07-18-64	-26
52E270024-1	TEST RADAR INSTRUMENT	2			A08-03-64	0
52E270073-1	RON. EVAL. POD	1	10-10-64	10-24-64	07-18-64	-14
52E270079-1	RADAR COVER	1	10-10-64	10-24-64	06-30-64	-17
	(CAPE KENNEDY HANGAR)					
52E270018-1	TEST RADAR INSTRUMENT	2			A07-28-64	0
52E270073-1	RON. EVAL. POD	2	10-10-64	10-24-64	07-01-64	-17
52E270024-1	TEST RADAR INSTRUMENT	4	11-30-64	12-14-64	08-17-64	-17
52E270024-1	TEST RADAR INSTRUMENT	3 *	01-15-65	01-29-65	08-17-64	-24
52E270052-1	DOLLY RADAR	2			A06-16-64	0
52E270056-001	PRESS LEAK INDICATOR	2	08-15-64	08-29-64	07-01-64	- 9
52E270079-1	RADAR COVER	2	10-10-64	10-24-64	07-01-64	-17
52E040081-1	SIM S/C ENCR.-SUB.	2	08-15-64	08-29-64	09-25-64	+ 4
	(CAPE KENNEDY LAUNCHING PAD)					
52E270024-1	TEST CONSOLE	5	08-15-64	08-29-64	06-15-64	-11
52E270018-1	TEST RADAR INSTRUMENT	6			A07-29-64	0
52E270078-1	TEST CONSOLE TRANSP.	1			A08-03-64	0
	(CAPE KENNEDY RADAR RANGE)					
52E270018-401	CAL. KIT. RIST	2**	08-31-64	09-15-64	07-01-64	-11
52E270018-1	TEST RADAR INSTRUMENT	1			A07-22-64	0
52E270025-1	PIA CONSOLE RADAR (WEC TEST 2-3-64)	2			A06-08-64	0
	(VENDOR)					
52E040081-1	SIM S/C ENCR. SUB	1			A07-03-64	0

* In use for Qual Testing at Westinghouse.

** Unit 1 was damaged at MAC and returned to WEC for retrofit and repair. Unit will be sent to Cape. Unit 2 will be sent to St. Louis

MONTHLY SUMMARY

SYSTEM: Landing System
SUBSYSTEM: Landing Chutes
VENDOR: Northrop-Ventura
DATE: 7 August 1964

ENGINEERING STATUS

1. The twenty-two (22) second time delay from single point release on the main chute is being replaced with a zero time delay for S/C 5 and up. This release will be manually actuated in order to accomplish inversion at the most favorable moment.

2. A permanent reefing line was added to the test chute to approximate a five percent less than full open.

3. Engineering authorized Northrop to fabricate an experimental drogue parachute with the following design criteria: increase cone angle from 20 degrees to 30 degrees, increase porosity from 17 to 28 percent, increase number of gores from 12 to 16.

4. New design of the cartridges has eliminated the second bridgewire. These cartridges are to be reworked and the bridgewire removed to eliminate the possibility of accidental firing.

5. The acceptance test procedure for electrical cartridges was revised by adding a vibration sequence. This is programmed to eliminate resistance malfunctions.

ASSEMBLY AND DELIVERY STATUS

1. Final installation of S/C 2 controls was accomplished on 5 August 1964.

2. The 52-41703-197-145 and -201-144 mortar assemblies for S/C 3 were found to be unacceptable items on 1 August 1964. The counter-sink of the 'O' ring installation had not been done. These mortars will be returned to Northrop for rework and S/C 3 will take the next available items. Northrop is scheduled to ship these replacements by 12 August 1964.

3. The spare requirements for baroswitches -SST were completed with the shipment of the 52-41703-129 on 27 July 1964.

4. Due to part shortages, other than landing system items, final installation of S/C 3A thermal qual requirements is now scheduled to be complete by 28 August.

5. S/C 4 and S/C 5 controls are scheduled to be available for installation by 30 August 1964. This date is dependent upon the availability of the 52-41703-197-145 and -201-144 mortar assemblies.

6. The parachute components available for installation dates are dependent upon the availability of pyros.

TEST STATUS

DEVELOPMENT TESTS (PTV) (Ref. line 3)

1. PTV Drop #7 was completed on 9 July, 1964. To minimize the vibration, such as was experienced on Drop #6, an inactive reefing (overinflation control) line was incorporated on the test chute. The vehicle remained stable through-out drop and systems functioned as planned.

2. PTV Drop # 8 using PTV #3, was completed on 16 July, 1964. The test drogue deployed as planned after the drag chute deployment. The drogue chute bag and sabot continued downstream and penetrated the drag chute just inside the skirt band, breaking the permanent reefing line and opening up an entire gore. This is an expected problem and nothing will be done to alleviate it since this cannot happen on a production unit. There was minor damage to the PTV aft section on impact, but there was no test chute damage or data loss and thus test was termed successful.

3. PTV Drop #9 was cancelled on 22 July, 1964 due to NASA not accepting the 52-41703-179 cartridges. The PTV test program is still on stop pending availability of acceptable cartridges.

QUALIFICATION TESTS

1. Baroswitch (Ref. line 7)

   During the reporting period the qual tests have come to a stop three times. The first delay was in having to run acceptance tests. The second was caused by a test equipment failure. The third on 6 August, 1964 per preliminary reports, was due to a baroswitch failure. Northrop's quality control is now investigating. Further information will be transmitted at a later date.

2. Pyro Devices (Ref. line 9)

   The discrepancy noted during qualification testing on the 52-41703-95 and -97 reefing cutters was that a greater pull force was required. Engineering evaluated and found acceptable and are revising the qual spec's. The final phase of qual is scheduled to begin 31 August, 1964.

   The failure analysis being performed by Northrop on the reefing cutters which failed to fire during PTV Drop #5 is still in process.

   Qualification testing on the 52-41703-157 forward and aft bridle leg was successfully completed on 21 July, 1964.

   Three pieces of the 52-41703-179 cartridges failed immersion tests during a lot sampling test. Dispositions on failures was transmitted to MAC on 3 August, 1964. The disposition was evaluated and resolved. Cartridges then went to pressure tests where partial failures were experienced during lot sampling tests. This failure analysis is scheduled to be complete by 10 August 1964. If accepted, cartridges will be made available for PTV and S/A #7 drop tests. Cartridges will also be available for the final phase of acceptance tests upon approval. The test fixture will be complete by 10 August, 1964, and thus the vibration tests could begin immediately.

3. Static No. 7 (Ref. line 21)

The R & R section for S/A #7 was shipped to El Centro on 20 July, 1964.

During electrical check-out there was a failure in the 52-77626-327 relay panel of the sequential system. This relay panel was shipped back to MAC and received here on 6 August, 1964. MAC has scheduled to complete rework and ship the panel to El Centro by 13 August, 1964.

If parts become available as scheduled and acceptable pyros are ready, the the first drop of S/A #7 is tentatively scheduled for 21 August, 1964.

4. Static No. 4A (Ref. line 16)

S/A #4A is in work and progressing as scheduled. Due to that fact that S/C 2, S/C 3, and S/C 3A have strict priority, parts are being taken and procurement of replacement parts for S/A #4A could possibly cause the scheduled completion date of 21 August, 1964 to slip.

AGE STATUS

1. Two each of R6275 and R6276 drogue and main packing boxes were shipped to the Cape on 24 July, 1964.

The third drogue packing box is to be used by Northrop in testing. After testing it is to be refurbished and shipped to the Cape.

The third main packing box is at Northrop awaiting final disposition on refurbishment.

GEMINI SPACECRAFT

CONTRACT NO. NAS 9-170

LANDING CHUTE - (VENDOR: NORTHROP-VENTURA)

STATUS CHART

REPORT NO. 8580-1 -42

LAST PROGRAM SCHEDULE CHANGE: 24 Apr. 64

STATUS AS OF: 7 August 64

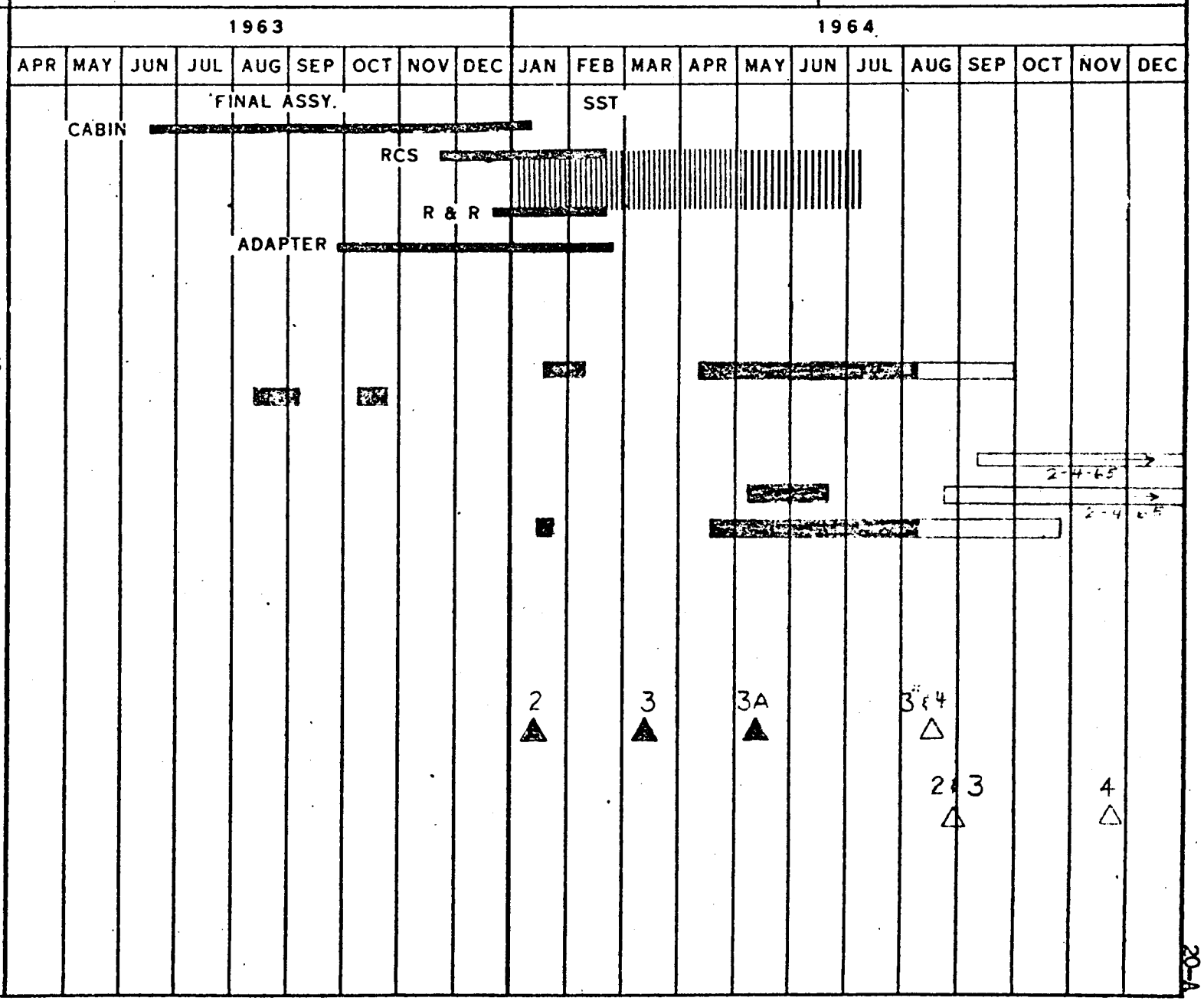

* S/C 3 HIGH ALTITUDE EQUIPMENT

LEGEND:

- ▽ TEST PROPOSAL DUE
- ◊ HARDWARE AVAILABLE
- ▭ TEST ACTIVITY
- ○ REPORT DUE
- ☆ REPORT APPROVED

SOLID INDICATES ACTUALS

GEMINI LANDING SYSTEM
PARACHUTE QUALIFICATION AND DEVELOPMENT TESTS
SCD NO. 52-41703

8560-1-42

Date: 8-07-64

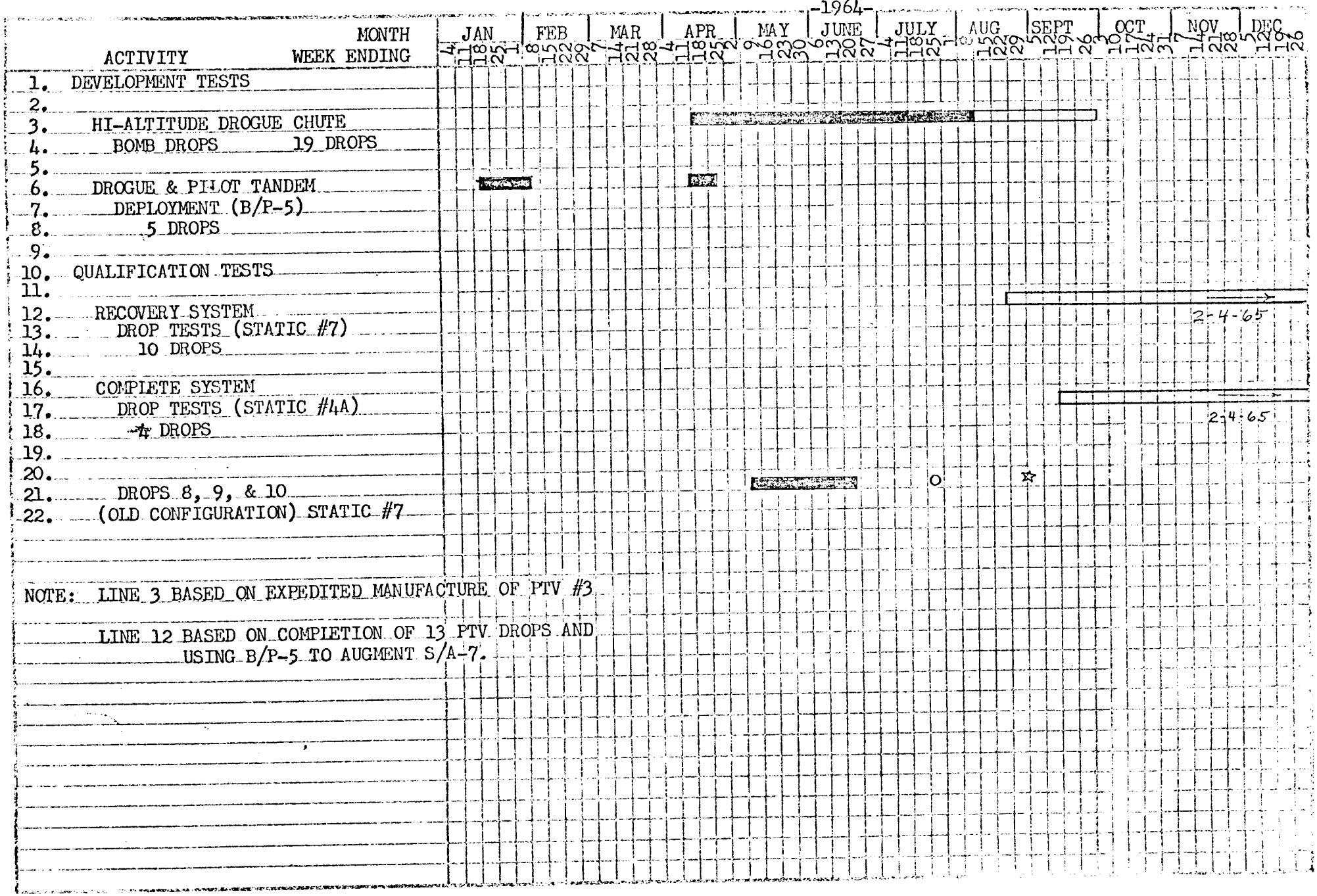

NOTE: LINE 3 BASED ON EXPEDITED MANUFACTURE OF PTV #3

LINE 12 BASED ON COMPLETION OF 13 PTV DROPS AND USING B/P-5 TO AUGMENT S/A-7.

LEGEND:

- ▽ TEST PROPOSAL DUE
- ◊ HARDWARE AVAILABLE
- ▭ TEST ACTIVITY
- ○ REPORT DUE
- ☆ REPORT APPROVED

SOLID INDICATES ACTUAL

GEMINI LANDING SYSTEM
HARDWARE QUALIFICATION AND DEVELOPMENT TESTS
SCD NO. 52-41703

7 August 1964

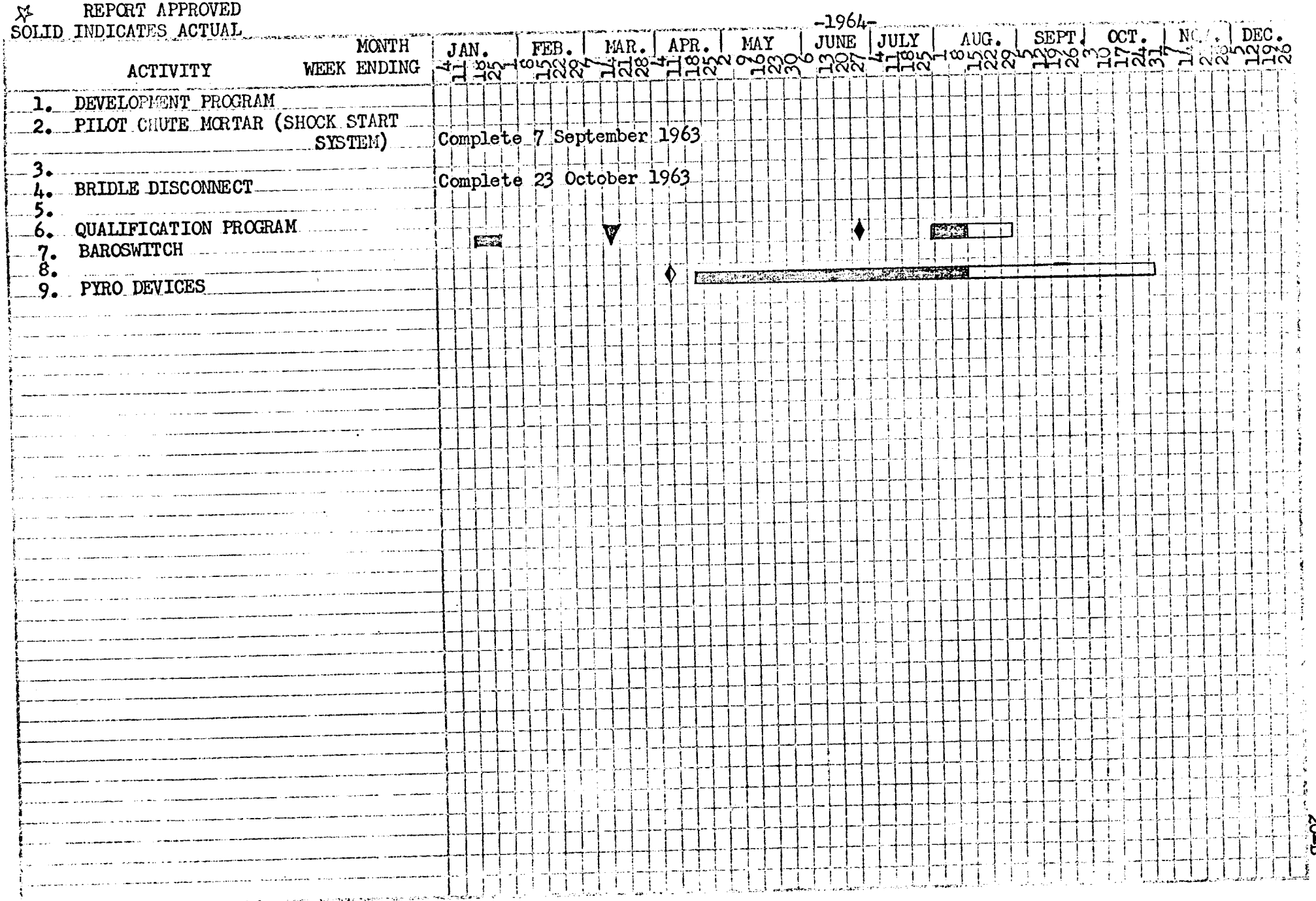

VENDOR DELIVERY STATUS REPORT
SYSTEM - LANDING
VENDOR - NORTHROP VENTURA

CHART NO.: 20-C

DATE: 8-07-64

UNIT NO	TYPE	USAGE	COMPONENT	VENDOR W/S	AVAIL FOR INSTL	REQ'D FOR INSTL	SLACK
1	PA-1	SC-2	CONTROLS			A08-05-64	
2	PA-2	SC-3	CONTROLS		A03-16-64	02-29-64	- 2
2	PA-2	SC-3	CONTROLS (CABIN)			A06-28-64	
2	PA-2	SC-3	** CONTROLS (R & R)	08-12-64	8-26-64	05-11-64	-13
3	PA-3	SPARE	BAROSWITCHES-SST			A08-04-64	
4*	PA-4	SC-3A	CONTROLS & CHUTES		A05-15-64	04-10-64	- 5
5	PA-5	SC-4	CONTROLS (CABIN)	A07-27-64	08-14-64	04-01-64	-19
5	PA-5	SC-4	CONTROLS (R & R)	08-12-64	08-26-64	07-30-64	- 4
6	PA-6	SC-5	CONTROLS (CABIN)	A07-27-64	08-12-64	06-20-64	- 6
			(R & R)	08-14-64	08-30-64	10-30-64	+ 8
7	PA-7	SC-6	CONTROLS	09-07-64	09-21-64	08-17-64	- 5
8	PA-8	SC-7	CONTROLS	11-03-64	11-17-64	10-15-64	- 4
9	PA-9	SC-8	CONTROLS	11-20-64	11-30-64	12-15-64	+ 2
10	PA-10	SC-9	CONTROLS	01-20-65	01-30-65	02-15-65	+ 2
11	PA-11	SC-10	CONTROLS	03-20-65	03-30-65	04-15-65	+ 2
12	PA-12	SC-11	CONTROLS	05-20-65	05-31-65	06-15-65	+ 2
13	PA-13	SC-12	CONTROLS	07-20-65	07-30-65	08-16-65	+ 2
1	PA-1	SC-2 (c)	PARACHUTE	08-17-64	08-30-64	06-11-64	- 7
2	PA-2	SPARE (c)	PARACHUTE	08-14-64	08-24-64	06-30-64	- 8
3	PA-3	SC-3 (c)	PARACHUTE	08-17-64	08-30-64	09-06-64	+ 1
4	PA-4	SC-4 (c)	PARACHUTE	11-09-64	11-22-64	12-09-64	+ 2
5	PA-5	SPARE (c)	PARACHUTE	08-07-64	08-17-64	11-30-64	+14
6	PA-6	SC-5 (c)	PARACHUTE	02-08-65	02-22-65	03-08-65	+ 2
7	PA-7	SPARE (c)	PARACHUTE	09-25-64	10-09-64	02-28-65	+19
8	PA-8	SC-6 (c)	PARACHUTE	04-25-65	05-09-65	05-25-65	+ 2
9	PA-9	SC-7 (c)	PARACHUTE	06-15-65	06-29-65	07-20-65	+ 3
10	PA-10	SC-8 (c)	PARACHUTE	08-08-65	08-22-65	09-08-65	+ 2
11	PA-11	SC-9 (c)	PARACHUTE	10-03-65	10-13-65	11-03-65	+ 2
12	PA-12	SC-10 (c)	PARACHUTE	11-29-65	12-13-65	12-29-65	+ 2
13	PA-13	SC-11 (c)	PARACHUTE	01-25-66	02-08-66	02-25-66	+ 2
14	PA-14	SC-12 (c)	PARACHUTE	03-22-66	04-06-66	04-03-66	0

*Used hardware recovered from Drop Tests.

**The 52-41703-201-144, -197-145 mortar assemblies were rejected after being accepted for installation. The will ship date reflects the replacement items.

VENDOR ACE STATUS REPORT
SYSTEM - LANDING
VENDOR - NORTHROP-VENTURA

CHART NO: 20-D

DATE: 8-7-64

PART NUMBER	NOMENCLATURE	UNIT NO	VENDOR W/S	AVAIL FOR INSTL	REQ'D FOR INSTL	SLACK
R6275	PKG BOX DROGUE CHUTE	1	A 7-24-64	8-17-64	7-08-64	- 5
R6275	PKG BOX DROGUE CHUTE	2	A 7-24-64	8-17-64	7-08-64	- 5
R6275	PKG BOX DROGUE CHUTE	3	8-27-64	9-27-64	7-08-64	-11
R6275	PKG BOX DROGUE CHUTE	4	8-31-64	9-30-64	7-08-64	-12
R6276	PKG BOX MAIN CHUTE	1	A 7-24-64	8-17-64	7-08-64	- 5
R6276	PKG BOX MAIN CHUTE	2	A 7-24-64	8-17-64	7-08-64	- 5
R6276	PKG BOX MAIN CHUTE	3	8-18-64	9-18-64	7-08-64	- 9

MONTHLY SUMMARY

SYSTEM: Time Reference
SUBSYSTEM: Electronic & Event Timer
VENDOR: E.E.D.
DATE: 7 August 1964

ENGINEERING STATUS

1. EP-2 Event Timer was disassembled and repaired. A burned out diode in module 4 had caused it to be inoperative. The unit is now scheduled for ATP and is expected to be available 12 August 1964.

2. Electronic Timer design changes affecting 512 second update inhibit, 256 second event relay inhibit and TR-300 second indicator, were considered by the NASA Review Board during the week 3-7 August 1964. No directive relative to the changes has been received by MAC.

ASSEMBLY AND DELIVERY STATUS

1. SN-103 Electronic Timer for S/C 4 was delivered 7 July 1964.

2. Production of timers SN-107 and up will resume after review of qualification test results.

3. Availability of Event and Electronic Timers 106 has been delayed until 12 August 1964 because vibration tests have been suspended from time to time when extremely hot weather affected test console instruments.

TEST STATUS

1. All qualification testing on the timers has been completed. Overstress reliability requirements having been met in qualification testing, the performance of overstress tests has been deleted by agreement between NASA and MAC (Ref. NASA TWX GT 55164, dated 14 July 1964). As stated above, MAC EED expects to complete the test reports 10 August 1964.

GEMINI SPACECRAFT

CONTRACT NO. NAS 9-170

EVENT TIMER - (MCDONNELL EED)

STATUS CHART (REPORT 8664)

REPORT NO. 8580-1 -42

LAST PROGRAM SCHEDULE CHANGE: 24 April 1964

STATUS AS OF: 20 July 1964

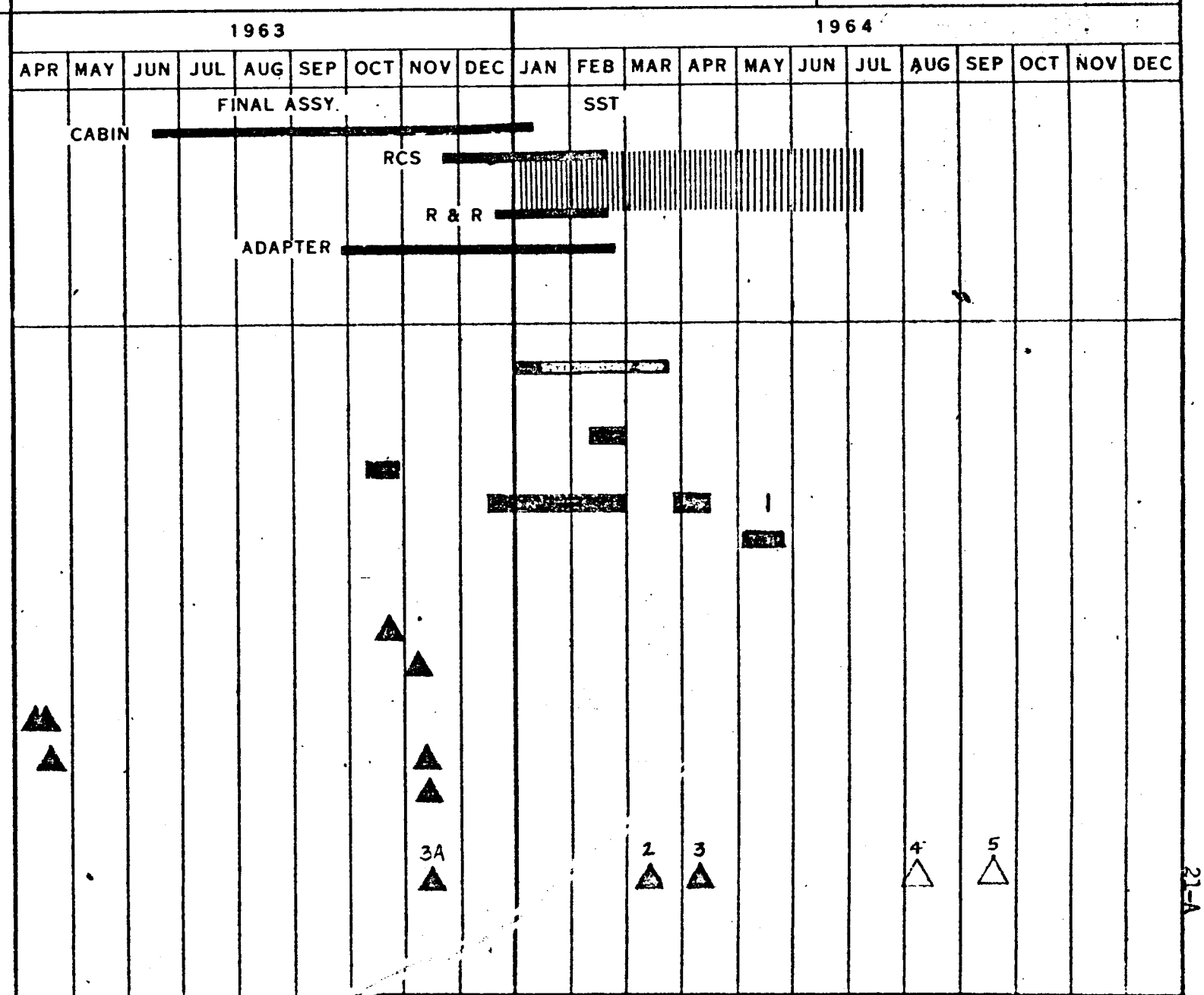

LEGEND:
- ▽ TEST PROPOSAL DUE
- ◊ HARDWARE AVAIL
- ▭ TEST SCHEDULE
- ○ REPORT DUE
- ✡ REPORT APPROVED

SOLID INDICATES ACTUAL

QUALIFICATION AND DEVELOPMENT TEST STATUS
EVENT TIMER
M.A.C. ELECTRONIC ENGINEERING DIVISION

M.A.C. REPORT 8664

REPORT NO.: 8580-1-42
LAST PROGRAM SCHEDULE CHANGE: 4-24-64
STATUS AS OF: 7 August 64

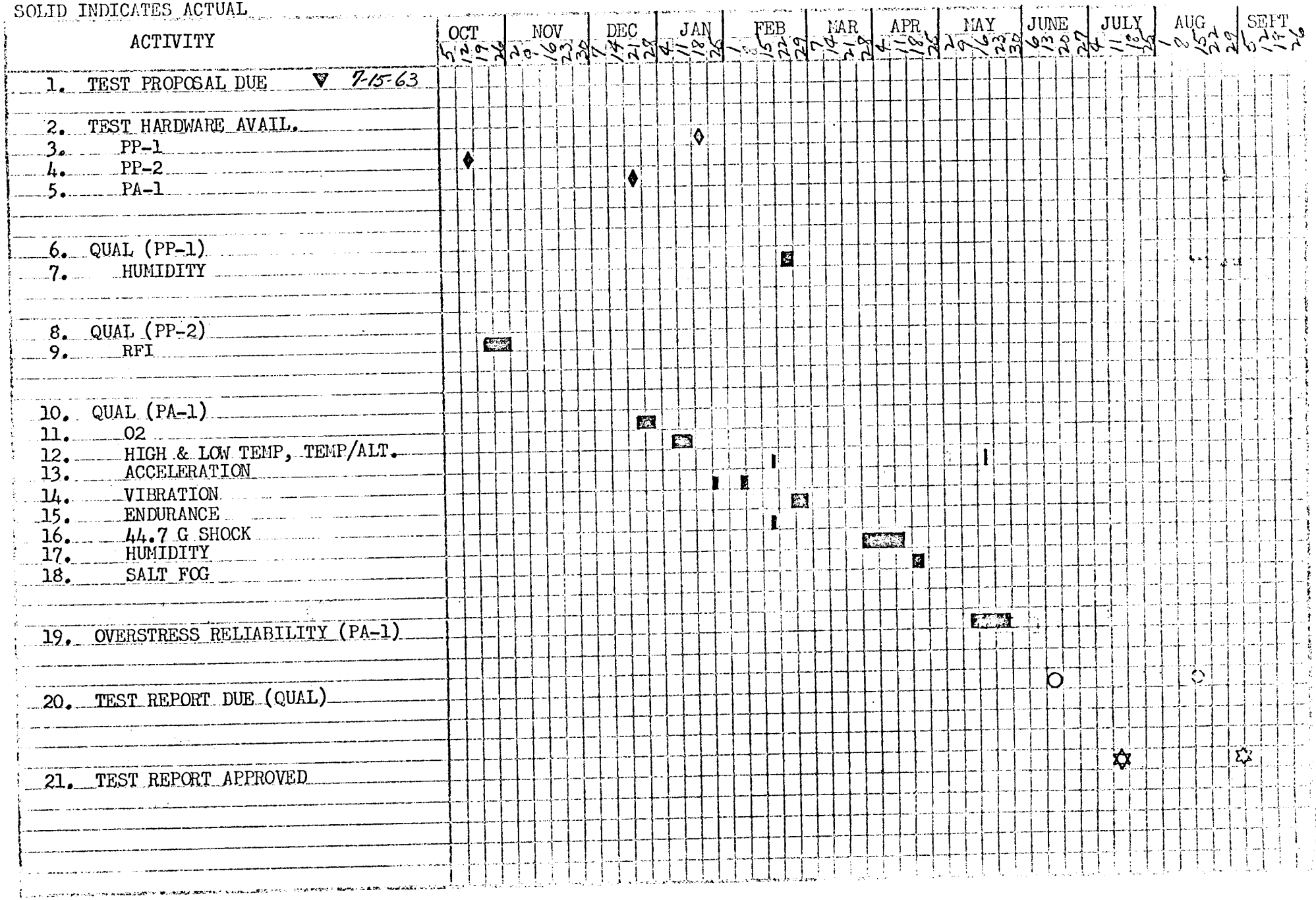

VENDOR DELIVERY STATUS REPORT
EVENT TIMER
MCDONNELL - E.E.D.

CHART NO.: 21-C

DATE: 8-07-64

UNIT No.	TYPE	S/N	USAGE	AVAIL FOR INSTL	REQ'D FOR INSTL	SLACK
2	EP-2		DEVELOPMENT TESTING		A05-15-63	
2	EP-2		CHANCE-VOUGHT TEST		A11-07-63	
2	EP-2		CENTRIFUGE TRAINER AD.08-14-64			
3	PP-1	11	QUAL		A02-15-64	
3	PP-1	11	CHANCE-VOUGHT TEST		A06-10-64	
4	PP-2	12	QUAL		A10-11-63	
4	PP-2	12	CTU		A12-30-63	
5	PP-3	13	SC-3A		A07-28-64	
6	PA-1	101	QUAL		A12-20-63	
7	PA-2	102	SC-2		A03-18-64	
8	PA-3	103	SC-3		A05-07-64	
9	PA-4	104	SPARE SST		A04-15-64	
10	PA-5	105	SPARE HGR	A05-06-64	06-30-64	
11	PA-6	106	SC-4	08-12-64	04-30-64	-14
12	PA-7	107	SPARE HGR	09-11-64	08-30-64	- 2
13	PA-8	108	SC-5	09-18-64	07-22-64	- 8
14	PA-9	109	SC-6	09-28-64	09-18-64	- 1
15	PA-10	110	SC-7	10-19-64	11-06-64	+ 3
16	PA-11	111	SC-8	12-05-64	11-05-64	+ 4
17	PA-12	112	SC-9	02-03-65	03-03-65	+ 4
18	PA-13	113	SC-10	03-23-65	04-23-65	+ 4
19	PA-14	114	SC-11	05-24-65	06-24-65	+ 4
20	PA-15	115	SC-12	07-19-65	08-19-65	+ 4

VENDOR AGE STATUS REPORT

TIME REFERENCE SYSTEM

EED

CHART NO.: 21-D
22-D

DATE: 7 Aug.'64

All AGE Delivered - See previous 8580-1 report for dates.

GEMINI SPACECRAFT

CONTRACT NO. NAS 9-170

ELECTRONIC TIMER - (MCDONNELL EED)

STATUS CHART (REPORT 8664)

REPORT NO. 8580-1 -42

LAST PROGRAM SCHEDULE CHANGE: 24 April 1964

STATUS AS OF: 7 August 1964

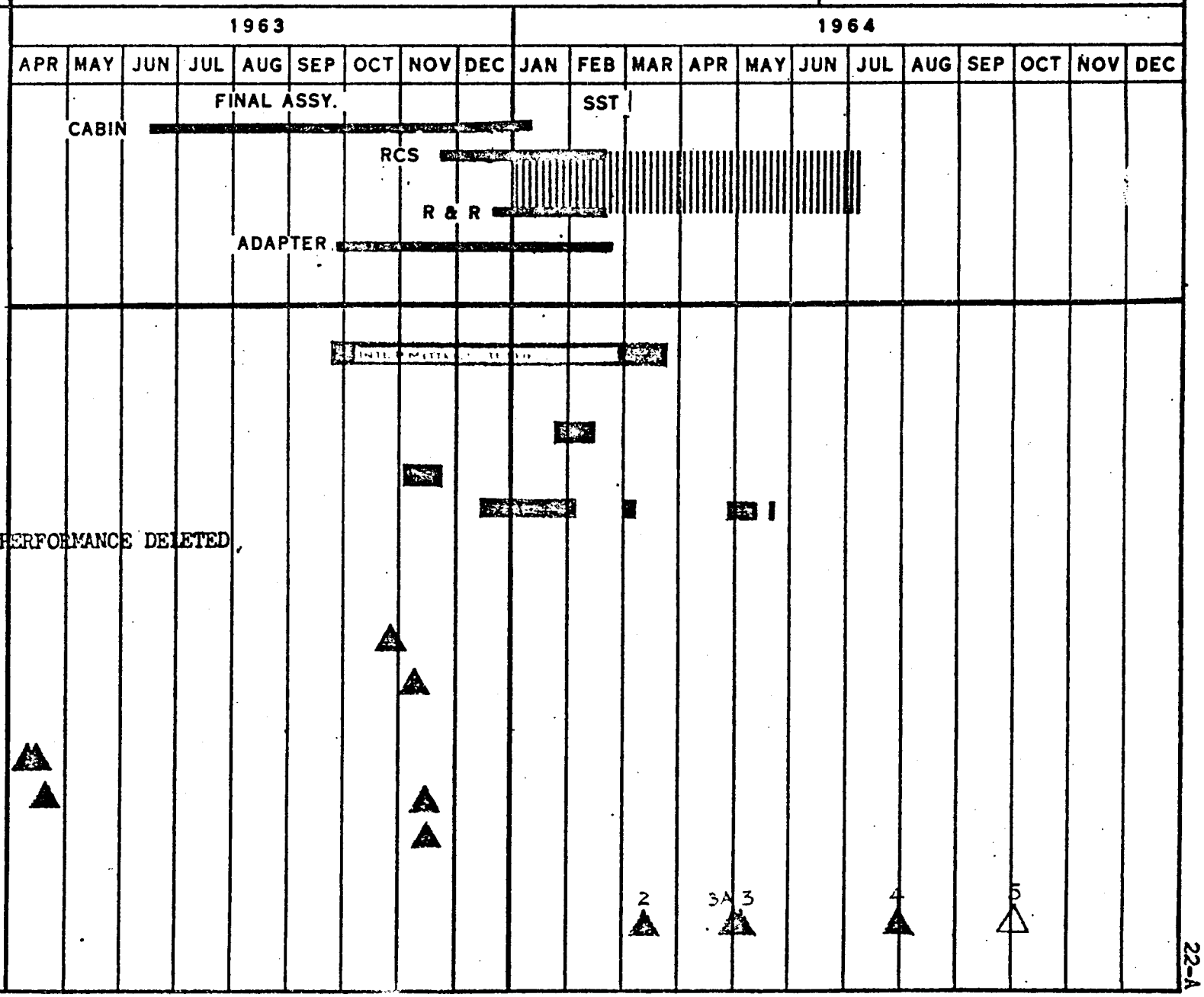

22-A

LEGEND:

TEST PROPOSAL DUE
HARDWARE AVAIL.
TEST SCHEDULE
REPORT DUE
REPORT APPROVED
SOLID INDICATES ACTUAL

QUALIFICATION AND DEVELOPMENT TEST STATUS
ELECTRONIC TIMER
M.A.C. ELECTRONIC ENGINEERING DIVISION

7 August 1964

MAC REPORT 8664

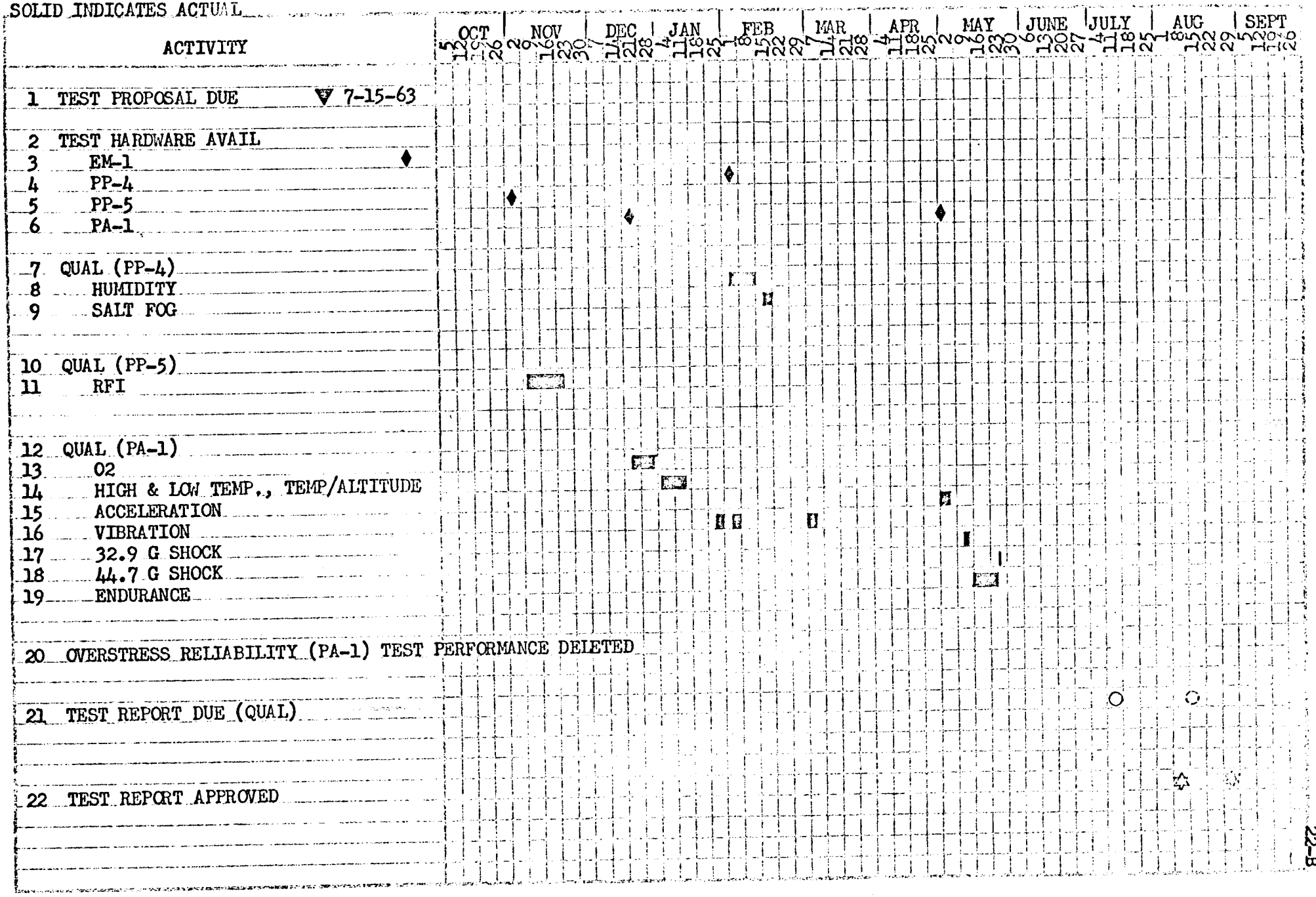

VENDOR DELIVERY STATUS REPORT
ELECTRONIC TIMER
MCDONNELL - E.E.D.

CHART NO: 22-C

DATE: 8-7-64

UNIT NO	TYPE	S/N	USAGE	AVAIL FOR INSTL	REQ'D FOR INSTL	SLACK
1	EP-1		ESTU		A11-25-64	
1	EP-1		DEVELOPMENT		A04-20-64	
2	EP-2		DEVELOPMENT TESTING		A09-01-64	
2	EP-2		IN-LOOP TEST-IBM		A09-30-64	
3	PP-1	11	CTU		A12-03-63	
4	PP-2	12	NASA FLY OVER-1		A10-10-63	
5	PP-3	13	NASA FLY OVER-2		A11-05-63	
6	PP-4	21	QUAL		A01-28-64	
6	PP-4	21	ESTU		A04-20-64	
7	PP-5	22	QUAL		A11-04-63	
7	PP-5	22	SC-3A		A06-15-64	
8	PA-1	101	QUAL		A04-27-64	
9	PA-2	102	SC-2		A03-18-64	
10	PA-4	104	SC-3		A05-14-64	
11	PA-3	103	SC-4	A07-31-64	06-02-64	
12	PA-5	105	SPARE-SST		A05-25-64	
13	PA-6	106	SPARE-HGR	08-12-64	06-30-64	- 8
14	PA-7	107	SPARE-HGR	09-11-64	08-30-64	- 2
15	PA-8	108	SC-5	10-02-64	08-20-64	- 7
16	PA-9	109	SC-6	10-23-64	10-17-64	- 1
17	PA-10	110	SC-7	11-27-64	12-09-64	+ 2
18	PA-11	111	SC-8	01-04-65	02-04-65	+ 4
19	PA-12	112	SC-9	03-02-65	04-02-65	+ 4
20	PA-13	113	SC-10	04-26-65	05-26-65	+ 4
21	PA-14	114	SC-11	06-28-65	07-28-65	+ 4
22	PA-15	115	SC-12	08-21-65	09-21-65	+ 4

No spares allocated until S/N 105 - effectivity of TRS-Radar interface configuration change.

MONTHLY SUMMARY

SUBSYSTEM: Data Transmission
VENDOR: Electro Mechanical Research
DATE: 7 August 1964

ENGINEERING STATUS

1. PCM'S

A. Failure of -85 low level multiplexers during high temperature portion of qualification test was traced to a back-to-back solder connection where heat from the last solder operation deteriorates the first. To solve this problem a crimping operation has been substituted for the first solder operation. All airborne units are to be retrofitted.

B. The spurious reset problems appear to be almost completely associated with AGE equipment and cabling. Further investigations are being made as schedules permit.

C. Dynamic impedance of a representative number of PCM channels were checked and all were found to meet specifications. Rise and fall times for the TRS request pulses were determined using EM-1 PCM system. Rise time was less than one-micro-second; fall time was about 50 micro-seconds between 90% and 10% points.

D. As a result of failures during high temperature, vibration and humidity portions of quality tests new crimp type wire connections, 'O' ring seals and lock nuts have been incorporated into the high and low level multiplexers. The low level multiplexer and high level multiplexers have been redesignated 52-85713-385 and -387 respectively.

E. Based on a review of the results of the temperature portion of the PCM qualification test and review of the accuracy figures available for ATP data MAC has revised the PCM low level accuracy requirements as indicated in EO #92619 as follows:

(1) Actual encoded output shall equal the theoretical output within $\pm$ 6 counts on 100% of the low level analog channels.

(2) Within $\pm$ 4 counts on 95% of the low level analog channels.

(3) Within $\pm$ 3 counts on 75% of the low level analog channels.

2. TAPE RECORDERS

A. Failure of the 52-85713-37 (S/N 12P) during vibration portion of qual test has been attributed to reel whip, and shock mounts having the wrong resonant frequency. A roller assembly has been incorporated to reduce the reel movement and a procedure has been specified to check the resonant frequency of the shock mounts.

ASSEMBLY AND DELIVERY STATUS

1. IPCM'S

A. IPCM #1 for use in the 041-1 re-entry module simulator shipped on 6 August to MAC St. Louis.

B. IPCM #2 for use in the 040-3 DTS test set being installed in St. Louis has been rejected by MAC Quality Assurance due to excessive 13 bit error in the 640 sample per second channels (108 thru 113). Corrective action is being taken and delivery is expected approximately 13 August.

2. PCM'S

A. Four -385 low level and four -387 hi level multiplexers are scheduled to be hand carried to MAC St. Louis on 8 August for retrofit to S/C 2 (A/B 8) and S/C 3 (A/B 9). These multiplexers incorporated new crimp wire connections in the low levels and new 'O' ring seals and lock nuts in both low and high levels.

B. A/B 10 (S/C 3A) has been delayed due to utilizing its multiplexers to retrofit A/B 8 in S/C 2. The programmer for this system is to be held at EMR until the multiplexers from A/B 8, (S/C 2) can be refurbished and ATP'd as a system. Expected will ship date for A/B 10 is 17 August.

C. A/B 11 (Spare-SST) has been delayed due to using its multiplexers to retrofit A/B 9 (S/C 3). Multiplexers from A/B 9 (S/C 3) will be refurbished and ATP'd with A/B 11's programmer. A/B 11 programmer has experienced excessive errors in the 640 sample per second channels (108 - 113). Expected will ship for this system is 24 August.

D. A/B 12 (Spare-Hgr) will ship remains 25 September with a system scheduled every three weeks thereafter.

3. TAPE RECORDERS

A. -35 (S/N 7P Spare-SST) was returned to RCA for special tests and modification on 13 July. Unit is expected to be returned to MAC St. Louis on 17 August.

B. -35 (S/N 11P, IMCC) will ship date is now 14 August. This unit will then be delivered to the Manned Spacecraft Center at Houston, Texas.

C. -37 (S/N 13, S/C 3) was hand carried to St. Louis on 6 August under Project Expedite.

4. TRANSMITTERS

A. S/N 9 xmtrs (-63, -65, -67) are expected to be delivered on 10 August.

B. An approximate two week slip occurred in the transmitter delivery schedule due to RCA closing for two weeks.

TEST STATUS

1. PCM QUAL

A. A/B 7A has completed the high temperature, low temperature, vibration, humidity and is approximately fifty percent thru temperature-altitude endurance portion of the qual test. Due to multiplexer failure that occurred in certain tests, the high temperature, vibration and humidity tests will have to be repeated utilizing the -385 and -387 multiplexers.

2. TAPE RECORDER QUAL

A. -37 (S/N 12P) with reel snubbers installed to reduce reel whip and modified to separate the S/C ground from the signal ground completed vibration portion of qual test and is progressing into high temperature portion of test. Vibration test data is presently being analyzed by MAC Engineering to determine if the test was a complete success.

3. TRANSMITTER QUAL AND RELIABILITY TEST

A. The transmitter qual test report is in final printing and is expected to be submitted to MAC Engineering approximately 8 August.

B. Transmitter reliability tests are to begin the week of 24 August. Test start date was delayed due to two week shutdown of RCA facility for vacation.

AGE

1. Installation of 040-3 DTS continues at MAC St. Louis. Completion is hampered by the unavailability of a PCM system with a sufficient drive capability to perform checkout. IPCM #2 is scheduled for delivery approximately 13 August.

2. 041-1 re-entry module instrumentation simulator was received less IPCM from Missouri Research Laboratory. IPCM for this test set completed ATP on 28 July and delivery is expected on 6 August.

3. A/B 5 (IMCC-MSC) has been reallocated to the Cape for use in their 041-1 simulator. Delivery to the Cape will be after delivery of an IPCM to MAC and retrofit of hardline output module to A/B 5 at EMR.

4. Late delivery of IPCM #2 and excessive repair time required on A/B 5 are the gating items hampering the use of the 040-3 at St. Louis and the 041-1 at the Cape.

5. EMR has been requested to furnish the services of an additional representative for checkout of the 040-3 test set for one week after delivery of the first IPCM. Work load on ground stations being utilized for S/C 2 and S/C 3 checkout demand full time of EMR representatives presently at MAC.

GEMINI SPACECRAFT

CONTRACT NO. NAS 9-170

DATA TRANSMISSION SYSTEM

(VENDOR: ELECTRO-MECHANICAL RESEARCH, INC.)

STATUS CHART

REPORT NO. 858[illegible]2

LAST PROGRAM SCHEDULE CHANGE: 24 April 1964

STATUS AS OF: 7 Aug. 1964

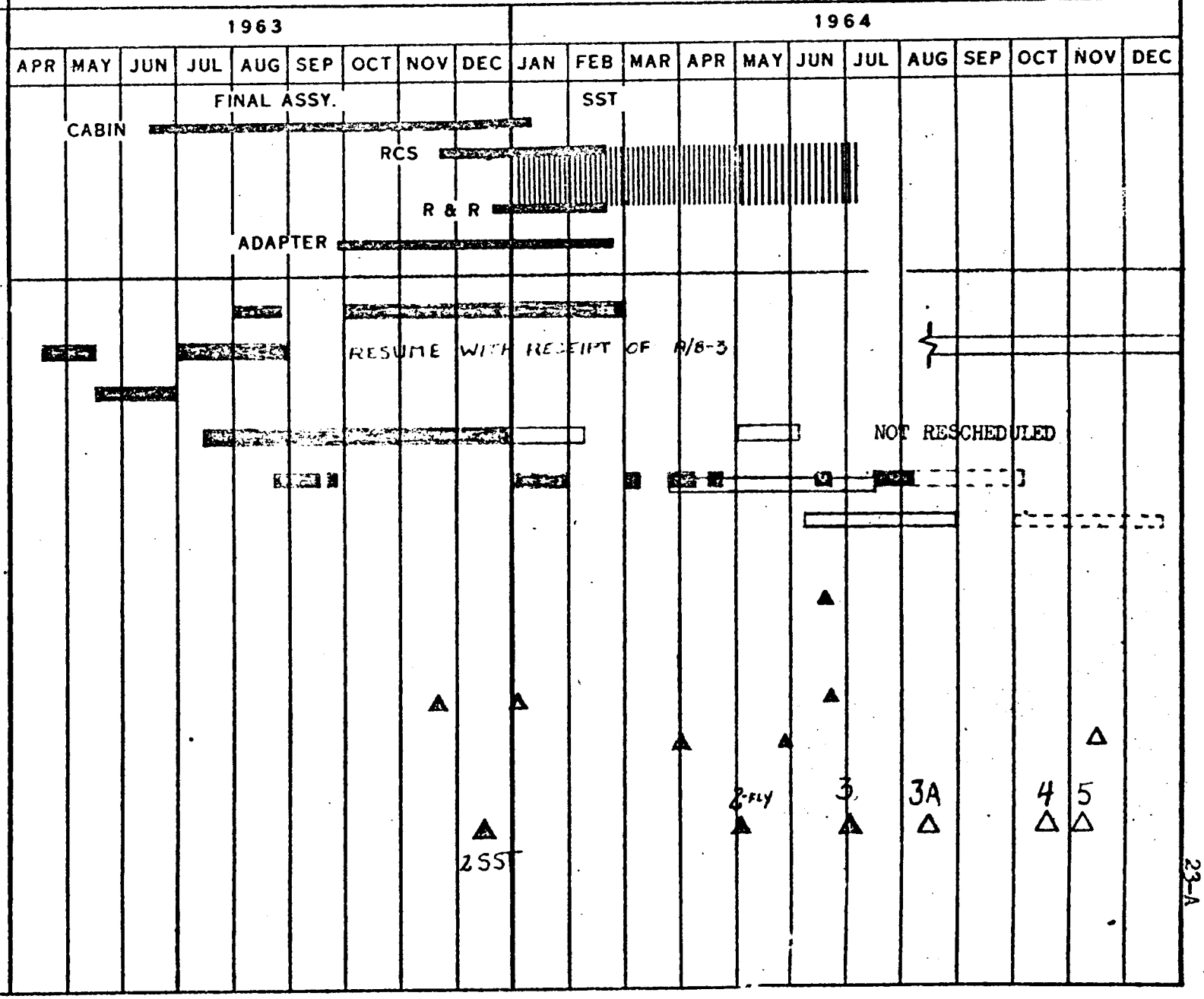

LEGEND:
- ▽ TEST PROCEDURE APPROVED
- △ HARDWARE AVAILABLE
- ▭ TEST SCHEDULE
- O REPORT DUE
- ✡ REPORT APPROVED

SOLID INDICATES ACTUAL

QUALIFICATION AND DEVELOPMENT TEST STATUS

DTS TAPE RECORDER
(EIR-RCA)

8580-1-42
7 Aug. 1964

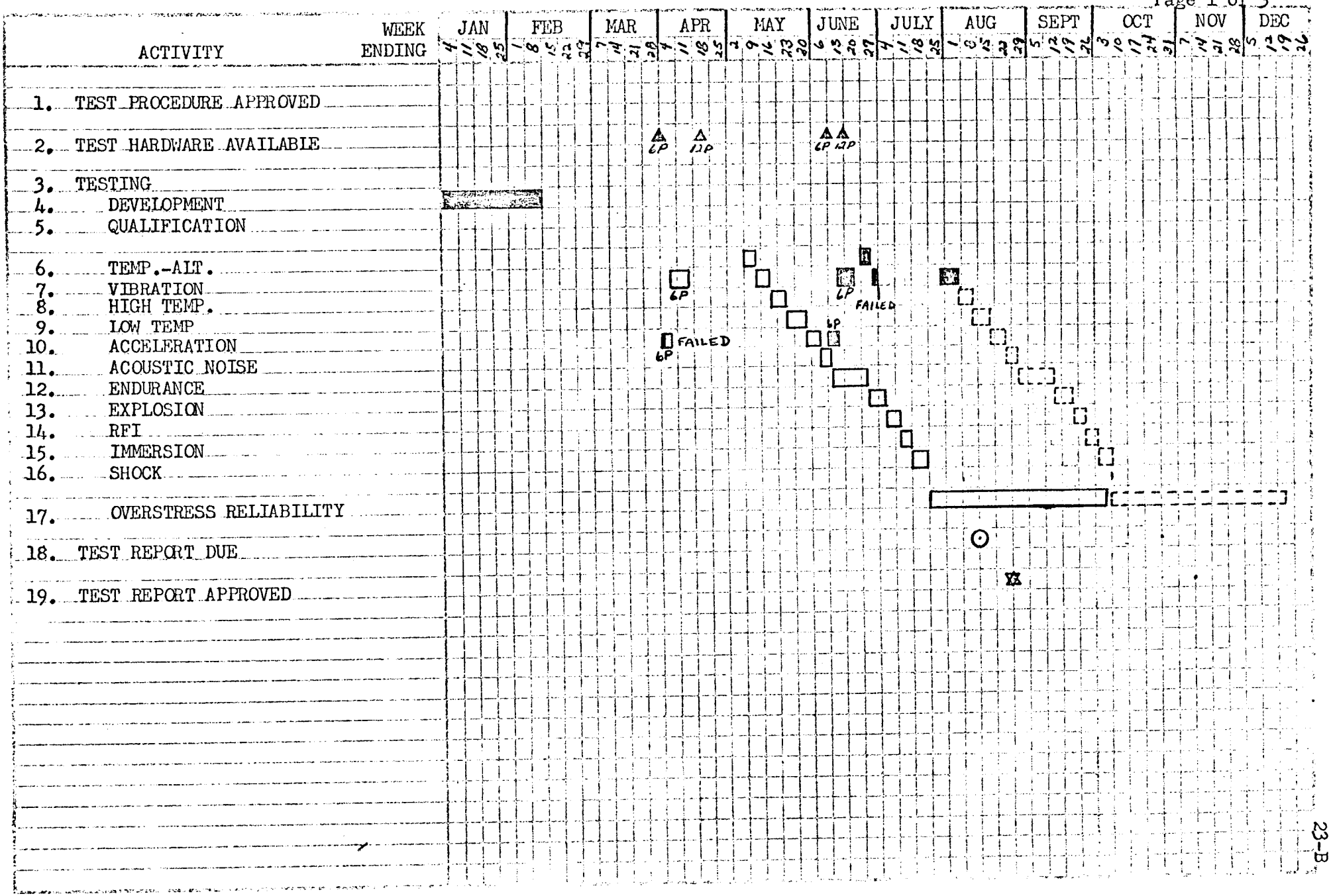

LEGEND:
- ▽ PROCEDURE APPROVED
- △ HARDWARE AVAILABLE
- ▭ TEST SCHEDULE
- ○ REPORT DUE
- ✡ REPORT APPROVED

SOLID INDICATES ACTUAL

QUALIFICATION AND DEVELOPMENT TEST STATUS

DTS TRANSMITTERS
EMR-RCA
SCD 52-85713

8580-1-42

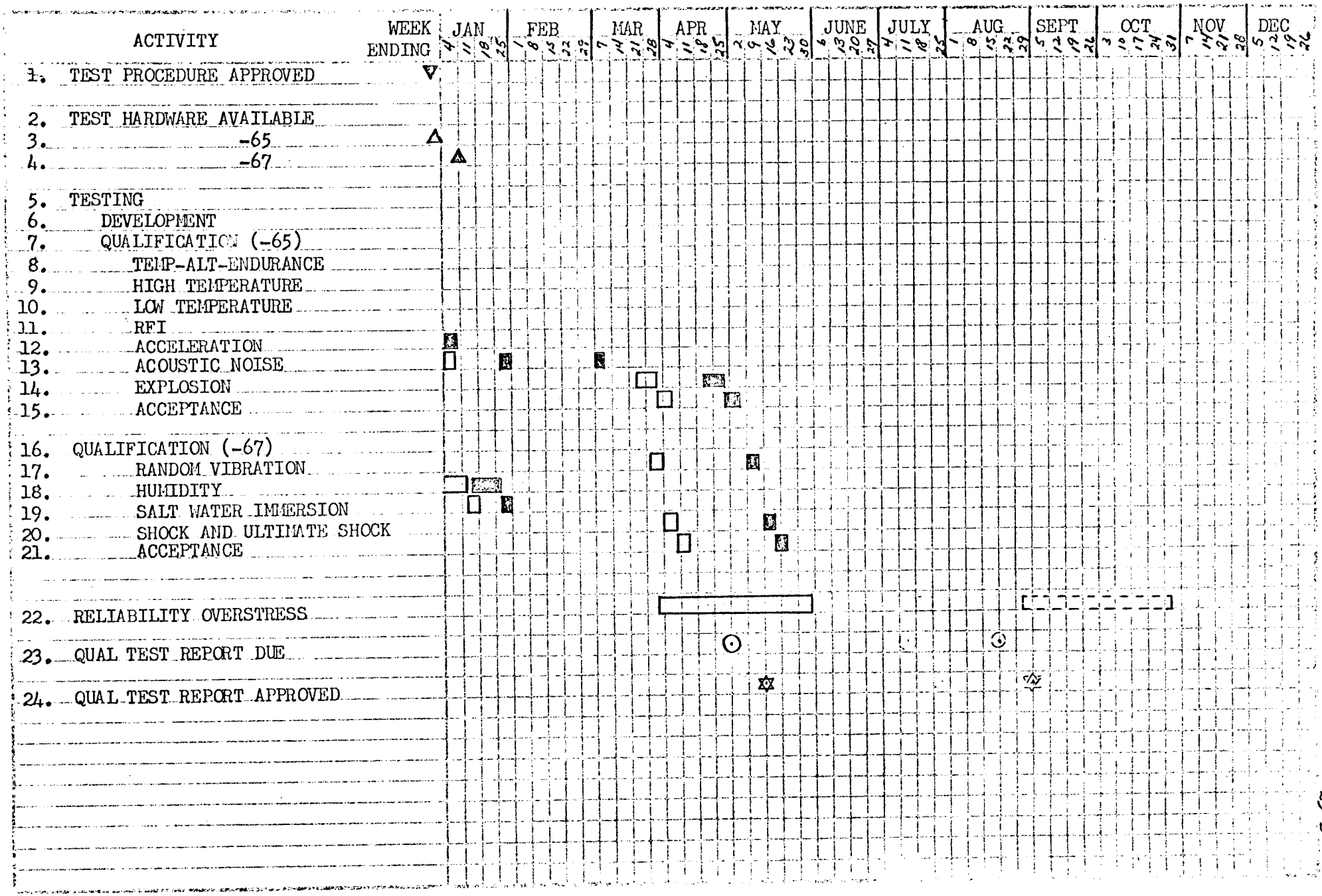

LEGEND:
- ● TEST PROCEDURE APPROVED
- △ HARDWARE AVAILABLE
- ▭ TEST SCHEDULE
- ○ REPORT DUE
- ✡ REPORT APPROVED

QUALIFICATION & DEVELOPMENT TEST STATUS

DATA TRANSMISSION SYSTEM-PCM
(ELECTRO-MECHANICAL RESEARCH)
SCD 52-85713

7 August 1964

SOLID INDICATES ACTUAL

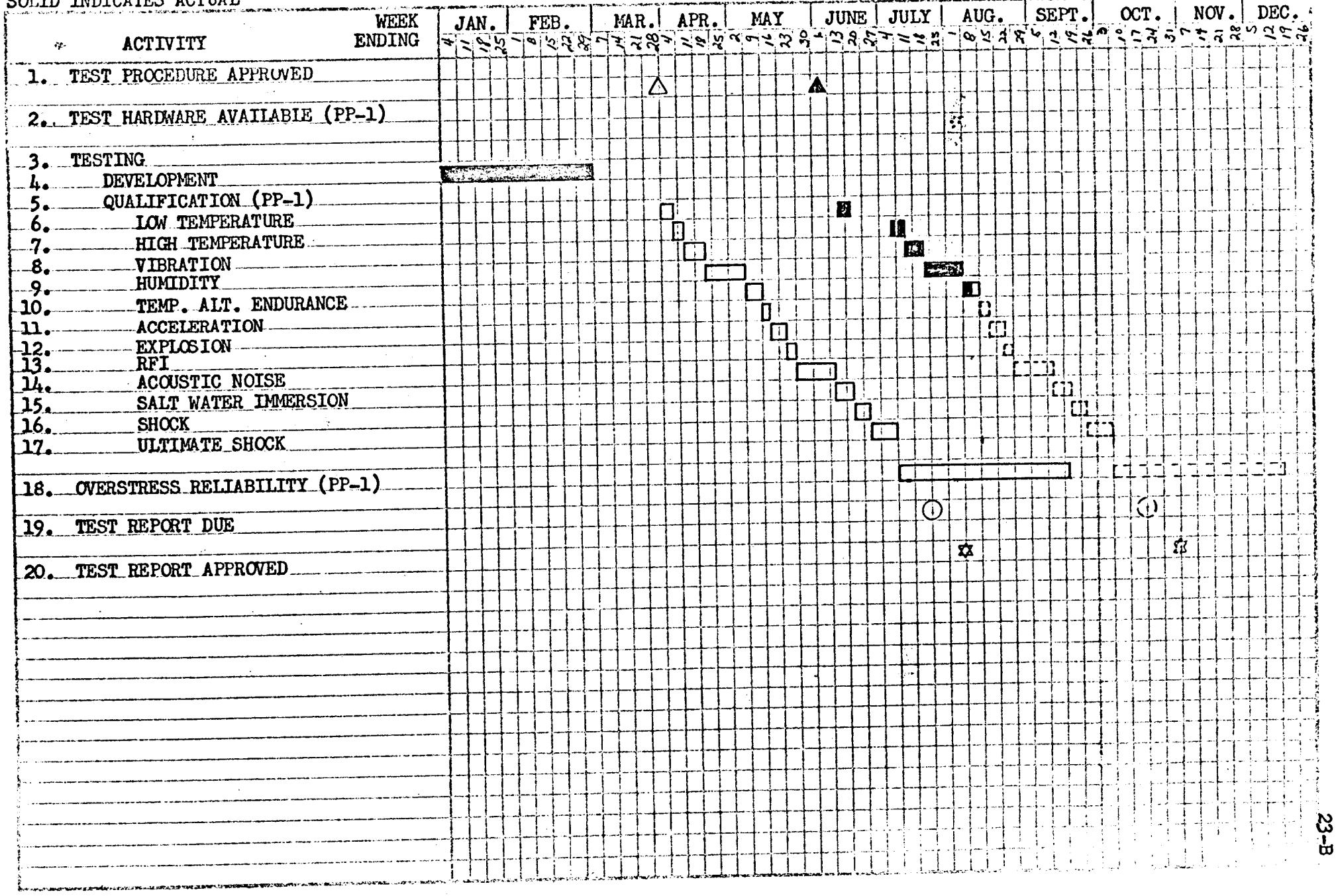

PCM'S

VENDOR DELIVERY STATUS REPORT
DATA TRANSMISSION SYSTEM
ELECTRO-MECHANICAL RESEARCH

CHART NO.: 23-1C

DATE: 7 Aug. '64

UNIT NO.	TYPE	USAGE	COMPONENT	VENDOR W/S	AVAIL. FOR INSTL	REQ'D. FOR INSTL	SLACK
1	BB-1	VENDOR	DEVELOPMENT			A12-27-62	
2	BB-2	ESTU	CIMU-GMS-1			A04-11-63	
3	EP-1	CTU	PCM A/B 1 1-83, 2-85, 2-87			A07-02-63	
4	PPP-1	FO-1	PCM A/B 2 1-183, 2-185, 2-187			A09-17-63	
5	PPP-2	VENDOR	PCM A/B 3 1-183, 2-185, 2-187	Held by Vendor for Test			
6	PPP-3	GMS-2	PCM A/B 4 1-183, 2-185, 2-187			A06-23-64	
		CIMU	PCM A/B 4 (After SC 2 Fly)		08-15-64		
7	PPP-4	AGE	PCM A/B 5 Sent to Cape for use with 041-1 Test Set 1-183 On delivery of IPCM #3 A/B 5 2-185, 2-187 Will be assigned to IMCC				
8	PPP-5	FO-2	PCM A/B 6 1-183, 2-185, 2-187			A03-28-64	
9	PP-1	QUAL	PCM A/B 7A & 7B 2-83, 2-85, 2-87			A06-04-64	
10	PP-2	SC-2	**PCM A/B 8 1-83, 2-385, 2-387			A05-11-64	
		GMS-2	PCM A/B 8 (After SC-2 Fly)		08-15-64		
11	PP-3	SC-3	**PCM A/B 9 1-83, 2-385, 2-387		*	A06-09-64	
12	PP-4	SC-3A	***PCM A/B 10 1-83, 2-385, 1-185, 2-387	08-17-64	09-07-64	04-10-64	-18
13	PP-5	SPARE-SST	***PCM A/B 11 1-83, 2-385, 2-387	08-24-64	09-11-64	03-31-64	-23
14	PP-6	SPARE-HGR	PCM A/B 12 1-83, 2-385, 2-387	09-25-64	10-16-64	04-30-64	-24
15	PP-7	SC-4	PCM A/B 13 1-83, 2-385, 2-387	10-16-64	11-06-64	04-21-64	-28

UNIT NO.	TYPE	USAGE	COMPONENT	VENDOR W/S	AVAIL FOR INSTL	REQ'D FOR INSTL	SLACK
16	PP-8	SC-5	PCM A/B 14 1-83, 2-385, 2-387	11-06-64	11-27-64	07-15-64	-19
17	PP-9	SC-6	PCM A/B 15 1-83, 2-385, 2-387	11-27-64	12-18-64	09-16-64	-13
18	PP-10	SPARE-SST	PCM A/B 16 1-83, 1-385, 1-387	12-18-64	01-08-65	05-31-64	-31
19	PP-11	SPARE-HGR	PCM A/B 17 2-83, 2-385, 2-387	01-08-65	01-29-65	06-30-64	-30
20	PP-12	SC-7	PCM A/B 18 1-83, 2-385, 2-387	01-29-65	02-19-65	11-15-64	-14
21	PP-13	AD-13	PCM PART'L 1-385, 1-387	02-19-65	03-12-65	12-02-64	-14
22	PP-14	SC-8	PCM A/B 19 1-83, 2-385, 2-387	03-12-65	04-02-65	01-04-65	-12
23	PP-16	SC-9	PCM A/B 20 1-83, 2-385, 2-387	04-02-65	04-23-65	03-03-65	- 8
24	PP-17	SC-10	PCM A/B 21 1-83, 2-385, 2-387	04-23-65	05-14-65	04-23-65	- 3
25	PP-18	SC-11	PCM A/B 22 1-83, 2-385, 2-387	05-14-65	06-04-65	06-24-65	+ 3
26	PP-19	SC-12	PCM A/B 23 1-83, 2-385, 2-387	06-04-65	06-25-65	08-19-65	+ 8
27	PP-20	AD-14	PCM PART'L 1-83, 2-385, 2-387	06-25-65	07-16-65	11-29-65	+19

* PIA Waived. ATP accepted as PIA under Project Expedite

** PCM A/B 8 (SC-2) and A/B 9 (SC-3) will be retrofitted with -385 & -387 Low and Hi level multiplexers approximately 8 August.

*** Multiplexers from A/B 8 & A/B 9 will be refurbished to -385 & -387 Configuration and retrofitted to A/B 10 & A/B 11

TRANSMITTERS

VENDOR DELIVERY STATUS REPORT
DATA TRANSMISSION SYSTEM
ELECTRO-MECHANICAL RESEARCH

CHART NO: 23-2C

DATE: 7 Aug. '64

UNIT NO.	TYPE	USAGE	COMPONENT	VENDOR W/S	AVAIL FOR INSTL	REQ'D FOR INSTL	SLACK
3	EP-1	CTU	XMTR S/N 1E E63, E65, E67			A 6-20-63	
4	PART'L	SC-1	XMTR S/N 4 63, 65, 67			A12-03-63	
5	EP-2	FO-1	XMTR S/N 3E, 3E E63, E67			A 7-22-63	
6	EP-3	CIMU	XMTR S/N 2E, 3E E63, E65, E67			A 7-22-63	
7	PA-2	SC-2	XMTR S/N 6 -63, -67			A 4-21-64	
		GMS-2	XMTR S/N (After SC-2 Fly)		8-15-64		
8	PA-3	SC-3	XMTR S/N 7 -63, -65, -67			A 6-09-64	
9	PA-4	SC-3A	XMTR S/N 8 -63, -65, -67			A 6-12-64	
10	PA-5	FO-2	XMTR S/N 6, S/N 9 -63, -67	8-10-64	8-17-64	12-01-63	-33
11	PA-6	SPARE-SST	XMTR S/N 9, 9 & 10 -63, -65, -67	8-19-64	8-26-64	5-31-64	-13
12	PA-7	SPARE-HGR	XMTR S/N 10, 11 &11 -63, -65, -67	8-28-64	9-04-64	7-31-64	- 5
13	PA-8	SC-4	XMTR S/N 12, 10 &12 -63, -65, -67	9-09-64	9-16-64	4-21-64	-21
14	PA-9	IMCC (MSC)	XMTR S/N 13, 2E &13 -63, E65, -67	9-25-64	10-02-64	4-30-64	-22
15	PA-10	SC-5	XMTR S/N 14,12,14 -63, -65, -67	10-09-64	10-23-64	7-15-64	-13
16	PA-11	SPARE-SST	XMTR S/N 15,13,15 -63, -65, -67	10-23-64	11-06-64	8-31-64	- 9

UNIT NO.	TYPE	USAGE	COMPONENT	VENDOR W/S	AVAIL FOR INSTL	REQ'D FOR INSTL	SLACK
17	PA-12	SPARE-HGR	XMTR S/N 16,14,16 -63, -65, -67	11-06-64	11-20-64	8-31-64	-11
18	PA-13	SC-6	XMTR S/N 17, 15,17 -63, -67, -65	11-20-64	12-04-64	9-16-64	-11
19	PA-14	AD-13	XMTR S/N 11 -63, -65, -67	12-04-64	12-18-64	12-02-64	- 2
20	PA-16	SC-7	XMTR S/N 18, 16,18 -63, -65, -67	12-18-64	1-02-65	11-15-64	- 7
21	PA-17	SC-8	XMTR S/N 19,17,19 -63, -65, -67	1-02-65	1-16-65	1-04-65	- 2
22	PA-18	SC-9	XMTR S/N 20,18,20 -63, -65, -67	1-16-65	1-30-65	3-03-65	+ 5
23	PA-19	SC-10	XMTR S/N 21,19,21 -63, -65, -67	1-30-65	2-13-65	4-23-65	+10
24	PA-20	SC-11	XMTR S/N 22,20,22 -63, -65, -67	2-13-65	2-27-65	6-24-65	+17
25	PA-21	SC-12	XMTR S/N 23,21,23 -63, -65, -67	2-27-65	3-13-65	8-19-65	+23
26	PA-22	AD-14	XMTR S/N 24 -63, -65, -67	3-13-65	3-27-65	11-29-65	+35

TAPE RECORDER

VENDOR DELIVERY STATUS REPORT
DATA TRANSMISSION SYSTEM
ELECTRO-MECHANICAL RESEARCH

CHART NO. 23-3C

DATE: 7 Aug. '64

UNIT NO.	TYPE	USAGE	COMPONENT	VENDOR W/S	AVAIL FOR INSTL	REQ'D FOR INSTL	SLACK
3	EP-2	VENDOR	-31 (2P)	Return to Vendor for rework		A10-24-63	
4	EP-3	CTU	-31 (3P)			A11-02-63	
5	EP-4	FO-1	-31 (4P)			A 7-31-63	
6	PP-6	FO-2	-35 (6P)	After Special Vibration Test		A 6-21-64	
7	PP-7	S/C 2	-35 (9P)		A 7-03-64	A 7-06-64	
		ICMU	-35 (9P)	After S/C 2 Fly	8-15-64		
8	PP-9	*SPARE-SST	-35*(7P)	Returned for rework	8-17-64		
9	PP-10	S/C 3A	-35 (10P)			A 6-09-64	
10	PP-11	IMCC (MSC)	-35 (11P)	8-14-64	8-21-64		
11	PA-1	QUAL	-37 (12P)			A 4-21-64	
12	PA-2	S/C 3	-37 (13P)	A 8-06-64	A 8-07-64	3-25-64	-19
13	PA-3	SPARE-HGR	-37 (14P)	8-17-64	8-24-64	7-30-64	- 3
14	PA-4	S/C 4	-37 (15P)	9-09-64	9-16-64	4-21-64	-21
15	PA-5	S/C 5	-37 (16P)	10-05-64	10-12-64	7-15-64	-12
16	PA-6	SPARE-SST	-37 (17P)	10-28-64	11-04-64	5-31-64	-22
17	PA-7	SPARE-HGR	-37 (18P)	11-20-64	11-29-64	8-30-64	-13
18	PA-8	S/C 6	-37 (19P)	12-11-64	12-18-64	9-16-64	-13
19	PA-9	S/C 7	-37 (20P)	1-02-65	1-09-65	11-15-64	- 7
20	PA-10	S/C 8	-37 (21P)	1-23-65	1-30-65	1-04-65	- 4
21	PA-11	S/C 9	-37 (22P)	2-06-65	2-13-65	3-03-65	+ 3
22	PA-12	S/C 10	-37 (23P)	2-20-65	2-27-65	4-23-65	+ 7
23	PA-13	S/C 11	-37 (24P)	3-13-65	3-20-65	6-24-65	+14
24	PA-14	S/C 12	-37 (25P)	4-03-65	4-10-65	8-19-65	+19
25	PA-15	MISC.	-37 (26P)	4-24-65	5-01-65	———	

* -35 (7P) returned to RCA for repair, rework and special tests on 13 July.

VENDOR AGE STATUS REPORT

CHART NO.: 23-D

DATA TRANSMISSION

DATE: 7 Aug.'64

ELECTRO-MECHANICAL RESEARCH

PART NO.	NOMENCLATURE	UNIT NO.	VENDOR W/S	AVAIL FOR USAGE	REQ'D FOR USAGE	SLACK
			PRE-INSTALLATION ACCEPTANCE			
52E440040-3	TEST SET S/C INS	1		A 6-23-64	3-30-64	-12
			SPACECRAFT SYSTEM TESTS			
52E440011-3M	GND STATION PCM	2		A 6-26-64	3-13-64	
52E440011-3	GND STATION PCM	1		A 3-28-64		
52E440011-1		1		A11-25-63		
			HANGAR			
52E440011-9	GND STATION PCM	1		A 5-29-64		
52E440011-3	GND STATION PCM	3	11-15-64	11-29-64	7-06-64	-21
			PAD			
52E440011-5	GND STATION PCM	1			A 6-15-64	

MONTHLY SUMMARY

SYSTEM: Crew Station
SUBSYSTEM: Escape System
VENDOR: Weber Aircraft
DATE: 7 August 1964

ENGINEERING STATUS

1. Pyrotechnics - Period 27 June thru 24 July 1964

52-72719 - Ballute Deploy and Release System - Hardware is being produced for qual test and production. Sled test #7 was performed. Next reporting period - sled test #8 will be performed. Complete and final approval of acceptance test procedures. Final approval on refurbishing kit. Vibration test on Aneroid assembly. Lot sample for NOTS delivery.

52-72718 - Drogue Mortar - Hardware is being produced for qual test and production. Sled test #7 was performed. Changed main lanyard and finalized design released from Engineering. Problems encountered - reel on main lanyard broke free during sled test #7. Next reporting period - Sled test #8 to be performed. Complete final approval on acceptance test procedure. Final approval on refurbish kit. Vibration test on Anerdids to be run. Lot sample for N.O.T.S delivery. Vibration test main lanyard with reel in place.

52-72717 - Seat Man Separator - Results of last report dry leak tests are eight of the thirty cartridges tested failed due to a leak between body and primer. This has been corrected by improving the glyptal application. The remaining twenty-two cartridges were x-rayed and four were rejected due to the washer that retains primer being cocked. Sled test #7 was performed. Next reporting period - Lot sampling for NOTS delivery and qual test will be performed. Sled test #8 will be performed.

52-72716 Harness Release Actuator - Lead pellet, firing pin penetration test has been perfected. Method of applying glyptal during assembly of primer to cartridge body has been improved. Method of inspection at this point in production has been improved. Problems encountered - Test results on cartridges from previous report period were made available (a) 19 of 199 cartridges leaked in radiflo. 18 of the 19 that leaked were found to have leaked between primer and body. Production qual control test at -65° F was run and time delay was found to be too long. Next reporting period - Lot sample for NOTS delivery. Sampling and qual testing is expected to begin.

52-72707 - MDF Initiation System - The entire system was installed and fired on sled #7 to activate the entire abort sequence. Added a plug to replace the electrical detonator. The -5 manual firing mechanism has been broken down for installation and shipment into an interconnect manifold and a manual initiator. Next reporting period - It is expected that sample testing will begin.

2. Aerodynamics - Period 26 June thru 24 July 1964

The second rocket sled qualification test (re-entry type with dual ejections) was successfully completed.

Analysis is continuing to determine astronaut trajectories and touchdown boundaries for in-flight ejections, an allowable C.G. envelope for satisfactory astronaut-ejection seat dynamics, minimum lead times to escape GLV fragments following in-flight failures and F-106B test trajectories.

3. Strength - Period 26 June 1964 thru 24 July 1964

Sled shot #7 (re-entry ejection condition) successfully run. Iniatiated detail design of ballute load support sling. Released elbow support structure.

4. Engineering changes were released on the following during the reporting period: Ballute load support sling; personnel harness lap belt, survival kit and adjustable stowable elbow support.

5. AGE - Period 26 June 1964 to 24 July 1964

A. PDT and FAD successfully performed on 52E010048-1 ejection seat track guide guard.

B. A study of ejection seat handling and usage requirements at SST, Cape Hangar and Cape Pad was performed, this study confirmed that the existing AGE will satisfactorily support the ejection seats when installing or removing them from a vertically positioned S/C.

PROCUREMENT

1. Test hardware for SET 8 is estimated to be available 15 August 1964.

2. Pyrotechnic hardware for spacecraft usage continues to remain indefinite. MAC has placed "trouble-shooter" type personnel in resident at pyrotechnic vendor.

3. Egress tanks for sled #8 were available on 25 July 1964. Egress tanks deliveries for spacecraft and qual test usage continues to slip due to pressure leaks, warpage and LOX cleaning problems.

ASSEMBLY AND DELIVERY STATUS

1. Spare seats (Serial numbers 107 and 108) are complete and awaiting MRR action. Discrepancies are being reviewed for necessary corrective action. It is estimated that the seats will be shipped week of 10 August 1964.

2. Static No. 5 seats (Serial numbers 20 and 21) were updated and shipped on 17 July. Egress tanks for above seats were shipped from Weber on 5 August 1964. Backboard assemblies remain a shortage item, due to pyro's.

3. Seats #54 and #55 structure plus egress tanks 106 and 107 for sled 8 were completed during the reporting period.

4. Egress tanks (Serial numbers 115 and 118) for S/C 3 usage were delivered to AiResearch on 5 August 1964,

TEST STATUS

1. Qualification (Static)

Static test (Ref. line 19) is now estimated to extend thru week ending 7 November 1964.

Vibration test (Ref. line 20) has slipped from week of 3 August to approximately 29 August. Shortage of pyrotechnic hardware and backboard are reasons for slippage.

Environmental test (Ref. line 23) is estimated to begin week of 29 August and continue for approximately five weeks.

Environmental test (Ref. line 22) is estimated to begin week 5 September and extend approximately three weeks.

Shock test (Ref. line 21) is estimated to begin week of 31 August and continue approximately eight weeks.

2. Qualification (Dynamic)

Sled test #8 (Ref. lines 33, 34) has now been estimated to be conducted on 20 August. Shortage of pyro hardware and backboards are the delaying factors.

Remaining SET and SOPE tests are estimated to slip accordingly.

3. Qualification (Personnel Parachute)

The personnel parachute drop program is being held until pyro situation is relieved. Preparation action is continuing at El Centro.

4. F106 High Altitude Program

The program is scheduled to begin in early September. In the meantime an aircraft modification program must be completed. Weber has been advised that the F106 will be available at El Centro on the 15th of August. Weber Engineering has the F106 Engineering scheduled to be completed on the 20th of August.

AGE STATUS

All AGE has been delivered.

GEMINI SPACECRAFT
CONTRACT NO. NAS 9-170

ESCAPE SYSTEM - (VENDOR: WEBER AIRCRAFT)

STATUS CHART

REPORT NO. 8580-1-42
LAST PROGRAM SCHEDULE CHANGE: 24 April '64
STATUS AS OF: 7 August '64

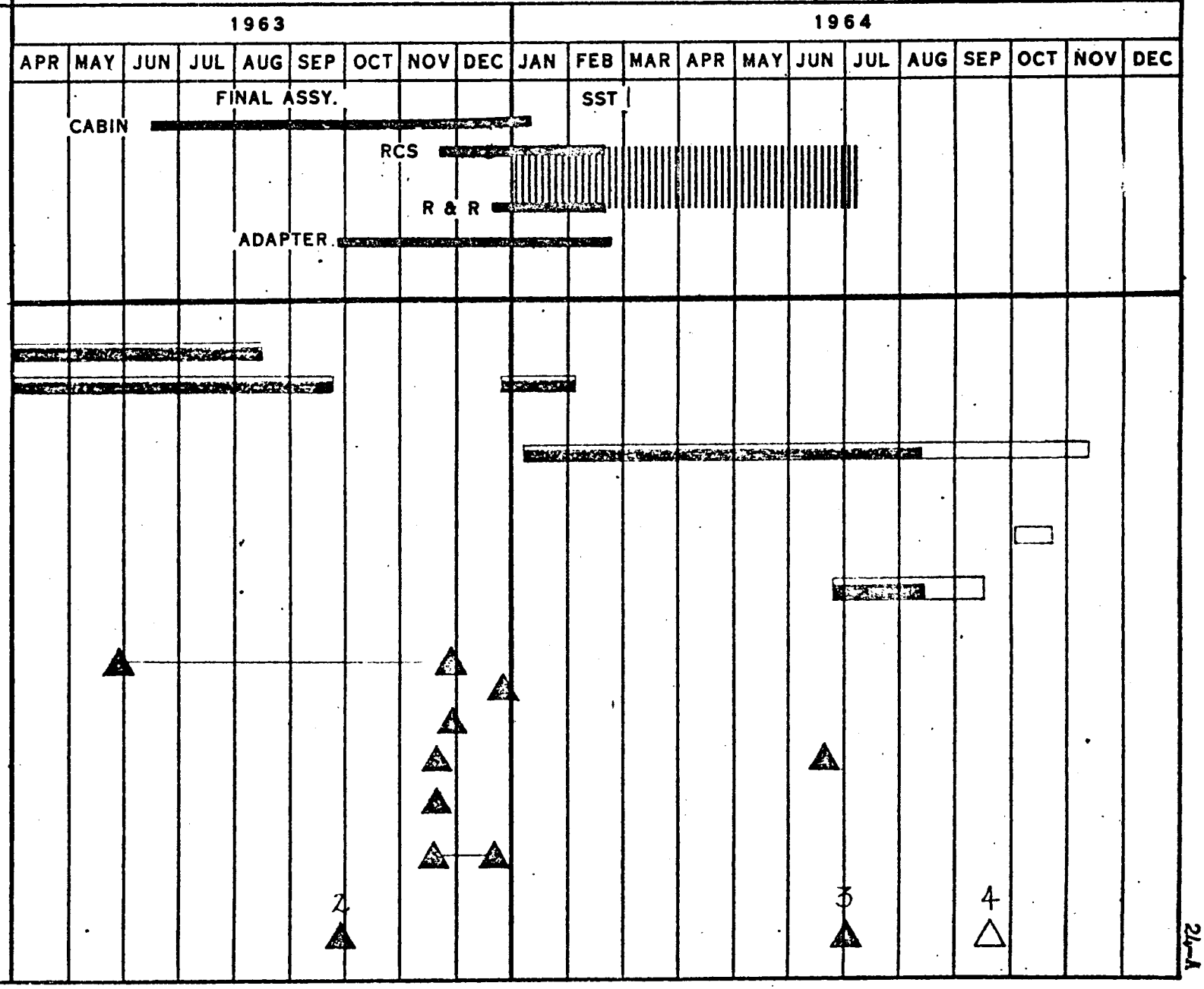

24-A

LEGEND:

△ TEST PROPOSAL DUE

◊ HARDWARE AVAILABLE

□ TEST SCHEDULE

SOLID INDICATES ACTUALS

QUALIFICATION & DEVELOPMENT TEST STATUS
GEMINI EJECTION SEAT SYSTEM
(WEBER AIRCRAFT)

7 August 1964

	ACTIVITY	TEST NO.	TEST SEAT NO.
1	DEVELOPMENT TESTING		
2	PAD EJEC.(COMP.MAY 63)	9	25
3	(COMP.MAY 63)	9A	26
4	(COMP.JUN 63)	10	29
5	(COMP.JUN 63)	10	30
6	(COMP.JULY 63)	11	25
7	(COMP.JULY 63)	11	28
8			
9	SLED TEST(COMP. JUNE 63)	2	27
10	(COMP. JUNE 63)	2	28
11	(COMP. AUG 63)	3	29
12	(COMP. AUG 63)	3	30
13		5	31
14		5	32
15		4	28
16		4	30
17			
18	QUALIFICATION TESTING		
19	STATIC TEST		37
20	VIBRATION TEST		38
21	SHOCK TEST		53
22	ENVIRONMENTAL TEST		58
23	ENVIRONMENTAL TEST		59
24			
25	DYNAMIC TESTING		
26	SOPE QUAL TEST	12	60
27		12	61
28		13	62
29		13	63
30			
31	SLED TEST	7	51
32		7	52
33		8	54
34		8	55
35		9	56
36		9	57
37		10	64
38		10	65
39			
40	B/P 3A DEL. FROM MAC		

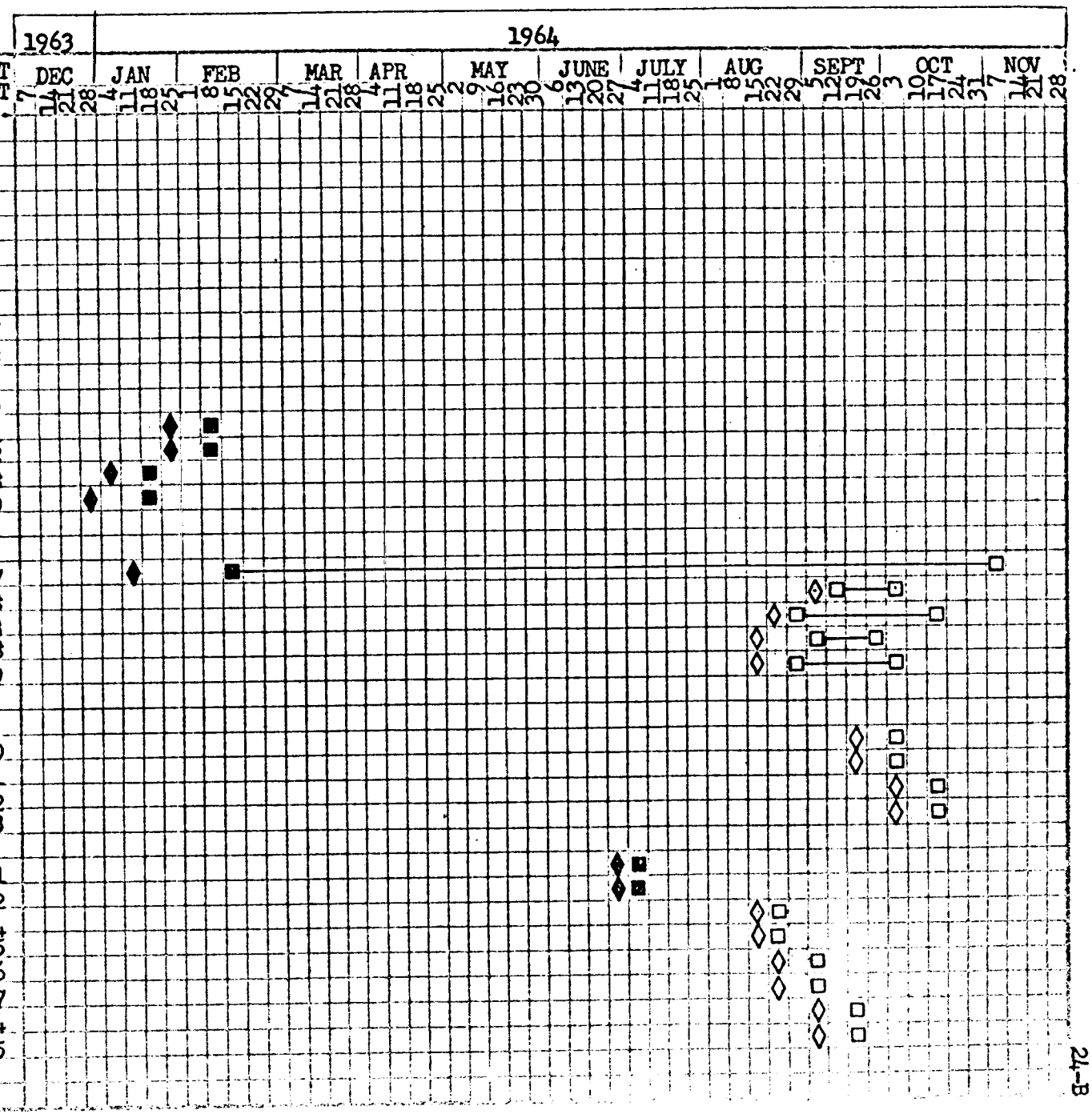

VENDOR DELIVERY STATUS REPORT

CHART NO: 24-C

EJECTION SEAT

DATE: 7 Aug.'64

WEBER AIRCRAFT

UNIT NO.	TYPE	USAGE	COMPONENT	VENDOR W/S	AVAIL FOR INSTL	REQ'D FOR INSTL	SLACK
1-2	PP-1-2	SA-5	Flotation			A12-24-63	
3-4	PP-3-4	SC-2	Qualifiable			A 7-06-64	
5-6	PA-3-4	SC-3	Qualifiable		A 7-03-64	3-25-64	-14
7-8	PA-5-6	SPARES	Qualifiable	8-10-64	8-24-64	6-20-64	- 8
9-10	PA-7-8	SC-4	Qualifiable	9-01-64	9-15-64	6-02-64	-15
11-12	PA-9-10	SC-5	Qualififable	10-01-64	10-15-64	8-20-64	- 8
13-14	PA-11-12	SC-6	Qualifiable	11-02-64	11-16-64	10-17-64	- 4
15-16	PA-13-14	SC-7	Qualifiable	12-01-64	12-15-64	12-09-64	- 1
17-18	PA-15-16	SC-8	Qualified	1-02-65	1-15-65	2-05-65	+ 3
19-20	PA-17-18	SC-9	Qualified	2-05-65	2-19-65	4-02-65	+ 6
21-22	PA-19-20	SC-10	Qualified	3-05-65	3-19-65	5-28-65	+10
23-24	PA-21-22	SC-11	Qualified	4-09-65	4-23-65	7-28-65	+14
25-26	PA-23-24	SC-12	Qualified	5-14-65	5-28-65	9-21-65	+18
27-28	PA-25-26	SA-2	Qualified	6-18-65	7-02-65	11-22-65	+21

Spares Seats are same as spacecraft seats except less pyrotechnic hardware and backboard.

Note: SC-3Seats shipped less backboard assemblies due to pyrotechnic hardware shortages.

VENDOR AGE STATUS REPORT

CHART NO.: 24-D

SYSTEM - ESCAPE

DATE: 7 Aug. '64

VENDOR - WEBER AIRCRAFT

NOTE: All AGE delivered - See previous 8580-1 report for delivery dates

MONTHLY SUMMARY

SYSTEM: Time Reference System
SUBSYSTEM: Greenwich Mean Time Clock
VENDOR: E. E. D. McDonnell Aircraft
DATE: 7 August 1964

ENGINEERING STATUS

1. A MAC EED Engineering team inspected the Aerosonics plant at Clearwater, Florida during the week of 27-31 July 1964. There was a general dissatisfaction with production and failure analysis techniques. As a result, manufacture of SN-105 and 106 units is being temporarily delayed while MAC EED makes a review of the design and the production methods. In addition, the calendar day gear will be redesigned so that it cannot be inadvertently turned backward. It is also planned to improve the spacing between the triangle marker and the clock hands to eliminate interference. At the same time, lubrication procedures are being improved and preventive maintenance routines are being written for use after clock delivery.

ASSEMBLY AND DELIVERY STATUS

1. SN-102 clock was made available for S/C 3 on 16 July 1964.

TEST STATUS

1. Delivery of qualification test units 22 and 23 has been delayed until 10 August 1964. Qualification testing will begin immediately thereafter.

GEMINI SPACECRAFT
CONTRACT NO. NAS 9-170

GREENWICH MEAN TIME CLOCK - (MCDONNELL EED)

STATUS CHART (Report 8664)

REPORT NO. 8580-1 -42
LAST PROGRAM SCHEDULE CHANGE: 24 April '64
STATUS AS OF: 7 August 1964

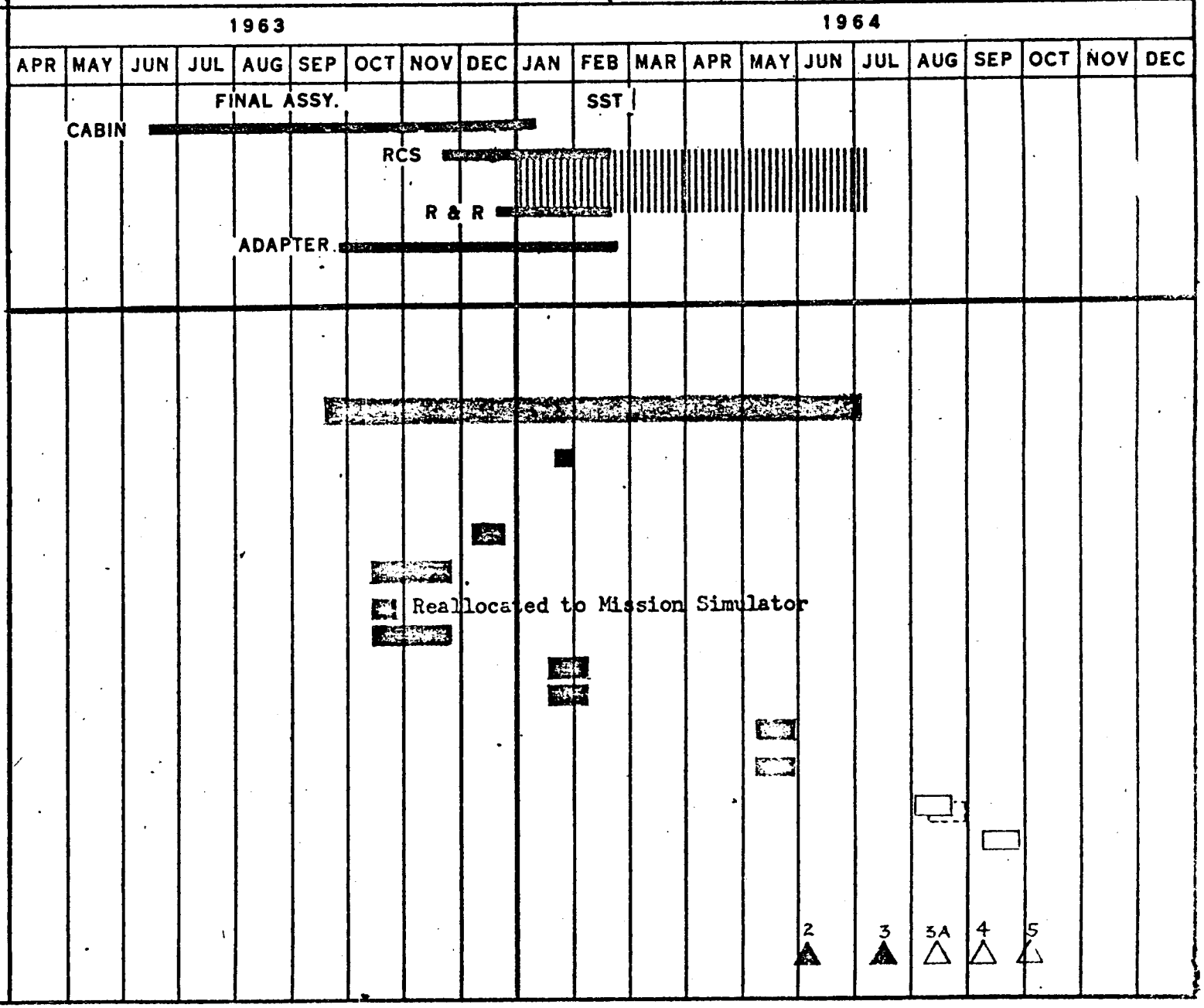

LEGEND:
▽ TEST PROPOSAL DUE
◊ HARDWARE AVAILABLE
▭ TEST SCHEDULE
SOLID INDICATES ACTUAL

QUALIFICATION AND DEVELOPMENT TEST STATUS
GREENWICH MEAN TIME CLOCK
MAC ELECTRONIC ENGINEERING DIVISION
MAC REPORT 8664

REPORT NO. 8580-1-42
LAST PROGRAM
SCHEDULE CHANGE: 4-24-64
STATUS AS OF: 7 August 64

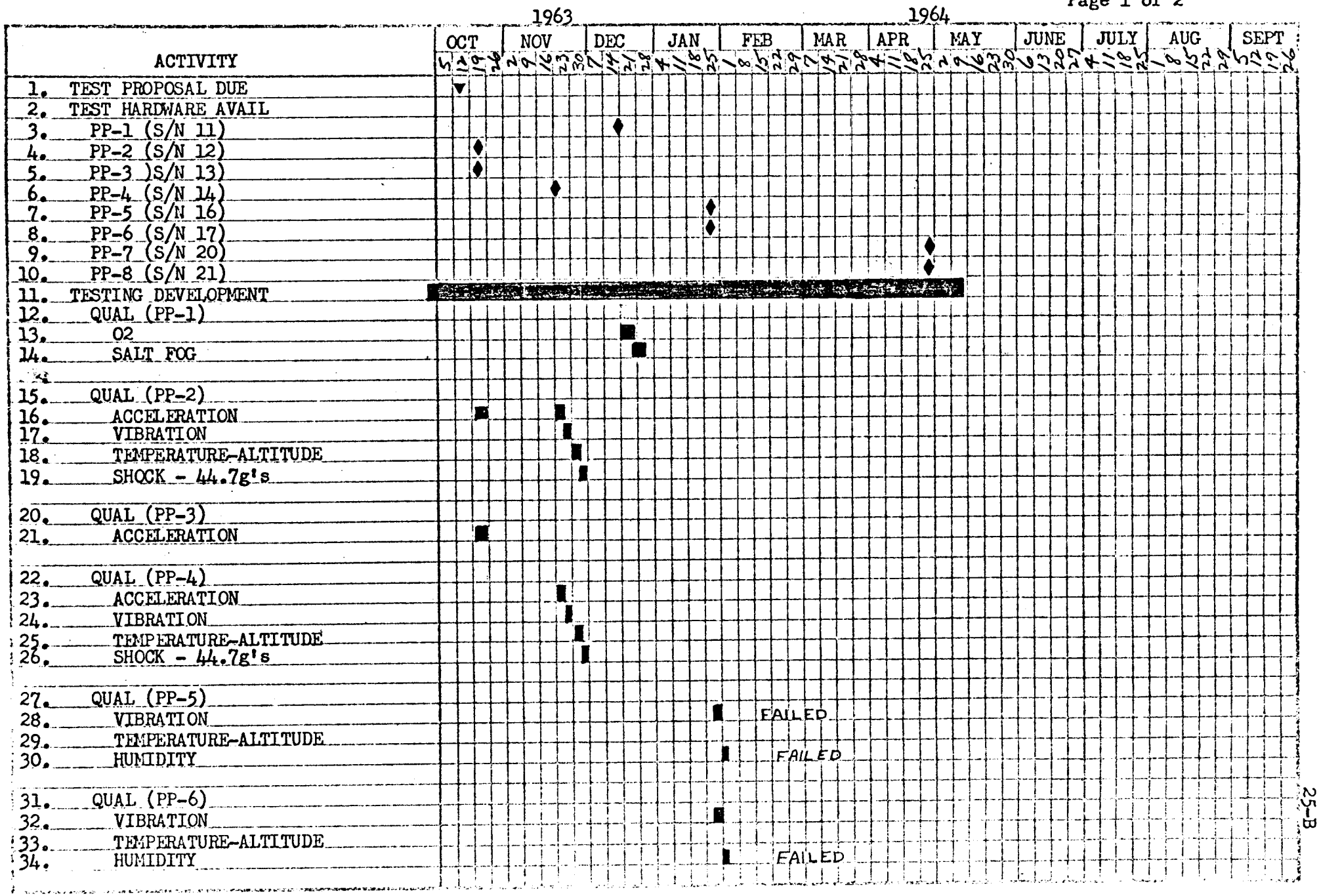

25-B

LEGEND:
- ▽ TEST PROPOSAL DUE
- ◊ HARDWARE AVAILABLE
- ▭ TEST SCHEDULE

SOLID INDICATES ACTUAL

QUALIFICATION AND DEVELOPMENT TEST STATUS
GREENWICH MEAN TIME CLOCK
MAC ELECTRONIC ENGINEERING DIVISION
MAC REPORT 8664

REPORT NO. 8580-1-42
LAST PROGRAM
SCHEDULE CHANGE: 4-24-
STATUS AS OF: 7 Aug-64

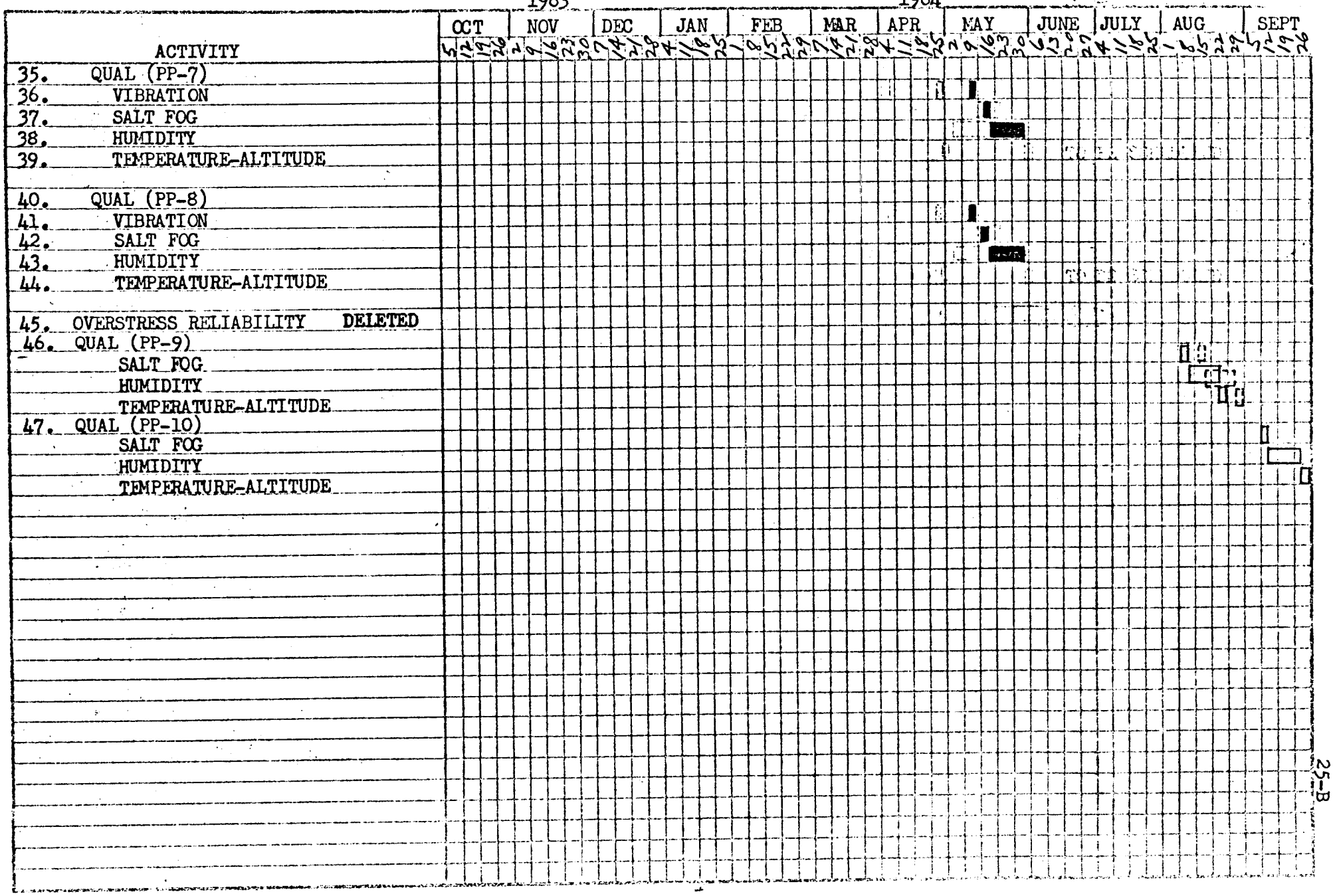

VENDOR DELIVERY STATUS REPORT
GREENWICH MEANTIME CLOCK
MCDONNELL - E.E.D.

CHART NO: 25-C

DATE: 8-7-64

UNIT NO	TYPE	S/N	USAGE	AVAIL FOR INSTL	REQ'D FOR INSTL	SLACK
1	PP-1	11	QUAL		A12-18-63	
1	PP-1	11	CTU		A01-21-64	
2	PP-2	12	QUAL		A10-15-63	
3	PP-3	13	QUAL*		A10-15-63	
4	PP-4	14	QUAL*		A11-21-63	
5	PP-5	16	QUAL		A01-23-64	
6	PP-6	17	QUAL		A01-23-64	
7	PP-7	20	QUAL		A04-24-64	
8	PP-8	21	QUAL		A04-24-64	
9	PA-1	101	SC-2		A06-09-64	
10	PA-2	102	SC-3		A08-06-64	-
11	PP-9	22	QUAL	08-10-64	08-10-64	0
12	PP-10	23	QUAL	08-10-64	08-17-64	+ 1
13	PA-3	103	SC-3A	08-14-64	05-20-64	-12
14	PA-14	104	SPARE-SST	08-28-64	03-31-64	-22
15	PA-15	105	SPARE-HGR	09-04-64	06-30-64	-10
16	PA-16	106	SC-4	09-11-64	04-30-64	-19
17	PA-17	107	SPARE-HGR	09-18-64	08-31-64	- 3
18	PA-18	108	SPARE-HGR	09-25-64	11-30-64	+10
19	PA-19	109	SC-5	10-02-64	07-22-64	-10
20	PA-20	110	SC-6	10-09-64	09-18-64	- 3
21	PA-21	111	SC-7	10-16-64	11-06-64	+ 3
22	PA-22	112	SC-8	12-04-64	01-05-65	+ 4
23	PA-23	113	SC-9	02-03-65	03-03-65	+ 4
24	PA-24	114	SC-10	03-23-65	04-23-65	+ 4
25	PA-25	115	SC-11	05-24-65	06-24-65	+ 4
26	PA-26	116	SC-12	07-19-65	08-19-65	+ 4

* Reallocated to Mission Simulator.