[redacted]

MAC
Control No. C-95817

PROJECT GEMINI

PROGRAM PROGRESS REPORT [redacted]

1 May 1964

REPORT 8580-1-38
CONTRACT NAS 9-170

[redacted]

[redacted]

THIS MATERIAL CONTAINS INFORMATION AFFECTING THE NATIONAL DEFENSE [redacted] WITHIN THE MEANING OF THE ESPIONAGE LAWS, TITLE [redacted] SECTIONS 793 AND 794. THE [redacted]MISSION OR REVELATION OF WHICH [redacted] MANNER TO AN UNAUTHORIZED PERSON IS PROHIBITED BY LAW

[redacted]

G65-10055

5397-4

INDEX

I. SCHEDULES

SUMMARY SCHEDULE
PRODUCTION SCHEDULE
TEST PLAN SCHEDULE
SIMULATORS AND TRAINER SCHEDULE
P.I.A. AND S.E.D.R. SCHEDULE
ENGINEERING STATUS REPORT GENERAL INFORMATION

II. WORK PLANS

SPACECRAFT MANUFACTURING
EQUIPMENT STUDY
SUPPLEMENTARY WORK PLANS
ZONE STATUS CHARTS
NARRATIVE
STATIC ARTICLES
TARGET VEHICLE DOCKING ADAPTER
MISCELLANEOUS

III. MAN-HOURS

ENGINEERING

IV. VENDOR STATUS

ENGINEERING INFORMATION
NARRATIVE
QUALIFICATION AND DEVELOPMENT TESTS
SYSTEM DELIVERY STATUS
A.G.E. DELIVERY STATUS

CHANGES INCORPORATED IN 8580-1-38

A. Schedules:

All schedules revised to reflect program changes which were the results of the Gemini Management Panel Meeting of 12 April 1964, and the NASA/MAC Management Meeting of 17 April 1964.

B. Work Plans:

All reflect the schedule changes as noted above.

C. Vendor Status:

Equipment required dates revised to reflect schedule changes. Available dates updated to latest actuals.

[redacted]

GEMINI SPACECRAFT MASTER SUMMARY SCHEDULE

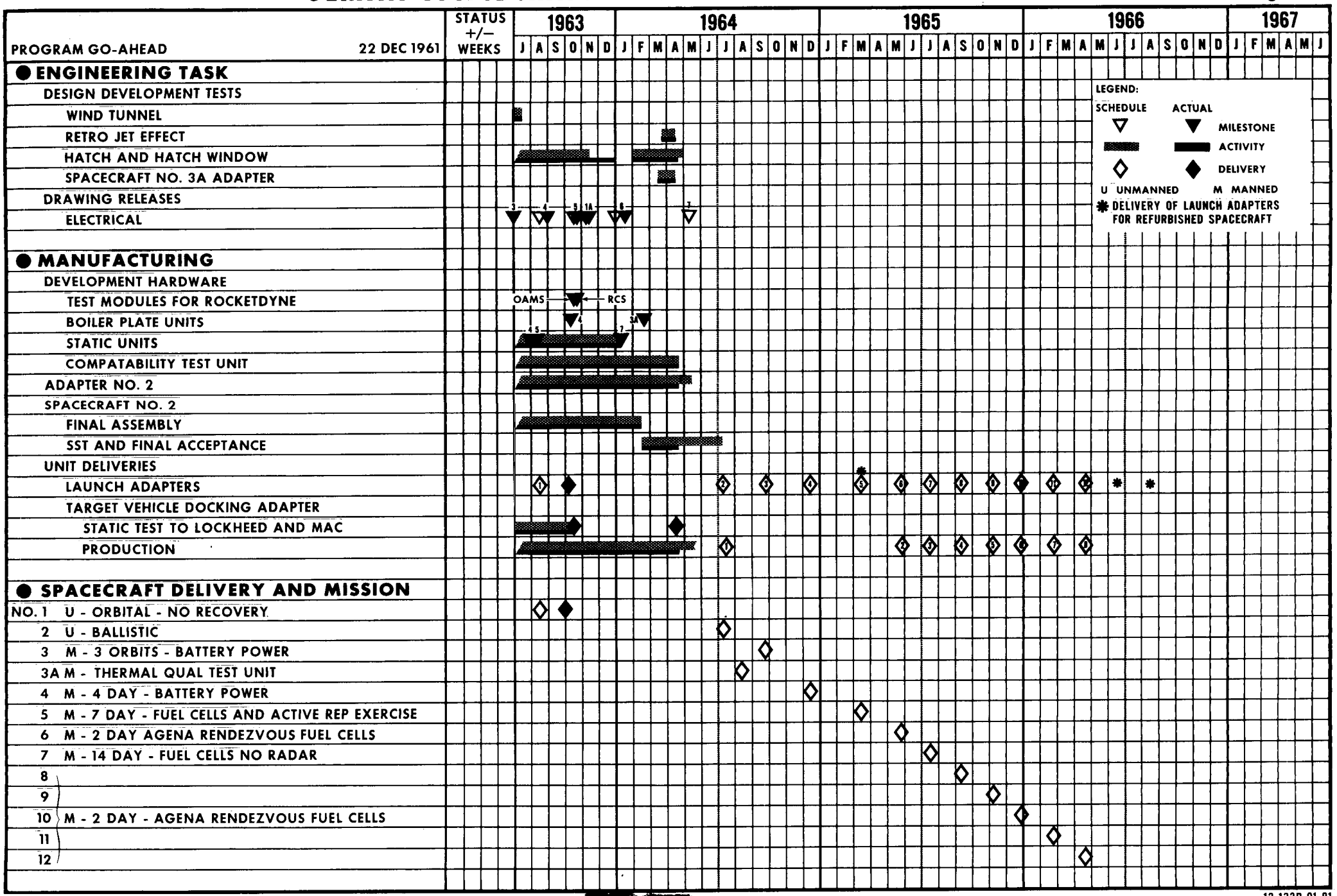

24 APRIL 1964

[redacted]

12-133P-01-01

[redacted]

GEMINI SPACECRAFT MASTER SUMMARY SCHEDULE

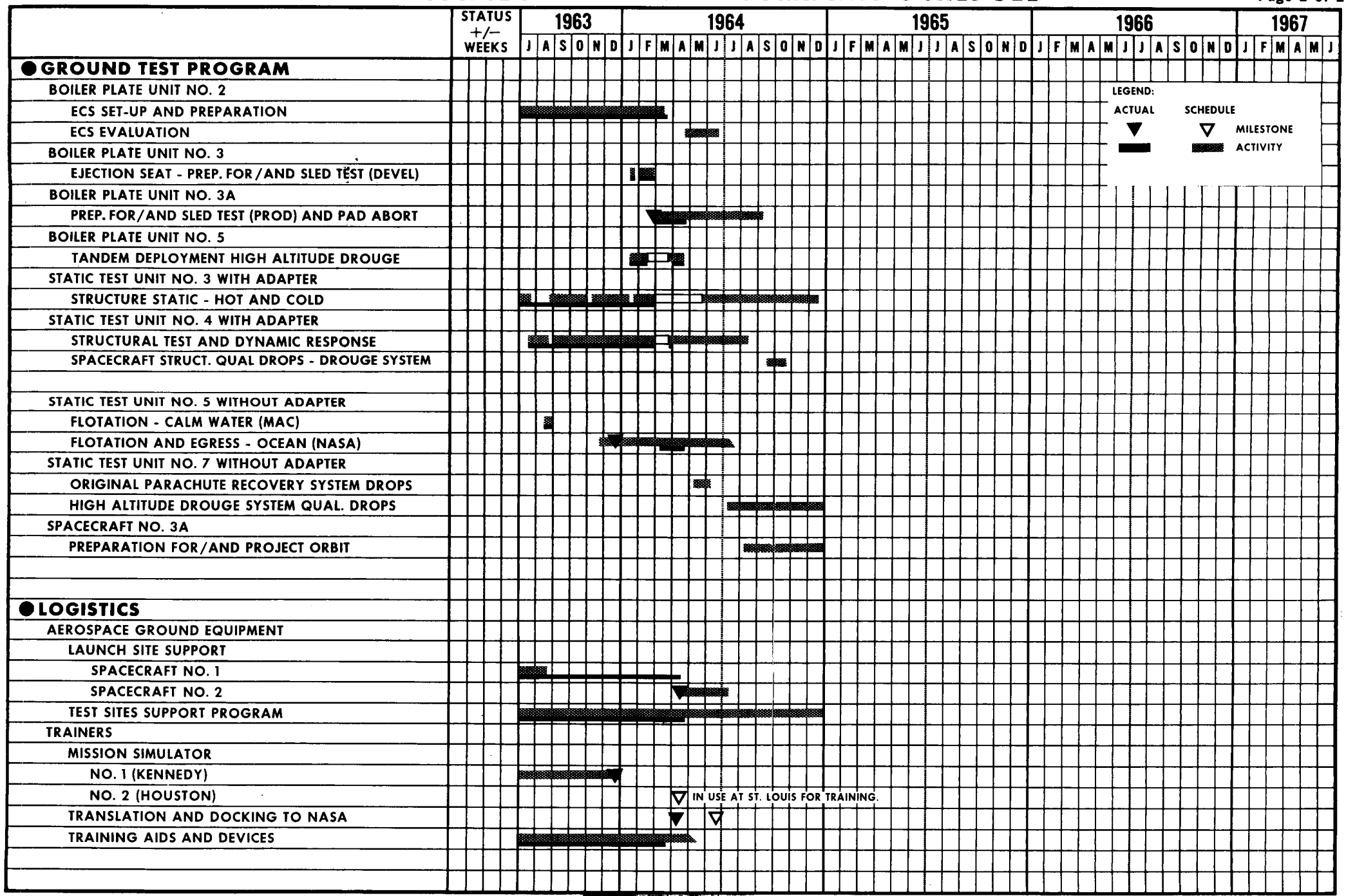

[redacted]

[redacted]

GEMINI SPACECRAFT PRODUCTION SCHEDULE

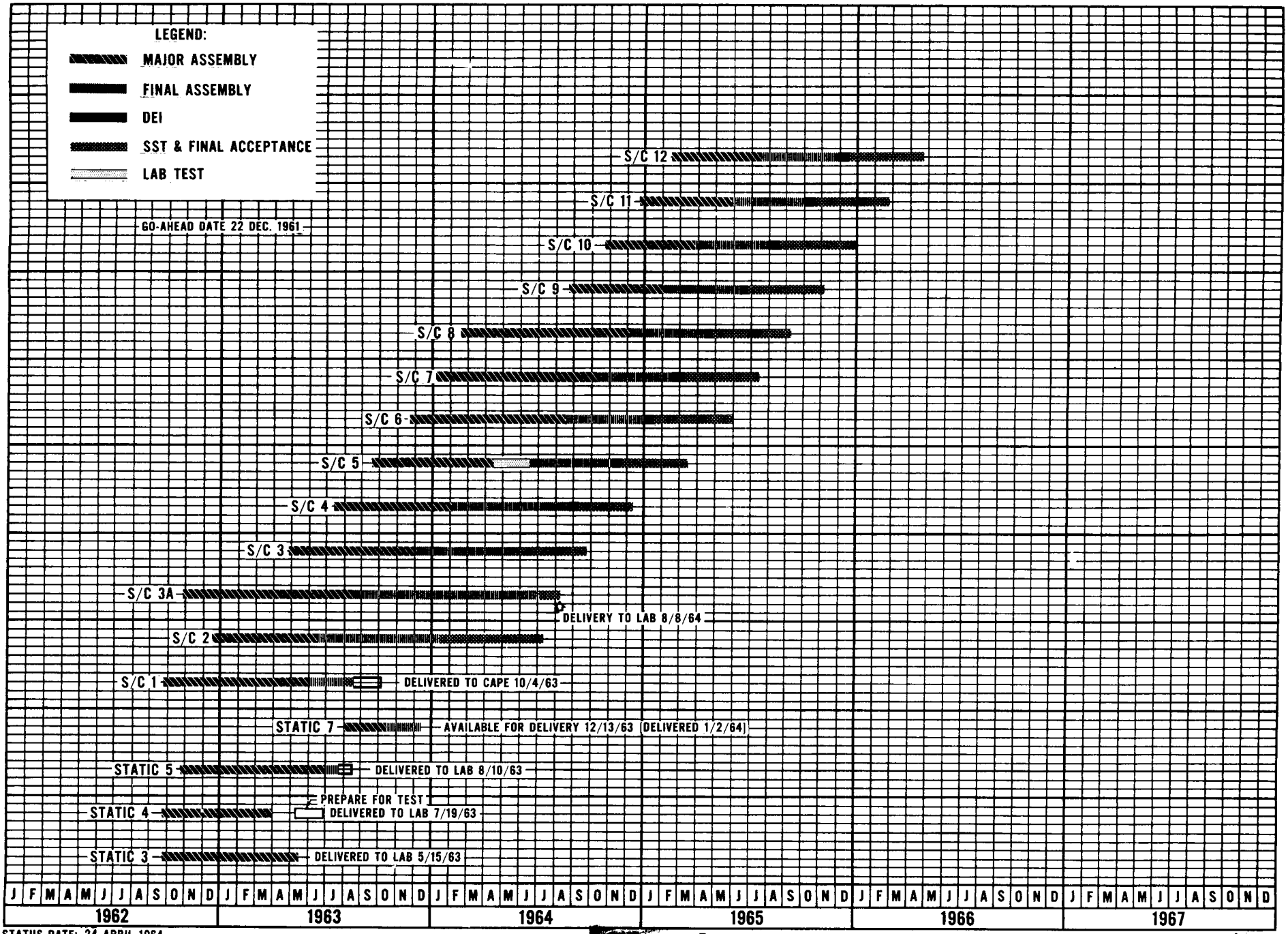

STATUS DATE: 24 APRIL 1964

[redacted]

12-133P-02-01

GEMINI TEST PLAN SCHEDULE
INDEX

WIND TUNNEL TESTS
- Aerodynamic Tests — Page 2
- Thermodynamic Tests — Page 3
- Structural Dynamic Tests — Page 3
- Propulsion Tests — Page 3

RECOVERY SYSTEMS
- Parachute — Page 4
- Floatation and Egress — Page 5
- Water Drops — Page 5
- Skid Landing Gear — Page 6
- Paraglider — Page 6
- Hatch — Page 7
- Ejection Seat Development — Page 8
- Ejection Seat Qualification — Page 9
- Heat Shield — Page 10

DOCKING SYSTEMS — Page 11

PROPULSION SYSTEMS — Page 12

MATERIALS AND PROCESSES — Page 12

RELEASE MECHANISM — Page 13

STRUCTURAL TESTS
- R & R - RCS — Page 15
- Miscellaneous Structural Tests — Page 15
- Static No. 3 Adapter — Page 16
- Static Article No. 3 — Page 17
- Static Article No. 4 — Page 18

DATA ACQUISITION SYSTEM — Page 19

ANTENNA SYSTEMS — Page 20

ELECTRICAL COMPONENTS TEST — Page 21

ELECTRONICS SYSTEMS TEST UNIT — Page 22

COMPATIBILITY TEST UNIT — Page 22

GUIDANCE AND CONTROL SIMULATION — Page 22

ELECTRICAL POWER SYSTEM COMPATIBILITY — Page 23

SPACECRAFT SYSTEMS TESTS — Page 23

ENVIRONMENTAL CONTROL — Page 24

THERMAL QUALIFICATION — Page 25

DATE 22 JANUARY 1962
REVISED 2 MARCH 1964 (REV. Q)
REVISED 23 MARCH 1964 (REV. R)
REVISED 24 APRIL 1964 (REV. S)

MCDONNELL
ST. LOUIS, MISSOURI

GEMINI TEST PLAN SCHEDULE

REPORT
MODEL 133P

	Test Req. No. 52--	ACTIVITY	1963 J	A	S	O	N	D	1964 J	F	M	A	M	J	J	A	S	O	N	D	SLACK	COMMENTS
1		WIND TUNNEL TESTS:																				
2		AERODYNAMIC TESTS																				
3	41.02	6% LAUNCH CONFIG. - STATIC STAB. & PRESSURE (AMES UNITARY - LOW)																				TEST COMPLETED JUNE '62
4	41.16	6% LAUNCH CONFIG. - STATIC STAB. & PRESSURE (LEWIS 10' - HIGH)																				TEST COMPLETED SEPT '62
5	41.04	10% REENTRY MODULE & ABORT CONFIG. - STATIC STAB. (MAC PSWT)																				TEST COMPLETED JUNE '62
6	41.03	1.925% REENTRY MODULE & ABORT CONFIG.-STATIC STAB. (LANGLEY 11')																				TEST COMPLETED JAN '63
7	41.06	9% REENTRY MODULE - STATIC STABILITY (MAC HIT)																				TEST COMPLETED JUNE '62
8	41.11	10% REENTRY MODULE & ABORT CONFIG.DYN.STAB.(LANGLEY 8'&UNITARY																				TEST COMPLETED NOV '62
9	41.14	REENTRY MODULE - DYNAMIC STAB. (AMES S.S. FREE FLT.)																				TEST COMPLETED DEC '62
10	41.01, 01.02, 01.03	20% SEAT - STATIC STAB. & PRESSURES (MAC PSWT)																				TEST COMPLETED APRIL '63
11	41.12	10% JET/HATCH EFFECTS, EJECTION SEAT - STATIC STAB. (MAC PSWT)																				TEST COMPLETED OCT '62
12	41.07	10% REENTRY MODULE - PRESSURE & HATCH HINGE MOMENTS (MAC PSWT)																				TEST COMPLETED JULY '62
13	41.05	30% LANDING CONFIG. - STATIC STAB. & PRESSURE (MAC LSWT)																				TEST COMPLETED MAY '62
14	41.15	5% REENTRY MODULE - SPIN (LANGLEY SPIN)																				TEST COMPLETED JAN '63
15	41.19	FULL SCALE - BALLUTE (MAC LSWT).																				TEST COMPLETED JULY '63
16	41.20	FULL SCALE - 18.2' DIA. PILOT CHUTE (AMES)																				EQUIPMENT DEL. FOR NASA TEST
17																						
			J	A	S	O	N	D	J	F	M	A	M	J	J	A	S	O	N	D		
			1963						1964													

LEGEND:
TESTS: ① ② ③
HDW. DEL: ① ② ③

① PLANNED
② CURRENT EST.
③ ACTUAL

DATE 22 JANUARY 1962

REVISED 2 MARCH 1964 (REV. Q)

REVISED 23 MARCH 1964 (REV. R)

REVISED 24 APRIL 1964 (REV. S)

MCDONNELL

ST. LOUIS, MISSOURI

GEMINI TEST PLAN SCHEDULE

PAGE 3

REPORT

MODEL 133P

	Test Req. No. 52--	ACTIVITY	1963 J	A	S	O	N	D	1964 J	F	M	A	M	J	J	A	S	O	N	D	SLACK	COMMENTS
1		WIND TUNNEL TESTS:																				
2		THERMODYNAMIC TEST																				
3	41.08, 08.01, 08.02	10% REENTRY MODULE & LAUNCH CONFIG.-PRESS. & HEAT (AEDC)																				TESTS COMPLETED OCT '62
4	41.09	10% REENTRY MOD. & LAUNCH CONFIG PRESS. & HEAT (LANGLEY UNITARY)																				TEST COMPLETED NOV '62
5		7% REENTRY MODULE - HEAT TRANSFER (CAL)																				TEST COMPLETED OCT '62
6		STRUCTURAL DYNAMIC TESTS:																				
7	41.17	10% LAUNCH CONFIG. - DYN. PRESS. (AMES 11' - 14' & 9' x 7')																				TEST COMPLETED DEC '62
8																						
9		PROPULSION:																				
10	41.21	RETRO ABORT ROCKET JET FLOW EFFECTS																				TEST COMPLETED APRIL '64 TEST AT A.E.D.C.
11																						
12																						
13																						
14																						
15																						
16																						
17																						
			J	A	S	O	N	D	J	F	M	A	M	J	J	A	S	O	N	D		
			1963						1964													

LEGEND:

TESTS: ① ② ③

HDW. DEL: ① ② ③

① PLANNED

② CURRENT EST.

③ ACTUAL

DATE 22 JANUARY 1962
REVISED 2 MARCH 1964 (REV. Q)
REVISED 23 MARCH 1964 (REV. R)
REVISED 24 APRIL 1964 (REV. S)

MCDONNELL
ST. LOUIS, MISSOURI

GEMINI TEST PLAN SCHEDULE

PAGE 4
REPORT
MODEL 133P

	Test Req. No. 52--	ACTIVITY	COMMENTS
1		RECOVERY SYSTEMS DEVELOPMENT & QUALIFICATION	
2		PARACHUTE - NORTHROP-VENTURA	
3		BOMB DROPS - DROGUE DEVELOPMENT	(4) DROPS TEST COMPLETED SEPT '62
4		BOMB DROPS - MAIN CHUTE & DROGUE CHUTE DEVELOPMENT	(16) DROPS-AT EL CENTRO TEST COMPLETED FEB '63
5		MAC DELIVERY - BOILERPLATE 5	B/P 5 DELIVERY AUG '62
6		COMPLETE SYSTEM DROPS (BOILERPLATE 5)	TEST COMPLETED SEPT '63
7		BOILERPLATE 5 TO NORTH AMERICAN AVIATION PROGRAM	DELIVERED SEPT '63
8		NAA DROP TESTS (B/P 5)	TEST COMPLETED DEC. '63
9		MAC DELIVERY - STATIC 7	DELIVERED JAN '64
10		COMPLETE SYSTEM DROPS (STATIC 7) (SINGLE 18 FT. DROGUE)	-11 3 DROPS
11		TANDEM DEPLOYMENT OF 18 FT. PILOT & 8.3 FT. DROGUE CHUTES (B/P 5)	5 DROPS
12		BOMB DROPS - 8.3FT. DROGUE CHUTE DEVELOPMENT	-2 25 DROPS
13		RECOVERY SYSTEM QUAL DROPS (STATIC 7) (DOUBLE DROGUE)	-3 14 DROPS
14		S/C STRUCTURAL QUAL DROP TESTS (STATIC 4) (DOUBLE DROGUE)	-5 2 DROPS
15			
16			
17			

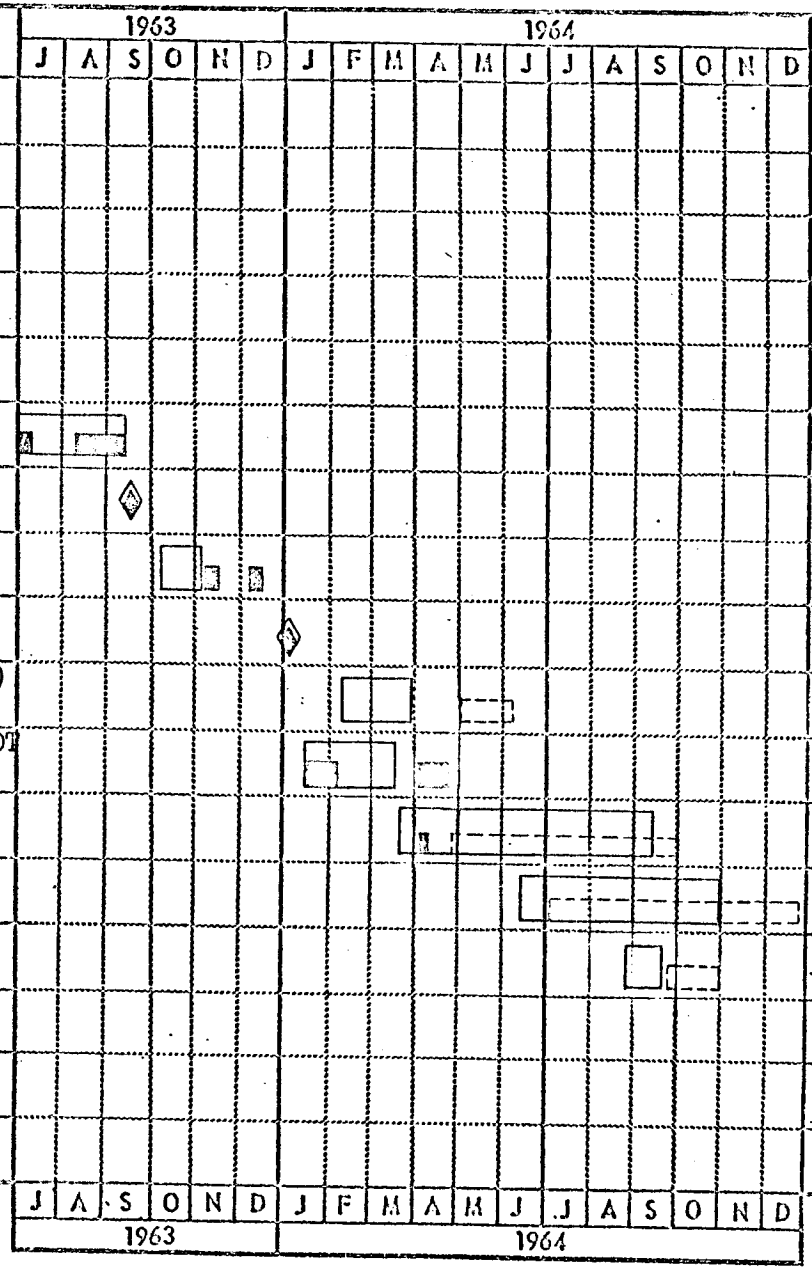

LEGEND:
TESTS: ① ② ③
HDW. DEL: ① ② ③

① PLANNED
② CURRENT EST.
③ ACTUAL

DATE 22 JANUARY 1962
REVISED 2 MARCH 1964 (REV. Q)
REVISED 23 MARCH 1964 (REV. R)
REVISED 24 APRIL 1964 (REV. S)

MCDONNELL
ST. LOUIS, MISSOURI

GEMINI TEST PLAN SCHEDULE

REPORT
MODEL 133P

	Test Req. No. 52--	ACTIVITY	COMMENTS
1		FLOTATION & EGRESS	
2	43.02 & .02.01	FLOTATION STABILITY, 1/4 SCALE MODEL	TESTS COMPLETED MAR '63
3		FLOTATION, CALM WATER, STATIC 5	TESTS COMPLETED AUG. '63
4		FLOTATION & EGRESS QUAL., STATIC 5	DELIVERED DEC. '63 TO BE CONDUCTED BY NASA
5			
6			
7			
8		WATER DROPS	
9		BOILERPLATE 4 - DELIVERED FROM WEBER TO MAC	DELIVERED OCT. '63
10		B/P 4 MOD. FOR DROP RIG	COMPLETED FEB '64
11	52.32.01	SET-UP AND CHECK-OUT DROPS (AMF RIG)	COMPLETED DEC '63
12	52.32.01	B/P 4 WATER DROPS (PARKS WATER SITE)	TESTS COMPLETED APRIL '64
13			
14			
15			
16			
17			

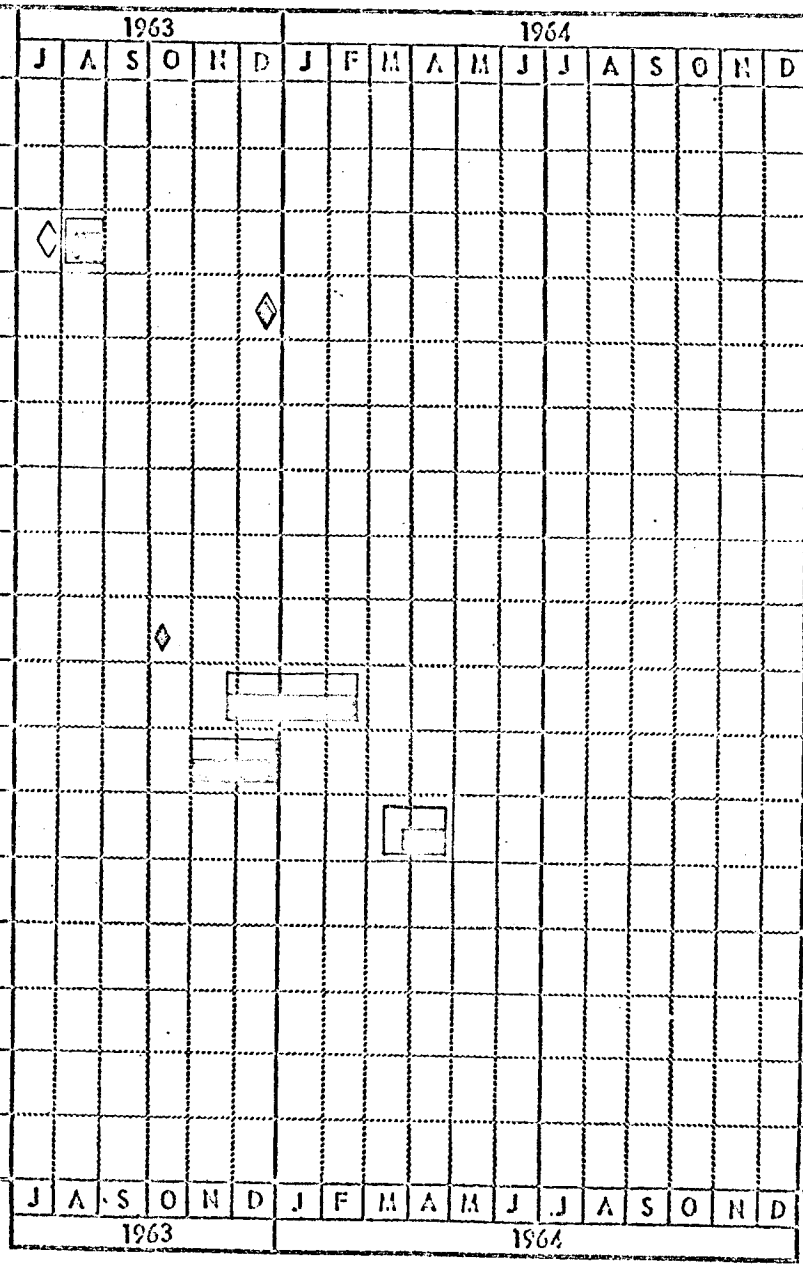

LEGEND:
TESTS: ① ② ③
HDW. DEL:
① PLANNED
② CURRENT EST.
③ ACTUAL

DATE 22 JANUARY 1962
REVISED 2 MARCH 1964 (REV. Q)
REVISED 23 MARCH 1964 (REV. R)
REVISED 24 APRIL 1964 (REV. S)

MCDONNELL
ST. LOUIS, MISSOURI

GEMINI TEST PLAN SCHEDULE

REPORT
MODEL 133P

	Test Req. No. 52--	ACTIVITY	1963 J	A	S	O	N	D	1964 J	F	M	A	M	J	J	A	S	O	N	D	SLACK	COMMENTS
1		SKID LANDING GEAR																				
2	42.02, .09 & .10	1/4 SCALE MODEL DROPS - GEAR DEVELOPMENT																				TESTING COMPLETED JULY '63
3	42.05	JIG DROPS - METERING TUBE EVALUATION - NOSE LANDING GEAR																				TESTING COMPLETED AUG. '63
4	42.04	JIG DROPS - METERING TUBE EVALUATION - L/H MAIN LANDING GEAR																				TESTING COMPLETED NOV. '63
5		DELIVERY & SET-UP OF LANDING SIMULATION APPARATUS - BY AMF																				PROGRAM STOPPED, NASA TWX, GPO-54374
6	42.06	FUNCTIONAL & DROP TESTS - PROD. GEAR EVAL. - B/P 4																				
7	52.18	DROP TESTS - LANDING GEAR CHECK-OUT - STATIC 2																				
8	69.13	MAIN LANDING GEAR ACTUATOR (6 SEPARATIONS)																				
9	69.11	NOSE LANDING GEAR DEPLOY																				
10	69.13	MAIN LANDING GEAR DOOR SPECIMEN SILL (4 SEPARATIONS)																				
11		MAIN LANDING GEAR DOOR (2 SEP.)																				
12	69.20	MAIN LANDING GEAR DOOR & GEAR EXTENSION (UNDERWATER)																				
13		PARAGLIDER TESTS																				
14	52.29	PARAGLIDER SUPPORT STRUCTURE NOSE GEAR INTERFACE																				
15	52.29	PARAGLIDER AFT PITCH FITTING																				
16	52.29	PARAGLIDER ROLL FITTING																				
17	52.23	LANDING IMPACT - PARAGLIDER																				
			J	A	S	O	N	D	J	F	M	A	M	J	J	A	S	O	N	D		
			1963						1964													

LEGEND:
TESTS: ① ② ③
HDW. DEL: ① ② ③

① PLANNED
② CURRENT EST.
③ ACTUAL

DATE 22 JANUARY 1962
REVISED 2 MARCH 1964 (REV. Q)
REVISED 23 MARCH 1964 (REV. R)
REVISED 24 APRIL 1964 (REV. S)

MCDONNELL
ST. LOUIS, MISSOURI

GEMINI TEST PLAN SCHEDULE

REPORT
MODEL 133P

	Test Req. No. 52--	ACTIVITY	COMMENTS
1		HATCH DEVELOPMENT-QUALIFICATION TESTS	
2	51.01.01	MODEL TESTS - SEAL DEVELOPMENT	TESTS COMPLETED JUNE '62
3		SPECIMEN HATCH REWORK COMPLETE	
4	45.02	DETERMINE HATCH LEAK RATE	COMPLETED JAN '64
5	45.02	HATCH PRESSURIZATION & ACTUATION	TEST COMPLETED FEB. '64
6	58.16	SPECIAL HATCH VIBRATION	TEST COMPLETED MAR. '64
7	45.02	LEAKAGE TESTS	TESTING POSTPONED DUE TO BUDGET LIMITATIONS
8	45.02	MANUAL UNLOCKING,&ULT.STRENGTH TEST	
9			
10	52.30	TEMPERATURE, SHOCK, & PRESSURE WINDOW STRUCTURE	-8
11	58.04 58.10	WINDOW VIBRATION & ACOUSTIC TESTS	(1) ACOUSTIC TESTS AT MARTIN. TESTS COMPLETED APRIL '64
12			
13	45.04	B/P 3A HATCH ACTUATION - AT MAC	TEST COMPLETED FEB. '64
14	45.01	HATCH PRESS. DISTRIBUTION AND AIRLOADS - B/P 3 (AT WEBER)	TESTS COMPLETED FEB. '64 REF: PAGE 15, LINE 12
15			
16			
17			

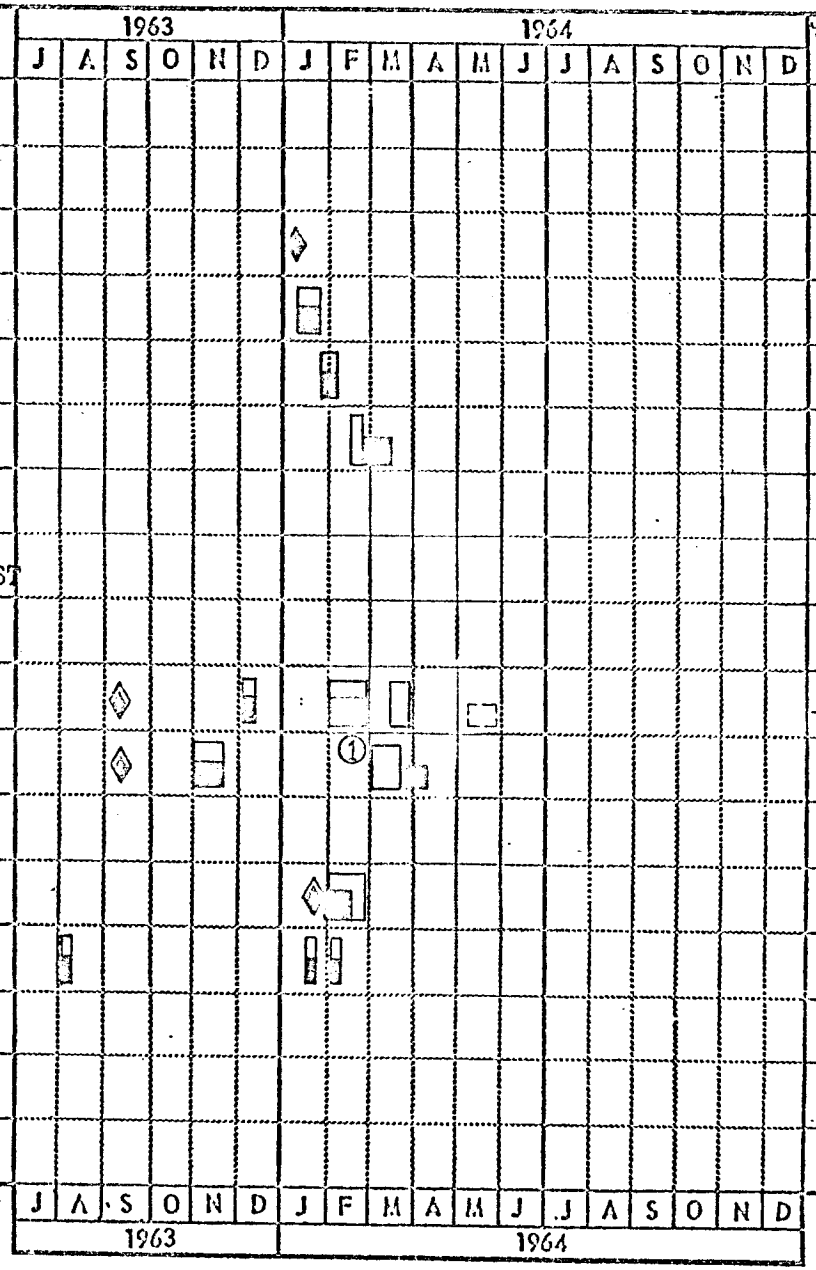

LEGEND:
TESTS: ① ② ③
HDW. DEL:
① PLANNED
② CURRENT EST.
③ ACTUAL

DATE 22 JANUARY 1962
REVISED 2 MARCH 1964 (REV. Q)
REVISED 23 MARCH 1964 (REV. R)
REVISED 24 APRIL 1964 (REV. S)

MCDONNELL
ST. LOUIS, MISSOURI

GEMINI TEST PLAN SCHEDULE

REPORT
MODEL 133P

	Test Req. No. 52--	ACTIVITY	1963 J	A	S	O	N	D	1964 J	F	M	A	M	J	J	A	S	O	N	D	SLACK	COMMENTS
1		EJECTION SEAT DEVELOPMENT TESTS:																				
2		SUSTAINER ROCKET TESTS, STATIC FIRING - AT RPI																				TESTS COMPLETED SEPT. '63
3		SUSTAINER ROCKET TESTS PLUME INVESTIGATION AT ALT. - AT AEDC																				TESTS COMPLETED OCT. '62
4	60.06.01	SLUMP TEST, DUMMY - AT ACEL																				TEST COMPLETED MAR. '63
5	60.06	SLUMP TEST, HUMAN - AT ACEL																				TEST COMPLETED AUG. '63
6	60.09	SEAT MECHANISMS FUNCTIONAL TEST																				TEST COMPLETED APRIL '63
7	58.13	SEAT VIBRATION TEST																				TEST COMPLETED MAY '63
8		SEAT-MAN SEPARATION TESTS - AT WEBER																				TESTS COMPLETED JAN. '63
9		HORIZONTAL TRACK FIRING - AT RPI																				TEST COMPLETED APRIL '63
10		SOPE TESTS, SEAT DEVELOPMENT																				(11 TESTS) TEST COMPLETED JULY '63
11		MAC DELIVERY - BOILERPLATE 3 TO WEBER																				DELIVERED JULY '62
12	45.01	SLED TESTS, SEAT DEVELOPMENT (DRAG RUN TEST FIRST) B/P 3																				(5 RUNS) TESTS COMPLETED FEB '64
13																						
14																						
15																						
16																						
17																						
			J	A	S	O	N	D	J	F	M	A	M	J	J	A	S	O	N	D		
			1963						1964													

LEGEND:
TESTS: ③ ① ②
HDW. DEL: ① ② ③

① PLANNED
② CURRENT EST.
③ ACTUAL

DATE 22 JANUARY 1962
REVISED 2 MARCH 1964 (REV. Q)
REVISED 23 MARCH 1964 (REV. R)
REVISED 24 APRIL 1964 (REV. S)

MCDONNELL
ST. LOUIS, MISSOURI

GEMINI TEST PLAN SCHEDULE

REPORT
MODEL 133P

	Test Req. No. 52--	ACTIVITY	1963 J	A	S	O	N	D	1964 J	F	M	A	M	J	J	A	S	O	N	D	SLACK	COMMENTS
1		EJECTION SEAT QUALIFICATION TESTS																				
2		MAC DELIVERY - BOILERPLATE 3A TO WEBER								◊												DELIVERED FEB '64
3	58.06	SEAT QUALIFICATION SLED RUNS:																				REF. WEBER SCHED, 15 APR 64
4		TEST #6 (15° YAW, NOSE LEFT, 0° PITCH, NON-EJECTION) q = 740										▯		▯							-6	
5		TEST #7 (180° YAW, 0° PITCH)											▯	▯							-6	
6		TEST #8 (15° YAW, NOSE LEFT, 0° PITCH) q = 740 psf												▯	▯						-4	
7		TEST # 9 (0° YAW, 0° PITCH) q = 920												▯	▯	▯					-5	
8		TEST #10 (0° YAW, -15° PITCH, NOSE DOWN)													▯	▯					-5	
9																						
10		SIMULATED OFF-PAD EJECTION TESTS:																				
11		S.O.P.E. TEST #1														▯	▯				-2	
12		S.O.P.E. TEST #2															▯	▯			-2	
13		[illegible]																				
14		SEAT STATIC & ENVIRONMENTAL TESTS - AT WEBER									▭	▭	▭									
15	58.12.01	SEAT VIBRATION QUAL. TEST (SEAT #38 WITH COMPLETE EQUIP.)											◊	▯ ◊	▯						-4	
16																						
17																						

LEGEND:
TESTS: ① ② ③
HDW. DEL: ◊ ◊ ◊
① PLANNED
② CURRENT EST.
③ ACTUAL

DATE 22 JANUARY 1962
REVISED 2 MARCH 1964 (REV. Q)
REVISED 23 MARCH 1964 (REV. R)
REVISED 24 APRIL 1964 (REV. S)

MCDONNELL
ST. LOUIS, MISSOURI

GEMINI TEST PLAN SCHEDULE

PAGE 10
REPORT
MODEL 133P

	Test Req. No. 52--	ACTIVITY	1963 J	A	S	O	N	D	1964 J	F	M	A	M	J	J	A	S	O	N	D	SLACK	COMMENTS
1		HEAT SHIELD DEVELOPMENT - QUALIFICATION																				
2	51.03.05 & .03.06	ABLATION MATERIAL SELECTION - PLASMA JET																				TESTS COMPLETED JUNE 1962
3	51.03.08 51.10	SPECIMEN TESTING OF SELECTED ABLATION MATERIAL																				TESTS COMPLETED JAN '63
4	51.03.01 & .03.02	ADHESIVE DEVELOPMENT																				TESTS COMPLETED MARCH '62
5	51.05, 51.11	STRUCT. & THERMAL SHOCK - PROTO BACKUP STRUCTURE																				TESTS COMPLETED JULY '62
6		MFG. DELIVERY - PROTO HEAT SHIELD																				DELIVERED FEB '63
7	51.12 & .01, 51.18	STRENGTH, TEMPERATURE & ENVIRONMENT - PROTO SHIELD SPECIMENS																				TESTS COMPLETED JUNE 1963
8	52.32	LANDING IMPACT - WATER DROPS																			-2	REF: PAGE 18, LINE 14
9	51.12.02	CONTINUED HEAT SHIELD QUAL. TESTS - BOND LINES																				AWAITING NASA DIRECTION STATIC #4, -1 HEAT SHIELD
10																						
11																						
12																						
13																						
14																						
15																						
16																						
17																						
			J	A	S	O	N	D	J	F	M	A	M	J	J	A	S	O	N	D		
			1963						1964													

LEGEND:
TESTS: ③ ① ② ③
HDW. DEL:

① PLANNED
② CURRENT EST.
③ ACTUAL

DATE 22 JANUARY 1962
REVISED 2 MARCH 1964 (REV. Q)
REVISED 23 MARCH 1964 (REV. R)
REVISED 24 APRIL 1964 (REV. S)

MCDONNELL
ST. LOUIS, MISSOURI

GEMINI TEST PLAN SCHEDULE

REPORT
MODEL 133P

	Test Req. No. 52--	ACTIVITY	1963 J	A	S	O	N	D	1964 J	F	M	A	M	J	J	A	S	O	N	D	SLACK	COMMENTS
1		DOCKING SYSTEM DEVELOPMENT QUALIFICATION																				
2		1/4 SCALE DESIGN CONCEPT MODEL DEVELOPMENT																				TESTS COMPLETED JULY '62
3	52.16	DOCKING CONE IMPACT TEST																				TEST COMPLETED MAY '63
4	44.05	1/4 SCALE DYNAMIC MODEL TESTS DOCKING DEVELOPMENT								①			②									TESTS COMPLETED JUNE '63
5	44.08	DAMPER ORIFICE DEVELOPMENT & ENVIRONMENTAL QUAL. TEST																				① DEV. TESTS ② QUAL. TESTS
6	44.04.01	TRANSLATOR & DOCKING TRAINER DOCKING SIMULATOR TESTS	①							②												(1) DEVELOPMENT TESTS COMP. (2) OPER. USAGE TESTS MAR '64
7	52.40	DEFLECTION TEST OF DOCKING CONE																				UTILIZES TDA ST. #1
8		MAC DELIVERY - TARGET DOCKING ADAPTER (TDA) ST. #1 TO LOCKHEED																				DELIVERED OCT. '63
9		LMSC LAUNCH & INSERTION PHASE STRUCTURAL TESTS																				TDA ST. #1
10	44.09	DYNAMIC SHOCK - FULL SCALE DOCKING	TESTING POSTPONED DUE TO BUDGET LIMITATIONS																			TDA ST. #1, R & R ST. #4
11		MFG. DELIVERY - TARGET DOCKING ADAPTER (TDA) STATIC #2																				DELIVERED APRIL '64
12	52.47	TDA STIFFNESS TEST			TESTING POSTPONED DUE TO BUDGET LIMITATIONS																	TDA ST. #2
13	44.07	FUNCTIONAL & LIFE TEST LATCHING, PULLUP, AND RELEASE			"				"		"		"	"				"				TDA ST. #2, R & R ST. #3
14	52.27	ULT. STATIC TEST - GEMINI/ AGENA MANEUVERING			"				"		"		"	"				"				ST. #3 R & R - RCS TDA ST. #2
15	44.06	DYNAMIC RESPONSE - STRUCTURE (DOCKED CONFIGURATION)			"				"		"		"	"				"				TDA ST. #2 AND ST. #4
16	80.03	TDA P.A. #1 VIBRATION TEST																			-4	
17		TDA P.A. #1 AGENA ENGINE OPERATION & ENVIRONMENT TEST (LMSC)																			-4	
			J	A	S	O	N	D	J	F	M	A	M	J	J	A	S	O	N	D		
			1963						1964													

LEGEND:
TESTS: ① ② ③
HDW. DEL: ① ② ③
① PLANNED
② CURRENT EST.
③ ACTUAL

DATE 22 JANUARY 1962
REVISED 2 MARCH 1964 (REV. Q)
REVISED 23 MARCH 1964 (REV. R)
REVISED 24 APRIL 1964 (REV. S)

MCDONNELL
ST. LOUIS, MISSOURI

GEMINI TEST PLAN SCHEDULE

REPORT
MODEL 133P

	Test Req. No. 52--	ACTIVITY	COMMENTS
1		PROPULSION SYSTEM:	
2	14.01 14.01.XX	COMPATIBILITY TESTS PROPELLANT/MATERIAL	TESTING AS REQUIRED
3	70.01	RETRO ROCKET ABORT SEPARATION, FULL SCALE - AT AEDC	TEST COMPLETED JULY '63
4		B/P TEST ARTICLE DELIVERY TO AEDC	DELIVERED SEPT. '63
5	70.01.01	RETRO ROCKET ABORT SEPARATION - (SALVO) - POP GUN II	TEST COMPLETED OCT. '63
6	41.21	RETRO ABORT ROCKET JET FLOW EFFECTS	TESTS COMPLETED APRIL '64
7			
8			
9			
10			
11			
12		MATERIALS & PROCESSES DEVELOPMENT	
13	44.02, 60.02, 68.01&.18	MATERIAL SELECTION	TESTING AS REQUIRED
14	14.XX 15.XX	FABRICATION & ASSEMBLY PROCESSES	TESTING AS REQUIRED
15	17.XX	MATERIAL THERMAL & ENVIRONMENTAL CHARACTERISTICS	TESTING AS REQUIRED
16			
17			

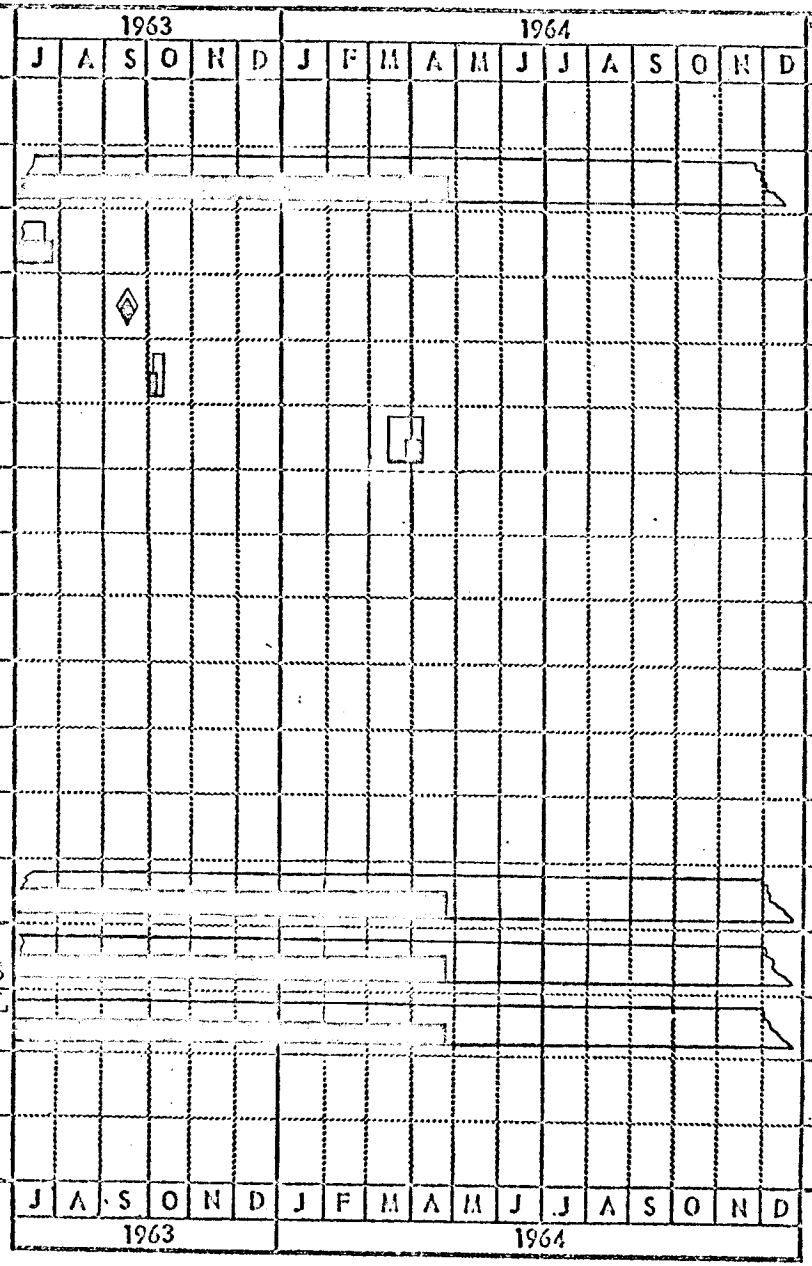

LEGEND:
TESTS: ① ② ③
HDW. DEL: ① ② ③
① PLANNED
② CURRENT EST.
③ ACTUAL

DATE 22 JANUARY 1962
REVISED 2 MARCH 1964 (REV. Q)
REVISED 23 MARCH 1964 (REV. R)
REVISED 24 APRIL 1964 (REV. S)

MCDONNELL
ST. LOUIS, MISSOURI

GEMINI TEST PLAN SCHEDULE

REPORT
MODEL 133P

	Test Req. No. 52--	ACTIVITY	SLACK	COMMENTS
1		RELEASE MECHANISMS:		
2	69.01, .02 .03 & .18	DEVELOPMENT TESTS, EXPLOSIVE SEPARATION CONFIGURATIONS		TESTING AS REQUIRED
3	69.03 & 69.16	EVALUATION, FLSC BLAST EFFECTS (FULL SCALE)		TESTS COMPLETED JUNE '63
4				
5		ADAPTER DEMONSTRATION TESTS-RELEASE MECHANISMS:		
6		STATIC # 3 & # 4 ADAPTERS AVAILABLE FOR TEST		(1) STATIC #3 ADAPTER (2) STATIC #4 ADAPTER
7	58.18	DYNAMIC SHOCK -Z13 PYROS (EQUIP. SECTION ST. 4 ADAPTER)		TEST COMPLETED DEC. '63
8	69.12	BOOSTER/ADAPTER (Z13) (PARTIAL SPECIMEN) STRUCT. (5 SEPAR.)	-5	
9	69.12	EQUIP/RETRO SEC. (Z69) (PARTIAL SPECIMEN) STRUCT (5 SEPAR)	-2	
10	69.10	REENTRY SECTION/RETRO SECTION (Z100) (5 SEPARATION TESTS)	-10	
11	69.10 69.12	Z13,Z69,Z100 ELV. TEMP.-FULL ADAPTER (1 SEPARATION EACH)	-1	
12				
13				
14		REENTRY MODULE DEMONSTRATION TESTS-RELEASE MECHANISMS:		
15	45.04	HATCH ACTUATOR (HATCH STRUCTURAL DYNAMICS) (2 SEPAR.TESTS)B/P 3A		TESTS COMPLETED FEB. '64 REF: PAGE 7 , LINE 13
16		HATCH ACTUATOR (SEAT QUAL PROGRAM) (14 SEPARATION TESTS) B/P 3A	-5	REF: PAGE 9 , LINE 2
17				

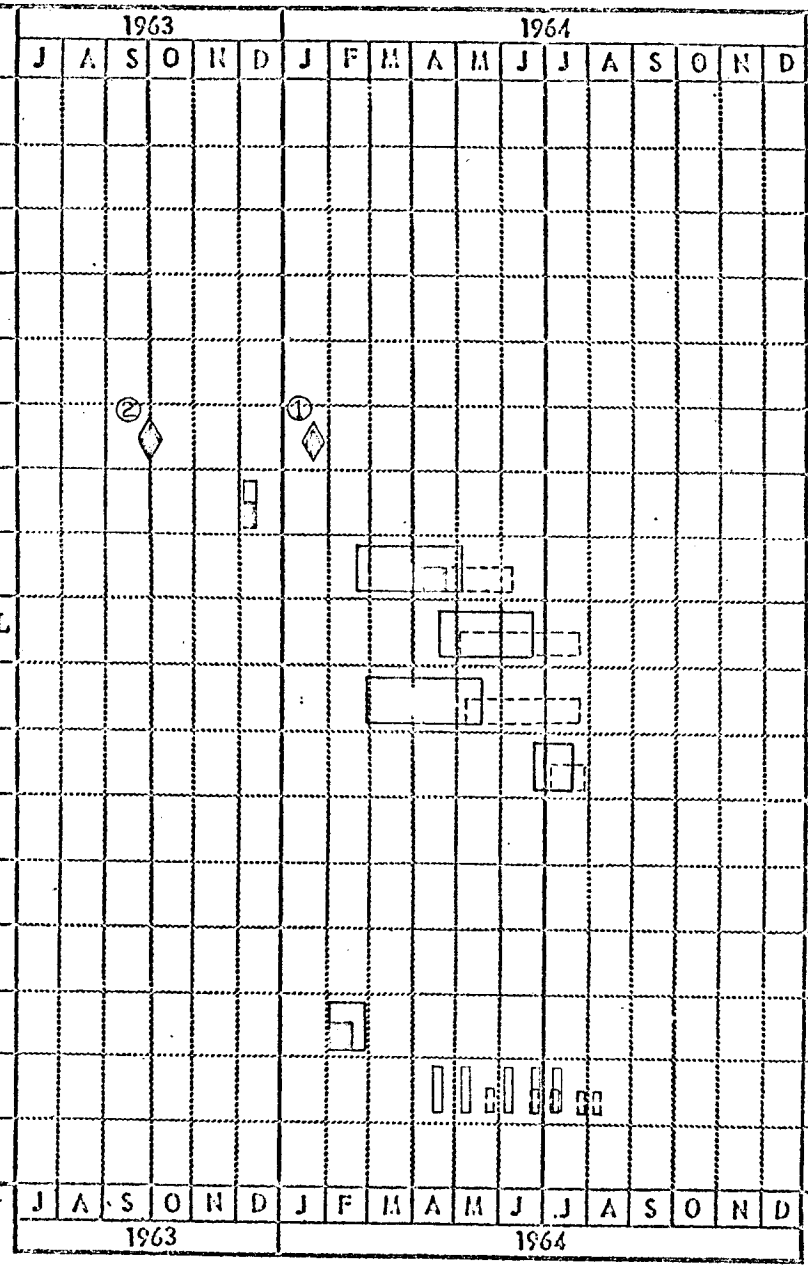

LEGEND:
TESTS:
HDW. DEL:
① PLANNED
② CURRENT EST.
③ ACTUAL

DATE 22 JANUARY 1962
REVISED 2 MARCH 1964 (REV. Q)
REVISED 23 MARCH 1964 (REV. R)
REVISED 24 APRIL 1964 (REV. S)

MCDONNELL
ST. LOUIS, MISSOURI

GEMINI TEST PLAN SCHEDULE

REPORT
MODEL 133P

	Test Req. No. 52--	ACTIVITY	1963 J	A	S	O	N	D	1964 J	F	M	A	M	J	J	A	S	O	N	D	SLACK	COMMENTS
1		REENTRY DEMONSTRATION TESTS-RELEASE MECHANISMS (CONT.):																				
2	69.13	CREWMAN SIMULATOR (5 SEPAR)																				TESTS COMPLETED FEB. '64 TUBE & CABLE MOCK-UP
3	69.13	AFT RECOVERY HOIST LOOP DOOR (6 SEPAR.) PARACHUTE CONFIG.																				S/C 5, REF. PAGE 16, LINE 12 & 13
4	69.13	HORIZON SCANNER FAIRING & HOR. SCAN. RELEASE SYSTEM (6 SEPAR.)																				S/C 5, REF. PAGE 16, LINE 11 & 13
5																						
6	69.11	R & R SECTION & RCS AVAILABLE																			-9	① R &R SEC. ② RCS SEC.
7	69.11	R & R MODULE RELEASE & RADAR COVER RELEASE (SINGLE DROGUE)																			-4	
8	69.11.01	R & R MODULE RELEASE & RADAR COVER RELEASE (DOUBLE DROGUE)																				
9	52.07.01	DROGUE CHUTE MORTAR (DOUBLE DROGUE)																				
10	69.14	EMERGENCY DOCKING RELEASE																				SCHEDULE LATER
11	69.14	DOCKING INDEXING BAR																				SCHEDULE LATER
12																						
13																						
14																						
15																						
16																						
17																						

LEGEND:
TESTS: ① ② ③
HDW. DEL: ① ② ③
① PLANNED
② CURRENT EST.
③ ACTUAL

DATE 22 [illegible]NUARY 1962
REVISED 2 MARCH 1964 (REV. Q)
REVISED 23 MARCH 1964 (REV. R)
REVISED 24 APRIL 1964 (REV. S)

MCDONNELL
ST. LOUIS, MISSOURI

GEMINI TEST PLAN SCHEDULE

PAGE 15
REPORT
MODEL 133P

	Test Req. No. 52--	ACTIVITY	SLACK	COMMENTS
1		STRUCTURAL TEST PROGRAM		
2		R & R - RCS SECTION (STRUCTURE TEST UNITS)		TEST COMPLETED JULY '63
3	52.20	PARACHUTE SUPPORT FITTINGS (2 FORWARD POINTS ONLY)		TEST COMPLETED JULY '63
4	52.11	RADAR SUPPORT STRUCTURE		TEST COMPLETED JULY '63
5	52.22	HOISTING PROVISIONS		TEST COMPLETED JULY '63
6	52.12	NOSE LAUNCH FAIRING (SINGLE DROGUE)		TEST COMPLETED AUG. '63
7	52.10	REENTRY HEATING DROGUE CHUTE SUPPORT STRUCTURE (SINGLE DROGUE)		TEST COMPLETED APRIL '64
8	52.12.01	NOSE LAUNCH FAIRING (DOUBLE DROGUE)		
9	52.10.01	REENTRY HEATING DROGUE CHUTE SUPPORT STRUCTURE (DOUBLE DROGUE)		
10	58.05 58.09	BERYLLIUM SHINGLES-VIBRATION & ACOUSTIC QUAL. TESTS	-5	ACOUSTIC TESTS DEPENDENT ON VENDOR SELECTION
11		MISCELLANEOUS STRUCTURAL ARTICLES		
12		HORIZON SCANNER FAIRING, SLED "a" LOADING (B/P 3 & B/P 3A)	-4	B/P 3 TESTS COMPLETED FEB '64 REF. PAGE 7, LINE 14
13	58.14	SPACECRAFT #1 SEAT PALLET - DYN. RESPONSE		TEST COMPLETED AUG. '63
14	58.15	SPACECRAFT #2 SEAT PALLET - DYN. RESPONSE		TEST COMPLETED APRIL '64
15	52.42 55.06	UMBILICAL DISCONNECT ELECTRICAL & GROUND COOLING		TESTS COMPLETED JAN. '64 MARTIN 2 ADAPTER
16	52.34.01	STATIC TEST OF BLAST SHIELD DOOR		TEST COMPLETED MAR. '64 MARTIN 2 ADAPTER
17	52.50	STATIC TEST OF BATTERY MODULE	-4	MARTIN 2 ADAPTER

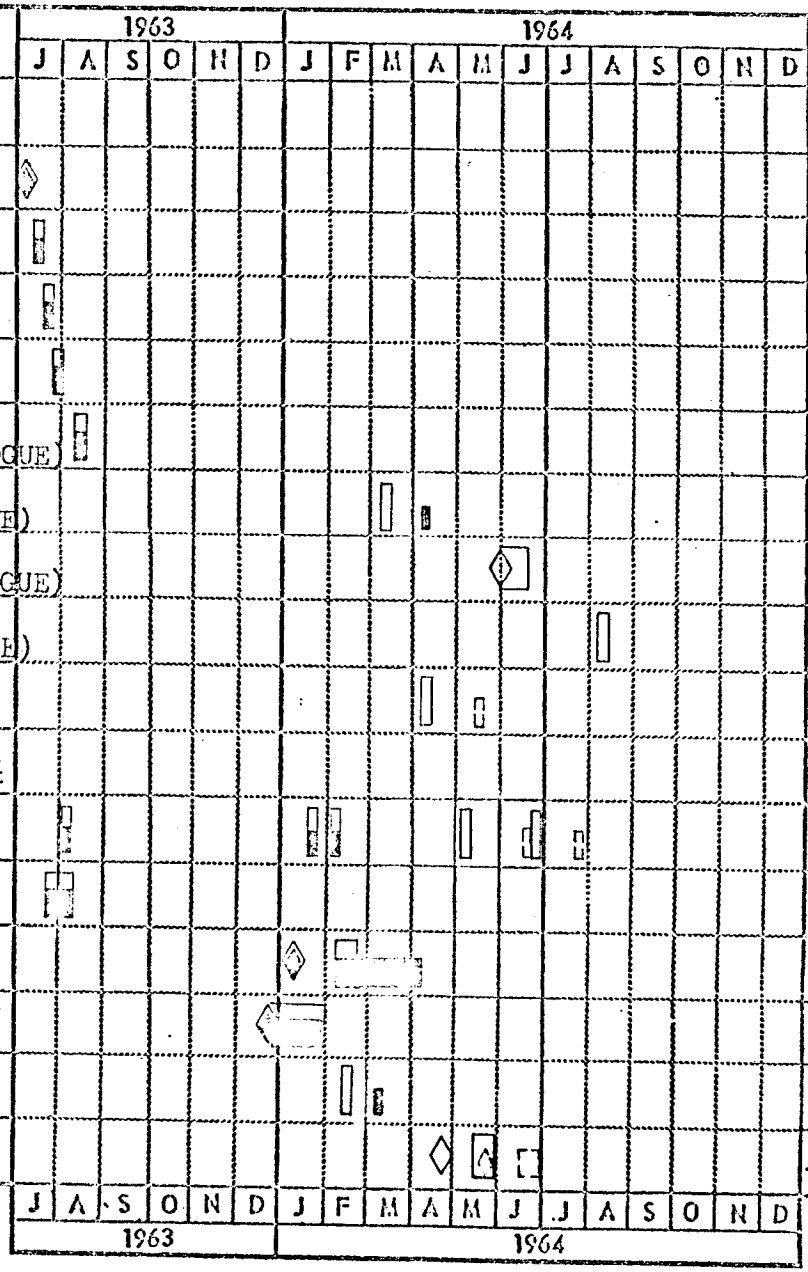

LEGEND:
TESTS: ① ② ③
HDW. DEL: ① ② ③

① PLANNED
② CURRENT EST.
③ ACTUAL

DATE 22 JANUARY 1962
REVISED 2 MARCH 1964 (REV. Q)
REVISED 23 MARCH 1964 (REV. R)
REVISED 24 APRIL 1964 (REV. S)

MCDONNELL
ST. LOUIS, MISSOURI

GEMINI TEST PLAN SCHEDULE

REPORT
MODEL 133P

	Test Req. No. 52--	ACTIVITY	1963 J	A	S	O	N	D	1964 J	F	M	A	M	J	J	A	S	O	N	D	SLACK	COMMENTS
1		STRUCTURAL TEST PROGRAM																				
2		STATIC 3 ADAPTER																				
3	52.34	EQUIPMENT MOUNTS																				TEST COMPLETED JULY '63
4	52.08 52.39	RETRO STRUCTURES																				TEST COMPLETED JULY '63
5	52.35	ADAPTER HOT LAUNCH																				TEST COMPLETED JAN. '64
6	258.01	DYNAMIC RESPONSE OF GEMINI ADAPTER WITH DOD EXP. EQUIP.																				MARTIN 2 ADAPTER
7	255.01	DOD EXP. MECH FUNCTIONAL TEST																				S/C 5 ADAPTER
8		SPACECRAFT 5 STRUCTURAL ASSY.																				
9		S/C 5 STRUCT. DEL. TO LAB																				DELIVERED APRIL 1964
10	58.22	HORIZON SCANNER DYNAMIC RESPONSE																			-1	
11	69.13	HORIZON SCANNER & HORIZON SCANNER FAIRING PYRO DEMO. (5 SEPAR.)																			-1	
12	69.13	AFT HOIST LOOP PYRO DEMOS.																			-1	
13	69.13	ENVIRONMENTAL FIRING, HOR. SCAN., H.S. FAIRING, & AFT HOIST LOOP																			-1	
14																						
15																						
16																						
17																						

LEGEND:
TESTS: ① ② ③
HDW. DEL: ① ② ③

① PLANNED
② CURRENT EST.
③ ACTUAL

DATE 22 JANUARY 1962
REVISED 2 MARCH 1964 (REV. Q)
REVISED 23 MARCH 1964 (REV. R)
REVISED 24 APRIL 1964 (REV. S)

MCDONNELL
ST. LOUIS, MISSOURI

GEMINI TEST PLAN SCHEDULE

PAGE 17
REPORT
MODEL 133P

	Test Req. No. 52--	ACTIVITY	1963 J	A	S	O	N	D	1964 J	F	M	A	M	J	J	A	S	O	N	D	SLACK	COMMENTS
1		STRUCTURAL TEST PROGRAM																				
2		STATIC ARTICLE NO. 3 (REENTRY SECT PARACH. CONF. - LANDING GEAR)																				DELIVERED MAY '63
3	52.03	SPACECRAFT LANDING CONDITION																				TEST COMPLETED JULY '63
4	52.20	PARACHUTE SUPPORT FITTING (AFT POINT)																				TEST COMPLETED JUNE '63
5		INSTRUMENTATION FOR TEST																				COMPLETED JULY '63
6		INSTALL SHINGLES																				COMPLETED SEPT. '63
7	52.06	SPACECRAFT LAUNCH CONDITIONS																				TEST COMPLETED NOV. '63 MARTIN #2 ADAPTER
8	52.19.02	RE-ENTRY LOADS																				TEST COMPLETED FEB. '64
9	52.45	RE-ENTRY ELECTRICAL UMBILICAL DISCONNECT																				TEST COMPLETED FEB. '64
10		MOD. TO 04300-5 CONFIG.																				COMPLETED MAR '64
11	52.14	CHUTE DEPLOY, HOT																			-3	
12	52.19.01	SPACECRAFT RE-ENTRY CONDITIONS																			-3	
13		MOD. TO 04300-11 CONFIG.																			-5	
14	52.26	AFT HOIST LOOP & SUPPORT STRUCTURE																				RETEST FROM PAGE 18, LINE 7
15	52.36	SPACECRAFT ABORT CONDITIONS																			-5	USES MARTIN #1 ADAPTER OR MARTIN #2 ADAPTER
16																						
17																						

LEGEND:
TESTS: ③ ① ②
HDW. DEL: ① ② ③

① PLANNED
② CURRENT EST.
③ ACTUAL

DATE 22 JANUARY 1962
REVISED [illegible]ARCH 1964 (REV. Q)
REVISED 23 MARCH 1964 (REV. R)
REVISED 24 APRIL 1964 (REV. S)

MCDONNELL
ST. LOUIS, MISSOURI

GEMINI TEST PLAN SCHEDULE

PAGE 18
REPORT
MODEL 133P

	Test Req. No. 52--	ACTIVITY	SLACK	COMMENTS
1		STATIC #4 STRUCTURAL TEST PROGRAM		
2	52.21	SEAT BACKUP (SEE LINE 11)		ST. 4 DELIVERED MARCH '63 TESTS COMPLETED JUNE '63
3	58.03	DYNAMIC RESPONSE TESTS (ABORT, RE-ENTRY, LAUNCH)		USED MARTIN #2 ADAPTER TESTS COMPLETED SEPT. '63
4		LIGHT HATCHES - INSTALL & RIG		COMPLETED NOV. '63
5	52.24	PRESSURIZATION-CYCLING AND ULTIMATE		TESTS COMPLETED JAN. '64
6	52.49	HATCH OPERATION - SIMULATED MISSION, PHASE I		TESTS COMPLETED JAN. '64
7	52.26	AFT HOIST LOOP AND SUPPORT STRUCTURE		TESTING SUSPENDED PENDING HOIST LOOP DISPOSITION
8	52.33	HATCH BACKUP - R/H FLIPPER DOOR		TEST COMPLETED MAR. '64
9		REPAIR STATIC #4 STRUCTURE		COMPLETED MAR. '64
10	52.33	HATCH BACKUP - (R/H HATCH ULT.) (L/H & R/H HATCH)	-2	
11	52.21	SEAT BACKUP (RETEST FROM LINE 2)		TEST CANCELLED APRIL '64
12		MOD TO -11 & -17 CONFIGURATION (BALLAST, HEAT SHIELD, & E.O.'S)	-2	
13	52.49	HATCH OPERATION - SIMULATED MISSION, PHASE II & III	-2	
14	52.32	WATER LANDING IMPACT (PARACHUTE CONFIG)	-2	2 TEST CONDITIONS
15		MOD (-3) FOR HIGH ALTITUDE DOUBLE DROGUE DROPS	-2	
16		S/C STRUCTURAL QUAL DROP TESTS (DOUBLE DROGUE SYSTEM)	-2	2 DROPS
17		STATIC #4 AVAILABLE FOR DOCKING MOD		REF. PAGE 11, LINE 15

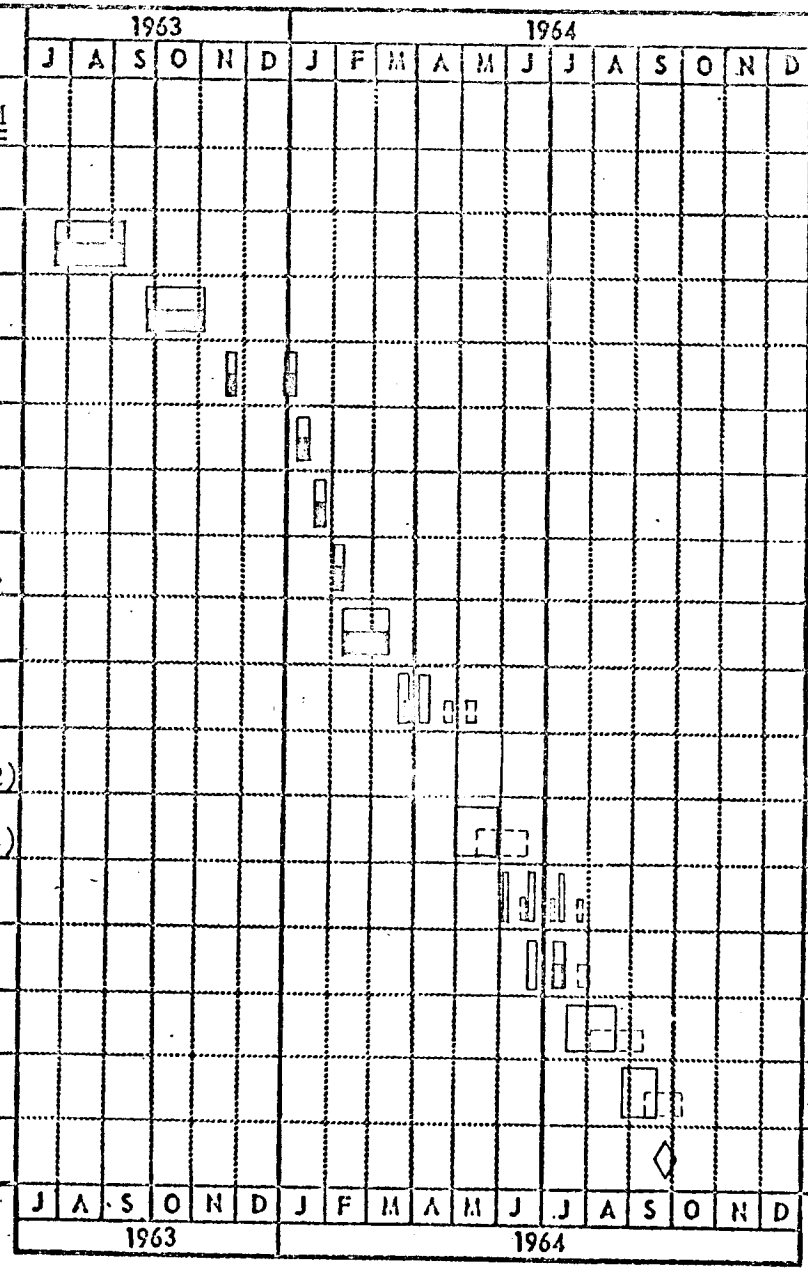

LEGEND:
TESTS: ① ② ③
HDW. DEL: ① ② ③

① PLANNED
② CURRENT EST.
③ ACTUAL

DATE 22 JANUARY 1962
REVISED MARCH 1964 (REV. Q)
REVISED 23 MARCH 1964 (REV. R)
REVISED 24 APRIL 1964 (REV. S)

MCDONNELL
ST. LOUIS, MISSOURI

GEMINI TEST PLAN SCHEDULE

REPORT
MODEL 133P

	Test Req. No. 52--	ACTIVITY	1963 J	A	S	O	N	D	1964 J	F	M	A	M	J	J	A	S	O	N	D	SLACK	COMMENTS
1		DATA ACQUISITION SYSTEM:																				
2		SIGNAL COND. VIBRATION TEST																				TEST COMPLETED AUG '62
3		SIGNAL COND. DESIGN VERIFICATION																				TESTS COMPLETED JUNE '63
4	64.08	SIGNAL COND. QUAL. TEST																			-10	
5	64.09	SIGNAL COND. ASSURANCE TEST																			-6	
6		COMPLETE INSTR. MOCKUP (CIMU)																				
7	64.03	SIGNAL COND. HEAT TRANSFER																				TEST COMPLETED JAN '63
8		PCM BREADBOARD AVAIL.																				DELIVERED APRIL '63
9	64.05	TEST BENCH COMPATIBILITY																				TESTING COMPLETED FEB '63
10	64.03	PCM EVALUATION																				TEST COMPLETED MAY '63
11	64.03	SIGNAL COND./PCM COMPATIBILITY																				TEST COMPLETED MAY '63
12	64.03	EFFECT OF POWER BUSS VARIATION																				TEST COMPLETED MAY '63
13	64.11 & 11.01	VOLT CONT. OSCILLATOR DEV. TEST																				TEST COMPLETED JULY '63
14																						
15																						
16																						
17																						
			J	A	S	O	N	D	J	F	M	A	M	J	J	A	S	O	N	D		
			1963						1964													

LEGEND:
TESTS: ① ② ③
HDW. DEL: ◊

① PLANNED
② CURRENT EST.
③ ACTUAL

DATE 22 JANUARY 1962
REVISED 2 MARCH 1964 (REV. Q)
REVISED 23 MARCH 1964 (REV. R)
REVISED 24 APRIL 1964 (REV. S)

MCDONNELL
ST. LOUIS, MISSOURI

GEMINI TEST PLAN SCHEDULE

REPORT
MODEL 133P

	Test Req. No. 52--	ACTIVITY	COMMENTS
1		ANTENNA SYSTEMS:	
2		UHF NOSE STUB, DESCENT & RECOVERY ANTENNAS	
3	063.02.0	RADIATION PATTERNS - IMPEDANCE MATCHING	TEST COMPLETED SEPT '62
4	052-063.19	QUALIFICATION TESTS	(2)Descent Antenna. Retest (1)TEST COMPLETED FEB '64 ON NOSE STUB
5			
6		HF WHIP ANTENNA (DE HAVILLAND A/C) VENDOR DEVELOPMENT (MECHANICAL)	
7		ENGR. EVALUATION & IMPEDANCE MATCHING	TEST COMPLETED NOV '62
8		QUALIFICATION TESTS	TEST COMPLETED NOV. '63
9		C BAND ANTENNAS (RADCOM - EMERTRON)	
10		VENDOR DEVELOPMENT, ENGR. EVALUATION QUAL. TESTS	TEST COMPLETED JUNE '63
11		UHF ADAPTER ANTENNAS (DE HAVILLAND A/C)	
12		VENDOR DEVELOPMENT, ENGR. EVALUATION & QUAL. TESTS	TEST COMPLETED SEPT. '63
13		C & S BAND SLOT ANTENNAS (ADAPTER) RANTEC CORP.)	
14		VENDOR DEVELOPMENT, ENGR. EVAL. & QUALIFICATION TESTS	TESTS COMPLETED JUNE '63
15		UHF MULTIPLEXERS (RANTEC CORP.)	
16		VENDOR DEVELOPMENT, ENGR. EVAL, & QUALIFICATION TESTS	TESTS COMPLETED APRIL '63
17		COAXIAL SWITCHES: VENDOR DEVEL., ENGR. EVAL. & QUAL. TESTS	TESTS COMPLETED APRIL '63

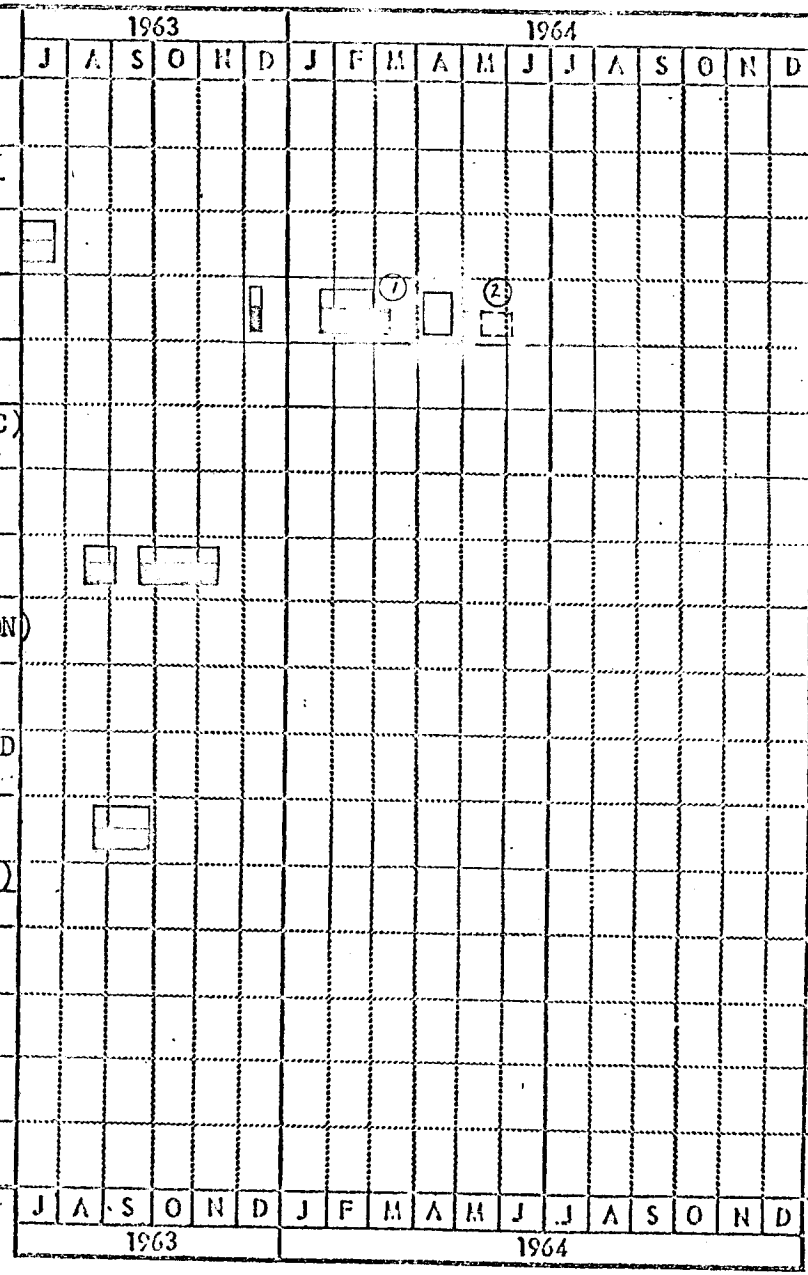

LEGEND:
TESTS:
HDW. DEL:
① PLANNED
② CURRENT EST.
③ ACTUAL

DATE 22 JANUARY 1962

REVISED MARCH 1964 (REV. R)

REVISED 24 APRIL 1964 (REV. S)

REVISED

MCDONNELL
ST. LOUIS, MISSOURI

GEMINI TEST PLAN SCHEDULE

REPORT

MODEL 133P

	Test Req. No. 52--	ACTIVITY	1963 J	A	S	O	N	D	1964 J	F	M	A	M	J	J	A	S	O	N	D	SLAC	COMMENTS
1		ELECTRICAL COMPONENTS TEST																				
2	066.03.02	RELAY - HARD MOUNTED VIB. INVESTIGATION																			-3	6 SPECIMENS RECEIVED AWAITING 6 OTHER RELAYS
3																						
4																						
5	066.05	ELECT. CONN. TEST (MG)																				CANCELLED MARCH '64
6	066.10	ELECT. CONNECTOR TEST (PTXXCP)																				CONNECTOR FAILED TO PASS DIELECTRIC & INSUL.
7	066.10.01	IMMERSION TEST-MOD. PTXXCP																				RESISTANCE CANCELLED MARCH '64
8	066.10.02	PTXXCP CONNECTORS MOD. PROCESS SPEC.																				TESTS COMPLETED MAR '64
9																						
10																						
11	066.18	EVAL. OF S/C WIRE HIGH & LOW TEMP																				DELAY ON DELIVERY OF TEFLON WIRE 4-6 WEEKS
12																						
13																						
14																						
15																						
16																						
17																						
			J	A	S	O	N	D	J	F	M	A	M	J	J	A	S	O	N	D		
			1963						1964													

LEGEND:

TESTS: ① ② ③

HDW. DEL: ① ② ③

① PLANNED
② CURRENT EST.
③ ACTUAL

DATE 22 JANUARY 1962
REVISED 2 MARCH 1964 (REV. Q)
REVISED 23 MARCH 1964 (REV. R)
REVISED 24 APRIL 1964 (REV. S)

MCDONNELL
ST. LOUIS, MISSOURI

GEMINI TEST PLAN SCHEDULE

REPORT
MODEL 133P

	Test Req. No. 52--	ACTIVITY	COMMENTS
1		ELECTRONIC SYSTEMS TEST UNIT (ESTU)	
2		INDIVIDUAL ENGINEERING PROTOTYPE SYSTEMS TESTS	TESTING FROM SEPT '62 THRU MAY '63
3		ESTU INTEGRATION PROGRAM	TESTING FROM NOV '62 THRU JULY '63
4		ESTU/CIMU INTEGRATION	TESTING JUNE & JULY '63
5	62.18	IMU TESTS ON THE ESTU	TEST COMPLETED FEB '64
6		GUIDANCE & CONTROL SIMULATION TEST (ANALOG):	
7		AVAILABILITY - THREE (3) AXIS MOTION TABLE & ESTU	3 AXIS TABLE DEL. NOV. '62
8	59.02	ATTITUDE MANEUVERING MODE	TESTING COMPLETED NOV. '63
9	59.01	IN-FLIGHT PLATFORM ALIGNMENT	TESTING COMPLETED MAR. '64
10	59.03	FLIGHT COMPUTER EVALUATION	TESTS COMPLETED JAN. '64
11	59.04	3-AXIS MOTION TABLE MISC. TESTS	
12	52.030.07	AGE SIMULATOR/ESTU	CANCELLED MAR. '64
13	61.00 THRU .06	COMPATABILITY TEST UNIT (CTU):	TESTING STOPPED UNTIL CTU REVIEW TO S/C 3 CONFIG. - LESS RCS SYSTEM.
14	68.47 68.41	COOLANT SYSTEM SERVICING	
15	61.08	ICS SYSTEM RE-TEST	TESTING COMPLETED FEB '64
16	62.11	ACME AIR BEARING TEST	
17	62.19	COMPUTER/RADAR INTEGRATED TEST	

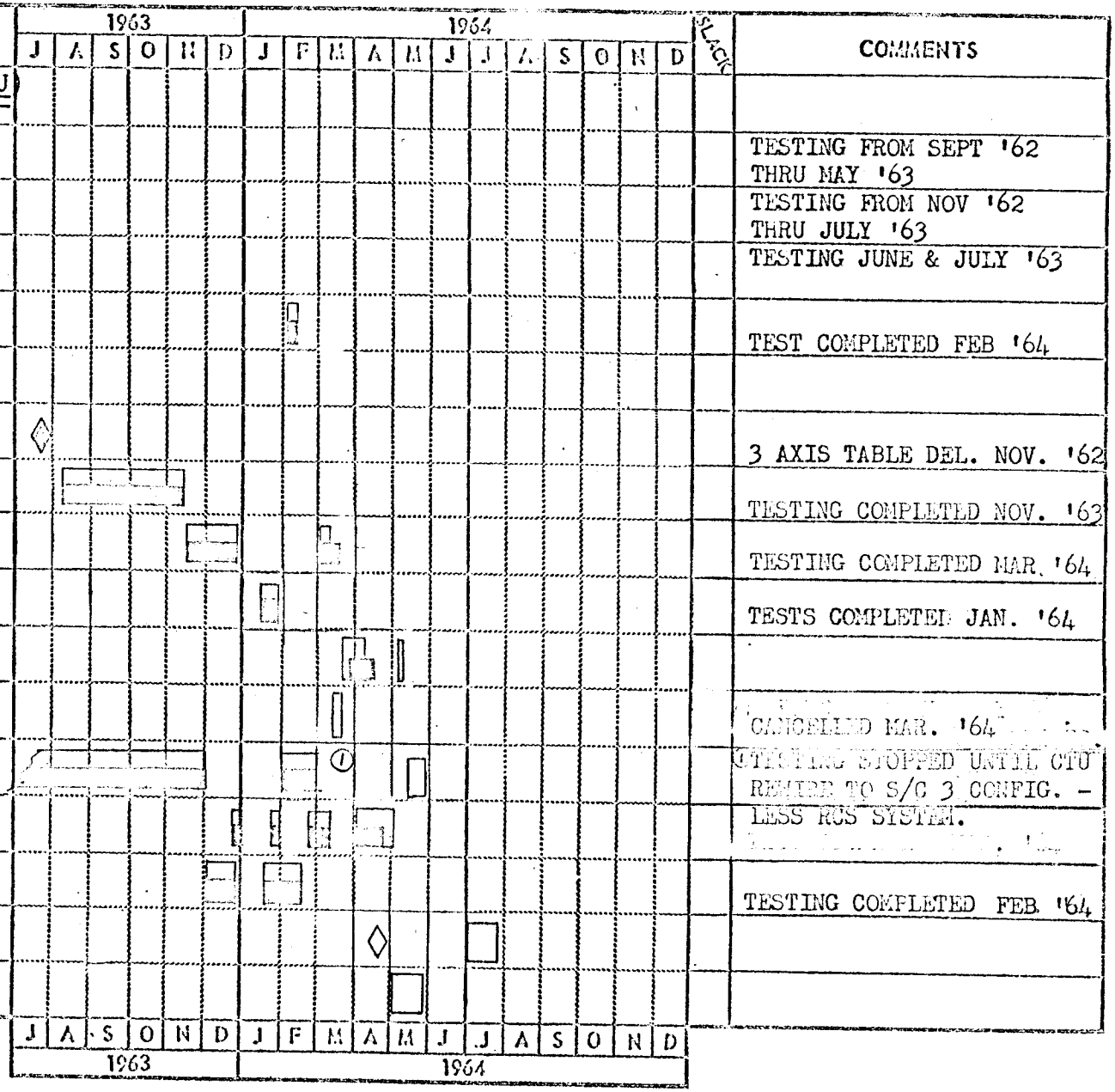

LEGEND:
TESTS:
HDW. DEL:
① PLANNED
② CURRENT EST.
③ ACTUAL

DATE 22 [illegible]UARY 1962
REVISED 2 MARCH 1964 (REV. Q)
REVISED 23 MARCH 1964 (REV. R)
REVISED 24 APRIL 1964 (REV. S)

MCDONNELL
ST. LOUIS, MISSOURI

GEMINI TEST PLAN SCHEDULE

REPORT
MODEL 133P

	Test Req. No. 52--	ACTIVITY	SLACK	COMMENTS
1	66.02	ELECTRICAL POWER SYSTEM COMPATIBILITY TESTING:		
2		FUEL CELL SECTION - ACCEPTANCE, CHECKOUT & FAMILIARIZATION	-6	UNITS 3A, 5 & 5A UNSATISFACTORY, RETURNED TO VENDOR
3		FUEL CELL SECTION - BENCH TEST (GASEOUS)		UNITS 503 & 3B
4		RSS REGULATORS - ACCEPTANCE, CHECKOUT & FAMIL. (GASEOUS)	-5	
5		COOLANT BENCH CHECKOUT, TEST SET-UP & INSTRUMENTATION		COMPLETED APRIL '63
6		RSS REGULATORS & FUEL CELL SECTION - SYSTEM TEST (GASEOUS)		F/C 3B & 501 FAILED, TO RESUME ON RECEIPT OF NEW F/C
7		ELECTRICAL POWER DISTRIBUTION SYS. FUNCTIONAL TESTS		TESTS COMPLETED SEPT. '63
8		ELECT. PWR. DIST. SYS., FUEL CELL SECTION & RSS REG. TEST (GASEOUS)		
9		RSS SYSTEM CHECKOUT & BENCH TESTS	-5	
10		RSS SYSTEM & REMOTE CONTROL CHECK OUT & INSTRUMENTATION (CRYOGENIC)		
11		FUEL CELL SECTIONS, RSS & ELECT. PWR.DIST.SYS.COMPAT. (CRYOGENIC)		
12		ELECT. PWR. SYSTEM - FUNCTIONAL TESTS, ALT. & TEMP. (CRYOGENIC)	-1	
13		ELECT. PWR. SYSTEM - FUNCTIONAL TESTS, VIBRATION (CRYOGENIC)		
14				
15				
16		PRODUCTION SPACECRAFT SYSTEMS TESTS		
17				

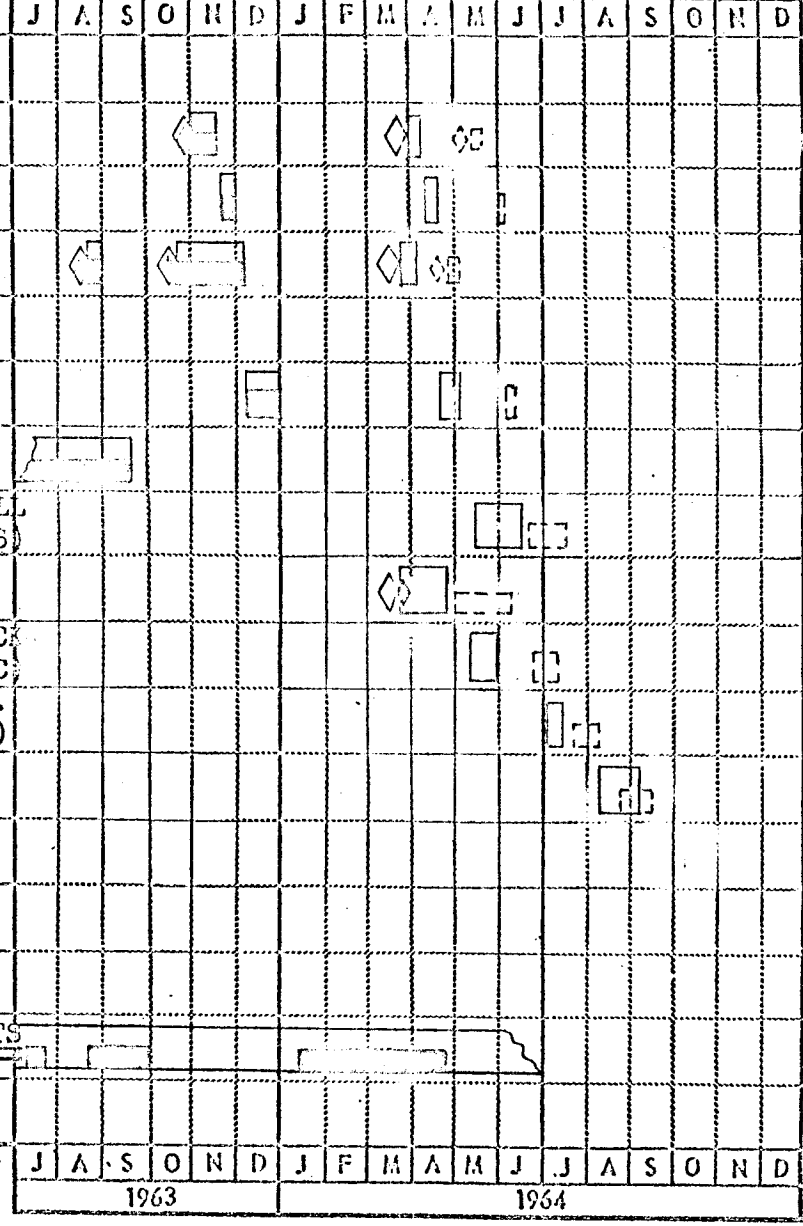

LEGEND:
TESTS: ① ② ③
HDW. DEL: ① ② ③
① PLANNED
② CURRENT EST.
③ ACTUAL

DATE 22 JANUARY 1962
REVISED 23 MARCH 1964 (REV. Q)
REVISED 23 MARCH 1964 (REV. R)
REVISED 24 APRIL 1964 (REV. S)

MCDONNELL
ST. LOUIS, MISSOURI

GEMINI TEST PLAN SCHEDULE

REPORT
MODEL 133P

	Test Req. No. 52--	ACTIVITY	SLACK	COMMENTS
1		ENVIRONMENTAL CONTROL:		
2		EQUIPMENT COOLING:		
3	68.02.01A .04, 68.05	ALTITUDE TESTS - COLD PLATE DEVELOPMENT		TEST COMPLETED NOV '62
4	68.01.02	MODEL TESTS - RADIATOR HEAT & PRESSURE		TEST COMPLETED NOV '62
5	68.06	ALTITUDE & TEMP ENVIR. - RADIATOR (THERMAL BALANCE)		TEST COMPLETED APRIL '64
6		BOILERPLATE NO. 2		
7		MFG. DELIVERY - BOILERPLATE NO. 2 TO LAB		DELIVERED MARCH '63
8		CABIN & SUIT CIRCUIT DELIVERY		DELIVERED JUNE '63
9	68.04	CABIN & SUIT CIRCUIT ALTITUDE TESTS - UNMANNED		TESTS COMPLETED JULY '63
10	68.04	CABIN & SUIT CIRCUIT ALTITUDE TESTS - MANNED		TESTS COMPLETED OCT. '63
11		COMPLETE ECS SYSTEM DELIVERY	-5	
12	68.04.02	ALTITUDE TESTS - UNMANNED		
13	68.04.02	ALTITUDE TESTS - MANNED		
14		CHAMBER MODIFICATION		COMPLETED DEC. '63
15	68.04.01	14-DAY UNMANNED TEST		
16	68.09	EGRESS SYSTEM EVALUATION		CONTINGENT ON AVAILABILITY OF EGRESS KIT
17		DELIVER BOILERPLATE NO. 2 TO MSC	-6	

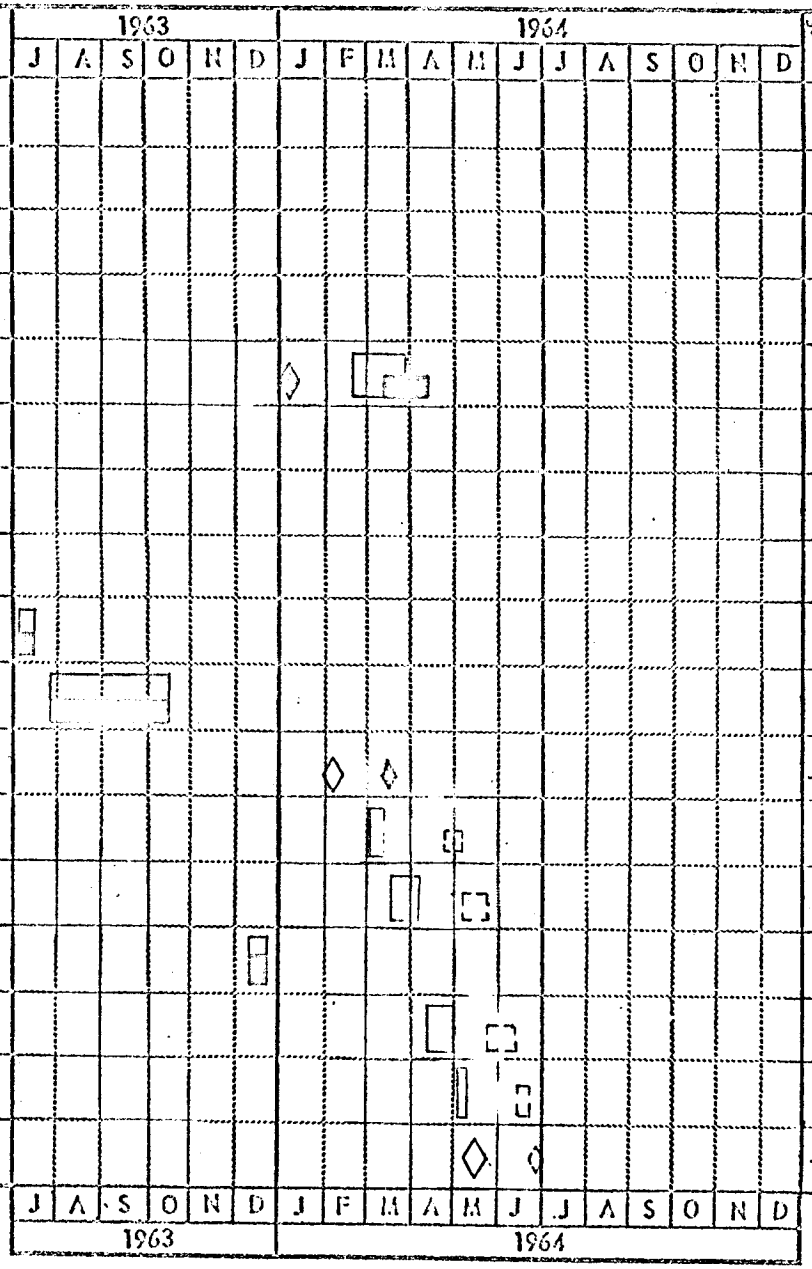

LEGEND:
TESTS: ① ② ③
HDW. DEL: ① ② ③
① PLANNED
② CURRENT EST.
③ ACTUAL

DATE 22 JANUARY 1962
REVISED 2 MARCH 1964 (REV. Q)
REVISED 23 MARCH 1964 (REV. R)
REVISED 24 APRIL 1964 (REV. S)

MCDONNELL
ST. LOUIS, MISSOURI

GEMINI TEST PLAN SCHEDULE

REPORT
MODEL 133P

	Test Req. No. 52--	ACTIVITY	1963 J	A	S	O	N	D	1964 J	F	M	A	M	J	J	A	S	O	N	D	SLACK	COMMENTS
1	072 072.01	THERMAL QUALIFICATION TEST																				
2																						
3																						
4																						
5	58.03.01	3A SPACECRAFT AVAIL. FOR THERMAL TEST																			-9	
6		SPECIAL INSTRUMENTATION INSTALLATION																				
7		HARDLINE CONTROL INSTALLED																				
8		SPECIAL TEST EQUIPMENT INSTALLED & COMBINED SYSTEMS CHECKOUT																				
9		SYSTEM SERVICING																				
10		MISSIONS																				
11		MINIMUM INTERNAL HEATING ONE LOOP, ONE PUMP																				
12		MAXIMUM INTERNAL HEATING, ONE LOOP, TWO PUMPS																				
13		MAXIMUM INTERNAL HEATING, TWO LOOPS, ONE PUMP PER LOOP																			-6	
14																						
15																						
16																						
17																						
			J	A	S	O	N	D	J	F	M	A	M	J	J	A	S	O	N	D		
			1963						1964													

LEGEND:
TESTS: ③ ① ②
HDW. DEL: ① ② ③

① PLANNED
② CURRENT EST.
③ ACTUAL

GROUND TEST SUMMARY

STRUCTURAL TEST PROGRAM

STATIC 2

1. Unit still on stop work per NASA directive.

STATIC 3

1. Manufacturing modification to -5 configuration completed and unit sent to Test Lab on 24 March 1964.
2. 30 Day Forecast - Static 3 to be mated with 52-31503-7 RCS section, and used for chute deploy at elevated temperature testing. Test run scheduled to start 23 May 1964, and continue into June.

STATIC 4

1. Repair of damage resulting from aft hoist loop test failure completed. Hatch Back-Up Structure Test run started 24 March 1964. The Left Hand Hatch Torque Box Skin failed at 120% DLL. Boilerplate 34 number 2 hatch was transferred to Static 4, and installation and rigging now in process.
2. 30 Day Forecast - Anticipate repair completion, and testing to be resumed by 27 April 1964. Re-test of Seat Back-up structure, scheduled to follow the current test, has been cancelled. Therefore, Static 4 will be returned to manufacturing for modification to the -11 and -17 configuration following completion of Hatch Back-up Structure Testing. Anticipate return to manufacturing by 15 May 1964, with modification to extend into June 1964.

STATIC 5

1. Unit at NASA-Houston for Flotation and Egress testing.

STATIC 7

1. Unit at Northrop-Ventura being prepared for single drogue chute qualification drops.
2. 30 Day Forecast - Drops currently scheduled to be conducted in weeks of 4 May, 18 May, and 8 June 1964.

BOILERPLATE 2

1. Parallel installation of NASA Bio-Med harness completed. Leaking cold plates found during system check out and servicing and were replaced. Servicing and check out continuing.
2. 30 Day Forecast - Anticipate unmanned check out run to start week of 27 April 1964. Testing to continue through May 1964.

BOILERPLATE 3A

1. Unit located at Weber for Seat Qualification Sled Runs and SOPE Tests. Sled Runs delayed for availability of qualified hatch actuators.
2. 30 Day Forecast - Actuator development and qual program in process at MAC. Anticipate actuator availability by end of May 1964.

BOILERPLATE 4

1. Unit moved to Parks water drop site on 6 March 1964. Water drops conducted on 26 March, 1 April, 9 April, and 16 April. All drops were successful.
2. 30 Day Forecast - No test activity.

BOILERPLATE 5

1. Pilot chute cable and linkage [illegible] completed. Sled drops [illegible]

five conducted on 10 April and 22 April.

2. 30 Day Forecast - No further test activity scheduled on this unit. However it is being considered for use in conjunction with Static 7 for the double drogue chute qual program.

SPACECRAFT 5

1. Approval obtained from NASA to use Spacecraft 5 for non-destructive testing. Unit delivered to Test Lab on 14 April 1964. Set up in process for Horizon Scanner Dynamic Response Test.

2. 30 Day Forecast - Test program on Spacecraft 5 to continue to mid-June 1964, at which time unit will be returned to manufacturing.

SPECIMEN HATCH

1. Phase 5 of hatch actuation TR, which calls for actuation under five variations of pressure and vibration, successfully completed on 18 March 1964. Hatch program now inactive due to budget limitations.

2. 30 Day Forecast - Hatch Leak Tests scheduled to start the third week in May, and extend into June 1964.

SPACECRAFT 3A ADAPTER

1. Radiator test completed on 2 April 1964. Test was successful, however it was found that the OAMS lines experienced temperatures of -17°F, 29° below the fluid freezing point. OAMS lines were shielded and test re-run. Temperatures did not go down to the previous level, but were still below the freezing point of +12°F. 3A Adapter was returned to manufacturing on 21 April 1964.

2. 30 Day Forecast - Manufacturing to up date adapter for use in Thermal Qual Test on S/C 3A. Additional shielding to correct OAMS Line Freezing to be

installed during mod, and checked out during Thermal Qual Test.

R & R AND RCS SECTIONS

1. 52-31503-7 R & R and RCS Sections delivered to lab. Re-entry Heating, Drogue Chute Support Structure Test successfully completed. RCS section being set up for one firing of MDF ring in preparation for Drogue Chute Support Structure Tests with Static 3.
2. 30 Day Forecast - RCS MDF ring firing to be conducted the week of 27 April 1964. RCS section will then be mated with Static 3 for Drogue Chute Support Structure Test.

TARGET DOCKING ADAPTER

1. Development and qualification of docking dampers continues. TDA Static 2 delivered to Test Lab on 8 April 1964. TDA test efforts delayed due to budget limitations.
2. 30 Day Forecast - No test activity scheduled.

RETRO ROCKET ABORT JET FLOW

1. Test firings successfully conducted at AEDC.
2. 30 Day Forecast - Testing completed. No further test activity planned.

MISCELLANEOUS TEST ACTIVITY

STRUCTURAL

1. Recovery Chute Cables - Static Pull and Shock Tests successfully completed.
2. Egress Kit Pressure Tanks - Four tanks pressure tested successfully.
3. Beryllium Shingle Deflection - Test successfully completed. Specimen withstood 1050 pound load.

4. Flipper Door - Thermal Test successfully completed.

5. Window Qualification - Window Acoustic Tests successfully completed by Martin. Window Pressure Tests at MAC delayed due to budget limitations.

PYROTECHNICS

1. Hatch Actuator Development - Development testing of hatch actuators transferred from Argus to MAC. Testing in process and will continue thru May 1964.

2. Nose Fairing Pyro - First of five firings conducted 9 April 1964. Pyro's fired successfully, however, actuating spring did not kick fairing away from R & R section. Set up modified and repeat firing conducted 18 April 1964. Results were still unsatisfactory. Set up was modified to replace pyro actuator with spring loaded release mechanism to conserve pyros during further development and testing.

3. Z13 - First of five ambient temperature firings successfully conducted on 13 April 1964. Boilerplate now being repaired for second firing.

ELECTRICAL

1. Photo Lights - Vibration Test conducted, with all units failing in two axis. Replacement lights due from vendor 30 April 1964. Test will be re-run upon receipt.

2. Flashing Recovery Light - Specimen passed Shock Test, but failed in altitude immersion. Failure was due to leak between potting compound and wiring. Replacement light made with new potting procedure to be available from vendor about 15 May 1964. Test will be re-run.

3. DC to DC Converter - Development and Qualification testing both being conducted. Qual unit passed Humidity, Temperature, Vibration and Endurance Tests. Development unit experienced heavy corrosion of outer case following

Salt Spray Test. Case to be modified to eliminate dissimilar metals, and improve paint requirements.

4. 3 Axis Table - Testing completed except for two days of Rate Command Mode Tests. ACE package returned to vendor for rework. Testing will be completed upon its return about 1 May 1964.

5. Electrical Connectors - Ribbed wire specimens received and tested. Tests were successful, with no leakage between potting compound and wire. MG, CP and O Ring testing discontinued due to success of ribbed wire method.

6. AGE Battery Rack - Test results were unsatisfactory due to voltage variation. Vendor representative to come to MAC to check out test procedure and equipment in an effort to determine cause and corrective action.

7. UHF Antennas - Nose stub antenna successfully completed all phases of testing. Dessent antenna successfully failed high temp phase of test. However, also not all function both before and after high temp [illegible] satisfactory. DCO UHF Antenna Pattern Tests started 30 April 1964 and are continuing as weather permits.

8. Relay Panels - 300 Relay panel failed vibration testing in all three axes. 300 Relay Panel experienced contact disturbances on four relays during random vibration in horizontal axis. 300 Panel test being [illegible] with rubber mounting washers.

9. Event Timer - Development and Qual Tests in progress.

VIBRATION

[illegible]

determined that the degree of failure was acceptable and testing is now considered complete.

2. Seat Pallet - Modified seat pallet with beefed up camera mount [illegible] March 1964. During vertical axis vibration, camera mount failed. Mount was modified, and test successfully re-run on 5 April 1964.

3. Horizon Scanner - Vibration run started on 18 April 1964. Unit failed during third axis vibration run. Repair in process, with test to be resumed upon completion.

MATERIALS AND PROCESSES

1. Cold Weld - Tests completed 3 April 1964.

2. Tubing Flare Fittings - Torque valves established and vibration testing conducted on various sizes of tubing with Standard and Parker [illegible]. Test efforts on -O" ring and spherical fittings discontinued when it was determined that in [illegible] were re-sealed.

3. Radiator Compression Fittings - Testing of various types of fittings continued. Metal re-inforced nylon specimens now in test.

GEMINI SPACECRAFT
MANUFACTURING WORK PLAN AND TEST
TRANSLATION AND DOCKING TRAINER

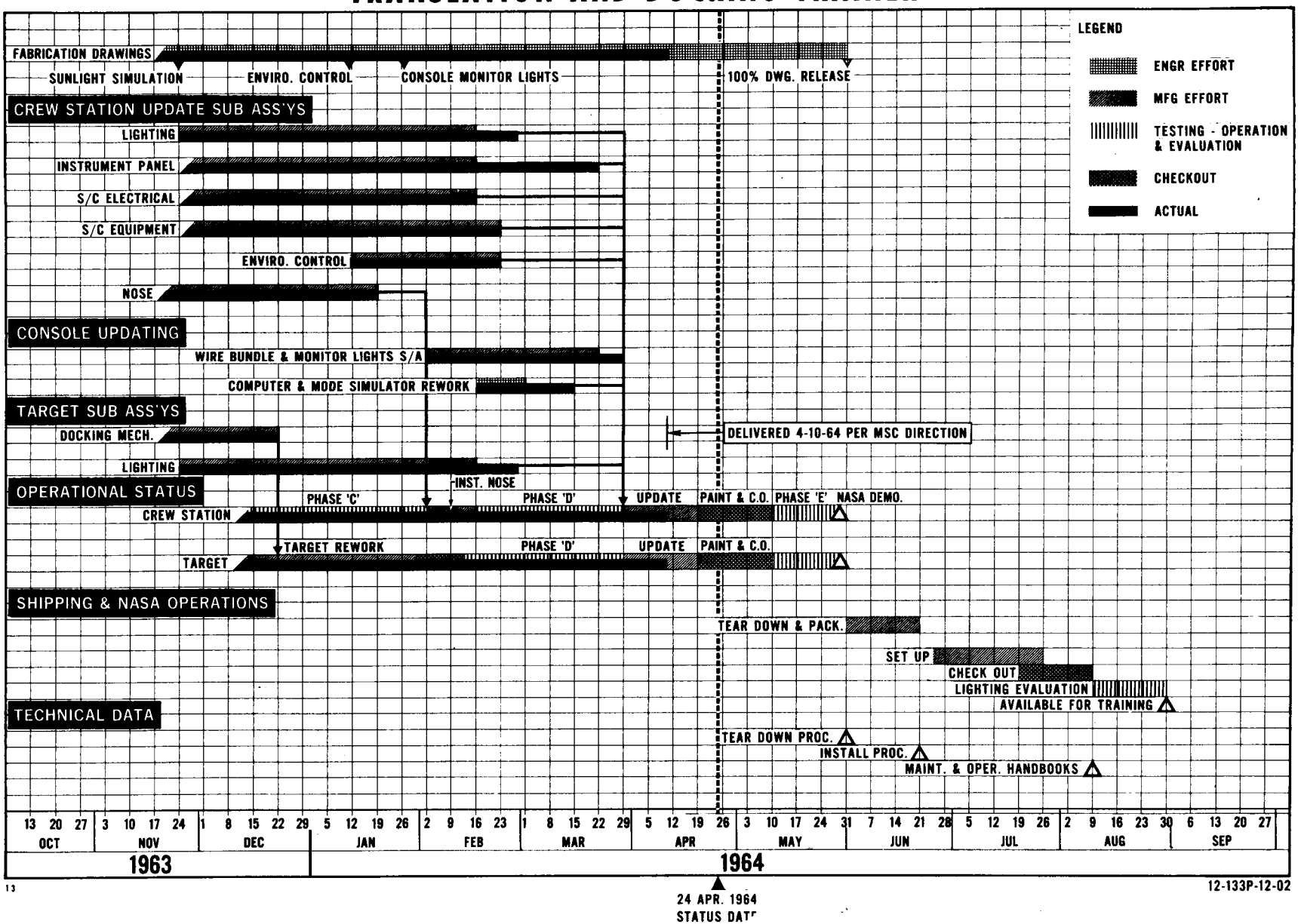

12-133P-12-02

[illegible] STATUS [illegible] PERIOD [illegible]
TRANSLATION & [illegible]

TEST PROGRAM ACTIVITY

The [illegible] System [illegible] and [illegible] good [illegible] the [illegible] between the target and [illegible] [illegible] is engaged [illegible].

The Engineering Evaluation Test program [illegible] by [illegible] [illegible] and [illegible] [illegible] Dept. [illegible]

[illegible] Acceptance Test program [illegible] the customer site.

[illegible]

[illegible]

(A) [illegible]

(B) [illegible]

[illegible]

(A) [illegible]

(1) [illegible]

(2) [illegible]

(B) [illegible]

(C) [illegible]

(D) [illegible]

SUBJECT: GEMINI STATUS REPORT FOR PERIOD 1 MARCH 1964 THRU 22 APRIL 1964 - TRANSLATION & DOCKING TRAINER

52D0090073 - Control Console Wiring:

(A) Revised attitude indicator wiring.

(B) Added track cleaner circuitry.

(C) Interim wiring changes made in servo-loop circuitry for testing.

52D0090112 - Servo Amplifier:

Initiated work on this drawing to show MAC modifications to the Ai-hley Servo Amps

52D0090115 - Plug-In Assemblies:

Supplied shop with information for assembling plug-in modules for amplifiers

STRUCTURAL - MECHANICAL DESIGN WORK

Trainer facility drawing brought up to date to show N.A.S.A. [illegible] installation.

Addition of vertical carriage down-lock (new design)

Longitudinal drive system re-work to provide for N.A.S.A. [illegible] installation (new design for cable adjustment).

Modification of rotational limit switches to provide [illegible] work of existing structure)

Modification of Air Bearings. (Re-work of existing hardware)

Re-work of pitch and roll locks. (New design to [illegible])

Longitudinal velocity [illegible] system re-work. (New design to provide more positive operation)

Longitudinal [illegible]

SUBJECT: GEMINI STATUS REPORT FOR PERIOD [illegible] MARCH [illegible] THRU [illegible] APRIL [illegible]
TRANSLATION & DOCKING TRAINER

Re work of lateral dampers to reduce travel for N.A.S.A. [illegible] installation.

Addition of vertical carriage extension for use with [illegible] bias. (New Design)

GEMINI MISSION SIMULATOR SCHEDULE

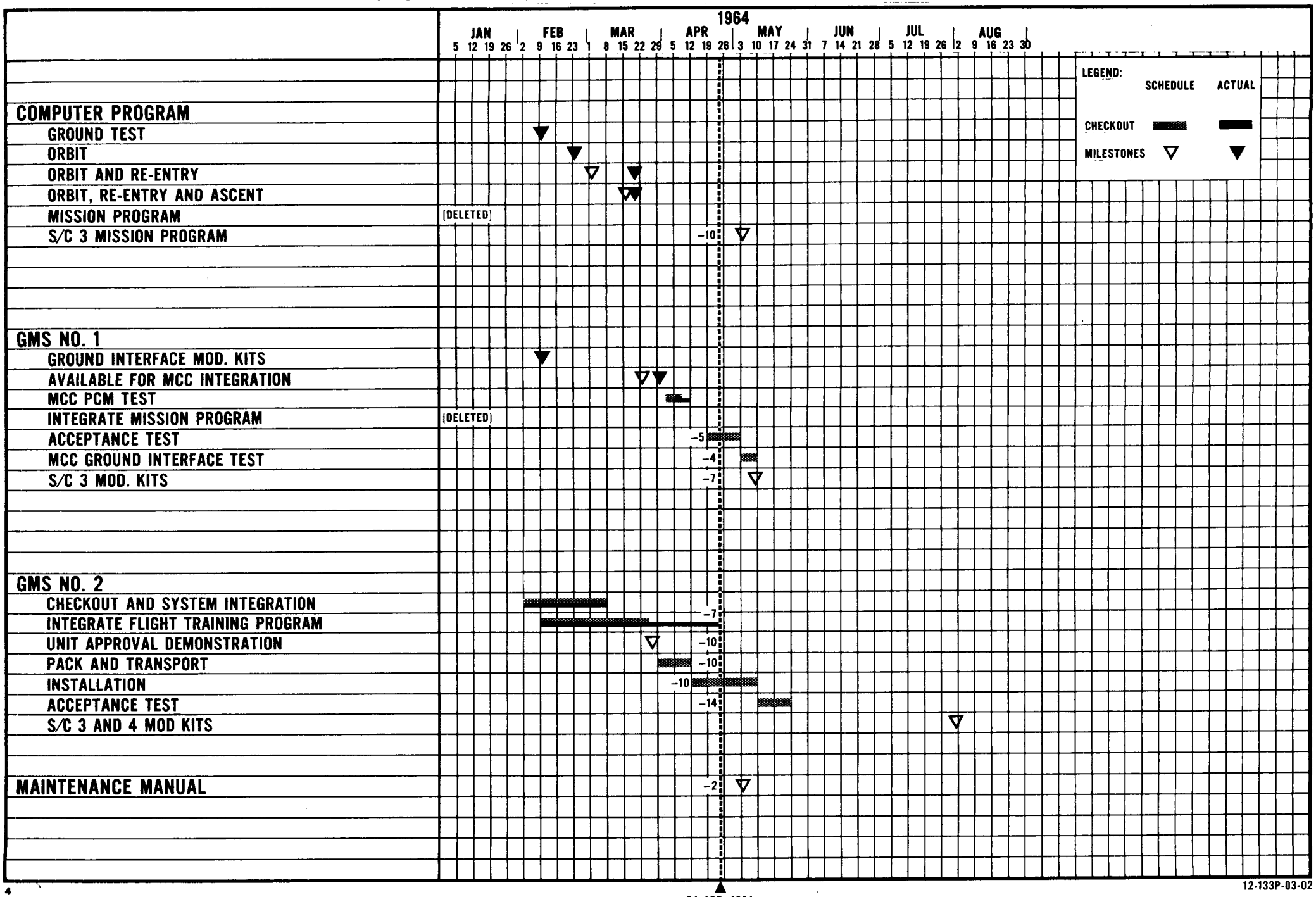

12-133P-03-02

SYSTEM: Mission Simulator
SUBSYSTEM:
VENDOR: MAC-MED
St. Louis, Missouri
DATE: 24 April 1964

MONTHLY SUMMARY

ENGINEERING STATUS

1. Demonstration, review and NASA instructor training on GMS S/N 2 began on 31 March for a two week period. MSC personnel were given detailed briefings on the operation of the GMS and on individual system simulations.

2. Astronaut training began on 15 April. MSC personnel are conducting the training exercises with MAC support as required. A limited training program is being used pending completion of the ascent and re-entry computer programs.

3. Program assembly and hardware integrations are continuing on second and third shifts along with equipment maintenance. The completion of the ascent and re-entry programs has continued to be delayed because of assembly and equipment integration problems.

STRUCTURE

1. Engineering for redesigned Hoist Loop is completed and hardware is being made. A test request has been written to strength test the new configuration.

2. Design will be started April 13 on Communications Experiment for S/C 3. A landing gear door will be engineered to accommodate a re-entry communications experiment equipment to be furnished by NASA.

3. Continued engineering effort on job sheets, trouble reports and other required design changes.

4. Hatch

   a) Completed design for quartz window in R/H hatch. Window to have optical qualities compatible with existing windows and provide an ultra violet filter.

   b) Completed design for high optical vicor window for R/H window.

   c) Completed revised detailed rigging instructions for hatch mechanism.

   d) Added beef-up doubler and former to torque box.

5. Adapter

   a) Released firm engineering for canting lateral OAMS thrusters and provided new fairings.

   b) Completed study for addition of a docking light to the adapter

   c) Revised bottle mounts on the E.C.S. Module Structure and Fuel Cell Module Structure to provide a gap between the bottles and the blast panels.

6. Heat Shield

   a) Follow-up coordination with fabrication continues.

7. Crewman Simulator S/C 2

   a) Follow-up coordination with fabrication continues

STRUCTURAL DYNAMICS

Inspection of the relay panels has indicated that cell structure variations of the foam are possible in each panel. Efforts are being made to assure that the test relay panel has a closely controlled foam structure.

Preliminary calculations are beind made on NASA/DOD Experiments 4 and 9 to determine the change in vibration characteristics of the electronics module caused by the added equipment. There is a possibility of combining the experiment's functional tests with the forth coming adapter vibration tests.

A Dynamic Test of the Blood and Sea Urchin Egg Experiment has been initiated by the project to determine that these experiments are capable of withstanding the hatch opening loads.

The Shutoff Float Valve has successfully completed the vibration tests. The spectrum was revised to reflect the high gains anticipated with equipment attached to the small pressure bulkhead.

The radiation cooled thrusters have successfully completed preliminary vibration tests. A complete final qualification test will be accomplished at a later date.

A completely changed vibration test has been outlined for the GAS bottles for the retest. The vibration spectrum has been modified to accumulated vibration test time for this system.

Flight Readiness Review for Spacecraft No. 1 was attended at Cape Kennedy. Meeting was conducted successfully with all problem areas being satisfactorily resolved.

Development of the hatch actuator is continuing. Response data has been obtained for the dummy hatch and will be correlated with the data obtained on the production hatch. A study will be conducted on the transient response of the hatch using experimental force versus time data.

A redesign of the mounting system for the horizon sensor system has been accomplished. A retest of this system will be conducted during April.

An analysis of the response of the equipment adapter to turbulent airflow during launch was accomplished. Included in the analysis were the low frequency ECS pump package modes and the high frequency modes with retrograde adapter effects. Gemini 10% wind tunnel fluctuating pressured data was used to obtain the forcing functions. The resulting data was transmitted to the Strength Department where it was determined that the adapter was flight worthy.

The IBM 1620 Gemini orbit configuration stability program has been checked out up to the point of including the three elastic body bending modes. Already included are rigid body motion, rate-damping control mode logic, and gyro dynamics including hysterises.

The program designed to obtain dynamic response information on the spacecraft equipment has been resolved. All testing will be conducted on Spacecraft No. 2 in conjunction with the normal SST testing. A structural dynamics design note has been released on this program.

GEMINI LOADS

1. Reports - The revision of MAC Report 8616, Structural Design Criteria-Gemini Spacecraft is now proceeding. The NASA decision on meteoroid criteria is being incorporated along with other changes and should be completed shortly.

2. Launch Phase Loads - Prepared loads distributions for six conditions for a high priority re-evaluation of adapter strength with revised buffet loads. Work continues on evaluation of thermal curtain loads for an abrupt adapter pressure loss per RFA 016B (EJS 52-2798). This work was interrupted by the previously mentioned higher priority work on re-evaluation of adapter strength.

3. Landing System Loads - Completed work on hoist fitting loads envelope for new water recovery requirements per RFA 021B. Started revision of parachute recovery system loads summary for the newly discovered increased load for the drogue parachute in tandem with the pilot chute.

ENGINEERING PROCUREMENT SERVICES

1. Supplied technical evaluations and established Engineering position, participated in 10 negotiations and issued price negotiations covering 8 SCD systems involving 238 changes and overruns. Completed technical evaluations of 10 additional systems involving 118 changes. Initiated technical evaluations on 17 systems which involved 117 changes and overruns. Reviewed approximately 40 SCD's and /or DCN's.

2. During Next Reporting Period

   Participate in 5 negotiations tentatively scheduled involving approximately 61 changes and/or overruns. Complete and issued price negotiation memos covering 6 systems. Complete technical evaluations of 2 additional systems involving 36 changes and overrun costs.

THERMODYNAMICS

1. Heat Transfer

1.1 Structural - A new design for the UHF nose stub antenna has been analyzed and is thermally acceptable.

The following structural parts have been thermally analyzed for design heating conditions: (a) Ground umbilical support beam (b) Launch temperatures on a docking bar illumination light (c) Flipper door temperature gradiants (d) Cover for nose fairing ejector spring cavity (e) C-Band antenna (f) Electronic equipment mounted on brackets off the conical section inner wall and (g) Parachute bridle riser and trough cover.

1.2 Heat Shield - Thermodynamics T.N. No. 88 has been completed. This TN completes the work to be done on EJS 52-890 which studied the 2-dimensional structural temperature distribution of the heat shield-edge ring region.

TR 052-051.25 has been released which is to evaluate the effects of honeycomb joint variations in the ablative heat shield layer. Both the difficulty of DC-325 filling and thermal performance will be evaluated.

A study of the latest S/C #2 trajectory for nomical and several dispersed conditions of heating rate, initial temperature, and parachute cooling rate has been completed in preparation for a mid-April meeting with NASA (GPO) thermodynamic personnel.

1.3 Re-entry Boundary Study - A second status report on the extended mission re-entry heating envelope for Gemini-Agena operations was released as Thermodynamics T.N. 80-A and was presented at the 17 March NASA T & O meeting in Houston.

1.4 Pyrotechnics - The snorkel inlet door pyrotechnic has been analyzed and the peak temperature found to be below 250°F. Re-entry temperatures are being estimated on the cable cutter pyrotechnicsin the dual drogue system.

1.5 Aerodynamic Heating - Assistance was furnished NASA/MSC in checking out an IBM program which will derive local heating rates from measured flight temperatures.

GT-2 RCS compartment beryllium shingle temperatures have been calculated using flat plate theory and local conditions and the resulting maximum is only 40°F hotter than the HVIP result.

1.6 Orbital Heating - Studies to determine orbital heating extremes of various sections of the spacecraft assuming various fixed orientations of the vehicle have been summarized in Thermodynamics TN 93.

2. Equipment Temperature Control

2.1 Passive Control - Measurement of a typical aft cover for absorptivity and emissivity characteristics was completed using the Gier Dunkle semi-portable equipment.

The results from the radiator test show lower temperatures for equipment relying upon passive control than was calculated for the thermal qualification test configuration. It was expected that these temperatures would be lower because of the differences in configuration factors and emissivity factors that result from not having the bulk of the scanner equipment installed.

2.2 Active Control - The test request to balance the flow between parallel loops in the S/C #3 coolant system has been submitted

Orifice sizes have been selected for manufacture based upon tests conducted using the actual fitting configuration and desired a flow splits.

It has been recommended that the radar minimum temperature be controlled by using heat generated by radar stand-by power with the duty cycle scheduled by monitoring the radar ground plane temperature via telemetry

AERODYNAMICS

1. RE-ENTRY DYNAMICS - The six-degree-of-freedom orbit re-entry study has been completed. Trajectory and dynamic parameters for controlled and uncontrolled re-entries have been analyzed and are in final stages of incorporation into Aerodynamic Information Note (AIN) 70.

   A dynamic motion study of the Gemini Mode II abort configuration is also being prepared at the present time for AIN presentation. This study complements the above re-entry analysis and utilizes the same general techniques. Computer work has been completed and an AIN is presently being prepared.

   DURING NEXT REPORTING PERIOD - Publish AIN 70. Prepare and publish abort configuration AIN.

2. MISSION PLANNING AND ANALYSIS - GT-2 final abort boundaries from lift-off to ballistic insertion have been defined and are published in AIN 83. A list of the Aerodynamic data required from GT-2 is being compiled for incorporation in the GT-2 data reduction requirement document. A computation to obtain re-entry lift to drag ratio from flight test data is included.

   Modes II, III, and IV abort boundary data for manned flight have been updated. The resulting high altitude Mode II data (posigrade separation and half-lift re-entry) are published in AIN 84. Mode III boundary definitions and Mode II to Mode III transition data are to be found in AIN 81. Also presented in this AIN is range control capability thru retro delay to minimize recovery time and Africa "over-fly" capability using the OAMS to reach the Indian Ocean. AIN 82 provides Mode IV boundary definition and a parametric study of the OAMS capability.

The orbital re-entry limitations based on heating limits have been defined in AIN 79. The real time computer program and ground displays are being developed.

3. RANGE SAFETY - Published AIN 72 outlining the aerodynamic estimates of bits and pieces resulting from destruct action on GT-2. Currently preparing impact dispersion boundaries for MAC hardware items on GT-2 mission. Also an abort and post injection sequencing writeup for inclusion in the MMB GT-2 range safety report is being prepared.

4. PARACHUTE RECOVERY SYSTEM - The first development test of the high altitude drogue parachute was conducted on 9 April 1964 at El Centro. The test was unsuccessful because of the unexplained disconnect from the Parachute Test Vehicle (PTV) of the cross beam to which the test drogue and Gemini Drag simulation chute were attached.

The fourth test of the tandem deployment concept for the Gemini high altitude drogue stabilization system was successfully conducted at El Centro on 10 April 1964. This was the first test of the modified pilot chute attachment cable fittings and increase in the cable size.

DURING NEXT REPORTING PERIOD - PTV drops will resume after analysis of the results of the last test and corrective action has been accomplished. Demonstration of the tandem deployment concept and qualification of the GT-2 recovery system will continue.

SPECIFICATIONS

Report	Title	Notes 1	2	3	4
8611	Gemini Spacecraft Performance Spec.			X	
8611-Add.A	Target Docking Adapter			X	
8611-2	Configuration Document for S/C 2 (Prel.)				X
8611-3	Configuration Document for S/C 3 (Prel.)			X	
8635	Gemini Crew Station Specification			X	
8636	Gemini Environmental Control Sys. Spec.			X	
8637	Gemini Guidance and Control Sys. Spec.			X	
8638	Gemini Electrical System Specification			X	
8639	Gemini Communications System Specification				X
8640-3	Instrumentation Sys. Spec. Supplement 3 (Spacecraft 3/Prel.)		X		
8641	Time Reference System Specification			X	
8642	Propulsion System Specification			X	
8643	Landing System Specification			X	
8645	Pyrotechnics System Specifications			X	
A402	Interface Req. for DOD/NASA Experiments 4 and 9	X			
A516	Interface Requirements for DOD/NASA Exp. 1, 2 and 8			X	
A531	Interface Requirements for DOD/NASA Exp. 11			X	

NOTES:

1. Submitted
2. Being prepared
3. Being revised
4. In print

MAC Report No. A402, "Interface Requirements for DOD/NASA Experiments 4 and 9" submitted to NASA, AFCRL, and AFSCFO for review and comment. Spacecraft/Launch Vehicle Interface Specifications and Control Document, NASA ISCD-1, being updated by submittal and incorporation of approved specification changes. Attended meetings, prepared minutes and agenda and coordinated action items resulting from Spacecraft/Launch Vehicle and Spacecraft/Target Vehicle Working Group Meetings. Gemini Spacecraft/Agena Interface Specification and Control Document, NASA ISCD-2, being revised to incorporate agreements reached in 31 March through 3 April Houston meetings.

DURING NEXT REPORTING PERIOD - Submit part of documents being revised. Negotiate Experiments 4 and 9 Interface Requirements Document, MAC Report A402. Submit preliminary drafts of Interface Requirements Documents for Experiments 1, 2, 8 and 11. MAC Reports A516 and A531, respectively.

LAUNCH PREPARATION GROUP

MAC's Cape office personnel committed to participation in the factory Spacecraft Systems Test are all in St. Louis. All sections of Spacecraft #2 are actually in the SST which is proceeding on a schedule agreed to in Houston on 5 April. The phase of this schedule to be accomplished on Complex 19 in conjunction with the Titan has been coordinated with the Martin/Cape office.

The installation and check-out of the Mission Simulator is continuing.

Spacecraft #1 was successfully launched and MAC personnel are taking part in the post-flight analysis.

Certain items of AGE installed on Complex 19 were damaged by the booster exhaust at the time of GT-1 launch. Replacement of this equipment and protection for future flights is actively underway.

Work is continuing in all phases of activation at Hangar F and at the Kennedy Space Center.

Additional MAC/Cape personnel will be proceeding to St. Louis this month for the beginning of Spacecraft #3 SST.

RELIABILITY

MAC Report 9796, "Failure Mode and Effect Analysis, Gemini Spacecraft" was released on 13 March. The Abort Time Study Report was released on 9 March. Gemini Reliability Information Note No. 108, "Failure Mode Evaluation of Instrumentation Signal Conditioner/Spacecraft Interfaces" was released 7 April. Work on the revision of the Crew Safety Report, as an Appendix to MAC Report 8951, "Project Gemini Reliability Model", has begun. The evaluation of the reliability of the Docking System was initiated. Work on CCP 8, the reliability review of the electrical schematics for S/C No. 3, is about 90 percent complete. Effort will be completed in April and a report submitted to the NASA. A meeting was held at MAC to review CDC diodes used on Gemini spacecraft. MAC is to obtain part numbers of CDC diodes used by AiResearch, Minneapolis-Honeywell (St. Petersburg), and Westinghouse. The determination of acceptability of these diodes is to be based upon ground rules established at this meeting. The CDC diodes used by other vendors are considered acceptable. The status of discontinued and "purple plague" transistors was transmitted to the NASA at this meeting. The revision of the single point failure summary is in work and will be completed during the next reporting period. Acceptance testing of the IGS Computor No. 7 and 8 has been delayed because of solder balls found in the Crossover Detector (COD) modules. The cause and a course of action are being studied. It has been discovered that a transistor in the programmer bi-level channel signal conditioner of the Data Transmission System is adversely affected by a combination of high temperature and low voltage. An alternate transistor from the same vendor is being evaluated. Advanced Technology

Labs (ATL) has provided MAC with cost information and delivery schedules for additional overstress testing of the Horizon Sensor. The Horizon Sensor positor bearings are being subjected to additional environmental life testing. An AiResearch report on the achieved reliability for the ECS and RSS was reviewed by MAC and comments given to AiResearch for incorporation in the report. A revision of the report should be received in April. Reliability reporting requirements and failure analyses were discussed with AiResearch's Chief of Reliability and Gemini Program Reliability Engineer at MAC on 12-13 March. The quality and quantity of AiResearch's reports should improve during the next reporting period. General Electric is preparing a report on the achieved reliability of the fuel cell. The report should be released to MAC in April. The UHF whip antenna has successfully completed overstress testing. The non-operating acceleration phase of the P2B fuel cell design qualification testing has begun. Preliminary evaluations of redesigned time delay relays for the Electrical System indicates improvements have been made. Computor exploratory RFI testing is being continued. The Rendezvous Radar Qualification Unit is undergoing PDA testing prior to start of Qualification testing. The vendor for the oxidizer valve heat blanket, Thermal Systems, was visited on 6 March to clarify reporting requirements and discuss thermostat failures. Two-hundred and eight new Trouble Reports were received during March. The backlog of open reports increased from 690 to 699.

DURING NEXT REPORTING PERIOD - Evaluate the effect of heating radar by placing it on "standby", on reliability of radar. Continue work on CCP. 8. Coordinate with NASA on Single Point Failure Analysis Summary

OUTSIDE EQUIPMENT

1. Completed the following Job Sheets:

52-2651A	Increase squib reliability
52-2685D	Remove Dose rate from expr. #11
52-2686	D.O.D. Exp. #4 and #9
52-2690	A.C.P.U. Modification
52-2709	Coolant Sys. Parallel Loop Balance
52-2711	Relocation of H_2 Vent
52-2749	H_2 Heat Exchanger revision
52-2754	Addition of thrusters
52-2768	O_2 Line Installation
52-2778	Horizon Scanner R.F. Filter
52-2852	Time Delay Relay Change
52-2860	Install new IGS Power Supply
52-2877	Gap increase between Cryo bottle and panel

Problem Areas: None

2. Next Period continue work on the following Job Sheets:

52-2546	S/C 3 Temp. Qual. Config.
52-2677C	Filter revision
52-2774	S/C 7 release
52-2780	Electro Static Experiment
52-2799	C-Band Phase Shifter PWR Supply
52-2834	Coolant System Blowout Plugs
52-2897	S/C 2 Ballast Revision
52-2898	Bridle Storage
52-2902	Hi-Temp Problem of Equipment Fwd. Bi60
52-2903	Modify Coax Switch MTG

52-2914	Long Mission Batt Module Revision
52-2915	Rerout Tubing Z160 Bay
52-2923	Redesign UHF Stub Antenna
52-2924	Umbilical Redesign
52-2929	Addition of H_2O Tanks to S/C 3 Batt. Module

PYROTECHNICS

A. HARNESS RELEASE ACTUATOR

1. During Report Period - Approved with changes the preliminary "Design Approval Test Procedures" submitted by Vendor. Approved with changes the assembly drawing submitted by Vendor. Received weight statur report. H.R.A. is overweight by.04 pounds. Approved without changes the reliability assurance test procedure.

2. Expected Next Report Period - The harness release actuator will be used on seat man separation tests at Weber Aircraft.

B. THRUSTER ASSEMBLY SEAT MAN SEPARATOR

1. During Report Period - Revised SCD Strength requirements and added a Proof Pressure Test to the Acceptance Test Procedure. Approved with changes the preliminary "Acceptance Test Procedures" and design approval test procedures submitted by Vendor.

2. Expected Next Report Period - Will complete Qual. Burst Test and then will increase pressure until the Assy. is destroyed. This latter test has been requested by stress dept. Thruster Assembly will be used on 2 or 3 seat man separation tests at Weber Aircraft.

C. DROGUE MORTAR-BACKBOARD JETTISON ASSY.

1. During Report Period - 3 Backboard Jettison Assemblies were delivered to Weber Aircraft for development testing. Have approved layouts of restraint strap cutters, jetelox release pin, MDF time delay cartridge and MDF time delay firing mechanism. Configurations of the MDF manifold assy and lap belt disconnect are still being worked out.

2. Problems Encountered - Retaining Pin failed during firing of MDF Manifold Assy Test.

3. Expected Next Report Period - The Drogue Mortar without Backboard Jettison Assembly will be used on 4 low altitude dummy drop test. The Drogue Mortar and Backboard Jettison Assembly will be used on Backboard Jettison Tests at Weber Aircraft.

D. BALLUTE DEPLOY AND RELEASE SYSTEM

1. During Report Period - Units manufactured to old configuration.

2. Problems Encountered - System being redesigned to be compatible with 48 inch Ballute Per EJS 52-2793.

3. Expected Next Report Period - System redesigned and DCN released.

E. SEPARATION ASSY FLSC

1. During Report Period - Completed Humidity, Vibration, Salt Spray and Acceleration on the -1 Assy Qual Tests. Continuing development work on -107 Assy.

2. Problems Encountered - Problems on X cord density. Corrected by swaging cord instead of drawing.

3. Expected Next Report Period - Completion of Qual Test on -1 Assy. Should be in Qual Test on -107 Assy.

F. SEAT EJECTOR ROCKET CATAPULT

1. During Report Period - Verification testing of catapults to prove compliance with performance requirements. Final approvals on Design Approval Test Procedure and Acceptance Test Procedure Vendor performed external loads tests as first part of qualification tests.

2. Expected Next Report Period - Design Approval Testing should be started by 4/20/64.

G. Z 100.75 SEPARATION ASSY

1. During Report Period - Loaded 6 assemblies for shippment to MAC also started loading Qual Test Units.

2. Expected Next Report Period - Begin Qual Test on Detonator and Complete Assy's.

H. R & R SEPARATION ASSY

1. During Report Period - Qual Testing under way.

2. Expected Next Report Period - Qual should be 70% complete.

I. SCD WIRE BUNDLE GUILLOTINE (C.A.D.)

1. During Report Period - -1 and -3 are awaiting cartridges for Qual Test. -5, -7, -9 and -11 awaiting cartridges to complete Qual Test and Qual Test 60% complete. -13 in Qual Test (80% complete). -61, -69, -77 in development. -35 and -36 units being manufactured for NAA Development Program.

2. Problems Encountered - -29 cartridge found to be overcharged during Qual Test. Qual Test stopped, new charge load established. Cartridges currently being reloaded to new established load.

3. Expected Next Report Period - Qual Test for -1 thru -13 Assy should be completed. Development for -61, -69 and -77 should be 80% completed.

J. NDF INITIATION SYSTEM

1. During Report Period - Qualification Testing is under way. Basic R.A.T. Tests completed.

2. Expected Next Report Period - Qual. expected to be 50% complete.

K. TUBING CUTTER SEALER

1. During Report Period - Development work completed. Started fabrication on parts for Qual Testing.

2. Expected Next Report Period - Finish fabrication of Qual Test Assy's and start Qual Testing 4/27/64.

L. LANDING GEAR SYSTEM PYRO DEVICES

1. During Report Period -

   a) Actuator body assy. parts ready to be assembled at O.E.A.

   b) Most explosive valve body assy. parts in to O.E.A. and inspected, except nitrogen storage bottles which are being fabricated.

   c) Most parawing and normally closed valve body assembly parts are in to O.E.A. except for valve bodies themselves.

   d) R.A.T. cartridges ready to load at cartridge vendor.

   e) Cartridge vendor manufacturing cartridges. The instantaneous cartridges are awaiting charges from O.E.A.

2. Expected Next Report Period -

   a) R.A.T. Tests will be completed by O.E.A.

   b) Fabrication of Qual Test Hardware for all four landing gear system pyro device body assemblies will be through fabrication, and inspected and assembled by O.E.A.

   c) The No-Time Delay cartridges for Qual Tests at O.E.A. should be in and possibly the time delay cartridge for parawing exp. valve.

M. HORIZON SCANNER RELEASE ASSY.

1. During Report Period - Development of Talley Cartridge completed with deviation on Time Delay; acceptable to MAC TR-052.058.28 Hardware made available and fixture prepared for test.

2. Expected Next Report Period - Qualification Tests to be in progress at Talley incorporating results of MAC Engineering tests, by 4/21/64

N. HORIZON SCANNER FAIRING RELEASE ASSY.

1. During Report Period - Qualification Program continued with NO failures.

2. Expected Next Report Period - Qualification Tests to be completed.

O. SCD PYROTECHNIC SWITCH (C.A.D.)

1. During Report Period - Investigation was conducted to find a more suitable glass sealing material. As of this date a suitable material has been found and production will start immediately.

2. Problems Encountered - All work halted this period due to the problem of the pins adhearing to the glass filler.

3. Expected Next Report Period - Reliability assurance test to be completed and Qual Test started.

P. LANDING GEAR DOOR JETTISON

1. During Report Period - Development Testing nearing completion.

2. Expected Next Report Period - Solution to tooling problem. Completion of development and release of units for production is anticipated.

GEMINI ELECTRONICS

1.0 COMMUNICATIONS

1.1 Agena Acquisition Light - A modified Agena Acquisition Light (shielded case with screen over flash tube, and shielded cables and filter box) successfully passed all RFI compatibility tests with the Westinghouse transponder.

The Vendor has been requested to proceed with the following tasks on the Light:

1) Adjust repetition rate of light.
2) Redesign protective plastic cover.
3) Provide two filters, one for each light, providing final RFI measurements indicate this method is acceptable.
4) Minimize effort in refining flash tube RFI screen.
5) Establish production retrofit design.
6) Prepare report on work performed on RFI suppression.

1.2 Acquisition Aid Beacon - The nut securing the RF output connector fractured during the vibration portion of the Reliability Assurance (Overstress) tests. To remedy this problem, the number of threads securing the connector have been increased along with the thickness of the securing nut. Effectivity S/C 3 and up.

1.3 Helmet Microphone - The Vendor has designed a new mold for the mike enabling easier and faster assembly and increasing overall strength. Appearance is unchanged. Effectivity is on all production units.

2.0 GUIDANCE AND CONTROL

2.1 ACME - On S/C 2, the primary Rate Gyro Package, NAC P/N 52-87700-17 will be replaced with a 52-87700-33 Rate Gyro

Package, which contains rate gyros having demonstrated significantly longer life. Effectivity of the 52-87700-33 is S/C 2 primary package only and S/C 3 and up.

The series regulator transistor in the Attitude Control Electronics -10 volt power supply is being changed from a type 2N1233 to a type 2N1132. This change is necessary to avoid overstressing of the regulator transistor. Effectivity is S/C 2 and up.

2.2 Radar - The radar's absorber configuration was approved, but tests on two production prototypes have indicated that the absorber is not providing the isolation that was anticipated. No additional work will be expended to improve the radar's performance until completion of the New Mexico State University's tests.

During this reporting period it became apparent that an antenna gain of 7.2 db could not be achieved; therefore, additional design effort was suspended. The minimum acceptable gain has been fixed at 6.0 db, thereby reducing the predicted RF signal noise ratio by 1.2 db.

At the Rendezvous and Recovery meeting held during the week of 23 March 1964, the Flight Operations Division of the NASA indicated that present mechanization of engine arm switch was acceptable. However, MAC will further coordinate with the Agena Interface Committee on the engine arm switch and anticipates the switch problem to be resolved during the next reporting period.

2.3 Transponder - The Qual. #1 Transponder has experienced a frequency shift problem during sell-off prior to entering Qual. testing. The Vendor is proposing the addition of an isolator between the transmitter and present circulator as a solution to the problem.

One Rendezvous Evaluation Pod will be canceled from the Gemini Program. However, the transponder, the 2 spiral antennas, and the boost regulator to have been used in the above REP will still be built and will be used on the flight test program at the White Sands Missile Range.

2.4 Attitude Display Group - The Hi/Lo scale factor capability has been incorporated in the 52-87702-21 Attitude Indicators with no resultant problems. Effectivity is S/C 3 and up. Eight (8) -21 Indicators have been accepted by MAC.

The hermetric seal fix has proven adequate since none of the 12 Indicators presented for Acceptance Testing have developed a leak.

The Flight Director Controller successfully completed all phases of DAT. Reliability Assurance Tests have been initiated, and should be completed during next reporting period. Nine (9) 52-87702-23 Flight Director Controllers have been accepted by MAC for use on S/C 3 and up.

2.5 Horizon Sensor System - During final Vendor tests of the S/C 2 Horizon Sensor, a reed relay in the loss-of-track module failed. Failure cause was traced to the discharge of one of the RFI filter capacitors through the contacts of the reed switch. A 20 ohm current limiting resistance was added in series with the contacts as a production fix.

Trim resistors have been replaced by trim potentiometers to speed up alignment and reduce rework-trim time. Effectivity S/C 2 and up.

Tests of the optics of the Horizon Sensor have been completed in the Air Force Chamber. Final report being prepared. Preliminary analysis indicates no optical problems in tracking the earth at temperatures down to 160°K.

2.6 Digital Computer - During this reporting period the Vendor experienced the following problems in the acceptance phase of S/C 2 Fly Computer #8:

a) Vibration Test -

1. Broken Wire (-25 V Reg) - Repaired via adding three layers of thermofit sleeving and rerouting. Change is effective on all production units.

2. Chafed ground wire - Rerouted and repaired.

3. Circuit Module Failed, E/I Memory Driver - Replaced; Diode open, failure analysis incomplete.

b) Temperature Test -

1. Gimbal Angle Cross-Over Detector (COD) - Soldering performed on external terminals of COD produces sufficient heat to cause solder within interior of encapsulated COD to flow. This occurs when COD's modules are initially installed into computer. The fix was, to apply thermal conductive epoxy (Furane) on COD internal solder points and to use external heat sink during installation. A high temperature solder is also being evaluated for internal COD use.

2. Divide Problem, open diode in circuit module - Immediate, module replaced; CM Failure analysis pending.

c) Others -

1. DAS (Telemetry) Shift Pulse Malfunction - Caused by intermittent open in cable.

2. AC output to Displays and ACME Malfunctioned - These problem traced to a Diagnostic test program error.

All the listed problems are in the first occurrence category. Hence, no major design changes are anticipated. Assuming no other problems are encountered, acceptance test on Computer #8 should be completed during the next reporting period.

2.7 IVI and MDIU - Three (3) 52-87712-9 IVI units with printed circuit boards and plated-through-holes have been accepted. Exploratory Qual. is still in progress on the IVI and MDIU. Formal Qual. on each to start during next reporting period.

2.8 Inertial Measurement Unit - The IMU for S/C 2 (PA-5) was shipped to IBM. The platform in this system has undergone a single-axis vibration at 10.5g. Subsequent to vibration, a Z gyro was replaced. This failure has not yet been explained. PA-5 was accepted with S/N 308 Static Power Supply, not considered a flyable unit due to transient problems. Present plans call for replacement with a flyable unit prior to IGS sell off.

Static Power Supply (S/N 309) still experiencing turn-on voltage transient problem on the computer 20 VDC line. Transient has been reduced but is still of sufficient magnitude to possibly harm the computer. Problem is still under investigation.

The platform for IMU PA-7 (S/C 3) will be subjected to three-axis vibration as an acceptance criterian. Subsequent IMU's will be vibrated as complete systems.

IMU DAT procedure, Vol. II, is being reviewed by MAC.

IMU Acceptance Test procedures were reviewed with the Vendor. Vendor is to submit revised procedure for final approval. All future changes will be made via ECN.

The static accuracy failure during High Temperature, reported during last reporting period, is not attributed to improper data recording.

After Humidity Test on Qual. Test #1 IMU, peeling of paint, corrosion on painted surfaces, and corrosion at dissimilar metal mechanical interfaces were discovered. MAC has directed the Vendor to open the System Electronics and Gimbal Control Electronics of Qual. Test #1 IMU and inspect for internal corrosion. The platform is pressurized and will therefore not be opened.

Power Supply failed during Post Humidity. System Fast Heat cycle is inoperative. Problem being investigated by Vendor.

Discrepant Resolver Readout - Vendor believes that the cables were apparently affected by Humidity. Problem is being investigated by Vendor.

2.9 <u>ACPU</u> - S/N 101 unit has been modified for S/C 2 mission, passed acceptance tests and been shipped to MAC. S/N 100 unit will be returned for modification as a back-up unit for the S/C 2 mission following completion of S/C 2 IGS integration tests at IBM.

Vendor is evaluating design changes required in the ACPU to mate with the redesigned Static Power Supply for use in S/C 3 and up.

3.0 INTEGRATION

3.1 <u>Communications</u> - The following tasks were performed by the Communications Integration Group:

a) Reviewed three (3) RFI test reports and two (2) proposed SCD's.

b) Coordinated efforts on planned RF compatibility test consisting of locating necessary equipment, preparing test procedure, and planning installation of equipment on screen wire mock-up.

c) Performed a study of the effects of a + 10% tolerance in setting peak deviation on the GeminI telemetry system.

d) Performed a study on the RF link for recovering S/C 2 telemetry data lost during plasma blackout.

3.2 Guidance and Control - The following tasks were performed by the Guidance and Control Integration Group:

a) Conducted test program to determine:

1. The operating characteristics of a vendor furnished power supply for possible use with the C-Band Phase Shifter.

2. The feasibility of changing the power supply output frequency and voltage, and

3. System performance of the power supply andC-Band Phase Shifter.

b) Prepared EJS for addition of a status indicator lamp to alert the crew to the condition of the 400 cps 26 VAC bus.

c) Coordinated S/C 2 Single Point Failure Study results from Electronics in response to EJS 52-2891.

d) Prepared EJS to re-install command excitation transformer output voltage divider required to correct S/C 2 re-entry roll rate.

4.0 TESTING -

4.1 Communications -

4.1.1 Spacecraft System Test -

a) The following tasks on S/C 2 were completed:

1) VSWR and Insertion loss measurements on the Cabin. The final disposition of the high VSWR (3.5:1) at UHF Voice on the Descent antenna will not be made until vibration tests on S/C 2 are completed. The limit on the VSWR is 3:1.

2) Completed SEDR IK344-2, TM Transmitter tests. Investigation is being conducted by Spacecraft Systems Test and Launch Preparation Group personnel to determine why deviation sensitivity is high on low-frequency TM.

4.1.2 Thermal Qualification Testing (S/C 3A) - Support of testing S/C 3A consisted of:

a) Completed fabrication of Coax switching panel.

b) Completed interconnection of Comm. Ground Station (AGE).

c) Completed installation of two antennas on the roof of Bldg. 103A for telemetry of SST data to Bldg. 101.

4.1.3 Complex Activation - The following tasks were completed on Communication Complex Activation:

a) Completed Readiness Tests (Validation) on two (2) DCS Test Sets and DCS Tape Control Unit.

b) Prepared Readiness Test Procedures for the Adapter Simulator, and the Beacon Test console in Bldg. 103.

c) Modified Communications Ground Stations to accept time code distribution signals. These signals will be used for time correlation of data related to integrated S/C tests.

4.2 Guidance and Control -

4.2.1 AGE -

a) Modification of the PIA test equipment for the transponder and Radar has been completed.

b) Calibration of ACME PIA AGE equipment was accomplished.

4.2.2 PIA - Successfully completed PIA on an OAME and one Hand Controller Potentiometer. Three Hand Controller Pots. failed PIA.

4.2.3 Complex Activation - 95% of the Guidance and Control official readiness tests have been completed. Modification of the Guidance and Control Simulator has been completed.

INSTRUMENTATION SYSTEM

1.0 Design

1.1 Lion Research has been asked to modify the CO_2 Partial Pressure System to reduce the flow rate, so that an external water absorber will not be required. Lion Research says this approach is feasible.

1.2 Verbal agreement has been received from NASA Bio-Medical Instrumentation Group to accepting the bio-medical DC-DC converter with the excessive current, as it was described. (Over 50 milliamps for 275 microsecond with a peak at 5.5 amps.) The design note on this is in typing.

1.3 All Gulton accelerometers have been examined for compliance with the request to epoxy all screws. Several screws were found with little or no epoxy applied. On future units special Quality Control procedures have been established to assure compliance.

1.4 Released the following new drawings:

a. Spacecraft equipment - 52-88227, Buffer Amplifier for NASA/DOD Experiments 4 and 9.

b. Test support equipment - 52-04068, Time Reference System Simulator Assembly for testing the buffer amplifier.

1.5 Released the following changes:

a. Against spacecraft equipment:

(1) 52-88101, EO to complete package configuration for Spacecraft 5 and 6.

(2) 52-88102, EO to incorporate the 52-88220-1 sigma conditioner.

(3) 52-88102, EO to complete package configuration for Spacecraft 5 and 6.

(4) 52-88226, EO adding diode and capacitor to input circuitry.

(5) 52-88226, EO to improve accuracy of component selection procedures.

(6) 52-88611, Drawing deviation incorporating bushings into package mounting lugs and relocating mounting holes - to eliminate interference between Package 12 and multiplexer.

b. Against test support equipment:

(1) 52-04001, EO adding transformer - provides isolation which protects signal conditioners from high voltages.

(2) 52-04004, EO to correct wiring.

(3) 52-04058, EO to make harness compatible with latest definition of tape recorder configuration.

(4) 52-04061, EO changing cable covering to prevent burning of cable in oven

(5) 52-04063, EO to update test set to latest definition of equipment configuration.

(6) 52-04064, EO to make harness compatible with changes in electronic unit.

(7) 52-04067, DCN to obsolete drawing. Part to be tested no longer required.

c. Against Aerospace Ground Equipment (AGE):

(1) 52E440008, EO to add A06G0363 control indicator.

(2) 52E440035, EO to provide index cards for convenient transducer calibration equipment correlation, and to provide additional transducer holders

(3) 52E4400 0, EO to provide clearance for selector switch.

2.0 DOD/NASA Experiments 1, 2 and 8

2.1 The periscope and telescope design is approximately 75% complete.

2.2 Camera evaluation is 90% complete.

2.3 The 200mm lens evaluation has been delayed because of late delivery of hardware.

3.0 PIA

3.1 Released PCN's 45, 46, 47 for incorporation to SEDR 320 with the following procedures and revisions enclosed:

a. 52-85713-35, high mode recording tape recorder (revised).

b. 52-88221-33, -99, PSD signal conditioners (revised).

c. 40710, lo-level commutator (revised).

d. 52-88103-5, tape recorder (revised).

e. 52-85713-81, PCN Multiplexer and recorder DTS (revised).

3.2 A total of 186 items of instrumentation flight hardware were tested this reporting period. 176 items successfully passed PIA, and 10 items were rejected.

3.3 Completed First Article Demonstration (FAD) on the 52E440008 DC/DC Converter test set.

3.4 Completed readiness test procedures and testing on the following AGE and interim AGE equipment:

a. 52E440040-3 tape recorder portion of the DTS test set.

b. CIMU test bench - used as interim AGE to test the DTS.

3.5 Completed readiness test procedures for the 52E440035 test harnesses and sensors. Inspection and testing of equipment is now in progress.

MOCKUP

1. Engineering Mockup

Latest information pertaining to outstanding RFA's and latest EJS's is being incorporated into Mockup in preparation for NASA review scheduled 12 May 1964.

Instrument panels, communications bundles and control console are being rewired per new wiring diagrams.

Instrument panels and crew station are being updated to S/C #5 configuration.

DOD Experiments are being mockup and installed as information becomes available.

During Next Reporting Period - Continue updating crew station and preparing for NASA review.

2. Tube & Cable Mockup

Mockup is progressing at a normal rate. S/C #4 is being incorporated in all areas except Z160.20 bulkhead and inside cabin. Z160.20 bulkhead is being reworked to reflect S/C #5 condition and latest changes for S/C #3 water lines are being incorporated in cabin area.

During Next Reporting Period - Continue incorporating latest information.

GEMINI PROPULSION SYSTEM

Solid Propellant Rocket Motors

TE-385 Retrograde Rocket - Two batch acceptance motors, equipped with old initiators, were successfully fired during the report period. These motors are to be included in the qualification program, Group II sea level statistical firings.

Rework of the Holex 3575 initiator has been abandoned as it afforded neither schedule advantage or program economics to incorporate required design changes. Holex has received go-ahead for the 4480 initiator on an expedited based. Estimated qualification completion date for this initiator is 5 July 1964 with the pyrogen qualification to follow by two weeks.

Base Recirculation - Two 10% scale base heating tests (four nozzle configuration) were performed in A.E.D.C.'s J-2A cell at initial altitudes of 450,000 feet and 203,000 feet. The results of these tests substantiated M.A.C.'s pretest predictions, based upon both analysis and cold flow tests, that there would be no appreciable base recirculation. Base pressures measured near the center of the heat shield reflected little more than altitude droop, with maximum pressure rises during firing of .0006 and .0067 psi for the 450,000 feet and 203,000 feet initial altitudes. The maximum temperature rises recorded on the beam were 41.6°F and 156.5°F for the web and lower cap respentively. This corresponds to a temperature rise on the production item of 60°F on the web and 70°F on the cap. Data is not yet available for the last two tests, one a four nozzle and the other a two nozzle configuration, which were completed 9 April 1964.

RENDEZVOUS AND RECOVERY AND RE-ENTRY CONTROL SYSTEM

1. Released changes required for beef-up due to increased drogue chute-pilot chute loads. Released changes necessary to define gaps, mismatches, etc. for beryllium shingles and retainers. Prepared changes required to provide additional thermal protection for drogue chute cable guillotines. Provided thermal protection to pilot chute cables adjacent to cable attach fittings, also to pilot chute-drogue chute apex line in area of guillotine. Released changes required to close off opening existing after nose fairing ejector is separated. Released modifications to panels replacing radar on non-docking spacecraft to be compatible with drogue chute-pilot chute installations. Modified main parachute riser protection ring for routing and protecting forward bridle.
   Next Reporting Period....Make changes to nose fairing ejector found necessary as result of pyro separation tests. Provide shimming provisions to obtain required shingle fit. Modify nose fairing for compatibility with redesigned UHF nose "stub" antenna. Investigate methods of hoisting spacecraft with shingles installed. Investigate "softer" radar seal. Investigate closing off gaps between latch receptacle sliding doors in closed position and shingles. Release modifications required to provide for installation of forward parachute bridle stowage container.

2. Target Docking Adapter

   Provided coordination for Gemini-Agena interface working group and with SCD vendor. Completed coordination of Lockheed tests utilizing Static No. 1 TDA. Continued coordination with the [illegible] for development of the TDA dampers. Released changes required to install overcenter springs in the mooring drive system.

Released changes to limit switch brackets for improved access for rigging. Made necessary changes for modified status display lights. Initiated changes to provide support for mooring drive system flexible shafts.

Next Reporting Period....Continue coordination for interface working group, with SCD vendor, and with lab. Release changes to dampers as required from results of the damper development tests. Study changes to Agena lighting. Complete adding provisions for flex shaft support. Initiate changes to finalize rigging instructions, incorporating changes required due to recent modifications to the mooring drive system.

ESCAPE & RECOVERY

1. Coordinated installation of NASA/DOD Experiment Mockup on B/P 3A.
2. DCN'ed several landing gear drawings.
3. Monitored shipment of Static 2 landing gear parts to NASA MSC.
4. Stockpiling paperwork concerned with S2. (To be reviewed and acted on when S2 becomes authorized for manufacture.)

Problem Areas: None

During Next Reporting Period:

Coordinate special tests to be run on B/P 3A.

WEIGHTS

1. Coordinated with NASA, the Cost Schedule and weight effects of the initial items on the weight reduction program. Implementation will be by specific directives.
2. Continued the in-house review for weight reduction items.
3. Continued analysis of DOD/NASA Experiment effects on Spacecraft mass properties.
4. Revised the ballast installation of S/C to reflect the changes in equipment requirements.

Problem Areas

1. Fluid spacecraft configuration definition.
2. NASA coordinated GFE list with Weights data.
3. Detail weight data on DOD & NASA Experiments.

Next Period

1. Weight and balance S/C 2 for launch. Complete installation of weight and balance fixture in permanent location in Bldg. 101
2. Implement NASA configuration revision if directives to proceed are recieved.
3. Implement weight reduction items if directives are received.
4. Begin work on additional weight report data requirements if directions to proceed are received.

ECS, RSS, SCD GROUP

1. Paraglider Pneumatic System

   A. Two of the six (6) -1021 Tank Assemblies that were to be sent to Boron for completion of ATP tests were tested at Boron. One (1) assembly passed the leak test; the other failed at the seal. Failure report has not been received yet.
   The rest of the -1021 Assemblies are being held up for -1009 Fill Valve leak check before assembly of the -1021 Tank Assembly for which the main cause is low priority for this system.
   Qualification Test Schedule for Paraglider dated 30 March 1964 has a qualification test start of 15 April 1964 with a completion date of 24 July 1964.

2. Coolant Filter

   A. Pneudraulics, Inc., of Montclair, California, was recommended for furnishing the hardware. Vendor was notified on 10 April to begin work immediately. Vendor estimates that six (6) pieces of unqualified hardware will be delivered 10 July. The pacing factor is the delivery of forging to Pneudraulics. For $2,000 six (6) pieces of hardware can be delivered 10 June (forging will be fought from a different supplier). Spacecraft 3A, 3 and up effectivity.

3. Coldplates

   A. SCD's 52-83753 and 52-83754 Battery Module Coldplates as well as SCD's 52-83755, 52-83756 and 52-83757 for DOD Experiments are in the process of being awarded to the Avco Corporation Spacecraft 3A, 3 and 4 effectivity for Battery Coldplates, and Spacecraft 5 and 7 effectivity for Experiment Coldplates

B. MAC has had limited success in brazing MAC designed coldplates. Manufacturing is in the process of revising their fabrication process to correct encountered deficiencies.

C. Fairchild-Stratos is in the process of proposing changes to their salt brazing fabrication process in order to comply with MAC storage and service life requirements. So far the vendor has declined to define a known storage or service life. Stratos salt brazed coldplates have experienced a functional failure rate of 60 percent for all plates delivered so far.

D. Qualification testing has not started as of this date. Storage and service life requirements have to be met before any qualification testing.

E. MAC is continuing the investigation of MAC brazing of Fairchild-Stratos coldplates.

4. <u>Burst Diaphragm</u>

A. Rough draft of the specification is presently in work.

ELECTRICAL SYSTEM

1. Power Generation

   a. Completed Fuel Cell/RSS Module modifications for S/C 2, including line size revision.

   b. Completed non-operating acceleration and 3 axis sweep sinusoidal vibration program on P2B Fuel Cell.

   c. Released Battery installation detail engineering for S/C 3 and 4.

   Problem Areas

   Product water line filters in S/C plumbing blocked by foreign material indicating possible cleaning or deterioration problem.

   Next Reporting Period

   Continuation of P2B Qualification Program

   Results of investigations of problem areas

2. S/C Electrical Installations

   a. Development effort in progress to improve vibration characteristics of Relay Panel Assemblies. 3 Axis Sinusoidal successfully completed. Modified fabrication details and Panel installation techniques under investigation relative to random vibration.

   b. Redesign of re-entry umbilical connector initiated to improve isolation of power pins from sea water short circuits after connector has been subjected to re-entry heating.

   c. Coordinated details of automation of Astronaut functions for S/C 2 with MSC Personnel.

   d. Reviewed preliminary results of flotation tests of S/C Static 3 Program with MSC.

   e. Spacecraft 2 detail electrical drawings in release.

   Current Work

   Continuation of Relay Panel Development Testing
   Continuation of Post Landing Immersion Review

GUIDANCE AND CONTROL MECHANICS

1. Re-entry Guidance Analysis: An error analysis of re-entry following a Mode 3 launch abort is currently being compiled into a Gemini Design Note. This note will contain the effects of off-nominal retro attitude and impulse, navigation uncertainties, instrument errors, and atmospheric density variations on the touchdown accuracy of the Gemini re-entry guidance system.

   The hybrid simulation of re-entry was checked out and production running was initiated. Testing to date has included evaluation of display parameters and the effects of various control system failures.

   Analysis of the alternate re-entry guidance system has led to a revision of zero-lift prediction technique in order to improve the system accuracy. In addition, effort is being directed toward improving the commanded bank profiles for targets located throughout a wider area of the footprint.

2. Touchdown Predict Guidance Analysis: Deck T-275 is now checked out and in production. Several runs have been made and a numerical error in the Math Flow 4 retro ΔV's has been discovered. Using the correct ΔV values, Deck T-275 predicts a touchdown within 1 degree of the center of the "actual" re-entry foot-print.

3. Docking Trainer Tests: Tests were performed to determine docking accuracy, fuel usage, and impact velocity, for normal and failure modes of operation, as well as for variable vehicle acceleration levels. Analysis of the data obtained is continuing, but the final results are expected to show docking can be accomplished with an off-centerline error at entry into the docking cone of less than 4 inches. Fuel expended of course depends upon initial conditions

of relative rates; but for zero initial rate conditions the force required is from 1.0 to 4.0 lbs. Velocity at impact is between 0.4 and 1.0 ft/sec. for the majority of the runs. It was established that the loss of any one thruster, attitude or translation control, should not significently affect one's ability to successfully complete the docking task, althoughthe loss of a radical translation thruster increases the control assignment to a greater extent than any other.

4. Attitude Control: The retro disturbance torques and their effects on spacecraft attitude have been detailed in GDN No. 172. Further work in determining a simplified procedure for selecting an aim point or points is in progress.

GEMINI MANUFACTURING WORK PLAN - SPACECRAFT NO. 2

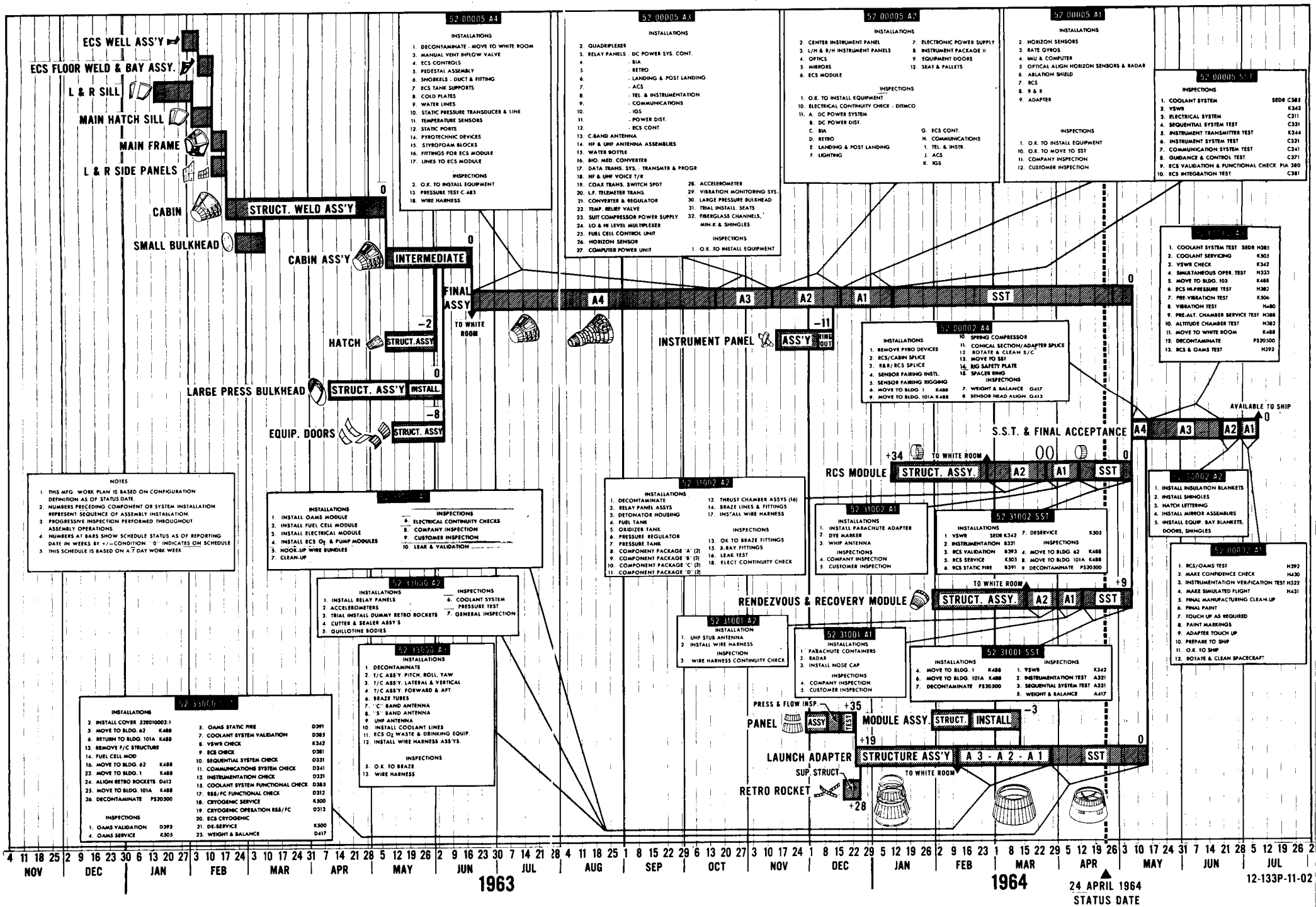

52 00005 A4

INSTALLATIONS
1. DECONTAMINATE - MOVE TO WHITE ROOM
3. MANUAL VENT INFLOW VALVE
4. ECS CONTROLS
5. PEDESTAL ASSEMBLY
6. SNORKELS - DUCT & FITTING
7. ECS TANK SUPPORTS
8. COLD PLATES
9. WATER LINES
10. STATIC PRESSURE TRANSDUCER & LINE
11. TEMPERATURE SENSORS
12. STATIC PORTS
14. PYROTECHNIC DEVICES
15. STYROFOAM BLOCKS
16. FITTINGS FOR ECS MODULE
17. LINES TO ECS MODULE

INSPECTIONS
2. O.K. TO INSTALL EQUIPMENT
13. PRESSURE TEST C 483
18. WIRE HARNESS

52 00005 A3

INSTALLATIONS
2. QUADRIPLEXER
3. RELAY PANELS - DC POWER SYS. CONT.
4. - BIA
5. - RETRO
6. - LANDING & POST LANDING
7. - ACS
8. - TEL. & INSTRUMENTATION
9. - COMMUNICATIONS
10. - IGS
11. - POWER DIST.
12. - ECS CONT.
13. C-BAND ANTENNA
14. HF & UHF ANTENNA ASSEMBLIES
15. WATER BOTTLE
16. BIO. MED. CONVERTER
17. DATA TRANS. SYS. - TRANSMTR & PROGR
18. HF & UHF VOICE T/R
19. COAX TRANS. SWITCH SPOT
20. L.F. TELEMETER TRANS.
21. CONVERTER & REGULATOR
22. TEMP. RELIEF VALVE
23. SUIT COMPRESSOR POWER SUPPLY
24. LO & HI LEVEL MULTIPLEXER
25. FUEL CELL CONTROL UNIT
26. HORIZON SENSOR
27. COMPUTER POWER UNIT
28. ACCELEROMETER
29. VIBRATION MONITORING SYS.
30. LARGE PRESSURE BULKHEAD
31. TRIAL INSTALL. SEATS
32. FIBERGLASS CHANNELS, MIN-K & SHINGLES

INSPECTIONS
1. O.K. TO INSTALL EQUIPMENT

52 00005 A2

INSTALLATIONS
2. CENTER INSTRUMENT PANEL
3. L/H & R/H INSTRUMENT PANELS
4. OPTICS
5. MIRRORS
6. ECS MODULE
7. ELECTRONIC POWER SUPPLY
8. INSTRUMENT PACKAGE II
9. EQUIPMENT DOORS
12. SEAT & PALLETS

INSPECTIONS
1. O.K. TO INSTALL EQUIPMENT
10. ELECTRICAL CONTINUITY CHECK - DITMCO
11. A. DC POWER SYSTEM
B. DC POWER DIST.
C. BIA
D. RETRO
E. LANDING & POST LANDING
F. LIGHTING
G. ECS CONT.
H. COMMUNICATIONS
I. TEL. & INSTR.
J. ACS
K. IGS

52 00005 A1

INSTALLATIONS
2. HORIZON SENSORS
3. RATE GYROS
4. IMU & COMPUTER
5. OPTICAL ALIGN HORIZON SENSORS & RADAR
6. ABLATION SHIELD
7. RCS
8. R & R
9. ADAPTER

INSPECTIONS
1. O.K. TO INSTALL EQUIPMENT
10. O.K. TO MOVE TO SST
11. COMPANY INSPECTION
12. CUSTOMER INSPECTION

52 00005 SST

INSPECTIONS
1. COOLANT SYSTEM SEDR C385
2. VSWR K342
3. ELECTRICAL SYSTEM C311
4. SEQUENTIAL SYSTEM TEST C331
5. INSTRUMENT TRANSMITTER TEST K344
6. INSTRUMENT SYSTEM TEST C321
7. COMMUNICATION SYSTEM TEST C341
8. GUIDANCE & CONTROL TEST C371
9. ECS VALIDATION & FUNCTIONAL CHECK PIA 380
10. ECS INTEGRATION TEST C381

52 00002 A4

INSTALLATIONS
1. REMOVE PYRO DEVICES
2. RCS/CABIN SPLICE
3. R&R/RCS SPLICE
4. SENSOR FAIRING INSTL.
5. SENSOR FAIRING RIGGING
6. MOVE TO BLDG. 1 K488
9. MOVE TO BLDG. 101A K488
10. SPRING COMPRESSOR
11. CONICAL SECTION/ADAPTER SPLICE
12. ROTATE & CLEAN S/C
13. MOVE TO SST
14. RIG SAFETY PLATE
15. SPACER RING

INSPECTIONS
7. WEIGHT & BALANCE G417
8. SENSOR HEAD ALIGN. G413

52 00002 A1

1. COOLANT SYSTEM TEST SEDR H385
2. COOLANT SERVICING K505
3. VSWR CHECK K342
4. SIMULTANEOUS OPER. TEST H333
5. MOVE TO BLDG. 103 K488
6. RCS HI-PRESSURE TEST H382
7. PRE-VIBRATION TEST K506
8. VIBRATION TEST H480
9. PRE-ALT. CHAMBER SERVICE TEST H388
10. ALTITUDE CHAMBER TEST H383
11. MOVE TO WHITE ROOM K488
12. DECONTAMINATE PS20500
13. RCS & OAMS TEST H392

52 00002 A2

1. INSTALL INSULATION BLANKETS
2. INSTALL SHINGLES
3. HATCH LETTERING
4. INSTALL MIRROR ASSEMBLIES
5. INSTALL EQUIP. BAY BLANKETS, DOORS, SHINGLES

52 00013 A1

1. RCS/OAMS TEST H392
2. MAKE CONFIDENCE CHECK H430
3. INSTRUMENTATION VERIFICATION TEST H322
4. MAKE SIMULATED FLIGHT H431
5. FINAL MANUFACTURING CLEAN-UP
6. FINAL PAINT
7. TOUCH UP AS REQUIRED
8. PAINT MARKINGS
9. ADAPTER TOUCH UP
10. PREPARE TO SHIP
11. O.K. TO SHIP
12. ROTATE & CLEAN SPACECRAFT

52 31002 A2

INSTALLATIONS
1. DECONTAMINATE
2. RELAY PANEL ASSYS
3. DETONATOR HOUSING
4. FUEL TANK
5. OXIDIZER TANK
6. PRESSURE REGULATOR
7. PRESSURE TANK
8. COMPONENT PACKAGE 'A' (2)
9. COMPONENT PACKAGE 'B' (2)
10. COMPONENT PACKAGE 'C' (2)
11. COMPONENT PACKAGE 'D' (2)
12. THRUST CHAMBER ASSYS (16)
14. BRAZE LINES & FITTINGS
17. INSTALL WIRE HARNESS

INSPECTIONS
13. OK TO BRAZE FITTINGS
15. X-RAY FITTINGS
16. LEAK TEST
18. ELECT CONTINUITY CHECK

52 31002 A1

INSTALLATIONS
1. INSTALL PARACHUTE ADAPTER
2. DYE MARKER
3. WHIP ANTENNA

INSPECTIONS
4. COMPANY INSPECTION
5. CUSTOMER INSPECTION

52 31002 SST

INSTALLATIONS
1. VSWR SEDR K342
2. INSTRUMENTATION B321
3. RCS VALIDATION B393
5. RCS SERVICE K505
6. RCS STATIC FIRE B391
7. DESERVICE K505

INSPECTIONS
4. MOVE TO BLDG. 62 K488
8. MOVE TO BLDG. 101A K488
9. DECONTAMINATE PS20500

52 31006 A2

INSTALLATIONS
1. INSTALL RELAY PANELS
2. ACCELEROMETERS
3. TRIAL INSTALL DUMMY RETRO ROCKETS
4. CUTTER & SEALER ASSY'S
5. GUILLOTINE BODIES

INSPECTIONS
6. COOLANT SYSTEM PRESSURE TEST
7. GENERAL INSPECTION

52 31000 A1

INSTALLATIONS
1. DECONTAMINATE
2. T/C ASS'Y. PITCH, ROLL, YAW
3. T/C ASS'Y. LATERAL & VERTICAL
4. T/C ASS'Y. FORWARD & AFT
6. BRAZE TUBES
7. "C" BAND ANTENNA
8. "S" BAND ANTENNA
9. UHF ANTENNA
10. INSTALL COOLANT LINES
11. ECS O_2 WASTE & DRINKING EQUIP.
12. INSTALL WIRE HARNESS ASS'YS.

INSPECTIONS
3. O.K. TO BRAZE
13. WIRE HARNESS

52 31002 A2

INSTALLATION
1. UHF STUB ANTENNA
2. INSTALL WIRE HARNESS

INSPECTION
3. WIRE HARNESS CONTINUITY CHECK

52 31001 A1

INSTALLATIONS
1. PARACHUTE CONTAINERS
2. RADAR
3. INSTALL NOSE CAP

INSPECTIONS
4. COMPANY INSPECTION
5. CUSTOMER INSPECTION

52 31001 SST

INSTALLATIONS
4. MOVE TO BLDG. 1 K488
6. MOVE TO BLDG. 101A K488
7. DECONTAMINATE PS20500

INSPECTIONS
1. VSWR K342
2. INSTRUMENTATION TEST A321
3. SEQUENTIAL SYSTEM TEST A331
5. WEIGHT & BALANCE A417

52 31000 A2

INSTALLATIONS
2. INSTALL COVER 52E010002-1
3. MOVE TO BLDG. 62 K488
6. RETURN TO BLDG. 101A K488
13. REMOVE F/C STRUCTURE
14. FUEL CELL MOD
16. MOVE TO BLDG. 62 K488
22. MOVE TO BLDG. 1 K488
24. ALIGN RETRO ROCKETS D413
25. MOVE TO BLDG. 101A K488
26. DECONTAMINATE PS20500

INSPECTIONS
1. OAMS VALIDATION D393
4. OAMS SERVICE K505
5. OAMS STATIC FIRE D391
7. COOLANT SYSTEM VALIDATION D385
8. VSWR CHECK K342
9. ECS CHECK D381
10. SEQUENTIAL SYSTEM CHECK D331
11. COMMUNICATIONS SYSTEM CHECK D341
12. INSTRUMENTATION CHECK D321
15. COOLANT SYSTEM FUNCTIONAL CHECK D385
17. RSS/FC FUNCTIONAL CHECK D312
18. CRYOGENIC SERVICE K500
19. CRYOGENIC OPERATION RSS/FC D313
20. ECS CRYOGENIC
21. DE-SERVICE K500
23. WEIGHT & BALANCE D417

NOTES
1. THIS MFG. WORK PLAN IS BASED ON CONFIGURATION DEFINITION AS OF STATUS DATE.
2. NUMBERS PRECEDING COMPONENT OR SYSTEM INSTALLATION REPRESENT SEQUENCE OF ASSEMBLY INSTALLATION.
3. PROGRESSIVE INSPECTION PERFORMED THROUGHOUT ASSEMBLY OPERATIONS.
4. NUMBERS AT BARS SHOW SCHEDULE STATUS AS OF REPORTING DATE IN WEEKS BY +/-CONDITION. "0" INDICATES ON SCHEDULE
5. THIS SCHEDULE IS BASED ON A 7 DAY WORK WEEK

SPACECRAFT 2

EQUIPMENT STUDY

LEGEND:

▽ WILL SHIP

▼ ACTUAL SHIPPED

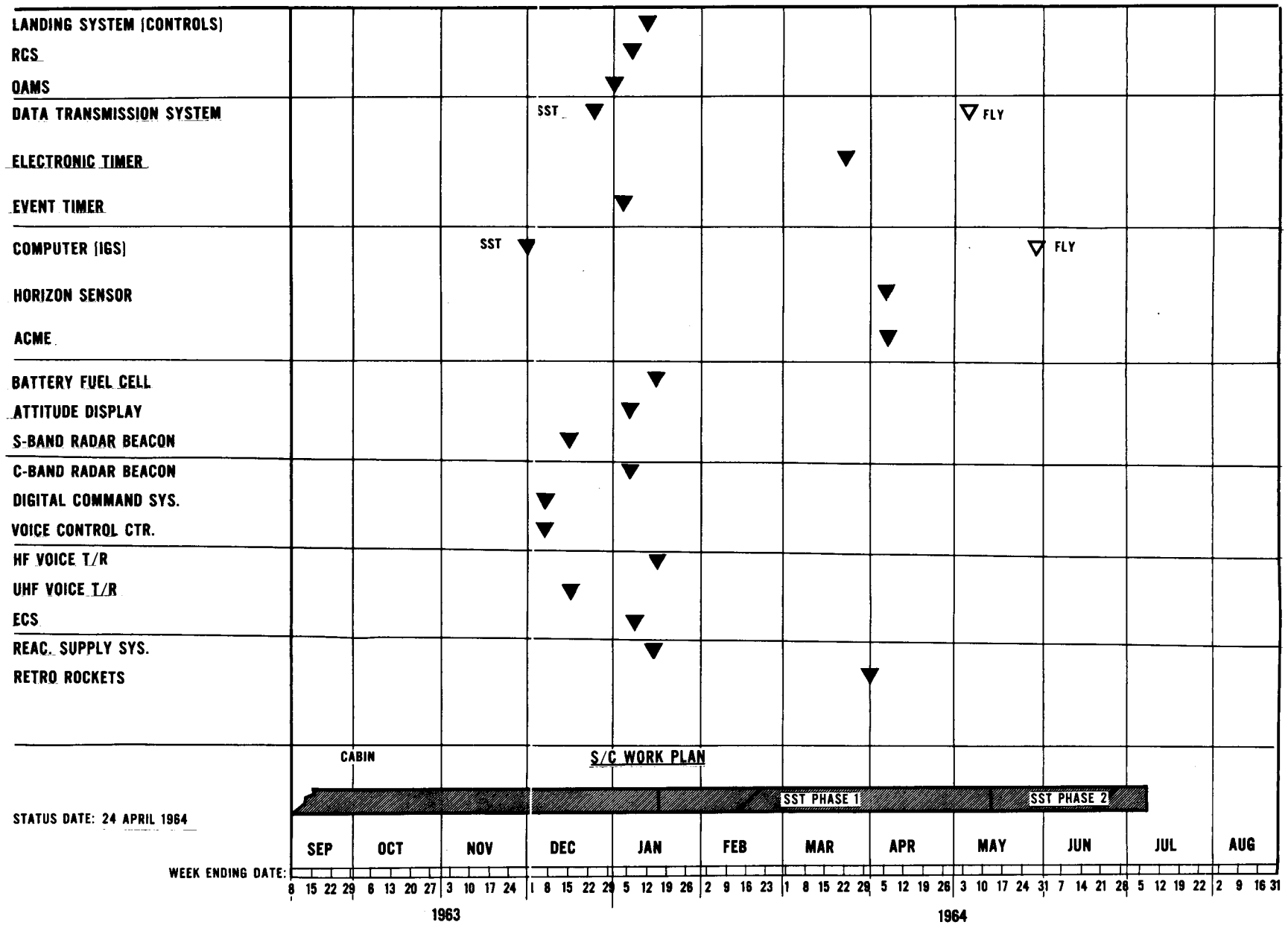

S/C-2 SST TO DELIVERY

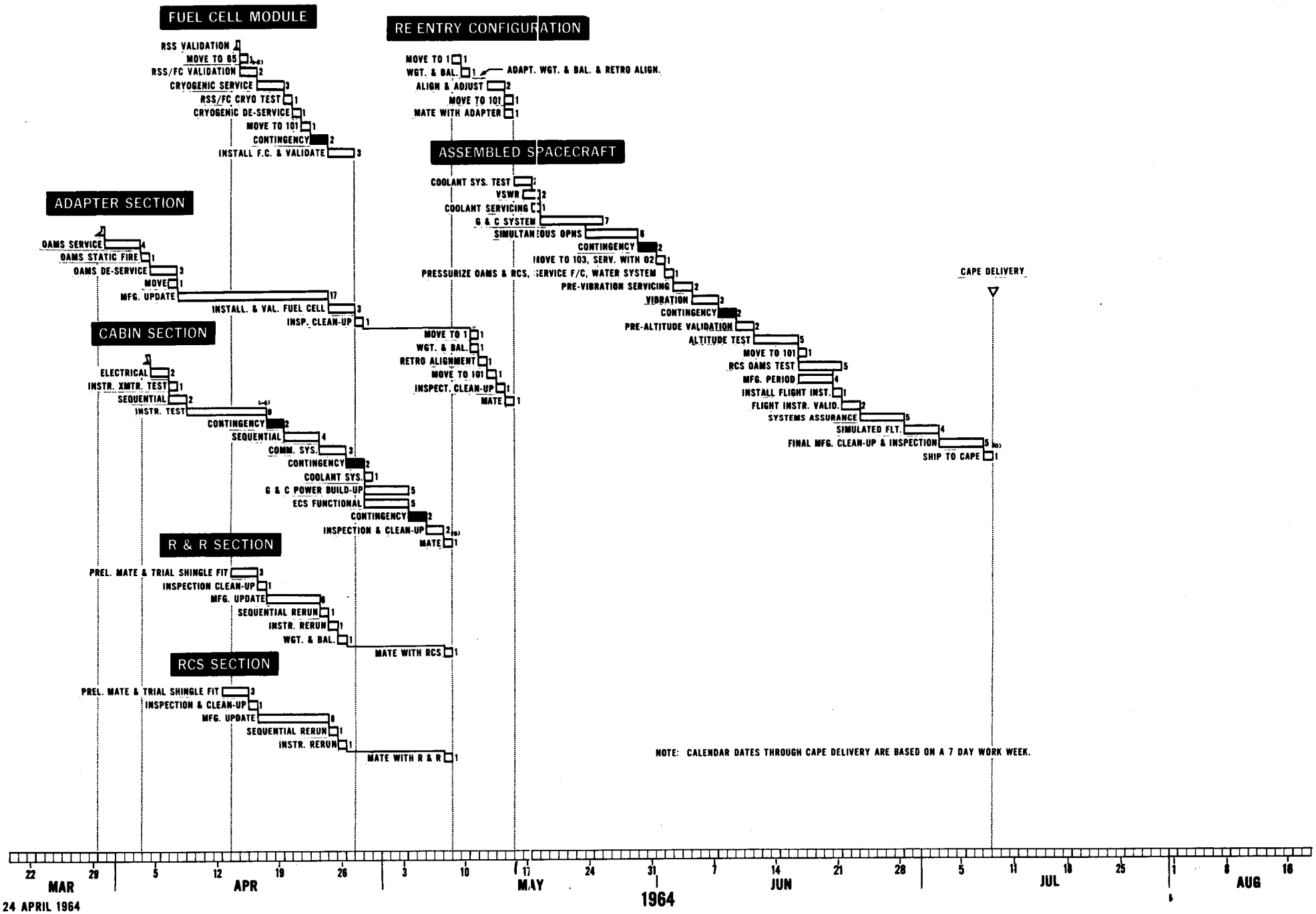

24 APRIL 1964

S/C-2 SCHEDULE

CAPE DELIVERY TO LAUNCH

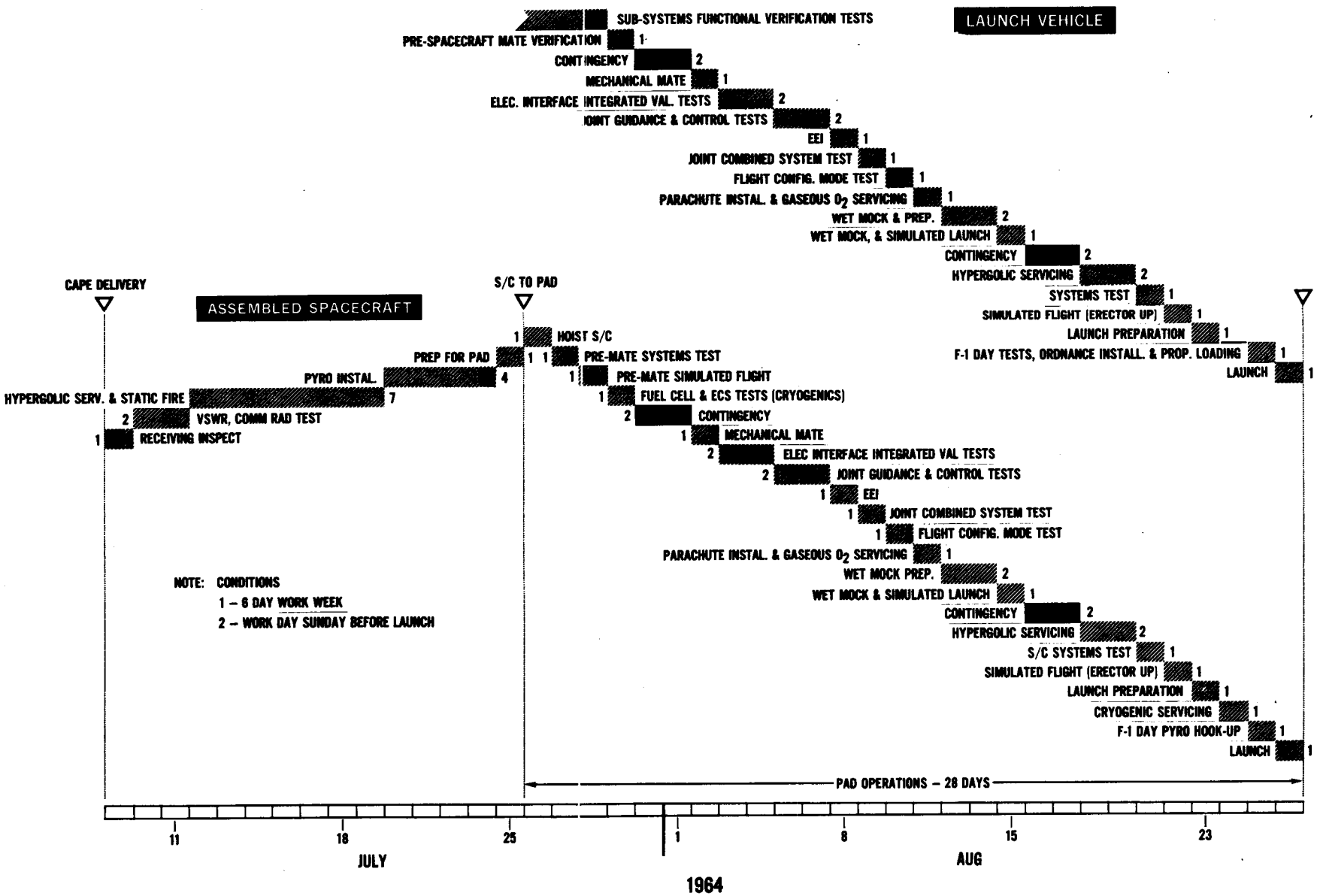

24 APRIL 1964

S C 2 WORK PLAN FINAL ASSY

	ZONE	TOTAL HRS.	OPEN HRS.
1. LARGE PRESSURE BULKHEAD	9	39	0
2. PRESSURE TEST	9	74	0
3. ECS INSTALLATION & PLUMBING	9	72	0
4. WIRE BUNDLES IN CABIN	9	643	14
5. PEDESTAL INSTALLATION	9	24	0
6. FIBERGLASS CHANNELS & MIN-K	11 12	298	6
7. INSTALL SHINGLES	4 5 6 7 8 9 11 12	870	18
8 INSTALL & RIG 32060 DOORS	11 12	152	38
9. INSTALL & RIG HATCHES	9 11 12	121	10
10. INSTALL STYROFOAM	3 7	82	0
11. INSTALL COLD PLATES & PLUMBING	4 7 8 9	195	0
12. INSTALL W/B IN EQUIPMENT BAYS	3 8	[illegible]	45
13. SPLICE THERMOCOUPLES & TEST	4 7 11 12	96	0
14. DITMCO	9	186	0
15. EQUIPMENT INSTALLATION (OTHER)	3 4 5 7 8 11 12	536	171
16. INSTALL STATIC SYSTEM	3 9	94	4
17. PRESSURE TEST (STATIC SYSTEM)	3 9	36	0
18. SST	9	0	0
19. EQUIPMENT DOORS	7 11 8 12 9	150	45
20. EQUIPMENT INSTALLATION (CABIN)	9	[illegible]	[illegible]
21. SPLICE TEMP. SENSORS	4 5 7 8 9	98	24
22. MECHANICAL MATE RCS & RR	16		
MECHANICAL MATE ADAPTER			
23. HEAT SHIELD INSTALLATION	10	235	2
24. E.O.P.O.	16	[illegible]	4

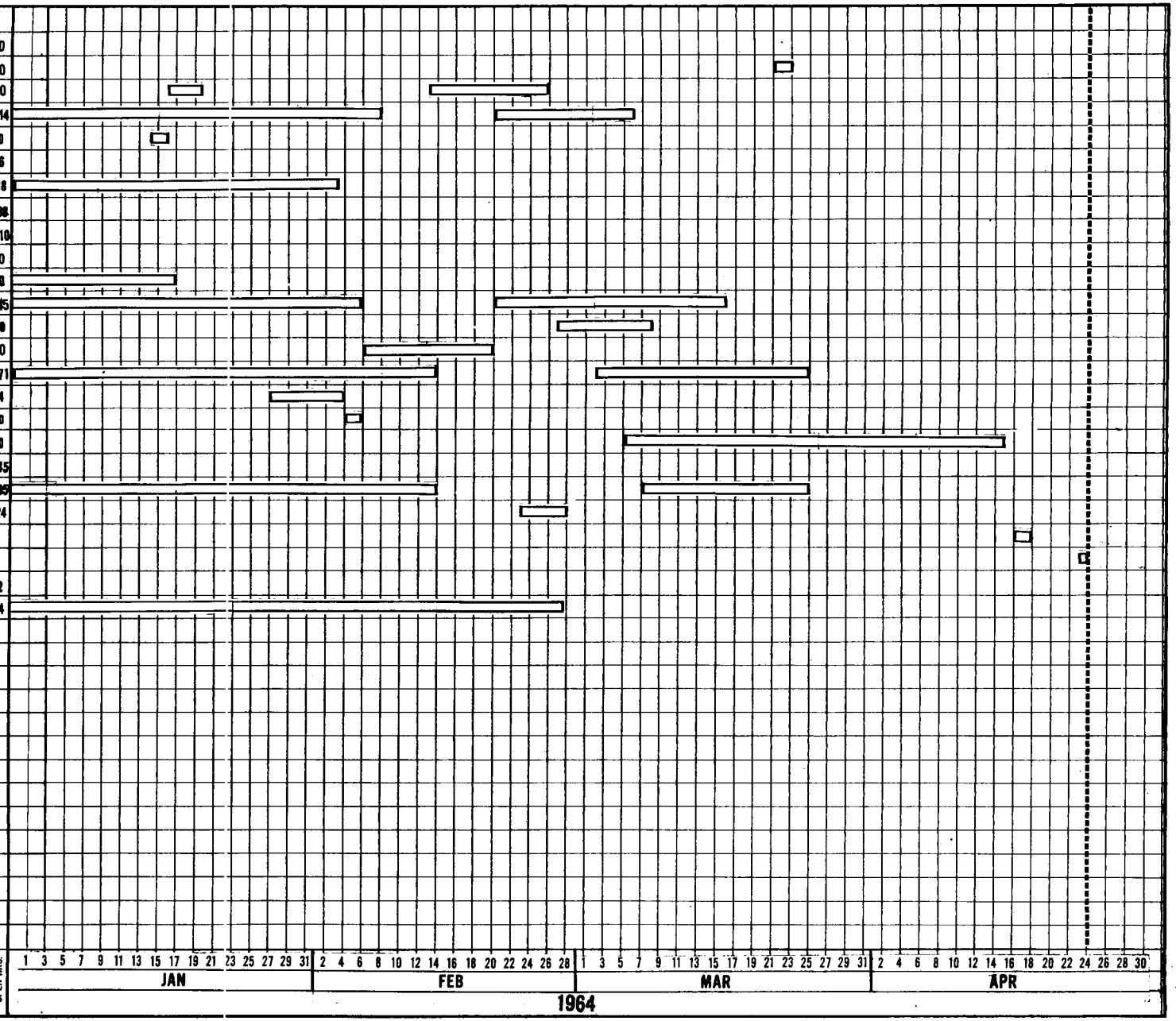

LEGEND: WORK PERIOD

STATUS AS OF 24 APRIL 1964

S C 2 WORK PLAN FINAL ASSEMBLY

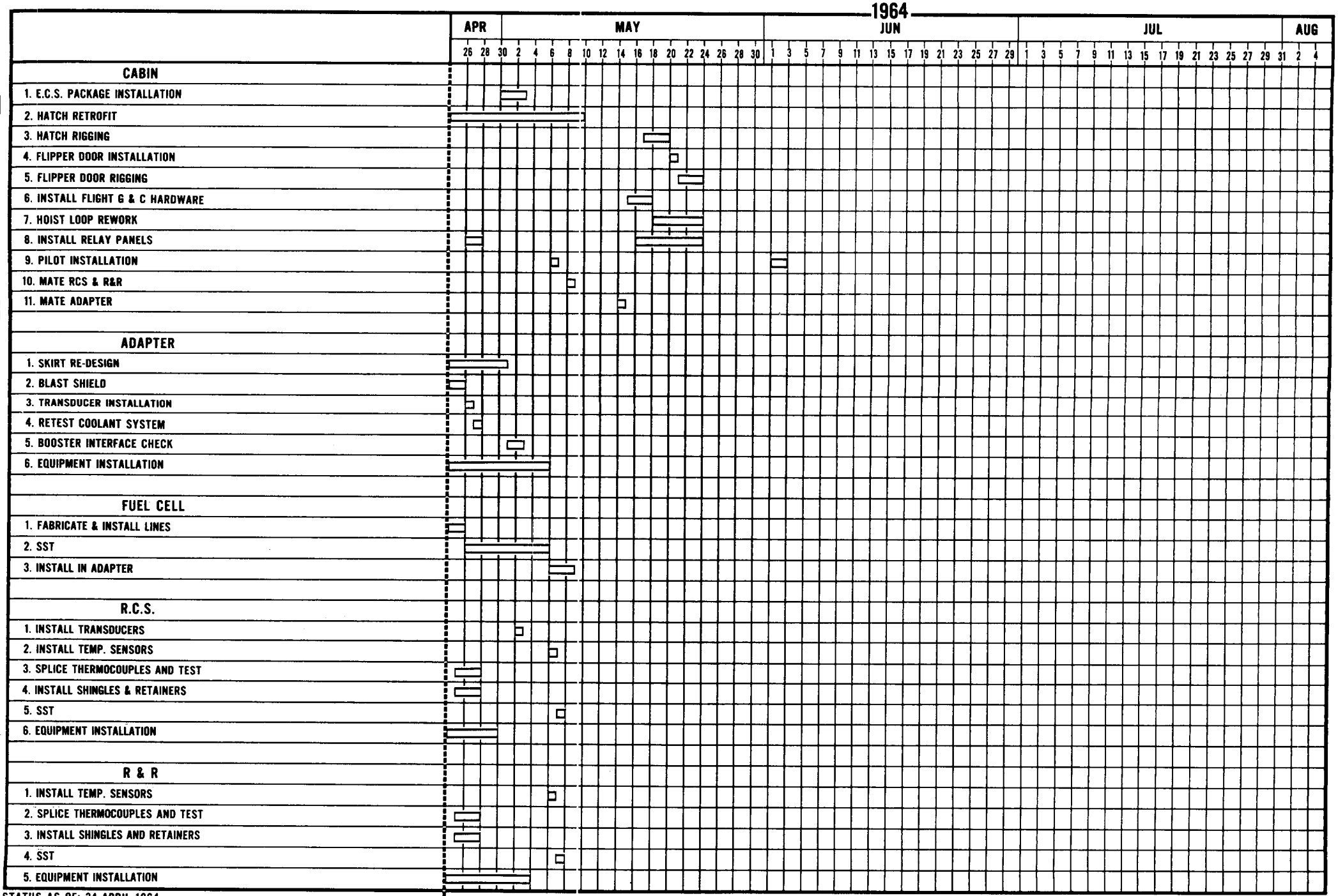

STATUS AS OF: 24 APRIL 1964

GEMINI ZONE CHART

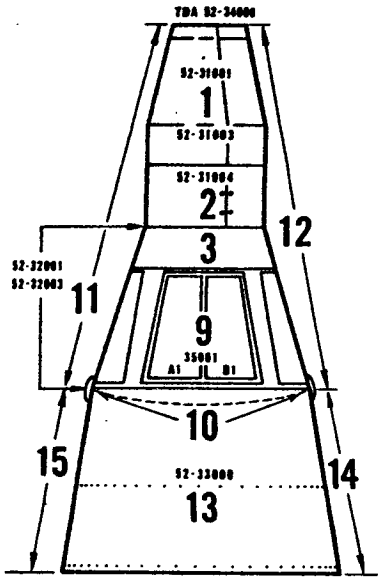

TOP VIEW

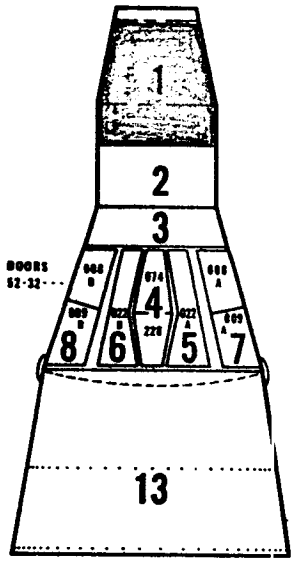

BOTTOM VIEW

1. RENDEZVOUS AND RADAR MODULE
2. RE-ENTRY RCS MODULE
3. FORWARD AREA CONE
4. CENTER EQUIPMENT BAY
5. L/H LANDING GEAR BAY
6. R/H LANDING GEAR BAY
7. L/H EQUIPMENT BAY
8. R/H EQUIPMENT BAY
9. CREW PRESSURIZED AREA
10. EXTERIOR AREA OF LARGE PRESS. BULKHEAD
11. SPACECRAFT EXTERIOR L/H
12. SPACECRAFT EXTERIOR R/H
13. INTERNAL ADAPTER AREA
14. R/H EXTERNAL ADAPTER AREA
15. L/H EXTERNAL ADAPTER AREA
16. ZONE FOR ENTIRE SPACECRAFT

GEMINI SPACECRAFT NO. 2

ZONE NO. 1

TOTAL EQUIPMENT REQUIRED 19

EQUIPMENT ON HAND 19

EQUIPMENT TO SCHEDULE 0

EQUIPMENT LATE 0

PART NO.	PART NAME	NORM. INST.	SLACK	DEF. INST.	SLACK	HOURS TO INSTALL
88721-127	TEMP SENSOR (1)	00001	-5	00002 A4	0	
-125	" " (2)	"	-5	"	0	

GEMINI ZONE CHART

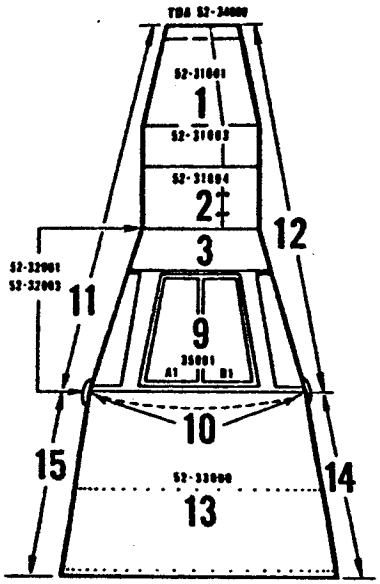

TOP VIEW

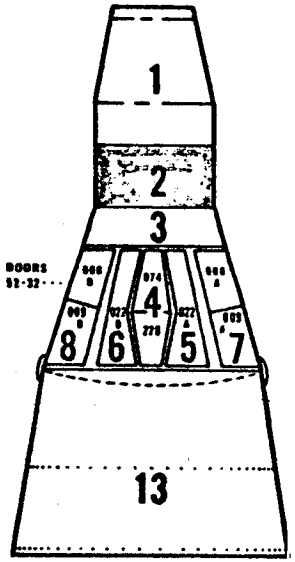

BOTTOM VIEW

1. RENDEZVOUS AND RADAR MODULE
2. RE-ENTRY RCS MODULE
3. FORWARD AREA CONE
4. CENTER EQUIPMENT BAY
5. L/H LANDING GEAR BAY
6. R/H LANDING GEAR BAY
7. L/H EQUIPMENT BAY
8. R/H EQUIPMENT BAY
9. CREW PRESSURIZED AREA
10. EXTERIOR AREA OF LARGE PRESS. BULKHEAD
11. SPACECRAFT EXTERIOR L/H
12. SPACECRAFT EXTERIOR R/H
13. INTERNAL ADAPTER AREA
14. R/H EXTERNAL ADAPTER AREA
15. L/H EXTERNAL ADAPTER AREA
16. ZONE FOR ENTIRE SPACECRAFT

GEMINI SPACECRAFT NO. 2

ZONE NO. 2

TOTAL EQUIPMENT REQUIRED 60

EQUIPMENT ON HAND 60

EQUIPMENT TO SCHEDULE 0

EQUIPMENT LATE 0

PART NO.	PART NAME	NORM. INST.	SLACK	DEF. INST.	SLACK	HOURS TO INSTALL
88721-127	TEMP SENSOR (1)	00001 DSEC	-6	00002 A4	0	
-123	" " (1)	"	-6	"	0	
-121	" " (3)	"	-5	"	+1	

4-23-4

GEMINI ZONE CHART

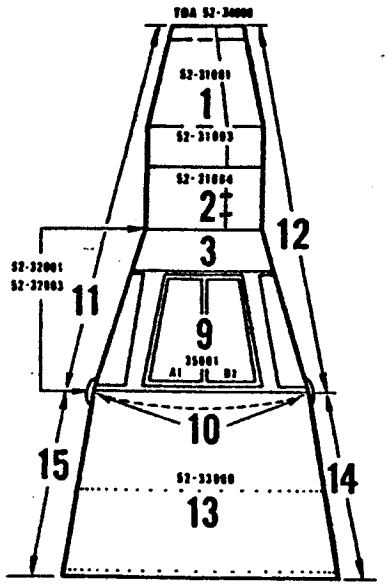

TOP VIEW

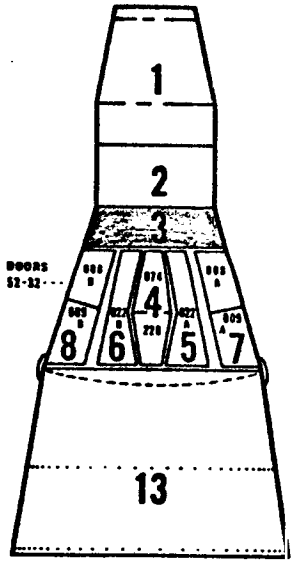

BOTTOM VIEW

1. RENDEZVOUS AND RADAR MODULE
2. RE-ENTRY RCS MODULE
3. FORWARD AREA CORE
4. CENTER EQUIPMENT BAY
5. L/H LANDING GEAR BAY
6. R/H LANDING GEAR BAY
7. L/H EQUIPMENT BAY
8. R/H EQUIPMENT BAY
9. CREW PRESSURIZED AREA
10. EXTERIOR AREA OF LARGE PRESS. BULKHEAD
11. SPACECRAFT EXTERIOR L/H
12. SPACECRAFT EXTERIOR R/H
13. INTERNAL ADAPTER AREA
14. R/H EXTERNAL ADAPTER AREA
15. L/H EXTERNAL ADAPTER AREA
16. ZONE FOR ENTIRE SPACECRAFT

GEMINI SPACECRAFT NO. 2

ZONE NO. 3

TOTAL EQUIPMENT REQUIRED 25

EQUIPMENT ON HAND 25

EQUIPMENT TO SCHEDULE 0

EQUIPMENT LATE 0

PART NO.	PART NAME	NORM. INST.	SLACK	DEF. INST.	SLACK	HOURS TO INSTALL

4-23-4

GEMINI ZONE CHART

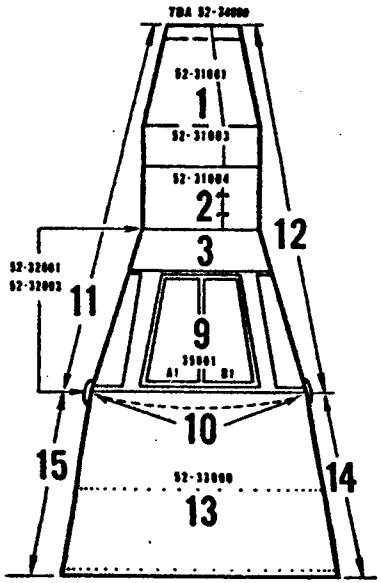

TOP VIEW

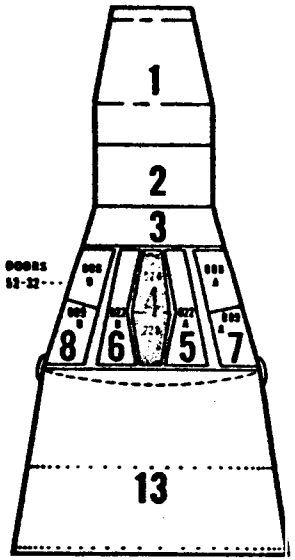

BOTTOM VIEW

1. RENDEZVOUS AND RADAR MODULE
2. RE-ENTRY RCS MODULE
3. FORWARD AREA CONE
4. CENTER EQUIPMENT BAY
5. L/H LANDING GEAR BAY
6. R/H LANDING GEAR BAY
7. L/H EQUIPMENT BAY
8. R/H EQUIPMENT BAY
9. CREW PRESSURIZED AREA
10. EXTERIOR AREA OF LARGE PRESS. BULKHEAD
11. SPACECRAFT EXTERIOR L/H
12. SPACECRAFT EXTERIOR R/H
13. INTERNAL ADAPTER AREA
14. R/H EXTERNAL ADAPTER AREA
15. L/H EXTERNAL ADAPTER AREA
16. ZONE FOR ENTIRE SPACECRAFT

GEMINI SPACECRAFT NO. 2

ZONE NO. 4

TOTAL EQUIPMENT REQUIRED 10

EQUIPMENT ON HAND 10

EQUIPMENT TO SCHEDULE 0

EQUIPMENT LATE 0

PART NO.	PART NAME	NORM. INST.	SLACK	DEF. INST.	SLACK	HOURS TO INSTALL

4-23-4

GEMINI ZONE CHART

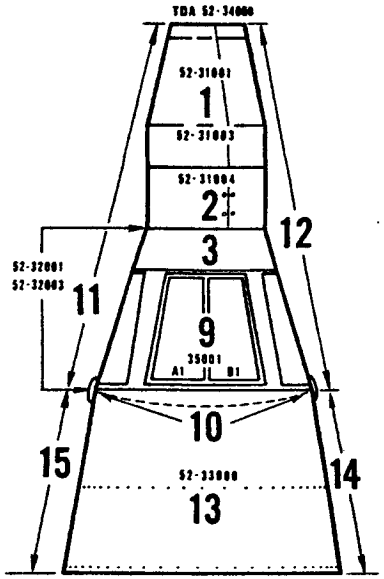

TOP VIEW

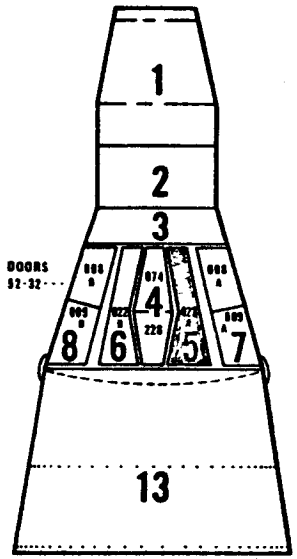

BOTTOM VIEW

1. RENDEZVOUS AND RADAR MODULE
2. RE-ENTRY RCS MODULE
3. FORWARD AREA CONE
4. CENTER EQUIPMENT BAY
5. L/H LANDING GEAR BAY
6. R/H LANDING GEAR BAY
7. L/H EQUIPMENT BAY
8. R/H EQUIPMENT BAY
9. CREW PRESSURIZED AREA
10. EXTERIOR AREA OF LARGE PRESS. BULKHEAD
11. SPACECRAFT EXTERIOR L/H
12. SPACECRAFT EXTERIOR R/H
13. INTERNAL ADAPTER AREA
14. R/H EXTERNAL ADAPTER AREA
15. L/H EXTERNAL ADAPTER AREA
16. ZONE FOR ENTIRE SPACECRAFT

GEMINI SPACECRAFT NO. 2

ZONE NO. 5

TOTAL EQUIPMENT REQUIRED 10

EQUIPMENT ON HAND 10

EQUIPMENT TO SCHEDULE 0

EQUIPMENT LATE 0

PART NO.	PART NAME	NORM. INST.	SLACK	DEF. INST.	SLACK	HOURS TO INSTALL

4-23-4

GEMINI ZONE CHART

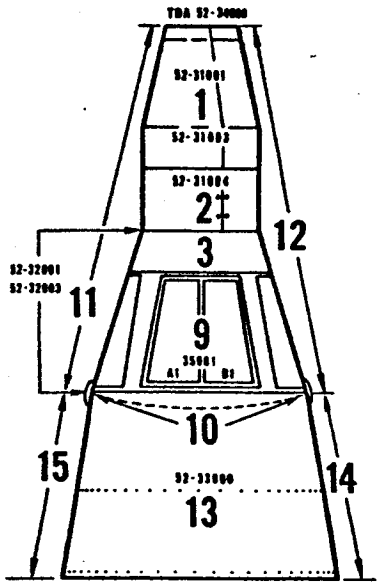

TOP VIEW

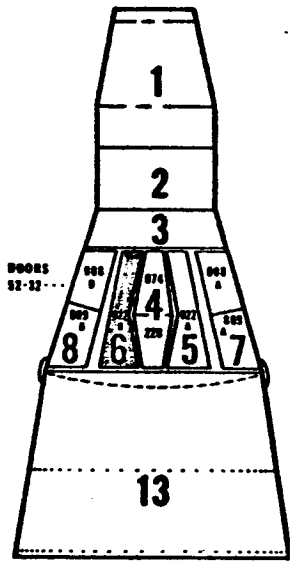

BOTTOM VIEW

1. RENDEZVOUS AND RADAR MODULE
2. RE-ENTRY RCS MODULE
3. FORWARD AREA CONE
4. CENTER EQUIPMENT BAY
5. L/H LANDING GEAR BAY
6. R/H LANDING GEAR BAY
7. L/H EQUIPMENT BAY
8. R/H EQUIPMENT BAY
9. CREW PRESSURIZED AREA
10. EXTERIOR AREA OF LARGE PRESS. BULKHEAD
11. SPACECRAFT EXTERIOR L/H
12. SPACECRAFT EXTERIOR R/H
13. INTERNAL ADAPTER AREA
14. R/H EXTERNAL ADAPTER AREA
15. L/H EXTERNAL ADAPTER AREA
16. ZONE FOR ENTIRE SPACECRAFT

GEMINI SPACECRAFT NO. 2

ZONE NO. 6

TOTAL EQUIPMENT REQUIRED 7

EQUIPMENT ON HAND 7

EQUIPMENT TO SCHEDULE 0

EQUIPMENT LATE 0

PART NO.	PART NAME	NORM. INST.	SLACK	DEF. INST.	SLACK	HOURS TO INSTALL

4-23-4

GEMINI ZONE CHART

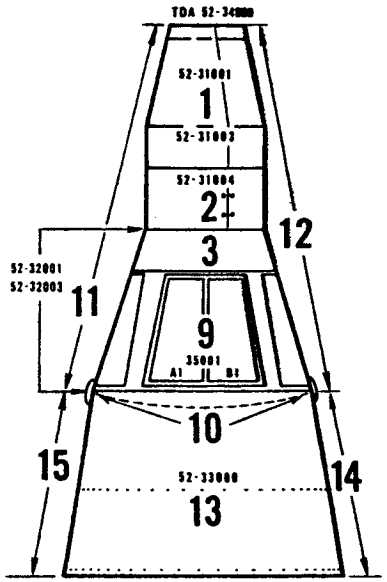

TOP VIEW

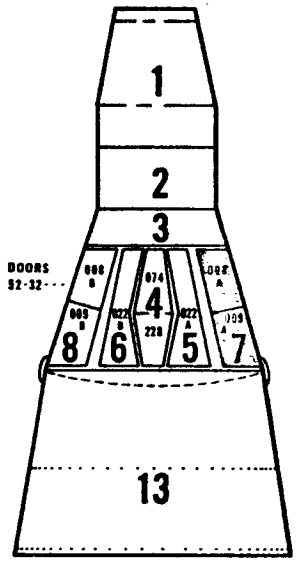

BOTTOM VIEW

1. RENDEZVOUS AND RADAR MODULE
2. RE-ENTRY RCS MODULE
3. FORWARD AREA CONE
4. CENTER EQUIPMENT BAY
5. L/H LANDING GEAR BAY
6. R/H LANDING GEAR BAY
7. L/H EQUIPMENT BAY
8. R/H EQUIPMENT BAY
9. CREW PRESSURIZED AREA
10. EXTERIOR AREA OF LARGE PRESS. BULKHEAD
11. SPACECRAFT EXTERIOR L/H
12. SPACECRAFT EXTERIOR R/H
13. INTERNAL ADAPTER AREA
14. R/H EXTERNAL ADAPTER AREA
15. L/H EXTERNAL ADAPTER AREA
16. ZONE FOR ENTIRE SPACECRAFT

GEMINI SPACECRAFT NO. 2

ZONE NO. 7

TOTAL EQUIPMENT REQUIRED 26

EQUIPMENT ON HAND 22

EQUIPMENT TO SCHEDULE 0

EQUIPMENT LATE 4

	PART NO.	PART NAME	NORM. INST.	SLACK	DEF. INST.	SLACK	HOURS TO INSTALL
52	87717-23	Power Supply (1)	00005 A2	-24	00002 A2	0	2
	" -35	IGS Sys. Elec. (1)	"	-24	"	0	2
	87710-7	Computer (1)	"	-24	"	0	2
	88721-127	TEMP SENSOR (1)	00001 DSCC	-6	"	0	

4-23-4

GEMINI ZONE CHART

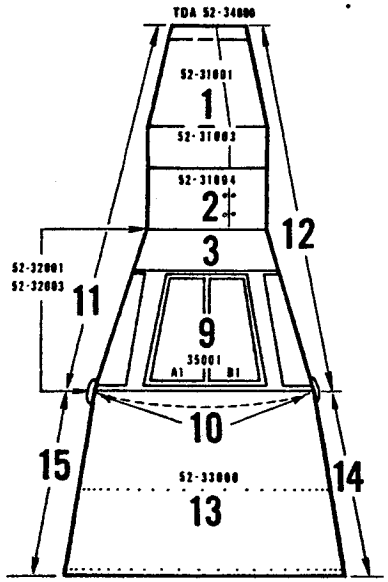

TOP VIEW

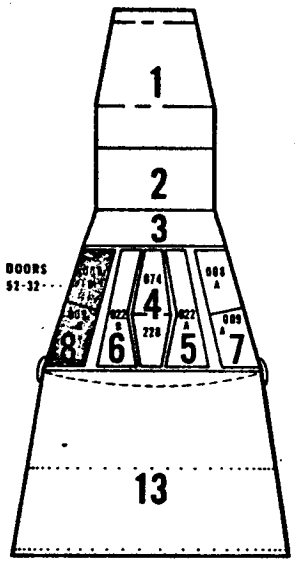

BOTTOM VIEW

1. RENDEZVOUS AND RADAR MODULE
2. RE-ENTRY RCS MODULE
3. FORWARD AREA CONE
4. CENTER EQUIPMENT BAY
5. L/H LANDING GEAR BAY
6. R/H LANDING GEAR BAY
7. L/H EQUIPMENT BAY
8. R/H EQUIPMENT BAY
9. CREW PRESSURIZED AREA
10. EXTERIOR AREA OF LARGE PRESS. BULKHEAD
11. SPACECRAFT EXTERIOR L/H
12. SPACECRAFT EXTERIOR R/H
13. INTERNAL ADAPTER AREA
14. R/H EXTERNAL ADAPTER AREA
15. L/H EXTERNAL ADAPTER AREA
16. ZONE FOR ENTIRE SPACECRAFT

GEMINI SPACECRAFT NO. 2

ZONE NO. 8

TOTAL EQUIPMENT REQUIRED 31

EQUIPMENT ON HAND 27

EQUIPMENT TO SCHEDULE 0

EQUIPMENT LATE 4

PART NO.	PART NAME	NORM. INST.	SLACK	DEF. INST.	SLACK	HOURS TO INSTALL
85713-83	PROGRAMMER	00005 A3	-21	00002 A4	+3	2
85713-85	L.L. MULTIPLEXER	00005 A3	-21	00002 A4	+2	2
85713-87	H.L. MULTIPLEXER	00005 A3	-21	00002 A4	+2	2
88721-127	TEMP SENSOR (4)	0000 DSC				

4-23-4

GEMINI ZONE CHART

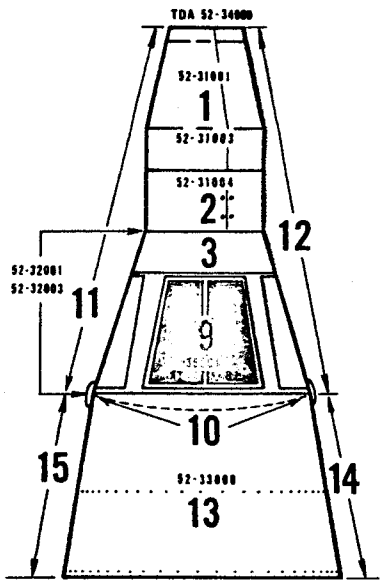

TOP VIEW

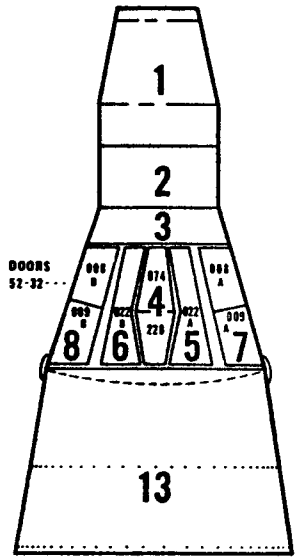

BOTTOM VIEW

1. RENDEZVOUS AND RADAR MODULE
2. RE-ENTRY RCS MODULE
3. FORWARD AREA CONE
4. CENTER EQUIPMENT BAY
5. L/H LANDING GEAR BAY
6. R/H LANDING GEAR BAY
7. L/H EQUIPMENT BAY
8. R/H EQUIPMENT BAY
9. CREW PRESSURIZED AREA
10. EXTERIOR AREA OF LARGE PRESS. BULKHEAD
11. SPACECRAFT EXTERIOR L/H
12. SPACECRAFT EXTERIOR R/H
13. INTERNAL ADAPTER AREA
14. R/H EXTERNAL ADAPTER AREA
15. L/H EXTERNAL ADAPTER AREA
16. ZONE FOR ENTIRE SPACECRAFT

GEMINI SPACECRAFT NO. 2

ZONE NO. 9

TOTAL EQUIPMENT REQUIRED 85

EQUIPMENT ON HAND 85

EQUIPMENT TO SCHEDULE 0

EQUIPMENT LATE 0

PART NO.	PART NAME	NORM. INST.	SLACK	DEF. INST.	SLACK	HOURS TO INSTALL
72711-23	CART HOUSING	00005 A4	-31	00002 A4	0	

4-23-4

GEMINI ZONE CHART

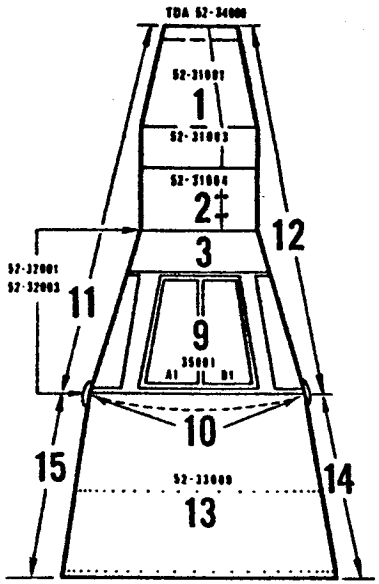

TOP VIEW

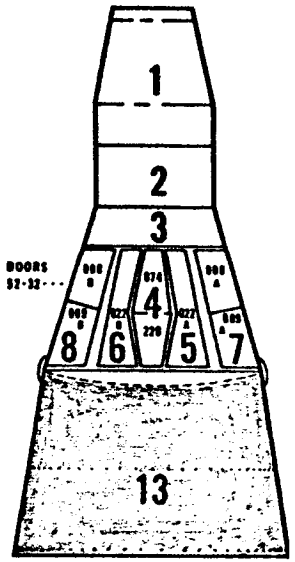

BOTTOM VIEW

1. RENDEZVOUS AND RADAR MODULE
2. RE-ENTRY RCS MODULE
3. FORWARD AREA CONE
4. CENTER EQUIPMENT BAY
5. L/H LANDING GEAR BAY
6. R/H LANDING GEAR BAY
7. L/H EQUIPMENT BAY
8. R/H EQUIPMENT BAY
9. CREW PRESSURIZED AREA
10. EXTERIOR AREA OF LARGE PRESS. BULKHEAD
11. SPACECRAFT EXTERIOR L/H
12. SPACECRAFT EXTERIOR R/H
13. INTERNAL ADAPTER AREA
14. R/H EXTERNAL ADAPTER AREA
15. L/H EXTERNAL ADAPTER AREA
16. ZONE FOR ENTIRE SPACECRAFT

GEMINI SPACECRAFT NO. 2

ZONE NO. 13

TOTAL EQUIPMENT REQUIRED 51

EQUIPMENT ON HAND 49

EQUIPMENT TO SCHEDULE 0

EQUIPMENT LATE 2

PART NO.	PART NAME	NORM. INST.	SLACK	DEF. INST.	SLACK	HOURS TO INSTALL
88721-117	TEMP SENSOR	00001 DSQ	-3	00002 A4	+2	
-119	" "	"	-4	"	+1	

4-23-4

GEMINI ZONE CHART

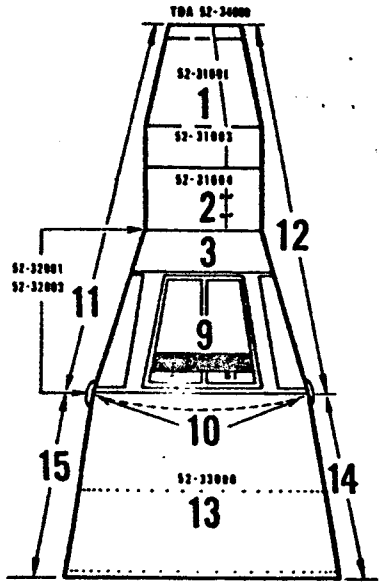

TOP VIEW

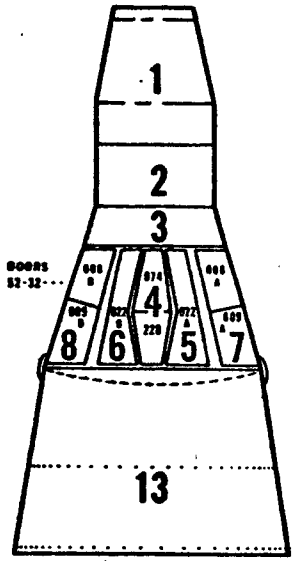

BOTTOM VIEW

1. RENDEZVOUS AND RADAR MODULE
2. RE-ENTRY RCS MODULE
3. FORWARD AREA CONE
4. CENTER EQUIPMENT BAY
5. L/H LANDING GEAR BAY
6. R/H LANDING GEAR BAY
7. L/H EQUIPMENT BAY
8. R/H EQUIPMENT BAY
9. CREW PRESSURIZED AREA
10. EXTERIOR AREA OF LARGE PRESS. BULKHEAD
11. SPACECRAFT EXTERIOR L/H
12. SPACECRAFT EXTERIOR R/H
13. INTERNAL ADAPTER AREA
14. R/H EXTERNAL ADAPTER AREA
15. L/H EXTERNAL ADAPTER AREA
16. ZONE FOR ENTIRE SPACECRAFT

GEMINI SPACECRAFT NO. 2

ZONE NO. PEDESTAL

TOTAL EQUIPMENT REQUIRED 15

EQUIPMENT ON HAND 15

EQUIPMENT TO SCHEDULE 0

EQUIPMENT LATE 0

PART NO.	PART NAME	NORM. INST.	SLACK	DEF. INST.	SLACK	HOURS TO INSTALL

4-23-4

GEMINI ZONE CHART

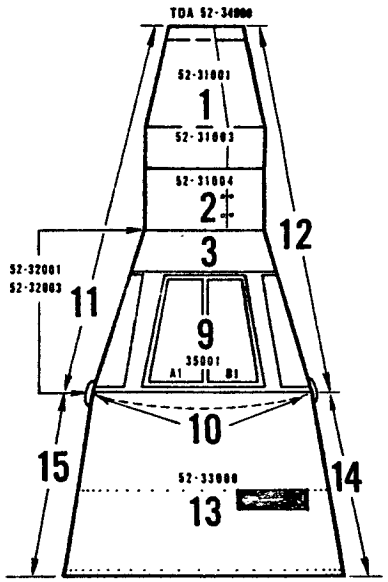

TOP VIEW

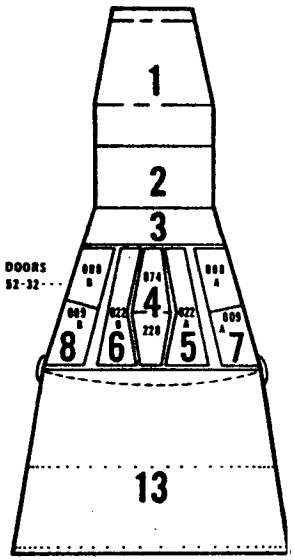

BOTTOM VIEW

1. RENDEZVOUS AND RADAR MODULE
2. RE-ENTRY RCS MODULE
3. FORWARD AREA CONE
4. CENTER EQUIPMENT BAY
5. L/H LANDING GEAR BAY
6. R/H LANDING GEAR BAY
7. L/H EQUIPMENT BAY
8. R/H EQUIPMENT BAY
9. CREW PRESSURIZED AREA
10. EXTERIOR AREA OF LARGE PRESS. BULKHEAD
11. SPACECRAFT EXTERIOR L/H
12. SPACECRAFT EXTERIOR R/H
13. INTERNAL ADAPTER AREA
14. R/H EXTERNAL ADAPTER AREA
15. L/H EXTERNAL ADAPTER AREA
16. ZONE FOR ENTIRE SPACECRAFT

GEMINI SPACECRAFT NO. 2

ZONE NO. Elec. Mod

TOTAL EQUIPMENT REQUIRED 21

EQUIPMENT ON HAND 19

EQUIPMENT TO SCHEDULE 0

EQUIPMENT LATE 2

	PART NO.	PART NAME	NORM. INST.	SLACK	DEF. INST.	SLACK	HOURS TO INSTALL
52	85713-87	H.L. Multiplexer	00001 DSCC	-21	00002 AF	+3	2
	" -85	L.L. "	"	-21	"	+3	2

4-23-4

GEMINI ZONE CHART

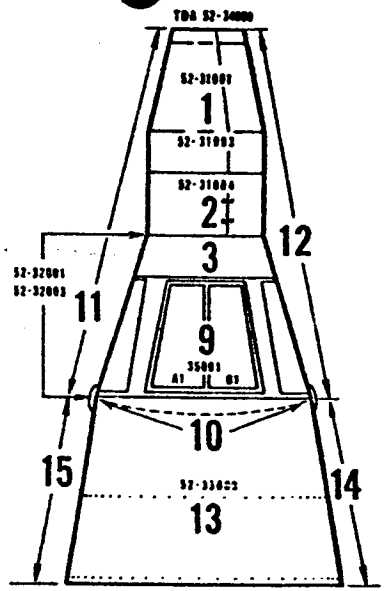

TOP VIEW

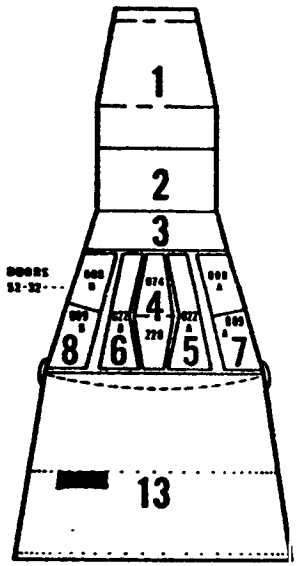

BOTTOM VIEW

1. RENDEZVOUS AND RADAR MODULE
2. RE-ENTRY RCS MODULE
3. FORWARD AREA CONE
4. CENTER EQUIPMENT BAY
5. L/H LANDING GEAR BAY
6. R/H LANDING GEAR BAY
7. L/H EQUIPMENT BAY
8. R/H EQUIPMENT BAY
9. CREW PRESSURIZED AREA
10. EXTERIOR AREA OF LARGE PRESS. BULKHEAD
11. SPACECRAFT EXTERIOR L/H
12. SPACECRAFT EXTERIOR R/H
13. INTERNAL ADAPTER AREA
14. R/H EXTERNAL ADAPTER AREA
15. L/H EXTERNAL ADAPTER AREA
16. ZONE FOR ENTIRE SPACECRAFT

GEMINI SPACECRAFT NO. 2

ZONE NO. ECS O2 MODULE

TOTAL EQUIPMENT REQUIRED 5

EQUIPMENT ON HAND 5

EQUIPMENT TO SCHEDULE 0

EQUIPMENT LATE 0

PART NO.	PART NAME	NORM. INST.	SLACK	DEF. INST.	SLACK	HOURS TO INSTALL

4-23-4

GEMINI ZONE CHART

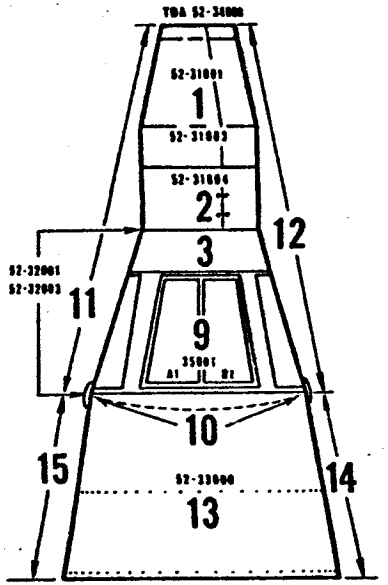

TOP VIEW

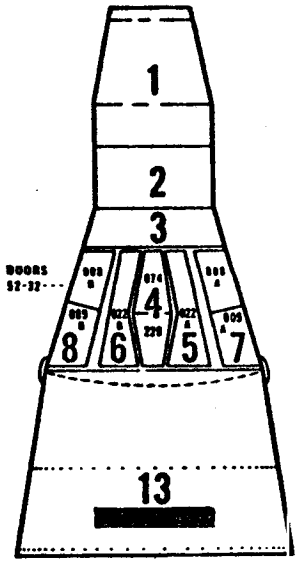

BOTTOM VIEW

1. RENDEZVOUS AND RADAR MODULE
2. RE-ENTRY RCS MODULE
3. FORWARD AREA CONE
4. CENTER EQUIPMENT BAY
5. L/H LANDING GEAR BAY
6. R/H LANDING GEAR BAY
7. L/H EQUIPMENT BAY
8. R/H EQUIPMENT BAY
9. CREW PRESSURIZED AREA
10. EXTERIOR AREA OF LARGE PRESS. BULKHEAD
11. SPACECRAFT EXTERIOR L/H
12. SPACECRAFT EXTERIOR R/H
13. INTERNAL ADAPTER AREA
14. R/H EXTERNAL ADAPTER AREA
15. L/H EXTERNAL ADAPTER AREA
16. ZONE FOR ENTIRE SPACECRAFT

GEMINI SPACECRAFT NO. 2

ZONE NO. OAMS MODULE

TOTAL EQUIPMENT REQUIRED 21

EQUIPMENT ON HAND 21

EQUIPMENT TO SCHEDULE 0

EQUIPMENT LATE 0

PART NO.	PART NAME	NORM. INST.	SLACK	DEF. INST.	SLACK	HOURS TO INSTALL

4-23-4

GEMINI ZONE CHART

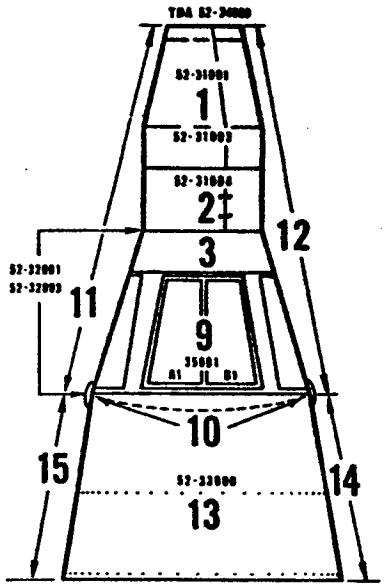

TOP VIEW

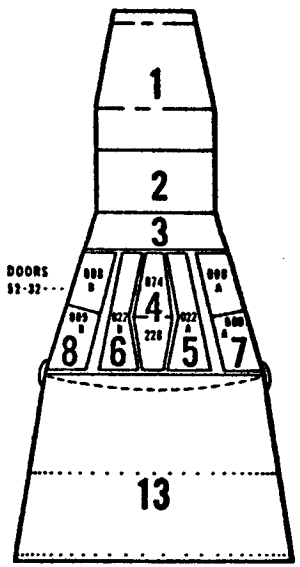

BOTTOM VIEW

1. RENDEZVOUS AND RADAR MODULE
2. RE-ENTRY RCS MODULE
3. FORWARD AREA CONE
4. CENTER EQUIPMENT BAY
5. L/H LANDING GEAR BAY
6. R/H LANDING GEAR BAY
7. L/H EQUIPMENT BAY
8. R/H EQUIPMENT BAY
9. CREW PRESSURIZED AREA
10. EXTERIOR AREA OF LARGE PRESS. BULKHEAD
11. SPACECRAFT EXTERIOR L/H
12. SPACECRAFT EXTERIOR R/H
13. INTERNAL ADAPTER AREA
14. R/H EXTERNAL ADAPTER AREA
15. L/H EXTERNAL ADAPTER AREA
16. ZONE FOR ENTIRE SPACECRAFT

GEMINI SPACECRAFT NO. 2

ZONE NO. PALLET "A" L/H

TOTAL EQUIPMENT REQUIRED 7

EQUIPMENT ON HAND 7

EQUIPMENT TO SCHEDULE 0

EQUIPMENT LATE 0

PART NO.	PART NAME	NORM. INST.	SLACK	DEF. INST.	SLACK	HOURS TO INSTALL

4-23-4

GEMINI ZONE CHART

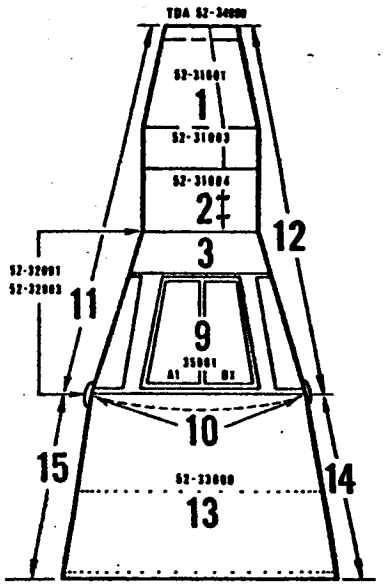

TOP VIEW

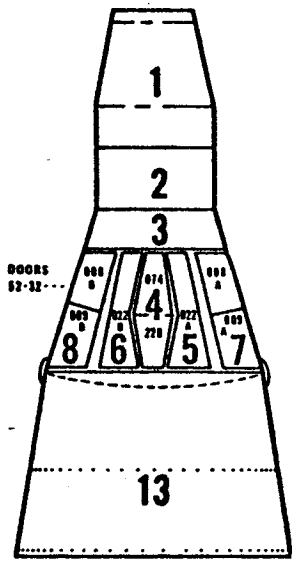

BOTTOM VIEW

1. RENDEZVOUS AND RADAR MODULE
2. RE-ENTRY RCS MODULE
3. FORWARD AREA CONE
4. CENTER EQUIPMENT BAY
5. L/H LANDING GEAR BAY
6. R/H LANDING GEAR BAY
7. L/H EQUIPMENT BAY
8. R/H EQUIPMENT BAY
9. CREW PRESSURIZED AREA
10. EXTERIOR AREA OF LARGE PRESS. BULKHEAD
11. SPACECRAFT EXTERIOR L/H
12. SPACECRAFT EXTERIOR R/H
13. INTERNAL ADAPTER AREA
14. R/H EXTERNAL ADAPTER AREA
15. L/H EXTERNAL ADAPTER AREA
16. ZONE FOR ENTIRE SPACECRAFT

GEMINI SPACECRAFT NO. 2

ZONE NO. PALLET "B" R/H

TOTAL EQUIPMENT REQUIRED 9

EQUIPMENT ON HAND 9

EQUIPMENT TO SCHEDULE 0

EQUIPMENT LATE 0

PART NO.	PART NAME	NORM. INST.	SLACK	DEF. INST.	SLACK	HOURS TO INSTALL

GEMINI ZONE CHART

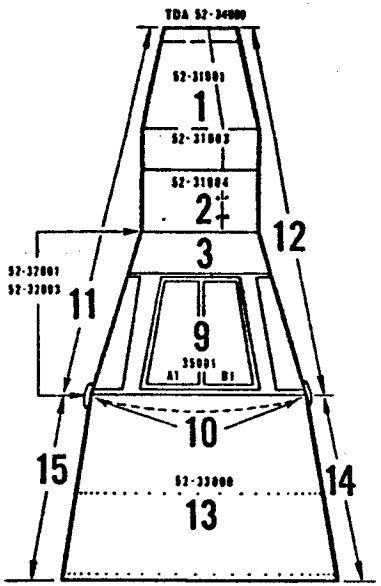

TOP VIEW

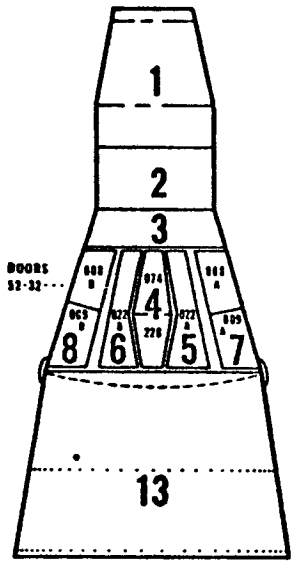

BOTTOM VIEW

1. RENDEZVOUS AND RADAR MODULE
2. RE-ENTRY RCS MODULE
3. FORWARD AREA CONE
4. CENTER EQUIPMENT BAY
5. L/H LANDING GEAR BAY
6. R/H LANDING GEAR BAY
7. L/H EQUIPMENT BAY
8. R/H EQUIPMENT BAY
9. CREW PRESSURIZED AREA
10. EXTERIOR AREA OF LARGE PRESS. BULKHEAD
11. SPACECRAFT EXTERIOR L/H
12. SPACECRAFT EXTERIOR R/H
13. INTERNAL ADAPTER AREA
14. R/H EXTERNAL ADAPTER AREA
15. L/H EXTERNAL ADAPTER AREA
16. ZONE FOR ENTIRE SPACECRAFT

GEMINI SPACECRAFT NO. 2

ZONE NO. PALLET "A" R/H

TOTAL EQUIPMENT REQUIRED 8

EQUIPMENT ON HAND 8

EQUIPMENT TO SCHEDULE 0

EQUIPMENT LATE 0

PART NO.	PART NAME	NORM. INST.	SLACK	DEF. INST.	SLACK	HOURS TO INSTALL

GEMINI ZONE CHART

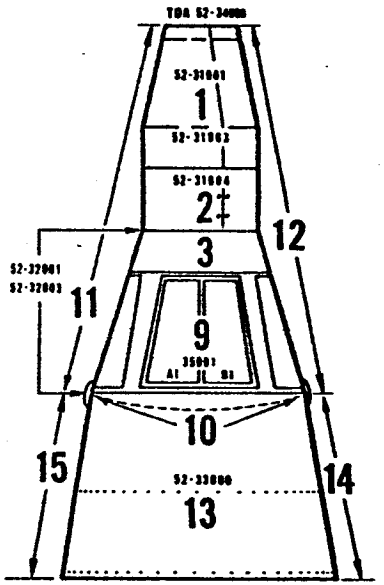

TOP VIEW

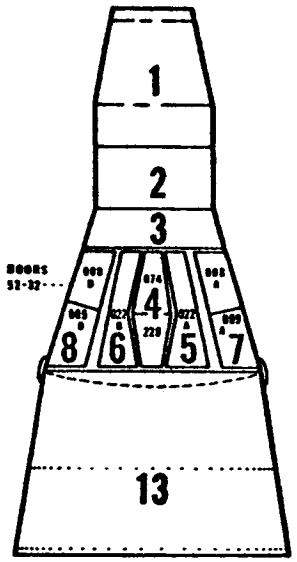

BOTTOM VIEW

1. RENDEZVOUS AND RADAR MODULE
2. RE-ENTRY RCS MODULE
3. FORWARD AREA CONE
4. CENTER EQUIPMENT BAY
5. L/H LANDING GEAR BAY
6. R/H LANDING GEAR BAY
7. L/H EQUIPMENT BAY
8. R/H EQUIPMENT BAY
9. CREW PRESSURIZED AREA
10. EXTERIOR AREA OF LARGE PRESS. BULKHEAD
11. SPACECRAFT EXTERIOR L/H
12. SPACECRAFT EXTERIOR R/H
13. INTERNAL ADAPTER AREA
14. R/H EXTERNAL ADAPTER AREA
15. L/H EXTERNAL ADAPTER AREA
16. ZONE FOR ENTIRE SPACECRAFT

GEMINI SPACECRAFT NO. 2

ZONE NO. PALLET "B" L/H

TOTAL EQUIPMENT REQUIRED 13

EQUIPMENT ON HAND 13

EQUIPMENT TO SCHEDULE 0

EQUIPMENT LATE 0

PART NO.	PART NAME	NORM. INST.	SLACK	DEF. INST.	SLACK	HOURS TO INSTALL

4-23-4

GEMINI ZONE CHART

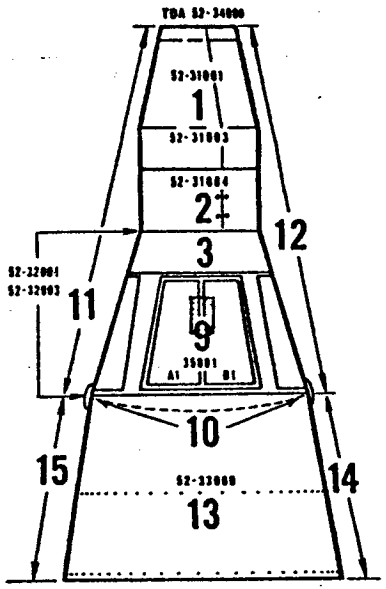

TOP VIEW

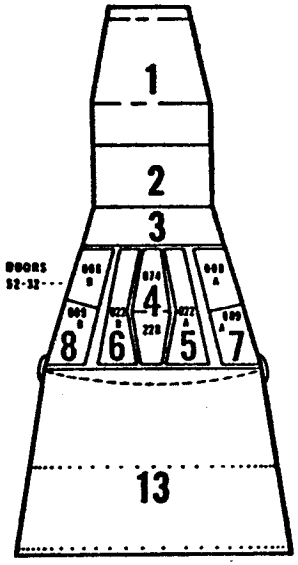

BOTTOM VIEW

1. RENDEZVOUS AND RADAR MODULE
2. RE-ENTRY RCS MODULE
3. FORWARD AREA CONE
4. CENTER EQUIPMENT BAY
5. L/H LANDING GEAR BAY
6. R/H LANDING GEAR BAY
7. L/H EQUIPMENT BAY
8. R/H EQUIPMENT BAY
9. CREW PRESSURIZED AREA
10. EXTERIOR AREA OF LARGE PRESS. BULKHEAD
11. SPACECRAFT EXTERIOR L/H
12. SPACECRAFT EXTERIOR R/H
13. INTERNAL ADAPTER AREA
14. R/H EXTERNAL ADAPTER AREA
15. L/H EXTERNAL ADAPTER AREA
16. ZONE FOR ENTIRE SPACECRAFT

GEMINI SPACECRAFT NO. 2

ZONE NO. 9

81000 03
UPPER M.I.P.

TOTAL EQUIPMENT REQUIRED 46

EQUIPMENT ON HAND 46

EQUIPMENT TO SCHEDULE 0

EQUIPMENT LATE 0

PART NO.	PART NAME	NORM. INST.	SLACK	DEF. INST.	SLACK	HOURS TO INSTALL

2-23-4

GEMINI ZONE CHART

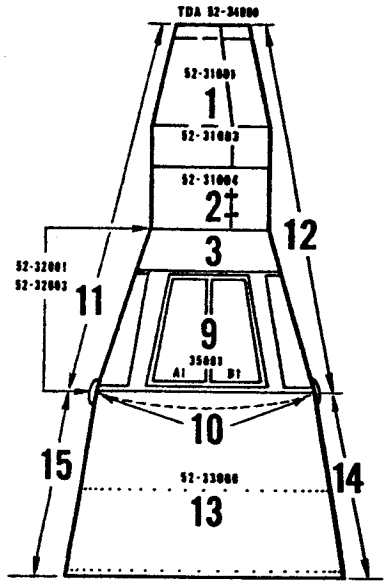

TOP VIEW

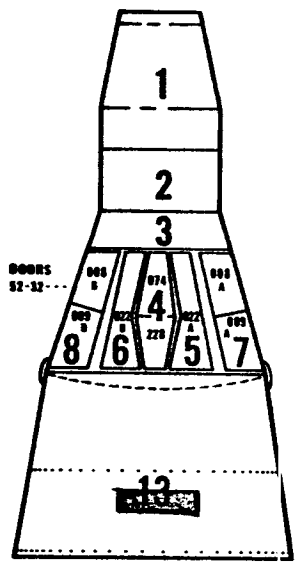

BOTTOM VIEW

1. RENDEZVOUS AND RADAR MODULE
2. RE-ENTRY RCS MODULE
3. FORWARD AREA CONE
4. CENTER EQUIPMENT BAY
5. L/H LANDING GEAR BAY
6. R/H LANDING GEAR BAY
7. L/H EQUIPMENT BAY
8. R/H EQUIPMENT BAY
9. CREW PRESSURIZED AREA
10. EXTERIOR AREA OF LARGE PRESS. BULKHEAD
11. SPACECRAFT EXTERIOR L/H
12. SPACECRAFT EXTERIOR R/H
13. INTERNAL ADAPTER AREA
14. R/H EXTERNAL ADAPTER AREA
15. L/H EXTERNAL ADAPTER AREA
16. ZONE FOR ENTIRE SPACECRAFT

GEMINI SPACECRAFT NO. 2

ZONE NO. FUEL CELL

TOTAL EQUIPMENT REQUIRED 35

EQUIPMENT ON HAND 35

EQUIPMENT TO SCHEDULE 0

EQUIPMENT LATE 0

PART NO.	PART NAME	NORM. INST.	SLACK	DEF. INST.	SLACK	HOURS TO INSTALL

4-23-4

GEMINI ZONE CHART

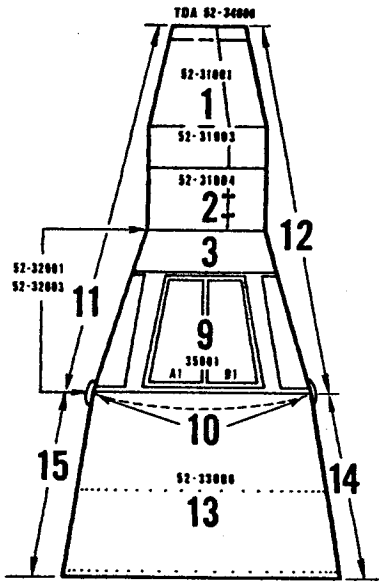

TOP VIEW

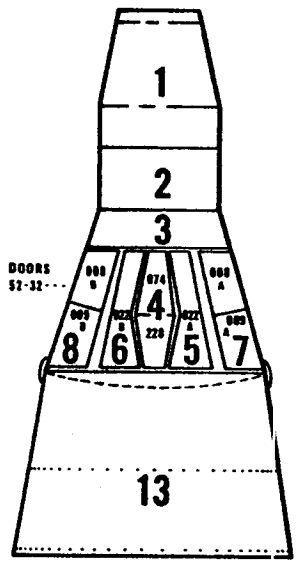

BOTTOM VIEW

1. RENDEZVOUS AND RADAR MODULE
2. RE-ENTRY RCS MODULE
3. FORWARD AREA CONE
4. CENTER EQUIPMENT BAY
5. L/H LANDING GEAR BAY
6. R/H LANDING GEAR BAY
7. L/H EQUIPMENT BAY
8. R/H EQUIPMENT BAY
9. CREW PRESSURIZED AREA
10. EXTERIOR AREA OF LARGE PRESS. BULKHEAD
11. SPACECRAFT EXTERIOR L/H
12. SPACECRAFT EXTERIOR R/H
13. INTERNAL ADAPTER AREA
14. R/H EXTERNAL ADAPTER AREA
15. L/H EXTERNAL ADAPTER AREA
16. ZONE FOR ENTIRE SPACECRAFT

GEMINI SPACECRAFT NO. 2

ZONE NO. ECS O_2 PUMP

TOTAL EQUIPMENT REQUIRED 27

EQUIPMENT ON HAND 27

EQUIPMENT TO SCHEDULE 0

EQUIPMENT LATE 0

PART NO.	PART NAME	NORM. INST.	SLACK	DEF. INST.	SLACK	HOURS TO INSTALL

4-23-4

GEMINI ZONE CHART

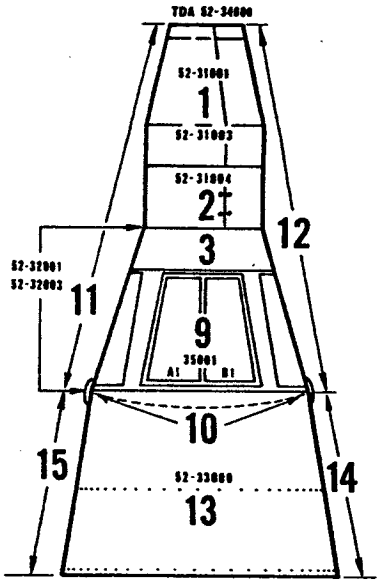

TOP VIEW

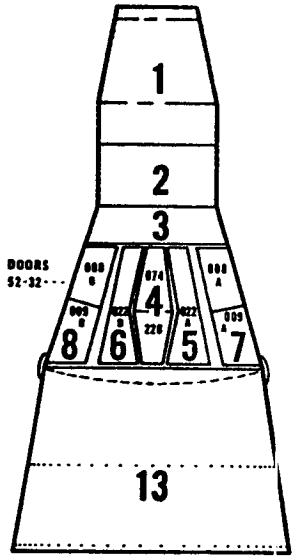

BOTTOM VIEW

1. RENDEZVOUS AND RADAR MODULE
2. RE-ENTRY RCS MODULE
3. FORWARD AREA CONE
4. CENTER EQUIPMENT BAY
5. L/H LANDING GEAR BAY
6. R/H LANDING GEAR BAY
7. L/H EQUIPMENT BAY
8. R/H EQUIPMENT BAY
9. CREW PRESSURIZED AREA
10. EXTERIOR AREA OF LARGE PRESS. BULKHEAD
11. SPACECRAFT EXTERIOR L/H
12. SPACECRAFT EXTERIOR R/H
13. INTERNAL ADAPTER AREA
14. R/H EXTERNAL ADAPTER AREA
15. L/H EXTERNAL ADAPTER AREA
16. ZONE FOR ENTIRE SPACECRAFT

GEMINI SPACECRAFT NO. 2

ZONE NO. 9-81000-501 4/H M.I.P.

TOTAL EQUIPMENT REQUIRED 23

EQUIPMENT ON HAND 22

EQUIPMENT TO SCHEDULE 0

EQUIPMENT LATE 1

	PART NO.	PART NAME	NORM. INST.	SLACK	DEF. INST.	SLACK	HOURS TO INSTALL
52	87712-5	Increment Vel. Ind.	81000-501	-23	00002 A2	0	2

4-23-4

GEMINI ZONE CHART

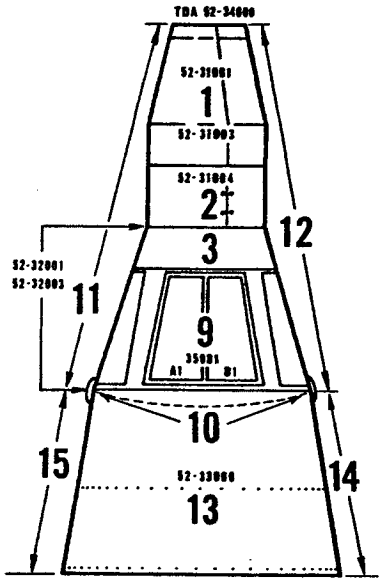

TOP VIEW

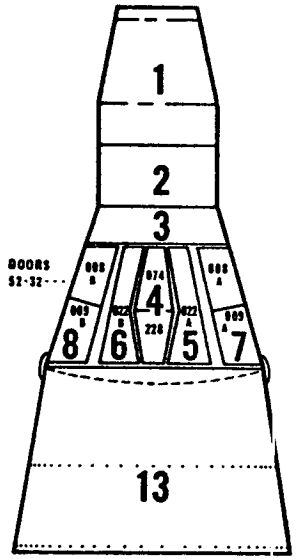

BOTTOM VIEW

1. RENDEZVOUS AND RADAR MODULE
2. RE-ENTRY RCS MODULE
3. FORWARD AREA CONE
4. CENTER EQUIPMENT BAY
5. L/H LANDING GEAR BAY
6. R/H LANDING GEAR BAY
7. L/H EQUIPMENT BAY
8. R/H EQUIPMENT BAY
9. CREW PRESSURIZED AREA
10. EXTERIOR AREA OF LARGE PRESS. BULKHEAD
11. SPACECRAFT EXTERIOR L/H
12. SPACECRAFT EXTERIOR R/H
13. INTERNAL ADAPTER AREA
14. R/H EXTERNAL ADAPTER AREA
15. L/H EXTERNAL ADAPTER AREA
16. ZONE FOR ENTIRE SPACECRAFT

GEMINI SPACECRAFT NO. 2

ZONE NO. 9-81000-502 R/H M.I.P.

TOTAL EQUIPMENT REQUIRED 23

EQUIPMENT ON HAND 20

EQUIPMENT TO SCHEDULE 0

EQUIPMENT LATE 3

	PART NO.	PART NAME	NORM. INST.	SLACK	DEF. INST.	SLACK	HOURS TO INSTALL
52	877113-7	Manu. Data Key Board	81000-502	-23	00002 A1	0	4
	" -9	" " Readout	"	-23	"	0	2
	J05A0002	Clock	"	-23	"	0	1

4-23-4

SUBJECT: GEMINI STATUS REPORT FOR THE PERIOD ENDING 24 APRIL 1964 - SPACECRAFT NUMBER TWO

RECAPITULATION

Cabin

During this reporting period, the Upper and Lower Main Instrument Panels were installed. Cabin interior shakedown for NASA/MAC Inspection was performed. The Spacecraft was rotated, cleaned and moved into the Screen Room. Final installation of the Heat Shield to the Cabin was accomplished this period. The T/M Transmitters and number two Instrument Package were installed and sold. The Hatches were removed and are in rework per EJS 52-2135.

The Cabin Assembly for this Spacecraft is located in the Screen Room where SST is in progress. SEDR IC 311-2 Electrical Test, ECS Validation PIA 380, VSWR, IC 311-2 Sequential and IC 321-2 Part II Instrumentation has been performed and is complete. IC 321-2 Part I Instrumentation is in work at this writing.

Adapter

This Assembly is located in the White Room where final assembly operations are in process. The following SST testing was completed: SEDR ID 385 Coolant System, SEDR K 488 and move to building 62, SEDR K 419 Pre-Service OAMS, SEDR K 505 OAMS Service, SEDR K 391 OAMS Static Fire, SEDR K 505 De-Service OAMS, SEDR K 488 Move to Building 101 and SEDR ID 341 Communication. The ECS Pump Module was installed. All pyro devices were installed except the 52-72708-3-10 Cutter which has a mid ship date of 11 May 1964. Spacers for TIA were installed. The UHF Whip Antenna was installed and tested. Trial fit of Retro Rockets was accomplished. The 52-33052 cover was installed but has to be

SUBJECT: GEMINI STATUS REPORT FOR THE PERIOD ENDING 24 APRIL 1964 - SPACECRAFT NUMBER TWO

removed because of the nipper material pulling loose.

RCS Module

This assembly is located in the White Room where final assembly operations are in process. The following SST testing was completed; SEDR B391 RCS Static Fire, SEDR K505 RCS De-Service and SEDR K488 and K419 Move to Building 101. The Parachute container was installed per MPS 20. EJS 2481 rework of Static System lines and leak check of new lines were completed. The Shingles and retainers were fitted and returned to the Sub-Assembly area for rework. MPS 39 add radius to thrust chamber out [illegible] is presently in work.

R & R Module

This assembly is in the White Room where final assembly operations are in process. Rerun of SEDR IA 321 Instrumentation was completed. A rerun of VOWR was completed. Shingles and retainers were trial fitted and a preliminary rate was accomplished. The Shingles were returned to the Sub-Assembly area for rework.

FORECAST

The following events are scheduled for accomplishment during the next thirty day period:

Cabin

The remaining SEDRS to be completed are: IC 337-2 Part II Sequential, C341-2 Communication System, C 371-2 Guidance and Control Power Buildup, IC 381 ECS Functional.

Manufacturing work in the Cabin [illegible] this period will [illegible]

SUBJECT: GEMINI STATUS REPORT FOR THE PERIOD ENDING 24 APRIL 1964 - SPACECRAFT NUMBER TWO

installing the ECS Package, Hatch Retrofit (EJS 52-2135) rigging Flipper Door, rigging Flight G & C Hardware, Hoist Loop rework (EJS 52-2886) Relay Panel Installation (EJS 2852) and Pallet Installation. The Cabin will be mated with RCS and R & R.Weight and Balance will be performed.

Adapter

EJS 2496 remove and replace High and Low Level Multiplexers in the Adapter. The 52-33052 Cover, Blast Shields and Seals will be installed. 52-88705-43 Transducers will be replaced Clean up of Doors and removals and installation of Fuel Cell will be accomplished. Retest of Coolant System on O_2 Module, Weight and Balance and Retro Alignment will be completed.

RCS

Thermocouples will be spliced and tested. EJS 2135 and EJS 2808 external hatch handle will be worked. Addition of a radius to thrust chamber cut out will be completed. EJS 2637 and EJS 2807 52-31133-51 ring will be completed. EJS 2467 Temperature Sensors will be installed and SEDR 321 rerun of instrumentation will be completed. Shingles will be installed and Weight and Balance accomplished.

R & R

In the R & R Section the 52-31019 nose fairing will be installed. Thermocouple holes will be drilled in Shingles, thermocouples will be installed, spliced and tested. EJS 2467 install new Temperature Sensors and rerun of SEDR IA 321 instrumentation will be completed. Shingles and retainers will be reinstalled and Weight and Balance accomplished.

GEMINI MANUFACTURING WORK PLAN—SPACECRAFT NO. 3

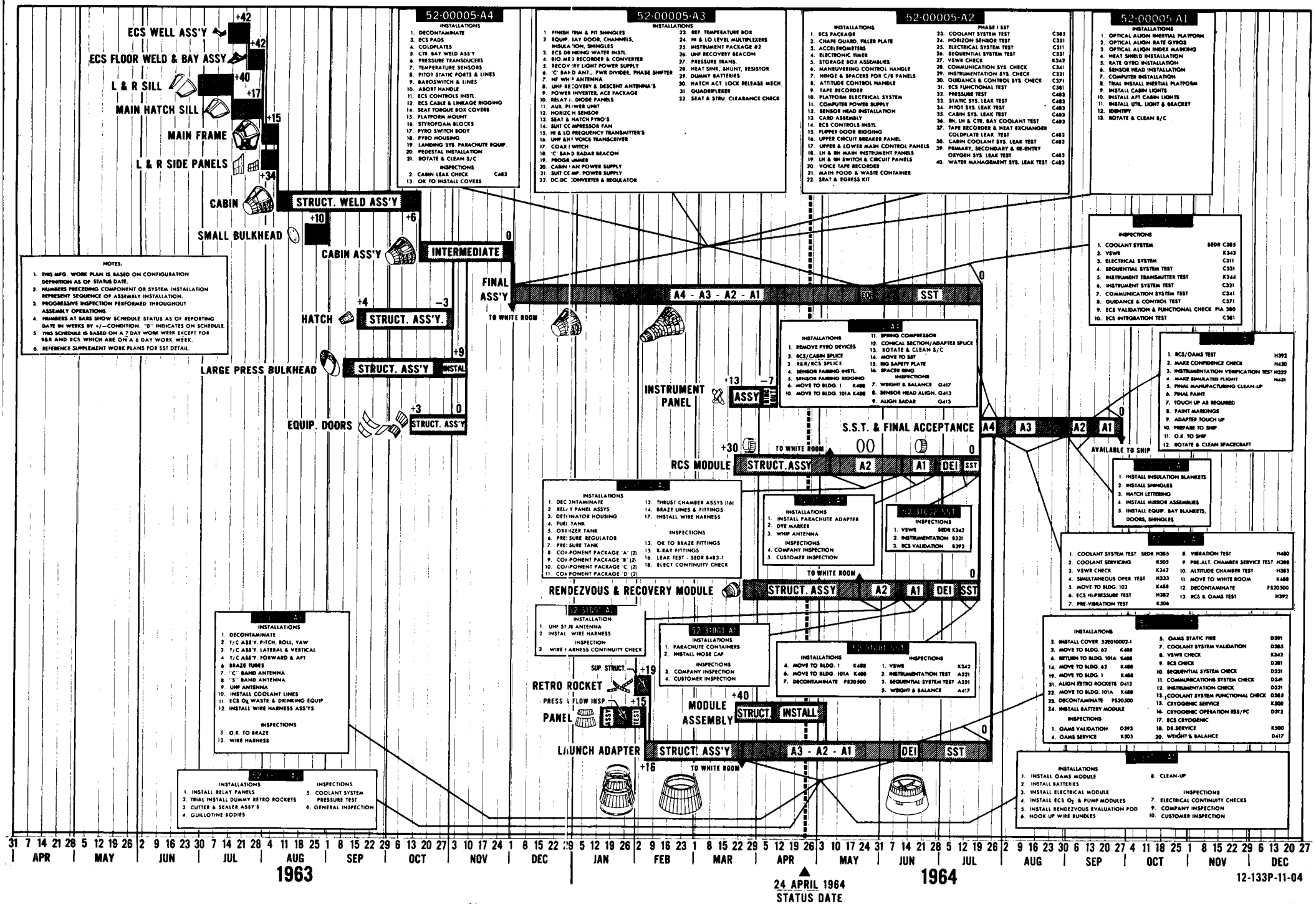

GEMINI SPACECRAFT NO. 3
EQUIPMENT STUDY

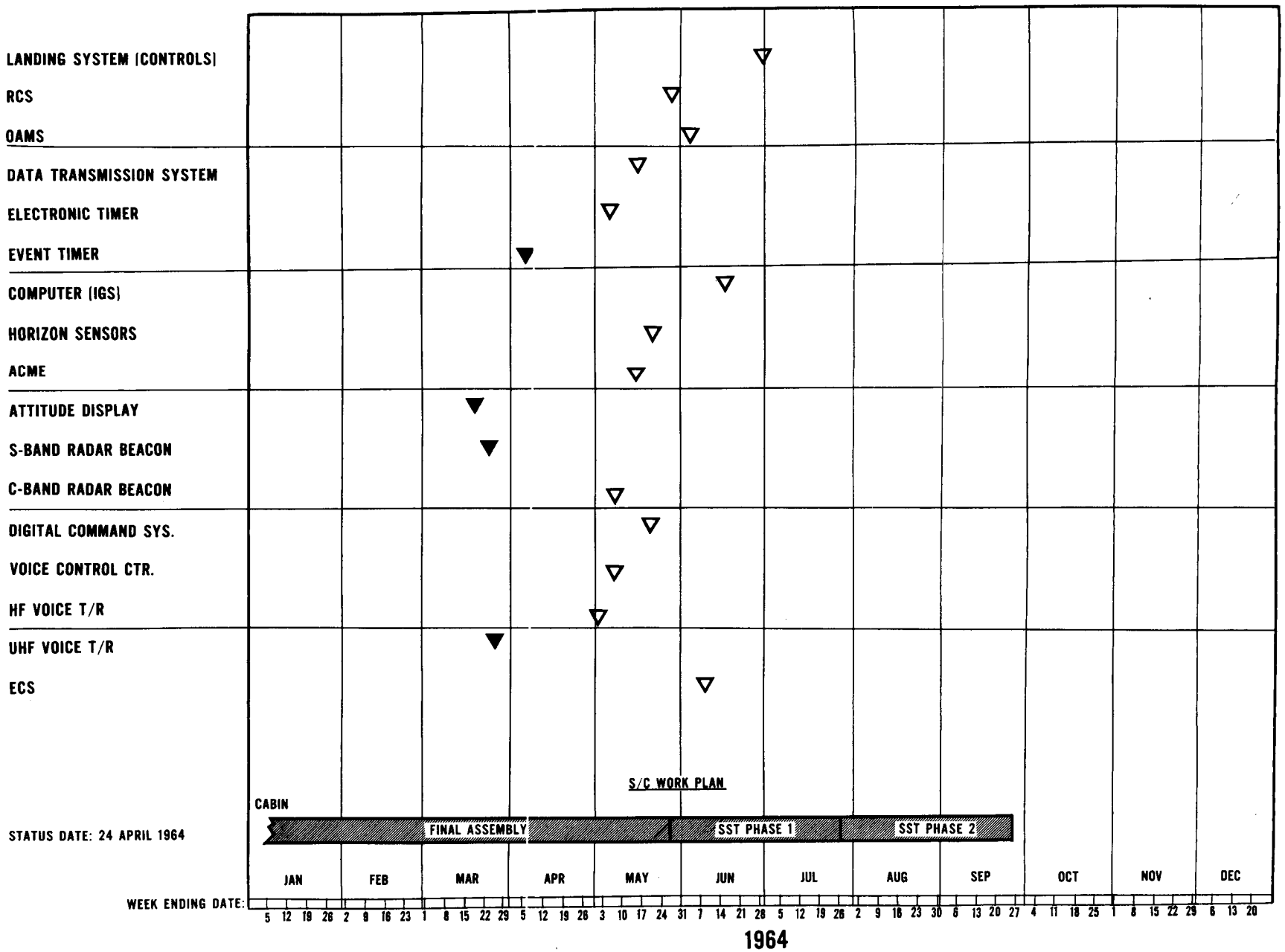

S/C-3 SCHEDULE

SST TO MATE

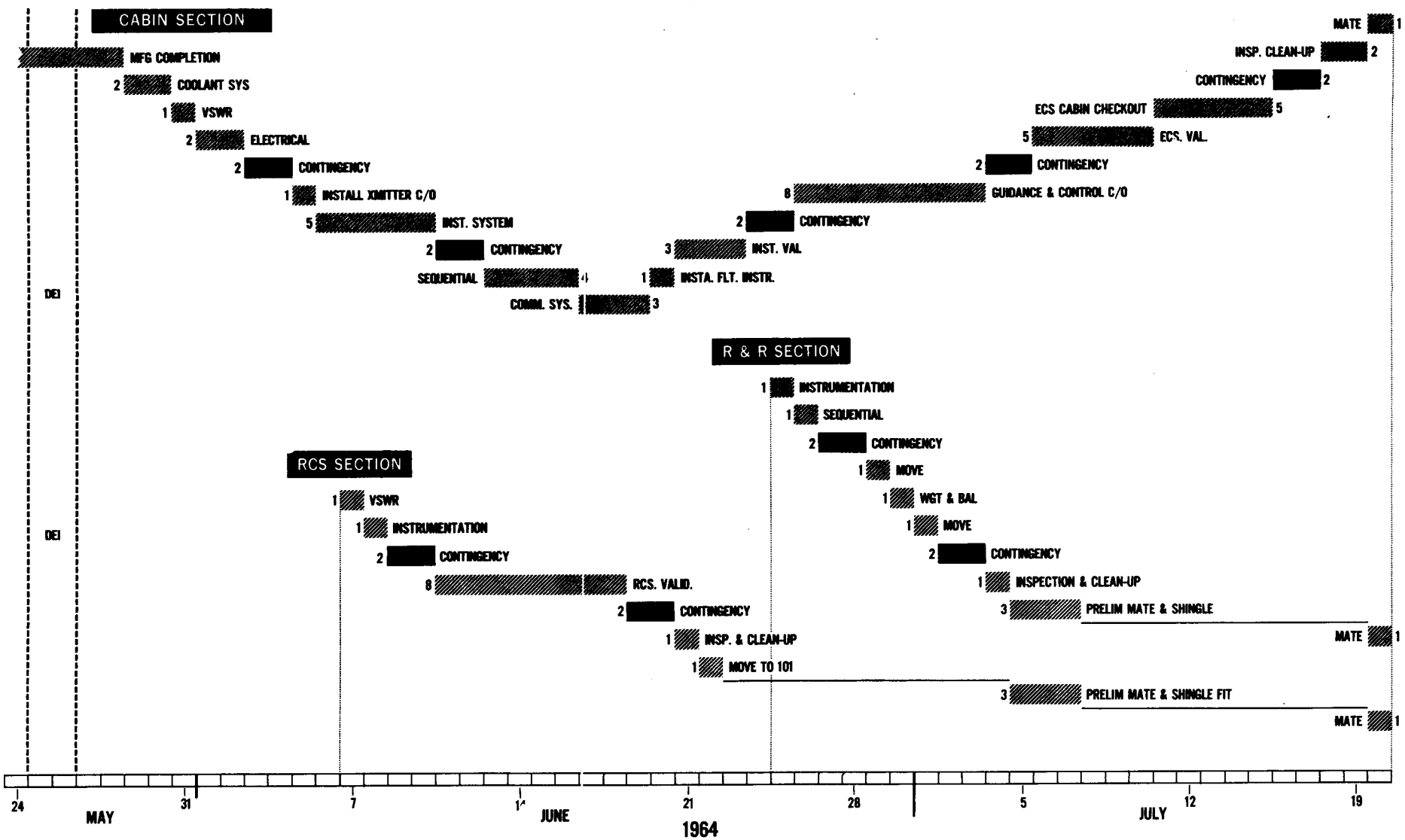

24 APRIL 1964

S/C-3 SCHEDULE

SST TO DELIVERY

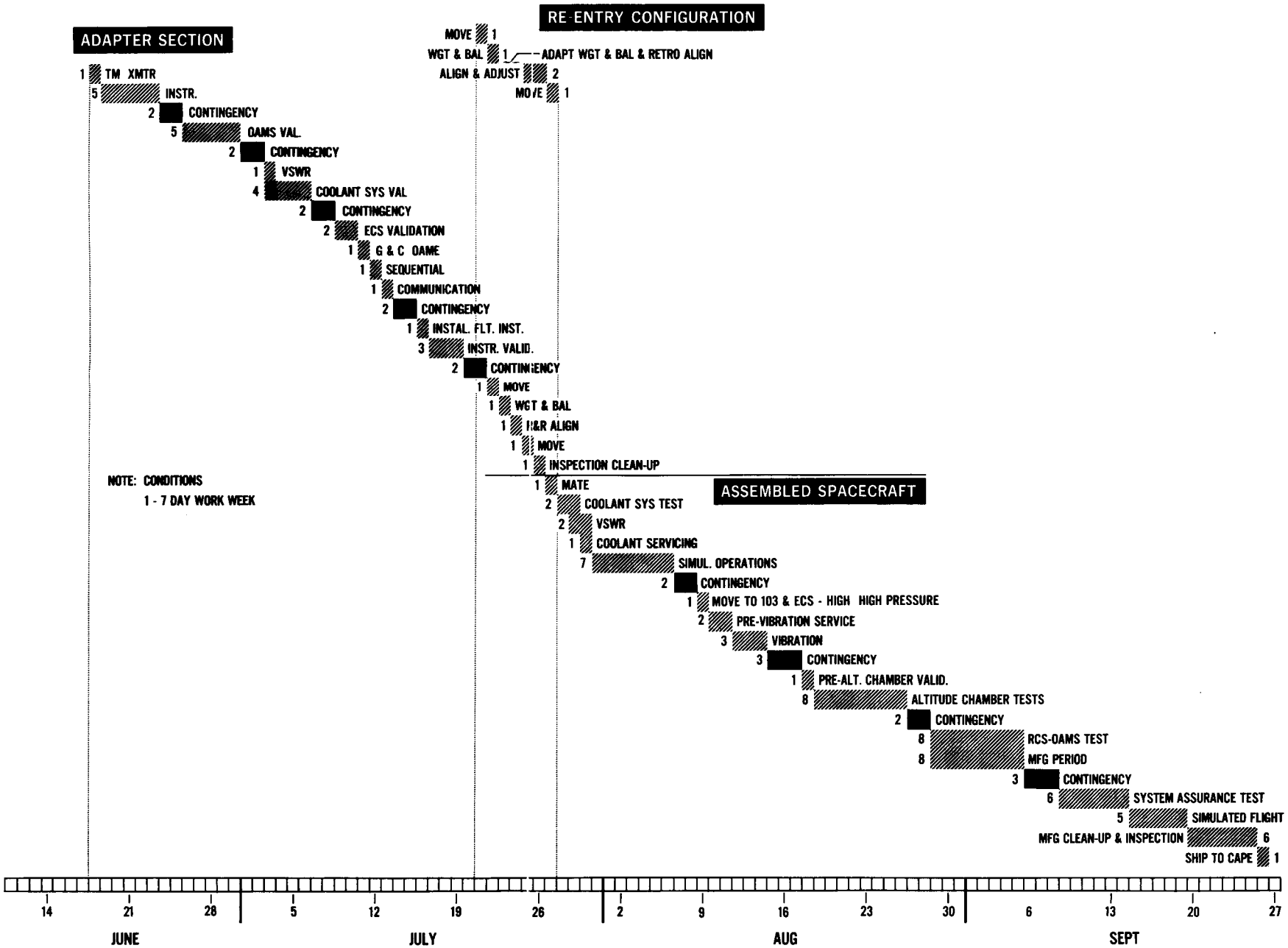

24 APRIL 1964

S/C-3 SCHEDULE

CAPE DELIVERY TO LAUNCH

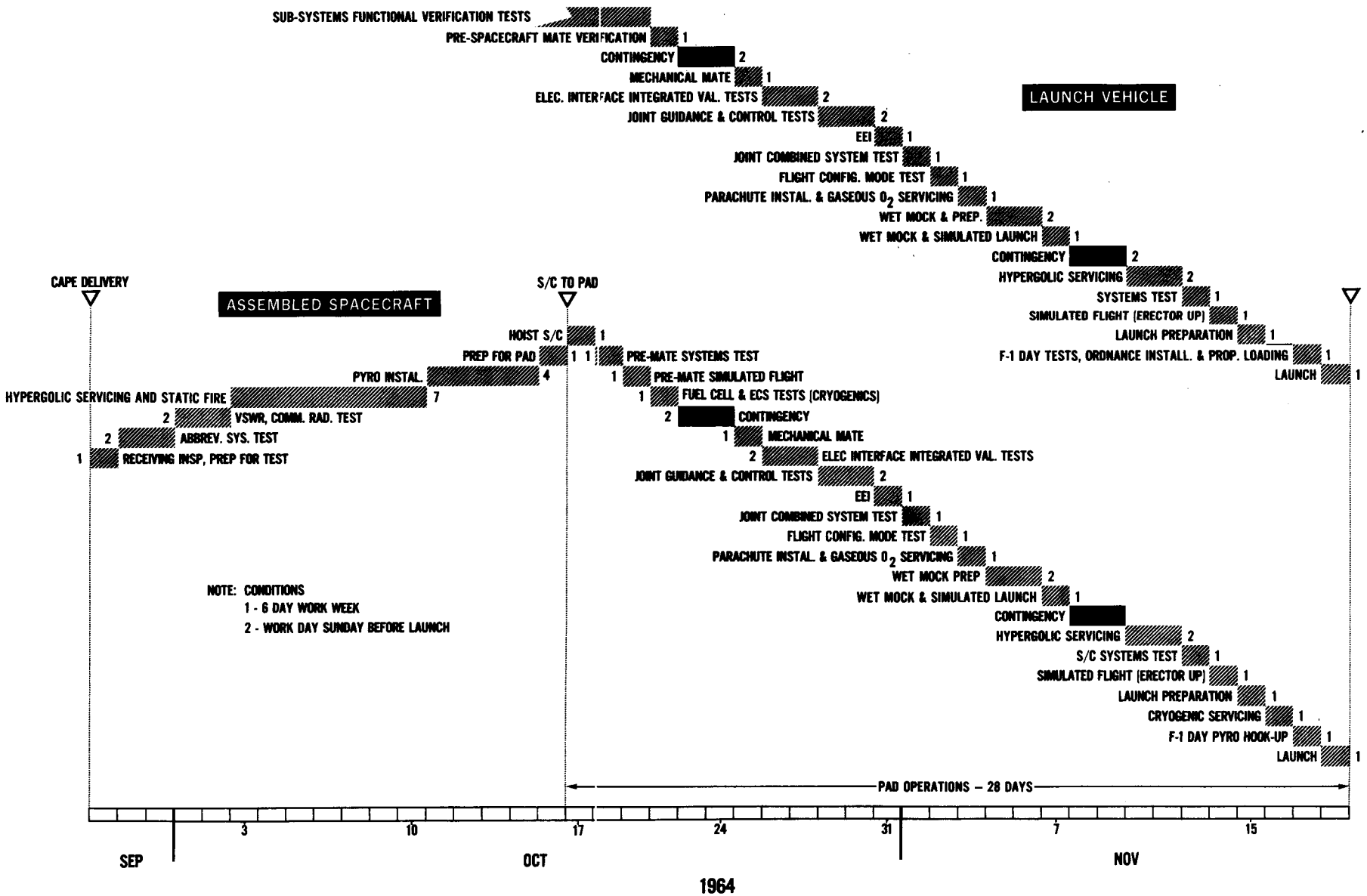

24 APRIL 1964

S C 3 WORK PLAN FINAL ASSY

	ZONE	TOTAL HRS.	OPEN HRS.
1. STRUCTURAL EOPO INCORP		197	32
2. PRESSURE TEST	9	95	18
3. ECS INSTALLATION & PLUMBING	9	184	54
4. WIRE BUNDLES IN CABIN	9	365	30
5. PEDESTAL INSTALLATION	9	4	0
6. FIBERGLASS CHANNELS & MIN-K	4 5 6 7 8 11 12	11	0
7. INSTALL SHINGLES	3 4 5 6 7 8 11 12	142	0
8. INSTALL & RIG HATCHES	11 12	13	0
9. INSTALL & RIG 32060 DOORS	5 6	34	34
10. INSTALL STYROFOAM	3 7 8	81	0
11. INSTALL COLD PLATES & PLUMBING	3 7 8	214	48
12. INSTALL W/B IN EQUIPMENT BAYS	3 7 8	921	175
13. SPLICE THERMOCOUPLES & TEST	9 11 12	62	60
14. INSTALL STATIC SYSTEM	3	79	12
15. PRESSURE TEST STATIC SYSTEM	3	18	0
16. EQUIPMENT INSTALLATION (CABIN)	9	579	359
17. EQUIPMENT INSTALLATION (OTHER)	7 8	357	133
18. DITMCO	16	187	187
19. SPLICE TEMP. SENSORS	9 11 12	18	18
20. SST PHASE I		0	0
21. HEAT SHIELD INSTALLATION	10	30	24
22. MECHANICAL MATE RCS & RR	1 2 9		
23. MECHANICAL MATE ADAPTER	10 14 15		
24. COOLANT			
25. VSWR			
26. MANUFACTURING COMPLETION			
27. MANUFACTURING UPDATE			

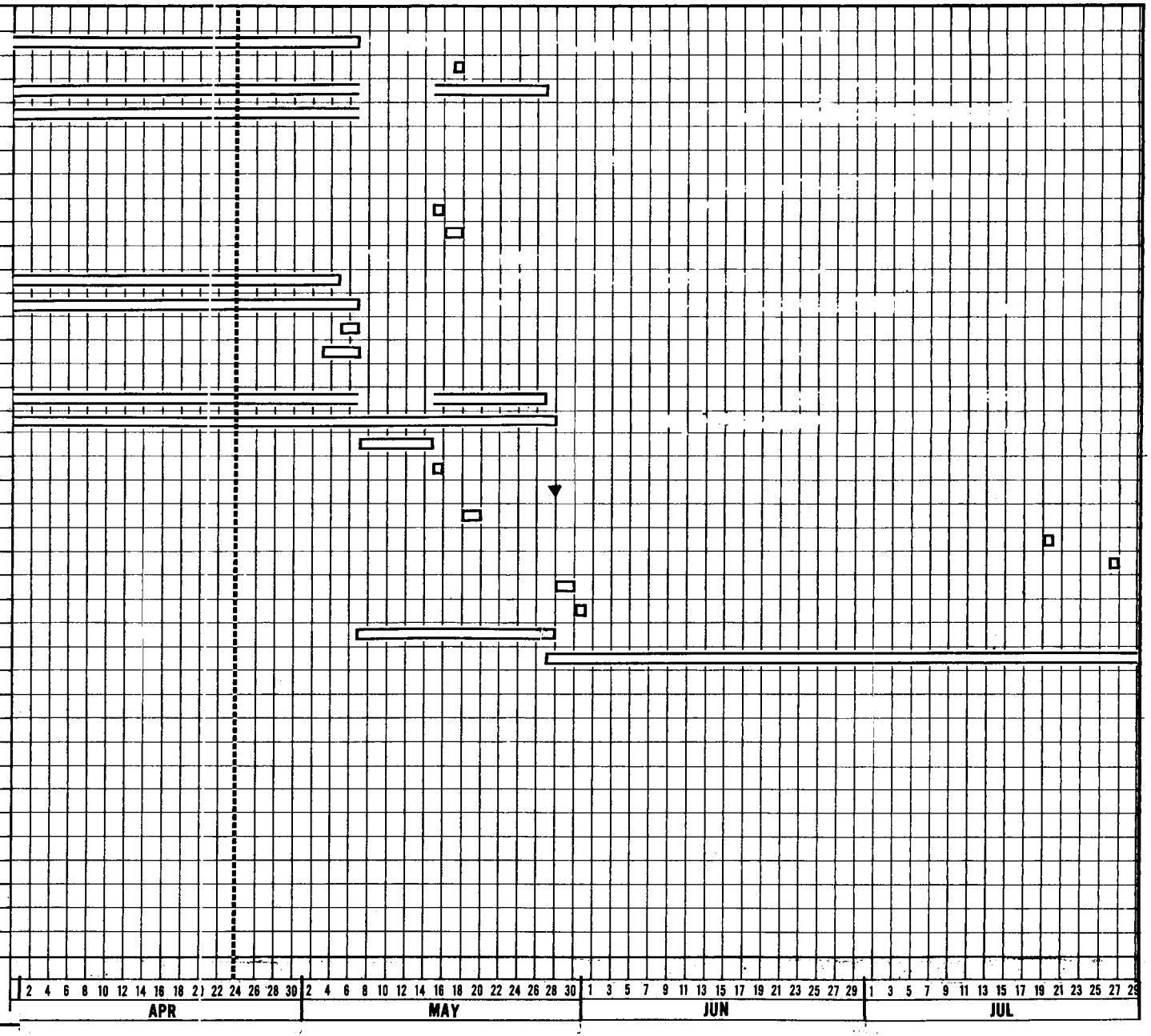

LEGEND: WORK PERIOD

STATUS AS OF: 24 APRIL 1964

S C 3 WORK PLAN FINAL ASSY

		TOTAL HRS.	OPEN HRS.
1. STRUCTURAL EOPO INCORP			
2. PRESSURE TEST	9		
3. ECS INSTALLATION & PLUMBING	9		
4. WIRE BUNDLES IN CABIN	9		
5. PEDESTAL INSTALLATION	9		
6. FIBERGLASS CHANNELS & MIN-K	3 4 5 6 7 8 11 12		
7. INSTALL SHINGLES	3 4 5 6 7 8 11 12		
8. INSTALL & RIG HATCHES	11 12		
9. INSTALL & RIG 32080 DOORS	5 6		
10. INSTALL STYROFOAM	3 7 8		
11. INSTALL COLD PLATES & PLUMBING	3 7 8		
12. INSTALL W/B IN EQUIPMENT BAYS	3 7 8		
13. SPLICE THERMOCOUPLES & TEST	9 11 12		
14. INSTALL STATIC SYSTEM	3		
15. PRESSURE TEST STATIC SYSTEM	3		
16. EQUIPMENT INSTALLATION (CABIN)	9		
17. EQUIPMENT INSTALLATION (OTHER)	7 8		
18. DITMCO	16		
19. SPLICE TEMP. SENSORS	9 11 12		
20. SST PHASE I			
21. HEAT SHIELD INSTALLATION	10		
22. MECHANICAL MATE RCS & RR	1 2 9		
23. MECHANICAL MATE ADAPTER	10 14 15		
24. COOLANT			
25. VSWR			
26. MANUFACTURING COMPLETION			
27. MANUFACTURING UPDATE			

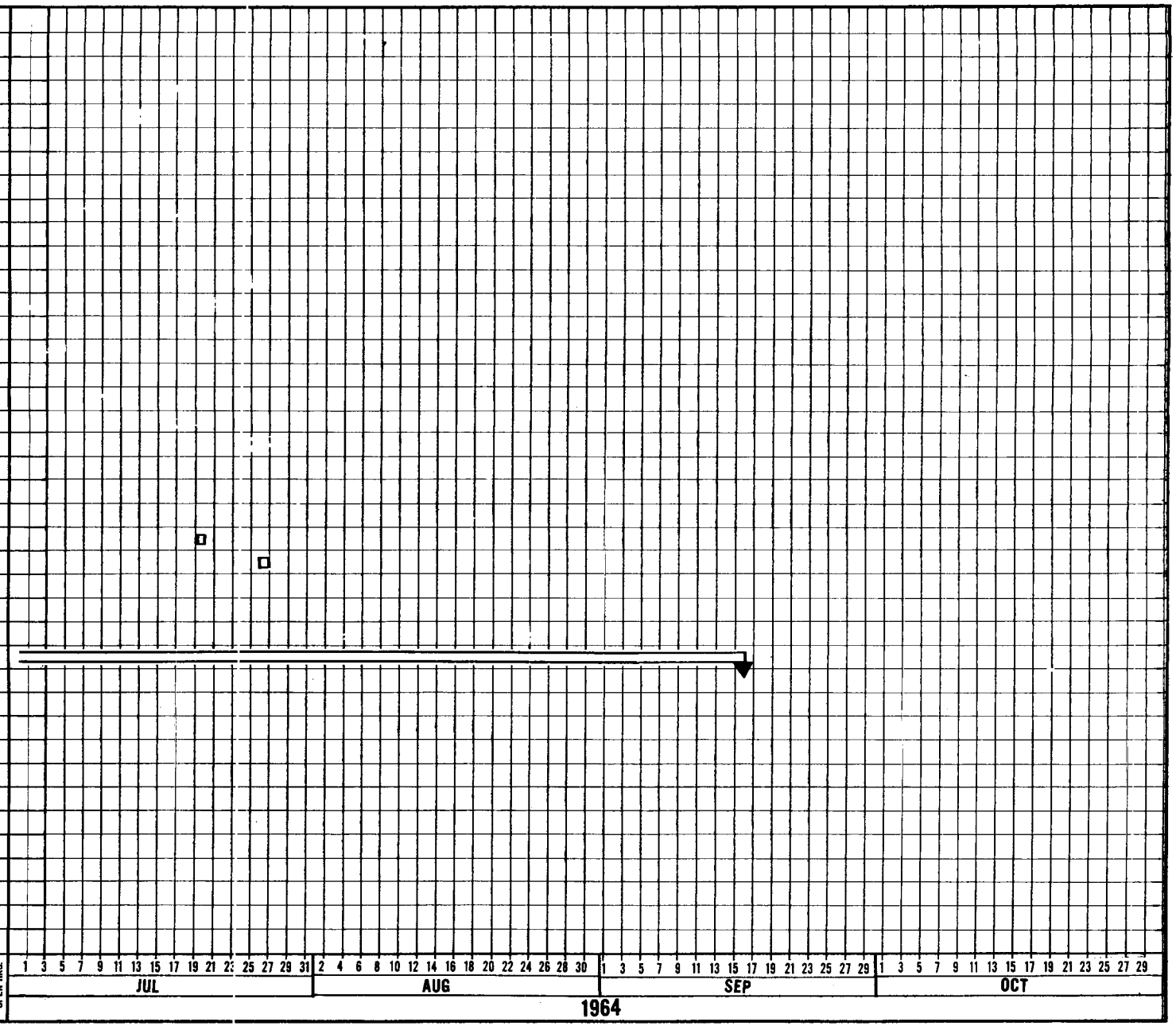

LEGEND: WORK PERIOD

ZONE

14 STATUS AS OF: 24 APRIL 1964

S C 3 WORK PLAN MODULE FINAL ASSY

	ZONE	TOTAL HRS.	OPEN HRS.
RCS	2		
1. INSTALL PLUMBING & PRESSURE TEST		218	140
2. INSTALL W/B - T/C - T/S		187	182
3. FIBERGLASS CHANNELS - MIN - K - INSULATION		0	0
4. INSTALL EQUIP		150	95
5. INSTALL SHINGLES - RETAINERS		262	182
6. DITMCO - T/C - T/S TEST		74	0
7. S S T		0	0
8. INSTALL THRUST CHAMBERS		24	24
9. INSTALL STYROFOAM		0	0
10. NASA/MAC INSPECTION		159	140
R & R	1		
11. INSTALL W/B - T/C - T/S		0	0
12. FIBERGLASS CHANNELS - MIN - K - INSULATION		0	0
13. INSTALL EQUIP		0	0
14. INSTALL SHINGLES - RETAINERS		0	0
15. DITMCO - T/C - T/S TEST		0	0
16. S S T		0	0
17. NASA/MAC INSPECTION		0	0
ADAPTER	13		
18. EOPO & STATUS		541	90
19. INSTALL PLUMBING & PRESSURE TEST		412	80
20. INSTALL W/B - T/C - T/S		416	127
21. INSTALL EQUIPMENT		283	144
22. DTMCO - T/C - T/S TEST		79	79
23. S S T		0	0
24. NASA/MAC INSPECTION		200	184

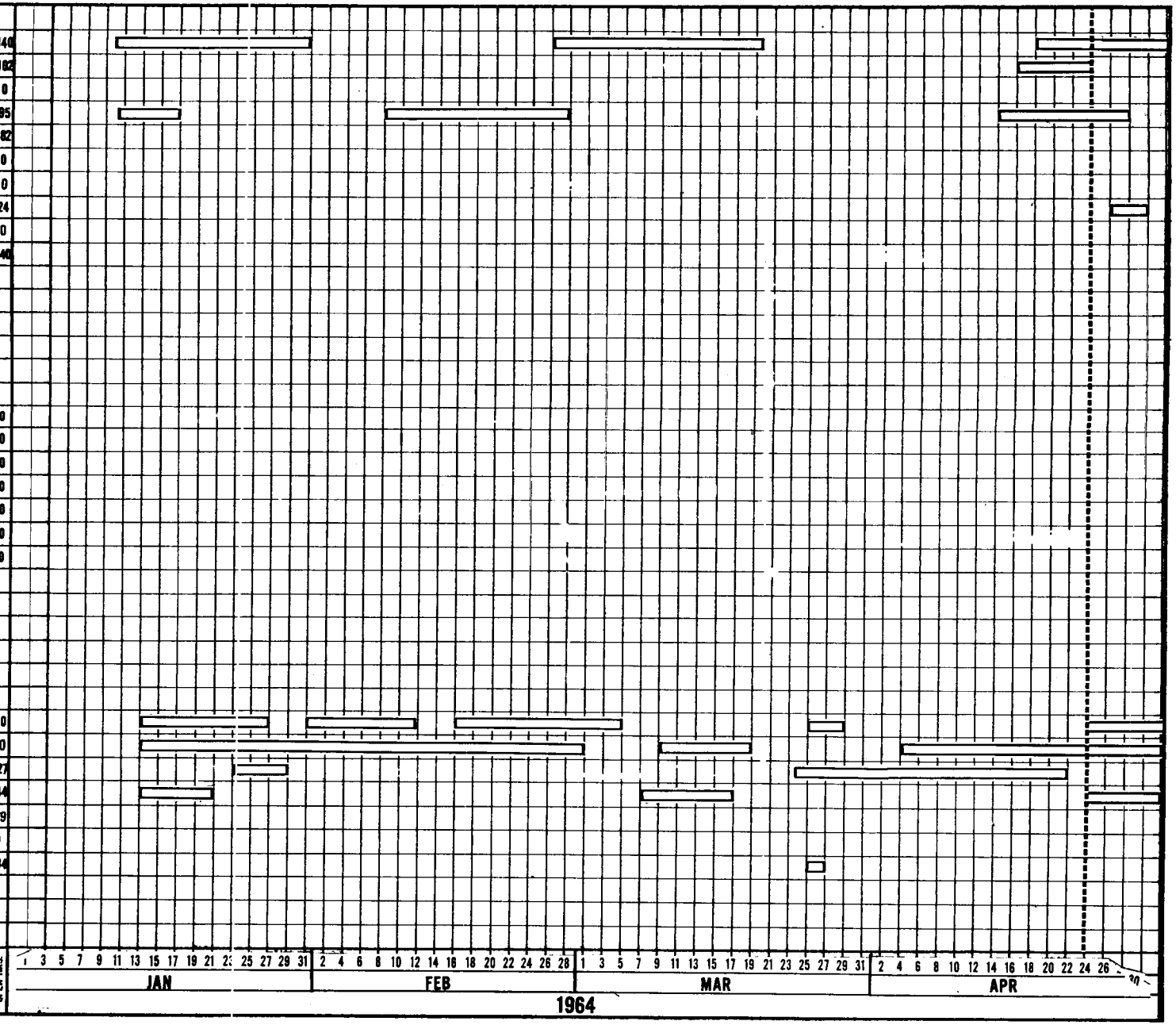

LEGEND: WORK PERIOD

STATUS AS OF: 24 APRIL 1964

S C 3 WORK PLAN MODULE FINAL ASSY

RCS	2	
1. INSTALL PLUMBING & PRESSURE TEST		
2. INSTALL W/B - T/C - T/S		
3. FIBERGLASS CHANNELS - MIN - K - INSULATION		
4. INSTALL EQUIP		
5. INSTALL SHINGLES - RETAINERS		
6. DITMCO - T/C - T/S TEST		
7. S S T		
8. INSTALL THRUST CHAMBERS		
9. INSTALL STYROFOAM		
10. NASA/MAC INSPECTION		
R & R	1	
11. INSTALL W/B - T/C - T/S		
12. FIBERGLASS CHANNELS - MIN - K - INSULATION		
13. INSTALL EQUIP		
14. INSTALL SHINGLES - RETAINERS		
15. DITMCO - T/C - T/S TEST		
16. S S T		
17. NASA/MAC INSPECTION		
ADAPTER	13	
18. EOPO & STATUS		
19. INSTALL PLUMBING & PRESSURE TEST		
20. INSTALL W/B - T/C - T/S		
21. INSTALL EQUIPMENT		
22. DTMCO - T/C - T/S TEST		
23. S S T		
24. NASA/MAC INSPECTION		

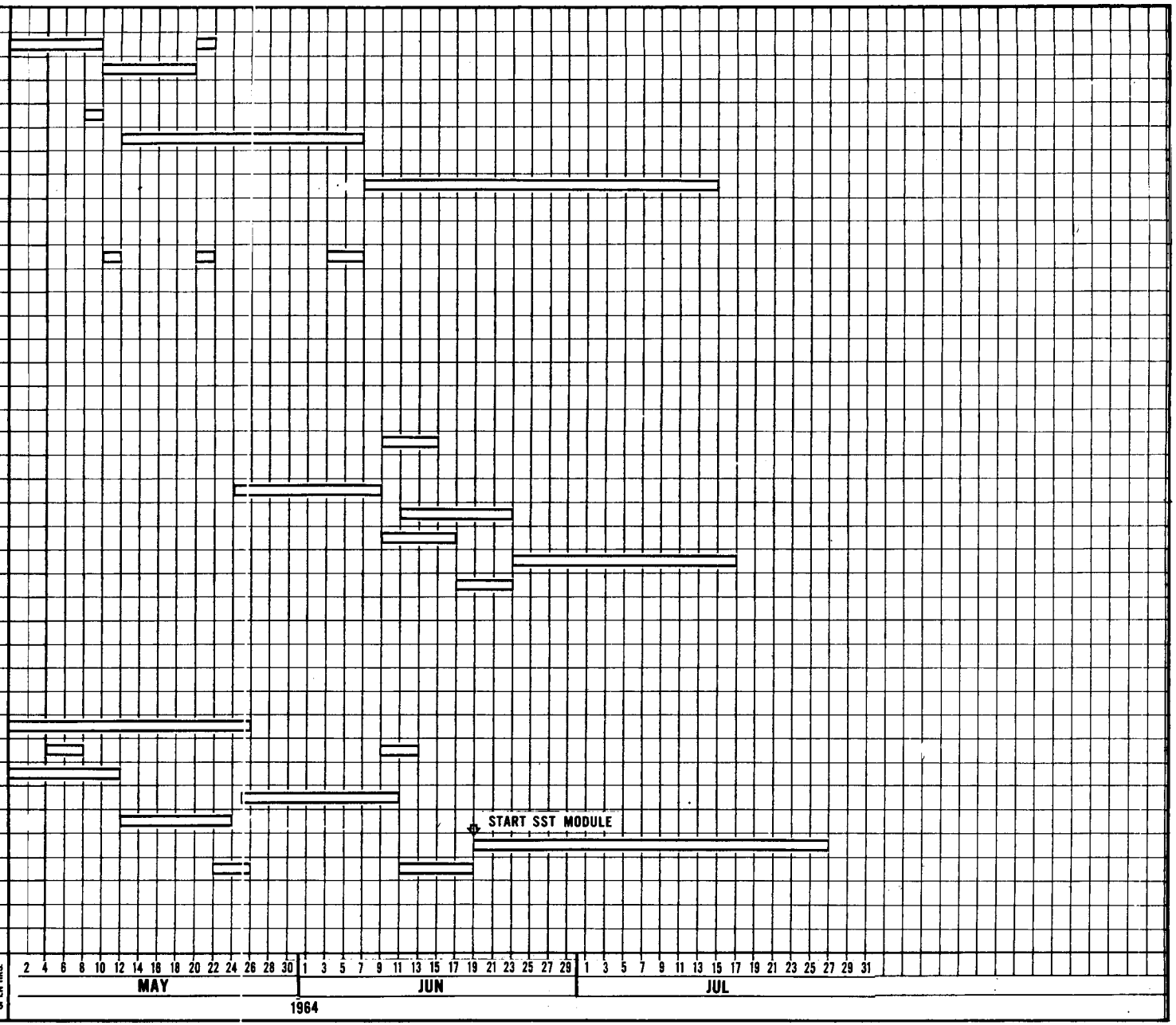

LEGEND:

ZONE | TOTAL HRS. | OPEN HRS.

STATUS AS OF: 24 APRIL 1964

GEMINI ZONE CHART

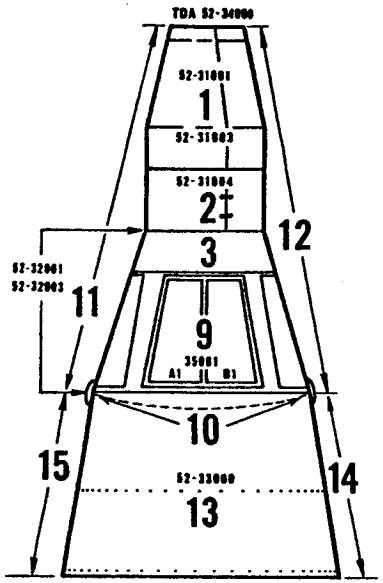

TOP VIEW

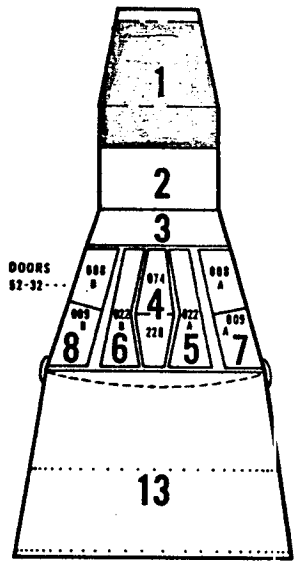

BOTTOM VIEW

1. RENDEZVOUS AND RADAR MODULE
2. RE-ENTRY RCS MODULE
3. FORWARD AREA CONE
4. CENTER EQUIPMENT BAY
5. L/H LANDING GEAR BAY
6. R/H LANDING GEAR BAY
7. L/H EQUIPMENT BAY
8. R/H EQUIPMENT BAY
9. CREW PRESSURIZED AREA
10. EXTERIOR AREA OF LARGE PRESS. BULKHEAD
11. SPACECRAFT EXTERIOR L/H
12. SPACECRAFT EXTERIOR R/H
13. INTERNAL ADAPTER AREA
14. R/H EXTERNAL ADAPTER AREA
15. L/H EXTERNAL ADAPTER AREA
16. ZONE FOR ENTIRE SPACECRAFT

GEMINI SPACECRAFT NO. 3

ZONE NO. 1

TOTAL EQUIPMENT REQUIRED 8

EQUIPMENT ON HAND 8

EQUIPMENT TO SCHEDULE 0

EQUIPMENT LATE 0

PART NO.	PART NAME	NORM. INST.	SLACK	DEF. INST.	SLACK	HOURS TO INSTALL

4-23-4

GEMINI ZONE CHART

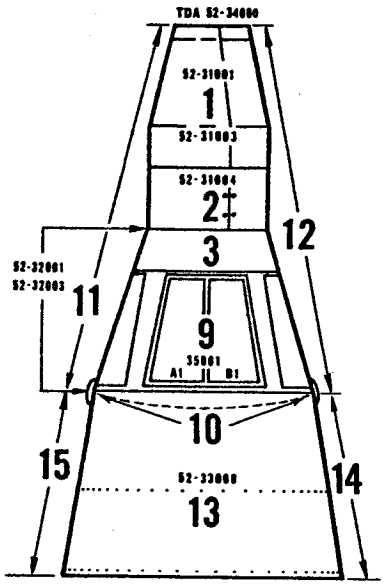

TOP VIEW

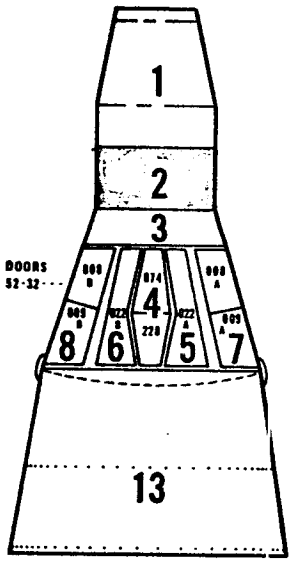

BOTTOM VIEW

1. RENDEZVOUS AND RADAR MODULE
2. RE-ENTRY RCS MODULE
3. FORWARD AREA CONE
4. CENTER EQUIPMENT BAY
5. L/H LANDING GEAR BAY
6. R/H LANDING GEAR BAY
7. L/H EQUIPMENT BAY
8. R/H EQUIPMENT BAY
9. CREW PRESSURIZED AREA
10. EXTERIOR AREA OF LARGE PRESS. BULKHEAD
11. SPACECRAFT EXTERIOR L/H
12. SPACECRAFT EXTERIOR R/H
13. INTERNAL ADAPTER AREA
14. R/H EXTERNAL ADAPTER AREA
15. L/H EXTERNAL ADAPTER AREA
16. ZONE FOR ENTIRE SPACECRAFT

GEMINI SPACECRAFT NO. 3

ZONE NO. 2

TOTAL EQUIPMENT REQUIRED 47

EQUIPMENT ON HAND 42

EQUIPMENT TO SCHEDULE 5

EQUIPMENT LATE 0

PART NO.	PART NAME	NORM. INST.	SLACK	DEF. INST.	SLACK	HOURS TO INSTALL

4-23-4

GEMINI ZONE CHART

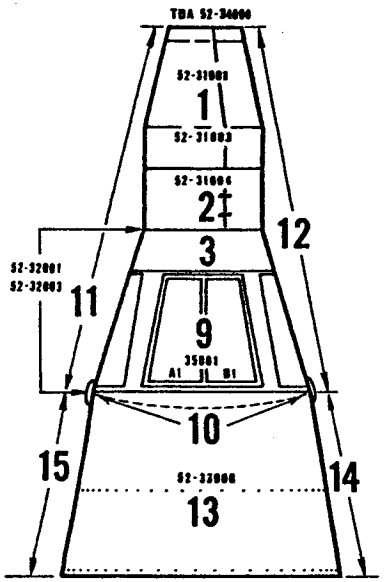

TOP VIEW

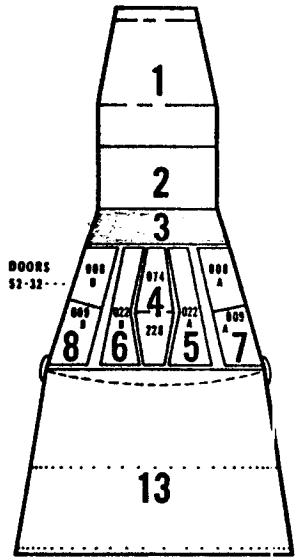

BOTTOM VIEW

1. RENDEZVOUS AND RADAR MODULE
2. RE-ENTRY RCS MODULE
3. FORWARD AREA CONE
4. CENTER EQUIPMENT BAY
5. L/H LANDING GEAR BAY
6. R/H LANDING GEAR BAY
7. L/H EQUIPMENT BAY
8. R/H EQUIPMENT BAY
9. CREW PRESSURIZED AREA
10. EXTERIOR AREA OF LARGE PRESS. BULKHEAD
11. SPACECRAFT EXTERIOR L/H
12. SPACECRAFT EXTERIOR R/H
13. INTERNAL ADAPTER AREA
14. R/H EXTERNAL ADAPTER AREA
15. L/H EXTERNAL ADAPTER AREA
16. ZONE FOR ENTIRE SPACECRAFT

GEMINI SPACECRAFT NO. 3

ZONE NO. 3

TOTAL EQUIPMENT REQUIRED 44

EQUIPMENT ON HAND 41

EQUIPMENT TO SCHEDULE 1

EQUIPMENT LATE 2

PART NO.	PART NAME	NORM. INST.	SLACK	DEF. INST.	SLACK	HOURS TO INSTALL
52 72711-23	CARTRIDGE HOUSING (1)	00005 A4				2
72714-24	JULTCH BODY (1)	00005 A4	11	00005 A1	0	2

4-23-4

GEMI ZONE CHART

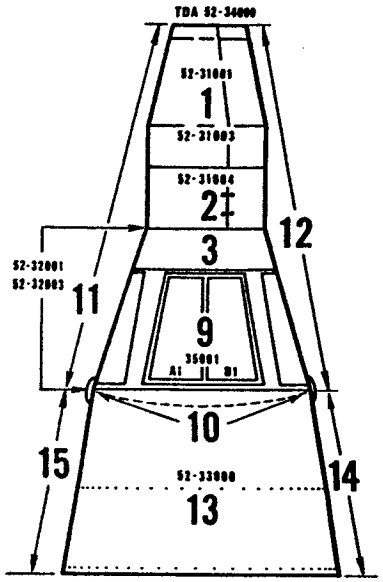

TOP VIEW

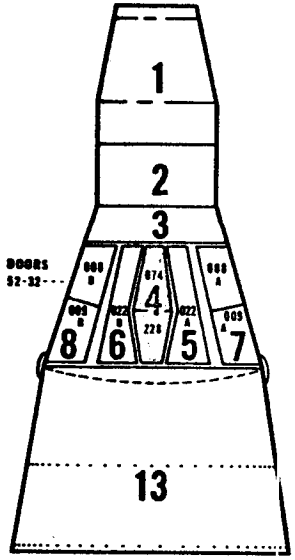

BOTTOM VIEW

1. RENDEZVOUS AND RADAR MODULE
2. RE-ENTRY RCS MODULE
3. FORWARD AREA CONE
4. CENTER EQUIPMENT BAY
5. L/H LANDING GEAR BAY
6. R/H LANDING GEAR BAY
7. L/H EQUIPMENT BAY
8. R/H EQUIPMENT BAY
9. CREW PRESSURIZED AREA
10. EXTERIOR AREA OF LARGE PRESS. BULKHEAD
11. SPACECRAFT EXTERIOR L/H
12. SPACECRAFT EXTERIOR R/H
13. INTERNAL ADAPTER AREA
14. R/H EXTERNAL ADAPTER AREA
15. L/H EXTERNAL ADAPTER AREA
16. ZONE FOR ENTIRE SPACECRAFT

GEMINI SPACECRAFT NO. 3

ZONE NO. 4

TOTAL EQUIPMENT REQUIRED 32

EQUIPMENT ON HAND 29

EQUIPMENT TO SCHEDULE 2

EQUIPMENT LATE 1

PART NO.	PART NAME	NORM. INST.	SLACK	DEF. INST.	SLACK	HOURS TO INSTALL
52-37700-5	ACE (1)	00005 A3	-8	EOI	0	4

4-23-4

GEMINI ZONE CHART

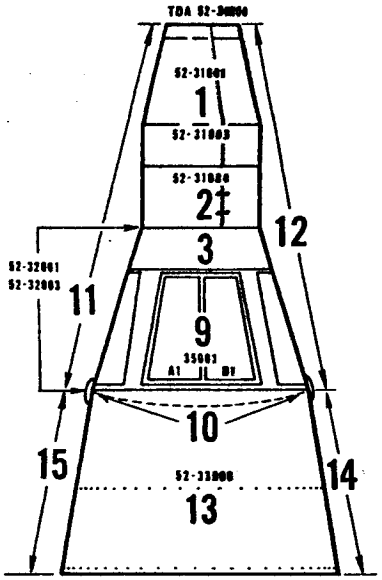

TOP VIEW

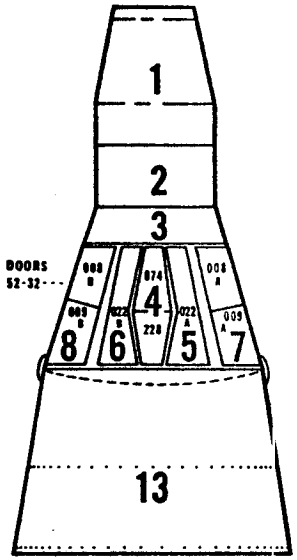

BOTTOM VIEW

1. RENDEZVOUS AND RADAR MODULE
2. RE-ENTRY RCS MODULE
3. FORWARD AREA CONE
4. CENTER EQUIPMENT BAY
5. L/H LANDING GEAR BAY
6. R/H LANDING GEAR BAY
7. L/H EQUIPMENT BAY
8. R/H EQUIPMENT BAY
9. CREW PRESSURIZED AREA
10. EXTERIOR AREA OF LARGE PRESS. BULKHEAD
11. SPACECRAFT EXTERIOR L/H
12. SPACECRAFT EXTERIOR R/H
13. INTERNAL ADAPTER AREA
14. R/H EXTERNAL ADAPTER AREA
15. L/H EXTERNAL ADAPTER AREA
16. ZONE FOR ENTIRE SPACECRAFT

GEMINI SPACECRAFT NO. 3

ZONE NO. 7

TOTAL EQUIPMENT REQUIRED 44

EQUIPMENT ON HAND 33

EQUIPMENT TO SCHEDULE 6

EQUIPMENT LATE 5

PART NO.	PART NAME	NORM. INST.	SLACK	DEF. INST.	SLACK	HOURS TO INSTALL
52 37717-19	INERTIAL PLATFORM (1)	00005 A1	-14	00005 SST	0	4
37714-23	SWITCH BODY (2)	"	-9	00005 A3	0	2
37703-13	ELEC. PKG (1)	00005 A3	-7	00005 B1	0	3
37723-5	AUX PWR UNIT (1)	"	-13	00005 SST	0	4
37603-215	RELAY PANEL (1)	"	-4	00005 A2	0	2

4-23-4

GEMINI ZONE CHART

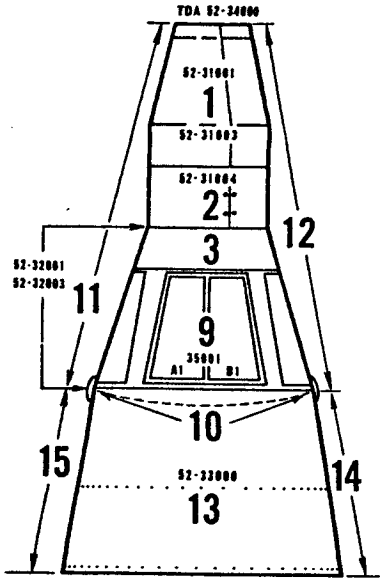

TOP VIEW

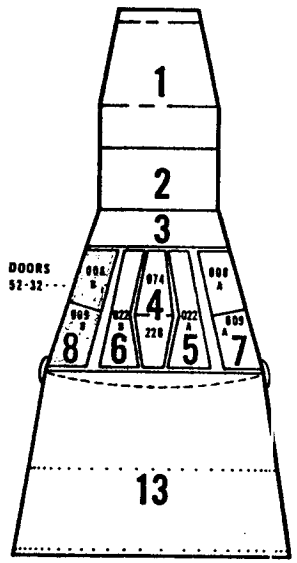

BOTTOM VIEW

1. RENDEZVOUS AND RADAR MODULE
2. RE-ENTRY RCS MODULE
3. FORWARD AREA CONE
4. CENTER EQUIPMENT BAY
5. L/H LANDING GEAR BAY
6. R/H LANDING GEAR BAY
7. L/H EQUIPMENT BAY
8. R/H EQUIPMENT BAY
9. CREW PRESSURIZED AREA
10. EXTERIOR AREA OF LARGE PRESS. BULKHEAD
11. SPACECRAFT EXTERIOR L/H
12. SPACECRAFT EXTERIOR R/H
13. INTERNAL ADAPTER AREA
14. R/H EXTERNAL ADAPTER AREA
15. L/H EXTERNAL ADAPTER AREA
16. ZONE FOR ENTIRE SPACECRAFT

GEMINI SPACECRAFT NO. 3

ZONE NO. 8

TOTAL EQUIPMENT REQUIRED 73

EQUIPMENT ON HAND 65

EQUIPMENT TO SCHEDULE 6

EQUIPMENT LATE 2

	PART NO.	PART NAME	NORM. INST.	SLACK	DEF. INST.	SLACK	HOURS TO INSTALL
52	72714-23	SWITCH BODY (6)	00005 A4		00005 A3		12
	85719-7	UHF RECV BCH (1)	00005 A3	-8	EOI	0	2

4-23-4

GEMINI ZONE CHART

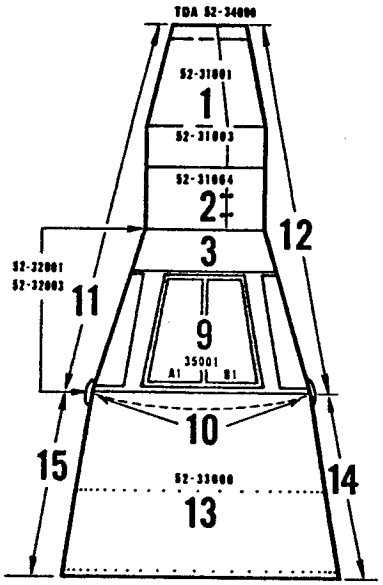

TOP VIEW

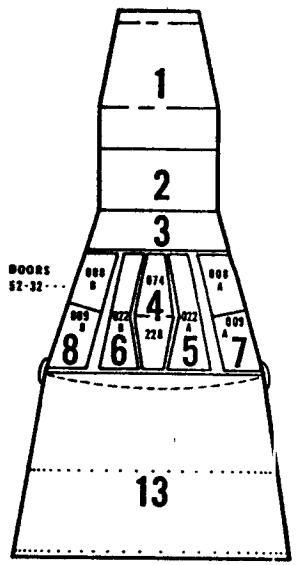

BOTTOM VIEW

1. RENDEZVOUS AND RADAR MODULE
2. RE-ENTRY RCS MODULE
3. FORWARD AREA CONE
4. CENTER EQUIPMENT BAY
5. L/H LANDING GEAR BAY
6. R/H LANDING GEAR BAY
7. L/H EQUIPMENT BAY
8. R/H EQUIPMENT BAY
9. CREW PRESSURIZED AREA
10. EXTERIOR AREA OF LARGE PRESS. BULKHEAD
11. SPACECRAFT EXTERIOR L/H
12. SPACECRAFT EXTERIOR R/H
13. INTERNAL ADAPTER AREA
14. R/H EXTERNAL ADAPTER AREA
15. L/H EXTERNAL ADAPTER AREA
16. ZONE FOR ENTIRE SPACECRAFT

GEMINI SPACECRAFT NO. 3

ZONE NO. 9

TOTAL EQUIPMENT REQUIRED 99

EQUIPMENT ON HAND 91

EQUIPMENT TO SCHEDULE 6

EQUIPMENT LATE 2

PART NO.	PART NAME	NORM. INST.	SLACK	DEF. INST.	SLACK	HOURS TO INSTALL
52 32044-303-3	L.H EGRESS KIT	00303 A2				6
82044-304-3	R.H EGRESS KIT	"				6

4-23-4

GEMINI ZONE CHART

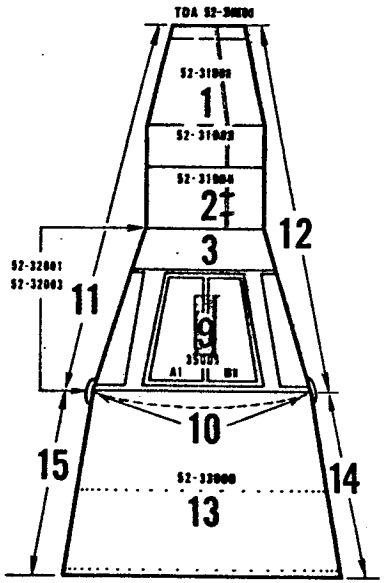

TOP VIEW

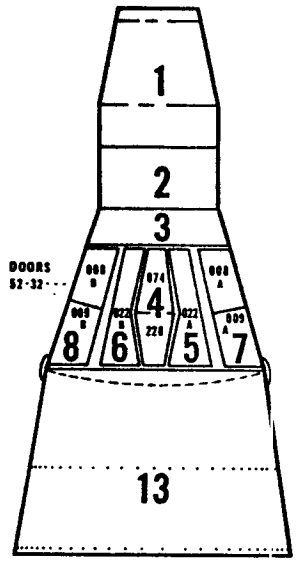

BOTTOM VIEW

1. RENDEZVOUS AND RADAR MODULE
2. RE-ENTRY RCS MODULE
3. FORWARD AREA CONE
4. CENTER EQUIPMENT BAY
5. L/H LANDING GEAR BAY
6. R/H LANDING GEAR BAY
7. L/H EQUIPMENT BAY
8. R/H EQUIPMENT BAY
9. CREW PRESSURIZED AREA
10. EXTERIOR AREA OF LARGE PRESS. BULKHEAD
11. SPACECRAFT EXTERIOR L/H
12. SPACECRAFT EXTERIOR R/H
13. INTERNAL ADAPTER AREA
14. R/H EXTERNAL ADAPTER AREA
15. L/H EXTERNAL ADAPTER AREA
16. ZONE FOR ENTIRE SPACECRAFT

GEMINI SPACECRAFT NO. 3

ZONE NO. PEDESTAL

TOTAL EQUIPMENT REQUIRED 13

EQUIPMENT ON HAND 13

EQUIPMENT TO SCHEDULE 0

EQUIPMENT LATE 0

PART NO.	PART NAME	NORM. INST.	SLACK	DEF. INST.	SLACK	HOURS TO INSTALL

4-23-4

GEMINI ZONE CHART

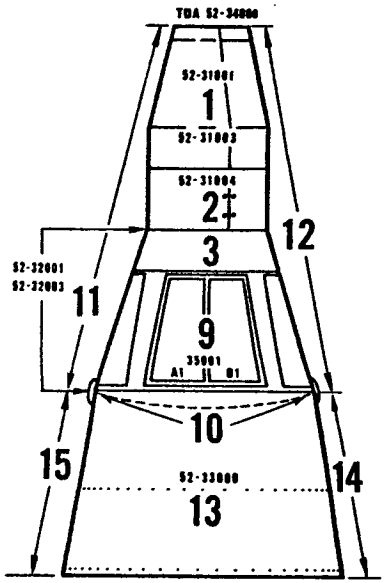

TOP VIEW

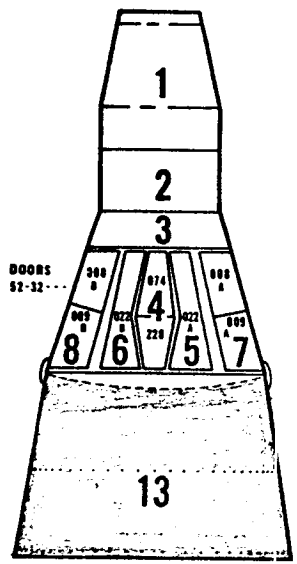

BOTTOM VIEW

1. RENDEZVOUS AND RADAR MODULE
2. RE-ENTRY RCS MODULE
3. FORWARD AREA CONE
4. CENTER EQUIPMENT BAY
5. L/H LANDING GEAR BAY
6. R/H LANDING GEAR BAY
7. L/H EQUIPMENT BAY
8. R/H EQUIPMENT BAY
9. CREW PRESSURIZED AREA
10. EXTERIOR AREA OF LARGE PRESS. BULKHEAD
11. SPACECRAFT EXTERIOR L/H
12. SPACECRAFT EXTERIOR R/H
13. INTERNAL ADAPTER AREA
14. R/H EXTERNAL ADAPTER AREA
15. L/H EXTERNAL ADAPTER AREA
16. ZONE FOR ENTIRE SPACECRAFT

GEMINI SPACECRAFT NO. 3

ZONE NO. ADAPTER

TOTAL EQUIPMENT REQUIRED 41

EQUIPMENT ON HAND 34

EQUIPMENT TO SCHEDULE 3

EQUIPMENT LATE 4

	PART NO.	PART NAME	NORM. INST.	SLACK	DEF. INST.	SLACK	HOURS TO INSTALL
52-	50702-21	RETRO ROCKETS (4)	33000 -AC	-11	33000 -SST	0	4

4-23-4

GEMINI ZONE CHART

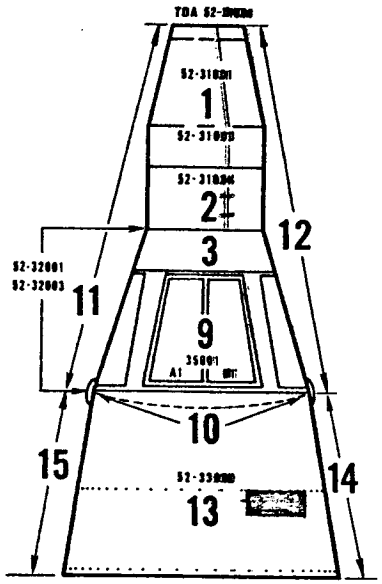

TOP VIEW

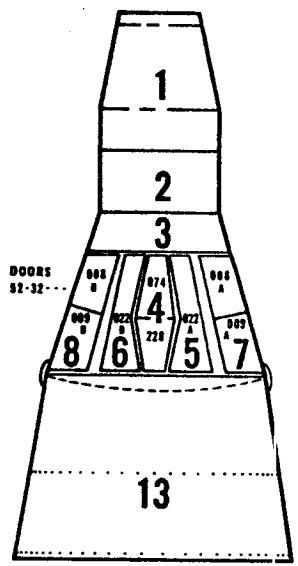

BOTTOM VIEW

1. RENDEZVOUS AND RADAR MODULE
2. RE-ENTRY RCS MODULE
3. FORWARD AREA CONE
4. CENTER EQUIPMENT BAY
5. L/H LANDING GEAR BAY
6. R/H LANDING GEAR BAY
7. L/H EQUIPMENT BAY
8. R/H EQUIPMENT BAY
9. CREW PRESSURIZED AREA
10. EXTERIOR AREA OF LARGE PRESS. BULKHEAD
11. SPACECRAFT EXTERIOR L/H
12. SPACECRAFT EXTERIOR R/H
13. INTERNAL ADAPTER AREA
14. R/H EXTERNAL ADAPTER AREA
15. L/H EXTERNAL ADAPTER AREA
16. ZONE FOR ENTIRE SPACECRAFT

GEMINI SPACECRAFT NO. 3

ZONE NO. ELEC. MOD.

TOTAL EQUIPMENT REQUIRED 25

EQUIPMENT ON HAND 22

EQUIPMENT TO SCHEDULE 3

EQUIPMENT LATE 0

PART NO.	PART NAME	NORM. INST.	SLACK	DEF. INST.	SLACK	HOURS TO INSTALL

4-23-4

GEMINI ZONE CHART

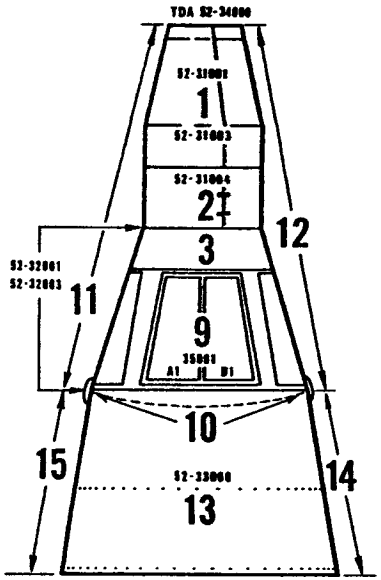

TOP VIEW

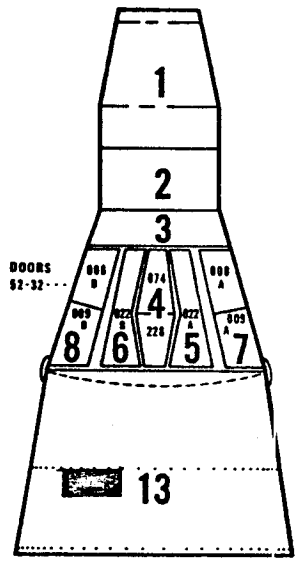

BOTTOM VIEW

1. RENDEZVOUS AND RADAR MODULE
2. RE-ENTRY RCS MODULE
3. FORWARD AREA CONE
4. CENTER EQUIPMENT BAY
5. L/H LANDING GEAR BAY
6. R/H LANDING GEAR BAY
7. L/H EQUIPMENT BAY
8. R/H EQUIPMENT BAY
9. CREW PRESSURIZED AREA
10. EXTERIOR AREA OF LARGE PRESS. BULKHEAD
11. SPACECRAFT EXTERIOR L/H
12. SPACECRAFT EXTERIOR R/H
13. INTERNAL ADAPTER AREA
14. R/H EXTERNAL ADAPTER AREA
15. L/H EXTERNAL ADAPTER AREA
16. ZONE FOR ENTIRE SPACECRAFT

GEMINI SPACECRAFT NO. 3

ZONE NO. ECS O_2

TOTAL EQUIPMENT REQUIRED 5

EQUIPMENT ON HAND 4

EQUIPMENT TO SCHEDULE 1

EQUIPMENT LATE 0

PART NO.	PART NAME	NORM. INST.	SLACK	DEF. INST.	SLACK	HOURS TO INSTALL

4-23-4

GEMINI ZONE CHART

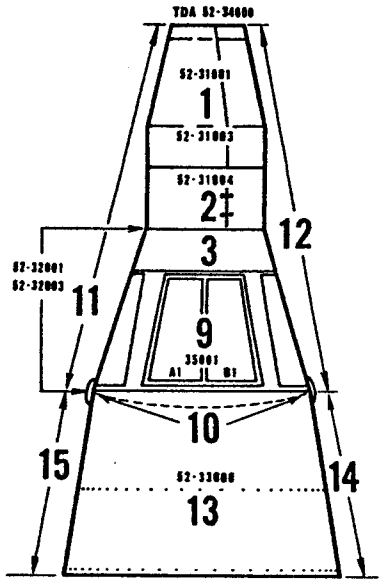

TOP VIEW

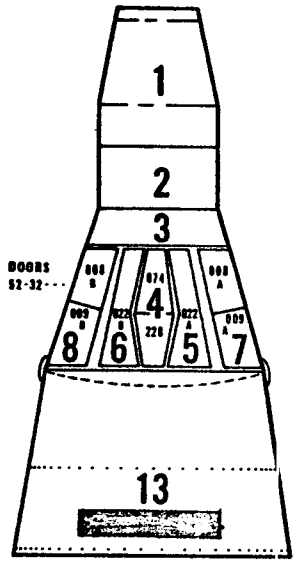

BOTTOM VIEW

1. RENDEZVOUS AND RADAR MODULE
2. RE-ENTRY RCS MODULE
3. FORWARD AREA CONE
4. CENTER EQUIPMENT BAY
5. L/H LANDING GEAR BAY
6. R/H LANDING GEAR BAY
7. L/H EQUIPMENT BAY
8. R/H EQUIPMENT BAY
9. CREW PRESSURIZED AREA
10. EXTERIOR AREA OF LARGE PRESS. BULKHEAD
11. SPACECRAFT EXTERIOR L/H
12. SPACECRAFT EXTERIOR R/H
13. INTERNAL ADAPTER AREA
14. R/H EXTERNAL ADAPTER AREA
15. L/H EXTERNAL ADAPTER AREA
16. ZONE FOR ENTIRE SPACECRAFT

GEMINI SPACECRAFT NO. 3

ZONE NO. OAMS

TOTAL EQUIPMENT REQUIRED 21

EQUIPMENT ON HAND 18

EQUIPMENT TO SCHEDULE 3

EQUIPMENT LATE 0

PART NO.	PART NAME	NORM. INST.	SLACK	DEF. INST.	SLACK	HOURS TO INSTALL

GEMINI ZONE CHART

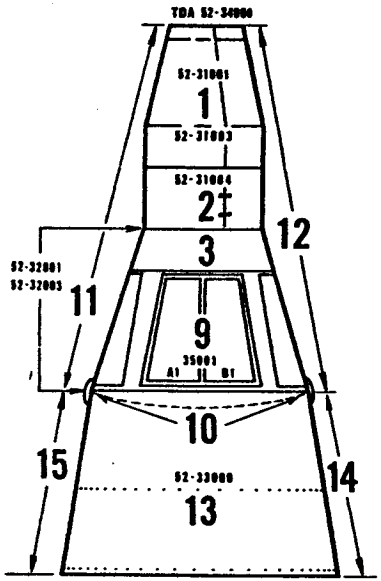

TOP VIEW

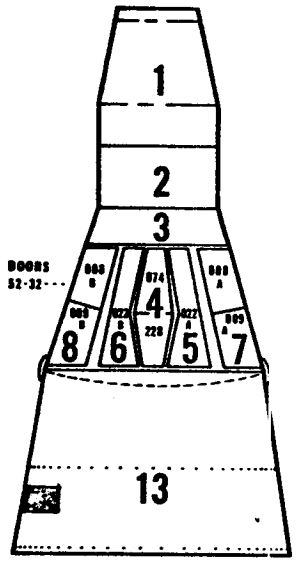

BOTTOM VIEW

1. RENDEZVOUS AND RADAR MODULE
2. RE-ENTRY RCS MODULE
3. FORWARD AREA CONE
4. CENTER EQUIPMENT BAY
5. L/H LANDING GEAR BAY
6. R/H LANDING GEAR BAY
7. L/H EQUIPMENT BAY
8. R/H EQUIPMENT BAY
9. CREW PRESSURIZED AREA
10. EXTERIOR AREA OF LARGE PRESS. BULKHEAD
11. SPACECRAFT EXTERIOR L/H
12. SPACECRAFT EXTERIOR R/H
13. INTERNAL ADAPTER AREA
14. R/H EXTERNAL ADAPTER AREA
15. L/H EXTERNAL ADAPTER AREA
16. ZONE FOR ENTIRE SPACECRAFT

GEMINI SPACECRAFT NO. 3

ZONE NO. ECS PUMP

TOTAL EQUIPMENT REQUIRED 31

EQUIPMENT ON HAND 22

EQUIPMENT TO SCHEDULE 8

EQUIPMENT LATE 1

PART NO.	PART NAME	NORM. INST.	SLACK	DEF. INST.	SLACK	HOURS TO INSTALL
52-83771-3	FILTER ASSY.	83305 -AZA1	-9	33000 -SST	0	2

GEMINI ZONE CHART

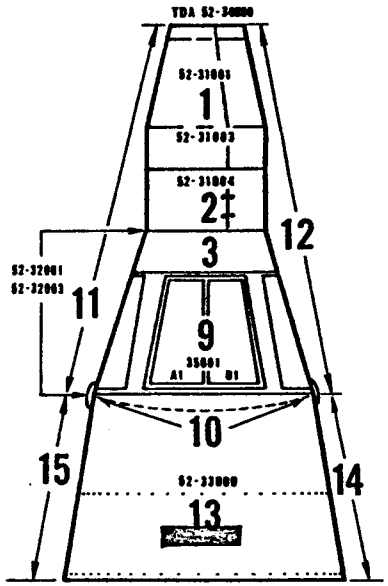

TOP VIEW

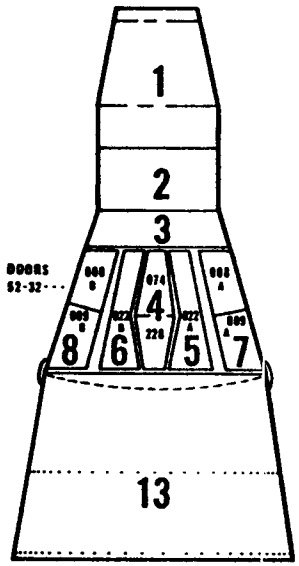

BOTTOM VIEW

1. RENDEZVOUS AND RADAR MODULE
2. RE-ENTRY RCS MODULE
3. FORWARD AREA CONE
4. CENTER EQUIPMENT BAY
5. L/H LANDING GEAR BAY
6. R/H LANDING GEAR BAY
7. L/H EQUIPMENT BAY
8. R/H EQUIPMENT BAY
9. CREW PRESSURIZED AREA
10. EXTERIOR AREA OF LARGE PRESS. BULKHEAD
11. SPACECRAFT EXTERIOR L/H
12. SPACECRAFT EXTERIOR R/H
13. INTERNAL ADAPTER AREA
14. R/H EXTERNAL ADAPTER AREA
15. L/H EXTERNAL ADAPTER AREA
16. ZONE FOR ENTIRE SPACECRAFT

GEMINI SPACECRAFT NO. 3

ZONE NO. BATTERY

TOTAL EQUIPMENT REQUIRED 21

EQUIPMENT ON HAND 20

EQUIPMENT TO SCHEDULE 1

EQUIPMENT LATE 0

PART NO.	PART NAME	NORM. INST.	SLACK	DEF. INST.	SLACK	HOURS TO INSTALL

4-23-4

SUBJECT: GEMINI STATUS REPORT FOR THE PERIOD ENDING 24 APRIL 1964 - SPACECRAFT NUMBER THREE

RECAPITULATION

Cabin

Final Assembly of the Cabin is still in progress. The Coolant System for the re-entry has been completed with the exception of the inertial platform mount part number 52-87717-29. Jumper Lines were installed and the Manufacturing SHDR C-483-3 Pressure Check of the Coolant System has been completed. There is a tentative will ship of 29 April 1964 on the inertial platform mount.

The Heat Shield buildup and fitting is still in process. Interference was encountered with structure on the Large Pressure Bulkhead and was repaired on salvage 34AE40, also the rework on the 52-32208 hoist fitting caused it to hit the Heat Shield which is on salvage 44AE31 for rework of the fitting.

All wire bundles are installed and reworked to include EJS changes incorporated prior to 21 April 1964, with the exception of the 52-77001-B204 Wire Bundle which is short the umbilical plug part number 52-79708-9. The CTU -B204 is being updated to Spacecraft Number 3 configuration for installation and use for DITMCO and SST.

The environmental control system is progressing. ECS Package 52-83700-479 has been received and a trial fit is being made prior to buildup to assure the Saddle Structure aligns properly and there is sufficient clearance for the seat and EJS door.

Adapter

All the 52-52701-265 25 lb. thrusters have been installed on the Adapter. All the wire bundles have been installed and are being reworked to incorporate the EJS changes up to 28 April 1964 at which time a

SUBJECT: GEMINI STATUS REPORT FOR THE PERIOD ENDING 24 APRIL 1964 - SPACECRAFT NUMBER THREE

cut off for DIFMCO is programed. Shortage of 52-52701-269 100 lb. thrusters are delaying completion of OAMS Lines.

RCS

An X-ray of all brazed connections was made with satisfactory results on the RCS. Thrusters 52-52700-217 are all installed. All packages are installed except "B" 52-52700-175 two each and "C" 52-52700-205 one each. Wire bundle has been installed and EMS incorporated.

R & R

The replacement R & R which will contain the high altitude Drouge Chute has not been received in the White Room as yet.

Adapter Modules

OAMS and Electronic Modules have wire bundles installed and are having equipment installed daily. ECS Pump Equipment is being installed. Several parts are available for installation on the ECS O_2 and Battery Modules when the structures are received in the White Room.

FORECAST

The following events are scheduled for accomplishment during the next thirty day period:

Cabin

DIFMCO will be accomplished and all discrepancies closed. The Coolant System split drop check will be made on the Coolant System Zone 4,7 and 8. Optical alignment of the inertial platform and image projector for the Left Hand Panel is scheduled.

Adapter

Remark of wire bundles will be completed and DIFMCO performed.

SUBJECT: GEMINI STATUS REPORT FOR THE PERIOD ENDING 24 APRIL 1964
- SPACECRAFT NUMBER THREE

Coolant check per D483-3 will be accomplished. Pending receipt from vendor, 100 lb. Thrusters 52-52700-269 will be installed and OAMS Lines completed. All equipment except Modules will be installed.

RCS

Installation of remaining packages. Oxidizer and Fuel Tanks will be completed. Trial fit of Shingles is to be performed. Plumbing will be completed.

R & R

Still in Structure Area. Scheduled for delivery to the White Room 14 May 1964.

OAMS

Tanks and Packages will be installed.

ECS O2 and Battery

Structures will be delivered to White Room for equipment installation.

GEMINI MANUFACTURING WORK PLAN - SPACECRAFT NO. 3A

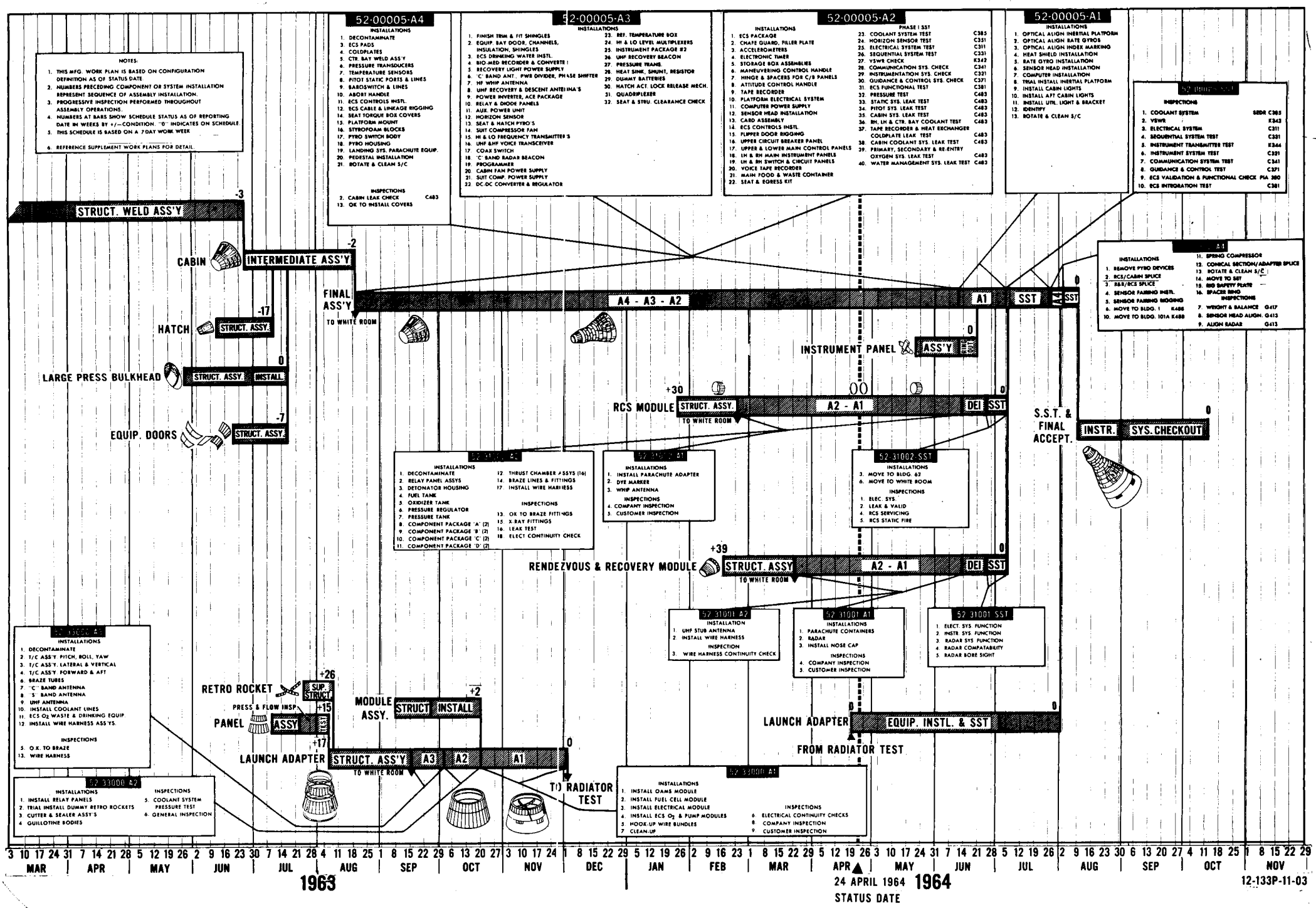

GEMINI SPACECRAFT NO. 3A
EQUIPMENT STUDY

LEGEND:

▽ WILL SHIP

▼ ACTUAL SHIPPED

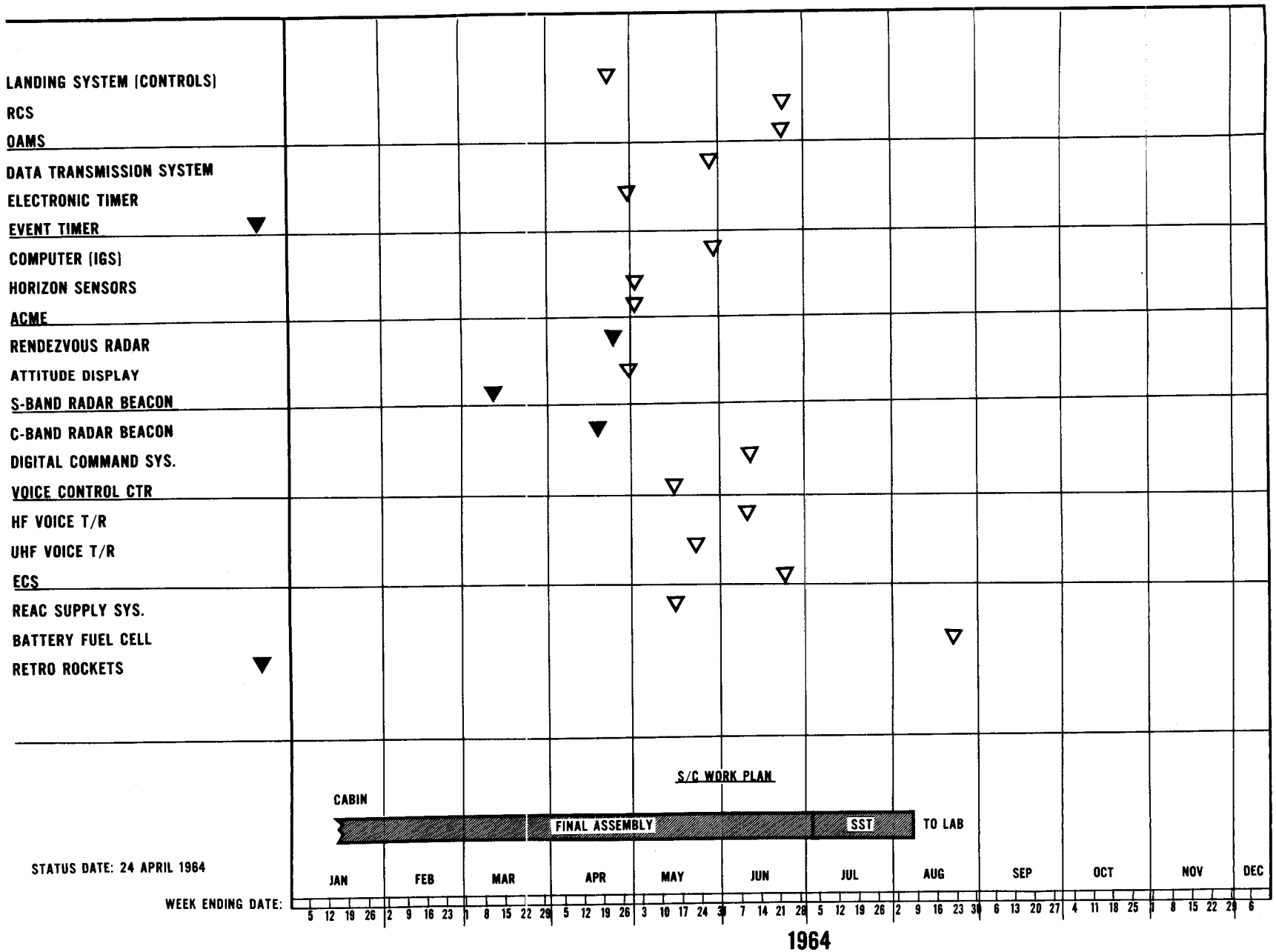

S C 3A WORK PLAN MODULE FINAL ASSY

	ZONE	TOTAL HRS.	OPEN HRS.
RCS	2		
1. INSTALL PLUMBING & PRESSURE TEST		322	183
2. INSTALL W/B - T/C - T/S		168	168
3. FIBERGLASS CHANNELS - MIN - K - INSULATION			
4. INSTALL EQUIP		187	177
5. INSTALL SHINGLES - RETAINERS		12	12
6. DITMCO - T/C - T/S TEST		25	25
7. S S T		159	159
8. INSTALL THRUST CHAMBERS		20	20
9. INSTALL STYROFOAM		13	13
10. NASA/MAC INSPECTION		143	143
R & R	1		
11. INSTALL W/B - T/C - T/S		62	62
12. FIBERGLASS CHANNELS - MIN - K - INSULATION			
13. INSTALL EQUIP		107	87
14. INSTALL SHINGLES - RETAINERS		8	8
15. DITMCO - T/C - T/S TEST		26	26
16. S S T		90	90
17. NASA/MAC INSPECTION		17	17
ADAPTER	13		
18. INSTALL PLUMBING & PRESSURE TEST		167	167
19. INSTALL W/B - T/C - T/S		162	162
20. INSTALL EQUIPMENT		432	432
21. DTMCO - T/C - T/S TEST		79	79
22. S S T		626	626
23. NASA/MAC INSPECTION		58	58

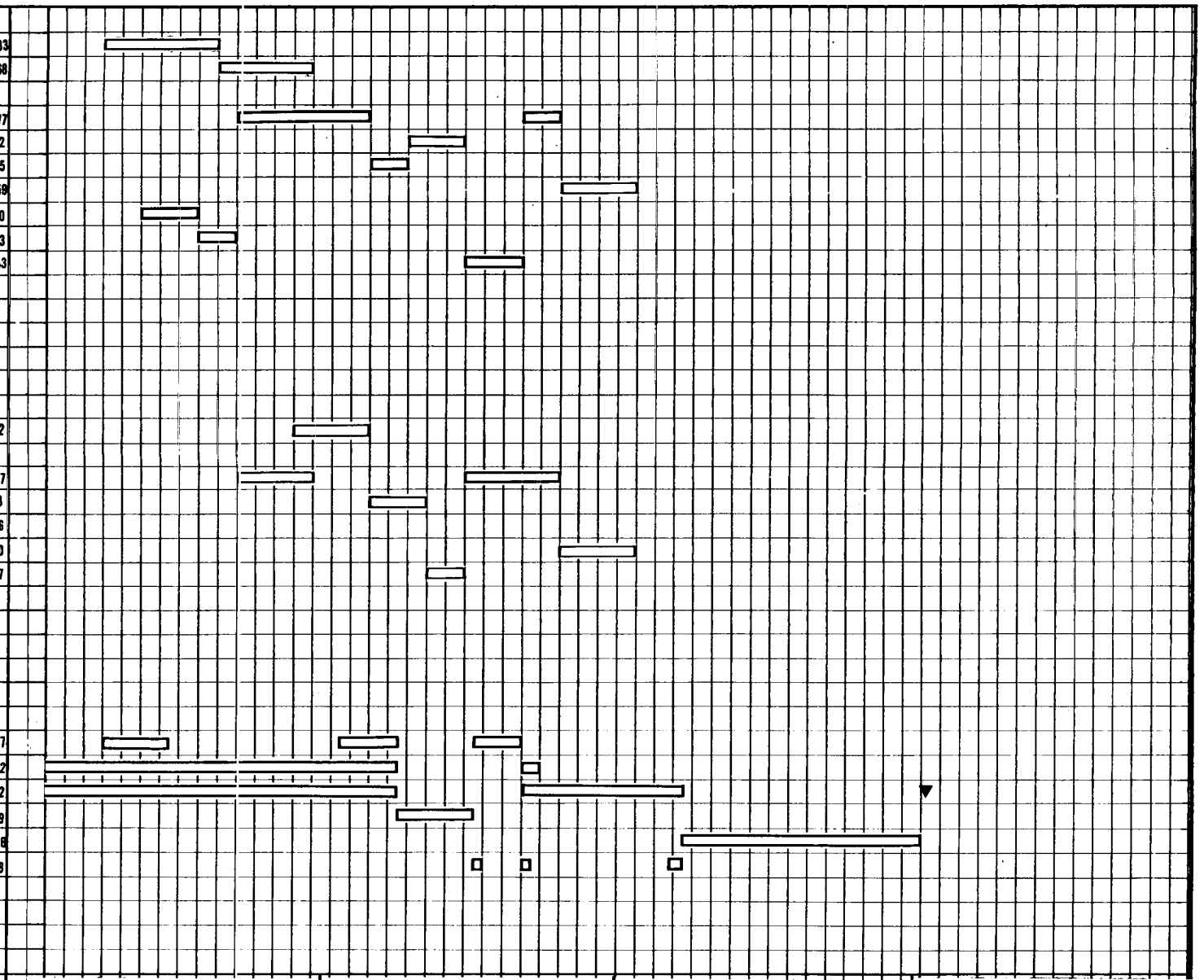

LEGEND: WORK PERIOD

14 STATUS AS OF: 24 APRIL 1964

S C 3A WORK PLAN FINAL ASSY AND SST

	ZONE	TOTAL HRS.	OPEN HRS.
1. STRUCTURAL EOPO INCORPORATION	16	2045	180
2. PRESSURE TEST 5#	9	86	9
3. ECS INSTALLATION & PLUMBING	9	192	50
4. WIRE BUNDLES IN CABIN	9	219	211
5. PEDESTAL INSTALLATION	9	56	17
6. FIBERGLASS CHANNELS & MIN-K	11 12	337	6
7. INSTALL SHINGLES	11 12	811	18
8. INSTALL & RIG HATCHES	11 12	148	8
9. INSTALL & RIG 32060 DOORS	5 6	138	91
10. INSTALL STYROFOAM	3 7 8	0	0
11. INSTALL COLDPLATES & PLUMBING	3 7 8	205	66
12. INSTALL WIRE BUNDLES IN EQUIP BAYS	3 7 8	839	678
13. SPLICE THERMOCOUPLES & TEST	9 11 12	60	60
14. INSTALL STATIC SYSTEM	3	0	0
15. STATIC SYSTEM PRESSURE TEST	3	0	0
16. INSTALL EQUIPMENT-CABIN	9	686	511
17. INSTALL EQUIPMENT-OTHER	7 8	538	306
18. DITMCO	16	209	209
19. SPLICE TEMP. SENSORS	9 11 12	12	12
20. SST-PHASE I	9	76	0
21. HEATSHIELD INSTALLATION	10	30	30
22. MECHANICAL MATE	10 14 15	142	142

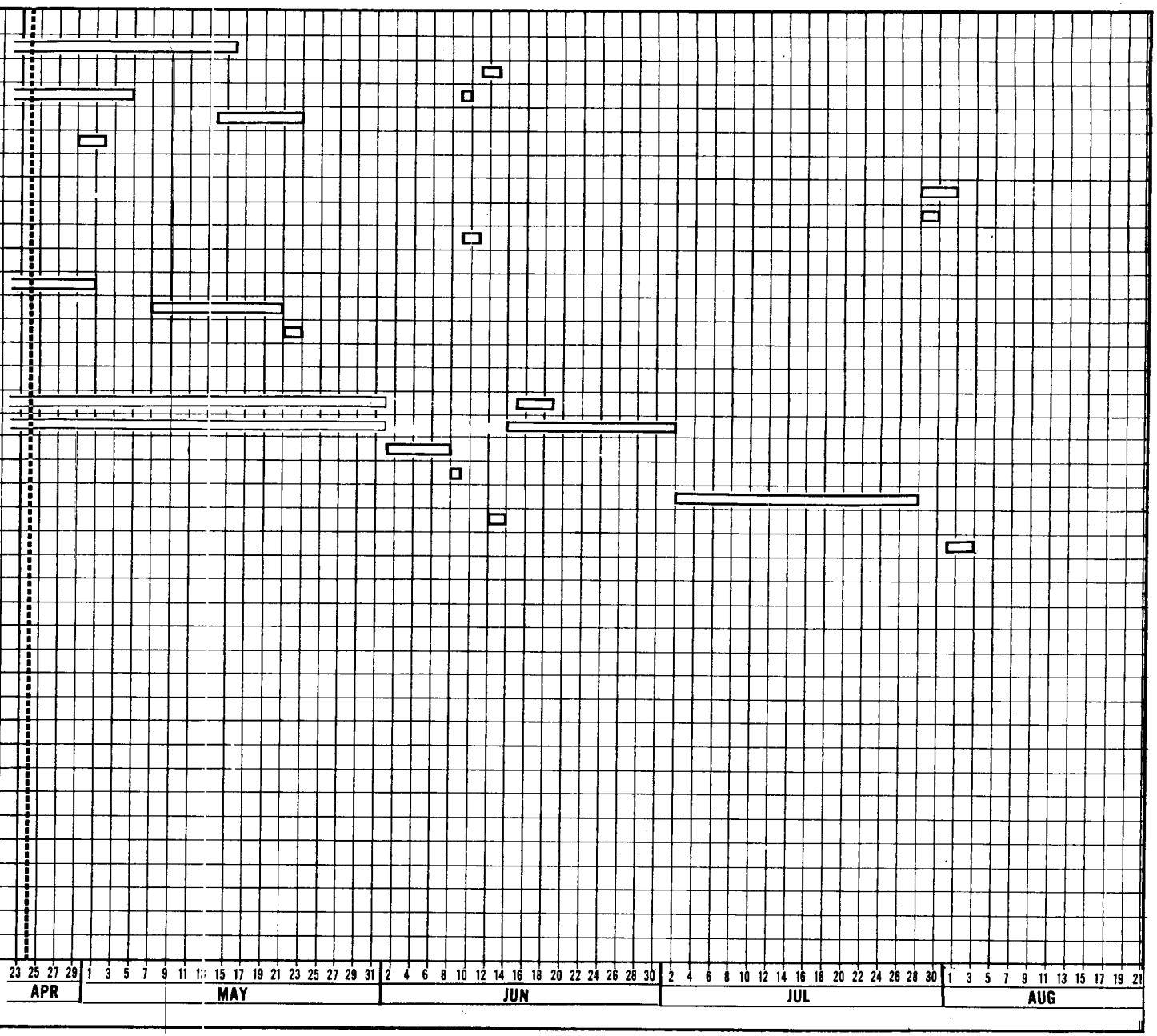

LEGEND: WORK PERIOD

STATUS AS OF: 24 APRIL 1964

GEMINI ZONE CHART

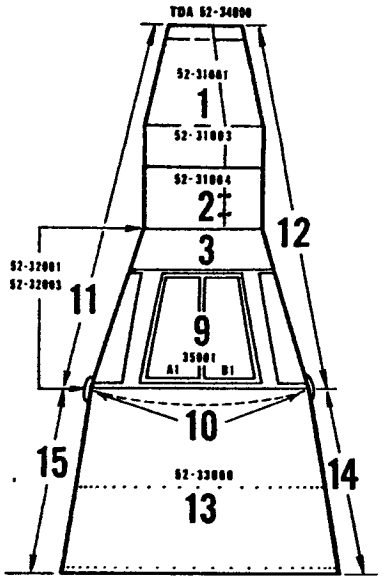

TOP VIEW

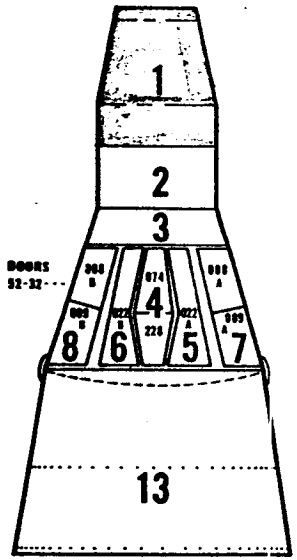

BOTTOM VIEW

1. RENDEZVOUS AND RADAR MODULE
2. RE-ENTRY RCS MODULE
3. FORWARD AREA CONE
4. CENTER EQUIPMENT BAY
5. L/H LANDING GEAR BAY
6. R/H LANDING GEAR BAY
7. L/H EQUIPMENT BAY
8. R/H EQUIPMENT BAY
9. CREW PRESSURIZED AREA
10. EXTERIOR AREA OF LARGE PRESS. BULKHEAD
11. SPACECRAFT EXTERIOR L/H
12. SPACECRAFT EXTERIOR R/H
13. INTERNAL ADAPTER AREA
14. R/H EXTERNAL ADAPTER AREA
15. L/H EXTERNAL ADAPTER AREA
16. ZONE FOR ENTIRE SPACECRAFT

GEMINI SPACECRAFT NO. 3A

ZONE NO. 1

TOTAL EQUIPMENT REQUIRED 40

EQUIPMENT ON HAND 18

EQUIPMENT TO SCHEDULE 22

EQUIPMENT LATE 0

PART NO.	PART NAME	NORM. INST.	SLACK	DEF. INST.	SLACK	HOURS TO INSTALL

4-23-64

GEMINI ZONE CHART

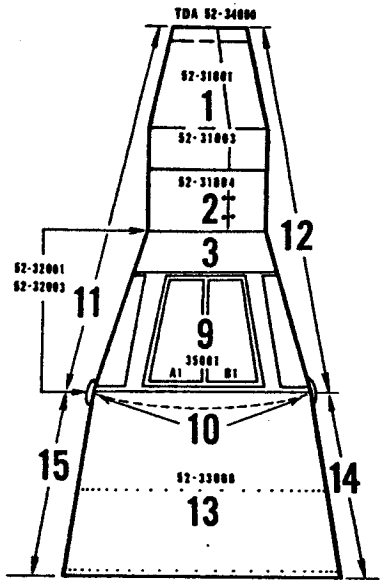

TOP VIEW

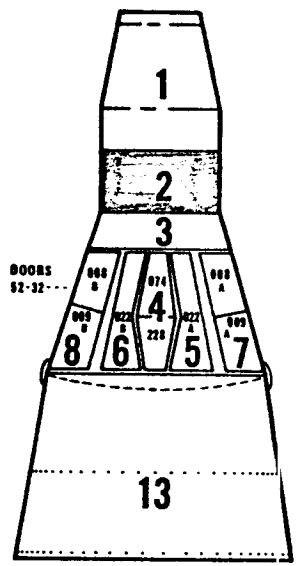

BOTTOM VIEW

1. RENDEZVOUS AND RADAR MODULE
2. RE-ENTRY RCS MODULE
3. FORWARD AREA CONE
4. CENTER EQUIPMENT BAY
5. L/H LANDING GEAR BAY
6. R/H LANDING GEAR BAY
7. L/H EQUIPMENT BAY
8. R/H EQUIPMENT BAY
9. CREW PRESSURIZED AREA
10. EXTERIOR AREA OF LARGE PRESS. BULKHEAD
11. SPACECRAFT EXTERIOR L/H
12. SPACECRAFT EXTERIOR R/H
13. INTERNAL ADAPTER AREA
14. R/H EXTERNAL ADAPTER AREA
15. L/H EXTERNAL ADAPTER AREA
16. ZONE FOR ENTIRE SPACECRAFT

GEMINI SPACECRAFT NO. 3A

ZONE NO. 2

TOTAL EQUIPMENT REQUIRED 77

EQUIPMENT ON HAND 17

EQUIPMENT TO SCHEDULE 48

EQUIPMENT LATE 2

52

PART NO.	PART NAME	NORM. INST.	SLACK	DEF. INST.	SLACK	HOURS TO INSTALL
41703-139	CARTRIDGE	00003 A3	-28	00003 A2	0	2
41703-143	CARTRIDGE	"	-28	"	0	2

4-23-64

GEMINI ZONE CHART

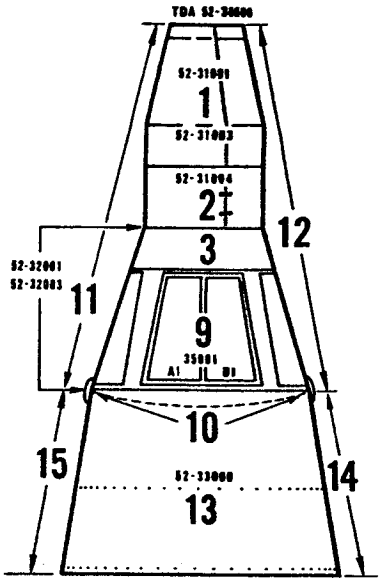

TOP VIEW

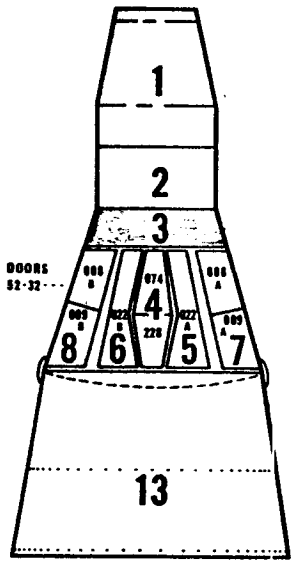

BOTTOM VIEW

1. RENDEZVOUS AND RADAR MODULE
2. RE-ENTRY RCS MODULE
3. FORWARD AREA CONE
4. CENTER EQUIPMENT BAY
5. L/H LANDING GEAR BAY
6. R/H LANDING GEAR BAY
7. L/H EQUIPMENT BAY
8. R/H EQUIPMENT BAY
9. CREW PRESSURIZED AREA
10. EXTERIOR AREA OF LARGE PRESS. BULKHEAD
11. SPACECRAFT EXTERIOR L/H
12. SPACECRAFT EXTERIOR R/H
13. INTERNAL ADAPTER AREA
14. R/H EXTERNAL ADAPTER AREA
15. L/H EXTERNAL ADAPTER AREA
16. ZONE FOR ENTIRE SPACECRAFT

GEMINI SPACECRAFT NO. 3A

ZONE NO. 3

TOTAL EQUIPMENT REQUIRED 48

EQUIPMENT ON HAND 31

EQUIPMENT TO SCHEDULE 13

EQUIPMENT LATE 4

52

PART NO.	PART NAME	NORM. INST.	SLACK	DEF. INST.	SLACK	HOURS TO INSTALL
72714-7	Switch Body (1)	00005 A4	-36	00005 A2	0	2
85716-11	H.F Whip Antenna (1)	00005 A3	-28	"	0	6
83717-1	Inflow Duct	00005 A4	-35	"	0	2
83711-7	Seal Assy	"	-38	00005 A2	0	4

4-23-64

GEMINI ZONE CHART

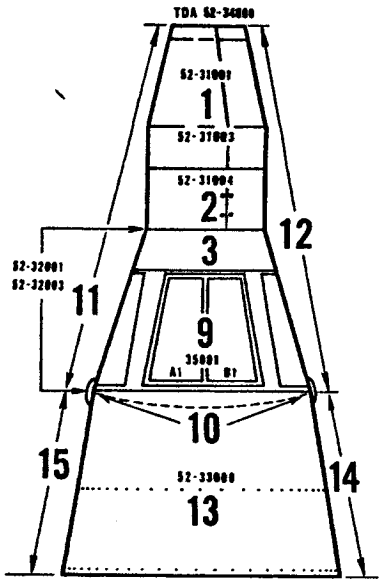

TOP VIEW

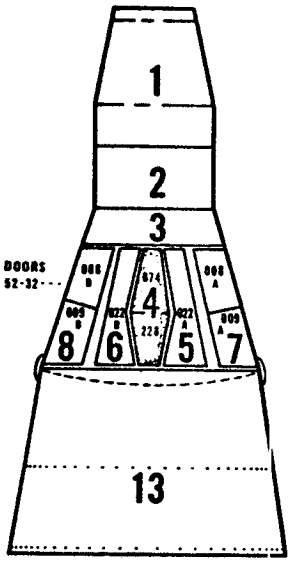

BOTTOM VIEW

1. RENDEZVOUS AND RADAR MODULE
2. RE-ENTRY RCS MODULE
3. FORWARD AREA CONE
4. CENTER EQUIPMENT BAY
5. L/H LANDING GEAR BAY
6. R/H LANDING GEAR BAY
7. L/H EQUIPMENT BAY
8. R/H EQUIPMENT BAY
9. CREW PRESSURIZED AREA
10. EXTERIOR AREA OF LARGE PRESS. BULKHEAD
11. SPACECRAFT EXTERIOR L/H
12. SPACECRAFT EXTERIOR R/H
13. INTERNAL ADAPTER AREA
14. R/H EXTERNAL ADAPTER AREA
15. L/H EXTERNAL ADAPTER AREA
16. ZONE FOR ENTIRE SPACECRAFT

GEMINI SPACECRAFT NO. 3A

ZONE NO. 4

TOTAL EQUIPMENT REQUIRED 32

EQUIPMENT ON HAND 30

EQUIPMENT TO SCHEDULE 2

EQUIPMENT LATE 0

PART NO.	PART NAME	NORM. INST.	SLACK	DEF. INST.	SLACK	HOURS TO INSTALL

4-23-64

GEMINI ZONE CHART

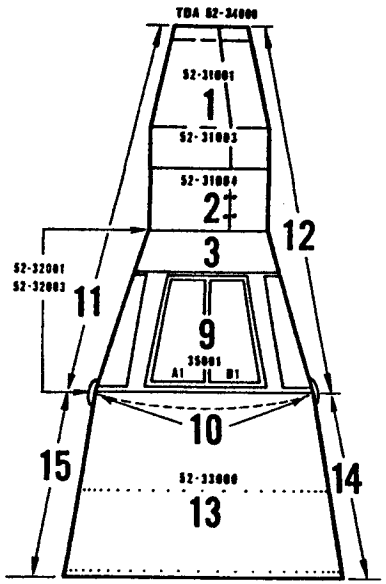

TOP VIEW

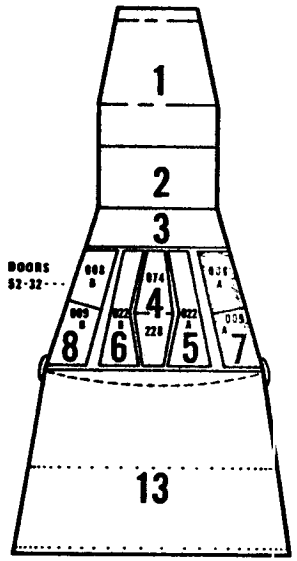

BOTTOM VIEW

1. RENDEZVOUS AND RADAR MODULE
2. RE-ENTRY RCS MODULE
3. FORWARD AREA CONE
4. CENTER EQUIPMENT BAY
5. L/H LANDING GEAR BAY
6. R/H LANDING GEAR BAY
7. L/H EQUIPMENT BAY
8. R/H EQUIPMENT BAY
9. CREW PRESSURIZED AREA
10. EXTERIOR AREA OF LARGE PRESS. BULKHEAD
11. SPACECRAFT EXTERIOR L/H
12. SPACECRAFT EXTERIOR R/H
13. INTERNAL ADAPTER AREA
14. R/H EXTERNAL ADAPTER AREA
15. L/H EXTERNAL ADAPTER AREA
16. ZONE FOR ENTIRE SPACECRAFT

GEMINI SPACECRAFT NO. 3A

ZONE NO. 7

TOTAL EQUIPMENT REQUIRED 51

EQUIPMENT ON HAND 36

EQUIPMENT TO SCHEDULE 11

EQUIPMENT LATE 4

	PART NO.	PART NAME	NORM. INST.	SLACK	DEF. INST.	SLACK	HOURS TO INSTALL
52	83735-5	COLD PLATE (1)	00005 A4	-36	00005 A2	0	2
	83739-9	COLD PLATE	"	-36	00005 A2	0	2
	83738-5	COLD PLATE	"	-36	"	0	2
	87717-29	PLATEFORM BASE		-40	00005 A2	0	2

4-23-64

GEMINI ZONE CHART

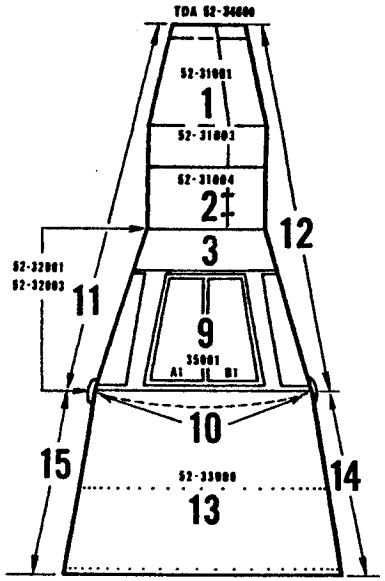

TOP VIEW

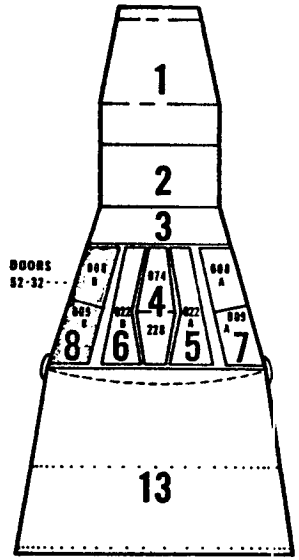

BOTTOM VIEW

1. RENDEZVOUS AND RADAR MODULE
2. RE-ENTRY RCS MODULE
3. FORWARD AREA CONE
4. CENTER EQUIPMENT BAY
5. L/H LANDING GEAR BAY
6. R/H LANDING GEAR BAY
7. L/H EQUIPMENT BAY
8. R/H EQUIPMENT BAY
9. CREW PRESSURIZED AREA
10. EXTERIOR AREA OF LARGE PRESS. BULKHEAD
11. SPACECRAFT EXTERIOR L/H
12. SPACECRAFT EXTERIOR R/H
13. INTERNAL ADAPTER AREA
14. R/H EXTERNAL ADAPTER AREA
15. L/H EXTERNAL ADAPTER AREA
16. ZONE FOR ENTIRE SPACECRAFT

GEMINI SPACECRAFT NO. 3A

ZONE NO. 8

TOTAL EQUIPMENT REQUIRED 83

EQUIPMENT ON HAND 65

EQUIPMENT TO SCHEDULE 5

EQUIPMENT LATE 13

	PART NO.	PART NAME	NORM. INST.	SLACK	DEF. INST.	SLACK	HOURS TO INSTALL
52	72714-7	SWITCH BODY (3)	00005 A4	-36	00005 A2	0	3
	85713-65	H.F. TRANSMITTER (1)	00005 A3	-28	"	0	4
	85709-11	U.H.F. TRANSCEIVER (2)	"	-28	"	0	4
	85713-67	L.F TRANSMITTER (1)	"	-28	"	0	4
	85707-9	'C' BAND BEACON (1)	"	-28	"	0	4
	85710-11	H.F VOICE TRANS (1)	"	-28	"	0	2
	85719-7	U.H.F REC. BEACON (1)	"	-28	"	0	2
	83731-5	COLD PLATE (1)	00005 A4	-36	"	0	2
	83730-5	" " (1)	"	-36	"	0	2

4-23-64

GEMINI ZONE CHART

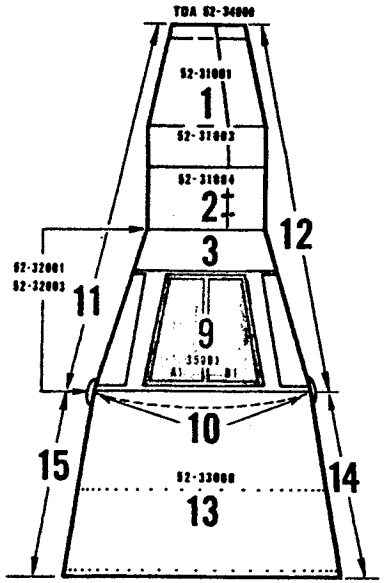

TOP VIEW

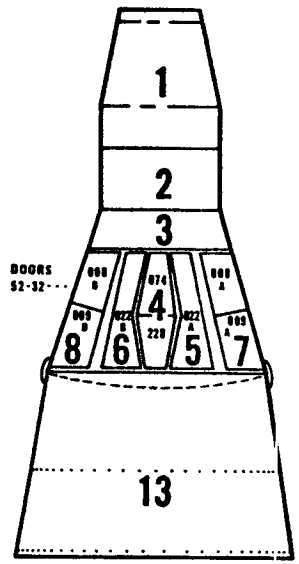

BOTTOM VIEW

1. RENDEZVOUS AND RADAR MODULE
2. RE-ENTRY RCS MODULE
3. FORWARD AREA CONE
4. CENTER EQUIPMENT BAY
5. L/H LANDING GEAR BAY
6. R/H LANDING GEAR BAY
7. L/H EQUIPMENT BAY
8. R/H EQUIPMENT BAY
9. CREW PRESSURIZED AREA
10. EXTERIOR AREA OF LARGE PRESS. BULKHEAD
11. SPACECRAFT EXTERIOR L/H
12. SPACECRAFT EXTERIOR R/H
13. INTERNAL ADAPTER AREA
14. R/H EXTERNAL ADAPTER AREA
15. L/H EXTERNAL ADAPTER AREA
16. ZONE FOR ENTIRE SPACECRAFT

GEMINI SPACECRAFT NO. 3A

ZONE NO. 9

TOTAL EQUIPMENT REQUIRED 123

EQUIPMENT ON HAND 91

EQUIPMENT TO SCHEDULE 32

EQUIPMENT LATE 0

PART NO.	PART NAME	NORM. INST.	SLACK	DEF. INST.	SLACK	HOURS TO INSTALL

4-23-64

GEMINI ZONE CHART

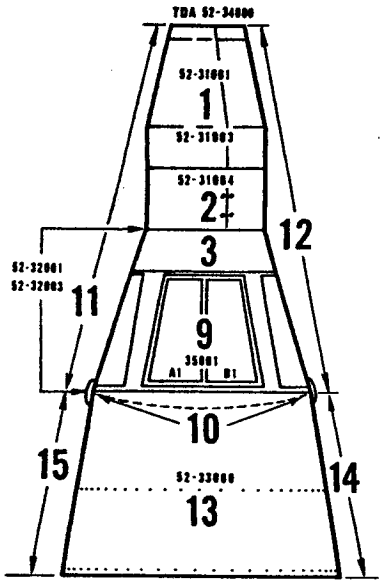

TOP VIEW

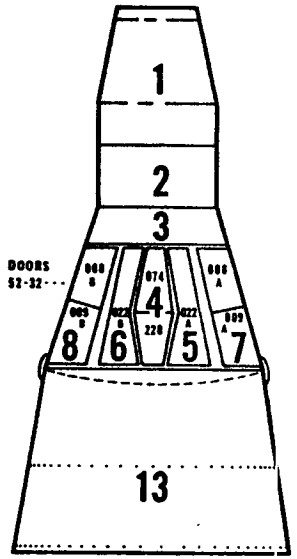

BOTTOM VIEW

1. RENDEZVOUS AND RADAR MODULE
2. RE-ENTRY RCS MODULE
3. FORWARD AREA CONE
4. CENTER EQUIPMENT BAY
5. L/H LANDING GEAR BAY
6. R/H LANDING GEAR BAY
7. L/H EQUIPMENT BAY
8. R/H EQUIPMENT BAY
9. CREW PRESSURIZED AREA
10. EXTERIOR AREA OF LARGE PRESS. BULKHEAD
11. SPACECRAFT EXTERIOR L/H
12. SPACECRAFT EXTERIOR R/H
13. INTERNAL ADAPTER AREA
14. R/H EXTERNAL ADAPTER AREA
15. L/H EXTERNAL ADAPTER AREA
16. ZONE FOR ENTIRE SPACECRAFT

GEMINI SPACECRAFT NO. 3A

ZONE NO. 11

TOTAL EQUIPMENT REQUIRED 2

EQUIPMENT ON HAND 0

EQUIPMENT TO SCHEDULE 2

EQUIPMENT LATE 0

PART NO.	PART NAME	NORM. INST.	SLACK	DEF. INST.	SLACK	HOURS TO INSTALL

4-23-64

GEMINI ZONE CHART

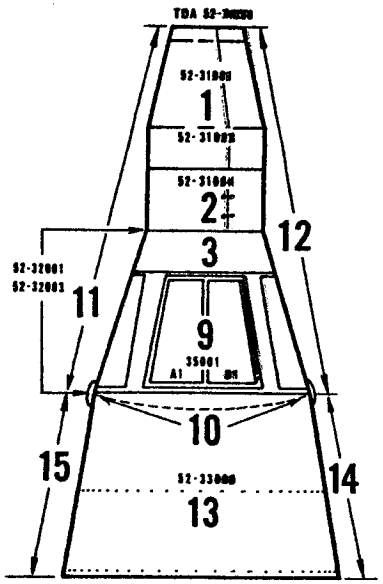

TOP VIEW

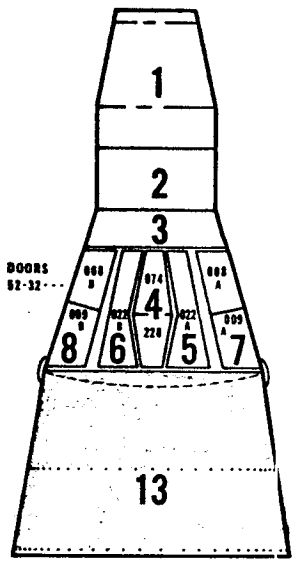

BOTTOM VIEW

1. RENDEZVOUS AND RADAR MODULE
2. RE-ENTRY RCS MODULE
3. FORWARD AREA CONE
4. CENTER EQUIPMENT BAY
5. L/H LANDING GEAR BAY
6. R/H LANDING GEAR BAY
7. L/H EQUIPMENT BAY
8. R/H EQUIPMENT BAY
9. CREW PRESSURIZED AREA
10. EXTERIOR AREA OF LARGE PRESS. BULKHEAD
11. SPACECRAFT EXTERIOR L/H
12. SPACECRAFT EXTERIOR R/H
13. INTERNAL ADAPTER AREA
14. R/H EXTERNAL ADAPTER AREA
15. L/H EXTERNAL ADAPTER AREA
16. ZONE FOR ENTIRE SPACECRAFT

GEMINI SPACECRAFT NO. 3A

ZONE NO. 13

TOTAL EQUIPMENT REQUIRED 88

EQUIPMENT ON HAND 14

EQUIPMENT TO SCHEDULE 74

EQUIPMENT LATE 0

PART NO.	PART NAME	NORM. INST.	SLACK	DEF. INST.	SLACK	HOURS TO INSTALL

4-23-4

GEMINI ZONE CHART

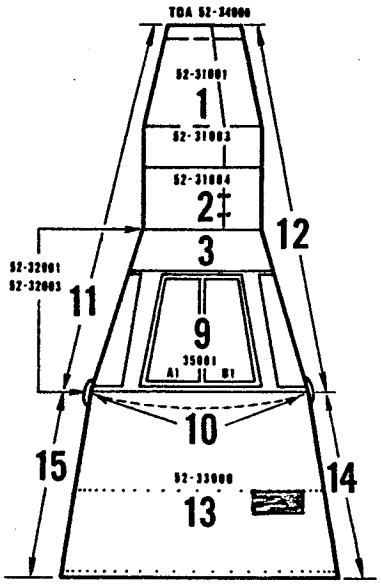

TOP VIEW

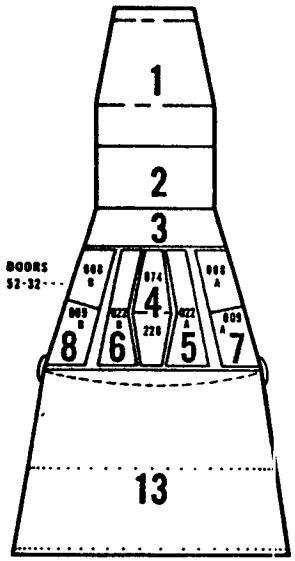

BOTTOM VIEW

1. RENDEZVOUS AND RADAR MODULE
2. RE-ENTRY RCS MODULE
3. FORWARD AREA CONE
4. CENTER EQUIPMENT BAY
5. L/H LANDING GEAR BAY
6. R/H LANDING GEAR BAY
7. L/H EQUIPMENT BAY
8. R/H EQUIPMENT BAY
9. CREW PRESSURIZED AREA
10. EXTERIOR AREA OF LARGE PRESS. BULKHEAD
11. SPACECRAFT EXTERIOR L/H
12. SPACECRAFT EXTERIOR R/H
13. INTERNAL ADAPTER AREA
14. R/H EXTERNAL ADAPTER AREA
15. L/H EXTERNAL ADAPTER AREA
16. ZONE FOR ENTIRE SPACECRAFT

GEMINI SPACECRAFT NO. 3A

ZONE NO. Elec. Mod.

TOTAL EQUIPMENT REQUIRED 17

EQUIPMENT ON HAND 6

EQUIPMENT TO SCHEDULE 11

EQUIPMENT LATE 0

PART NO.	PART NAME	NORM. INST.	SLACK	DEF. INST.	SLACK	HOURS TO INSTALL

4-23-4

GEMINI ZONE CHART

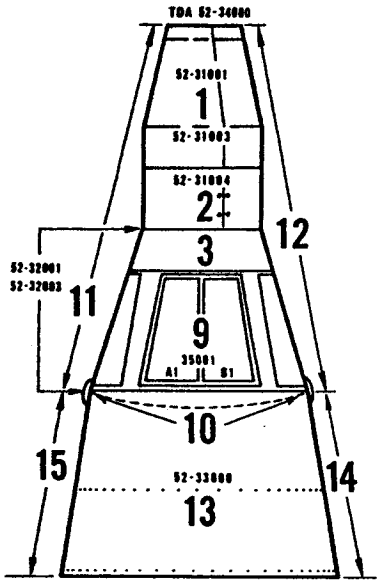

TOP VIEW

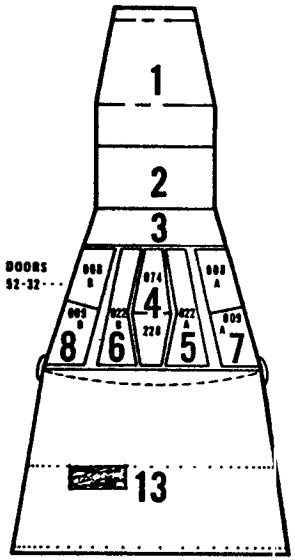

BOTTOM VIEW

1. RENDEZVOUS AND RADAR MODULE
2. RE-ENTRY RCS MODULE
3. FORWARD AREA CONE
4. CENTER EQUIPMENT BAY
5. L/H LANDING GEAR BAY
6. R/H LANDING GEAR BAY
7. L/H EQUIPMENT BAY
8. R/H EQUIPMENT BAY
9. CREW PRESSURIZED AREA
10. EXTERIOR AREA OF LARGE PRESS. BULKHEAD
11. SPACECRAFT EXTERIOR L/H
12. SPACECRAFT EXTERIOR R/H
13. INTERNAL ADAPTER AREA
14. R/H EXTERNAL ADAPTER AREA
15. L/H EXTERNAL ADAPTER AREA
16. ZONE FOR ENTIRE SPACECRAFT

GEMINI SPACECRAFT NO. 3A

ZONE NO. O_2 Mod

TOTAL EQUIPMENT REQUIRED 3

EQUIPMENT ON HAND 0

EQUIPMENT TO SCHEDULE 3

EQUIPMENT LATE 0

PART NO.	PART NAME	NORM. INST.	SLACK	DEF. INST.	SLACK	HOURS TO INSTALL

4-23-4

GEMINI ZONE CHART

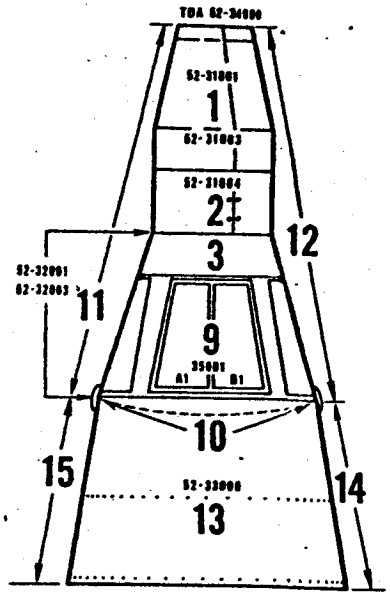

TOP VIEW

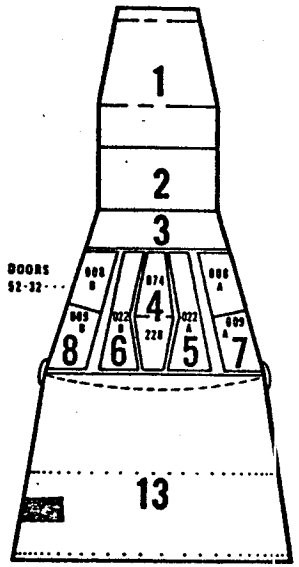

BOTTOM VIEW

1. RENDEZVOUS AND RADAR MODULE
2. RE-ENTRY RCS MODULE
3. FORWARD AREA CONE
4. CENTER EQUIPMENT BAY
5. L/H LANDING GEAR BAY
6. R/H LANDING GEAR BAY
7. L/H EQUIPMENT BAY
8. R/H EQUIPMENT BAY
9. CREW PRESSURIZED AREA
10. EXTERIOR AREA OF LARGE PRESS. BULKHEAD
11. SPACECRAFT EXTERIOR L/H
12. SPACECRAFT EXTERIOR R/H
13. INTERNAL ADAPTER AREA
14. R/H EXTERNAL ADAPTER AREA
15. L/H EXTERNAL ADAPTER AREA
16. ZONE FOR ENTIRE SPACECRAFT

GEMINI SPACECRAFT NO. 3A

ZONE NO. ECS PUMP

TOTAL EQUIPMENT REQUIRED 27

EQUIPMENT ON HAND 10

EQUIPMENT TO SCHEDULE 17

EQUIPMENT LATE 0

PART NO.	PART NAME	NORM. INST.	SLACK	DEF. INST.	SLACK	HOURS TO INSTALL

4-23-4

GEMINI ZONE CHART

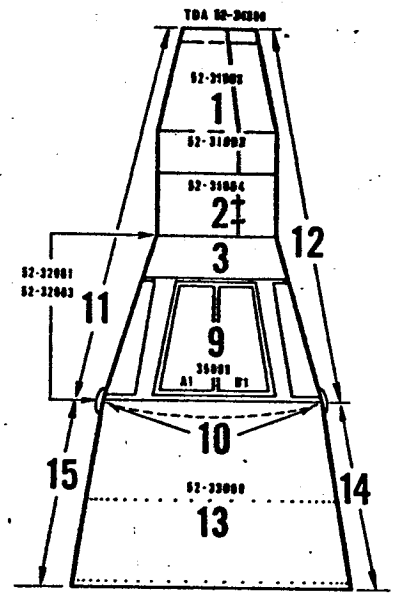

TOP VIEW

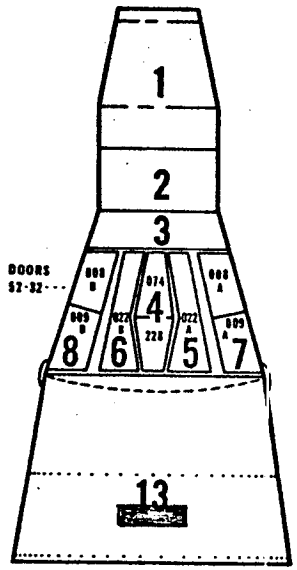

BOTTOM VIEW

1. RENDEZVOUS AND RADAR MODULE
2. RE-ENTRY RCS MODULE
3. FORWARD AREA CONE
4. CENTER EQUIPMENT BAY
5. L/H LANDING GEAR BAY
6. R/H LANDING GEAR BAY
7. L/H EQUIPMENT BAY
8. R/H EQUIPMENT BAY
9. CREW PRESSURIZED AREA
10. EXTERIOR AREA OF LARGE PRESS. BULKHEAD
11. SPACECRAFT EXTERIOR L/H
12. SPACECRAFT EXTERIOR R/H
13. INTERNAL ADAPTER AREA
14. R/H EXTERNAL ADAPTER AREA
15. L/H EXTERNAL ADAPTER AREA
16. ZONE FOR ENTIRE SPACECRAFT

GEMINI SPACECRAFT NO. 3A

ZONE NO. Batt. Mod

TOTAL EQUIPMENT REQUIRED 18

EQUIPMENT ON HAND 0

EQUIPMENT TO SCHEDULE 18

EQUIPMENT LATE 0

PART NO.	PART NAME	NORM. INST.	SLACK	DEF. INST.	SLACK	HOURS TO INSTALL

4-23-4

24 April 1964

SUBJECT: GEMINI STATUS REPORT FOR THE PERIOD ENDING 24 APRIL 1964
- SPACECRAFT NUMBER THREE A

RECAPITULATION

Cabin

Honeycomb bonding completed on the Large Pressure Bulkhead. Right Hand Hatch Shear Pins completed. Shingles prefitted, removed and stored for final installation. Pedestal installed in Cabin Area less coldplate. Heat Exchanger hold down bolts fitted to proper alignment. Coolant lines installed less hook-up to applicable major components. Seat Rails reworked and bought off. Equipment bays updated to latest engineering prior to Wire Bundle installation. MR'S and EOPO'S worked as applicable.

FORECAST

The following events are scheduled for accomplishment during the next thirty day period: Optical Alignment of coldplates in Zone 4 and Zone 7 to be made. Coolant Line Pressure Check to be made in center equipment bay and cabin. Balance of Coolant Line pressure checks contingent on coldplates in house. Wire bundles will be installed in equipment bays and cabin. Snorkel Ducting, portion of ECS loop, to be installed in cabin and Z160 area. Major equipment items to be installed where applicable.

GEMINI MANUFACTURING WORK PLAN–SPACECRAFT NO. 4

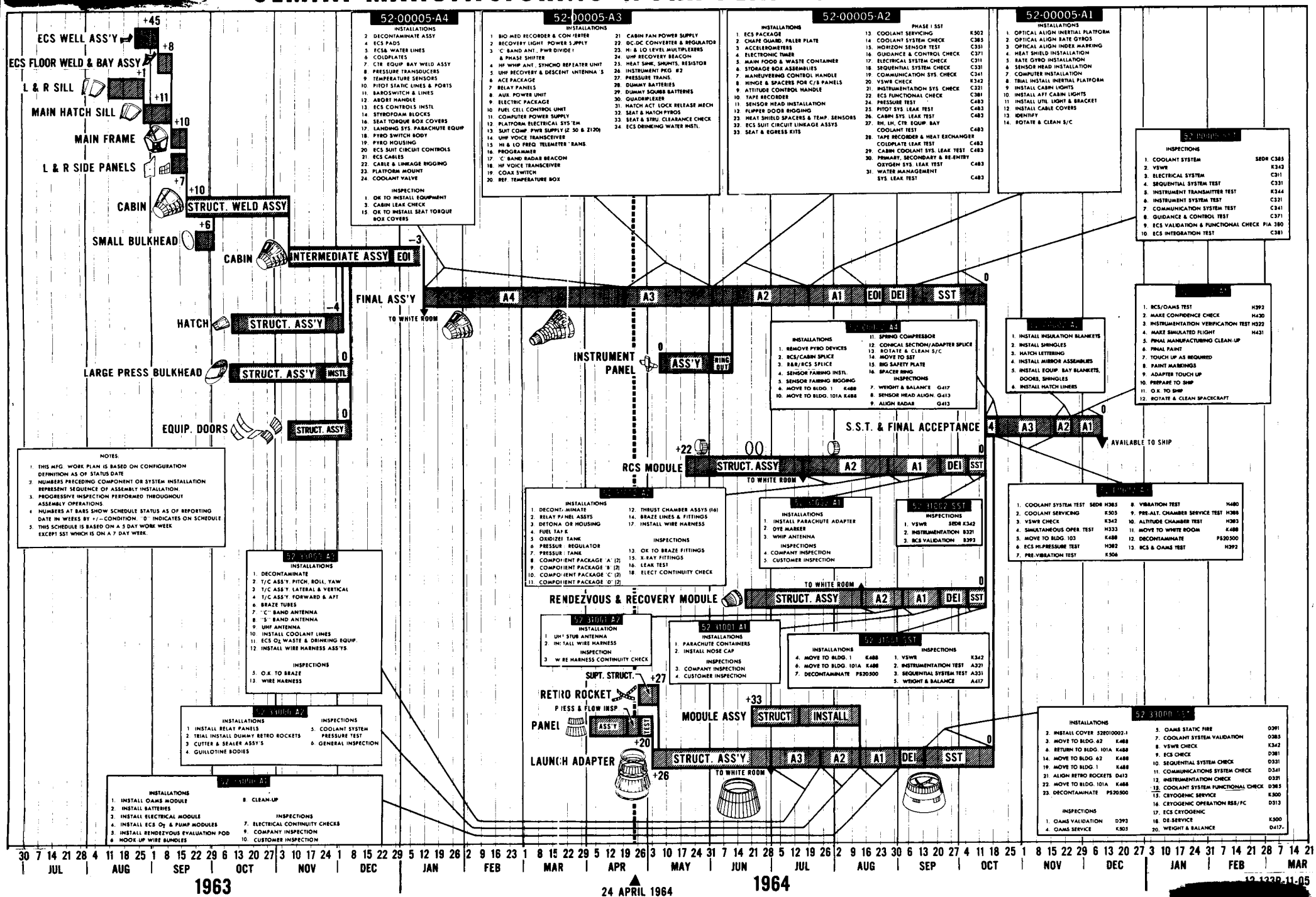

[redacted]

24 April 1964

SUBJECT: GEMINI STATUS REPORT FOR THE PERIOD ENDING 24 APRIL 1964
- SPACECRAFT NUMBER FOUR

RECAPITULATION

Cabin

Progress on the Final Assembly task has been limited due to part shortages. The EOPO task continues to progress as parts become available for installation.

Adapter

The Adapter for this unit is presently awaiting rework of the A.F. Jig and the availability of parts. No schedule slippage is anticipated.

Adapter Modules

The Adapter Modules have progressed satisfactorily during this report period.

R & R

The R & R Module buildup has progressed satisfactorily to schedule

RCS

The RCS Module buildup has made progress satisfactorily to meet schedule.

FORECAST

The following events are scheduled for accomplishment during the next thirty day period: Work on the Cabin is anticipated on a greater effort with receipt of SCD parts. The Modules will continue buildup to schedule.

GEMINI MANUFACTURING WORK PLAN—SPACECRAFT NO. 5

NOTES:

1. THIS MFG. WORK PLAN IS BASED ON CONFIGURATION DEFINITION AS OF STATUS DATE
2. NUMBERS PRECEDING COMPONENT OR SYSTEM INSTALLATION REPRESENT SEQUENCE OF ASSEMBLY INSTALLATION
3. PROGRESSIVE INSPECTION PERFORMED THROUGHOUT ASSEMBLY OPERATIONS.
4. NUMBERS AT BARS SHOW SCHEDULE STATUS AS OF REPORTING DATE IN WEEKS BY +/— CONDITION. "0" INDICATES ON SCHEDULE
5. THIS SCHEDULE IS BASED ON A 5 DAY WORK WEEK EXCEPT FOR SST WHICH IS ON A 6 DAY WEEK

CABIN INTERMEDIATE ASS'Y — EOI (0)

LAB TEST (0)

HATCH (−8)

LARGE BULKHEAD (−6)

EQUIP. DOORS (−6)

FINAL ASS'Y — A4 | A3 | A2 | A1 | EOI | DEI | SST (0)

TO WHITE ROOM

INSTRUMENT PANEL — ASS'Y | RING OUT

S.S.T. & FINAL ACCEPTANCE — A4 | A3 | A2 | A1 (0)

AVAILABLE TO SHIP

RCS MODULE (+29) — STRUCT. ASSY | A2 | A1 | DEI | SST (0)

TO WHITE ROOM

RENDEZVOUS & RECOVERY MODULE — STRUCT. ASSY | A2 | A1 | DEI | SST (0)

TO WHITE ROOM

RETRO ROCKET (+35) — SUPT. STRUCT.

PRESS & FLOW INSP. (+22)

PANEL — ASS'Y | TEST

MODULE ASSY. (+29) — STRUCT. | INSTALL (0)

LAUNCH ADAPTER (+28) — STRUCTURE ASS'Y | A3 | A2 | A1 | DEI | SST (0)

TO WHITE ROOM

52-00005-A4

INSTALLATIONS

2. DECONTAMINATE ASSY
4. ECS PADS
5. ECS & WATER LINES
6. COLDPLATES
7. CTR. EQUIP. BAY WELD ASSY.
8. PRESSURE TRANSDUCERS
9. TEMPERATURE SENSORS
10. PITOT STATIC LINES & PORTS
11. BAROSWITCH & LINES
12. ABORT HANDLE
13. ECS CONTROLS INSTL.
14. STYROFOAM BLOCKS
16. SEAT TORQUE BOX COVERS
17. LANDING SYS. PARACHUTE EQUIP.
18. PYRO SWITCH BODY
19. PYRO HOUSING
20. ECS SUIT CIRCUIT CONTROLS
21. ECS CABLES
22. CABLE & LINKAGE RIGGING
23. PLATFORM MOUNT
24. COOLANT VALVE

INSPECTION

1. OK TO INSTALL EQUIPMENT
2. CABIN LEAK CHECK
13. OK TO INSTALL SEAT TORQUE BOX COVERS

52-00005-A3

INSTALLATIONS

1. BIO-MED RECORDER & CONVERTER
2. RECOVERY LIGHT POWER SUPPLY
3. "C" BAND ANT., PWR DIVIDER & PHASE SHIFTER
4. HF WHIP ANT., SYNCHO REPEATER UNIT
5. UHF RECOVERY & DESCENT ANTENNA'S
6. ACE PACKAGE
7. RELAY PANELS
8. AUX. POWER UNIT
9. ELECTRIC PACKAGE
10. FUEL CELL CONTROL UNIT
11. COMPUTER POWER SUPPLY
12. PLATFORM ELECTRICAL SYSTEM
13. SUIT COMP. PWR SUPPLY (Z150 & Z120)
14. UHF VOICE TRANSCEIVER
15. HI & LO FREQ. TELEMETER TRANS.
16. PROGRAMMER
17. "C" BAND RADAR BEACON
18. HF VOICE TRANSCEIVER
19. CLEAR SWITCH
20. RE-TEMPERATURE BOX
21. CABIN FAN POWER SUPPLY
22. DC DC CONVERTER & REGULATOR
23. HI & LO LEVEL MULTIPLEXERS
24. UHF RECOVERY BEACON
25. HEAT SINK, SHUNTS, RESISTOR
26. INSTRUMENT PKG. #2
27. PRESSURE TRANS
28. DUMMY BATTERIES
29. DUMMY SQUIBB BATTERIES
30. QUADRIPLEXER
31. HATCH ACT. LOCK RELEASE MECH.
32. SEAT & HATCH PYROS
33. SEAT & STRU. CLEARANCE CHECK
34. ECS DRINKING WATER INSTL.

52-00005-A2

INSTALLATIONS

1. ECS PACKAGE
2. CHAFE GUARD, FILLER PLATE
3. ACCELEROMETERS
4. ELECTRONIC TIMER
5. MAIN FOOD & WASTE CONTAINER
6. STORAGE BOX ASSEMBLIES
7. MANEUVERING CONTROL HANDLE
8. HINGE & SPACERS FOR C/B PANELS
9. ATTITUDE CONTROL HANDLE
10. TAPE RECORDER
11. SENSOR HEAD INSTALLATION
12. FLIPPER DOOR RIGGING
23. HEAT SHIELD SPACERS & TEMP. SENSORS
32. ECS SUIT CIRCUIT LINKAGE ASSYS
33. SEAT & EGRESS KITS

PHASE I SST

13. COOLANT SERVICING — K502
14. COOLANT SYSTEM CHECK — C385
15. HORIZON SENSOR TEST — C351
16. GUIDANCE & CONTROL CHECK — C371
17. ELECTRICAL SYSTEM CHECK — C311
18. SEQUENTIAL SYSTEM CHECK — C331
19. COMMUNICATION SYS. CHECK — C341
20. VSWR CHECK — K342
21. INSTRUMENTATION SYS. CHECK — C321
22. ECS FUNCTIONAL CHECK — C381
24. PRESSURE TEST — C483
25. PITOT SYS. LEAK TEST — C483
26. CABIN SYS. LEAK TEST — C483
27. RH, LH, CTR. EQUIP. BAY COOLANT TEST — C483
28. TAPE RECORDER & HEAT EXCHANGER COLDPLATE LEAK TEST — C483
29. CABIN COOLANT SYS. LEAK TEST — C483
30. PRIMARY, SECONDARY & RE-ENTRY OXYGEN SYS. LEAK TEST — C483
31. WATER MANAGEMENT SYS. LEAK TEST — C483

52-00005-A1

INSTALLATIONS

1. OPTICAL ALIGN INERTIAL PLATFORM
2. OPTICAL ALIGN RATE GYROS
3. OPTICAL ALIGN INDEX MARKING
4. HEAT SHIELD INSTALLATION
5. RATE GYRO INSTALLATION
6. SENSOR HEAD INSTALLATION
7. COMPUTER INSTALLATION
8. TRIAL INSTALL INERTIAL PLATFORM
9. INSTALL CABIN LIGHTS
10. INSTALL AFT CABIN LIGHTS
11. INSTALL UTIL. LIGHT & BRACKET
12. INSTALL CABLE COVERS
13. IDENTIFY
14. ROTATE & CLEAN S/C

[illegible]

INSPECTIONS

1. COOLANT SYSTEM — SEDR C385
2. VSWR — K342
3. ELECTRICAL SYSTEM — C311
4. SEQUENTIAL SYSTEM TEST — C321
5. INSTRUMENT TRANSMITTER TEST — K344
6. INSTRUMENT SYSTEM TEST — C321
7. COMMUNICATION SYSTEM TEST — C341
8. GUIDANCE & CONTROL TEST — C371
9. ECS VALIDATION & FUNCTIONAL CHECK — PIA 380
10. ECS INTEGRATION TEST — C381

[illegible]

1. COOLANT SYSTEM TEST — SEDR H385
2. COOLANT SERVICING — K505
3. VSWR CHECK — K342
4. SIMULTANEOUS OPER. TEST — H333
5. MOVE TO BLDG. 103 — K488
6. ECS HI-PRESSURE TEST — H382
7. PRE VIBRATION TEST — K506
8. VIBRATION TEST — H480
9. PRE-ALT. CHAMBER SERVICE TEST — H388
10. ALTITUDE CHAMBER TEST — H383
11. MOVE TO WHITE ROOM — K488
12. DECONTAMINATE — PS20500
13. RCS & OAMS TEST — H392

[illegible]

1. RCS/OAMS TEST — H392
2. MAKE CONFIDENCE CHECK — H430
3. INSTRUMENTATION VERIFICATION TEST — H322
4. MAKE SIMULATED FLIGHT — H431
5. FINAL MANUFACTURING CLEAN-UP
6. FINAL PAINT
7. TOUCH UP AS REQUIRED
8. PAINT MARKINGS
9. ADAPTER TOUCH UP
10. PREPARE TO SHIP
11. O.K. TO SHIP
12. ROTATE & CLEAN SPACECRAFT

[illegible] A4

INSTALLATIONS

1. REMOVE PYRO DEVICES
2. RCS/CABIN SPLICE
3. R&R/RCS SPLICE
4. SENSOR FAIRING INSTL.
5. SENSOR FAIRING RIGGING
6. MOVE TO BLDG. 1 — K488
10. MOVE TO BLDG. 101A — K488
11. SPRING COMPRESSOR
12. CONICAL SECTION/ADAPTER SPLICE
13. ROTATE & CLEAN S/C
14. MOVE TO SST
15. RIG SAFETY PLATE
16. SPACER RING

INSPECTIONS

7. WEIGHT & BALANCE — G417
8. SENSOR HEAD ALIGN. — G413
9. ALIGN RADAR — G413

[illegible] A2

1. INSTALL INSULATION BLANKETS
2. INSTALL SHINGLES
3. HATCH LETTERING
4. INSTALL MIRROR ASSEMBLIES
5. INSTALL EQUIP. BAY BLANKETS, DOORS, SHINGLES
6. INSTALL HATCH LINERS

[illegible] A2

INSTALLATIONS

1. DECONTAMINATE
2. RELAY PANEL ASSYS
3. DETONATOR HOUSING
4. FUEL TANK
5. OXIDIZER TANK
6. PRESSURE REGULATOR
7. PRESSURE TANK
8. COMPONENT PACKAGE "A" (2)
9. COMPONENT PACKAGE "B" (2)
10. COMPONENT PACKAGE "C" (2)
11. COMPONENT PACKAGE "D" (2)
12. THRUST CHAMBER ASSYS (16)
14. BRAZE LINES & FITTINGS
17. INSTALL WIRE HARNESS

INSPECTIONS

13. OK TO BRAZE FITTINGS
15. X-RAY FITTINGS
16. LEAK TEST
18. ELECT CONTINUITY CHECK

[illegible] A2

INSTALLATIONS

1. INSTALL PARACHUTE ADAPTER
2. DYE MARKER
3. WHIP ANTENNA

INSPECTIONS

4. COMPANY INSPECTION
5. CUSTOMER INSPECTION

[illegible] SST

INSPECTIONS

1. VSWR — SEDR K342
2. INSTRUMENTATION — B321
3. RCS VALIDATION — B393

52 31001 A2

INSTALLATIONS

1. DECONTAMINATE
2. INSTALL DOCKING SIGHTING BAR
3. INSTALL DOCKING LATCHES
4. GUILLOTINE BODY
5. UHF STUB ANTENNA
6. RELAY PANELS
7. ACCELEROMETER
8. AMPLIFIER
9. PYROTECHNIC ACTUATOR
10. LANDING SYSTEM
11. WIRE HARNESS

INSPECTIONS

12. THERMOCOUPLE TEST

52 31001 A1

INSTALLATIONS

1. PARACHUTE CONTAINERS
2. RADAR
3. INSTALL NOSE CAP

INSPECTIONS

4. COMPANY INSPECTION
5. CUSTOMER INSPECTION

52 31001 SST

INSTALLATIONS

5. MOVE TO BLDG. 1 — K488
7. MOVE TO BLDG. 101A — K488
8. DECONTAMINATE — PS20500

INSPECTIONS

1. VSWR — K342
2. INSTRUMENTATION TEST — A321
3. SEQUENTIAL SYSTEM TEST — A331
4. RADAR TEST
6. WEIGHT & BALANCE — A417

52 33000 A3

INSTALLATIONS

1. DECONTAMINATE
2. T/C ASS'Y PITCH, ROLL, YAW
3. T/C ASS'Y LATERAL & VERTICAL
4. T/C ASS'Y FORWARD & AFT
6. BRAZE TUBES
7. "C" BAND ANTENNA
8. "S" BAND ANTENNA
9. UHF ANTENNA
10. INSTALL COOLANT LINES
11. ECS O_2 WASTE & DRINKING EQUIP.
12. INSTALL WIRE HARNESS ASS'YS

INSPECTIONS

5. O.K. TO BRAZE
13. WIRE HARNESS

52 33000 A2

INSTALLATIONS

1. INSTALL RELAY PANELS
2. TRIAL INSTALL DUMMY RETRO ROCKETS
3. CUTTER & SEALER ASSY'S
4. GUILLOTINE BODIES

INSPECTIONS

5. COOLANT SYSTEM PRESSURE TEST
6. GENERAL INSPECTION

52 33000 A1

INSTALLATIONS

1. INSTALL OAMS MODULE
2. INSTALL FUEL CELL MODULE
3. INSTALL ELECTRICAL MODULE
4. INSTALL ECS O_2 & PUMP MODULES
5. ECS COOLANT
6. BLAST SHIELD
7. HOOK UP WIRE BUNDLES

INSPECTIONS

8. ELECTRICAL CONTINUITY CHECKS
9. COMPANY INSPECTION
10. CUSTOMER INSPECTION

52 33000 SST

INSTALLATIONS

2. INSTALL COVER 52E010002-1
3. MOVE TO BLDG. 62 — K488
6. RETURN TO BLDG. 101A — K488
14. MOVE TO BLDG. 62 — K488
20. MOVE TO BLDG. 1 — K488
22. ALIGN RETRO ROCKETS — D413
23. MOVE TO BLDG. 101A — K488
24. DECONTAMINATE — PS20500

INSPECTIONS

1. OAMS VALIDATION — D393
4. OAMS SERVICE — K505
5. OAMS STATIC FIRE — D391
7. COOLANT SYSTEM VALIDATION — D385
8. VSWR CHECK — K342
9. ECS CHECK — D381
10. SEQUENTIAL SYSTEM CHECK — D331
11. COMMUNICATIONS SYSTEM CHECK — D341
12. INSTRUMENTATION CHECK — D321
13. COOLANT SYSTEM FUNCTIONAL CHECK — D385
15. RSS/FC FUNCTIONAL CHECK — D312
16. CRYOGENIC SERVICE — K300
17. CRYOGENIC OPERATION RSS/FC — D313
18. ECS CRYOGENIC TEST
19. OS-SERVICE — K300
21. WEIGHT & BALANCE — D417

15 22 29 5 12 19 26 2 9 16 23 1 8 15 22 29 5 12 19 26 3 10 17 24 31 7 14 21 28 5 12 19 26 2 9 16 23 30 6 13 20 27 3 10 17 24 31 7 14 21 28 4 11 18 25 1 8 15 22 29 6 13 20 27 3 10 17 24 31 7 14 21 28 7 14 21 28 4 11 18 25 2 9 16 23 30 6 13 20 27 4 11 18 25 1 8 15 22 29

DEC JAN FEB MAR APR MAY JUN JUL AUG SEP OCT NOV DEC JAN FEB MAR APR MAY JUN JUL AUG

24 APRIL 1964
STATUS DATE

1964

[redacted]

24 April 1964

SUBJECT: GEMINI STATUS REPORT FOR THE PERIOD ENDING 24 APRIL 1964
- SPACECRAFT NUMBER FIVE

RECAPITULATION

Cabin

The Cabin is at the Lab for non-destructive tests and is scheduled to be returned to the fabrication department 10 June 1964. The Main Landing Gear Door rework is complete. The doors will be installed to the Cabin when it is returned from the Lab.

Adapter

The Adapter has the welding and pressure test of Coolant Tubes completed. Presently it is held up for the rework of jig and part shortages involved in EJS 2754.

Adapter Modules

The OAMS Module has been removed from jig and is in HAC Shakedown prior to sending to head room. All Structural work is complete

FORECAST

The following events are scheduled for accomplishment during the next thirty day period: The Adapter jig rework will be complete and work against EJS 2754 will be started. The OAMS Module will be complete structurally.

GEMINI MANUFACTURING WORK PLAN—SPACECRAFT NO. 6

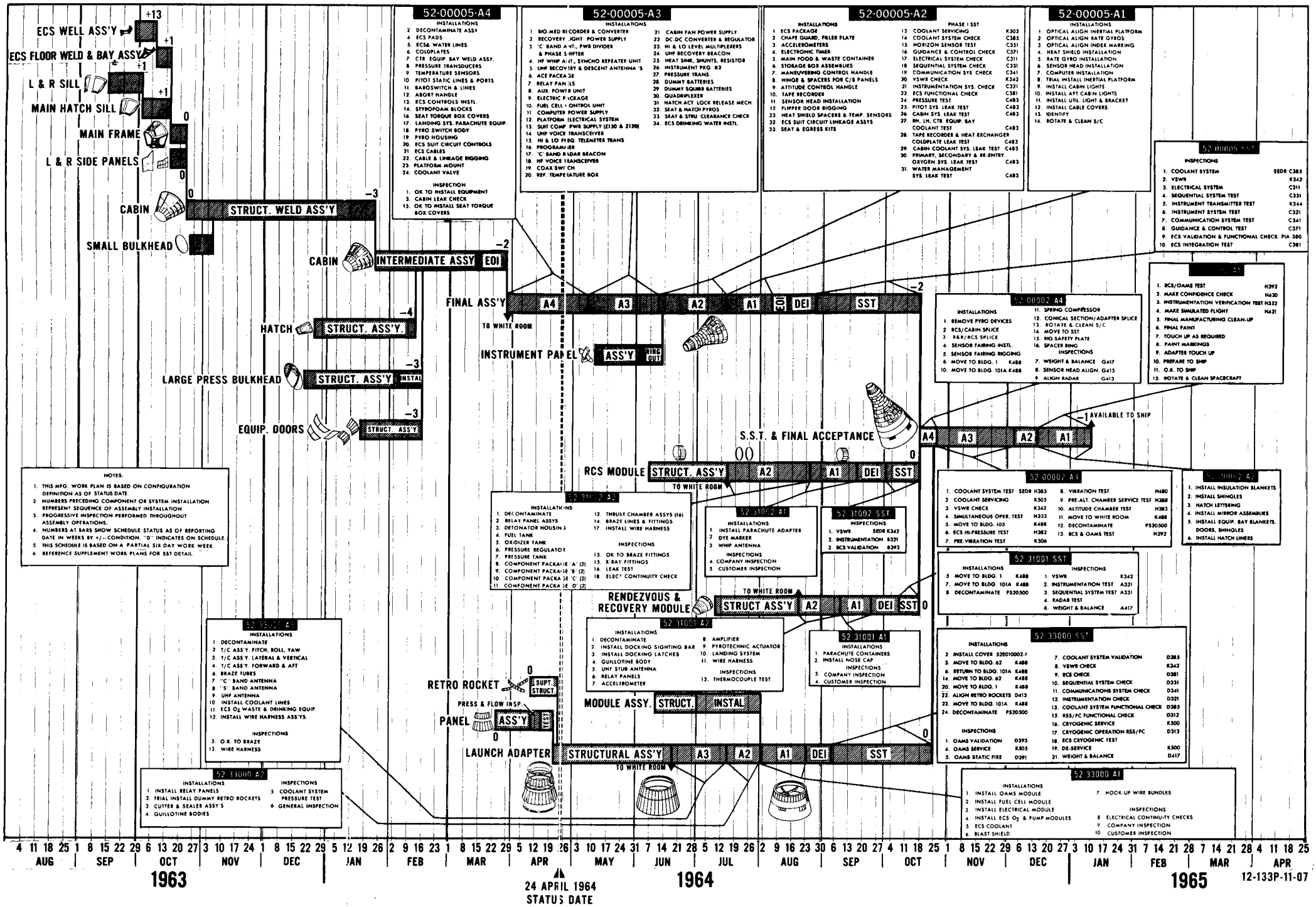

52-00005-A4

INSTALLATIONS
2. DECONTAMINATE ASSY
4. ECS PADS
5. ECS& WATER LINES
6. COLDPLATES
7. CTR. EQUIP. BAY WELD ASSY.
8. PRESSURE TRANSDUCERS
9. TEMPERATURE SENSORS
10. PITOT STATIC LINES & PORTS
11. BAROSWITCH & LINES
12. ABORT HANDLE
13. ECS CONTROLS INSTL.
14. STYROFOAM BLOCKS
16. SEAT TORQUE BOX COVERS
17. LANDING SYS. PARACHUTE EQUIP.
18. PYRO SWITCH BODY
19. PYRO HOUSING
20. ECS SUIT CIRCUIT CONTROLS
21. ECS CABLES
22. CABLE & LINKAGE RIGGING
23. PLATFORM MOUNT
24. COOLANT VALVE

INSPECTION
1. OK TO INSTALL EQUIPMENT
3. CABIN LEAK CHECK
13. OK TO INSTALL SEAT TORQUE BOX COVERS

52-00005-A3

INSTALLATIONS
1. BIO-MED RECORDER & CONVERTER
2. RECOVERY LIGHT POWER SUPPLY
3. "C" BAND ANT., PWR DIVIDER & PHASE SHIFTER
4. HF WHIP ANT., SYNCHO REPEATER UNIT
5. UHF RECOVERY & DESCENT ANTENNA'S
6. ACT PACKAGE
7. RELAY PANELS
8. AUX. POWER UNIT
9. ELECTRIC PACKAGE
10. FUEL CELL CONTROL UNIT
11. COMPUTER POWER SUPPLY
12. PLATFORM ELECTRICAL SYSTEM
13. SUIT COMP PWR SUPPLY (Z150 & Z120)
14. UHF VOICE TRANSCEIVER
15. HI & LO FREQ. TELEMETER TRANS
16. PROGRAMMER
17. "C" BAND RADAR BEACON
18. HF VOICE TRANSCEIVER
19. COAX SWITCH
20. REF. TEMPERATURE BOX
21. CABIN FAN POWER SUPPLY
22. DC-DC CONVERTER & REGULATOR
23. HI & LO LEVEL MULTIPLEXERS
24. UHF RECOVERY BEACON
25. HEAT SINK, SHUNTS, RESISTOR
26. INSTRUMENT PKG #2
27. PRESSURE TRANS.
28. DUMMY BATTERIES
29. DUMMY SQUIBB BATTERIES
30. QUADRIPLEXER
31. HATCH ACT. LOCK RELEASE MECH.
32. SEAT & HATCH PYROS
33. SEAT & STRU. CLEARANCE CHECK
34. ECS DRINKING WATER INSTL.

52-00005-A2

INSTALLATIONS
1. ECS PACKAGE
2. CHAFE GUARD, FILLER PLATE
3. ACCELEROMETERS
4. ELECTRONIC TIMER
5. MAIN FOOD & WASTE CONTAINER
6. STORAGE BOX ASSEMBLIES
7. MANEUVERING CONTROL HANDLE
8. HINGE & SPACERS FOR C/B PANELS
9. ATTITUDE CONTROL HANDLE
10. TAPE RECORDER
11. SENSOR HEAD INSTALLATION
12. FLIPPER DOOR RIGGING
23. HEAT SHIELD SPACERS & TEMP. SENSORS
32. ECS SUIT CIRCUIT LINKAGE ASSYS
33. SEAT & EGRESS KITS

PHASE I SST
13. COOLANT SERVICING K502
14. COOLANT SYSTEM CHECK C385
15. HORIZON SENSOR TEST C351
16. GUIDANCE & CONTROL CHECK C371
17. ELECTRICAL SYSTEM CHECK C311
18. SEQUENTIAL SYSTEM CHECK C331
19. COMMUNICATION SYS CHECK C341
20. VSWR CHECK K342
21. INSTRUMENTATION SYS. CHECK C321
22. ECS FUNCTIONAL CHECK C381
24. PRESSURE TEST C483
25. PITOT SYS. LEAK TEST C483
26. CABIN SYS. LEAK TEST C483
27. RH, LH, CTR. EQUIP. BAY COOLANT TEST C483
28. TAPE RECORDER & HEAT EXCHANGER COLDPLATE LEAK TEST C483
29. CABIN COOLANT SYS. LEAK TEST C483
30. PRIMARY, SECONDARY & RE-ENTRY OXYGEN SYS. LEAK TEST C483
31. WATER MANAGEMENT SYS. LEAK TEST C483

52-00005-A1

INSTALLATIONS
1. OPTICAL ALIGN INERTIAL PLATFORM
2. OPTICAL ALIGN RATE GYROS
3. OPTICAL ALIGN INDEX MARKING
4. HEAT SHIELD INSTALLATION
5. RATE GYRO INSTALLATION
6. SENSOR HEAD INSTALLATION
7. COMPUTER INSTALLATION
8. TRIAL INSTALL INERTIAL PLATFORM
9. INSTALL CABIN LIGHTS
10. INSTALL AFT CABIN LIGHTS
11. INSTALL UTIL. LIGHT & BRACKET
12. INSTALL CABLE COVERS
13. IDENTIFY
14. ROTATE & CLEAN S/C

52-00005-SST

INSPECTIONS
1. COOLANT SYSTEM SEDR C385
2. VSWR K342
3. ELECTRICAL SYSTEM C311
4. SEQUENTIAL SYSTEM TEST C331
5. INSTRUMENT TRANSMITTER TEST K344
6. INSTRUMENT SYSTEM TEST C321
7. COMMUNICATION SYSTEM TEST C341
8. GUIDANCE & CONTROL TEST C371
9. ECS VALIDATION & FUNCTIONAL CHECK PIA 380
10. ECS INTEGRATION TEST C381

52-00002-A4

INSTALLATIONS
1. REMOVE PYRO DEVICES
2. RCS/CABIN SPLICE
3. R&R/RCS SPLICE
4. SENSOR FAIRING INSTL.
5. SENSOR FAIRING RIGGING
6. MOVE TO BLDG. 1 K488
10. MOVE TO BLDG. 101A K488
11. SPRING COMPRESSOR
12. CONICAL SECTION/ADAPTER SPLICE
13. ROTATE & CLEAN S/C
14. MOVE TO SST
15. RKS SAFETY PLATE
16. SPACER RING

INSPECTIONS
7. WEIGHT & BALANCE G417
8. SENSOR HEAD ALIGN. G413
9. ALIGN RADAR G413

52-00002-A3

1. RCS/OAMS TEST H392
2. MAKE CONFIDENCE CHECK H430
3. INSTRUMENTATION VERIFICATION TEST H322
4. MAKE SIMULATED FLIGHT H431
5. FINAL MANUFACTURING CLEAN-UP
6. FINAL PAINT
7. TOUCH UP AS REQUIRED
8. PAINT MARKINGS
9. ADAPTER TOUCH UP
10. PREPARE TO SHIP
11. O.K. TO SHIP
12. ROTATE & CLEAN SPACECRAFT

52-00002-A2

1. INSTALL INSULATION BLANKETS
2. INSTALL SHINGLES
3. HATCH LETTERING
4. INSTALL MIRROR ASSEMBLIES
5. INSTALL EQUIP. BAY BLANKETS, DOORS, SHINGLES
6. INSTALL HATCH LINERS

52-00002-A3

1. COOLANT SYSTEM TEST SEDR H385
2. COOLANT SERVICING K505
3. VSWR CHECK K342
4. SIMULTANEOUS OPER. TEST H333
5. MOVE TO BLDG. 103 K488
6. ECS HI-PRESSURE TEST H382
7. PRE-VIBRATION TEST K506
8. VIBRATION TEST H480
9. PRE-ALT. CHAMBER SERVICE TEST H388
10. ALTITUDE CHAMBER TEST H383
11. MOVE TO WHITE ROOM K488
12. DECONTAMINATE PS20500
13. RCS & OAMS TEST H392

52-31002-A2

INSTALLATIONS
1. DECONTAMINATE
2. RELAY PANEL ASSYS
3. DETONATOR HOUSING
4. FUEL TANK
5. OXIDIZER TANK
6. PRESSURE REGULATOR
7. PRESSURE TANK
8. COMPONENT PACKAGE "A" (2)
9. COMPONENT PACKAGE "B" (2)
10. COMPONENT PACKAGE "C" (2)
11. COMPONENT PACKAGE "D" (2)
12. THRUST CHAMBER ASSYS (16)
14. BRAZE LINES & FITTINGS
17. INSTALL WIRE HARNESS

INSPECTIONS
13. OK TO BRAZE FITTINGS
15. X-RAY FITTINGS
16. LEAK TEST
18. ELECT CONTINUITY CHECK

52-31002-A1

INSTALLATIONS
1. INSTALL PARACHUTE ADAPTER
2. DYE MARKER
3. WHIP ANTENNA

INSPECTIONS
4. COMPANY INSPECTION
5. CUSTOMER INSPECTION

52-31002-SST

INSPECTIONS
1. VSWR SEDR K347
2. INSTRUMENTATION B321
3. RCS VALIDATION B393

52-31001-SST

INSTALLATIONS
5. MOVE TO BLDG. 1 K488
7. MOVE TO BLDG. 101A K488
8. DECONTAMINATE PS20500

INSPECTIONS
1. VSWR K342
2. INSTRUMENTATION TEST A321
3. SEQUENTIAL SYSTEM TEST A331
4. RADAR TEST
6. WEIGHT & BALANCE A417

52-31001-A2

INSTALLATIONS
1. DECONTAMINATE
2. INSTALL DOCKING SIGHTING BAR
3. INSTALL DOCKING LATCHES
4. GUILLOTINE BODY
5. UHF STUB ANTENNA
6. RELAY PANELS
7. ACCELEROMETER
8. AMPLIFIER
9. PYROTECHNIC ACTUATOR
10. LANDING SYSTEM
11. WIRE HARNESS

INSPECTIONS
12. THERMOCOUPLE TEST

52-31001-A1

INSTALLATIONS
1. PARACHUTE CONTAINERS
2. INSTALL NOSE CAP

INSPECTIONS
3. COMPANY INSPECTION
4. CUSTOMER INSPECTION

52-33000-SST

INSTALLATIONS
2. INSTALL COVER 52E010002-1
3. MOVE TO BLDG. 62 K488
6. RETURN TO BLDG. 101A K488
14. MOVE TO BLDG. 62 K488
20. MOVE TO BLDG. 1 K488
22. ALIGN RETRO ROCKETS D413
23. MOVE TO BLDG. 101A K488
24. DECONTAMINATE PS20500

INSPECTIONS
1. OAMS VALIDATION D393
4. OAMS SERVICE K505
5. OAMS STATIC FIRE D391
7. COOLANT SYSTEM VALIDATION D385
8. VSWR CHECK K342
9. ECS CHECK D381
10. SEQUENTIAL SYSTEM CHECK D331
11. COMMUNICATIONS SYSTEM CHECK D341
12. INSTRUMENTATION CHECK D321
13. COOLANT SYSTEM FUNCTIONAL CHECK D385
15. RSS/FC FUNCTIONAL CHECK D312
16. CRYOGENIC SERVICE K500
17. CRYOGENIC OPERATION RSS/FC D313
18. ECS CRYOGENIC TEST
19. DE-SERVICE K500
21. WEIGHT & BALANCE D417

52-33000-A3

INSTALLATIONS
1. DECONTAMINATE
2. T/C ASS'Y. PITCH, ROLL, YAW
3. T/C ASS'Y. LATERAL & VERTICAL
4. T/C ASS'Y. FORWARD & AFT
6. BRAZE TUBES
7. "C" BAND ANTENNA
8. "S" BAND ANTENNA
9. UHF ANTENNA
10. INSTALL COOLANT LINES
11. ECS O_2 WASTE & DRINKING EQUIP.
12. INSTALL WIRE HARNESS ASS'YS.

INSPECTIONS
5. O.K. TO BRAZE
13. WIRE HARNESS

52-33000-A2

INSTALLATIONS
1. INSTALL RELAY PANELS
2. TRIAL INSTALL DUMMY RETRO ROCKETS
3. CUTTER & SEALER ASSY'S
4. GUILLOTINE BODIES

INSPECTIONS
5. COOLANT SYSTEM PRESSURE TEST
6. GENERAL INSPECTION

52-33000-A1

INSTALLATIONS
1. INSTALL OAMS MODULE
2. INSTALL FUEL CELL MODULE
3. INSTALL ELECTRICAL MODULE
4. INSTALL ECS O_2 & PUMP MODULES
5. ECS COOLANT
6. BLAST SHIELD
7. HOOK-UP WIRE BUNDLES

INSPECTIONS
8. ELECTRICAL CONTINUITY CHECKS
9. COMPANY INSPECTION
10. CUSTOMER INSPECTION

NOTES:
1. THIS MFG. WORK PLAN IS BASED ON CONFIGURATION DEFINITION AS OF STATUS DATE.
2. NUMBERS PRECEDING COMPONENT OR SYSTEM INSTALLATION REPRESENT SEQUENCE OF ASSEMBLY INSTALLATION.
3. PROGRESSIVE INSPECTION PERFORMED THROUGHOUT ASSEMBLY OPERATIONS.
4. NUMBERS AT BARS SHOW SCHEDULE STATUS AS OF REPORTING DATE IN WEEKS BY +/—CONDITION. "0" INDICATES ON SCHEDULE.
5. THIS SCHEDULE IS BASED ON A PARTIAL SIX DAY WORK WEEK.
6. REFERENCE SUPPLEMENT WORK PLANS FOR SST DETAIL.

24 April 1964

SUBJECT: GEMINI STATUS REPORT FOR THE PERIOD ENDING 24 APRIL 1964
- SPACECRAFT NUMBER SIX

RECAPITULATION

Cabin

The Cabin Assembly for this Spacecraft is in the Structure Area, installed in the Line Dolly. Work on all doors and hatches have been completed and these units have been moved to the Cabin Area. Both hatches and the right hand flipper door have been rigged. All equipment bay doors have been trial fitted. The structure portion of the ECS cradle and the battery tracks have been completed.

Adapter

The Adapter structure buildup of the quarter panels is complete. Jig locating, drilling and riveting of the quarter panels and separation ring is complete. All access door openings have been cut.

FORECAST

The following events are scheduled for accomplishment during the next thirty day period: All doors will be trial fitted. The left hand flipper door will be rigged. The Shingles will be installed. The Pressure Test will be completed. The Heat Torque Box and Main Landing Gear Area structure will be completed. This unit is scheduled to enter the White Room 14 August 1964.

GEMINI SPACECRAFT
MANUFACTURING WORK PLAN
TARGET DOCKING ADAPTER

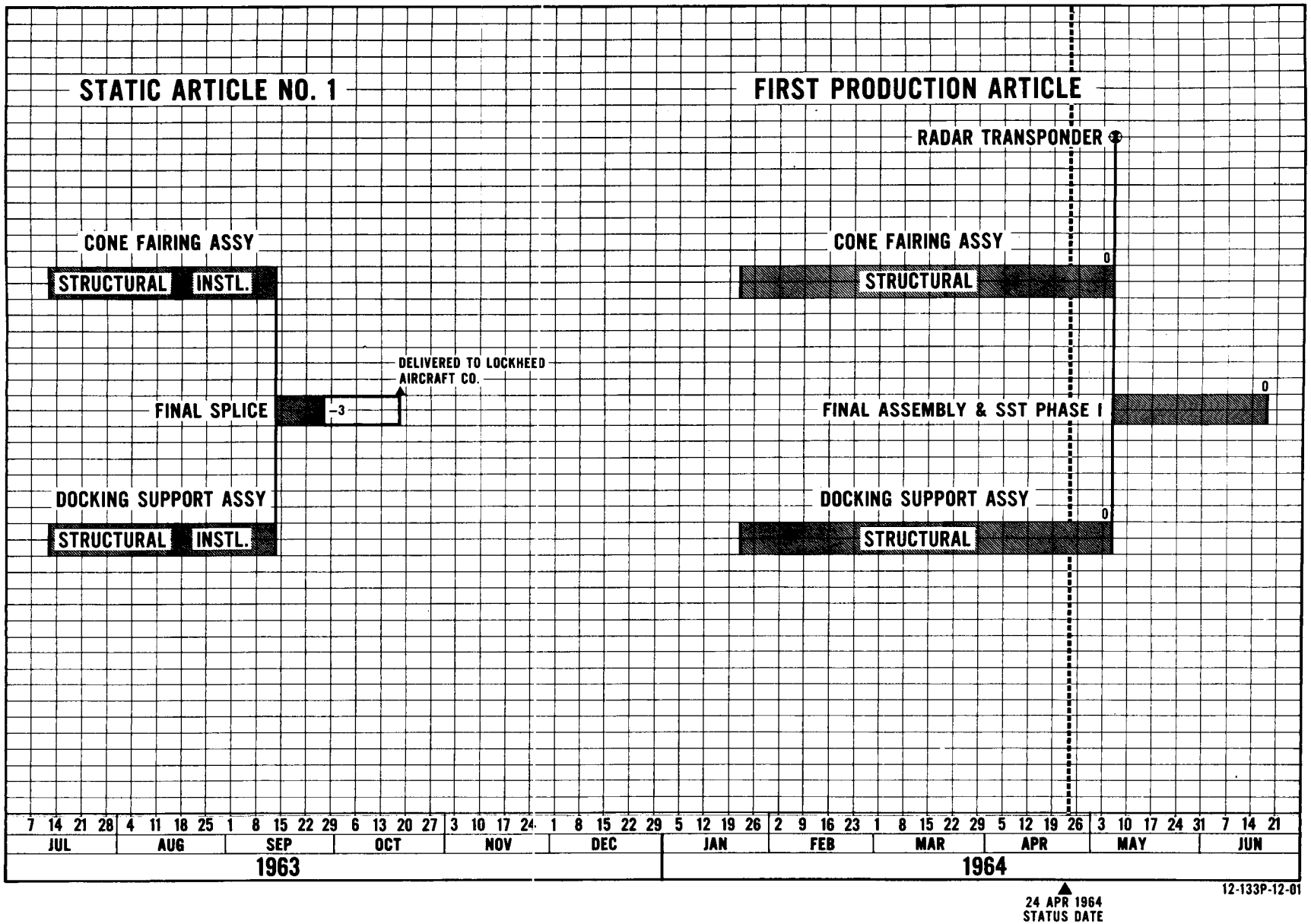

12-133P-12-01

24 April 1964

SUBJECT: GEMINI STATUS REPORT FOR THE PERIOD ENDING 24 APRIL 1964
- TARGET DOCKING ADAPTER NUMBER ONE AND TARGET DOCKING ADAPTER STATIC NUMBER TWO

RECAPITULATION

TDA NO. 1

The Structure work has been completed. Final Assembly has been started and wire bundles are being installed.

FORECAST

The following events are scheduled for accomplishment during the next thirty day period: Wiring to be completed and Final Assembly operations continued.

RECAPITULATION

STATIC NO 2

Final Assembly was completed and the unit delivered to lab on 7 April 1964.

GAMINI AGE, MAC IN-HOUSE SUMMARY
THROUGH 24 APRIL 1964

1. Number of units scheduled to start Assembly by 24 April 1964 = [illegible]

2. Number of units which started Assembly by 24 April 1964 = [illegible]

3. Number of units scheduled to have completed Assembly by 24 April 1964 = [illegible]

4. Number of units which were completed thru Assembly by 24 April 1964 = 1515

   195 of the 1515 were fabricated by Department 930 Cape.

   48 of the 1515 were fabricated by Department 966 EED.

5. Number of units which were completed and bought by NASA (end item) by 24 April 1964 = 485.

   17 of the 485 units were fabricated by Department 930 Cape.

   2 of the 485 units were fabricated by Department 966 EED.

6. Number of units that are forecast complete thru Assembly between 24 April 1964 and 8 May 1964 = 38.

   21 of the 38 units are fabricated by Department 930 Cape.

   17 of the 38 units are fabricated by Department 966 EED.

7. Number of units that are forecast complete and bought by NASA (end item) between 24 April 1964 and 8 May 1964 = 975.

8. Number of units that were scheduled to start Assembly by 24 April 1964 but were not started = 54.

9. Number of units that were scheduled to complete thru Assembly by 24 April 196[illegible] but were not completed = 84.

I. AGE FOR MANUFACTURING

   Manufacturing is not held up for AGE.

II. AGE FOR CAPE PAD: S/C NO. 2

   Last item required for PAD usage forecast availability June 1964.

III. AGE FOR CAPE HANGAR: S/C NO. 2

   Last item required for Hangar usage [illegible]

[illegible]

Phase I - Production and Interim ACE is being used.

Phase II - Production ACE will be used.

ACTUAL ENGINEERING MANHOURS

MAC Cost Item No.	Description of Work	3/22/64 Tot Hrs	3/29/64 Tot Hrs	4/5/64 Tot Hrs	4/12/64 Tot Hrs
	SPACE VEHICLE SYSTEM				
01	Flt. Tech. & Mission Planning	1,785	1,785	1,430	1,580
02	Flt. Sim. Tr. & Tr. Aids	5,898	6,908	4,610	5,585
03	Personnel Training	191	110	152	223
04	Ground Test Program	3,347	2,942	2,731	3,678
05	Project Orbit Tests	2,903	2,758	2,614	3,161
06	S/C Systems Tests	11,425	9,263	9,513	11,021
07	Launch Operations	129	218	354	1,290
08	Publications	4,138	3,616	3,197	4,059
09	Spare Parts	169	79	117	92
11	Aerospace Ground Equip.	7,820	7,491	7,287	9,101
12	Main., Repair & Support	27	40	3	-0-
13	Spec., Reports & Docum.	1,869	1,567	1,211	1,662
	RE-ENTRY MODULE				
21	Space Fr., Re-entry Mod. Fabr & Str. Ass.	7,003	6,072	5,152	6,398
22	Space Fr., Re-entry Mod. Inst & Fin. Ass.	614	498	447	750
23	Inertial Guidance System	2,103	1,841	1,589	2,053
24	Attitude Control System	1,488	1,442	994	1,158
25	Electrical System	2,967	2,960	2,388	2,833
26	Communication System	1,184	1,144	1,054	1,410
27	Instrumentation & Recording	3,710	3,515	2,814	3,469
28	Re-entry Reac. Control Sys.	832	821	807	909
29	Landing Sys. - Paraglider	175	119	73	180
30	Landing Sys. - Recovery Chute	357	453	423	568
31	Post Land. & Survival Sys.	120	143	155	41
32	Crew Systems, Displays, Instr.	1,116	1,049	630	936
33	Ejection Seat	926	849	564	676
34	Time Reference System	677	764	569	661
35	Pyrotech. & Release Mech.	2,390	2,420	2,071	2,907
36	Environmental Control Sys.	2,613	2,594	2,294	2,755
37	Ablation Shield	169	137	133	190
56	Rendezvous Radar	479	456	327	436
57	Horizon Sensors	251	233	261	358
	ADAPTER MODULE				
51	Adapter Mod. Fabr., Space Frame	2,859	3,309	2,359	2,783
52	Adapter Mod. Inst. & Fin Ass., Space Frame	105	146	64	105
53	Battery Fuel Cell	227	272	146	193
54	Reactant Supply System	1,093	1,092	1,094	1,161
55	Adapter Prop. System	1,472	1,408	1,071	1,570
59	Retrograde Rocket	116	106	66	109
61	Adapter Environ. Control Sys.	2,712	2,677	1,794	1,383
62	Adapter - Elect. & Misc. Electronics	521	411	448	600
71	Target Vehicle Docking Adapter	574	697	485	599
	SUB-TOTAL	78,554	74,405	63,491	78,583
J.O. 383	Gemini In-Flight Experiments	1,809	1,797	2,018	2,002
	GRAND TOTAL	80,363	76,202	65,509	80,585

I N D E X

Code	SYSTEM	VENDOR	LOCATION	SCN
01	OAMS	Rocketdyne	Canoga Park, Cal.	52-52701
02	RCS	Rocketdyne	Canoga Park, Cal.	52-52700
03	Retro Rockets	Thiokol	Elkton, Maryland	52-50702
04	IGS	I.B.M.	Owego, N.Y.	52-87710
05	IMU	Honeywell-St. Pete.	St. Petersbury, Fla.	52-87717
06	ACME	Honeywell-Minn.	Minneapolis, Minn.	52-87700
07	Horizon Sensors	Adv. Tech. Labs.	Mountainview, Cal.	52-87703
08	Fuel Cell	General Electric	Lynn, Mass.	52-79700
09	Reactant Supply	AiResearch	Torrance, Calif.	52-83701
10	ECS	AiResearch	Torrance, Calif.	52-83700
11	Attitude Display	Lear-Siegler	Grand Rapids, Mich.	52-87702
12	Heat Shield	McDonnell E.E.D.	St. Louis, Mo.	
13	UHF Voice T/R	Collins Radio	Cedar Rapids, Iowa	52-85709
14	HF Voice T/R	Collins Radio	Cedar Rapids, Iowa	52-85710
15	Voice Control Center	Collins Radio	Cedar Rapids, Iowa	52-85712
16	Digital Command	Motorola	Scottsdale, Arizona	52-85714
17	S-Band Radar Beacon	ACF Industries	Paramus, N.J.	52-87706
18	C-Band Radar Beacon	ACF Industries	Paramus, N.J.	52-87707
19	Rendezvous Radar	Westinghouse	Baltimore, Maryland	52-87704
20	Landing System	Northrop-Ventura	Van Nuys, Calif.	52-83703
21	Event Timer	McDonnell E.E.D.	St. Louis, Mo.	SCR 8664
22	Electronic Timer	McDonnell E.E.D.	St. Louis, Mo.	SCR 8664
23	Data Transmission	Electro-Mechanical Research	Sarasota, Fla.	52-85713
24	Ejection Seat	Weber Aircraft	Burbank, Calif.	52-82000
25	Greenwich Mean Time Clock	McDonnell E.E.D.	St. Louis, Mo.	SCR 8664

SPACECRAFT

CONTRACT NO. NAS 9-170

SYSTEM QUALIFICATION

STATUS CHART

REPORT NO. 8ECO-1 -3

LAST PROGRAM SCHEDULE CHANGE: 24 Apr. 1964

STATUS AS OF: 24 April 1964

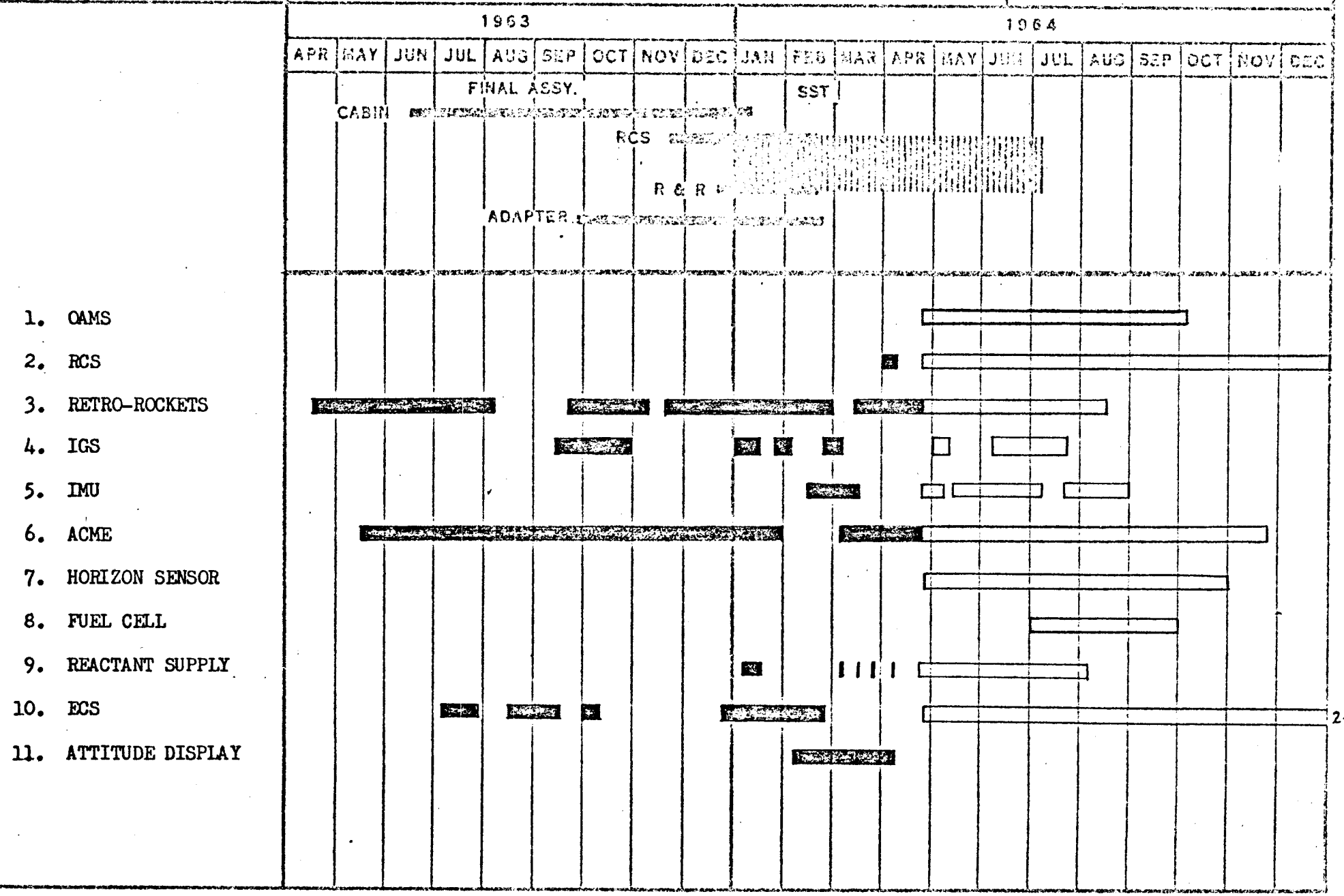

GEMINI SPACECRAFT
CONTRACT NO. NAS 9-170

SYSTEM QUALIFICATION STATUS CHART

REPORT NO. 8500-1-38
LAST PROGRAM SCHEDULE CHANGE: 24 Apr. 1964
STATUS AS OF: 24 April 1964

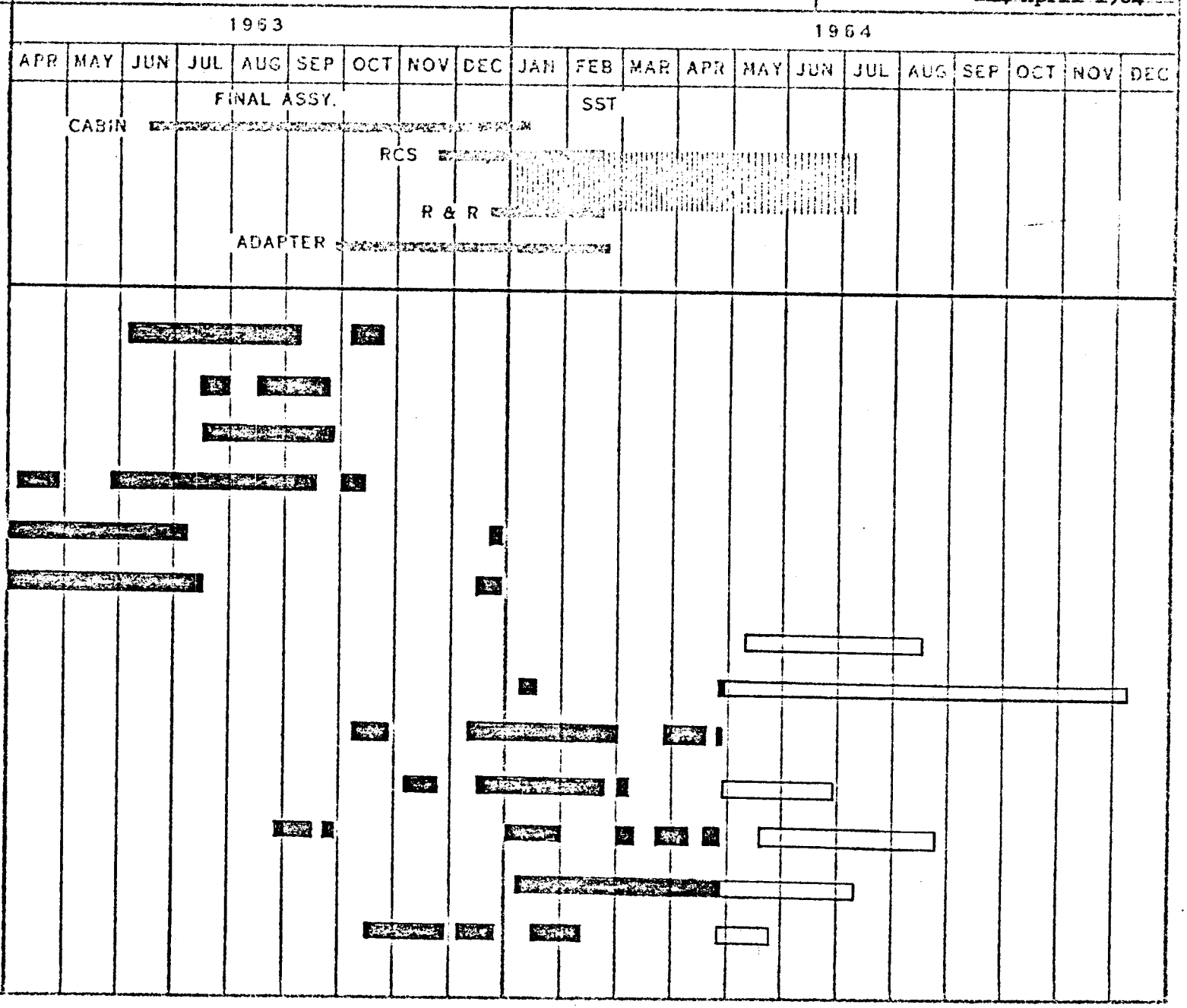

MONTHLY SUMMARY

SYSTEM: RCS & OAMS
VENDOR: Rocketdyne, Los Angeles
DATE: 24 April 1964

ENGINEERING STATUS

OAMS and RCS Propellant Systems

1. Gas calibration tests have been completed on RCS S/N 003. Preliminary data reduction indicates gas calibration may be a feasible means of determining variations in propellant flow rate if environmental control is maintained.

2. The OAMS propellant loading and TCA duty cycle for S/C 2 through 4 have been established.

3. Testing is underway at MAC to compare the results obtained by flushing with Freon MF only and the tri-flush procedure, in an effort to reduce flushing time. Data obtained will be compared to tests being conducted at Rocketdyne using Freon TF as the flush fluid.

4. The final manufacturing test procedure for the RCS, SEDR B483-3 has been reviewed and approved. The preliminary manufacturing test procedure for the OAMS SEDR D483-3, is currently being reviewed.

5. A Rocketdyne report on their effort to meet Class 4 cleanliness criteria at Reno has been reviewed. This report fails to conclude whether Class 4 can be consistently maintained. Rocketdyne's request to continue testing at Class 7 levels for an additional 30 days has been disapproved by MAC.

6. Guidlines for procurement of system DIT and DAT hardware requirements have been established.

7. The Reliability Assurance Test outline has been revised to include vibration overstress tests and a test program for the motor operated shutoff valve as requested by the NASA.

8. Design Approval Test procedures for the cartridges and motor operated shutoff valve have been reviewed and returned to Rocketdyne with required changes. DAT procedures for the propellant tank are being reviewed.

9. Rocketdyne was visited for the purpose of reviewing almost 100 failures and resolving outstanding failure analyses. An improvement in the reliability effort at Rocketdyne is expected under the direction of a new Reliability Manager.

Thrust Chambers - (TCA)

1. Development is continuing on the BLC maneuver thrust chambers and low mixture ratio attitude thrust chambers. The production configuration for the 100 pound Boundary Layer Cooled (BLC) TCA is in the Design Verification Test (DVT) phase. Tests have been conducted using flight weight chambers and selected modified conical injectors for the attitude TCA's. Injector fabrication problems seem to be the main cause of the unit to unit variation experienced in tests. Appropriate corrective action which consists primarily of a hot fire screening inspection procedure is being instituted.

2. Design Information Tests on the 25 lb. RCS TCA's are scheduled to start during the next report period.

3. The report summarizing results of the test program to determine the effects of cracked throats on 100 lb. TCA performance has been received. Results indicate the criteria established for determining the acceptability of throat cracks is valid. Results of tests conducted on the 25 lb. TCA's will be submitted during the next report period.

4. A study of the possible methods of preventing oxidizer valve freezing of the "Swing Out" radiation cooled thrusters has been completed. Methods considered were: Engine pulsing electric heaters and heating with circulating radiator fluid. The electric heater appears to be the most practical method.

5. The radiation cooled thrusters have successfully completed preliminary vibration tests. A complete final qualification test will be accomplished at a later date.

PROCUREMENT

1. Results of the failure analysis at Del Manufacturing, based on sample testing of burst diaphragms, indicate that no assurance of good quality diaphragms can be derived from either a destructive or non-destructive mode of testing. Rocketdyne, however, has developed an alternate design, described as a cutter form of relief disc, several of which have been manufactured by a supplier in Kansas City. During the week starting 27 April 1964, Rocketdyne personnel will witness a series of tests with these new relief discs.

2. Vibration testing of the redesigned Pressure-Temperature Indicator resulted in a broken balance weight. The nature of this failure justifies a redesign.

3. All uninstalled pressure regulators at MAC except four (4) will be returned direct to National Water Lift for rework, due to an out-of-tolerance fluctuation occurring at certain flow rates. These in turn will be returned direct to MAC following the rework.

ASSEMBLY AND DELIVERY STATUS

1. CTU

A. RCS - All items have been shipped to MAC.

B. OAMS - All items have been shipped except the following:

1. 25# TCA (8) - Three actual, five to be delivered from production hardware not suitable for flight as available.

2. S/C 2

A. RCS - Complete except for cartridges. Cartridges should ship 4-30-64 direct to Cape.

B. OAMS - Complete except for cartridges. Cartridges should ship 4-30-64 direct to Cape.

3. S/C 3

A. RCS

1. Package "A" (3): Three pieces actual.

2. Package "B" (3): Three pieces will ship 5-29-64. Slipped to 5-29-64 as a result of possible filter contamination

3. Package "C" (2): One piece actual. The second piece which is a -205, has been delayed pending investigation of the chip and burn problem, and resultant filter contamination. Estimated will ship is 5-5-64

4. Package "D" (2): Two pieces actual.

5. Press. Tank (2): Two pieces actual.

6. Fuel Tank (2): Two pieces actual.

7. Press. Regulator (3): Vendor incorporation of fix to eliminate out of tolerance fluctuations has delayed will ship date of three pieces to 5-4-64

8. Oxidizer Tanks (2): Two pieces actual.

9. 25# TCA (16): Sixteen pieces actual.

10. Cartridges (10): Will ship date of 4-30-64 direct to the Cape is based on Rocketdyne's compliance with explosive handling ordinance.

11. P-T Indicator (1): One piece actual.

B. OAMS

1. Package "C" (1): One piece actual

2. Package "D" (1): One piece actual.

3. Package "E" (1): This unit is being delayed pending investigation of the chip and burn problem and resultant filter contamination. Estimated will ship is 6-5-64

4. Press. Tank (1): One piece actual.

5. Oxidizer Tank (1): One piece actual.

6. Fuel Tank (1): One piece actual.

7. 25# TCA (8): Eight pieces actual

8. 100# TCA (4): The will ship date of 5-22-64 is predicated on resolution of the chip and burn problem relative to the solenoid valves

9. M.O.S.O. Valve (2): Two pieces actual.

10. Cartridge (1): [illegible]

TEST STATUS

Components

1. A minor low frequency instability has been discovered in the pressure regulator in certain flow regimes using nitrogen. Although this instability is not divergent, nor is it considered to offer any adverse effects on system performance, it has been decided to modify the regulator to eliminate the instability. Modified units will be delivered in time for installation in S/C 3. Regulators in stock will be returned to the manufacturer for modification.

2. All redundancy in component PIA tests has been eliminated to reduce test time.

3. A study is being made to evaluate the results if propellant vapors or condensates were to mix in the gas portion of the system.

4. The component PIA bench in use at Rocketdyne is being updated to incorporate modifications made to the benches at St. Louis and Cape Kennedy.

5. The propellant tank bladder leakage test has been modified to reduce test time. The new procedure consists of evacuating both the inside and outside of the bladder to eliminate pockets of trapped gas.

6. Two of the pressure regulators failed R & D sinusoidal vibration tests while flowing. Failure was caused by excessive seat wear. As a result of these failures, additional vibration tests will be conducted using a random input rather than the previously employed sinusoidal which was adjudged unrealistically severe.

7. Qualification Test officially started on 30 March 1964, employing two (2) "A" Packages and two (2) RCS Pressurant Tanks.

8. The following significant hot firing tests were conducted during the report period:

T/C	INJECTOR	C*	O/F	BURN TIME (SECONDS)	REMARKS
25# RCS	006	94.1	1.3	230.5	6° Ablative
25# RCS	006	--	1.3	140.0	200° Presoak
25# RCS	006	--	1.3	138.3	"Vertical Up" Attitude
25# RCS	006	--	1.3	702.5	6° Ablative
25# OAMS	Conical**	95.3	0.7	435.0	S/C 6 DVT #1
25# OAMS	Conical**	93.5	0.7	543.0	S/C 6 DVT #2
25# OAMS	Conical**	96.1	0.7	345.0	S/C 6 DVT #3
25# OAMS	006	--	1.3	143.3	200° Presoak
25# OAMS	Conical**	94.0	0.7	586	Birdcage 90° Ablative
100# OAMS	001	86.8	1.6	541.7	6° Ablative
100# OAMS	001 BLC	84.0	1.3	750.2	Birdcage (25% BLC) F/W Core
100# OAMS	001	83.8	1.0	291.2	Birdcage 6° Ablative
100# OAMS	001	87.5	1.2	290.3	Birdcage (33% BLC)
100# OAMS	001	85.1	1.2	759.0	Birdcage (25% BLC)
100# OAMS	001	87.1	1.2	1488.0	Birdcage (28% BLC) Macerated
100# OAMS	001	87.7	1.2	556	Birdcage (28% BLC) F/W Core
100# OAMS	001	88.1	1.2	634.8	Birdcage (28% BLC) F/W Core
100# OAMS	001	87.3	1.2	758	Birdcage (28% BLC)
100# OAMS	001	88.5	1.2	675.2	Birdcage (28% BLC) F/W Core

** Conical injector with [illegible] oversize fuel orifices .038" Dia

GEMINI
SPACECRAFT
CONTRACT NO. NAS 9-170

ORBIT ATTITUDE MANEUVER SYSTEM
(VENDOR: ROCKETDYNE)
STATUS CHART

REPORT NO. GSPO-1
LAST PROGRAM SCHEDULE CHANGE 24 Apr 64
STATUS AS OF: 24 April 1964

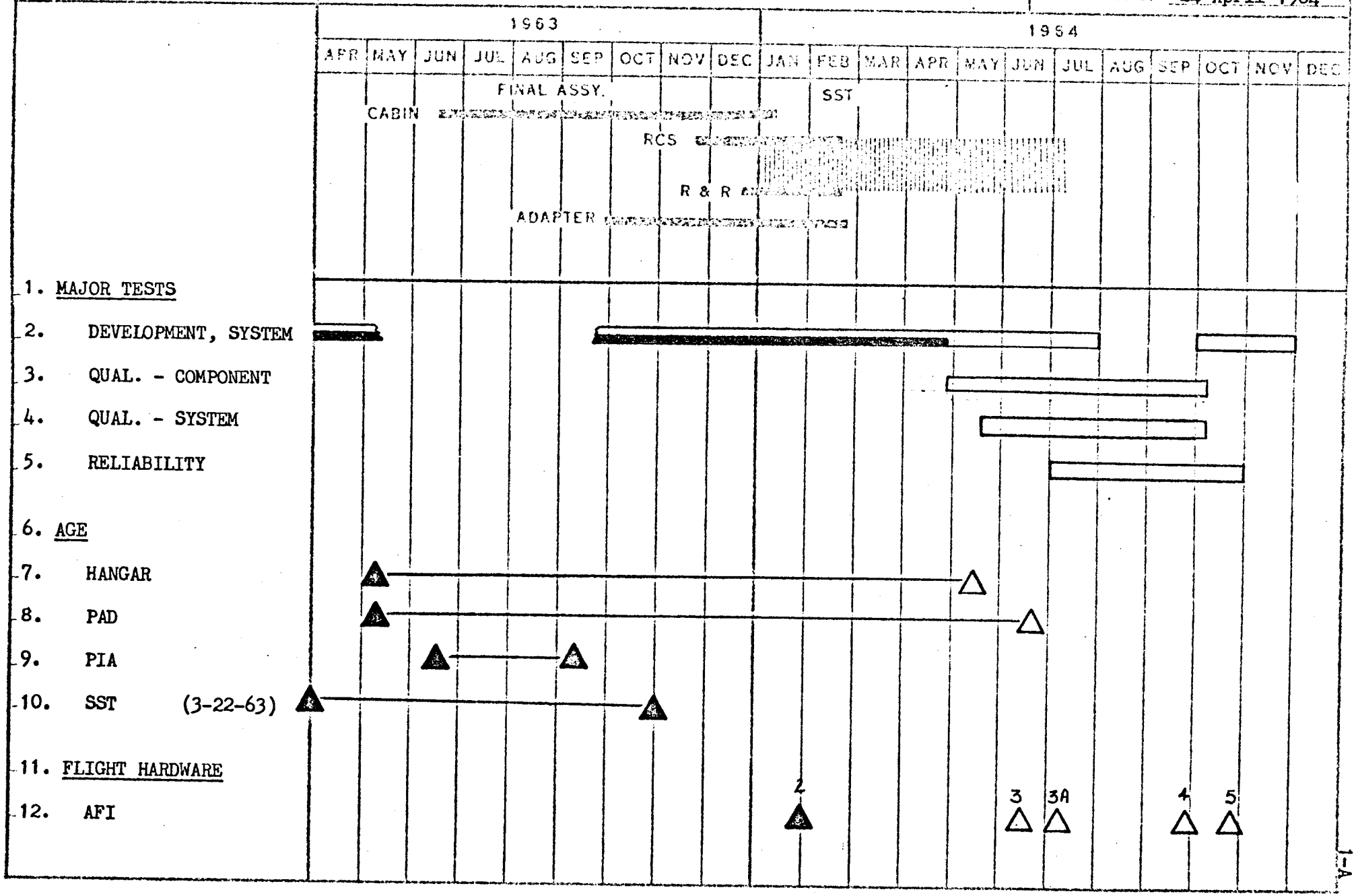

QUALIFICATION TEST STATUS
ORBIT ATTITUDE AND MANEUVER SYSTEM - COMPONENTS
ROCKETDYNE - SCD 52-52701

24 APRIL 1964

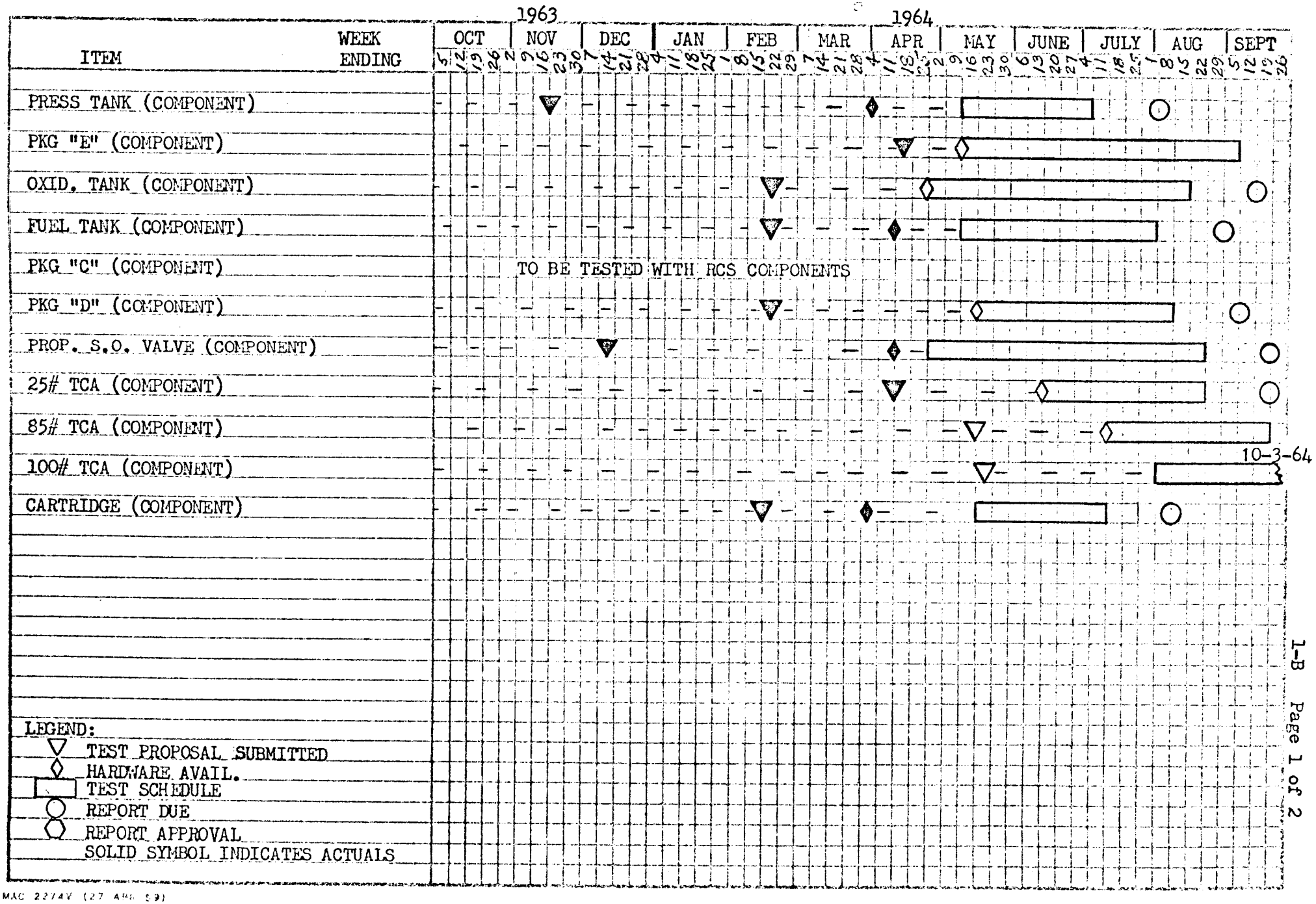

MAC 2274V (27 APR 59)

QUALIFICATION TEST STATUS
ORBIT ATTITUDE AND MANEUVER SYSTEM
ROCKETDYNE SCD-52-52701

24 APRIL 1964

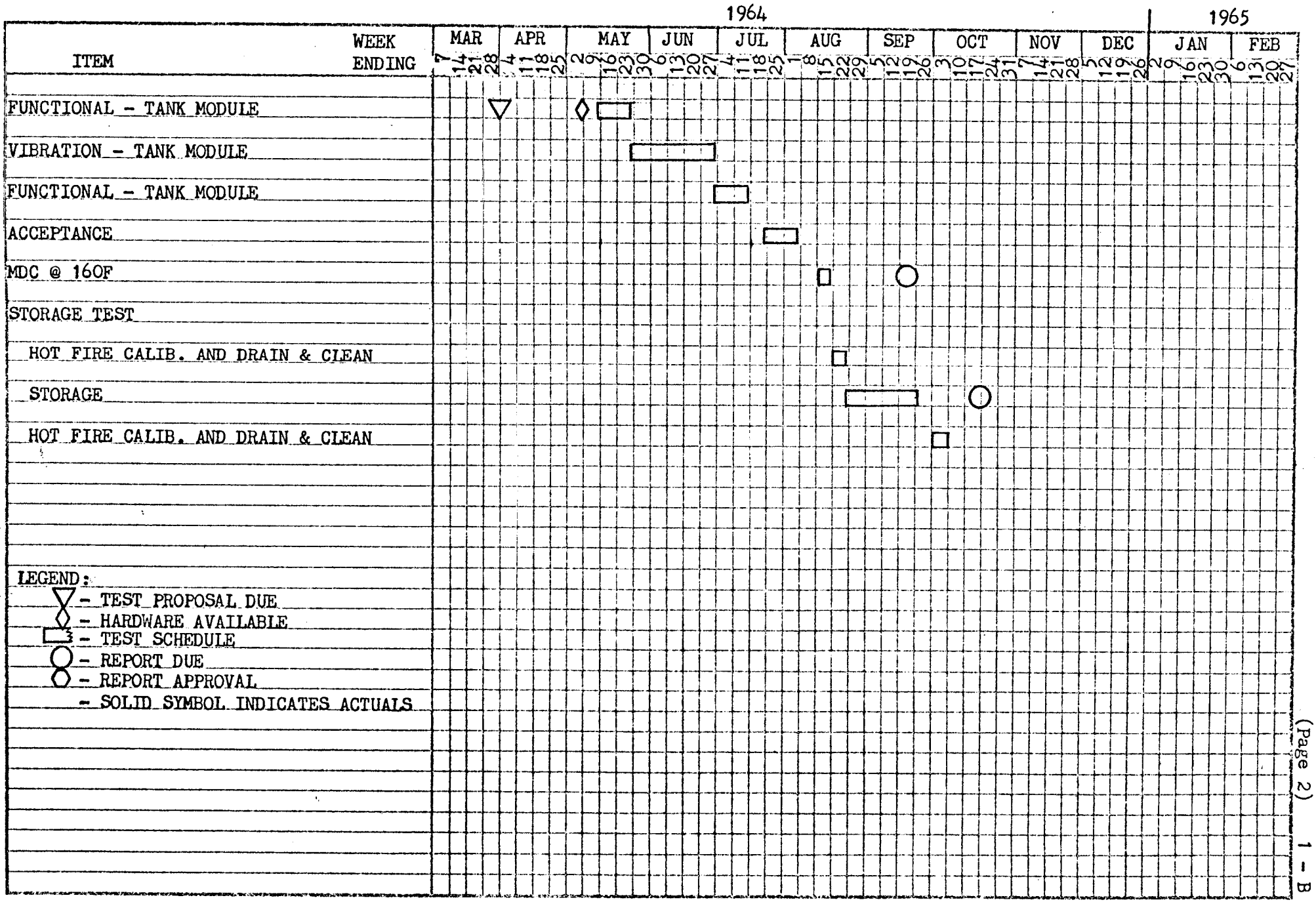

MAC 2274V (27 APR 59)

VENDOR DELIVERY STATUS REPORT
ORBIT ATTITUDE MANEUVER SYSTEM
ROCKETDYNE

Date: 4-24-64

UNIT NO	TYPE	USAGE	COMPONENT	VENDOR W/S	AVAIL FOR INSTL	REQ'D FOR INSTL	SLACK
8	PA-1	SC-2	-245 TCA 25#		ACTUAL		
8	PA-1	SC-2	-247 TCA 85#		ACTUAL		
8	PA-1	SC-2	-249 TCA 100#		ACTUAL		
8	PA-1	SC-2	-233 CARTRIDGE	4-30-64	5-10-64	5-13-64	+
9	PA-2	SC-3	-171 COMP PKG C	ACTUAL	5-08-64	4-02-64	[illegible]
9	PA-2	SC-3	-173 COMP PKG D	ACTUAL	ACTUAL	4-02-64	
9	PA-2	SC-3	-175 COMP PKG E	6-05-64	6-15-64	4-02-64	[illegible]
9	PA-2	SC-3	-265 TCA 25#	ACTUAL	5-08-64	3-17-64	[illegible]
9	PA-2	SC-3	-269 TCA 100#	5-22-64	6-02-64	3-17-64	[illegible]
9	PA-2	SC-3	-169 PRESS TANK	ACTUAL	5-08-64	4-02-64	[illegible]
9	PA-2	SC-3	-177 OXID TANK	ACTUAL	ACTUAL	4-02-64	
9	PA-2	SC-3	-179 FUEL TANK	ACTUAL	ACTUAL	4-02-64	
9	PA-2	SC-3	-187 S.O. VALVES	ACTUAL	5-08-64	4-02-64	[illegible]
9	PA-2	SC-3	-233 CARTRIDGE	4-30-64	5-10-64	9-17-64	[illegible]
10	PA-3	SC-3A	-171 COMP PKG C	ACTUAL	5-08-64	4-20-64	[illegible]
10	PA-3	SC-3A	-173 COMP PKG D	ACTUAL	5-08-64	4-20-64	[illegible]
10	PA-3	SC-3A	-175 COMP PKG E	6-26-64	7-06-64	4-20-64	[illegible]
10	PA-3	SC-3A	-265 TCA 25#	5-08-64	5-18-64	4-20-64	[illegible]
10	PA-3	SC-3A	-267 TCA 85#	5-08-64	5-18-64	4-20-64	[illegible]
10	PA-3	SC 3A	-269 TCA 100#	5-08-64	5-18-64	4-20-64	[illegible]
10	PA-3	SC-3A	-169 PRESS TANK	ACTUAL	5-08-64	4-20-64	[illegible]
10	PA-3	SC-3A	-177 OXID TANK	ACTUAL	5-08-64	4-20-64	[illegible]
10	PA-3	SC-3A	-211 FUEL TANK	ACTUAL	5-08-64	4-20-64	[illegible]
10	PA-3	SC-3A	-187 S.O. VALVE	ACTUAL	5-08-64	4-20-64	[illegible]
10	PA-3	SC-3A	-233 CARTRIDGE	4-30-64	5-10-64	10-30-64	[illegible]
11	PA-4	SC-4	-235-103 COMP PKG C	7-17-64	7-27-64	7-05-64	[illegible]
11	PA-4	SC-4	-237-103 COMP PKG D	7-10-64	7-20-64	7-05-64	[illegible]
11	PA-4	SC-4	-175-104 COMP PKG E	7-10-64	7-20-64	7-05-64	[illegible]
11	PA-4	SC-4	-251 TCA 25#	9-18-64	9-28-64	6-22-64	[illegible]
11	PA-4	SC-4	-253 TCA 85#	9-11-64	9-21-64	6-22-64	[illegible]
11	PA-4	SC-4	-255 TCA 100#	9-04-64	9-14-64	6-22-64	[illegible]
11	PA-4	SC-4	-169 PRESS TANK	ACTUAL	5-08-64	7-05-64	+ [illegible]
11	PA-4	SC-4	-177 OXID TANK	7-17-64	7-27-64	7-05-64	[illegible]
11	PA-4	SC-4	-211 FUEL TANK	ACTUAL	5-08-64	7-05-64	+ [illegible]
11	PA-4	SC-4	-187 S.O. VALVE	ACTUAL	5-08-64	7-05-64	+ [illegible]
11	PA-4	SC-4	-233-104 CARTRIDGE	7-24-64	8-03-64	12-09-64	[illegible]
			S/C 2 - SST				
12	PA-5	SPARES	-235-103 COMP PKG C	6-19-64	7-03-64	1-31-64	[illegible]
12	PA-5	SPARES	-237-103 COMP PKG D	6-26-64	7-10-64	1-31-64	[illegible]
12	PA-5	SPARES	-239-104 COMP PKG E	7-17-64	7-31-64	1-31-64	[illegible]
12	PA-5	SPARES	-251 TCA 25#	8-21-64	9-04-64	1-31-64	[illegible]
12	PA-5	SPARES	-253 TCA 85#	8-14-64	8-28-64	1-31-64	[illegible]
12	PA-5	SPARES	-255 TCA 100#	8-07-64	8-21-64	1-31-64	[illegible]
12	PA-5	SPARES	-177 OXID TANK	5-23-64	6-06-64	1-31-64	[illegible]
12	PA-5	SPARES	-179 FUEL TANK	7-17-64	7-31-64	1-31-64	[illegible]
12	PA-5	SPARES	-257 S.O. VALVES	[illegible]	[illegible]	1-31-64	[illegible]
12	PA-5	SPARES	-233 CARTRIDGE	[illegible]	[illegible]	3-31-64	[illegible]

UNIT NO	TYPE	USAGE	COMPONENT	VENDOR W/S	AVAIL FOR INSTL	REQ'D FOR INSTL	SLACK
			S/C 2 HANGAR				
12	PA-5	SPARES	-235-103 COMP PKG C	7-10-64	7-24-64	4-30-64	-12
12	PA-5	SPARES	-237-103 COMP PKG D	7-03-64	7-17-64	4-30-64	-11
12	PA-5	SPARES	-239-104 COMP PKG E	8-07-64	8-21-64	4-30-64	-16
12	PA-5	SPARES	-251 TCA 25#	8-21-64	9-04-64	4-30-64	-18
12	PA-5	SPARES	-253 TCA 85#	8-14-64	8-28-64	4-30-64	-17
12	PA-5	SPARES	-255 TCA 100#	8-07-64	8-21-64	4-30-64	-16
12	PA-5	SPARES	-169 PRESS TANK	ACTUAL	5-08-64	4-30-64	-1
12	PA-5	SPARES	-177 OXID TANK	6-15-64	6-29-64	4-30-64	-9
12	PA-5	SPARES	-179 FUEL TANK	7-31-64	8-14-64	4-30-64	-5
12	PA-5	SPARES	-257 S.O. VALVE	5-22-64	6-05-64	4-30-64	-5
12	PA-5	SPARES	-233-104 CARTRIDGE	7-17-64	7-31-64	6-30-64	-4
13	PA-6	SC-5	-235-103 COMP PKG C	7-31-64	8-10-64	9-08-64	+2
13	PA-6	SC-5	-237-103 COMP PKG D	7-31-64	8-10-64	9-08-64	+2
13	PA-6	SC-5	-239-104 COMP PKG E	8-14-64	8-24-64	9-08-64	+
13	PA-6	SC-5	-281 TCA 25#	10-16-64	10-26-64	8-25-64	-9
13	PA-6	SC-5	-253 TCA 85#	10-16-64	10-26-64	8-25-64	-9
13	PA-6	SC-5	-255 TCA 100#	10-02-64	10-12-64	8-25-64	-7
13	PA-6	SC-5	-169 PRESS TANK	5-08-64	5-18-64	9-08-64	+[illegible]
13	PA-6	SC-5	-213 OXID TANK	8-14-64	8-24-64	9-08-64	+[illegible]
13	PA-6	SC-5	-179 FUEL TANK	9-04-64	9-14-64	9-08-64	-[illegible]
13	PA-6	SC-5	-257 S.O. VALVES	6-26-64	7-06-64	9-08-64	+8
13	PA-6	SC-5	-243-104 CARTRIDGE	7-31-64	8-10-64	3-08-65	+29

VENDOR AGE STATUS REPORT
RCS & OAMS
ROCKETDYNE

PART NO.	NOMENCLATURE	UNIT NO	VENDOR W/S	AVAIL FOR USAGE	REQD FOR USAGE	SLACK
			SPACECRAFT SYSTEM TEST			
E420006-1	PROP CK-OUT UT	1		ACTUAL		
E420007-3	PROP CONTROL UT	1		ACTUAL		
E420007-3	PROP CONTROL UT	2		ACTUAL		
E420009-1	CK-OUT ADP KIT	1		ACTUAL		
E420013-1	N2 PRESS UNIT	2		ACTUAL		
E420013-1	N2 PRESS UNIT	3		ACTUAL		
E420014-1	HE PRESS UNIT	2		ACTUAL		
E420014-1	HE PRESS UNIT	3		ACTUAL		
E420019-1	PROP SVG ADP KIT	1		ACTUAL		
			HANGAR			
E420006-1	PROP CK-OUT UT	2		ACTUAL		
E420006-1	PROP CK-OUT UT	3		ACTUAL		
E420007-3	PROP CONTROL UT	4	4-25-64	5-02-64	5-04-64	0
E420007-3	PROP CONTROL UT	5	5-09-64	5-16-64	6-08-64	+ 3
E420007-3	PROP CONTROL UT	6	5-16-64	5-23-64	7-01-64	+ 5
E420009-1	CK-OUT ADP KIT	2		ACTUAL		
E420009-1	CK-OUT ADP KIT	3		ACTUAL		
E420010-1	PIA CONSOLE	2		ACTUAL		
E420011-1	PROP COM C/O KIT	2		ACTUAL		
E420012-1	FUEL METER UNIT	1		ACTUAL		
E420013-1	N2 PRESS UNIT	4		ACTUAL		
E420013-1	N2 PRESS UNIT	5		ACTUAL		
E420013-1	N2 PRESS UNIT	6		ACTUAL		
E420014-1	HE PRESS UNIT	4		ACTUAL		
E420014-1	HE PRESS UNIT	5		ACTUAL		
E420014-1	HE PRESS UNIT	6		ACTUAL		
E420015-1	RCS DISP SYST	1		ACTUAL		
E420015-1	RCS DISP SYST	2		ACTUAL		
E420016-1	OAMS DISP SYST	1		ACTUAL		
E420019-1	PROP SVG ADP KIT	3		ACTUAL		
E420019-1	PROP SVG ADP KIT	4		ACTUAL		
E420025-1	OXID METER UNIT	1		ACTUAL		
			PAD			
E420007-3	PROP CONTROL UT	3		ACTUAL		
E420012-1	FUEL METER UNIT	2	6-08-64	6-15-64	6-29-64	+ 2
E420013-1	N2 PRESS UNIT	1		ACTUAL		
E420014-1	HE PRESS UNIT	1		ACTUAL		
E420015-1	RCS DISP SYST	3		ACTUAL		
E420015-1	RCS DISP SYST	4		ACTUAL		
E420016-1	OAMS DISP SYST	2		ACTUAL		
E420019-1	PROP SVG ADP KIT	2	6-20-64	6-27-64	6-29-64	[illegible]
E420025-1	OXID METER UNIT	2	6-08-64	6-15-64	8-10-64	+ 3
			PIA			
E420010-1	PIA CONSOLE	1		ACTUAL		
E420011-1	PROP COM C/O KIT	1		ACTUAL		

SPACECRAFT

CONTRACT NO. NAS 9-170

RE-ENTRY CONTROL SYSTEM (VENDOR: ROCKETDYNE)

STATUS CHART

REPORT NO. 85001-25

LAST PROGRAM SCHEDULE CHANGE: 24 Apr 64

STATUS AS OF: 24 April 64

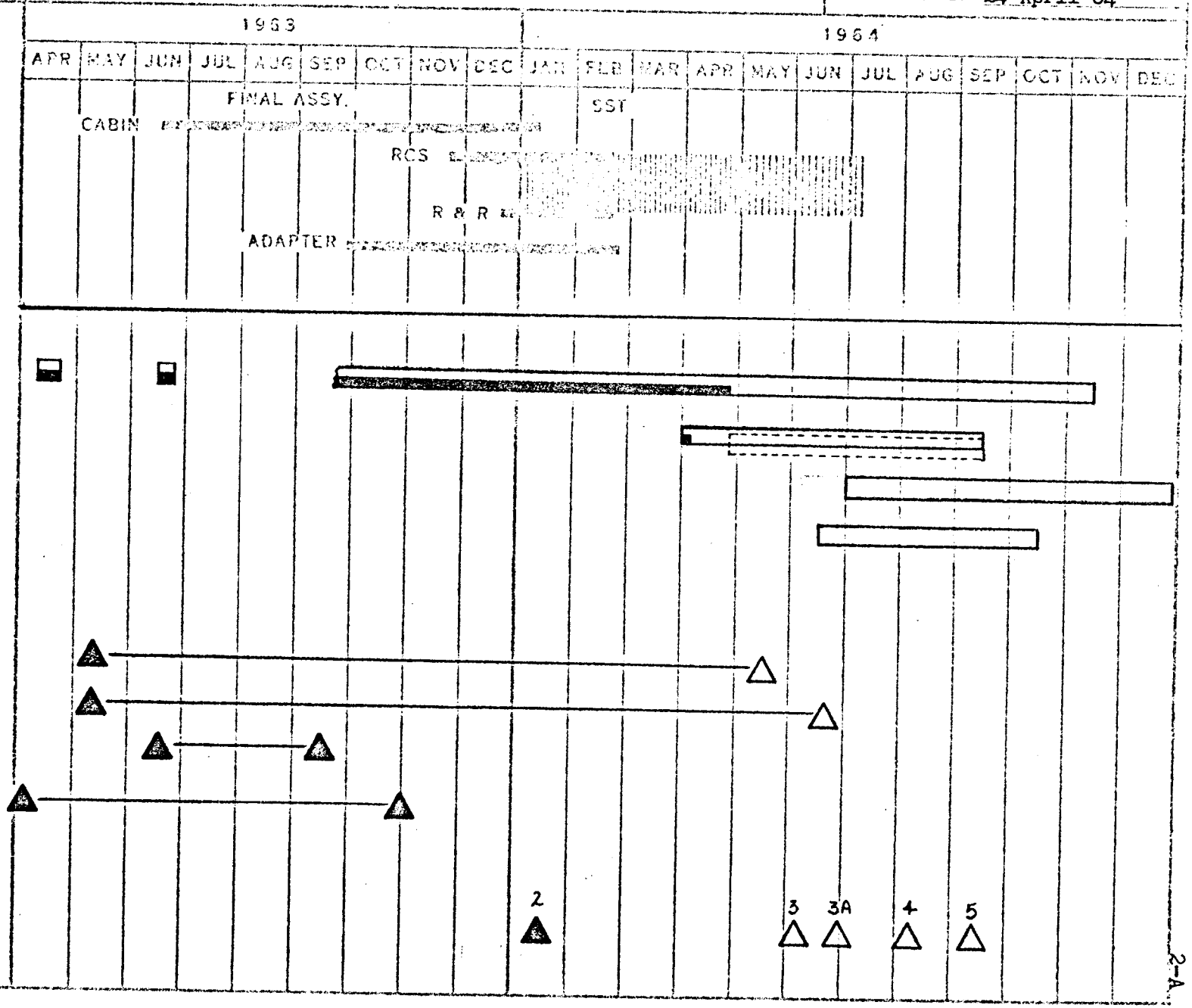

QUALIFICATION TEST STATUS
RE-ENTRY CONTROL SYSTEM-COMPONENTS
ROCKETDYNE - SCD 52-52700

24 APRIL 1964

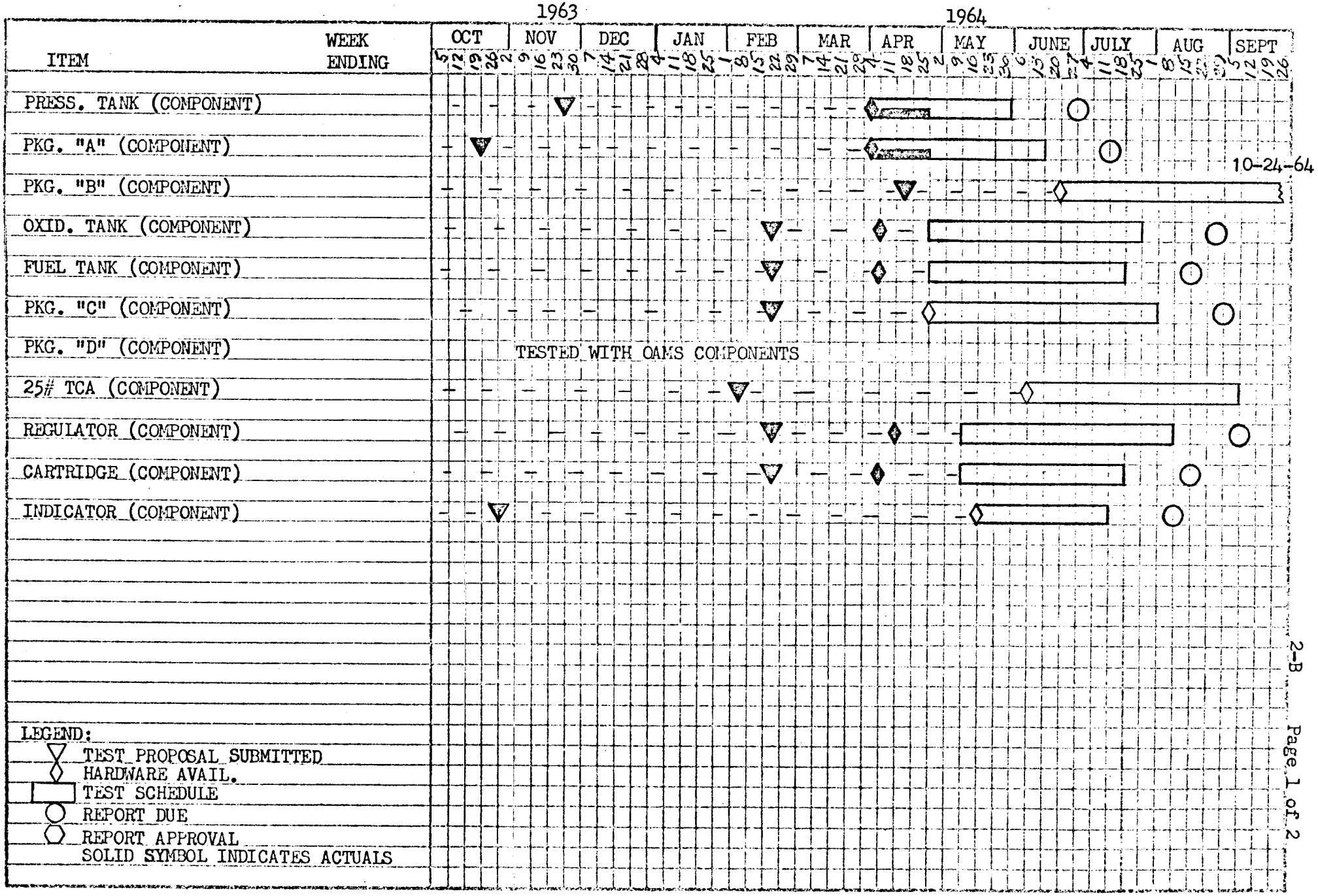

MAC 2274V (27 APR 59)

QUALIFICATION TEST STATUS
RE-ENTRY CONTROL SYSTEM
ROCKETDYNE - SCD 52-52700

24 APRIL 1964

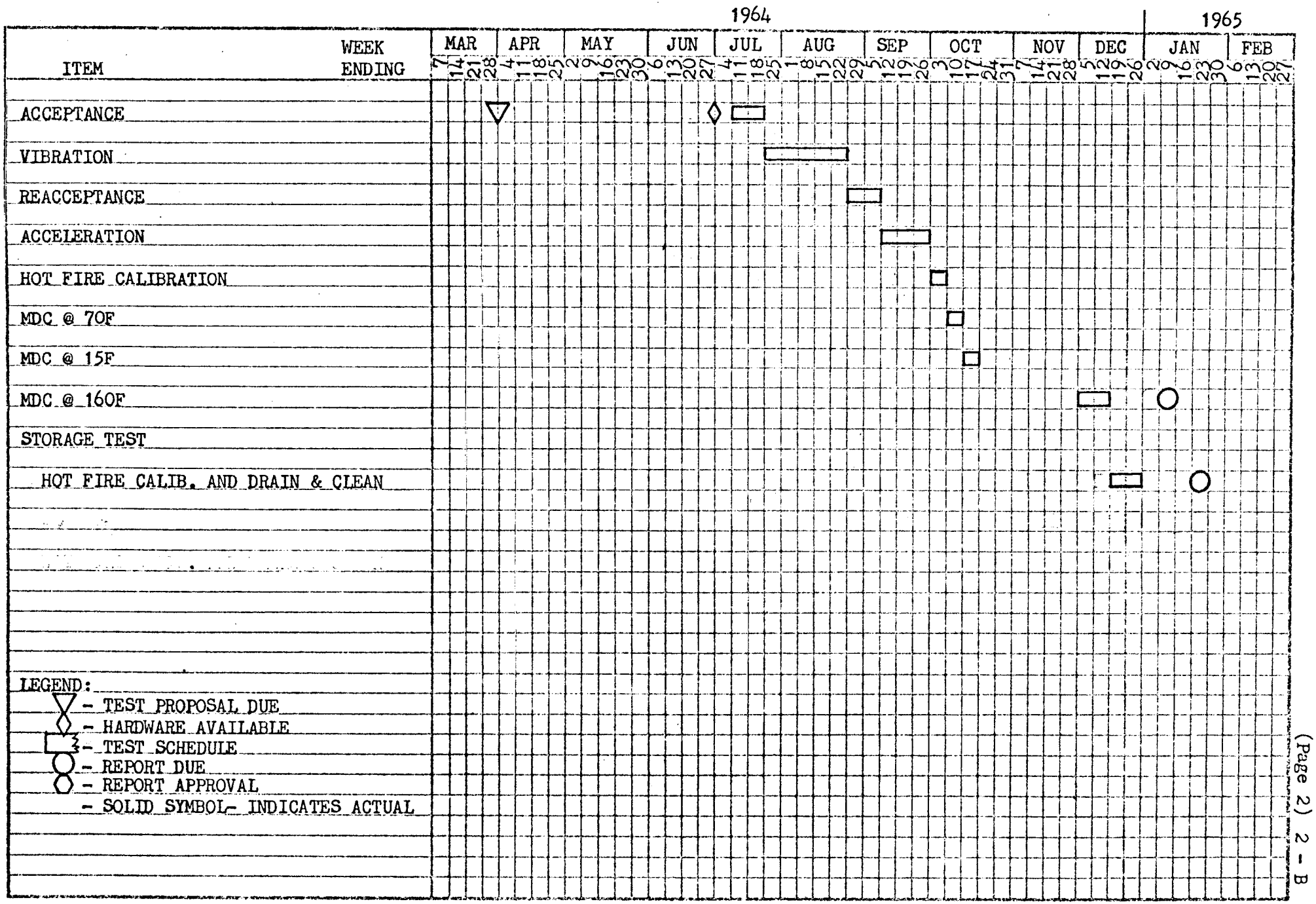

MAC 2274V (27 APR 59)

VENDOR DELIVERY STATUS REPORT Chart No. : 2 C (Pg [illegible])
RE ENTRY CONTROL SYSTEM
ROCKETDYNE Date: 4-24-64

UNIT NO	TYPE	USAGE	COMPONENT	VENDOR W/S	AVAIL FOR INSTL	REQ'D FOR INSTL	SLACK
7	PA-1	SC-2	-151 CARTRIDGE	4-30-64	5-10-64	5-13-64	
7	PA-1	SC-2	-221 TCA 25#		ACTUAL		
8	PA-2	SC-3	-151 COMP PKG A	ACTUAL	5-08-64	4-04-64	[illegible]
8	PA-2	SC-3	-233 COMP PKG B	5-29-64	6-09-64	4-04-64	[illegible]
8	PA-2	SC-3	-153 COMP PKG C	ACTUAL	5-08-64	4-04-64	[illegible]
8	PA-2	SC-3	-205 COMP PKG C	5-15-64	5-25-64	4-04-64	[illegible]
8	PA-2	SC-3	-155 COMP PKG D	ACTUAL	ACTUAL	4-04-64	
8	PA-2	SC-3	-217 TCA 25#	ACTUAL	ACTUAL	4-04-64	
8	PA-2	SC-3	-149 PRESS TANK		ACTUAL		
8	PA-2	SC-3	-185 OXID TANK	ACTUAL	5-08-64	4-04-64	[illegible]
8	PA-2	SC-3	-183 FUEL TANK	ACTUAL	5-08-64	4-04-64	[illegible]
8	PA-2	SC-3	-231 PRESS REG	5-04-64	5-14-64	4-04-64	[illegible]
8	PA-2	SC-3	-213 P.T. IND.	ACTUAL	5-08-64	3-10-64	[illegible]
8	PA-2	SC-3	-201 CARTRIDGE	4-30-64	5-10-64	9-17-64	[illegible]
9	PA-3	SC-3A	-151 COMP PKG A	ACTUAL	5-08-64	5-22-64	[illegible]
9	PA-3	SC-3A	-175 COMP PKG B	6-19-64	6-29-64	5-22-64	[illegible]
9	PA-3	SC-3A	-153 COMP PKG C	ACTUAL	5-08-64	5-22-64	[illegible]
9	PA-3	SC-3A	-155 COMP PKG D	ACTUAL	5-08-64	5-22-64	[illegible]
9	PA-3	SC-3A	-217 TCA 25#	5-15-64	5-25-64	5-22-64	[illegible]
9	PA-3	SC-3A	-149 PRESS TANK	ACTUAL	ACTUAL	5-22-64	
9	PA-3	SC-3A	-185 OXID TANK	ACTUAL	5-08-64	5-22-64	[illegible]
9	PA-3	SC-3A	-183 FUEL TANK	ACTUAL	5-08-64	5-22-64	[illegible]
9	PA-3	SC-3A	-231 PRESS REG	5-12-64	5-22-64	5-22-64	[illegible]
9	PA-3	SC-3A	-213 P.T. IND.	5-29-64	6-09-64	5-20-64	[illegible]
9	PA-3	SC-3A	-201 CARTRIDGE	4-30-64	5-10-64	10-30-64	[illegible]
10	PA-4	SC-4	-151-103 COMP PKG A	7-03-64	7-13-64	7-02-64	[illegible]
10	PA-4	SC-4	-203 COMP PKG B	7-17-64	7-27-64	7-02-64	[illegible]
10	PA-4	SC-4	-205-103 COMP PKG C	7-31-64	8-10-64	7-02-64	[illegible]
10	PA-4	SC-4	-207-103 COMP PKG D	7-17-64	7-27-64	7-02-64	[illegible]
10	PA-4	SC-4	-217 TCA 25#	6-12-64	6-22-64	7-02-64	[illegible]
10	PA-4	SC-4	-149 PRESS TANK	ACTUAL	5-08-64	7-02-64	[illegible]
10	PA-4	SC-4	-185 OXID TANK	4-30-64	5-10-64	7-02-64	[illegible]
10	PA-4	SC-4	-183 FUEL TANK	6-12-64	6-22-64	7-02-64	[illegible]
10	PA-4	SC-4	-231 PRESS REG	6-12-64	6-22-64	7-02-64	[illegible]
10	PA-4	SC-4	-213 P.T. IND.	7-10-64	7-20-64	4-30-64	[illegible]
10	PA-4	SC-4	-201-103 CARTRIDGE	7-17-64	7-27-64	12-09-64	[illegible]
10	PA-4	SC-4	-201-104 CARTRIDGE	7-17-64	7-27-64	12-09-64	[illegible]
			S/C 2 - SST				
11	PA-5	SPARES	-209-103 COMP PKG A	7-17-64	7-31-64	1-31-64	[illegible]
11	PA-5	SPARES	-211 COMP PKG B	7-31-64	8-14-64	1-31-64	[illegible]
11	PA-5	SPARES	-205-103 COMP PKG C	6-19-64	7-03-64	1-31-64	[illegible]
11	PA-5	SPARES	-207-103 COMP PKG D	6-19-64	7-03-64	1-31-64	[illegible]
11	PA-5	SPARES	-219 TCA 25#	8-14-64	8-28-64	1-31-64	[illegible]
11	PA-5	SPARES	-185 OXID TANK	ACTUAL	5-08-64	1-31-64	[illegible]
11	PA-5	SPARES	-183 FUEL TANK	5-02-64	5-16-64	1-31-64	[illegible]
11	PA-5	SPARES	-231 PRESS REG	5-19-64	6-02-64	1-31-64	[illegible]
11	PA-5	SPARES	-213 P.T. IND.	6-05-64	6-19-64	1-31-64	[illegible]
11	PA-5	SPARES	-201 CARTRIDGE	7-03-64	7-17-64	1-31-64	[illegible]

Date: 4-24-64

UNIT NO	TYPE	USAGE	COMPONENT	VENDOR W/S	AVAIL FOR INSTL	REQ'D FOR INSTL	SLACK
			S/C 2 HANGAR				
11	PA-5	SPARES	-209-103 COMP PKG A	7-31-64	8-14-64	4-30-64	[illegible]
11	PA-5	SPARES	-211 COMP PKG B	8-14-64	8-28-64	4-30-64	[illegible]
11	PA-5	SPARES	-205-103 COMP PKG C	7-03-64	7-17-64	4-30-64	[illegible]
11	PA-5	SPARES	-207-103 COMP PKG D	7-03-64	7-17-64	4-30-64	[illegible]
11	PA-5	SPARES	-219 TCA 25#	8-14-64	8-28-64	4-30-64	[illegible]
11	PA-5	SPARES	-149 PRESS TANK	ACTUAL	5-08-64	4-30-64	[illegible]
11	PA-5	SPARES	-185 OXID TANK	ACTUAL	5-08-64	4-30-64	[illegible]
11	PA-5	SPARES	-183 FUEL TANK	5-15-64	5-29-64	4-30-64	[illegible]
11	PA-5	SPARES	-231 PRESS REG	5-26-64	6-09-64	4-30-64	[illegible]
11	PA-5	SPARES	-213 P.T. IND.	6-12-64	6-26-64	4-30-64	[illegible]
11	PA-5	SPARES	-201-103 CARTRIDGE	7-10-64	7-24-64	6-30-64	[illegible]
11	PA-5	SPARES	-201-104 CARTRIDGE	7-10-64	7-24-64	6-30-64	[illegible]
12	PA-6	SC-5	-209-103 COMP PKG A	8-14-64	8-24-64	9-29-64	[illegible]
12	PA-6	SC-5	-211 COMP PKG B	8-28-64	9-07-64	9-29-64	[illegible]
12	PA-6	SC-5	-205-103 COMP PKG C	8-14-64	8-24-64	9-29-64	[illegible]
12	PA-6	SC-5	-207-103 COMP PKG D	8-07-64	8-17-64	9-29-64	[illegible]
12	PA-6	SC-5	-219 TCA 25#	9-04-64	9-14-64	9-29-64	[illegible]
12	PA-6	SC-5	-149 PRESS TANK	5-22-64	6-01-64	9-29-64	[illegible]
12	PA-6	SC-5	-185 OXID TANK	5-22-64	6-01-64	9-29-64	[illegible]
12	PA-6	SC-5	-183 FUEL TANK	8-14-64	8-24-64	9-29-64	[illegible]
12	PA-6	SC-5	-231 PRESS REG	7-24-64	8-03-64	9-29-64	[illegible]
12	PA-6	SC-5	-213 P.T. IND.	7-17-64	7-27-64	7-22-64	[illegible]
12	PA-6	SC-5	-215-103 CARTRIDGE	7-24-64	8-03-64	3-08-65	+30
12	PA-6	SC-5	-215-104 CARTRIDGE	7-24-64	8-03-64	3-08-65	+30

MONTHLY SUMMARY

SYSTEM: Rocket System
SUBSYSTEM: Retro Rockets
VENDOR: Thiokol
DATE: 24 April 1964

ENGINEERING STATUS

1. Aerodynamics

A. Spacecraft Escape Studies Mode II

Mode II retro abort capability using 2, 3, and 4 retro rockets and associated investigations were published in AIN No. 67. Work directed toward an updated Mode II status report continues.

B. Spacecraft Separation Studies

1. Retro Adapter Separation: Continuing efforts to define minimum altitude separating boundary during Mode III aborts. Study includes various times of abort, pitch attitudes, separation altitudes from 300,000 to 400,000 feet, weight and aerodynamic parameter uncertainty. To date, the analysis substantiates the somewhat arbitrarily selected early boundary of 400,000 feet.

2. 90 Inch Equipment Adapter Separation: Separation studies in this area are planned for nominal launch trajectories at maximum velocity where re-entry with retros is not necessary to land short of Africa.

2. Thermodynamics

A. Heat Transfer

Structural: Two scaled model adapter heating tests were conducted at AEDC on 3-4 April with initial altitudes of 450,000 and 203,000 feet. Preliminary analysis of the test results, simulating salvo firing of four retrograde rockets, indicates that the maximum temperatures are well below the design limit.

3. Initiator Failure

A. Vendor representatives met in St. Louis on 9 and 10 April with MAC Engineering. A decision was reached to abandon the rework of the 3575 initiator since the proposed rework would not meet MAC standards and the quantity would not be sufficient for the retesting.

B. It was also decided to give the Holex Company go-ahead to fabricate and test the 4480 alumina disc initiator.

PROCUREMENT

1. Aeronca has furnished Thiokol all the required aft closures.

2. The Holex Company and the Hi-Shear Company will furnish initiators of different design to insure delivery of a satisfactory initiator.

3. The Holex Company has encountered an assembly problem and has submitted a small change in design. MAC Engineering is now evaluating the change. This could possibly extend the initiator program one to three weeks.

ASSEMBLY AND DELIVERY STATUS

1. Six "live" motors were delivered to MAC in St. Louis for S/C 2 less the initiators and the pyrogens on 8 April. Motors for S/C 3 and up will be shipped to the Cape for PIA and then to St. Louis for installation and alignment. After removal they will be returned to the Cape. Thiokol expects to ship S/C 3 by 25 May.

2. The acceptance test procedure for delivery of motors has been revised to include MAC's requested changes. Copies are expected out of printing this week.

TEST STATUS

1. Motor Qual (Ref. Line 9)

Aero Test Lab has completed the vibration and acceleration conditioning of (18) motors. These motors will be humidity conditioned by Thiokol before firing. All firing will be held up till qualified initiators and pyrogens are available in mid July.

2. Initiator Qual (Ref. Line 29)

Holex is tentatively scheduled to start Qual testing on 5 June and complete on 7 July.

3. Pyrogen Qual (Ref. Line 31)

All pyrogen assemblies are complete and ready for installation of initiators. Testing will be run in parallel with initiator Qual test.

AGE

1. Two Qual test fired motors are being refurbished for AGE use. Thiokol expects to ship by 25 May. Slight discrepancies are being evaluated by Engineering.

2. Thiokol shipped their mirror alignment fixture to MAC and expects to have a replacement in operation by 15 May.

GEMINI SPACECRAFT
CONTRACT NO. NAS 9-170

RETRO-ROCKETS (VENDOR: THIOKOL)

STATUS CHART

REPORT NO. [illegible]-38
LAST [illegible]
SCHEDULE CHANGE: 24 April 1964
STATUS AS OF: 24 April 1964

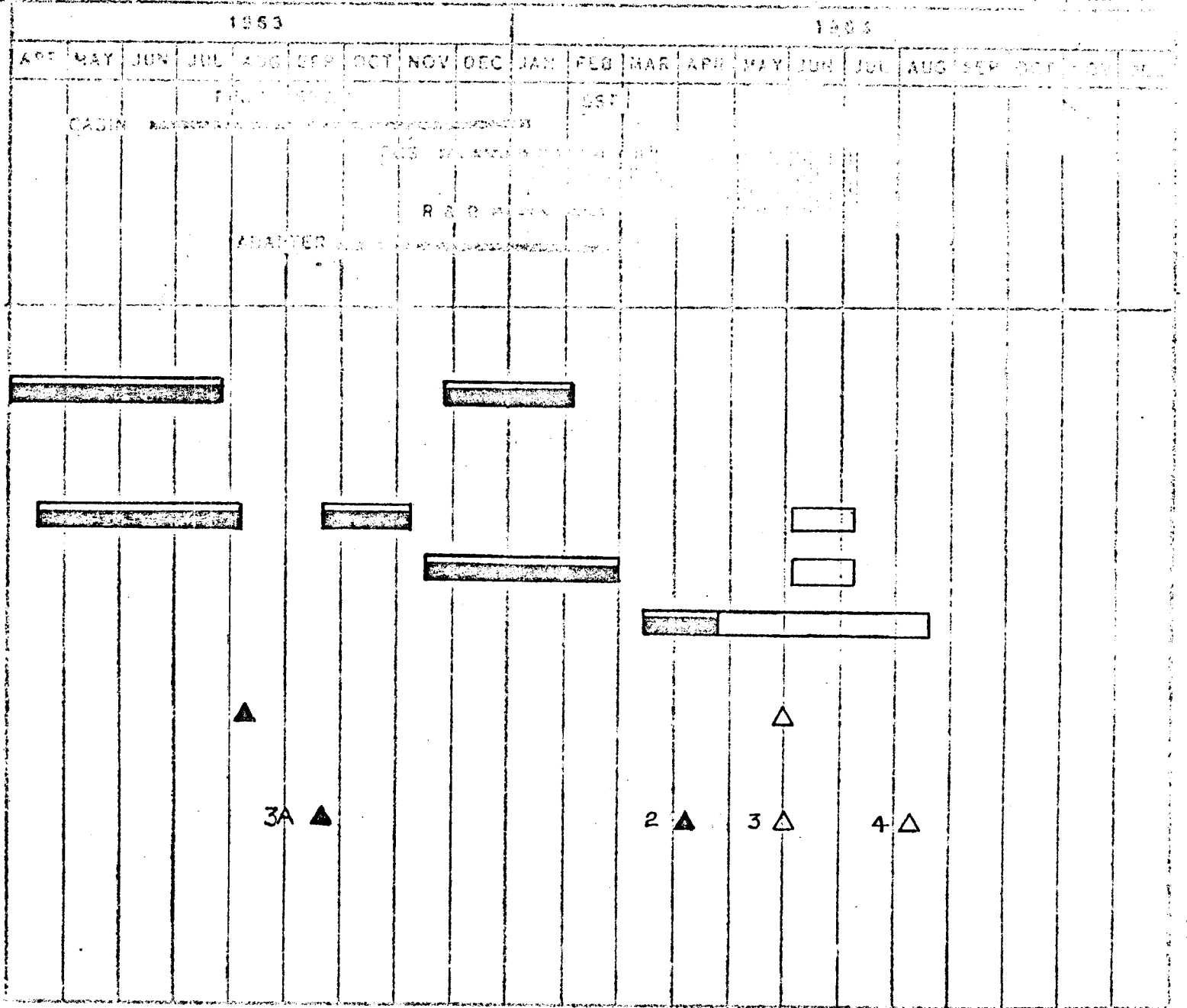

MAJOR TESTS

1. DEVELOPMENT (MOTOR)
2. QUAL
3. INITIATOR
4. PYROGEN
5. MOTOR

AGE

6. CAPE C/O HGR

FLIGHT HARDWARE

7. AFI

LEGEND:
- ▽ TEST PROPOSAL DUE
- ◇ HARDWARE AVAILABLE
- ▭ TEST ACTIVITY
- ○ REPORT DUE
- ⬡ REPORT APPROVED

SOLID INDICATES ACTUALS

QUALIFICATION & DEV. TEST STATUS
RETRO ROCKETS
THIOKOL CHEMICAL CORP. 52-50702

24 April 1964

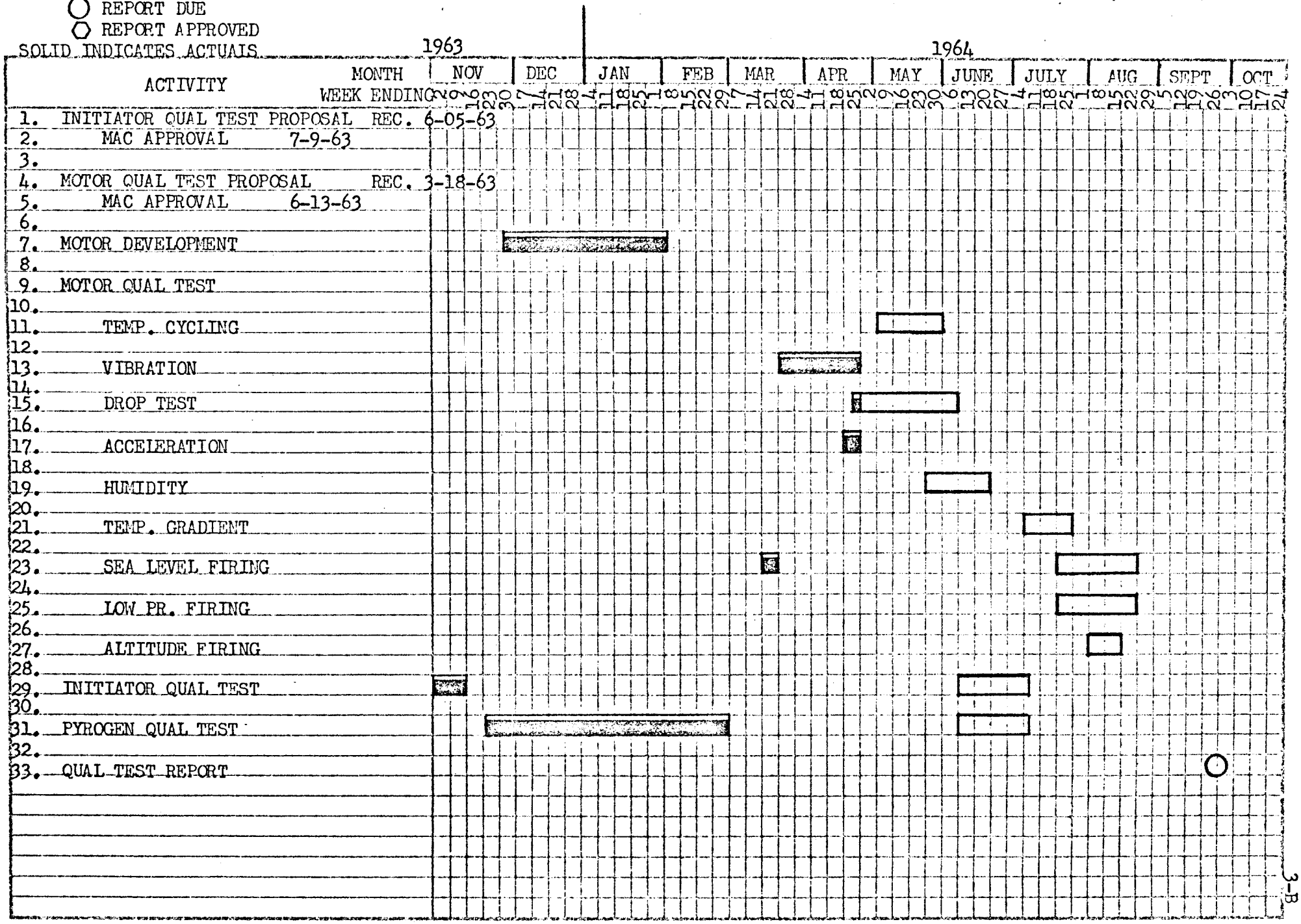

MAC 2274V (27 APR 59)

VENDOR DELIVERY STATUS REPORT

CHART NO. 03 C

SYSTEM - RETROGRADE ROCKETS

DATE: 4-24-64

VENDOR - THIOKOL

UNIT NO.	TYPE	USAGE	COMPONENT	VENDOR W/S	AVAIL. FOR INSTL	REQ'D. FOR INSTL	SLACK
1-18	EP 1-18	VENDOR	DEVELOPMENT			A11-25-63	0
19-38	PP 1-20	VENDOR	QUAL			A 3-27-64	0
39-58	PA 1-20	VENDOR	QUAL			A 3-27-64	0
1-18	EMPT 1-4	CTU	EMPT MOTOR			A 7-01-63	0
1-18	INERT 1-4	SC 3A	INERT MOTOR			A 2-03-64	0
59-62	PA 21-24	SC 2	ROCKET MOTORS		A 4-08-64	4-27-64	+ 3
63-66	PA 25-28	SPARE	ROCKET MOTORS	5-25-64	6-01-64	4-30-64	- 4
67-70	PA 29-32	SC 3	ROCKET MOTORS	5-25-64	6-01-64	6-08-64	+ 1
71-74	PA 33-36	SC 4	ROCKET MOTORS	8-03-64	8-10-64	9-16-64	+ 3
75-78	PA 37-40	SC 5	ROCKET MOTORS	9-11-64	9-18-64	11-13-64	+ 8
79-82	PA 41-44	SC 6	ROCKET MOTORS	10-02-64	10-09-64	1-26-65	+13
83-86	PA 45-48	AD 13	ROCKET MOTORS	12-03-64	12-10-64	2-15-65	+ 9
87-90	PA 49-52	SC 7	ROCKET MOTORS	2-02-65	2-09-65	3-15-65	+ 3
91-94	PA 53-56	SC 8	ROCKET MOTORS	3-22-65	3-29-65	5-10-65	+ 6
95-98	PA 57-60	SC 9	ROCKET MOTORS	4-13-65	4-20-65	7-05-65	+11
99-102	PA 61-64	SC 10	ROCKET MOTORS	6-02-65	6-09-65	8-25-65	+ [illegible]
103-106	PA 65-68	SC 11	ROCKET MOTORS	8-03-65	8-10-65	10-25-65	+ [illegible]
107-110	PA 69-72	SC 12	ROCKET MOTORS	10-05-65	10-12-65	12-17-65	+10
111-114	PA 73-76	AD 14	ROCKET MOTORS	12-03-65	12-10-65	2-09-66	+ 9
115-118	PA 77-80	AD 15	ROCKET MOTORS	2-11-66	2-18-66	4-05-66	+ 8

VENDOR AGE STATUS REPORT

CHART NO. [illegible]

SYSTEM - RETRO ROCKETS

DATE: [illegible]

VENDOR - THIOKOL

PART NO.	NOMENCLATURE	UNIT NO.	VENDOR W/S	AVAIL. FOR INSTL.	REQ'D. FOR INSTL.	[illegible]
			HANGAR			
52E400012-1	SLING RETRO RO	1		A 8-09-63		
52E400012-1	SLING RETRO RO	2		A 8-09-63		
52E400013-1	DOLLY RETRO RO	1		A 8-09-63		
52E400014-1	EMPTY RETRO RO	2	5-25-64	6-01-64	8-17-64	[illegible]
52E400014-1	EMPTY RETRO RO	1	5-25-64	6-01-64	6-15-64	[illegible]

MONTHLY SUMMARY

SYSTEM: Guidance & Control
SUBSYSTEM: I.G.S.
VENDOR: I.B.M.
DATE: 24 April 1964

ENGINEERING STATUS

1. Guidance & Control Mechanics
Ascent Guidance - Studies have continued in the areas of error analyses, error effects, acceptance tests, and documentation of IGS/RGS combined performance. The error analysis is presently directed toward evaluation of the effects of accelerometer bias or I.G.S. insertion accuracy. In order to evaluate the effect of insertion errors on the proximity of the spacecraft to the target at subsequent spogees, a two-vehicle orbit insertion program for the 7094 was written, coded, and partially checked out.

IBM acceptance tests are being evaluated by programming the tests on the 7094. This program was checked out and is now ready for production runs.

Normal performance of the IGS and switchover criteria are being established by a combined ascent guidance simulation. This 7094 program is currently being checked out.

ASSEMBLY & DELIVERY STATUS

1. Status of Computer #7, IBM Formal Qual
Formal acceptance testing began once again on 11 April. After 20 minutes of operation in the Thermal Vacuum Chamber the computer experienced an unprogrammed sequencing down. There were no malfunction indications and testing was resumed. Shortly thereafter, numerous transients on the +9.3V and +27.2V computer power lines began to be experienced. No malfunctions occurred and testing continued. The computer stopped looping through the diagnostic test program for 23 seconds. Then the computer came back on and began looping normally. A check indicated that the computer had re-initialized. Twenty two minutes later the power plug to the TPC was accidentally disconnected causing an unsequenced power off to the computer. The power plug was re installed and the computer appeared to be looping normally. Thirty minutes later the computer experienced a malfunction and formal testing was discontinued until the equipment hook-up and power supplies could be investigated as to transients on the lines.

Formal testing resumed on 14 April. After 30 minutes of operation the computer stopped looping for 8 seconds. Testing was then halted to further investigate this problem.

Troubleshooting of this unit indicated a COD problem. Further investigation revealed marginal "one" bits were again located in memory.

IBM disassembled the computer and installed it on the "spider" for further testing. At present the unit is installed on the spider and is being operated in a temperature chamber in an effort to isolate the degradation of "one" bits. IBM has isolated one CM which appears to be causing this degradation. Further effort will continue to assure that other CM's are operating properly. It should be remembered that this computer experienced a loss of 28VDC causing possible overstress of 99 CM's on panels A4 and A5

2. Status of Computer #8, S/C 2 FLY
On 2 April, during a 10 second vibration test in the minor horizontal plane a missing pulse was noted in the yaw ladder output. This was traced to a marginal condition in the common ladder amplifier for the pitch, roll, and yaw channels. Also the hold time of the Sample and Hold circuit was involved. To correct the programmer sampling time, three additional no operation instructions were added to allow sufficient time for the Ladder Amplifier to recover.

Formal testing resumed on 8 April and the computer passed the 10 second equalization test in the major horizontal plane, but failed in minor horizontal plane. Three errors were stored in the error data section of memory; two divide errors and one Input-Output Processor error.

The computer was vibrated in the minor horizontal plane on 14 and 15 April in trouble shooting the two divide and one Input-Output Processor. Niether of these errors occurred. However, a malfunction similiar in nature to one previously experienced occurred and was later corrected.

Upon removing the cover for visual inspection of the Memory Array a screw was found loose between Panels A3 and A4. The screw was classified as a foreign object.

On the 17th, the computer was successfully operated for ten seconds equalization, at full power, in the minor horizontal plane. The unit also operated successfully for ten seconds equalization, at full power, in the vertical plane.

On the 19th the computer was vibrated for 60 seconds at full power in the vertical axis without a malfunction. The axis was then changed to the major horizontal and the computer operated successfully for ten seconds at full power. After 20 seconds of vibration at full power the vibration equipment, not the computer, failed. The computer was transferred to the temperature altitude test area and after operating for almost an hour, the computer ladder outputs became erratic. This failure was traced to latch which was failing to set properly. The CM containing this latch was replaced on 21 April and the temperature altitude portion of formal acceptance started again on the 23rd. The computer successfully operated for the five hours of this test.

3. Status of Computer #9, S/C 3 FLY
Assembly was delayed due to a faulty magnetic modulator. The magnetic modulator was replaced on 20 April. Prior to being returned to final assembly, IBM plans to install this computer in a temperature chamber in order to verify that all components will operate properly at elevated temperature.

4. Status of Computer #10, SPARE
The line stoppers for even initial spider assembly of this unit are Panels A3 and A4. Both panels are in the very latter stages of fabrication. The panels still have to be populated with circuit modules and flow soldered.

TEST STATUS

1. Status of Computer #5, IBM Exploratory Qual
Due to the equipment and manpower which is being expounded on Computers #7 and #8, next to nothing has been done in this area. Chart 4-B reflects the present test situation for this unit and it also reflects the additions and deletions of activities for Formal Qual.

AGE STATUS

1. Two units of 52E270051-1, Computer Handling Dolly, were shipped to the Cape on 17 April 1964.

2. All of the AGE dates continued to slip, but as Spacecraft 2 also slipped a zero or plus slack was able to be maintained. IBM feels that the delivery dates now shown are accurate and the only foreseeable problem might be procurement of the 90 degree fittings for the 52E270076-1, Test Box.

GEMINI SPACECRAFT
CONTRACT NO. NAS 9-170

INERTIAL GUIDANCE SYSTEM _ (VENDOR: I.B.M.)

STATUS CHART

REPORT NO. 8580-1 -38
LAST PROGRAM SCHEDULE CHANGE: 24 April 1964
STATUS AS OF: 24 April 1964

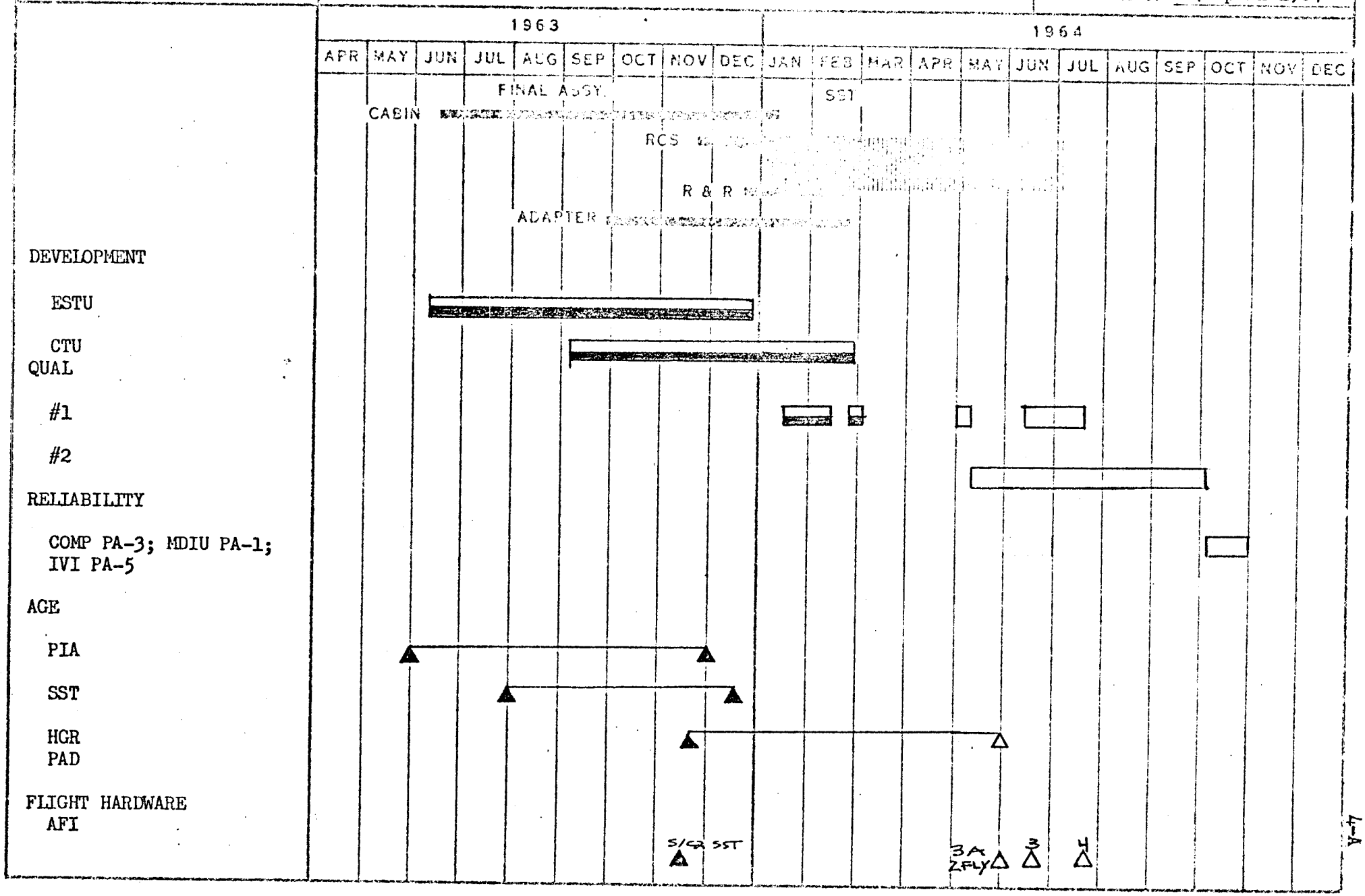

LEGEND

- ▽ Test Proposal Due
- ◊ Hardware Available
- □ Test Schedule
- ○ Report Due
- ☆ Report Approved

SOLID INDICATES ACTUAL

QUALIFICATION AND DEVELOPMENT TEST STATUS
INERTIAL GUIDANCE SYSTEM
VENDOR: I.B.M.
SCD 52-87710

Chart No: 4-B
Date: 24 April 1964

-1964-

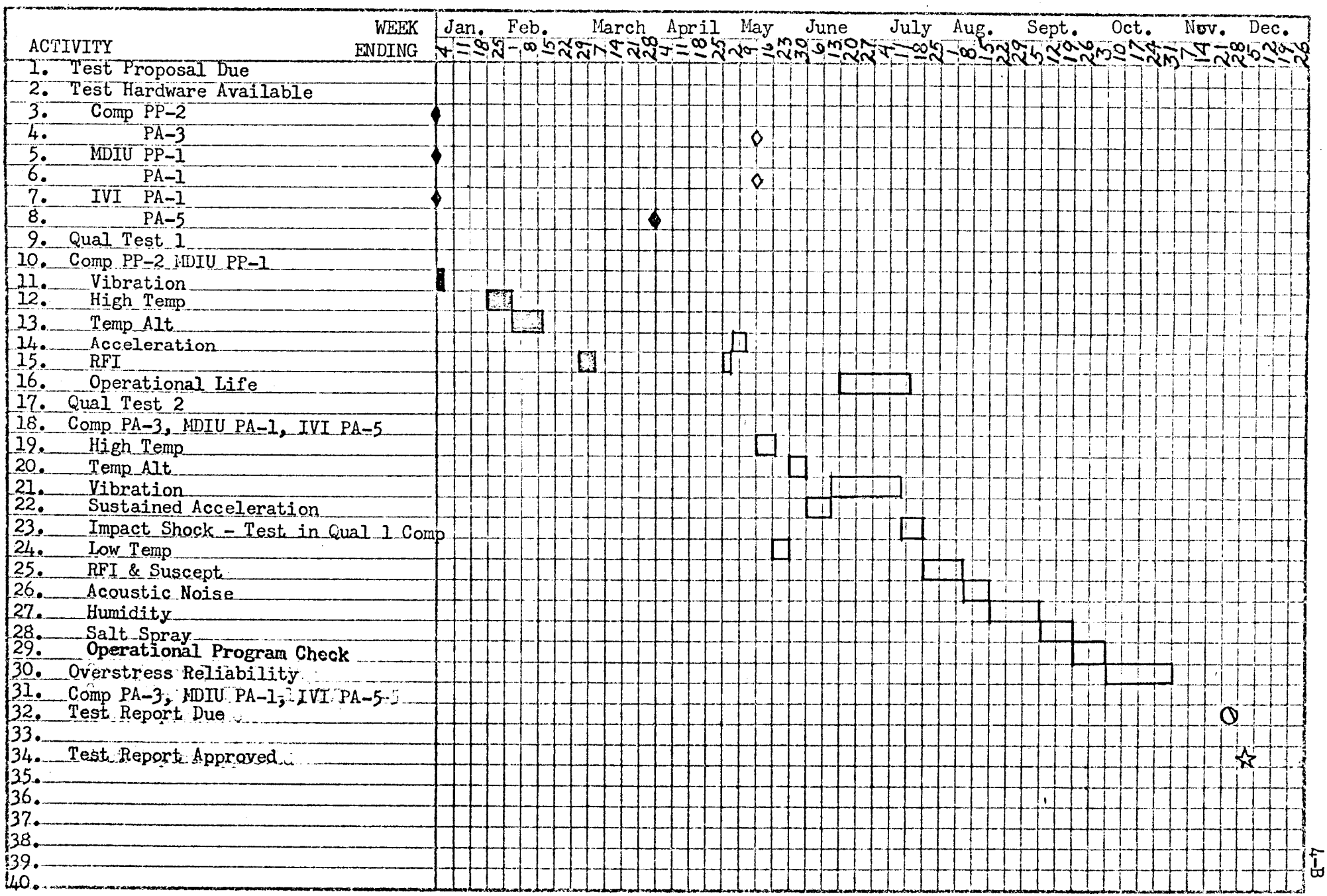

MAC 2274V (27 APR 59)

VENDOR DELIVERY STATUS REPORT

CHART NO: 4-C

SYSTEM - I.G.S.

DATE: 24 April 1965

VENDOR - I.B.M.

UNIT NO.	TYPE	USAGE	VENDOR W/S	AVAIL. FOR INSTL.	REQ'D. FOR INSTL.	SLACK
1	EP-1	ESTU			A05-21-63	
2	EP-2	CCTU			A08-01-63	
3	EP-3	CTU			A07-22-63	
5	PP-2	QT-1			A09-13-63	
4		PARTIAL SPARE			A09-30-63	
4	PP-1	S/C 2 SST			A11-29-63	
4	PP-1	S/C 3A		05-29-64	06-05-64	+ 7
6	PA-1	ENGRG TEST			A11-11-63	
8	PA-2	S/C 2 FLY	05-29-64	06-01-64	12-17-63*	-23
7	PA-3	QT 2		05-05-64		
9	PA-4	S/C 3 FLY	06-16-64	06-19-64	04-22-64*	- 8
6	PA-1	MISS ENVIR CTU		06-15-64	06-15-64	0
10	PA-5	SPARE	06-20-64	07-04-64	04-30-64	- [illegible]
11	PA-6	S/C 4	07-27-64	08-31-64	07-21-64	- [illegible]
12	PA-7	SPARE	08-31-64	09-14-64	06-30-64	-[illegible]
13	PA-8	S/C 5	10-02-64	10-30-64	10-01-64	- [illegible]
14	PA-9	S/C 6	11-06-64	12-04-64	11-28-64	- [illegible]
15	PA-10	S/C 7	12-11-64	01-08-65	01-19-65	+ [illegible]
16	PA-11	S/C 8	01-15-65	02-13-65	03-12-65	+ [illegible]
17	PA-12	S/C 9	02-20-65	03-20-65	05-12-65	+ 7
18	PA-13	S/C 10	03-19-65	04-16-65	07-01-65	+[illegible]
19	PA-14	S/C 11	04-23-65	05-21-65	08-30-65	+[illegible]
20	PA-15	S/C 12	05-25-65	06-22-65	10-27-65	+[illegible]

* S/C 2 FLY - AFI Date does not include PIA time.

* S/C 3 FLY - AFI Date does not include PIA time.

NOTE: PA-5 and up AFI dates include PIA and IGS Integration Test time.

VENDOR AGE STATUS REPORT

CHART NO: 4 D

SYSTEM - ICS

DATE: 24 April 1964

VENDOR - IBM

PART NO.	COMPONENT	UNIT NO.	VENDOR W/S	AVAIL. FOR USAGE	REQ'D. FOR USAGE	STACK
		(PRE-INSTALLATION ACCEPTANCE)				
52E270023-3	MEMORY LOADER	1		A05-25-63		0
52E270023-7	BENCH TEST EQUIP	1		A12-17-63		0
52E270050-1	COMP DOLLY BTE	1		A12-17-63		0
52E270034-1	MDIU IVI TESTR	1		A06-01-63		0
52E270051-1	COMP HDL DOLLY	1-2		A08-30-63		0
52E270023-5	TEST PROG. CONS.	4		A08-30-63		0
		(SPACECRAFT SYSTEM TEST)				
52E270003-1	COMP TEST CONS	4		A12-23-63		0
52E270003-1	COMP TEST CONS	5		A12-23-63		0
52E270039-1	G & CS SIMULAT.	1		A12-01-63		0
52E270068-1	FIXTURE COMP. ADAP.	1				(2)
52E270076-1	TEST BOX	1		A07-14-63		
52E270003-401	CPEE					(3)
		(CAPE KENNEDY HANGAR)				
52E270003-1	COMP TEST CONS	1	A08-01-63	08-01-64	07-24-64	0
52E270003-1	COMP TEST CONS	3	A12-10-63	07-10-64	07-10-64	0
52E270023-3	MEMORY LOADER	3	04-27-64	06-26-64	06-26-64	0
52E270023-5	TEST BENCH CONS	5	05-01-64	06-26-64	06-26-64	0
52E270023-7	BENCH TEST EQUIP	4	05-10-64	06-26-64	06-26-64	0
52E270050-1	COMP DOLLY BTE	4	06-10-64	06-26-64	06-26-64	0
52E270034-1	MDIU IVI TESTR	3	06-01-64	07-10-64	07-10-64	0
52E270039-1	G & CS SIMULAT	2	A01-20-64	05-29-64	05-29-64	0
52E270051-1	COMP HDL DOLLY	3	A04-17-64	04-27-64	07-17-64	+[illegible]
52E270051-1	COMP HDL DOLLY	4	A04-17-64	04-27-64	07-17-64	+[illegible]
52E270068-1	FIXTURE COMPUTER	2	06-01-64	06-08-64	07-17-64	+[illegible]
52E270076-1	TEST BOX	2	05-22-64	05-29-64	07-17-64	+[illegible]
52E270003-401	CPEE					(3)
		(CAPE KENNEDY PAD)				
52E270003-1	COMP TEST CONS	2	A12-10-63	07-24-64	07-24-64	[illegible]

(1) This unit is presently at IBM and will be shipped to Cape after modification approximately 7-1-64.

(2) To be cancelled.

(3) To be procured.

MONTHLY SUMMARY

SYSTEM: Guidance & Control
SUBSYSTEM: I.M.U.
VENDOR: Honeywell, St. Pete
DATE: 24 April 1964

ENGINEERING STATUS

1. MAC Engineering notified Honeywell not to retrofit circuits to replace Continental Device diodes of gold past construction. Honeywell will utilize all fabricated modules and assemblies incorporating these diodes.

2. Honeywell was directed to perform vibration tests as part of the acceptance test procedure on all IMU platforms from PA-7 and up.

3. Due to funding, MAC AGE directed Honeywell to incorporate modifications in the Cape Kennedy IMU AGE in order to accomplish testing on S/C 2. AGE equipment involved:

   IMU System Test Consoles 52E270042-1 and -3.
   IMU PIA Test Consoles - 52E270032-1.

4. Honeywell was authorized to perform special power supply test using P-40 inverter (S/C 2 FLY) in order to prove flight capability (See Assembly & Delivery portion of this report for results of these tests).

5. Honeywell was directed, following Humidity portion of Qual Test #1, to partially disassemble and visually inspect the DAT Unit for corrosion and degradation. For results of this inspection, see "Testing" portion of this report. This inspection procedure was incorporated into the DAT procedure.

6. Honeywell has "fixed" a 3-point platform mount and hand-carried it to MAC where pressure drop tests and bubble tests were conducted. It is anticipated that if this mount is acceptable, it will be utilized for S/C 3A.

7. 3-Axis Table Test: Manual gyrocompassing tests have been completed and the results are being analyzed. The gyrocompassing requirement of manually controlling spacecraft attitude to 1 degree was found to be a simple task using the FDI's and the pulse mode of ACME. The dynamic platform alignment errors measured in these tests agree favorably with results of the all digital computer simulation studies.

   Loss of inertial platform reference was studied for possible occurrence during launch transients or during platform operation at 90 degree yaw angles. In the launch transient tests the stable element was never disturbed even though the severity and duration of the platform disturbance was greater than that determined from launch guidance studies. The platform tests at 90 degree yaw angles showed that it is possible, although unlikely, to disturb the platform stable element by producing a spacecraft motion greater than which can be compensated for by the inner roll gimbal.

PROCUREMENT

1. The availability of the re-designed static inverter (J282PA) is still one of criticality. Engineering Magnetics has revised their delivery schedule. The first delivery of the redesigned inverter will be realized 29 April, after which a delivery of one every two (2) weeks will be realized.

This delay was due to an internal noise problem in the inverter. This problem has been "fixed" by the addition of two capacitors, which were [illegible] items. Due to the lengthy procurement time, Honeywell [illegible] capacitor substitution which was in-house.

ACCEPTANCE DELIVERY

1. Production Article 2 - Qual Test 1
Unit completed and entered qual test 14 February. (See "Test Status" section of this report for results of qualification test).

2. Production Article 3 - (Hangar 02A Spare)
Unit presently held in storage at Honeywell - due to decreased funding appropriation. Honeywell has proposed, and MAC agreed, to hold off [illegible] this unit until Honeywell's FY 65. For estimated delivery of this unit "Vendor Status Chart".

3. Production Article 4 - (OSR Test Unit)
Power inverter for this unit expected to be received by Honeywell [illegible] June 1964. Based upon receipt of this inverter, expect OSR to [illegible] of July 1964.

4. Production Article 5 (S/C 2 [illegible])
Confidence check on this system, after replacement of the [illegible] completed 27 March. MNR's on the platform power supply and system [illegible] missed to MAC/NASA for approval. Also [illegible] was in question (due to witnessed [illegible] on other Honeywell [illegible] MAC resident [illegible] requested that the platform [illegible] be [illegible] for corrosion. The visual inspection indicated no evidence of corrosion on this platform. Upon completion of the inspection, a [illegible] check was made and the platform [illegible]. All MNR's [illegible] this system on 8 April. The platform was hand carried to IBM [illegible] system electronics and power supply (with P-9 inverter) [illegible] IBM 9 April.

While undergoing IBM's acceptance test, the [illegible] platform failed [illegible] April. The unit was shipped back to Honeywell [illegible] April for failure analysis and rework. Cause of failure was defined as a faulty slip ring in the [illegible] inner gimbal, resulting in a major overhaul. Rework started [illegible] April [illegible] combined on a [illegible]-shift basis. New slip rings installed and functional [illegible] started 20 April. Functional checks completed [illegible] April and unit [illegible] final unit acceptance test [illegible] April [illegible] before the delivery of the [illegible] worked platform will be accomplished [illegible] May 196[illegible].

5. Production Article 6 (Qual Test 2)
Post vibration checks performed and the following problems were [illegible] of the vibration test [illegible] MAC [illegible] report [illegible]

A. Oscillation [illegible] in [illegible] [illegible] inverter [illegible] installed [illegible] [illegible]

B. [illegible]

[illegible]

The phase shift network (LC) for synchro reference voltage has been installed and static accuracy and synchro phase shift measurements were performed. During these tests, the B-2 torque motor armature resistance was high (increased from 97 ohms to more than 74 ohms since installation). Torque motor to be replaced. Estimate start 27 April; based on torque motor replacement, estimate unit to start acceptance test 11 May 1964.

System electronics is available for acceptance test. Static power supply and C.C.E. will be mated and undergo acceptance test during week ending 1 May 1964.

6. Production Article #7 (S/C 3 FLY)
The platform (H-10/104) completed LS test with no descrepant items; however, during acceptance test of S/C 2 FLY platform (H-11/105), the method of nulling the synchro bridge was found to be in error. This error, plus the fact that H-10/104 platform had the new phase shift (LC) network installed since platform LS test, resulted in a decision to return H-10/104 platform to ES to re-run the static accuracy test.

Platform test indicated the fourth gimbal resolver out of specification. The fourth gimbal synchro resolver had to be shimmed to bring the resolver error curve "in spec".

The static power supply and GCE became available on 7 April, with MRR action (MRR 59865) for interim usage pending receipt of redesigned static power supply.

The system Electronics was available during last report period.

Formal acceptance was initiated 18 April. The first test of acceptance vibration of platform in 3 axis, was completed 20 April. The following problems were found during and after vibration.

A. "X" accelerometer TCA lead broken during vibration in the longitudinal axis at 8.4 G's. This was apparently caused from insufficient stress loop. The lead was replaced and testing continued.

B. During rework of the broken lead (See A above) two gimbal wedges were left in the platform; therefore, the platform cover had to be removed for the removal of the wedges.

C. During inspection of platform after vibration, clearance of first gimbal was found to be less that .020 inches; specification calls for .025 inches. Clearance problem was determined to be caused by "B-3" rotary component stiffenre coming loose during vibration.

Platform undergoing rework and expects to complete week ending 1 May 1964. Vibration is scheduled on 5 May 1964.

The system electronics is completed and available; MRR's for the static power supply and GCE was approved 7 April to allow use of power supply in acceptance test.

[illegible] platform [illegible] and [illegible] [illegible] [illegible] [illegible] [illegible] [illegible] [illegible] vibration [illegible] [illegible] [illegible] [illegible] [illegible] [illegible] [illegible] [illegible] [illegible] [illegible] during vibration. The platform [illegible] [illegible] about the longitudinal axis. At the [illegible] level, the [illegible] [illegible] [illegible] appeared. This problem was found to be internal [illegible] [illegible] by a screw which was too long. The platform [illegible] [illegible] [illegible] present plans call for a few engineering [illegible] and [illegible] [illegible] [illegible] [illegible].

[illegible] Platform Mounts
[illegible] of the fourteen platform mounts [illegible] [illegible] received during [illegible] part of April at Honeywell were rejected by Honeywell [illegible] [illegible] [illegible] [illegible] examination of these [illegible] [illegible] [illegible] [illegible] [illegible] [illegible] [illegible] [illegible] on [illegible] [illegible]. [illegible] [illegible] [illegible] in regard to alloy segregation. This segregation problem, which [illegible] [illegible] referred to as [illegible] segregation, is a cause of the [illegible] [illegible].

[illegible] the acceptable platform mounts, [illegible] [illegible] [illegible] [illegible] [illegible] [illegible] failed [illegible] [illegible] [illegible] in April [illegible]. It was [illegible] [illegible] [illegible] and [illegible] [illegible] [illegible] [illegible] presently [illegible] [illegible] [illegible] [illegible] is expected to start acceptance testing on [illegible] April [illegible].

[illegible] Due [illegible] [illegible] [illegible] [illegible], Honeywell proposed and [illegible] [illegible] modifications, schedule slippage for flight hardware, qualification [illegible] [illegible], and shortening of [illegible] retrofits. For schedule [illegible] [illegible] individual sections of this report.

[illegible]

[illegible] Qualification Test [illegible]
The [illegible] humidity test began [illegible] March and completed [illegible] [illegible] [illegible] each cycle, the [illegible] was shut down [illegible] [illegible] [illegible] [illegible] [illegible] correct system operation. During [illegible] [illegible] [illegible] [illegible] [illegible] [illegible] test gimbal [illegible] position signal was [illegible]. [illegible] [illegible] [illegible] that cable [illegible] had a broken wire at the connector pin. The [illegible] [illegible] [illegible] placed with new and longer [illegible] and [illegible] [illegible], after which [illegible] [illegible] was repaired and [illegible] test [illegible] for comparison. The [illegible] [illegible] [illegible] compatible and it was believed the discrepancy was [illegible] [illegible] [illegible] cable length and not the system. An investigation to determine [illegible] cause of the intermittent discrepancy followed the completion [illegible] operating cycle. Final cycle of [illegible] qualification test was [illegible] April. [illegible] humidity [illegible] [illegible] to be performed [illegible] [illegible], [illegible] these tests were delayed due to [illegible] failure which [illegible] [illegible] [illegible] system was energized. [illegible] [illegible] [illegible] [illegible] [illegible] Honeywell [illegible] [illegible] [illegible] [illegible] [illegible] [illegible] [illegible] [illegible] caused by [illegible] relay in the power [illegible] [illegible] [illegible] [illegible] [illegible] [illegible] [illegible] [illegible] for repair.

[illegible] [illegible] [illegible] [illegible] [illegible] [illegible] [illegible] [illegible] [illegible] [illegible] [illegible] [illegible] [illegible] [illegible] [illegible]

of April. Results of these tests confirmed that the [illegible] gyro parameters are out of spec, and the [illegible] gyro instant torque parameter has doubled since the start of humidity test. Corrosion and paint defects are under [illegible] and investigation by MAC/Honeywell Engineering.

Upon the resolution of the above, Honeywell intends to perform [illegible] portion of qualification test #1 prior to stopping qualification test [illegible] until FY 65, due to funding.

2. Qualification Test #2
Estimate start of qualification test 15 May; see "Qualification Test Status Charts". (See Assembly & Delivery #5).

3. OSR
Estimate start of OSR test first week July 1964, see "Qualification Test Status Charts". (See Assembly & Delivery #3).

[illegible]

1. Test console ([illegible]) unit 3 failed during acceptance test [illegible] Failure isolated to [illegible] amplifier discriminator hood. Special [illegible] have been requested by MAC residents to determine whether [illegible] based on these special tests, will ship has been revised to [illegible] May [illegible].

2. [illegible] Test Console ([illegible]) unit 2 started acceptance test [illegible] is expected to be shipped from Honeywell to the Cape on [illegible] May.

3. The delay in shipping items 1 & 2 above was due to the availability [illegible] digital voltmeters to replace voltmeters which have previously failed.

4. For remaining [illegible] Status Charts"

5. Due to the funding, Honeywell proposed to delay retrofits on [illegible] ment until their FY 65. A meeting was held by MAC [illegible] to determine which equipment must be retrofitted in order to test [illegible] System. A list was prepared and submitted to Honeywell, [illegible] them to perform the necessary modifications. Equipment involved [illegible]

PART NO.	UNIT NO.	USAGE
[illegible]	1	[illegible]
[illegible]	2	[illegible]
[illegible]	1	[illegible]
[illegible]	2	[illegible]
[illegible]	3	[illegible]

MAC presently awaiting [illegible]

SPACECRAFT

CONTRACT NO. NAS 9-170

INERTIAL MEASUREMENT UNIT
(VENDOR: HONEYWELL - ST. PETERSBURG)
STATUS CHART

REPORT NO. 8530-1 -38

LAST PROGRAM SCHEDULE CHANGE 24 April 1964

STATUS AS OF: 24 April 1964

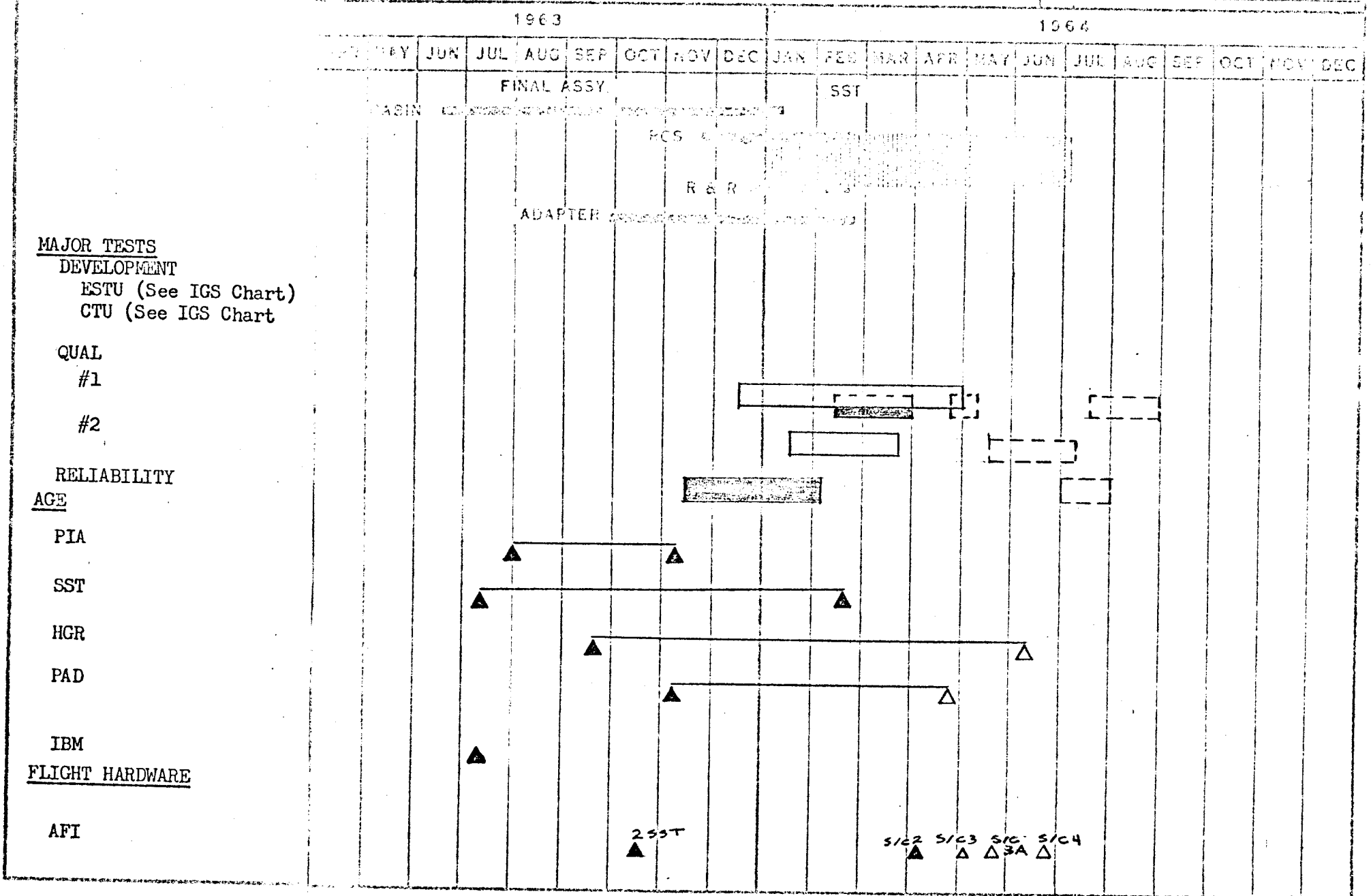

LEGEND
- ▽ Test Proposal Due
- ◊ Hardware Available
- □ Test Schedule
- ○ Report Due
- ☆ Report Approved

~~SOLID INDICATES ACTUALS~~

QUALIFICATION AND DEVELOPMENT TEST STATUS
INERTIAL MEASUREMENT UNIT
MINNEAPOLIS-HONEYWELL
SCD 52-87717

Date: 24 April 1964

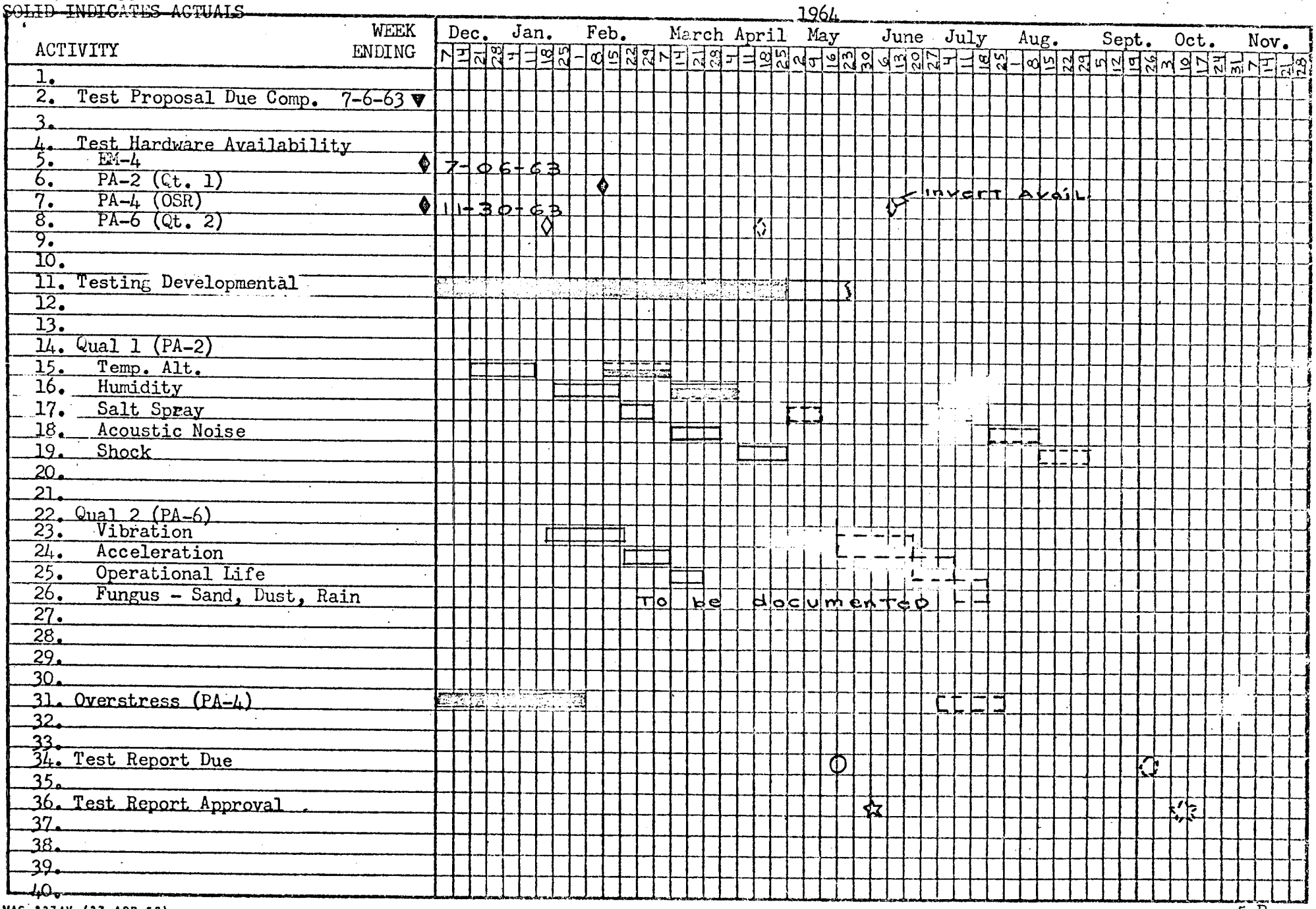

MAC 2274V (27 APR 59)

VENDOR DELIVERY STATUS REPORT

CHART NO. 3-C

SYSTEM - IMU

DATE: 24 April 1964

VENDOR - HONEYWELL, ST. PETERSBURG

UNIT UNIT NO.	TYPE	USAGE	VENDOR W/S	AVAIL. FOR INSTL.	REQ'D. FOR INSTL.	SLACK
1	EP-1	ESTU			A03-10-63	
2	EP-2	CCTU			A05-13-63	
3	EP-3	CTU			A06-17-63	
4	EP-5	VENDOR			A08-01-63	
5	PA-1	S/C 2 SST			A10-24-63	
6	PA-1	S/C 3A		06-15-64	06-05-64	-2
7	PA-2	QUAL 1			A02-19-64	
8	PA-3	HGR 02A	09-15-64	09-24-64	04-30-64	22
9	PA-4	OSR	06-15-64	07-01-64		
10	PA-5	S/C 2	A04-09-64	05-03-64	11-20-63	[illegible]
11	PA-6	QUAL 2		05-15-64		
12	PA-7	S/C 3	05-15-64	05-19-64	03-26-64	[illegible]
13	PA-8	SST 01A	05-29-64	06-04-64	03-31-64	[illegible]
14	PA-9	S/C 4	06-30-64	07-14-64	07-21-64	[illegible]
15	PA-10 (x)	HGR 02A	08-14-64	08-28-64	06-30-64	[illegible]
16	PA-11	S/C 5	10-15-64	10-27-64	10-01-64	[illegible]
17	PA-12	S/C 6	11-15-64	11-27-64	11-28-64	[illegible]
18	PA-13	S/C 7	12-15-64	12-29-64	01-19-64	[illegible]
19	PA-14	S/C 8	01-15-65	01-29-65	03-12-65	[illegible]
20	PA-15	S/C 9	02-15-65	03-01-65	05-12-65	[illegible]
21	PA-16	S/C 10	03-15-65	03-28-65	07-01-65	[illegible]
22	PA-17	S/C 11	04-15-65	04-29-65	08-30-65	[illegible]
23	PA-18	S/C 12	05-15-65	05-29-65	10-27-65	[illegible]
24	PLATFORM	HGR 02A	05-25-65	05-29-65	07-31-64	[illegible]

NOTES:

1. PA-2 Qual Test #1 halted after salt fog; will resume 1 July - complete 31 August 1964
2. PA-4 OSR - Held up until FY'65 - estimate start 1 July - complete 31 July.
3. PA-5 - S/C 2 FLY - Sent to I.B.M. 9 April; integrated I.G.S. to MAC 29 May 1964.
4. PA-7 S/C 3 FLY - To be sent to I.B.M. for integration.

VENDOR ACE STATUS REPORT

CHART NO. 5-D

SYSTEM - I.M.U.

DATE: 22 Ap[illegible]

VENDOR - HONEYWELL, ST. PETERSBURG

PART NO.	COMPONENT	UNIT NO.	VENDOR W/S	AVAIL. FOR USAGE	REC'D. FOR USAGE	SLACK
	(PRE-INSTALLATION ACCEPTANCE)					
52E270007-1	ADAPTER KIT	2		A09-01-63		
52E270032-1	TEST CONSOLE IMU	1		A11-11-63		
52E270020-1	TEST CONSOLE PLATFORM	1		A08-01-63		
52E270053-1	IMU TEST CABLE SET	1		A11-11-63		
	(SPACECRAFT SYSTEM TEST)					
52E270008-1	TEST PLATFORM PANEL	1		A07-19-63		
52E270036-1	3 AXIS DOLLY	1	SHIP CONSIGNED TO MAC (L)			
52E270036-1	3 AXIS DOLLY	2	SHIP CONSIGNED TO IBM (L)			
52E270042-1	TEST CONSOLE	1		(5) A08-09-63		
52E270042-1	TEST CONSOLE	2		A02-21-64		
52E270054-1	PLATFORM EXT. CABLE SET	1		A08-09-64		
52E270006-1	MT. REFERENCE	2		A01-29-64		
52E270059-1	2 AXIS DOLLY	1		A02-25-64		
52E270054-1	PLATFORM EXT. CABLE SET	2		A03-15-64		
	(HANGAR)					
52E270006-1	MT. REFERENCE	1		(1) A03-09-64		
52E270007-1	ADAPTER KIT	1		A02-22-64		
52E270008-1	TEST PLATFORM PANEL	3		A02-22-64		
52E270020-1	TEST CONSOLE	2		A03-18-64		
52E270032-1	TEST CONSOLE	2	05-01-64	(5) 05-27-64	05-11-64	
52E270036-1	3 AXIS DOLLY	4		(2) 06-15-64		
52E270036-1	3 AXIS DOLLY	5	05-07-64	05-20-64	06-15-64	[illegible]
52E270042-3	TEST CONSOLE	1		(5) A09-13-64		
52E270042-3	TEST CONSOLE	2		(5) A03-07-64		
52E270053-1	IMU TEST	2	06-12-64	06-25-64	05-11-64	[illegible]
52E270054-1	PLATFORM EXT. CABLE	3		(2) A05-26-64		
52E270059-1	2 AXIS DOLLY	2		(2) 06-15-64	06-15-64	[illegible]
52E270054-1	PLATFORM EXT. CABLE SET	4		(1) 08-17-64	08-17-64	
	(PAD)					
52E270008-1	TEST PLATFORM PANEL	2		A04-03-64		
52E270042-1	TEST CONSOLE IMU	3	05-01-64	(5) 05-07-64	06-15-64	[illegible]

PART NO.	COMPONENT	UNIT NO.	VENDOR W/S	AVAIL. FOR USAGE	RECD. FOR USAGE	BLACK
			(IBM)			
52E270036-1	3 AXIS DOLLY	3	SHIP CONSIGNED TO IBM (3)			

NOTES: A. Those items indicated as (1) are at MAC & will be shipped to Cape on or before the "AFU" Date indicated.

B. Item indicated as (2) is at MAC & will be used for SST Testing.

C. Those items indicated as (3) are to be returned to Minneapolis-Honeywell for sell of and indication. The 3 Axis Dolly Unit 1 which was "Shipped Consigned to MAC" has been returned to Minneapolis-Honeywell. After modification, this unit to go to Cape to be used in the place of the item marked (2). One of the 3 Axis Dolly Shipped Consigned to IBM was returned to Minneapolis-Honeywell, after which it will be sent to Cape and take the place of item marked (4).

D. Those items indicated as (4) sent to Honeywell for retrofit.

E. Those items indicated as (5) modifications necessary for S/C 2 test.

MONTHLY SUMMARY

SYSTEM: Guidance & Control
SUBSYSTEM: ACME
VENDOR: Honeywell, Minneapolis
DATE: 24 April 1964

ENGINEERING STATUS

1. Rate Gyro Package - Engineering has decided to use one -33 configuration RGP in S/C 2 along with a -17. The -33 configuration will be used in S/C 3 and up. The problems with the -17 are improper or insufficient bearing lubrication during the RGP build process, and lubrication "spin-off" during use, even if properly lubricated during build. This problem affects Rate Gyro Life. The -33 Rate Gyro Package incorporates a new type bearing retainer that life tests have shown to have a satisfactory life expectancy.

2. Attitude Control Electronics Package
Analysis of Qual 1 launch condition vibration resulted in the following changes to the ACE units:

PROBLEM: Three screws that hold a card retaining channel to the ACE chassis came loose.

FIX: Lockwire the screws down.

PROBLEM: Inadequate support of wire bundles.

FIX: Additional cabling support.

PROBLEM: Breakage of wires between mounting board terminals and pre amplifier modules.

FIX: Modules will be cemented to board.

PROBLEM: Breakage of capacitor leads on lag network board.

FIX: Increased strain release for capacitor leads and change in method of mounting boards to chassis.

PROBLEM: Ears on cards retaining bracket broke.

FIX. Replace aluminum bracket with a similar bracket made of stainless steel.

PROCUREMENT

1. Honeywell has decided to change to Motorola as the supplier of a particular zener diode. This new diode will be incorporated in PA-12 and up as a product improvement.

2. Honeywell informed MAC that they had found a transistor in the ACE power supply that under certain conditions, was running at a projected dissipation in excess of that recommended by the manufacturer. To solve this problem, a Fairchild 2N1232B transistor was chosen to replace the legacy 2N1233.

Six 2N1132B transistors were hand-carried to Honeywell from MAC on 8 April for S/C 2, Overstress, and Qual 1 ACE units. Ten 2N1132B transistors were sent to Honeywell 22 April when Honeywell procurement facilities were unable to get transistors prior to 5-10-64 in order that S/C 3 ACE (PA-7) be shipped by 5-18-64.

3. General Electric (Syracuse, N.Y.) has agreed to ship 2N335A transistors by 4-25-64. Therefore, there should be no delay in the delivery of the ACE Life Unit (PA-1) because of lack of these transistors.

ASSEMBLY & DELIVERY

1. ACME serial numbers are as follows:

   ACE -100 series, OAME -200 series, Power Inverter -300 series, Rate Gyro Packages -400 series. The last two digits of all units are still the same, only the first digit is changed.

2. ACE SN-106 (PA-5) was returned to vendor for installation fixes described in "Engineering Status" and was returned to MAC 15 April. The unit then was run through a complete PDA test at MAC, the test being run by Honeywell personnel, with MAC and NASA witnessing. No PIA is planned for this unit per NASA (at MAC) consent.

3. ACE SN-114 (Qual 3) (PA-4) will be ready to start Qual 1 tests about 5-1-64. Fixes described in "Engineering Status" were installed in it. OAME SN-208 has completed PDA test and is awaiting approval of its test results. Power Inverter SN-305 has been delivered. Rate Gyro SN-412 is awaiting MRR from Honeywell.

4. ACE SN-103 and OAME SN-203 (PA-3) (S/C 3A) will be shipped to MAC 5-1-64. Rate Gyro Package (PA-3) and Power Inverter (PA-3) for S/C 3A are at MAC.

5. S/C 3 ACE (PA-7) will be shipped to MAC 5-18-64 and OAME (SN-211) (PA-7) on 5-1-64. Power Inverter and Rate Gyro Package for S/C 3 have completed PIA at MAC.

TEST STATUS (See "Detail Test Chart")

1. Qual 1 Vibration Testing was completed 20 April. (Line 17). Acoustic Noise Test will start 27 April at Bell, Buffalo, New York. (Line 18).

2. Failures which occurred during Launch Condition Vibration are as follows:

   A. Failures which are listed in "Engineering Status" were the primary failures.

   B. Green Lead from secondary yaw switch amp transformer 3A8T2 to terminal K8. (ACE)

   C. Relay Board Mating Connector 3A7P8 wire was broken at pin HR. (ACE)

   D. Additional discrepancies which were created during the trouble shooting and repair processes on 4-10-64 are as follows:

      1. Yellow wire from secondary yaw switching amplifier transformer 3A8T2 to terminal J9 was broken at J9. (ACE)

      2. Wire between 3A7P8 [illegible] (ACE)

3. Wires were broken at Pins A and B on connector 3A7P8. (ACE)

4. Relay 5A2K107 in Qual 1 OAME package SN-102 had intermittent operation in vibration test. This condition was repeated on the bench and the relay was replaced. (OAME)

3. Orbit Mode
Although no failures occurred during orbit vibration, the following malfunctions occurred during the quick checks subsequent to the runs. Primary OAME attitude jet 8 driver was temporarily inoperative during the tests conducted after the vertical axis vibration. After repeatedly alternating between primary and secondary drivers, the primary jet 8 driver commenced operating normally. Attempts thereafter to duplicate the failure were unsuccessful. Secondary OAME attitude drivers for jets 1, 2, 5, and 6 failed to operate after the final vibration run. As before, the problem was cleared up by repeatedly switching between primary and secondary OAME drivers. Operation was intermittent for a short period of time but improved until no malfunctions remained.

4. Failures occurring during reentry condition vibration are as follows:

A. A failure occurred approximately one minute after the start of the second run - horizontal vibration (perpindicular to the longitudinal axis of the package). RCS ring A and B jets 1 and 2 were observed to be in a full on condition. Although intermittent firing was expected due to variations in the pitch gyro output, the jets in question remained on after power was removed from the gyro. The malfunction was repeated during the third vibration run using both primary and secondary pitch electronics.

Minneapolis-Honeywell believes that this is a characteristic of this package configuration only and will not occur in production hardware. The reasons given are the change in value of capacitor C2 in the low hysteresis switch and the redesign of the minimum pulse circuit. Further testing in this area is under investigation.

B. Four minutes after the start of horizontal vibration parallel to the ACE longitudinal axis, RCS ring B jet 8 fired and remained on throughout the rest of the test. Pin 2 of the relay 3A6K80B appears to be shorted internally to the relay case. This relay is now in failure analysis at Honeywell.

AGE

1. System Test Console (52E270037-301) SN-5 was direct shipped to the Cape 24 April.

2. Retrofit of System Test Console SN-2 is now in progress at the Cape Pad. The expected date of completion is 8 May. The delay in completion is because personnel will work four 40-hour weeks, rather than two 60 hour weeks.

3. Retrofit of System Test Console SN-1 will be done by MAC personnel. Mod Kit 495 will be shipped to MAC from Honeywell on 4-30 64. Retrofit will be done when test schedule permits.

4. Correlation of PIA Test Console SN-5 at Honeywell has been completed. It is now analyzing the data.

NAA PARAGLIDER TESTS

COMPONENT	W/S DATE
-23 ACE	A10-17-64
-41 ACE	A01-08-64
-23 ACE	A02-12-64
-41 ACE	08-14-64
-41 ACE	09-01-64
-29 PWR. INVR.	A09-30-64
-29 PWR. INVR.	A09-30-64
-29 PWR. INVR.	A01-31-64
-29 PWR. INVR.	A03-11-64
-29 PWR. INVR.	A03-11-64
-29 PWR. INVR.	A03-11-64

GEMINI
SPACECRAFT
CONTRACT NO. NAS 9-1[illegible]

ATTITUDE CONTROL AND MANEUVER ELECTRONICS
VENDOR: HONEYWELL-MINNEAPOLIS

STATUS CHART

REPORT NO. 8580-1 -38
LAST PROGRAM SCHEDULE CHANGE 24 April 1964
STATUS AS OF: 24 April 1964

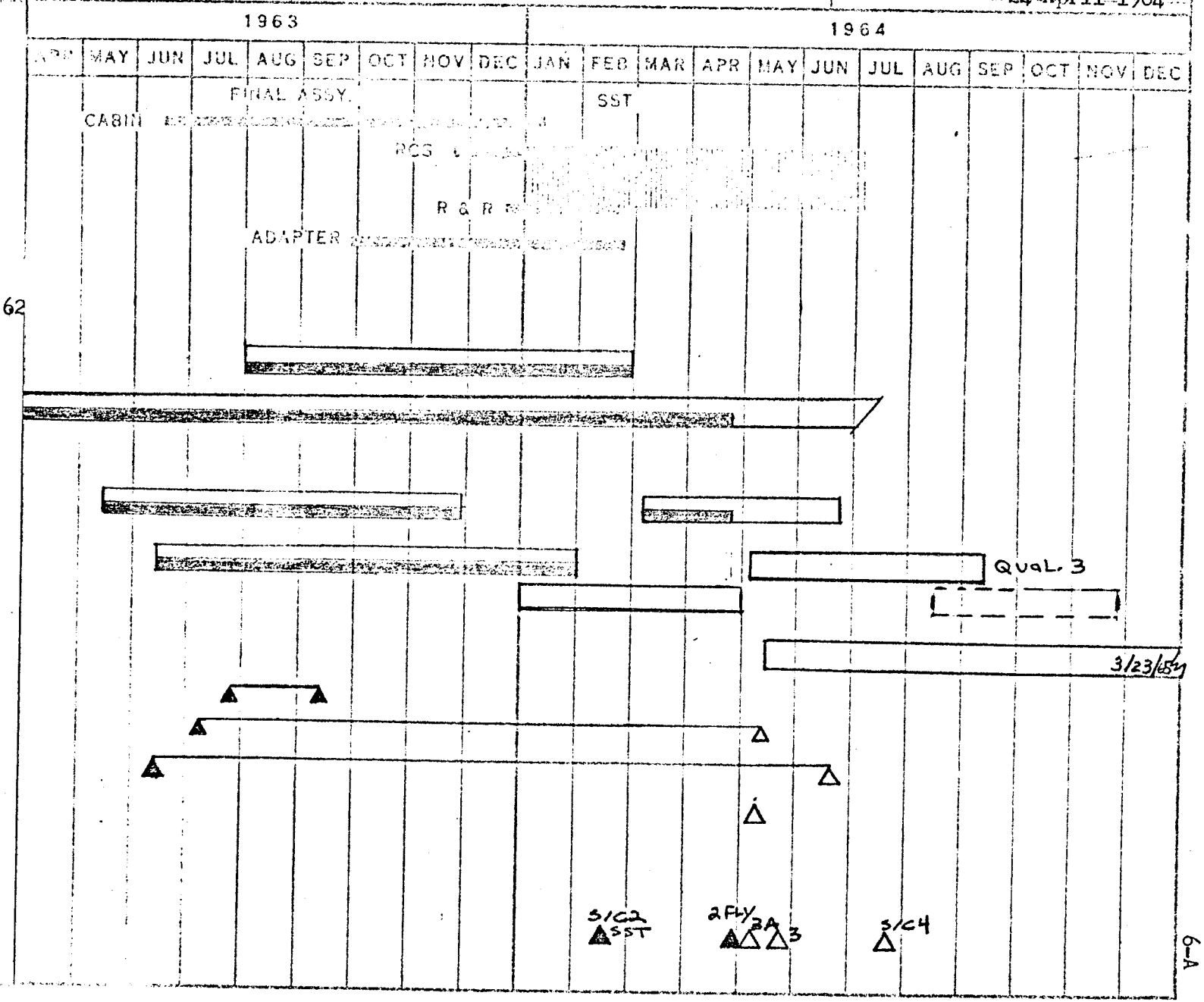

1. ESTU - Compl. Oct.'62
2. CTU
3. VENDOR DEVELOPMENT

QUALIFICATION TESTS

4. QUAL I
5. QUAL II
6. OSR
7. OPER. LIFE

AGE

8. PIA
9. SST
10. CAPE - HANGAR
11. CAPE - PAD

FLIGHT HARDWARE

12. AFI

LEGEND
- ▽ Test Proposal Due
- ◊ Hardware Available
- □ Test Schedule
- O Report Due
- ☆ Report Approved

SOLID INDICATES ACTUAL

QUALIFICATION AND DEVELOPMENT TEST STATUS
ATTITUDE CONTROL AND MANEUVER ELECTRONICS
HONEYWELL-MINNEAPOLIS
SCD 52-87700

Date: 24 April 1964

ACTIVITY	WEEK ENDING
1. Test Proposal	3-15
2.	
3. Test Hardware Available	5-8-62
4. Breadboard	
5. PA-1	
6. PA-2	
7. PA-4	
8. Testing	
9. Development (Breadboard)	
10.	
11. Qual 1 (PA-1)	(PA-2)
12. Pre Qual Acceptance	(PA-1)
13. Performance 3	(PA-1)
14. High Temp/Alt	(PA-1)
15. Low Temp	(PA-1)
16. Vibration	(PA-1)
17. Vibration	(PA-2)
18. Acoustic Noise	(PA-2)
19. Acceleration	(PA-2)
20. Salt Fog	(PA-2)
21. Performance	(PA-2)
22. PQA	(PA-2)
23. Explosion (OAME)	
24. Shock (ACE, P.I., R.G.P.)	
25.	
26. Qual 2 (PA-2)	
27. Pre Qual Acceptance	
28. Performance	
29. E & E Intefference (RFI)	
30. Humidity	
31. Performance	
32. PQA	
33. Report Due (Qual #1 & #2)	
34. Test Report Approved (Qual 1 & 2)	
35. Qual Test 3 (PA-4)	
36. PQA (Production PIA)	
37. Performance	
38. Vibration	
39. High Temp/Altitude	
40. Low Temp	

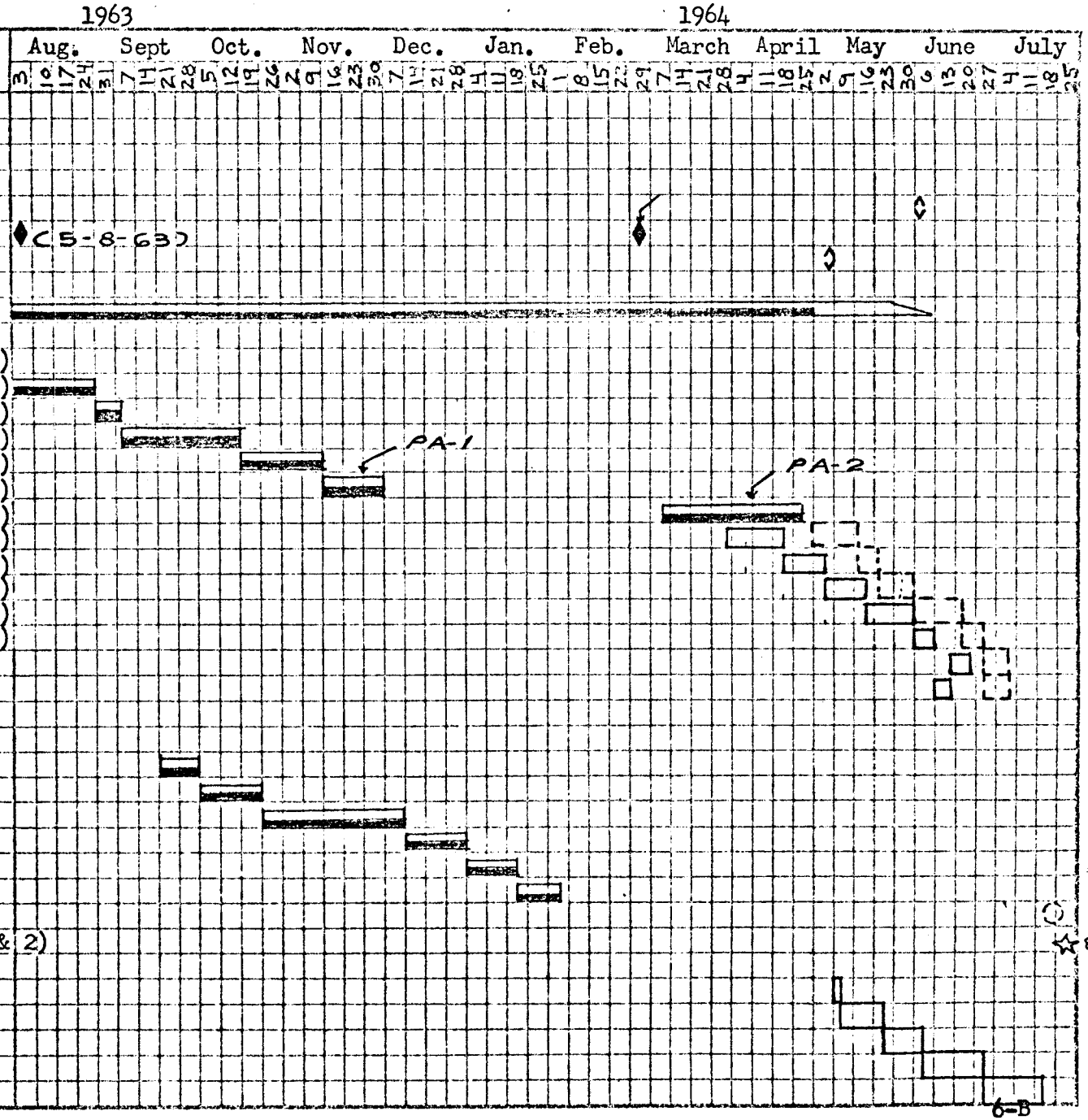

MAC 2274V (27 APR 59)

LEGEND
- ▽ Test Proposal Due
- ◊ Hardware Available
- □ Test Schedule
- O Report Due
- ☆ Report Approved
- SOLID INDICATES ACTUAL

QUALIFICATION AND DEVELOPMENT TEST STATUS
ATTITUDE CONTROL AND MANEUVER ELECTRONICS
HO HONEYWELL-MINNEAPOLIS
SCD 52-87700

Date: 24 April 1964
Page: 2 of 2

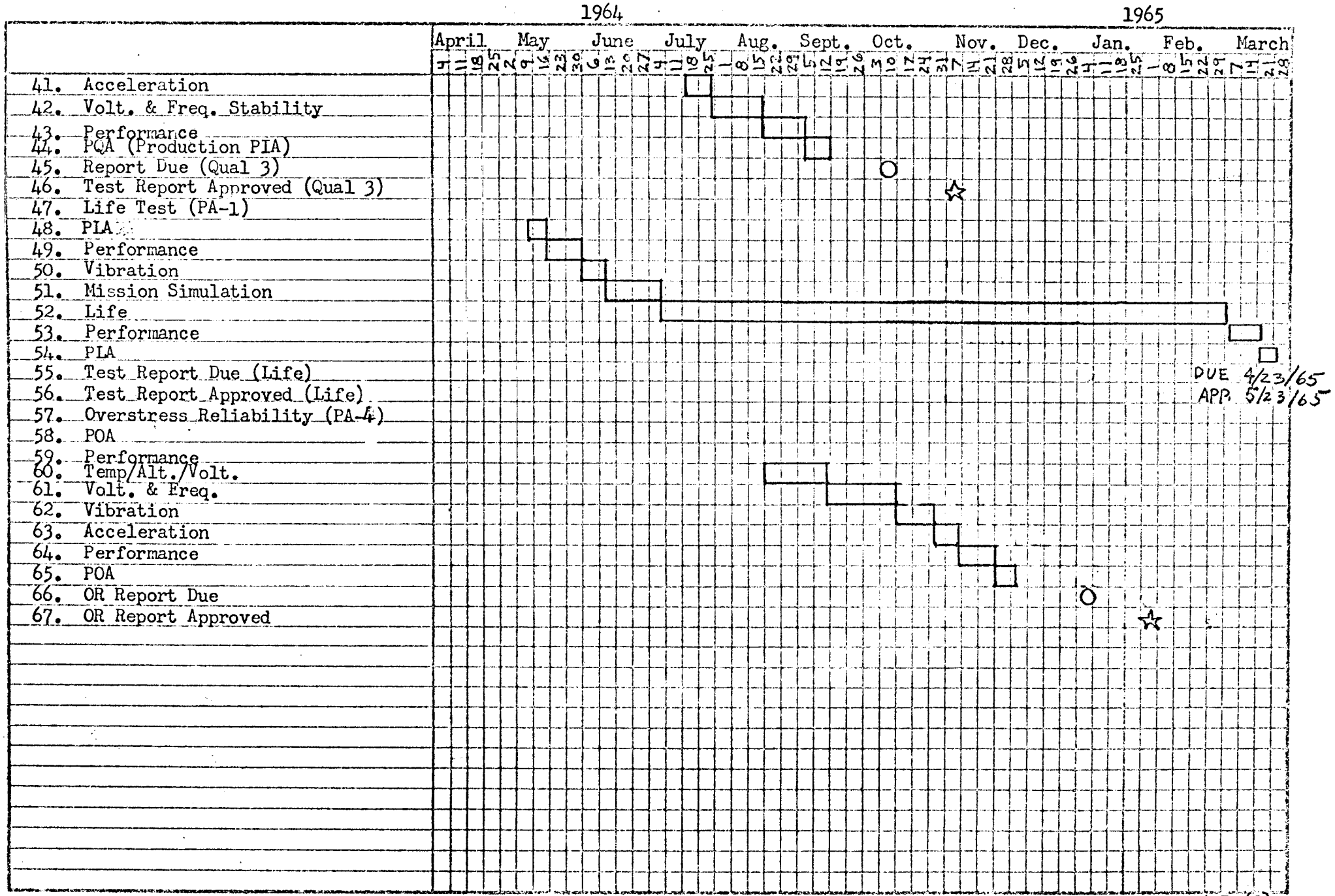

VENDOR DELIVERY STATUS REPORT

SYSTEM - ACME

CHART NO. [illegible]

VENDOR - HONEYWELL, MINNEAPOLIS

DATE: [illegible]

UNIT NO.	TYPE	USAGE	VENDOR W/S	AVAIL. FOR INSTL.	REQ'D FOR INSTL.	[illegible]
1	EP-1	ESTU			A10-22-62	
2	EP-2	3 AXIS DYNAMIC TEST			A11-07-62	
3	PA-1	QUAL I			A07-03-63	
3	PA-1	OPER. LIFE		06-01-64	05-20-64	
4	PA-2	QUAL II			A06-27-63	
4	PA-2	QUAL I			A02-27-64	
6	PA-4	QUAL 3 & OSR		05-01-64	04-01-64	
5	PA-3	S/C 3A -25 ACE++	05-01-64	05-07-64	04-10-64	
5	PA-3	S/C 3A -19 OAME++	05-01-64	05-07-64	04-20-64	
5	PA-3	S/C 3A PWR INV.++		A02-20-64		
5	PA-3	S/C 3A -17 RGP++		A02-20-64		
7	PA-5	S/C 2 -39 ACE		A04-24-64		
7	PA-5	S/C 2 -35 OAME			A03-27-64	
7	PA-5	S/C 2 -29 PWR INV.		A10-09-63		
7	PA-5	S/C 2 -17 RGP			A02-22-64	
7	PA-5	S/C 2 -33 RGP		A04-17-64		
8	PA-6	S/C 2 SST -37 ACE***			A02-25-64	
9	PA-7	S/C 3 -27 ACE	05-18-64	05-25-64	02-26-64	
9	PA-7	S/C 3 -35 OAME	05-01-64	05-10-64	03-17-64	
9	PA-7	S/C 3 -29 PWR INV.		A04-18-64		
9	PA-7	S/C 3 -33 RGP		A04-22-64		
8	PA-6	SPARE SST-27 ACE -35 OAME*	06-15-64	06-25-64	01-31-64	
10	PA-8	S/C 4 -27 ACE	07-15-64	07-25-64	04-21-64	
10	PA-8	S/C 4 -35 OAME	07-15-64	07-25-64	06-22-64	
10	PA-8	S/C 4 -29 PWR INV.		A04-18-64		
10	PA-8	S/C 4 -33 RGP	07-15-64	07-25-64	07-21-64	
11	PA-9	SPARE HGR**	07-31-64	08-10-64	04-30-64	
12	PA-10	S/C 5	09-15-64	09-25-64	07-15-64	
13	PA-11	SPARE SST	10-15-64	10-25-64	03-31-64	
14	PART	AD-13 -35 OAME	10-01-64	10-11-64	11-19-64	
15	PA-12	STATIC 2	10-01-64	10-11-64	10-15-64	
16	PA-13	S/C 6	10-31-64	11-10-64	09-17-64	
17	PA-14	SPARE HGR	11-13-64	11-23-64	06-30-64	
18	PA-15	S/C 7	12-01-64	12-11-64	11-15-64	
19	PA-16	SPARE SST	12-15-64	12-25-64	04-30-64	
20	PA-17	S/C 8	01-02-65	01-02-65	01-04-65	
21	PA-18	SPARE HGR	01-15-65	01-25-65	07-31-64	
22	PA-19	S/C 9	02-01-65	02-11-65	03-03-65	
23	PA-20	S/C 10	02-15-65	02-25-65	04-23-65	
24	PA-21	S/C 11	03-09-65	03-19-65	06-24-65	
25	PA-22	S/C 12	03-30-65	04-09-65	08-19-65	
26	PART	AD-14 -35 OAME	02-28-65	03-10-65	11-15-64	
27	PART	AD-15 -35 OAME	03-26-65	04-05-65	[illegible]	

** S/C 3A units are from [illegible]
[illegible]
[illegible]
[illegible]

VENDOR AGE STATUS REPORT

CHART NO. 6-D

SYSTEM - ACME

DATE: 24 April [illegible]

VENDOR - HONEYWELL, MINNEAPOLIS

PART NO.	COMPONENT	UNIT NO.	VENDOR W/S	AVAIL. FOR USAGE	REQ'D. FOR USAGE	SLIP-X
			(PRE-INSTALLATION ACCEPTANCE)			
52E270019-1	ADAPTER RATE TABLE***	1		A06-18-63		
52E270009-1	BOX TEST POINT	1		A07-30-63		
52E270002-303	PIA TEST CONSOLE	2**		A09-13-63		
52E270002-303	PIA TEST CONSOLE	4**	04-27-64	05-10-64		
			(SPACECRAFT SYSTEMS TEST)			
52E270037-901	TEST CONSOLE	1		A07-03-63		
52E270009-1	BOX TEST POINT	2		A08-17-63		
52E270037-301	SYSTEM TEST CONSOLE***	1		A09-20-63		
52E270037-301	SYSTEM TEST CONSOLE	3	04-29-64	05-10-64	01-07-64	19
			(HANGAR) ++			
52E270019-1	ADPT. RATE TABLE***	2		A02-22-64		
52E270009-1	BOX TEST POINT	3		A02-22-64		
52E270009-1	BOX TEST POINT +	4		A11-01-63		
52E270037-301	SYSTEM TEST CONSOLE	4	05-10-64	05-30-64	07-01-64	[illegible]
52E270037-301	SYSTEM TEST CONSOLE	5	A04-24-64	05-30-64	07-01-64	[illegible]
52E270002-303	PIA TEST CONSOLE	2	05-02-64	06-07-64	07-01-64	[illegible]
			(PAD) ++			
52E270037-301	TEST CONSOLE***	2	A01-22-64	05-08-64	08-01-64	[illegible]
			(NORTH AMERICAN)			
52E270002-301	PIA TEST CONSOLE***	3		A02-14-64		
52E270002-301	PIA TEST CONSOLE***	5	06-07-64	06-20-64	02-19-64	[illegible]

** SN-4 replaces SN-2, which will be then shipped to Cape. Retrofit is planned to be done at Cape.

*** See "retrofit" section of AGE narrative.

++ APU at Cape Kennedy.

MONTHLY SUMMARY

SYSTEM: Guidance
SUBSYSTEM: Horizon Sensors
VENDOR: A.T.L.
DATE: 24 April 1964

ENGINEERING STATUS

1. SN-102 (Qual 1) and up will have a split cover incorporated into them. The purpose of the split cover is ease of manufacture and repair.

2. ATL has been directed to provide a transient suppression network for the Simulator-Test Horizon (52E270016-1) which will attenuate transients to the extent that thermal cycling of the test horizon shall not cause a loss of track in the flight hardware. The Test Horizon "Head Interconnect Cable" is to be modified to the latest spacecraft systems configuration which resulted from Horizon Sensor RFI tests.

3. ATL has been instructed for the Tester - Horizon Sensor (52E270021-1) to:

   A. Add the capability for monitoring Position Amplifier Output and Asimuth Amplitude Sensor at test points 37 and 38, for internal and external electronic packages.

   B. Modify pitch and roll interconnection to internal and external electronic packages to the present spacecraft monitoring philosophy where the pitch and roll outputs of the AGE disconnect are routed to the monitor panel.

   C. Modify interconnect cables.

   D. Perform conducted interference tests at the AGE interfaces to the Horizon Sensor System utilizing simulated resistive loads.

4. ATL has been directed to provide for the Simulator Horizon Sensor (52E270[illegible]) a new heated core assembly complete with thermostat, arc suppression network and associated wiring including connector.

PROCUREMENT

1. A shipment of RFI capacitors, which will be used on SN-103 and up, was shipped to ATL from Sprague on 23 April.

ASSEMBLY & DELIVERY

1. SN-101 (S/C 2) was shipped to MAC on 10 April 1964. PDA test of Horizon Sensor is scheduled to start 27 April.

2. SN-11 (S/C 3A) completed PDA testing on 24 April. An MRR has been instituted against this unit. If the MRR is approved, the unit should be shipped approximately 28 April.

3. SN-102 (Qual 1) will start PDA test on 28 April. A bolometer was replaced in this unit. However, the gating factor is the factory test equipment which should be ready by then.

4. SN-103 (Qual Lite) will be delivered approximately 7 May to the [illegible]

5. SN-105 and [illegible] [illegible]

TEST STATUS (See "Detail Test Chart")

1. Qual 1 test will start approximately 1 May on PA-2.

2. Qual Life test is scheduled to start approximately 11 May on PA-3.

3. A special temperature test on the Horizon Sensor (SN-105 and SN-102) is now in progress. The expected date of completion is 27 April.

AGE

1. To allow for the incorporation of the Engineering changes, the following units of AGE will be shipped on the following dates:

   Simulator Horizon Sensor (52E270014-1) SN-1 W/S 6-01-64.
   Simulator Test Horizon (52E270016-1) SN-1, W/S 5-15-64.
   Tester Horizon Sensor (52E270021-1) SN-2, W/S 6-15-64.

2. Tester Horizon Sensor SN-1 will be retrofitted during the period 5-15-64 through 6-30-64.

3. Upon completion of assembly of heated cones, they will be shipped to MAC approximately 5-30, for use with Simulator Horizon Sensor.

4. Retrofit of Simulator Test Horizon will occur approximately 7 June.

5. An Umbilical Amplifier (52E270015-13)(SST) SN-5 has been ordered from ATL. It will be shipped approximately 1 June 1964.

SPACECRAFT

CONTRACT NO. NAS 9-170

HORIZON SENSORS
(VENDOR: ADVANCED TECHNOLOGY LABORATORIES)
STATUS CHART

REPORT NO. 8730-1

LAST PROGRAM SCHEDULE CHANGE: 24 April 1964

STATUS AS OF: 24 April 1964

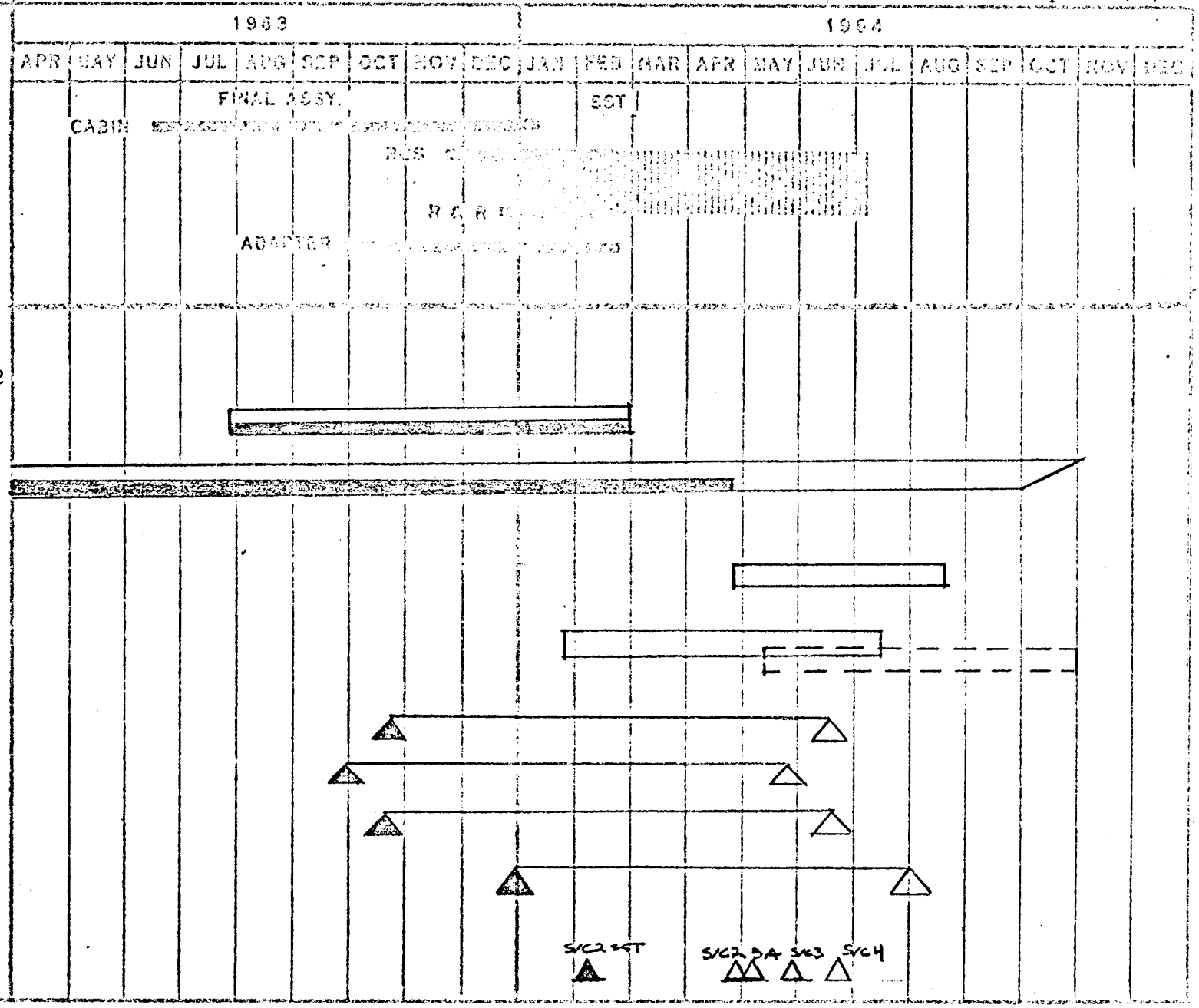

MAJOR TESTS

1. ESTU Comp. Oct. '62
2. CTU
3. VENDOR DEVELOPMENT

QUALIFICATION TESTS

4. UNIT 1 S/N 102 (Qual 1)
5. UNIT 2 - LIFE (Qual 2) S/N 103

AGE

6. PIA
7. SST
8. CAPE - HANGAR
9. CAPE - PAD

FLIGHT HARDWARE

10. AFI

LEGEND
- ▽ Test Proposal Due
- ◊ Hardware Available
- □ Test Schedule
- ○ Report Due
- ☆ Report Approved

SOLID INDICATES ACTUAL

QUALIFICATION AND DEVELOPMENT TEST STATUS
HORIZON SENSOR SYSTEM
ADVANCE TECHNOLOGY LABS
SCD 52-87703

Chart No: 7-B
Date: 24 April 1964
Page: 1 of 2

-1964-

WEEK ENDING: Jan. 4, 11, 18, 25; Feb. 1, 8, 15, 22, 29; March 7, 14, 21, 28; April 4, 11, 18, 25; May 2, 9, 16, 23, 30; June 6, 13, 20, 27; July 4, 11, 18, 25; Aug. 1, 8, 15, 22, 29; Sept. 5, 12, 19, 26; Oct. 3, 10, 17, 24, 31; Nov. 7, 14, 21, 28; Dec. 5, 12, 19, 26

	ACTIVITY
1.	Test Proposal Due 7-22-63
2.	
3.	Test Hardware Available (EM-1) 11/62
4.	PA-2
5.	PA-3
6.	
7.	Testing
8.	Development
9.	Sensor Head
10.	Electronics Package
11.	
12.	Qual 1 (PA-2)
13.	PDA (ATL)
14.	Fingerprint Test (ATL)
15.	Temperature (ATL)
16.	Functional (ATL)
17.	Functional (Rototest)
18.	Vibration (Rototest)
19.	Functional (Rototest)
20.	Acoustic Noise (Rototest)
21.	Functional (Rototest)
22.	Functional (Philco)
23.	Acceleration (Philco)
24.	Functional (Philco)
25.	RFI (Philco)
26.	Functional (Philco)
27.	Functional (ATL)
28.	Humidity (ATL)
29.	Functional (ATL)
30.	Functional (Dalmo)
31.	Salt Spray (Dalmo)
32.	Functional (Dalmo)
33.	44.79 G Shock (Dummy Unit)
34.	Fungus
35.	Qual 2 (PA-3) Life
36.	Sensor Head
37.	Temperature/Altitude
38.	RFI
39.	Electronics Package
40.	Temperature/Altitude

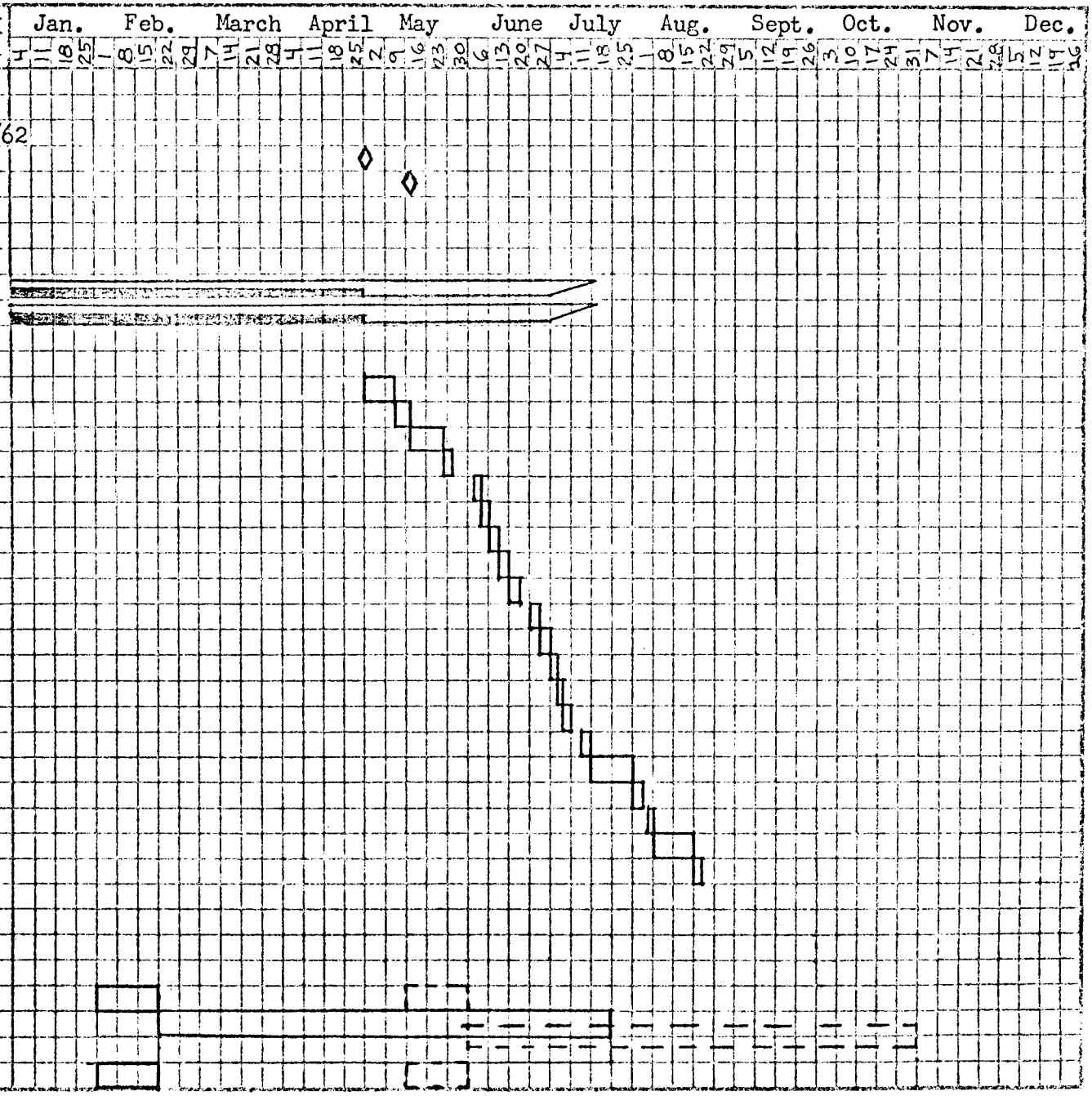

7-B

MAC 2274V (27 APR 59)

LEGEND
▽ Test Proposal Due
◊ Hardware Available
□ Test Schedule
○ Report Due
☆ Report Approved
SOLID INDICATES ACTUAL

QUALIFICATION AND DEVELOPMENT TEST STATUS
HORIZON SENSOR SYSTEM
ADVANCE TECHNOLOGY LABS
SCD 52-87703

Date: 24 April 1964

-1964-

ACTIVITY	WEEK ENDING	Jan.	Feb.	March	Apr.	May	June	July	Aug.	Sept.	Oct.	Nov.	Dec.
		4 11 18 25	1 8 15 22 29	7 14 21 28	4 11 18 25	2 9 16 23 30	6 13 20 27	4 11 18 25	1 8 15 22 29	5 12 19 26	3 10 17 24 31	7 14 21 28	5 12 19 26
41. RFI													
42. Test Report Due													
43. Test Report Approval													

MAC 2274V (27 APR 59)

▽ Test Proposal Due
◊ Hardware Available
☐ Test Schedule
O Report Due
☆ Report Approved
SOLID INDICATES ACTUAL

QUALIFICATION AND DEVELOPMENT TEST STATUS
HORIZON SENSOR SYSTEM
ADVANCE TECHNOLOGY LABS
SCD 52-87703

Date: 24 April 1964

-1964-

ACTIVITY	WEEK ENDING	Jan.				Feb.				March				Apr.				May					June				July				Aug.				Sept.				Oct.					Nov.				Dec.			
		4	11	18	25	1	8	15	22	29	7	14	21	28	4	11	18	25	2	9	16	23	30	6	13	20	27	4	11	18	25	1	8	15	22	29	5	12	19	26	3	10	17	24	31	7	14	21	28	5	12	19	26
41. RFI																																																					
42. Test Report Due																																																					
43. Test Report Approval																																																					

MAC 2274V (27 APR 59)

VENDOR DELIVERY STATUS REPORT

CHART NO: 7-C

SYSTEM - HORIZON SENSORS

DATE: 24 April 19[illegible]

VENDOR - A.T.L.

UNIT NO.	S/N	TYPE	USAGE	VENDOR W/S	AVAIL. FOR INSTL.	REQ'D. FOR INSTL.	STA[illegible]
1	1	EP-1	ESTU			A02-01-64	
2	2	EP-2	DYNAMICS			A02-11-64	
3	11	PP-1	CTU			A06-24-64	
3	11	PP-1	S/C 3A *	04-28-64	05-08-64	03-10-64	[illegible]
4	104	PA-4	S/C 2 SST **			A02-01-64	
5	101	PA-1	S/C 2	A04-10-64	04-29-64	04-10-64	[illegible]
6	102	PA-2	VENDOR QUAL 1		05-01-64	04-15-64	[illegible]
7	103	PA-3	VENDOR QUAL LIFE		05-07-64	05-01-64	[illegible]
8	106	PA-5	S/C 3	05-15-64	05-25-64	02-26-64	[illegible]
9	107	PA-6	S/C 3	05-22-64	06-01-64	02-26-64	[illegible]
10	105	PA-7	SPARE SST	05-29-64	06-08-64	01-31-64	[illegible]
11	108	PA-8	S/C 4	06-05-64	06-15-64	04-21-64	[illegible]
12	109	PA-9	S/C 4	06-12-64	06-22-64	04-21-64	[illegible]
13	110	PA-10	SPARE HGR	06-19-64	06-29-64	04-30-64	[illegible]
14	111	PA-11	S/C 5	07-01-64	07-11-64	07-15-64	[illegible]
15	112	PA-12	S/C 5	07-08-64	07-18-64	07-15-64	[illegible]
16	113	PA-13	SPARE HGR	07-15-64	07-25-64	06-30-64	[illegible]
17	114	PA-14	SPARE HGR	08-01-64	08-11-64	08-31-64	[illegible]
18	115	PA-15	S/C 6	08-10-64	08-20-64	09-17-64	[illegible]
19	116	PA-16	S/C 6	08-24-64	09-03-64	09-17-64	[illegible]
20	117	PA-17	S/C 7	09-07-64	09-17-64	11-15-64	[illegible]
21	118	PA-18	S/C 7	09-21-64	10-01-64	11-15-64	[illegible]
22	119	PA-19	S/C 8	10-05-64	10-15-64	01-04-65	[illegible]
23	120	PA-20	S/C 8	10-19-64	10-29-64	01-04-65	[illegible]
24	121	PA-21	S/C 9	11-02-64	11-12-64	03-03-65	[illegible]
25	122	PA-22	S/C 9	11-16-64	11-26-64	03-03-65	[illegible]
26	123	PA-23	S/C 10	11-30-64	12-10-64	04-23-65	[illegible]
27	124	PA-24	S/C 10	12-14-64	12-24-64	04-23-65	[illegible]
28	125	PA-25	S/C 11	12-28-64	01-08-65	06-24-65	[illegible]
29	126	PA-26	S/C 11	01-11-65	01-21-65	06-24-65	[illegible]
30	127	PA-27	S/C 12	01-25-65	02-04-65	08-19-65	[illegible]
31	128	PA-28	S/C 12	02-08-65	02-18-65	08-19-65	[illegible]

* "RFI" Fix is being installed in S/C 3A Unit. (Old CTU Unit)

** SN-104 may be used for S/C 2 SST and S/C 3 SST.

VENDOR AGE STATUS REPORT
SYSTEM - HORIZON SENSORS
VENDOR - A.T.L.

CHART NO.: 7-D

DATE: 24 April [illegible]

PART NO.	NOMENCLATURE	UNIT NO.	VENDOR W/S	AVAIL. FOR USAGE	REQ'D. FOR USAGE
			PRE-INSTALLATION ACCEPTANCE		
52E270016-1	SIMULATOR TEST HORIZON (PIA)	2		A 3-10-64	
52E270016-401	SIMULATOR H/S-CAL. KIT	1		A12-15-63	
52E270021-1	TESTER H/S	1		A10-25-63**	
			SPACECRAFT SYSTEMS TEST		
52E270015-17	MONITOR PANEL H/S***	1		A 9-10-63	
52E270015-13	UMBILICAL AMPLIFIER	3		A 2-21-64	
52E270014-1	SIMULATOR HORIZON SYSTEM TEST	1	6-01-64	6-15-64	5-15-64
52E270005-1	FIXTURE H/S ALIGN.	1		A 8-30-63	
52E270015-17	MONITOR PANEL H/S***	2		A 1-07-64	
52E270015-13	UMBILICAL AMPLIFIER	2		A 2-24-64	
52E270014-1	SIMULATOR HORIZON SYSTEM TEST	2		A 1-10-64	
52E270015-13	UMBILICAL AMPLIFIER	6	6-01-64	6-15-64	6-15-64
			HANGAR++		
52E270005-1	FIXTURE H/S ALIGN	2	A 9-25-63	6-01-64	7-01-64
52E270021-1	TESTER H/S	2	6-15-64**	6-29-64	7-01-64
52E270015-17	MONITOR PANEL H/S***	3	A 1-12-64	6-01-64	
52E270015-13	UMBILICAL AMPLIFIER	1	A 2-24-64	6-01-64	7-01-64
52E270016-1	SIMULATOR TEST HORIZON (PIA)	1	5-15-64+	6-15-64	7-01-64
52E270015-17	MONITOR PANEL H/S***	5	A 1-12-64	6-01-64	
52E270015-13	UMBILICAL AMPLIFIER	5	A 2-28-64	6-01-64	7-01-64
52E270016-401	SIMULATOR H.S. CALIBRATION KIT	2	A12-16-63	6-01-64	7-01-64
52E270014-1	SIMULATOR H/S	3	A 1-17-64	5-15-64	7-01-64
			PAD++		
52E270014-1	SIMULATOR HORIZON SYSTEM TEST	4	A 3-20-64	6-15-64	8-01-64
52E270015-17	MONITOR PANEL HORIZON SENSOR***	4	A 1-15-64	8-01-64	8-01-64
52E270015-13	UMBILICAL AMPLIFIER	4	A 2-24-64	8-01-64	8-01-64

* Returned to A.T.L. for retrofit. A.T.L. will return SN-1 to MAC on 5-15-64.

\+ A.T.L. will return SN-1 to MAC on 5-01-64 after retrofit.

** Installation of Head Simulator on SN-1 at MAC is scheduled 6-15-64 to 6-30-64. ATL is currently working on design of retrofit.

++ AFU date of completion of checkout on AGE at Cape Kennedy.

*** Installed in Cabin Assy. - Guidance & Control Monitors (52E270015-[illegible]) [illegible]

MONTHLY SUMMARY

SYSTEM: Electrical Power
SUBSYSTEM: Fuel Cell
VENDOR: General Electric
West Lynn, Mass.
DATE: 24 April 1964

ENGINEERING STATUS

1. The Fuel Cell R & D Program to extend life expectancy has been reviewed by MAC, MSC and G.E. R & D Mission Life Load Profile has been revised to be more representative of Ground Test, plus flight loads for current and future evaluation programs.

2. A study has been completed concerning a proposed secondary isolated coolant system for the Fuel Cells. G.E. will have to substantiate that lowering of coolant temperature at the Fuel Cell inlet will increase cell life.

3. Contamination of water separators consisted of blue-black spots, red and gold spots, brown discoloration and handling contamination. Analysis of contamination was performed by a local university and found to be encapsulated carbon, mold, discoloration from cork inserts used on Cutting Fixture and contamination due to handling at supplier facility and at G.E. It was found that by passing the water separators thru a hydrochloric acid bath that the red spots, brown discoloration and handling contamination could be removed. The blue-black spots (carbon) are of no consequence because the carbon has been encapsulated in glass during firing process at Dow-Corning. The red and gold spots are still under study to determine their cause. Tighter Q.C. surveillance has been instituted at G.E. and Dow-Corning to prevent handling contamination.

4. Coolant manifold leakage developed in (Section 507,510) P2B sections. It was found that the Teflon tubing had been extruded when the locknut was loosened to give flexibility during assembly, thus causing leakage. This interconnect system is being redesigned using solid titanium-paladium tubing and bellows instead of Teflon. This redesign will become effective in P3 design section.

5. M & E bonding problem has been resolved by dipping the assembly in 65°C distilled water after Quinon Treatment to restore water content prior to bonding to frame.

6. Fuel Cell requirements for S/C 3 and S/C 4 have been cancelled. Job Order 306 supplement 5-28 was issued on 6 April directing curtailment of all Fuel Cell effort for these spacecrafts.

PROCUREMENT STATUS

1. Water separators have been the constraining item on section assembly. Dow-Corning has undertaken the cutting operation previously performed for them by another vendor. Both Dow-Corning and G.E. have increased their Q.C. surveillance to insure cleanliness of the separators. The Hydrochloric Acid bath is being used to remove contamination.

ASSEMBLY & DELIVERY STATUS

Section Summary

Section 3B - Delivered to test area and installed on 23 April. Leak developed between H_2 control valve and Delta P Sensor. This was repaired on 24 April. A coolant leak [illegible] developed between [illegible]

Section 502A - Awaiting completion of Stack 159.

Section 503A - Awaiting water separators to complete section assembly. This section is scheduled for MAC P2B FC/RSS Power System test.

Section 507 - Also being held for water separators.

Section 508 - Delivered to MAC St. Louis on 18 April now installed in S/C 2 - SST. Replaced Section 504.

Section 509 - Completed PDA test on 23 April and is awaiting disposition of MRR by MAC St. Louis. Delivery to MAC is estimated for 28 April.

Section 510 - Has been assembled, however, a leak developed in the outer coolant loop. This is expected to be repaired and the section ready for test on 29 April.

Section 511 - Will be first P3 configuration section assembly. Stacks 201, 202 and 203 will be used in this section. Section 511 is scheduled for G.E. Life Testing scheduled for 30 May.

Stack Summary

Stack 1A - Formally production Stack 109 has been refurbished. Presently awaiting water separator. This stack is expected to be green run tested on 28 April and will be used in checking out AGE-1 at G.E.

Stack 99A - Completed Green Run and is being delivered to NASA This is a P3 design stack.

Stack 158 - Completed Green Run and will be utilized in Section 503A.

Stack 159 - In assembly and scheduled for Section 502A.

Stacks 160, 161 & 162 - Estimated to be last P2B configuration stacks. These will be used as backup for P2B sections.

Stacks 201, 202 & 203 - Assembled and completed Green Run tests will be used in P3 Section 511.

Stack 204 - P3 stack presently having coolant manifold potted.

Stack 205 - P3 stack in assembly scheduled for Green Run 27 April.

TEST STATUS

MAC Testing

1. P2B Section [illegible] has been [illegible] [illegible]
[illegible]

G.E. Testing

1. P2B Qual at Raytheon (Sudbury, Mass.) began with successful checkout of vibration equipment on 16 April. Section 506 was charged on 17 April with following resistances noted:

	Valve Room Temp. Prior to Chg.	Valve 102°F After Chg.
Stack A	.218	.199
B	.222	.206
C	.500	.620

2. Data optained from Stack "C" will be ignored per MAC instruction. This stack showed a high diffusion rate when activated after non-operating Acceleration test.

AGE STATUS

1. AGE-1 being installed at G.E. (Lynn) is expected to be operational by 1 May. Minor pressure drop and workmanship problems are expected to be completed in order to maintain 1 May completion.

2. AGE-2 (Cape) will ship date of 22 May is still being maintained with no serious problems thus far. AGE-3 (PIA) will ship date remains 10 July.

GEMINI
SPACECRAFT
CONTRACT NO. NAS 9-170

BATTERY FUEL CELL

(VENDOR: GENERAL ELECTRIC)
STATUS CHART

REPORT NO. 65304-38
LAST PROGRAM SCHEDULE CHANGE: 24 April 1964
STATUS AS OF: 24 April 1964

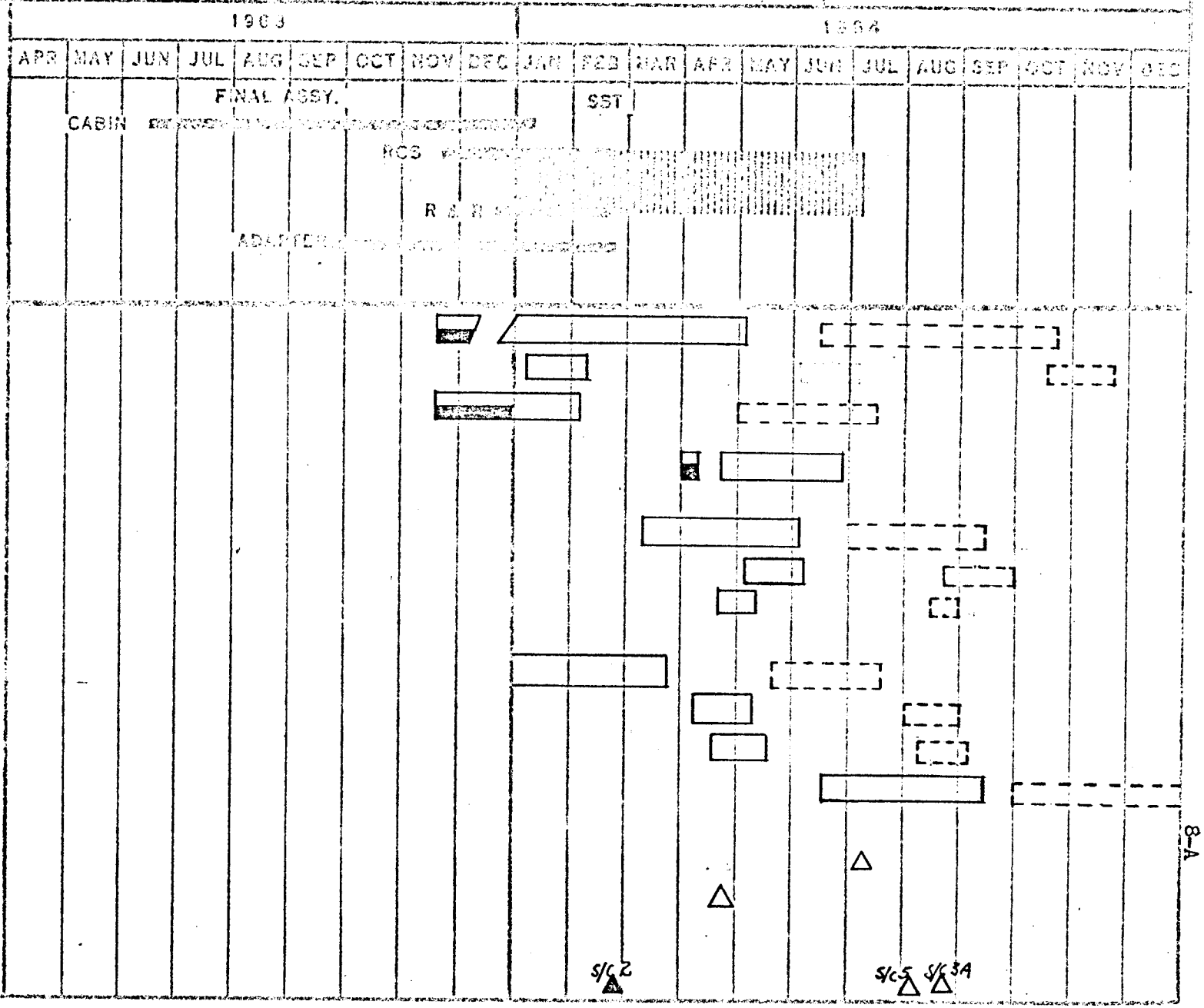

DEVELOPMENT

1. POWER SYSTEMS TEST
2. CTU
3. VENDOR DEVELOPMENT

P2B QUAL

4. VIBR., ACCEL., SHOCK

QUALIFICATION

5. VIBR. SHOCK, ACCEL.
6. TEMP. & ALTITUDE
7. SALT SPRAY

RELIABILITY

8. 9-32 CELL STACK OSR
9. SECTION LIFE
10. SECTION OSR VIBR.
11. ENDURANCE

AGE

12. PIA
13. CAPE CHECKOUT

FLIGHT HARDWARE

14. AFI

LEGEND:

◇ HARDWARE AVAILABLE

▭ TEST SCHEDULE

○ REPORT DUE

SYSTEM DETAIL TEST CHART
BATTERY FUEL CELL SCD 52-79700
GENERAL ELECTRIC

REPORT NO. 8580-[illegible]38
LAST PROGRAM
SCHEDULE CHANGE: 4-24-64
STATUS AS OF: 4-24-64

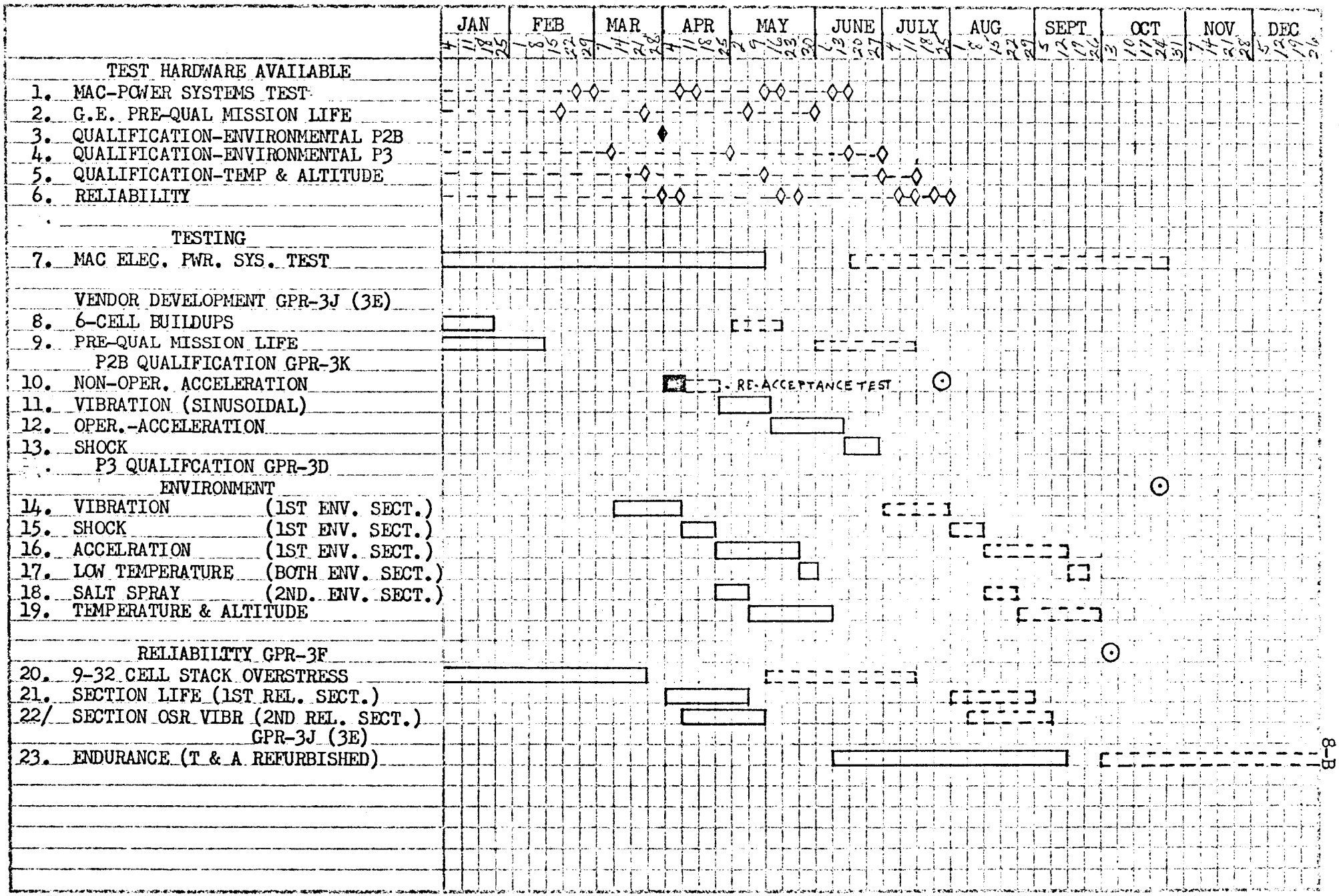

MAC 22747 (27 APR 59)

VENDOR DELIVERY STATUS REPORT
FUEL CELL
GENERAL ELECTRIC

CHART [illegible]

DATE: 4-24-64

UNIT NO	TYPE	S/N	USAGE	VENDOR W/S	AVAIL FOR INSTL	REQ'D FOR INSTL	STATUS
8	PA-4	*505	S/C-2		***	A 3-20-64	
9	PA-5	*506	QUAL		A 3-18-64		
10	PA-6	*508	S/C-2	A 4-17-64	***	A 4-21-64	
11	PA-7	*509	MISC.	4-25-64	5-05-64		
12	PA-8	**502A	MISC.	5-02-64	5-12-64		
13	PA-9	**503A	FC/RSS PWR SYS.	5-09-64	5-19-64		
14	PA-10	*507	MISC.	5-16-64	5-26-64		
15	PA-11	*510	MISC.	5-23-64	6-02-64		
16	PA-12	511	VENDOR LIFE	5-30-64	5-30-64		
17	PA-13-14	512-513	FC/PWR SYS.	6-13-64	6-23-64	A.S.A.P.	
18	PA-15-16	514-515	VENDOR QUAL	6-27-64	6-27-64		
19	PA-17-18	516-517	VENDOR QUAL	7-11-64	7-11-64		
20	PA-19-20	518-519	VENDOR CSR	7-25-64	7-25-64		
21	PA-21-22	520-521	S/C-5	8-08-64	8-18-64	9-08-64	[illegible]
22	PA-23-24	522-523	S/C-3A	8-22-64	9-01-64	9-29-64	[illegible]
23	PA-25	524	SPARE-SST	8-29-64	9-08-64	1-31-64	[illegible]
24	PA-26	525	SPARE-HGR	9-05-64	9-15-64	7-31-64	[illegible]
25	PA-27-28	526-527	S/C-6	9-19-64	9-29-64	11-23-64	[illegible]
26	PA-29-30	528-529	AD-13	10-03-64	10-13-64	12-02-64	[illegible]
27	PA-31-32	530-531	MISC (CTU)	10-17-64	10-27-64	****	
28	PA-33	532	SPARE-SST	10-24-64	11-03-64	3-31-64	[illegible]
29	PA-34-35	533-534	S/C 7	11-07-64	11-17-64	1-02-65	[illegible]
30	PA-36-37	535-536	S/C 8	11-21-64	12-01-64	2-26-65	[illegible]
31	PA-38	537	SPARE-SST	11-28-64	12-08-64	7-31-64	[illegible]
32	PA-39	538	SPARE-HGR	12-05-64	12-15-64	12-31-64	[illegible]
33	PA-40-41	539-540	S/C-9	12-19-64	12-29-64	4-26-65	[illegible]
34	PA-42-43	541-542	S/C-10	1-02-65	1-12-65	6-17-65	[illegible]
35	PA-44-45	543-544	S/C-11	1-16-65	1-26-65	8-14-65	[illegible]
36	PA-46	545	SPARE-HGR	1-23-65	2-02-65	2-28-65	[illegible]
37	PA-47-48	546-547	S/C-12	2-06-65	2-16-65	10-07-65	[illegible]
38	PA-49-50	548-549	AD-14	2-20-65	3-02-65	11-29-65	[illegible]
39	PA-51-52	550-551	AD-15	3-06-65	3-16-65	12-27-65	[illegible]

* P2B configuration sections.
** P2B refurbished sections.
*** PIA waived. PDA accepted as PIA.
**** New test schedule for CTU being prepared.
Note: Section 504 removed from S/C-2. (See Narrative SST S/C-2)

VENDOR AGE STATUS REPORT
FUEL CELL
GENERAL ELECTRIC

CHART NO: 8-D

DATE: 4-24-64

PART NUMBER	NOMENCLATURE	UNIT NO	VENDOR W/S	AVAIL FOR USAGE	REQ'D FOR USAGE	SLACK
			PRE-INSTALLATION ACCEPTANCE			
E230001-1	T-SET FUEL CELL	2	7-10-64	8-10-64	4-01-64	-19
			HANGAR			
E230001-1	TEST SET FUEL CELL	1	5-22-64	6-06-64	6-29-64	+4

RSS ENGINEERING INFORMATION

1. RSS (52-83701)

   A. A total of ten (10) cryogenic vessels were held up because of heat leak rates above the maximum allowable specification and ATP requirements. Original numbers were found to be in error due to faulty NBS oxygen data that was obtained early in the program. Incorporation of new data and more careful analysis of temperature associated with the stored fluids for test ambient conditions during vented boil-off and 72 hour no-loss build-up tests have resulted in new allowable boil-off rates, some of which are higher and some of which are lower and even more stringent. A review of flight profiles and prelaunch requirements made at MAC relative to the specific bottles on hold showed that although some were marginal they could be accepted and allowed to proceed down the line through manufacturing.

   A study is presently underway to possibly allow a reduction in the 72 hour no-loss stand-by requirement.

   B. The Reactants Supply System has been removed from Spacecraft 3. Equipment will be reallocated for later spacecraft.

MONTHLY SUMMARY

SYSTEM: Electrical Power
SUBSYSTEM: Reactant Supply System
VENDOR: AiResearch
DATE: 24 April 1964

ASSEMBLY & DELIVERY STATUS

1. This month has witnessed an overall improvement in the R.S.S. status due primarily to change in program requirements.

2. By reallocation, S/C 3A (Long Mission) and S/C 5 (Short Mission) hardware is available except for the following:

MAC-129 Pressure Regulator for S/C 3A
MAC-71 Oxygen Cryogenic Tank for S/C 3A
MAC-95 Check Valve for S/C 3A
MAC-81 Hydrogen Cryogenic Tank for S/C 3A
MAC-59 Check Valves for S/C 3A
MAC-19 Heat Exchanger for S/C 5
MAC-59+95 Check Valves for S/C 5

These are all scheduled for shipment from AiResearch by 14 May 1964 or sooner.

3. The above action will also accelerate hardware availability for Qual test and spares.

4. As reported last month, the 72 hour standby requirements test continues to be the controlling factor of ATP testing for Cryogenic Tanks. MAC Engineering has worked out acceptable tables for vented heat loss with AiResearch Thermo group that will qualify most of tanks presently in work. However, final solution to eliminate 72 hour standby failures has not been reached. Data for each tank is being studied as submitted and MRR action taken where necessary to obtain needed vessels. Vendor Qual and Development hardware should be ready by end of May.

5. The following hardware was shipped the past month:to MAC:

1. MAC-19 Heat Exchanger for S/C 3A.
2. MAC-103 Solenoid Valve for S/C 3A.
3. MAC-127 Indicator for S/C 3A.
4. MAC-41 Pressure Transducer for spares.
5. MAC-73 Oxygen Cryogenic Tank.

6. The following hardware was delivered to AiResearch for Qual test usage:

1. MAC-15 Oxygen Container.
2. MAC-19 Heat Exchangers (3).
3. MAC-57 Vent Valve.
4. MAC-73 Oxygen Cryogenic Tank.
5. MAC-81 Hydrogen Cryogenic Tank.
6. MAC-127 Indicators (2).
7. MAC-129 Pressure Regulator.

TEST STATUS

1. Very little Qual and Reliability testing has been done to date on R.S.S. This is partly due to the following:

A. Hold up by AiResearch engineering attempting to solve the heat loss, emissitivity rates and 72 hour standby failures.

B. Lack of hardware occasioned by the above test failures and rework.

C. Compilation of new technical data as result of above to incorporate on A.T.P.

D. Revision of test schedule as result of MAC visits by SCD Engineers and Status Analyst to monitor and accelerate testing.

The basis has been laid for a marked improvement in Qual testing by AiResearch for next month.

2. At MAC the Electrical Power Systems test portion of Fuel Cell compatibility has been completed and S.S.T. testing must be completed before same set up can be used to complete F.C.C. This test and the CTU testing are now scheduled for September 1964 completion.

GEMINI SPACECRAFT
CONTRACT NO. NAS 9-170

REACTANT SUPPLY SYSTEM (VENDOR: AIRESEARCH)

STATUS CHART

REPORT NO. 8550-1-38
LAST PROGRAM SCHEDULE CHANGE: 4-24-64
STATUS AS OF: 4-24-64

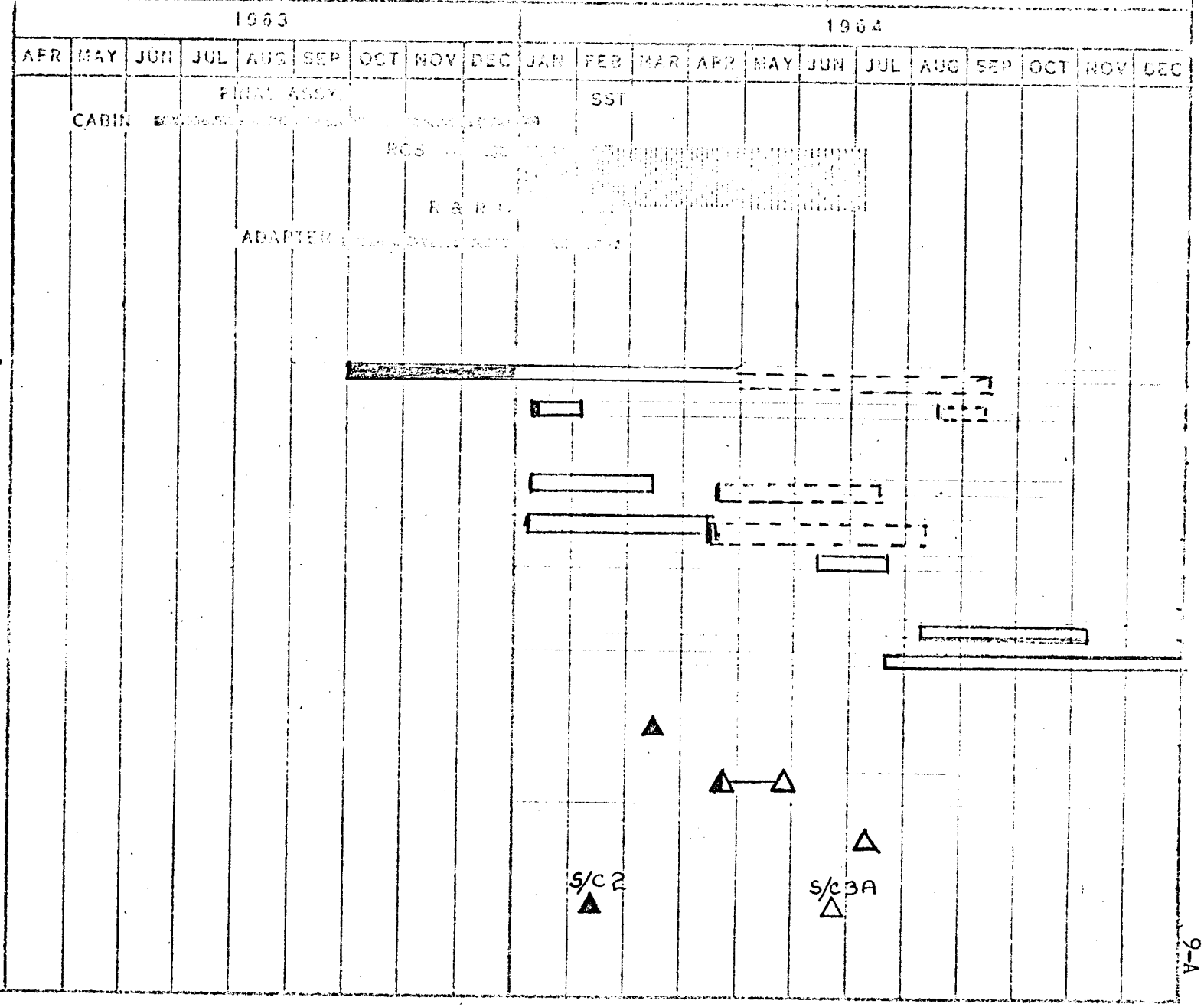

LEGEND:

◇ H_2 SUBSYS AVAIL

△ O_2 SUBSYS AVAIL

▭ TEST SCHEDULE REPORT DUE

SYSTEM DETAIL TEST CHART
REACTANT SUPPLY SYSTEM
(AIRESEARCH MFG)
SCD 52-83701

REPORT NO.: [illegible]-1-38
LAST PROGRAM
SCHEDULE CHANGE: 4-24-64
STATUS AS OF: 4-24-64

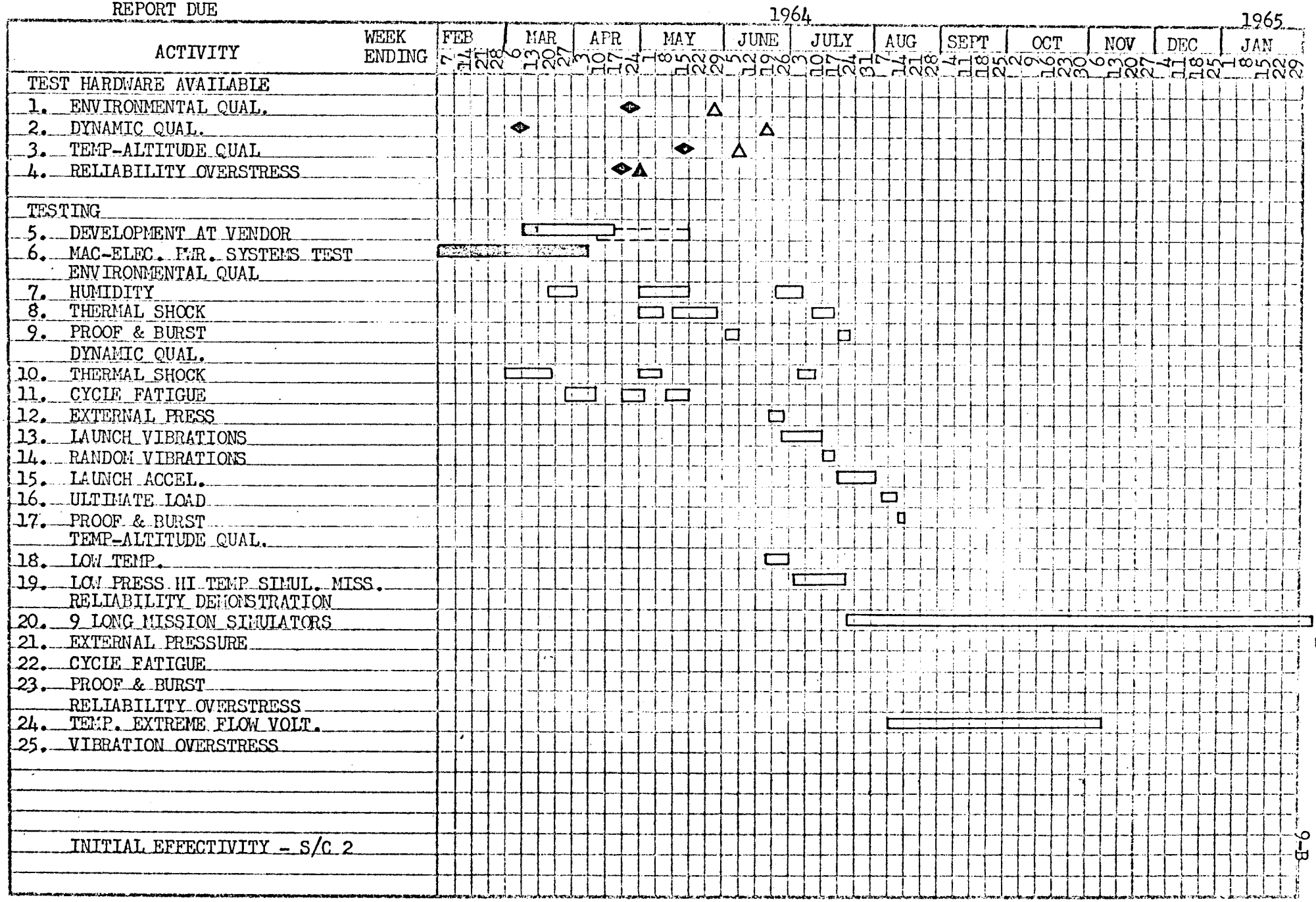

MAC 2274V (27 APR 59)

VENDOR DELIVERY STATUS REPORT
REACTANT SUPPLY SYSTEM
AIRESEARCH

CHART NO. [illegible]

DATE. [illegible]

TYPE	USAGE	COMPONENT	VENDOR W/S	AVAIL. FOR INSTL.	REQ'D. FOR INSTL.	[illegible]
PA-4	SPARE COMPONENTS (SC-2 SST)		5-22-64	5-30-64	1-31-65	[illegible]
PA-5	SC-3A	71 O2 Sub-IM	5-14-64	5-24-64	4-20-65	[illegible]
		81 H2 Sub-IM	5-05-64	5-15-64	4-20-65	[illegible]
		21 Press Rel Val		A 1-06-64	4-20-65	
		19 O2 Ht Xchgr		A 3-25-64	4-20-65	
		23 Press Rel Val	A11-22-64	5-05-64	4-20-65	[illegible]
		37 Temp Sensor		A10-29-63	4-20-65	
PA-6	VENDOR DEVELOPMENT					
		23 Press Rel Val	5-15-64	5-25-64		
		59 Discon. Val	5-01-64	5-11-64		
		129 Reg O2 & H2	5-08-64	5-18-64		
PA-7	VENDOR QUAL ENVIR					
		71 O2 Sub-IM	5-26-64	6-06-64		
		81 H2 Sub-IM	4-27-64	5-07-64		
PA-8	VENDOR QUAL DYNAM					
		71 O2 Sub-IM	6-17-64	5-04-64		
		81 H2 Sub-IM		A 3-06-64		
PA-9	VENDOR QUAL TEMP & ALT					
		71 O2 Sub-IM	6-05-64	6-15-64		
		81 H2 Sub-IM	5-14-64	5-04-64		
PA-10	VENDOR QSR					
		73 O2 Sub-SM		A 2-17-64		
		77 H2 Sub-SM		A 2-17-64		
PA-11	SPARE COMPONENTS (SST)		6-05-64	6-15-64	[illegible]	[illegible]
PA-12	SC-5	73 O2 Sub-SM	A 2-13-64	5-05-64	9-19-64	[illegible]
		21 Press Rel Val	A 1-06-64	5-05-64	9-19-64	[illegible]
		77 H2 Sub-SM	A 2-18-64	5-05-64	9-19-64	[illegible]
		19 O2 Ht. Xchgr	4-26-64	5-05-64	9-19-64	[illegible]
		23 Press Rel Val	5-01-64	5-11-64	9-19-64	[illegible]
		37 Temp Sensor		A10-29-64	9-19-64	[illegible]
PA-13	SPARE COMPONENTS (SC-2 CAPE)		5-22-64	5-30-64	[illegible]	[illegible]
PA-14	SC-5	71 O2 Sub-IM	8-06-64	8-16-64	[illegible]	[illegible]
		81 H2 Sub-IM	6-08-64	6-18-64	[illegible]	[illegible]
		21 Press Rel Val	5-15-64	5-25-64	[illegible]	[illegible]
		19 O2 Ht Xchgr	5-01-64	5-11-64	[illegible]	[illegible]
		23 Press Rel Val	[illegible]	[illegible]	[illegible]	[illegible]
		37 Temp Sensor	[illegible]	[illegible]	[illegible]	[illegible]

TYPE	USAGE	COMPONENT	VENDOR W/S	AVAIL. FOR INSTL.	REC'D. FOR INSTL.	SLACK
PA-15	AD-13		5-25-64	6-04-64	12-02-64	+25
PA-16	SC-7		6-23-64	7-04-64	1-02-65	+25
PA-17	SC-8		7-23-64	8-04-64	2-02-65	+3
PA-18	SC-9		9-23-64	10-05-64	4-26-65	+28
PA-19	SC-10		11-23-64	12-05-64	6-17-65	+27
PA-20	SC-11		1-23-65	2-04-65	8-14-65	+27
PA-21	SC-12		3-23-65	4-04-65	10-17-65	+26
PA-22	AD-14		5-23-65	6-04-65	11-29-65	+24
PA-23	AD-15		7-23-65	8-04-65	1-27-66	+2[illegible]

VENDOR AGE STATUS REPORT
RSS
VENDOR: AIRESEARCH

CHART NO.: 09 B
DATE: 4-22-64

PART NUMBER	NOMENCLATURE	UNIT NO.	VENDOR W/S	AVAIL. FOR INSTL.	REQ'D FOR INSTL.	SLACK
		PRE-INSTALLATION ACCEPTANCE				
E230027-1	LH_2 BENCH	1		ACTUAL **		
E180012-1	LO_2 BENCH	1		ACTUAL **		
		HANGAR				
E230054-1	DOLLY RSS O2	3		ACTUAL*		
E230055-1	DOLLY RSS H2	5		ACTUAL		
E230055-1	DOLLY RSS H2	4		ACTUAL		
E230054-1	DOLLY RSS O2	4		ACTUAL*		
E230027-1	RSS PIA LH2			ACTUAL		
		MANUFACTURING				
E230055-1	DOLLY RSS H2	3		ACTUAL*		
E230055-1	DOLLY RSS H2	2		ACTUAL		
E230054-1	DOLLY RSS O2	1		ACTUAL		
E230055-1	DOLLY RSS H2	1		ACTUAL		
E230054-1	DOLLY RSS O2	2		ACTUAL		
		VENDOR AGE USED ON RSS BUT BOUGHT ON ECS				
E180010-1	LO PRESS BENCH	1	ACTUAL			
E180011-1	HI PRESS BENCH	1	ACTUAL			

* Unit to be retained by AiResearch For In House testing.

** Limited Operational

ECS ENGINEERING INFORMATION

1. Environmental Control System

Analysis - Considerable analysis was originated to determine the overall performance of ECS and RSS components, especially tankage, for the latest rendezvous mission pre-launch schedule: capability to launch during either of the first two windows, reservice the third day, and meet either of the last two windows. Based on these analysis ten bottles which failed to meet SCD requirements have been found to be adequate to perform the mission and have been accepted.

Configuration changes to the suit inlet and outlet nozzles have been proposed which will permit a 45-percent reduction in nozzle pressure drop and restore suit circuit flow to near-original levels. Coordination with NASA/MSC on the outlet press-to-test-valve vendor is continuing.

Studies have been conducted and recommendations made to increase the egress oxygen flowrate and total fill-quantity upward to ensure adequate CO_2-scavenging and metabolic cooling for the latest egress trajectory and suit flow-split changes.

A water-management-system cleanliness study is in progress to determine whether the system or astronauts are jeopardized by bacteria and algae growth during the mission.

Suit-circuit temperature stability analysis is continuing with theoretical calculations to show the effect of small coolant-control-handle changes. System adequacy and inherent stability will be demonstrated in coming B/P 2 tests.

Results of preliminary Static-5 post-landing-phase tests by NASA/MCS show potential problems with water inflow thru the snorkel. Relocation and/or component configuration changes are being studied.

Testing - B/P #2 Testing - Equipment and instrumentation installations are complete. Special NASA bio-medical instrumentation sensors and signal conditioners operated satisfactorily with the monitoring equipment and wire bundles installed in the test setup. Coolant loop, primary oxygen and suit loop leak checks were completed. Coolant loop, LOX and high pressure GOX servicing is tentatively scheduled for this week with preliminary unmanned check out runs starting the third or fourth week in April.

2. Gemini ECS (52-83700 Vol. I)

A. Completed

1. AiResearch Report SS-2171, Rev. 1, (Special Cycle Test for Composite Disconnect) approved without change.

2. AiResearch Report SS-2170, Rev. 1, (Special Qualification Vibration Test) approved without change.

3. AiResearch Report SS-2097, Rev. 3, (AFP for Secondary Oxygen Sub-System) approved final with changes.

A. Completed (Continued)

4. Study for increasing operating range of cryogenic pressure transducers was completed, and data submitted to NASA.

B. In Progress

1. AiResearch Report SS-2162 "Exceptions and Deviations to MAC/SCD 52-83700" in review.

2. Bendix electrical connector that failed qualification humidity testing has been returned to Bendix for further analysis.

3. Effort to expedite qualification tests to meet Spacecraft 3 deadline.

4. Suit compressor and power supply performance being investigated.

5. AiResearch Process Specification AF-209b (Wiring and Soldering) in review.

6. AiResearch proposing special 36 hour immersion qualification test on suit compressor power supply.

7. Study underway for changing screen size on the cabin recirculation valve (-27).

C. Problems

1. Cabin Fan Power Supply (-67) Qualification Test failures have been analyzed and it has been found that a void existed in epoxy potting material causing a mechanical fatigue of a lead wire. MAC is attempting to determine a method of external inspection to check the adequacy of the internal L-4 potting.

2. Failure to meet 72 hour stand-by for cryogenic tankage.

3. Expediting qualification failure reporting, analysis and corrective action.

3. Static No. 2 ECS: (APL 54)

A. Heat exchanger failure reported last month has been resolved by AiResearch in the redesign of clamping of the coils of tubing inside of the heat exchanger and general beef-up of some material. The redesign will be compatible with the previous portions of the qualification tests, and these tests will not have to be run over according to AiResearch Qualification Test Schedule dated 30 March 1964. Qualification test will resume on 4 May 1964 and be completed on 15 May 1964.

4. Water Pressure Regulator (SCD 52-83770)

A. Acceptance Test Specification was reviewed and given preliminary approval with change on 20 March. Unqualified hardware will be delivered 30 April. Vendor schedule indicates that qualification tests will be completed 27 July. Qualification test plan is presently being reviewed. Spacecraft 3 and 4 effectivity.

MONTHLY SUMMARY

SYSTEM: Environmental Control
SU VENDOR: AiResearch
DATE: 24 April 1964

ASSEMBLY AND DELIVERY STATUS

1. The past month witnessed an increase in hardware shipped to MAC and in design changes affecting this hardware and others at AIRE. This latter factor has adversely affected delivery and test schedules as well as MAC assembly and testing. Retrofit and effectivity requirements also complicate AIRES assembly and delivery allocations.

2. Following is a list of hardware shipped past month:

MAC-913 Pump Power Supply for B/P 2
MAC-407 Launch Coolant Heat Exchanger - S/C 3
MAC-479 Suit Loop - S/C 3 (New Design)
MAC-497 Pump Unit - S/C 3
MAC-55 Suit Compr. Power Supply S/C 3A
MAC-487 Press Relief Valve - S/C 3A (New Design)
MAC-483 Fuel Cell Regulator- S/C 3A (New Design)
MAC-85 Cabin Relief Valve- S/C 4 and Spares
MAC-707 Cabin Cooling for S/C 3 (New Design)
MAC-255 Cabin & Suit Valvefor S/C 3
MAC-473 Suit Power Supplies S/C 6 and 7 (New Design)

3. The following were shipped for Spares by AIRE:

MAC-51 (4) Egress O2 Orifices
MAC-101 (2) Cabin Fans
MAC-171 (2) Ducts
MAC-473 (4) Suit Power Supplies
MAC-299 Dual Regulator Valve
MAC-217 Absorber Bed
MAC-219 Absorber Bed

4. The following were shipped to AIRE for Qual testing:

MAC-141 Temp. Control Valve
MAC-143 Press Relief Valve
MAC-255 Cabin & Suit Valve
MAC-483 Fuel Cell Regulator
MAC-497 Pump Unit
MAC-421 Reservoirs
MAC-707 Cabin Cooling
MAC-1021 ECS #2 Supply Package

5. Following are shortages and will ship dates for S/C 3:

				W/S
MAC-703 & -704	Egress Kits	Weber Delivery Delay		6-08 6.
MAC-429	Primary O2	On MRR	5-08 or	5-15 6.
MAC-281	Pr Regulator	On MRR	5-08 or	5-15-6.
MAC-495	Water Tank	Bladder Leakage		5-08 6.
MAC-491	Control Valve	Recalibration		5-08 6.

6. S/C 3A shortages follow:

MAC-127 Primary O2 (on MRR)
MAC-483 Fuel Cell Regulator
MAC-143 Relief Valve
MAC-497 Pump Unit
MAC-491 Control Valve
MAC-495 Water Tank
MAC-421 Reservoir
MAC-715 Lch/Cool Ht. Exhr

7. Deletion of RSS Hardware increased hardware necessary to support batteries, instead of Fuel Cell, and added procurement and time were involved.

8. The problem involving inconsistent voltage readings of tested Power Supplies from Engineering Magnetics was solved with finding of voids in potting procedure. Units are being returned to them from AIRE and MAC to repot and for vibration testing. Turn about time for rework will average a week for each type. The Power Supplies involved are for Suit Compressor, Pump, and Cabin Fan.

9. The Egress Oxygen Kits have slipped behind schedule several weeks at Weber, (MAC's machining supplier for tanks,) due to problems incorporating Jet-o-lox provision on castings already machined. Welding rework was necessary. Second supplier has not been able to supply units as expected and this source will be four to five weeks later than scheduled. Development unit which had to be returned to Weber for rework has been returned to AIRE and S/C 3 units will not be delivered till 4-30- to AIRE. This may delay delivery to MAC till 6-26-61. Although out of AIRE's control, MAC Reps are working closely with Engineers and Weber in order to expedite.

10. In summary: Several major problems were solved involving new techniques and testing to prevent future failures; others are in process of accomplishment while some such as cryogenic tanks and design change problems are being studied. Plans under way call for review of Qual testing, total hardware needs and most efficient allocations.

TEST STATUS

1. New Qual test schedules have been drawn up by Status Analyst to reduce total time span and conform to August Qual completion for S/C 2. Engineering has been monitoring and witnessing testing this past month thru visits and personal efforts of MAC resident office. As a result of combined efforts AIRE has more hardware in testing than previous month and are revising program to accomplish MAC and NASA objective. New breakdown will be available next month.

2. As forecast, savings of time and cost should be noticeable and permit necessary design changes to be effected faster. Some additional equipment has been secured for AIRE to facilate the above and Program Manager's aid has been obtained.

3. The cryogenic tanks and egress kits remain late hardware items due to delivery problems and efforts are being made to expedite for testing purposes.

4. PLA and SST testing at MAC are proceeding per schedule based on bench availability. Manned and unmanned tests are scheduled for May completion.

AGE

1. Several design changes have been authorized this month in the AGE equipment which will take about sixty days to incorporate. MOD Kits for ITAC 52E18004-3 service unit are added. A new mobile refrigeration unit was added (ITAC 52E180172-3). Mod kits to install filters will be made for 52E180013-1 Coolant PIA Bench, as well as new Power Supplies to run two pumps.

CONTRACT NO. NAS 9-170

ENVIRONMENTAL CONTROL (VENDOR: AIRESEARCH)

STATUS CHART

REPORT NO. [illegible]

LAST PREVIOUS SCHEDULE CHANGE: 4-24-64

STATUS AS OF: 4-24-64

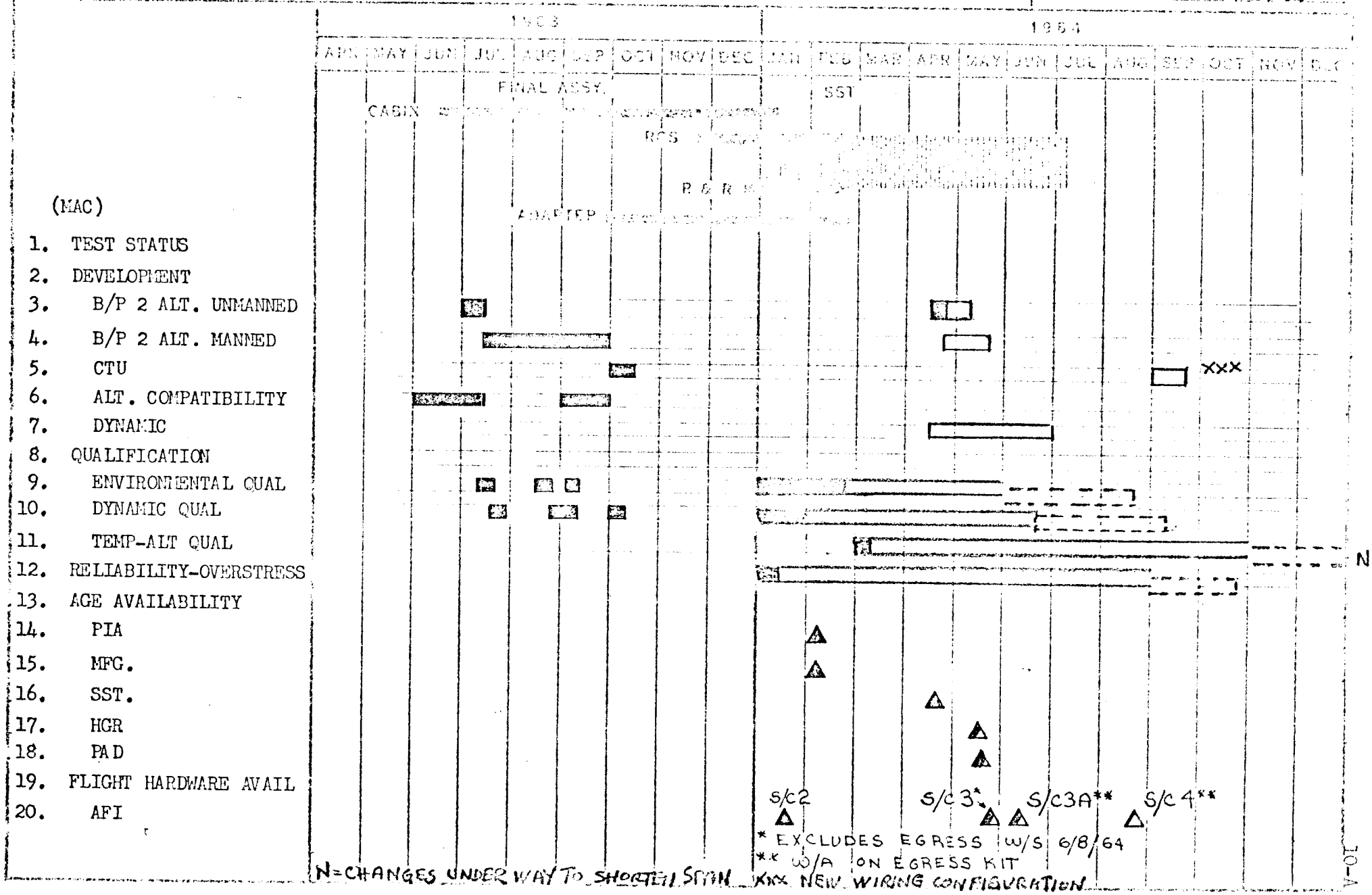

LEGEND:

△ HARDWARE AVAILABLE

▭ TEST SCHEDULE

SYSTEM DETAIL TEST CHART
ENVIRONMENTAL CONTROL SYSTEM
SCD 52-83700
AIRESEARCH

REPORT NO.: 8580-1-38
LAST PROGRAM
SCHEDULE CHANGE: 14-24-64
STATUS AS OF: 4-24-64

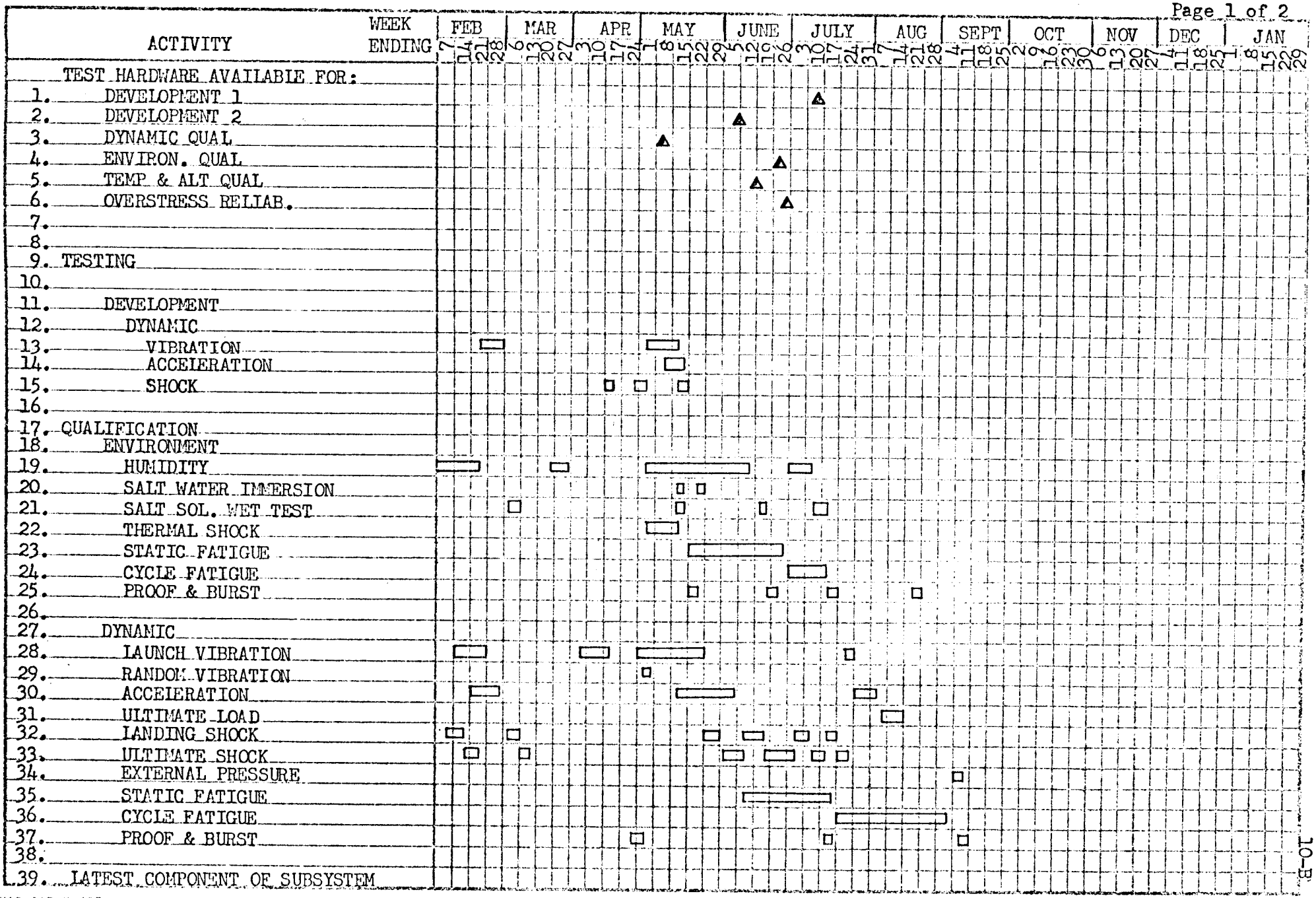

MAC 2274V (27 APR 59)

LEGEND: [redacted]

HARDWARE AVAILABLE

TEST SCHEDULE

SYSTEM DE[redacted]L TEST CHART
ENVIRONMENTAL CONTROL SYSTEM
SCD 52-83700
AIRESEARCH

REPORT NO.: 8580-1[redacted]3
LAST PROGRAM
SCHEDULE CHANGE: 14-24-64
STATUS AS OF: 4-24-64

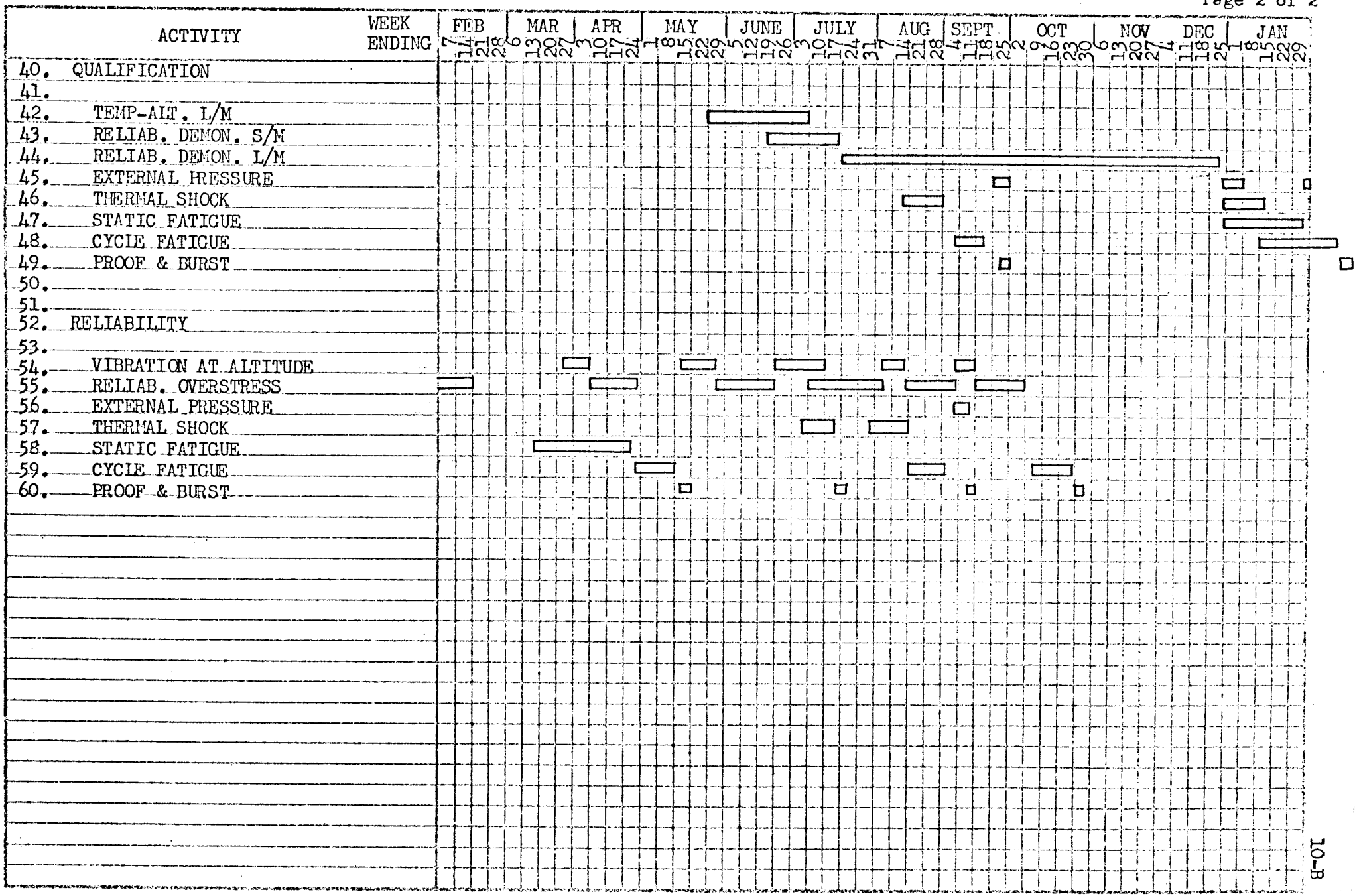

MAC 2274V (27 APR 59)

VENDOR DELIVERY STATUS REPORT
ENVIRONMENTAL CONTROL
AIRESEARCH

CHART NO.: 10-3

DATE: 4-24-64

TYPE	USAGE	COMPONENT	VENDOR W/S	AVAIL FOR INSTL.	REQ'D. FOR INSTL.	SLACK
PP-1	BP-2	C-703 Egress 02	6-28-64	7-08-64	12-01-63	
		C-704 Egress 02	6-28-64	7-08-64	12-01-63	
		A-913 Pump Pwr	A 4-24-64	5-04-64	12-01-63	
		A-421 Reservoir	4-26-64	5-04-64	12-01-63	
		A-497 Pump Unit	4-26-64	5-04-64	12-01-63	
PP-2	VENDR DEV. 1	A-127 Pr. 02	7-08-64	7-18-64		
		A-429 Pr. 02	7-08-64	7-18-64		
		A-703 Egress 02	4-28-64	5-08-64		
PP-2A	VENDR DEV. 2	C-161 Indicator	6-05-64	6-15-64		
		A-407 H.X. L/C	5-19-64	5-29-64		
		A-429 Pr. 02	6-05-64	6-15-64		
		A-483 Valve	4-26-64	5-06-64		
		A-913 Pwr Pump	4-26-64	5-06-64		
PA-1	SC-2			ACTUAL		
PA-2	SC-3	C-055 Pwr Sup.		A 3-16-64	2-26-64	0
		C-281 Indicator	5-14-64	5-24-64	4-02-64	7
		A-407 H.X. Lch Cl	A 4-20-64	5-01-64	4-02-64	5
		A-421 Reservoir	A 2-17-64	5-01-64	4-02-64	4
		A-429 Primary 02	5-14-64	5-24-64	4-02-64	7
		C-445 Temp Valve	A 2-18-64	5-01-64	3-23-64	5
		A-457 Pwr Sup PP		A 2-13-64	4-02-64	0
		A-463 H.X. Excher	A 2-06-64	5-01-64	4-02-64	5
		C-479 Suit Loop	A 4-10-64	5-01-64	3-25-64	5
		A-487 Valve		A 3-17-64	4-02-64	
		A-491 Val Coolant	5-22-64	5-30-64	4-02-64	-6
		C-495 Val Water	5-01-64	5-11-64	2-26-64	10
		A-497 Pump Unit	A 4-24-64	5-06-64	4-02-64	-4
		C-703 Egress 02	6-08-64	6-18-64	3-25-64	12
		C-704 Egress 02	6-08-64	6-18-64	3-25-64	12
		C-707 Cabin Cool	A 3-04-64	5-01-64	1-29-64	13
		C-709 Pwr Sup.	5-17-64	5-27-64	2-26-64	15
PA-3	SC-3A	C-055 Pwr Sup.	A 4-20-64	5-05-64	4-10-64	3
		A-127 Pr. 02	5-26-64	6-06-64	4-20-64	7
		A-143 Val Press	4-25-64	5-05-64	4-20-64	2
		A-151 H.X. Reg		A12-27-63	4-20-64	
		C-255 Temp Valve	A 2-25-64	5-01-64	3-13-64	7
		A-421 Reservoir	5-08-64	5-18-64	4-20-64	3
		C-445 Temp Valv	5-08-64	5-21-64	5-08-64	2
		A-457 Pwr Sup.	A 3-16-64	5-01-64	4-20-64	2
		A-463 Pr. 02 H.X.	A 3-19-64	5-01-64	4-20-64	3
		C-477 Suit Sub	5-01-64	5-11-64	5-08-64	3

TYPE	USAGE	COMPONENT	VENDOR W/S	AVAIL. FOR INSTL.	REQ'D. FOR INSTL.	SLAC
PA-3	SC-3A	A-483 Water Reg	5-15-64	5-25-64	4-20-64	[illegible]
		A-497 Pump Unit	4-25-64	5-05-64	4-20-64	[illegible]
		C-703 Egress 02	W/A	W/A	5-08-64	
		C-704 Egress 02	W/A	W/A	5-08-64	
		C-707 Cabin Cool	A 4-24-64	5-01-64	3-13-64	[illegible]
		A-715 H.X. Lch Cl	5-12-64	5-24-64	4-20-64	[illegible]
PA-4	VENDR ENV QUAL			6-22-64		
-5	DYN QUAL			5-04-64		
-6	T & A QUAL			6-12-64		
-7	OSR			6-25-64		
PA-8	SC-4	A-023 H.X. Grnd	5-03-64	5-11-64	7-05-64	[illegible]
		A-027 Val Btrfly		A 2-03-64	4-01-64	
		C-473 Pwr Sup Suit		A 2-24-64	4-21-64	
		C-085 Val Rel	4-25-64	5-05-64	4-01-64	[illegible]
		A-127 Primary 02	8-18-64	8-28-64	7-05-64	[illegible]
		A-143 Val Sel	5-15-64	5-25-64	7-05-64	[illegible]
		A-491 Val Coolant	6-06-64	6-16-64	7-05-64	[illegible]
		C-201 Val Drk	5-01-64	5-11-64	4-01-64	[illegible]
		A-463 Pr. 02 H.X.	A 3-19-64	5-01-64	7-05-64	[illegible]
		C-477 Suit Sub	5-22-64	6-01-64	6-02-64	[illegible]
		C-255 Val Temp		A 2-24-64	4-01-64	
		C-495 Val Wtr	5-22-64	6-01-64	4-21-64	[illegible]
		A-497 Pump Unit	5-01-64	5-11-64	7-05-64	[illegible]
		C-275 Scndry 02		A 1-25-64	4-01-64	
		C-277 Scndry 02		A12-20-63	4-01-64	
		A-715 H.X. Lch Cl	6-23-64	7-03-64	7-05-64	[illegible]
		A-483 Reg Water	5-22-64	6-01-64	7-05-64	[illegible]
		C-707 Cabin Cool	5-08-64	5-18-64		
		A-421 Reservoir	5-15-64	5-25-64	7-05-64	[illegible]
		C-703 Egress 02	W/A	W/A	6-02-64	
		C-704 Egress 02	W/A	W/A	6-02-64	
		A-457 Pwr Sup C/P	W/A		7-05-64	
PARTL	SPARE COMPONENTS (SC-2 SST)		6-17-64	6-27-64	1-31-64	[illegible]
PARTL	AD-13 COMPONENTS		8-04-64	8-14-64	11-15-64	[illegible]
PA-9	SC-5	C-275 Scndry 02	5-08-64	5-18-64	6-20-64	[illegible]
		C-277 Scndry 02	5-08-64	5-18-64	6-20-64	[illegible]
		A-429 Primary 02	7-08-64	7-18-64	7-08-64	
		A-463 Ht. Excher	5-08-64	5-18-64	7-08-64	[illegible]
		C-479 Suit Loop	5-29-64	6-11-64	8-20-64	[illegible]
		A-497 Pump Unit	5-08-64	5-18-64	7-08-64	[illegible]
		C-703 Egress 02	W/A		8-20-64	
		C-704 Egress 02	W/A		8-20-64	
		C-707 Cabin Cool	5-15-64	5-25-64	6-20-64	[illegible]
		A-715 H.X. Lch Cl	7-07-64	7-17-64	7-08-64	

type TYPE	USAGE	COMPONENT	VENDOR W/S	AVAIL. FOR INSTL.	REQ'D. FOR INSTL.	SLA[illegible]
PARTL	SPARE COMPONENTS (SC-2 CAPE)		6-17-64	6-27-64	4-30-64	[illegible]
PA-10	*SC-6	SYSTEM	8-06-64	8-16-64	11-30-64	[illegible]
PA-11	*SC-7		8-20-64	9-01-64	1-30-65	[illegible]
PA-12	SC-8		10-20-64	10-31-64	3-28-65	[illegible]
PA-13	SC-9		12-20-64	12-31-64	5-30-65	[illegible]
PA-14	SC-10		2-20-65	3-04-65	7-30-65	[illegible]
PA-15	SC-11		4-20-65	5-01-65	9-30-65	[illegible]
PA-16	SC-12		6-20-65	7-01-65	11-30-65	[illegible]
PARTL	AD-14	COMPONENTS	12-20-65	12-30-65	1-31-66	[illegible]
PARTL	AD-15		2-20-66	3-03-66	3-28-66	[illegible]

* Excludes Egress Kit (MAC-703, -704)

VENDOR AGE STATUS REPORT

CHART NO. [illegible]

E.C.S.

DATE: 4-24-64

AIRESEARCH

PART NUMBER	NOMENCLATURE	UNIT NO.	VENDOR W/S	AVAIL. FOR INSTL.	REQ'D. FOR INSTL.	SLACK
			MANUFACTURING			
E180021-1	DOLLY ECS PKG	1		ACTUAL		
E180066-1	DOLLY ECS CRYO	1		ACTUAL		
E180066-1	DOLLY ECS CRYO	2		ACTUAL		
E180021-3	DOLLY ECS PKG	5		ACTUAL		
			PRE-INSTALLATION ACCEPTANCE			
E180010-1	LO PRESS BENCH	1		ACTUAL		
E180011-1	HI PRESS BENCH	1		ACTUAL		
E180012-1	CRYO BENCH	1		ACTUAL		
E180013-1	COOL BENCH	1		ACTUAL		
			SPACECRAFT SYSTEM TEST			
E180004-1	SERV UNIT SC	2		ACTUAL		
E180004-1	SERV UNIT SC	1		ACTUAL		
E180004-3	SERV UNIT SC	1	A4-21-64	5-01-64	3-30-64	[illegible]
E180026-1	CO2 ABSORBER	1		ACTUAL		
E180026-1	CO2 ABSORBER	2		ACTUAL		
E180027-1	TEST SC LEAK	1		ACTUAL		
E180027-1	TEST SC LEAK	2		ACTUAL		
E180076-1	TEST CON SC	2		ACTUAL		
E180076-1	TEST CON SC	1		ACTUAL		
E180126-1	CO2 ABSORBER	2		ACTUAL		
E180126-1	CO2 ABSORBER	1		ACTUAL		
E180021-1	DOLLY ECS PKG	1		ACTUAL		
			HANGAR			
E180004-3	SER UT SC COOL	3	5-15-64	5-25-64	6-01-64	[illegible]
E180004-3	SER UT SC COOL	4	5-15-64	5-25-64	6-29-64	[illegible]
E180010-1	ECS PIA BENCH	2		ACTUAL		
E180011-1	ECS PIA BENCH	2		ACTUAL		
E180012-1	ECS PIA BENCH	2		ACTUAL		
E180013-1	ECS PIA BENCH	2	5-22-64	6-02-64	8-10-64	[illegible]
E180021-1	DOLLY ECS PKG	3		ACTUAL		
E180026-1	CO2 ABSORBER	4	A4-20-64	5-05-64	8-10-64	[illegible]
E180027-1	TEST SC LEAK	3		ACTUAL		
E180066-1	DOLLY ECS CRYO	4		ACTUAL		
E180066-1	DOLLY ECS CRYO	3		ACTUAL		
E180076-1	TEST CONS ECS	3		ACTUAL		
E180076-1	TEST CONS ECS	4		ACTUAL		
E180126-1	CO2 ABSORBER	4	A4-24-64	5-06-64	8-10-64	[illegible]

PART NUMBER	NOMENCLATURE	UNIT NO.	VENDOR W/S	AVAIL. FOR INSTL.	REC'D. FOR INSTL.	SLACK
			HANGAR			
E180126-1	CO2 ABSORBER	5	4-30-64	5-10-64	8-10-64	+13
E180126-1	CO2 ABSORBER	6	4-30-64	5-10-64	8-10-64	+13
E180004-3	SERV UNIT SC	2		ACTUAL		
E180021-3	DOLLY ECS PKG	1		ACTUAL		
E180021-3	DOLLY ECS PKG	2		ACTUAL		
E180021-3	DOLLY ECS PKG	3		ACTUAL		
E180026-1	CO2 ABSORBER	3		ACTUAL		
E180027-1	TEST SC LEAK	4		ACTUAL		
E180126-1	CO2 ABSORBER	3	4-30-64	5-10-64	8-10-64	+13

PART NUMBER	NOMENCLATURE	UNIT NO.	VENDOR W/S	AVAIL. FOR INSTL.	REQ'D. FOR INSTL.	STATUS
			HANGAR			
E180126-1	CO2 ABSORBER	5	4-30-64	5-10-64	8-10-64	[illegible]
E180126-1	CO2 ABSORBER	6	4-30-64	5-10-64	8-10-64	[illegible]
E180004-3	SERV UNIT SC	2		ACTUAL		
E180021-3	DOLLY ECS PKG	1		ACTUAL		
E180021-3	DOLLY ECS PKG	2		ACTUAL		
E180021-3	DOLLY ECS PKG	3		ACTUAL		
E180026-1	CO2 ABSORBER	3		ACTUAL		
E180027-1	TEST SC LEAK	4		ACTUAL		
E180126-1	CO2 ABSORBER	3	4-30-64	5-10-64	8-10-64	[illegible]

MONTHLY SUMMARY

SYSTEM: Guidance & Control
SUBSYSTEM: Attitude Display
VENDOR: Lear-Siegler
DATE: 24 April 1964
Page 1

ENGINEERING STATUS

1. During the month no major engineering problems occurred.

2. Reallocation of attitude indicators was accomplished between S/C 4, S/C 5, and Houston Trainers. This was done in order to facilitate the use of in-house equipment in S/C 4.

3. The AGE retrofits have been approved by MAC Engineering. This change will revise the AC Voltmeter in the test console to incorporate range changing (attenuator networks) for the milliameters in the flight director controller test panel. These networks, which can be individually selected by axis, will allow readings of 2 and 3 times the normal current in the roll channel and 2 times the normal current in the pitch and yaw channels.

   A transformer in the flight director controller test panel must be changed to provide a higher signal level. Estimate completion of retrofit early June.

ASSEMBLY & DELIVERY

1. During this and the previous reporting period, Lear shipped seven (7) flight director indicators and eight (8) Flight Director Controllers.

2. S/C 3A Status

   A. Controllers SN-203 and 204 in house at MAC. (Monthly Summary dated 20 March indicated that controller 200 was to be used for this craft. However, this controller has been installed in S/C 2).

   B. Indicator SN-103 is in house at MAC. Indicator SN-102 was again marginal during vibration test done in late March. The unit was rejected due to roll meter binding. Since this unit had a history of the same failure it was decided on 4-7 to replace the roll meter. The unit underwent rework and went into acceptance testing 20 April. During retesting a fogging problem occurred which necessitated changing the window. New estimate will ship to MAC 4-30.

3. S/C 3 Status

   A. Indicator SN's 104 and 105 are in house at MAC.

   B. Controllers SN-206 and 208 are in house at MAC.

4. SST 01A Status

   A. Indicator SN-106 and controller SN-207 are in house at MAC.

5. S/C 4 Status

   A. Indicator SN-109 in house at MAC. Indicator SN-108 was shipped from Lear 25 March.

B. Controllers SN-210 and 211 shipped to MAC 24 March.

6. HGR-02A (first requirement)

A. Indicator SN-107 failed to pass acceptance test 23 March and completed rework (roll meter adjustment) 7 April. Unit re-entered acceptance test and was shipped to MAC 14 April.

B. Controller SN-209 shipped to MAC 24 March.

7. S/C 5 Status

A. Indicator SN-111 completed acceptance test 8 April and was shipped to MAC 14 April. Shipment delayed due to re-allocation.

Indicator SN-113 completed acceptance test and was shipped to MAC 14 April.

B. Controllers SN-212 and 213 were shipped to MAC 24 March.

8. S/C 6 Status

A. Indicator SN 114 entered acceptance test 20 April. A slight meter hang-up problem was encountered. The unit was reworked and re-entered acceptance test. Estimate Will Ship 4-30.

B. Indicator SN 115 is in build-up stage (see Vendor Status Chart for estimated deliveries).

C. Controller SN 215 was shipped to MAC 24 March.

D. Controller SN-214 was completed final assembly and is expected to enter acceptance testing 27 April. Estimate Will Ship 5 May.

9. S/C 7 Status

A. Indicator SN-116 and 117 same disposition as 8 (B).

B. Controller SN-216 shipped to MAC 24 March. Controller SN-217 was shipped to MAC 31 March.

10. Houston Spare

A. Indicators SN's 110 and 112 passed acceptance test with MRR disposition. They were shipped 4-24-64. (to Houston)

B. Controllers SN 201 and 202 were shipped to Houston 20 Dec. 1963.

11. HGR 02A

A. Indicator SN-118 same disposition as 8 (B).

B. Controller SN-218 same disposition as 8 (B).

12. Controller SN-219 (presently allocated to S/C 8) and controller SN-220 (presently allocated to S/C 9) have both completed final assembly and are expected to enter acceptance test week of 4-27. Contractual [illegible] between Year and MAC will delay shipment until July.

TEST STATUS

1. Qual Test #1 (SN-001) unit completed humidity and shock 4 April, completing testing procedures.

2. Qual Test #2 (SN-005)
Completed Operational Life Test 1 April completing this testing procedure.

3. OSR (SN-005)
Unit entered reliability testing 6 April and completed this testing procedure 10 April.

4. With the completion of OSR, the entire Qual Test program has been completed. Qual Test reports being prepared at Lear and are expected to be delivered to MAC by end of April.

AGE STATUS

1. AGE retrofit as mentioned in Engineering Status (3) is expected to be complete by 15 June.

2. Cape AGE requirements, which were in-house at MAC, were sent to the Cape 25 March. The test console retrofit will be accomplished at this site.

3. Retrofitting of the test console in order to accomodate S/C hardware built to the newer configuration has necessitated the use of an interim test procedure. This interim test procedure, utilizing an attenuator box, is in final evaluation by MAC Engineering and is expected to be presented to NASA 4-27 (SEDR 363). This procedure has been checked out by MAC personnel and found to be acceptable. Submittal and approval of this interim test procedure has delayed in-house PIA testing of available S/C hardware.

4. It is now planned to send a prototype Attitude Display group (either the BSTU or CTU Units now in-house at MAC) to the Cape location for PIA AGE validation tests. Estimate Will Ship of these units to the Cape 25 May.

REALLOCATION

1. Reallocation which was accomplished (see Engineering Status "2") reflects the following changes:

(REALLOCATION)

TYPE	USAGE	S7N	W/S
PA-9	S/C 4	108	A03-25-64
PA-10	S/C 4	109	A03-13-64
PA-12	S/C 5	111	A04-14-64
PA-11	HOUSTON	110	A04-24-64
PA-13	HOUSTON	112	A04-24-64

(ORIGINAL ALLOCATION)

PA-11	S/C 4	110	A04-24-64
PA-12	S/C 4	111	A04-14-64
PA-13	S/C 5	112	A04-24-64

(ORIGINAL ALLOCATION)

TYPE	USAGE	S/N	W/S
PA-9	HOUSTON	108	A03-25-64
PA-10	HOUSTON	109	A03-13-64

NOTE: Indicators designated for Houston were shipped directly to Spare location.

GEMINI SPACECRAFT
CONTRACT NO. NAS 9-170

ATTITUDE DISPLAY - (VENDOR: LEAR-SIEGLER)

STATUS CHART

REPORT NO. 85804 -38
LAST PROGRAM SCHEDULE CHANGE: 24 April 1964
STATUS AS OF: 24 April 1964

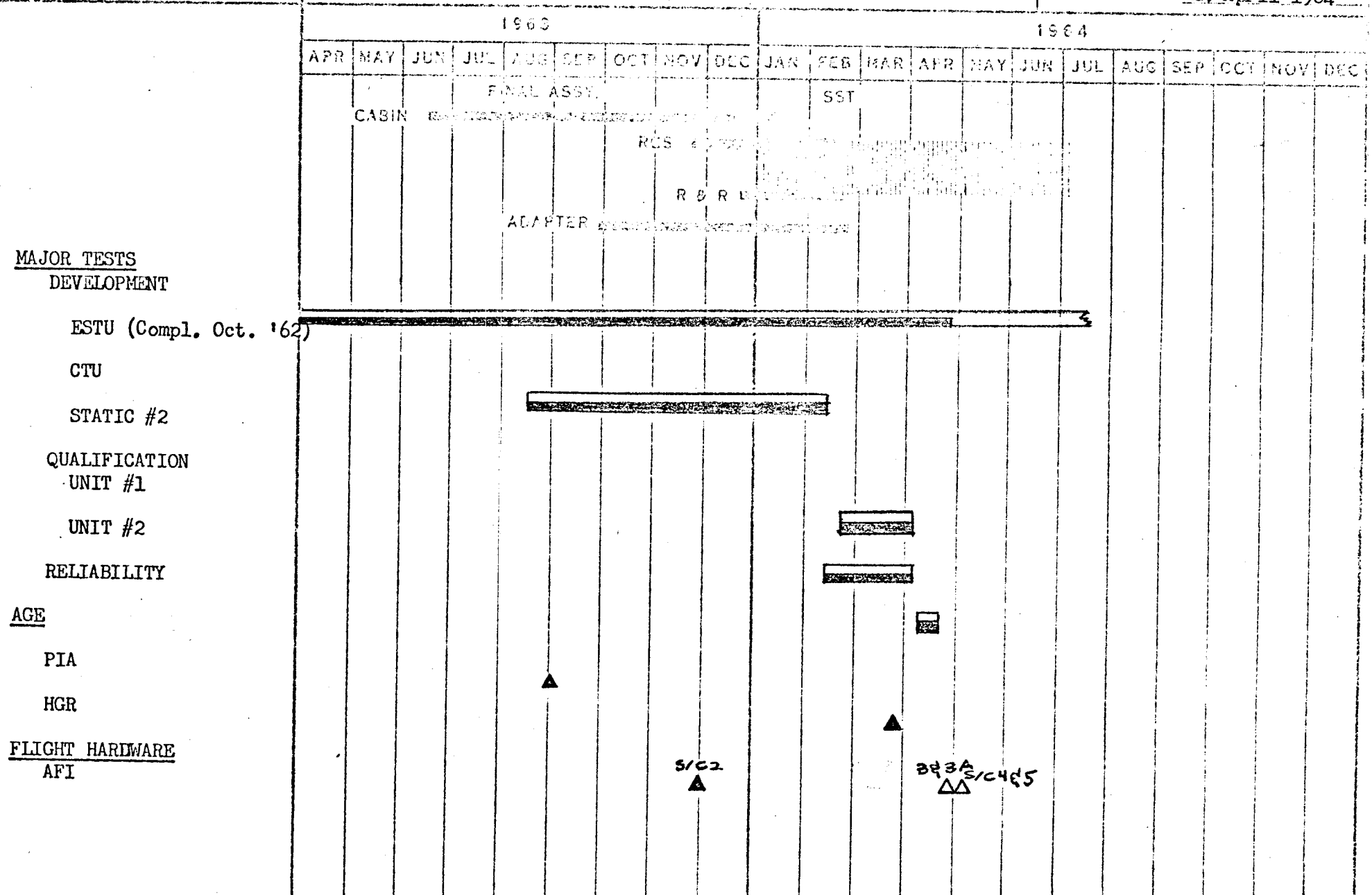

LEGEND
- ▽ Test Proposal Due
- ◊ Hardware Available
- □ Test Schedule
- O Report Due
- ☆ Report Approved

(SOLID INDICATES ACTUAL)

QUALIFICATION AND DEVELOPMENT TEST STATUS
ATTITUDE DISPLAY GROUP
LEAR-SIEGLER, INC.
SCD 52-87703

Date: 24 April 1964

-1964-

ACTIVITY	WEEK ENDING
1. Test Proposal Due	7-63 ▽
2.	
3. Test Hardware Available	
4. EM-1	7-62 ◊
5. PP-1 (Reworked-Encapsulated Modules)	
6. PP-2 (Reworked-Encapsulated Modules)	
7. Testing	
8. Development (EM-1)	
9.	
10. Qual I (S/N-001)	
11. Pressure	
12. Low Temp	
13. Vibration	
14. Acceleration	
15. RFI	
16. High Temp	
17. Humidity	
18. O_2 Atmos	
19. 44.7 G Shock	
20. Fungus	
21. Sand & Dust	
22. Rain	
23. Qual 2 (PP-2) (S/N-005)	
24. Salt Spray	
25. Operation Life	
26.	
27. Overstress Reliability	
28.	
29.	
30. Test Report Due (Qual)	
31.	
32. Test Report Approved	
33.	
34.	
35.	
36.	
37.	
38.	
39.	
40.	

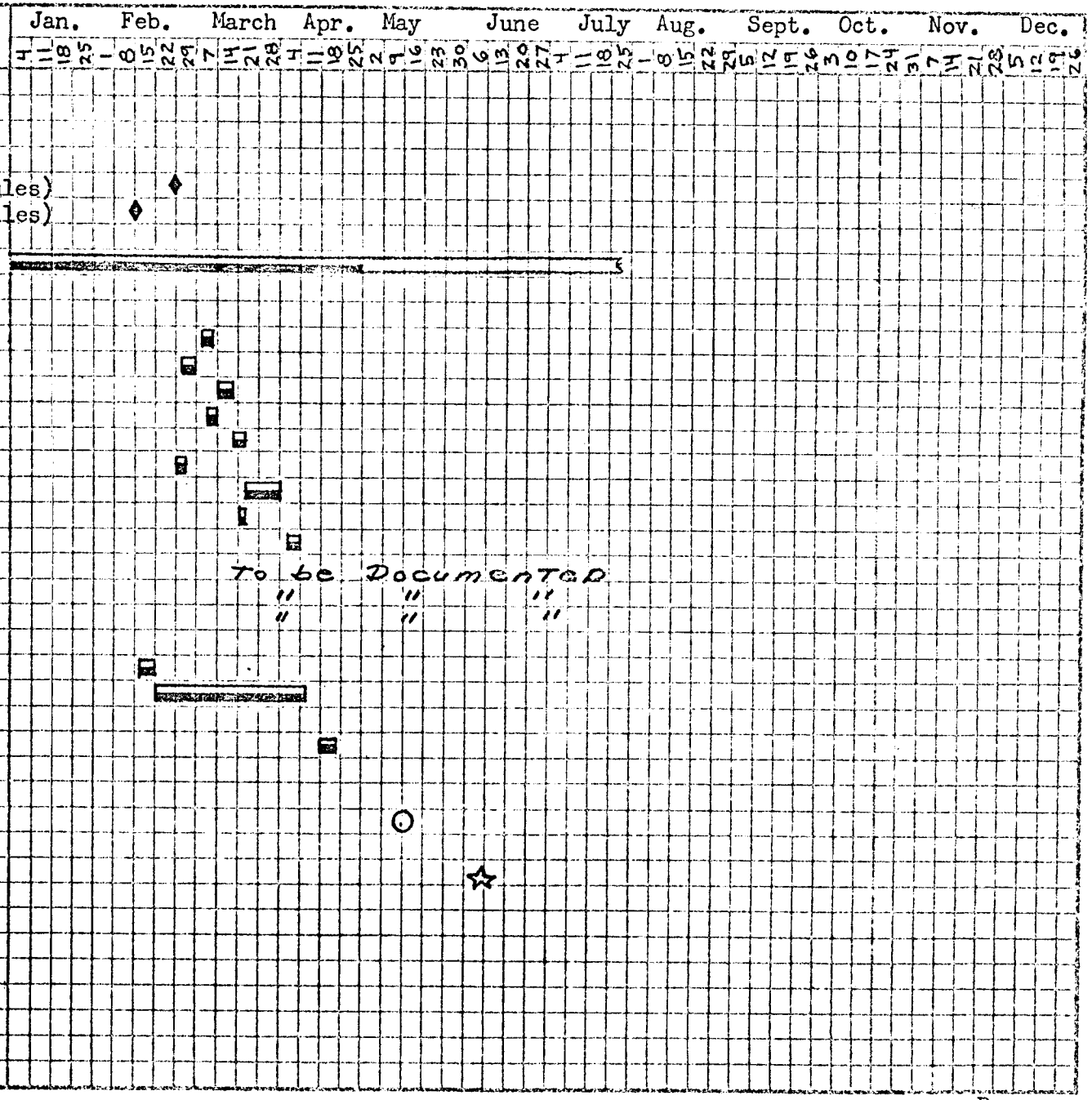

MAC 2274V (27 APR 59)

VENDOR DELIVERY STATUS REPORT

CHART NO. 11-C

SYSTEM - ATTITUDE DISPLAY

DATE: 24 April 1964

VENDOR - LEAR-SIEGLER

UNIT NO.	TYPE	USAGE	COMPONENT	VENDOR W/S	AVAIL. FOR INSTL.	REQ'D. FOR INSTL.	SLACK
1-2	EP-1-2	ESTU	INDICATORS			A10-08-63	
3-4	EP-1-2	ESTU	CONTROLLERS			A10-08-63	
5	EP-3	IBM	INDICATOR			A11-10-63	
6	EP-3	IBM	CONTROLLER			A11-10-63	
7-8	PP-1-2	QUAL	CONTROLLERS			A02-11-64	
9-10	PP-2-4	CTU	INDICATORS			A02-25-64	
11-12	PP-3-4	CTU	CONTROLLERS			A02-25-64	
13-14	PP-1-3	ST-2	INDICATORS		A08-26-63		
15-16	PA-1-2	S/C 2	INDICATORS			A02-24-64	
17-18	PA-5-6	S/C 2	CONTROLLERS			A02-24-64	
19	PA-3	S/C 3A	INDICATOR	04-30-64	05-05-64	05-08-64	0
20	PA-4	S/C 3A	INDICATOR	A02-25-64	05-05-64	05-08-64	0
21	PA-1	S/C 3A	CONTROLLER	A10-17-63	05-05-64	05-08-64	0
22	PA-4	S/C 3A	CONTROLLER	A11-08-63	05-05-64	05-08-64	0
23	PA-5	S/C 3	INDICATOR	A02-29-64	04-27-64	03-25-64	- 5
24	PA-6	S/C 3	INDICATOR	A03-06-64	04-27-64	03-25-64	- 5
25-26	PA-7-8	S/C 3	CONTROLLERS	A03-13-64	04-27-64	03-25-64	- 5
27	PA-7	SST SPARE	INDICATOR		A03-31-64	03-30-64	0
[illegible]	PA-9	SST SPARE	CONTROLLER		A03-25-64	03-30-64	+ 1
29	PA-8	HGR SPARE	INDICATOR		A04-14-64	04-30-64	+ 2
30	PA-10	HGR SPARE	CONTROLLER		A03-25-64	04-30-64	+ 5
31-32	PA-2-3	HOUSTON	CONTROLLERS		A12-30-63	04-30-64	+17
33	PA-11	HOUSTON	INDICATOR	A04-24-64	04-28-64	04-30-64	0
34	PA-13	HOUSTON	INDICATOR	A04-24-64	04-28-64	04-30-64	0
35-36	PA-9-10	S/C 4	INDICATORS	A03-25-64	05-10-64	06-02-64	+ [illegible]
37-38	PA-11-12	S/C 4	CONTROLLERS	A03-25-64	05-10-64	06-02-64	+ [illegible]
39-40	PA-12-14	S/C 5	INDICATORS	A04-14-64	05-19-64	08-20-64	+14
41-42	PA-13-14	S/C 5	CONTROLLERS	A03-25-64	05-19-64	08-20-64	+14
43	PA-19	HGR SPARE	INDICATOR	07-15-64	07-19-64	06-30-64	- [illegible]
44	PA-19	HGR SPARE	CONTROLLER	05-05-64	05-09-64	06-30-64	+ [illegible]
45-46	PA-15-16	S/C 6	INDICATORS	05-15-64	05-24-64	10-17-64	+2[illegible]
47-48	PA-15-16	S/C 6	CONTROLLERS	05-05-64	05-24-64	10-17-64	+2[illegible]
49-50	PA-17-18	S/C 7	INDICATORS	06-15-64	06-24-64	12-09-64	+2[illegible]
51-52	PA-17-18	S/C 7	CONTROLLERS	A03-31-64	06-24-64	12-09-64	+2[illegible]
53-54	PA-20-21	S/C 8	INDICATORS	08-15-64	08-24-64	02-04-65	[illegible]
55-56	PA-20-21	S/C 8	CONTROLLERS	07-15-64	08-24-64	02-04-65	[illegible]
57-58	PA-22-23	S/C 9	INDICATORS	09-15-64	09-24-64	04-02-65	[illegible]
59-60	PA-22-23	S/C 9	CONTROLLERS	07-15-64	09-24-64	04-02-65	[illegible]
61-62	PA-24-25	S/C 10	INDICATORS	10-15-64	10-24-64	05-26-65	[illegible]
63-64	PA-24-25	S/C 10	CONTROLLERS	09-15-64	10-24-64	05-26-65	[illegible]
65-66	PA-26-27	S/C 11	INDICATORS	11-15-64	11-24-64	07-28-65	[illegible]
67-68	PA-26-27	S/C 11	CONTROLLERS	10-15-64	11-24-64	07-28-65	[illegible]
69-70	PA-28-29	S/C 12	INDICATORS	12-15-64	12-24-64	09-21-65	[illegible]
[illegible]72	PA-28-29	S/C 12	CONTROLLERS	11-15-64	12-24-64	09-21-65	[illegible]

NOTE: 1. See AGE Status regarding PIA of S/C 3 and up.

VENDOR AGE STATUS REPORT

CHART NO. 11-D

SYSTEM - ATTITUDE DISPLAY

DATE: 24 April 196

VENDOR - LEAR-SIEGLER

PART NO.	COMPONENT	UNIT NO.	VENDOR NO. W/S	AVAIL. FOR USAGE	REQ'D. FOR USAGE	SLACK
		(PRE-INSTALLATION ACCEPTANCE)				
52E270035-1	PIA TEST CONSOLE	2		(1) A11-11-63		
52E270047-1	TEMPLATE ATT.	1		A11-11-63		
		(HANGAR)				
52E270035-1	TEST CONSOLE	1		(1) A03-25-64		
52E270047-1	TEMPLATE ATT.	2		A03-21-64		
		(SPACECRAFT SYSTEM TEST)				
52E270047-1	TEMPLATE ATT.	3		A09-24-63		

(1) Both Test Consoles will be retrofitted. Estimate completion of retrofit 6-15. (See AGE Status).

Chart No.: 2

MONTHLY SUMMARY

System: Spacecraft Structure
Subsystem: Heat Shield
Vendor: McDonnell E.E.D.
Date: 24 April 1964

1. Production progress on Heat Shields for the month of April is as follows:

SPACECRAFT NO. 4 - Ablative fill operations, final machining and cover completed, however, a large quantity of voids in fill were indicated by x-rays. Rework of these voids in process on a low priority basis. Estimated completion now 1 June 1964.

SPACECRAFT NO. 5 - Structural sandwich buildup complete thru post cure, x-ray and contour check. Ablative core profile completed 24 April 1964. Ablative fill operations will proceed on a low priority basis. Estimated completion now 14 July 1964.

MX - 2625 RINGS - Manufacturing operations were completed on 16 MX - 2625 FIBERITE rings, (4) of which have final machining operation completed.

PROBLEM AREAS - There are no known problem areas at this time.

VENDOR DELIVERY STATUS REPORT

SYSTEM: HEAT SHIELD

VENDOR: MCDONNELL AIRCRAFT

Unit Number	Type	Usage	Component	Avail For Instl	Req'd For Instl
1	PP-1	MAC	Development		A02-0[illegible]
2	PP-2	MAC	Development		A02-[illegible]
3	PA-1	STATIC-4			A0[illegible]
4	PA-2	STATIC-3			A05-[illegible]
5	PA-3	SC-1			A06-22-[illegible]
6	PA-4	SC-2R			A12-20-[illegible]
7	PA-5	STATIC-4(2)			A12-2[illegible]
8	PA-6	STATIC-3(2)			A12-0[illegible]
9	PA-7	SC-3			A02-[illegible]
10	PA-8	SC-4		06-01-64	07-20-64
11	PA-9	SC-5		07-14-64	[illegible]
12	PA-10	SC-6		11-24-64	[illegible]-64
13	PA-11	SC-7		01-12-65	[illegible]
14	PA-12	SC-8		03-05-65	03-12-[illegible]
15	PA-13	SC-9		05-0[illegible]-65	05-[illegible]
16	PA-14	SC-10		06-[illegible]-65	[illegible]
17	PA-15	SC-11		08-[illegible]-65	[illegible]
18	PA-16	SC-12		10-20-65	[illegible]

Static 1 and Static 2 [illegible] shield (52-0[illegible]12)

MONTHLY SUMMARY

SYSTEM: Communications
SUBSYSTEM: UHF Voice T/R
VENDOR: Collins Radio
Cedar Rapids, Iowa
DATE: 24 April 1964

ENGINEERING STATUS

1. Collins Radio and MAC engineering are presently discussing possible solutions to the sealing problem. The following changes in the sealing process are contemplated in order to eliminate the possibility of solder entering the evacuation tube during final sealing of the radio:

   A. Redesign of Teflon plug that is inserted into evacuation tube prior to soldering on cap.

   B. To have radio positioned, so that evacuation tube is on the bottom, during soldering of cap.

   C. In addition, the caps will only be used one time and will not be soldered into place for leak testing prior to the final seal.

2. UHF transmitter tuning over SCD temperature range is expected to be corrected when the T/C Capacitors from Aerovox Corporation are installed.

3. A hold on UHF radio SN-104 and up is still in effect pending acquisition of Argon Gas detection equipment by Collins Radio. Availability of this equipment is anticipated to be approximately 1 May 1964.

   A. The inability of the Mass Spectrometer to measure the Argon leak rate effectively necessitated the purchase of additional equipment. The designer of the Mass Spectrometer attempted to modify his equipment to measure Argon, but the equipment was unable to make accurate measurements of the leak rate.

4. MAC Engineering concurred to a two ounce increase in weight of the UHF T/R's. MAC Engineering believes that the increased weight limit from 50 ounces to 52 ounces, due to the bottom flatness fix, is justified by the shielding effect of the added shims and the surface flatness gained.

PROCUREMENT STATUS

1. Collins Radio expects to receive their shipment of T/C Capacitors from Aerovox Corporation the week of 27 April 1964. Aerovox is scheduled to ship the capacitors to Collins 24 April 1964.

ASSEMBLY & DELIVERY STATUS

1. SN-101 and SN-102 were installed in SC-3 23 March 1964.

2. SN-103 (SC-3A) was out of specification in weight following its PDA test at Collins. MAC's agreement to the weight increase, paragraph four under Engineering eliminated this out of specification condition and allowed SN-103 to be shipped to MAC 17 April 1964. SN-103 is expected to be available for installation in SC-3A 1 May 1964.

   A. SN-103 met all of the electrical requirements of the SCD but did not have the T/C Capacitor installed, did not meet the flatness requirement of .020 and helium gas was used for leak detection instead of Argon. SN-103 was made to a -11 configuration.

3. The tentative PDA test schedule at Collins for SN-104 (SC-3A) is approximately 15 May 1964. Collins Radio will decide upon a firm will ship schedule for SN-104 and up following receipt and installation of the Argon leak detection equipment.

   A. A hold is in effect SN-104 and up pending acquisition of the Argon Gas detection equipment and receipt of the T/C Capacitors.

   B. SN-104 and up will be identified to a new dash number (-13). This configuration will contain the new T/C Capacitors, have the flatness fix incorporated and Argon will be used for measurement of the leak rate.

TEST STATUS

1. SN-13 will begin Reliability Assurance Testing approximately the week of 11 May after receipt of T/C Capacitors from Aerovox.

2. SN-12 completed approximately one half of the Overstress Reliability Test (the Vibration portion) on 13 April 1964. The temperature portion is yet to be run. The T/R operated satisfactorily during all three planes which indicates that the design changes made after the DAT did not affect the ability of the T/R to stand vibration.

3. The Qual and Reliability reports are currently in rough draft form. Both reports are expected to be submitted to MAC approximately 3 July 1964.

AGE STATUS

1. The FAD on the UHF Recovery Beacon was successfully performed 17 April 1964. The UHF Recovery Beacon was the final system requiring the UHF PIA Bench for its FAD.

GEMINI SPACECRAFT
CONTRACT NO. NAS 9-170

UHF VOICE T/R (VENDOR: COLLINS RADIO)

STATUS CHART

REPORT NO. 65554 -38
LAST PROGRAM SCHEDULE CHANGE 24 April 1964
STATUS AS OF 24 April 1964

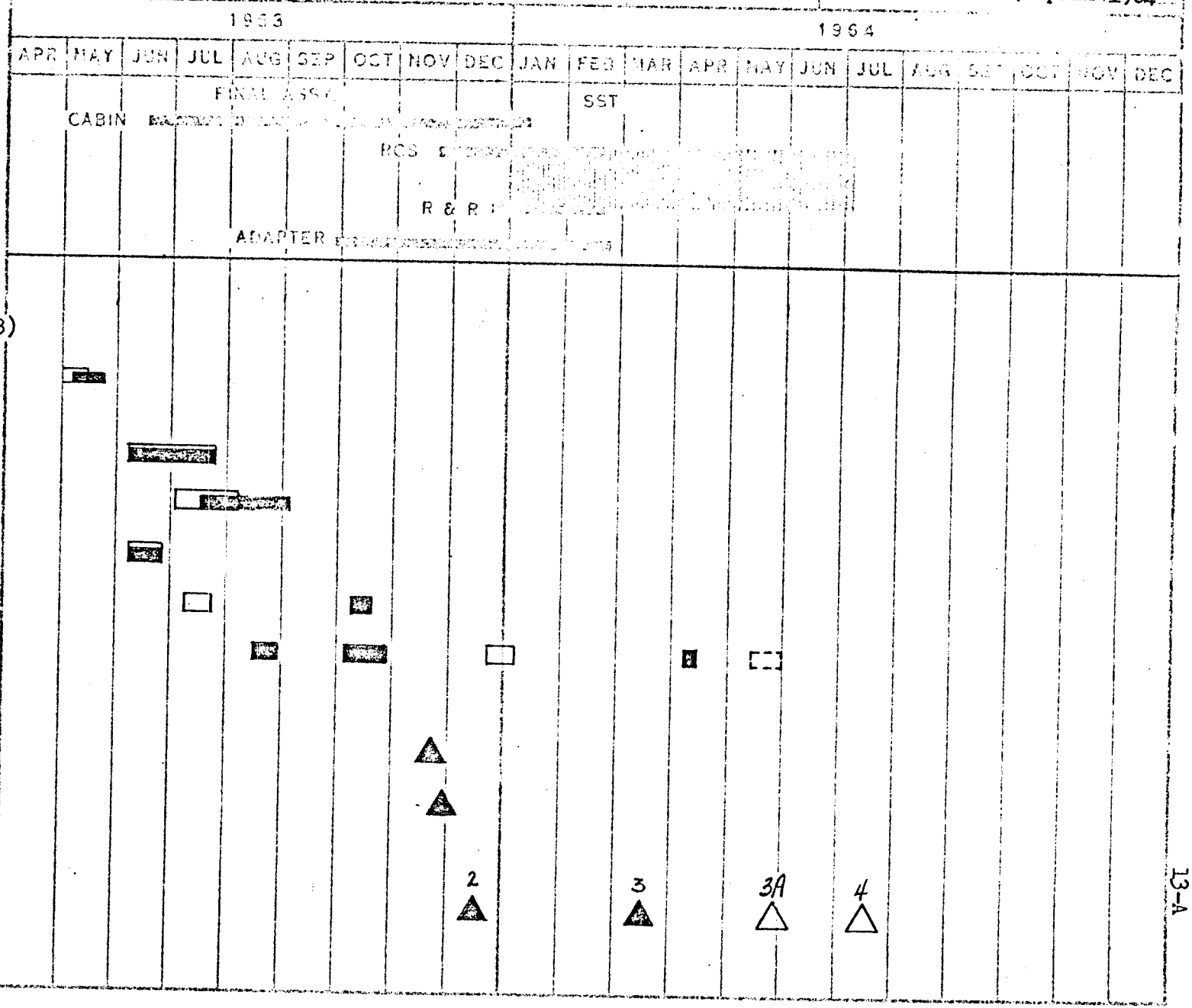

LEGEND
- ▽ TEST PROPOSAL DUE
- ◊ HARDWARE AVAIL.
- ▭ TEST SCHEDULE
- ○ REPORT DUE
- ✡ REPORT APPROVED

SOLID INDICATES ACTUAL

QUALIFICATION AND DEVELOPMENT TEST STATUS

UHF VOICE T/R
COLLINS RADIO COMPANY
SCD 52-85709

8580-1-38
24 April 1964
24 April 1964

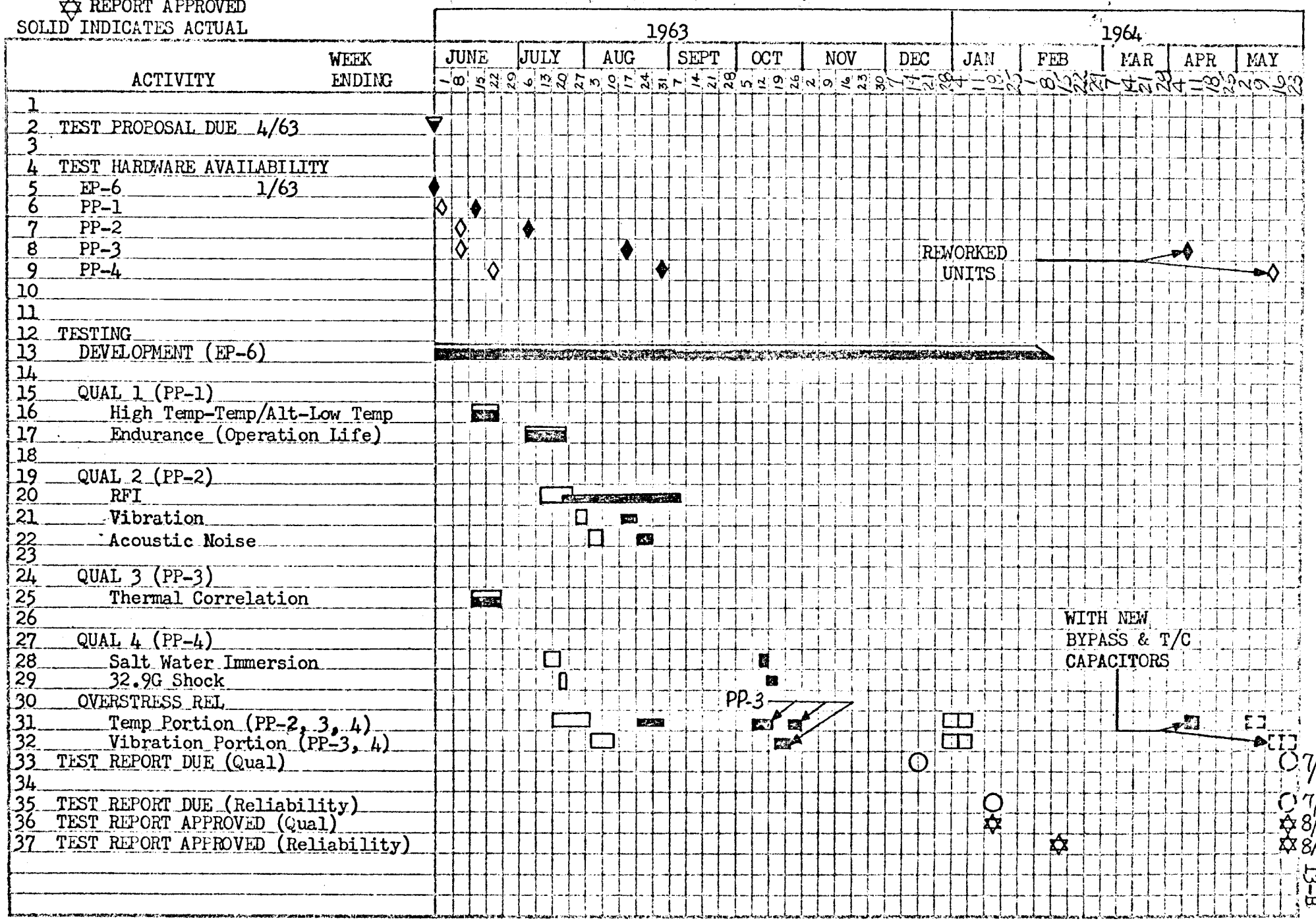

NAC 2274V (27 APR 59)

VENDOR DELIVERY STATUS REPORT
UHF VOICE T/R
COLLINS

CHART NO: [illegible]

DATE: [illegible]

UNIT NO	TYPE	S/N	USAGE COMPONENT	VENDOR W/S	AVAIL FOR INSTL	REQ'D FOR INSTL	SLACK
1	EP-1	1	ESTU			A03-01-63	
2	EP-2	2	ESTU			A03-01-63	
3	EP-3	3	CTU			A04-26-63	
4	EP-4	4	CTU			A04-26-63	
5	EP-5	5	ST-5			A11-19-63	
6	PP-1	10	VENDOR QUAL			A06-03-63	
7	PP-2	11	VENDOR QUAL			A08-01-63	
8	PP-3	12	VENDOR QUAL			A08-13-63	
8	PP-3	12	VENDOR REL.	*A04-09-64		A12-22-63	
9	PP-4	13	VENDOR QUAL			A08-29-63	
9	PP-4	13	VENDOR REL.			A12-22-63	
10	PP-5	14	ST-5	*05-13-64		A11-29-63	
11	PA-1	100	SC-2			A12-15-63	
12	PA-2	101	SC-3			A03-23-64	
13	PA-3	102	SC-3			A03-23-64	
14	PA-4	103	SC-3A	A04-17-64	05-01-64	04-10-64	[illegible]
15	PA-5	104	SC-3A	05-22-64	05-29-64	04-10-64	[illegible]
16	PA-6	105	SPARE (SST)	06-05-64	06-12-64	02-28-64	[illegible]
17	PA-7	106	SPARE (HGR)	06-19-64	06-26-64	04-30-64	[illegible]
18	PA-8	107	SC-4	07-01-64	07-08-64	04-21-64	[illegible]
19	PA-9	108	SC-4	07-10-64	07-17-64	04-21-64	[illegible]
20	PA-10	109	SC-5	07-22-64	07-29-64	07-15-64	[illegible]
21	PA-11	110	SC-5	07-31-64	08-07-64	07-15-64	[illegible]
22	PA-12	111	SPARE (SST)	08-12-64	08-19-64	03-31-64	[illegible]
23	PA-13	112	SPARE (HGR)	08-21-64	08-28-64	06-30-64	[illegible]
24	PA-14	113	SC-6	09-04-64	09-11-64	09-17-64	[illegible]
25	PA-15	114	SC-6	09-18-64	09-25-64	09-17-64	[illegible]
26	PA-16	115	SPARE (SST)	10-02-64	10-09-64	04-30-64	[illegible]
27	PA-17	116	SPARE (HGR)	10-16-64	10-23-64	07-31-64	[illegible]
28	PA-18	117	SC-7	10-30-64	11-06-64	11-15-64	[illegible]
29	PA-19	118	SC-7	11-11-64	11-18-64	11-15-64	[illegible]
30	PA-20	119	**SPARE (MACOIP)	11-20-64	11-27-64	04-30-64	[illegible]
31	PA-21	120	SC-8	12-02-64	12-09-64	01-04-65	[illegible]
32	PA-22	121	SC-8	12-11-64	12-18-64	01-04-65	[illegible]
33	PA-23	122	SC-9	12-23-64	12-30-64	03-03-65	[illegible]
34	PA-24	123	SC-9	01-04-65	01-11-65	03-03-65	[illegible]
35	PA-25	124	SC-10	01-13-65	01-20-65	04-23-65	[illegible]
36	PA-26	125	SC-10	01-22-65	01-29-65	04-23-65	[illegible]
37	PA-27	126	SC-11	01-29-65	02-05-65	06-24-65	[illegible]
38	PA-28	127	SC-11	02-05-65	02-12-65	06-24-65	[illegible]
39	PA-29	128	SC-12	02-12-65	02-19-65	08-19-65	[illegible]
40	PA-30	129	SC-12	02-19-65	02-26-65	08-19-65	[illegible]
41	PA-31	130	ST-2	02-26-65	————	————	
42	PA-32	131	ST-2	03-05-65	————	————	
43	PA-33	132	MISCELLANEOUS	03-12-65	————	————	

* Rework to incorporate bypass and T/C Capacitors prior to Reliability Assurance Test.

** ST 5 Spare (Stocked at MAC St. Louis).

VENDOR AGE STATUS REPORT
COMMUNICATION SYSTEM
COLLINS

CHART NO: 1-
14-
15-
DATE: 4-24-64

PART NUMBER	NOMENCLATURE	UNIT NO	VENDOR W/S	AVAIL FOR USAGE	RIQ'D FOR USAGE	STAT
			PRE-INSTALLATION ACCEPTANCE			
E190002-1	PIA BENCH UHF	1		*A11-29-63		
E190001-1	PIA BENCH HF	1		A01-23-64		
(E190001-1)	PIA BENCH VCC	1		**A02-12-64		
			HANGAR			
E190028-1	TB-UHF-PIA	1		A11-29-63		
E190028-1	TB-HF-PIA	1		A01-23-64		
E190028-1	TB-VCC-PIA	1		A02-08-64		

* The FAD on the UHF Voice T/R, Telemetry Transmitter, UHF Recovery Beacon, and the Acquisition Aid Beacon has been approved.

** The FAD on the PIA Bench VCC was officially approved 11 March 1964.

MONTHLY SUMMARY

SYSTEM: Communications
SUBSYSTEM: HF Voice T/R
VENDOR: Collins Radio
Cedar Rapids, Iowa
DATE: 24 April 1964

ENGINEERING STATUS

1. The sealing problem affecting the UHF radio will also affect the HF radio. The contemplated changes in the sealing process of the UHF radio (paragraph 1, UHF Monthly Narrative) also apply to the HF radio. The change which Collins believes will give the most assurance of solving the problem is: to increase the length of the Teflon Plug that is inserted into the evacuation tube and also have several size diameter plugs available so that a snug fit is possible in all cases. These proposed changes have not been approved as yet and a hold is in effect for HF radios SN-101 and SN-104 and up.

   A. The problem of solder entering into the radio during sealing of the evacuation tube was again evident during post seal testing of HF T/R SN-101.

   B. Initial inspection of the returned unit disclosed that solder balls were not present in the unit. During rework of SN-101 a new chasis incorporating the redesigned evacuation tube was installed and the radio was sealed with the revised sealing process.

   C. During testing of the transmitter a malfunction was observed when, intermittently, the transmitter could not be keyed. The cover was removed and a solder splash was found on the lead of a resistor connected to a terminal of the transmitt/receive relay. When the solder splash was removed, the transmitter operated normally.

2. A hold on production of all HF radios SN-104 and up is also in effect pending receipt of Argon Gas detection equipment by Collins Radio. Collins expects to receive this equipment by 1 May 1964.

3. The maximum weight specification for the HF radios was also increased two ounces from 62 ounces to 64 ounces, during the reporting period.

ASSEMBLY & DELIVERY STATUS

1. The last unit shipped by Collins to MAC was SN-103 on 27 February 1964. The next unit expected to be shipped is SN-101 SC-3 Adapter (retrofit) on approximately 1 May 1964.

   A. The problem of solder balls in HF radios was first noticed during past seal testing of HF T/R SN-102. This resulted in the evacuation tube being redesigned and the sealing process changed.

   B. SN-101 HF T/R was returned to Collins 5 February 1964 for inspection to see if solder balls were present in the radio. A firm fix solving the current sealing problem (Engineering - paragraph 1) is necessary before SN-101 will begin PDA testing. Collins Radio will be unable to give a firm will ship or PDA test schedule until the corrective action has been put into practice.

2. SN-104 (SC-3A) is expected to be shipped following SN-101. SN-104 is expected to be shipped to MAC approximately 22 May 1964.

   A. The decision to use Argon Gas in the leak detection method and the subsequent delay in acquiring the necessary measuring equipment has contributed to detain Collins' delivery effort.

TEST STATUS

1. The Qual and Reliability test reports are expected to be shipped to MAC during the month of July. They are presently in rough draft form.

GEMINI SPACECRAFT

CONTRACT NO. NAS 9-170

HF VOICE T/R - (VENDOR: COLLINS RADIO)

STATUS CHART

REPORT NO. [illegible] -38

LAST PROGRAM SCHEDULE [illegible] 24 April 1964

STATUS AT 24 April 1964

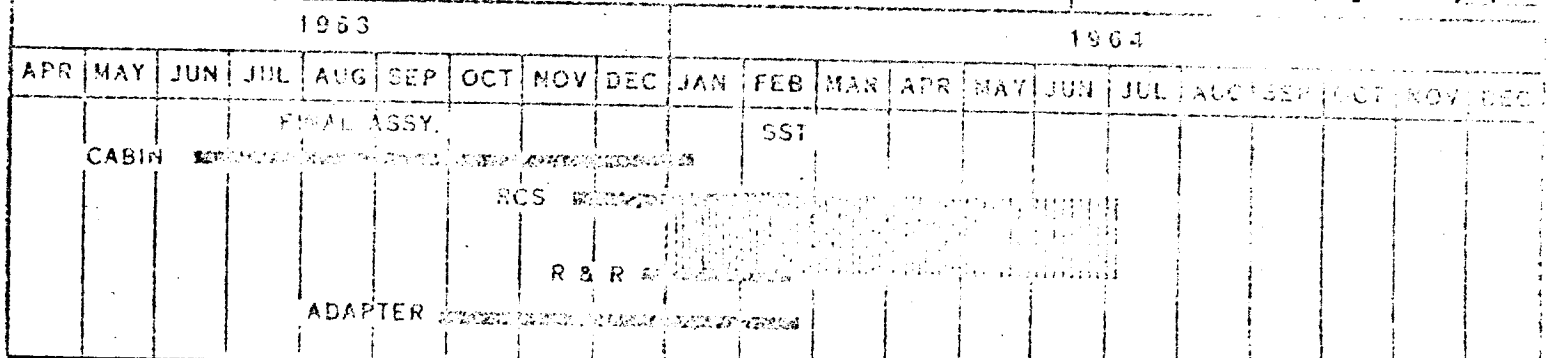

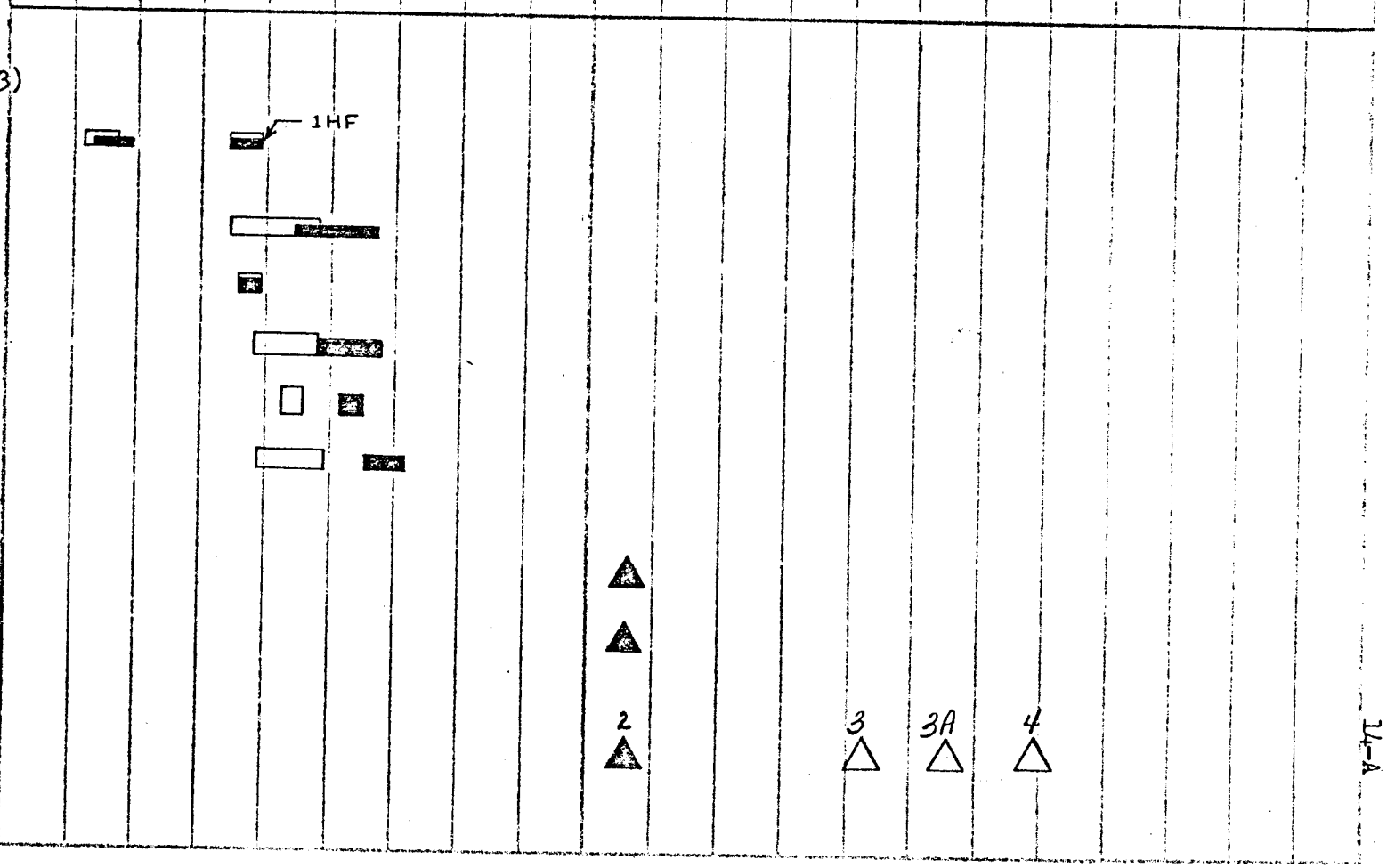

LEGEND
- ▽ TEST PROPOSAL DUE
- ◊ HARDWARE AVAIL.
- ▭ TEST SCHEDULE
- ○ REPORT DUE
- ✡ REPORT APPROVED

SOLID INDICATES ACTUAL

QUALIFICATION AND DEVELOPMENT TEST STATUS

HF VOICE T/R
COLLINS RADIO COMPANY
SCD 52-85710

8580-1-38
24 April 1964
24 April 1964

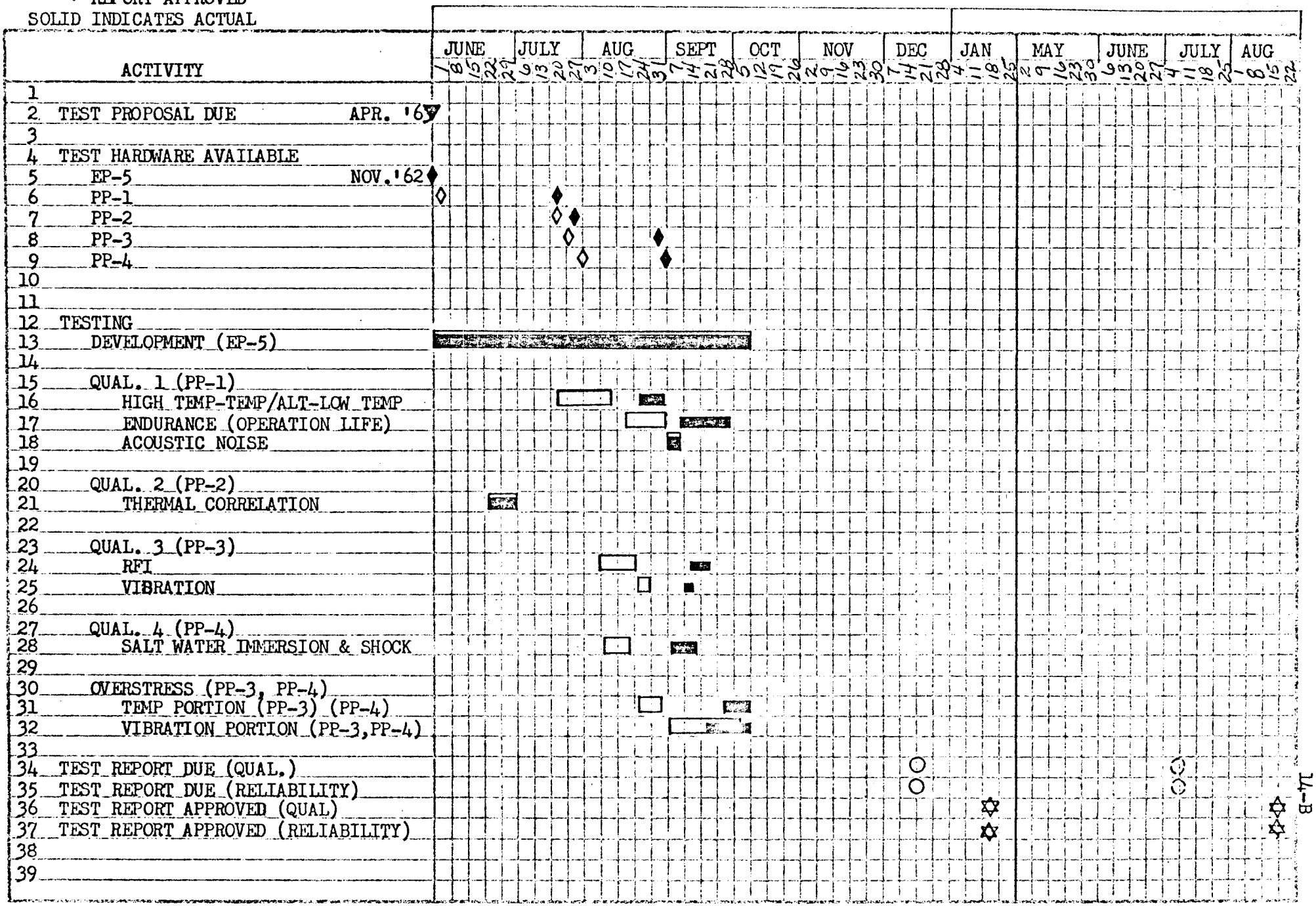

VENDOR DELIVERY STATUS REPORT
HF VOICE I/R
COLLINS

SHEET NO: [illegible]

DATE: [illegible]

UNIT NO	TYPE	S/N	USAGE COMPONENT	VENDOR W/S	AVAIL FOR INSTL	REQ'D FOR INSTL	SLIP
1-2	EP-1+2	1-2	ESTU			A12-07-62	
3-4	EP-3+4	3-4	CTU			A04-08-63	
5	EP-5	5	VENDOR DEVELOPMENT			A04-15-63	
6	PP-1	10	VENDOR QUAL			A08-12-63	
7	PP-2	11	VENDOR QUAL			A08-21-63	
8	PP-3	12	VENDOR QUAL			A08-29-63	
9	PP-4	13	VENDOR QUAL			A08-29-63	
10	PP-5	14	ST-5			A11-19-63	
11	PA-3	102	SC-2			A02-05-64	
12	PA-1	**100	SPARE (HOU03E) ST-5			A02-27-64	
13	PA-4	103	SC-3			A03-05-64	
14	PA-2	*101	SC-3 (AD)	05-01-64	05-08-64	04-02-64	[illegible]
15	PA-5	104	SC-3A	05-22-64	05-29-64	04-10-64	[illegible]
16	PA-6	105	SC-3A (AD)	06-10-64	06-17-64	04-20-64	[illegible]
17	PA-7	106	SPARE (SST)	06-19-64	06-26-64	01-31-64	[illegible]
18	PA-8	107	SPARE (HGR)	07-03-64	07-10-64	04-30-64	[illegible]
19	PA-9	108	SC-4	07-15-64	07-22-64	04-21-64	[illegible]
20	PA-10	109	SC-4 (AD)	07-24-64	07-31-64	07-06-64	[illegible]
21	PA-11	110	SPARE (SST)	08-05-64	08-12-64	03-31-64	[illegible]
22	PA-12	111	SC-5	08-14-64	08-21-64	07-15-64	[illegible]
23	PA-13	112	SPARE (SST)	08-26-64	09-02-64	04-30-64	[illegible]
24	PA-14	113	SPARE (HGR)	09-04-64	09-11-64	06-30-64	[illegible]
25	PA-15	114	SC-5 (AD)	09-16-64	09-23-64	09-08-64	[illegible]
26	PA-16	115	SC-6	09-25-64	10-02-64	09-17-64	[illegible]
27	PA-17	116	SPARE (HGR)	10-09-64	10-16-64	07-31-64	[illegible]
28	PA-18	117	AD-13	10-16-64	10-23-64	12-02-64	[illegible]
29	PA-19	118	SC-6 (AD)	10-30-64	11-06-64	11-23-64	[illegible]
30	PA-20	119	SC-7	11-13-64	11-20-64	11-15-64	[illegible]
31	PA-21	120	SC-7 (AD)	11-18-64	11-25-64	01-02-65	[illegible]
32	PA-22	121	SC-8	11-27-64	12-04-64	01-04-65	[illegible]
33	PA-23	122	SC-8 (AD)	12-09-64	12-16-64	02-06-65	[illegible]
34	PA-24	123	SC-9	12-23-64	12-30-64	02-03-65	[illegible]
35	PA-25	124	SC-10	01-06-65	01-13-65	04-23-65	[illegible]
36	PA-26	125	SC-9 (AD)	01-15-65	01-22-65	04-26-65	[illegible]
37	PA-27	126	SC-10 (AD)	01-22-65	01-29-65	06-17-65	[illegible]
38	PA-28	127	SC-11	01-29-65	02-05-65	06-24-65	[illegible]
39	PA-29	128	SC-11 (AD)	02-05-65	02-12-65	08-14-65	[illegible]
40	PA-30	129	SC-12	02-12-65	02-19-65	08-19-65	[illegible]
41	PA-31	130	SC-12 (AD)	02-19-65	02-26-65	10-07-65	[illegible]
42	PA-32	131	AD-14	02-26-65	03-04-65	11-29-65	[illegible]
43	PA-33	132	AD-15	03-05-65	03-12-65	01-27-66	[illegible]
44	PA-34	133	MISCELLANEOUS	03-12-65	----------	----------	

AD - Adapter

* Returned to vendor for solder ball check and rework to -11 configuration.

** Shipped to Houston as a back-up unit for SE-5.

TEST STATUS

1. The Salt Fog test is now scheduled for the week of 18 May 1964.

2. The Qual and Reliability test reports are expected to be sent to MAC during the month of July. Both reports are currently in rough draft form.

SPACECRAFT

CONTRACT NO. NAS 9-170

VOICE CONTROL CENTER (VENDOR: COLLINS RADIO)

STATUS CHART

REPORT NO. STATUS -38

LAST PROGRESS

SCHEDULE CHANGE 24 April 1964

STATUS AS 24 April 1964

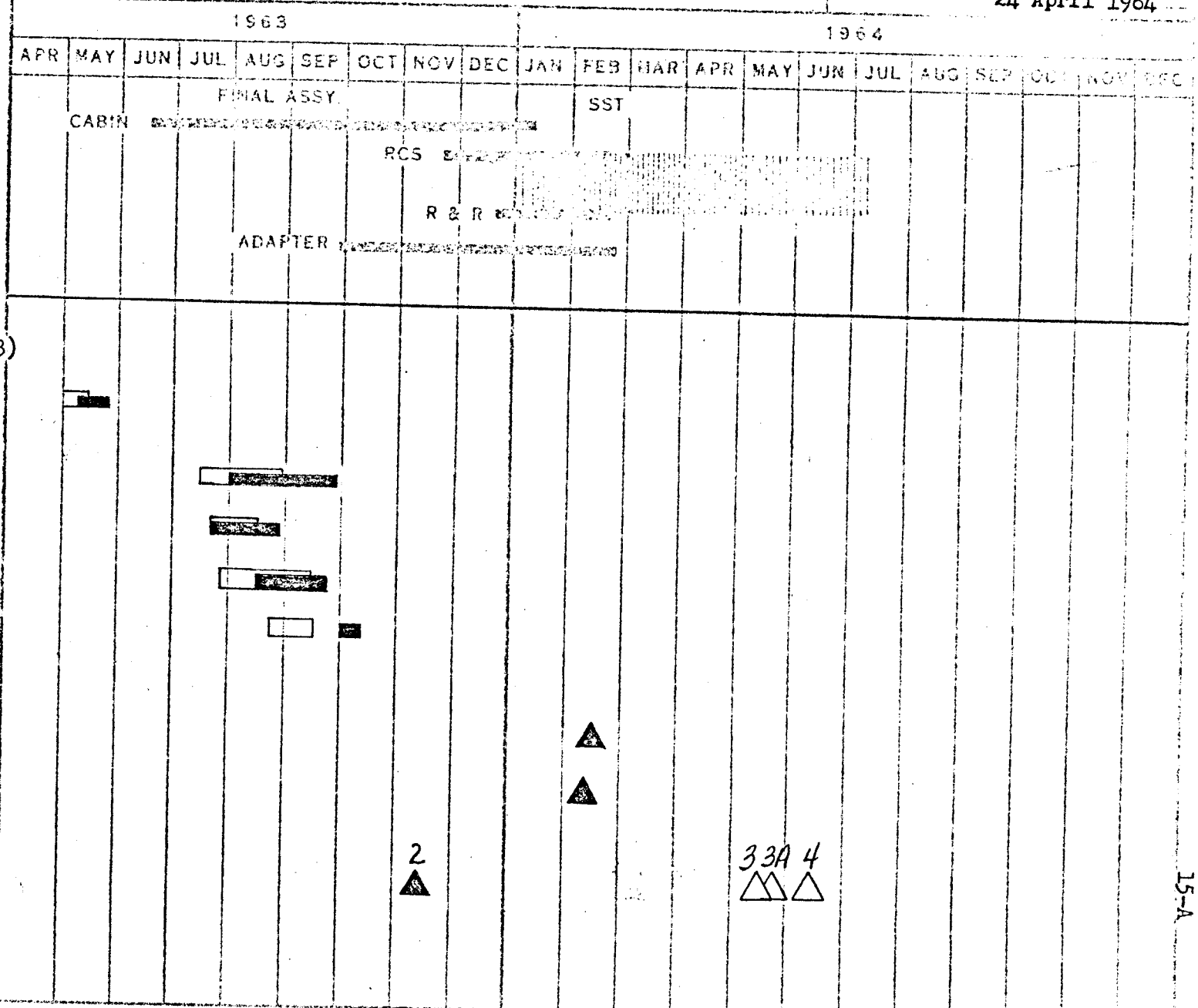

MAJOR TESTS

1 DEVELOPMENT
2 ESTU (100% ON 1-26-63)
3
4 CTU
5
6 QUALIFICATION
7 TEST 1
8
9 TEST 2
10
11 TEST 3
12
13 RELIABILITY
14
15
16 AGE AVAILABILITY
17 PIA
18
19 CAPE C/O (HGR)
20
21
22 FLIGHT HARDWARE
23 AFI
24
25
26

QUALIFICATION AND DEVELOPMENT TEST STATUS

VOICE CONTROL CENTER
COLLINS RADIO COMPANY
SCD 52-85712

8580-1-38
24 April 1964
24 April 1964

EGEND

- ▽ TEST PROPOSAL DUE
- ◊ HARDWARE AVAIL.
- ▭ TEST SCHEDULE
- ○ REPORT DUE
- ✡ REPORT APPROVED

SOLID INDICATES ACTUAL

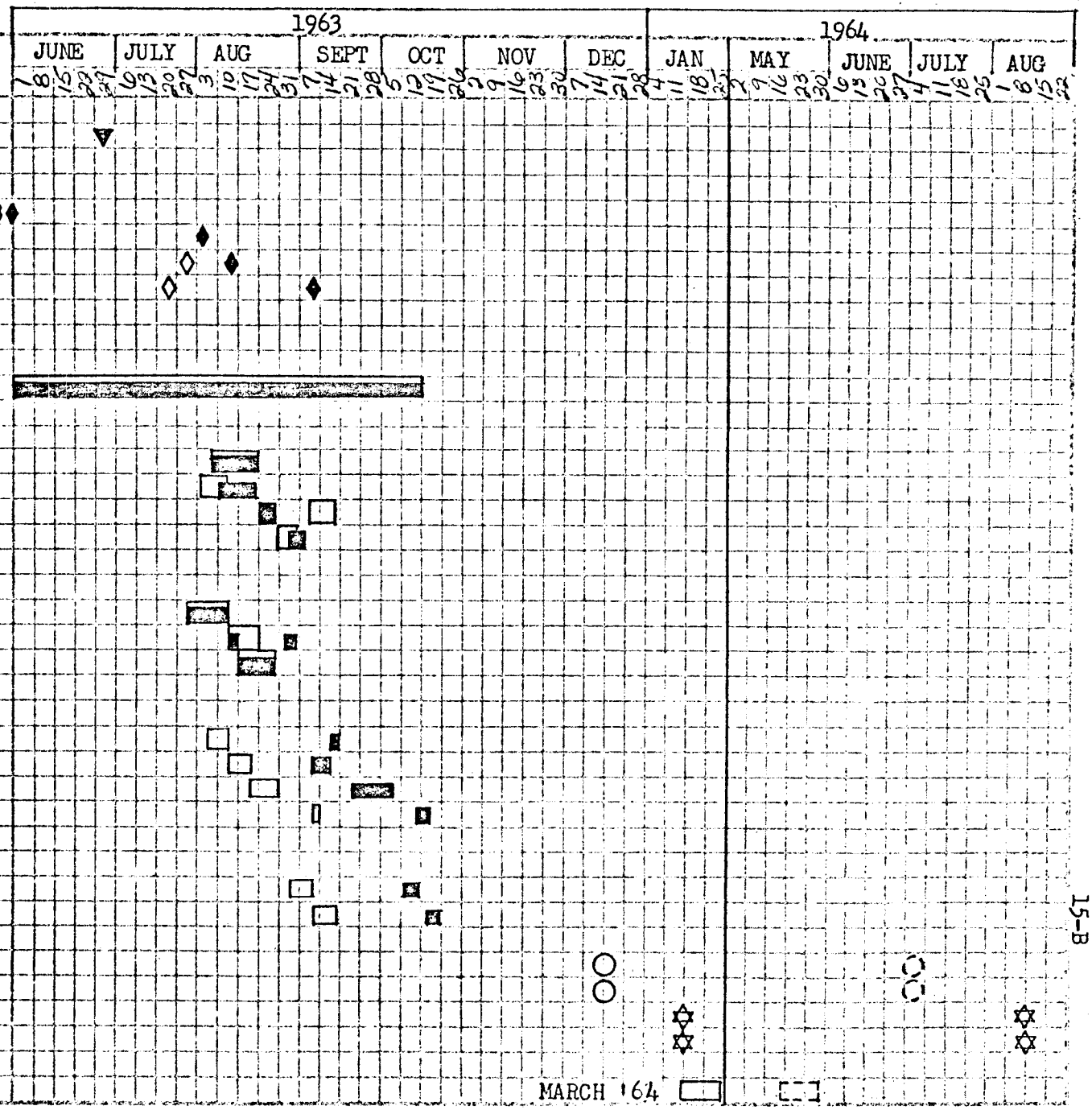

MAC 2274V (27 APR 59)

VENDOR DELIVERY STATUS REPORT
VOICE CONTROL CENTER
COLLINS

CHART NO: 15-C

DATE: 4-24-64

UNIT NO	TYPE	S/N	USAGE COMPONENT	VENDOR W/S	AVAIL FOR INSTL	REQ'D FOR INSTL	SLACK
1	EP-1	1	ESTU			A01-23-63	
2	EP-4	4	VENDOR ENGR. QUAL			A01-24-63	
3	EP-2	2	CTU			A04-15-63	
4	EP-3	3	ST-5			A11-13-63	
5	PP-1	10	VENDOR QUAL			A07-29-63	
6	PP-2	11	VENDOR QUAL			A08-08-63	
7	PP-3	12	VENDOR QUAL			A09-05-63	
8	PP-4	13	SC-2			A11-25-63	
9	PA-2	*101	SC-3	05-08-64	05-15-64	03-10-64	- 9
10	PA-9	108	SC-3A	05-15-64	05-22-64	05-20-64	0
11	PA-10	109	SPARE (SST)	05-22-64	05-29-64	01-31-64	-17
12	PA-4	*103	SC-4	06-05-64	06-12-64	04-30-64	- 6
13	PA-3	*102	SPARE (HGR)	06-19-64	06-26-64	04-30-64	- 8
14	PA-7	*106	SPARE (SST)	07-03-64	07-10-64	03-31-64	-14
15	PA-6	*105	SPARE (HGR)	07-17-64	07-24-64	06-30-64	- 3
16	PA-1	*100	SC-5	07-31-64	08-07-64	07-22-64	- 2
17	PA-8	*107	SC-6	08-14-64	08-21-64	09-18-64	+ 4
18	PA-5	*104	SC-7	08-28-64	09-04-64	11-06-64	+ 9
19	PA-11	110	SC-8	09-16-64	09-23-64	01-05-65	+15
20	PA-12	111	SC-9	10-02-64	10-09-64	03-03-65	+21
21	PA-13	112	SC-10	10-21-64	10-28-64	04-23-65	+28
22	PA-14	113	SC-11	11-06-64	11-13-64	06-24-65	+34
23	PA-15	114	SC-12	11-25-64	12-02-64	08-19-65	+40
24	PA-16	**115	ST-2	12-11-64	———	———	
25	PA-17	**116	ST-2 (PAR07B)	12-30-64	———	———	

* To be returned to Collins for repair (rework of Astro Mode Switches).
** ST-2 is currently on stop order (waiting to be established as a firm delivery requirement).

SYSTEM: Communications
SUBSYSTEM: Digital Command
VENDOR: Motorola
Scottsdale, Arizona
DATE: 24 April 1964

MONTHLY SUMMARY

ENGINEERING STATUS

1. The SCD has been revised to require Motorola to modify the dual receiver. This modification effective in S/N 102 and up will result in the desired system performance when either of the two dual receivers is operating unquieted. Receiver Decoders that have been modified in accordance with this change will have the MAC part number 52-85714-25.

ASSEMBLY AND DELIVERY STATUS

1. S/N's 102, 103, and 104 will be returned to Motorola for retrofit. These units will be inserted into the Vendor Delivery Schedule (Chart 16-C) as soon as realistic dates are determined for their delivery following retrofit.

2. Motorola is expected to deliver the first Digital Command System (S/N 105) with the dual receiver interference fix incorporated on 20 May. It is anticipated Motorola will be able to deliver one unit every three weeks after this date.

3. During this reporting period there were no Digital Command Systems delivered. Modules and frame assemblies have been fabricated during this interval.

4. Motorola has indicated they have all components needed to assemble through S/N 111. Definite commitments regarding delivery dates have not been received from their suppliers for delivery of some components (i.e. transistors, capacitors, and VCO's) needed for S/N 112 and up.

GEMINI SPACECRAFT
CONTRACT NO. NAS 9-170

DIGITAL COMMAND SYSTEM - (VENDOR: MOTOROLA)

STATUS CHART

REPORT NO. 8580-1-38
LAST PROGRAM SCHEDULE CHANGE 24 April 1964
STATUS AS OF 24 April 1964

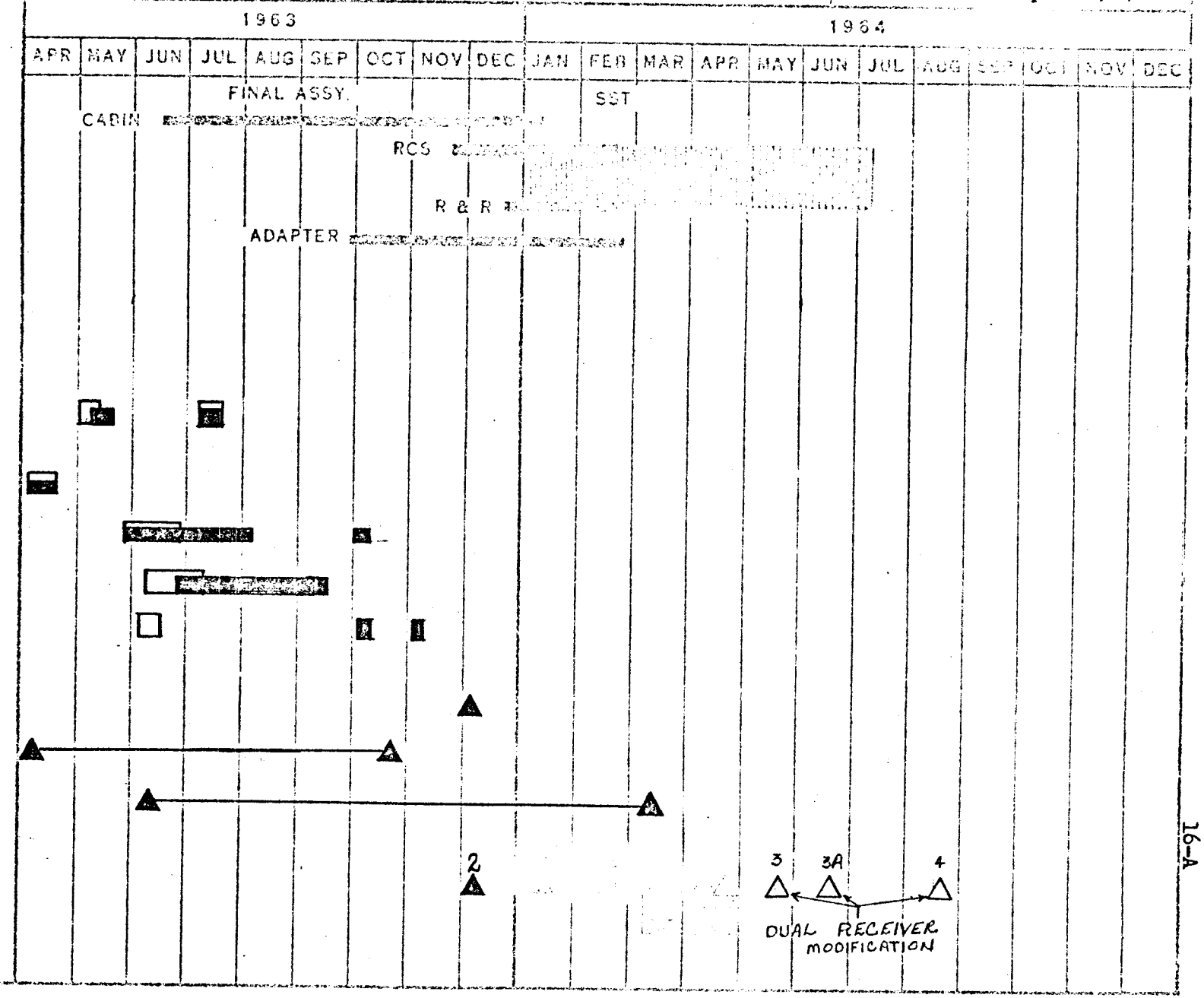

MAJOR TESTS

2. DEVELOPMENT
3. ESTU (100% 11/62)
4.
5. CTU
6.
7. QUALIFICATION
8. TEST 1
9.
10. TEST 2
11.
12. TEST 3
13.
14. RELIABILITY
15.
16. AGE AVAILABILITY
17. PIA
18.
19. SST
20.
21. CAPE
22.
23. FLIGHT HARDWARE
24. AFI
25.
26.

QUALIFICATION AND DEVELOPMENT TEST STATUS

DIGITAL COMMAND SYSTEM
MOTOROLA INC.
SCD 52-85714

24 April 1964

LEGEND
- ▽ TEST PROPOSAL DUE
- ◇ HARDWARE AVAILABLE
- ▭ TEST SCHEDULE
- ○ REPORT DUE
- ✡ REPORT APPROVED

SOLID INDICATES ACTUAL

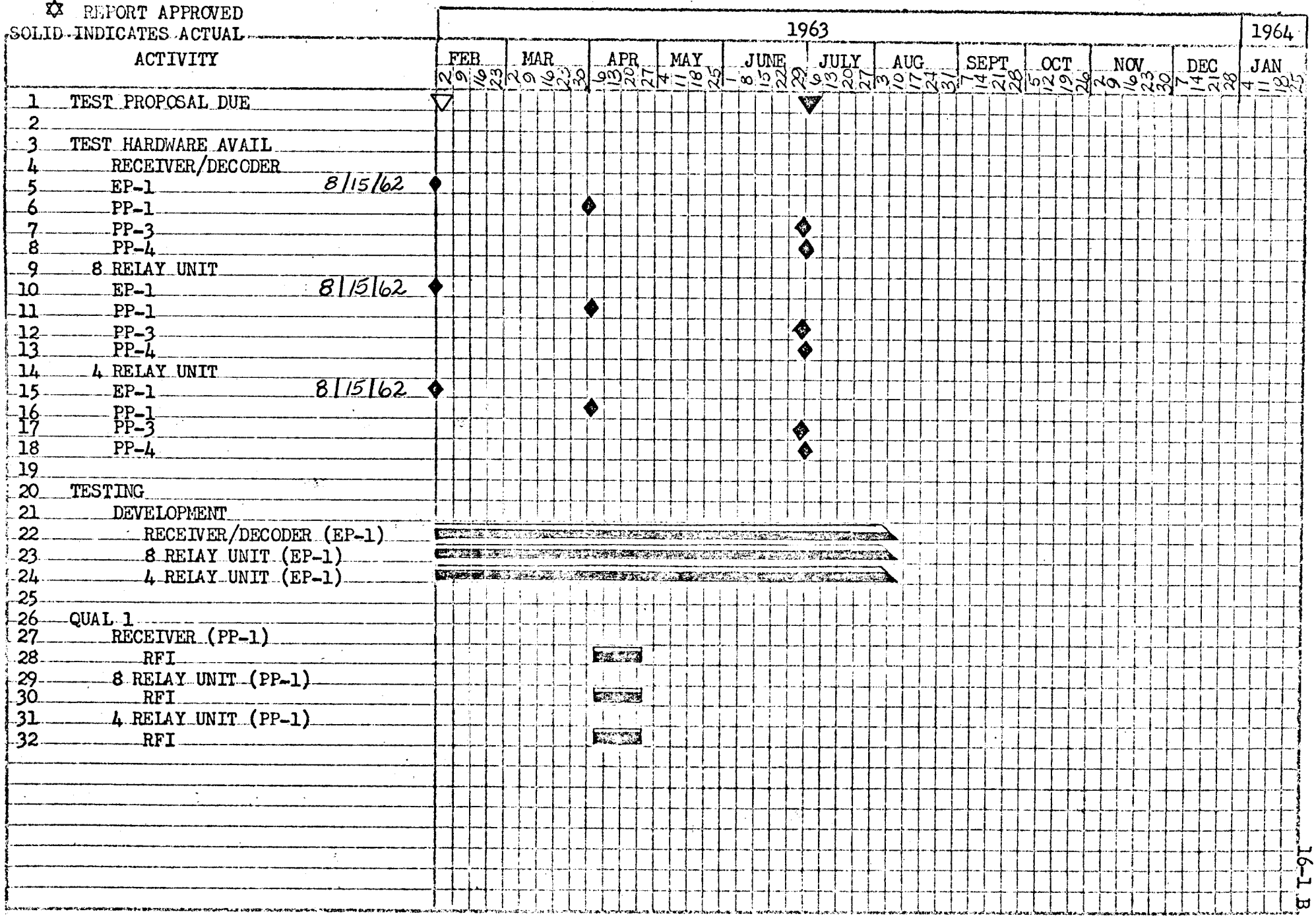

16-1 B

MAC 22747 (27 APR 59)

24 April 1964

QUALIFICATION AND DEVELOPMENT TEST STATUS

DIGITAL COMMAND SYSTEM
MOTOROLA INC.
SCD 52-85714

LEGEND
- ▽ TEST PROPOSAL DUE
- ◊ HARDWARE AVAILABLE
- ▭ TEST SCHEDULE
- ○ REPORT DUE
- ✡ REPORT APPROVED

SOLID INDICATES ACTUAL

	ACTIVITY	1963 JULY 6 13 20 27	AUG 3 10 17 24 31	SEPT 7 14 21 28	OCT 5 12 19 26	NOV 2 9 16 23 30	DEC 7 14 21 28	1964 JAN 4 11 18 25	FEB 1 8 15 22 29	MAR 7 14 21 28	APR 4 11 18 25	MAY 2 9 16 23 30	JUNE 6 13 20 27
1	QUAL 2												
2	RECEIVER DECODER (PP-3)												
3	VIBRATION	FAILED ON 6-29, 7-10, 7-19, 7-23, 7-24, 7-27, 7-29											
4	VIBRATION (RE SCHEDULED)		FAILED 7-30										
5	VIBRATION (RESCHEDULED)												
6	LOW & HIGH TEMP (PP-3)												
7	TEMP/ALT/ENDR. (PP-3)												
8	FUNGUS	DOCUMENTED											
9	SAND AND DUST	DOCUMENTED											
10	RAIN	DOCUMENTED											
11	ACCELERATION (PP-3)												
12	8 RELAY UNIT (PP-3)	SAME AS RECEIVER/DECODER											
13	4 RELAY UNIT (PP-3)	SAME AS RECEIVER/DECODER											
14													
15	QUAL 3												
16	RECEIVER DECODER (PP-4)												
17	15G SHOCK (PP-3)												
18	HUMIDITY (PP-4)												
19	SALT SPRAY (PP-4)												
20	ACOUSTIC NOISE (PP-4)												
21	FUNGUS	DOCUMENTED											
22	SAND AND DUST	DOCUMENTED											
23	RAIN	DOCUMENTED											
24													
25	8 RELAY UNIT (PP-4)	SAME AS RECEIVER/DECODER											
26	4 RELAY UNIT (PP-4)	SAME AS RECEIVER/DECODER											
27													
28													
29	OVERSTRESS RELIABILITY (PP-3, 4)												
30	LOW TEMP. AND LOW VOLT. (PP-3)												
31	ALT., HIGH TEMP., HIGH VOLT (PP-3)												
32	VIBRATION (PP-4)												
33	CENTRIFUGAL ACCELERATION (PP-4)												
34													
35	TEST REPORT DUE (QUAL.)												
36	TEST REPORT DUE (REL. ASS.)												
37	TEST REPORT APPROVED (QUAL)												
38	TEST REPORT APPROVED (R.A.)												

MAC 2274Y (27 APR 59)

16-2B

VENDOR DELIVERY STATUS REPORT
DIGITAL COMMAND SYSTEM
MOTOROLA, INC.

CHART NO. 16-C

DATE: 4-24-64

UNIT NO	TYPE	S/N	USAGE	VENDOR W/S	AVAIL FOR INSTL	REQ'D FOR INSTL	SLACK
1	EP-1	1	ESTU			A11-09-62	
2	EP-2	2	NASA FLY OVER -1			A01-26-63	
3	PP-2	12	CTU			A05-22-63	
4	PP-1	11	NASA FLY OVER-2			A05-22-63	
5	PP-3	13	VENDOR QUAL			A06-28-63	
6	PP-4	14	VENDOR QUAL OSR			A06-28-63	
7	PA-1	101	SC-2			A01-21-64	
8	PA-5	105	SC-3	5-20-64	5-30-64	4-02-64	- 8
9	PA-6	106	SC-3A	6-10-64	6-20-64	4-20-64	- 9
10	PA-7	107	SPARE SST	7-01-64	7-11-64	1-30-64	-23
11	PA-8	108	SPARE HGR	7-22-64	8-01-64	4-30-64	-13
12	PA-9	109	SC-4	8-12-64	8-22-64	7-06-64	- 7
13	PA-10	110	SPARE HGR	9-02-64	9-12-64	6-30-64	-11
14	PA-11	111	SC-5	9-23-64	10-03-64	9-08-64	- 4
15	PA-12	112	SC-6	10-14-64	10-24-64	11-23-64	+ 4
16	PA-13	113	AD-13	11-04-64	11-14-64	12-02-64	+ 3
17	PA-14	114	SC-7	11-25-64	12-05-64	1-02-65	+ 4
18	PA-15	115	SC-8	12-16-64	12-26-64	2-26-65	+ 9
19	PA-16	116	SC-9	1-06-65	1-16-65	4-26-65	+14
20	PA-17	117	SC-10	1-27-65	2-06-65	6-17-65	+19
21	PA-18	118	SC-11	2-17-65	2-27-65	8-14-65	+24
22			SC-12			10-07-65	
23			AD-14			11-29-65	
24			AD-15			1-27-66	

S/N's 102, 103 and 104 will be returned to Motorola for retrofit. These units will be inserted into the delivery schedule as soon as realistic dates are determined for their return to MAC after retrofit.

VENDOR AGE STATUS REPORT
DIGITAL COMMAND SYSTEM
MOTOROLA

CHART NO: 16-D

DATE: 4-24-64

PART NUMBER	NOMENCLATURE	UNIT NO	VENDOR W/S	AVAIL FOR USAGE	REQ'D FOR USAGE	SLACK
			PRE-INSTALLATION ACCEPTANCE			
E190020-1	TEST PIA-DCS	3		A12-03-63		
E190023-1	ADP-DCS MODULE TST.	11		A09-26-63		
			SPACECRAFT SYSTEM TEST			
E190004-1	TEST STA-S/C COMM.	1		A05-08-63		
E190004-1	TEST STA-S/C COMM.	2		A08-13-63		
E190020-1	TEST PIA-DCS	1		A05-23-63		
E190025-1	DCS TST SET TAPE	1		A10-25-63		
E190019-1	MONITOR-DCS	1		A09-26-63		
			HANGAR			
E190004-301	TEST STA-S/C COMM.	1		A07-19-63		
E190004-301	TEST STA-S/C COMM.	2		A08-14-63		
E190023-1	ADP-DCS MODULE TST	2		A10-22-63		
E190025-1	TEST SET TAPE DCS	2		A10-22-63		
E190020-1	TEST PIA-DCS	2		A03-10-64		
E190019-1	MONIT-DCS	2		A10-22-63		
E190020-1	TEST PIA-DIG. COMM.	4		A10-22-63		
			PAD			
E190004-303	TEST STA-S/C COMM.	1		A07-09-63		
E190020-301	TEST PIA-DCS	1		A10-22-63		
E190019-1	MONITOR-DCS	3		A03-10-64		
E190025-301	DCS TEST SET TAPE	1		A10-22-63		
			ORBIT			
E190004-1	TEST STA-S/C COMM.	3		A02-14-64		

MONTHLY SUMMARY

SYSTEM: Communications
SUBSYSTEM: C & S Band Radar Beacon
VENDOR: ACF Industries
Paramus, New Jersey
DATE: 24 April 1964

ENGINEERING STATUS

1. During the reporting period ACFE agreed to keep a record of the failures that occur on the beacon breadboard layout for C & S Band Beacons.

2. On 3 April NASA, MAC and ACF personnel were at ACF to discuss the history of modules which contain key resistors. ACF's quality of workmanship was reviewed and discussed. The question of whether to scrap these modules and build new ones, using a different resistor, was also considered.

   A. Following completion of this discussion MAC Engineers returned to MAC and proceeded to evaluate alternatives to improve the reliability of the units. These alternatives, accompanied with MAC Engineering's evaluation of them, will be presented to NASA the week of 27 April 1964.

ASSEMBLY & DELIVERY STATUS

C-BAND

1. An investigation was made by ACF to try and determine the cause of the count-up and count-down on beacon SN-101. A thorough visual check disclosed that 5 coax connectors were loose. SN-101 was also given an electrical bench check and a check while under vibration. No cause of the counting could be found.

   A. MAC Engineering evaluated the data taken by ACF personnel during their investigation and decided to have SN-101 shipped to MAC for use in SC-3A. SN-101 was shipped to MAC 17 April. SN-101 is expected to be available for installation 1 May 1964.

2. SN-104 failed its PIA test at MAC due to being out of specification on receiver sensitivity. SN-104 was returned to ACF 15 April 1964. A failure analysis is now being performed on SN-104 by ACF personnel.

3. SN-107's failure during Acceptance testing was due to a defective co-axial connector between the circulator and directional coupler. The connector has been replaced and the micro-wave components are being tested in the ACF's micro-wave lab.

4. SN-108's trouble on the breadboard jig was found to be a bad pulse amplifier package and not micro-wave components as was originally thought. It is presently in Quality Control testing and is expected to begin preliminary testing 24 April 1964.

S-BAND

1. SN-103 was out of specification on input power and beacon delay during its PIA test at MAC. MAC expects to return SN-103 to ACF the week of 27 April 1964. ACF will be able to give a firm return will ship date upon completion of the failure analysis for SN-103.

2. SN-104 (SC-3A) was available for installation 26 March. The installation delay of SN-104 in SC-3A is due to extensive radiator tests on the microwave module.

Electronic module installation personnel received the electronic module for SC-3A from the test area 21 April. SN-104 is expected to be installed approximately 29 April 1964.

3. SN-105 Spare SST successfully passed its PIA test at MAC 6 April 1964. SN-105 will be stored in the G.F.A.E. Crib at MAC for use as a spare approximately 2 April 1964.

4. Trouble shooting is still being done on SN-106. During the 30°F temperature portion of the Acceptance test the beacon exhibited counting down. ACF personnel are trouble shooting on the unit.

5. SN-107 Spare HGR began the temperature portion of the ATP test cycle 23 April 1964. SN-107's scheduled will ship date to MAC is approximately 6 May 1964.

6. The components of SN-108 are being tested on the breadboard prior to subassembly buildup. SN-108 is expected to be shipped approximately 22 May 1964.

TEST STATUS

1. Beacons S/N's 10-C and 10-S experienced failures during "Overstress" tests. Beacon S/N 10-C failed during random vibration testing and S/N 10-S failed during temperature testing. ACF personnel have completed their failure analysis for both units and have also submitted quotes for the repair costs. MAC engineering is presently evaluating the quotes to determine if the costs are valid.

   A. Following repair, Overstress testing will continue to determine the design margin built into the beacons.

2. ACF's resubmitted Qual test report was approved by MAC engineering 24 March 1964.

SPACECRAFT

CONTRACT NO. NAS 9-170

S-BAND RADAR BEACON - (VENDOR: ACF INDUSTRIES)

STATUS CHART

REPORT NO. 2580-1 -38

LAST PROGRESS SCHEDULE CHANGE 24 April 1964

STATUS AS OF 24 April 1964

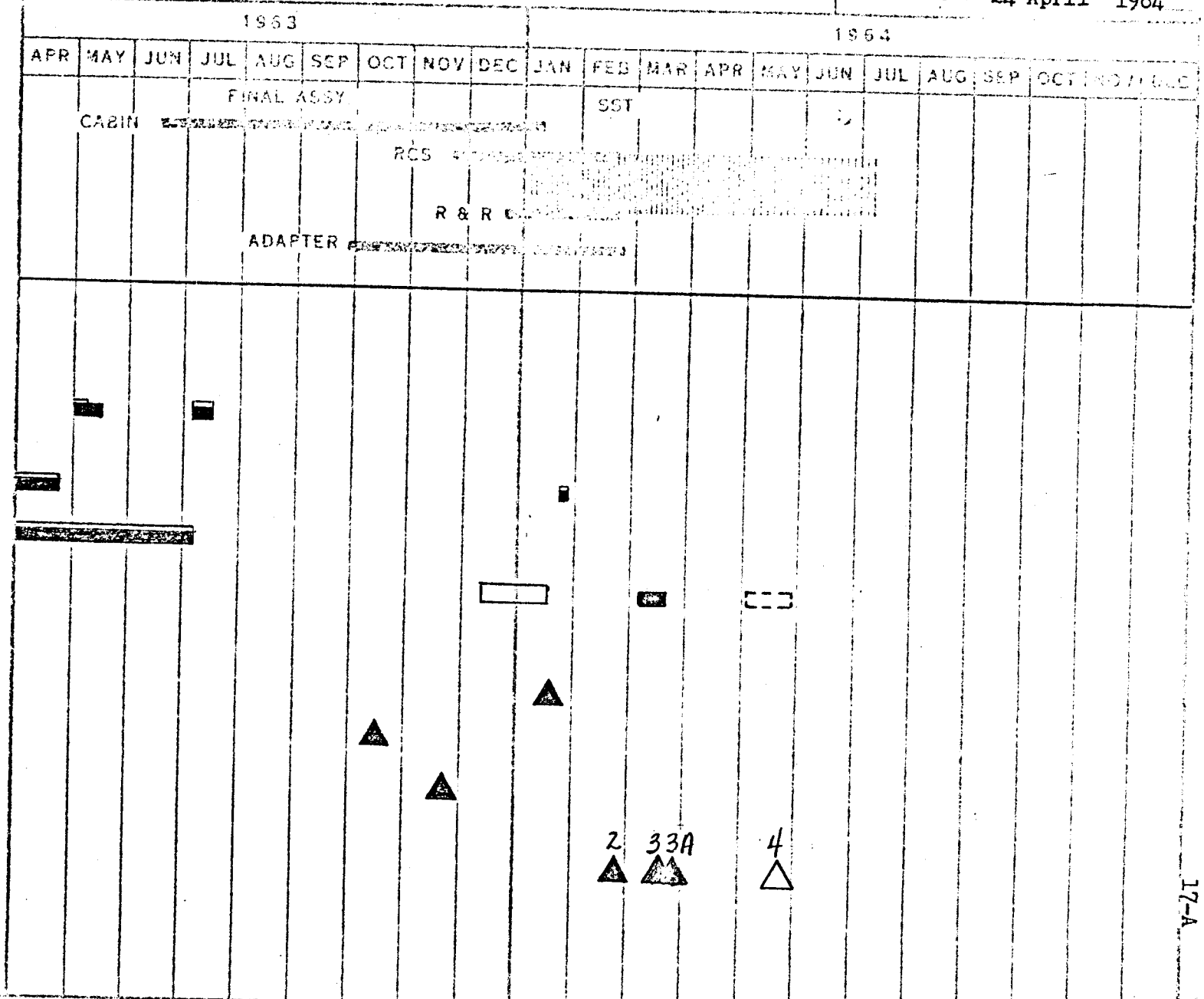

LEGEND

- ▽ TEST PROPOSAL DUE
- ◊ HARDWARE AVAIL.
- ▭ TEST SCHEDULE
- ○ REPORT DUE
- ✡ REPORT APPROVED

SOLID INDICATES ACTUAL

QUALIFICATION AND DEVELOPMENT TEST STATUS

S-BAND RADAR BEACON
ACF ELECTRONICS
SCD 52-85715

24 April 1964

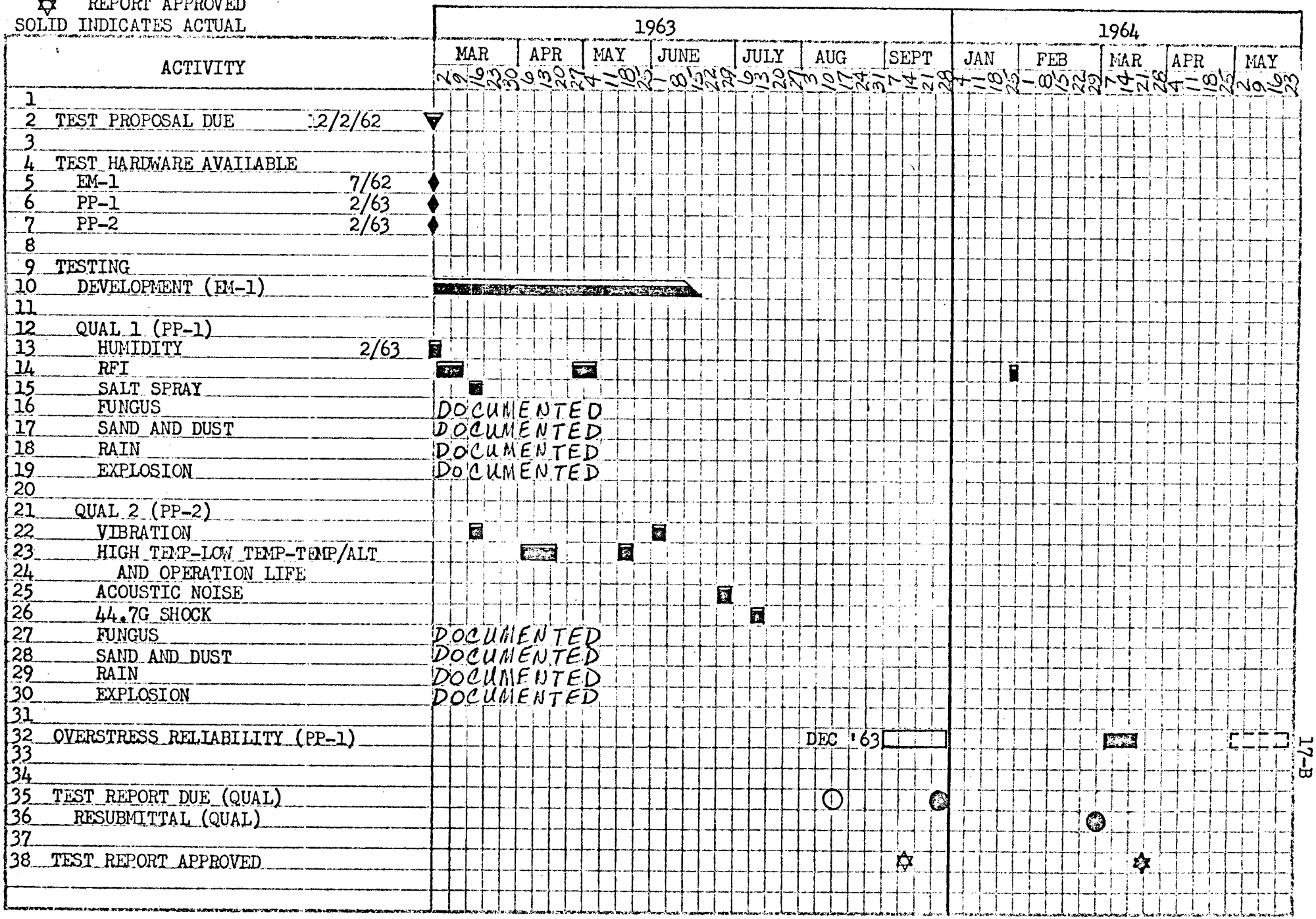

MAC 2274V (27 APR 59)

VENDOR DELIVERY STATUS REPORT
S-BAND RADAR BEACON
ACR INDUSTRIES

CHART NO: 17-C

DATE: 4-24-64

UNIT NO	TYPE	S/N	USAGE COMPONENT	VENDOR W/S	AVAIL FOR INSTL	REQ'D FOR INSTL	SLACK
1	EP-1	1	ESTU				
2	PP-1	10	VENDOR QUAL			A09-22-62	
2	PP-1	10	VENDOR REL.			A01-10-64	
3	PP-2	11	VENDOR QUAL			A03-06-64	
4	PA-1	100	CTU			A03-22-63	
5	PA-3	102	SC-2			A04-18-63	
6	PA-2	101	SC-3			A02-27-64	
7	PA-5	104	SC-3A	A03-13-64	A03-26-64	**A03-18-64	
8	PA-6	105	SPARE (SST)	A03-24-64	A04-06-64	04-20-64	+ 3
9	PA-8	107	SPARE (HGR)	05-06-64	05-13-64	01-31-64	- 9
10	PA-9	108	SC-4	05-22-64	05-29-64	04-30-64	- 2
11	PA-7	106	SPARE (SST)	06-10-64	06-17-64	07-05-64	+ 5
12	PA-10	109	SPARE (HGR)	07-01-64	07-08-64	03-31-64	-11
13	PA-11	110	SC-5	07-10-64	07-17-64	06-30-64	- 1
14	PA-4	*103	SC-6	07-29-64	08-07-64	09-08-64	+ 7
15	PA-12	111	AD-13	08-21-64	08-28-64	11-23-64	+15
16	PA-13	112	SC-7	09-09-64	09-16-64	12-02-64	+14
17	PA-14	113	SC-8	09-25-64	10-02-64	01-02-65	+15
18	PA-15	114	SC-9	10-23-64	10-30-64	02-26-65	+21
19	PA-16	115	SC-10	11-27-64	12-04-64	04-26-65	+25
20	PA-17	116	SC-11	12-30-64	01-08-65	06-17-65	+27
21	PA-18	117	SC-12	01-22-65	01-29-65	08-14-65	+32
22	PA-19	118	AD-14	02-19-65	02-26-65	10-07-65	+36
23	PA-20	119	AD-15	03-19-65	03-26-65	01-27-66	+42

* To be returned to vendor for rework - Failed PIA rerun following temp. cycling (Vendor will ship date is a MAC estimate).

** To be reworked by an ACF engineer the week of 2 March 1964 (Temp cycle and PIA rerun required).

VENDOR AGE STATUS REPORT
C & S BAND RADAR
ACF INDUSTRIES

CHART NO: 17, 18-D

DATE: 4-24-64

PART NUMBER	NOMENCLATURE	UNIT NO	VENDOR W/S	AVAIL FOR USAGE	REQ'D FOR USAGE	SLACK
			PRE-INSTALLATION ACCEPTANCE			
E190003-1	PIA BENCH C & S BCN.	1		A01-03-64		
			SPACECRAFT SYSTEM TEST			
E190012-1	PROBE C-BAND ANT.	1		A09-02-63		
E190011-1	PROBE C & S ANT.	1		A09-02-63		
E190011-1	PROBE ASY C & S ANT.	2		A10-15-63		
E190012-1	PROBE C-BAND ANT.	4		A10-15-63		
			HANGAR			
E190012-1	PROBEEC-BAND ANT.	2		A10-15-63		
E190012-1	PROBE C-BAND ANT.	3		A10-15-63		
E190011-1	PROBE C & S ANT.	3		A10-15-63		
E190011-1	PROBE C & S ANT.	4		A10-15-63		
E190003-1	PIA BENCH C & S BCN.	2		A11-25-63		

OSTEEN SPACECRAFT
CONTRACT NO. NAS 9-170

C-BAND RADAR BEACON - (VENDOR: ACF INDUSTRIES)

STATUS CHART

REPORT NO. 8520-1 -38
LAST PROGRAM SCHEDULE CHANGE 24 April 1964
STATUS AS OF 24 April 1964

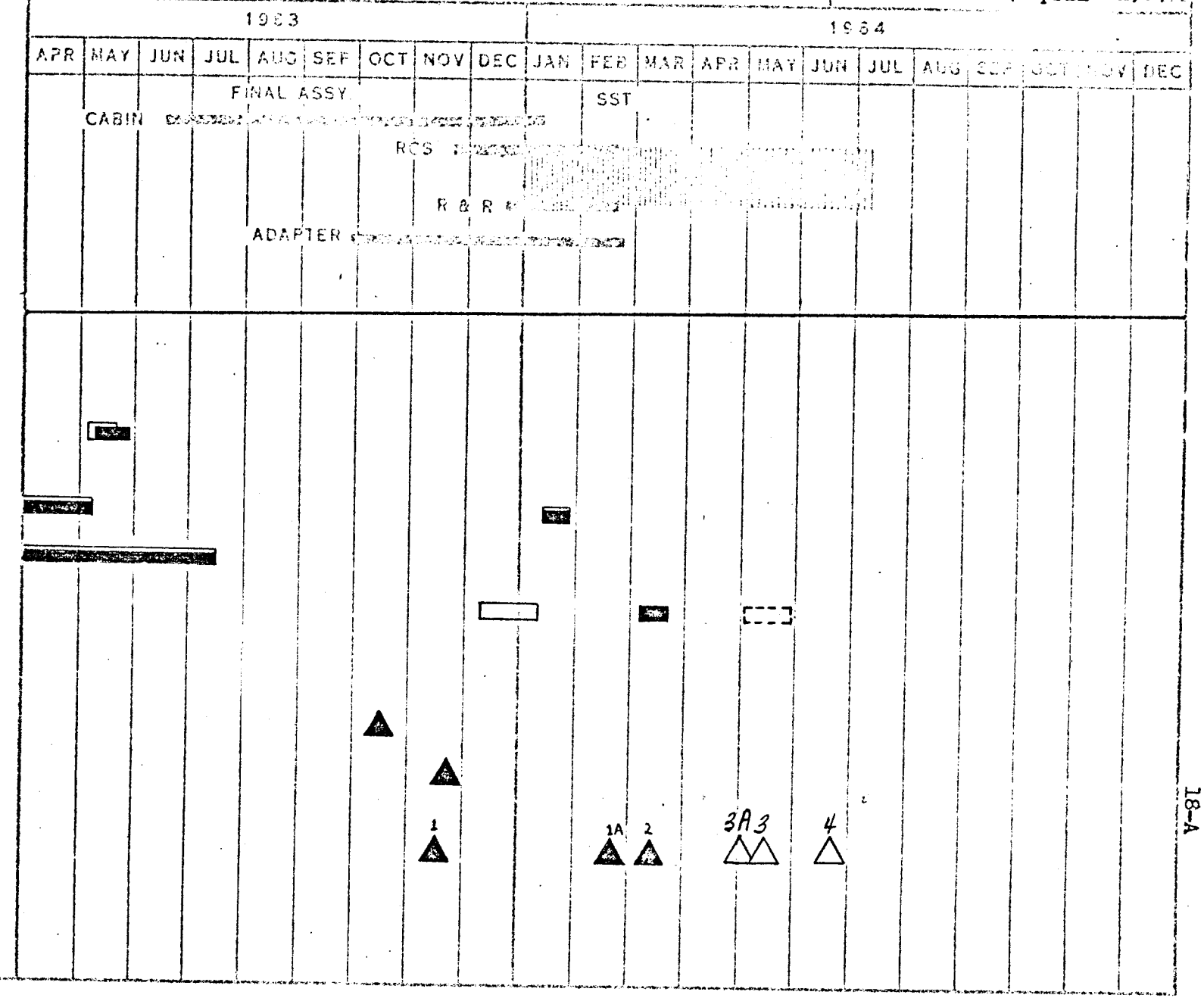

LEGEND

- ▽ TEST PROPOSAL DUE
- ◊ HARDWARE AVAIL.
- ▭ TEST SCHEDULE
- ○ REPORT DUE
- ✡ REPORT APPROVED

SOLID INDICATES ACTUAL

QUALIFICATION AND DEV. TEST STATUS

C-BAND RADAR BEACON
ACF ELECTRONICS
SCD 52-85707

24 April 1964

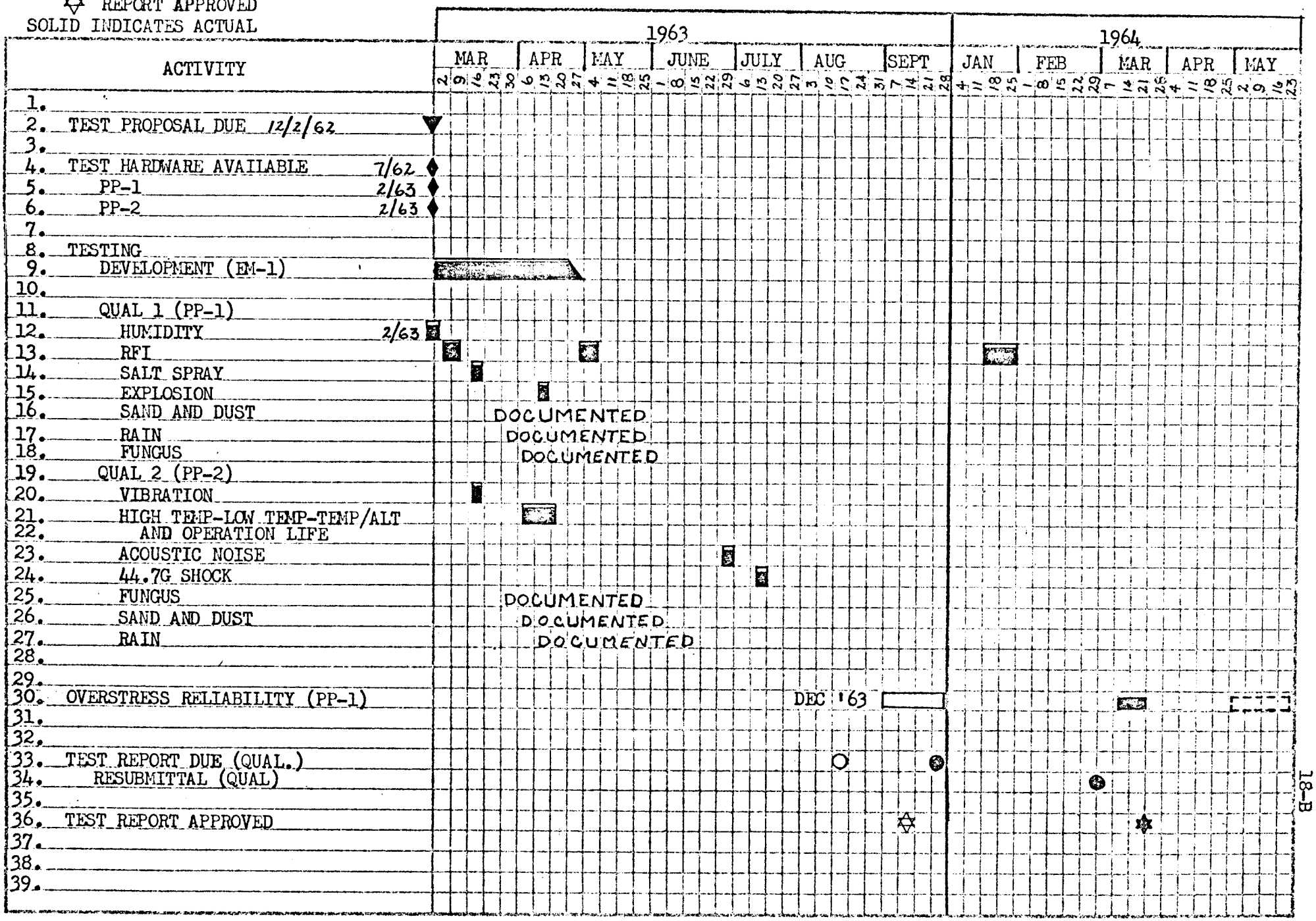

MAC 2274V (27 APR 59)

VENDOR DELIVERY STATUS REPORT
C-BAND RADAR BEACON
ACF INDUSTRIES

CHART NO: 18-C

DATE: 4-24-64

UNIT NO	TYPE	S/N	USAGE COMPONENT	VENDOR W/S	AVAIL FOR INSTL	REQ'D FOR INSTL	SLACK
1	EP-1	1	ESTU			A09-22-62	
2	PP-1	10	VENDOR QUAL			A01-14-64	
2	PP-1	10	VENDOR REL.			A03-06-64	
3	PP-2	11	VENDOR QUAL			A03-04-63	
4	PA-1	100	CTU			A04-26-63	
5	PA-7	106	SC-1 (CAPE)	(A03-10-64)		A03-13-64	
6	PA-3	102	SC-2			*A03-14-64	
7	PA-6	105	SC-1A			**A02-21-64	
8	PA-4	103	SPARE (HGR)		**A03-10-64		
9	PA-2	101	SC-3A	A04-17-64	05-01-64	04-10-64	-3
10	PA-9	108	SC-3	05-08-64	05-15-64	02-26-64	-11
11	PA-8	107	SPARE (SST)	05-27-64	06-03-64	01-31-64	-18
12	PA-10	109	SC-4	06-12-64	06-19-64	04-21-64	-8
13	PA-5	***104	SC-5	07-01-64	07-08-64	06-15-64	-3
14	PA-11	110	SPARE (SST)	07-24-64	07-31-64	03-31-64	-17
15	PA-12	111	SPARE (HGR)	08-12-64	08-19-64	06-30-64	-7
16	PA-13	112	SC-6	08-28-64	09-04-64	09-17-64	+2
17	PA-14	113	SC-7	09-18-64	09-25-64	11-15-64	+7
18	PA-15	114	SC-8	10-09-64	10-16-64	01-04-65	+11
19	PA-16	115	SC-9	11-20-64	11-27-64	03-03-65	+14
20	PA-17	116	SC-10	12-11-64	12-18-64	04-23-65	+18
21	PA-18	117	SC-11	01-11-65	01-18-65	06-24-65	+23
22	PA-19	118	SC-12	01-25-65	02-01-65	08-19-65	+28

* Rerun of PIA following Temp. Cycle of modules containing KM2-T5 Resistors.
** Reworked by MAC engineer (replaced key resistors) week of 16 March.
*** Returned to vendor for rework 15 April 1964 (Vendor will ship date is a MAC estimate).

MONTHLY SUMMARY

SYSTEM: Guidance and Control
SUBSYSTEM: Rendezvous Radar
VENDOR: Westinghouse
DATE: 24 April 1964

ENGINEERING STATUS

1. The false alarm in PP-2 Radar has been corrected. The trouble was isolated to the instability of the Narrowband AGC. The output of the Amplifier had a low amplitude high frequency oscillation. It was found that the configuration forms a complex oscillator with the output emitter follower acting as a grounded base oscillator. The frequency elements are the lead inductance of the 20 volt power supply lead and the collector to emitter capacitance.

2. Procedures to be followed during the Quality testing of the Radar have been submitted by Westinghouse to McDonnell. These procedures were found to have no conflicts with MQA 171-1 on the MIL-Q-9858 requirements. These procedures will eliminate duplications of procedural audits and are deemed most efficient.

3. Programming has been initiated on both digital portions (environment and rendezvous subroutine) of the rendezvous hybird simulation. Programming of the gravitational equations of motion has been completed and checkout of this portion will begin this week. Work is continuing on the IBM 1620 computer to determine a satisfactory method for solution for the equations describing spacecraft angular motion. To date, all efforts has been directed toward the use of quaternions to describe body motion.

4. The two mission plans (Plan 1 Rev. 1 and Plan 2) for the "First Agena Rendezvous Flight" proposed by NASA-MSC are currently being critiqued. Short term analysis plans include simulation and error analysis of the closed loop terminal guidance phase and evaluation of the corresponding fuel requirements. A more complete analysis is necessary and is currently being planned.

5. Gemini Design Note No. 173 was released and presented to NASA at the R & R Meeting on 1 April 1964. This note describes the results of an error analysis of the Gemini closed-loop rendezvous terminal guidance system.

6. Several techniques for rendezvous at first apogee were investigated, fuel requirements summarized, and the results submitted at the R & R Meeting, 1 April 1964. The line-of-sight terminal rendezvous simulation using a TV window display of target motion is undergoing checkout. The checkout at present is approximately 80% complete. The rendezvous simulation is expected to be operational during the week of 20 April. Work on the TV window display for this simulation has continued.

7. Gemini Design Note No. 175, "Effect of Gravitational Acceleration on the "Rendezvous Problem", was completed during the last reporting period. This note gives the magnitude and direction of the acceleration of the Spacecraft relative to the target due to the earth's gravitational attraction on both sides.

PROCUREMENT STATUS

1. Dipole Antennae should be available for assembly starting the end of May. It is estimated that enough units to complete 2 Spacecraft will be available each month thereafter.

2. Spiral Antennas should be available for assembly by the middle of May and enough units should be available to complete 2 spacecraft, each month thereafter.

3. Comlink Encoders should be available the middle of May. It is estimated that enough units will be available each month thereafter to complete 2 spacecraft per month.

4. DeHavilland Transponder Antenna Boom
Three units are now in assembly and will be complete by 30 April 1964.

5. Qualification testing on the Antenna Boom will begin by 30 April and be complete by 1 July 1964.

6. Several production type Transponder Antenna Booms are in assembly and it is estimated, the first production unit will be shipped to MAC by 14 July 1964.

ASSEMBLY & DELIVERY STATUS

1. PA-1 Radar currently allocated to Spacecraft 4 is in final assembly and should be complete the latter part of May.

2. PA-2 Radar currently allocated as a back up spare for Spacecraft 4 is in final assembly and is scheduled to be completed the early part of June.

3. PA-3 Radar currently allocated to Spacecraft 5 is in the early stages of final assembly and is scheduled to be complete the latter part of June.

4. PA-4 Radar currently allocated as a back up spare for Spacecraft 5 is also in the early stages of final assembly and is scheduled for completion early in July.

5. PP-2 Transponder has undergone the complete Pre-Delivery Acceptance test and an MRR was submitted for MAC action. The unit is currently in Westinghouse Manufacturing Area having the Frequency Drift Fix incorporated per McDonnell direction in answer to MCN 151. The unit should be ready for test verification by 30 April 1964.

6. PP-3 Transponder is in assembly, completion is estimated to be the week of 22 May 1964.

7. PP-4 Transponder is in Westinghouse Electrical Demonstration prior to Pre-Delivery Acceptance Testing.

TEST STATUS

1. PP-4 Radar for Qualification Test #1 experienced a malfunction in the Video Group during post Vibration Electrical Testing. The faulty module was replaced.

The unit is currently undergoing a repeat of the post vibration [illegible] after which the electrical test will be rerun. A slip of 1 week is anticipated before Qual Testing will begin

2. PP-2 Radar for Qualification test #2 is in Westinghouse Demonstration prior to formal Pre-Delivery Acceptance testing. This unit should be ready for Pre-Delivery Acceptance testing by 30 April 1964. However, it may not be tested until the week of 4 May due to the priority of PP-4 and EM 3 Radars.

3. PP-3 Radar for White Sands Missile Range is in Westinghouse Demonstration prior to formal Pre-Delivery Acceptance test. The unit should be ready for P.D.A. by 30 April 1964, but will not begin P.D.A. until the week of 18 May as PP-4, EM 3 and PP-2 Radars have a higher priority.

AGE STATUS

1. 52E270018-1 RIST Factory S/N 5 was shipped from Westinghouse and was received at McDonnell Aircraft 31 March 1964.

2. 52E270018-401 Calibration Kit for the 52E270018-1 was shipped with the above RIST and received at McDonnell Aircraft 31 March 1964.

3. One unit (52E270018-1) and one unit of the (52E270024-1) will be shipped to New Mexico State University the week of 27 April 1964. The 52E270018-1 will be returned to McDonnell Aircraft for Systems testing and as such will have to be formally accepted before shipment. The 52E270024-1 is on loan to MAC for the tests at NMSU and will not have to pass formal tests. The tests which will be performed require a bore sighted radar, since one is not available, shipment may be delayed several days. The delzy will have little effect on the test schedule as EM-3 Radar will not be in Acceptance testing until the week of 1 May.

SPACECRAFT
CONTRACT NO. NAS 9-170

RENDEZVOUS RADAR - (VENDOR: WESTINGHOUSE)

STATUS CHART (52-87701)

REPORT NO. 65603-1 -58
LAST PROGRAM SCHEDULE CHANGE: 24 April 1964
STATUS AS OF: 24 April 1964

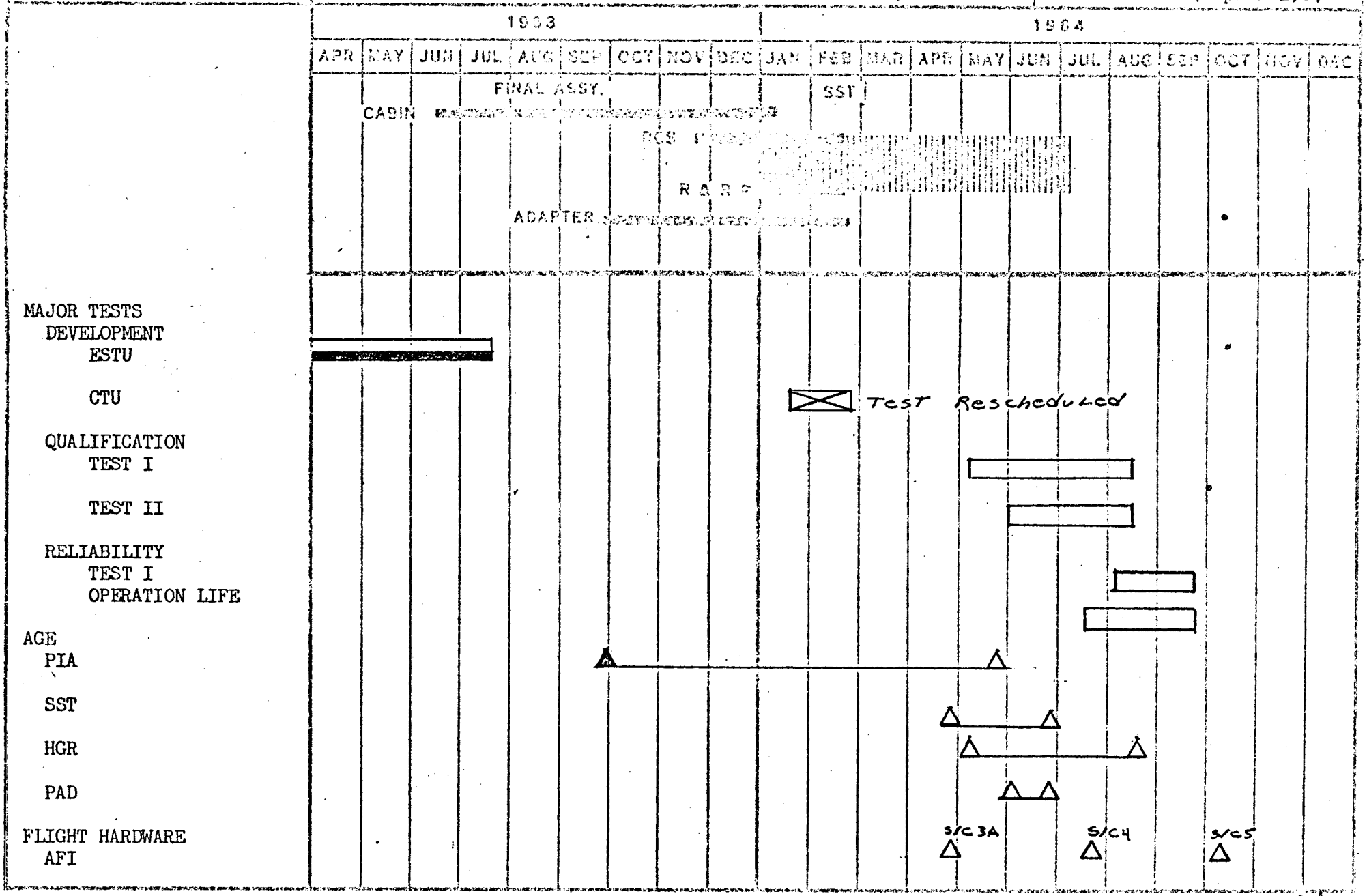

LEGEND
- ▽ Test Proposal Due
- ◊ Hardware Available
- □ Test Schedule
- ○ Report Due
- ☆ Report Approved

SOLID INDICATES ACTUAL

QUALIFICATION AND DEVELOPMENT TEST STATUS
RENDEZVOUS RADAR
WESTINGHOUSE ELECTRIC CO.
SCD 52-87700

Date: 24 April 1964

ACTIVITY	WEEK ENDING
1. Test Proposal Due	6-22-63
2.	
3. Test Hardware Available	
4. Radar	
5. EP-3	3-29-64
6. PP-2	
7. PP-4	
8. Indicator - EP-4	10-25-62
9. PP-5	8-24-63
10. PP-6	8-24-63
11. PP-1	6-01-64
12. PP-2	6-01-64
13. Encoder EM-1	7-04-63
14. PP-2	5-17-64
15.	
16. Testing	
17. Development	
18. Radar (EP-3)	
19. Indicator (EP-4)	
20. Encoder (EM-1)	
21.	
22. Qual 1	
23. Radar (PP-4)	
24. Bench	
25. Low Temp.	
26. Low Press./T.A. H.C.	
27. Vibration	
28. Acceleration	
29. Acoustic Noise	
30. Salt Fog	
31. Indicator (PP-1)	
32.	
33.	
34.	
35.	
36.	
37.	
38. Radar Mock Up	
39. #1 Temp. Control	
40. #2 Salt Fog	

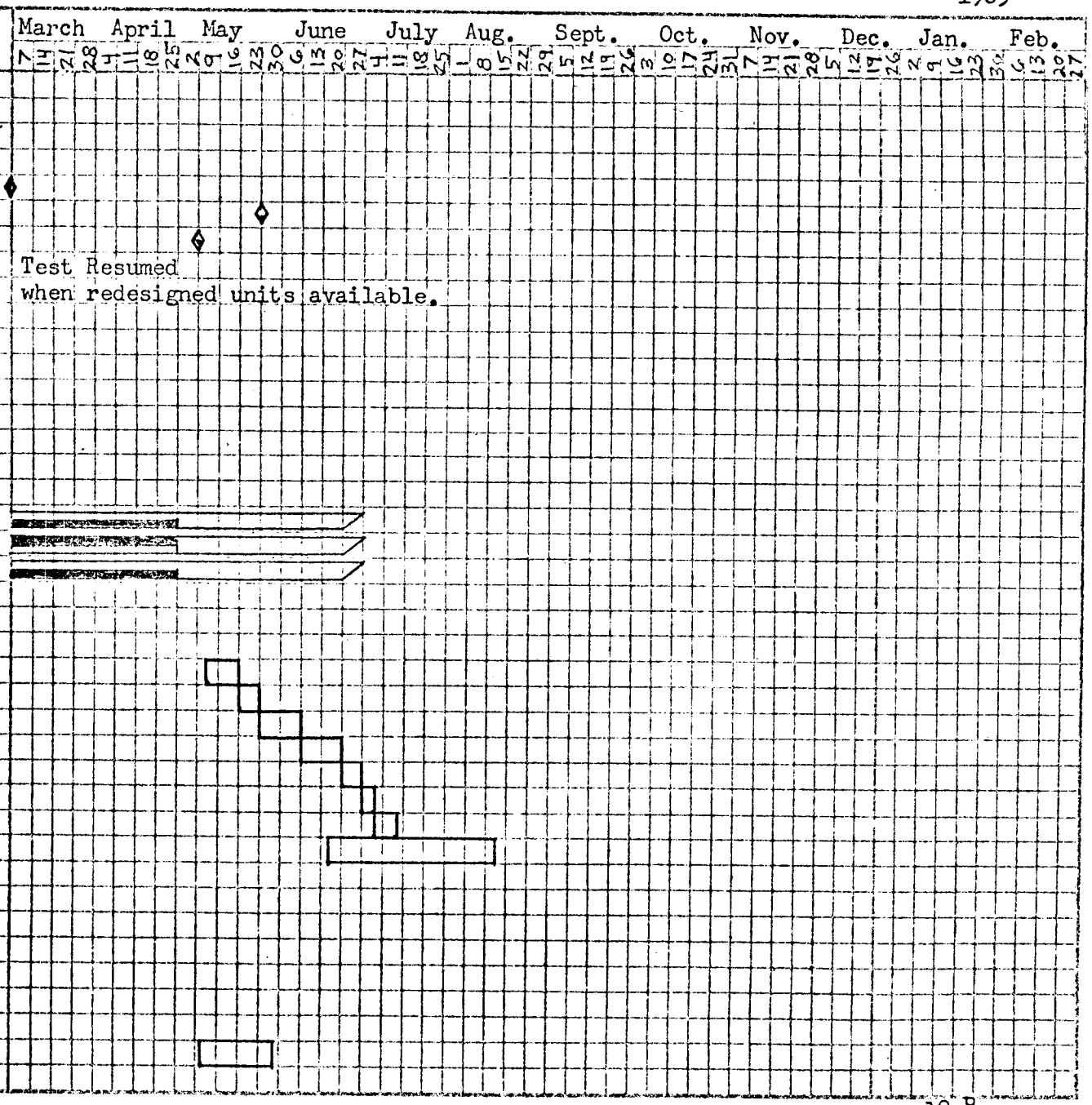

MAC 2274V (27 APR 59)

LEGEND
- ▽ Test Proposal Due
- ◊ Hardware Available
- □ Test Schedule
- ○ Report Due
- ☆ Report Approved

SOLID INDICATES ACTUAL

QUALIFICATION AND DEVELOPMENT TEST STATUS
RENDEZVOUS RADAR
WESTINGHOUSE ELECTRIC CO.
SCD 52-87701

Date: 24 April 1964

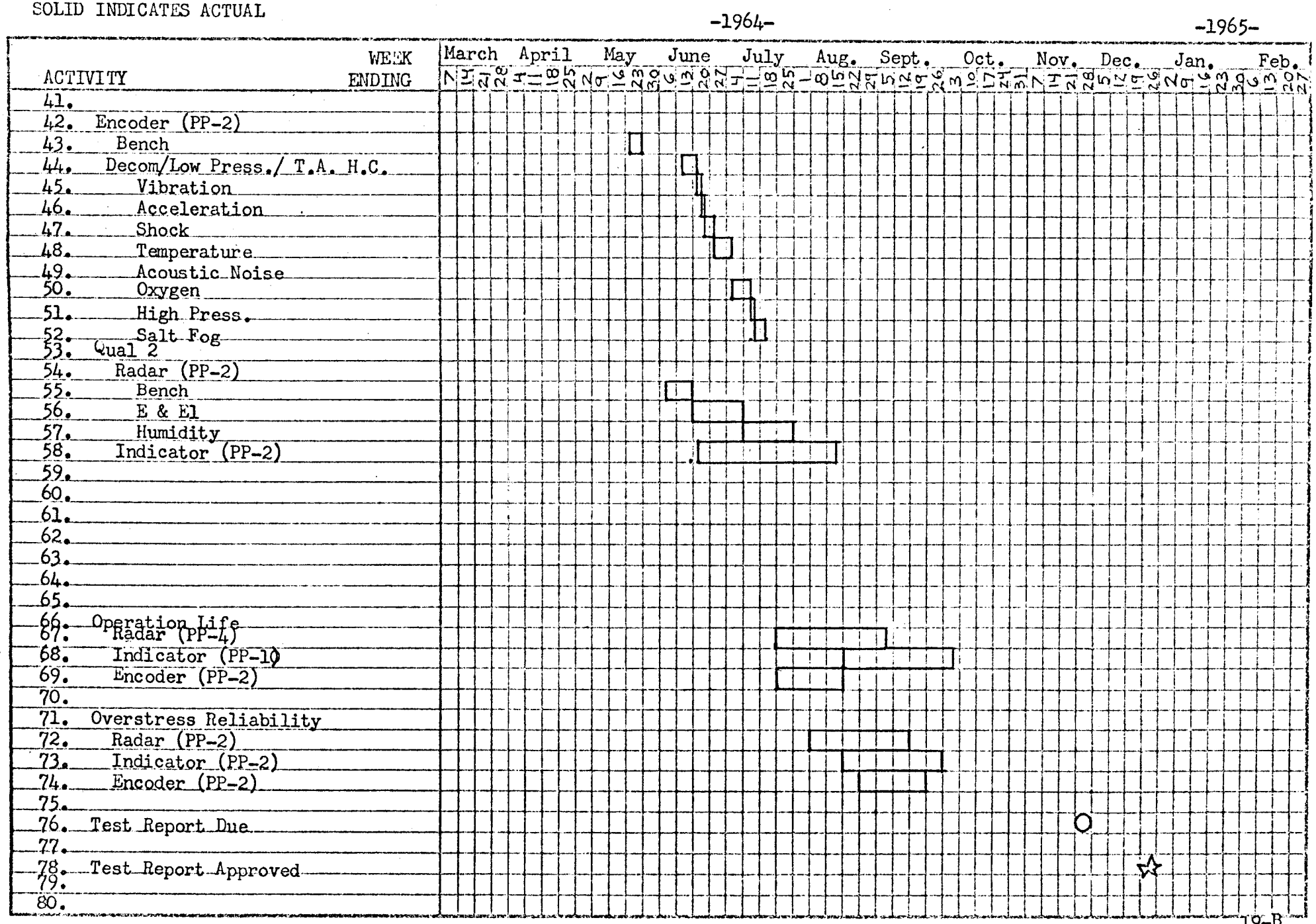

MAC 2274V (27 APR 59)

VENDOR DELIVERY STATUS REPORT

CHART NO: 19-6

SYSTEM - RENDEZVOUS RADAR

DATE: 24 April [illegible]

VENDOR - WESTINGHOUSE

UNIT NO.	USAGE	TYPE	DASH NO.	VENDOR W/S	AVAIL. FOR INSTL.	REQ'D. FOR INSTL.	[illegible]
1	ESTU	EP-1	- 3			A02-15-63	
2	ELEC EVAL	EP-2	- 3			A05-10-63	
3	MECH EVAL	EP-3	- 3			A06-30-63	
4	CTU	PP-1	-23			A02-26-64	
4	S/C 3A	PP-1	-29		A04-22-64	06-08-64	[illegible]
5	QUAL 2	PP-2	-27		05-22-64	03-28-64	[illegible]
6	WSMR	PP-3	-35	06-19-64	06-29-64	07-01-64	[illegible]
7	QUAL 1	PP-4	-25		04-30-64	02-03-64	[illegible]
8	S/C 4	PA-1	-21	07-24-64	08-03-64	08-20-64	[illegible]
9	SPARE	PA-2	-21	08-28-64	09-04-64	02-29-64	[illegible]
10	S/C 5	PA-3	-21	10-02-64	10-01-64	11-17-64	[illegible]
11	SPARE	PA-4	-21	11-06-64	11-31-64	05-30-64	[illegible]
12	S/C 7	PA-5	-21	12-11-64	12-21-64	02-10-65	[illegible]
13	SPARE	PA-6	-21	01-15-65	01-22-65	07-30-64	[illegible]
14	S/C 8	PA-7	-21	02-19-65	03-01-65	05-05-65	[illegible]
15	SPARE	PA-8	-21	03-26-65	04-02-65	09-30-64	[illegible]
16	S/C 9	PA-9	-21	04-30-65	05-10-65	06-30-65	[illegible]
17	S/C 10	PA-10	-21	06-04-65	06-14-65	08-20-65	[illegible]
18	S/C 11	PA-11	-21	07-09-65	07-19-65	10-20-65	[illegible]
19	S/C 12	PA-12	-21	08-03-65	08-23-65	12-17-65	[illegible]

VENDOR AGE STATUS REPORT

CHART NO: 19-D

SYSTEM - RENDEZVOUS RADAR

DATE: 24 April 196[illegible]

VENDOR - WESTINGHOUSE

PART NO.	COMPONENT	UNIT NO.	VENDOR W/S	AVAIL. FOR USAGE	REQ'D. FOR USAGE	SLACK
			(PRE-INSTALLATION ACCEPTANCE)			
52E270025-1	PIA CONSOLE	1			A09-30-63	
52E270018-1	TEST RADAR INS	5		A03-31-64	04-01-64	- 0
52E270018-401	CAL KIT RIST	1		A03-31-64	04-01-64	- 0
52E270052-1	DOLLY RADAR	3	05-20-64	06-03-64	05-01-64	- 5
52E270056-001	PRESS LEAK INDICATOR	1	05-01-64	05-15-64	05-01-64	- 2
			(SPACECRAFT SYSTEM TEST)			
52E270024-1	TEST RADAR INSTRUMENT	1	04-27-64	05-11-64	08-18-64	[illegible]
52E270018-1	TEST RADAR INSTRUMENT	4	05-20-64	06-03-64	08-18-64	[illegible]
52E270018-1	TEST RADAR INSTRUMENT	8	06-18-64	07-02-64	08-18-64	+ 7
52E270024-1	TEST RADAR INSTRUMENT	2	05-08-64	05-22-64	08-18-64	+13
52E270073-1	RON. EVAL. POD	1	06-24-64	07-08-64	08-18-64	+ 6
52E270079-1	RADAR COVER	1	05-08-64	05-22-64	05-01-64	[illegible]
			(CAPE KENNEDY HANGAR)			
52E270018-1	TEST RADAR INSTRUMENT	9	05-08-64	05-22-64	12-01-64	+28
52E270073-1	RON. EVAL. POD	2	08-19-64	09-02-64	08-10-64	[illegible]
52E270024-1	TEST RADAR INSTRUMENT	4	06-01-64	06-15-64	11-02-64	[illegible]
52E270024-1	TEST RADAR INSTRUMENT	3	06-15-64	06-29-64	11-09-64	[illegible]
52E270052-1	DOLLY RADAR	4	06-01-64	06-15-64	05-18-64	[illegible]
52E270056-001	PRESSURE LEAK INDICATOR	2	06-15-64	06-29-64	08-10-64	+ 7
52E040081-1	SIM S/C ENCR.-SUB.	2	06-01-64	06-15-64	11-02-64	[illegible]
52E270079-1	RADAR COVER	2	05-08-64	05-22-64	05-18-64	[illegible]
			(CAPE KENNEDY LAUNCHING PAD)			
52E270024-1	TEST CONSOLE	5	06-19-64	07-03-64	08-10-64	[illegible]
52E270018-1	TEST RADAR INSTRUMENT	6	06-22-64	07-06-64	07-01-64	[illegible]
52E270073-1	TEST CONSOLE TRANSPONDER	1	06-01-64	06-15-64	07-13-64	[illegible]
			(CAPE KENNEDY RADAR RANGE)			
52E270018-401	CAL. KIT. RIST	2	05-20-64	06-03-64	05-04-64	[illegible]
52E270018-1	TEST RADAR INSTRUMENT	7	04-27-64	05-10-64	05-04-64	[illegible]
52E270025-1	PIA CONSOLE RADAR (WEC TEST 2-3-64)	2	06-01-64	06-15-64	05-01-64	[illegible]
			(VENDOR)			
52E040081-1	SIM S/C ENCR. SUB	1	05-01-64	05-15-64	04-30-64	[illegible]

MONTHLY SUMMARY

SYSTEM: Landing System
SUBSYSTEM: Landing Chutes
VENDOR: Northrop-Ventura
DATE: 24 April 1964

ENGINEERING STATUS

1. Drawings for the Drogue and Pilot Mortar Assemblies, 52-41703-201-144 and 52-41703-197-145 were approved with change on 24 April 1964.

2. A total of six Riser Cables were Static pulled to destruction. All units pulled, failed above the ultimate load of 9000 pounds.

3. The QTWO'S for Pyro's and Pyrotechnic Assemblies are in the process of being approved.

ASSEMBLY AND DELIVERY STATUS

1. The Bridle Arm Disconnects, 52-41703-215, are not installed in S/C 2. This is the only MAC installed part that remains to be installed.

2. S/C 3 Controls are available except for the High Altitude hardware, which includes the 40K Baroswitch and the Drogue and Pilot Mortar Assemblies. The drawings for these mortar assemblies were approved by MAC on 24 April 1964 and returned to Northrop. Northrop will now proceed to incorporate MAC changes, and manufacture these items. It is anticipated that the present will ship date of 30 June 1964 can be bettered.

TEST STATUS

Development Test (PTV)

1. On 4 April 1964, thirty-two Drogue Mortar Cartridges were shipped to El Centro for the PTV Drop tests. The first Drop with PTV #1 took place on 9 April 1964. During the first Drop the vehicle was severly damaged. The results of this Drop are still being evaluated, but a preliminary investigation indicated that the Cross Beam, to which both the Drag and Drogue Chute were attached, was prematurely released. Investigations, to date, have not determined the cause of the premature release.

2. The second PTV Drop test has been scheduled for 29 April 1964. (Ref. line 3)

3. Present plans indicate the possibility of building a third PTV, since PTV #1 has not been recovered and would probably be of no further use to the Drop program.

Development Test (B/P No. 5)

1. The MAC supplied Riser Cables and Fittings for B/P No. 5 were hand carried to the El Centro Test Site on 3 April 1964. Six Bridle Disconnect Cartridges (52-41703-209) were shipped to El Centro on 4 April 1964.

2. The fourth B/P No. 5 Drop which was scheduled for 8 April was cancelled by Northrop due to a decision made by a visual inspection of the Riser Cables. This Drop was later performed on 10 April 1964 and proved successful.

TEST STATUS (Continued)

Development Test (B/P No. 5) (continued)

3. The fifth B/P No. 5 Drop was successfully performed on 21 April 1964. This completed the Drogue and Pilot Tandem Deployment Development Tests. (Ref. line 6)

Qualification Tests

1. Three S/A No. 7 Drops

The pyro's which had been the constraining item in the three Static Seven Drops are available and the first Drop has been scheduled for 30 April 1964. These tests should be complete by 4 June 1964. (Ref. line 21)

2. Fourteen S/A No. 7 Drops

A study is underway to determine the feasibility of reworking B/P No. 5 to a static article configuration in order to augment Static Article 7. The present start and completion dates are 2 July and 10 December 1964 respectively. (Ref. line 12)

3. Pyro Devices

The first of Pyro Qual tests, Dielectric test, was performed on the mortar cartridges (52-41703-179) on 14 April 1964. A failure was encountered during this test and the results are now being evaluated. Pyro Qual tests are estimated to be complete by 7 September, 1964. (Ref. line 9)

4. Baroswitch

These tests are still held up due to hardware availability. The tentative start date and completion dates for these are 2 June to 30 June 1964. (Ref. line 7)

AGE

1. FAD on the pilot and main packing boxes is tentatively scheduled for 4 June 1964. It is estimated that these packing boxes will be shipped approximately 1 July 1964. This should allow time for painting and inspection. The new RFI date is 20 July 1964. (Ref. chart 20-D)

LANDING CHUTE - (VENDOR: NORTHROP-VENTURA)

24 Apr. 1964

24 April 1964

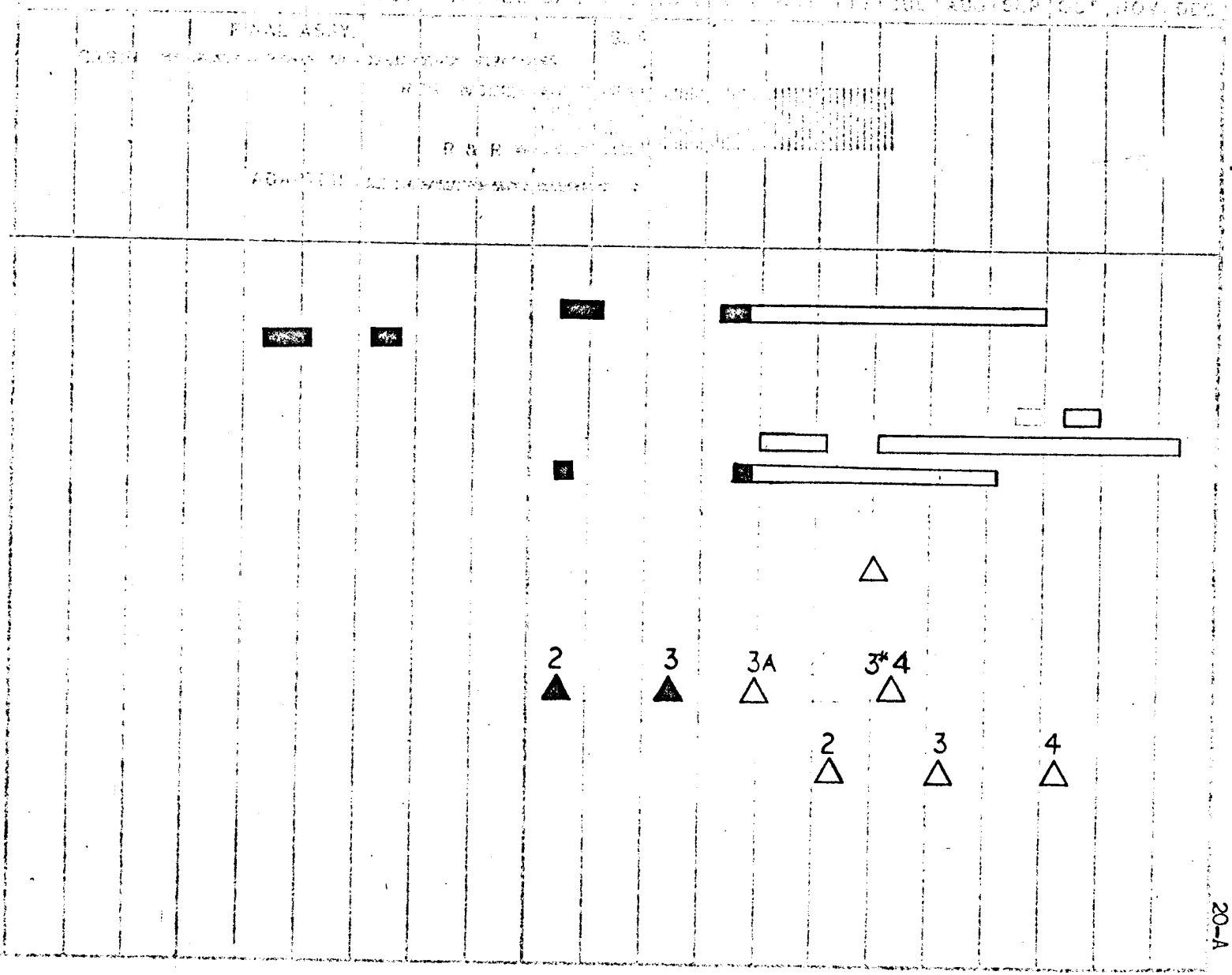

MAJOR TESTS

DEVELOPMENT
1. BOMB DROPS & B/P 5
2. HARDWARE

QUALIFICATION
3. DROPS S/A 4
4. DROPS S/A 7
5. BAROSWITCH-PYRO

AGE

6. CAPE C/O

FLIGHT HARDWARE

CONTROLS
7. AFI

PARACHUTE
8. AFI

* S/C 3 HIGH ALTITUDE EQUIPMENT

LEGEND
▽ Test Proposal Due
◊ Hardware Available
▭ Test Activity
○ Report Due
☆ Report Approved
SOLID INDICATES ACTUALS

GEMINI LANDING SYSTEM
PARACHUTE QUALIFICATION AND DEVELOPMENT TESTS
SCD NO. 52-41703

REPORT NO. 8588-1-38
LAST PROGRAM
SCHEDULE CHANGE: 14-24-64
STATUS AS OF: 4-24-64

-1964-

ACTIVITY	MONTH / WEEK ENDING
1. Development Tests	
2.	
3. Hi-Altitude Drogue Chute	
4. Bomb Drops 19 Drops	
5.	
6. Drogue & Pilot Tandem	
7. Deployment (B/P-5)	
8. 5 Drops	
9.	
10. Qualification Tests	
11.	
12. Recovery System	
13. Drop Tests (Static #7)	
14. 14 Drops	
15.	
16. Complete System	
17. Drop Tests (Static #4)	
18. 2 Drops	
19.	
20.	
21. Drops 8, 9, & 10	
22. (Old Configuration) Static #7	
23.	
24.	
25.	
26.	
27.	
28.	
29.	
30.	
31.	
32.	
33.	
34.	
35.	
36.	
37.	
38.	
39.	
40.	

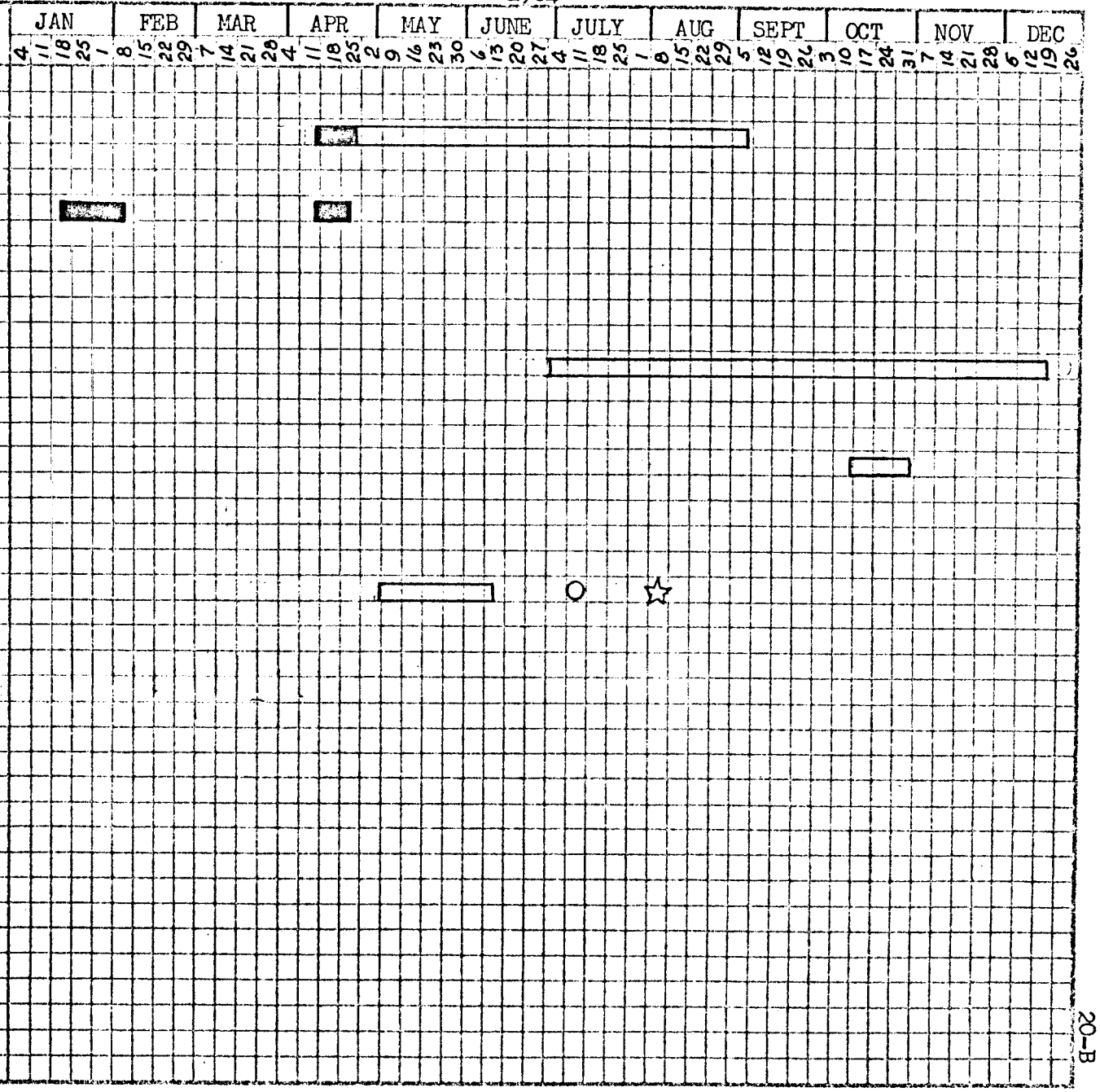

20-B

MAC 2274V (27 APR 59)

LEGEND
- ▽ Test Proposal Due
- ◊ Hardware Available
- ▭ Test Activity
- ○ Report Due
- ☆ Report Approved

SOLID INDICATES ACTUAL

GEMINI LANDING SYSTEM
HARDWARE QUALIFICATION AND DEVELOPMENT TESTS
SCD NO. 52-41703

REPORT NO. 8580-1-38
LAST PROGRAM
SCHEDULE CHANGE: 11-24-64
STATUS AS OF: 4-24-64

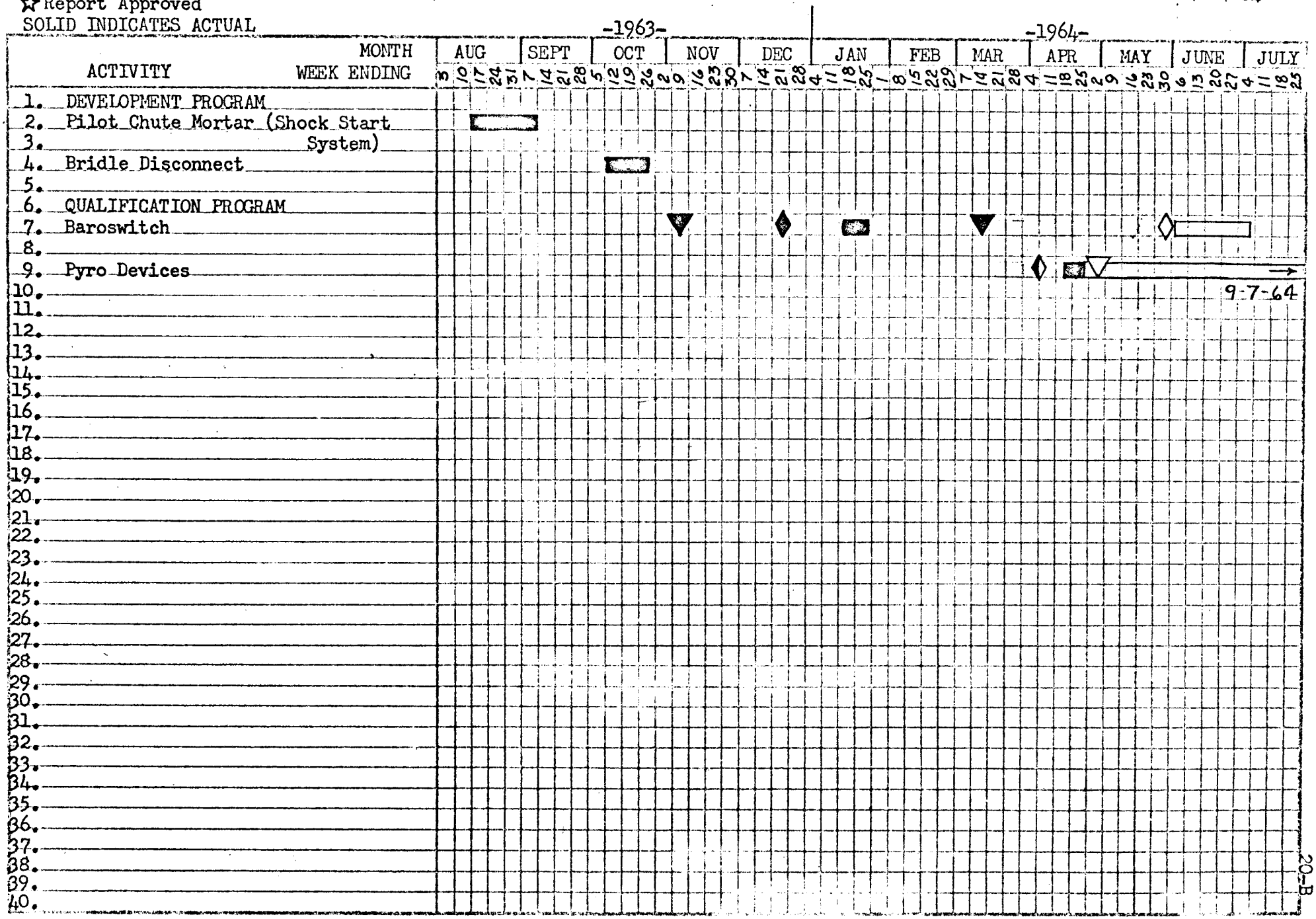

MAC 2274V (27 APR 59)

VENDOR DELIVERY STATUS REPORT
SYSTEM - LANDING
VENDOR - NORTHROP-VENTURA

CHART NO.: 20-C

DATE: 4-24-64

UNIT NO	TYPE	USAGE	COMPONENT	VENDOR W/S	AVAIL FOR INSTL	REQ'D FOR INSTL	SLACK
1	PA-1	SC-2	CONTROLS		A 1-16-64	9-11-63	-18
2	PA-2	SC-3	CONTROLS		A 3-16-64	2-29-64	- 2
2	PA-2	SC-3	CONTROLS (CABIN)	6-01-64	6-10-64	2-29-64	-15
2	PA-2	SC-3	CONTROLS (R&R)	6-30-64	7-10-64	5-11-64	- 8
3	PA-3	SPARE	BAROSWITCHES-SST	6-12-64	6-22-64	12-31-63	-25
4*	PA-4	SC-3A	CONTROLS & CHUTES	4-24-64	5-04-64	4-10-64	- 4
5	PA-5	SC-4	CONTROLS (CABIN)	6-01-64	6-10-64	4-01-64	-10
5	PA-5	SC-4	CONTROLS (R&R)	6-30-64	7-10-64	7-30-64	+ 3
6	PA-6	SC-5	CONTROLS	6-30-64	7-10-64	6-20-64	- 3
7	PA-7	SC-6	CONTROLS	7-20-64	7-30-64	8-17-64	+ 2
8	PA-8	SC-7	CONTROLS	9-21-64	9-30-64	10-15-64	+ 2
9	PA-9	SC-8	CONTROLS	11-20-64	11-30-64	12-15-64	+ 2
10	PA-10	SC-9	CONTROLS	1-20-65	1-30-65	2-15-65	+ 2
11	PA-11	SC-10	CONTROLS	3-20-65	3-30-65	4-15-65	+ 2
12	PA-12	SC-11	CONTROLS	5-20-65	5-31-65	6-15-65	+ 2
13	PA-13	SC-12	CONTROLS	7-20-65	7-30-65	8-16-65	+ 2
1	PA-1	SC-2 (c)	PARACHUTE	5-27-64	6-10-64	6-11-64	0
2	PA-2	SPARE (c)	PARACHUTE	5-27-64	6-10-64	3-31-64	-10
3	PA-3	SC-3 (c)	PARACHUTE	7-23-64	8-06-64	9-06-64	+ 4
4	PA-4	SC-4 (c)	PARACHUTE	9-25-64	10-09-64	12-09-64	+ 9
5	PA-5	SPARE (c)	PARACHUTE	7-23-64	8-06-64	7-31-64	- 1
6	PA-6	SC-5 (c)	PARACHUTE	11-19-64	12-03-64	3-08-65	+13
7	PA-7	SPARE (c)	PARACHUTE	9-25-64	10-09-64	9-30-64	- 1
8	PA-8	SC-6 (c)	PARACHUTE	1-08-65	1-22-65	5-25-65	+19
9	PA-9	SC-7 (c)	PARACHUTE	3-10-65	3-24-65	7-20-65	+17
10	PA-10	SC-8 (c)	PARACHUTE	5-12-65	5-26-65	9-08-65	+15
11	PA-11	SC-9 (c)	PARACHUTE	7-09-65	7-23-65	11-03-65	+15
12	PA-12	SC-10 (c)	PARACHUTE	9-10-65	9-24-65	12-29-65	+14
13	PA-13	SC-11 (c)	PARACHUTE	11-12-65	11-26-65	2-25-66	+13
14	PA-14	SC-12 (c)	PARACHUTE	1-31-66	2-04-66	4-03-66	+ 8

* Used hardware recovered from Drop Tests.

VENDOR AGE STATUS REPORT

SYSTEM - LANDING

VENDOR - NORTHROP-VENTURA

CHART NO.: 20-D

DATE: 4-24-64

PART NUMBER	NOMENCLATURE	UNIT NO	VENDOR W/S	AVAIL FOR INSTL	REQ'D FOR INSTL	SLACK
			HANGAR			
R6275	PKG BOX DROGUE CHUTE	1	7-01-64	8-01-64	7-20-64	- 2
R6275	PKG BOX DROGUE CHUTE	2	7-01-64	8-01-64	7-20-64	- 2
R6275	PKG BOX DROGUE CHUTE	3	7-01-64	8-01-64	7-20-64	- 2
R6275	PKG BOX DROGUE CHUTE	4	7-01-64	8-01-64	7-20-64	- 2
R6276	PKG BOX MAIN CHUTE	1	7-01-64	8-01-64	7-20-64	- 2
R6276	PKG BOX MAIN CHUTE	2	7-01-64	8-01-64	7-20-64	- 2
R6276	PKG BOX MAIN CHUTE	3	7-01-64	8-01-64	7-20-64	- 2

MONTHLY SUMMARY

SYSTEM: Time Reference System
SUBSYSTEM: Electronic & Event Timers
VENDOR: EED
DATE: 24 April 1964

ENGINEERING STATUS

1. An engineering change was made in the Electronic Timers effective S/N 102 and S/N 103 and up. This change is to control the output of the Tx Flip-Flop and the Computer Buffer Flip-Flop to the "Zero" state at power turn-on. The Tx relay contact closure following a power interruption will be prevented by tying a gate resistor in the relay driver flip-flop to the special +12 volts. Since the special +12 volts comes up prior to the normal 12 volt supply this will steer the flip-flop into the desired state. This modification has been accomplished in S/N 101 and has proven acceptable.

2. S/N 105 and up Event Timers will be modified to prevent extra trigger pulses from being generated in the first three toggle flip-flops of the count down chain due to positive spikes fed through the steering diodes. Circuit modifications to three flip-flops and attenuation of the oscillator input to module 2 will eliminate the possibility of a double frequency output for module 2.

PROCUREMENT

1. EED has crystal oscillators to fabricate through S/N 106. The procurement of additional oscillators does not appear to be a problem. The quality of the oscillators received from Delta-F has improved.

2. Rework of all the baseplate-heat fin assemblies has been initiated. EED has received modified baseplates to build through S/N 105.

3. Re-screened 2N914 transistors to fabricate through S/N 106 will be returned to EED from Fairchild 28 April. The remainder of the transistors will be returned from Fairchild during May.

ASSEMBLY AND DELIVERY STATUS

1. No Electronic Timers were delivered during this reporting period. S/N 101 (Qual) is scheduled to be delivered on 27 April. Retrofit will be completed on S/N 103 (SC-3) on 4 May.

2. Event Timer S/N 103 (SC-3) was delivered on 6 April and S/N 104 (Spare SST) on 15 April.

TEST STATUS

1. The Event Timer has completed Qual testing except for one axis of the acceleration test which is scheduled for 27 April. Salt fog started on 13 April and completed on 15 April. Humidity was run from 23 March through 7 April S/N 101 successfully completed both tests.

2. S/N 101 Electronic Timer was being retrofitted and modified during this reporting period. The following Qual tests are scheduled for the Electronic Timer.

Test	Start	Complete
Acceleration	4-28-64	4-29-64
32.9g Shock	4-30-64	4-30-64
44.7g Shock	5-01-64	5-01-64
Endurance	5-04-64	5-18-64

GEMINI
SPACECRAFT
CONTRACT NO. NAS 9-170

EVENT TIMER - (MCDONNELL EED)

STATUS CHART (REPORT 8664)

REPORT NO. SSBO-1 -38
LAST PROGRAM SCHEDULE CHANGE 24 April 1964
STATUS AS 24 April 1964

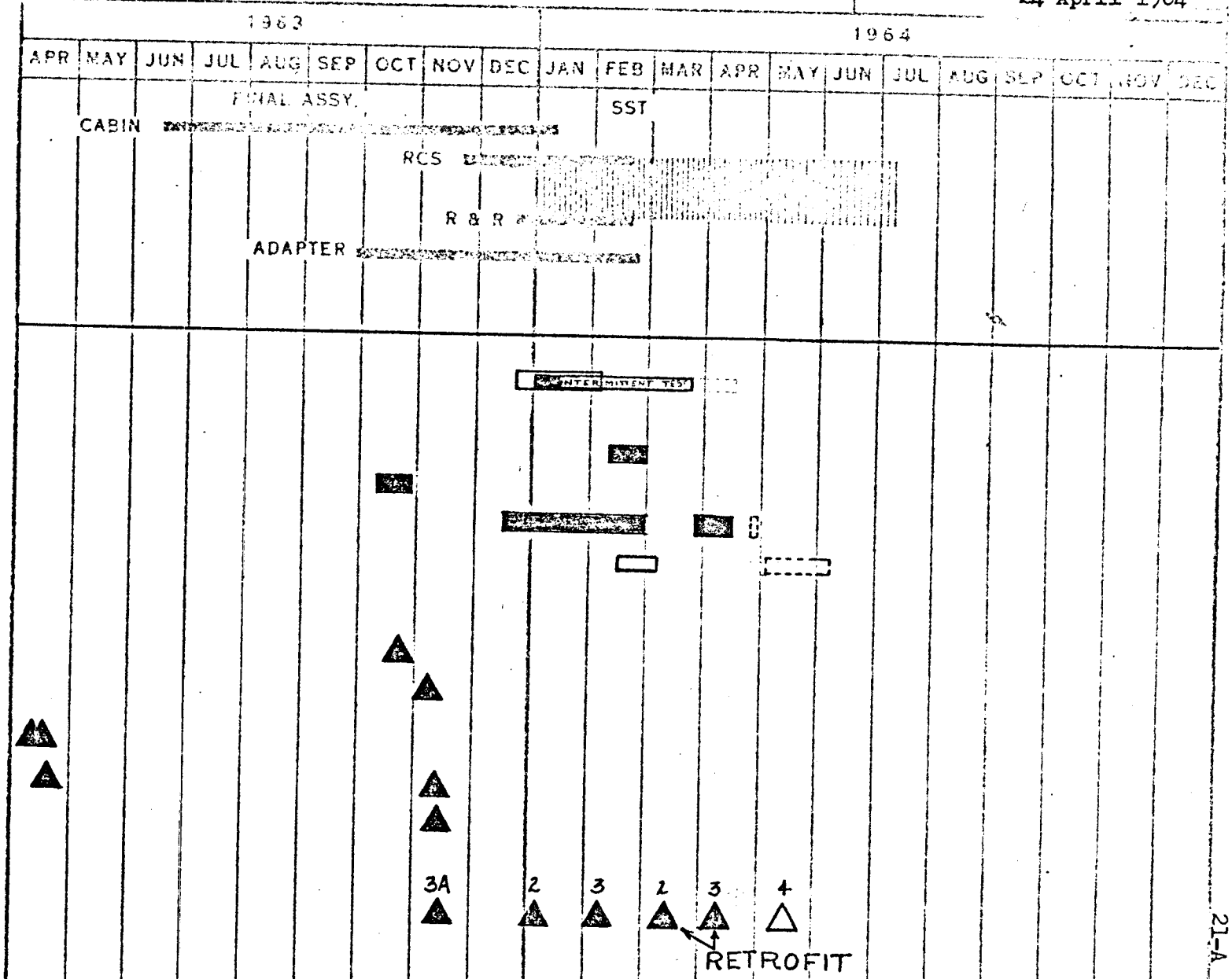

MAJOR TESTS
1 CTU
2 QUAL.
3 PP-1
4 PP-2
5 PA-1
6 RELIABILITY

AGE
7 PIA CONSOLE
8 MAD
9 HANGAR
10 CONTROL PANEL
11 SST
12 HANGAR
13 PAD

DELIVERIES (FLIGHT)
14 AFI

LEGEND:
- ▽ TEST PROPOSAL DUE
- ◊ HARDWARE AVAIL
- ▭ TEST SCHEDULE
- ○ REPORT DUE
- ✡ REPORT APPROVED

SOLID INDICATES ACTUAL

QUALIFICATION AND DEVELOPMENT TEST STATUS
EVENT TIMER
M.A.C. ELECTRONIC ENGINEERING DIVISION

M.A.C. REPORT 8664

REPORT NO.: 8580-1-38
LAST PROGRAM
SCHEDULE CHANGE: 4-24-64
STATUS AS OF: 4-24-64

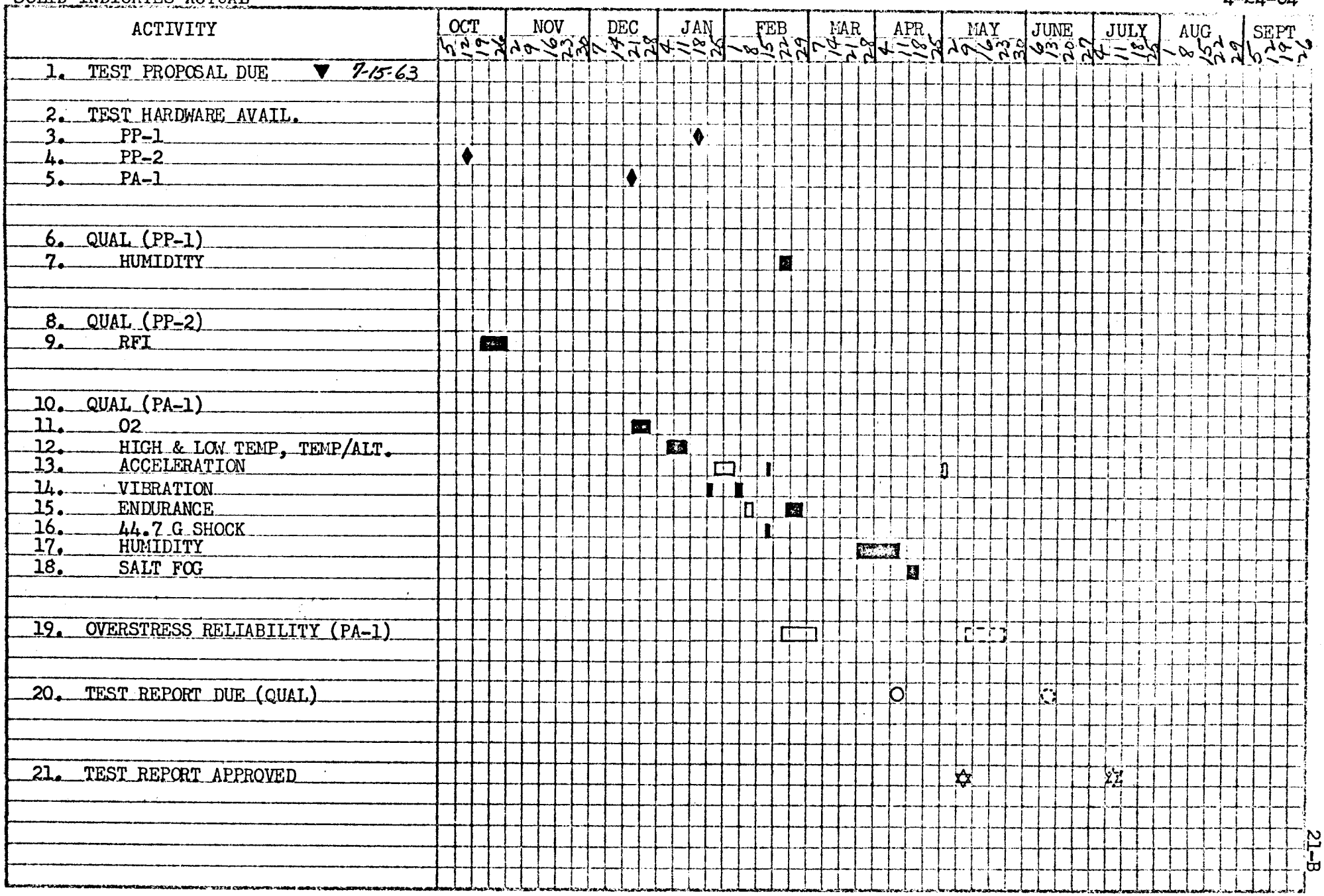

MAC 2274V (27 APR 59)

VENDOR DELIVERY STATUS REPORT
EVENT TIMER
MCDONNELL - E.E.D.

CHART NO: 21-C

DATE: 4-24-64

UNIT NO	TYPE	S/N	USAGE	AVAIL FOR INSTL	REQ'D FOR INSTL	SLACK
2	EP-2		DEVELOPMENT TESTING		A 5-15-63	
2	EP-2		CHANCE-VOUGHT TEST		A11-07-63	
3	PP-1	11	QUAL		A 2-15-64	
4	PP-2	12	QUAL		A10-11-63	
4	PP-2	12	CTU		A12-30-63	
5	PP-3	13	SC-3A	A11-15-63	5-20-64	
6	PA-1	101	QUAL		A12-20-63	
7	PA-2	102	SC-2 (RETROFIT)		A 3-18-64	
8	PA-3	103	SC-3 (RETROFIT)	A 4-06-64	3-10-64	
9	PA-4	104	SPARE SST	A 4-15-64	1-31-64	
10	PA-5	105	SPARE HGR	5-08-64	4-30-64	- 1
11	PA-6	106	SC-4	5-15-64	4-30-64	- 2
12	PA-7	107	SPARE HGR	6-16-64	6-30-64	+ 2
13	PA-8	108	SC-5	7-06-64	7-22-64	+ 2
14	PA-9	109	SC-6	9-05-64	9-18-64	+ 2
15	PA-10	110	SC-7	10-06-64	11-06-64	+ 4
16	PA-11	111	SC-8	12-05-64	1-05-65	+ 4
17	PA-12	112	SC-9	2-03-65	3-03-65	+ 4
18	PA-13	113	SC-10	3-23-65	4-23-65	+ 4
19	PA-14	114	SC-11	5-24-65	6-24-65	+ 4
20	PA-15	115	SC-12	7-19-65	8-19-65	+ 4

VENDOR AGE STATUS REPORT
TIME REFERENCE SYSTEM
(E.E.D.)

CH[illegible]
[illegible]
DATE: [illegible]

PART NUMBER	NOMENCLATURE	UNIT NO	VENDOR W/S	AVAIL FOR USAGE	REQ'D FOR USAGE	STACK
			PRE-INSTALLATION ACCEPTANCE			
52E270012-1	PIA CONSOLE	1			A10-22-63	
			SPACECRAFT SYSTEM TEST			
52E270048-1	CONTROL PANEL	1			A 4-16-63	
52E270048-1	CONTROL PANEL	1			A 4-16-63	
			HANGAR			
52E270048-1	CONTROL PANEL	1			A 4-27-63	
52E270048-1	CONTROL PANEL	1			A11-12-63	
52E270012-1	PIA CONSOLE	1			A11-05-63	
			PAD			
52E270048-1	CONTROL PANEL	1			A11-12-63	

GEMINI SPACECRAFT
CONTRACT NO. NAS 9-170

ELECTRONIC TIMER - (MCDONNELL EED)

STATUS CHART (REPORT 8664)

REPORT NO. 8800-1 -38
LAST PROGRAM SCHEDULE CHANGE 24 April 1964
STATUS AS OF 24 April 1964

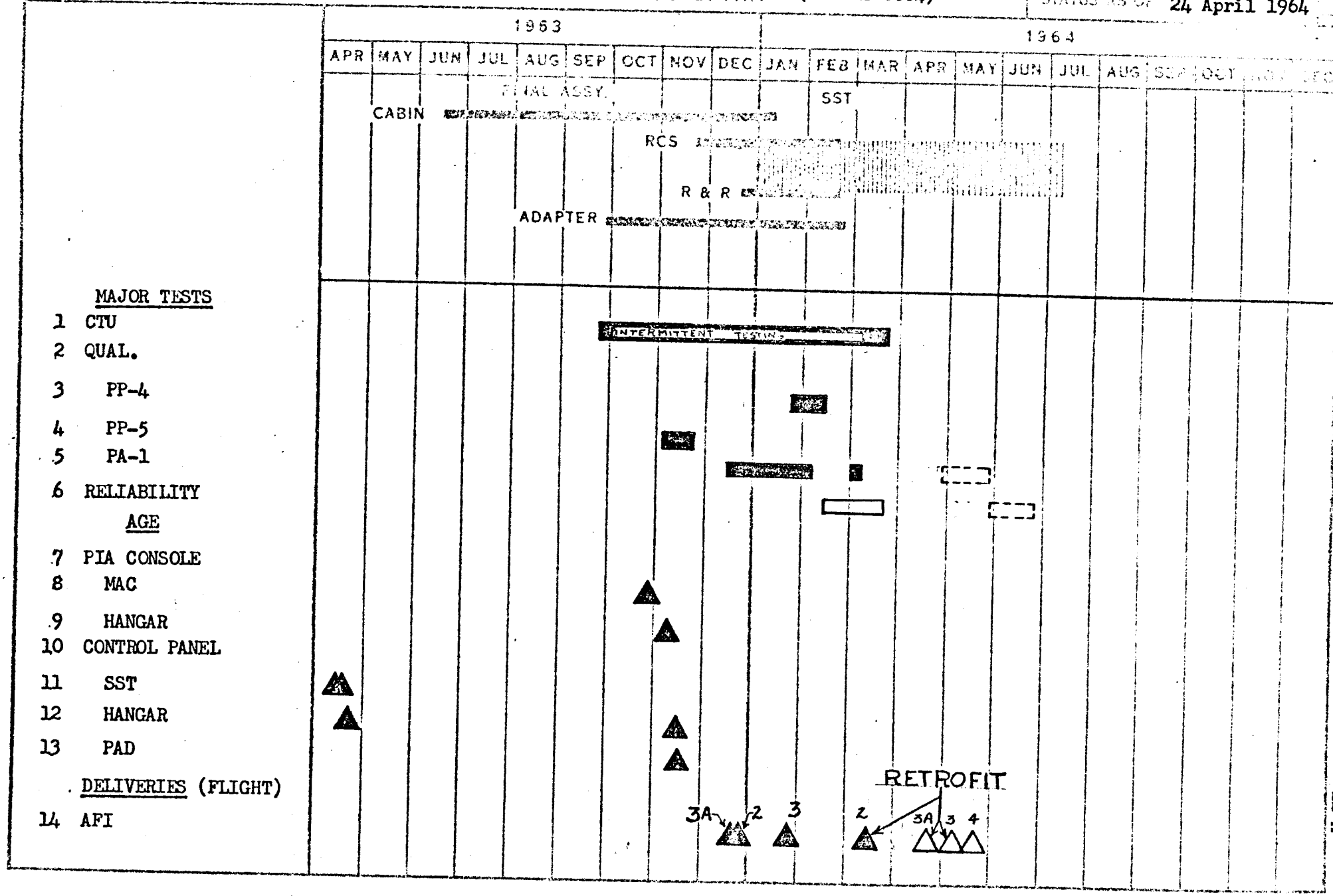

LEGEND:

- ▽ TEST PROPOSAL DUE
- ◊ HARDWARE AVAIL.
- ▭ TEST SCHEDULE
- ○ REPORT DUE
- ✡ REPORT APPROVED

SOLID INDICATES ACTUAL

QUALIFICATION AND DEVELOPMENT TEST STATUS
ELECTRONIC TIMER
M.A.C. ELECTRONIC ENGINEERING DIVISION

M.A.C. REPORT 8664

REPORT NO. 8580-1-38
LAST PROGRAM
SCHEDULE CHANGE: 4-24-64
STATUS AS OF: 4-24-04

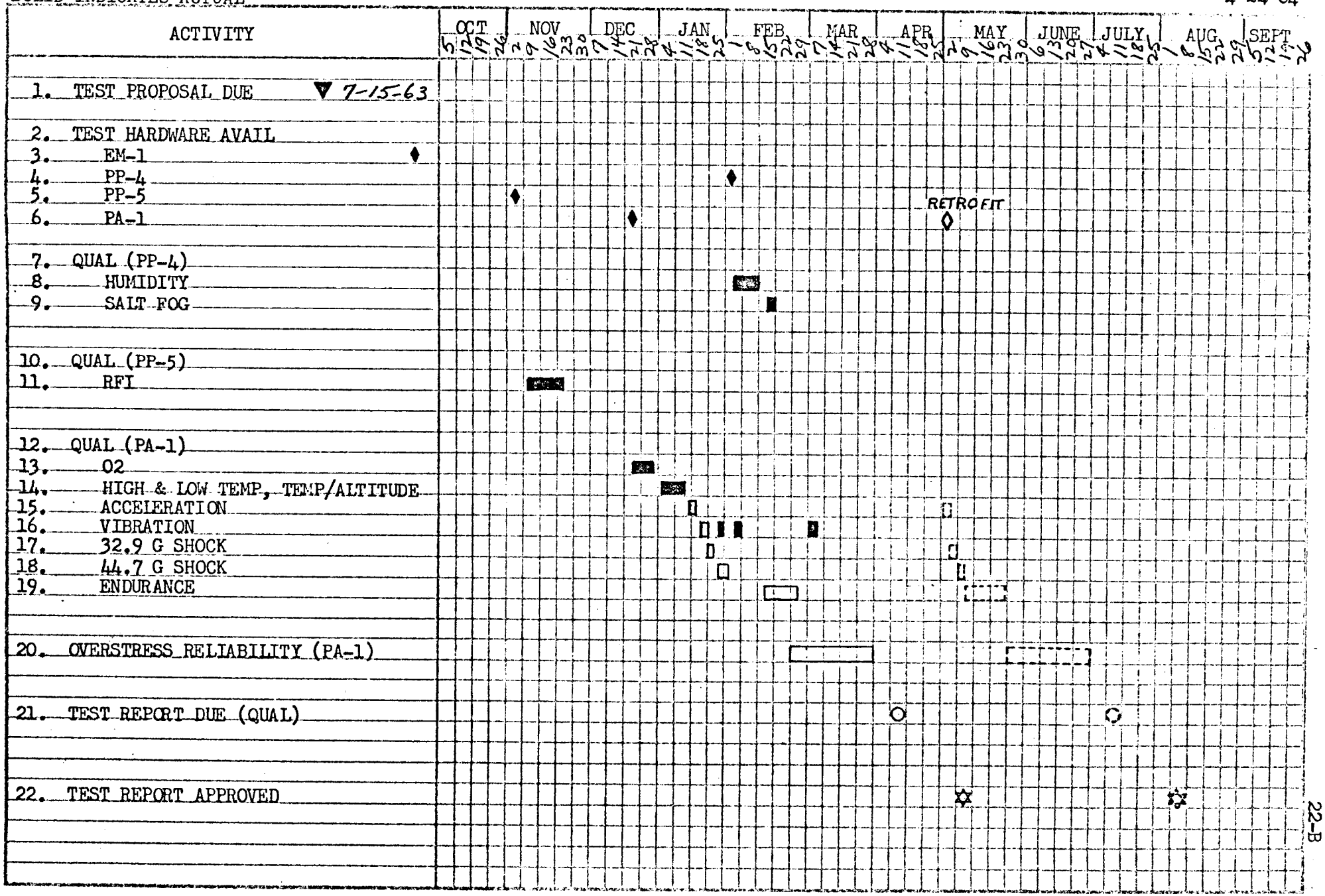

MAC 2274V (27 APR 59)

VENDOR DELIVERY STATUS REPORT
ELECTRONIC TIMER
NAC-EED

DATE: [illegible]

UNIT NO	TYPE	S/N	USAGE	AVAIL FOR INSTL	REQ'D FOR INSTL	[illegible]
1	EP-1		ESTU		A11-25-62	
1	EP-1		DEVELOPMENT		A 4-20-64	
2	EP-2		DEVELOPMENT TESTING		A 9-01-62	
2	EP-2		IN-LOOP TEST - IBM		A 9-30-63	
3	PP-1	11	CTU		A12-03-63	
4	PP-2	12	NASA FLY-OVER 1		A10-10-63	
5	PP-3	13	NASA FLY-OVER 2		A11-05-63	
6	PP-4	21	QUAL		A 1-28-64	
6	PP-4	21	ESTU		A 4-20-64	
7	PP-5	22	QUAL		A11-04-63	
7	PP-5	22	SC-3A (RETROFIT)	4-30-64	5-08-64	[illegible]
8	PA-1	101	QUAL (RETROFIT)	4-27-64	3-03-64	
9	PA-2	102	SC-2 (RETROFIT)		A 3-18-64	
10	PA-3	103	SC-3 (RETROFIT)	5-04-64	3-25-64	[illegible]
11	PA-4	104	SC-4	5-18-64	6-02-64	[illegible]
12	PA-5	105	SPARE SST	5-25-64	3-30-64	[illegible]
13	PA-6	106	SPARE HGR	6-09-64	4-30-64	[illegible]
14	PA-7	107	SPARE HGR	6-23-64	6-30-64	[illegible]
15	PA-8	108	SC-5	7-29-64	8-20-64	[illegible]
16	PA-9	109	SC-6	9-17-64	10-17-64	[illegible]
17	PA-10	110	SC-7	11-09-64	12-09-64	[illegible]
18	PA-11	111	SC-8	1-04-65	2-04-65	[illegible]
19	PA-12	112	SC-9	3-02-65	4-02-65	[illegible]
20	PA-13	113	SC-10	4-26-65	5-26-65	[illegible]
21	PA-14	114	SC-11	6-28-65	7-28-65	[illegible]
22	PA-15	115	SC-12	8-21-65	9-21-65	[illegible]

No spares allocated until S/N 105 - effectivity of TRS - Radar interface configuration change.

MONTHLY SUMMARY

SUBSYSTEM: Data Transmission
VENDOR: Electro-Mechanical Res
DATE: 24 April 1964

ENGINEERING

A. PCM

EMR has successfully completed their investigation of the low level accuracy problem and is investigating the quickest and most economical method of implementing the required fixes. Environmental specifications are being reviewed to determine if they may be relaxed in order to reduce costs and still maintain accuracy for a successful mission.

PROCUREMENT

A. PCM

Micro-D-Connectors supplied by Cannon Electric were discovered to be faulty during vibration of A/B 8 (S/C 2) PCM. On investigation it was found that the connector pins were fatigued due to the crimping process used by Cannon. EMR personnel went to Cannon and the vendor promised to reinstruct personnel performing the crimping process. Supplier also agreed to tighten Q.C. surveillance of this operation. All fifty-one pin connectors were scrapped and all twenty-five pin connectors were X-rayed to determine extent of pin damage.

ASSEMBLY AND DELIVERY

A. PCM

1. A/B 7 (Qual) due to shortage of transistors for buildup of Signal Conditioners and transfer of this matrix to A/B 8 (S/C 2) has slipped from 21 March to 18 May.

2. A/B 8 (S/C 2) has been plagued with various problems causing scheduled delivery dates to slip approximately one month. During vibration prior to Acceptance Test, the mother boards backed out of the connectors. This was fixed by attaching heel plates to the mother boards which were then fastened to the base plate. Micro-D-Connectors were then discovered to have broken pins, causing the matrix to be scrapped. The new matrix had a connector .040 off center which threw the overall tolerance out of spec. A/B 7 (Qual) matrix is being used for A/B 8. A/B 8 matrix is going to rework. In all will ship date slipped from 28 March to 6 May.

3. PCM A/B 6 shipped to Goddard on 21 March for IO-2.

B TRANSMITTERS

1. Transmitters S/N 7 (-63, 65, 67) for S/C 3 were delivered to MAC St. Louis on 17 April.

C. TAPE RECORDERS

1. -35 S/N 7P Tape Recorder was delivered to MAC on 16 March for S/C 2. During SST S/C 2 S/N 7P failed to operate properly. This unit will be replaced by EMR when -35 S/N 9P becomes available.

[illegible] shipped [illegible] MAC [illegible]

3. [illegible] S/N [illegible] will ship [illegible] (Estimated to be 28 Apr [illegible])

4. [illegible] S/N [illegible] will go into Acceptance Test approximately 27 Apr [illegible] and then into Qual Test program.

TESTING

MAC A/B SYSTEMS TEST

A CTMU design verification testing during the month was accomplished using airborne PCM System 6 with the following objectivies and conclusions.

1. A reported problem relative to compatibility of the PCM playback recorder, the PCM programmer and the PCM ground station in the Flyover program was investigated. Ground station synchronization of a delayed [illegible] appears to be related to the number of bit transitions in the data frame. Results of the investigation are as follows:

   1.1 RZ data input to the recorder from the programmer indicates a data train base line shift from 5 volts positive peak for minimum transitions (consecutive zeroes) to 3 volt peak for maximum transitions (consecutive ones). However, this did not correlate with quality of tape recorder output or ground station sync.

   1.2 RZ deck pulse rise time from programmer to recorder was 2.5 to 3 microseconds and did not adversely affect the ability to synchronize the ground station. When the clock pulse rise time was shortened to .5 microseconds, no change in quality resulted.

   1.3 The ground station could lock-on when the prime subframe data was programmed for an alternate one/zero pattern in every fourth word with all zeroes in remaining words. However, no success was obtained when every fourth word pattern was changed to a 10100000 pattern.

2. A malfunction of the PCM system 6 programmer computer sync pulse was verified and isolated to an AC gate module on mother board No. [illegible]. The module was replaced by EMR and the malfunction was corrected.

B CTU compatibility and RFI tests were performed utilizing PCM airborne system 6 with other Guidance and Control electronics. The PCM system was not adversely affected during the RFI investigation and the only incompatibility existing with the G and C equipment was the inability to recover computer words via the PCM. This resulted from a malfunction in the PCM programmer computer sync function, reference paragraph 2 for further information.

C A complete readiness test was performed to prepare CTMU for use as interim PCM equipment. Compatibility tests between the [illegible] and [illegible] tape recorders and the PCM system were completed. Results indicate no interface problem between spacecraft equipments.

EMR AIRBORNE SYSTEM TESTS

A [illegible]

B. TAPE RECORDERS

1. -35 (2P) Tape Recorder was released to EMR for one week for special programmer-recorder interface tests. Upon completion of these tests, EMR was to run all functional portions of the ATP, excluding burn-in, and ship it back to MAC St. Louis.

2. -35 (6P) failed special vibration tests. Recorder had difficulty in playback of bit information. The recorder played back more bits than had originally been recorded. RCA contends that this was due to transient bits caused by high voltage lines or radio frequency interference. Tests are to continue on this unit.

3. -37 S/N 12P qual is estimated to start approximately 1 May. Unit will go into acceptance test on 27 April.

C. TRANSMITTERS

1. Qual tests of the -65 and -67 transmitters (S/N 5) was completed on 21 April. Test reports have been forwarded to MAC St. Louis for approval. These qual transmitters will go through acceptance testing approximately 29 April.

AGE

A. An EMR representative was in St. Louis during the week of 17 February to modify the recorder portion of the 52E44004-3 test set. The purpose of modification was to provide capability of the test set to enable FIA testing the 52-85713-35 tape recorder.

B. 011-3 modified PCM ground station scheduled for shipment to St. Louis on 30 April has slipped to 30 May. Grounding problems discovered while checking out 011-5 and 011-9 required some rework of the 011-3.

C. 011-9 PCM ground station scheduled for delivery to the Cape on 20 March has slipped 9 May. Various problems on grounding and workmanship have caused slip.

D. The second 040-3 test set scheduled for Cape installation has been cancelled. EMR has been directed to hold all parts in bonded storage.

E. In-house test sets are still giving EMR problems in testing PCM equipment. Currently, only one test set is operable with the other two in various stages of rework.

SPACEMONT

CONTRACT NO. NAS 9-170

DATA TRANSMISSION SYSTEM

(VENDOR: ELECTRO-MECHANICAL RESEARCH, INC.)

STATUS CHART

REPORT NO. [illegible]-3

LAST PROGRAM SCHEDULE CHANGE: 24 April 1964

STATUS AS OF: 24 April 1964

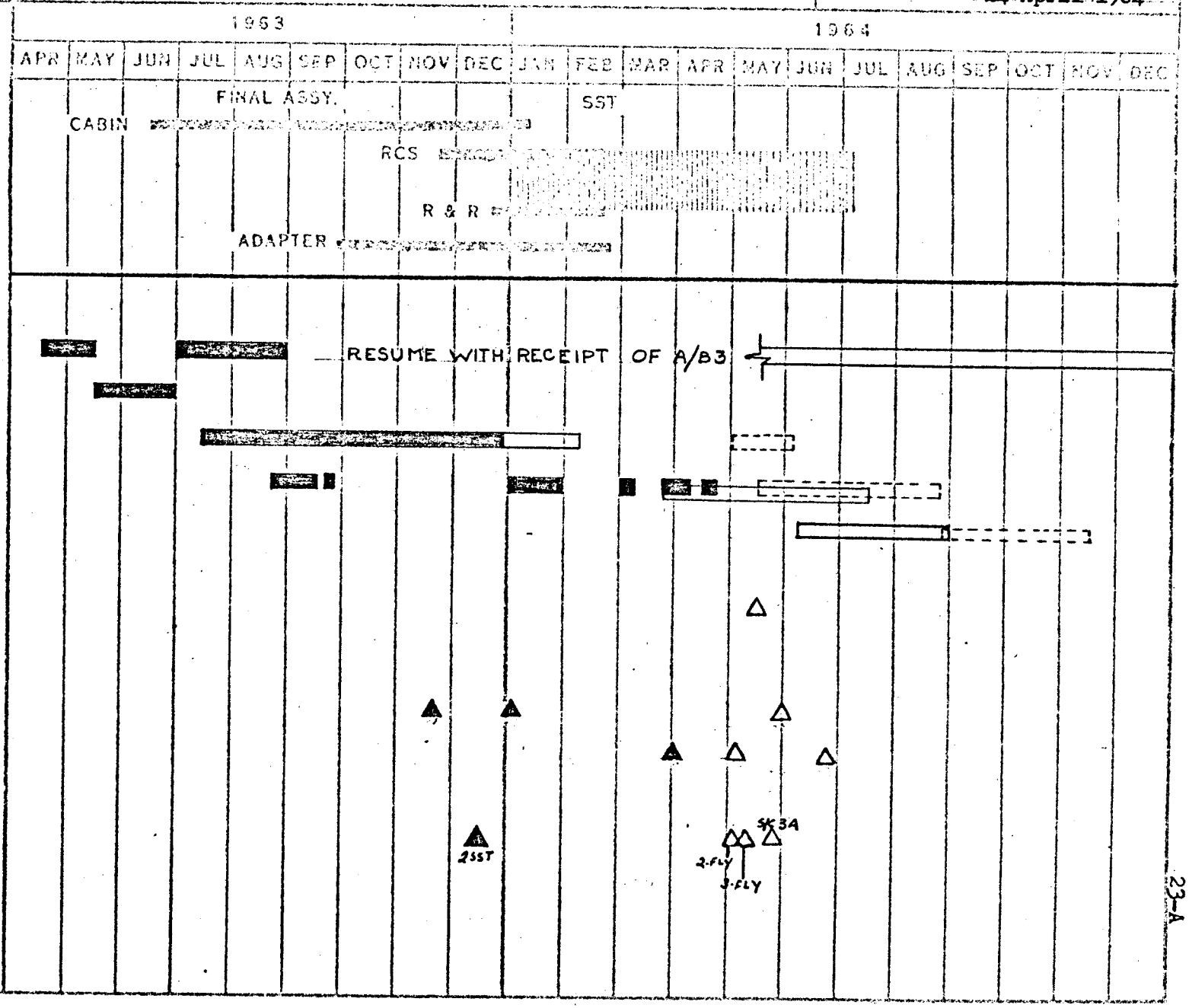

MAJOR TESTS

1. DEVELOPMENT
2. CIMU
3. ESTU
4. CTU
5. QUAL.
6. RELIABILITY

AGE (PCM)

7. PIA

AGE (GROUND STA)

8. SST
9. CAPE

FLIGHT HARDWARE

10. AFI

LEGEND
- ▽ TEST PROCEDURE APPROVED
- △ HARDWARE AVAILABLE
- ▭ TEST SCHEDULE
- ○ REPORT DUE
- ✡ REPORT APPROVED

SOLID INDICATES ACTUAL

QUALIFICATION AND DEVELOPMENT TEST STATUS

DTS TAPE RECORDER
(EMR-RCA)

8580-1-38
24 April 1964
24 April 1964

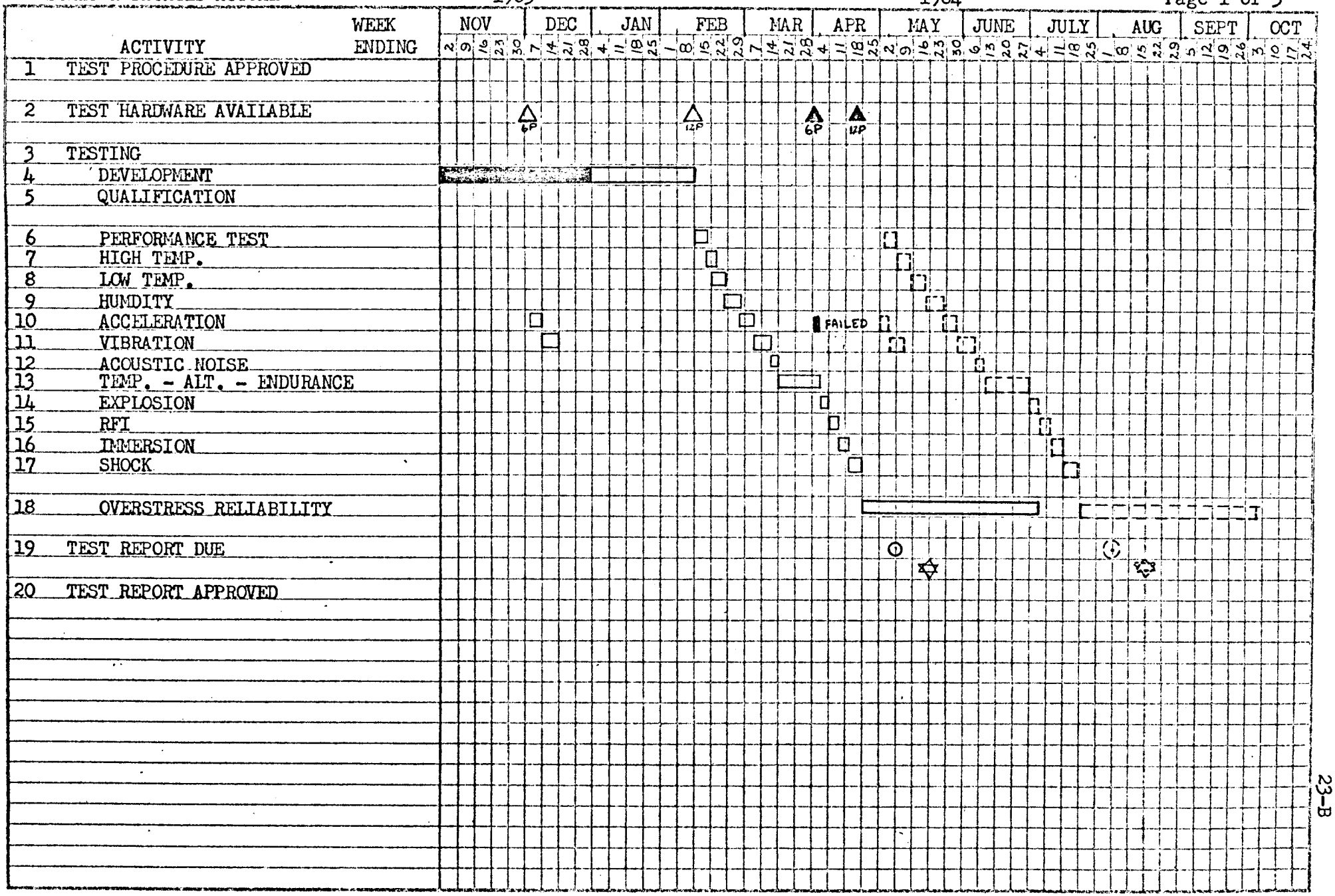

MAC 2274V (27 APR 59)

LEGEND:
- ▽ PROCEDURE APPROVED
- △ HARDWARE AVAILABLE
- ▭ TEST SCHEDULE
- ○ REPORT DUE
- ✡ REPORT APPROVED

SOLID INDICATES ACTUAL

QUALIFICATION AND DEVELOPMENT TEST STATUS

DTS TRANSMITTERS
EMR-RCA
SCD 52-85713

8580-1-38
24 April 1964

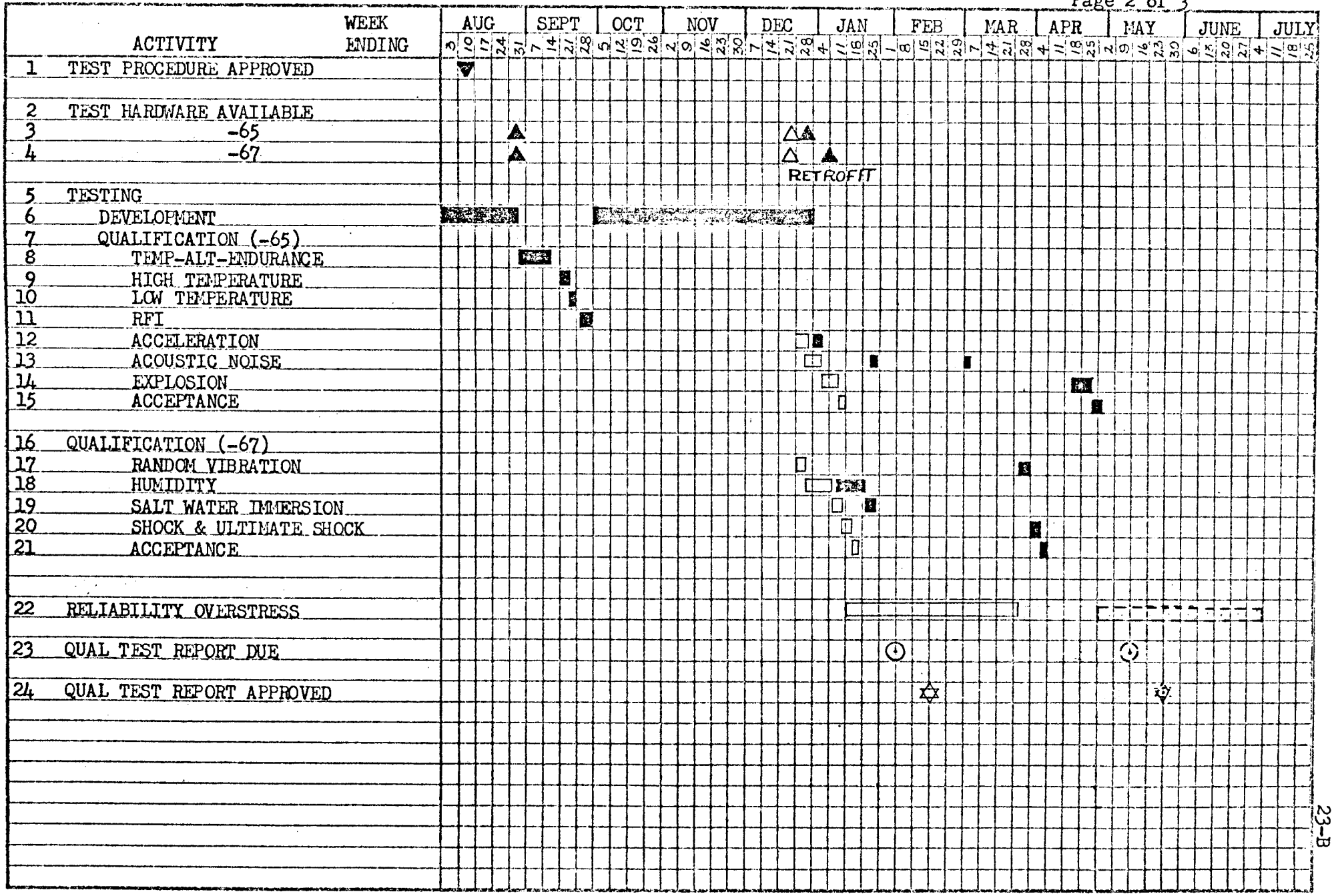

MAC 2274V (27 APR 59)

LEGEND:

- ▽ TEST PROCEDURE APPROVED
- △ HARDWARE AVAILABLE
- ▭ TEST SCHEDULE
- ○ REPORT DUE
- ✡ REPORT APPROVED

SOLID INDICATES ACTUAL

QUALIFICATION AND DEVELOPMENT TEST STATUS

DATA TRANSMISSION SYSTEM-PCM
(ELECTRO-MECHANICAL RESEARCH)
SCD 52-85713

8580-1-38

24 April 1964

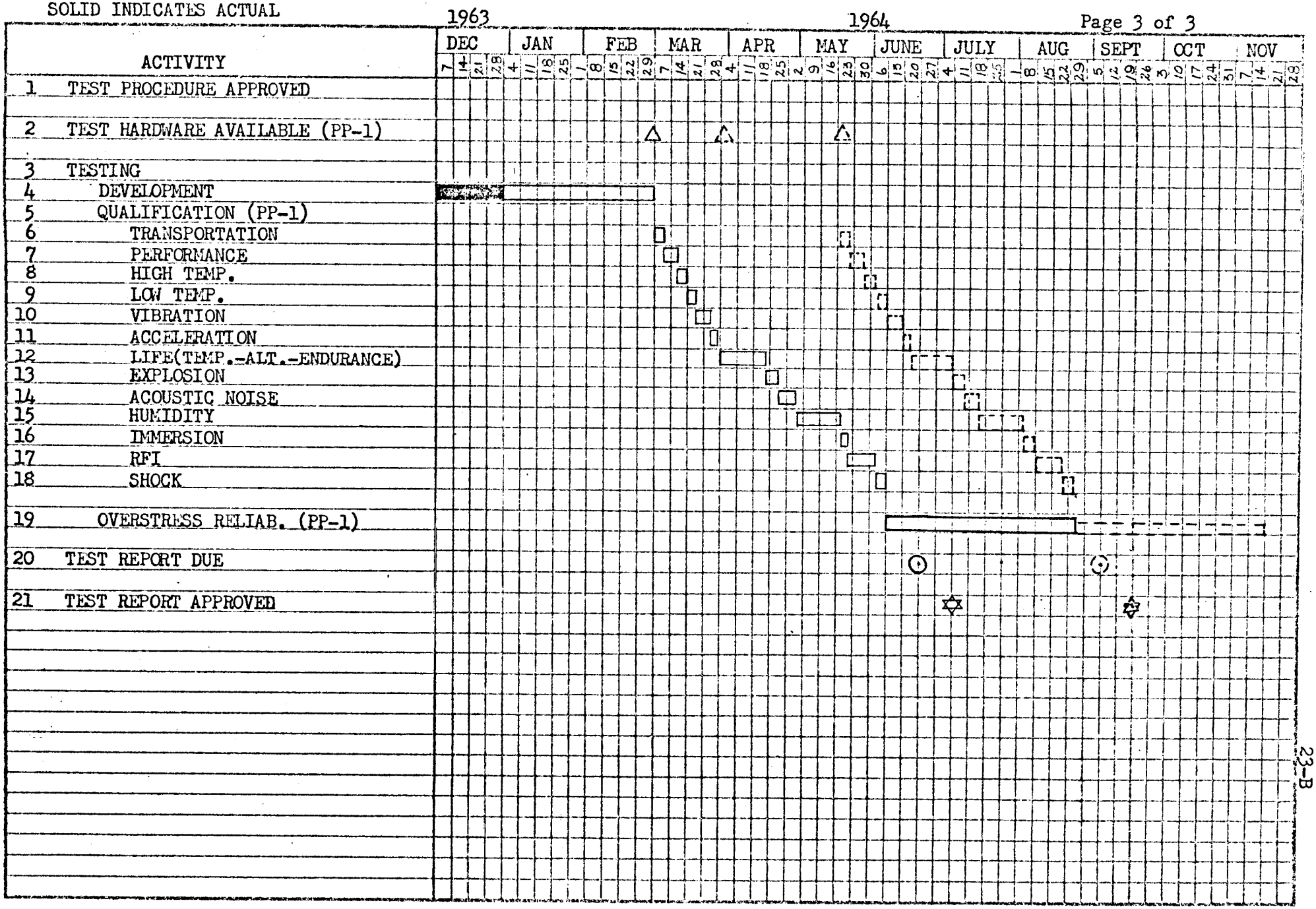

23-B

MAC 2274V (27 APR 59)

PCM S

VENDOR DELIVERY STATUS REPORT [illegible]
DATA TRANSMISSION SYSTEM
ELECTRO-MECHANICAL RESEARCH [illegible]

UNIT NO	TYPE	USAGE	COMPONENT	VENDOR W/S	AVAIL FOR INSTL	REQ'D FOR INSTL	STATUS
1	BB-1	VENDOR	DEVELOPMENT			A 2-27-63	
2	BB-2	ESTU	CIMU-GMS-1			A [illegible]	
3	EP-1	CTU	PCM A/B 1 1-83, 2-E65, 2-87			A 7-02-63	
4	PPP-1	FO-1	PCM A/B 2 1-183, 2-185, 2-187			A 9-[illegible]7-63	
5	PPP-2	VENDOR	PCM A/B-3 1-183, 2-185, 2-187	Held by Vendor for Investigation and Test			
6	PPP-3	SST-S/C 2	PCM A/B 4 1-183, 3-185, 2-187			A 2-08-64	
		GMS-2	PCM A/B 4 (After SST-S/C 2)		5-04-64		
		ICMU	PCM A/B 4 (After S/C 2 Fly)		8-[illegible]5-64		
7	PPP-4	AGE	PCM A/B 5 1-183, 2-185, 2-187	Required for Re-Entry Module Simulation [illegible] ICPM is available.			
		IMCC (MSC)	PCM A/B 5 (After AGE)				
8	PPP-5	FO-2	PCM A/B 6 1-183, 2-185, 2-187		A 3-2-64	12-30-63	
9	PP-1	QUAL	PCM A/B 7 2-83, 2-85, 2-87	5-18-64	5-8-64		
10	PP-2	S/C 2	PCM A/B 8 1-83, 3-85, 2-87	5-06-64	5-27-64	[illegible]	
		GMS-2	PCM A/B 8 (After S/C 2 Fly)		8-[illegible]-64		
11	PP-3	S/C 3	PCM A/B 9 1-83, 2-85, 2-87	5-11-64	6-04-64	3-25-64	
12	PP-4	S/C 3A	PCM A/B 10 1-83, 2-85, 2-87	5-28-64	6-22-64	[illegible]	
13	PP-5	SPARE SST	PCM A/B 11 1-83, 2-85, 2-87	6-[illegible]-64	7-06-64	[illegible]	
14	PP-6	S/C 4	PCM A/B 12 1-83, 2-85, 2-87	6-26-64	7-21-64	[illegible]	
15	PP-7	SPARE HGR	PCM A/B 13 1-83, 2-85, 2-87	7-10-64	8-04-64	[illegible]	
16	PP-8	S/C 5	PCM A/B 14 1-83, 2-85, 2-87	7-25-64	8-19-64	[illegible]	
17	PP-9	S/C 6	PCM A/B 15 1-83, 2-85, 2-87	8-[illegible]	[illegible]	[illegible]	

[illegible] NO	TYPE	USAGE	COMPONENT	VENDOR W/S	AVAIL FOR INSTL	[illegible] FOR INSTL	[illegible]
18	PP-10	S/C 7	PCM A/B 16 1-83, 2-85, 2-87	8-25-64	9-18-64	[illegible]	[illegible]
19	PP-11	SPARE-SST	PCM A/B 17 1-83, 1-85, 1-87	9-09-64	10-03-64	[illegible]	[illegible]
20	PP-12	SPARE-HGR	PCM A/B 18 2-83, 3-85, 3-87	9-24-64	10-19-64	[illegible]	[illegible]
21	PP-13	S/C 8	PCM A/B 19 1-83, 2-85, 2-87	10-09-64	11-03-64	[illegible]	[illegible]
22	PP-14	S/C 9	PCM A/B 20 1-83, 2-85, 2-87	10-24-64	11-18-64	[illegible]	[illegible]
23	PP-15	S/C 10	PCM A/B 21 1-83, 2-85, 2-87	11-09-64	12-04-64	[illegible]	[illegible]
24	PP-16	S/C 11	PCM A/B 22 1-83, 2-85, 2-87	11-24-64	12-18-64	[illegible]	[illegible]
25	PP-17	S/C 12	PCM A/B 23 1-83, 2-85, 2-87	12-09-64	1-03-65	[illegible]	[illegible]
26	PP-18	AD-13	PARTL PCM 1-85, 1-87	9-15-64	10-09-64	[illegible]	[illegible]
27	PP-19	AD-14	PARTL PCM 1-85, 1-87	12-24-64	1-18-65	[illegible]	[illegible]

TRANSMITTAL

VENDOR DELIVERY STATUS REPORT
DATA TRANSMISSION SYSTEM
ELECTRO MECHANICAL RESEARCH

CHART NO. [illegible]

DATE [illegible]

UNIT NO	TYPE	USAGE	COMPONENT	VENDOR W/S	AVAIL FOR INSTL	REQ'D FOR INSTL	[illegible]
3	EP-1	CTU	XMTR (1E) 1-E63, 1-E65, 1-E27			A 4-20-63	
4	PARTL	S/C 1	XMTR (4) 1-63, 1-65, 1-67			A 12-03-63	
5	EP-2	FO-1	XMTR (3E, 2E) 1-E63, 1-E67			A 7-22-63	
6	EP-3	CIMU	XMTR (2E, 3E, 2E) 1-E63, 1-E65, 1-E67			A 7-22-63	
7	PA-2	S/C 2	XMTR (6,6) 1-65, 1-67		*A 4-04-64	0-[illegible]-63	
		GMS-2	XMTR (6,6) (After S/C 2 Fly)		8-[illegible]5-64		
8	PA-3	S/C 3	XMTR (7) 1-63, 1-65, 1-67	A 4-17-64	4-25-64	2-25-64	
9	PA-4	S/C 3A	XMTR (8) 1-63, 1-65, 1-67	5-30-64	5-08-64	4-[illegible]-64	
10	PA-5	FO-2	XMTR (6, 9) 1-63, 1-67	5-22-64	5-30-64	2-[illegible]-63	
11	PA-6	SPARE-SST	XMTR (9, 9, 10) 1-63, 1-65, 1-67	5-05-64	6-13-64	[illegible]	
12	PA-7	S/C 4	XMTR (10, 11, 11) 1-63, 1-65, 1-67	7-06-64	7-14-64	4-[illegible]	
13	PA-8	IMCC (MSC)	XMTR (12, 10, 12) 1-63, 1-65, 1-67	7-13-64	7-21-64	2-[illegible]-63	
14	PA-9	SPARE HGR	XMTR (13, 2E, 13) 1-63, 1-65, 1-67	7-19-64	7-27-64	4-[illegible]-64	
15	PA-10	S/C 5	XMTR (14, 12, 14) 1-63, 1-65, 1-67	8-21-64	8-29-64	7-[illegible]-64	
16	PA-11	SPARE SST	XMTR (15, 13, 15) 1-63, 1-65, 1-67	8-28-64	9-05-64	2-[illegible]-64	
17	PA-12	S/C 6	XMTR (16, 14, 16) 1-63, 1-65, 1-67	9-21-64	9-29-64	9-[illegible]-64	
18	PA-13	S/C 7	XMTR (17, 15, 17) 1-63, 1-65, 1-67	9-28-64	10-06-64	[illegible]	

TRANSMITTERS

UNIT NO	TYPE	USAGE	COMPONENT	VENDOR W/S	AVAIL FOR INSTL	REQ'D FOR INSTL	[illegible]
19	PA-14	SPARE-HGR	XMTR (18,16,18) 1-63, 1-65, 1-67	10-05-64	10-13-64	6-30-[illegible]	[illegible]
20	PA-15	S/C 8	XMTR (19,17,19) 1-63, 1-65, 1-67	10-21-64	10-29-64	[illegible]	[illegible]
21	PA-16	S/C 9	XMTR (20,18,20) 1-63, 1-65, 1-67	10-31-64	11-09-64	3-0[illegible]	[illegible]
22	PA-17	S/C 10	XMTR (21,19,21) 1-63, 1-65, 1-67	11-30-64	12-08-64	4-22-65	[illegible]
23	PA-18	S/C 11	XMTR (22,20,22) 1-63, 1-65, 1-67	12-30-64	1-07-65	5-2[illegible]-65	[illegible]
24	PA-19	S/C 12	XMTR (23,21,23) 1-63, 1-65, 1-67	1-30-65	2-08-65	8-[illegible]-65	[illegible]
25	PA-20	AD-13	XMTR (11) 1-63	7-06-64	7-14-64	12-0[illegible]	[illegible]
26	PA-21	AD-14	XMTR (24) 1-63	2-28-65	3-08-65	1-27-[illegible]	*

* Indicates Waiver of XMTR S/N 6 PIA.

TAPE RECORDER

VENDOR DELIVERY STATUS REPORT
DATA TRANSMISSION SYSTEM
ELECTRO-MECHANICAL RESEARCH

CHART NO: 23-3C

DATE: 4-24-64

UNIT NO	TYPE	USAGE	COMPONENT	VENDOR W/S	AVAIL FOR INSTL	REQ'D FOR INSTL	SLACK
3	EP-2	VENDOR	-31 (2P) Return to Vendor for Rework.			A10-24-63	
4	EP-3	CTU	-31 (3P)			A11-02-63	
5	EP-4	FO-1	-31 (4P)			A 7-31-63	
6	PP-6	FO-2	-35 (6P) (After Spec. Vibration Test)				
7	PP-7	SST-S/C 2	-35 (7P)		A 3-24-64	4-01-64	
		GMS-2	-35 (7P) (After S/C 2 - SST)				
8	PP-9	SC-2	-35 (9P)	A 4-27-64	5-05-64	4-01-64	- 4
		IGMU	-35 (9P) (After S/C 2 Fly)		8-15-64		
9	PP-10	SC-3A	-35 (10P)	4-24-64	5-02-64	5-08-64	+ 1
10	PP-1	IMCC (MSC)	-35 (11P)	4-28-64	5-05-64		
11	PA-1	QUAL	-37 (12P)			A 4-21-64	
12	PA-2	SC-3	-37 (13)	5-16-64	5-23-64	3-25-64	- 7
13	PA-3	SC-4	-37 (14)	6-13-64	6-20-64	6-02-64	- 3
14	PA-4	SPARE-SST	-37 (15)	7-11-64	7-18-64	1-31-64	-24
15	PA-5	SPARE-HGR	-37 (16)	8-08-64	8-15-64	4-30-64	-15
16	PA-6	SC-5	-37 (17)	9-05-64	9-12-64	8-20-64	- 3
17	PA-7	SC-6	-37 (18)	10-03-64	10-10-64	10-17-64	+ 1
18	PA-8	SC-7	-37 (19)	10-31-64	11-07-64	12-09-64	+ 5
19	PA-9	SPARE-SST	-37 (20)	11-28-64	12-05-64	3-31-64	-34
20	PA-10	SPARE-HGR	-37 (21)	12-26-64	1-02-65	6-30-64	-26
21	PA-11	SC-8	-37 (22)	1-23-65	1-30-65	2-04-65	+ 1
22	PA-12	SC-9	-37 (23)	2-20-65	2-27-65	4-02-65	+ 5
23	PA-13	SC-10	-37 (24)	3-20-65	3-27-65	5-26-65	+ 9
24	PA-14	SC-11	-37 (25)	4-17-65	4-24-65	7-28-65	+14
25	PA-15	SC-12	-37 (26)	5-16-65	5-24-65	9-21-65	+17

VENDOR AGE STATUS REPORT

DATA TRANSMISSION

ELECTRO-MECHANICAL RESEARCH

Date: 4-[illegible]-64

PART NO.	NOMENCLATURE	UNIT NO	VENDOR W/S	AVAIL FOR USAGE	REQD FOR INSTL	[illegible]
			PRE-INSTALLATION ACCEPTANCE			
52E440040-3	TEST SET S/C INS	11	5-15-64	5-22-64	3-30-64	[illegible]
			SPACECRAFT SYSTEM TESTS			
52E440011-3	GND STA PCM	2	5-30-64	6-06-64	3-13-64	
52E440011-3	GND STA PCM	1		A 3-28-64		
52E440011-1	GND STA PCM	1		A11-25-63		
			HANGAR			
52E440011-9	GND STA PCM	1	5-09-64	5-16-64	5-04-64	[illegible]
52E440011-3	GND STA PCM	3	6-26-64	7-03-64	7-06-64	[illegible]
			PAD			
52E440011-5	GND STA PCM	1	A 3-31-64	4-08-64	6-13-64	[illegible]

MONTHLY SUMMARY

SYSTEM: Crew Station
SUBSYSTEM: Escape System
VENDOR: Weber Aircraft
DATE: 24 April 1964

ENGINEERING STATUS

1. Egress Tank detail and assembly drawings are presently being reviewed to determine maximum and minimum allowable tolerances to facilitate manufacturing.

2. Acceptance test procedure relative to seat testing is being reviewed for possibility of tolerance relief.

3. Engineering changes for incorporation of jettison capabilities and 48" Ballute are estimated to be finalized by 1 May.

4. EJS 52-2922 (Manual Lanyard-Drogue Mortar) effective SC-3A, 3 and up, Static A and Qual tests has been released but estimates indicate schedule will not be affected.

5. Weber Aircraft has been directed by MAC to use actual Gemini survival gear during Environmental Qual testing in lieu of dummy equipment.

6. Abort Loads - Completed definition of the ejection seat design loads envelope versus trajectory time for Mode I aborts. Prepared new loads for the four foot diameter ballute. Issued new pressure loads for design of equipment attached to the astronaut's backboard.

   Miscellaneous Work - Prepared incremental drag data for B /P #3A between hatch open and closed configurations for NOTS to use in programming sled test velocities. Prepared a statement on Agena/TDA interface loads covering MAC requirements for NASA/ISCD-2, "Gemini/Agena Interface Specification and Control Document.

7. Ejection Seat System - Ballute structural qualification tests were started and completed on 10 April 1964 at the AEDC 16' x 16' supersonic propulsion wind tunnel facility. These tests indicate that only minor inlet fabrication changes are in order.

   Rocket Power Incorporated, Mesa, Arizona will enter the catapult and rocket motor qualification program during the next reporting period. Aerodynamic data reduction requirements and technique relative to this program were transmitted to R.P.I. An increase in the sustainer rocket thrust angle is being considered as a weight reduction item since less ballast would be required to obtain the required nominal thrust eccentricity.

   Analysis is continuing to determine astronaut touchdown boundaries for in-flight ejections, and an allowable C.G. envelope for satisfactory astronaut ejection seat dynamics.

   During the next reporting period - Monitor catapult-rocket motor and personnel parachute (with ballute) system qualification tests.

   Continue analysis of astronaut touchdown boundaries and astronaut - ejection seat C.G. envelope.

8. Ejection Seat and Fireball- Martin Report LV22A dated February 1964 was received. This report defines a new pad-failure fireball criteria. A study is underway to evaluate the effects of these new fireball data on the components of the Escape System. A test request for testing of white and international orange parachute material under combined radiant heating and shock loading conditions is ready for release.

PROCUREMENT

1. Jettison pyro hardware for use in yard arm tests has been delivered to Weber.

   A production control supervisor from MAC, St. Louis is presently at Ordnance Associates to improve production, scheduling, and testing.

2. Egress tanks serial No's 105 & 106, 107 & 108, 109 & 110 were delivered to Weber by Brackell on 30 March, 1 April and 20 April respectively. Estimated delivery from this source is two tanks each week beginning 1 May.

   Second source, Peacock Engineering, is expected to deliver first two tanks approximately 20 May and two each week thereafter. Recommendations have been made by MAC personnel for making schedule recovery.

ASSEMBLY AND DELIVERY STATUS

1. Informal estimate indicates seat PA-3 (No. 103) for SC-3 will be available approximately 1 June. Seat is presently available for delivery less pyrotechnic hardware and updated backboard. This delay causes a negative slack of twelve weeks.

   The MAC production control effort presently in effect at Ordnance Associates is expected to improve production at this facility.

2. Egress tank No. 105 was returned to AiResearch on 23 April after being updated to latest engineering changes. Tank No. 106 is presently at Weber for updating and is expected to be treturned to Airesearch by 30 April along with tank No. 107.

   Due to slippages in egress tank deliveries caused by manufacturing problems and engineering changes, recommendations for making schedule recovery have been made by MAC personnel.

TEST STATUS

1. Qualification (Static)

   Vibration test (Ref. Line 20) is expected to slip to approximately 1 June due to slippage in egress tank assembly (S/N 108).

2. Qualification (Dynamic)

   B/P-3A hatch run (sled #6) is presently expected to slip to approximately 1 June due to non-availability of hatch actuators which are estimated to be available by 15 May.

2. Qualification (Dynamic)(Continued)

Problems encountered in hatch actuator development tests at MAC have caused redesigns and manufacturing slippage.

Sled test No. 7 (Ref. Lines 31 & 32) is estimated to slip to approximately 18 June due to delay in hatch run.

Sled tests No's - 8 thru 10 (Ref. Lines 33 thru 38) and sled test No's 12 & 13 (Ref. Lines 26 thru 29) are estimated to slip accordingly.

3. Yard Arm Jettison Tests No's 1 thru 4 using jettison pyro hardware were performed on 15, 17, 20 and 23 April respectively. Three tests were satisfactory and one test was unsatisfactory. An additional test is presently scheduled for 28 April.

AGE

1. 52E060005-1 Fixture, C.G.Locating

Delivery estimated for 8 May for one week positive slack.

SPACECRAFT

CONTRACT NO. NAS 9-170

ESCAPE SYSTEM - (VENDOR: WEBER AIRCRAFT)

STATUS CHART

REPORT NO. [illegible]-3

LAST PROGRAM SCHEDULE CHANGE: 24 Apr. 1964

STATUS AS OF: 24 April 1964

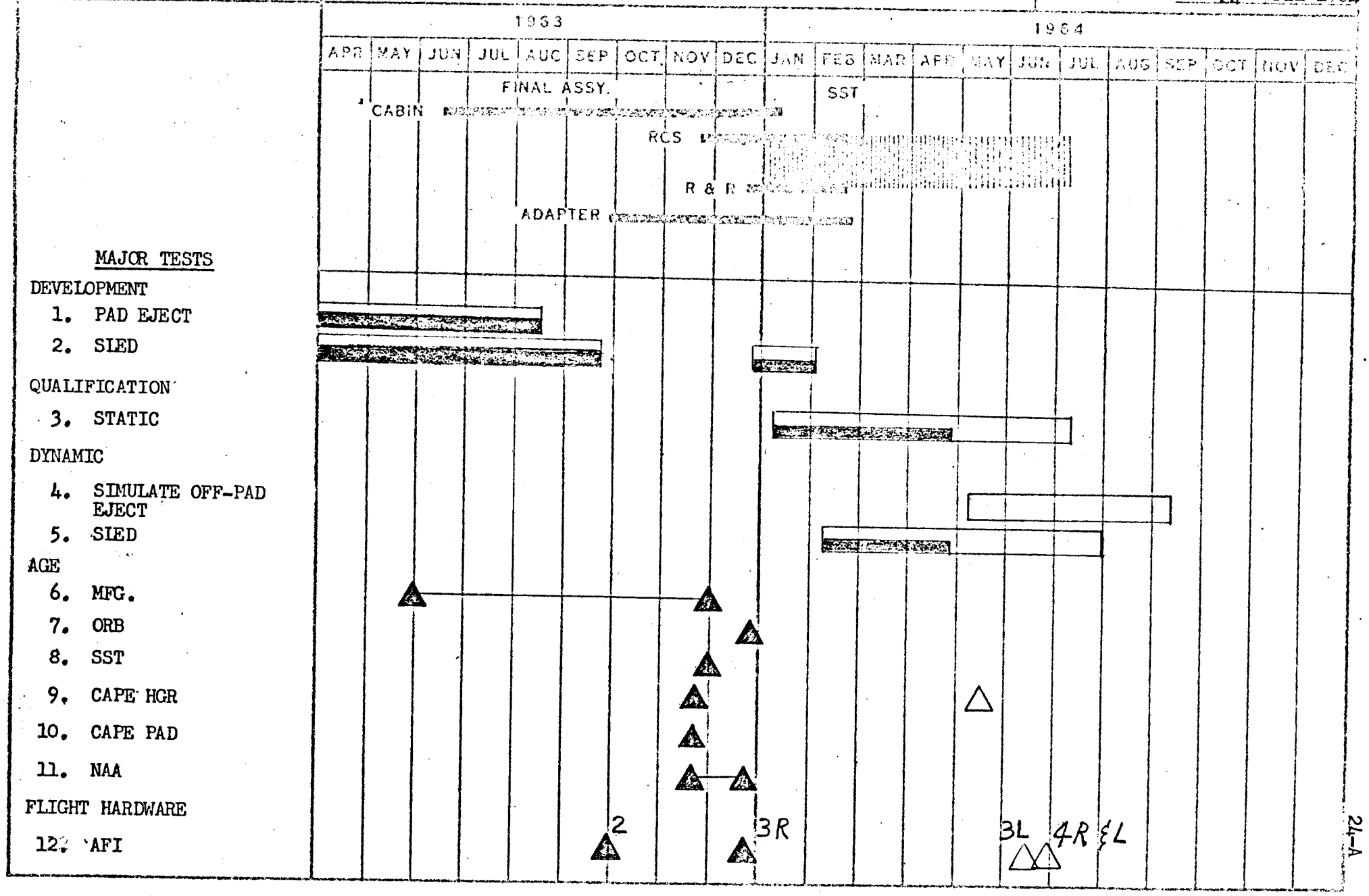

24-A

LEGEND:

△ TEST PROPOSAL DUE

◊ HARDWARE AVAILABLE

□ TEST SCHEDULE

SOLID INDICATES ACTUALS

QUALIFICATION & DEV. TEST STATUS
GEMINI EJECTION SEAT SYSTEM
(WEBER AIRCRAFT)

Date: 24 April 1964

ACTIVITY	TEST NO.	TEST SEAT NO.
1. DEVELOPMENT TESTING		
2. PAD EJEC. (COMP. MAY 63)	9	25
3. (COMP. MAY 63)	9A	26
4. (COMP. JUN 63)	10	29
5. (COMP. JUN 63)	10	30
6. (COMP. JULY 63)	11	25
7. (COMP. JULY 63)	11	28
8.		
9. SIED TEST (COMP. JUN 63)	2	27
10. (COMP. JUN 63)	2	28
11. (COMP. AUG 63)	3	29
12. (COMP. AUG 63)	3	30
13.	5	31
14.	5	32
15.	4	28
16.	4	30
17.		
18. QUALIFICATION TESTING		
19. STATIC TEST		37
20. VIBRATION TEST		38
21. SHOCK TEST		53
22. ENVIRONMENTAL TEST		51
23. ENVIRONMENTAL TEST		52
24.		
25. DYNAMIC TESTING		
26. SOPE QUAL TEST	12	60
27.	12	61
28.	13	62
29.	13	63
30.		
31. SIED TEST	7	51
32.	7	52
33.	8	54
34.	8	55
35.	9	56
36.	9	57
37.	10	58
38.	10	59
39.		
40. B/P 3A DEL. FROM MAC		

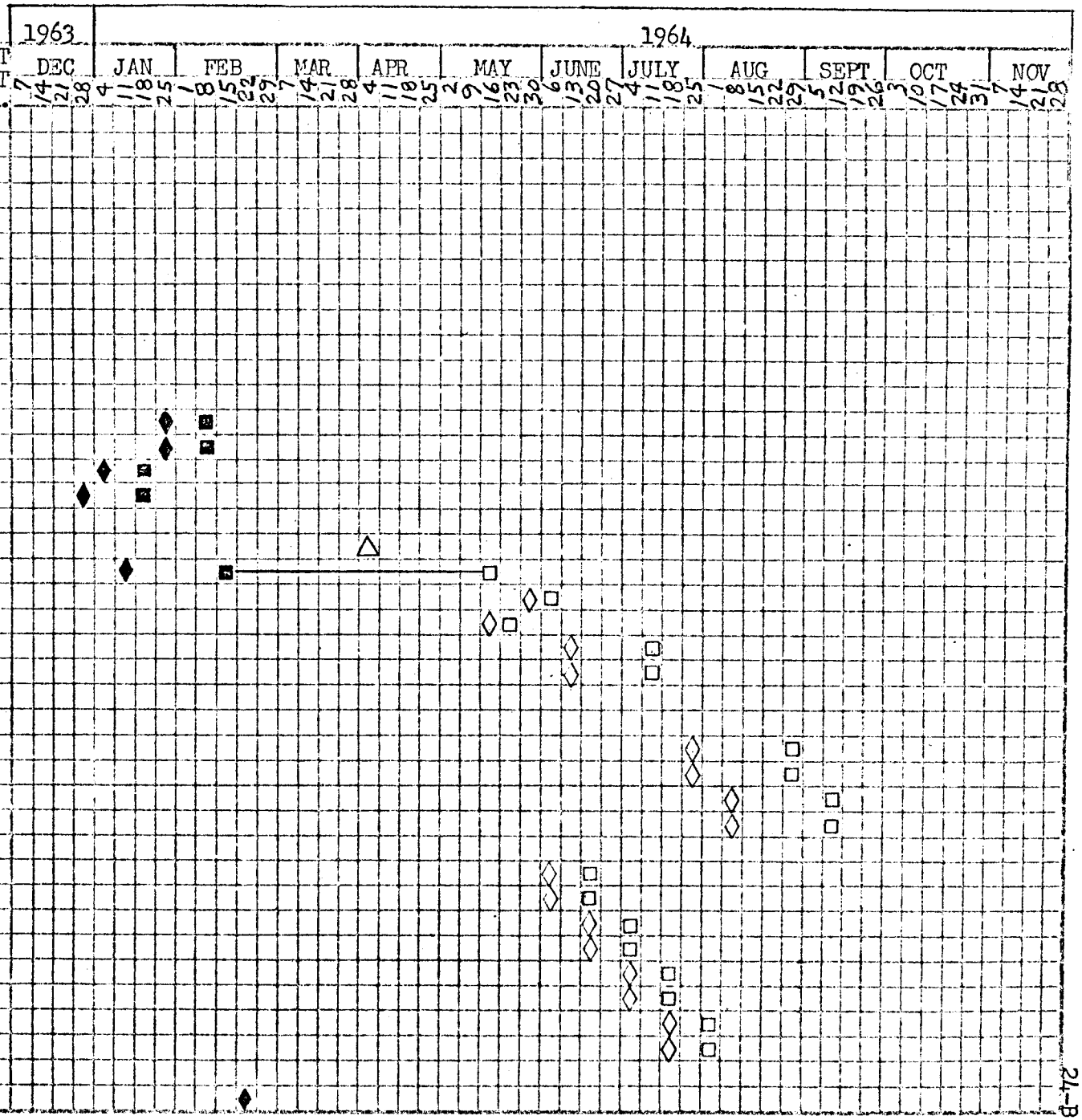

24-B

MAC 2274V (27 APR 59)

VENDOR DELIVERY STATUS REPORT

CHART NO.: 24-C

EJECTION SEAT

DATE: 4-24-64

WEBER AIRCRAFT

UNIT NO.	TYPE	USAGE	COMPONENT	VENDOR W/S	AVAIL. FOR INSTL.	REC'D. FOR INSTL.	SLACK
1-2	PP-1-2	SA-5	Flotation			A12-24-63	
3-4	PP-3-4	SC-2	Qualifiable		A 9-30-63	11-14-63	+ 6
5-6	PA-3-4	SC-3	Qualifiable	6-01-64	6-15-64	3-25-64	-12
7-8	PA-5-6	SC-4	Qualifiable	6-15-64	6-29-64	6-02-64	- 4
11-12	PA-9-10	SC-5	Qualifiable	6-29-64	7-13-64	8-20-64	+ 5
13-14	PA-11-12	SC-6	Qualifiable	8-10-64	8-24-64	10-17-64	+ 8
15-16	PA-13-14	SC-7	Qualified	9-21-64	10-05-64	12-09-64	+ 9
17-18	PA-15-16	SC-8	Qualified	11-02-64	11-16-64	2-04-65	+11
19-20	PA-17-18	SC-9	Qualified	12-14-64	12-28-64	4-02-65	+14
21-22	PA-19-20	SC-10	Qualified	1-25-65	2-08-65	5-26-65	+15
23-24	PA-21-22	SC-11	Qualified	3-08-65	3-22-65	7-28-65	+18
25-26	PA-23-24	SC-12	Qualified	4-19-65	5-03-65	9-21-65	+20
27-28	PA-25-26	SA-2	Qualified	5-31-65	6-14-65	11-22-65	+23
9-10	PA-7-8	Spares	Qualifiable	6-15-64	6-29-64	4-30-64	- 9

Note: R/H Seat for S/C-3 is at MAC. (Ref. Unit No. 6)

Spares Seats are same as spacecraft seats except less pyrotechnic hardware and backboard.

VENDOR AGE STATUS REPORT
SYSTEM - ESCAPE
VENDOR - WEBER AIRCRAFT

CHART NO.: 24-D

DATE: 4-24-64

PART NO.	NOMENCLATURE	UNIT NO.	VENDOR W/S	AVAIL. FOR INSTL.	REQ'D. FOR INSTL.	SLACK
			NORTH AMERICAN			
52E180002-1	SLING ASSY, EJC.	6		A11-23-63		
52E180002-1	SLING ASSY, EJC.	7		A11-23-63		
52E010041-1	SEAT SER S/C	7		A12-20-63		
52E010041-1	SEAT SER S/C	8		A12-20-63		
			MANUFACTURING			
52E010041-1	SEAT SER S/C	1		A11-29-63		
52E010041-1	SEAT SER S/C	2		A11-29-63		
52E180002-1	SLING ASSY, EJC.	2		A11-29-63		
			SPACECRAFT SYSTEM TEST			
52E010041-1	SEAT SER S/C	3		A11-29-63		
52E010041-1	SEAT SER S/C	4		A11-29-63		
52E010041-1	SEAT SER S/C	5		A11-23-63		
52E010041-1	SEAT SER S/C	6		A11-23-63		
			ORBIT			
52E010041-1	SEAT SER S/C	9		A12-27-63		
52E010041-1	SEAT SER S/C	10		A12-27-63		
			HANGAR			
52E180002-1	SLING ASSY EJC.	3		A11-23-63		
52E180002-1	SLING ASSY, EJC.	5		A11-23-63		
52E010041-1	SEAT SER S/C	11		A 1-06-64		
52E010041-1	SEAT SER S/C	12		A 1-06-64		
52E010041-1	SEAT SER S/C	13		A 1-13-64		
52E010041-1	SEAT SER S/C	14		A 1-13-64		
52E060005-1	FIXTURE, C.G. LOC	1	5-08-64	5-15-64	6-15-64	+ 4
			PAD			
52E180002-1	SLING ASSY, EJC.	4		A11-23-63		

MONTHLY SUMMARY

SYSTEM: Time Reference System
SUBSYSTEM: Greenwich Mean Time Clock
VENDOR: EED
DATE: 24 April 1964

ASSEMBLY AND DELIVERY STATUS

1. The only clocks delivered during this reporting period were two prototypes for Qual testing. These clocks were hand-carried to MAC from Aerosonic on 22 and 23 April. One of the clocks intended for Qual failed the rate test during assembly on 13 April. A clock intended to be the first production clock was substituted for the failed prototype to provide the two clocks needed for Qual testing.

2. Aerosonic is authorized to build only two production clocks (S/N's 101 and 102) before the completion of Qual testing. One of these clocks was substituted for the failed prototype, the second clock passed acceptance acceleration and vibration tests on 21 April, but failed the rate test on 22 April. This delays the availability of a clock for SC-2 until 15 May. S/N 102 (SC-3) is scheduled to be delivered one week later on 22 May.

3. Work on S/N 103 (SC-3A) will not be started until after 25 May, when the Qual tests should be completed. Delivery of this clock is now scheduled for 1 July.

TEST STATUS

1. S/N's 20 and 21 are scheduled to begin Qual testing on 27 April. Vibration, temperature-altitude, humidity and salt fog will be conducted in this sequence.

2. No Qual tests have been done since 4 February at which time S/N's 16 and 17 failed during humidity test.

GEMINI SPACECRAFT

CONTRACT NO. NAS 9-170

GREENWICH MEAN TIME CLOCK - (MCDONNELL EED)

STATUS CHART (REPORT 8664)

REPORT NO. 8SCO-1 -38

LAST PROGRAM SCHEDULE CHANGE: 24 Apr 1964

STATUS AS OF: 24 April 1964

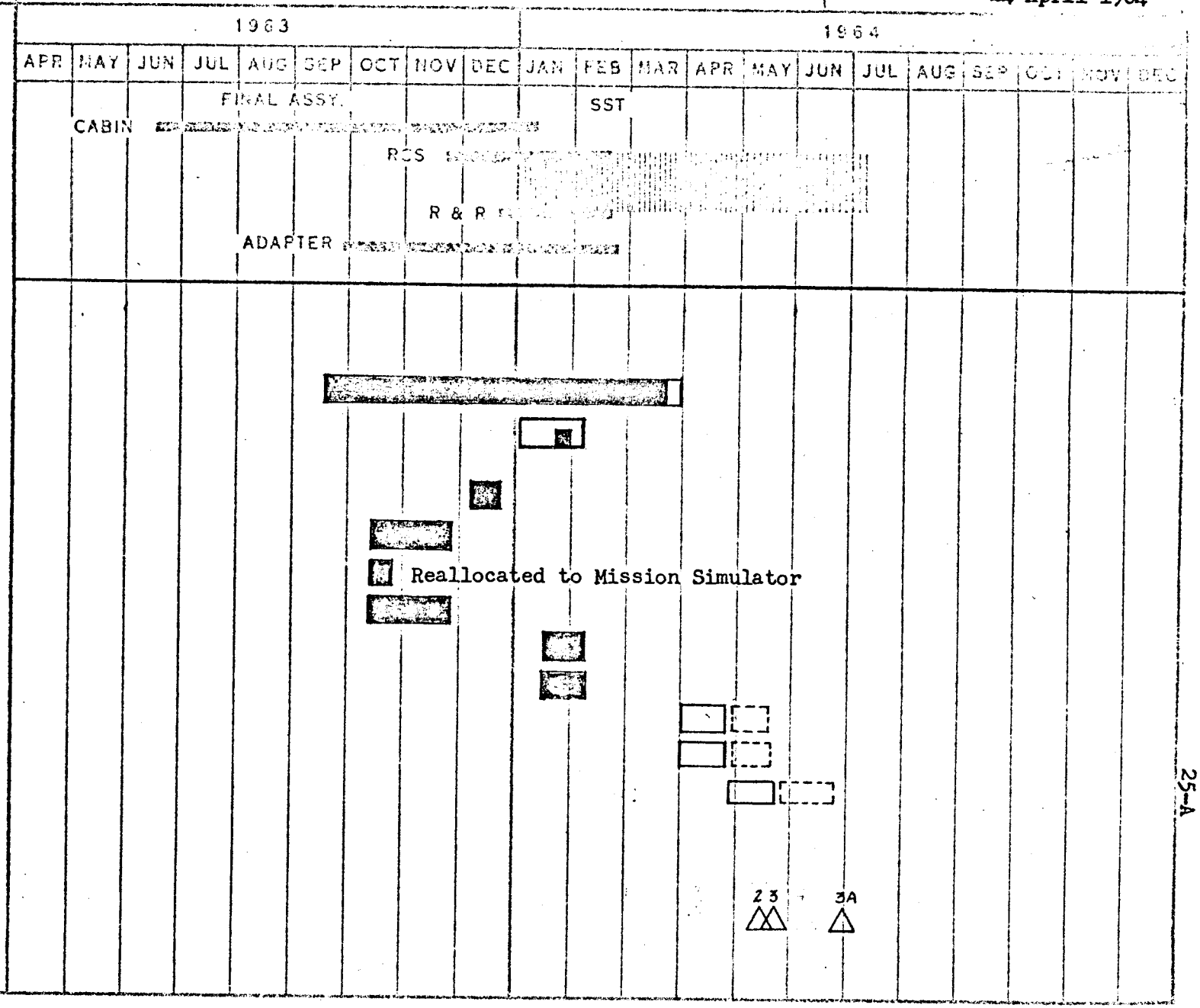

LEGEND:
▽ TEST PROPOSAL DUE
◊ HARDWARE AVAILABLE
▭ TEST SCHEDULE
SOLID INDICATES ACTUAL

QUALIFICATION AND DEVELOPMENT TEST STATUS
GREENWICH MEAN TIME CLOCK
MAC ELECTRONIC ENGINEERING DIVISION
MAC REPORT 8664

REPORT NO.8[illegible]-1-3'8
LAST PROGRAM[illegible]
SCHEDULE CHANGE: 4-24-64
STATUS AS OF: 4-24-64

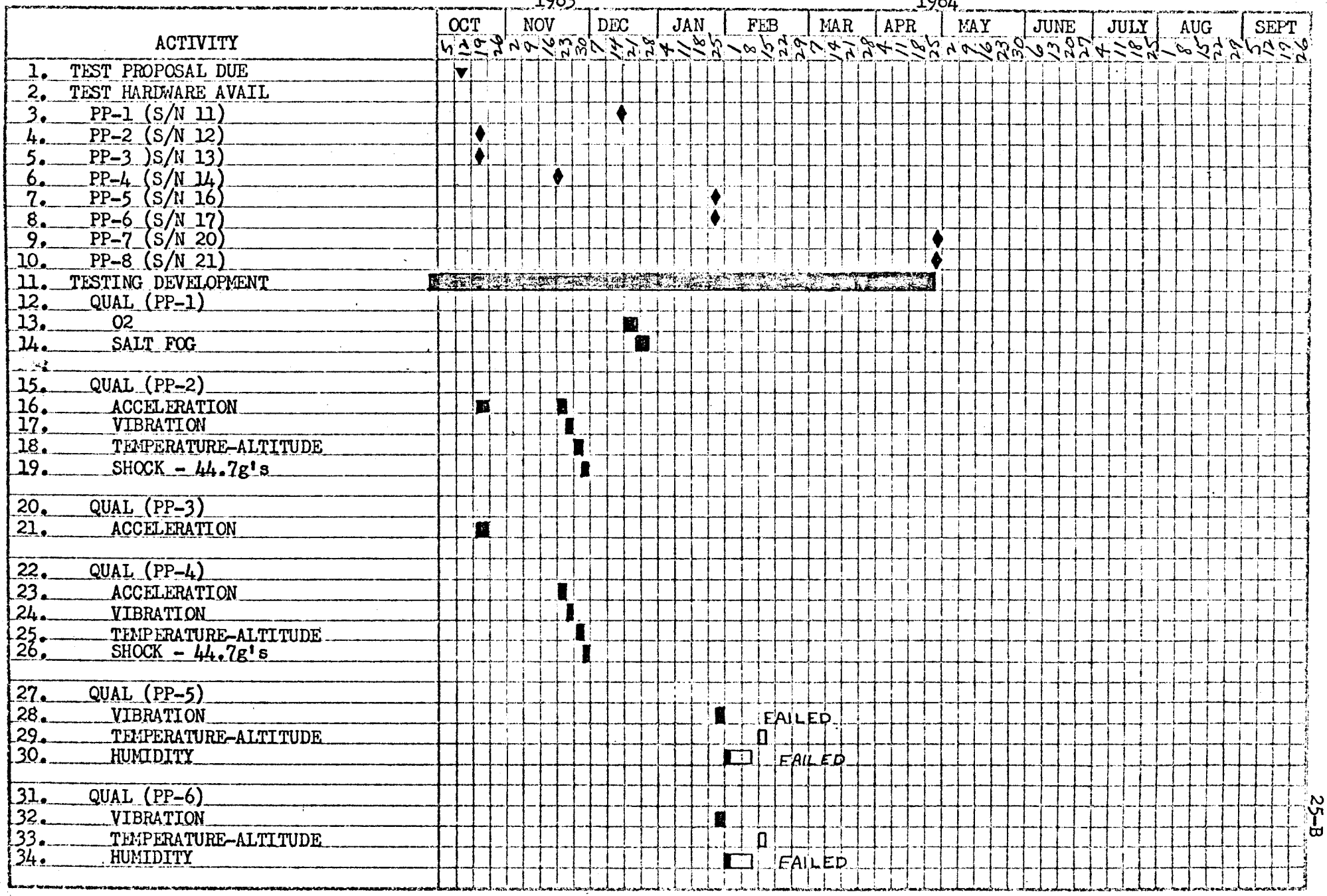

AC 2274V (27 APR 59)

LEGEND:
▽ TEST PROPOSAL DUE
◊ HARDWARE AVAILABLE
▭ TEST SCHEDULE
SOLID INDICATES ACTUAL

QUALIFICATION AND DEVELOPMENT TEST STATUS
GREENWICH MEAN TIME CLOCK
MAC ELECTRONIC ENGINEERING DIVISION
MAC REPORT 8664

REPORT NO. 580-1-38
LAST PROGRAM
SCHEDULE CHANGE: 4-24-61
STATUS AS OF: 4-24-61

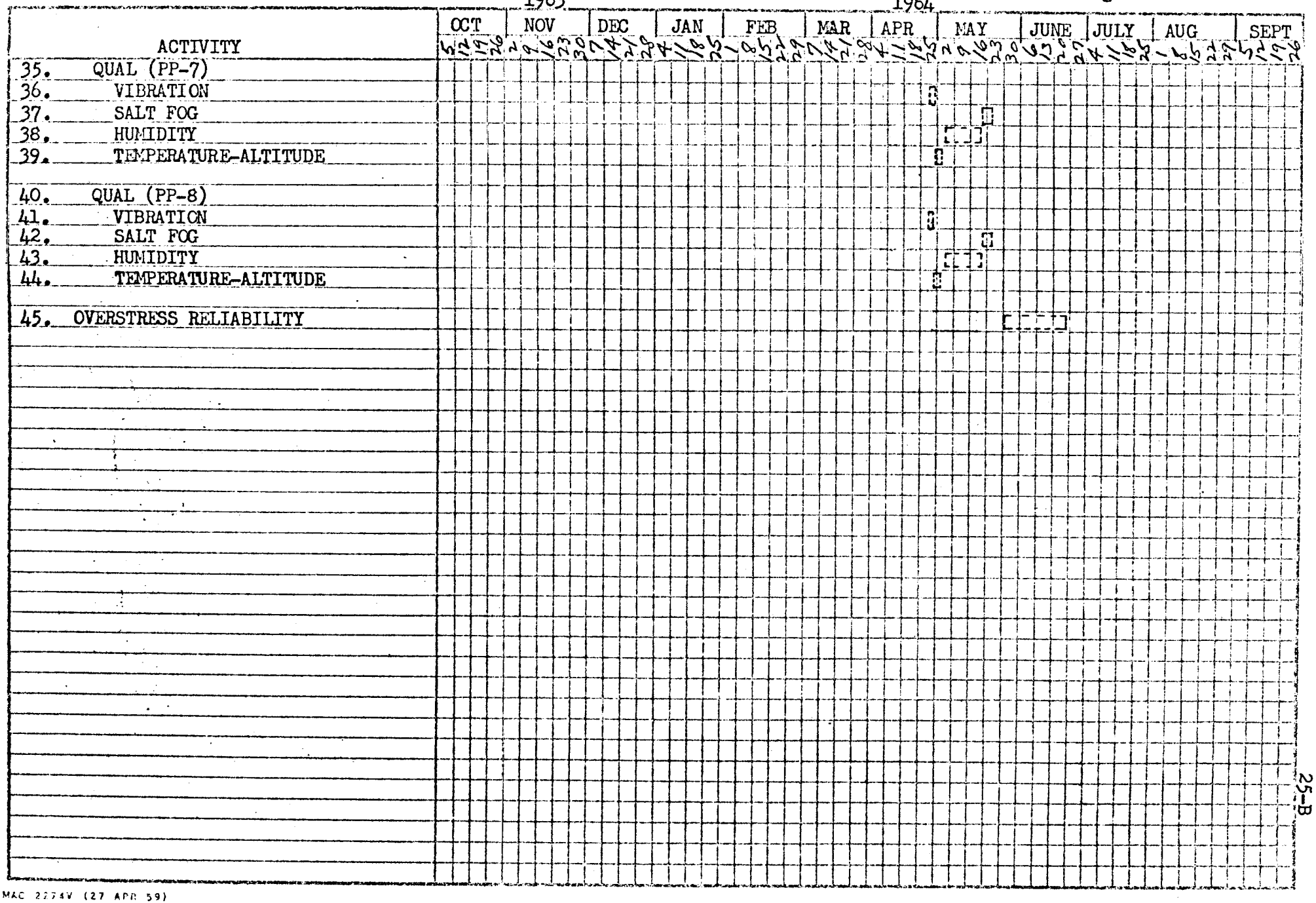

MAC 2274V (27 APR 59)

VENDOR DELIVERY STATUS REPORT
GREENWICH MEAN TIME CLOCK
FAC-EED

CHART [illegible]

DATE [illegible]

UNIT NO	TYPE	S/N	USAGE	AVAIL FOR INSTL	REQ'D FOR INSTL	SLACK
1	PP-1	11	QUAL		A12-18-63	
1	PP-1	11	CTU		A 1-21-64	
2	PP-2	12	QUAL		A10-15-63	
3	PP-3	13	QUAL*		A10-15-63	
4	PP-4	14	QUAL*		A11-21-63	
5	PP-5	16	QUAL		A 1-23-64	
6	PP-6	17	QUAL		A 1-23-64	
7	PP-7	20	QUAL	A 4-24-64	10-15-63	
8	PP-8	21	QUAL	A 4-24-64	10-15-63	
9	PA-1	101	SC-2	5-15-64	11-16-63	[illegible]
10	PA-2	102	SC-3	5-22-64	3-10-64	[illegible]
11	PA-3	103	SC-3A	7-01-64	5-20-64	[illegible]
12	PA-14	104	SPARE SST	7-08-64	1-30-64	[illegible]
13	PA-15	105	SPARE HGR	7-15-64	1-30-64	[illegible]
14	PA-16	106	SC-4	7-22-64	4-30-64	[illegible]
15	PA-17	107	SPARE HGR	7-29-64	4-30-64	[illegible]
16	PA-18	108	SPARE HGR	8-05-64	4-30-64	[illegible]
17	PA-19	109	SC-5	8-12-64	7-22-64	[illegible]
18	PA-20	110	SC-6	8-18-64	9-18-64	[illegible]
19	PA-21	111	SC-7	10-06-64	11-06-64	[illegible]
20	PA-22	112	SC-8	12-04-64	1-05-65	[illegible]
21	PA-23	113	SC-9	2-03-65	3-03-65	[illegible]
22	PA-24	114	SC-10	3-23-65	4-23-65	[illegible]
23	PA-25	115	SC-11	5-24-65	6-24-65	[illegible]
24	PA-26	116	SC-12	7-19-65	8-19-65	[illegible]

* Reallocated to Mission Simulator.