[redacted]

MAC
Control No. C-88649

PROJECT GEMINI

PROGRAM PROGRESS REPORT

3 January 1964

REPORT 8580-1-35
CONTRACT NAS 9-170

Group 4
Downgraded at 3 Year Intervals
Declassified After 12 Years

THIS MATERIAL CONTAINS INFORMATION AFFECTING [redacted] NATIONAL DEFENSE [redacted] UNITED STATES WITHIN THE [redacted]NING OF THE ESPIONAGE LAWS. TITLE [redacted] U.S.C., SEC[redacted] 793 AND 794. THE TRANSMISSION OR REVELATION [redacted] IN ANY MANNER TO AN UNAUTHORIZED PERSON [redacted]ROHIBITED BY [redacted]

~~CONFIDENTIAL~~

MAC
MASH. NO. 5019-1

INDEX

I. SCHEDULES

SUMMARY SCHEDULE
PRODUCTION SCHEDULE
TEST PLAN SCHEDULE
SIMULATORS AND TRAINER SCHEDULE
P.I.A. AND S.E.D.R. SCHEDULE
ENGINEERING STATUS REPORT GENERAL INFORMATION

II. WORK PLANS

SPACECRAFT MANUFACTURING
EQUIPMENT STUDY
SUPPLEMENTARY WORK PLANS
ZONE STATUS CHARTS
NARRATIVE
STATIC ARTICLES
TARGET VEHICLE DOCKING ADAPTER
MISCELLANEOUS

III. MAN-HOURS

ENGINEERING

IV. VENDOR STATUS

ENGINEERING INFORMATION
NARRATIVE
QUALIFICATION AND DEVELOPMENT TESTS
SYSTEM DELIVERY STATUS
A.G.E. DELIVERY STATUS

CHANGES INCORPORATED IN 8580-1-35

SCHEDULES

1 - Updated to latest actuals

WORK PLANS

1 - Work Plans for S/C 4, 5 and 6 included

2 - Revised Adapter Portion of S/C 3 Work Plan

MAN-HOURS

1 - Updated to month of December

VENDOR STATUS

1 - Updated to Latest Actuals

[redacted]

GEMINI SPACECRAFT MASTER SUMMARY SCHEDULE

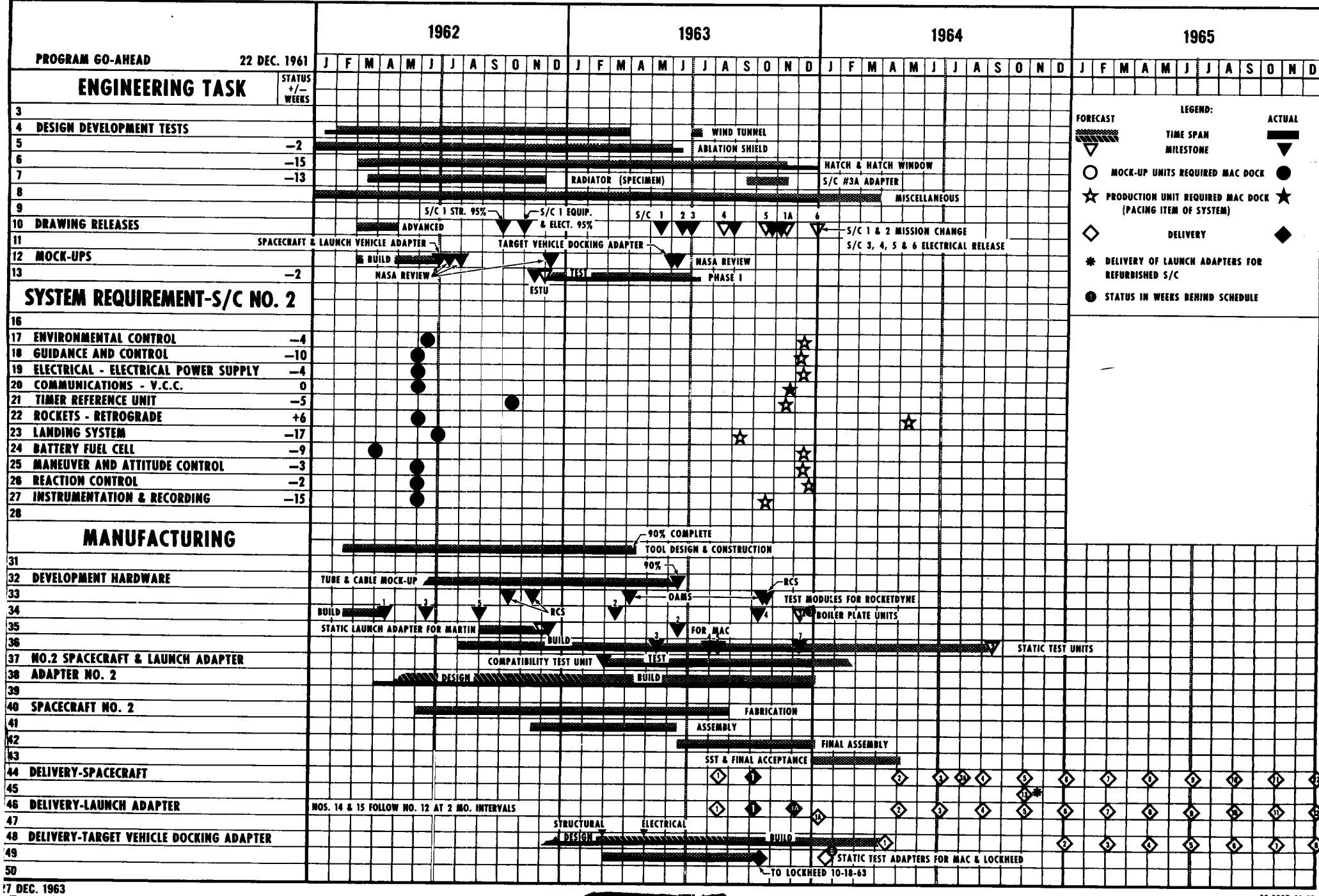

27 DEC. 1963

[redacted]

12-133P-01-01

[redacted]

GEMINI SPACECRAFT MASTER SUMMARY SCHEDULE

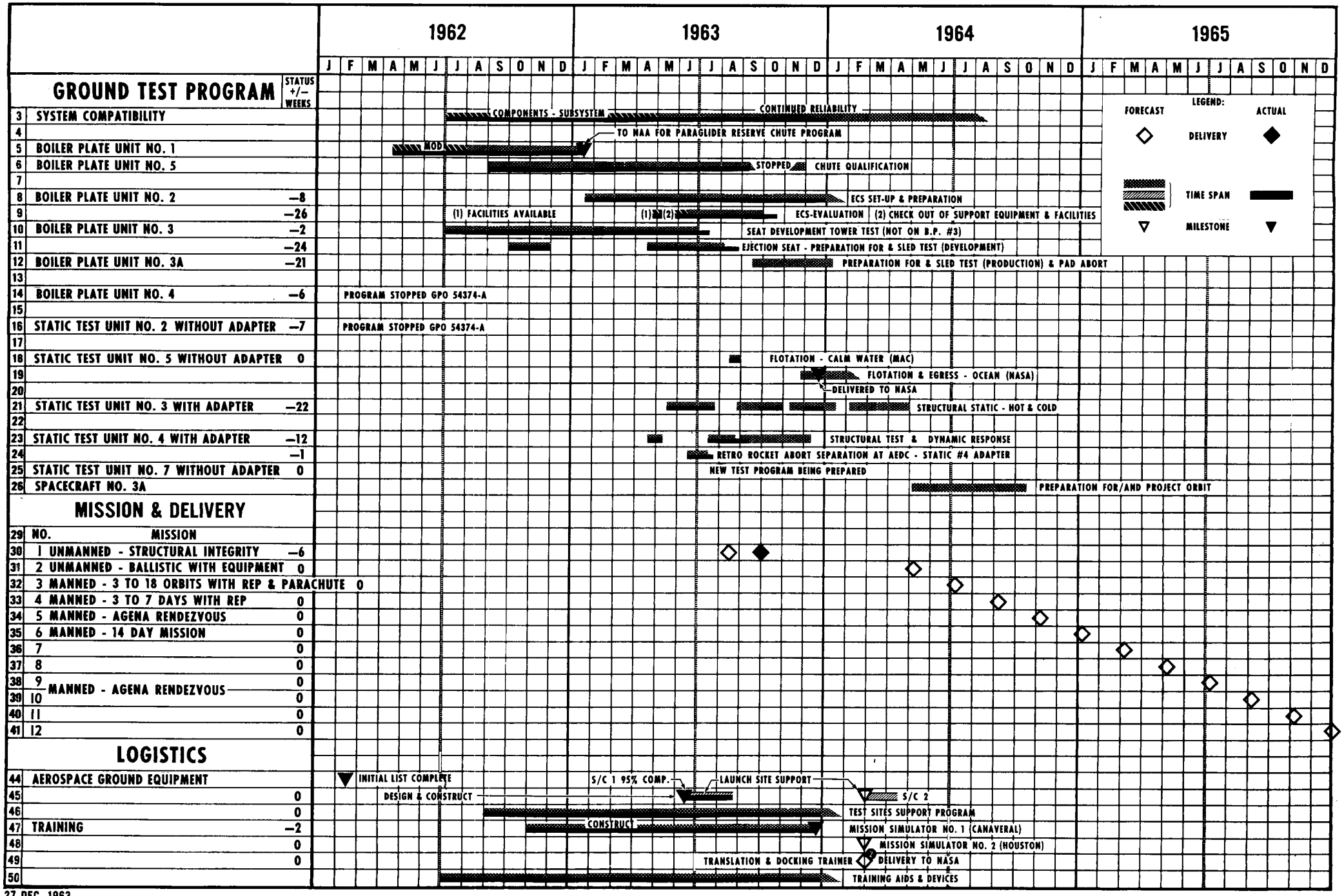

27 DEC. 1963

1

[redacted]

12-133P-01-02

[redacted]

GEMINI SPACECRAFT PRODUCTION SCHEDULE

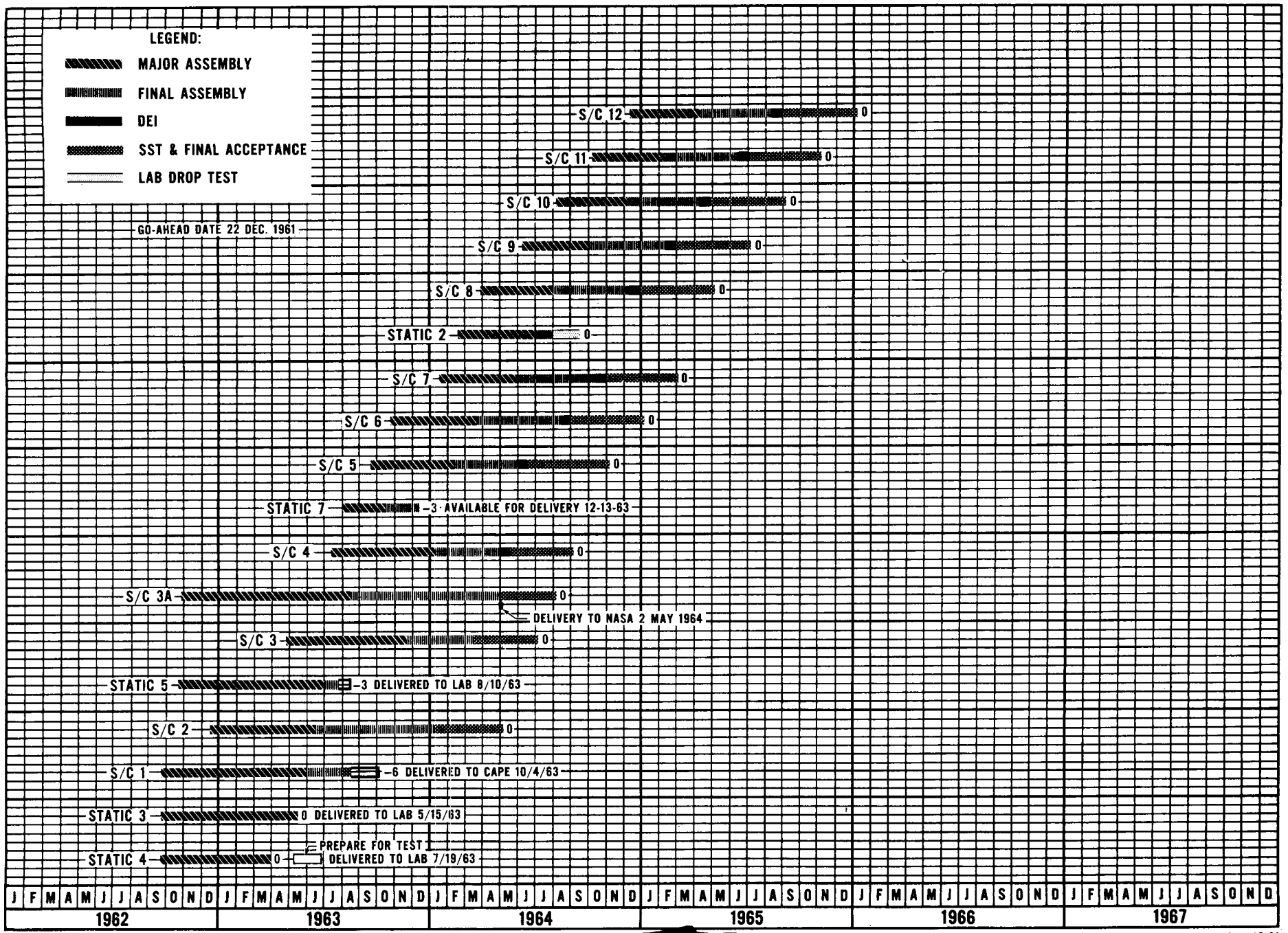

STATUS DATE: 27 DEC. 1963

[redacted]

12-133P-02-01

GEMINI TEST PLAN SCHEDULE

INDEX

WIND TUNNEL TESTS

- Aerodynamic Tests — Page 2
- Thermodynamic Tests — Page 3
- Structural Dynamic Tests — Page 3
- Propulsion Tests — Page 3

RECOVERY SYSTEMS

- Parachute — Page 4
- Skid Landing Gear — Page 5
- Flotation and Egress — Page 5
- Ejection Seat — Page 6
- Hatch — Page 7
- Heat Shield — Page 8

DOCKING SYSTEMS — Page 9

PROPULSION SYSTEMS — Page 10

MATERIALS AND PROCESSES — Page 10

RELEASE MECHANISM — Page 11

STRUCTURAL TESTS — Page 12

- R & R - RCS — Page 13
- Miscellaneous Structural Tests — Page 13
- Static Article No. 3 — Page 14
- Static Article No. 4 — Page 15

DATA ACQUISITION SYSTEM — Page 16

ANTENNA SYSTEMS — Page 17

ELECTRONICS SYSTEMS TEST UNIT — Page 18

COMPATIBILITY TEST UNIT — Page 18

GUIDANCE AND CONTROL SIMULATION — Page 18

ELECTRICAL POWER SYSTEM COMPATIBILITY — Page 19

ENVIRONMENTAL CONTROL — Page 20

THERMAL QUALIFICATION — Page 21

DATE 22 JANUARY 1962

REVISED 2 DECEMBER 1963 (REV. N)

REVISED 30 DECEMBER 1963 (REV. O)

REVISED

MCDONNELL

ST. LOUIS, MISSOURI

GEMINI TEST PLAN SCHEDULE

PAGE 2

REPORT

MODEL 133P

	Test Req. No. 52--	ACTIVITY	1963 J	A	S	O	N	D	1964 J	F	M	A	M	J	J	A	S	O	N	D	SLACK	COMMENTS
1		WIND TUNNEL TESTS:																				
2		AERODYNAMIC TESTS																				
3	41.02	6% LAUNCH CONFIG. - STATIC STAB. & PRESSURE (AMES UNITARY - LOW)																				TEST COMPLETED JUNE '62
4	41.16	6% LAUNCH CONFIG. - STATIC STAB. & PRESSURE (LEWIS 10' - HIGH)																				TEST COMPLETED SEPT '62
5	41.04	10% REENTRY MODULE & ABORT CONFIG. - STATIC STAB. (MAC PSWT)																				TEST COMPLETED JUNE '62
6	41.03	1.925% REENTRY MODULE & ABORT CONFIG.-STATIC STAB. (LANGLEY 11'																				TEST COMPLETED JAN '63
7	41.06	9% REENTRY MODULE - STATIC STABILITY (MAC HIT)																				TEST COMPLETED JUNE '62
8	41.11	10% REENTRY MODULE & ABORT CONFIG.DYN.STAB.(LANGLEY 8'&UNITARY)																				TEST COMPLETED NOV '62
9	41.14	REENTRY MODULE - DYNAMIC STAB. (AMES S.S. FREE FLT.)																				TEST COMPLETED DEC '62
10	41.01, 01.02, 01.03	20% SEAT - STATIC STAB. & PRESSURES (MAC PSWT)																				TEST COMPLETED APRIL '63
11	41.12	10% JET/HATCH EFFECTS, EJECTION SEAT - STATIC STAB. (MAC PSWT)																				TEST COMPLETED OCT '62
12	41.07	10% REENTRY MODULE - PRESSURE & HATCH HINGE MOMENTS (MAC PSWT)																				TEST COMPLETED JULY '62
13	41.05	30% LANDING CONFIG. - STATIC STAB. & PRESSURE (MAC LSWT)																				TEST COMPLETED MAY '62
14	41.15	5% REENTRY MODULE - SPIN (LANGLEY SPIN)																				TEST COMPLETED JAN '63
15	41.19	FULL SCALE - BALLUTE (MAC LSWT).																				TEST COMPLETED JULY '63
16	41.20	FULL SCALE - 18.2' DIA. PILOT CHUTE (AMES)																				EQUIPMENT DEL. FOR NASA TEST
17																						
			J	A	S	O	N	D	J	F	M	A	M	J	J	A	S	O	N	D		
			1963						1964													

LEGEND:

TESTS: ③ ① ②

HDW. DEL: ◊ ◊ ◆

① PLANNED

② CURRENT EST.

③ ACTUAL

DATE 22 JANUARY 1962

REVISED 2 DECEMBER 1963 (REV. N)

REVISED 30 DECEMBER 1963 (REV. O)

REVISED

MCDONNELL

ST. LOUIS, MISSOURI

GEMINI TEST PLAN SCHEDULE

PAGE 3

REPORT

MODEL 133P

	Test Req. No. 52--	ACTIVITY	1963 J	A	S	O	N	D	1964 J	F	M	A	M	J	J	A	S	O	N	D	SLACK	COMMENTS
1		WIND TUNNEL TESTS:																				
2		THERMODYNAMIC TEST																				
3	41.08; 08.01; 08.02	10% REENTRY MODULE & LAUNCH CONFIG.-PRESS. & HEAT (AEDC)																				TESTS COMPLETED OCT '62
4	41.09	10% REENTRY MOD. & LAUNCH CONFIG PRESS. & HEAT (LANGLEY UNITARY)																				TEST COMPLETED NOV '62
5		7% REENTRY MODULE - HEAT TRANSFER (CAL)																				TEST COMPLETED OCT '62
6		STRUCTURAL DYNAMIC TESTS:																				
7	41.17	10% LAUNCH CONFIG. - DYN. PRESS. (AMES 11' - 14' & 9' x 7')																				TEST COMPLETED DEC '62
8																						
9		PROPULSION:																				
10	41.21	RETRO ABORT ROCKET JET FLOW EFFECTS																				
11																						
12																						
13																						
14																						
15																						
16																						
17																						
			J	A	S	O	N	D	J	F	M	A	M	J	J	A	S	O	N	D		
			1963						1964													

LEGEND:

TESTS: ③ ① ②

HDW. DEL: ① ② ③

① PLANNED

② CURRENT EST.

③ ACTUAL

DATE 22 JANUARY 1962
REVISED 2 DECEMBER 1963 (REV. N)
REVISED 30 DECEMBER 1963 (REV. O)
REVISED

MCDONNELL
ST. LOUIS, MISSOURI

GEMINI TEST PLAN SCHEDULE

PAGE 4
REPORT
MODEL 133P

	Test Req. No. 52--	ACTIVITY	1963 J	A	S	O	N	D	1964 J	F	M	A	M	J	J	A	S	O	N	D	SLACK	COMMENTS
1		RECOVERY SYSTEMS DEVELOPMENT & QUALIFICATION																				
2		PARACHUTE - NORTHROP-VENTURA																				
3		BOMB DROPS - DROGUE DEVELOPMENT																				(4) DROPS TEST COMPLETED SEPT '62
4		BOMB DROPS - MAIN CHUTE & DROGUE CHUTE DEVELOPMENT																				(16) DROPS-AT EL CENTRO TEST COMPLETED FEB '63
5		MAC DELIVERY - BOILERPLATE 5																				B/P 5 DELIVERY AUG '62
6		COMPLETE SYSTEM DROPS (BOILER-PLATE 5)																				TEST COMPLETED SEPT. '63
7		BOILERPLATE 5 TO NAA PROGRAM																				DELIVERED SEPT. '63
8		NAA DROP TESTS (B/P 5)																			-4	TEST COMPLETED DEC. '63
9		MAC DELIVERY - STATIC 7																			-10	
10		COMPLETE SYSTEM DROPS (STATIC 7)																				84 FT. CHUTE, PILOT DEPLOY AT 10,000 FT. (3 DROPS)
11		TANDEM DEPLOYMENT OF 8.3 FT. DROGUE & 18 FT. PILOT CHUTES (B/P 5)																				84 FT. CHUTE, DROGUE DEPLOY AT 50,000 FT.
12		HIGH ALTITUDE DROGUE CHUTE DEVEL. BOMB DROPS																				20 DROPS
13		RECOVERY SYSTEM QUAL. DROPS (STATIC 7)																				14 DROPS
14		S/C STRUCTURAL QUAL. DROP TESTS (STATIC 4)																				2 DROPS
15																						
16																						
17																						
			J	A	S	O	N	D	J	F	M	A	M	J	J	A	S	O	N	D		
			1963						1964													

LEGEND:
TESTS: ① PLANNED ② CURRENT EST. ③ ACTUAL
HDW. DEL:

DATE 22 JAN[illegible]RY 1962
REVISED 2 DECEMBER 1963 (REV. N)
REVISED 30 DECEMBER 1963 (REV. O)
REVISED

MCDONNELL
ST. LOUIS, MISSOURI

GEMINI TEST PLAN SCHEDULE

PAGE 5
REPORT
MODEL 133P

	Test Req. No. 52--	ACTIVITY	COMMENTS
1		SKID LANDING GEAR	
2	42.02, .09 & .10	1/4 SCALE MODEL DROPS - GEAR DEVELOPMENT	TESTING COMPLETED JULY '63
3	42.05	JIG DROPS - METERING TUBE EVALUATION - NOSE LANDING GEAR	TESTING COMPLETED AUG. '63
4	42.04	JIG DROPS -METERING TUBE EVALUATION - L/H MAIN LANDING GEAR	TESTING COMPLETED NOV. '63
5	55.02	COMPONENT - ENVIRONMENTAL TEST - DAMPER	⚠
6		DELIVERY & SET-UP OF LANDING SIMULATION APPARATUS - BY AMF	SET-UP COMPLETE
7		WEBER DELIVERY - BOILERPLATE 4 TO MAC	DELIVERED OCT. '63
8	42.06	FUNCTIONAL & DROP TESTS - PROD. GEAR EVAL. - B/P 4	⚠
9		MANUFACTURING DELIVERY - STATIC 2	RESCHEDULED (GPO-54374)
10	52.18	DROP TESTS - LANDING GEAR CHECK-OUT - STATIC 2	⚠
11		MAC DELIVERY - STATIC 2 TO NAA	⚠
12			
13		FLOTATION & EGRESS	
14	43.02 & .02.01	FLOTATION STABILITY, 1/4 SCALE MODEL	TESTS COMPLETED MAR '63
15		FLOTATION, CAIM WATER, STATIC 5	TESTS COMPLETED AUG. '63
16		FLOTATION & EGRESS QUAL., STATIC 5	TO BE CONDUCTED BY NASA
17			

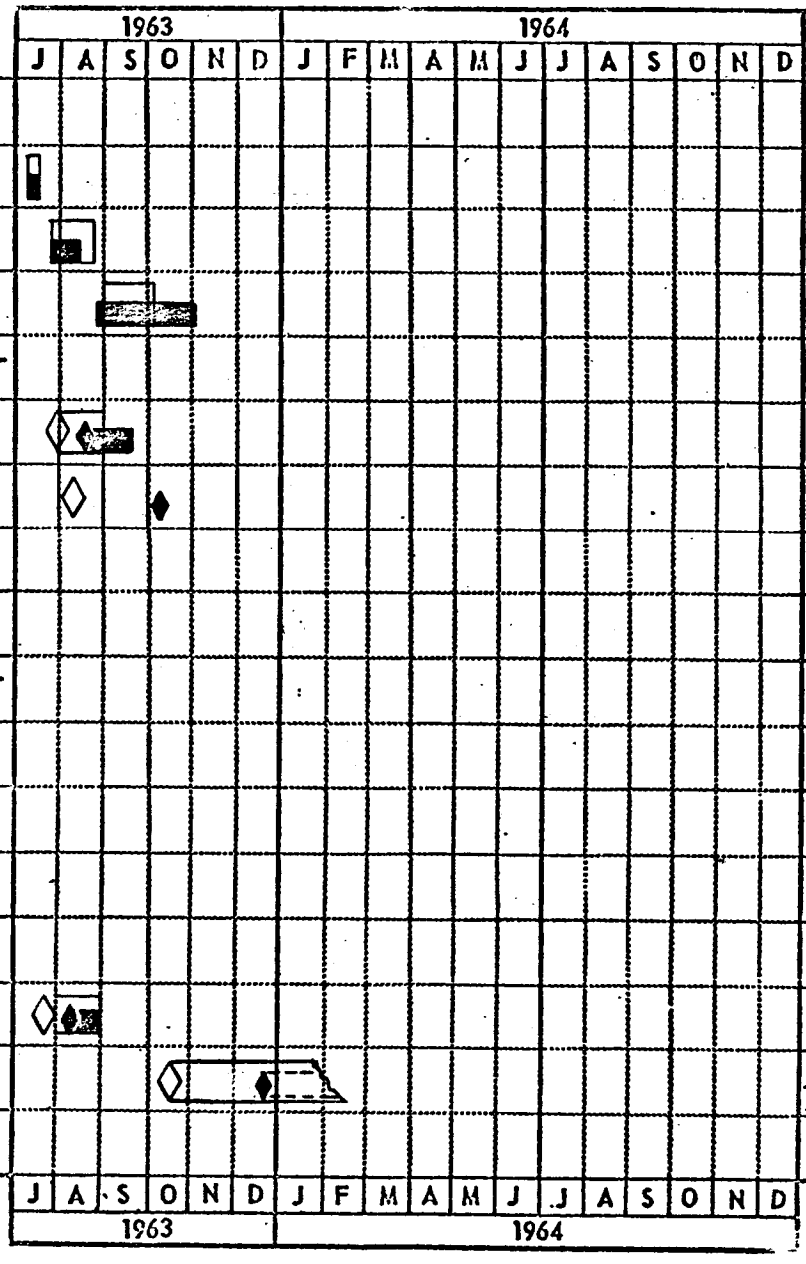

LEGEND:
TESTS: ① ② ③
HDW. DEL: ① ② ③
① PLANNED
② CURRENT EST.
③ ACTUAL

NOTE: ⚠ PARAGLIDER TESTS STOPPED, GPO TWX 54374

DATE 22 JANUARY 1962
REVISED 2 DECEMBER 1963 (REV. N)
REVISED 30 DECEMBER 1963 (REV. O)
REVISED

MCDONNELL
ST. LOUIS, MISSOURI

GEMINI TEST PLAN SCHEDULE

REPORT
MODEL 133P

	Test Req. No. 52--	ACTIVITY	1963 J	A	S	O	N	D	1964 J	F	M	A	M	J	J	A	S	O	N	D	SLACK	COMMENTS
1		EJECTION SEAT DEVELOPMENT & QUALIFICATION																				
2		SUSTAINER ROCKET TESTS, STATIC FIRING - AT RPI																				TESTS COMPLETED SEPT. '63
3		SUSTAINER ROCKET TESTS PLUME INVESTIGATION AT ALT. - AT AEDC																				TESTS COMPLETED OCT '62
4	60.06.01	SLUMP TEST, DUMMY - AT ACEL																				TEST COMPLETED MAR '63
5	60.06	SLUMP TEST, HUMAN - AT ACEL																				TEST COMPLETED AUG '63
6	60.09	SEAT MECHANISMS FUNCTIONAL TEST																				TEST COMPLETED APRIL '63
7	58.13	SEAT VIBRATION TEST																				TEST COMPLETED MAY '63
8		SEAT-MAN SEPARATION TESTS - AT WEBER																				TEST COMPLETED JAN '63
9		HORIZONTAL TRACK FIRING - AT RPI																				TEST COMPLETED APRIL '63
10		SOPE TESTS, SEAT DEVELOPMENT																				TEST COMPLETED JULY '63
11		MAC DELIVERY - BOILERPLATE 3 TO WEBER																				JULY 1962
12	45.01	SLED TESTS, SEAT DEVELOPMENT (DRAG RUN TEST FIRST) B/P 3																			-25	5 SLED RUNS; 1ST SLED RUN NOV '62. DELAY DUE TO
13		SEAT STATIC & ENVIRONMENTAL TESTS - AT WEBER																			-22	EGRESS KIT REDESIGN
14		MAC DELIVERY - BOILERPLATE 3A TO WEBER																			-28	REF: PAGE 7, LINE 9
15		SOPE TESTS, SEAT QUALIFICATION																			-28	
16	58.06	SLED TESTS, SEAT QUALIFICATION																			-28	5 SLED RUNS (INCL. 1 RUN FOR HATCH STRUCT. DYN.)
17	58.12.01	SEAT VIBRATION QUAL. TEST																			-4	SEAT #52

LEGEND:
TESTS: ③ ① ②
HDW. DEL: ① ② ③

① PLANNED
② CURRENT EST.
③ ACTUAL

DATE 22 JAN[illegible]Y 1962

REVISED 2 DECEMBER 1963 (REV. N)

REVISED 30 DECEMBER 1963 (REV. O)

REVISED

MCDONNELL

ST. LOUIS, MISSOURI

GEMINI TEST PLAN SCHEDULE

PAGE 7

REPORT

MODEL 133P

	Test Req. No. 52--	ACTIVITY	SLACK	COMMENTS
1		HATCH DEVELOPMENT - QUALIFICATION TESTS		
2	51.01.01	MODEL TESTS - SEAL DEVELOPMENT		TESTS COMPLETED JUNE '62
3	58.16	SPECIMEN HATCH - VIBRATION TEST	-33	HELD UP FOR REDESIGNED PARTS - DELIVERED JUNE '63
4	45.02	SPECIMEN HATCH - LEAKAGE TESTS	-30	
5	45.02	SPECIMEN HATCH - FUNCTIONAL, STRUCTURAL & ULTIMATE PRESSURE	-30	
6	58.04 58.10	WINDOW VIBRATION & ACOUSTIC TESTS	-16	(1) ACOUSTIC TEST OUT FOR FACILITY BID
7	52.30	TEMPERATURE, SHOCK & PRESSURE-WINDOW STRUCTURE	-9	
8	45.01	HATCH PRESS. DISTRIBUTION AND AIRLOADS - B/P 3	-23	
9	45.04	B/P 3A HATCH ACTUATION - AT MAC (STL)	-19	
10				
11				
12				
13				
14				
15				
16				
17				

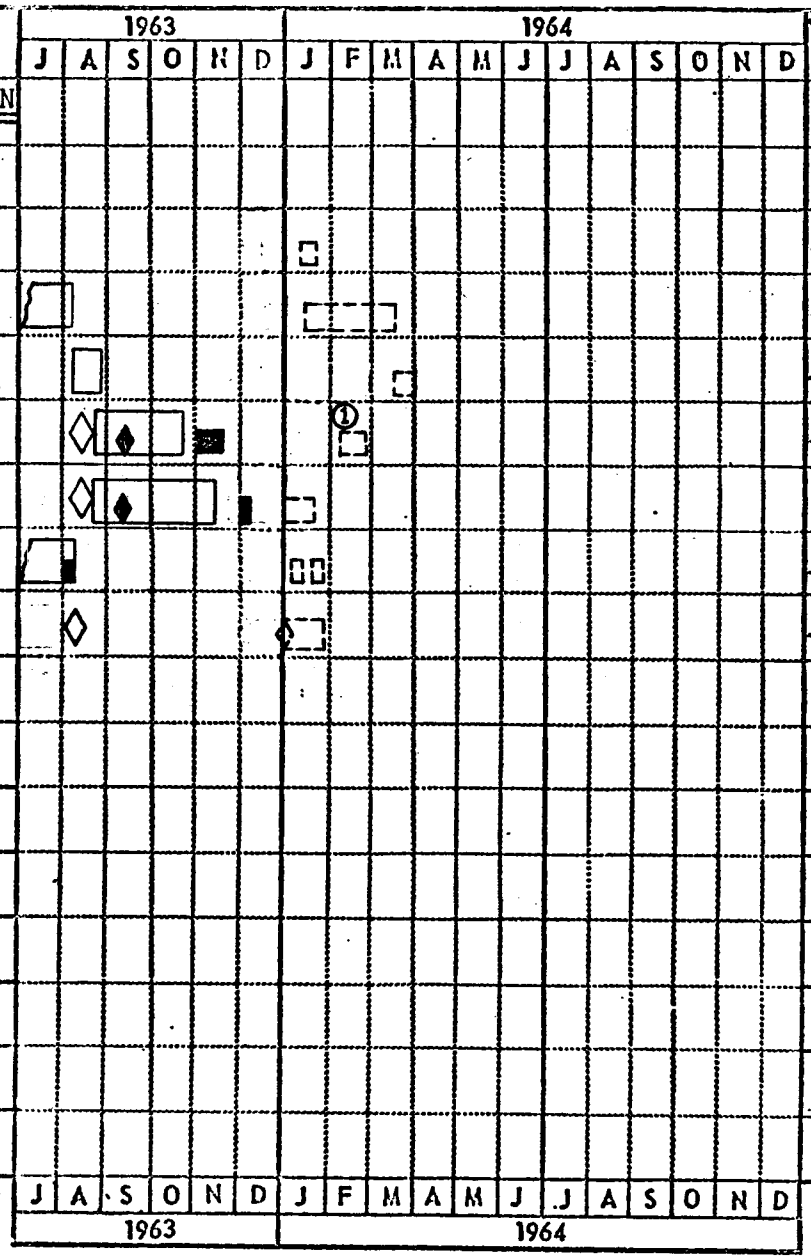

LEGEND:

TESTS: ① ② ③

HDW. DEL: ① ② ③

① PLANNED

② CURRENT EST.

③ ACTUAL

DATE 22 JANUARY 1962

REVISED 2 DECEMBER 1963 (REV. N)

REVISED 30 DECEMBER 1963 (REV. O)

REVISED

MCDONNELL

ST. LOUIS, MISSOURI

GEMINI TEST PLAN SCHEDULE

PAGE 8

REPORT

MODEL 133P

	Test Req. No. 52--	ACTIVITY	1963 J	A	S	O	N	D	1964 J	F	M	A	M	J	J	A	S	O	N	D	SLACK	COMMENTS
1		HEAT SHIELD DEVELOPMENT - QUALIFICATION																				
2	51.03.05 & .03.06	ABLATION MATERIAL SELECTION - PLASMA JET																				TESTS COMPLETED JUNE 1962
3	51.03.08 51.10	SPECIMEN TESTING OF SELECTED ABLATION MATERIAL																				TESTS COMPLETED JAN '63
4	51.03.01 & .03.02	ADHESIVE DEVELOPMENT																				TESTS COMPLETED MARCH '62
5	51.05, 51.11	STRUCT. & THERMAL SHOCK - PROTO BACKUP STRUCTURE																				TESTS COMPLETED JULY '62
6		MFG. DELIVERY - PROTO HEAT SHIELD																				FEB. 1963
7	51.12 & .01, 51.18	STRENGTH, TEMPERATURE & ENVIRONMENT - PROTO SHIELD SPECIMENS																				TESTS COMPLETED JUNE 1963
8	52.32	LANDING IMPACT - WATER DROPS																			-18	REF: PG 15, LINE 12
9	51.12.02	CONTINUED HEAT SHIELD QUAL. TESTS - BOND LINES																			-4	
10																						
11																						
12																						
13																						
14																						
15																						
16																						
17																						
			J	A	S	O	N	D	J	F	M	A	M	J	J	A	S	O	N	D		
			1963						1964													

LEGEND:

TESTS: ③ ① ② ③

HDW. DEL: ◊

① PLANNED

② CURRENT EST.

③ ACTUAL

DATE 22 JANUARY 1962
REVISED 2 DECEMBER 1963 (REV. N)
REVISED 30 DECEMBER 1963 (REV. O)
REVISED

MCDONNELL
ST. LOUIS, MISSOURI

GEMINI TEST PLAN SCHEDULE

REPORT
MODEL 133P

	Test Req. No. 52--	ACTIVITY	SLACK	COMMENTS
1		DOCKING SYSTEM DEVELOPMENT QUALIFICATION		
2		1/4 SCALE DESIGN CONCEPT MODEL DEVELOPMENT		TESTS COMPLETED JULY '62
3	52.16	DOCKING CONE IMPACT TEST		TEST COMPLETED MAY '63
4	44.05	1/4 SCALE DYNAMIC MODEL TESTS DOCKING DEVELOPMENT		TESTS COMPLETED JUNE '63
5	44.08	DAMPER ORIFICE DEVELOPMENT & ENVIRONMENTAL QUAL. TEST	-24	
6		TRANSLATOR & DOCKING TRAINER DOCKING SIMULATOR TESTS	-2	(1) DEVELOPMENT TESTS (2) OPER. USAGE TESTS
7	52.40	DEFLECTION TEST OF DOCKING CONE		UTILIZES TDA ST. #1
8		MAC DELIVERY - TARGET DOCKING ADAPTER (TDA) ST #1 TO LOCKHEED		DELIVERED OCT. 1963
9		LMSC LAUNCH & INSERTION PHASE STRUCTURAL TESTS	-6	TDA ST. #1
10		MFG. DELIVERY - TARGET DOCKING ADAPTER (TDA) ST #2	-13	
11	44.07	FUNCTIONAL & LIFE TEST LATCHING, PULLUP, & RELEASE	-26	TDA ST 2; R & R ST 4
12	44.06	DYNAMIC RESPONSE - STRUCTURE (DOCKED CONFIGURATION)	-15	TDA ST 2 & ST 4
13	44.09	DYNAMIC SHOCK - FULL SCALE DOCKING	-23	TDA ST 1; R & R ST 4 RCS ST 3
14	52.27	ULT. STATIC TEST - GEMINI/AGENA MANEUVERING	-21	UTILIZES ST 3 R & R - RCS TDA 2
15	52.47	TDA STIFFNESS TEST		TDA ST. #2
16	80.03	TDA P.A. #1 VIBRATION TEST		
17		TDA P.A. #1 - AGENA ENGINE OPERATION & ENVIRONMENT TEST (LMSC)		

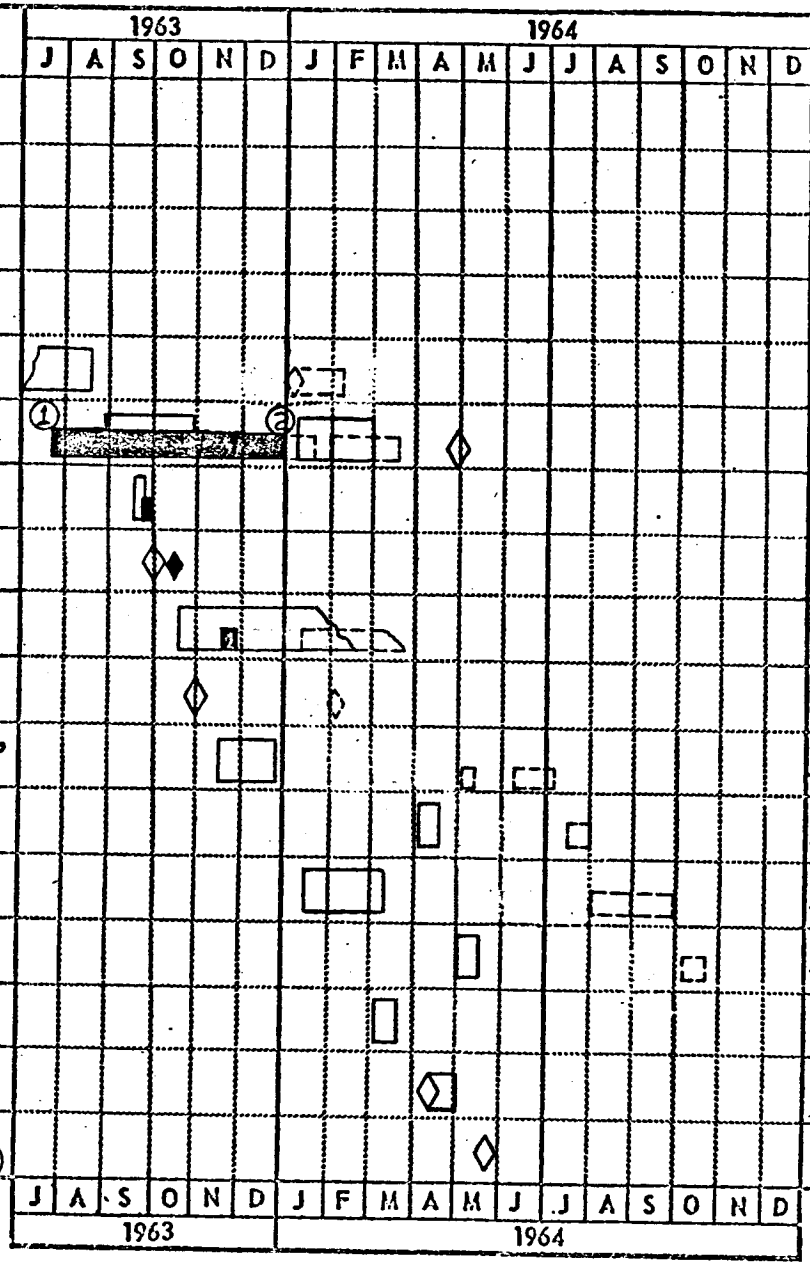

LEGEND:
TESTS:
HDW. DEL:
① PLANNED
② CURRENT EST.
③ ACTUAL

DATE 22 JANUARY 1962
REVISED 2 DECEMBER 1963 (REV. N)
REVISED 30 DECEMBER 1963 (REV. O)
REVISED

MCDONNELL
ST. LOUIS, MISSOURI

GEMINI TEST PLAN SCHEDULE

REPORT
MODEL 133P

	Test Req. No. 52--	ACTIVITY	1963 J	A	S	O	N	D	1964 J	F	M	A	M	J	J	A	S	O	N	D	SLACK	COMMENTS
1		PROPULSION SYSTEM:																				
2	14.01	COMPATIBILITY TESTS PROPELLANT/MATERIAL																				TESTING AS REQUIRED
3	70.01	RETRO ROCKET ABORT SEPARATION, FULL SCALE - AT AEDC																				TEST COMPLETED JULY '63
4		B/P TEST ARTICLE DELIVERY TO AEDC																				DELIVERED SEPT. '63
5	70.01.01	RETRO ROCKET ABORT SEPARATION - (SALVO) - POP GUN II																				TEST COMPLETED OCT. '63
6	41.21	RETRO ABORT ROCKET JET FLOW EFFECTS																				SEE PG 3, LINE 10
7																						
8																						
9																						
10																						
11																						
12		MATERIALS & PROCESSES DEVELOPMENT																				
13	44.02, 60.02, 68.01&.18	MATERIAL SELECTION																				TESTING AS REQUIRED
14	14&14.01, 15.04, .06, .09	FABRICATION & ASSEMBLY PROCESSES																				TESTING AS REQUIRED
15	17.01 & .03	MATERIAL THERMAL & ENVIR. CHARACTERISTICS																				TESTING AS REQUIRED
16																						
17																						
			J	A	S	O	N	D	J	F	M	A	M	J	J	A	S	O	N	D		
			1963						1964													

LEGEND:
TESTS: ③ ① ②
HDW. DEL: ① ② ③

① PLANNED
② CURRENT EST.
③ ACTUAL

DATE 22 JANUARY 1962
REVISED 2 DECEMBER 1963 (REV. N)
REVISED 30 DECEMBER 1963 (REV. O)
REVISED

MCDONNELL
ST. LOUIS, MISSOURI

GEMINI TEST PLAN SCHEDULE

REPORT
MODEL 133P

	Test Req. No. 52--	ACTIVITY	COMMENTS
1		RELEASE MECHANISMS:	
2	69.01.01, .02,03&13	DEVELOPMENT TESTS, EXPLOSIVE SEPARATION CONFIGURATIONS	TESTING AS REQUIRED
3	69.03 & .16	EVALUATION, FLSC BLAST EFFECTS (FULL SCALE)	TESTS COMPLETED JUNE '63
4			
5		ADAPTER DEMONSTRATION TESTS - RELEASE MECHANISMS:	
6		STATIC ADAPTER, STATIC #3 & #4	(1) STATIC 3 ADAPTER (2) STATIC 4 ADAPTER
7			
8	69.12	BOOSTER/ADAPTER (PARTIAL SPECIMEN) STRUCT., 5 SEPAR. TESTS	+13
9			
10	69.12	EQUIP/RETRO SECTION (PARTIAL SPEC.) STRUCT., 5 SEPAR. TESTS	△2
11	69.10	REENTRY SECTION/RETRO SECTION (Z100) 5 SEPARATION TESTS	-17
12	69.10 69.12	Z13, Z69, Z100 ELEV. TEMP (1 EACH SEPARATION TEST) (FULL ADAPTER)	+4 △2
13	58.18	DYNAMIC SHOCK - Z13 PYROS (EQUIP. SECTION ST. 4 ADAPTER)	PRELIMINARY TEST - EXISTING PYRO DESIGN
14		REENTRY MODULE DEMONSTRATION TESTS - RELEASE MECHANISMS:	
15	45.04	HATCH ACTUATOR (HATCH STRUCTURAL DYNAMICS), 2 SEPAR. TESTS	-27 REF: PAGE 7, LINE 9
16		HATCH ACTUATOR (SEAT QUAL. PROGRAM), 14 SEPAR. TESTS	-28 REF: PAGE 6, LINE 15 & 16
17			

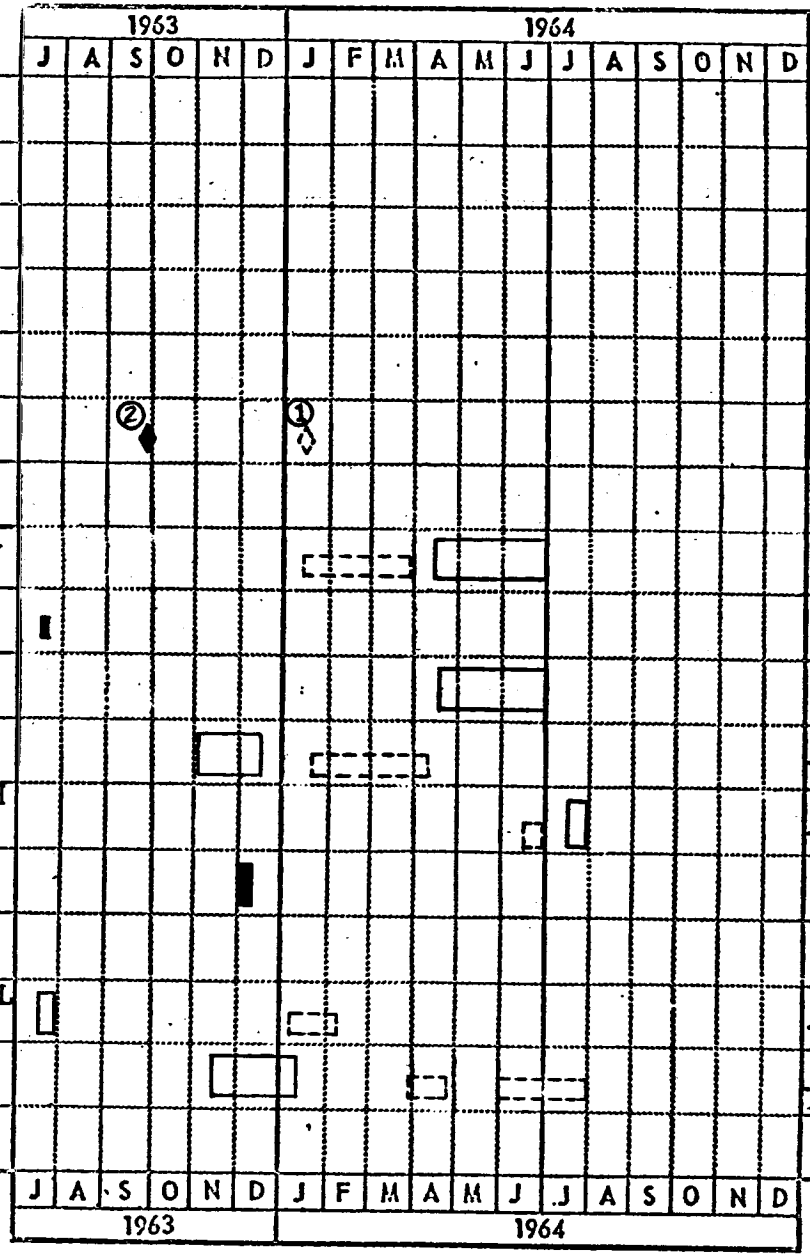

LEGEND:
TESTS: ③
HDW. DEL: ① ② ③
① PLANNED
② CURRENT EST.
③ ACTUAL

△2 Z69 PYRO REDESIGNED FOR HIGHER TEMP. ENVIRON

DATE 22 JANUARY 1962
REVISED 2 DECEMBER 1963 (REV. N)
REVISED 30 DECEMBER 1963 (REV. O)
REVISED

MCDONNELL
ST. LOUIS, MISSOURI

GEMINI TEST PLAN SCHEDULE

REPORT
MODEL 133P

	Test Req. No. 52--	ACTIVITY	1963 J	A	S	O	N	D	1964 J	F	M	A	M	J	J	A	S	O	N	D	SLACK	COMMENTS
1		REENTRY DEMONSTRATION TESTS - RELEASE MECHANISMS (CONT.):																				
2	69.13	AFT RECOVERY HOIST LOOP DOOR (6 SEPARATIONS) PARACHUTE CONFIG.																			-9	STATIC 4
3	69.13	HORIZON SCANNER FAIRING (6 SEPARATIONS)																			-3	
4	69.13	HORIZON SCANNER RELEASE SYSTEM (6 SEPARATIONS)																			-3	
5	69.13	MAIN LANDING GEAR ACTUATOR - STATIC 2 & 3 & SPECIMENS (6 SEPS)																				⚠
6	69.11	R&R SECTION & RCS (PYROTECHNICS)																			-33	
7	69.11	RADAR COVER RELEASE																			-39	
8	69.11	R & R MODULE RELEASE																			-39	
9	52.07	DROGUE CHUTE MORTAR																				WAITING DROGUE REDESIGN
10	69.11	NOSE LANDING GEAR DEPLOY																				⚠
11	69.11	EMERGENCY DOCKING RELEASE																				SCHEDULE LATER
12	69.11	DOCKING INDEXING BAR																				SCHEDULE LATER
13																						
14	69.13	MAIN LANDING GEAR DOOR - SPECMEN SILL (4 SEPARATIONS)																				⚠
15		MAIN LANDING GEAR DOOR - STATIC 3 (2 SEPARATIONS)																				⚠
16	69.20	MAIN LDG GEAR DOOR & GEAR EXTEN. (UNDERWATER) STA #4																				⚠
17																						
			J	A	S	O	N	D	J	F	M	A	M	J	J	A	S	O	N	D		
			1963						1964													

LEGEND:
TESTS:
HDW. DEL:
① PLANNED
② CURRENT EST.
③ ACTUAL

NOTE: ⚠ PARAGLIDER TESTS STOPPED, GPO TWX 54374.

DATE 22 JANUARY 1962
REVISED 2 DECEMBER 1963 (REV. N)
REVISED 30 DECEMBER 1963 (REV. O)
REVISED

MCDONNELL
ST. LOUIS, MISSOURI

GEMINI TEST PLAN SCHEDULE

REPORT
MODEL 133P

	Test Req. No. 52--	ACTIVITY	1963 J	A	S	O	N	D	1964 J	F	M	A	M	J	J	A	S	O	N	D	SLACK	COMMENTS
1		STRUCTURAL TEST PROGRAM																				
2		R & R - RCS SECTION (STRUCTURE TEST UNITS)																				TEST COMPLETED JULY '63
3	52.20	PARACHUTE SUPPORT FITTINGS (2 FORWARD POINTS ONLY)																				TEST COMPLETED JULY '63
4	52.11	RADAR SUPPORT STRUCTURE																				TEST COMPLETED JULY '63
5	52.22	HOISTING PROVISIONS																				TEST COMPLETED JULY '63
6	52.12	NOSE LAUNCH FAIRING																				TEST COMPLETED AUG. '63
7	52.10	REENTRY HEATING DROGUE CHUTE SUPPORT STRUCTURE																			-29	CONTINGENT ON AVAILABILITY OF BERYLLIUM SHINGLES
8	52.29	PARAGLIDER SUPPORT STRUCTURE - NOSE GEAR INTERFACE																				1
9																						
10																						
11		MISCELLANEOUS STRUCTURAL ARTICLES:																				
12	58.14	SPACECRAFT #1 SEAT PALLET - DYN. RESPONSE																				TEST COMPLETED AUG. '63
13	58.15	SPACECRAFT #2 SEAT PALLET - DYN. RESPONSE																			-5	
14	52.42 55.06	UMBILICAL DISCONNECT, ELECTRICAL & GROUND COOLING																			-3	MARTIN 2 ADAPTER
15	52.29	PARAGLIDER AFT PITCH FITTING (SPECIMEN HATCH)																				1
16		HORIZON SCANNER FAIRING (B/P 3)																			-25	REF: PAGE 6, LINE 12
17	52.29	PARAGLIDER ROLL FITTING (B/P 3A)																				1
			J	A	S	O	N	D	J	F	M	A	M	J	J	A	S	O	N	D		
			1963						1964													

LEGEND:
TESTS: ③ ① ② ③
HDW. DEL: ① ② ③
① PLANNED
② CURRENT EST.
③ ACTUAL

NOTE: 1 PARAGLIDER TESTS STOPPED - GPO TWX 54374.

DATE 22 JANUARY 1962
REVISED 2 DECEMBER 1963 (REV. N)
REVISED 30 DECEMBER 1963 (REV. O)
REVISED

MCDONNELL
ST. LOUIS, MISSOURI

GEMINI TEST PLAN SCHEDULE

REPORT
MODEL 133P

	Test Req. No. 52--	ACTIVITY	1963 J A S O N D	1964 J F M A M J J A S O N D	FLAG	COMMENTS
1		STRUCTURAL TEST PROGRAM				
2		STATIC ARTICLE NO. 3 (REENTRY SECT PARACH. CONF. - LANDING GEAR)				DELIVERED MAY '63
3	52.03	SPACECRAFT LANDING CONDITION				TEST COMPLETED JULY '63
4	52.20	PARACHUTE SUPPORT FITTING (AFT POINT)				TEST COMPLETED JUNE '63
5		INSTRUMENTATION FOR TEST				COMPLETED JULY '63
6		INSTALL SHINGLES				COMPLETED SEPT. '63
7	52.06	SPACECRAFT LAUNCH CONDITIONS				TEST COMPLETED NOV. '63 MARTIN #2 ADAPTER
8	52.19.02	RE-ENTRY LOADS			-11	
9	52.45	RE-ENTRY ELECTRICAL UMBILICAL DISCONNECT			-2	
10	52.14.0[illegible]	CHUTE DEPLOY, HOT			-17	
11	52.19.01	SPACECRAFT RE-ENTRY CONDITIONS			-18	
12	52.36	SPACECRAFT ABORT CONDITIONS			-24	USES MARTIN #2 ADAPTER
13		STATIC "3" ADAPTER				
14	52.34	EQUIPMENT MOUNTS				TEST COMPLETED JULY '63.
15	52.35	ADAPTER HOT LAUNCH			-13	
16	52.08.39 & 39.01	RETRO STRUCTURES				TEST COMPLETED JULY '63
17	52.34.01	STATIC TEST OF BLAST SHIELD DOOR			-9	USES MARTIN #2 ADAPTER

LEGEND:
TESTS: ③ ① ② ③
HDW. DEL: ① ② ③

① PLANNED
② CURRENT EST.
③ ACTUAL

DATE 22 JANUARY 1962
REVISED 2 DECEMBER 1963 (REV. N)
REVISED 30 DECEMBER 1963 (REV. O)
REVISED

MCDONNELL
ST. LOUIS, MISSOURI

GEMINI TEST PLAN SCHEDULE

REPORT
MODEL 133P

	Test Req. No. 52--	ACTIVITY	SLACK	COMMENTS
1		STRUCTURAL TEST PROGRAM:		
2		STATIC #4		DELIVERED MAR. '63
3	52.21	SEAT BACKUP		TESTS COMPLETED JUNE '63
4		PREPARATION FOR DYNAMIC RESPONSE		COMPLETED JULY '63
5	58.03	DYNAMIC RESPONSE TESTS (ABORT, RE-ENTRY, LAUNCH)	3	USE MARTIN #2 ADAPTER - 3 TEST CONDITIONS-COMP.SEPT '63
6		LIGHT HATCHES - INSTALL & RIG		COMPLETED NOV. '63
7	52.24	PRESSURIZATION - CYCLING & ULTIMATE	-16	2 TEST CONDITIONS
8	52.49	HATCH OPERATION - SIMULATED MISSION PHASE I		
9	52.33	HATCH BACKUP	-19	3 TEST CONDITIONS
10	52.26	AFT HOIST LOOP & SUPPORT (PARACHUTE CONFIG.)	-13	THIS TEST PREVIOUSLY PLANNED FOR SPECIMEN HATCH
11	52.21	SEAT BACKUP (RETEST)	-18	RETEST FROM LINE 3 ABOVE
12	52.23	LANDING IMPACT - PARAGLIDER		⚠1
13	52.49	HATCH OPERATION - SIMULATED MISSION PHASE II		
14	52.32	LANDING IMPACT - PARACHUTE	-17	2 TEST CONDITIONS
15	52.49	HATCH OPERATION - SIMULATED MISSION PHASE III		
16				
17				

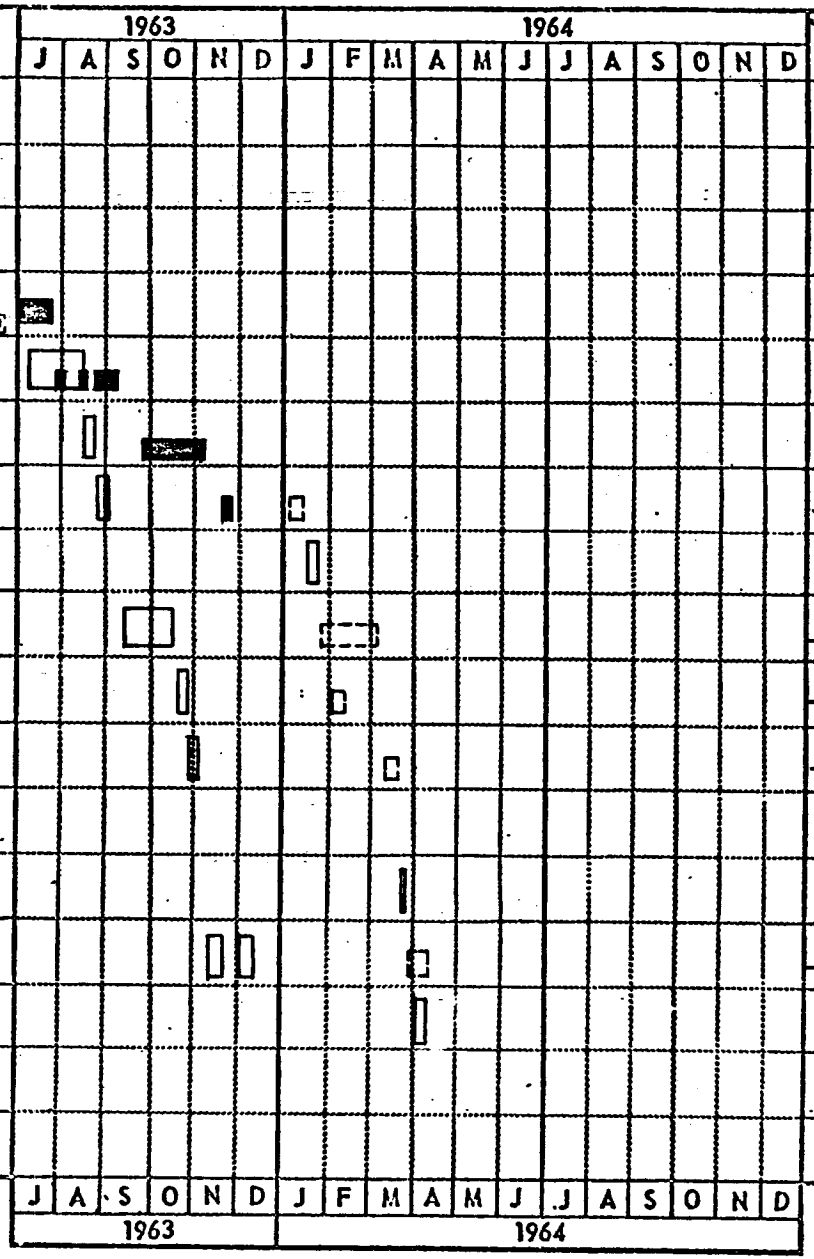

LEGEND:
TESTS: ① ② ③
HDW. DEL: ① ② ③
① PLANNED
② CURRENT EST.
③ ACTUAL

NOTE: ⚠1 PARAGLIDER TESTS STOPPED, GPO TWX 54374.

DATE 22 JANUARY 1962
REVISED 2 DECEMBER 1963 (REV. N)
REVISED 30 DECEMBER 1963 (REV. O)
REVISED

MCDONNELL
ST. LOUIS, MISSOURI

GEMINI TEST PLAN SCHEDULE

REPORT
MODEL 133P

	Test Req. No. 52--	ACTIVITY	1963 J	A	S	O	N	D	1964 J	F	M	A	M	J	J	A	S	O	N	D	SLACK	COMMENTS
1		DATA ACQUISITION SYSTEM:																				
2		SIGNAL COND. VIBRATION TEST																				TEST COMPLETED AUG '62
3		SIGNAL COND. DESIGN VERIFICATION																				TESTS COMPLETED JUNE '63
4	64.08	SIGNAL COND. QUAL. TEST																			-30	
5	64.09	SIGNAL COND. ASSURANCE TEST																			-30	
6		COMPLETE INSTR. MOCKUP (CIMU)																				
7	64.03	SIGNAL COND. HEAT TRANSFER																				TEST COMPLETED JAN '63
8		PCM BREADBOARD AVAIL.																				DELIVERED APRIL '63
9	64.05	TEST BENCH COMPATIBILITY																				TESTING COMPLETED FEB '63
10	64.03	PCM EVALUATION																				TEST COMPLETED MAY '63
11	64.03	SIGNAL COND./PCM COMPATIBILITY																				TEST COMPLETED MAY '63
12	64.03	EFFECT OF POWER BUSS VARIATION																				TEST COMPLETED MAY '63
13	64.11 & 11.01	VOLT CONT. OSCILLATOR DEV. TEST																				TEST COMPLETED JULY '63
14																						
15																						
16																						
17																						

LEGEND:
TESTS: ③ ① ②
HDW. DEL: ① ② ③

① PLANNED
② CURRENT EST.
③ ACTUAL

DATE 22 JAN[illegible]RY 1962
REVISED 2 DECEMBER 1963 (REV. N)
REVISED 30 DECEMBER 1963 (REV. O)
REVISED

MCDONNELL
ST. LOUIS, MISSOURI

GEMINI TEST PLAN SCHEDULE

REPORT
MODEL 133P

	Test Req. No. 52--	ACTIVITY	1963 J	A	S	O	N	D	1964 J	F	M	A	M	J	J	A	S	O	N	D	SLACK	COMMENTS
1		ANTENNA SYSTEMS:																				
2		UHF NOSE STUB, DESCENT & RECOVERY ANTENNAS																				
3	063.02.01	RADIATION PATTERNS - IMPEDANCE MATCHING																				TEST COMPLETED SEPT '62
4	052-063.19	QUALIFICATION TESTS																			-36	REDESIGN IN WORK. NEW SCHEDULE TO BE DETERMINED.
5		HF WHIP ANTENNA (DE HAVILLAND A/C)																				
6		VENDOR DEVELOPMENT (MECHANICAL)																				
7		ENGR. EVALUATION & IMPEDANCE MATCHING																				TEST COMPLETED NOV '62
8		QUALIFICATION TESTS																				TEST COMPLETED NOV. '63
9		C BAND ANTENNAS (RADCOM - EMERTRON)																				
10		VENDOR DEVELOPMENT, ENGR. EVALUATION QUAL. TESTS																				TEST COMPLETED JUNE '63
11		UHF ADAPTER ANTENNAS (DE HAVILLAND A/C)																				
12		VENDOR DEVELOPMENT, ENGR. EVALUATION & QUAL. TESTS																				TEST COMPLETED SEPT. '63
13		C & S BAND SLOT ANTENNAS (ADAPTER) RANTEC CORP.)																				
14		VENDOR DEVELOPMENT, ENGR. EVAL. & QUALIFICATION TESTS																				TESTS COMPLETED JUNE '63
15		UHF MULTIPLEXERS (RANTEC CORP.)																				
16		VENDOR DEVELOPMENT, ENGR. EVAL, & QUALIFICATION TESTS																				TESTS COMPLETED APRIL '63
17		COAXIAL SWITCHES: VENDOR DEVEL., ENGR. EVAL. & QUAL. TESTS																				TESTS COMPLETED APRIL '63
			J	A	S	O	N	D	J	F	M	A	M	J	J	A	S	O	N	D		
			1963						1964													

LEGEND:
TESTS:
HDW. DEL:

① PLANNED
② CURRENT EST.
③ ACTUAL

DATE 22 JANUARY 1962
REVISED 2 DECEMBER 1963 (REV. N)
REVISED 30 DECEMBER 1963 (REV. O)
REVISED

MCDONNELL
ST. LOUIS, MISSOURI

GEMINI TEST PLAN SCHEDULE

REPORT
MODEL 133P

	Test Req. No. 52--	ACTIVITY	1963 J A S O N D	1964 J F M A M J J A S O N D	SLACK	COMMENTS
1		ELECTRONIC SYSTEMS TEST UNIT (ESTU)				
2		INDIVIDUAL ENGINEERING PROTOTYPE SYSTEMS TESTS				TESTING FROM SEPT '62 THRU MAY '63
3		ESTU INTEGRATION PROGRAM				TESTING FROM NOV '62 THRU JULY '63
4		ESTU/CIMU INTEGRATION				TESTING JUNE & JULY '63
5						
6		GUIDANCE & CONTROL SIMULATION TEST (ANALOG):				
7		AVAILABILITY - THREE (3) AXIS MOTION TABLE & ESTU	◆			3 AXIS TABLE DEL. NOV. '62
8	59.02	ATTITUDE MANEUVERING MODE			-19	TESTING COMPLETED NOV. '63
9	59.01	IN-FLIGHT PLATFORM ALIGNMENT			-23	TESTING COMPLETED DEC. '63
10	59.03	FLIGHT COMPUTER EVALUATION			-23	
11						
12						
13	61.00 THRU .06	COMPATABILITY TEST UNIT (CTU):			-22	
14	68.40	COOLANT SYSTEM SERVICING			-2	
15	61.08	IGS SYSTEM RE-TEST				TESTING COMPLETED DEC. '63
16						
17						

LEGEND:
TESTS: ③ ① ②
HDW. DEL: ◇ ◆

① PLANNED
② CURRENT EST.
③ ACTUAL

DATE 22 JANUARY 1962
REVISED 2 DECEMBER 1963 (REV. N)
REVISED 30 DECEMBER 1963 (REV. O)
REVISED

MCDONNELL
ST. LOUIS, MISSOURI

GEMINI TEST PLAN SCHEDULE

REPORT
MODEL 133P

	Test Req. No. 52--	ACTIVITY	SLACK	COMMENTS
1	66.02	ELECTRICAL POWER SYSTEM COMPATIBILITY TESTING:		
2		FUEL CELL SECTION - ACCEPTANCE, CHECKOUT & FAMILIARIZATION		UNITS 3A, 5 & 5A UNSATISFACTORY, RETURNED TO VENDOR
3		FUEL CELL SECTION - BENCH TEST (GASEOUS)		
4		RSS REGULATORS - ACCEPTANCE, CHECKOUT & FAMIL. (GASEOUS)	-26	
5		COOLANT BENCH CHECKOUT, TEST SET-UP & INSTRUMENTATION		COMPLETED APRIL '63
6		RSS REGULATORS & FUEL CELL SECTION - SYSTEM TEST (GASEOUS)	-30	F/C 3B & 501 FAILED, TO RESUME ON RECEIPT OF NEW F/C SEC.
7		ELECTRICAL POWER DISTRIBUTION SYS. FUNCTIONAL TESTS	-15	
8		ELECT. PWR. DIST. SYS., FUEL CELL SECTION & RSS REG. TEST (GASEOUS)		TO FOLLOW LINE 6
9		RSS SYSTEM CHECKOUT & BENCH TESTS	-38	
10		RSS SYSTEM & REMOTE CONTROL CHECKOUT & INSTRUMENTATION (CRYOGENIC)	-33	
11		FUEL CELL SECTIONS, RSS & ELECT. PWR.DIST.SYS.COMPAT. (CRYOGENIC)	-33	
12		ELECT. PWR. SYSTEM - FUNCTIONAL TESTS, ALT. & TEMP. (CRYOGENIC)	-33	
13		ELECT. PWR. SYSTEM - FUNCTIONAL TESTS, VIBRATION (CRYOGENIC)	-33	
14				
15				
16		PRODUCTION SPACECRAFT SYSTEMS TESTS		
17				

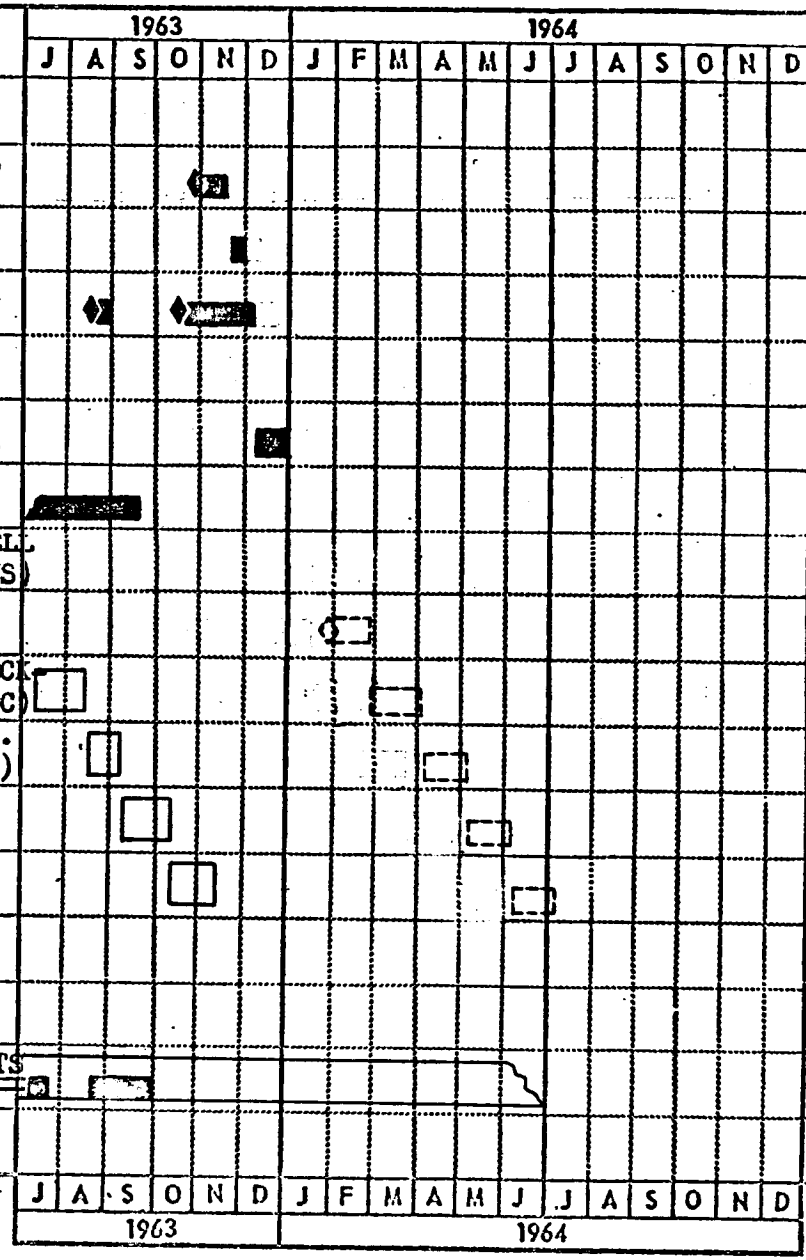

LEGEND:
TESTS:
HDW. DEL:
① PLANNED
② CURRENT EST.
③ ACTUAL

DATE 22 JANUARY 1962
REVISED 2 DECEMBER 1963 (REV. N)
REVISED 30 DECEMBER 1963 (REV. O)
REVISED

MCDONNELL
ST. LOUIS, MISSOURI

GEMINI TEST PLAN SCHEDULE

REPORT
MODEL 133P

	Test Req. No. 52--	ACTIVITY	1963 J	A	S	O	N	D	1964 J	F	M	A	M	J	J	A	S	O	N	D	SLACK	COMMENTS
1		ENVIRONMENTAL CONTROL:																				
2		EQUIPMENT COOLING:																				
3	68.02.01& .04,68.05	ALTITUDE TESTS - COLD PLATE DEVELOPMENT																				TEST COMPLETED NOV '62
4	68.01.02	MODEL TESTS - RADIATOR HEAT & PRESSURE																				TEST COMPLETED NOV '62
5	68.06	ALTITUDE & TEMP ENVIR. - RADIATOR (THERMAL BALANCE)			◊				◊												-16	
6		BOILERPLATE NO. 2																				
7		MFG. DELIVERY - BOILERPLATE NO. 2 TO LAB																				DELIVERED MARCH '63
8		CABIN & SUIT CIRCUIT DELIVERY																				DELIVERED JUNE '63
9	68.04	CABIN & SUIT CIRCUIT ALTITUDE TESTS - UNMANNED	■																			
10	68.04	CABIN & SUIT CIRCUIT ALTITUDE TESTS - MANNED		■	■	■																
11		COMPLETE ECS SYSTEM DELIVERY							◊												-35	
12	68.04.02	ALTITUDE TESTS - UNMANNED								□											-30	
13	68.04.02	ALTITUDE TESTS - MANNED	□	□	□					□											-25	
14		CHAMBER MODIFICATION						■														COMPLETED DEC. '63
15	68.04.01	14-DAY UNMANNED TEST		□							□										-24	
16	68.09	EGRESS SYSTEM EVALUATION			□							□									-28	CONTINGENT ON AVAILABILITY OF EGRESS KIT
17		DELIVER BOILERPLATE NO. 2 TO MSC				◊						◊									-23	
			J	A	S	O	N	D	J	F	M	A	M	J	J	A	S	O	N	D		
			1963						1964													

LEGEND:
TESTS: ③ ① ② ③
HDW. DEL: ◊ ◊ ◊

① PLANNED
② CURRENT EST.
③ ACTUAL

DATE 22 JANUARY 1962
REVISED 2 DECEMBER 1963 (REV. N)
REVISED 30 DECEMBER 1963 (REV. O)
REVISED

MCDONNELL
ST. LOUIS, MISSOURI

GEMINI TEST PLAN SCHEDULE

REPORT
MODEL 133P

	Test Req. No. 52--	ACTIVITY	1963 J	A	S	O	N	D	1964 J	F	M	A	M	J	J	A	S	O	N	D	SLACK	COMMENTS
1	072 072.01	THERMAL QUALIFICATION TEST																				
2		S/C 3A RECEIVED FROM MFG.																				
3																						
4	58.03.01	3A SPACECRAFT VIBRATION (NOT THERMAL BALANCE TEST)																				
5		3A SPACECRAFT AVAIL. FOR THERMAL TEST																				
6		SPECIAL INSTRUMENTATION INSTALLATION																				
7		HARDLINE CONTROL INSTALLED																				
8		SPECIAL TEST EQUIPMENT INSTALLED & COMBINED SYSTEMS CHECKOUT																				
9		SYSTEM SERVICING																				
10		MISSIONS																				
11		MINIMUM INTERNAL HEATING ONE LOOP, ONE PUMP																				
12		MAXIMUM INTERNAL HEATING, ONE LOOP, TWO PUMPS																				
13		MAXIMUM INTERNAL HEATING, TWO LOOPS, ONE PUMP PER LOOP																				
14																						
15																						
16																						
17																						
			J	A	S	O	N	D	J	F	M	A	M	J	J	A	S	O	N	D		
			1963						1964													

LEGEND:
TESTS: ① ② ③
HDW. DEL: ① ② ③

① PLANNED
② CURRENT EST.
③ ACTUAL

GROUND RULE [illegible]

RECOVERY SYSTEMS

PARACHUTE

1. Test planning has been completed to qualify both the old and new configuration recovery chute systems. Qualification of the old (no drogue) system for Spacecraft 2 and 3 will be accomplished through three drop tests using Static Article [illegible]. These drops will simulate parachute deployment from an unstable vehicle, and are scheduled to be conducted by Northrop [illegible] between 15 February 1964 and 31 March 1964.

   The new configuration system qualification program has been scheduled as follows:

   Phase I - Tandem deployment development of the 18 foot pilot chute and the 8.3 foot drogue chute. Three drops to be conducted by Northrop-Ventura using Boilerplate 5. Tests to be conducted [illegible] 1 January 1964 and 29 February 1964.

   Phase II -Drogue Chute development program. Four [illegible] altitude bomb drops to be conducted by Northrop Ventura. Testing to be conducted between 1 March 1964 and 31 August 1964.

   Phase III -System Qualification Drops. Fourteen drops to be conducted by Northrop-Ventura using Static [illegible]. Drops are scheduled between 1 June 1964 and 30 October 1964.

   Phase IV -Complete system and structural qualification [illegible]. Six drops to be conducted by Northrop [illegible] using Static [illegible]. Drops scheduled [illegible]

2. 30 Day Forecast - [illegible] tests as outlined in the above schedule.

PARAGLIDER

1. Test Vehicle Recovery System successfully completed on a second drop conducted by NAA on 2 December 1963, using Boilerplate 5.

2. 30 Day Forecast - No test activity scheduled.

EJECTION SEAT DEVELOPMENT AND QUALIFICATION

1. Ballute test live jumps conducted at El Centro indicate that the present system does not provide the degree of stabilization required to stop or prevent spin on high altitude ejection. Evaluation of the Ballute System is being conducted. Testing at NAC of escape system materials by exposure to simulated fireball radiant heating was completed with no failures.

2. 30 Day Forecast - Continue analysis of Ballute stabilization system. Continue in-flight eye, skin and capsule [illegible] analysis.

HATCH DEVELOPMENT QUALIFICATION TESTS

1. Hatch rework completed to eliminate excessive [illegible] hatch and sill, and to reduce latching handle [illegible]. EJS's against hatch assemblies have been [illegible] of this and other hatch development activity. [illegible] and instrumentation now in process.

2. 30 Day Forecast - Qualification test to completion by 10 January 1964. Pressurization, vibration and [illegible] test runs no failure, according to [illegible].

WINDOW QUALIFICATION TESTS

1. Shock test completed 4 December 1963. Unit [illegible] withstood 45 G's. Test set up and instrumentation in process for simulated mission temperature, shock and pressure test. Shaker and test chamber check out in progress.

2. 30 Day Forecast - Simulated mission test run to start 3 January 1964.

PROPULSION SYSTEM

1. TR approved and issued for additional scale model tests to be run at AEDC. Thiokol is developing rocket nozzles and will build most of the test hardware.

2. 30 Day Forecast - No test activity. Test tentatively scheduled for March 1964 at AEDC.

RELEASE MECHANISMS

1. A preliminary firing of the Zone 13 Pyro shaped charge was conducted on 11 December 1963, using the [illegible] charge with special shielding added to [illegible] elevated temperatures. Twenty-five open and [illegible] relays were monitored. No "false" or "[illegible]" [illegible] data is being analyzed.

2. 30 Day Forecast - Tests scheduled during January 1964 include "Booster-Adapter Separation", "Re-entry Sec[illegible] Separation", and "Patch Ejection".

ELECTRICAL POWER SYSTEM

1. Combined system test conducted on 10 December 1963, using fuel cell sections [illegible]. Six, five [illegible] operation and [illegible] observed. [illegible]

2. 30 Day Forecast - Further cell [illegible] by continued testing per [illegible] requirements. [illegible] complete failure is experienced, a special [illegible] will be conducted to check equipment feed back to the base. [illegible] pad start up will be simulated during this test.

GUIDANCE AND CONTROL SIMULATION

1. In flight Platform Alignment testing (automatic) continues.
2. 30 Day Forecast - Automatic phase to be completed. Manual phase to be conducted, extending into February 1964.

RADIATOR TESTS

1. 3A Adapter structure delivered to test lab on 9 December 1963. Test set up and instrumentation in process. Two of five modules have been delivered to test lab. Delivery of [illegible] three held for component shortages.
2. 30 Day Forecast - Delivery of balance of modules [illegible] by mid-January 1964. Test set up and [illegible] continue through January.

STRUCTURAL TEST PROGRAM - STATIC TEST [illegible]

STATIC 2

1. Static article No. 2 structure re-[illegible] configuration - Spacecraft No. 5.
2. 30 Day Forecast - No test activity.

STATIC 3

1. Heat Shield delivered to test lab on 9 December 1963. Set up in process for Heat Shield Secondary [illegible] test. Electrical [illegible] [illegible]

2. 30 Day Forecast - Heat Shield re-entry load test is [illegible] scheduled for 10 January 1964. Umbilical Disconnect test to follow. Anticipate test run to start 24 January 1964, and to extend into February 1964.

STATIC 4

1. Rework to correct interference condition in latching mechanism completed. Extensive rework also accomplished to correct excessive gap between hatches and sills, and to reduce latch handle loads. Hatch operation - simulated mission test run added to this static article.

2. 30 Day Forecast - Preservation test run, erecting and ultimate, scheduled for 30 December 1963 through 30 [illegible] Set up for simulated mission hatch operation to follow. [illegible] test run scheduled to start on 15 January 1964. Hatch backup structure tests scheduled to start [illegible] January 1964.

STATIC 5

1. -301 modification completed. Unit shipped [illegible] on 26 December 1963

STATIC 7

1. Manufacture and sequential checkout completed. Unit being prepared for shipment.

2. 30 Day Forecast - Unit scheduled for shipment to Northrop Ventura on 2 January 1964. Following instrumentation, calibration and simulated mission checkout, Northrop Ventura will conduct three duty cycle [illegible] system for [illegible] and [illegible]. [illegible] scheduled [illegible] January 1964.

BOILERPLATE 2

1. Additional parts requirements, plus non-delivery of vendor components has delayed completion of ECS system up-dating.

2. 30 Day Forecast - Now anticipate test runs to start on 25 January 1964 and continue through March 1964.

BOILERPLATE 3

1. No test activity.

2. 30 Day Forecast - No test activity pending completion of new egress kit.

BOILERPLATE 3A

1. Manufacture of Boilerplate 3A with one pair of hatches completed.

2. 30 Day Forecast - Unit to be delivered to test [illegible] 30 December 1963. Set up for batch emergency [illegible] to follow, with test scheduled for completion by mid-January 1964. Unit will then be returned [illegible] manufacturing for fit up of second set of hatches. Fit up completion and [illegible] original [illegible] set of hatches scheduled for [illegible] February 1964.

BOILERPLATE 4

1. Preparation for airborne drop test continues [illegible] fixture has been moved to [illegible] water [illegible] for water drop is in process. Progress has been hampered by cold weather.

2. 30 Day Forecast - [illegible] 20 January 1964, [illegible]

BOILERPLATE 5

1. Second paraglide test vehicle recovery system drop conducted by NAA on 2 December 1963. NAA equipment removed and unit returned to Northrop-Ventura.

2. 30 Day Forecast - Vehicle to be modified for the five tandem deployment chute drops as outlined in "Recovery Systems - Parachute" of this report.

STATIC 4 ADAPTER

1. Adapter Hot Launch test. Noise interference in LOGS recording system corrected by use of filters. Condition I test (limit load at elevated temperature) conducted on 13 December 1963. Structure withstood test, however, a loss of radiator pressure from 50 to 20 PSIG occurred at peak temperature. Cause of pressure loss was found to be due to loose connector where test set up lines were joined to test specimen. Set up completed for Condition II test (ultimate load at elevated temperature). Preliminary checkout (60% limit load) revealed the need to modify the strain gage set up. Modifications now in process.

2. 30 Day Forecast - Test date to be determined by progress of modification now in process. Ambient test was to be conducted during first week in January 1964. No further testing scheduled for this specimen.

MISCELLANEOUS TEST ACTIVITIES

ELECTRICAL

2. [illegible] Qualification test completed 20 December 1963.

2. Test of [illegible] conducted on [illegible] due to outside temperatures being below [illegible] requirement. Unit failed test. Unit to be sent to Cape for subsequent testing.

3. MG Connector testing continued. Additional failures encountered in that six of six connectors failed di-electric check in altitude-peak test. Failure analysis in process.

4. Flashing recovery light - two test specimens returned to Vendor for incorporation of latest configuration change. Test delayed until receipt of modified units.

5. UHF Antenna - During preliminary check out it was found that the Antenna Unit was incomplete. Unit returned to manufacturing. Testing to be conducted upon return of completed unit.

6. Relay Hard Mount - Two vibration tests of hard mount relay panels conducted. In both tests, relay failure occurred in the narrow band random vibration phase. Investigation being conducted. Suggested possible correction is to tune mounting panels to avoid vibration frequency in which failure occurs.

MATERIALS AND PROCESSES

1. Waterproof qualification test of assembled wire harness vacuum conditions successfully completed 5 December [illegible]

2. Pyrotechnic [illegible] completed 12 December 1963.

3. Plasma [illegible] to be [illegible]

4. Test run of salt compatibility with MS198 heat transfer fluid conducted on 17 December 1963.
5. Cad sublimation tests successfully completed.

PROBLEM AREAS

1. Continued non-delivery of Vendor items required to update ECS system for Boilerplate 2.
2. Projected delivery of new configuration egress kits may further delay Boilerplate 2 beyond current anticipated ship date of first week of April 1964.
3. Continued inability of Vendor to deliver beryllium shingles on schedule.

SST SCHEDULE - COMPATIBILITY TEST UNIT

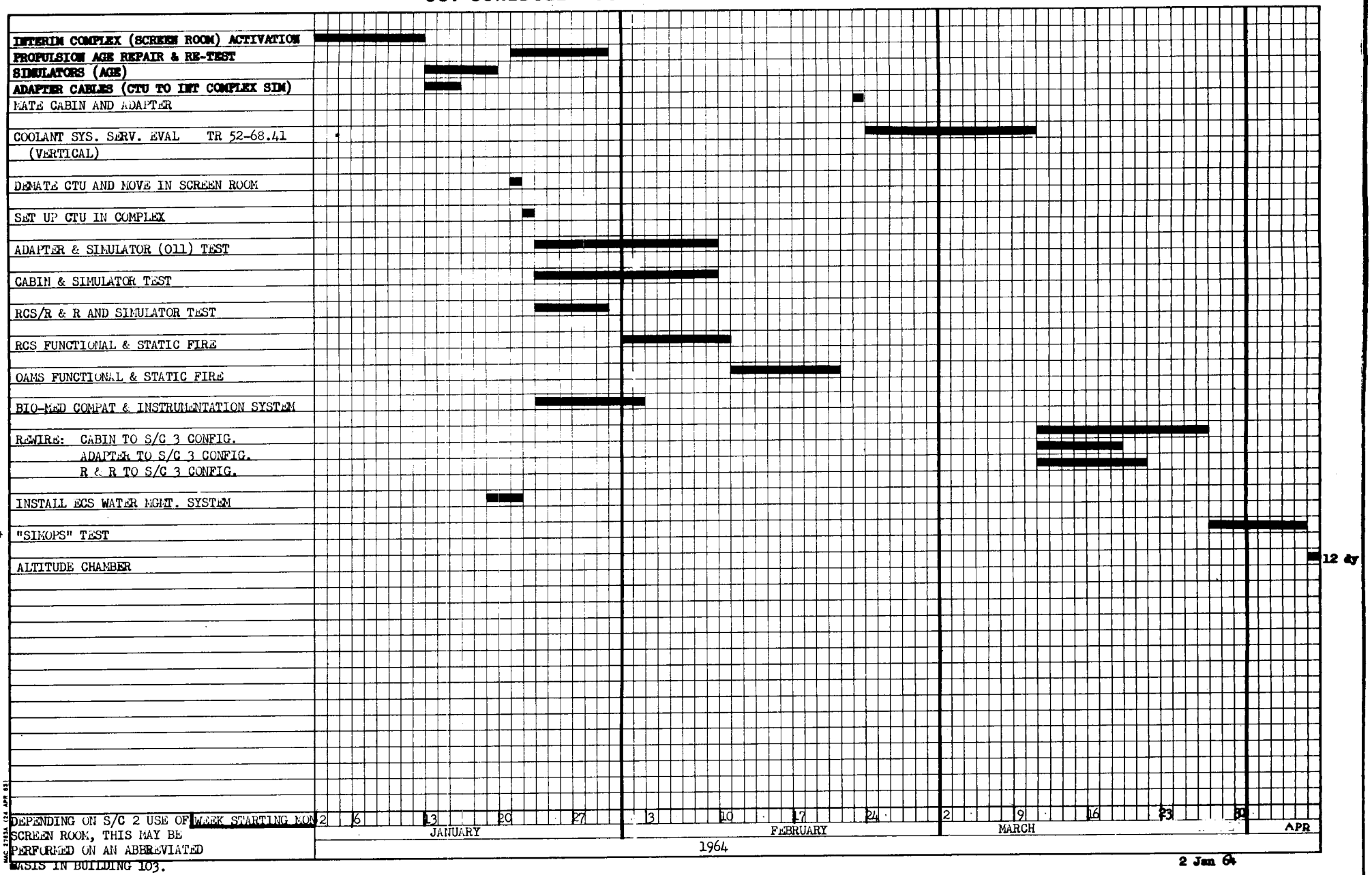

* DEPENDING ON S/C 2 USE OF SCREEN ROOM, THIS MAY BE PERFORMED ON AN ABBREVIATED BASIS IN BUILDING 103.

2 Jan 64

GEMINI SPACECRAFT
MANUFACTURING WORK PLAN AND TEST
TRANSLATION AND DOCKING TRAINER

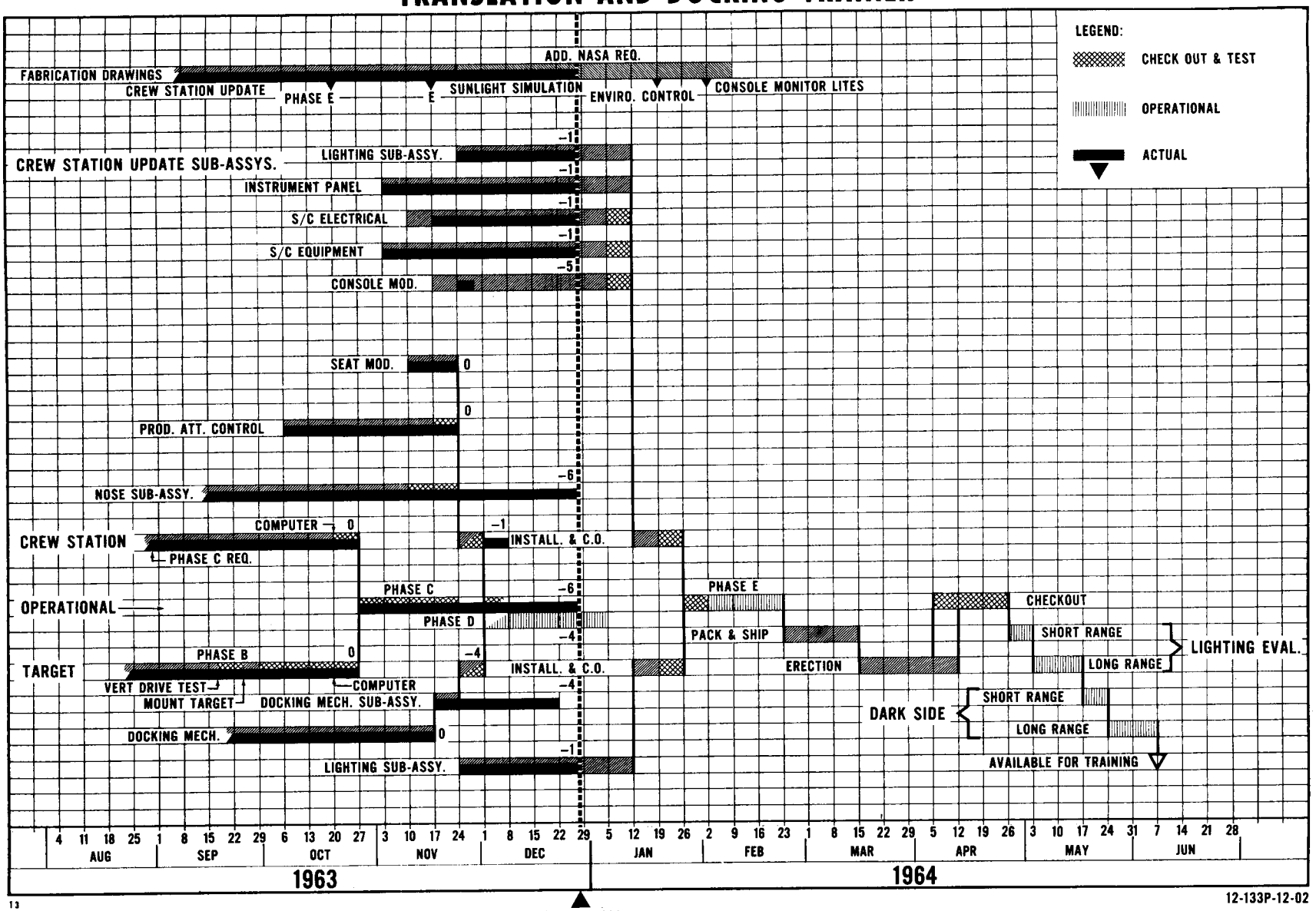

12-133P-12-02

[illegible]

[illegible]

The following was accomplished during the month of December 1963:

- Longitudinal [illegible] Phase "C"
- Vertical [illegible] completion Phase "C"
- Target docking adapter [illegible] sling [illegible]
- Access ladder completed and [illegible]
- Phase "D" [illegible] and [illegible]
- Phase "C" testing was [illegible]
  - longitudinal [illegible]
  - the longitudinal [illegible] operations.
- Various minor developmental [illegible] "C" testing of the [illegible]
- Fabrication of target [illegible]

Planned work for the month of January 1964 is as follows:

- Strengthen target sling and [illegible]
- Phase "D" testing. [illegible] complete Phase "D" [illegible]
- Continue fabrication of Phase "D" target [illegible] details and [illegible]
- Due to additional NASA requirements [illegible]
  - extended thru January to [illegible] 1964.
- Complete phase "D" testing [illegible] 30 June 1964.
- Start Phase "D" testing [illegible]

An accident occurred 29 [illegible] the sling and lower [illegible] the time the sling is removed [illegible] schedule is anticipated [illegible]

GEMINI MISSION SIMULATOR
S/N-1,2 SCHEDULE

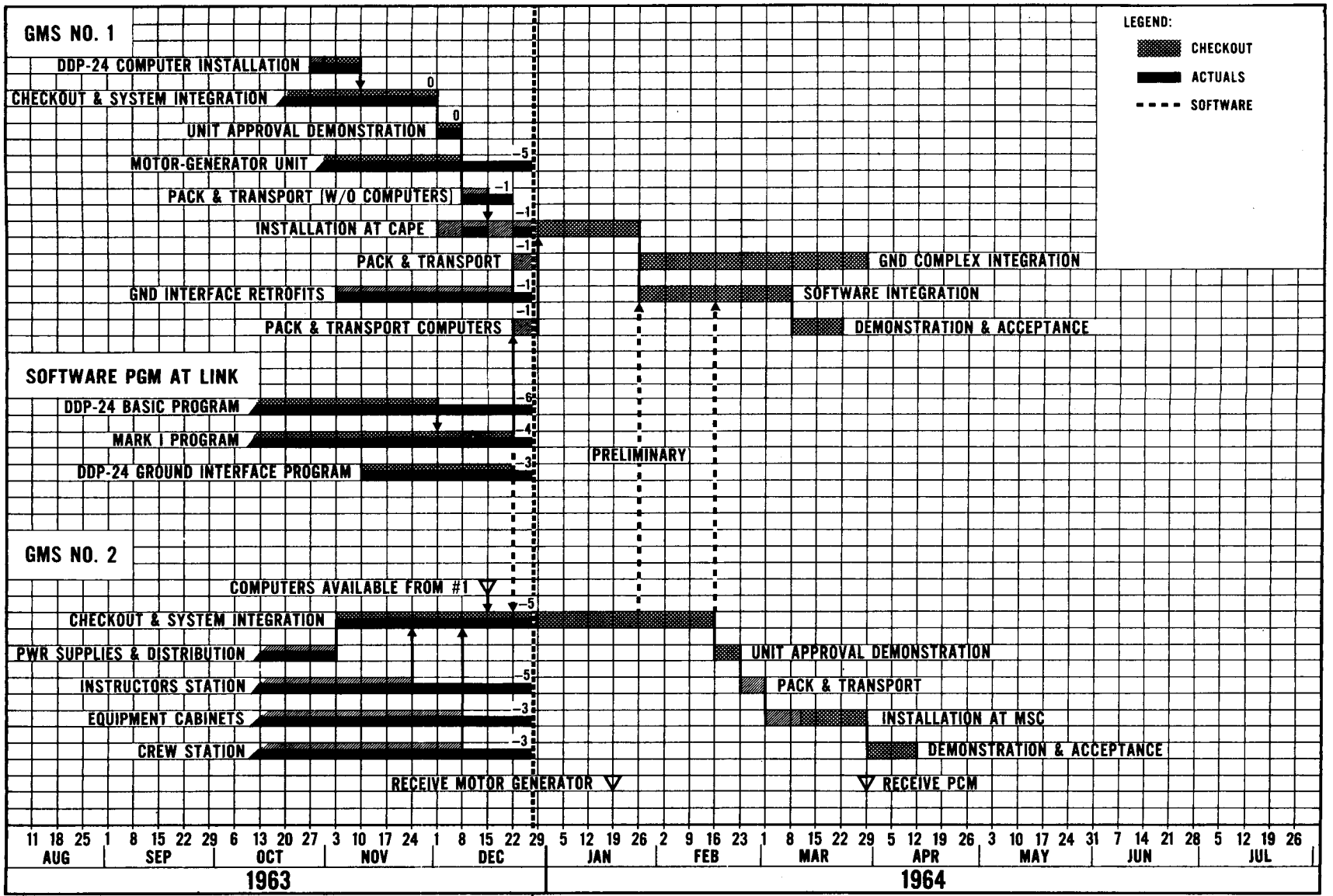

12-133P-03-02

SYSTEM	PART NUMBER	NOMENCLATURE	LOCATION INT.	LOCATION FINAL	DELIVERY DATE	FACILITY READY	START BENCH CHECKOUT & CALIBRATION	OPERATIONAL INT.	OPERATIONAL FINAL	REMARKS
COMM.	52E 190001	HF & Audio Bn.	None	B101A W/R #6	12/24/63	Now	1/06/64	None	1/20/64	
	52E 190002	UHF Bn.	B.1 W/R #6	↓	In-Plant	↓	↓	Now	1/20/64	
	52E 190003	Beacon Bn.	↓	↓	↓	↓	↓	↓	↓	
	52E 190020	DCC	↓	↓	↓	↓	↓	↓	↓	Shared usage with SST
	52E 190023	Dig. Converter	↓	↓	↓	↓	↓	↓	↓	
ECS & CMS	52E 420010	Prop Bn.	None	B101A W/R #10	In-Plant	Now	Now	None	1/10/64	
	52E 420011	Adpt. Kit	↓	↓	↓	↓	↓	↓	↓	
	52E 420097	Mass Spect.	↓	↓	↓	↓	↓	↓	12/30/63	SST Unit Available

NOTES:
1. Facility ready date defines location of brick and mortar area available for bench to be moved in.
2. Begin checkout and calibration date defines time required from facility ready date to install test bench in area.
3. Operation date defines time required to conduct checkout and calibration of bench to be ready for PIA testing.

SYSTEM	PART NUMBER	NOMENCLATURE	LOCATION INT.	LOCATION FINAL	DELIVERY DATE	FACILITY READY	START BENCH CHECKOUT & CALIBRATION	OPERATIONAL INT.	OPERATIONAL FINAL	REMARKS
ECS	52E 180010	Lo. Press. Bn.	B.1 W/R #10	B101A W/R #10	In-Plant	Now	Now	Now	12/30/63	
	52E 180011	Hi. Press. Bn.	↓	↓	↓	↓	↓	↓	1/06/64	* See Below
	52E 180013	Coolant Bn.	None	B101A W/R #6	↓	↓	↓	None	1/08/64	
	52E 180001	Fix - ECS Pkg.	B.1 W/R	B101A W/R	↓	↓	↓	Now	Now	Unit assigned to 188 - Shared usage
	52E 010086-1	Coolant Bench Laminar Flow Encl	None	B101A W/R #6	↓	↓	↓	None	1/08/64	
RCS	52E 180012	LO_2 Bn.	None	B103A Cyro Rm	In-Plant	Now	1/13/64	None	1/18/64	
	52E 230027	LH_2 Bn.	↓	B.65	↓	↓	1/08/64	↓	1/18/64	
	52E 010086-3	LH_2 Bn. Laminar Flow Encl	↓	↓	↓	↓	Now	↓	↓	

* Testing capability up to N_2 and O_2 Gas K - bottles pressures only. (approximately 2250 PSI)

SYSTEM	PART NUMBER	NOMENCLATURE	LOCATION INT.	LOCATION FINAL	DELIVERY DATE	FACILITY READY	START BENCH CHECKOUT & CALIBRATION	OPERATIONAL INT.	OPERATIONAL FINAL	REMARKS
EPS.		Flashing Rec. Lite								SPDR in work now. No AGE for this. SPDR to spell out using existing GED lab facilities
		Baro.Switch								
	52E 230001	Fuel Cell	B.102	B.62	2/08/64	Now		*	3/08/64	* Electrical & mechanical interim in operation now at B.62

SYSTEM	PART NUMBER	NOMENCLATURE	LOCATION INT.	LOCATION FINAL	DELIVERY DATE	FACILITY READY	START BENCH CHECKOUT & CALIBRATION	OPERATIONAL INT.	OPERATIONAL FINAL	REMARKS
G & C	52E 270023	Computer Bn.)	B.1 W/R #6	B101A W/R #6	*	Now	1/06/64	Now	1/21/64	* AGE in-plant less BTE which is coming in with hardware
	52E 270032	IMU Bench)IGS			In-Plant					
	52E 270036	IMU Dolly)								
	52E 270053	IMU Cable)								
	52E 270009	Box Test Pt.								2 Sets Avail.
	52E 270034	MDIU & Delta V								
	52E 270018-401	Kit - RIST			12/27/63					
	52E 270051	Dolly Computer	-		In-Plant			-		
	52E 270050	Dolly Computer	None					None		
	52E 270018	RIST Test Radar Ins.			12/27/63					
	52E 270052	Dolly Radar	B.1 W/R #6		1/16/64					
	52E 270071	ACPU Charger PI	None		1/15/64					
	52E 270025	Radar Console	B.1 W/R #6		In-Plant			Now		
	52E 270069	Recorder - G&C	None		2/18/64		2/25/64	None	3/05/64	
	52E 270056	Kit-Radar Press			1/29/64		2/05/64		2/10/64	
	52E 270007	Adpt Kit Plt		B.102	In-Plant		1/06/64		Now	Used in conj. w/Fecker Table
	52E 270020	Plt Consoles								
	52E 270002	ACME Bn.	B.1 W/R #6	B.101A W/R #6				Now	1/21/64	
	52E 270019	Adpt-Rate Table								Shared usage with SST
	52E 270055	Rate Table								
	52E 270021	Hor. Sens. Bn.								
	52E 270016	Hor. Simulator								
	52E 270047	Temp Att Ind.								
	52E 270035	Att. Ind.								

SYSTEM	PART NUMBER	NOMENCLATURE	LOCATION INT.	LOCATION FINAL	DELIVERY DATE	FACILITY READY	START BENCH CHECKOUT & CALIBRATION	OPERATIONAL INT.	OPERATIONAL FINAL	REMARKS
1 [illegible]	52E 440036	Ratiometer	B.42	B.101 * W Balc	In-Plant	12/30/63	1/15/64	Now	2/01/64	*to be moved at convenient time during test sched approximately 2/15/64
	52E 440039	Accel. Static Test Unit								
	52E 440008-1	DC-DC Converter Test Set								
	52E 440035	Harness Test Cables			**					** 5 units 1-95% comp 1-75% comp
	52E 440050	Bio-Med Power Supply Test Set			3/27/64				4/03/64	
	52E 440002	CO_2 Partial Press Test Set			In-Plant				2/01/64	
	52E 440040	Tape Recorder								
	52E 190002-1	Transmitters #	B.1 W/R #6	B.101A W/R #6		Now	1/06/64			
	52E 440040	PCM (CIMU)	B.42	B.101A W Balc	4/08/64	12/30/63	1/15/64		5/08/64	CIMU in oper
	52 - 04015	Signal Cond. Circuit C/O Box			In-Plant				2/01/64	
	52 - 04004	Signal Cond. PIA Console								
	52 - 04026	Signal Cond. Continuator								
	52 - 04010	Signal Cond. Comp. Selec.								
	52 - 04007	Signal Cond. Burn-In Console								
	52 - 04027	VCO Tester								
	52 - 04013	Interaction Test								

All three items are part of Data Transmission System Test Set

DATE: 12/20/63

DEC 2 3 1963

MAINTENANCE ENGINEERING (DEPT. 501)

PIA SEDR STATUS LIST

Information contained herein reflects the status of all PIA SEDR's, excluding SEDR PIA320 (Instrumentation). SEDR PIA320 is prepared by Dept. 285. Hardware required for S/C #2 is identified with a ▲ .

DATE 20 DEC. 63 ~~(EST)~~ (ACTUAL) PRELIMINARY AVAIL. 1 AUG 63 SEDR PIA 210

SHEET 1 OF 1 (EST) ~~(ACTUAL)~~ FINAL AVAILABLE 20 JAN 1964 * SYSTEM ELEC. SYS

HARDWARE			LATEST ATP	SEDR PART			PRELIMINARY		FINAL			REMARKS		
ITEM	P/N	DASH NUMBER	#	I	II	III	INCORP	EST INCORP	INCORP.	EST. INCORP	INCORP. BY	PREPARATION		REVIEW
BATTERY	52-79702	-7 ▲	ATP 5 REV C	Y			X			20 JAN 64				
BATTERY	52-79702	-9 ▲	ATP 6 REV C	Y			X			20 JAN 64				
BATTERY	52-79702	-11		Y						UNKNOWN	FCN	NO APPROVED ATP AVAILABLE		

* NOTE

THE FINAL DOCUMENT

AWAITING SIGNATURES

FROM BOTH THE SCD

ENGINEER AND NASA

DATE 20 Dec 63
SHEET 1 OF 1

~~(EST)~~ (ACTUAL) PRELIMINARY AVAIL. 8 Nov 63 *
(EST) ~~(ACTUAL)~~ FINAL AVAILABLE 20 JAN 1964

SEDR PA I 314
SYSTEM FUEL CELL

HARDWARE			LATEST ATP	SEDR PART			PRELIMINARY		FINAL			REMARKS			
ITEM	P/N	DASH NUMBER	#	I	II	III	INCORP	EST INCORP	INCORP.	EST. INCORP	INCORP. BY	PREPARATION		REVIEW	
FUEL CELL	52-79700	- 9 Δ	TR 052-		Y	Y	Y			20 JAN 64					
			066-002												
[illegible] VALVES Δ	GE7228114			Y											
[illegible] PURGE VALVES Δ	GE7228114			Y											
[illegible] PURGE VALVES Δ	GE697D110			X											
[illegible] VALVES Δ	GE697D111			X											
[illegible] SENSOR Δ	GE697D110			X											

* SECONDARY PRELIMINARY

Δ PART I. WILL HAVE TO BE WRITTEN USING NOT APPROVED ATP'S FROM GE. WE PRESENTLY DO NOT HAVE AGE TO PERFORM PTA ON A SPARE BASIS.

NOTE

DOCUMENT (FINAL) IN NASA OFFICE FOR SIGNATURE AND SENT TO HOUSTON FOR REVIEW.

DATE 20 DEC. 63 (EST) (ACTUAL) PRELIMINARY AVAIL. 23 JULY 63 SEDR PZA 350

SHEET 1 OF 1 (EST) (ACTUAL) FINAL AVAILABLE 10 OCT 63 SYSTEM SEG SYS.

HARDWARE			LATEST ATP	SEDR PART			PRELIMINARY		FINAL			REMARKS			
ITEM	P/N	DASH NUMBER	#	I	II	III	INCORP	EST INCORP	INCORP.	EST. INCORP	INCORP. BY	PREPARATION		REVIEW	
ELEC [illegible]	[illegible]	▲	A12A0067 FINAL RELEASE	V			V		V			PCN #1	RLEASED	5 NOV 1963	
[illegible]	[illegible]	▲	A12A0055 FINAL RELEASE	X			X		X			PCN #2	RELEASED	20 DEC. 1963	
[illegible] CLEAN	[illegible]	▲	—	V						31 JAN 64	PCN	NO APPROVED PTP AVAILABLE			

DATE 12/ /63 (EST) (ACTUAL) PRELIMINARY AVAIL. 8 AUG 1963 SEDR PIA 340

SHEET 1 OF 2 (EST) (ACTUAL) FINAL AVAILABLE 20 SEPT 1963 SYSTEM COMMUNICATIONS

HARDWARE			LATEST ATP	SEDR PART			PRELIMINARY		FINAL	FINAL		REMARKS		
	P/N	DASH NUMBER	#	I	II	III	INCORP	EST INCORP	INCORP.	EST. INCORP	INCORP. BY	PREPARATION	REVIEW	
[illegible]	52-85707	7 & 9 Δ	AR 1555 E	✓			✓			12/27/3	PCN #4	PCN #4 OUT FOR SIGN.		
[illegible]	52-85715	7 & 9 Δ	AR 1553 E	✓			✓			12/27/3	PCN #4	PCN #4 "	" "	"
[illegible]	52-85710	7 Δ	569-2302-00 Rev C	✓			✓		✓	12/20/63	PCN #6	DISTRIBUTED		
[illegible]	52-85709	7 Δ	569-2301-00 Rev A	✓			✓		✓			PCN # 7 IN	Review	(ORIGINAL CAN BE USED)
[illegible]	52-85719	7 Δ	NO ATP NUMBER	✓			✓		✓			Unit has not been Received.		
[illegible]	52-85706	07 & 9	Q-1196 Rev 5/19/63	✓			✓			1/3/64	PCN #5	PCN # 5 IN	Review	
[illegible]	52-85703	11 Δ	20190 REV. A	✓			✓		✓	UNK		PCN Being Prepared		(ORIGINAL CAN BE USED)
[illegible]	52-85704	9 Δ	20908 REV A	✓			✓		✓	UNK		PCN Being Prepared		ORIGINAL CAN BE USED
[illegible]	52-85715	63 & 67	9005-43 Rev D	✓			✓		✓	UNK.		PCN Being Prepared		(ORIGINAL CAN BE USED)
[illegible]	52-85714	15 & 17 & 19	12-23807C Rev. A	✓			✓		✓		PCN #1	PCN # 8 in Type		(ORIGINAL CAN BE USED)
[illegible]	52-85708	5 & 7	569-2348-00 Rev. A	✓			✓		✓		PCN #2			
[illegible]	52-85700	19 Δ	21002 Rev A	✓			✓		✓	UNK		PCN Being Prepared		(ORIGINAL
[illegible]	52-85700	21 Δ	21002 Rev A	✓			✓		✓	UNK		PCN Being Prepared		
[illegible]	52-85722	15 Δ	ST-4103A REV B	✓			✓		✓	UNK		PCN Being Prepared		CAN BE USED
[illegible]	52-85700	25 Δ	ST-4104 REV E	✓			✓		✓	UNK		PCN Being Prepared		
[illegible] Switch	52-85701	13 Δ	302 REV E	✓			✓		✓	UNK		PCN Being Prepared		
[illegible]	52-85720	11 Δ	657									Awaiting Engineering Proceed See.		

DATE 12/20/63 (EST) (ACTUAL) PRELIMINARY AVAIL. 8 AUG 63 SEDR PIA 340

SHEET 2 OF 2 (EST) (ACTUAL) FINAL AVAILABLE 20 SEPT 63 SYSTEM COMMUNICATIONS

HARDWARE			LATEST ATP	SEDR PART			PRELIMINARY		FINAL			REMARKS		
	P/N	DASH NUMBER	#	I	II	III	INCORP	EST INCORP	INCORP.	EST. INCORP	INCORP. BY	PREPARATION	REVIEW	
[illegible]	52-85702	17 ▲	ST-4102 A REV B	✓			✓		✓	UNK		PCN Being Prepared	(ORIG	CAN B
[illegible]	52-85101	1 ▲		✓			✓		✓	UNK		PCN Being Prepared	ORIGINAL	
[illegible]	52-85722	11 ▲	DHC-SP-AT-24M Issue 2	✓			✓		✓	UNK		PCN Being Prepared		CAN
[illegible]	52-85103	1 ▲		✓			✓		✓	UNK		PCN Being Prepared		BE
[illegible]	52-85716	7 ▲	DHC-SP-AT-15M Issue 3	✓			✓		✓	UNK		PCN Being Prepared		USED
[illegible]	52-85102	301 ▲		✓			✓		✓	UNK		PCN Being Prepared		
[illegible]	52-85723	11	B-422 Rev. 1	✓					✓		[illegible]			

DATE 12-20-63
SHEET 1 OF 1

(~~EST~~) (ACTUAL) PRELIMINARY AVAIL. Aug 28, 1963
(EST) (~~ACTUAL~~) FINAL AVAILABLE DEC 27, 1963

SEDR 350
SYSTEM HORIZON SENSOR

HARDWARE			LATEST ATP	SEDR PART			PRELIMINARY		FINAL			REMARKS		
ITEM	P/N.	DASH NUMBER	##	I	II	III	INCORP	EST INCORP	INCORP.	EST. INCORP	INCORP. BY	PREPARATION	REVIEW	
[illegible]	[illegible]	11 Δ		✓				UNKNOWN		UNKNOWN		NO ATP AVAILABLE		
[illegible]	[illegible]	13 Δ		✓				UNKNOWN		UNKNOWN		NO ATP AVAILABLE		
SYSTEM	[illegible]	302 Δ	TP29			✓	✓			27 Dec '3		In review by SCD expects DEC 2 [illegible] (for acceptance)		

DATE 12/20/63 (EST.) (ACTUAL) PRELIMINARY AVAIL. 14 AUG 63 SEDR 360

SHEET 1 OF 1 (EST.) (ACTUAL) FINAL AVAILABLE 8 NOV 63 SYSTEM ACME & HAND CONT

HARDWARE			LATEST ATP	SEDR PART			PRELIMINARY		FINAL			REMARKS		
ITEM	P/N	DASH NUMBER	#	I	II	III	INCORP	EST INCORP	INCORP.	EST. INCORP	INCORP. BY	PREPARATION	REVIEW	
ROLL TRIM	52-87700	-29 ▲	RED-1336-3	✓			✓		11/8/63		PCN#1&2	75 COPIES DISTRIBUTED		
RATE GYRO	"	-17 ▲	RED-1337-4	✓			✓		11/13/63		PCN#4	75 COPIES DISTRIBUTED		
ACE	"	-25 ▲	RED-1422	✓						1-20-69		ROUGH DRAFT BEING REVISED	*	
ACE	"	-27	NONE	✓						SC#7				
GAME	"	-19 ▲	RED-1334-5	✓			✓		11/3/63		PCN#3	75 COPIES DISTRIBUTED		
ATTD. H.C.	52-61365		N.A.	✓						1/10/69		ROUGH DRAFT OUT FOR REVIEW	*	
MAN H.C.	52-61371		N.A.	✓						1/17/69		MAN H.C. REDESIGNED PER ECS-52-2254	*	
ARTHC	52-61361		N.A.	✓						1/10/69		ROUGH DRAFT OUT FOR REVIEW	*	

* WILL BE INCORPORATED WHEN AVAILABLE BY PCN

DATE 10-20-63 (ACTUAL) PRELIMINARY AVAIL. AUG 18, 1963 SEDR 361

SHEET 1 OF 1 (ACTUAL) FINAL AVAILABLE NOV 26, 1963 SYSTEM ATTITUDE DISPLAY GROUP

HARDWARE			LATEST ATP	SEDR PART			PRELIMINARY		FINAL			REMARKS			
ITEM	P/N	DASH NUMBER	#	I	II	III	INCORP	EST INCORP	INCORP.	EST. INCORP	INCORP. BY	PREPARATION		REVIEW	
[illegible]	5287702	17 ▲	4027-005 REVD	✓			✓		✓			A PCN will be		initiated on part	
[illegible]	5287702	19 ▲	3X13-010 REVC	✓			✓		✓			I.A. [illegible] is being taken on this pcn until a go ahead is recieved from SED Engineer.			
[illegible]	5287702	1 ▲				✓	✓		✓						

DATE DEC 20 (EST) (ACTUAL) PRELIMINARY AVAIL. DEC. 4, 1963 SEDR PIA 37
SHEET 1 OF 1 (EST) (ACTUAL) FINAL AVAILABLE NOV. 14, 1963 SYSTEM INERTIAL GUIDAN

HARDWARE			LATEST ATP	SEDR PART			PRELIMINARY		FINAL			REMARKS	
ITEM	P/N	DASH NUMBER	#	I	II	III	INCORP	EST INCORP	INCORP.	EST. INCORP	INCORP. BY	PREPARATION	REVIEW
INERTIAL GUIDANCE SYSTEM	52-87710	-1 ▲	63-358-5000			✓		4/30/64		5/30/64		ATP HAS NOT BEEN APPROVED (PRELIMINARY IN WORK)	
INERTIAL MEASURING UNIT	52-87717	-1 ▲	RED 21101		✓		12/10/63			3/30/64		PRELIMINARY IN REVIEW	
INERTIAL PLATFORM	52-87717	-11 ▲	NONE	✓								NO ATP	
IMU SYSTEM ELECTRONICS	52-87717	-13 ▲	NONE	✓								NO ATP	
IGS POWER SUPPLY	52-87717	-15 ▲	NONE	✓								NO ATP	
DIGITAL COMPUTER	52-87710	-7 ▲	63-385-0020	✓			12/4/63			3/30/64		PRELIMINARY IN REVIEW (FINAL IN WORK)	
INCREMENTAL VELOCITY INDICATOR	52-87712	-5 ▲	6444401	✓			12/4/63			3/30/64		PRELIMINARY IN REVIEW	
MANUAL DATA READOUT UNIT	52-87713	-9 ▲	6444304 REV. B	✓			12/4/63			3/30/64		PRELIMINARY IN REVIEW	
MANUAL DATA KEYBOARD UNIT	52-87713	-7 ▲	6444404 REV. C	✓			12/4/63			3/30/64		PRELIMINARY IN REVIEW	
AUX COMPUTER POWER UNIT	52-87723	-7 ▲	779481	✓				4/30/64		5/30/64		ATP HAS NOT BEEN APPROVE (PRELIMINARY IN WORK)	
PRELL SYS	45-87700	-15 ▲	GG-118A-1	✓					11/11/63			FINAL DISTRIBUTION HAS BEEN MADE	

R. O'CONNELL

DATE 12/20/63 — SHEET 1 OF 4

(EST) (ACTUAL) PRELIMINARY AVAIL. 8/3/63

(EST) (ACTUAL) FINAL AVAILABLE PART I 9/30/63

SEDR PIA 380

SYSTEM ECS

HARDWARE			LATEST ATP	SEDR PART			PRELIMINARY		FINAL			REMARKS			
ITEM	P/N	DASH NUMBER	#	I	II	III	INCORP	EST INCORP	INCORP.	EST. INCORP	INCORP. BY	PREPARATION		REVIEW	
RE. V	52-53146	Δ -1	2093 REV1	X			X		X	12-4-63	PCN#4 12/7	PRINTED AND DISTRIBUTED		NEED ATP REV2	
CHEM C.V.	52-53149	Δ -9	2093 QCN A REV3	X			X		X	12-4-63	PCN#4 12/7	PRINTED AND DISTRIBUTED		NEED QCN B #	
SVOCKER V	52-53153	Δ -1	2093 REV2	X			X		X	12-4-63	PCN#4 12/7	PRINTED AND DISTRIBUTED		NEED REV 3	
AMBIENT V	52-53162	Δ -1	2093 REV2	X			X		X	12-4-63	PCN#4 12/7	PRINTED AND DISTRIBUTED			
TEMP C.V	52-53197	Δ -1	2094 REV3							12-30-63					
COOLANT PUMP MOD	52-53305	Δ -1			X					1-22-64					
CREW V	52-53700	Δ -5	2093 QCN A REV2	X			X		X	10-28-63	PCN#3	PRINTED AND DISTRIBUTED			
H.P.O.V	52-53700	Δ -15	2093 REV2	X			X		X	12-10-63	12/14 PCN#5	ONE COPY PRINTED AND DISTRIBUTED TO SST			
GND. H.X.	52-53700	Δ -23	2094 QCN A REV3	X						12-30-63	PCN#9	USES COOLANT BENCH MANUSCRIPT IN WO			
AIR S.SIT	52-53700	Δ -55	2099 REV6	X			X			12-30-63	PCN#8	MANUSCRIPT IN WORK		NEED Q	
PRESS. FAN	52-53700	Δ -67	2099 REV6	X			X		X	12-4-63	PCN#4 12/7	PRINTED AND DISTRIBUTED		NEED QC	
SUIT PURGE	52-53700	Δ -81	2092 REV2	X			X		X	12-10-63	12/14 PCN#5	ONE COPY PRINTED AND DISTRIBUTED TO SST			
MANUAL VLV	52-53700	Δ -89	2093 REV2	X			X		X	10-25-63	PCN#3	PRINTED AND DISTRIBUTED			
FAN	52-53700	-101	2093 QCN A REV4	X			X			1-6-64					
PRESS REG	52-53700	Δ -117	2102 REV2	X			X			12-23-63	PCN#6	SIGNED BY SST IN THERMO 12-13-63		NEED Q	
PRO O2	52-53700	-127	2095 REV3		X		X			11-15-64		USES CRYO BENCH		NEED QCN	
TEMP C.V	52-53700	Δ -141	2094 REV4	X			X			UNKNOWN		WAITING FOR CHANGES IN ATP SST WANTS ATP CHANGED	STEINER INFORMED		
AMBIENT V	52-53700	Δ -143	2094 REV2	X			X			1-6-64		USES COOLANT BENCH		NEED RE	
H2O [illegible]	52-53700	Δ -145	2094 REV1	X			X					NEED ATP, USES COOLANT BENCH			
TAC. V	52-53700	Δ -147	2094 REV4	X			X			1-6-64		USES COOLANT BENCH		NEED REV	
RESERVE	52-53700	Δ -151	2094 QCN A REV2	X			X			12-30-63	PCN#9	USES COOLANT BENCH			

DATE 12/20/63 — ~~(EST)~~ (ACTUAL) PRELIMINARY AVAIL. 8/3/63 — SEDR PIA 380

SHEET 2 OF 4 — ~~(EST)~~ (ACTUAL) FINAL AVAILABLE PART I 9/30/63 — SYSTEM ECS

HARDWARE			LATEST ATP	SEDR PART			PRELIMINARY		FINAL			REMARKS		
ITEM	P/N	DASH NUMBER	#	I	II	III	INCORP	EST INCORP	INCORP.	EST. INCORP	INCORP. BY	PREPARATION		REVIEW
FILTER	52-83700	-185 Δ	2102 REV1	X			X		X	10-28-63	PCN #3	PRINTED AND DISTRIBUTED		
SELECTOR V	52-83700	-201 Δ	2096 QCN A,B REV 2	X			X			12-30-63		USES COOLANT BENCH		
PRI H-X Sys	52-83700	-233 Δ	2116 QCN A REV 2		X		X			1-15-64		WILL INCORP REV 2 (NEED COOLANT & CRYO BENCH)		
PUMP V.	52-83700	-245 Δ	2096 QCN A REV 2	X			X			12-23-63	PCN #7	TYPED IN SST FOR APPROVAL 11/26 BACK IN TYPE 12/13/63 RETD TO SST		
EGLSS O_2	52-83700	-247 Δ	2098 REV 2		X				X	12-23-63		SIGNED OFF, IN PRINTING PROMISED 12/23/63		
EGLSS O_2	52-83700	-248 Δ	2098 REV 2		X				X	12-23-63		SIGNED OFF, IN PRINTING - PROMISED 12/23/63		
Spill Loop	52-83700	-253 Δ	2092 QCN A REV 3		X					12-23-63		IN TYPE SINCE 12/16/63		
TEMP C.V.	52-83177	-1	2095 REV 1	X			X			~~12-9-63~~		~~(WILL COOLANT BENCH)~~		
H_2O TANK	52-83700	-261 Δ	2096 REV 3		X							NEED ATP		
PUMP Sys	52-83700	-265 Δ	2094 REV 2		X							NEED ATP		
~~EGLSS O_2~~	~~52-83700~~	~~-271~~	~~2098 REV 2~~		~~X~~					~~11-18-63~~		~~SAME SITUATION AS -247~~		
~~EGLSS O_2~~	~~52-83700~~	~~-272~~	~~2098 REV 2~~		~~X~~					~~11-18-63~~		~~SAME SITUATION AS -247~~		
SEC O_2 Sys	52-83700	-275 Δ	2097 REV 2		X		X		X	12-23-63		IN PRINTING, PROMISED 12/23/63 WILL PCN to INCORPORATE QCN A,B		
SEC O_2 Sys	52-83700	-277 Δ	2097 REV 2		X		X		X	12-23-63		IN PRINTING, PROMISED 12/23/63 WILL PCN to INCORPORATE QCN A,B		
O_2 Panel	52-83700	-279	2095 REV 3			X				1-15-64		USES CRYOGENIC BENCH		
O_2 Panel	52-83700	-281 Δ	2095 REV 3			X				1-15-64		USES CRYOGENIC BENCH		
PRI O_2 SOV	52-83700	-297 Δ	2102 REV 1	X					X			PRINTED AND DISTRIBUTED		NEED RE 2 AD
Spill Loop	52-83700	-401	2092 QCN A REV 3		X					12-23-63		IN TYPE SINCE 12/16/63		

DATE 12/20/63 (~~EST~~) (ACTUAL) PRELIMINARY AVAIL. 8/3/63 SEDR PIA 380

SHEET 3 OF 4 (~~EST~~) (ACTUAL) FINAL AVAILABLE PART I 9/30/63 SYSTEM ECS

HARDWARE			LATEST ATP	SEDR PART			PRELIMINARY		FINAL			REMARKS	
ITEM	P/N	DASH NUMBER	#	I	II	III	INCORP	EST INCORP	INCORP.	EST. INCORP	INCORP. BY	PREPARATION	REVIEW
HEAT X	52-83700	-407		X								NEED ATP	
H_2O REG	52-83700	-409 Δ	2096 REV2	X						12-23-63	PCN#6	SIGNED BY SST IN THERMO	12/13/63
CONTROL CONL	52-83700	-415 Δ			X							NOT TESTED AS A MODULE, TAKE APART AND TEST-IC	
H.E.	52-83700	-413		X						12-30-63		USE COOLANT BENCH PART OF -415	
COOL RES.	52-83700	-421 Δ		X								NEED ATP	
PRI O_2 SY	52-83700	-429 Δ	2095 GENAEC REV3		X					1-15-64		USES CRYO BENCH	
SECONDS O_2	52-83700	-443			X							NEED ATP	
PLENUM O_2	52-83700	-444			X							NEED ATP	
PRI O_2 SYS	52-83700	-455 Δ	2094 GENAEC REV4	X								NEED ATP	
P.S. CONLAT	52-83700	-457 Δ	2099 GENA REV6							1-22-64			
REL. VALVE	52-83701	-23 Δ	2114 REV1	X			X					SEE PIA 384	
PRESS SENS.	52-83701	-41 Δ	2095 REV3	X								SEE PIA 384	
VALVE	52-83701	-59 Δ	2095 NC	X			X					SEE PIA 384	
S.O. VALVE	52-83713	-3 Δ	TM 207	X						12-23-63	PCN#6	SIGNED BY SST IN THERMO	12/13/63
PRESS V	52-83715	-3		X								NEED ATP	
PRESS V	52-83715	-4		X								NEED ATP	
PRESS V	52-83715	-5		X								NEED ATP	
PRESS V	52-83715	-6		X								NEED ATP.	
COLD PLATE	52-83722	-13 Δ		X								NEED TEST EQUIP. (QPIS. 52-8302 IS USED)	
COLD PLATE	52-83724	-5 Δ		X								NEED TEST EQUIP. (QPIS 52-8302 IS USED)	
COLD PLATE	52-83725	-9 Δ		X								NEED TEST EQUIP. (Q.P. I.S 52-8302 IS USED)	
COLD PLATE	52-83726	-9 Δ		X								NEED TEST EQUIP. (QPIS 52-8302 IS USED)	
COLD PLATE	52-83727	-5 Δ		X								NEED TEST EQUIP. (QPIS 52-8302 IS USED)	
COLD PLATE	52-83728	-9 Δ		X								NEED TEST EQUIP. (Q.P. I.S 52-8302 IS USED)	
COLD PLATE	52-83729	-5 Δ		X								NEED TEST EQUIP. (Q.P. I.S. 52-8302 IS USED)	
COLD PLATE	52-83730	-5 Δ		X								NEED TEST EQUIP. (Q.P. I.S 52-8302 IS USED)	
COLD PLATE	52-83731	-5 Δ		X								NEED TEST EQUIP. (Q.P. I.S. 52-8302 IS USED)	

DATE 12/20/63 (~~EST~~) (ACTUAL) PRELIMINARY AVAIL. 8/3/63 SEDR P/A 380

SHEET 4 OF 4 (EST) (ACTUAL) FINAL AVAILABLE PART I 9/30/63 SYSTEM ECS

HARDWARE			LATEST ATP	SEDR PART			PRELIMINARY		FINAL			REMARKS		
ITEM	P/N	DASH NUMBER	#	I	II	III	INCORP	EST INCORP	INCORP.	EST. INCORP	INCORP. BY	PREPARATION	REVIEW	
COLDPLATE	52-83732	-9 Δ		X								NEED TEST EQUIP. (Q.P.I.S. IS USED)		
COLDPLATE	52-83733	-5 Δ		X								NEED TEST EQUIP. (Q.P. I.S. IS USED)		
COLDPLATE	52-83734	-5 Δ		X								NEED TEST EQUIP. (Q.P. I.S. IS USED)		
COLDPLATE	52-83735	-5 Δ		X								NEED TEST EQUIP. (Q.P. I.S. IS USED)		
COLDPLATE	52-83736	-13 Δ		X								NEED TEST EQUIP. (Q.P. I.S. IS USED)		
COLDPLATE	52-83737	-9 Δ		X								NEED TEST EQUIP. (Q.P. I.S. IS USED)		
COLDPLATE	52-83738	-5 Δ		X								NEED TEST EQUIP. (Q.P. I.S. IS USED)		
COLDPLATE	52-83739	-9 Δ		X								NEED TEST EQUIP. (Q.P. I.S. IS USED)		
COLDPLATE	52-83740	-13 Δ		X								NEED TEST EQUIP. (Q.P. I.S. IS USED)		
COLDPLATE	52-83740	-15 Δ		X								NEED TEST EQUIP. (Q.P.I.S IS USED)		
COLDPLATE	52-83741	-9 Δ		X								NEED TEST EQUIP. (Q.P. I.S. IS USED)		
COLDPLATE	52-83742	-9 Δ		X								NEED TEST EQUIP. (Q.P. I.S. IS USED)		
COLDPLATE	52-83749	-1 Δ		X								NEED TEST EQUIP. (Q.P. I.S. IS USED)		
COLDPLATE	52-83750	-1 Δ		X								NEED TEST EQUIP. (Q.P.I.S. IS USED)		
COLDPLATE	52-83751	-1 Δ		X								NEED TEST EQUIP. (Q.P. I.S. IS USED)		
COLDPLATE	52-83752	-1		X								NEED TEST EQUIP. (Q.P. I.S. IS USED)		
COLDPLATE	52-83752	-3		X								NEED TEST EQUIP. (Q.P. I.S. IS USED)		
COLDPLATE	52-83753	-1		X								NEED TEST EQUIP. (Q.P. I.S. IS USED).		
COLDPLATE	52-83753	-2		X								NEED TEST EQUIP. (Q.P. I.S. IS USED)		
COLDPLATE	52-83754	-1		X								NEED TEST EQUIP. (Q.P. I.S. IS USED)		
O2 REG	52-83770	-3		X								NEED ATP		

DATE 12/20/63 — ~~(EST)~~ (ACTUAL) PRELIMINARY AVAIL. 16 SEPT 63 — SEDR PIA 384

SHEET 1 OF 2 — (EST) (ACTUAL) FINAL AVAILABLE 8 NOV 1963 — SYSTEM REACTANT SUPPLY SYS

HARDWARE			LATEST ATP	SEDR PART			PRELIMINARY		FINAL			REMARKS		
ITEM	P/N	DASH NUMBER	#	I	II	III	INCORP	EST INCORP	INCORP.	EST. INCORP	INCORP. BY	PREPARATION	REVIEW	
[illegible]	52-83701	-17 ▲	SS-2115-R REV 4	X			X			12/24/63	PCN #1	PCN #1 IS IN SYSTEMS ENG FOR SIGNATURE. WENT TO SYSTEMS ENG 12/20/63.		
[illegible]	52-83701	-19 ▲	SS-2114 REV 5	X			X			12/24/63	PCN #1			
PRESSURIZING RELIEF VALVE	52-83701	-21 ▲	SS-2115-R REV 5	X			X			12/24/63	PCN #2	PCN #2 IS SIGNED BY SST IN SYSTEMS ENG 12/20/63.		
RELIEF OR VALVE [illegible]	52-83701	-23 ▲	SS-2114 REV 5	X			X			12/24/63	PCN #2			
PRESSURE SWITCH O_2	52-83701	-35	SS-2095R REV 1	X			X		X					
[illegible]	52-83701	-37 ▲	SS-2114 REV 5	X			X			UNK	PCN'D ATP	PCN COVERED ATP AVILABLE TO SST. 12/23/63		
PRESS [illegible] O_2	52-83701	-41 ▲	SS-2095 REV 3	X						UNK.	PCN'D ATP	PCN COVERED ATP AVALIBLE TO SST 12/23/63		
POWER INVERTER	52-83701	-45 ▲	SS-2096 REV 3	X						UNK.	PCN'D ATP	PCN COVERED ATP AVAILABLE TO SST 12/23		
FILL VENT [illegible] VALVE H_2	52-83701	-57 ▲		X								NEED ATP. WRITER FEELS THAT ATP THAT IS AVAILABLE IS NOT ADEQUATE.		
VENT CHECK VALVE O_2	52-83701	-59 ▲	SS-2095 REV 3	X			X					NEED ATP. WRITER FEELS THAT ATP THAT IS AVAILABLE IS NOT ADEQUATE.		
O_2 SUBASSY (INLET)	52-83701	-71	SS-2095 REV 3		X					UNK.	PCN'D ATP	PCN COVERED ATP AVAILABLE TO SST 12/		
O_2 SUBASSY (OUTLET)	52-83701	-73	SS-2095 REV 3		X					UNK.	PCN'D ATP	PCN COVERED ATP AVAILABLE TO SST 12		
H_2 SUBASSY (INLET)	52-83701	-77 ▲	SS-2101 REV 1		X					UNK.	PCN'D ATP	PCN COVERED ATP AVAILABLE TO SST 12		
H_2 SUBASSY (OUTLET)	52-83701	-81	SS-2101 REV 1		X					UNK.	PCN'D ATP	PCN COVERED ATP AVAILABLE TO SST 12		
O_2 CHECK VALVE	52-83701	-95 ▲	SS-2117 REV 1	X			X		X					
H_2 CHECK VALVE	52-83701	-97 ▲	SS-2118 REV 1	X			X		X					
[illegible]	52-83701	-103	SS-2103R REV 1	X						1/15/64	PCN			
H_2 HEAT [illegible]	52-83701	-117	SS-2115R REV 4		X					12/30/63	PCN #1	PCN #1 IS IN SYSTEMS ENG FOR SIGNATURE. WENT TO SYSTEMS ENG. 12/20/63.		
[illegible]	52-83701	-121	SS-2101 REV 1			X				UNK.	PCN'D ATP	PCN COVERED ATP AVAILABLE TO SST 12/23/6		

DATE 12/20/63 (~~EST~~) (ACTUAL) PRELIMINARY AVAIL. 16 SEPT 1963 SEDR PIA 384

SHEET 2 OF 2 (~~EST~~) (ACTUAL) FINAL AVAILABLE 8 NOV 1963 SYSTEM REACTANT SUPPLY SYS.

HARDWARE			LATEST ATP	SEDR PART			PRELIMINARY		FINAL			REMARKS		
ITEM	P/N	DASH NUMBER	#	I	II	III	INCORP	EST INCORP	INCORP.	EST. INCORP	INCORP. BY	PREPARATION	REVIEW	
[illegible]	52-83701	-123	SS-2095 REV3			X				12/24/63	NEW SEC	IN SST FOR SIGNATURE		12/12/63
PRESSURIZING [illegible]	52-83701	-125 Δ	SS-2101 REV1			X				UNK	PCN'D ATP	PCN COVERED ATP	AVAILABLE TO SST	12/23/6
O2 IND PRESS TOX	52-83701	-127 Δ	SS-2095 REV2			X				12/24/63	NEW SEC.	IN SST FOR SIGNATURE		12/12/63
REGULATOR	52-83701	-129 Δ	SS-2103R REV4	X						1/7/64	PCN			
VALVE OUT [illegible] HIGH	52-83701	-135 Δ	SS-2103R REV3	X						1/7/64	PCN			
PRESS O2 SWITCH	52-83701	-139 Δ	SS-2095 REV3	X						UNK	PCN'D ATP	PCN COVERED ATP	AVAILABLE TO SST	12/23/63
O2 SUB ASSEMBLY	52-83701	-153 Δ	SS-2095 [illegible]				X			UNK	THIS IS THE SAME AS -123 WILL INCORPORATE WHEN QUICK CHANGE NOTICE IS AVAILABLE.			

DATE 20 DECEMBER 1963 (~~EST~~) (ACTUAL) PRELIMINARY AVAIL. 9 SEPTEMBER 1963 SEDR PIA 390

SHEET 1 OF 4 (EST) (~~ACTUAL~~) FINAL AVAILABLE 27 DECEMBER 1963 SYSTEM PROPULSION (OAMS)

HARDWARE			LATEST ATP	SEDR PART			PRELIMINARY		FINAL			REMARKS		
ITEM	P/N	DASH NUMBER	#	I	II	III	INCORP	EST INCORP	INCORP.	EST. INCORP	INCORP. BY	PREPARATION		REVIEW
PACKAGE "A"	52-52700	-151	RA-0220-210	✓			✓		✓					
		-171 △	RA-0206-141	✓			✓		✓					
		-209	RA 0220-310	✓						1-10-64	PCN			
PACKAGE "B"	52-52700	-173 △	RA-0206-142	✓			✓		✓					
		-175	RA-0220-211	✓			✓		✓					
		-203	RA-0220-211	✓					✓					
		-211	RA-0220-306	✓						1-10-64	PCN			
PACKAGE "C"	52-52701	-171	RA-0220-206	✓			✓		✓					
		-197 △	RA-0220-128	✓			✓		✓					
		-235	RA-0220-306	✓					✓					
PACKAGE "D"	52-52701	-173	RA-0220-207	✓			✓		✓					
		-195 △	RA-0220-129	✓			✓		✓					
		-237	RA-0220-307						✓					
PACKAGE "E"	52-52701	-121 △	RA-0220-108	✓			✓		✓					
		-175	RA-0220-212	✓			✓		✓					
		-239	RA-0220-318	✓						1-10-64	PCN			
PROPELLANT TANK	52-52701	-169	RA-0220-200	✓			✓		✓					
		-217 △	RA-0220-138	✓			✓		✓					
PIPES	52-52701	-179	RA-0220-201	✓			✓		✓					
		-211	RA-0220-201	✓			✓		✓					
		-219 △	RA-0220-277	✓			✓		✓					

DATE 20 DECEMBER 1963 (~~EST~~) (ACTUAL) PRELIMINARY AVAIL. 9 SEPTEMBER 1963 SEDR PIA 390

SHEET 2 OF 4 (EST) (~~ACTUAL~~) FINAL AVAILABLE 27 DECEMBER 1963 SYSTEM PROPULSION (OAMS)

HARDWARE			LATEST ATP	SEDR PART			PRELIMINARY		FINAL			REMARKS	
[illegible]	P/N	DASH NUMBER	#	I	II	III	INCORP	EST INCORP	INCORP.	EST. INCORP	INCORP. BY	PREPARATION	REVIEW
PRESSURE TANK	52-52701	-177	RA-0220-202	✓			✓		✓				
		-213	RA-0220-202	✓			✓		✓				
		-215 ▲	RA-0220-277	✓			✓		✓				
PRESSURE REGULATOR	52-52700	-145 ▲	NAS-28070-T1-1	✓			✓		✓				
		-177	NAS-28070-T2-2	✓			✓		✓				
THRUST CHAMBER ASSY	52-52701	-155 ▲		✓			✓			12-28-63	PCN	PIA BENCH 52EU20010-1 MUST BE MODIFIED TO ACCOMPLISH THIS TEST	
		-187		✓			✓			12-28-63	PCN		
		-257		✓						12-28-63	PCN		
THRUST CHAMBER ASSY	52-52701	-245 ▲	RA 0220-268	✓						1-10-64	PCN		
		-251	RA-0220-268	✓						1-10-64	PCN		
		-265	RA-0220-268	✓						1-10-64	PCN	PIA BENCH MUST BE MODIFIED TO ACCOMPLISH TESTS ON THE 52EU, 55EU AND 60EU THRUST CHAMBER ASSEMBLIES.	
THRUST CHAMBER ASSY	52-52701	-247 ▲	RA-0220-269	✓						1-10-64	PCN		
		-253	RA-0220-269	✓						1-10-64	PCN		
THRUST CHAMBER ASSY	52-52701	-249 ▲	RA-0220-270	✓						1-10-64	PCN		
		-255	RA-0220-270	✓						1-10-64	PCN		

DATE 30 DECEMBER 1963 — (~~EST~~) (ACTUAL) PRELIMINARY AVAIL. 9 SEPTEMBER 1963 — SEDR PIA 390

SHEET 3 OF 4 — (EST) (~~ACTUAL~~) FINAL AVAILABLE 27 DECEMBER 1963 — SYSTEM PROPULSION (ACS)

HARDWARE			LATEST ATP	SEDR PART			PRELIMINARY		FINAL			REMARKS			
ITEM	P/N	DASH NUMBER	#	I	II	III	INCORP	EST INCORP	INCORP.	EST. INCORP	INCORP. BY	PREPARATION		REVIEW	
[illegible]	52-52700	-151	RA-0220-210	✓			✓		✓						
		-171 △	RA-0206-141	✓			✓		✓						
		-209	RA-0220-310	✓						1-10-64	PCN				
[illegible]	52-52700	-173 △	RA-0206-142	✓			✓		✓						
		-175	RA-0220-211	✓			✓		✓						
		-203	RA-0220-211	✓					✓						
		-211	RA-0220-306	✓						1-10-64	PCN				
[illegible]	52-52700	-153	RA-0220-204	✓			✓		✓						
		-169 △	RA-0220-125	✓			✓		✓						
		-205	RA-0220-204	✓					✓						
[illegible]	[illegible]	-155	RA-0220-205	✓			✓		✓						
		-167 △	RA-0220-127	✓			✓		✓						
		-207	RA-0220-215	✓					✓						
[illegible]	[illegible]	-149	RA-0220-200	✓			✓		✓						
		-165 △	RA-0220-132	✓			✓		✓						
[illegible]	[illegible]	-177 △	RA-0220-326	✓			✓		✓						
		-183	RA-0220-177	✓			✓		✓						

DATE 20 DECEMBER 1963 (~~EST~~) (ACTUAL) PRELIMINARY AVAIL. 9 SEPTEMBER 1963 SEDR PIA 390

SHEET 4 OF 4 (EST) (~~ACTUAL~~) FINAL AVAILABLE 27 DECEMBER 1963 SYSTEM PROPULSION (PCS)

HARDWARE			LATEST ATP	SEDR PART			PRELIMINARY		FINAL			REMARKS	
ITEM	P/N	DASH NUMBER	#	I	II	III	INCORP	EST INCORP	INCORP.	EST. INCORP	INCORP. BY	PREPARATION	REVIEW
[illegible]	52-52700	-181 △	PA-0220-176	✓			✓		✓				
		-185	PA-0220-177	✓			✓		✓				
[illegible]	52-52700	-145 △	PAS-2[illegible]-71	✓			✓		✓				
		-177	PAS-2[illegible]-72	✓			✓		✓				
[illegible]	52-52700	-217	PA-0220-271	✓						1-10-64	PCN		PIA BENCH MUST BE MODIFIED TO ACCOMPLISH THIS TEST.
[illegible]		-219	PA-0220-181	✓						1-10-64	PCN		
		-221 △	PA-0220-181	✓						1-10-64	PCN		
[illegible]	52-52700	-177 △	PAS-[illegible]	✓						1-10-64	PCN		
		-213	PAS-[illegible]350	✓						1-10-64	PCN		PIA BENCH MUST BE MODIFIED TO ACCOMPLISH THIS TEST.
		-233	—	✓						1-10-64	PCN		

DATE 12-20-63
SHEET 1 OF 1

(~~EST~~) (ACTUAL) PRELIMINARY AVAIL. 10-31-63
(EST) (~~ACTUAL~~) FINAL AVAILABLE 2-28-64

SEDR PIA 400
SYSTEM REND. RADAR

HARDWARE			LATEST ATP	SEDR PART			PRELIMINARY		FINAL			REMARKS		
ITEM	P/N	DASH NUMBER	#	I	II	III	INCORP	EST INCORP	INCORP.	EST. INCORP	INCORP. BY	PREPARATION		REVIEW
RADAR	52-87701	25	T-712674	X		X	10-31-63			2-28-64		PART I IN REVIEW. REFL. ATP REV. B - REV. E OUT		
		21	NONE	X		X		6-1-64		9-1-64		S/C 4 HARDWARE		
XPONDER	52-87715	19	T-712678	X		X	10-31-63			2-28-64		SAME AS RADAR EXEPT REV. J NEW ATP OUT.		
ANTENNAS	52-87715													
-SPIRAL		21	T-712020	X			11-9-63			2-28-64		IN REVIEW-WILL NEED REV. DUE TO TEST LOCATION UNDEFINED.		
-DIPOLE		23	T-712020	X			11-9-63			2-28-64		SAME AS SPIRAL		
R+R IND.	52-87701	17	T-712606	X		X	10-31-63			2-28-64		READY FOR FINAL WITH MINOR REV.		
SWIGBOOM	52-87718	7	DHC-SP-ST 75M	X			11-6-63			2-28-64		SAME AS R+R IND.		
ENCODER	52-87701	19	NONE	X		X		12-30-63		2-28-64		NO FIRM ATP OR AGE INFO.		
ENC. CONT.	52-81716	3	NONE	X		X		12-30-63		2-28-64		SAME AS ENCODER		
												NOTE STOP WORK ON ABOVE ITEMS UNTIL ATP'S BECOME FIRMER.		

DATE 12-20-63 (EST) (~~ACTUAL~~) PRELIMINARY AVAIL. 12-30-63 SEDR PIA 404

SHEET 1 OF 1 (EST) (~~ACTUAL~~) FINAL AVAILABLE 1-30-64 SYSTEM REND. EVAL. POD.

HARDWARE			LATEST ATP	SEDR PART			PRELIMINARY		FINAL			REMARKS		
ITEM	P/N	DASH NUMBER	#	I	II	III	INCORP	EST INCORP	INCORP.	EST. INCORP	INCORP. BY	PREPARATION	REVIEW	
R.E.P.	52-87719	5	E-712676	X		X		12-30-63		1-30-64		AWAITING FIRM ATP		

DATE 12/20/63
SHEET 1 OF 1

~~(EST)~~ (ACTUAL) PRELIMINARY AVAIL. OCT 14 1963
~~(EST)~~ (ACTUAL) FINAL AVAILABLE NOV 27, 1963

SEDR PIA 410
SYSTEM DOCKING, LDG, POSTLD AND SURVIVAL

HARDWARE			LATEST ATP	SEDR PART			PRELIMINARY		FINAL			REMARKS			
ITEM	P/N	DASH NUMBER	#	I	II	III	INCORP	EST INCORP	INCORP.	EST. INCORP	INCORP. BY	PREPARATION		REVIEW	
BARO SWITCH	52-41703	-15 △	44A85 REVC	X			X		11/19/63						
BARO SWITCH	52-41703	-91	44A85 REVC	X			X		11/19/63						
BAROSWITCH	52-41703	-129 △	44A85 REVC	X			X		11/19/63						
BAROSWITCH	52-41703	-131 △	44A85 REVC	X			X		11/19/63						
PYM. TRANS (PARIS)	52-81709	-7										ATP IS	NOT APPROVED		
850 PST	52-83700	-1011										ATP IS	NOT APPROVED		
1100 PSI SWITCH	52-83700	-1013										ATP IS	NOT APPROVED		
CHECK VALVE	52-83700	-1015										ATP IS	NOT APPROVED		
AUX PRESS VESSEL	52-83700	-1017										ATP IS	NOT APPROVED		
AUX PRESS VESSEL	52-83700	-1019										ATP IS	NOT APPROVED		
SUPPLY PRESSE	52-83700	-1021										ATP IS	NOT APPROVED		

DATE 12/20/63 (~~EST~~) (ACTUAL) PRELIMINARY AVAIL. 11/4/63 SEDR PIA 4/89

SHEET 1 OF 2 (~~EST~~) (ACTUAL) FINAL AVAILABLE 12/20/63 (REISSUE) SYSTEM CABIN EQUIP.

HARDWARE			LATEST ATP	SEDR PART			PRELIMINARY		FINAL			REMARKS		
ITEM	P/N	DASH NUMBER	#	I	II	III	INCORP	EST INCORP	INCORP.	EST. INCORP	INCORP. BY	PREPARATION		REVIEW
[illegible]	52-81707	-3 ▲	MODEL 1581	✓			11/4/63		12/20/63					
AMMETER	52-81711	-3 ▲	MODEL 1581	✓			"		"					
PRESSURE INDICATOR	52-81713	-3,5,7 ▲	MODEL 1577	✓			"		"					
SUIT GAS COMP IND.	52-81710	-3 ▲	PA 1015	✓			"		"					
OXYGEN QTY IND.	52-81710	-9 ▲	PA 1020	✓			"		"					
PROP PRESS IND. #1	52-81708	-1 ▲	2766-004	✓			"		"					
PROP PRESS IND. #2	52-81708	-3 ▲	2766-004	✓			"		"					
MAIN DOOR [illegible]	52-51706	-3 ▲	1204456	✓			"		"					
ATT GAS PRESSURE	52-81715	-3	3000-1	✓			"		"					
RATE OF [illegible]	52-81723	-3 ▲	ES-503	✓			"		"					
[illegible]	52-81701	-3 ▲	ES-A516	✓			"		"					
[illegible]	52-81705	-3	[illegible]	✓			"		"					
[illegible]	52-81709	-3	56-802-NCA-4-A3	✓			"		"					
[illegible]	52-81709	-5	26571-[illegible]-11-4-A3	✓			"		"					

DATE 12/30/63
SHEET 2 OF 2

(EST) (ACTUAL) PRELIMINARY AVAIL. 11/4/63
(EST) (ACTUAL) FINAL AVAILABLE 12/20/63 (REISSUE)

SEDR PIA 489
SYSTEM CARW EQUIP.

HARDWARE			LATEST ATP	SEDR PART			PRELIMINARY		FINAL			REMARKS		
ITEM	P/N	DASH NUMBER	#	I	II	III	INCORP	EST INCORP	INCORP.	EST. INCORP	INCORP. BY	PREPARATION	REVIEW	
SEDR PREP														
RE PEN	52-81714	-3										ATP IS NOT AVAILABLE		
CRITIQUE														
ACCEPTANCE	52-81702	-3 ▲	ES-A520B	V			NONE		11/[illegible]/63			REISSUED WITH PCN #1 INCORPORATED		
DRAWING														
RE PRE														
PRESS														
CAR	52-81710	-5 ▲	PA 1019	V			NONE		TO BE ISSUED AS PCN #2			EST - 12/26/63		

ENGINEERING STATUS

REPORT

GENERAL INFORMATION

STRUCTURE DESIGN

A. STRUCTURE

1. Boiler Plate 3A is nearing completion. Production structure has been installed in boiler plate structure and hatches are being fitted.
2. As a result of the ECS unit interfering with the ECS door, a quick boiler plate type fix was made for Static 5. A production fix which seam welds a bumped pan to the inner door skin has been designed to provide clearance in the event that changing the ECS unit does not prove feasible.
3. Engineering has been completed on all job sheets scheduled during this period.

Problems Encountered -

1. Many problems have arisen in mating the B/P 3A production structure to the boiler plate structure; this was expected because of the basic concept of the design. Design and Stress have furnished men to help work out these problems as they become evident.
2. It has become apparent that installation of the ECS package is made more difficult by bolt heads, brackets, corners of stiffeners and ECS cradle structure which deviates from blue print. Engineering changes to alleviate these conditions are being made.

Next Reporting Period -

1. B/P 3A Status
2. General Progress and Problems

B. HATCH

1. Completed design and released drawings for airedduced handle load both inside and outside handles - completed and released a revision to mechanism to improve rigging in area of aft latches.

2. Next Reporting Period - Investigate and remove sharp corners and sharp objects - Investigate and design ultra violet filter to use with quartz windows. Provide mounting struct. for sighting reticle.

C. HEATSHIELD

1. Provided full time liaison to mfg. to maintain production schedule.

D. CREWMAN SIMULATOR S/C #2

1. Provided eng. support to keep up to date coverage in eng. during mfg. buildup.

E. ADAPTER STRUCTURE

1. Released design of adapter door seals to control venting during launch phase.

2. Completed Launch Vehicle - Spacecraft separation clearance studies. Revised Electrical Umbilical support structure, increasing strength to provide for breakaway feature of Electrical Umbilical.

3. Initialed feasibility study of a Retrorocket exhaust shroud for protection of structure and equipment from base-heating effects. Released drawing defining configuration of Radiator and Thermal Qual. Test Adapter Assy. Initiated study of Adapter Retrograde Section to Equipment Section.

4. During Next Reporting Period - Continue study of Retrorocket Exhaust Shroud. Complete Retrograde Section to Equipment Section Separation Study. Provide for structural revisions due to USAF-DOD experiments

F. RENDEZVOUS AND RECOVERY (R & R) SECTION AND RE-ENTRY CONTROL SYSTEM (RCS) SECTION.

1. Continued work on incorporating Hi-Altitude Drogue. Completed changes to remove interferences between R & R and RCS section shingles. Initiated changes to modify R & R section inboard shingle retainers so that gaps between ends of inboard retainers do not line up with gaps between ends

of outboard retainers. Initiated work to add protection for main parachute riser from being damaged on protrusions which extend forward of the Z191.97 RCS Ring. Modified Static System for Static #7 to add second baroswitch to duplicate Spacecraft #2 configuration. Initiated changes to Static #7 to add provisions to evaluate extension of UHF antennas through trough covers when chute bridles are deployed. Work on "ruggedizing" covers of refrasil-covered insulation blankets held up pending evaluation of new cover material.

2. Next Reporting Period - Continue work on incorporating Hi-Altitude Drogue. Complete changes to modify inboard shingle retainers, to provide chute riser protection. Make provisions for stowing modified hatch handle. Make changes to shingles to remove sharp edges which may damage astronauts' suit. Provide drawings required to install ballast for Static #7. Complete changes required to evaluate extension of UHF antenna on Static #7.

G. TARGET DOCKING ADAPTER (TDA)

1. Provided necessary coordination for Gemini-Agena interface working group and with SCD vendor. The vendor drawings for the mooring drive system and the latch release actuator have received final MAC Engineering approval. The Acceptance Test Procedures and the Qualification Test Procedures still require final approval. Revisions to these system SCD's are in work to reflect latest requirements and changes. Initiated changes to add third support point for the mooring drive system gear boxes because of a potential dynamic problem. Continued work on incorporating automatic rigidizing system for the TDA.

2. Next Reporting Period - Continue necessary coordination for Gemini-Agena interface working group and with SCD vendor. Release revised SCD. Prepare drawing to define painting requirements for TDA. Complete changes for

automatic rigidizing of TDA. Prepare changes to relocate umbilical due to installation of Hi-Altitude Drogue on spacecraft. Complete changes required for addition of third support point of mooring drive gear box.

M. PARACOORDINATION AND MECHANICAL GROUP

1. Assisted in planning phase-out of paraglider effectivity.
2. Coordinated action on AiResearch pressure vessel failures.
3. Issued E.O.'s to assure proper marking of Aeroquip Fittings.
4. Re-issued all SRT's on P/G and landing gear components to remove production paraglider effectivity.
5. Issued stop orders on P/G and landing gear parts for B/P3A, and B/P4.
6. Revised pressure test requirements on paraglider pneumatics and on landing gears to specify leak and proof pressures, leak rates, and testing fluids.
7. DCN'ed several landing gear drawings.
8. Coordinating status of MAC parts used in support of NAA TTV and FSTV.
9. Concluding feasibility study of instl. of NAA PCA in MAC torque box.

Problem Areas

1. Undefined drogue system for use on P/G and Static 2.
2. What is configuration of structure from which Static 2 is to be made. (e.g. heat shield mounting)

During Next Reporting Period

1. Submit results of PCA instl. study.
2. Review and coordinate configurations of paraglider, landing gear, and Static 2.

STRUCTURAL DYNAMICS

1. Revised test request for SST-vibration phase to include the testing of TDA #1 with Spacecraft No. 5 test. - - - - - continued work on report presenting evaluation of Spacecraft Static No. 4 GVT results. Correlation of theoretical adapter results with Static No. 4 GVT results completed. - - - - - Completed test on determination of dynamic gains due to impulsive loading. Analysis of data regarding structural response to impulsive loading now in progress. - - - - - Analyzed vibration failures which have occured in ACME system. - - - - - Concurred with request to increase dynamic pressure requirements for hatch sled test runs. - - - - - Requested that a vibration test be included in qualification testing on the quartz glass viewing window. - - - - - As a result of data obtained on the Static No. 4 vibration tests, qualification test procedures for equipment mounted to the small bulkhead are being reevaluated for possible changes to assure adequate equipment performance at higher vibration levels. - - - - - The eight degree of freedom analysis of collisions on the bottom side of the docking cone including thruster logic is continuing - - - - - released design note covering SST vibration results of Spacecraft No. 1 vibration instrumentation. - - - - - Reviewed analytical studies of horizon sensor to incorporate design changes in rotor assembly support - - - - - Reviewed preliminary results of direct analog studies and vibration tests of the inertial platform. . . .

2. <u>During Next Reporting Period</u> - To continue work on report correlating thereoretical analysis with Static No. 4 GVT results. - - - - - Complete analysis of data regarding structural response to impulsive loading. - - - - - Continue investigation into adequate qualification levels for equipment mounted on small pressure bulkhead. - - - - - Continue eight degree of freedom docking analysis. - - - - - Coordinate flight vibration instrumentation changes - - - - - Coordinate changes to horizon sensor position assembly . . . . . Undertake digital analysis of wind tunnel data for fluctuating pressures.

STRENGTH

1. Successfully completed TDA-Shroud separation tests at Douglas, Tulsa. Initiated coordination with LMSC on static qualification test of TDA for launch condition. Successfully completed tests of Agena acquisition light for extension shock. Continued release of TRs for ejection seat strength qualification. Studied redesign associated with ejection seat backboard jeetison. Resolved personnel parachute design loads compatible with C-9 canopy by reducing deployment altitudes. Verified that the excessive egress kit movement under landing shock was prominent because of restraint strap limberness and the initial play to fully tauten the system. Vacuum soak and wear tests completed to date on Everlube 620 are satisfactory. Concluded meteroid penetration criteria and analysis per last GPO directive. Continued work on installation of 8.3' drogue and 18.0' pilot chute. Premature failure of paraglider auxiliary nitrogen bottle traced to improper conditioning of AM350 boss material and deficient girth weld. Remaining units required rework and/or test for acceptability. Crazing of beryllium shingles due to machining of the cross rolled sheet led to a finish chem-milling to remove crazing. Analyzing 25# T.C.A. for RCS. Continued testing of release system for umbilicals and revised the drop weight requirements to 150#. Revised method for test of battery cases and increased noncritical dimensions. Resolved fabrication and testing difficulties on the ablation shield. Structurally qualified the second shield, S/C #2. Completed the summary: "Ablation Shield Limitations". Completed redesign of hatch mechanism with handle operating loads reduced approximately 60%. Ultimate design loads are 200 pounds on internal handle and 181 pounds external. Released Gemini Strength Note #6 "Investigation of Astronaut Safety in the

Spacecraft During Launch Vehicle Breakup and Explosion" and presented it in the Abort Panel Meeting, 27 November 1963, at Houston. Successfully static tested the adapter to limit launch loads at elevated temperature. Inspected the MM-B structural test adapter and modified the riveted joint between the Z13.44 mating ring and mold line skin to conform with flight articles. Completed work on the battery equipment module for equipment section of S/C #3 adapter. Worked on the study question of recontact between equipment and retro-sections of the adapter after firing of shaped charge for an abort. Work on landing gear delayed by NASA directive.

2. Problems Encountered - Failure of the hatch to remain closed on the fourth cycle of cabin pressurization was resolved. Failure was exactly duplicated by pressure cycling with hatch not fully latched. Hatch being rerigged for continuation of test plan. Dynamic and static tests showed that the support bracket for the OAMS pressurant bottle is insufficiently rigid to prohibit contact with module structure. Support to be stiffened. Static test of TDA Emergency Release receptacle showed insufficient strength under design load. Redesign resolved and retested successfully to qualify strength.

3. During Next Reporting Period - To complete TR release for ejection seat strength tests. Release revised requirements for personnel parachute SCD. Run sled test #4 for re-entry seat ejection. Release structural installation for drogue chute design. Coordinate data with laboratory for continuing test of adapter to ultimate launch loads at elevated temperature. Stiffen OAMS pressurant bottle support. Discontinue tests of various dry films in vacuum per TR 052-044.02.02 upon qualification of Everlube 620. Conclude LMSC test plan on static test of TDA for launch condition. Continue analysis of TDA for automatic rigidising system. Continue work on ejection seat backboard jettison.

GEMINI LOADS

1. During the subject reporting period, the following work was accomplished by the Loads Department.

   a. Reports - MAC Report 9030 "Structural Design Loads for Gemini Spacecraft" has been completed and is in the process of being released.

   b. Launch Phase Loads - In response to a request of the Gemini Structures Panel Meeting, prepared a summary of the basic equations and other data used in the adapter venting analysis and released it as Gemini Structural Loads - Note No. 3.

   c. Abort Loads - Completed and released a summary of escape hatch design loads for ejection during the launch phase and the related operating boundary for Mode I aborts.

   d. TDA Loads - Prepared a revised text covering TDA launch phase loads and venting requirements for co-ordination with NASA and LMSC prior to incorporation in ISCD-2 "Gemini/Agena/TDA Interface Specification and Control Document".

2. During the next reporting period MAC Report 9030 "Structural Design Loads for Gemini Spacecraft" will be released and transmitted. Work will continue on defining the Mode I abort boundaries based on design loads. The work remaining is on the seat limitations which in combination with the hatch boundaries will complete the definition.

GEMINI WEIGHT

1. Weighed and determined the ballast required for Static #7 to simulate spacecraft total weight and parachute suspended weight. Based on this configuration, calculated the 3 axis balance and 3 axis moments of inertia.
2. Revised Spacecraft #2 ballast installation and OAMS onboard propellants to reduct the launch weight 200 lbs. per NASA directive.
3. Revised the weight status reports to reflect a change from 7 and up to 10 and up for the paraglider installation. (It has since been directed to be removed from all spacecraft which will be reflected in the January weight report.)
4. Initiated feasibility studies for IBM tabulation of weight and balance differences between spacecraft.
5. Modified the St. Louis weight and balance fixture 52E060002 to accommodate Boilerplate #4 and Static #7.
6. Investigated and made recommendations on the problems associated with the flight weight, balance, and retro alignment of all spacecraft at St. Louis at least 120 working days prior to launch.
7. Investigated the weight penalties associated with the NASA request to change the electrical wire insulation to teflon (substantial penalty).
8. Revised the Static #5 ballast recommendations to reflect the recent NASA directed changes.
9. Continued the automated electrical wiring weight and balance calculation system implementation.

Problem Areas

1. The paper work system involved with the weighing, balancing and retro alignment of spacecraft 120 working days prior to launch.

2. Continued weight growth.

3. Lack of current weight data on GFE items.

Next Period

Determine Static #5 actual weight, balance and ballast to Spacecraft #3 configuration - Weight and ballast Boilerplate #4 for chute tests - Implement the additional details and information on mission weight and balance sequence requested by NASA for each spacecraft - Revise spacecraft predicted weights to implement Air Force experiments. Find ways to reduce Spacecraft #4 weight to allow implementation of Experiments 4, 11 and 9 - Review and evaluate the weight and balance effect of Experiment 4, 11, 9 on Spacecraft 5 and 6.

ENGINEERING PROCUREMENT

1. Coordinated and participated in negotiations and issued summary memos on nine SCD systems involving 179 changes.....Completed the technical evaluation of quotes received on seven additional system changes and overrun proposals.....Initiated the technical evaluation of quotes received for changes on nine SCD systems.....Prepared, coordinated and released for quotes, Statement of Work on Gemini Acoustic Noise Test program.

2. During Next Reporting Period to Coordinate and participate in negotiations of changes presently evaluated.....Continue evaluation of quotes received to reduce the number of present (918) changes outstanding.....Coordinate Field Support Statement of Work.....Release Statement of Work and initiate procurement of High Temperature Grease Lubricity Measurements.

THERMODYNAMIC

A. HEAT TRANSFER

1. Structural Temperatures - Preliminary work indicates that practically all inner skin surfaces except those opening into the pressurized cabin area, on the conical section must be finished with a low emissivity coating to reduce radiant heat transfer to internal equipment. Final recommendations will depend on the results of emissivity tests currently being conducted. A study was completed which indicates that adequate heat protection has been provided in the region of the "bumped hatch" inner mould line. Re-entry temperatures were computed for the cabin window installation, none of the computed window temperatures exceeded the design values. A study was initiated to determine required changes in the ECS door insulation to reduce re-entry heating to the CO_2 cannister to a tolerable level. Thermodynamics TN 79, describing temperature analysis of the horizon scanner and recommended design verification testing, was completed. Heat protection requirements for a redesign of the UHF stub antenna are being determined.

2. Heat Shield - The heat shield structural temperature distribution was determined for a re-entry from an 87-161 N.M. orbit, 60° after perigee assuming maximum lift and the retrograde from all four (4) rockets. The results were comparable with those for a maximum lift re-entry from a 161 N.M. circular orbit. The estimated heat shield and edge ring weight loss during re-entry was determined for several trajectories. Structural heat shield temperatures were computed for the S/C #2 revised nominal and approximate 3 Sigma dispersed trajectories.

3. Re-entry Heating Envelope - Several conical section shingle re-entry temperatures have been computed to further define the re-entry heating limits.

4. RCS and OAMS - The study to evaluate the effects of thrust chamber case temperatures in excess of 500°F (EJS 52-2442) is nearing completion on the MDF ring at Z192. In support of EJS 52-2615, preliminary analyses are being performed on three different concepts of radiation cooled 25# OAMS rockets. The three configurations are: a "bathtub" reflector cavity shared by two TCA's, a cylindrical reflector cavity around each TCA and a "swing-out" rocket with the TCA's locked in firing position outside the adapter outer surface.

   A study to determine the design features of an indicator system that would give warning of dangerous temperature conditions in the OAMS thruster case has been completed. The results of this study were reported in Thermodynamics TN 74.

5. Adapter Pyrotechnics - A study was completed to determine the amount of heat sink or insulation required on the Z68 adapter pyrotechnic ring to reduce the temperature below the maximum allowed limits. This is a parallel approach to the development of a higher temperature explosive. A run which has been completed on the hot launch adapter test (TR 052-052.35) has furnished temperature data in the Z68 ring area. The data is currently being analyzed for comparison with the analytical results.

6. Retro-Rockets - A study of the potential heating problem caused by reversed flow of retro-rocket exhaust gases during salvo firing at high altitudes was reported in Thermodynamics TN 66. This study indicates that, based on the calculations for the predicted stagnation temperature

and considering the most severe radiation heating, no thermal protection on the adapter beam would be justified. A test request was released to permit additional evaluation of the reversed flow heating with scale model tests at AEDC.

7. A pressure drop test was completed on S/C #2 adapter with isopropyl alcohol as the test fluid. No test reading exceeded the predicted values by more than 3 psi. This pressure drop is considered to be acceptable.

During Next Reporting Period -

Inner skin areas of the spacecraft requiring a low emissivity coating will be defined. Drogue Mortor re-entry temperature calculation will be completed. Studies are starting to determine the effect of S-3 material property variations on the heat shield bond line temperatures. Maximum temperatures of a radiation cooled 25# TCA will be completed.

B. EQUIPMENT TEMPERATURE CONTROL

1. Gemini Passive Temperature Control - The analytical method of determining the radiant heat transfer coefficients is being simplified and improved by combining the present steps into a single program. Input data for the improved method is being prepared for the battery powered spacecraft or spacecraft utilizing a reduced fuel cell inlet temperature. Parametric studies of the effect of degraded properties of the thermal control surfaces have been initiated.

A sampling method to determine the effective radiation properties of thermal control surfaces is being studies by the Reliability group. This method is intended to define the number of measurements that must be made and the level of confidence that can be placed upon the result. The request that the Gier Dunkle reflectometer and emissometer equipment

be provided at MAC St. Louis and at the Cape has not yet been approved by NASA.

The rendezvous radar temperature control problem is being approached by evaluating the thermal effect of the addition of the RF absorber on the ground plane surface. Preliminary testing of the radar in the low pressure radiation control chamber at Westinghouse indicates difficulty in meeting full mission design capability with the amount of R.F. absorber initially selected by Westinghouse. MAC Thermodynamics evaluated the test set up at Westinghouse 11/26/63 and made suggestions to improve the accuracy of the tests. It was agreed that the amount of R.F. absorber will be limited by the high temperature design criteria. An initial goal was set to determine this limit, then to evaluate the effectiveness of the limiting amount of R.F. abosrber in correcting the electronic cross coupling problem. Assuming an acceptable configuration is determined from both the thermal and electronic standpoint, methods of avoiding excessively low temperatures during the off mode will then be evaluated.

2. <u>Gemini Active Temperature Control</u> - The coldplate leakage test based upon measuring the time between bubbles escaping from a test chamber through a tube with the exit located under water has been proven unsatisfactory. Leakage tests based upon measurement with a halogen detector appears to be an acceptable method of checking. Coordination between Fairchild, MAC and the detector manufacturer is expected to solve the problem of leak testing.

The effect of equipment baseplate and coldplate mismatching because of lack of exact flatness has been evaluated. The maximum out of flatness expected to be encountered by any combination of a particular coldplate

and associated electronic equipment is acceptable from a heat transfer standpoint. This evaluation was based upon the level of workmanship to which the equipment is being manufactured and assuming that the interstice is applied per MAC PS13618.

The locations of thermal correlation points for most of the equipment have been defined by the manufacturers. Limiting temperatures for these points will be defined when the qualification tests are completed.

3. Target Docking Adapter Temperature Control - The analysis of the TDA is progressing satisfactorily. The passive thermal control system is capable of maintaining the transponder below the maximum allowable limits under all conditions. Some warm-up time will be required to bring the transponder temperature up to the value at which SCD performance can be maintained following long periods in the off mode during cold orbits.

Problem Areas - The rendezvous radar high temperature control is a problem when the Eccosorb RF absorber is utilized. The transponder and rendezvous radar low temperature control problem is not resolved. There is a need for a satisfactory method of checking the radiation properties of passive thermal control surfaces and the flow split between parallel coldplate cooling loops.

During Next Reporting Period -

Continue coordination with Westinghouse to solve radar and transponder temperature control problems. Continue all thermal analyses. Continue vendor coordination.

C. ECS, RSS, PARAGLIDER PNEUMATICS

1. General - A thorough study of methods and sequences for expulsion of RCS reactants prior to touchdown reveals a number of conflicts between RCS,

ECS and Aero requirements. Thermodynamics TN 81 on this subject has been issued and includes a general discussion of several modes of expulsion and their effects on other systems and astronaut safety. The serious problems attendant to reactants dumping demand re-evaluation of the requirement to dump.

2. Test Activity - Test Requests have been issued to investigate the extent and control of condensate in the one-open-visor orbit mode as result of Thermodynamics TN 68.

3. ECS for Paraglider Development Program - ECS development tests results shows performance inadequacies. Modifications to the ejector to provide better flow/pressure-rise performance have been completed and portions of the development testing program are being rerun. The vendor is required to provide three qualified units by 15 February 1964.

The beginning of the paraglider components qualification testing program has been delayed due to holdup in availability of components, since test conditions are to be applied to groups of components. The pacing items are the new Haydon limit switches for the (-1023) and (-1025) pressure switches. It is expected that testing will begin by 15 January 1964.

AERODYNAMICS

Re-Entry Dynamics -

1. The effects of initial attitude, C_{m_q} and roll rate on dynamic flight characteristics for uncontrolled six degree of freedom re-entries from orbit have been completed for a c.g. position range that covers the present c.g. positions during re-entry of the 2 day parachute, 14 day parachute, and 2 day paraglider missions. In addition the results of positive, negative and zero lift have been determined, when the initial attitude of the re-entry module is near trim. Studies are continuing to determine the effect of the following items on abort re-entry dynamic characteristics: (a) aborts from nominal and V-γ boundary boost trajectories; (b) full or zero Reaction Control System rate damping; (c) full and zero lift conditions; (d) center of gravity variations; and (e) re-entry attitudes following retro-adapter separation. To date the effects of (a) and (b) above have been determined for the condition of a full lift re-entry, at approximately the present abort configuration c.g. positions, using a manual (fly-by-wire) turn around that starts 45 seconds after abort. During Next Reporting Period - Manually controlled (fly-by-wire) re-entries from orbit for various initial attitudes will be initiated. Abort re-entry studies will be continued to define the effects of zero lift, c.g. position and turn around attitudes on re-entry characteristics.

Definition Of Spacecraft Aerodynamic Characteristics -

1. Incorporation of the latest recovery system modification (addition of an 8.3' D_o drogue chute to the previous pilot chute-main chute

configuration), will result in approximately a two week delay in the release of the revised form of Gemini Aerodynamic Information Note No. 20.

During Next Reporting Period - Re-issue Aerodynamic Information Note No. 20.

Spacecraft Separation Studies, Mode III and IV. -

1. The spacecraft-GLV separation analysis using the two aft OAMS engines has been completed and is being published as Aerodynamics Information Note No. 61.

Separation Characteristics Of Jettisoned Hardware -

1. Separation characteristics and the resulting relative separation trajectory between the retro adapter and spacecraft during a normal or aborted mission is being re-examined due to an increase in weight of the retro adapter. In addition, an analysis of the separation of the equipment adapter is being pursued.

Mission Planning And Analysis -

1. The operational technique and turn around method for a Mode III abort to allow immediate retro fire after GLV-spacecraft separation has been determined and preliminary data published in Aerodynamic Information Note No. 62 and transmitted to NASA-GPO.
2. The lower abort boundary for Mission GT-2 is being determined based on a retro salvo capability. In addition, the manned flight abort boundary is being revised to reflect the operational technique of only being able to maintain half lift when using the earth horizon as a reference. A computer program which uses the abort boundary and its

sensitivities has been devised to predict the real time approach to the abort boundary as a function of real time tracking inputs of altitude, flight path angle, and velocity.

3. The set up of a six degree of freedom program for simulation of the GT-2 Mission is continuing. This program will be used to generate the required AFMTC tapes.

4. The abort transition boundary conditions for manned missions between Mode III and IV, and between Mode IV and orbit insertion are being determined as a function of altitude, velocity, and flight path angle. The GT-2 Mission re-entry dispersion analysis is being revised to account for latest estimates of insertion dispersions and final configuration aerodynamics.

5. Range safety implementation for the GT-2 Mission has been initiated.

<u>During Next Reporting Period</u> - It is expected that calculations and documentation will be completed for the lower abort boundary of Mission GT-2, the half lift manned flight abort boundary and the computer program for predicting real time abort boundary on manned missions.

For the following items it is expected that computations will be essentially complete with documentation to follow at a later date -- six degree of freedom simulation for GT-2, abort boundary transition points, and GT-2 re-entry dispersions.

Analysis and work on the Mode III turn around abort technique and range safety for GT-2 will be a continuing effort.

A test program for development of the high-altitude stabilizing drogue has been prepared in conjunction with Northrop/Ventura. The program includes development of a "gliding" drag chute which will be used to simulate spacecraft drag area during deployment of the drogue from a bomb test vehicle. First drop is scheduled for March, 1964.

SPECIFICATIONS

1. The following reflects effort expended on Gemini documents during this reporting period:

Report	Title	Notes 1	2	3	4
8611	Gemini Spacecraft Performance Spec.			X	
8611 - Add. A	Target Docking Adapter			X	
8636	Gemini Environmental Control System Spec.			X	
8637	Gemini Guidance and Control System Spec.			X	
8638	Gemini Electrical System Spec.			X	
8639	Gemini Communications System Spec.			X	
8640-1A	Instrumentation System Spec. Supplement 1A (Spacecraft 1A)		X		
8640-2	Instrumentation System Spec. Supplement 2 (Spacecraft 2/Prel.)				X
8642	Propulsion System Spec.			X	
8644	Postlanding and Survival System Spec.	X			
8611-2	Configuration Document for Spacecraft 2 (Prel.)				X

NOTES:

1 - Submitted
2 - Being prepared
3 - Being revised
4 - In print

Rough draft of Interface Specification and Control Document for DOD/NASA Gemini Experiments 4 and 9 prepared and informally transmitted. Spacecraft/Launch Vehicle Interface and Control Document, NASA ISCD-1, submitted in final form for official signatures and release. Attended meetings, prepared minutes and agenda, and coordinated action items resulting from Spacecraft/Launch Vehicle and Spacecraft/Target Vehicle Working Group Meetings.

During Next Reporting Period

Prepare and publish preliminary copy of Spacecraft No. 1A Instrumentation System Specification. Submit documents being revised and in print as

specified. Revise NASA ISCD-2, Gemini Spacecraft/Agena Interface Spedification and Control Document, to include test criteria, FO requirements in accordance with agreements reached in recent meetings at Cape Kennedy and in St. Louis.

OPERATIONS

1. MAC/Operations continued the definition of industrial area facilities to POD and through active contact with the MILA activations contractor, advanced the status of the gemini test areas. Engineering contact with Martin continued on Complex 19 and MAC Quality Control participated in the acceptance testing of Spacecraft AGE there. Drawing information dates for Complex 14 Activations were met. Agena/Gemini Compatibility Test planning was carried on in two meetings with all agencies active in that area.
2. Immediate action for the upcoming month are the setup of increasing numbers of AGE units on Complex 19 and Hangar AF; and the participation in SST of S/C #2 in St. Louis.
3. Problems are maintaining proper arrival dates of all AGE and solution of engineering and installation problems in the industrial activation.

RELIABILITY

1. Approval copies of MAC Report 9796 "Failure Mode and Effect Analysis, Gemini Spacecraft" have been circulated for review, with an anticipated release date in early January 1964. Approximately 65 percent of the Abort Time Study has been completed. A configuration study of two vs. three regulator design in the R.S.S. has been completed. A review of S/C #2 Single Point Failure Analysis is nearing completion, with an anticipated release date of 20 December 1963. Conducted an evaluation of ACME mission simulation and life tests for statistical inferences. Increased the time delay tolerances and contact voltage drop for Over-stress tests continuing at Master Electronics on the Special Sensing Relay. Reinstructed all pyro vendors to comply with Paragraph 3.7 of MAC Report 8392. Failure reports will be required for any condition subjecting a "lot" to rejection, in addition to previous requirements. The duplication of serial numbers at Ordnance Associates, affecting 50 cartridges and detonators, has resulted in implementation of procedures to prevent recurrences. Conducted a Reliability Review of the Mooring Drive System redesign at the vendor's facility. Coordinated the requirements for the ECS Achieved Reliability Report with AiResearch, with the first report due in January 1964. A Reliability Estimate of 0.999 was submitted by G.E. for expected Fuel Cell performance (1/3 of "spec" requirement) in S/C #2 and #3; however, some underlying assumptions of the estimate do not appear justified. A dielectric breakdown of the HF Whip Antenna RF cable (RG-174U) occurred during high temperature Reliability Assurance testing. This cable previously had been replaced with RG-188U cable on production units and the test unit

will be so refurbished and test procedures will be modified to more realistic conditions. Submitted supplier change information to applicable vendors regarding "Orphan Transistors" and the Continental Devices Corporation "Gold Flake Diode" problem. Supplier change information on "Purple Plague Transistors" is being prepared. Directed Electro-Mechanical Research to submit results on their parts Qualification Test. Requested Westinghouse review M-H test data on Motorola 2N834 transistors used in the Rendezvous Radar. Directed M-H to perform the burn-in of silicone control rectifiers with forward blocking voltage applied and to justify the application of parts utilized near the manufacturers rating. Failure reporting continues to be a problem area with the backlog of open reports increasing from 430 to 636 during the period 1 October through 30 November.

<u>During Next Reporting Period</u> - Release MAC Report 9796. Continue Abort Time Study. Complete the review of S/C Single Point Failure Analysis. Conduct a study of a hi-altitude drogue configuration. Anticipate receipt of vendor responses relative to diode and transistor problems. Submit supplier change information to applicable vendors regarding "Purple Plague Transistors". Continue close coordination with vendors.

OUTSIDE EQUIPMENT

1. The following EJSs were completed:

52-2150	Additional Reservoirs in Coolant System
52-2395	Waterproofing Diode Panel and Terminal Block
52-2408	Condensate Line and Bracket Chg. to avoid Freezing
52-2496	Data Trans. Sys. Component Allocation
52-2508	Automatic Water Shutoff for Fuel Cell
52-2509	Addition of RSS Crossover
52-2511	Duplicate External Radar Config. for S/C #2
52-2523	Relocation of Vibration Pickups
52-2619	R.E.P. Turn On Switch Provisions
52-2621	Alternate Elect. Pwr. Source for S/C #3
52-2652	S/C #2 Power Sys. Monitor

Problem Areas

Equipment removal from coldplates due to vacuum bonding created by presence of intersitual heat transfer grease.

Next Period

Continue working on the following EJSs:

52-2445	Redesign of UHF Stub Antenna
52-2467	Modify Temp. Sensor System
52-2507	Addition of Third RSS Regulator
52-2523A	Relocation of Vibration Amplifier in Adapter
52-2602	Syncro Installation
52-2621A	Alternate Elect. Pwr. Drinking Water Sys. Rev.
52-2641	Addition of Regenerative Heat Exchangers
52-2679	Addition of Valves in Coolant Sys. Interface
52-2686	Incorporation of Experiments #4 and #9

PYROTECHNICS

A. SEAT EJECTOR ROCKET CATAPULT

1. Qualification test procedure submitted, free flight test report in work, development firings of catapult (redesigned) to eliminate hangup. Analysis of catapult cartridge for redesign.

2. Expected Next Report Period - Firings with redesigned catapult cartridges Submittal of Acceptance test procedure and free flight report. BPT in house preparation for qualification and acceptance testing.

B. FLSC SEPARATION ASSEMBLY

1. During Report Period - Started investigation of changes required to incorporate dipam explosive in place of RDX in -1 & -3 assemblies if the maximum temp at the jet cord is 500°F.

2. Expected Next Report Period - Redesign as required.

C. HATCH ACTUATOR

1. During Report Period

   a. Incorporated Lanyard release mechanism.

   b. Tests by Ordnance Associates and MAC to determined optimum firing pin assembly.

2. Expected Next Report Period - Incorporate cartridge actuation of this hatch actuator without functioning of the rocket catapult.

D. 2100.75 SEPARATION ASSEMBLY

1. During Report Period - Fab. master tools for drilling of adapter and continued in production on parts for qual. tests. Sent in rock up of explosive interconnects for fitting.

2. Problems Encountered - Trouble with the tools that form the sides of cutters. Tools will be strengthened.

3. Expected Next Report Period - Start production on explosive interconnects.

E. P&R SECTION SEPARATION ASSEMBLY

1. During Report Period - Development tests have been run by the vendor to verify the output characteristics of the refined grade of RDX. Reliability assurance tests of the detonators are now being run by QA

2. Expected Next Report Period - Reliability assurance tests will continue and it is expected that design approval testing will begin very shortly.

F. WIRE BUNDLE GUILLOTINE (C.A.D.)

1. During Report Period - Development work was completed on the -35 & -36 assemblies. Development work continued on the -41 assemblies. Production of cartridges is in progress. High altitude drogue requirements of the Guillotine Assemblies have been determined. Time delay requirements for the emergency docking release doors have been determined and approved.

2. Problems Encountered - Deflecting of the anvil on the -35 & -36 assemblies was encountered during development tests. This problem was resolved by increasing the anvil thickness.

3. Expected Next Report Period - Qualification testing will begin as soon as cartridges are available. The S.C.D. shall be revised to include the high altitude drogue Guillotine Assemblies. Detail drawings and release for production of the -35 & -36 assemblies should be forthcoming this month. Development work on the -41 assembly will continue.

G. M.D.F. INITIATION SYSTEM

1. During Report Period - Line configuration is now firm and all verification lines have been installed and accepted by MAC.
A study of interface conditions at the junction of the M.D.F. Initiation System and the Hatch Actuator has been conducted by QA. The basic problem, that of the firing pins puncturing the cartridge primers, has been solved by a redesign of the firing pin assembly.

2. Expected Next Report Period - Upon receipt of MAC approval of M.D.F. line configuration, the vendor has started production of qual. test assemblies. It is now expected that qual. testing should start within a few weeks.

H. TUBING CUTTERSEALER

1. During Report Period - Changed design of cutter to hold tubing on one end. Conducted feasibility tests using new design and new tube thickness.

I. LANDING GEAR SYSTEM PYRO DEVICES

1. During Report Period - Received qual. test procedure and resubmittal of assembly and envelope drawings for actuator assembly, parawing explosive valve and normally closed explosive valve, for MAC approval. Explosive valve assembly design proposal was modified during meeting with O.E.A. personnel at MAC. O.E.A. cutting some qual. test hardware.

2. Problems Encountered - Modification of integral storage bottle design for explosive valve assembly due to interference with MAC structure.

3. Expected Next Report Period - MAC will review and approve qual. test procedure and assembly and envelope drawings with change. O.E.A. will submit redesign of explosive valve assembly with integral storage bottles for MAC approval.

J. EMERGENCY DOCKING RELEASE SYSTEM

1. During Report Period - Redesign of latch receptable to incorporate independent stud.

2. Expected Next Report Period - Begin testing of latch receptacle and stud.

K. HORIZON SCANNER RELEASE ASSEMBLY

1. During Report Period - Preparations made to begin qual tests. Qual procedure resubmitted to MAC for approval.

Development report submitted to MAC.

2. Expected Next Report Period - Qual. tests to be in progress on horizon scanner release assembly and final development test made on R.E.P. release assembly.

L. HORIZON SCANNER FAIRING RELEASE ASSEMBLY

1. During Report Period - Hardware made available for qual. tests. Development report submitted. Qual. procedures submitted for approval.

2. Expected Next Report Period - Qual. tests to be in progress.

M. DOCKING BAR ASSEMBLY

1. During Report Period - Revision of S.C.D. incorporating time delay into jettison cartridge and single bridgewire into extension cartridge was released.

2. Expected Next Report Period - Continue cartridge design test.

N. PYROTECHNIC SWITCH

1. During Report Period - Cartridge production is in progress. Switch bodies are available. Qualification test procedures, detail drawings and installation drawings were received from Ordnance Associates and approved by MAC.

2. Problems Encountered - Resistance values across the switch assemblies were found to be beyond S.C.D. limits and possible solutions to this problem are being investigated.

3. Expected Next Report Period - Solution of the above resistance problem is anticipated during this period.

O. LAND. GEAR DOOR JETTISON

1. During Report Period - The vendor has run a series of tests of sealing methods, under the detonator housing and above the booster area and have generated a design that will, it is felt, meet all specification requirements.

2. Problems Encountered - The manufacturing problem has been aided by shipment of a total configuration, dummy M.D.F. ring from MAC to O.A.

3. Expected Next Report Period - Preliminary drawings of the basic system are being reviewed at MAC and it is expected that O.A. will start production of a number of M.D.F. rings within a few weeks.

P. HARNESS RELEASE ACTUATOR

1. During Report Period - Vendor drawings and qualification and acceptance test procedures received.

2. Expected Next Report Period - Approval of all vendor data submittals and return of documents.

Q. THRUSTER ASSEMBLY SEAT MAN SEPARATOR

1. During Report Period - Revised S.C.D. incorporating new threads on thruster cartridge to make it non-interchangeable with all cartridges used on ejection seat pyrotechnic devices. Vendor submitted for approval, a complete set of drawings of the thruster. These were approved with minor changes and returned.

2. Expected Next Report Period - Expect to receive qual. test report.

R. DROGUE MORTAR PERSONNEL PARACHUTE

1. During Report Period - Vendor submitted for review, a complete set of drawings of the drogue mortar.

2. Expected Next Report Period - The drogue mortar will be used on two low altitude dummy jump tests. To approve and return vendor drawings.

S. BALLUTE DEPLOY AND RELEASE SYSTEM

1. During Report Period - The S.C.D. was revised to increase the time for Ballute Deployment from 1.0 second to 5.0 seconds and to reduce the altitude for Ballute release from 17,000 feet to 11,500 feet. Development work was completed and detail drawings were prepared. Samples of a

redesigned Ballute riser were submitted to O.A. and they were requested to test the ability of the present release cutter to sever this new riser material.

2. Expected Next Report Period - Acceptance test procedures, qualification test procedures and detail drawings should be submitted this period. Production of test units, qualification test units and reliability test units will begin.

ELECTRONICS

A. COMMUNICATIONS

1. C-Band Radar Beacon - Vendor has been requested to rerun RFI Test. The Vendor's data for receiver front and rejection could not be verified on the bench. The data also indicated two unaccountable spurious responses which were only 40 db below maximum receiver response at 30 MC below and 42 MC above assigned frequency.

2. Antennas - The HF Whip Antenna successfully passed a special waterproof test performed at Cape Kennedy. The S-Band Antenna has been modified to meet SCD RF Power requirements by reducing the thickness of the alumina (ceramic) radome and by providing a foamed space between the radome and the radiating slots. Requalification through high temperature and vibration will be required prior to resuming production. Effectivity is for all production units. A design change, to the UHF Quadriplexer and Diplexer, of improving the capability of soldering and inspection of the solder connection of the common junction to the center conduction of the TNC RF output connector will be effective on all production units.

3. UHF Recovery Beacon - Design for the seal on the Beacon has been completed by both M.A.C. and the vendor.

4. Flashing Recovery Light - The lamp portion of the Flashing Recovery Light is being redesigned due to unreliable manufacturing process.

B. GUIDANCE AND CONTROL

1. Horizon Sensor System - Vibration tests by ATL at Wylie Labs indicated improvement in positor design; however, the SCD vibration requirement was not met. Positor flexure pivots broke after 4 to 6 minutes random vibration. Design analysis is continuing and further modification will be implemented.

During Special CTU tests at M.A.C. extreme susceptability to RFI was noted. An evaluation has been initiated. Also, during this test it was established that the H.S. test lens focal length is too long for the Spacecraft Systems Test (SST) Horizon Simulator. New lens is being designed.

A RC low pass filter has been added to the Electronics Package to prevent transient feedback concerning the pitch error oscillation problems, effective on all production units.

2. Attitude Display Group - The Temp.-Altitude portion of special environmental tests, on the minature modules for the Flight Director Controller, was completed successfully. Vibration and Humidity portion should be completed during next reporting period.

   Potentiometer for switching sensitivity on the Attitude Director Indicator should be available during next reporting period.

3. Transponder - The CTU Transponder has completed all of WEC's Preacceptance Tests, and has accumulated a total of 106 hours of transmit time and 205 hours of primary power on time.

4. IMU - Further tests were conducted with a bread-board Static Inverter. IGS performance with the bread-board inverter was satisfactory and permitted final criteria for the redesign of the Static Inverter. Effectivity of new inverter is planned for S/C #3 and Up.

   A low temperature induced gimbal oscillation was detected and the problem traced to a -30 volt regulator in the Gimbal Control Electronics. A modified regulator design was bread-boarded and verified by low temperature tests. Modified regulators are now being built for incorporation into production units.

C. INTEGRATION AND TESTING

1. Communications - Successfully completed PIA on S/N 125 and 127 Coax Switches, S/N 107 C-Band Antenna, S/N 101 DCS, S/N 102, 103 and 104 8-Relay Units, S/N 103 and 104 4-Relay Units, S/N 104 and 107 Power Dividers, and S/N 107 and 108 UHF Diplexers. C-Band Antennas Adapter S/N 103 and 104 failed PIA.

   SEDR K342-S5 (VSWR and Insertion Loss Test) was completed. SEDR F341-S5 (Communication Test) is in progress. During the first run of the Operational Test portion, interference caused by the Flashing Recovery Light and Recovery Beacon was present. Rerun of test is necessary.

2. Guidance and Control - Released Computer/Radar interface characteristics document. Resolved that redundant relays can be incorporated in GLV for Stage I gain change. Prepared study EJS to resolve ACPU-Computer incompatibility. Coordinated required changes to Low Pressure Test Bench to adequately demonstrate ECS inverters performance during acceptance testing. Outlined penalties associated with present suit compressor inverter suit compressor specifications. Continued witnessing Vendor acceptance tests for ECS inverters. Completed specification revision for the new IGS Power Supply.

   During this reporting period a Special Guidance and Control Interface Test was initiated on the CTU. Actual testing began on December 5 with SEDR SH 252 as the defining document. To supplement the SEDR various special test procedures were written. The hardware being used is S/C 2 flight and S/C 2 SST equipment.

   ACME was the first system tested. Some out of specification readings were taken. During the IMU testing which followed, major oscillations of all four gimbals were noted. During the retesting, a direct correlation

between the occurrence of oscillation and the temperature of the Gimbal Control Electronics package was recognized. The vendor was notified and instituted a redesign of a module in the gimbal control electronics package. In the computer sequences of the SEDR the digital interface testing progressed smoothly and preliminary data indicates no major problems. Horizon Sensor testing revealed four main problems. 1) The sensor lost track many times. Further tests indicated a susceptibility to radio frequency interference (RFI). RFI susceptibility tests are currently being run. 2) In the presence of high noise inputs to the horizon sensor, the IMU does not receive an ignore signal from it. 3) The ignore signal is removed prematurely before the horizon sensor has stabilized following a loss of track. Both ignore signal problems require more evaluation before corrective measures are determined.
4) The lens of the sensor was discovered to have the wrong focal length for the SST simulator. The vendor is designing a new lens.
The following additional interface problems have been uncovered.
1) Presently, a minus 5° bias in the ACME pitch channel is employed. When the HS looses track, a 0° output is given to ACME. This problem is presently being evaluated for possibility of a change of the bias to 4° or an ignore signal to ACME. 2) The Tx signal from the Time Reference System (TRS) is not being received at the computer. Spacecraft wiring is suspected and a continuity check will be made. AGE equipment problems have been found and EMR's have been initiated on all problem areas.

GUIDANCE AND CONTROL MECHANICS

1. Rendezvous - A program addition has been made to the digital simulation of semi-optical rendezvous to provide a modified technique. The purposes of this guidance technique were to alleviate the lateral thruster duty cycle problem and to rendezvous more economically than the present semi-optical method. Results indicate that the technique will alleviate the duty cycle problem only if an attitude maneuver can be made to utilize the aft firing thrusters for the initial thrust. Study of the duty cycle problem is continuing.

   The error analysis of the closed-loop rendezvous terminal guidance system has been concluded. General results indicate that the "three-sigma" velocity penalty is between 12 and 90 ft/sec. depending upon the range to the target at initiation of rendezvous terminal guidance. A rough draft of a design note describing this effort is in preparation.

   The study determining the optimum open-loop torquing rate for the inertial platform was continued and should be completed during the next reporting period.

   Work has been initiated to develop a hybrid simulation for the rendezvous mission. It is anticipated that several months will be required to make this simulation operational with the required interfaces between digital, analog, and crew station facilities.

   Gemini Design Note No. 145, "Evaluation of the Effect of Thrust Duration on the Gemini Closed-loop Rendezvous Procedure," was released. This note describes the effect of finite thrust periods on Gemini rendezvous when the steering equations are based on impulsive velocity changes. It is shown that a simple computer compensation and thrust axis

reference scheme reduce the error to an acceptable amount.

2. Re-entry - A ground track of S/C #1 for three orbits has been prepared. A similar ground track is being prepared for the S/C #3 mission. In addition, the retrograde time is being established for a landing at a target point located at 60° West longitude at the end of the third revolution. In conjunction with aerodynamics and thermodynamics groups the open-loop footprint and re-entry heating conditions will be established for this mission.

In Gemini Design Note No. 99, the attitude errors during retrograde were evaluated in terms of the dispersion of the zero lift touchdown point for a re-entry from a 161 na. mi. circular orbit. In GDN #143, these results were extrapolated to re-entries from other orbits. Digital computer runs have been made with several of the attitude time histories described in GDN #99 for re-entries from apogee and perigee of an 87-161 na. mi. elliptic orbit. Results show that the zero lift dispersions for a re-entry from apogee are practically the same as those for a re-entry from a 161 na. mi. circular orbit but the re-entry from perigee results in larger dispersions.

Modifications to Deck T-142 are currently being made. Changes include two tests on the density/altitude parameter "D". The purpose of this modification is two-fold. First, it will be possible to run re-entry trajectories using the manual back-up scheme proposed by the Flight Operations Division of MSC and secondly, it will be possible to examine an alternate re-entry guidance logic which will result in command bank angles similar to those of the manual back-up scheme. These modifications are currently in the check-out stage.

The constants in the range prediction equation are currently being updated to be consistent with the latest Gemini missions, aerodynamics and weights.

The size of the plotting map to be used with the Touchdown Predict mode has been established and a sample of same is being produced by ACIC. The map will be printed on mylar with a scale of approximately 1 : 60,000,000 at the equator. Latitude will be marked 0 to $\pm 45^{\circ}$ and longitude 0 to 360.

3. Ascent Guidance - A design note has been written describing the derivations and philosophy of the velocity update routine as used by the IGS computer during the ascent phase. This note is currently being reviewed for release within the next reporting period.

   An analysis was conducted on the IGS computer simulation (ascent mode) to determine the effects of drift rates of 10 degrees/hour about each gyro axis during first stage, and maintaining the misaligned orientation during second stage. This study was conducted to simulate the vibration effects on the gyro. It has been completed and the IGS tolerance study is currently being conducted.

   The Post Flight Analysis Simulation has been prepared. This simulation will determine how accurately the IGS computer results can be reproduced following a flight, using the quantities available from telemetry as open-loop inputs to the present IGS computer simulation. This proposed simulation requires only minor modification to the existing program, so preliminary results are expected within two weeks.

4. Acceptance/Mission - The acceptance/mission simulator equations have been programmed and are being checked out. The purpose of this program

is to aid in the evaluation of the adequacy of the proposed acceptance/mission simulation tests used in pre-launch check-out.

5. Reports - A Gemini Guidance and Control performance summary report has gone to press and will be released during the next reporting period. This document will provide a quick reference to the guidance and control elements of the Gemini. The material is designed to provide basic system information and function along with references to more detailed documents.

INSTRUMENTATION

A. DESIGN

1. A MAC tech writer has been temporarily assigned to the MAC resident office at EMR/Sarasota to prepare DTS manual. Anticipate a redline version of the manual will be completed by end of January 1964.
2. The 52-88222-25 DC voltage monitor is being revised to a -125 to prevent damage to the horizon scanner in the event of a signal conditioner failure.
3. MAC Quality Control will witness predelivery inspections on the 52-88221 phase sensitive demodulators and 52-88225 millivolt monitors at Bendix until discrepancies in quality of workmanship are eliminated.
4. The 52-88715 CO_2 sensor failed during vibration qual test. Indications are that the unit was overtested in the low frequency end of random spectrum.
5. Spacecraft #2 pallet instrumentation test set, 52E440059, design changes were released and rework is complete.
6. The 52E440055 pallet test set utilized on Spacecraft #1 has been returned to MAC St. Louis. The AGE group will modify for use on S/C 1A.
7. Engineering was released for heat treat of signal conditioner package #2 to improve the stress corrosion limit.
8. The vendor has modified all the accelerometers returned from spacecraft #1 at the Cape so they will withstand vibration environment. All items at MAC St. Louis are being prepared for shipment to Gulton for the same modification.
9. A design change to increase the 52-88105 TDA temperature sensor range and rate of response was released. An engineering model has been fabricated.

10. Preliminary version of spacecraft 2 Instrumentation Report, 8640-2, was sent to printing.

11. Schematics for MAC Report 8640-3 are complete. Work is in progress on reports for spacecraft 1A.

12. Design changes were released for an improved cabinet for storage and handling of the 52E440035 sensor calibration PIA adapters.

13. By NASA directive, an investigation of (1) the installation of syncro repeaters and (2) ground readout methods for phase sensitive demodulators was conducted. A design note is being written.

B. CIMU ACTIVITY

1. The PCM breadboard was checked out prior to delivery with the Gemini Mission Simulator.

2. The 52-04021 modulation assembly which is a simulator for signal conditioners, and an impedance matching network for production PCM use, were wired into the CIMU and checked out. General clean-up was accomplished to insure the CIMU is prepared for PCM PIA testing.

C. PIA

1. The following PIA test procedures and revisions were released in PCNs 32, 33, 34 for incorporation in SEDR 320. 52-88721-83 temperature sensor, 52-88224-23 DC Attenuator, 52-88226-5 DC Amplifier (revised), 28186 Vibration Measuring System (revised), 52-85713-35 Hi-speed Mode Tape Recorder, 52-88712-101 and -301 Liner Accelerometers (revised), 52-88106-25, -27 VCO Modules, 52-88111-1 and 45-88110-1 Camera, MR9389 Bio Med Power Supply.

2. A total of 182 items of flight hardware requiring PIA were received during the reporting period. 158 items successfully passed and 24 items failed PIA.

D. NEXT REPORTING PERIOD

1. Complete schematics for MAC Report 8640-1A and have redline copies of report available.

2. Release design for 52-88222-125 Amplifier and the printed circuit.

3. Start design layouts and studies for instrumentation for NASA/DOD experiments #4, #9 and #11.

4. Complete modification and calibration of acceleration and vibration monitoring systems for Spacecraft No. 1 use.

5. Distribute preliminary versions of MAC 8640-2.

ENGINEERING MOCK-UP

1. Information for latest EJS's and RFA's being incorporated into mock-up and preparations are being made for NASA review, scheduled for December 17 and 18, 1963.

2. Problems Encountered - Difficulty with communications system shorting out. Auxiliary system is being used temporarily.

3. During Next Reporting Period - Continue to update crew station and make preparations for NASA review.

Tube and Cable Mock-Up

4. S/C #3 is being mocked-up and is progressing at a normal rate. No problems of any consequence have been encountered thus far.

5. During Next Reporting Period - Continue incorporating latest information.

GEMINI MANUFACTURING WORK PLAN - SPACECRAFT NO. 2

[redacted]

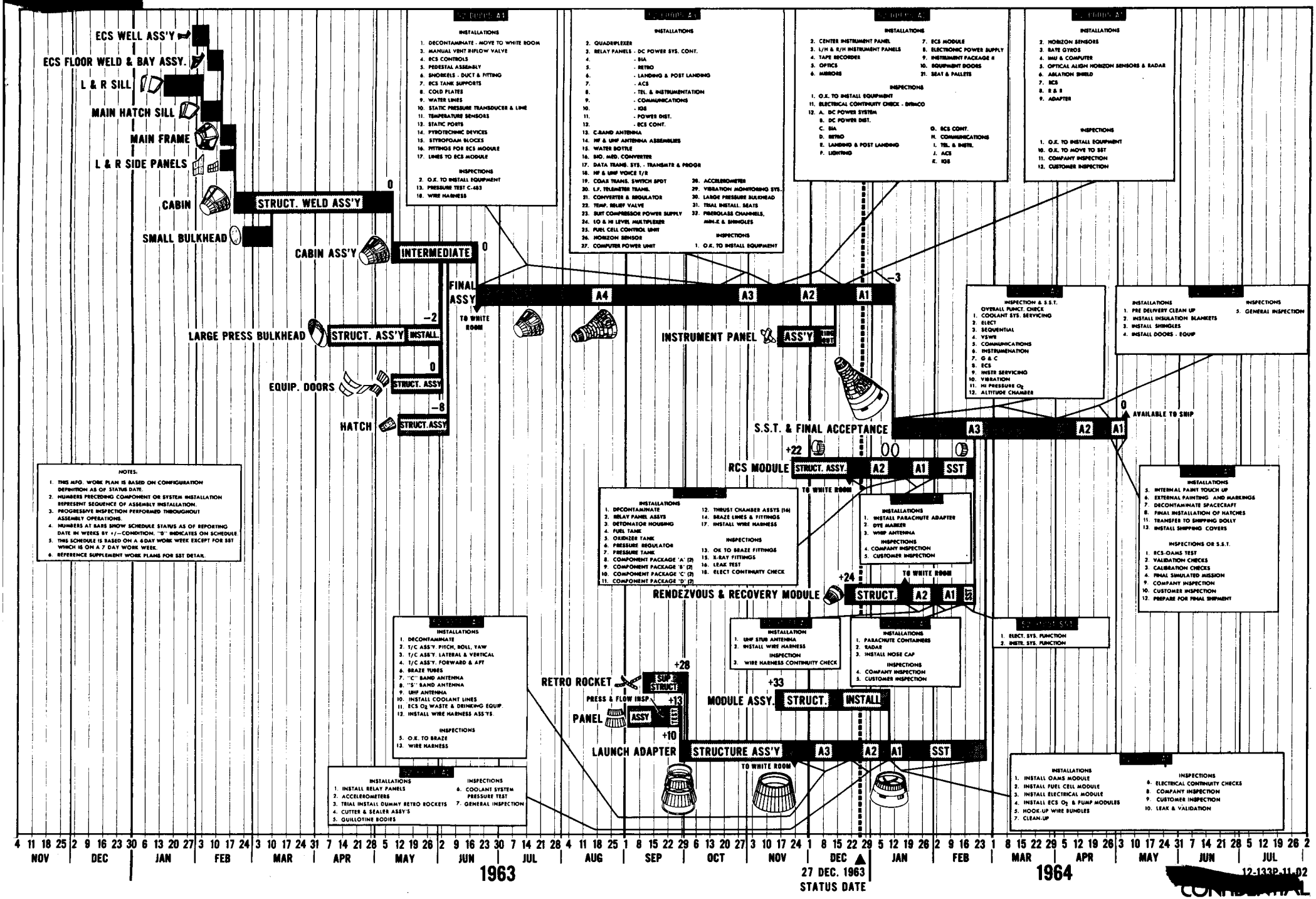

[redacted]

12-133P-11-02

GEMINI SPACECRAFT NO. 2
EQUIPMENT STUDY

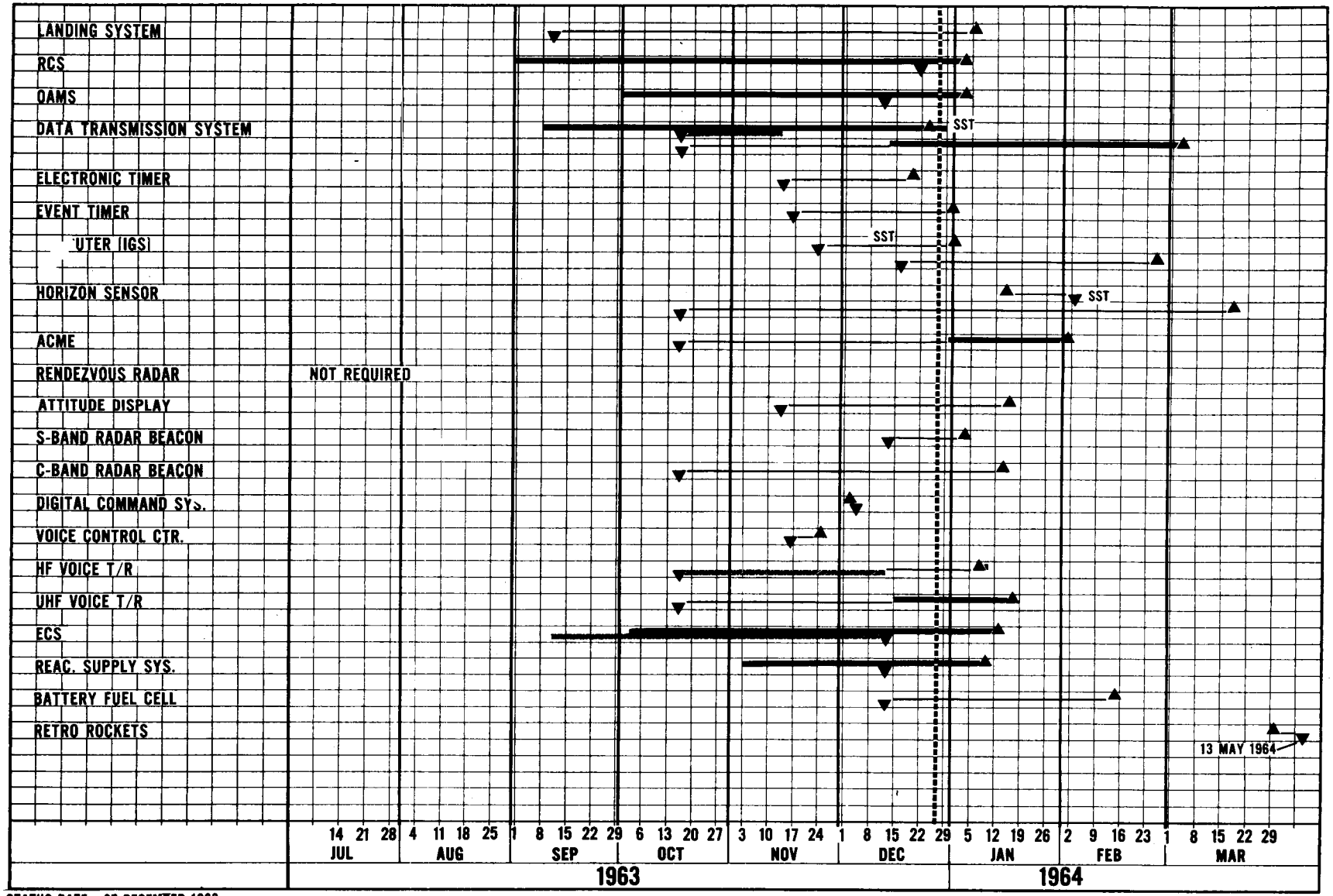

STATUS DATE: 27 DECEMBER 1963

RELOCATION OF PALLET EQUIPMENT
PER EJS 52-2399
SPACECRAFT NO. 2

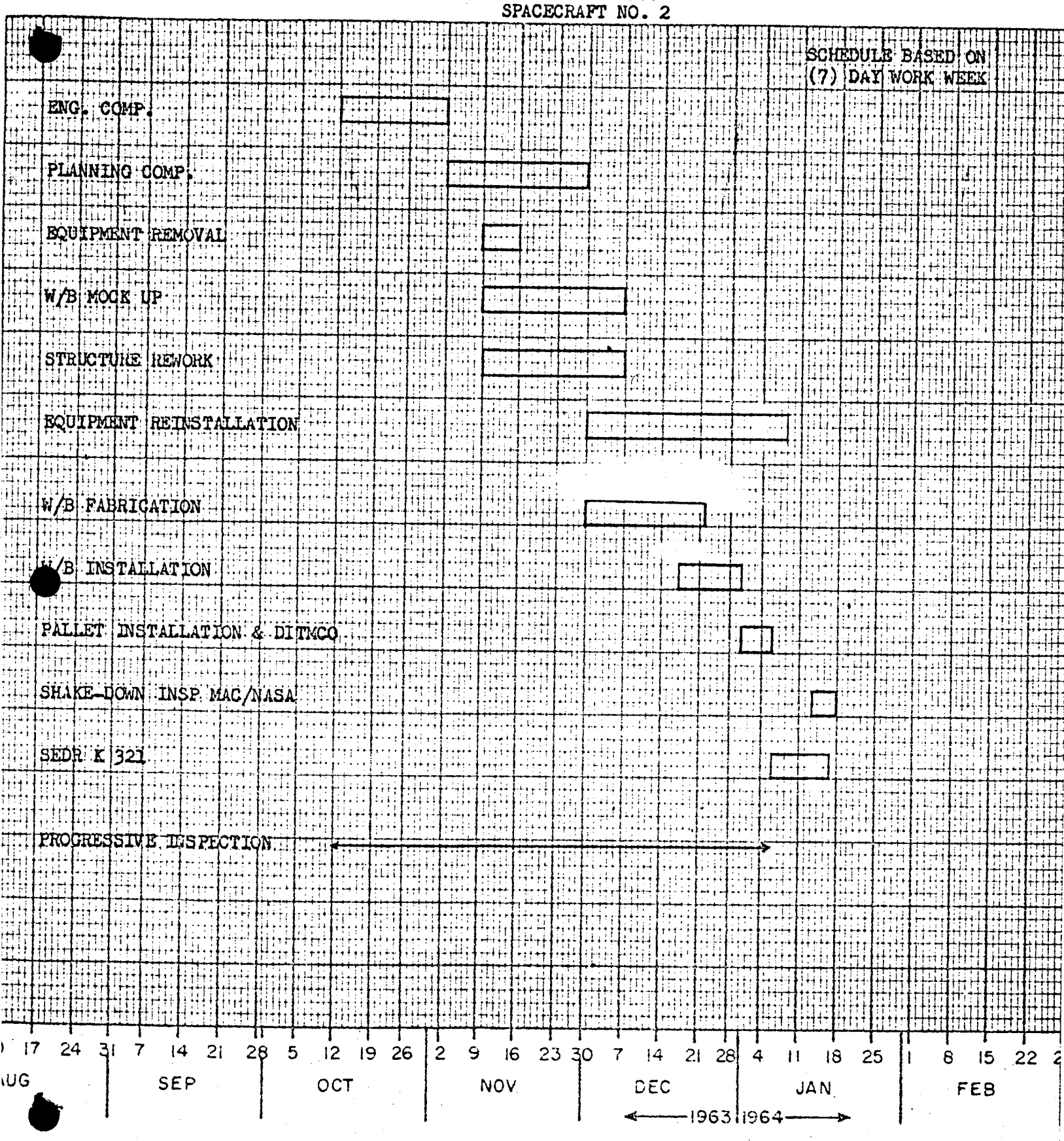

S C 2 WORK PLAN FINAL ASSY

	ZONE	TOTAL HRS.	OPEN HRS.
1. LARGE PRESSURE BULKHEAD	9	39	0
2. PRESSURE TEST	9	74	0
3. ECS INSTALLATION & PLUMBING	9	72	72
4. WIRE BUNDLES IN CABIN	9	606	353
5. PEDESTAL INSTALLATION	9	24	24
6. FIBERGLASS CHANNELS & MIN-K	11 12	302	11
7. INSTALL SHINGLES	4 5 6 7 8 9 11 12	594	254
8. INSTALL & RIG 32060 DOORS	11 12	148	102
9. INSTALL & RIG HATCHES	9 11 12	121	0
10. INSTALL STYROFOAM	3 7	82	0
11. INSTALL COLD PLATES & PLUMBING	4 7 8 9	198	142
12. INSTALL W/B IN EQUIPMENT BAYS	3 8	756	506
13. SPLICE THERMOCOUPLES & TEST	4 7 11 12	96	62
14. DITMCO	9	186	186
15. EQUIPMENT INSTALLATION (OTHER)	3 4 5 7 8 11 12	418	297
16. INSTALL STATIC SYSTEM	3 9	90	63
17. PRESSURE TEST (STATIC SYSTEM)	3 9	36	36
18. SST	9	0	0
19. EQUIPMENT DOORS	7 8 9 11 12	58	45
20. EQUIPMENT INSTALLATION (CABIN)	9	1033	666
21. SPLICE TEMP. SENSORS	4 5 7 8 9	74	74
22. MECHANICAL MATE RCS & RR	16	133	133
MECHANICAL MATE ADAPTER			
23. HEAT SHIELD INSTALLATION	10	232	95
24. E.O.P.O.	16	2268	274

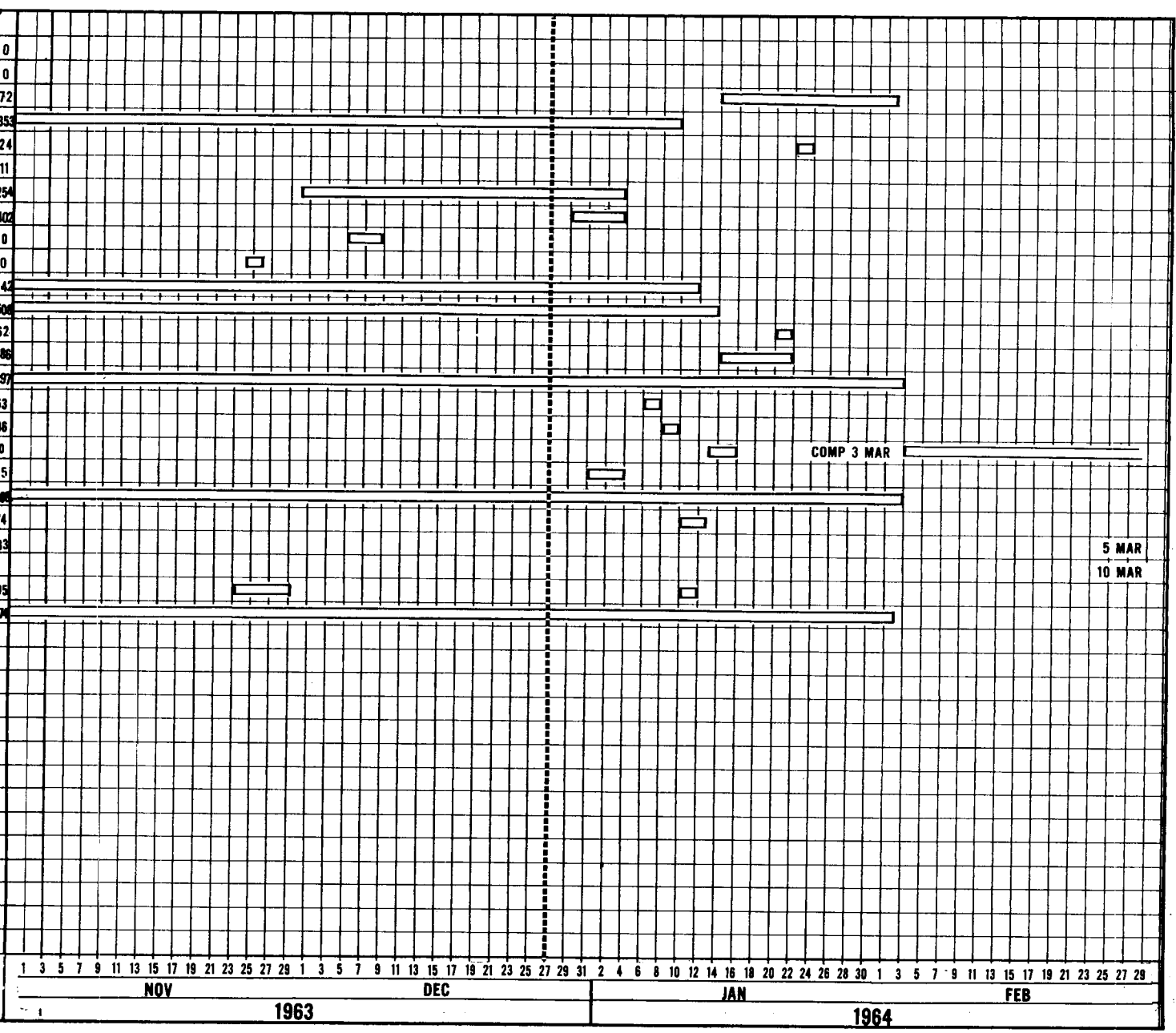

LEGEND: WORK PERIOD

STATUS AS OF 27 DEC 1963

S C 2 WORK PLAN MODULE FINAL ASSY

	ZONE	TOTAL HRS.	OPEN HRS.
RCS	2		
1. INSTALL PLUMBING & PRESSURE TEST		264	220
2. INSTALL W/B - T/C - T/S		204	194
3. FIBERGLASS CHANNELS - MIN - K - INSULATION		16	0
4. INSTALL EQUIP		160	79
5. INSTALL SHINGLES - RETAINERS		158	111
6. DITMCO - T/C - T/S TEST		106	106
7. S S T		84	84
8. INSTALL THRUST CHAMBERS		32	32
9. INSTALL STYROFOAM		11	9
10. NASA/MAC INSPECTION		53	53
R & R	1		
11. INSTALL W/B - T/C - T/S		89	89
12. FIBERGLASS CHANNELS - MIN - K - INSULATION		58	58
13. INSTALL EQUIP		122	54
14. INSTALL SHINGLES - RETAINERS		179	120
15. DITMCO - T/C - T/S TEST		90	90
16. S S T		12	4
17. NASA/MAC INSPECTION		12	12
ADAPTER	13		
18. INSTALL PLUMBING & PRESSURE TEST		323	323
19. INSTALL W/B - T/C - T/S		668	668
20. INSTALL EQUIPMENT		335	335
21. DTMCO - T/C - T/S TEST		96	96
22. S S T		69	69
23. NASA/MAC INSPECTION		53	53
24. INSTALL THRUST CHAMBERS			

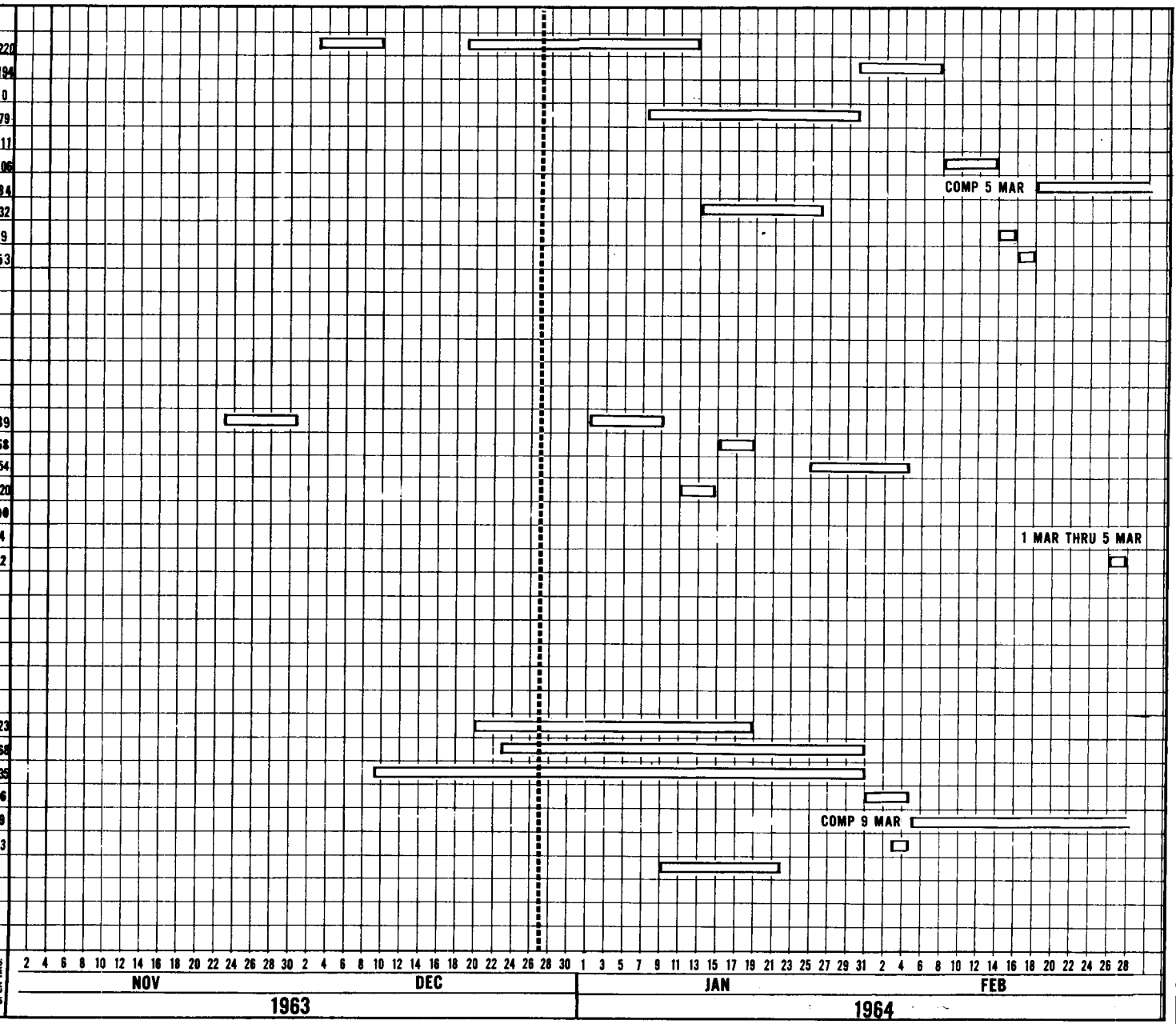

LEGEND: WORK PERIOD

STATUS AS OF: 27 DEC 1963

S/C NO. 2 SST

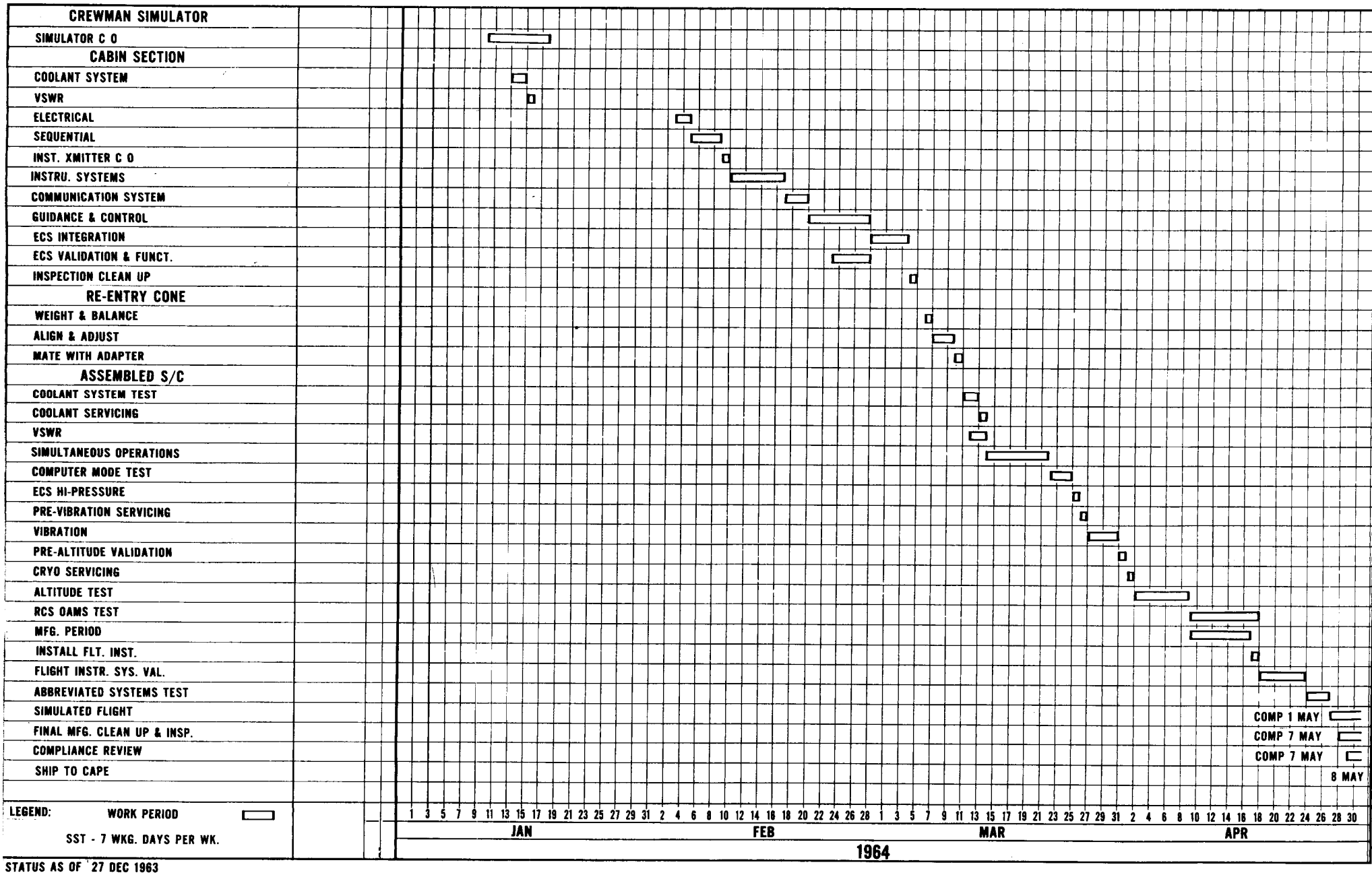

STATUS AS OF 27 DEC 1963

S/C NO. 2 SST

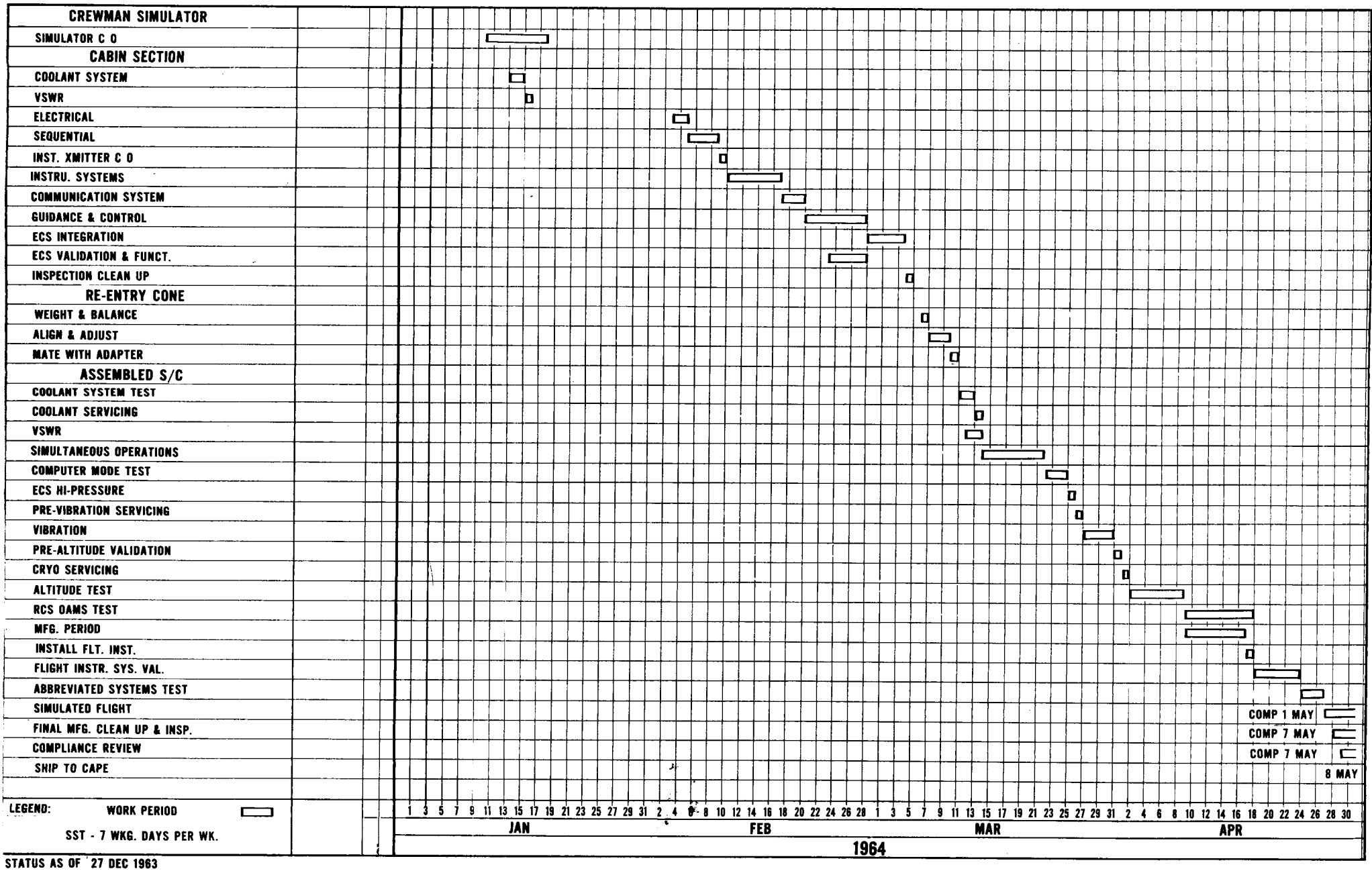

STATUS AS OF 27 DEC 1963

GEMINI ZONE CHART

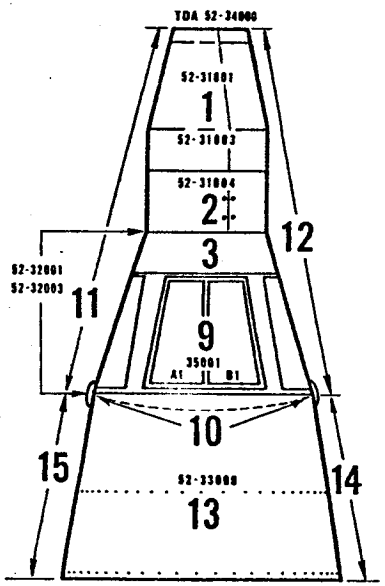

TOP VIEW

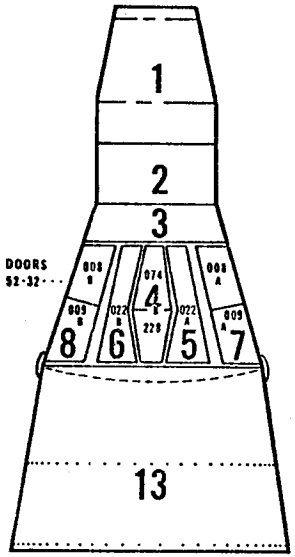

BOTTOM VIEW

1. RENDEZVOUS AND RADAR MODULE
2. RE-ENTRY RCS MODULE
3. FORWARD AREA CONE
4. CENTER EQUIPMENT BAY
5. L/H LANDING GEAR BAY
6. R/H LANDING GEAR BAY
7. L/H EQUIPMENT BAY
8. R/H EQUIPMENT BAY
9. CREW PRESSURIZED AREA
10. EXTERIOR AREA OF LARGE PRESS. BULKHEAD
11. SPACECRAFT EXTERIOR L/H
12. SPACECRAFT EXTERIOR R/H
13. INTERNAL ADAPTER AREA
14. R/H EXTERNAL ADAPTER AREA
15. L/H EXTERNAL ADAPTER AREA
16. ZONE FOR ENTIRE SPACECRAFT

GEMINI SPACECRAFT NO. 2

ZONE NO. 1

TOTAL EQUIPMENT REQUIRED 19

EQUIPMENT ON HAND 18

EQUIPMENT TO SCHEDULE 1

EQUIPMENT LATE 0

PART NO.	PART NAME	NORM. INST.	SLACK	DEF. INST.	SLACK	HOURS TO INSTALL

GEMINI ZONE CHART

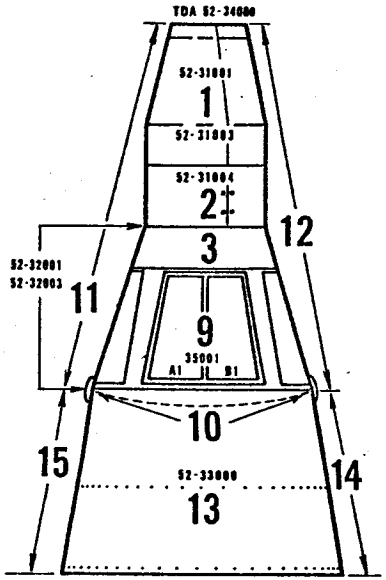

TOP VIEW

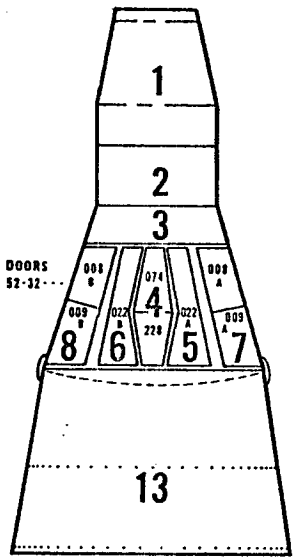

BOTTOM VIEW

1. RENDEZVOUS AND RADAR MODULE
2. RE-ENTRY RCS MODULE
3. FORWARD AREA CONE
4. CENTER EQUIPMENT BAY
5. L/H LANDING GEAR BAY
6. R/H LANDING GEAR BAY
7. L/H EQUIPMENT BAY
8. R/H EQUIPMENT BAY
9. CREW PRESSURIZED AREA
10. EXTERIOR AREA OF LARGE PRESS. BULKHEAD
11. SPACECRAFT EXTERIOR L/H
12. SPACECRAFT EXTERIOR R/H
13. INTERNAL ADAPTER AREA
14. R/H EXTERNAL ADAPTER AREA
15. L/H EXTERNAL ADAPTER AREA
16. ZONE FOR ENTIRE SPACECRAFT

GEMINI SPACECRAFT NO. 2

ZONE NO. 2

TOTAL EQUIPMENT REQUIRED 60

EQUIPMENT ON HAND 41

EQUIPMENT TO SCHEDULE 19

EQUIPMENT LATE 0

PART NO.	PART NAME	NORM. INST.	SLACK	DEF. INST.	SLACK	HOURS TO INSTALL

12/20/63

GEMINI ZONE CHART

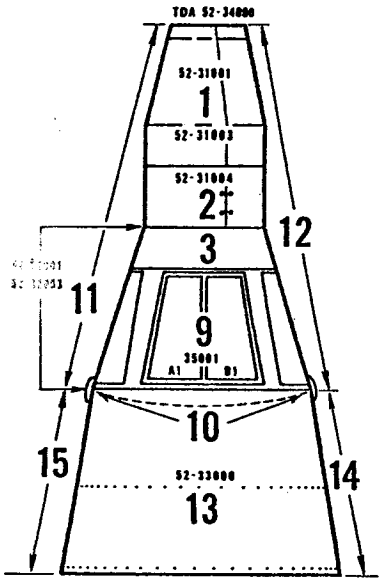

TOP VIEW

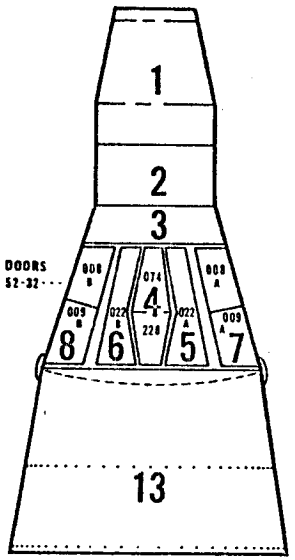

BOTTOM VIEW

1. RENDEZVOUS AND RADAR MODULE
2. RE-ENTRY RCS MODULE
3. FORWARD AREA CONE
4. CENTER EQUIPMENT BAY
5. L/H LANDING GEAR BAY
6. R/H LANDING GEAR BAY
7. L/H EQUIPMENT BAY
8. R/H EQUIPMENT BAY
9. CREW PRESSURIZED AREA
10. EXTERIOR AREA OF LARGE PRESS. BULKHEAD
11. SPACECRAFT EXTERIOR L/H
12. SPACECRAFT EXTERIOR R/H
13. INTERNAL ADAPTER AREA
14. R/H EXTERNAL ADAPTER AREA
15. L/H EXTERNAL ADAPTER AREA
16. ZONE FOR ENTIRE SPACECRAFT

GEMINI SPACECRAFT NO. 2

ZONE NO. 3

TOTAL EQUIPMENT REQUIRED 25

EQUIPMENT ON HAND 25

EQUIPMENT TO SCHEDULE 0

EQUIPMENT LATE 0

PART NO.	PART NAME	NORM. INST.	SLACK	DEF. INST.	SLACK	HOURS TO INSTALL

12/30/63

GEMINI ZONE CHART

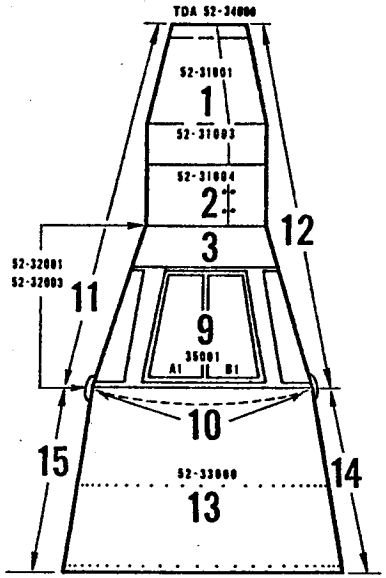

TOP VIEW

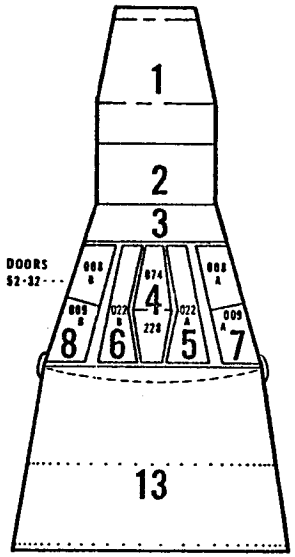

BOTTOM VIEW

1. RENDEZVOUS AND RADAR MODULE
2. RE-ENTRY RCS MODULE
3. FORWARD AREA CONE
4. CENTER EQUIPMENT BAY
5. L/H LANDING GEAR BAY
6. R/H LANDING GEAR BAY
7. L/H EQUIPMENT BAY
8. R/H EQUIPMENT BAY
9. CREW PRESSURIZED AREA
10. EXTERIOR AREA OF LARGE PRESS. BULKHEAD
11. SPACECRAFT EXTERIOR L/H
12. SPACECRAFT EXTERIOR R/H
13. INTERNAL ADAPTER AREA
14. R/H EXTERNAL ADAPTER AREA
15. L/H EXTERNAL ADAPTER AREA
16. ZONE FOR ENTIRE SPACECRAFT

GEMINI SPACECRAFT NO. 2

ZONE NO. 4

TOTAL EQUIPMENT REQUIRED 10

EQUIPMENT ON HAND 10

EQUIPMENT TO SCHEDULE 0

EQUIPMENT LATE 0

PART NO.	PART NAME	NORM. INST.	SLACK	DEF. INST.	SLACK	HOURS TO INSTALL

12/30/63

GEMINI ZONE CHART

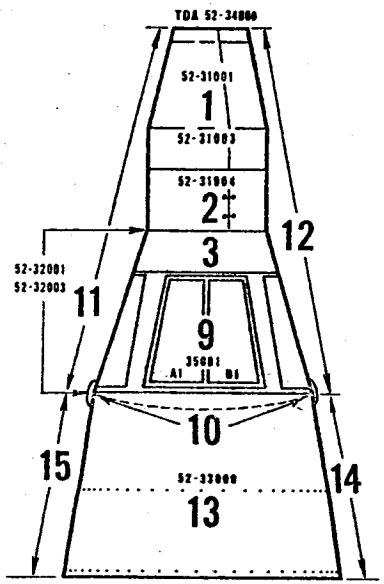

TOP VIEW

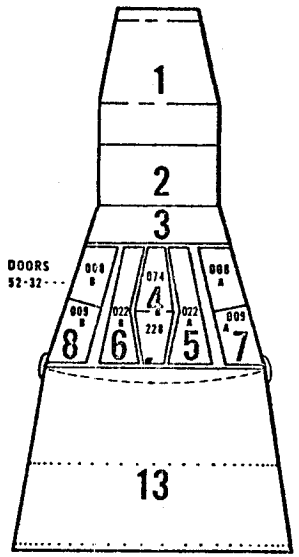

BOTTOM VIEW

1. RENDEZVOUS AND RADAR MODULE
2. RE-ENTRY RCS MODULE
3. FORWARD AREA CONE
4. CENTER EQUIPMENT BAY
5. L/H LANDING GEAR BAY
6. R/H LANDING GEAR BAY
7. L/H EQUIPMENT BAY
8. R/H EQUIPMENT BAY
9. CREW PRESSURIZED AREA
10. EXTERIOR AREA OF LARGE PRESS. BULKHEAD
11. SPACECRAFT EXTERIOR L/H
12. SPACECRAFT EXTERIOR R/H
13. INTERNAL ADAPTER AREA
14. R/H EXTERNAL ADAPTER AREA
15. L/H EXTERNAL ADAPTER AREA
16. ZONE FOR ENTIRE SPACECRAFT

GEMINI SPACECRAFT NO. 2

ZONE NO. 5

TOTAL EQUIPMENT REQUIRED 10

EQUIPMENT ON HAND 9

EQUIPMENT TO SCHEDULE 0

EQUIPMENT LATE 1

PART NO.	PART NAME	NORM. INST.	SLACK	DEF. INST.	SLACK	HOURS TO INSTALL
52-88112-59	JUNCTION BOX	00005 -A4	-10	00005 -A1	0	2

12/30/63

GEMINI ZONE CHART

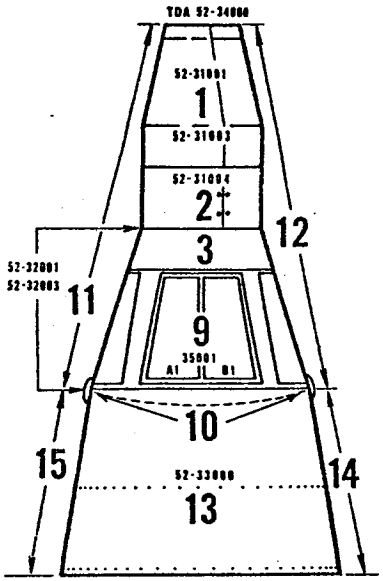

TOP VIEW

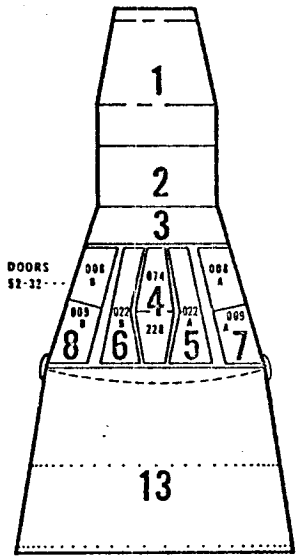

BOTTOM VIEW

1. RENDEZVOUS AND RADAR MODULE
2. RE-ENTRY RCS MODULE
3. FORWARD AREA CONE
4. CENTER EQUIPMENT BAY
5. L/H LANDING GEAR BAY
6. R/H LANDING GEAR BAY
7. L/H EQUIPMENT BAY
8. R/H EQUIPMENT BAY
9. CREW PRESSURIZED AREA
10. EXTERIOR AREA OF LARGE PRESS. BULKHEAD
11. SPACECRAFT EXTERIOR L/H
12. SPACECRAFT EXTERIOR R/H
13. INTERNAL ADAPTER AREA
14. R/H EXTERNAL ADAPTER AREA
15. L/H EXTERNAL ADAPTER AREA
16. ZONE FOR ENTIRE SPACECRAFT

GEMINI SPACECRAFT NO. 2

ZONE NO. 6

TOTAL EQUIPMENT REQUIRED 7

EQUIPMENT ON HAND 5

EQUIPMENT TO SCHEDULE 2

EQUIPMENT LATE 0

PART NO.	PART NAME	NORM. INST.	SLACK	DEF. INST.	SLACK	HOURS TO INSTALL

12/30/63

GEMINI ZONE CHART

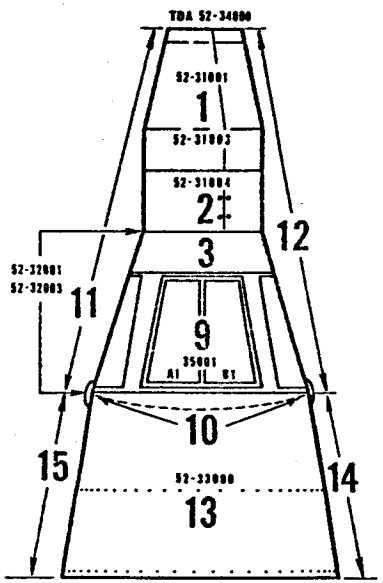

TOP VIEW

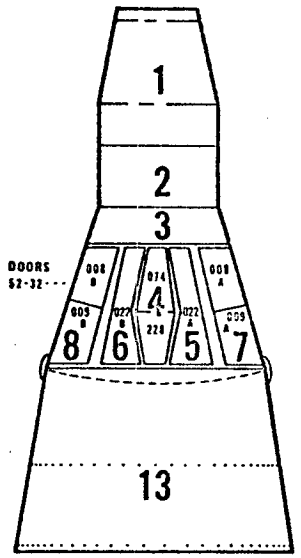

BOTTOM VIEW

1. RENDEZVOUS AND RADAR MODULE
2. RE-ENTRY RCS MODULE
3. FORWARD AREA CONE
4. CENTER EQUIPMENT BAY
5. L/H LANDING GEAR BAY
6. R/H LANDING GEAR BAY
7. L/H EQUIPMENT BAY
8. R/H EQUIPMENT BAY
9. CREW PRESSURIZED AREA
10. EXTERIOR AREA OF LARGE PRESS. BULKHEAD
11. SPACECRAFT EXTERIOR L/H
12. SPACECRAFT EXTERIOR R/H
13. INTERNAL ADAPTER AREA
14. R/H EXTERNAL ADAPTER AREA
15. L/H EXTERNAL ADAPTER AREA
16. ZONE FOR ENTIRE SPACECRAFT

GEMINI SPACECRAFT NO. 2

ZONE NO. 7

TOTAL EQUIPMENT REQUIRED 26

EQUIPMENT ON HAND 24

EQUIPMENT TO SCHEDULE 0

EQUIPMENT LATE 2

PART NO.	PART NAME	NORM. INST.	SLACK	DEF. INST.	SLACK	HOURS TO INSTALL
52- 72714-9	Switch Body (2)	00005 -A4	-12	00005 -A1	+1	3

12/20/63

GEMINI ZONE CHART

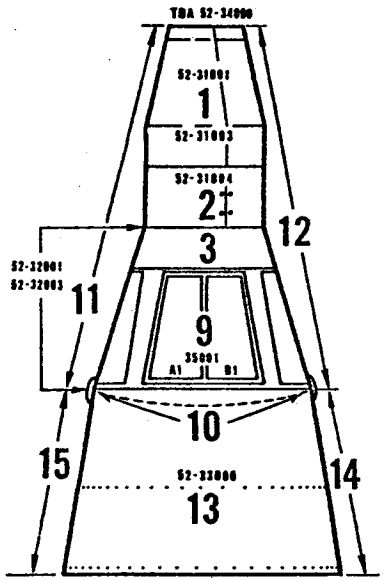

TOP VIEW

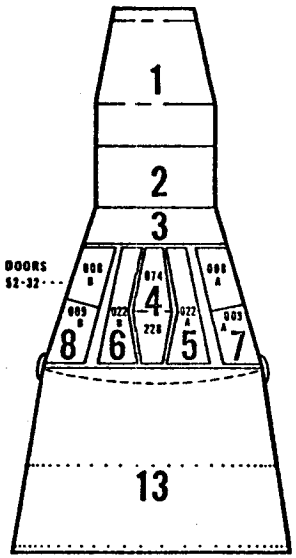

BOTTOM VIEW

1. RENDEZVOUS AND RADAR MODULE
2. RE-ENTRY RCS MODULE
3. FORWARD AREA CONE
4. CENTER EQUIPMENT BAY
5. L/H LANDING GEAR BAY
6. R/H LANDING GEAR BAY
7. L/H EQUIPMENT BAY
8. R/H EQUIPMENT BAY
9. CREW PRESSURIZED AREA
10. EXTERIOR AREA OF LARGE PRESS. BULKHEAD
11. SPACECRAFT EXTERIOR L/H
12. SPACECRAFT EXTERIOR R/H
13. INTERNAL ADAPTER AREA
14. R/H EXTERNAL ADAPTER AREA
15. L/H EXTERNAL ADAPTER AREA
16. ZONE FOR ENTIRE SPACECRAFT

GEMINI SPACECRAFT NO. 2

ZONE NO. 8

TOTAL EQUIPMENT REQUIRED 31

EQUIPMENT ON HAND 26

EQUIPMENT TO SCHEDULE 0

EQUIPMENT LATE 5

PART NO.	PART NAME	NORM. INST.	SLACK	DEF. INST.	SLACK	HOURS TO INSTALL
52-85709-7	UHF Voice Trans.	00005 -A3	-11	00005 A1	0	2
85713-183	Programmer	00005 -A3	-24	00002 A2	+1	2
85713-185	L.L. Multiplexer	00005 -A3	-21	00002 -A2	+2	2
85713-183	H.L. Multiplexer	00005 -A3	-21	00002 -A2	+2	2
85719-7	UHF Recovery Beacon	00005 -A3	-21	00002 -A2	+1	2

12/30/62

GEMINI ZONE CHART

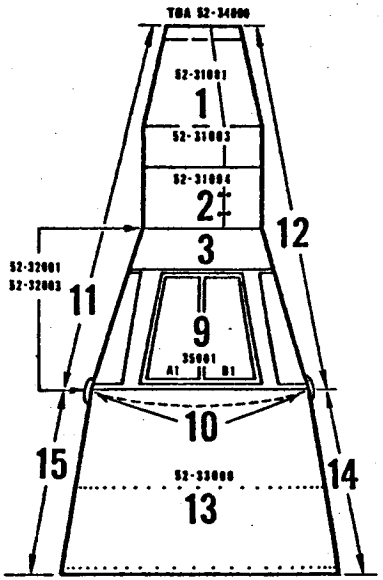

TOP VIEW

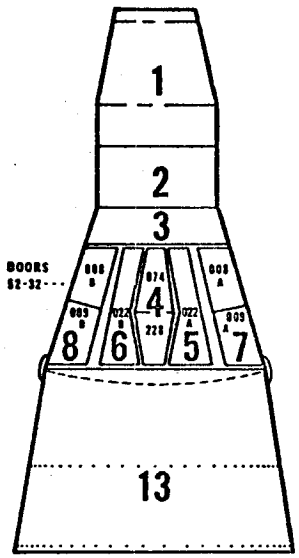

BOTTOM VIEW

1. RENDEZVOUS AND RADAR MODULE
2. RE-ENTRY RCS MODULE
3. FORWARD AREA CONE
4. CENTER EQUIPMENT BAY
5. L/H LANDING GEAR BAY
6. R/H LANDING GEAR BAY
7. L/H EQUIPMENT BAY
8. R/H EQUIPMENT BAY
9. CREW PRESSURIZED AREA
10. EXTERIOR AREA OF LARGE PRESS. BULKHEAD
11. SPACECRAFT EXTERIOR L/H
12. SPACECRAFT EXTERIOR R/H
13. INTERNAL ADAPTER AREA
14. R/H EXTERNAL ADAPTER AREA
15. L/H EXTERNAL ADAPTER AREA
16. ZONE FOR ENTIRE SPACECRAFT

GEMINI SPACECRAFT NO. 2

ZONE NO. 9

TOTAL EQUIPMENT REQUIRED 72

EQUIPMENT ON HAND 65

EQUIPMENT TO SCHEDULE 5

EQUIPMENT LATE 2

PART NO.	PART NAME	NORM. INST.	SLACK	DEF. INST.	SLACK	HOURS TO INSTALL
52-83717-1	INFLOW DUCT	00005 -A4	-27	00005 A1	0	2
83700-261	WATER STORAGE TANK	00005 -A3	-9	00005 -A1	0	3

12/30/63

GEMINI ZONE CHART

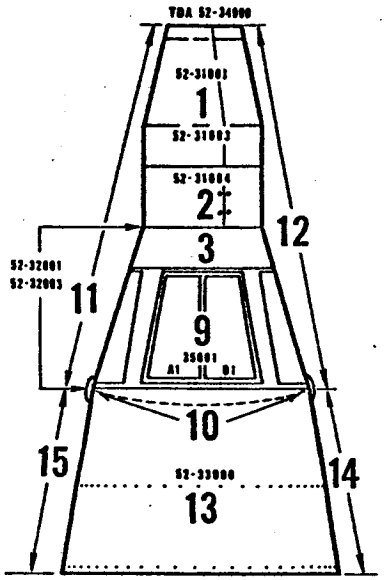

TOP VIEW

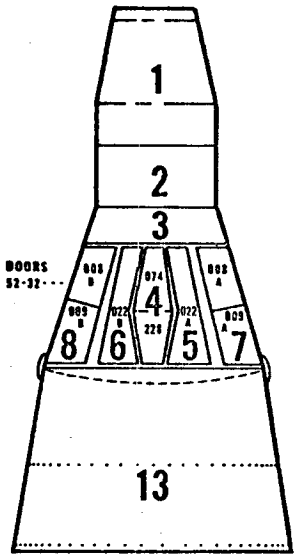

BOTTOM VIEW

1. RENDEZVOUS AND RADAR MODULE
2. RE-ENTRY RCS MODULE
3. FORWARD AREA CONE
4. CENTER EQUIPMENT BAY
5. L/H LANDING GEAR BAY
6. R/H LANDING GEAR BAY
7. L/H EQUIPMENT BAY
8. R/H EQUIPMENT BAY
9. CREW PRESSURIZED AREA
10. EXTERIOR AREA OF LARGE PRESS. BULKHEAD
11. SPACECRAFT EXTERIOR L/H
12. SPACECRAFT EXTERIOR R/H
13. INTERNAL ADAPTER AREA
14. R/H EXTERNAL ADAPTER AREA
15. L/H EXTERNAL ADAPTER AREA
16. ZONE FOR ENTIRE SPACECRAFT

GEMINI SPACECRAFT NO. 2

ZONE NO. 13

TOTAL EQUIPMENT REQUIRED 51

EQUIPMENT ON HAND 34

EQUIPMENT TO SCHEDULE 0

EQUIPMENT LATE 17

PART NO.	PART NAME	NORM. INST.	SLACK	DEF. INST.	SLACK	HOURS TO INSTALL
52- 52702-3	TEFLON LINE	33000 -A1	-7	00002 -A2	+1	2
52701-249	100# THRUST CHAMBER (6)	33000 -A3	-22	33000 -A1	0	12
52701-245	25# THRUST CHAMBER (8)	33000 -A3	-22	33000 -A1	0	16
52701-247	85# THRUST CHAMBER (2)	33000 -A3	-22	33000 -A1	0	4

12/20/63

GEMINI ZONE CHART

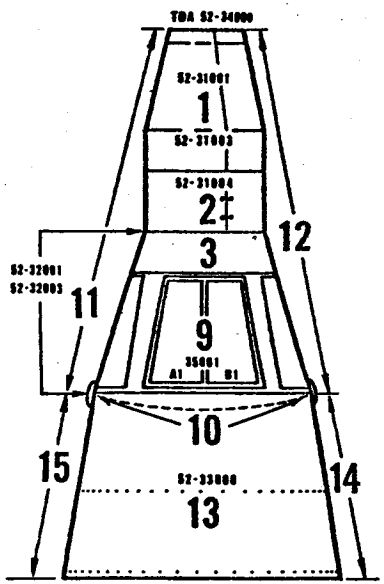

TOP VIEW

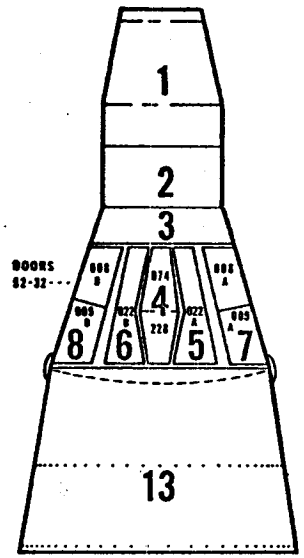

BOTTOM VIEW

1. RENDEZVOUS AND RADAR MODULE
2. RE-ENTRY RCS MODULE
3. FORWARD AREA CONE
4. CENTER EQUIPMENT BAY
5. L/H LANDING GEAR BAY
6. R/H LANDING GEAR BAY
7. L/H EQUIPMENT BAY
8. R/H EQUIPMENT BAY
9. CREW PRESSURIZED AREA
10. EXTERIOR AREA OF LARGE PRESS. BULKHEAD
11. SPACECRAFT EXTERIOR L/H
12. SPACECRAFT EXTERIOR R/H
13. INTERNAL ADAPTER AREA
14. R/H EXTERNAL ADAPTER AREA
15. L/H EXTERNAL ADAPTER AREA
16. ZONE FOR ENTIRE SPACECRAFT

GEMINI SPACECRAFT NO. 2

ZONE NO. PALLET "A" L/H

TOTAL EQUIPMENT REQUIRED 7

EQUIPMENT ON HAND 7

EQUIPMENT TO SCHEDULE 0

EQUIPMENT LATE 0

PART NO.	PART NAME	NORM. INST.	SLACK	DEF. INST.	SLACK	HOURS TO INSTALL

12/30/63

GEMINI ZONE CHART

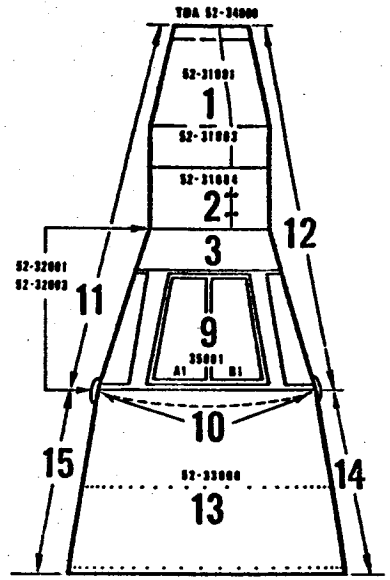

TOP VIEW

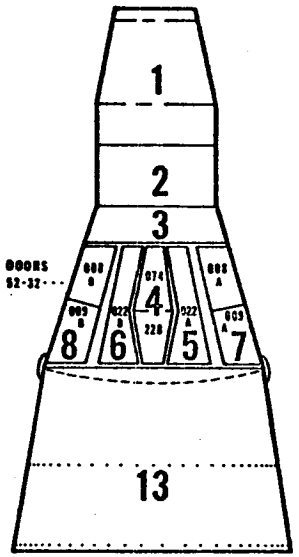

BOTTOM VIEW

1. RENDEZVOUS AND RADAR MODULE
2. RE-ENTRY RCS MODULE
3. FORWARD AREA CONE
4. CENTER EQUIPMENT BAY
5. L/H LANDING GEAR BAY
6. R/H LANDING GEAR BAY
7. L/H EQUIPMENT BAY
8. R/H EQUIPMENT BAY
9. CREW PRESSURIZED AREA
10. EXTERIOR AREA OF LARGE PRESS. BULKHEAD
11. SPACECRAFT EXTERIOR L/H
12. SPACECRAFT EXTERIOR R/H
13. INTERNAL ADAPTER AREA
14. R/H EXTERNAL ADAPTER AREA
15. L/H EXTERNAL ADAPTER AREA
16. ZONE FOR ENTIRE SPACECRAFT

GEMINI SPACECRAFT NO. 2

ZONE NO. PALLET "A" R/H

TOTAL EQUIPMENT REQUIRED 8

EQUIPMENT ON HAND 8

EQUIPMENT TO SCHEDULE 0

EQUIPMENT LATE 0

PART NO.	PART NAME	NORM. INST.	SLACK	DEF. INST.	SLACK	HOURS TO INSTALL

12/30/63

GEMINI ZONE CHART

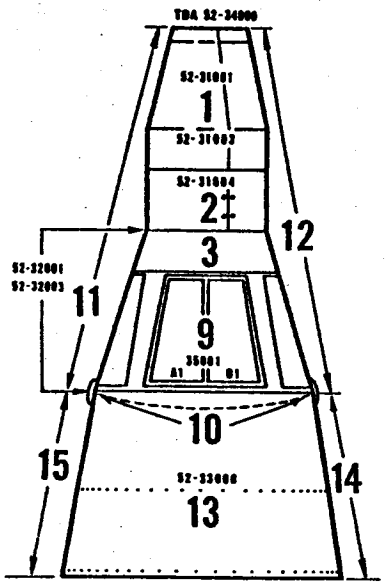

TOP VIEW

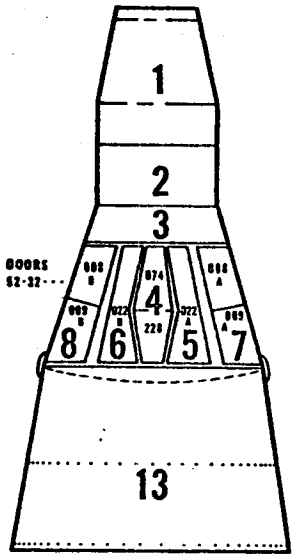

BOTTOM VIEW

1. RENDEZVOUS AND RADAR MODULE
2. RE-ENTRY RCS MODULE
3. FORWARD AREA CONE
4. CENTER EQUIPMENT BAY
5. L/H LANDING GEAR BAY
6. R/H LANDING GEAR BAY
7. L/H EQUIPMENT BAY
8. R/H EQUIPMENT BAY
9. CREW PRESSURIZED AREA
10. EXTERIOR AREA OF LARGE PRESS. BULKHEAD
11. SPACECRAFT EXTERIOR L/H
12. SPACECRAFT EXTERIOR R/H
13. INTERNAL ADAPTER AREA
14. R/H EXTERNAL ADAPTER AREA
15. L/H EXTERNAL ADAPTER AREA
16. ZONE FOR ENTIRE SPACECRAFT

GEMINI SPACECRAFT NO. 2

ZONE NO. PALLET "B" L/H

TOTAL EQUIPMENT REQUIRED 13

EQUIPMENT ON HAND 13

EQUIPMENT TO SCHEDULE 0

EQUIPMENT LATE 0

PART NO.	PART NAME	NORM. INST.	SLACK	DEF. INST.	SLACK	HOURS TO INSTALL

12/30/63

GEMINI ZONE CHART

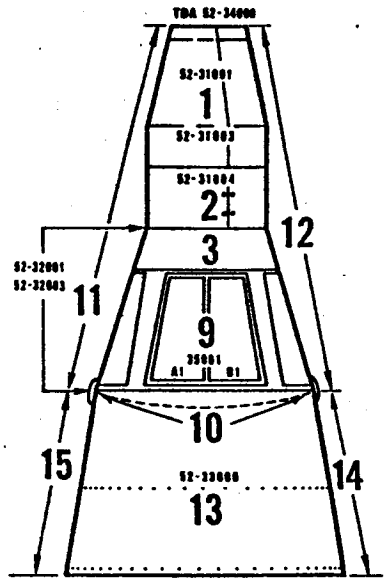

TOP VIEW

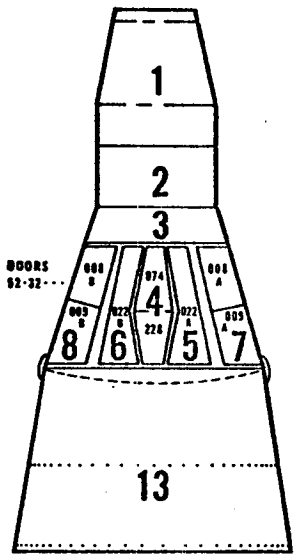

BOTTOM VIEW

1. RENDEZVOUS AND RADAR MODULE
2. RE-ENTRY RCS MODULE
3. FORWARD AREA CONE
4. CENTER EQUIPMENT BAY
5. L/H LANDING GEAR BAY
6. R/H LANDING GEAR BAY
7. L/H EQUIPMENT BAY
8. R/H EQUIPMENT BAY
9. CREW PRESSURIZED AREA
10. EXTERIOR AREA OF LARGE PRESS. BULKHEAD
11. SPACECRAFT EXTERIOR L/H
12. SPACECRAFT EXTERIOR R/H
13. INTERNAL ADAPTER AREA
14. R/H EXTERNAL ADAPTER AREA
15. L/H EXTERNAL ADAPTER AREA
16. ZONE FOR ENTIRE SPACECRAFT

GEMINI SPACECRAFT NO. 2

ZONE NO. PALLET "B" R/H

TOTAL EQUIPMENT REQUIRED 9

EQUIPMENT ON HAND 9

EQUIPMENT TO SCHEDULE 0

EQUIPMENT LATE 0

PART NO.	PART NAME	NORM. INST.	SLACK	DEF. INST.	SLACK	HOURS TO INSTALL

12/30/63

GEMINI ZONE CHART

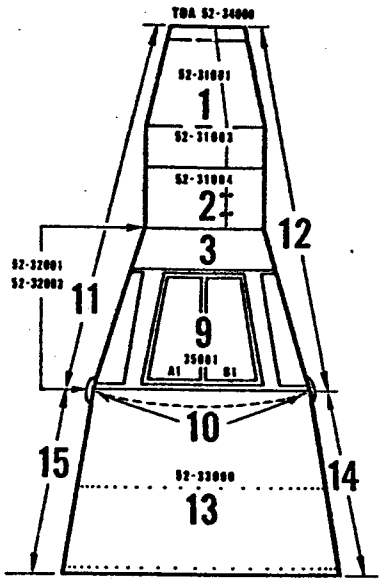

TOP VIEW

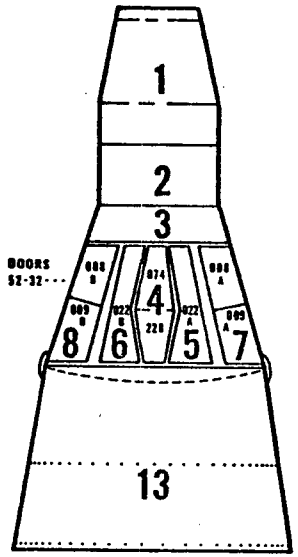

BOTTOM VIEW

1. RENDEZVOUS AND RADAR MODULE
2. RE-ENTRY RCS MODULE
3. FORWARD AREA CONE
4. CENTER EQUIPMENT BAY
5. L/H LANDING GEAR BAY
6. R/H LANDING GEAR BAY
7. L/H EQUIPMENT BAY
8. R/H EQUIPMENT BAY
9. CREW PRESSURIZED AREA
10. EXTERIOR AREA OF LARGE PRESS. BULKHEAD
11. SPACECRAFT EXTERIOR L/H
12. SPACECRAFT EXTERIOR R/H
13. INTERNAL ADAPTER AREA
14. R/H EXTERNAL ADAPTER AREA
15. L/H EXTERNAL ADAPTER AREA
16. ZONE FOR ENTIRE SPACECRAFT

GEMINI SPACECRAFT NO. 2

ZONE NO. PEDESTAL

TOTAL EQUIPMENT REQUIRED 15

EQUIPMENT ON HAND 13

EQUIPMENT TO SCHEDULE 0

EQUIPMENT LATE 2

PART NO.	PART NAME	NORM. INST.	SLACK	DEF. INST.	SLACK	HOURS TO INSTALL
52-83146-1	MANUAL CONT. VALVE	81002-501	-10	00005-A1	0	2
83156-1	CABIN TEMP. VALVE	"	-10	00005-A1	0	2

12/20/63

GEMINI ZONE CHART

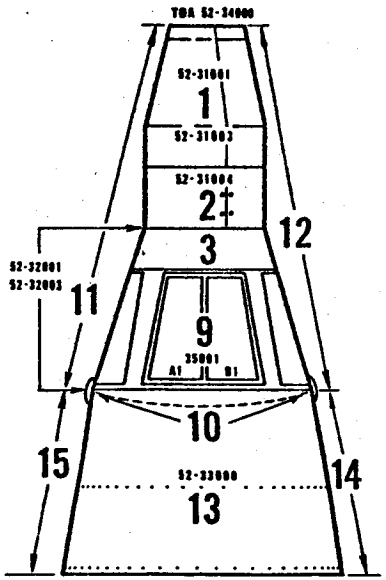

TOP VIEW

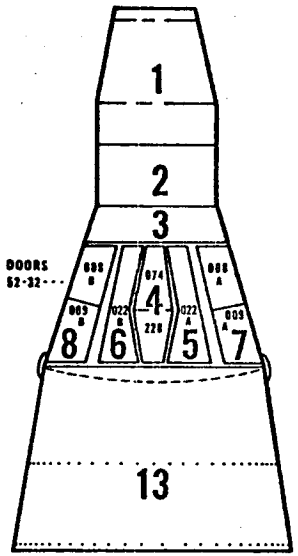

BOTTOM VIEW

1. RENDEZVOUS AND RADAR MODULE
2. RE-ENTRY RCS MODULE
3. FORWARD AREA CONE
4. CENTER EQUIPMENT BAY
5. L/H LANDING GEAR BAY
6. R/H LANDING GEAR BAY
7. L/H EQUIPMENT BAY
8. R/H EQUIPMENT BAY
9. CREW PRESSURIZED AREA
10. EXTERIOR AREA OF LARGE PRESS. BULKHEAD
11. SPACECRAFT EXTERIOR L/H
12. SPACECRAFT EXTERIOR R/H
13. INTERNAL ADAPTER AREA
14. R/H EXTERNAL ADAPTER AREA
15. L/H EXTERNAL ADAPTER AREA
16. ZONE FOR ENTIRE SPACECRAFT

GEMINI SPACECRAFT NO. 2

ZONE NO. OAMS MOD.

TOTAL EQUIPMENT REQUIRED 21

EQUIPMENT ON HAND 21

EQUIPMENT TO SCHEDULE 0

EQUIPMENT LATE 0

PART NO.	PART NAME	NORM. INST.	SLACK	DEF. INST.	SLACK	HOURS TO INSTALL

12/30/63

GEMINI ZONE CHART

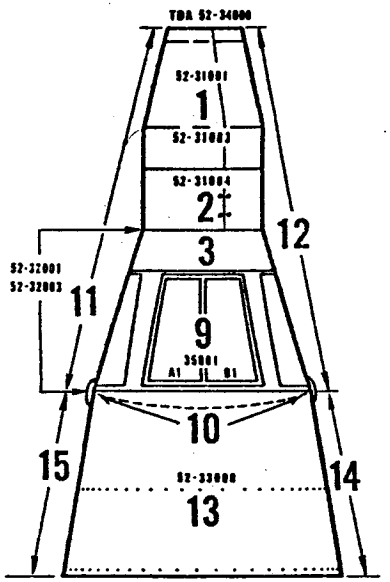

TOP VIEW

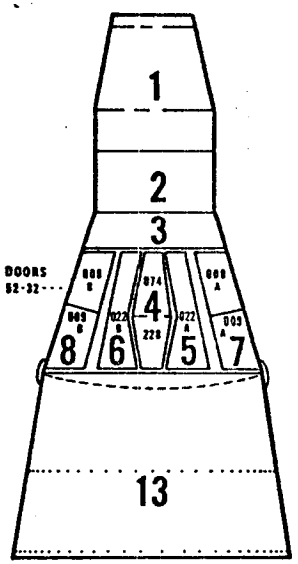

BOTTOM VIEW

1. RENDEZVOUS AND RADAR MODULE
2. RE-ENTRY RCS MODULE
3. FORWARD AREA CONE
4. CENTER EQUIPMENT BAY
5. L/H LANDING GEAR BAY
6. R/H LANDING GEAR BAY
7. L/H EQUIPMENT BAY
8. R/H EQUIPMENT BAY
9. CREW PRESSURIZED AREA
10. EXTERIOR AREA OF LARGE PRESS. BULKHEAD
11. SPACECRAFT EXTERIOR L/H
12. SPACECRAFT EXTERIOR R/H
13. INTERNAL ADAPTER AREA
14. R/H EXTERNAL ADAPTER AREA
15. L/H EXTERNAL ADAPTER AREA
16. ZONE FOR ENTIRE SPACECRAFT

GEMINI SPACECRAFT NO. 2

ZONE NO. ECS O_2 MODULE

TOTAL EQUIPMENT REQUIRED 5

EQUIPMENT ON HAND 5

EQUIPMENT TO SCHEDULE 0

EQUIPMENT LATE 0

PART NO.	PART NAME	NORM. INST.	SLACK	DEF. INST.	SLACK	HOURS TO INSTALL

12/30/63

GEMINI ZONE CHART

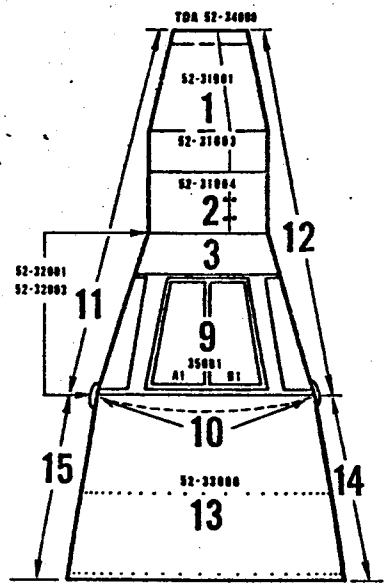

TOP VIEW

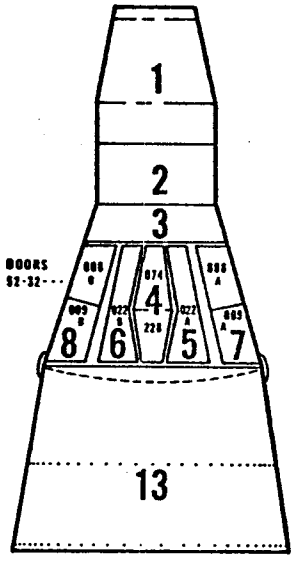

BOTTOM VIEW

1. RENDEZVOUS AND RADAR MODULE
2. RE-ENTRY RCS MODULE
3. FORWARD AREA CONE
4. CENTER EQUIPMENT BAY
5. L/H LANDING GEAR BAY
6. R/H LANDING GEAR BAY
7. L/H EQUIPMENT BAY
8. R/H EQUIPMENT BAY
9. CREW PRESSURIZED AREA
10. EXTERIOR AREA OF LARGE PRESS. BULKHEAD
11. SPACECRAFT EXTERIOR L/H
12. SPACECRAFT EXTERIOR R/H
13. INTERNAL ADAPTER AREA
14. R/H EXTERNAL ADAPTER AREA
15. L/H EXTERNAL ADAPTER AREA
16. ZONE FOR ENTIRE SPACECRAFT

GEMINI SPACECRAFT NO. 2

ZONE NO. ECS O_2 PUMP MODULE

TOTAL EQUIPMENT REQUIRED 21

EQUIPMENT ON HAND 13

EQUIPMENT TO SCHEDULE 8

EQUIPMENT LATE 0

PART NO.	PART NAME	NORM. INST.	SLACK	DEF. INST.	SLACK	HOURS TO INSTALL

12/30/63

GEMINI ZONE CHART

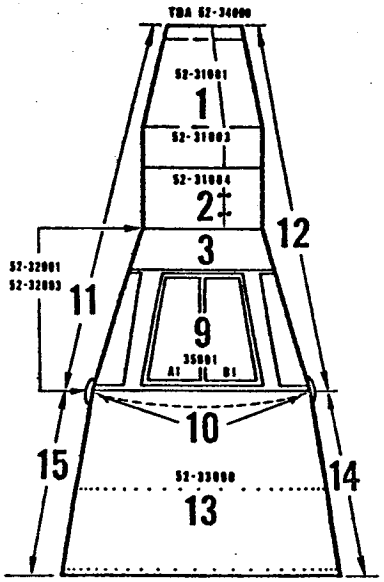

TOP VIEW

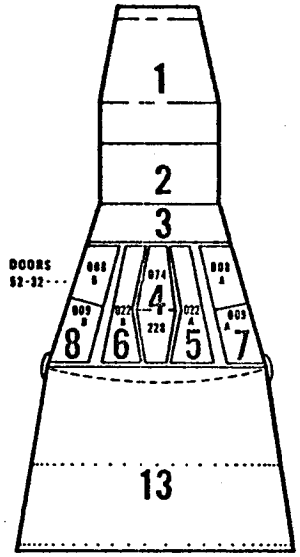

BOTTOM VIEW

1. RENDEZVOUS AND RADAR MODULE
2. RE-ENTRY RCS MODULE
3. FORWARD AREA CONE
4. CENTER EQUIPMENT BAY
5. L/H LANDING GEAR BAY
6. R/H LANDING GEAR BAY
7. L/H EQUIPMENT BAY
8. R/H EQUIPMENT BAY
9. CREW PRESSURIZED AREA
10. EXTERIOR AREA OF LARGE PRESS. BULKHEAD
11. SPACECRAFT EXTERIOR L/H
12. SPACECRAFT EXTERIOR R/H
13. INTERNAL ADAPTER AREA
14. R/H EXTERNAL ADAPTER AREA
15. L/H EXTERNAL ADAPTER AREA
16. ZONE FOR ENTIRE SPACECRAFT

GEMINI SPACECRAFT NO. 2

ZONE NO. ELECTRONIC MODULE

TOTAL EQUIPMENT REQUIRED 21

EQUIPMENT ON HAND 20

EQUIPMENT TO SCHEDULE 1

EQUIPMENT LATE 0

PART NO.	PART NAME	NORM. INST.	SLACK	DEF. INST.	SLACK	HOURS TO INSTALL

12/30/63

GEMINI ZONE CHART

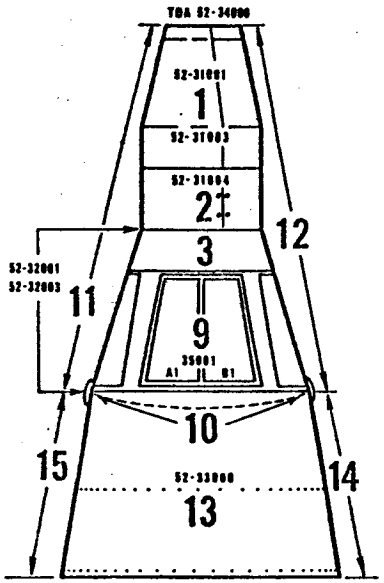

TOP VIEW

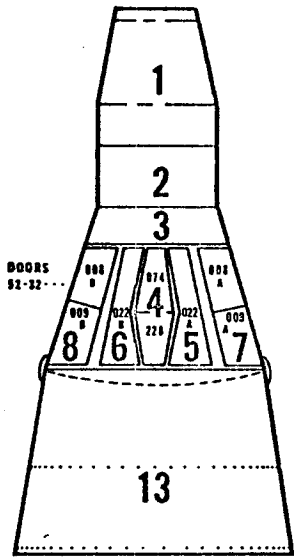

BOTTOM VIEW

1. RENDEZVOUS AND RADAR MODULE
2. RE-ENTRY RCS MODULE
3. FORWARD AREA CONE
4. CENTER EQUIPMENT BAY
5. L/H LANDING GEAR BAY
6. R/H LANDING GEAR BAY
7. L/H EQUIPMENT BAY
8. R/H EQUIPMENT BAY
9. CREW PRESSURIZED AREA
10. EXTERIOR AREA OF LARGE PRESS. BULKHEAD
11. SPACECRAFT EXTERIOR L/H
12. SPACECRAFT EXTERIOR R/H
13. INTERNAL ADAPTER AREA
14. R/H EXTERNAL ADAPTER AREA
15. L/H EXTERNAL ADAPTER AREA
16. ZONE FOR ENTIRE SPACECRAFT

GEMINI SPACECRAFT NO. 2

ZONE NO. FUEL CELL

TOTAL EQUIPMENT REQUIRED 35

EQUIPMENT ON HAND 17

EQUIPMENT TO SCHEDULE 16

EQUIPMENT LATE 2

PART NO.	PART NAME	NORM. INST.	SLACK	DEF. INST.	SLACK	HOURS TO INSTALL
52-79700-9	FUEL CELL (2)	MOD INSTAL.	-31	00002 -A2	0	4

12/30/63

GEMINI ZONE CHART

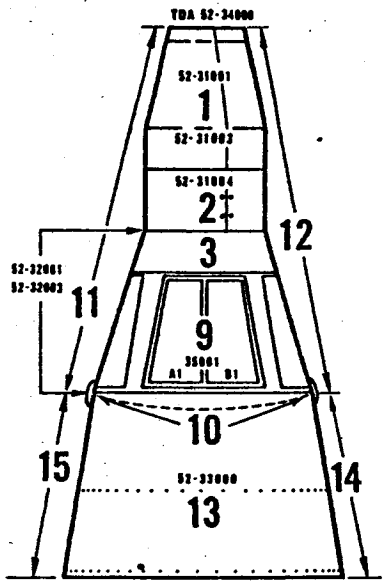

TOP VIEW

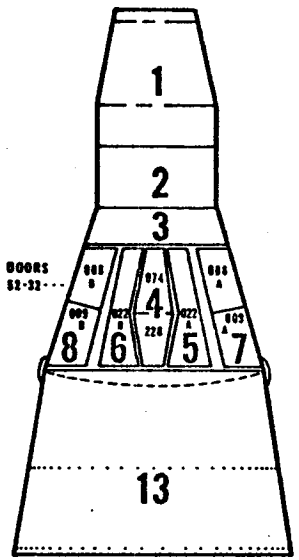

BOTTOM VIEW

1. RENDEZVOUS AND RADAR MODULE
2. RE-ENTRY RCS MODULE
3. FORWARD AREA CONE
4. CENTER EQUIPMENT BAY
5. L/H LANDING GEAR BAY
6. R/H LANDING GEAR BAY
7. L/H EQUIPMENT BAY
8. R/H EQUIPMENT BAY
9. CREW PRESSURIZED AREA
10. EXTERIOR AREA OF LARGE PRESS. BULKHEAD
11. SPACECRAFT EXTERIOR L/H
12. SPACECRAFT EXTERIOR R/H
13. INTERNAL ADAPTER AREA
14. R/H EXTERNAL ADAPTER AREA
15. L/H EXTERNAL ADAPTER AREA
16. ZONE FOR ENTIRE SPACECRAFT

GEMINI SPACECRAFT NO. 2

ZONE NO. 9 81000-501 L.H. M.I.P.

TOTAL EQUIPMENT REQUIRED 23

EQUIPMENT ON HAND 16

EQUIPMENT TO SCHEDULE 0

EQUIPMENT LATE 7

PART NO.	PART NAME	NORM. INST.	SLACK	DEF. INST.	SLACK	HOURS TO INSTALL
52-81702-3	LINEAR ACCELMETER IND	81000-501	-7	00005-A1	+2	4
81701-3	ALTIMETER IND.	"	-9	"	0	2
87712-5	INCREMENT VEL IND.	"	-9	"	0	2
A05A0018	EVENT TIMER	"	-9	"	0	2
87702-17	ATTITUDE DISPLAY IND	"	-9	"	0	1
81713-7	PROPELLANT QTY. IND.	"	-9	"	0	1
81723-3	RATE DESCENT IND.	"	-9	"	0	1

GEMINI ZONE CHART

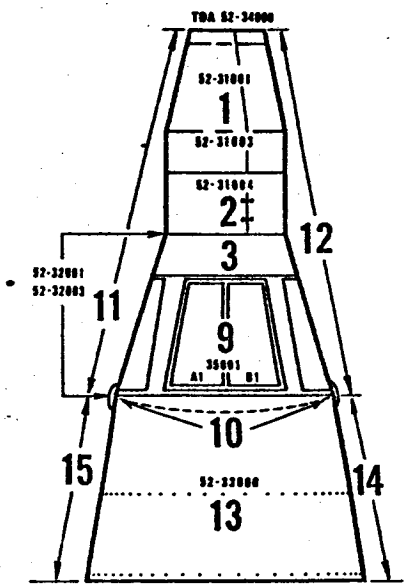

TOP VIEW

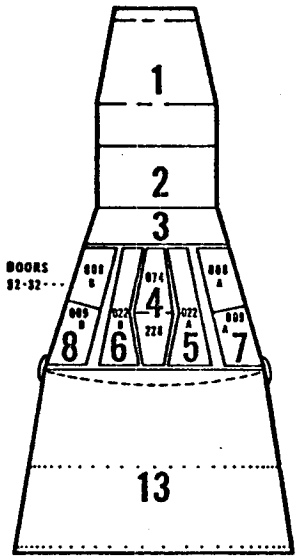

BOTTOM VIEW

1. RENDEZVOUS AND RADAR MODULE
2. RE-ENTRY RCS MODULE
3. FORWARD AREA CONE
4. CENTER EQUIPMENT BAY
5. L/H LANDING GEAR BAY
6. R/H LANDING GEAR BAY
7. L/H EQUIPMENT BAY
8. R/H EQUIPMENT BAY
9. CREW PRESSURIZED AREA
10. EXTERIOR AREA OF LARGE PRESS. BULKHEAD
11. SPACECRAFT EXTERIOR L/H
12. SPACECRAFT EXTERIOR R/H
13. INTERNAL ADAPTER AREA
14. R/H EXTERNAL ADAPTER AREA
15. L/H EXTERNAL ADAPTER AREA
16. ZONE FOR ENTIRE SPACECRAFT -

GEMINI SPACECRAFT NO. 2

ZONE NO. 9 81000-502 R.H. M.I.P.

TOTAL EQUIPMENT REQUIRED 23

EQUIPMENT ON HAND 17

EQUIPMENT TO SCHEDULE 0

EQUIPMENT LATE 6

PART NO.	PART NAME	NORM. INST.	SLACK	DEF. INST.	SLACK	HOURS TO INSTALL
87713-7	MANU. DATA KEY BOARD	81000 -502	-9	00005 -A1	0	4
-9	MANU. DATA READOUT	"	-9	"	0	2
87702-17	ATTITUDE DISPLAY	"	-9	"	0	1
J05A0001	CLOCK	"	-9	"	0	1
81711-3	FUEL CELL	"	-9	"	0	1
87702-19	FLIGHT IND.	"	-9	"	0	2

GEMINI ZONE CHART

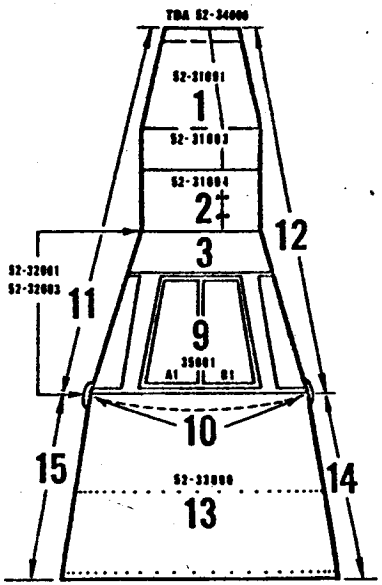

TOP VIEW

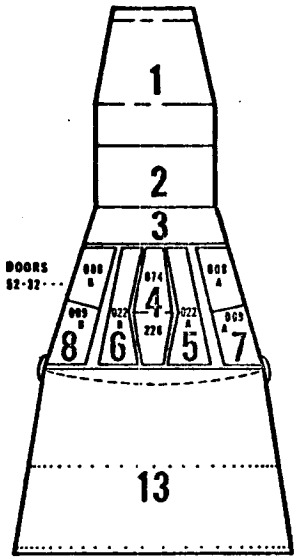

BOTTOM VIEW

1. RENDEZVOUS AND RADAR MODULE
2. RE-ENTRY RCS MODULE
3. FORWARD AREA CONE
4. CENTER EQUIPMENT BAY
5. L/H LANDING GEAR BAY
6. R/H LANDING GEAR BAY
7. L/H EQUIPMENT BAY
8. R/H EQUIPMENT BAY
9. CREW PRESSURIZED AREA
10. EXTERIOR AREA OF LARGE PRESS. BULKHEAD
11. SPACECRAFT EXTERIOR L/H
12. SPACECRAFT EXTERIOR R/H
13. INTERNAL ADAPTER AREA
14. R/H EXTERNAL ADAPTER AREA
15. L/H EXTERNAL ADAPTER AREA
16. ZONE FOR ENTIRE SPACECRAFT

GEMINI SPACECRAFT NO. 2

ZONE NO. 9 81000-503 UPPER M.I.P.

TOTAL EQUIPMENT REQUIRED 46

EQUIPMENT ON HAND 40

EQUIPMENT TO SCHEDULE 0

EQUIPMENT LATE 6

PART NO.	PART NAME	NORM. INST.	SLACK	DEF. INST.	SLACK	HOURS TO INSTALL
52-83700-281	ECD O2 & PRESS	81000 -503	-9	00005 -A1	0	2
81710-3	CABIN SUIT TEMP	"	-9	"	0	2
-5	" " "	"	-9	"	0	2
-9	" " "	"	-9	"	0	2
83701-125	INDICATOR	"	-9	"	0	2
-127	"	"	-9	"	0	2

27 December 1963

SUBJECT: GEMINI STATUS REPORT FOR THE PERIOD 30 NOVEMBER 1963 THRU 27 DECEMBER 1963 - SPACECRAFT NUMBER TWO

1. RECAPITULATION

The Cabin Assembly for this spacecraft is located in the White Room where final assembly operations are in progress. Shingles are in work in all areas of the spacecraft. First fitting has been completed and final fitting is in work and nearing completion. Thermocouples are being installed as the shingles are completed. The shingles on the hatches have been fitted and thermocouples on the windows are being installed. The -209 Wire Bundle in the Z160 Bay is approximatly 90% complete and the Cabin wire bundles are being installed from the plugs on the small pressure bulkhead. Structure work in the Z160 bay has been completed and the static system has been worked up to the Baroswitches.

The R & R Section for this unit is located in the White Room where final assembly operations are in progress. The inner retainers and fitting of blankets has been completed.

The RCS Section for this unit is also located in the White Room where final assembly operations are in progress. Line brazing has been worked up to the tanks, packages, and thrust chambers. The styrofoam block has been trial fitted.

The Adapter for this unit entered the White Room 15 December 1963 and final assembly is in work. OAMS line brazing, build up of wire bundles and coolant lines are in work. The aluminum fold installation was completed in the White Room.

2. FORECAST

The following major events are scheduled for accomplishment during the next thirty day period. Installation of Wire Bundles in the Cabin and Equipment Bays is scheduled to be completed. Thermocouples are to be spliced and tested. DITMCO is to be completed. Temperature Sensors will be installed and tested after DITMCO. The final fitting of the Coolant Lines is in work and should be complete by the middle of the month. The Static System will be completed and pressure tested. The final fitting of the Heat Shingles and Equipment Doors will be accomplished by the middle of the month. The ECS Package and system will be installed.

RCS plumbing and pressure test is scheduled to be completed. Wire Bundles, Thermocouples and Temperature Sensors will also be installed after the brazing is completed. The tanks, packages and thrust chambers will also be installed. DITMCO, Temperature Sensor, and Thermocouple testing will be complete.

Adapter OAMS lines, coolant lines and second solder of the wire bundles will be completed. Equipment will be installed

GEMINI MANUFACTURING WORK PLAN - SPACECRAFT NO. 3A

[redacted]

NOTES:

1. THIS MFG. WORK PLAN IS BASED ON CONFIGURATION DEFINITION AS OF STATUS DATE.
2. NUMBERS PRECEDING COMPONENT OR SYSTEM INSTALLATION REPRESENT SEQUENCE OF ASSEMBLY INSTALLATION.
3. PROGRESSIVE INSPECTION PERFORMED THROUGHOUT ASSEMBLY OPERATIONS.
4. NUMBERS AT BARS SHOW SCHEDULE STATUS AS OF REPORTING DATE IN WEEKS BY +/-CONDITION. "0" INDICATES ON SCHEDULE.
5. THIS SCHEDULE IS BASED ON A 6 DAY WORK WEEK
6. REFERENCE SUPPLEMENT WORK PLANS FOR SST DETAIL.

[redacted]

INSTALLATIONS

2. DECONTAMINATE
4. STYROFOAM BLOCKS
5. ECS & WATER LINES
6. COLDPLATES
7. WELD ASSEMBLY
8. PRESSURE TRANSDUCERS
9. TEMPERATURE SENSORS
10. PITOT STATIC LINES
11. BAROSWITCH
12. ABORT HANDLE
13. CABLE ASSEMBLIES
15. COVERS
16. H_2O_2 COOLANT LINES
17. INERTIAL PLATFORM
18. PYROTECHNIC SWITCH BODY
19. PYROTECHNIC ACTUATOR
20. PYROTECHNIC VALVE BODY
21. LANDING SYSTEM PARACHUTE EQUIP.
22. SHUT-OFF & VENTILATION VALVES
23. INFLOW & SNORKEL DUCTS
24. CABIN HEAT EXCHANGER
25. CABIN PRESS. & WATER VALVE
26. SECONDARY O_2 - ECS
27. QUADRANT ASSY.
28. LINKAGE ASSY.
29. WIRE HARNESS & HARDWARE

INSPECTIONS

1. O.K. TO INSTALL EQUIPMENT
3. CABIN LEAKAGE CHECK
14. O.K. TO INSTALL COVERS

[redacted]

INSTALLATIONS

5. ECS PRESSURE SWITCH
6. ECS WATER STORAGE TANK
4. BIO. MED. CONVERTER
5. RECOVERY LIGHT
6. "C" BAND ANTENNA
7. POWER DIVIDER
8. HF WHIP ANTENNA
9. UHF RECOVERY & DESCENT ANTENNA ASSYS.
10. POWER INVERTER
11. ATTITUDE CONTROL ELECTRONICS
12. MONITORING CONTROL UNIT
13. AUXILIARY POWER UNIT
14. ELECT. PACKAGE
15. DOOR ASSEMBLIES
16. HATCH ACTUATOR BODY
17. ROCKET CATAPULT
18. MANUAL FIRING MECH.
19. SUIT COMPRESSOR FAN
20. HI FREQUENCY TRANSMITTER
21. UHF VOICE TRANSCEIVER
22. LO-FREQUENCY TRANSMITTER
23. COAX. SWITCH
24. "C" BAND BEACON
25. HF VOICE TRANSCEIVER
26. PROGRAMMER
27. CAB. FAN POWER SUPPLY
28. SUIT COMPRESS. POWER SUPPLY
29. CONVERTER & REGULATOR
30. REF. TEMP. BOX
31. MANIPULATORS HI & LO
32. INSTRUMENTATION ASSY.
33. UHF RECOVERY BEACON
34. ECS DRINKING WATER TANK
35. HATCH ACTUATOR LOCK RELEASE
37. FIBERGLASS, MIN-K & SHINGLES

INSPECTIONS

1. O.K. TO INSTALL EQUIPMENT
36. BRINCO

[redacted]

INSTALLATIONS

2. ECS PACKAGE
3. ACCELEROMETERS
4. ELECTRIC TIMER
5. FOOD & WASTE CONTAINER
6. MANEUVERING CONTROL HANDLE
7. ATTITUDE CONTROL HANDLE
8. TAPE RECORDER
9. SYSTEM ELECT.
10. POWER SUPPLY
11. SENSOR HEAD PLATFORM
13. FLIPPER DOORS

INSPECTIONS

1. O.K. TO INSTALL EQUIPMENT
12. PRESSURE TEST
23. SEATS

SST PHASE I

14. COOLANT SYSTEM
15. LEAK & VALIDATION
16. ELECTRICAL SYSTEM
17. SEQUENTIAL SYSTEM
18. VSWR
19. COMMUNICATIONS SYSTEM
20. INSTRUMENTATION SYSTEM
21. MECHANISMS SYSTEM
22. ECS FUNCTIONAL SYSTEM

[redacted]

INSTALLATIONS

2. SENSOR HEADS
3. SENSOR FAIRING
4. OPTICAL ALIGN
5. ALIGN PLATFORM SCANNERS & RADAR
6. RATE GYRO
7. INERTIAL PLATFORM
8. COMPUTER
9. HEAT SHIELD ASSY.
10. CABIN LIGHTS
14. FAIRINGS
15. ELECTRICAL CLEAN-UP
16. MECHANICAL CLEAN-UP
18. RCS ASSY.
19. R & R ASSY.
21. ADAPTER ASSY.

INSPECTIONS

1. O.K. TO INSTALL EQUIPMENT

SST PHASE I

11. 106 TEST
12. ACME TEST
13. HORIZON SENSOR
17. COMPANY INSPECTION
20. CUSTOMER INSPECTION

[redacted]

INSPECTION & S.S.T.

OVERALL FUNCT. CHECK

1. COOLANT SYS. SERVICING
2. ELECT
3. SEQUENTIAL
4. VSWR
5. COMMUNICATIONS
6. INSTRUMENTATION
7. G & C
8. ECS
9. INSTR SERVICING
10. VIBRATION
11. HI PRESSURE O_2
12. ALTITUDE CHAMBER

STRUCT. WELD ASS'Y -3

CABIN — INTERMEDIATE ASS'Y -2

FINAL ASS'Y — A4 — A3 — A2 — A1 — EOD -4

TO WHITE ROOM

HATCH — STRUCT. ASSY. -17

INSTRUMENT PANEL & ASS'Y

LARGE PRESS BULKHEAD — STRUCT. ASSY. — INSTALL 0

RCS MODULE — STRUCT. ASSY — A2 — A1 & SST

TO WHITE ROOM

EQUIP. DOORS — STRUCT. ASSY. -7

SST & FINAL ACCEPT — VIBR. — INSTR. — A3 — A1 0

[redacted]

INSTALLATIONS

1. DECONTAMINATE
2. RELAY PANEL ASSYS
3. DETONATOR HOUSING
4. FUEL TANK
5. OXIDIZER TANK
6. PRESSURE REGULATOR
7. PRESSURE TANK
8. COMPONENT PACKAGE "A" (2)
9. COMPONENT PACKAGE "B" (2)
10. COMPONENT PACKAGE "C" (2)
11. COMPONENT PACKAGE "D" (2)
12. THRUST CHAMBER ASSYS (16)
14. BRAZE LINES & FITTINGS
17. INSTALL WIRE HARNESS

INSPECTIONS

13. OK TO BRAZE FITTINGS
15. X-RAY FITTINGS
16. LEAK TEST
18. ELECT CONTINUITY CHECK

[redacted]

INSTALLATIONS

1. INSTALL PARACHUTE ADAPTER
2. DYE MARKER
3. WHIP ANTENNA

INSPECTIONS

4. COMPANY INSPECTION
5. CUSTOMER INSPECTION

[redacted]

INSTALLATIONS

3. MOVE TO BLDG. 62
6. MOVE TO WHITE ROOM

INSPECTIONS

1. ELEC. SYS.
2. LEAK & VALID
4. RCS SERVICING
5. RCS STATIC FIRE

[redacted]

INSTALLATIONS

1. PRE DELIVERY CLEAN UP
2. INSTALL INSULATION BLANKETS
3. INSTALL SHINGLES
4. INSTALL MIRROR ASSEMBLIES
5. INSTALL DOORS - EQUIP

INSPECTIONS

6. GENERAL INSPECTION

[redacted]

INSTALLATIONS

5. INTERNAL PAINT TOUCH UP
6. EXTERNAL PAINTING AND MARKINGS
7. DECONTAMINATE SPACECRAFT
8. FINAL INSTALLATION OF HATCHES
11. TRANSFER TO SHIPPING DOLLY
13. INSTALL SHIPPING COVERS

INSPECTIONS OR S.S.T.

1. RCS-OAMS TEST
2. VALIDATION CHECKS
3. CALIBRATION CHECKS
4. FINAL SIMULATED MISSION
9. COMPANY INSPECTION
10. CUSTOMER INSPECTION
12. PREPARE FOR FINAL SHIPMENT

RENDEZVOUS & RECOVERY MODULE — STRUCT. ASSY — A2 — A1 & SST

TO WHITE ROOM

[redacted]

INSTALLATION

1. UHF STUB ANTENNA
2. INSTALL WIRE HARNESS

INSPECTION

3. WIRE HARNESS CONTINUITY CHECK

[redacted]

INSTALLATIONS

1. PARACHUTE CONTAINERS
2. RADAR
3. INSTALL NOSE CAP

INSPECTIONS

4. COMPANY INSPECTION
5. CUSTOMER INSPECTION

[redacted]

1. ELECT. SYS. FUNCTION
2. INSTR. SYS. FUNCTION
3. RADAR SYS. FUNCTION
4. RADAR COMPATABILITY
5. RADAR BORE SIGHT

[redacted]

INSTALLATIONS

1. DECONTAMINATE
2. T/C ASS'Y. PITCH, ROLL, YAW
3. T/C ASS'Y. LATERAL & VERTICAL
4. T/C ASS'Y. FORWARD & AFT
6. BRAZE TUBES
7. "C" BAND ANTENNA
8. "S" BAND ANTENNA
9. UHF ANTENNA
10. INSTALL COOLANT LINES
11. ECS O_2 WASTE & DRINKING EQUIP.
12. INSTALL WIRE HARNESS ASS'YS.

INSPECTIONS

5. O.K. TO BRAZE
13. WIRE HARNESS

RETRO ROCKET — SUP. STRUCT. +26

PRESS & FLOW INSP. +15

PANEL — ASSY

MODULE ASSY. — STRUCT — INSTALL +2

EQUIP. INSTL. & SST

FROM RADIATOR TEST

+17

LAUNCH ADAPTER — STRUCT. ASS'Y — A3 — A2 — A1 0

TO WHITE ROOM

TO RADIATOR TEST

[redacted]

INSTALLATIONS

1. INSTALL RELAY PANELS
2. TRIAL INSTALL DUMMY RETRO ROCKETS
3. CUTTER & SEALER ASSY'S
4. GUILLOTINE BODIES

INSPECTIONS

5. COOLANT SYSTEM PRESSURE TEST
6. GENERAL INSPECTION

[redacted]

INSTALLATIONS

1. INSTALL OAMS MODULE
2. INSTALL FUEL CELL MODULE
3. INSTALL ELECTRICAL MODULE
4. INSTALL ECS O_2 & PUMP MODULES
5. HOOK-UP WIRE BUNDLES
7. CLEAN-UP

INSPECTIONS

6. ELECTRICAL CONTINUITY CHECKS
8. COMPANY INSPECTION
9. CUSTOMER INSPECTION

3 10 17 24 31 7 14 21 28 5 12 19 26 2 9 16 23 30 7 14 21 28 4 11 18 25 1 8 15 22 29 6 13 20 27 3 10 17 24 1 8 15 22 29 5 12 19 26 2 9 16 23 1 8 15 22 29 5 12 19 26 3 10 17 24 31 7 14 21 28 5 12 19 26 2 9 16 23 30 6 13 20 27 4 11 18 25 1 8 15 22 29

MAR APR MAY JUN JUL AUG SEP OCT NOV DEC JAN FEB MAR APR MAY JUN JUL AUG SEP OCT NOV

1963 — 27 DEC. 1963 STATUS DATE — 1964

12-133P-11-03

[redacted]

GEMINI SPACECRAFT NO. 3A
EQUIPMENT STUDY

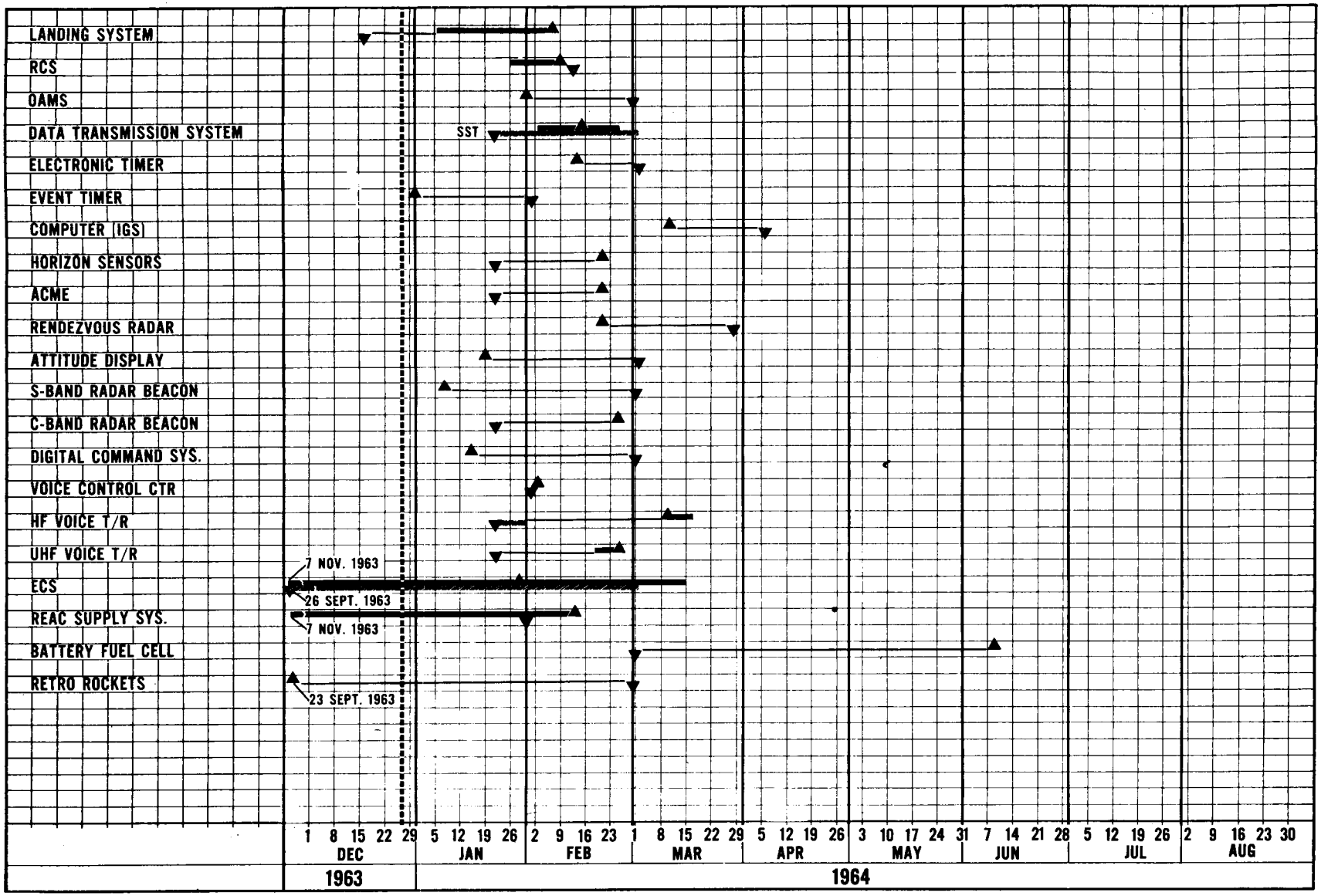

STATUS DATE: 27 DECEMBER 1963

S C 3A WORK PLAN MODULE FINAL ASSY

RCS	2		
1. INSTALL PLUMBING & PRESSURE TEST			
2. INSTALL W/B - T/C - T/S			
3. FIBERGLASS CHANNELS - MIN - K - INSULATION			
4. INSTALL EQUIP			
5. INSTALL SHINGLES - RETAINERS			
6. DITMCO - T/C - T/S TEST			
7. S S T			
8. INSTALL THRUST CHAMBERS			
9. INSTALL STYROFOAM			
10. NASA/MAC INSPECTION			
R & R	1		
11. INSTALL W/B - T/C - T/S			
12. FIBERGLASS CHANNELS - MIN - K - INSULATION			
13. INSTALL EQUIP			
14. INSTALL SHINGLES - RETAINERS			
15. DITMCO - T/C - T/S TEST			
16. S S T			
17. NASA/MAC INSPECTION			
ADAPTER	13		
18. INSTALL PLUMBING & PRESSURE TEST			
19. INSTALL W/B - T/C - T/S			
20. INSTALL EQUIPMENT			
21. DTMCO - T/C - T/S TEST			
22. S S T			
23. NASA/MAC INSPECTION			
LEGEND: WORK PERIOD	ZONE	TOTAL HRS.	OPEN HRS.

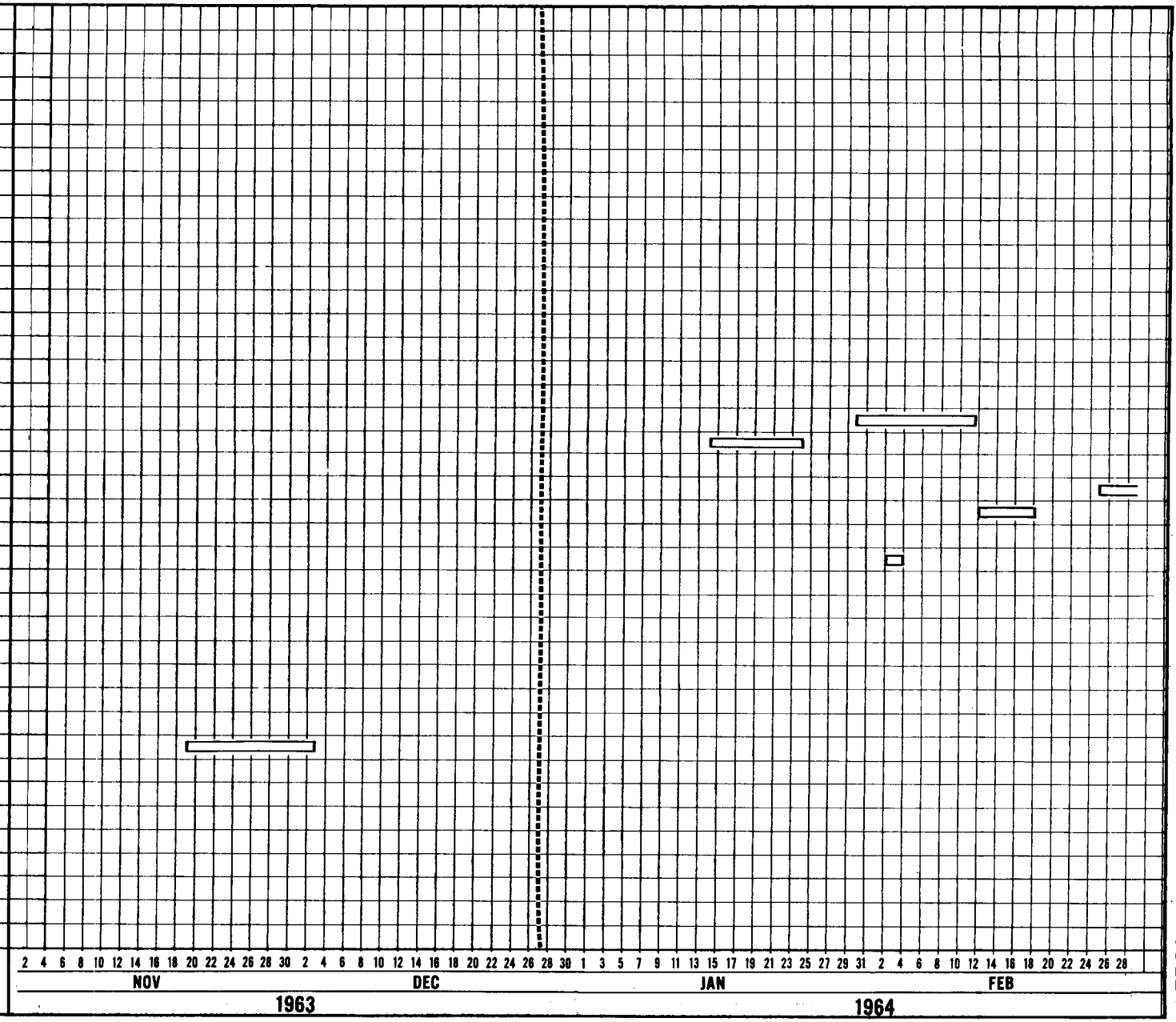

14 STATUS AS OF: 27 DEC 1963

S C 3A WORK PLAN MODULE FINAL ASSY

RCS	2	
1. INSTALL PLUMBING & PRESSURE TEST		
2. INSTALL W/B - T/C - T/S		
3. FIBERGLASS CHANNELS - MIN - K - INSULATION		
4. INSTALL EQUIP		
5. INSTALL SHINGLES - RETAINERS		
6. DITMCO - T/C - T/S TEST		
7. S S T		
8. INSTALL THRUST CHAMBERS		
9. INSTALL STYROFOAM		
10. NASA/MAC INSPECTION		
R & R	1	
11. INSTALL W/B - T/C - T/S		
12. FIBERGLASS CHANNELS - MIN - K - INSULATION		
13. INSTALL EQUIP		
14. INSTALL SHINGLES - RETAINERS		
15. DITMCO - T/C - T/S TEST		
16. S S T		
17. NASA/MAC INSPECTION		
ADAPTER	13	
18. INSTALL PLUMBING & PRESSURE TEST		
19. INSTALL W/B - T/C - T/S		
20. INSTALL EQUIPMENT		
21. DTMCO - T/C - T/S TEST		
22. S S T		
23. NASA/MAC INSPECTION		

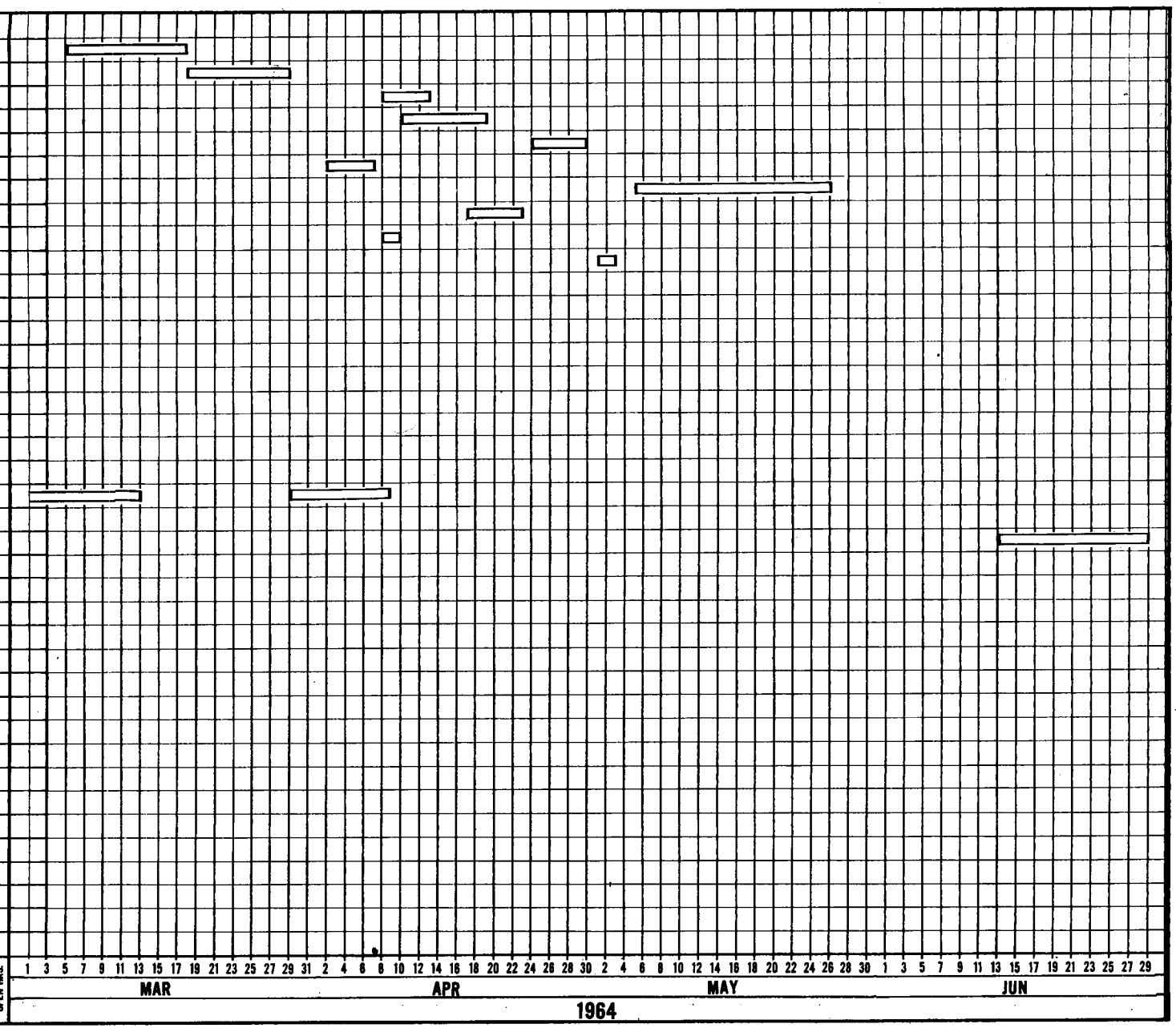

LEGEND: WORK PERIOD

ZONE | TOTAL HRS. | OPEN HRS.

14 STATUS AS OF: 27 DEC 1963

S C 3A WORK PLAN FINAL ASSY AND SST

	ZONE	TOTAL HRS.	OPEN HRS.
1. STRUCTURAL E.O. INCORP.	16	468	396
2. PRESSURE TEST (CABIN 5LB)	9	77	0
3. ECS INSTALL - PLUMBING	9	185	76
4. W/B IN CABIN	9	212	212
5. PEDESTALL INSTALLATION	9		
6. FIBERGLASS CHANNELS & MIN - K	11 12	337	6
7. INSTALL SHINGLES	11 12	808	523
8. INSTALL & RIG HATCHES	11 12	148	8
9. INSTALL & RIG 32060 DOORS	5 6	138	112
10. INSTALL STYROFOAM	3 7 8	111	21
11. INSTALL COLD PLATES & PLUMBING	3 7 8	187	131
12. INSTALL W/B IN EQUIPMENT BAYS	3 7 8	715	655
13. SPLICE THERMO COUPLES & TEST	9 11 12	60	60
14. INSTALL STATIC SYSTEM	3	77	69
15. PRESSURE TEST (STATIC SYSTEM)	3		
16. INSTALL EQUIP (CABIN)	9	591	529
17. INSTALL EQUIP (OTHER THAN CABIN)	7	496	413
18. DITMCO	16	209	209
19. SPLICE TEMP. SENSORS	9 11 12	12	12
20. S S T PHASE I	9	176	176
21. INSTALL HEAT SHIELD	10	26	
22. MECHANICAL MATE	10 14 15	148	148

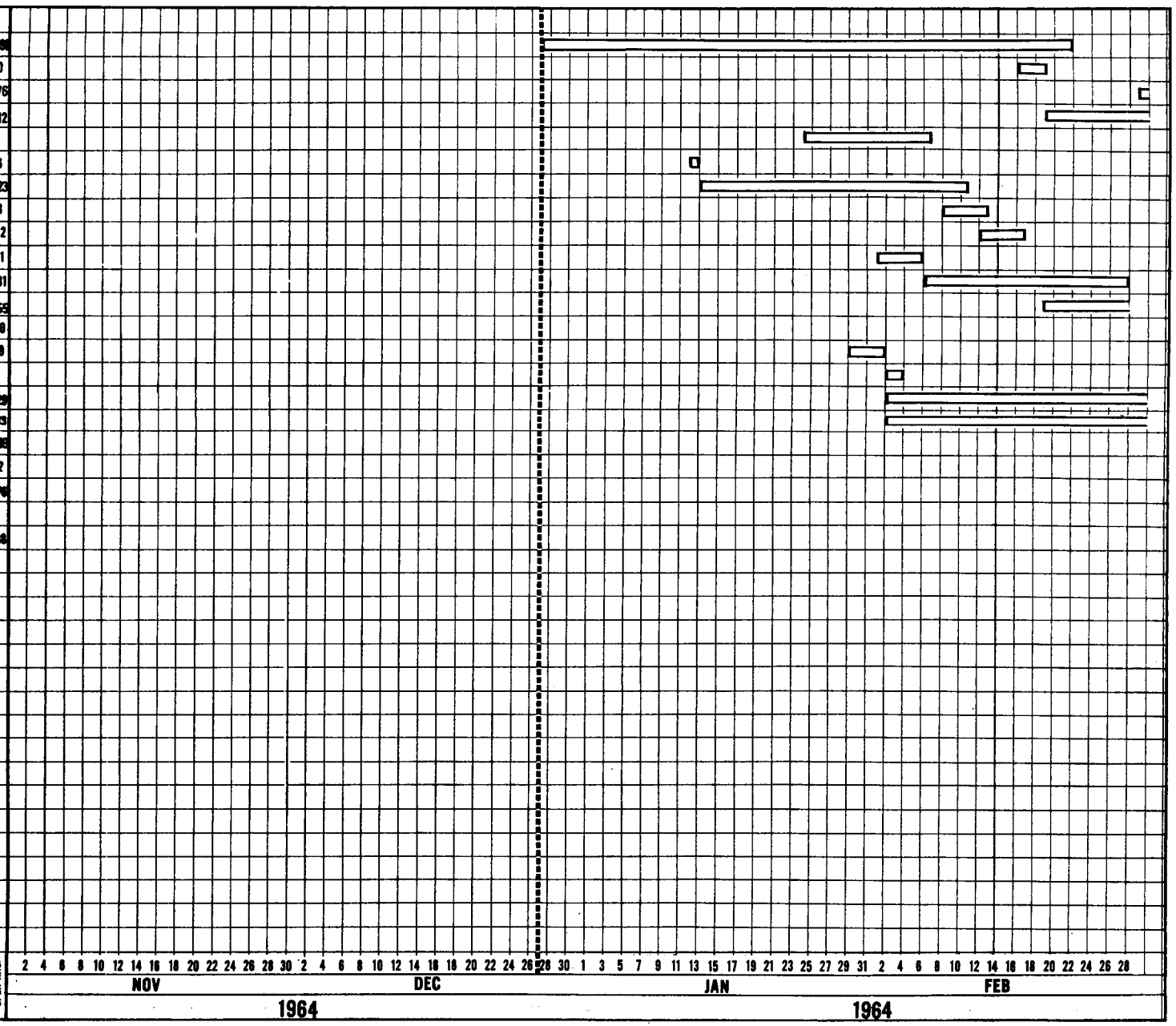

WORK PERIOD

14 STATUS AS OF: 27 DEC 1963

S C 3A WORK PLAN FINAL ASSY AND SST

1. STRUCTURAL EOPO INCORPORATION	16		
2. PRESSURE TEST 5#	9		
3. ECS INSTALLATION & PLUMBING	9		
4. WIRE BUNDLES IN CABIN	9		
5. PEDESTAL INSTALLATION	9		
6. FIBERGLASS CHANNELS & MIN-K	11 12		
7. INSTALL SHINGLES	11 12		
8. INSTALL & RIG HATCHES	11 12		
9. INSTALL & RIG 32060 DOORS	5 6		
10. INSTALL STYROFOAM	3 7 8		
11. INSTALL COLDPLATES & PLUMBING	3 7 8		
12. INSTALL WIRE BUNDLES IN EQUIP BAYS	3 7 8		
13. SPLICE THERMOCOUPLES & TEST	9 11		
14. INSTALL STATIC SYSTEM	2		
15. STATIC SYSTEM PRESSURE TEST	3		
16. INSTALL EQUIPMENT-CABIN	9		
17. INSTALL EQUIPMENT-OTHER	7 8		
18. DITMCO	16		
19. SPLICE TEMP. SENSORS	9 11 12		
20. SST-PHASE I	9		
21. HEATSHIELD INSTALLATION	10		
22. MECHANICAL MATE	10 14 15		

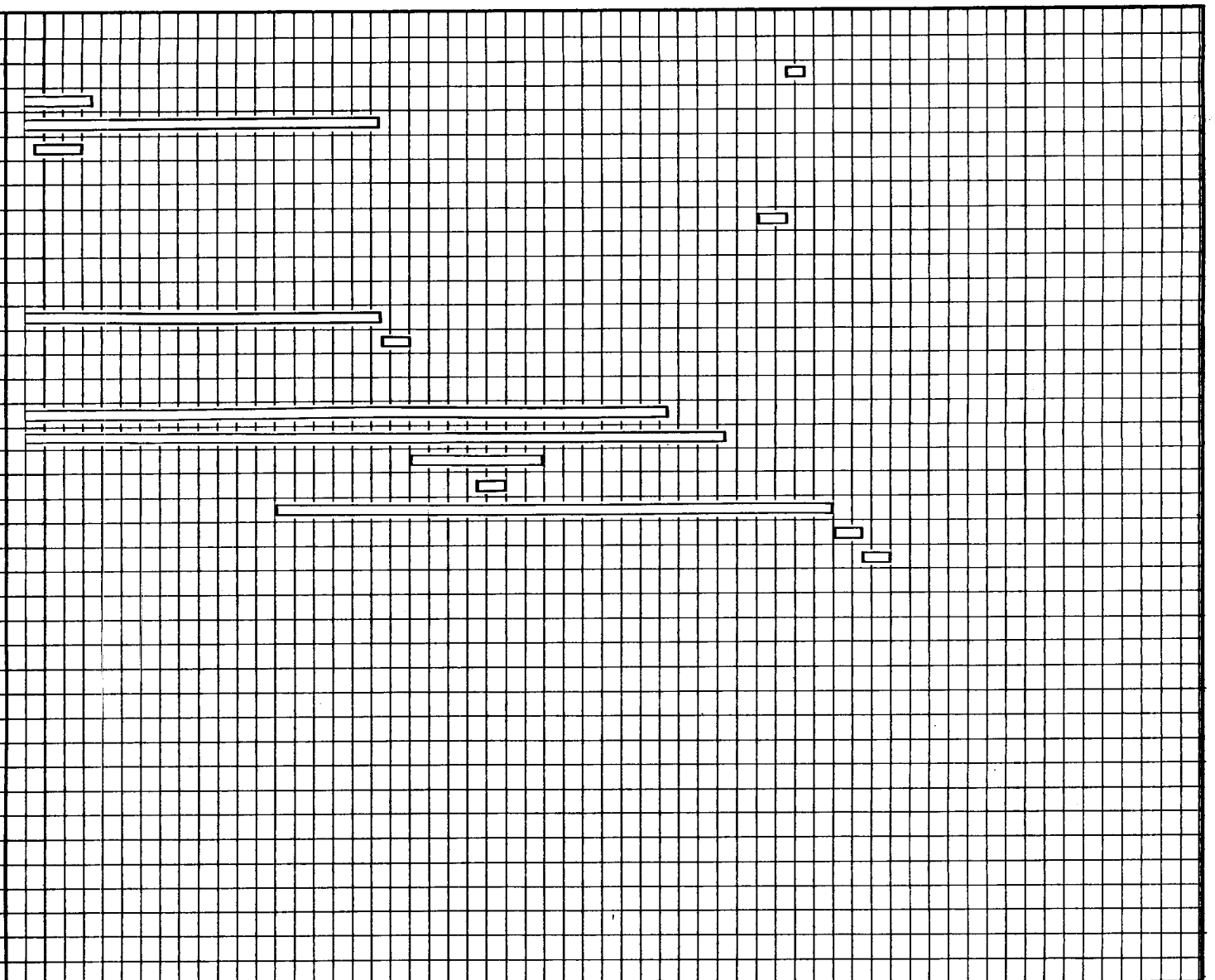

LEGEND: WORK PERIOD

ZONE | TOTAL HRS. | OPEN HRS.

STATUS AS OF: 27 DEC 1963

GEMINI ZONE CHART

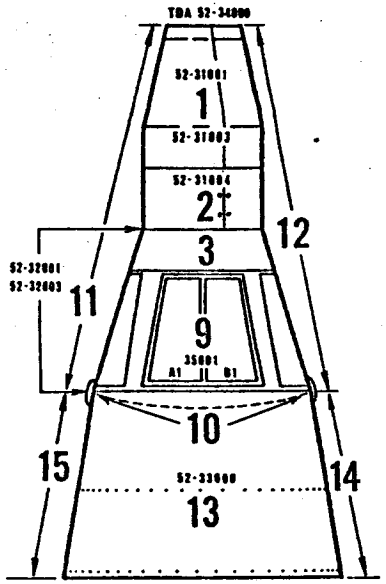

TOP VIEW

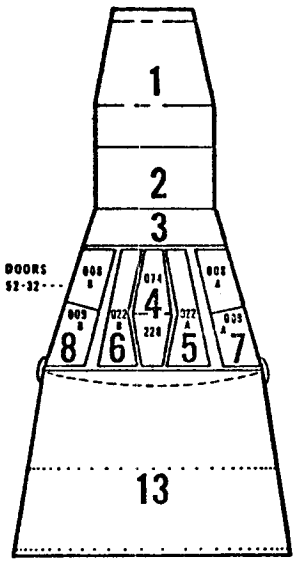

BOTTOM VIEW

1. RENDEZVOUS AND RADAR MODULE
2. RE-ENTRY RCS MODULE
3. FORWARD AREA CONE
4. CENTER EQUIPMENT BAY
5. L/H LANDING GEAR BAY
6. R/H LANDING GEAR BAY
7. L/H EQUIPMENT BAY
8. R/H EQUIPMENT BAY
9. CREW PRESSURIZED AREA
10. EXTERIOR AREA OF LARGE PRESS. BULKHEAD
11. SPACECRAFT EXTERIOR L/H
12. SPACECRAFT EXTERIOR R/H
13. INTERNAL ADAPTER AREA
14. R/H EXTERNAL ADAPTER AREA
15. L/H EXTERNAL ADAPTER AREA
16. ZONE FOR ENTIRE SPACECRAFT

GEMINI SPACECRAFT NO. 3A

ZONE NO. 1

TOTAL EQUIPMENT REQUIRED 39

EQUIPMENT ON HAND 13

EQUIPMENT TO SCHEDULE 26

EQUIPMENT LATE 0

PART NO.	PART NAME	NORM. INST.	SLACK	DEF. INST.	SLACK	HOURS TO INSTALL

12-27-3

GEMINI ZONE CHART

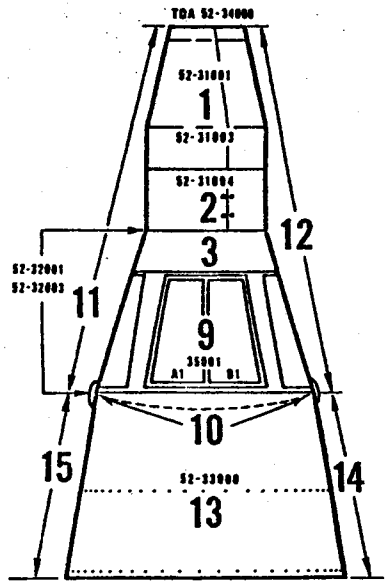

TOP VIEW

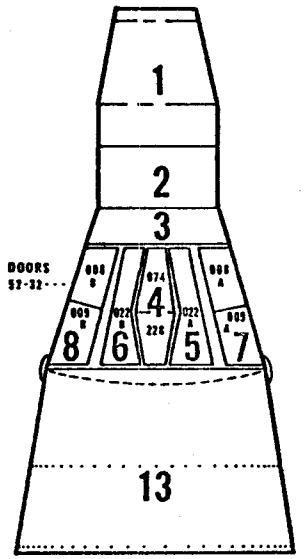

BOTTOM VIEW

1. RENDEZVOUS AND RADAR MODULE
2. RE-ENTRY RCS MODULE
3. FORWARD AREA CONE
4. CENTER EQUIPMENT BAY
5. L/H LANDING GEAR BAY
6. R/H LANDING GEAR BAY
7. L/H EQUIPMENT BAY
8. R/H EQUIPMENT BAY
9. CREW PRESSURIZED AREA
10. EXTERIOR AREA OF LARGE PRESS. BULKHEAD
11. SPACECRAFT EXTERIOR L/H
12. SPACECRAFT EXTERIOR R/H
13. INTERNAL ADAPTER AREA
14. R/H EXTERNAL ADAPTER AREA
15. L/H EXTERNAL ADAPTER AREA
16. ZONE FOR ENTIRE SPACECRAFT

GEMINI SPACECRAFT NO. 3A

ZONE NO. 2

TOTAL EQUIPMENT REQUIRED 48

EQUIPMENT ON HAND 6

EQUIPMENT TO SCHEDULE 42

EQUIPMENT LATE 0

PART NO.	PART NAME	NORM. INST.	SLACK	DEF. INST.	SLACK	HOURS TO INSTALL

12-27-3

GEMINI ZONE CHART

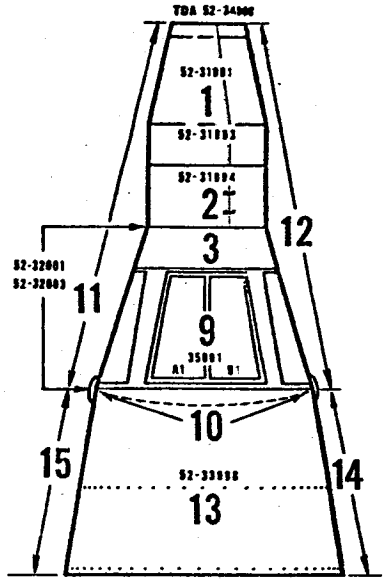

TOP VIEW

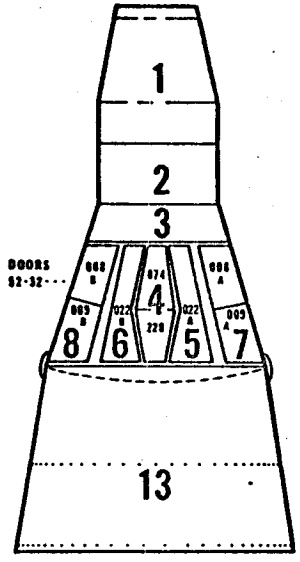

BOTTOM VIEW

1. RENDEZVOUS AND RADAR MODULE
2. RE-ENTRY RCS MODULE
3. FORWARD AREA CONE
4. CENTER EQUIPMENT BAY
5. L/H LANDING GEAR BAY
6. R/H LANDING GEAR BAY
7. L/H EQUIPMENT BAY
8. R/H EQUIPMENT BAY
9. CREW PRESSURIZED AREA
10. EXTERIOR AREA OF LARGE PRESS. BULKHEAD
11. SPACECRAFT EXTERIOR L/H
12. SPACECRAFT EXTERIOR R/H
13. INTERNAL ADAPTER AREA
14. R/H EXTERNAL ADAPTER AREA
15. L/H EXTERNAL ADAPTER AREA
16. ZONE FOR ENTIRE SPACECRAFT

GEMINI SPACECRAFT NO. 3A

ZONE NO. 3

TOTAL EQUIPMENT REQUIRED 34

EQUIPMENT ON HAND 26

EQUIPMENT TO SCHEDULE 5

EQUIPMENT LATE 3

	PART NO.	PART NAME	NORM. INST.	SLACK	DEF. INST.	SLACK	HOURS TO INSTALL
52	41703-15	Bayo switch (1)	00005 A4	-20	00005 A3	0	2
	72714-7	Switch Body (1)	"	-20	"	0	2
	83717-1	Inflow Duct Assy (1)	"	-19	←	0	2

12-27-3

GEMINI ZONE CHART

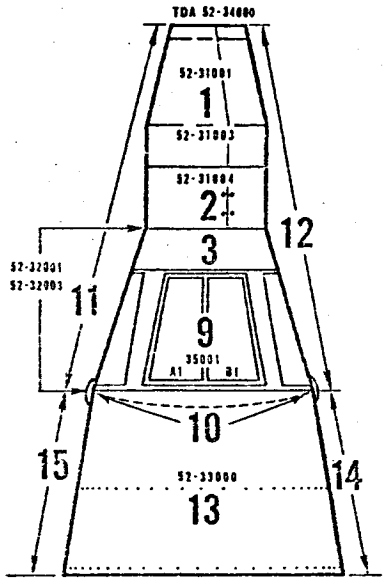

TOP VIEW

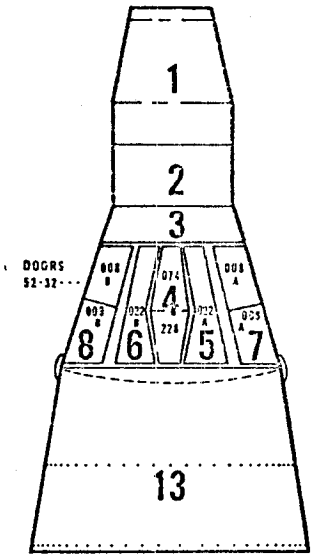

BOTTOM VIEW

1. RENDEZVOUS AND RADAR MODULE
2. RE-ENTRY RCS MODULE
3. FORWARD AREA CONE
4. CENTER EQUIPMENT BAY
5. L/H LANDING GEAR BAY
6. R/H LANDING GEAR BAY
7. L/H EQUIPMENT BAY
8. R/H EQUIPMENT BAY
9. CREW PRESSURIZED AREA
10. EXTERIOR AREA OF LARGE PRESS. BULKHEAD
11. SPACECRAFT EXTERIOR L/H
12. SPACECRAFT EXTERIOR R/H
13. INTERNAL ADAPTER AREA
14. R/H EXTERNAL ADAPTER AREA
15. L/H EXTERNAL ADAPTER AREA
16. ZONE FOR ENTIRE SPACECRAFT

GEMINI SPACECRAFT NO. 3A

ZONE NO. 4

TOTAL EQUIPMENT REQUIRED 30

EQUIPMENT ON HAND 25

EQUIPMENT TO SCHEDULE 4

EQUIPMENT LATE 1

	PART NO.	PART NAME	NORM. INST.	SLACK	DEF. INST.	SLACK	HOURS TO INSTALL
52	93725-13	Cold Plate (1)	00005 A4	-20	00005 A3	0	2

12-27-3

GEMINI ZONE CHART

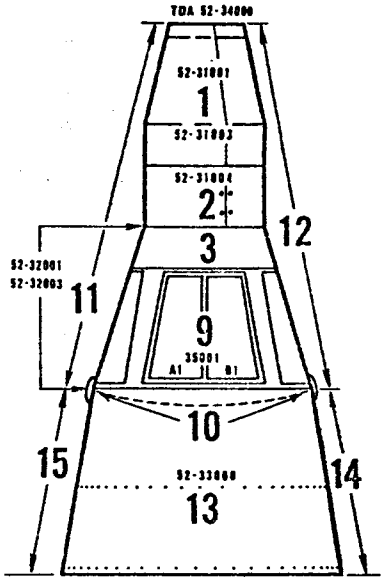

TOP VIEW

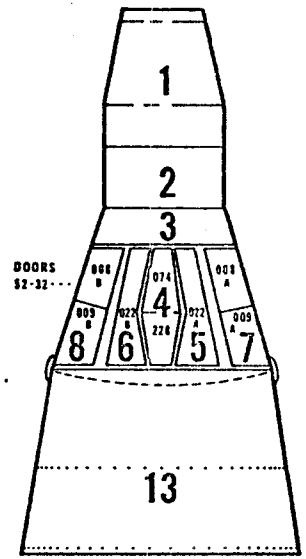

BOTTOM VIEW

1. RENDEZVOUS AND RADAR MODULE
2. RE-ENTRY RCS MODULE
3. FORWARD AREA CONE
4. CENTER EQUIPMENT BAY
5. L/H LANDING GEAR BAY
6. R/H LANDING GEAR BAY
7. L/H EQUIPMENT BAY
8. R/H EQUIPMENT BAY
9. CREW PRESSURIZED AREA
10. EXTERIOR AREA OF LARGE PRESS. BULKHEAD
11. SPACECRAFT EXTERIOR L/H
12. SPACECRAFT EXTERIOR R/H
13. INTERNAL ADAPTER AREA
14. R/H EXTERNAL ADAPTER AREA
15. L/H EXTERNAL ADAPTER AREA
16. ZONE FOR ENTIRE SPACECRAFT

GEMINI SPACECRAFT NO. 3A

ZONE NO. 7

TOTAL EQUIPMENT REQUIRED 41

EQUIPMENT ON HAND 20

EQUIPMENT TO SCHEDULE 6

EQUIPMENT LATE 15

	PART NO.	PART NAME	NORM. INST.	SLACK	DEF. INST.	SLACK	HOURS TO INSTALL
52	83735-5	Cold Plate (1)	00005 A4	-20	00005 A3	0	2
	87723-5	Aux Pow Unit (1)	00005 A3	-42	00005 A2	0	6
	79700-5	F.C. Mont Cont Unit (1)	"	-42	"	0	6
	87717-17	Inertial Plate form (1)	00005 A4	-26	00005 A2	0	.3
	72714-9	Switch Body (2)	"	-20	00005 A3	0	2
	72714-17	Cartridge (9)	"	-20	"	0	12

12-27-3

GEMINI ZONE CHART

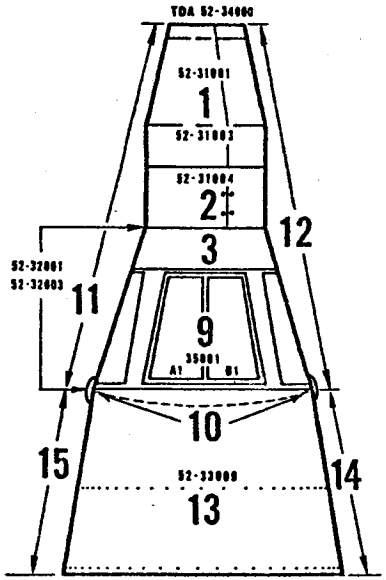

TOP VIEW

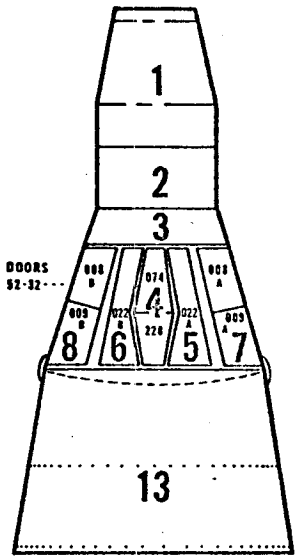

BOTTOM VIEW

1. RENDEZVOUS AND RADAR MODULE
2. RE-ENTRY RCS MODULE
3. FORWARD AREA CONE
4. CENTER EQUIPMENT BAY
5. L/H LANDING GEAR BAY
6. R/H LANDING GEAR BAY
7. L/H EQUIPMENT BAY
8. R/H EQUIPMENT BAY
9. CREW PRESSURIZED AREA
10. EXTERIOR AREA OF LARGE PRESS. BULKHEAD
11. SPACECRAFT EXTERIOR L/H
12. SPACECRAFT EXTERIOR R/H
13. INTERNAL ADAPTER AREA
14. R/H EXTERNAL ADAPTER AREA
15. L/H EXTERNAL ADAPTER AREA
16. ZONE FOR ENTIRE SPACECRAFT

GEMINI SPACECRAFT NO. 3A

ZONE NO. 8

TOTAL EQUIPMENT REQUIRED 82

EQUIPMENT ON HAND 57

EQUIPMENT TO SCHEDULE 18

EQUIPMENT LATE 7

PART NO.	PART NAME	NORM. INST.	SLACK	DEF. INST.	SLACK	HOURS TO INSTALL
52 83729-5	Cold Plate (1)	00005 A4	-20	00005 A3	0	2
83731-5	" " (1)	"	-20	"	0	2
72714-7	Switch Body (1)	"	-20	"	0	2
" -9	" " (1)	"	-20	"	0	2
85713-183	Programmer (1)	00005 A3	-22	00005 A1	0	2
" -185	L.L. Multiplexer (1)	"	-22	"	0	4
" -187	H.L. " (1)	"	-22	"	0	4

12-27-3

GEMINI ZONE CHART

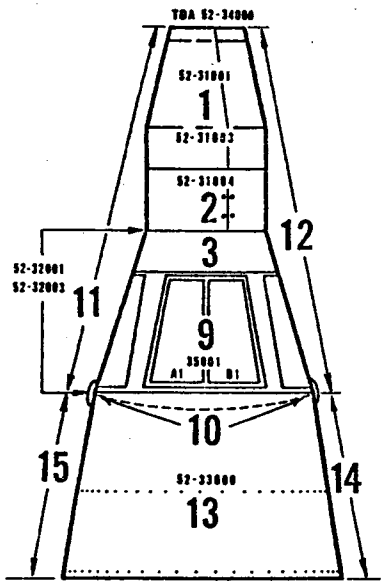

TOP VIEW

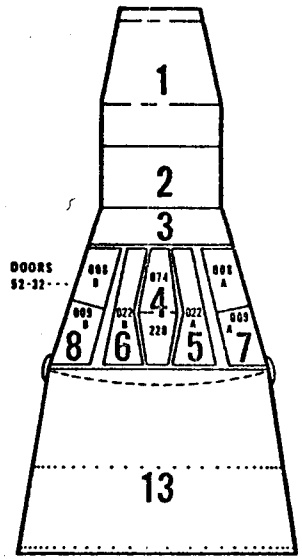

BOTTOM VIEW

1. RENDEZVOUS AND RADAR MODULE
2. RE-ENTRY RCS MODULE
3. FORWARD AREA CONE
4. CENTER EQUIPMENT BAY
5. L/H LANDING GEAR BAY
6. R/H LANDING GEAR BAY
7. L/H EQUIPMENT BAY
8. R/H EQUIPMENT BAY
9. CREW PRESSURIZED AREA
10. EXTERIOR AREA OF LARGE PRESS. BULKHEAD
11. SPACECRAFT EXTERIOR L/H
12. SPACECRAFT EXTERIOR R/H
13. INTERNAL ADAPTER AREA
14. R/H EXTERNAL ADAPTER AREA
15. L/H EXTERNAL ADAPTER AREA
16. ZONE FOR ENTIRE SPACECRAFT

GEMINI SPACECRAFT NO. 3A

ZONE NO. 9

TOTAL EQUIPMENT REQUIRED 91

EQUIPMENT ON HAND 27

EQUIPMENT TO SCHEDULE 33

EQUIPMENT LATE 31

	PART NO.	PART NAME	NORM. INST.	SLACK	DEF. INST.	SLACK	HOURS TO INSTALL
52	88721-35	Temp Sensor (1)	00005 A4	-20	00005 A3	0	2
	83716-7	Cable Assy (1)	"	-17	"	0	2
	" -5	" " (1)	"	-17	"	0	2
	" -9	" " (1)	"	-17	"	0	2
	" -3	" " (1)	"	-17	"	0	2
	" -11	" " (1)	"	-17	"	0	2
	" -13	" " (1)	"	-17	"	0	2
	41703-183	Bridle Disconnect Assy (1)	"	-17	"	0	2
	83700-415	Cabin Ht. Exch. (1)	"	-21	"	0	2
	83708-35	Q. D. Nipple (4)	"	-20	"	0	2
	" -45	Disconnect (6)	"	-20	"	0	2
	" -39	Q. D. Nipple (1)	"	-20	"	0	2
	81716-3	Control Encoder (1)	"	-20	"	0	2
	72716-7	Firing Mech (INERT) (2)	"	-20	"	0	8
	" -9	Cartridge " (2)	"	-20	"	0	2
	41703-139	" " (2)	"	-20	"	0	2
	" -143	" " (4)	"	-20	"	0	2

12-27-3

GEMINI ZONE CHART

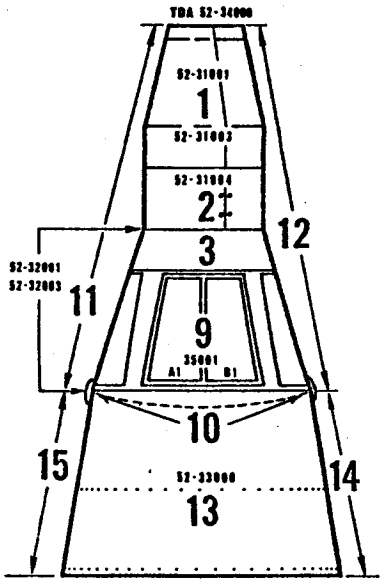

TOP VIEW

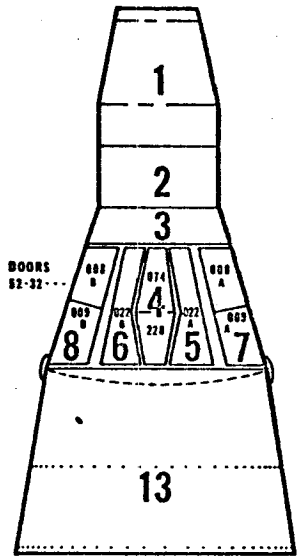

BOTTOM VIEW

1. RENDEZVOUS AND RADAR MODULE
2. RE-ENTRY RCS MODULE
3. FORWARD AREA CONE
4. CENTER EQUIPMENT BAY
5. L/H LANDING GEAR BAY
6. R/H LANDING GEAR BAY
7. L/H EQUIPMENT BAY
8. R/H EQUIPMENT BAY
9. CREW PRESSURIZED AREA
10. EXTERIOR AREA OF LARGE PRESS. BULKHEAD
11. SPACECRAFT EXTERIOR L/H
12. SPACECRAFT EXTERIOR R/H
13. INTERNAL ADAPTER AREA
14. R/H EXTERNAL ADAPTER AREA
15. L/H EXTERNAL ADAPTER AREA
16. ZONE FOR ENTIRE SPACECRAFT

GEMINI SPACECRAFT NO. 3A

ZONE NO. ECS Pump PKg

TOTAL EQUIPMENT REQUIRED 21

EQUIPMENT ON HAND 20

EQUIPMENT TO SCHEDULE 0

EQUIPMENT LATE 1

	PART NO.	PART NAME	NORM. INST.	SLACK	DEF. INST.	SLACK	HOURS TO INSTALL
52	38721-25	Sensor, Temp	MOD INSTL	-25	CC005 R3	0	2

12-27-3

27 December 1963

SUBJECT: GEMINI STATUS REPORT FOR THE PERIOD 30 NOVEMBER THRU 27 DECEMBER 1963 - SPACECRAFT THREE "A".

1. RECAPITULATION

Left Hand and Right Hand Hatches have been removed and reinstalled on the Spacecraft. Shingles are being fitted to equipment bay areas. Fillerglass Channels, Min-K and Equipment Doors are also being fitted. Numerous structure E/O's are being incorporated.

2. FORECAST

Rigging of Hatches, Decontamination, Pressure Test of Cabin will be accomplished this month. Wire Bundles with their component parts, will be installed in their applicable zones. The balance of Styrofoam Insulation and the Static System components in the Z166 area will be completed. Flushing lines will be hooked up to dummy coldplates.

~~CONFIDENTIAL~~

GEMINI MANUFACTURING WORK PLAN—SPACECRAFT NO. 3

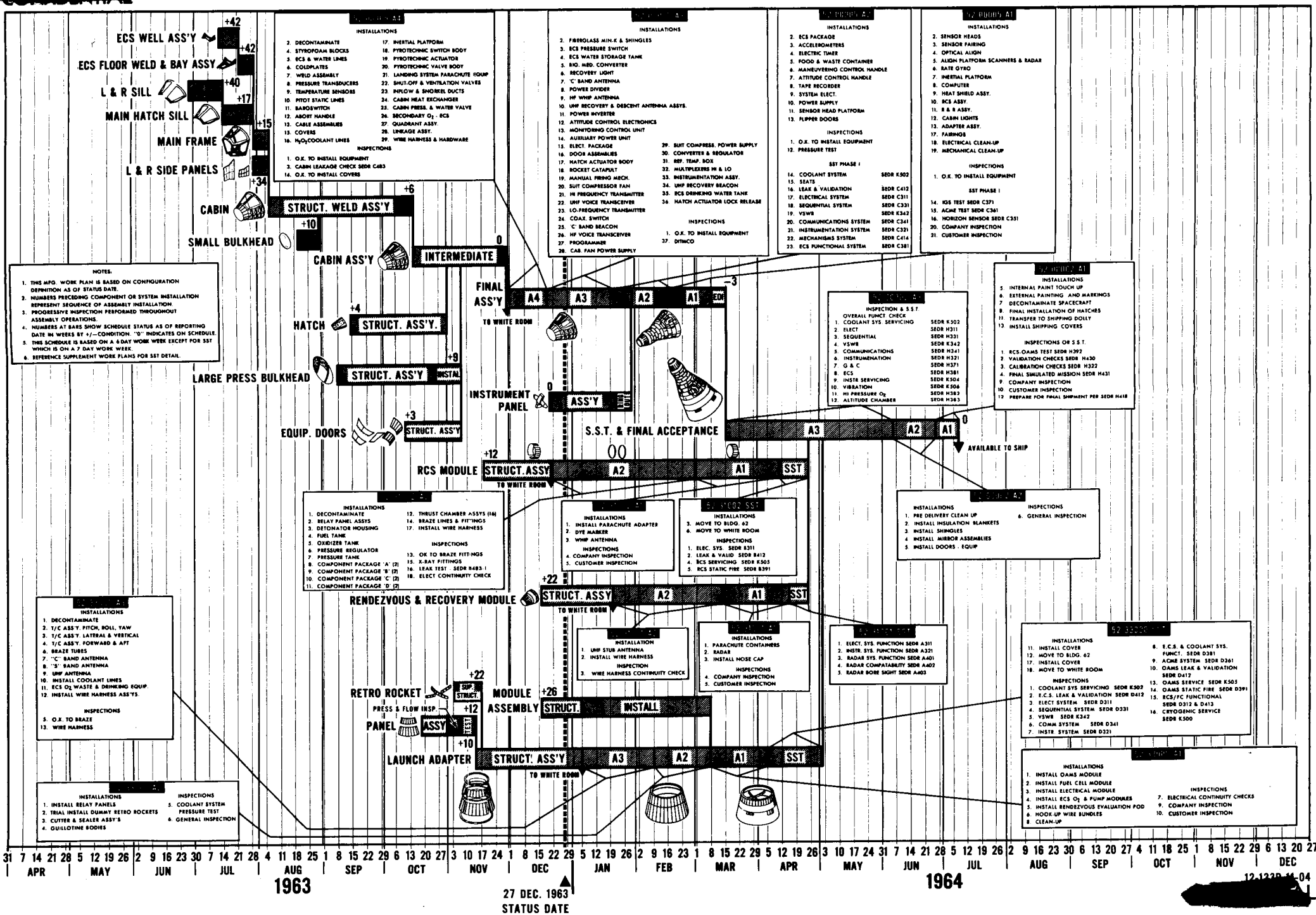

[redacted]

GEMINI SPACECRAFT NO. 3
EQUIPMENT STUDY

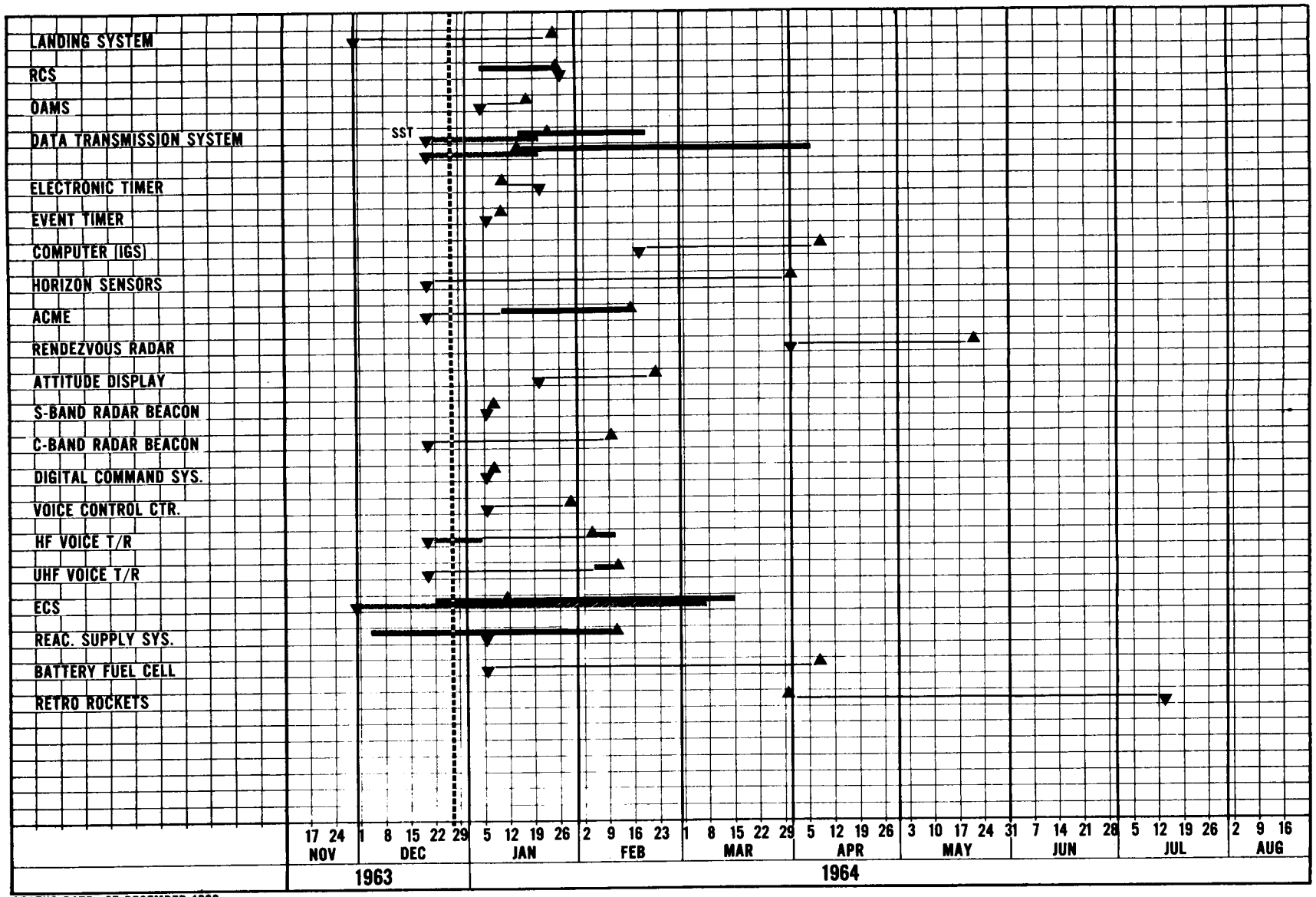

STATUS DATE: 27 DECEMBER 1963

S C 3 WORK PLAN FINAL ASSY

	ZONE	TOTAL HRS.	OPEN HRS.
1. STRUCTURAL EOPO INCORP		1068	553
2. PRESSURE TEST	9	95	18
3. ECS INSTALLATION & PLUMBING	9	164	150
4. WIRE BUNDLES IN CABIN	9	287	285
5. PEDESTAL INSTALLATION	9	4	4
6. FIBERGLASS CHANNELS & MIN-K	4 5 6 7 8 11 12	11	11
7. INSTALL SHINGLES	3 4 5 7 8 11 12	142	142
8. INSTALL & RIG HATCHES	11 12	8	8
9. INSTALL & RIG 32060 DOORS	5 6	34	34
10. INSTALL STYROFOAM	3 7 8	81	23
11. INSTALL COLD PLATES & PLUMBING	3 7 8	179	173
12. INSTALL W/B IN EQUIPMENT BAYS	3 7 8	686	607
13. SPLICE THERMOCOUPLES & TEST	9 11 12	62	62
14. INSTALL STATIC SYSTEM	3	77	75
15. PRESSURE TEST STATIC SYSTEM	3	18	18
16. EQUIPMENT INSTALLATION (CABIN)	9	481	481
17. EQUIPMENT INSTALLATION (OTHER)	7 8	309	236
18. DITMCO	16	187	187
19. SPLICE TEMP. SENSORS	9 11 12	18	18
20. SST PHASE I		0	0
21. HEAT SHIELD INSTALLATION	10	20	20
22. MECHANICAL MATE RCS & RR	1 2 9	80	80
23. MECHANICAL MATE ADAPTER	10 14 15	37	37

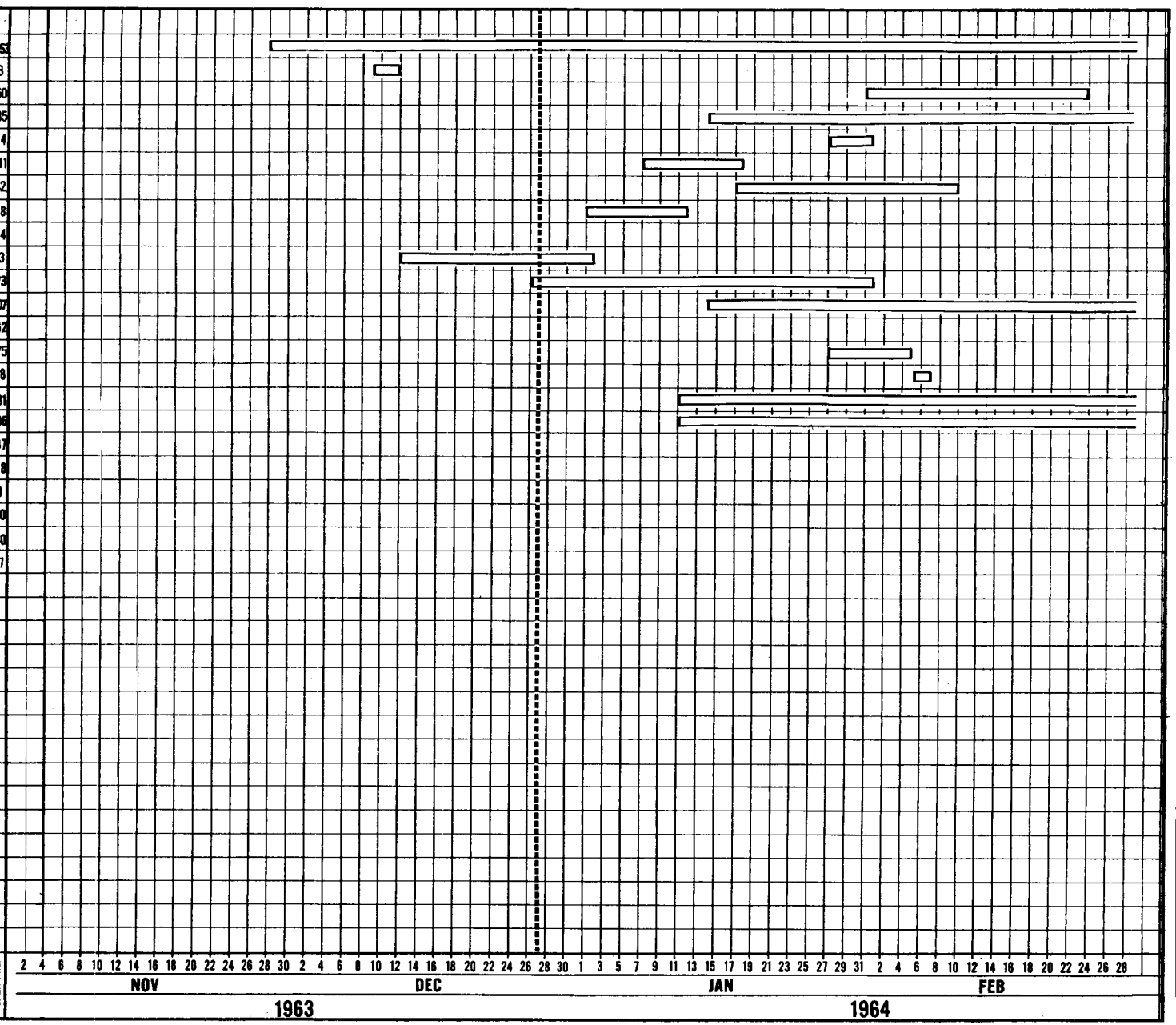

LEGEND: WORK PERIOD

STATUS AS OF: 27 DEC 1963

S C 3 WORK PLAN FINAL ASSY

1. STRUCTURAL EOPO INCORP			
2. PRESSURE TEST	9		
3. ECS INSTALLATION & PLUMBING	9		
4. WIRE BUNDLES IN CABIN	9		
5. PEDESTAL INSTALLATION	9		
6. FIBERGLASS CHANNELS & MIN-K	3 4 5 6 7 8 11 12		
7. INSTALL SHINGLES	3 4 5 6 7 8 11 12		
8. INSTALL & RIG HATCHES	11 12		
9. INSTALL & RIG 32060 DOORS	5 6		
10. INSTALL STYROFOAM	3 7 8		
11. INSTALL COLD PLATES & PLUMBING	3 7 8		
12. INSTALL W/B IN EQUIPMENT BAYS	3 7 8		
13. SPLICE THERMOCOUPLES & TEST	9 11 12		
14. INSTALL STATIC SYSTEM	3		
15. PRESSURE TEST STATIC SYSTEM	3		
16. EQUIPMENT INSTALLATION (CABIN)	9		
17. EQUIPMENT INSTALLATION (OTHER)	7 8		
18. DITMCO	16		
19. SPLICE TEMP. SENSORS	9 11 12		
20. SST PHASE I			
21. HEAT SHIELD INSTALLATION	10		
22. MECHANICAL MATE RCS & RR	1 2 9		
23. MECHANICAL MATE ADAPTER	10 14 15		

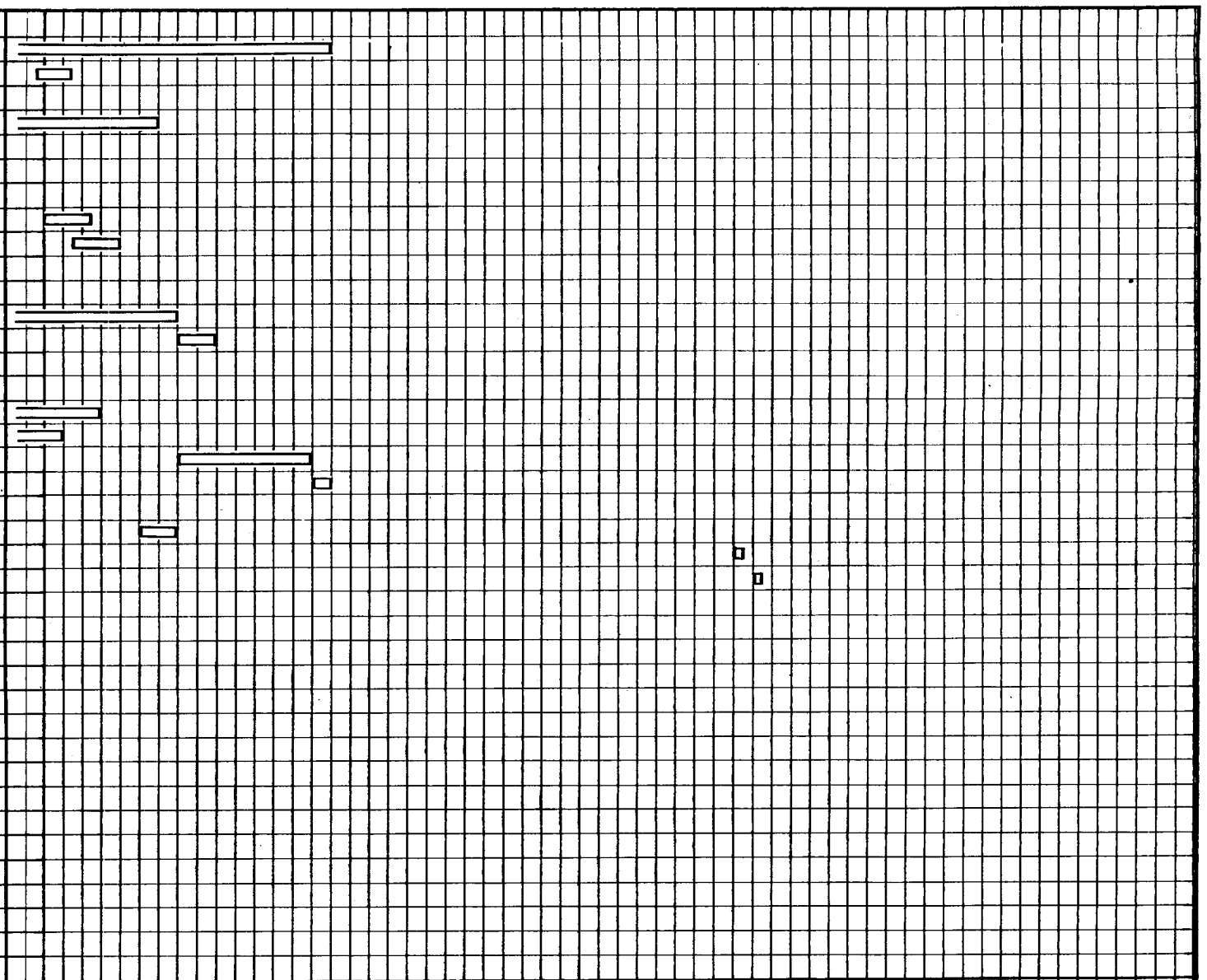

LEGEND: WORK PERIOD

ZONE | TOTAL HRS. | OPEN HRS.

14 STATUS AS OF: 27 DEC 1963

S C 3 WORK PLAN MODULE FINAL ASSY

	ZONE	TOTAL HRS.	OPEN HRS.
RCS	2		
1. INSTALL PLUMBING & PRESSURE TEST		284	284
2. INSTALL W/B - T/C - T/S		153	153
3. FIBERGLASS CHANNELS - MIN - K - INSULATION		0	0
4. INSTALL EQUIP		101	101
5. INSTALL SHINGLES - RETAINERS		0	0
6. DITMCO - T/C - T/S TEST		74	74
7. S S T		0	0
8. INSTALL THRUST CHAMBERS		16	16
9. INSTALL STYROFOAM		0	0
10. NASA/MAC INSPECTION		144	144
R & R	1		
11. INSTALL W/B - T/C - T/S		35	35
12. FIBERGLASS CHANNELS - MIN - K - INSULATION		0	0
13. INSTALL EQUIP		57	57
14. INSTALL SHINGLES - RETAINERS		8	8
15. DITMCO - T/C - T/S TEST		24	24
16. S S T			
17. NASA/MAC INSPECTION		23	23
ADAPTER	13		
18. INSTALL PLUMBING & PRESSURE TEST		383	383
19. INSTALL W/B - T/C - T/S		345	345
20. INSTALL EQUIPMENT		237	237
21. DTMCO - T/C - T/S TEST		79	79
22. S S T			
23. NASA/MAC INSPECTION		179	179
		2142	2142

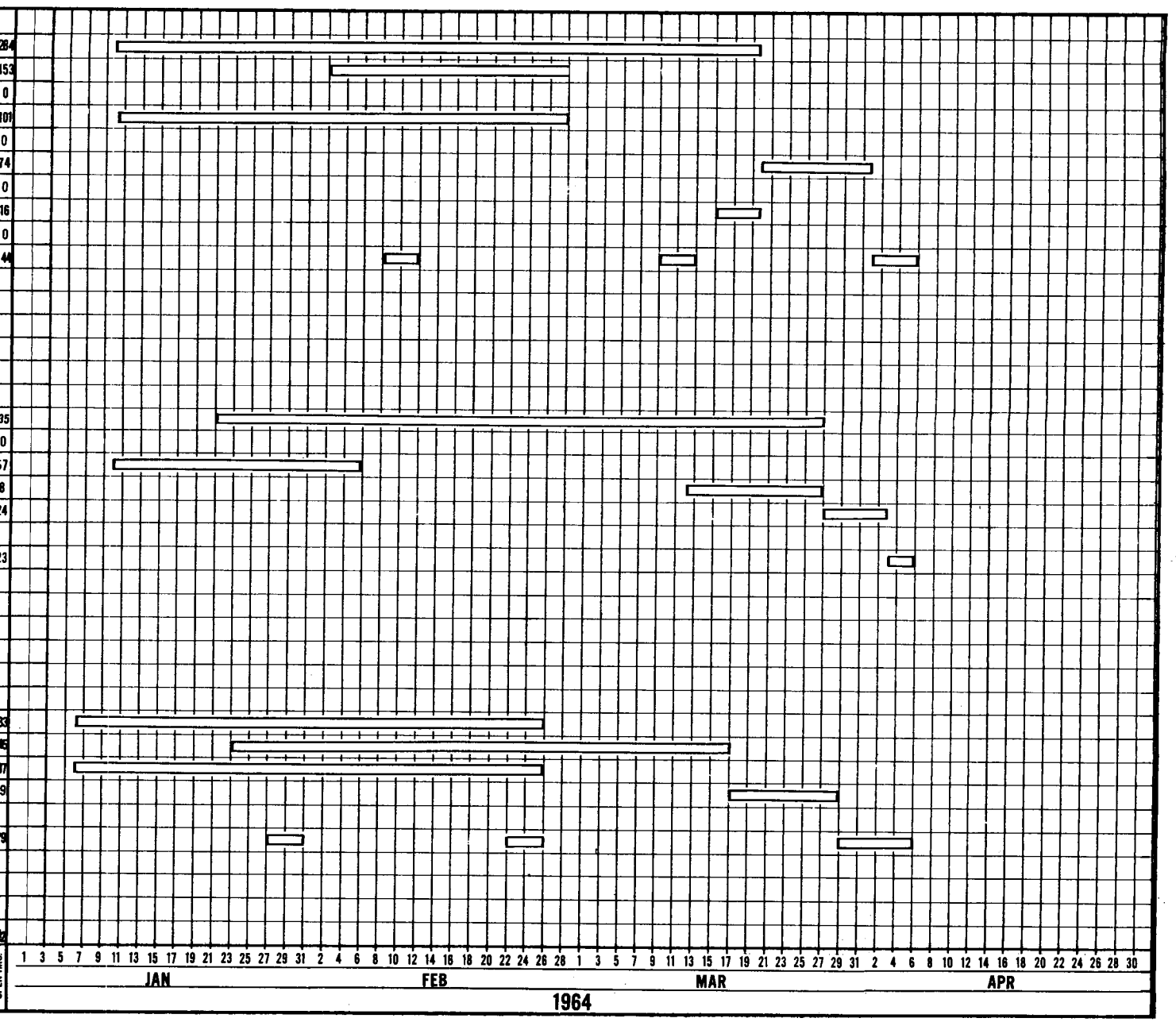

LEGEND: WORK PERIOD

 STATUS AS OF: 27 DEC 1963

S C 3 WORK PLAN MODULE FINAL ASSY

	ZONE	TOTAL HRS.	OPEN HRS.
RCS	2		
1. INSTALL PLUMBING & PRESSURE TEST			
2. INSTALL W/B - T/C - T/S			
3. FIBERGLASS CHANNELS - MIN - K - INSULATION			
4. INSTALL EQUIP			
5. INSTALL SHINGLES - RETAINERS			
6. DITMCO - T/C - T/S TEST			
7. S S T			
8. INSTALL THRUST CHAMBERS			
9. INSTALL STYROFOAM			
10. NASA/MAC INSPECTION			
R & R	1		
11. INSTALL W/B - T/C - T/S			
12. FIBERGLASS CHANNELS - MIN - K - INSULATION			
13. INSTALL EQUIP			
14. INSTALL SHINGLES - RETAINERS			
15. DITMCO - T/C - T/S TEST			
16. S S T			
17. NASA/MAC INSPECTION			
ADAPTER	13		
18. INSTALL PLUMBING & PRESSURE TEST			
19. INSTALL W/B - T/C - T/S			
20. INSTALL EQUIPMENT			
21. DTMCO - T/C - T/S TEST			
22. S S T			
23. NASA/MAC INSPECTION			
24.			

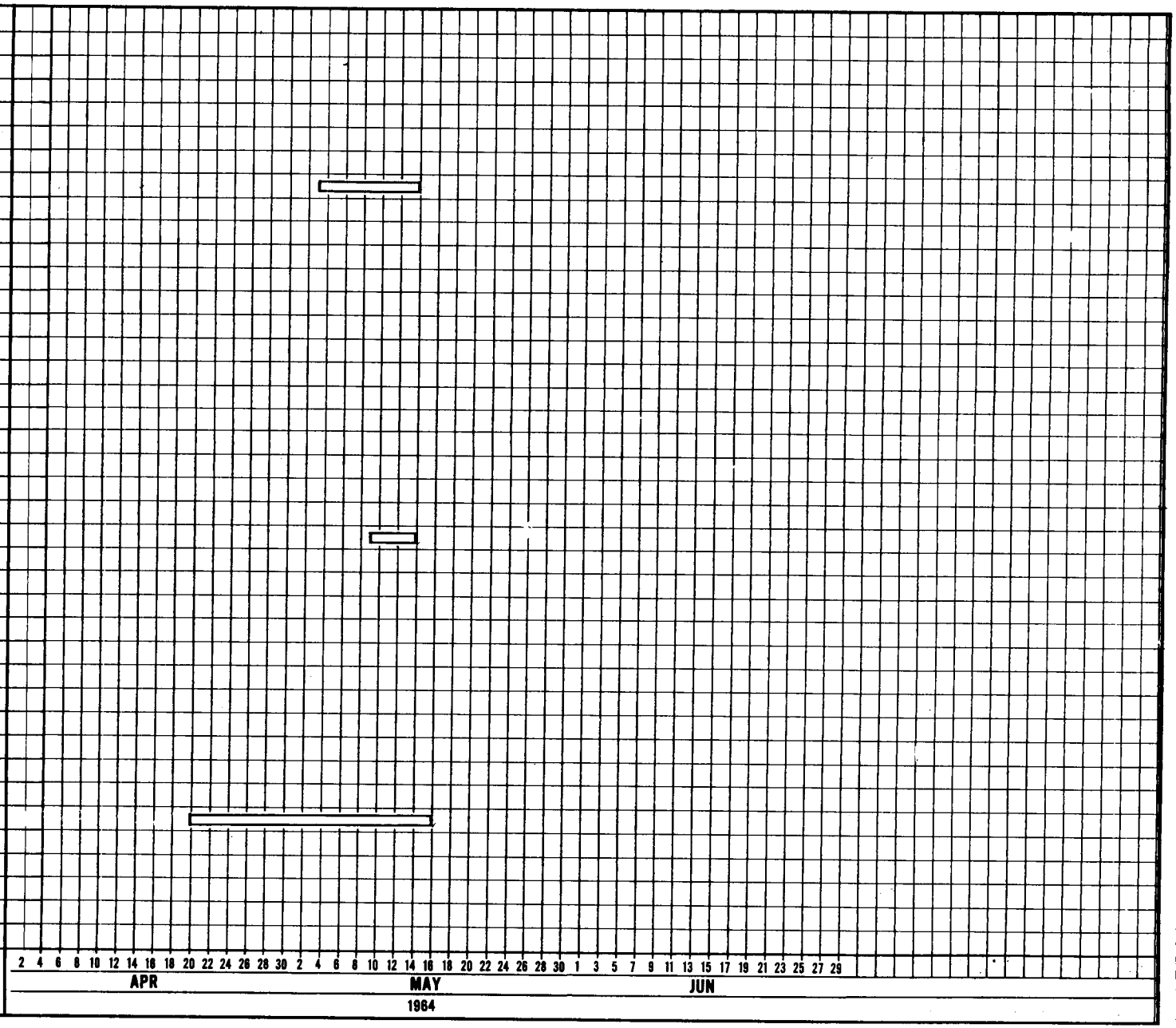

LEGEND: WORK PERIOD

STATUS AS OF: 27 DEC 1963

S C N03 SST

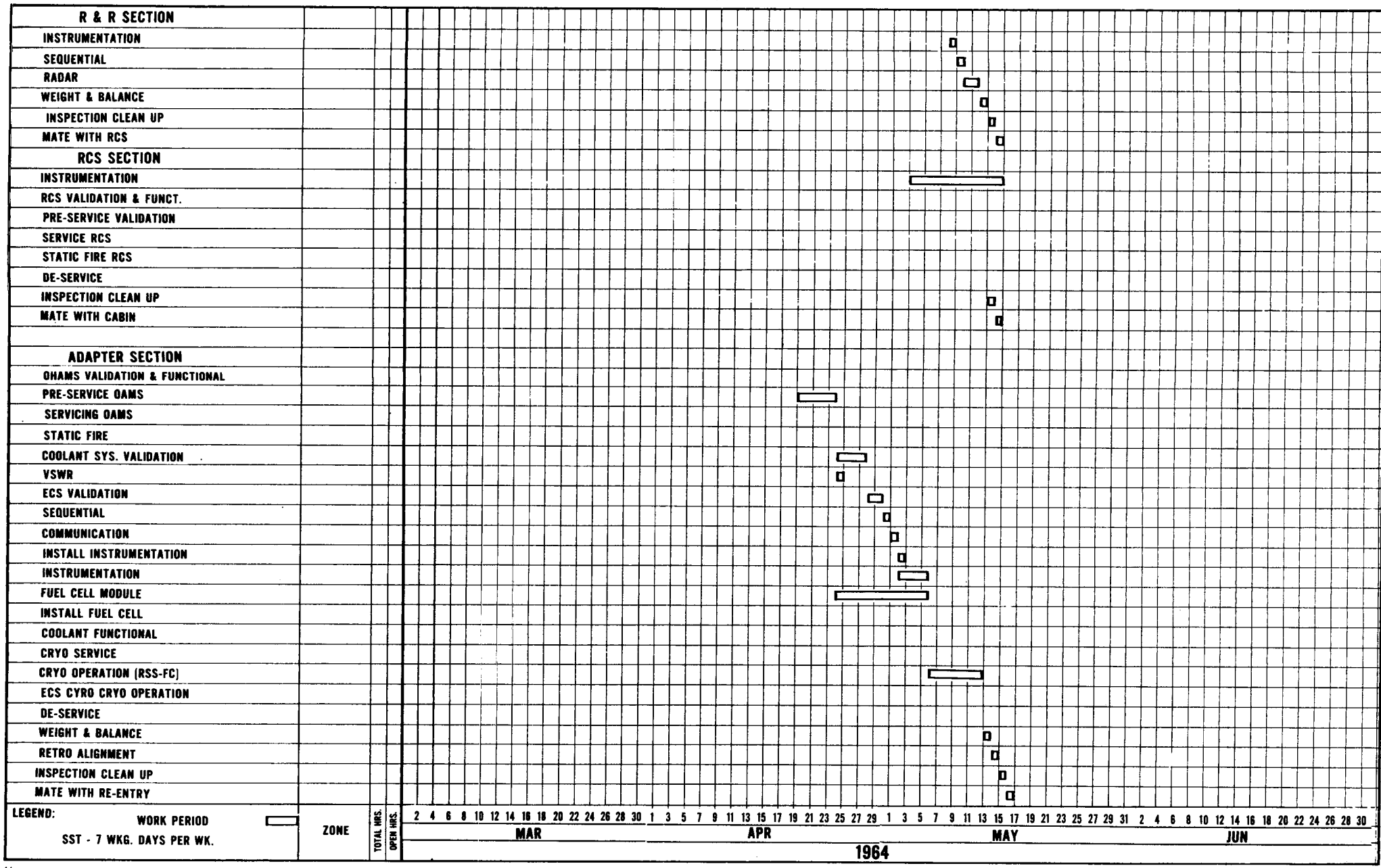

STATUS AS OF: 27 DEC 1963

S/C 3 SST

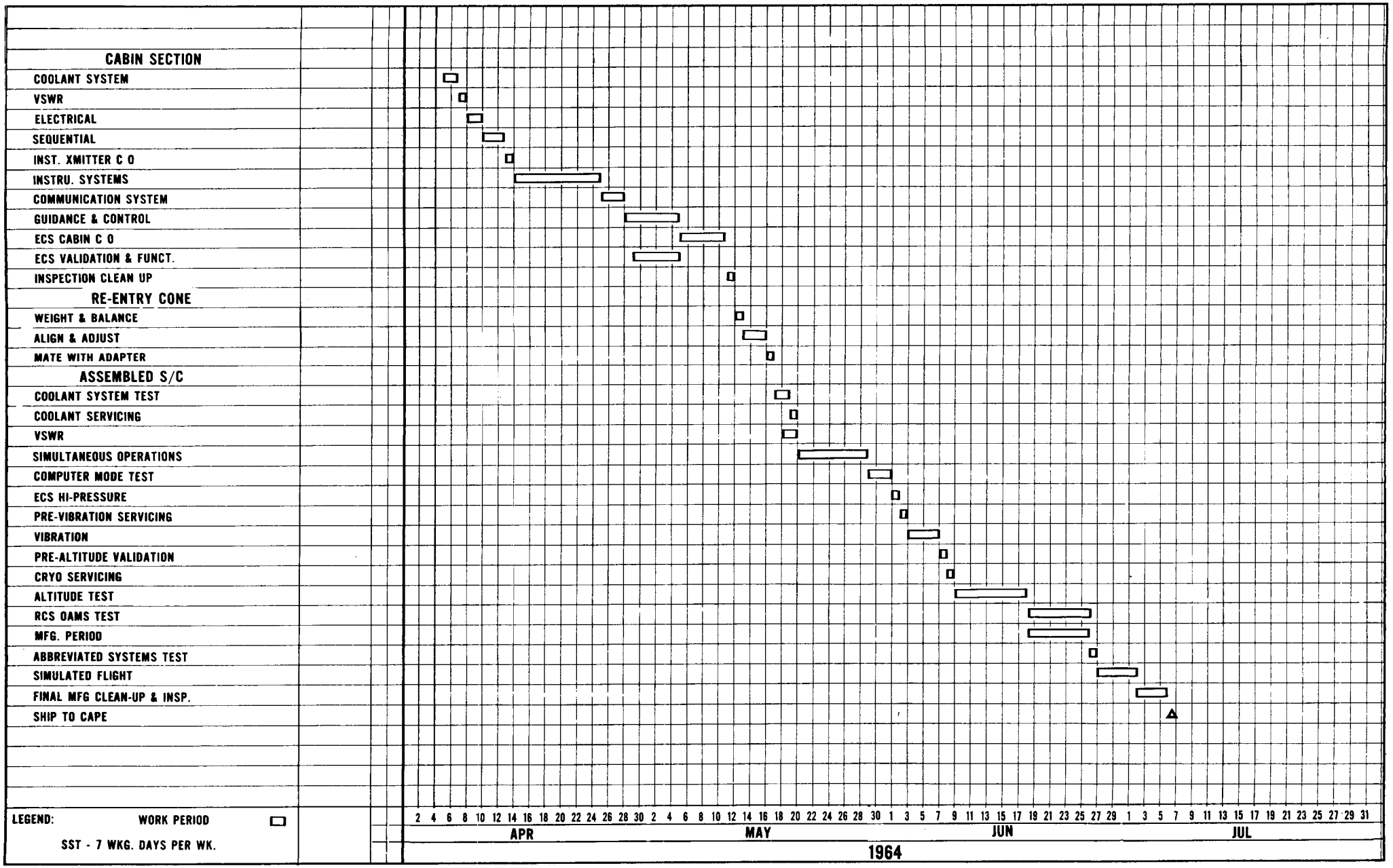

LEGEND: WORK PERIOD

SST - 7 WKG. DAYS PER WK.

STATUS AS OF 27 DEC 1963

GEMINI ZONE CHART

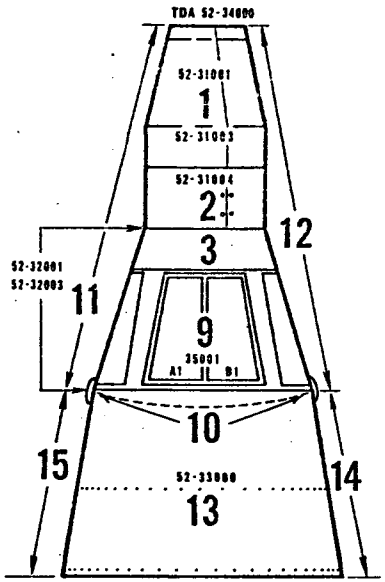

TOP VIEW

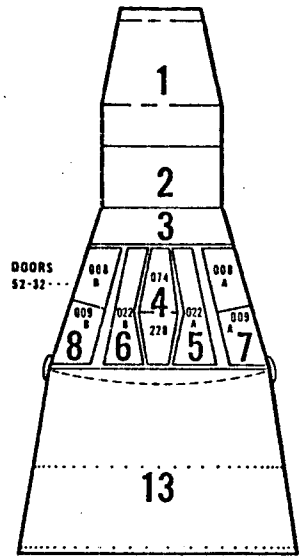

BOTTOM VIEW

1. RENDEZVOUS AND RADAR MODULE
2. RE-ENTRY RCS MODULE
3. FORWARD AREA CONE
4. CENTER EQUIPMENT BAY
5. L/H LANDING GEAR BAY
6. R/H LANDING GEAR BAY
7. L/H EQUIPMENT BAY
8. R/H EQUIPMENT BAY
9. CREW PRESSURIZED AREA
10. EXTERIOR AREA OF LARGE PRESS. BULKHEAD
11. SPACECRAFT EXTERIOR L/H
12. SPACECRAFT EXTERIOR R/H
13. INTERNAL ADAPTER AREA
14. R/H EXTERNAL ADAPTER AREA
15. L/H EXTERNAL ADAPTER AREA
16. ZONE FOR ENTIRE SPACECRAFT

GEMINI SPACECRAFT NO. 3

ZONE NO. 12

TOTAL EQUIPMENT REQUIRED 1

EQUIPMENT ON HAND 1

EQUIPMENT TO SCHEDULE 0

EQUIPMENT LATE 0

PART NO.	PART NAME	NORM. INST.	SLACK	DEF. INST.	SLACK	HOURS TO INSTALL

GEMINI ZONE CHART

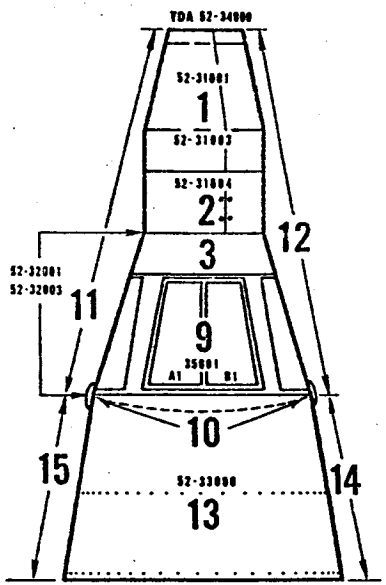

TOP VIEW

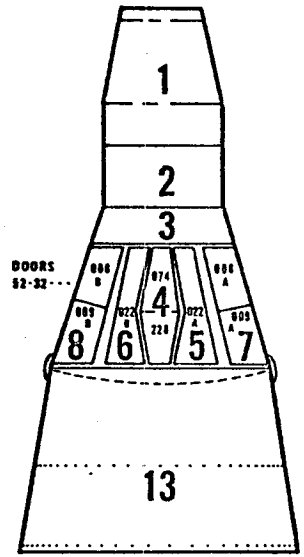

BOTTOM VIEW

1. RENDEZVOUS AND RADAR MODULE
2. RE-ENTRY RCS MODULE
3. FORWARD AREA CONE
4. CENTER EQUIPMENT BAY
5. L/H LANDING GEAR BAY
6. R/H LANDING GEAR BAY
7. L/H EQUIPMENT BAY
8. R/H EQUIPMENT BAY
9. CREW PRESSURIZED AREA
10. EXTERIOR AREA OF LARGE PRESS. BULKHEAD
11. SPACECRAFT EXTERIOR L/H
12. SPACECRAFT EXTERIOR R/H
13. INTERNAL ADAPTER AREA
14. R/H EXTERNAL ADAPTER AREA
15. L/H EXTERNAL ADAPTER AREA
16. ZONE FOR ENTIRE SPACECRAFT

GEMINI SPACECRAFT NO. 3

ZONE NO. ADAPTER (13)

TOTAL EQUIPMENT REQUIRED 52

EQUIPMENT ON HAND 11

EQUIPMENT TO SCHEDULE 41

EQUIPMENT LATE 0

PART NO.	PART NAME	NORM. INST.	SLACK	DEF. INST.	SLACK	HOURS TO INSTALL

GEMINI ZONE CHART

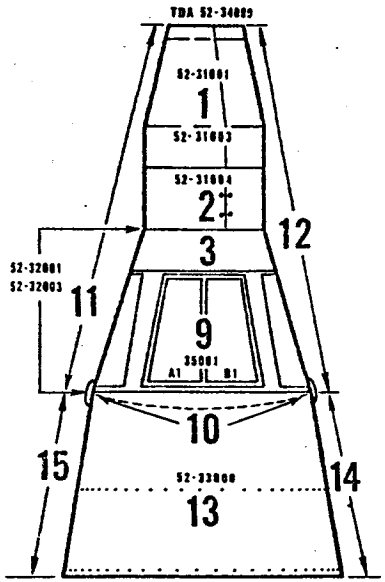

TOP VIEW

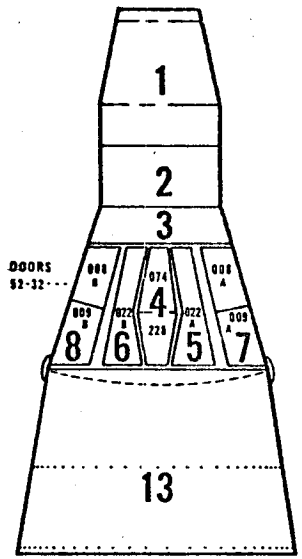

BOTTOM VIEW

1. RENDEZVOUS AND RADAR MODULE
2. RE-ENTRY RCS MODULE
3. FORWARD AREA CONE
4. CENTER EQUIPMENT BAY
5. L/H LANDING GEAR BAY
6. R/H LANDING GEAR BAY
7. L/H EQUIPMENT BAY
8. R/H EQUIPMENT BAY
9. CREW PRESSURIZED AREA
10. EXTERIOR AREA OF LARGE PRESS. BULKHEAD
11. SPACECRAFT EXTERIOR L/H
12. SPACECRAFT EXTERIOR R/H
13. INTERNAL ADAPTER AREA
14. R/H EXTERNAL ADAPTER AREA
15. L/H EXTERNAL ADAPTER AREA
16. ZONE FOR ENTIRE SPACECRAFT

GEMINI SPACECRAFT NO. 3

ZONE NO. PEDESTAL

TOTAL EQUIPMENT REQUIRED 13

EQUIPMENT ON HAND 6

EQUIPMENT TO SCHEDULE 7

EQUIPMENT LATE 0

	PART NO.	PART NAME	NORM. INST.	SLACK	DEF. INST.	SLACK	HOURS TO INSTALL
52	95156-1	CABIN TEMP CNTRL (1)	81002 -503	-3	00005 A3	0	2
	83146-1	MANUAL VALVE (1)	"	-3	"	0	2

GEMINI ZONE CHART

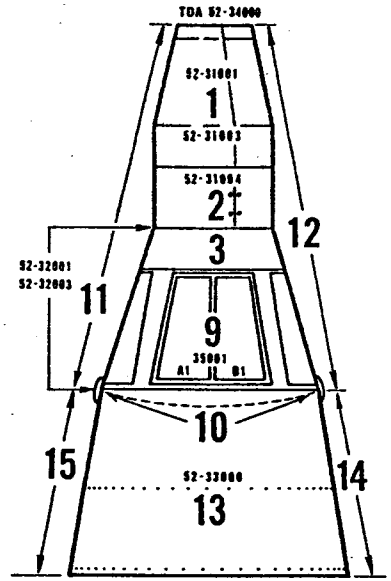

TOP VIEW

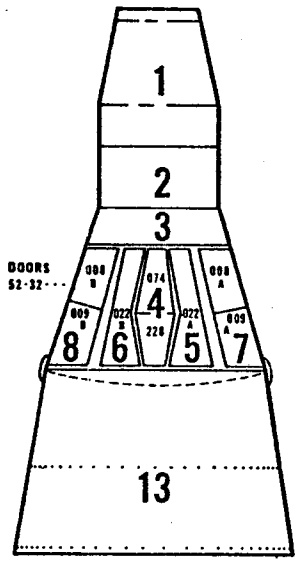

BOTTOM VIEW

1. RENDEZVOUS AND RADAR MODULE
2. RE-ENTRY RCS MODULE
3. FORWARD AREA CONE
4. CENTER EQUIPMENT BAY
5. L/H LANDING GEAR BAY
6. R/H LANDING GEAR BAY
7. L/H EQUIPMENT BAY
8. R/H EQUIPMENT BAY
9. CREW PRESSURIZED AREA
10. EXTERIOR AREA OF LARGE PRESS. BULKHEAD
11. SPACECRAFT EXTERIOR L/H
12. SPACECRAFT EXTERIOR R/H
13. INTERNAL ADAPTER AREA
14. R/H EXTERNAL ADAPTER AREA
15. L/H EXTERNAL ADAPTER AREA
16. ZONE FOR ENTIRE SPACECRAFT

GEMINI SPACECRAFT NO. 3

ZONE NO. OAMS

TOTAL EQUIPMENT REQUIRED 23

EQUIPMENT ON HAND 0

EQUIPMENT TO SCHEDULE 23

EQUIPMENT LATE 0

PART NO.	PART NAME	NORM. INST.	SLACK	DEF. INST.	SLACK	HOURS TO INSTALL

GEMINI ZONE CHART

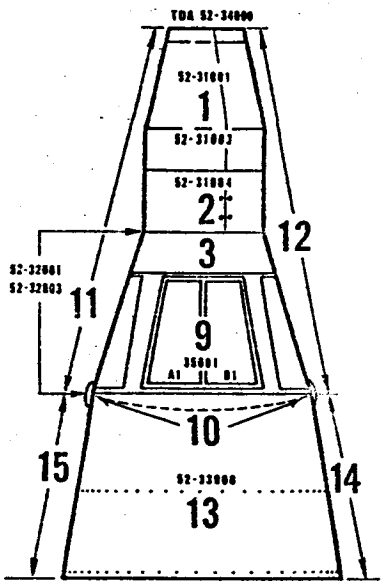

TOP VIEW

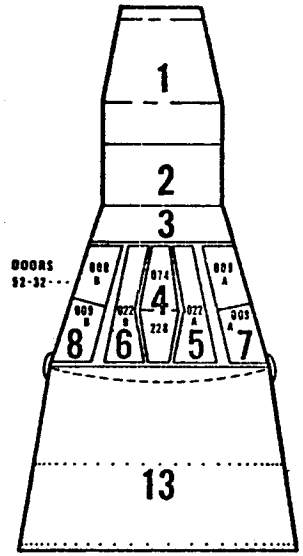

BOTTOM VIEW

1. RENDEZVOUS AND RADAR MODULE
2. RE-ENTRY RCS MODULE
3. FORWARD AREA CONE
4. CENTER EQUIPMENT BAY
5. L/H LANDING GEAR BAY
6. R/H LANDING GEAR BAY
7. L/H EQUIPMENT BAY
8. R/H EQUIPMENT BAY
9. CREW PRESSURIZED AREA
10. EXTERIOR AREA OF LARGE PRESS. BULKHEAD
11. SPACECRAFT EXTERIOR L/H
12. SPACECRAFT EXTERIOR R/H
13. INTERNAL ADAPTER AREA
14. R/H EXTERNAL ADAPTER AREA
15. L/H EXTERNAL ADAPTER AREA
16. ZONE FOR ENTIRE SPACECRAFT

GEMINI SPACECRAFT NO. 3

ZONE NO. ELECTRONIC MOD.

TOTAL EQUIPMENT REQUIRED 25

EQUIPMENT ON HAND 15

EQUIPMENT TO SCHEDULE 10

EQUIPMENT LATE 0

PART NO.	PART NAME	NORM. INST.	SLACK	DEF. INST.	SLACK	HOURS TO INSTALL

GEMINI ZONE CHART

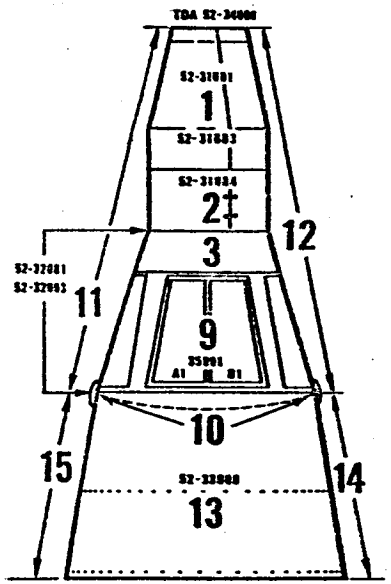

TOP VIEW

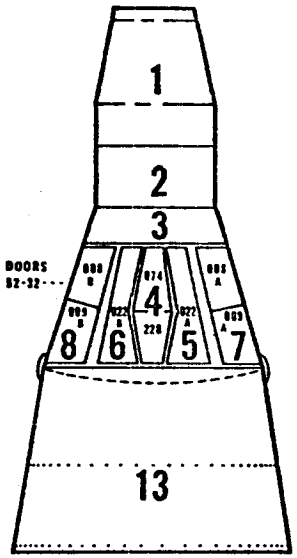

BOTTOM VIEW

1. RENDEZVOUS AND RADAR MODULE
2. RE-ENTRY RCS MODULE
3. FORWARD AREA CONE
4. CENTER EQUIPMENT BAY
5. L/H LANDING GEAR BAY
6. R/H LANDING GEAR BAY
7. L/H EQUIPMENT BAY
8. R/H EQUIPMENT BAY
9. CREW PRESSURIZED AREA
10. EXTERIOR AREA OF LARGE PRESS. BULKHEAD
11. SPACECRAFT EXTERIOR L/H
12. SPACECRAFT EXTERIOR R/H
13. INTERNAL ADAPTER AREA
14. R/H EXTERNAL ADAPTER AREA
15. L/H EXTERNAL ADAPTER AREA
16. ZONE FOR ENTIRE SPACECRAFT

GEMINI SPACECRAFT NO. 3

ZONE NO. FUEL CELL

TOTAL EQUIPMENT REQUIRED 41

EQUIPMENT ON HAND 32

EQUIPMENT TO SCHEDULE 9

EQUIPMENT LATE 2

	PART NO.	PART NAME	NORM. INST.	SLACK	DEF. INST.	SLACK	HOURS TO INSTALL
52-	79700-9	FUEL CELL (2)	MOD. INST.	-4	33000 -A2	0	

GEMINI ZONE CHART

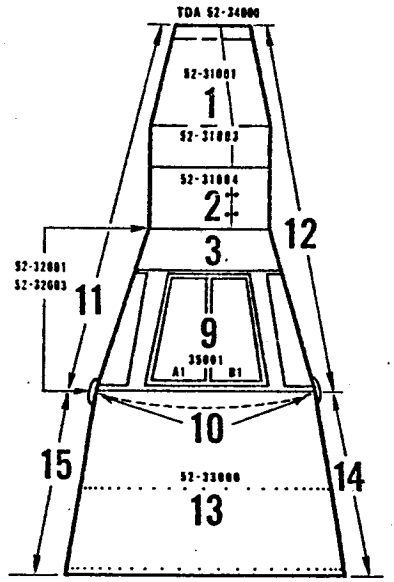

TOP VIEW

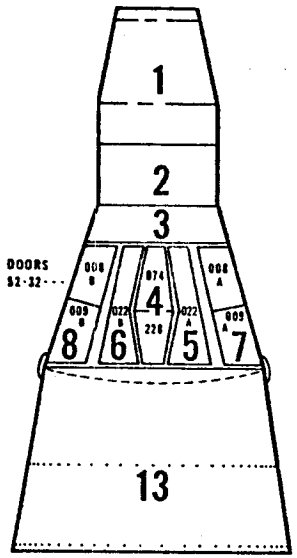

BOTTOM VIEW

1. RENDEZVOUS AND RADAR MODULE
2. RE-ENTRY RCS MODULE
3. FORWARD AREA CONE
4. CENTER EQUIPMENT BAY
5. L/H LANDING GEAR BAY
6. R/H LANDING GEAR BAY
7. L/H EQUIPMENT BAY
8. R/H EQUIPMENT BAY
9. CREW PRESSURIZED AREA
10. EXTERIOR AREA OF LARGE PRESS. BULKHEAD
11. SPACECRAFT EXTERIOR L/H
12. SPACECRAFT EXTERIOR R/H
13. INTERNAL ADAPTER AREA
14. R/H EXTERNAL ADAPTER AREA
15. L/H EXTERNAL ADAPTER AREA
16. ZONE FOR ENTIRE SPACECRAFT

GEMINI SPACECRAFT NO. 3

ZONE NO. ECS O_2

TOTAL EQUIPMENT REQUIRED 5

EQUIPMENT ON HAND 2

EQUIPMENT TO SCHEDULE 3

EQUIPMENT LATE 0

PART NO.	PART NAME	NORM. INST.	SLACK	DEF. INST.	SLACK	HOURS TO INSTALL

GEMINI ZONE CHART

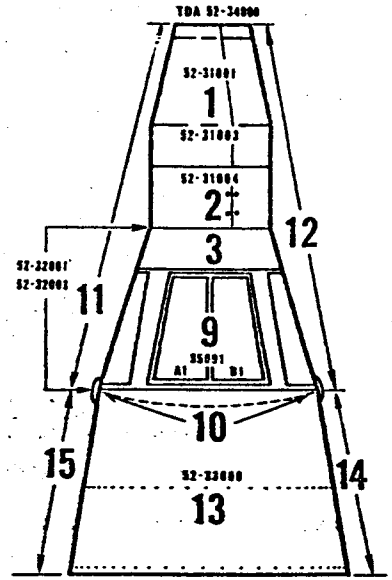

TOP VIEW

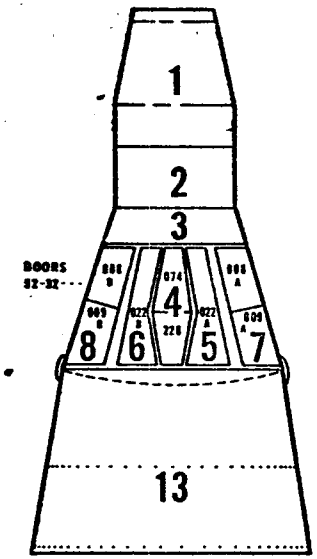

BOTTOM VIEW

1. RENDEZVOUS AND RADAR MODULE
2. RE-ENTRY RCS MODULE
3. FORWARD AREA CONE
4. CENTER EQUIPMENT BAY
5. L/H LANDING GEAR BAY
6. R/H LANDING GEAR BAY
7. L/H EQUIPMENT BAY
8. R/H EQUIPMENT BAY
9. CREW PRESSURIZED AREA
10. EXTERIOR AREA OF LARGE PRESS. BULKHEAD
11. SPACECRAFT EXTERIOR L/H
12. SPACECRAFT EXTERIOR R/H
13. INTERNAL ADAPTER AREA
14. R/H EXTERNAL ADAPTER AREA
15. L/H EXTERNAL ADAPTER AREA
16. ZONE FOR ENTIRE SPACECRAFT

GEMINI SPACECRAFT NO. 3

ZONE NO. ECS O_2 COOLANT

TOTAL EQUIPMENT REQUIRED 25

EQUIPMENT ON HAND 13

EQUIPMENT TO SCHEDULE 12

EQUIPMENT LATE 0

PART NO.	PART NAME	NORM. INST.	SLACK	DEF. INST.	SLACK	HOURS TO INSTALL

GEMINI ZONE CHART

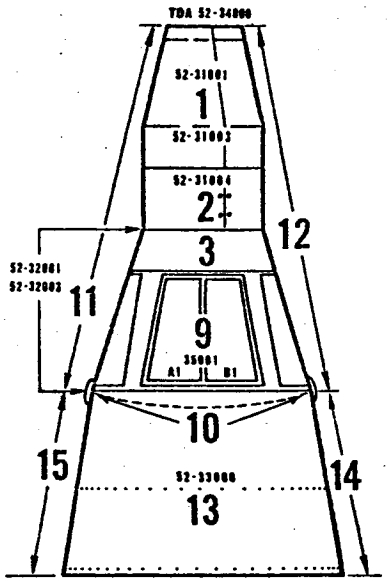

TOP VIEW

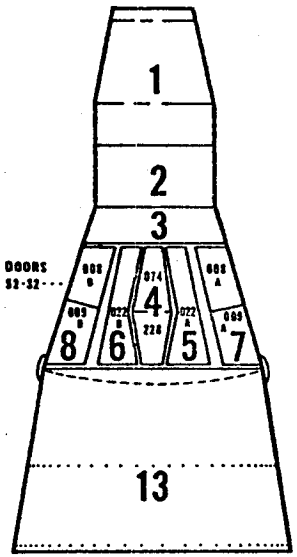

BOTTOM VIEW

1. RENDEZVOUS AND RADAR MODULE
2. RE-ENTRY RCS MODULE
3. FORWARD AREA CONE
4. CENTER EQUIPMENT BAY
5. L/H LANDING GEAR BAY
6. R/H LANDING GEAR BAY
7. L/H EQUIPMENT BAY
8. R/H EQUIPMENT BAY
9. CREW PRESSURIZED AREA
10. EXTERIOR AREA OF LARGE PRESS. BULKHEAD
11. SPACECRAFT EXTERIOR L/H
12. SPACECRAFT EXTERIOR R/H
13. INTERNAL ADAPTER AREA
14. R/H EXTERNAL ADAPTER AREA
15. L/H EXTERNAL ADAPTER AREA
16. ZONE FOR ENTIRE SPACECRAFT

GEMINI SPACECRAFT NO. 3

ZONE NO. 9 81000-501 L.H. M.I.P.

TOTAL EQUIPMENT REQUIRED 19

EQUIPMENT ON HAND 8

EQUIPMENT TO SCHEDULE 3

EQUIPMENT LATE 8

PART NO.	PART NAME	NORM. INST.	SLACK	DEF. INST.	SLACK	HOURS TO INSTALL
52-87701-17	RANGE & RATE IND.	81000-501	-0	00005-A2	+3	1
81713-5	PROP. QTY. IND.	"	-0	"	+3	1
81708-1	L.V. PROP TANK PRESS IND #1	"	-1	"	+2	1
81701-3	SENSITIVE ALT.	"	-0	"	+3	1
81702-3	LINEAR ACCEL. IND.	"	-0	"	+3	1
87712-5	INCR. VELOCITY IND.	"	-8	00005-A1	0	1
87702-21	ATTITUDE DISPLAY IND.	"	-0	00005-A2	+3	1
87702-19	FLIGHT DIRECTOR	"	-0	"	+3	1

GEMINI ZONE CHART

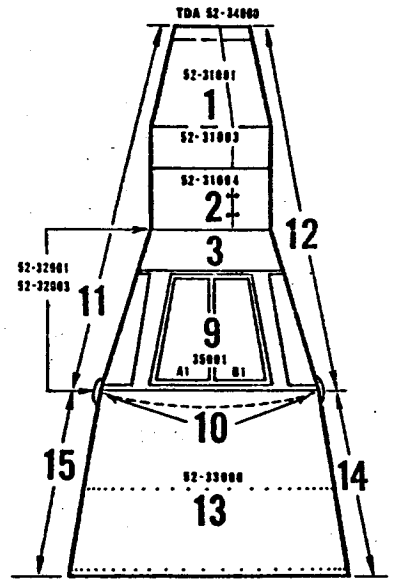

TOP VIEW

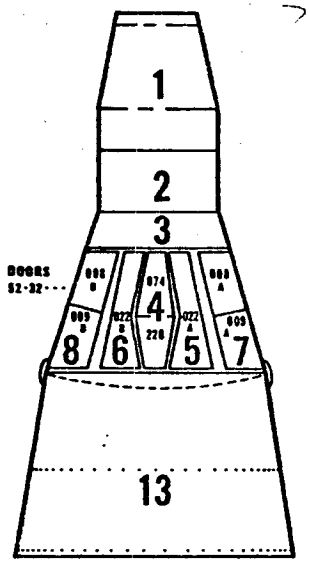

BOTTOM VIEW

1. RENDEZVOUS AND RADAR MODULE
2. RE-ENTRY RCS MODULE
3. FORWARD AREA CONE
4. CENTER EQUIPMENT BAY
5. L/H LANDING GEAR BAY
6. R/H LANDING GEAR BAY
7. L/H EQUIPMENT BAY
8. R/H EQUIPMENT BAY
9. CREW PRESSURIZED AREA
10. EXTERIOR AREA OF LARGE PRESS. BULKHEAD
11. SPACECRAFT EXTERIOR L/H
12. SPACECRAFT EXTERIOR R/H
13. INTERNAL ADAPTER AREA
14. R/H EXTERNAL ADAPTER AREA
15. L/H EXTERNAL ADAPTER AREA
16. ZONE FOR ENTIRE SPACECRAFT

GEMINI SPACECRAFT NO. 3

ZONE NO. 9 81000-502 R.H. M.I.P.

TOTAL EQUIPMENT REQUIRED 19

EQUIPMENT ON HAND 10

EQUIPMENT TO SCHEDULE 8

EQUIPMENT LATE 1

PART NO.	PART NAME	NORM. INST.	SLACK	DEF. INST.	SLACK	HOURS TO INSTALL
105A0001	CLOCK	81000 -502	-8	00005 -A1	0	1
52-87713-7	MANUAL DATA KEYBOARD	"	-8	00005 -A1	0	1
-9	MANUAL DATA READOUT	"	-10	00005 -A1	0	1
87702-21	DISPLAY GROUP	"	-5	00005 -A2	0	1

GEMINI ZONE CHART

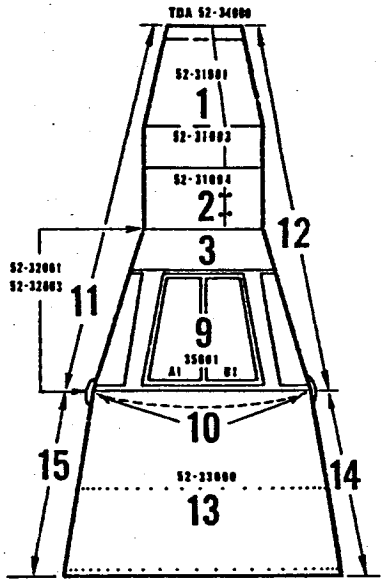

TOP VIEW

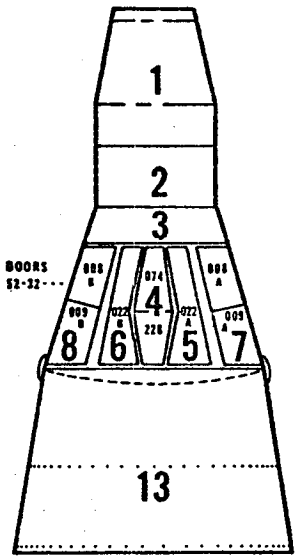

BOTTOM VIEW

1. RENDEZVOUS AND RADAR MODULE
2. RE-ENTRY RCS MODULE
3. FORWARD AREA CONE
4. CENTER EQUIPMENT BAY
5. L/H LANDING GEAR BAY
6. R/H LANDING GEAR BAY
7. L/H EQUIPMENT BAY
8. R/H EQUIPMENT BAY
9. CREW PRESSURIZED AREA
10. EXTERIOR AREA OF LARGE PRESS. BULKHEAD
11. SPACECRAFT EXTERIOR L/H
12. SPACECRAFT EXTERIOR R/H
13. INTERNAL ADAPTER AREA
14. R/H EXTERNAL ADAPTER AREA
15. L/H EXTERNAL ADAPTER AREA
16. ZONE FOR ENTIRE SPACECRAFT

GEMINI SPACECRAFT NO. 3

ZONE NO. 9 81000-503 UPPER MAIN M.I.P.

TOTAL EQUIPMENT REQUIRED 48

EQUIPMENT ON HAND 28

EQUIPMENT TO SCHEDULE 20

EQUIPMENT LATE 0

PART NO.	PART NAME	NORM. INST.	SLACK	DEF. INST.	SLACK	HOURS TO INSTALL

GEMINI ZONE CHART

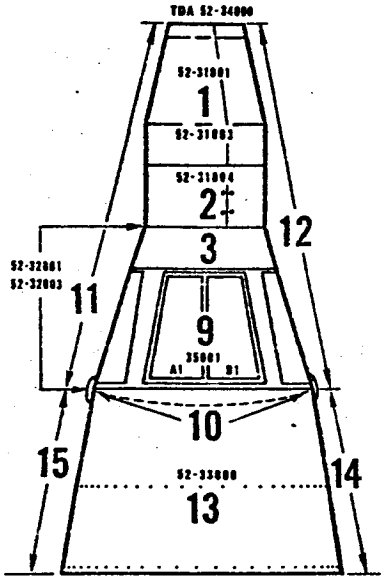

TOP VIEW

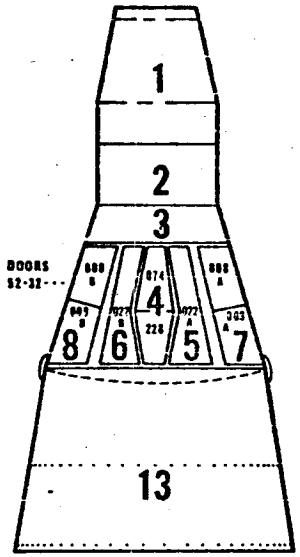

BOTTOM VIEW

1. RENDEZVOUS AND RADAR MODULE
2. RE-ENTRY RCS MODULE
3. FORWARD AREA CONE
4. CENTER EQUIPMENT BAY
5. L/H LANDING GEAR BAY
6. R/H LANDING GEAR BAY
7. L/H EQUIPMENT BAY
8. R/H EQUIPMENT BAY
9. CREW PRESSURIZED AREA
10. EXTERIOR AREA OF LARGE PRESS. BULKHEAD
11. SPACECRAFT EXTERIOR L/H
12. SPACECRAFT EXTERIOR R/H
13. INTERNAL ADAPTER AREA
14. R/H EXTERNAL ADAPTER AREA
15. L/H EXTERNAL ADAPTER AREA
16. ZONE FOR ENTIRE SPACECRAFT

GEMINI SPACECRAFT NO. 3

ZONE NO. 9 81000-505 LOWER MAIN M.I.P.

TOTAL EQUIPMENT REQUIRED 25

EQUIPMENT ON HAND 21

EQUIPMENT TO SCHEDULE 4

EQUIPMENT LATE 0

PART NO.	PART NAME	NORM. INST.	SLACK	DEF. INST.	SLACK	HOURS TO INSTALL

GEMINI ZONE CHART

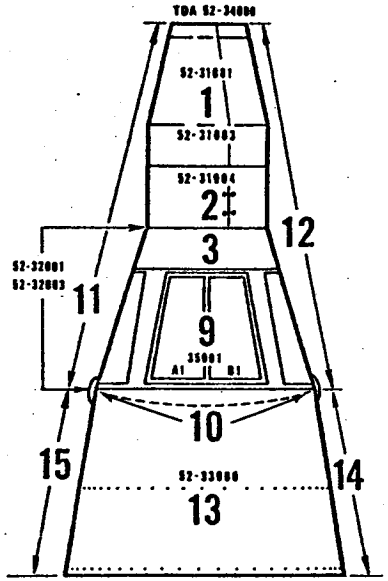

TOP VIEW

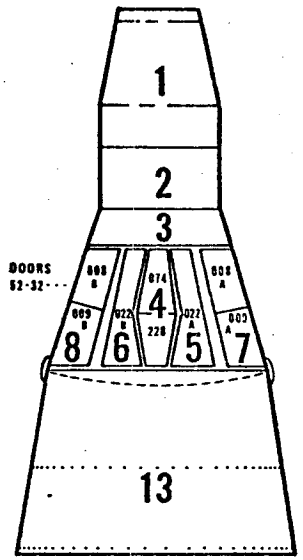

BOTTOM VIEW

1. RENDEZVOUS AND RADAR MODULE
2. RE-ENTRY RCS MODULE
3. FORWARD AREA CONE
4. CENTER EQUIPMENT BAY
5. L/H LANDING GEAR BAY
6. R/H LANDING GEAR BAY
7. L/H EQUIPMENT BAY
8. R/H EQUIPMENT BAY
9. CREW PRESSURIZED AREA
10. EXTERIOR AREA OF LARGE PRESS. BULKHEAD
11. SPACECRAFT EXTERIOR L/H
12. SPACECRAFT EXTERIOR R/H
13. INTERNAL ADAPTER AREA
14. R/H EXTERNAL ADAPTER AREA
15. L/H EXTERNAL ADAPTER AREA
16. ZONE FOR ENTIRE SPACECRAFT

GEMINI SPACECRAFT NO. 3

ZONE NO. 1

TOTAL EQUIPMENT REQUIRED 17

EQUIPMENT ON HAND 10

EQUIPMENT TO SCHEDULE 7

EQUIPMENT LATE 0

PART NO.	PART NAME	NORM. INST.	SLACK	DEF. INST.	SLACK	HOURS TO INSTALL

GEMINI ZONE CHART

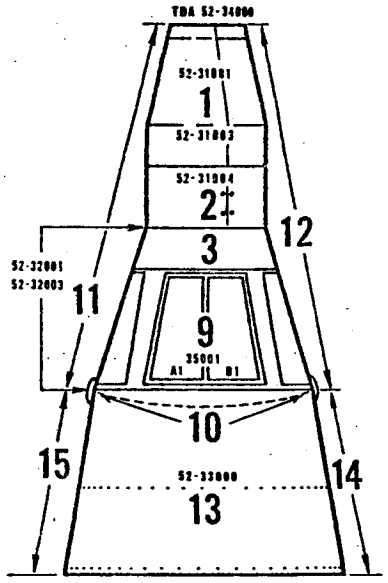

TOP VIEW

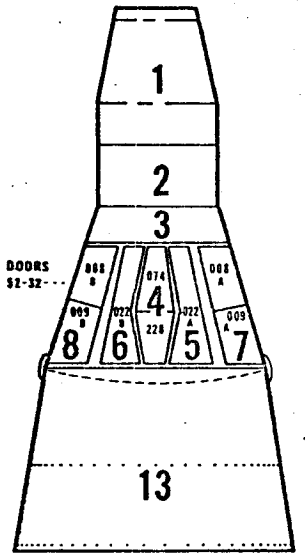

BOTTOM VIEW

1. RENDEZVOUS AND RADAR MODULE
2. RE-ENTRY RCS MODULE
3. FORWARD AREA CONE
4. CENTER EQUIPMENT BAY
5. L/H LANDING GEAR BAY
6. R/H LANDING GEAR BAY
7. L/H EQUIPMENT BAY
8. R/H EQUIPMENT BAY
9. CREW PRESSURIZED AREA
10. EXTERIOR AREA OF LARGE PRESS. BULKHEAD
11. SPACECRAFT EXTERIOR L/H
12. SPACECRAFT EXTERIOR R/H
13. INTERNAL ADAPTER AREA
14. R/H EXTERNAL ADAPTER AREA
15. L/H EXTERNAL ADAPTER AREA
16. ZONE FOR ENTIRE SPACECRAFT

GEMINI SPACECRAFT NO. 3

ZONE NO. 2

TOTAL EQUIPMENT REQUIRED 54

EQUIPMENT ON HAND 13

EQUIPMENT TO SCHEDULE 41

EQUIPMENT LATE 0

PART NO.	PART NAME	NORM. INST.	SLACK	DEF. INST.	SLACK	HOURS TO INSTALL

GEMINI ZONE CHART

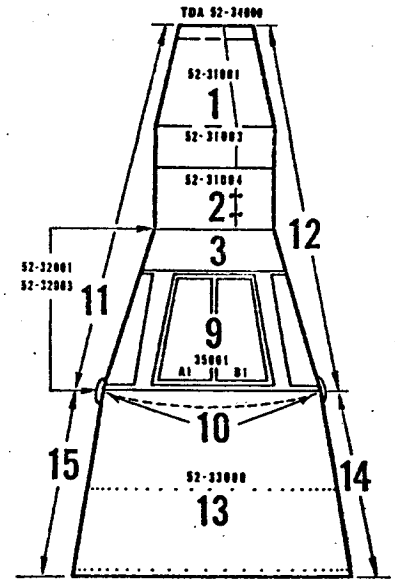

TOP VIEW

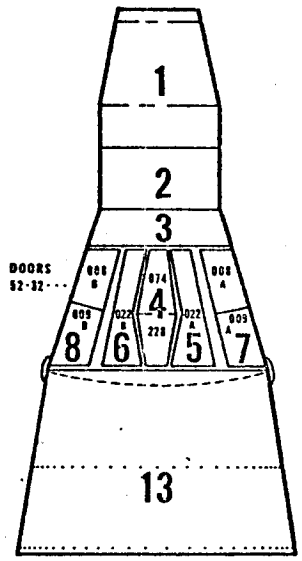

BOTTOM VIEW

1. RENDEZVOUS AND RADAR MODULE
2. RE-ENTRY RCS MODULE
3. FORWARD AREA CONE
4. CENTER EQUIPMENT BAY
5. L/H LANDING GEAR BAY
6. R/H LANDING GEAR BAY
7. L/H EQUIPMENT BAY
8. R/H EQUIPMENT BAY
9. CREW PRESSURIZED AREA
10. EXTERIOR AREA OF LARGE PRESS. BULKHEAD
11. SPACECRAFT EXTERIOR L/H
12. SPACECRAFT EXTERIOR R/H
13. INTERNAL ADAPTER AREA
14. R/H EXTERNAL ADAPTER AREA
15. L/H EXTERNAL ADAPTER AREA
16. ZONE FOR ENTIRE SPACECRAFT

GEMINI SPACECRAFT NO. 3

ZONE NO. 3

TOTAL EQUIPMENT REQUIRED 39

EQUIPMENT ON HAND 27

EQUIPMENT TO SCHEDULE 12

EQUIPMENT LATE 0

PART NO.	PART NAME	NORM. INST.	SLACK	DEF. INST.	SLACK	HOURS TO INSTALL

GEMINI ZONE CHART

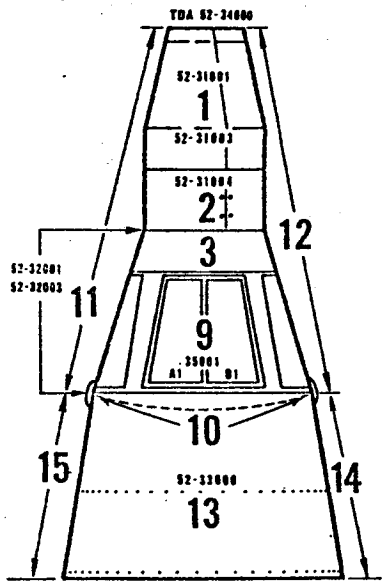

TOP VIEW

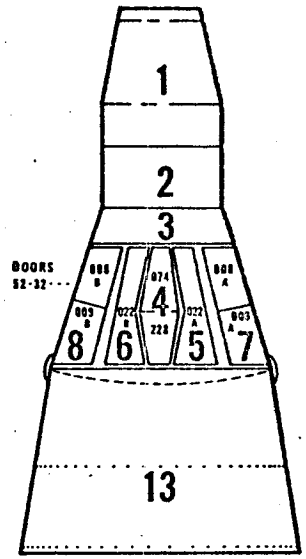

BOTTOM VIEW

1. RENDEZVOUS AND RADAR MODULE
2. RE-ENTRY RCS MODULE
3. FORWARD AREA CONE
4. CENTER EQUIPMENT BAY
5. L/H LANDING GEAR BAY
6. R/H LANDING GEAR BAY
7. L/H EQUIPMENT BAY
8. R/H EQUIPMENT BAY
9. CREW PRESSURIZED AREA
10. EXTERIOR AREA OF LARGE PRESS. BULKHEAD
11. SPACECRAFT EXTERIOR L/H
12. SPACECRAFT EXTERIOR R/H
13. INTERNAL ADAPTER AREA
14. R/H EXTERNAL ADAPTER AREA
15. L/H EXTERNAL ADAPTER AREA
16. ZONE FOR ENTIRE SPACECRAFT

GEMINI SPACECRAFT NO. 3

ZONE NO. 4

TOTAL EQUIPMENT REQUIRED 31

EQUIPMENT ON HAND 26

EQUIPMENT TO SCHEDULE 3

EQUIPMENT LATE 2

	PART NO.	PART NAME	NORM. INST.	SLACK	DEF. INST.	SLACK	HOURS TO INSTALL
52	87700-25	ACE (1)	00005 A3	-4	00005 A2	.0	4
52	87700-31	PWR INVERTER (1)	00005 A3	-5	00005 A1	+3	4

GEMINI ZONE CHART

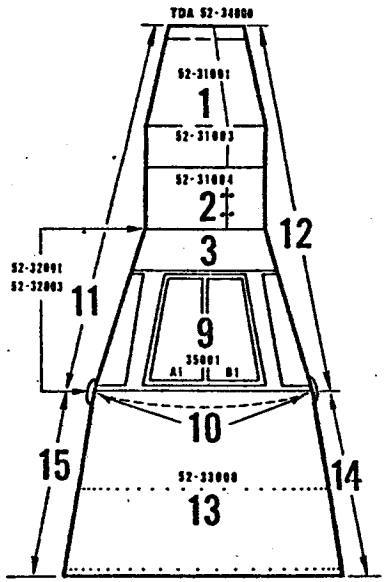

TOP VIEW

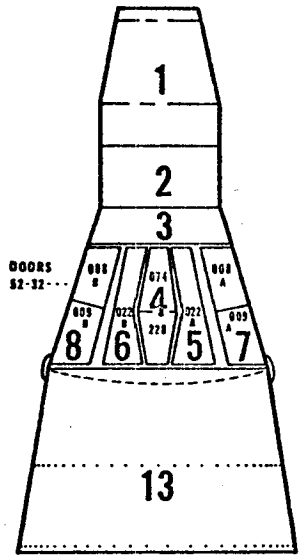

BOTTOM VIEW

1. RENDEZVOUS AND RADAR MODULE
2. RE-ENTRY RCS MODULE
3. FORWARD AREA CONE
4. CENTER EQUIPMENT BAY
5. L/H LANDING GEAR BAY
6. R/H LANDING GEAR BAY
7. L/H EQUIPMENT BAY
8. R/H EQUIPMENT BAY
9. CREW PRESSURIZED AREA
10. EXTERIOR AREA OF LARGE PRESS. BULKHEAD
11. SPACECRAFT EXTERIOR L/H
12. SPACECRAFT EXTERIOR R/H
13. INTERNAL ADAPTER AREA
14. R/H EXTERNAL ADAPTER AREA
15. L/H EXTERNAL ADAPTER AREA
16. ZONE FOR ENTIRE SPACECRAFT

GEMINI SPACECRAFT NO. 3

ZONE NO. 7

TOTAL EQUIPMENT REQUIRED 44

EQUIPMENT ON HAND 30

EQUIPMENT TO SCHEDULE 6

EQUIPMENT LATE 8

	PART NO.	PART NAME	NORM. INST.	SLACK	DEF. INST.	SLACK	HOURS TO INSTALL
52	73714-9	SWITCH BODY (2)	00005 A4	-2	00005 A3	+0	3
52	79700-5	CNTRL UNIT F/C (1)	00005 A3	-8	00002 A3	+0	2
52	87703-13	HORIZON SENSOR (2)	00005 A3	-4	00005 A1	+0	4
52	87717-13	IMU SYS ELEC. (1)	00005 A2	-1	00005 A1	+0	2
52	87717-15	IGS PWR SUPPLY (1)	00005 A2	-1	00005 A1	+0	2
52	87710-7	COMPUTOR (1)	00005 A1	-3	00002 A3	+0	2

GEMINI ZONE CHART

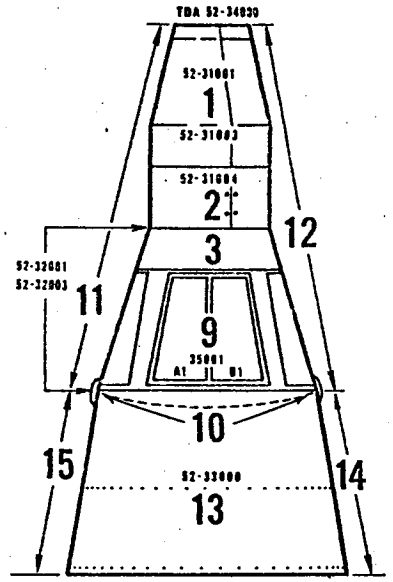

TOP VIEW

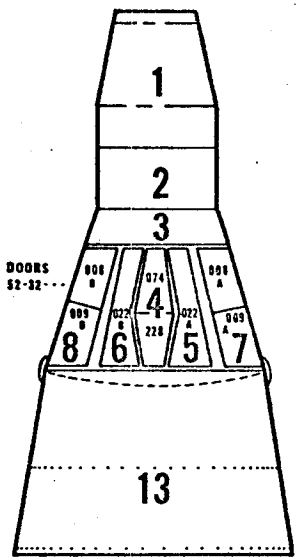

BOTTOM VIEW

1. RENDEZVOUS AND RADAR MODULE
2. RE-ENTRY RCS MODULE
3. FORWARD AREA CONE
4. CENTER EQUIPMENT BAY
5. L/H LANDING GEAR BAY
6. R/H LANDING GEAR BAY
7. L/H EQUIPMENT BAY
8. R/H EQUIPMENT BAY
9. CREW PRESSURIZED AREA
10. EXTERIOR AREA OF LARGE PRESS. BULKHEAD
11. SPACECRAFT EXTERIOR L/H
12. SPACECRAFT EXTERIOR R/H
13. INTERNAL ADAPTER AREA
14. R/H EXTERNAL ADAPTER AREA
15. L/H EXTERNAL ADAPTER AREA
16. ZONE FOR ENTIRE SPACECRAFT

GEMINI SPACECRAFT NO. 3

ZONE NO. 8

TOTAL EQUIPMENT REQUIRED 88

EQUIPMENT ON HAND 59

EQUIPMENT TO SCHEDULE 20

EQUIPMENT LATE 9

	PART NO.	PART NAME	NORM. INST.	SLACK	DEF. INST.	SLACK	HOURS TO INSTALL
52	72714-7	SWITCH BODY (3)	00005 A4	-2	00005 A3	+1	3
52	72719-9	SWITCH BODY (3)	00005 A4	-2	00005 A3	+1	3
52	85709-7	UHF VOICE TRANSC (2)	00005 A3	-2	00005 A2	+0	4
52	85719-7	UHF RECOVERY BEAC (1)	00005 A3	-7	00005 A1	+0	2

GEMINI ZONE CHART

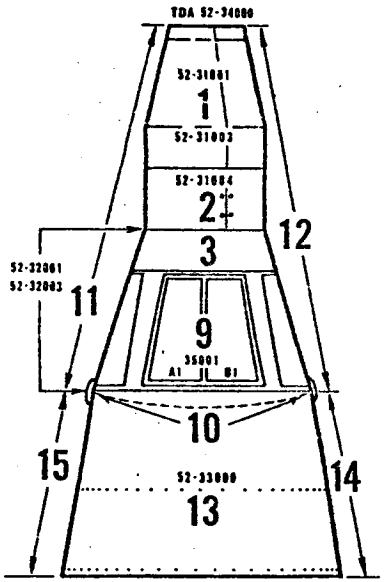

TOP VIEW

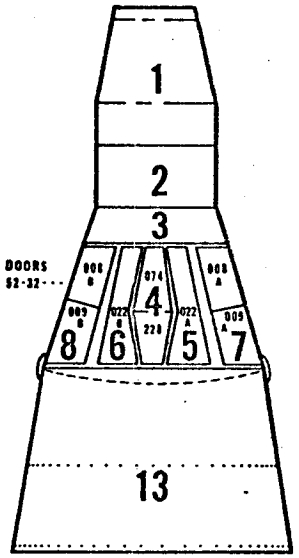

BOTTOM VIEW

1. RENDEZVOUS AND RADAR MODULE
2. RE-ENTRY RCS MODULE
3. FORWARD AREA CONE
4. CENTER EQUIPMENT BAY
5. L/H LANDING GEAR BAY
6. R/H LANDING GEAR BAY
7. L/H EQUIPMENT BAY
8. R/H EQUIPMENT BAY
9. CREW PRESSURIZED AREA
10. EXTERIOR AREA OF LARGE PRESS. BULKHEAD
11. SPACECRAFT EXTERIOR L/H
12. SPACECRAFT EXTERIOR R/H
13. INTERNAL ADAPTER AREA
14. R/H EXTERNAL ADAPTER AREA
15. L/H EXTERNAL ADAPTER AREA
16. ZONE FOR ENTIRE SPACECRAFT

GEMINI SPACECRAFT NO. 3

ZONE NO. 9

TOTAL EQUIPMENT REQUIRED 78

EQUIPMENT ON HAND 37

EQUIPMENT TO SCHEDULE 32

EQUIPMENT LATE 9

	PART NO.	PART NAME		NORM. INST.	SLACK	DEF. INST.	SLACK	HOURS TO INSTALL
52	83716-3	CABLE ASSY	(1)	00005 A4	-2	00005 A3	+0	2
	-5		(1)					2
	-7		(1)					2
	-11		(1)					2
	-13		(1)					2
	-35		(1)					2
52	88721-35	TEMP SENSOR	(1)	00005 A4	-4	00005 A2	+0	2
	MAC9389	BIO MED CONVERTER	(1)	00005 A3	-7	00002 A3	+0	3
52	85713-31	TAPE RECORDER	(1)	00005 A3	-7	00002 A3	+0	1

GEMINI ZONE CHART

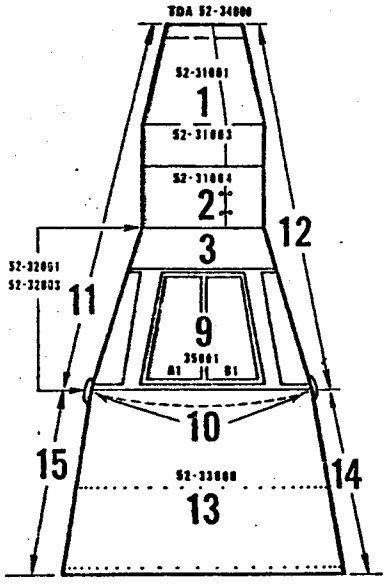

TOP VIEW

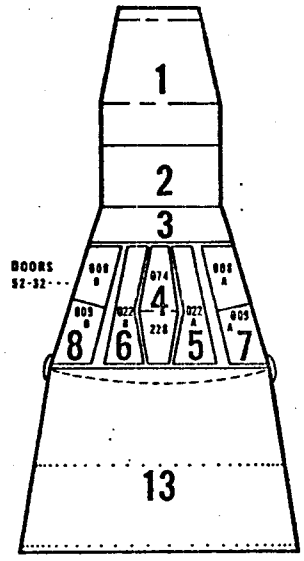

BOTTOM VIEW

1. RENDEZVOUS AND RADAR MODULE
2. RE-ENTRY RCS MODULE
3. FORWARD AREA CONE
4. CENTER EQUIPMENT BAY
5. L/H LANDING GEAR BAY
6. R/H LANDING GEAR BAY
7. L/H EQUIPMENT BAY
8. R/H EQUIPMENT BAY
9. CREW PRESSURIZED AREA
10. EXTERIOR AREA OF LARGE PRESS. BULKHEAD
11. SPACECRAFT EXTERIOR L/H
12. SPACECRAFT EXTERIOR R/H
13. INTERNAL ADAPTER AREA
14. R/H EXTERNAL ADAPTER AREA
15. L/H EXTERNAL ADAPTER AREA
16. ZONE FOR ENTIRE SPACECRAFT

GEMINI SPACECRAFT NO. 3

ZONE NO. 10

TOTAL EQUIPMENT REQUIRED 2

EQUIPMENT ON HAND 0

EQUIPMENT TO SCHEDULE 2

EQUIPMENT LATE 0

PART NO.	PART NAME	NORM. INST.	SLACK	DEF. INST.	SLACK	HOURS TO INSTALL

GEMINI ZONE CHART

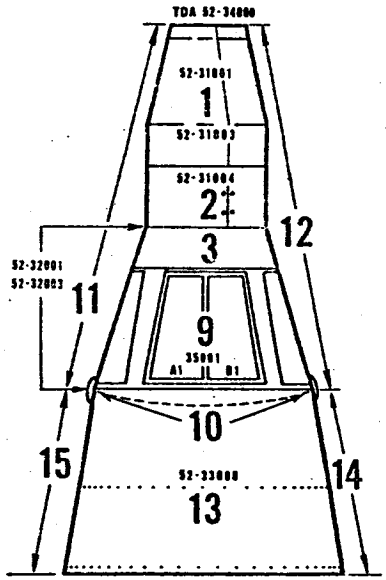

TOP VIEW

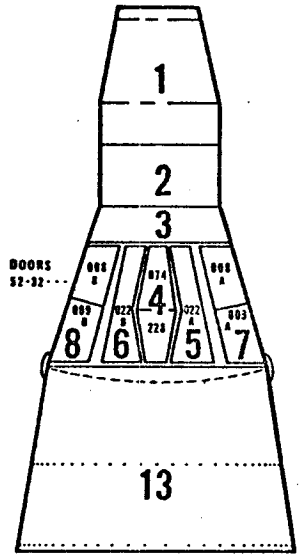

BOTTOM VIEW

1. RENDEZVOUS AND RADAR MODULE
2. RE-ENTRY RCS MODULE
3. FORWARD AREA CONE
4. CENTER EQUIPMENT BAY
5. L/H LANDING GEAR BAY
6. R/H LANDING GEAR BAY
7. L/H EQUIPMENT BAY
8. R/H EQUIPMENT BAY
9. CREW PRESSURIZED AREA
10. EXTERIOR AREA OF LARGE PRESS. BULKHEAD
11. SPACECRAFT EXTERIOR L/H
12. SPACECRAFT EXTERIOR R/H
13. INTERNAL ADAPTER AREA
14. R/H EXTERNAL ADAPTER AREA
15. L/H EXTERNAL ADAPTER AREA
16. ZONE FOR ENTIRE SPACECRAFT

GEMINI SPACECRAFT NO. 3

ZONE NO. 11

TOTAL EQUIPMENT REQUIRED 3

EQUIPMENT ON HAND 1

EQUIPMENT TO SCHEDULE 2

EQUIPMENT LATE 0

PART NO.	PART NAME	NORM. INST.	SLACK	DEF. INST.	SLACK	HOURS TO INSTALL

27 December 1963

SUBJECT: GEMINI STATUS REPORT FOR THE PERIOD 30 NOVEMBER 1963 TO 27 DECEMBER 1963 - SPACECRAFT NUMBER THREE

1. RECAPITULATION

The Cabin Assembly for this Spacecraft is located in the White Room where final assembly operations are in progress. Styrofoam has been installed in zones 7 and 8 and seven coldplates have also been installed. Coolant plumbing is being installed in adjacent areas. Available thermal blanks have also been installed in the Z160 area as well as in zones 7 and 8. Six dummy batteries 52-79702-7 and -9 have had trial installations made. The hatch actuator lock release lanyards are also installed.

The R & R Section as well as the modules for the adapter are in the White Room for final assembly operations except for the ECS pump package.

The PCS Section for this Spacecraft is located in the [illegible] where final assembly operations are in progress. The [illegible] are being installed. The anchor nuts have been installed. [illegible] are in work at the present time.

The Adapter for this unit is located in the structure area [illegible] final assembly operations are in progress. The unit is now in [illegible] and D.R.'s are being worked. ECSO items have been completed.

Hatches and Doors for this unit have been returned from the White Room to the Structure Area for rework. This rework is basically in [illegible] in shingle installation and ECSO items. Work is now in progress on other units.

The [illegible] pump module has been [illegible] from the White Room [illegible] as [illegible] on a [illegible]

2. FORECAST

The following events are scheduled for accomplishment during the next 30 day period: delivery to the White Room the following items, adapter, RCS module, doors, hatches and ECS pump module, install hatches - fit shingles and rigging of hatches and flipper doors, complete styrofoam Z160 area Zone 3, install remainder of min-K and fitshingles, start installation of electrical equipment, install coldplates and coolant plumbing.

CONFIDENTIAL

GEMINI MANUFACTURING WORK PLAN SPACECRAFT NO. 5

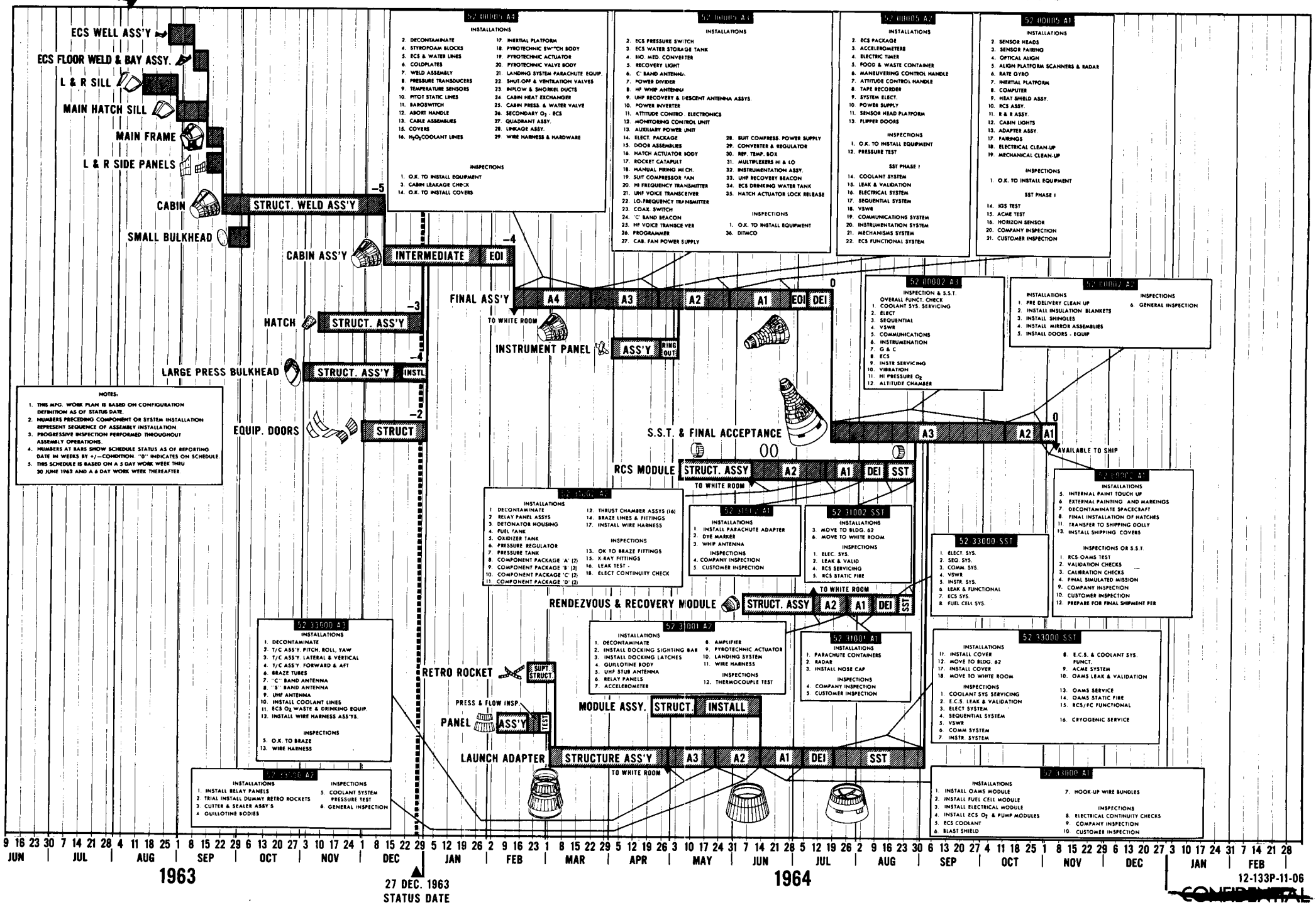

12-133P-11-06

CONFIDENTIAL

GEMINI STATUS REPORT FOR THE PERIOD 30 NOVEMBER THRU
27 DECEMBER 1963 - SPACECRAFT NUMBER FIVE

1. RECAPITULATION

The Cabin Assembly for this Spacecraft is located in the Structure Area and is now installed in the assembly jig. Partial spotwelding was completed on 26 December and the unit reinstalled in the jig for further locating of details. Clean up of detail work prior to spotwelding was completed 20 December.

The Hatches for this Spacecraft are located in the structure area. Buildup of details on both hatches is in progress. The skin assemblies for these hatches were installed in the assembly jigs on 4 December 1963.

The doors for this Spacecraft are located in the structure area. All units are located in their respective assembly jigs and work is in progress.

The Large Pressure Bulkhead is located in the structure area. This unit is now installed in the assembly jig and work is in progress.

2. FORECAST

The following events are scheduled for accomplishment during the next 30 day period: Completion of cabin structure weld assembly and installation of the unit in the line dolly, completion of hatches, large pressure bulkhead and equipment doors.

GEMINI MANUFACTURING WORK PLAN—SPACECRAFT NO. 6

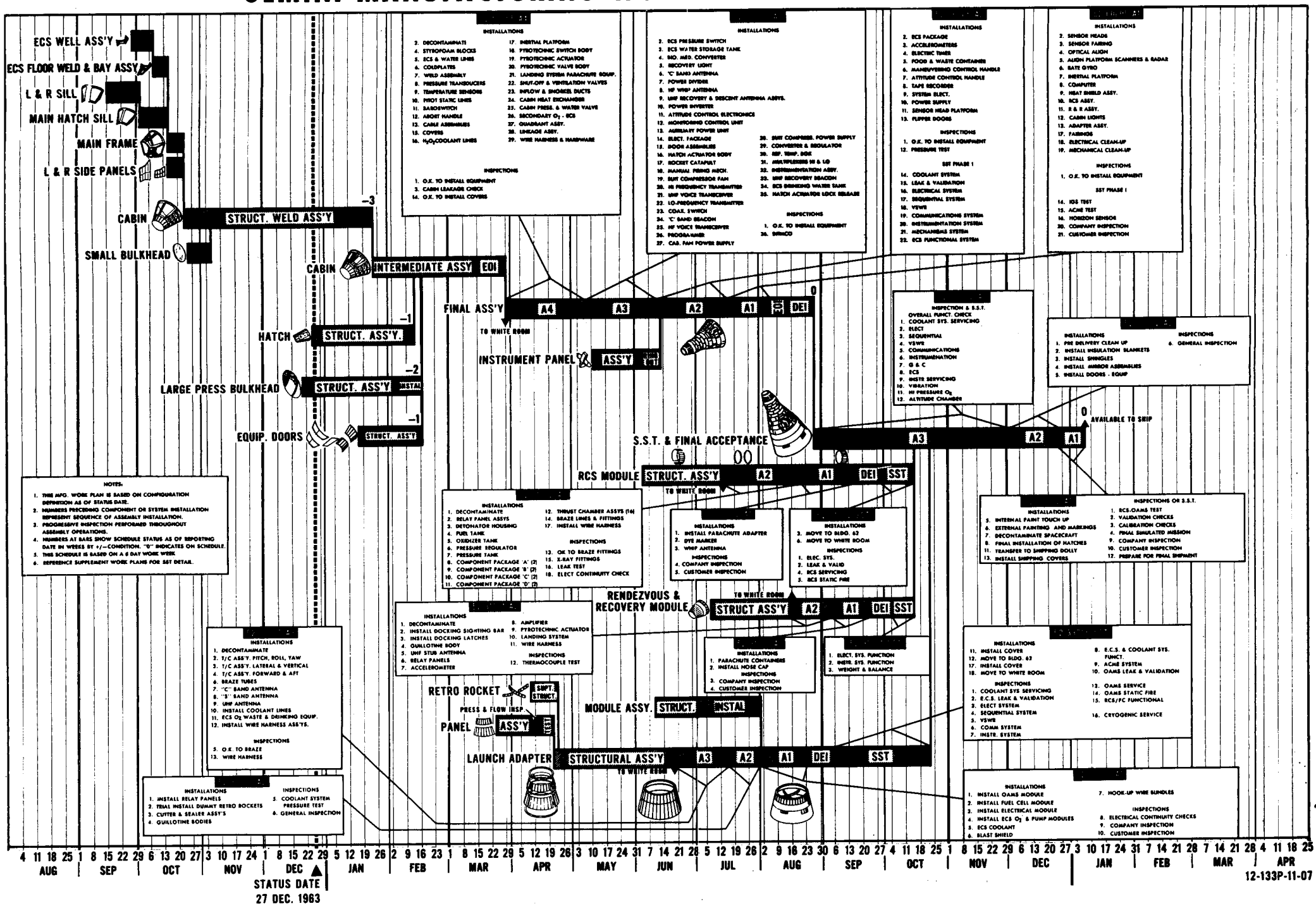

27 December 1963

SUBJECT: GEMINI STATUS REPORT FOR THE PERIOD 30 NOVEMBER THRU 27 DECEMBER 1963 - SPACECRAFT NUMBER SIX

1. RECAPITULATION

The Cabin Assembly for this Spacecraft is located in the Structure Area. The unit is now in welding prior to installation in the assembly jig The 32134 stiffeners have been located and welding is complete. Miscellaneous straps and wire bundle clips are in work. Work on the Small Pressure Bulkhead is also being accomplished. The side panels have been installed and the installation of the anchor nuts has been accomplished.

The Large Pressure Bulkhead is in work in the structure area. Work is in progress in the assembly jig.

Work has just been started on the hatches for this unit in the structure area.

2. FORECAST

The following events are scheduled to be accomplished during the next 30 day period: start of all equipment doors, completion of spotwelding of cabin structure and installation of this unit in the assembly jig. continuation of work on the hatches and Large Pressure Bulkhead.

GEMINI SPACECRAFT
MANUFACTURING WORK PLAN
STATIC ARTICLE NO.7

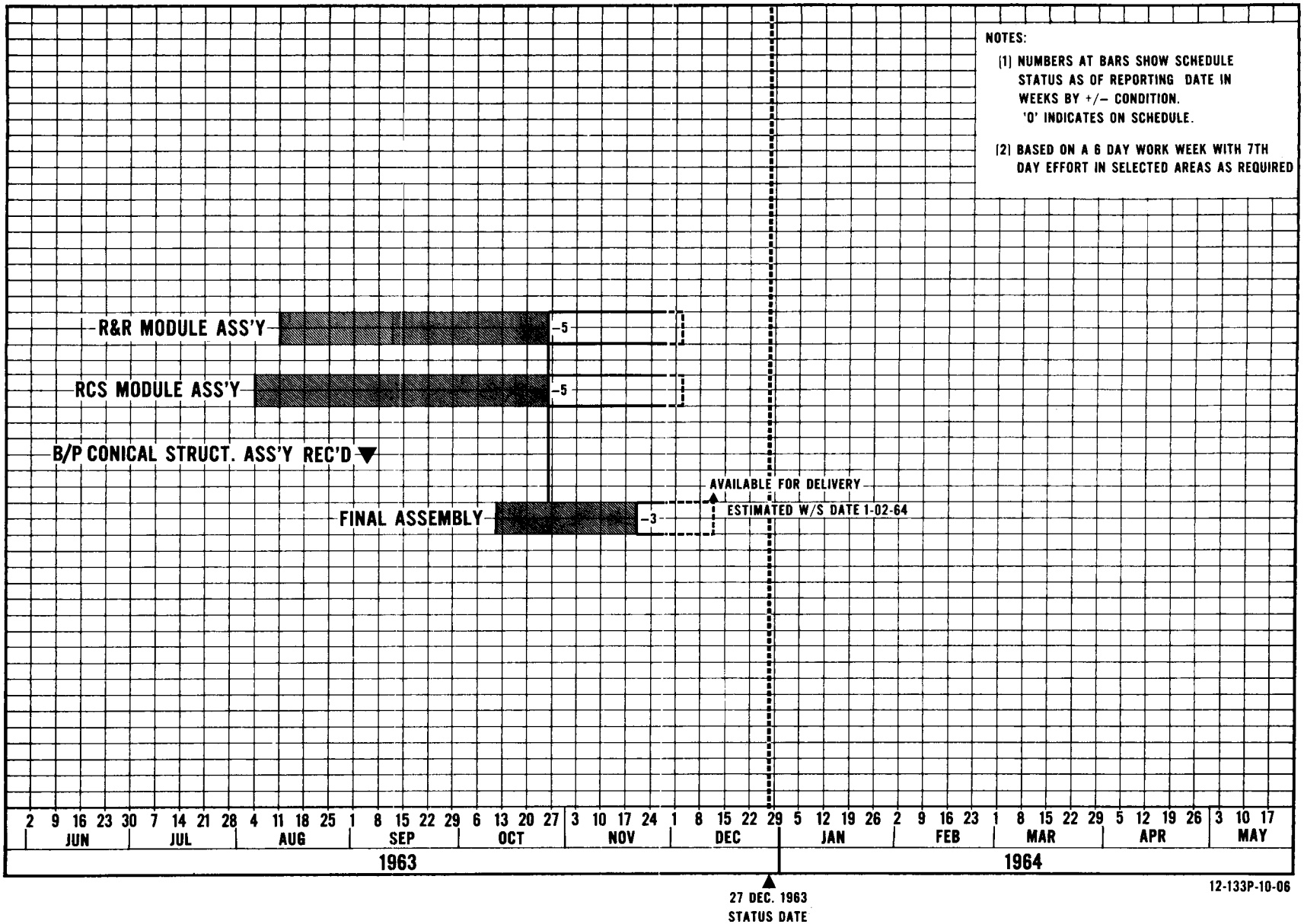

12-133P-10-06

SUBJECT: GEMINI STATUS REPORT FOR THE PERIOD 30 NOVEMBER 1963
27 DECEMBER 1963 - SPACECRAFT - STATIC 7

1 RECAPITULATION

The Cabin Assembly for this Spacecraft is located in the [illegible] Area. All work was completed insofar as possible with available [illegible] 6 December. Painting was completed on 8 December and the unit returned to the structure area for additional installations. The unit was [illegible] on 14 December and returned to the structure area for installation of additional equipment.

The R & R and RCS Sections for this unit are complete. [illegible] operations have been completed and painting has also been accomplished.

The second R & R and RCS Sections for this unit [illegible] structure area. Final assembly operations are in progress.

2 FORECAST

The following events are scheduled for accomplishment [illegible] next 30 day period. Delivery of the static vehicle and the [illegible] R & R and RCS Sections to Northrop - Ventura.

27 December 1963

SUBJECT: GEMINI STATUS REPORT FOR THE PERIOD 30 NOVEMBER THRU 27 DECEMBER 1963 - SPACECRAFT - BOILERPLATE 3A

1. RECAPITULATION

The Cabin Assembly for this unit is located in the Structure Area where final assembly and clean up operations are now in progress. Both hatches have been installed and flipper door installation and rigging is now in work. Shingles are also being installed on both the structure and hatches. The work on the Large Pressure Bulkhead has been completed. The seat track installations are also complete. Final installation of the Z104 splice plates was made on 13 December. Final installation of the pressure vessel to the boilerplate was accomplished on 5 December.

The replacement hatches for this unit are in work in the structure area.

2. FORECAST

The following events are scheduled to be accomplished during the next 30 day period: completion of this unit and delivery to the Lab for tests, completion of replacement hatches and delivery to the Lab.

Contract NAS 9-170

Actual Engineering Manhours

MAC Cost Item No.	Description of Work	W/E 12/1/63 Total Hrs	W/E 12/8/63 Total Hrs	W/E 12/15/63 Total Hrs	W/E 12/22/63 Total Hrs
	SPACE VEHICLE SYSTEM				
01	Flt. Tech. & Mission Plan.	1,020	1,434	1,885	1,840
02	Flt. Simulation Tr. & Tr. Aids	8,361	10,435	10,463	8,832
03	Personnel Training	184	96	84	246
04	Ground Test Program	2,068	2,771	3,086	2,736
05	Project Orbit Tests	1,328	1,667	1,726	1,694
06	S/C Systems Tests	2,429	2,836	2,970	3,338
07	Launch Operations	-0-	-0-	9	20
08	Publications	2,322	3,268	3,698	3,408
09	Spare Parts	29	47	24	31
11	Aerospace Ground Equip.	7,678	9,774	10,189	10,073
12	Main., Repair & Support	24	8	8	8
13	Spec., Reports & Docum.	1,117	1,370	1,306	1,302
	RE-ENTRY MODULE				
21	Space Frame, Re-entry Mod. Fabr. & Str. Ass.	6,360	7,798	6,939	6,795
22	Space Frame, Re-entry Mod. Install. & Final Ass.	401	489	557	509
23	Interial Guidance Sys.	2,145	2,633	2,686	2,699
24	Attitude Control Sys.	1,246	1,527	1,525	1,467
25	Electrical Sys.	3,447	4,487	4,039	3,949
26	Communication Sys.	1,324	1,643	1,628	1,725
27	Instrumentation & Recording	3,372	3,832	4,168	4,064
28	Re-entry Reac. Control Sys.	861	1,494	1,700	1,059
29	Landing Sys. - Paraglider	463	406	405	322
30	Landing Sys. - Recovery Chute	266	335	353	295
31	Post Land. & Survival Sys.	62	89	164	79
32	Crew Systems, Displays, Instr.	764	976	853	872
33	Ejection Seat	721	762	757	590
34	Time Reference Sys.	783	681	692	649
35	Pyrotech. & Release Mech.	623	838	1,019	1,046
36	Environmental Control Sys.	2,168	2,719	2,783	2,586
37	Ablation Shield	266	267	496	383
56	Rendezvous Radar	524	670	636	532
57	Horizon Sensors	133	207	229	275
	ADAPTER MODULE				
51	Space Frame, Adapter Mod. Fabr.	1,845	1,979	2,245	2,256
52	Space Frame, Adapter Mod. Install. & Final Ass.	148	184	168	119

MAC Cost Item No.	Description of Work	W/E 12/1/63 Total Hrs	W/E 12/8/63 Total Hrs	W/E 12/15/63 Total Hrs	W/E 12/22/63 Total Hrs
	ADAPTER MODULE (Continued)				
53	Battery Fuel Cell	224	371	293	254
54	Reactant Supply System	208	329	574	563
55	Adapter Propulsion System	726	1,441	1,024	862
59	Retrograde Rocket	167	202	165	110
61	Adapter Environ. Control Sys.	1,319	1,792	1,805	2,108
62	Adapter - Elect. & Misc. Electronics	387	440	498	417
71	Target Vehicle Docking Adapter	481	622	666	587
	TOTALS	57,994	72,919	74,515	70,700

Typical

	SYSTEM	VENDOR	LOCATION	
[illegible]	OAMS	Bendix	Canoga Park, Calif.	[illegible]
[illegible]	RCS	Bendix	Canoga Park, Calif.	[illegible]
[illegible]	Remote Receiver	Thiokol	Elkton, Maryland	[illegible]
[illegible]	TGS	I.B.M.	Owego, N.Y.	[illegible]
[illegible]	TMU	Honeywell - St. Peter	St. Petersburg, Fla.	[illegible]
[illegible]	ACME	Honeywell - Minn.	Minneapolis, Minn.	[illegible]
[illegible]	Harrison Sensors	Air Tech. Lab	Mountainview, Calif.	[illegible]
[illegible]	Fuel Cell	General Electric	Lynn, Mass.	[illegible]
[illegible]	Reactant Supply	AiResearch	Torrance, Calif.	[illegible]
[illegible]	RCS	AiResearch	Torrance, Calif.	[illegible]
[illegible]	Attitude Display	Lear Siegler	Grand Rapids, Mich.	[illegible]
[illegible]	Heat Shield	McDonnell E.S.D.	St. Louis, Mo.	[illegible]
[illegible]	UHF Voice T/R	Collins Radio	Cedar Rapids, Iowa	[illegible]
[illegible]	HF Voice T/R	Collins Radio	Cedar Rapids, Iowa	[illegible]
[illegible]	Voice Control Cntr	Collins Radio	Cedar Rapids, Iowa	[illegible]
[illegible]	Digital Command	Motorola	Scottsdale, Ariz.	[illegible]
[illegible]	S-Band Radar	ITT Intercontinental	Paramus, N.J.	[illegible]
[illegible]	C-Band Radar	ITT Intercontinental	Paramus, N.J.	[illegible]
[illegible]	Range Safety Rcvr	Westinghouse	Baltimore, Md.	[illegible]
[illegible]	Docking System	Sperry Sys. Div.	Van Nuys, Calif.	[illegible]
[illegible]	Escape Tower	McDonnell E.S.D.	St. Louis, Mo.	[illegible]
[illegible]	Escape Motor	McDonnell E.S.D.	St. Louis, Mo.	[illegible]
[illegible]	Data Transmission	Air Force Missile Test Center	Cape Canaveral, Fla.	[illegible]
[illegible]	[illegible]	[illegible]	[illegible]	[illegible]
[illegible]	[illegible]	[illegible]	[illegible]	[illegible]

GEMINI SPACECRAFT
CONTRACT NO. NAS 9-170

SYSTEM QUALIFICATION

STATUS CHART

REPORT NO. 3350-1 -35
LAST PROGRAM SCHEDULE CHANGE: 15 Nov 63
STATUS AS OF: 27 Dec 63

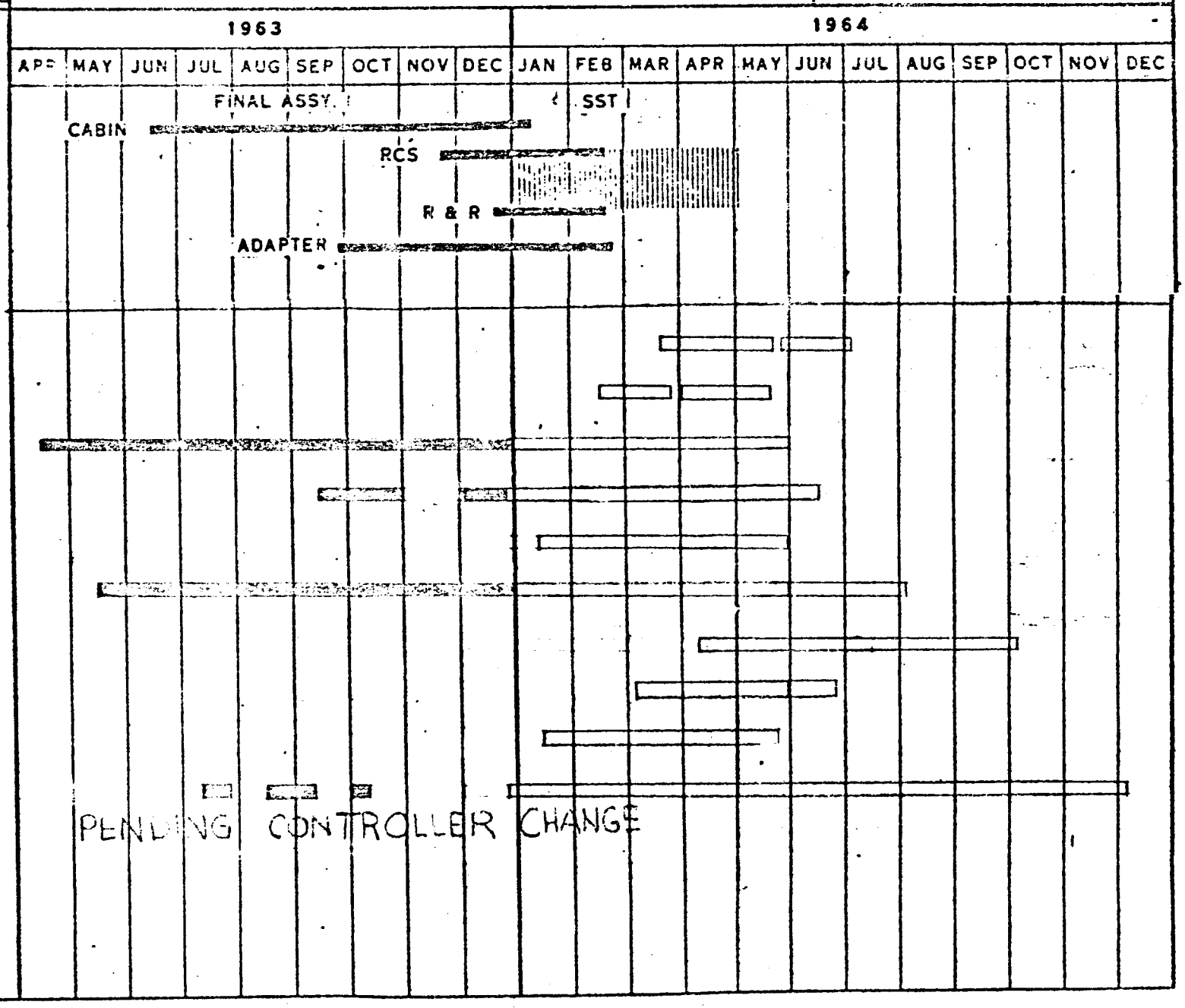

GEMINI SPACECRAFT

CONTRACT NO. NAS 9-170

SYSTEM QUALIFICATION

STATUS CHART

REPORT NO. 8580-1 - 35

LAST PROGRAM SCHEDULE CHANGE: 15 Nov. 1963

STATUS AS OF: 27 Dec. 1963

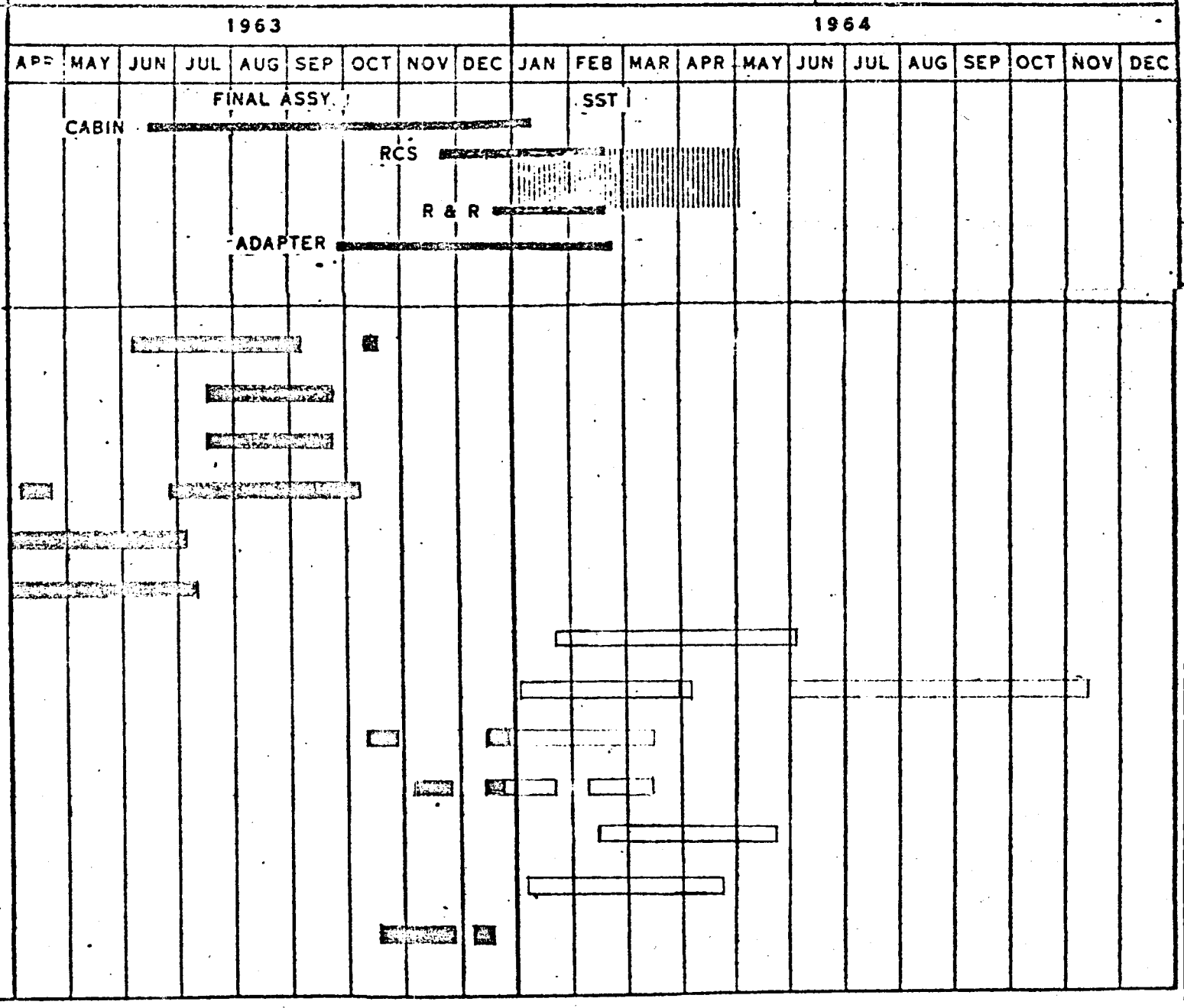

[illegible] AND [illegible] STATUS

1. [illegible]

   A. [illegible] All [illegible] have been shipped to AAC.

   B. [illegible] All [illegible] have been shipped with the following exceptions:

      1. [illegible] TCA [illegible] two actual [illegible] to be delivered from [illegible] hardware not suitable for flight [illegible] available

      2. [illegible] TCA [illegible] two actual [illegible] to be delivered from [illegible] hardware not suitable for flight [illegible] available

2. S/C 2

   A. [illegible] Complete [illegible] for TCA [illegible] and [illegible] ridges. Two of [illegible] have been shipped and last TCA required [illegible] ridges [illegible] ship [illegible] Cape.

   B. [illegible] Complete [illegible] for TCA [illegible] ridges. [illegible] has been shipped and last TCA [illegible] Three of six [illegible] TCA have been shipped and last TCA [illegible] ship 12/28/6[illegible]. Two of two [illegible] TCA [illegible] ship 12/[illegible] [illegible] should ship [illegible] to Cape.

3. S/C 3

   A. [illegible]

      1. Package [illegible]: One [illegible] will ship [illegible] to Arnoldine [illegible]

      2. Package [illegible]: [illegible] have been held up for [illegible]

      3. Package [illegible]: One [illegible] ship to Arnoldine [illegible]

      4. Package [illegible]: One [illegible] ship to Arnoldine [illegible]

      5. Power Tank [illegible]: [illegible]

      6. Fuel Tank [illegible]: [illegible] have been held up [illegible]

      7. [illegible]

10. P-T Indicator (1): Actual

B. OAMS

1. Package "C" (1): One piece actual.

2. Package "D" (1): One piece will ship 12/28/63. This piece is in MAC/AFQC Buy-off.

3. Package "E" (1): One piece will ship 1/13/64. Assembly was held up because of valve shortage. This piece is in work.

4. Press. Tank (1): One piece actual.

5. Oxidizer Tank (1): One piece will ship 1/04/64. This piece is in particle count.

6. Fuel Tank (1): One piece will ship 12/31/63. This piece is at Mass Specification.

7. 25# TCA (8): Eight pieces will ship by 1/11/64. These pieces are in the pipeline.

8. 85# TCA (2): Two pieces will ship by 1/06/64. These pieces are in the pipeline.

9. 100# TCA (6): Six pieces will ship by 1/10/64. These pieces are in the pipeline.

10. M.O.S.O. Valve (2): Two pieces actual.

11. Cartridge (1): Direct ship to Cape is now estimated 1/07/64.

TEST STATUS

1. Development Testing: MAC estimates that Rocketdyne is 50% complete with Development Testing

2. The system D.I.T. (Design Information Test) procedures have been submitted by Rocketdyne, but no test schedule was submitted. This information will be furnished when available.

3. DAT - RAT: Rocketdyne has not yet formally submitted an updated test schedule. Test status charts submitted with this report were made to the best information available.

4. The Design Approval Test procedures for the pressurant tanks and motor operated shut-off valve are being reviewed. The DAT procedure for the P-T Indicator has been reviewed and approved with change.

5. The following Hot Fire Tests were conducted since the last Report:

T/C	INJECTOR	WRAP	%	O/F	TEST	BURN TIME	REMARKS
25# OAMS	Conical	High Temp	92	1.34	MDC	201 SEC.	3 Tube Injector
25# OAMS	006	High Temp	94.3	1.31	MDC	197.1 SEC.	Raybestos Chamber
100# OAMS	001	High Temp	86.6	1.59	MDS (new)	475 SEC.	Low Perf. Injector
100# OAMS	001	High Temp	85	1.59	MDC + SS	540 SEC.	Low Perf. Injector

GEMINI
SPACECRAFT
CONTRACT NO. NAS 9-170

ORBIT ATTITUDE MANEUVER SYSTEM

(VENDOR: ROCKETDYNE)

STATUS CHART

REPORT NO. [illegible]-1 -35
LAST PROGRAM SCHEDULE CHANGE: 15 Nov. 1963
STATUS AS OF: 27 Dec. 1963

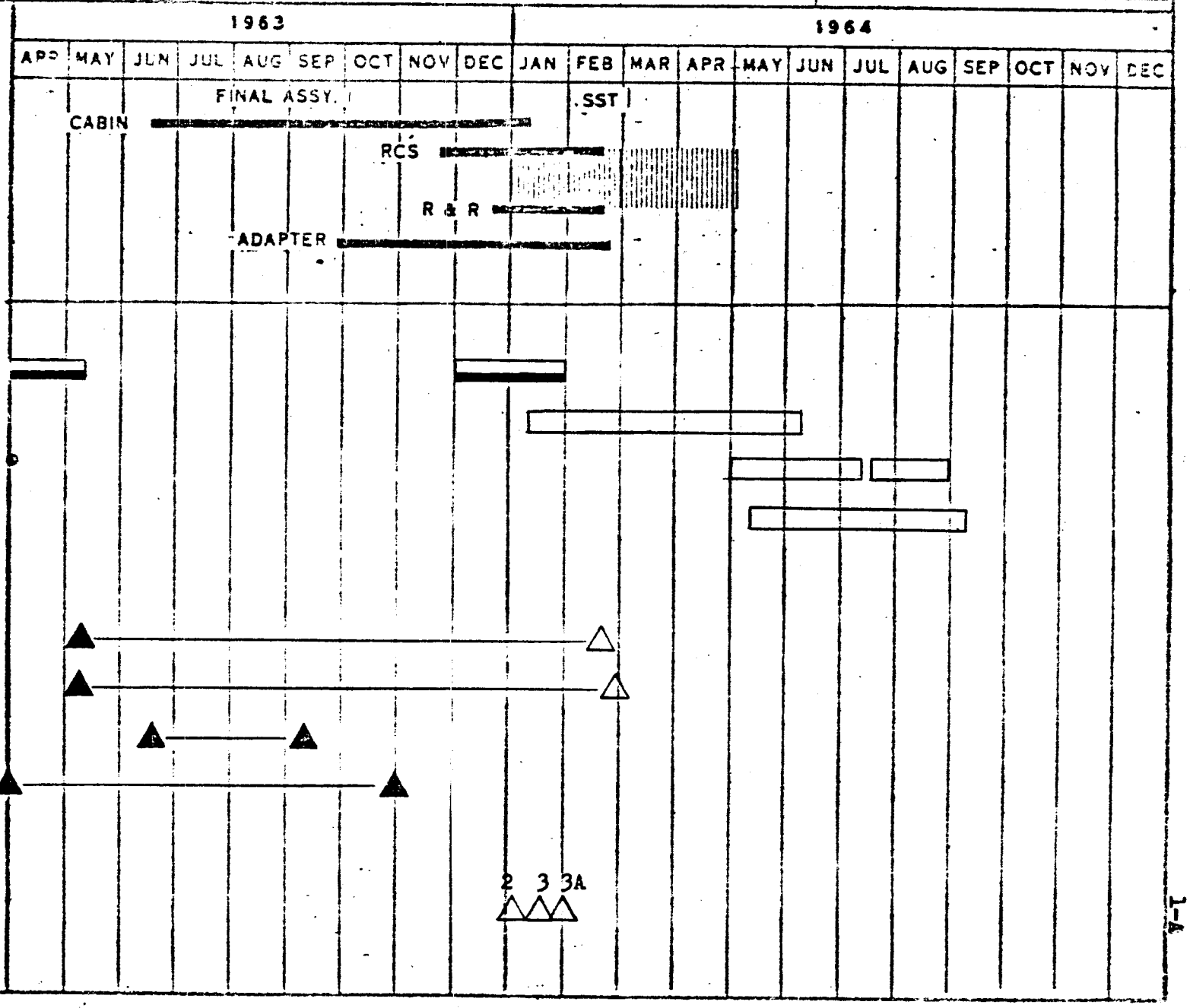

QUALIFICATION TEST STATUS
ORBIT ATTITUDE AND MANEUVER SYSTEM - COMPONENTS
ROCKETDYNE - SCD 52-52701

27 DECEMBER 1963

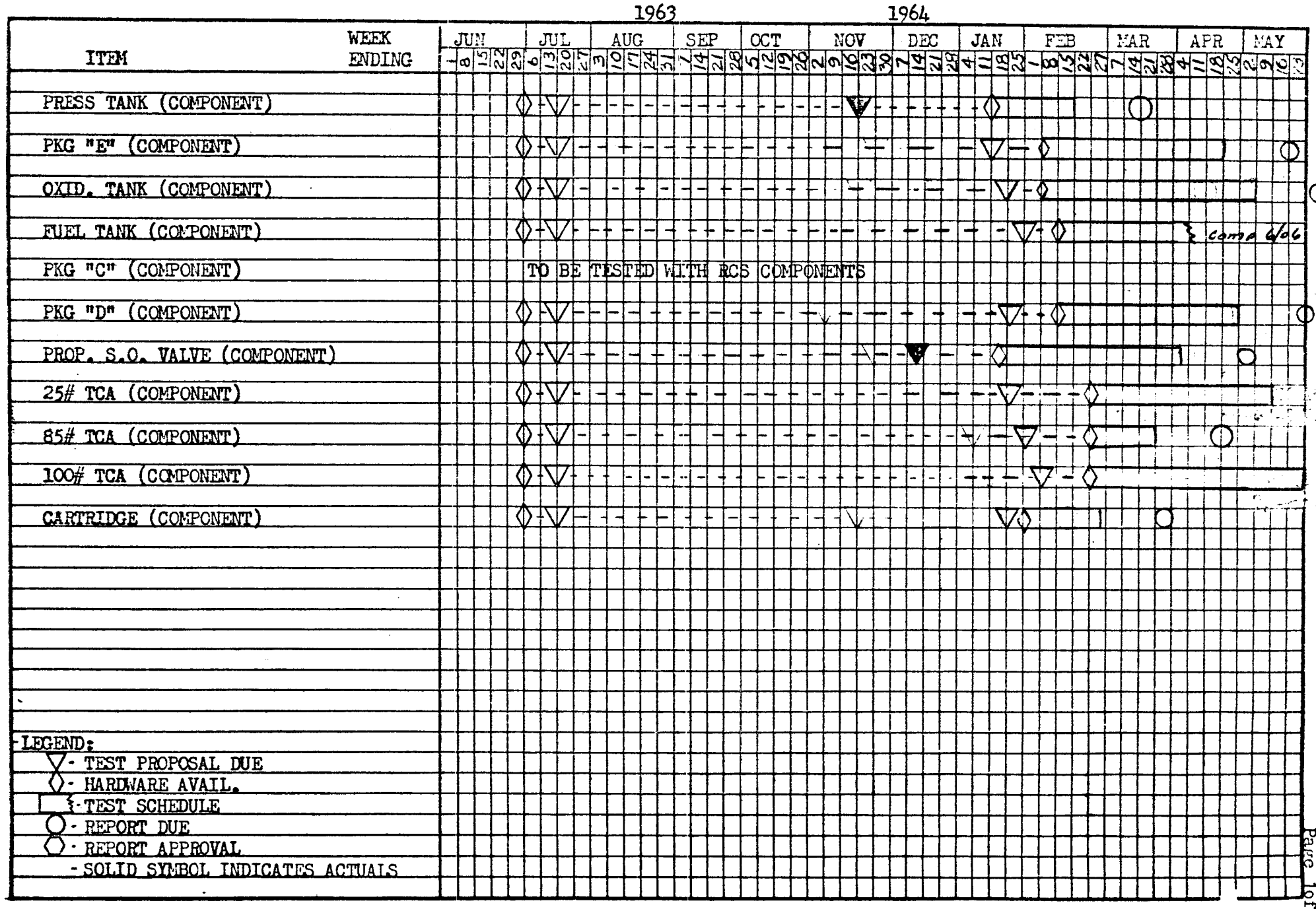

1-B
Page 1 of 2

MAC 2274V (27 APR 59)

QUALIFICATION TEST STATUS
ORBIT ATTITUDE AND MANEUVER SYSTEM
ROCKETDYNE SCB-52-52701

27 DECEMBER 1963

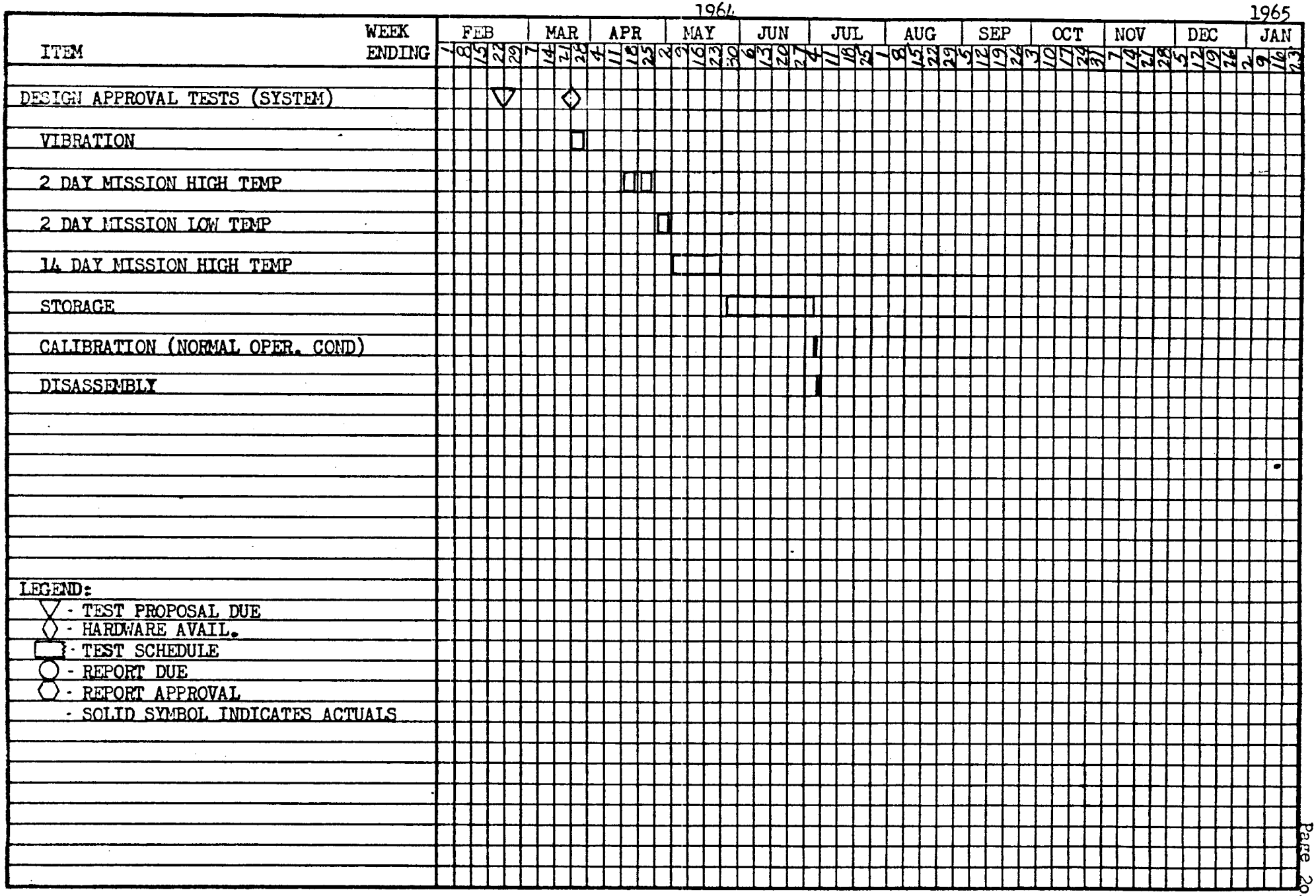

MAC 2274V (27 APR 59)

VENDOR DELIVERY STATUS REPORT
ORBIT ATTITUDE MANEUVER SYSTEM
ROCKETDYNE

UNIT NO	TYPE	USAGE	COMPONENT	VENDOR W/S	AVAIL FOR INSTL	REQ'D FOR INSTL	SL
8	PP-1	SC-2	-245 TCA 25#	12-20-63	01-03-64	12-12-63	[illegible]
8	PP-1	SC-2	-247 TCA 85#	12-29-63	01-02-64	12-12-63	[illegible]
8	PP-1	SC-2	-249 TCA 100#	12-28-63	01-02-64	12-12-63	[illegible]
8	PP-1	SC-2	-233 CARTRIDGE	01-07-64	01-14-64	05-13-64	[illegible]
9	PP-2	SC-3	-171 COMP PKG C	A	01-17-64	01-04-64	[illegible]
9	PP-2	SC-3	-173 COMP PKG D	12-28-63	01-17-64	01-04-64	[illegible]
9	PP-2	SC-3	-175 COMP PKG E	01-13-64	01-17-64	01-04-64	[illegible]
9	PP-2	SC-3	-245 TCA 25#	01-11-64	01-17-64	01-04-64	[illegible]
9	PP-2	SC-3	-247 TCA 85#	01-06-64	01-17-64	01-04-64	[illegible]
9	PP-2	SC-3	-249 TCA 100#	01-10-64	01-17-64	01-04-64	[illegible]
9	PP-2	SC-3	-169 PRESS TANK	A	01-17-64	01-04-64	[illegible]
9	PP-2	SC-3	-177 OXID TANK	01-04-64	01-17-64	01-04-64	[illegible]
9	PP-2	SC-3	-179 FUEL TANK	12-31-63	01-17-64	01-04-64	[illegible]
9	PP-2	SC-3	-187 S O VALVE	A	01-17-64	01-04-64	[illegible]
9	PP-2	SC-3	-233 CARTRIDGE	01-07-64	01-17-64	02-04-64	[illegible]
10	PP-3	SC-3A	-171 COMP PKG C	01-07-64	02-01-64	03-01-64	[illegible]
10	PP-3	SC-3A	-173 COMP PKG D	01-04-64	02-01-64	03-01-64	[illegible]
10	PP-3	SC-3A	-175 COMP PKG E	12-27-63	02-01-64	03-01-64	[illegible]
10	PP-3	SC-3A	-245 TCA 25#	01-20-64	02-01-64	03-01-64	[illegible]
10	PP-3	SC-3A	-247 TCA 85#	01-15-64	02-01-64	03-01-64	[illegible]
10	PP-3	SC-3A	-249 TCA 100#	01-22-64	02-01-64	03-01-64	[illegible]
10	PP-3	SC-3A	-169 PRESS TANK	A	02-01-64	03-01-64	[illegible]
10	PP-3	SC-3A	-177 OXID TANK	A	02-01-64	03-01-64	[illegible]
10	PP-3	SC-3A	-211 FUEL TANK	A	02-01-64	03-01-64	[illegible]
10	PP-3	SC-3A	-187 S O VALVE	A	02-01-64	03-01-64	[illegible]
10	PP-3	SC-3A	-233 CARTRIDGE	01-07-64	01-14-64	03-01-64	[illegible]

[illegible]	[illegible]	[illegible]		[illegible]	[illegible]
[illegible]	[illegible]	[illegible]		[illegible]	[illegible]
EA20012-?	[illegible]	[illegible]		[illegible]	[illegible]
EA20008-1	[illegible]	[illegible]		ACTUAL	[illegible]
EA20013-?	[illegible]	[illegible]		[illegible]	[illegible]
EA20013-?	[illegible]	[illegible]		[illegible]	[illegible]
EA20014-1	[illegible]	[illegible]		[illegible]	[illegible]
EA20014-1	[illegible]	[illegible]		[illegible]	[illegible]
EA20019-?	[illegible]	[illegible]		ACTUAL	[illegible]

EA20004-1	[illegible]	[illegible]	[illegible]	ACTUAL	[illegible]
EA20005-1	PROP [illegible]	[illegible]	[illegible]	[illegible]	[illegible]
EA20007-3	PROP [illegible]	[illegible]	[illegible]	[illegible]	[illegible]
EA20007-3	PROP [illegible]	[illegible]	[illegible]	[illegible]	[illegible]
EA20007-3	[illegible]	[illegible]	[illegible]	[illegible]	[illegible]
EA20008-1	[illegible]	[illegible]	ACTUAL	ACTUAL	[illegible]
EA20009-1	[illegible]	[illegible]	[illegible]	[illegible]	[illegible]
EA20010-1	[illegible]	[illegible]		ACTUAL	
EA20012-1	PROP [illegible]	[illegible]		ACTUAL	
EA20012-1	[illegible]	[illegible]		ACTUAL	
EA20013-1	[illegible]	[illegible]		ACTUAL	
EA20013-1	[illegible]	[illegible]	[illegible]	01-05-64	[illegible]
EA20013-1	[illegible]	[illegible]	[illegible]	[illegible]	[illegible]
EA20014-1	[illegible]	[illegible]		ACTUAL	
EA20014-1	[illegible]	[illegible]	[illegible]	01-05-64	[illegible]
EA20014-1	[illegible]	[illegible]	[illegible]	[illegible]	[illegible]
EA20015-1	[illegible]	[illegible]		ACTUAL	
EA20015-1	[illegible]	[illegible]		ACTUAL	
EA20016-1	[illegible]	[illegible]		ACTUAL	
EA20019-1	[illegible]	[illegible]	[illegible]	[illegible]	[illegible]
EA20019-1	[illegible]	[illegible]	[illegible]	[illegible]	[illegible]

EA20004-3	PROP [illegible]	[illegible]	[illegible]	[illegible]	[illegible]
EA20012-1	[illegible]	[illegible]	[illegible]	[illegible]	[illegible]
EA20013-1	[illegible]	[illegible]		ACTUAL	
EA20014-1	[illegible]	[illegible]		ACTUAL	
EA20015-1	[illegible]	[illegible]	[illegible]	[illegible]	[illegible]
EA20015-1	[illegible]	[illegible]	[illegible]	[illegible]	[illegible]
EA20016-1	[illegible]	[illegible]	[illegible]	[illegible]	[illegible]
EA20019-1	[illegible]	[illegible]	[illegible]	[illegible]	[illegible]
EA20025-1	[illegible]	[illegible]	[illegible]	[illegible]	[illegible]

GEMINI SPACECRAFT
CONTRACT NO. NAS 9-170

REACTION CONTROL SYSTEM (VENDOR: ROCKETDYNE)

STATUS CHART

REPORT NO 8390-1 -35
LAST PROGRAM SCHEDULE CHANGE: 15 Nov. 1963
STATUS AS OF: 27 Dec. 1963

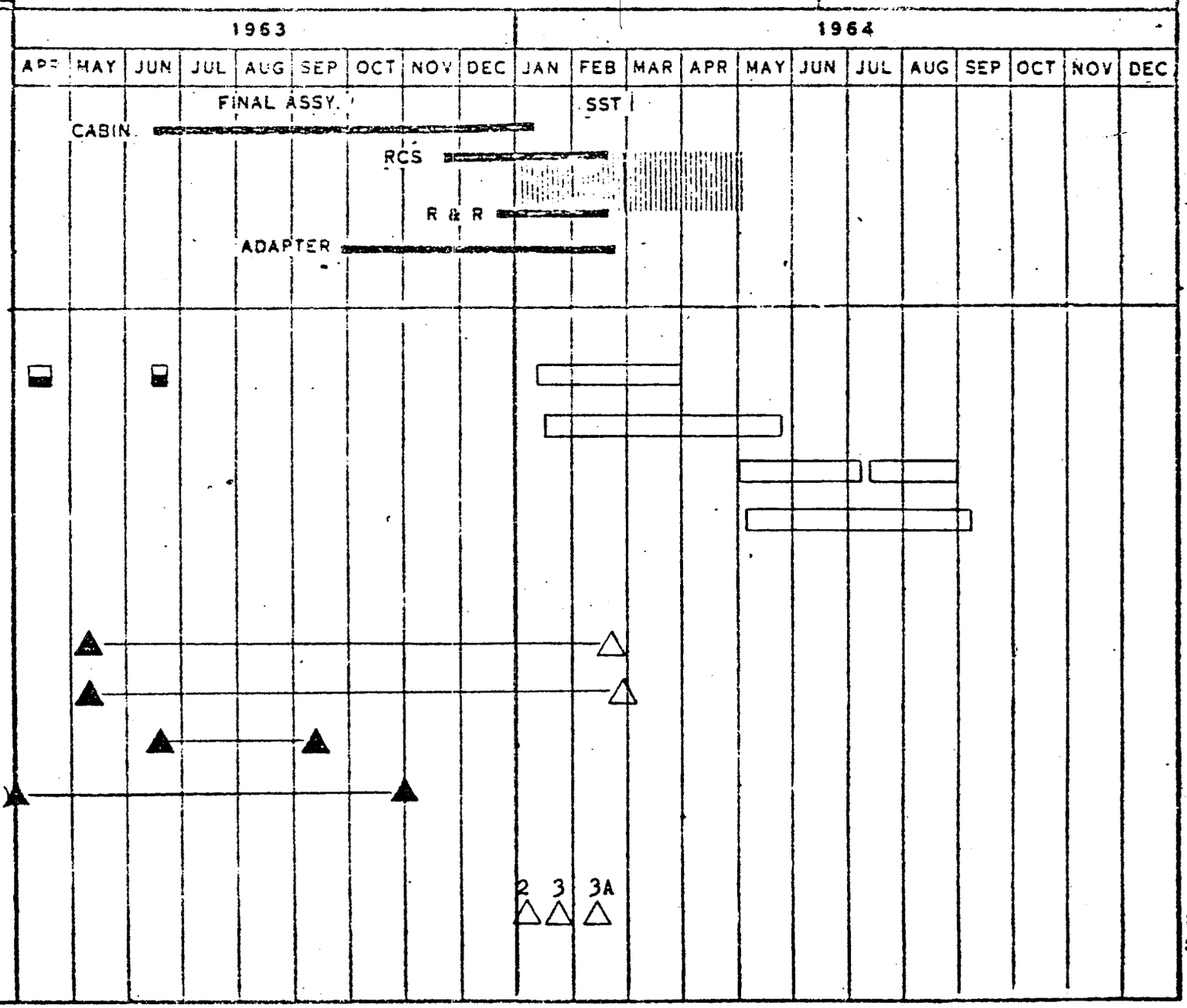

2-A

QUALIFICATION TEST STATUS
RE-ENTRY CONTROL SYSTEM
ROCKETDYNE - SCD 52-52700

27 DECEMBER 1963

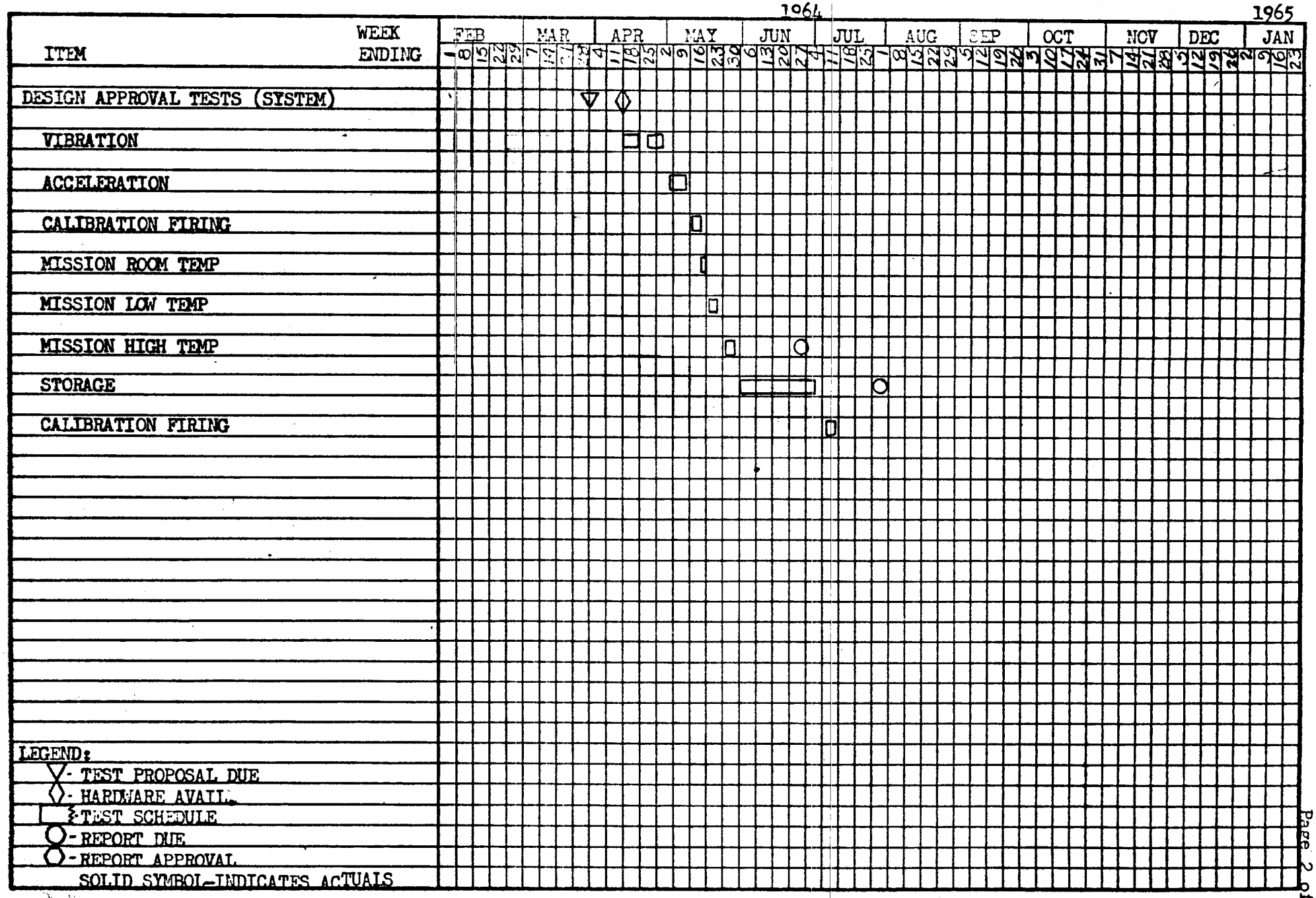

MAC 2274N (27 APR 59)

[illegible]	[illegible]	[illegible]	[illegible]	[illegible]	[illegible]	[illegible]	[illegible]
[illegible]	[illegible]	[illegible]	[illegible]	[illegible]	[illegible]	[illegible]	[illegible]
[illegible]	[illegible]	[illegible]	[illegible]	[illegible]	[illegible]	[illegible]	[illegible]
[illegible]	[illegible]	[illegible]	[illegible]	[illegible]	[illegible]	[illegible]	[illegible]
[illegible]	[illegible]	[illegible]	[illegible]	[illegible]	[illegible]	[illegible]	[illegible]
[illegible]	[illegible]	[illegible]	[illegible]	[illegible]	[illegible]	[illegible]	[illegible]
[illegible]	[illegible]	[illegible]	[illegible]	[illegible]	[illegible]	[illegible]	[illegible]
[illegible]	[illegible]	[illegible]	[illegible]	[illegible]	[illegible]	[illegible]	[illegible]
[illegible]	[illegible]	[illegible]	[illegible]	[illegible]	[illegible]	[illegible]	[illegible]
[illegible]	[illegible]	[illegible]	[illegible]	[illegible]	[illegible]	[illegible]	[illegible]
[illegible]	[illegible]	[illegible]	[illegible]	[illegible]	[illegible]	[illegible]	[illegible]
[illegible]	[illegible]	[illegible]	[illegible]	[illegible]	[illegible]	[illegible]	[illegible]
[illegible]	[illegible]	[illegible]	[illegible]	[illegible]	[illegible]	[illegible]	[illegible]
[illegible]	[illegible]	[illegible]	[illegible]	[illegible]	[illegible]	[illegible]	[illegible]
[illegible]	[illegible]	[illegible]	[illegible]	[illegible]	[illegible]	[illegible]	[illegible]
[illegible]	[illegible]	[illegible]	[illegible]	[illegible]	[illegible]	[illegible]	[illegible]
[illegible]	[illegible]	[illegible]	[illegible]	[illegible]	[illegible]	[illegible]	[illegible]
[illegible]	[illegible]	[illegible]	[illegible]	[illegible]	[illegible]	[illegible]	[illegible]
[illegible]	[illegible]	[illegible]	[illegible]	[illegible]	[illegible]	[illegible]	[illegible]
[illegible]	[illegible]	[illegible]	[illegible]	[illegible]	[illegible]	[illegible]	[illegible]
[illegible]	[illegible]	[illegible]	[illegible]	[illegible]	[illegible]	[illegible]	[illegible]
[illegible]	[illegible]	[illegible]	[illegible]	[illegible]	[illegible]	[illegible]	[illegible]
[illegible]	[illegible]	[illegible]	[illegible]	[illegible]	[illegible]	[illegible]	[illegible]
[illegible]	[illegible]	[illegible]	[illegible]	[illegible]	[illegible]	[illegible]	[illegible]
[illegible]	[illegible]	[illegible]	[illegible]	[illegible]	[illegible]	[illegible]	[illegible]
[illegible]	[illegible]	[illegible]	[illegible]	[illegible]	[illegible]	[illegible]	[illegible]
[illegible]	[illegible]	[illegible]	[illegible]	[illegible]	[illegible]	[illegible]	[illegible]
[illegible]	[illegible]	[illegible]	[illegible]	[illegible]	[illegible]	[illegible]	[illegible]
[illegible]	[illegible]	[illegible]	[illegible]	[illegible]	[illegible]	[illegible]	[illegible]
[illegible]	[illegible]	[illegible]	[illegible]	[illegible]	[illegible]	[illegible]	[illegible]
[illegible]	[illegible]	[illegible]	[illegible]	[illegible]	[illegible]	[illegible]	[illegible]
[illegible]	[illegible]	[illegible]	[illegible]	[illegible]	[illegible]	[illegible]	[illegible]
[illegible]	[illegible]	[illegible]	[illegible]	[illegible]	[illegible]	[illegible]	[illegible]
[illegible]	[illegible]	[illegible]	[illegible]	[illegible]	[illegible]	[illegible]	[illegible]
[illegible]	[illegible]	[illegible]	[illegible]	[illegible]	[illegible]	[illegible]	[illegible]
[illegible]	[illegible]	[illegible]	[illegible]	[illegible]	[illegible]	[illegible]	[illegible]
[illegible]	[illegible]	[illegible]	[illegible]	[illegible]	[illegible]	[illegible]	[illegible]
[illegible]	[illegible]	[illegible]	[illegible]	[illegible]	[illegible]	[illegible]	[illegible]
[illegible]	[illegible]	[illegible]	[illegible]	[illegible]	[illegible]	[illegible]	[illegible]
[illegible]	[illegible]	[illegible]	[illegible]	[illegible]	[illegible]	[illegible]	[illegible]
[illegible]	[illegible]	[illegible]	[illegible]	[illegible]	[illegible]	[illegible]	[illegible]
[illegible]	[illegible]	[illegible]	[illegible]	[illegible]	[illegible]	[illegible]	[illegible]

[illegible]

[illegible]

PROBLEM FIXES STATUS (See Attachment [illegible])

1. A study of the potential [illegible] problem caused by the [illegible] rocket exhaust gases [illegible] high [illegible] in Thor missile TM 66. This study [illegible] Indices for the prediction [illegible] severe rocket [illegible] be furnished. A test [illegible] of the [illegible]

PROCUREMENT

1. There are no [illegible] data.

TEST STATUS

1. Oxygen Fuel [illegible]
[illegible] scheduled to [illegible] Thiokol could then complete testing the balance of the [illegible] This [illegible] test stoppage with no delay [illegible] oxygen fuel is not a [illegible] effects of the [illegible] testing will be used [illegible]

2. Motor Development (Ref. Line 4)
Four Rocket Motors are undergoing [illegible] more are being conditioned to temperature cycling [illegible] two rockets will be [illegible]

3. Motor Qual (Ref. Line 9)
The following efforts have been made to reduce the [illegible] time between motor development completion, and motor qual test [illegible]

   A. MAC Engineering [illegible] the [illegible] allow starting the [illegible] and the [illegible] available.

   B. Thiokol [illegible] to the completion of [illegible] not be done due to the [illegible] temperature cycling [illegible] cases, by [illegible]

[illegible]

[illegible]

[illegible]

[illegible]

[illegible]

GEMINI SPACECRAFT

CONTRACT NO. NAS 9-170

RETRO-ROCKETS (VENDOR: THIOKOL)

STATUS CHART

REPORT NO. [illegible]30-1 --34

LAST PROGRAM SCHEDULE CHANGE: 15 Nov. 1963

STATUS AS OF: 27 Dec. 1963

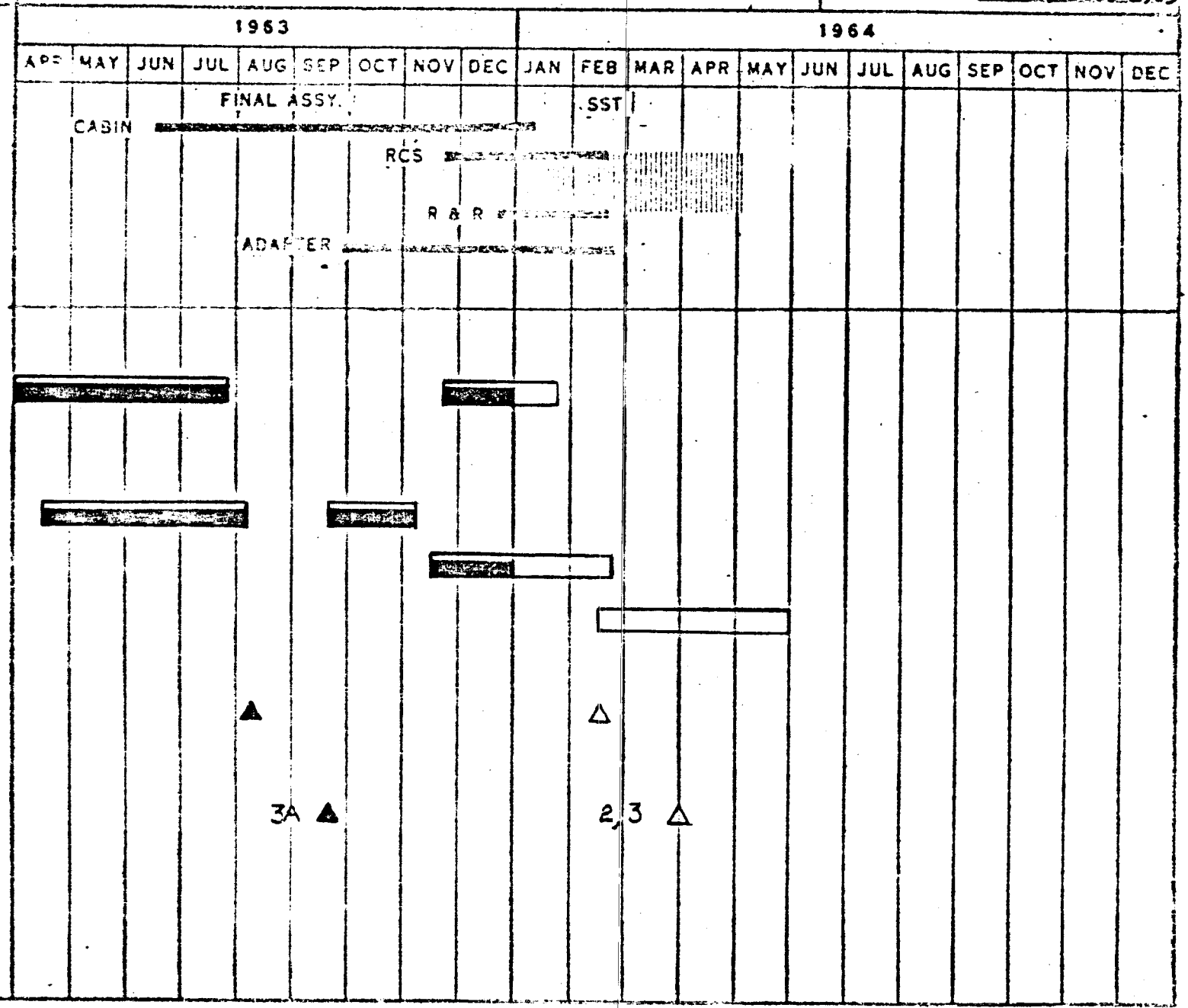

LEGEND
- ▽ T[illegible] Proposal Due
- ◇ Hardware Available
- ▭ Test Activity
- ○ Report Due
- ☆ Report Approved

SOLID INDICATES ACTUALS

QUALIFICATION & DEV. TEST STATUS
RETRO ROCKETS
THIOKOL CHEMICAL CORP. 52-50702

-1963- | -1964-

MONTH: Sept. (7, 14, 21, 28) | Oct. (5, 12, 19, 26) | Nov. (2, 9, 16, 23, 30) | Dec. (7, 14, 21, 28) | Jan. (4, 11, 18, 25) | Feb. (1, 8, 15, 22, 29) | March (7, 14, 21, 28) | April (4, 11, 18, 25) | May (2, 9, 16, 23, 30) | June (6, 13, 20, 27) | July (4, 11, 18, 25) | Aug. (1, 8, 15, 22, 29)

	ACTIVITY	WEEK ENDING
1.	Initiator Qual Test Proposal	REC. 6-5-63
2.	MAC Approval	7-9-63
3.		
4.	Motor Qual Test Proposal - REC 3-18-63	
5.	MAC Approval	6-13-63
6.		
7.	Motor Development	
8.		
9.	Motor Qual Test	
10.		
11.	Temp. Cycling	
12.		
13.	Vibration	
14.		
15.	Drop Test	
16.		
17.	Acceleration	
18.		
19.	Humidity	
20.		
21.	Temp. Gradient	
22.		
23.	Sea Level Firing	
24.		
25.	Initiator Qual Test	
26.		
27.	Pyrogen Qual Test	
28.		
29.	Qual Test Report	
30.		
31.		
32.		
33.		
34.		
35.		
36.		
37.		
38.		
39.		
40.		

MAC 2274V (27 APR 59)

[illegible]

[illegible]

[illegible]

UNIT NO.	TYPE	WAGON	COMMENT	[illegible]	[illegible]	[illegible]	[illegible]
[illegible]	[illegible]	[illegible]	[illegible]			[illegible]	
	[illegible]						
[illegible]	[illegible]	[illegible]	[illegible]		[illegible]	[illegible]	[illegible]
[illegible]	[illegible]	[illegible]	[illegible]			[illegible]	[illegible]
[illegible]	[illegible]	[illegible]	[illegible]		[illegible]	[illegible]	[illegible]
[illegible]	[illegible]	[illegible]	[illegible]	[illegible]	[illegible]	[illegible]	[illegible]
[illegible]	[illegible]	[illegible]	[illegible]	[illegible]	[illegible]	[illegible]	[illegible]
[illegible]	[illegible]	[illegible]	[illegible]	[illegible]	[illegible]	[illegible]	[illegible]
[illegible]	[illegible]	[illegible]	[illegible]	[illegible]	[illegible]	[illegible]	[illegible]
[illegible]	[illegible]	[illegible]	[illegible]	[illegible]	[illegible]	[illegible]	[illegible]
[illegible]	[illegible]	[illegible]	[illegible]	[illegible]	[illegible]	[illegible]	[illegible]
[illegible]	[illegible]	[illegible]	[illegible]	[illegible]	[illegible]	[illegible]	[illegible]
[illegible]	[illegible]	[illegible]	[illegible]	[illegible]	[illegible]	[illegible]	[illegible]
[illegible]	[illegible]	[illegible]	[illegible]	[illegible]	[illegible]	[illegible]	[illegible]
[illegible]	[illegible]	[illegible]	[illegible]	[illegible]	[illegible]	[illegible]	[illegible]
[illegible]	[illegible]	[illegible]	[illegible]	[illegible]	[illegible]	[illegible]	[illegible]
[illegible]	[illegible]	[illegible]	[illegible]	[illegible]	[illegible]	[illegible]	[illegible]
[illegible]	[illegible]	[illegible]	[illegible]	[illegible]	[illegible]	[illegible]	[illegible]
[illegible]	[illegible]	[illegible]	[illegible]	[illegible]	[illegible]	[illegible]	[illegible]
[illegible]	[illegible]	[illegible]	[illegible]	[illegible]	[illegible]	[illegible]	[illegible]
[illegible]	[illegible]	[illegible]	[illegible]	[illegible]	[illegible]	[illegible]	[illegible]
[illegible]	[illegible]	[illegible]	[illegible]	[illegible]	[illegible]	[illegible]	[illegible]
[illegible]	[illegible]	[illegible]	[illegible]	[illegible]	[illegible]	[illegible]	[illegible]
[illegible]	[illegible]	[illegible]	[illegible]	[illegible]	[illegible]	[illegible]	[illegible]

[illegible]

[illegible]

[illegible]

[illegible]	NOMENCLATURE	[illegible]	[illegible]	[illegible]	[illegible]
			[illegible]		
[illegible]	SLING RETRO RO	1		[illegible]	
[illegible]	SLING RETRO RO	2		[illegible]	
[illegible]	DOLLY [illegible] RO	[illegible]		[illegible]	
[illegible]	EMPTY RETRO RO	2	[illegible]	[illegible]	[illegible]
[illegible]	EMPTY RETRO RO	[illegible]	[illegible]	[illegible]	[illegible]

MONTHLY SUMMARY

[illegible]
SUBSYSTEM [illegible]
VENDOR [illegible]
DATE [illegible]

ENGINEERING

1 All M I B Panels are being subjected to an overstress electrical test of 10 amps for four seconds duration. This test is performed to ensure high quality plated through holes and printed circuitry. This testing has resulted in scrapage of several boards. (See Assembly & Delivery [illegible] resultant slippage).

2 Digital Computer
Production Prototype #4 Computer was successfully integrated with [illegible] System #4, with one exception. Problems were encountered with [illegible] Power Supply/Computer Interface test. This test was waived during [illegible] #4 Integration but the problem is still being investigated at [illegible] and IBM.

3. Incremental Velocity Indicator
Printed circuit boards are being redesigned to incorporate plated through [illegible]. Effectivity is for S/C #3 and up

4. Manual Data Insertion Unit
Environmental problems with resistor assembly for the Readout [illegible] have been resolved. Replacement qualification units have [illegible] unit

ASSEMBLY & DELIVERY

1. The vacuum electrical problem seems to be under control [illegible] computers have satisfactorily passed acceptance [illegible] writer's opinion several more shipments will have to be [illegible] certain the problem is solved

2. It is estimated that the test and rejection of M I B panels [illegible] will result in a one month slippage of computers #7 and [illegible] will slip due to the late delivery of the MDU. No slippage [illegible] in subsequent units. (See Vendor Delivery Status Report)

[illegible] STATUS

Current Status of Unit Test #1 MDU Computer is:
1 The computer was in detail test 12 21 63 and completed [illegible] The computer is now being readied for [illegible] in the [illegible] Vacuum Chamber on 27 Dec 1963 [illegible] ahead of [illegible] the Temperature Cycle is [illegible]

[illegible]

1 [illegible]

PART NO.	COMPONENT	UNIT NO.	USAGE	[illegible]
52-270023-7	BENCH TEST	1	PIA	12 17 6[illegible]
52-270050-1	DOLLY	1	PIA	12 [illegible] 6[illegible]
52-270003-1	TEST CONS	4	SST	12 [illegible] 6[illegible]

GEMINI SPACECRAFT
CONTRACT NO. NAS 9-170

INERTIAL GUIDANCE SYSTEM – (VENDOR: I.B.M.)

STATUS CHART

REPORT NO. 34
LAST PROGRAM SCHEDULE CHANGE: 15 Nov. 1963
STATUS AS OF: 27 Dec. 1963

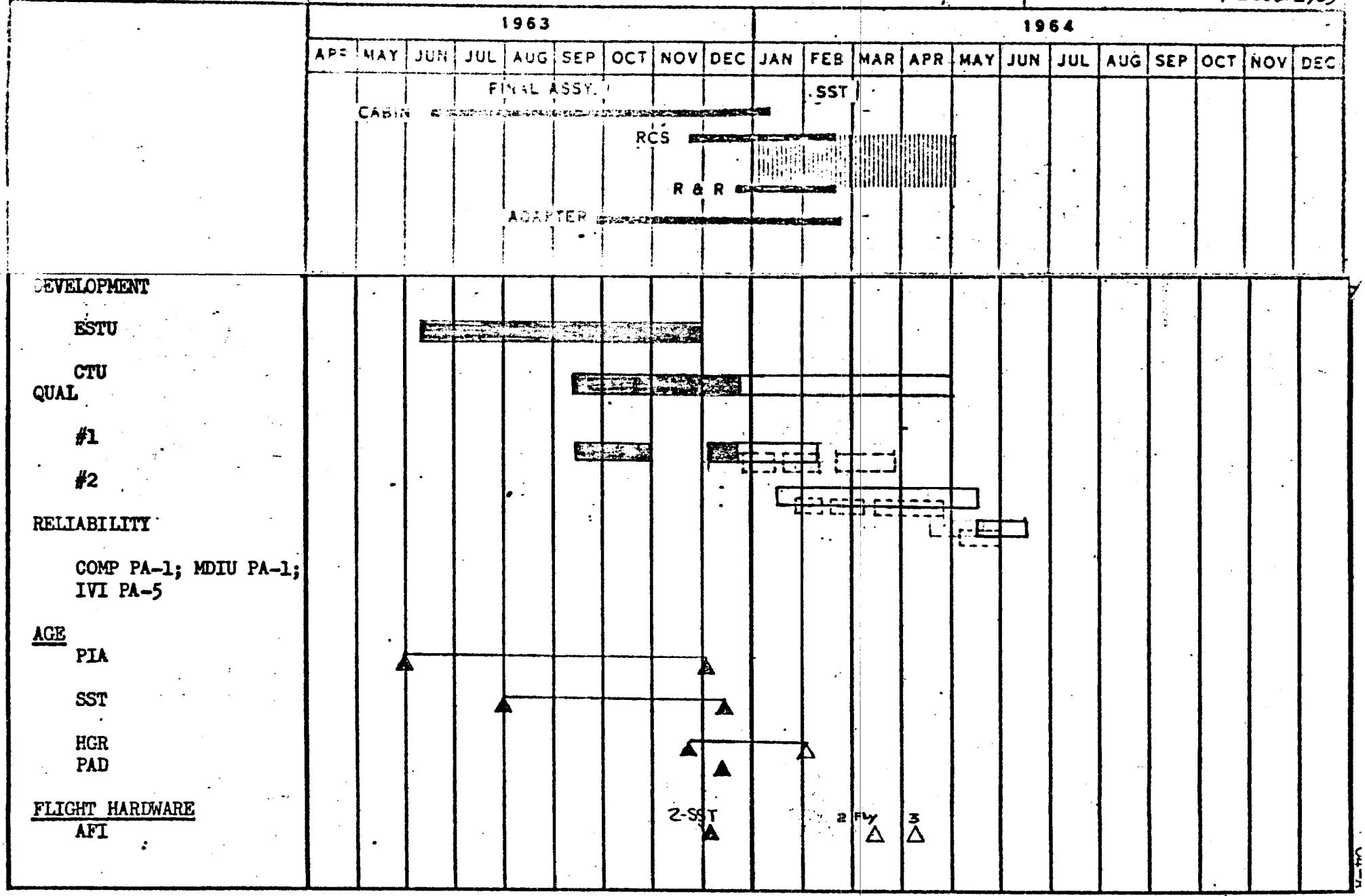

LEGEND
Test Proposal Due
Hardware Available
Test Schedule
Report Due
Report Approved
SOLID INDICATES ACTUAL

QUALIFICATION AND DEVELOPMENT TEST STATUS
INERTIAL GUIDANCE SYSTEM
IBM

SCD 52-87710 COMPUTER
SCD 52-87712 INCREMENTAL VELOCITY IND
SCD 52-87713 MANUAL DATA INSERTION UNIT

DATE: 29 Nov. 1963

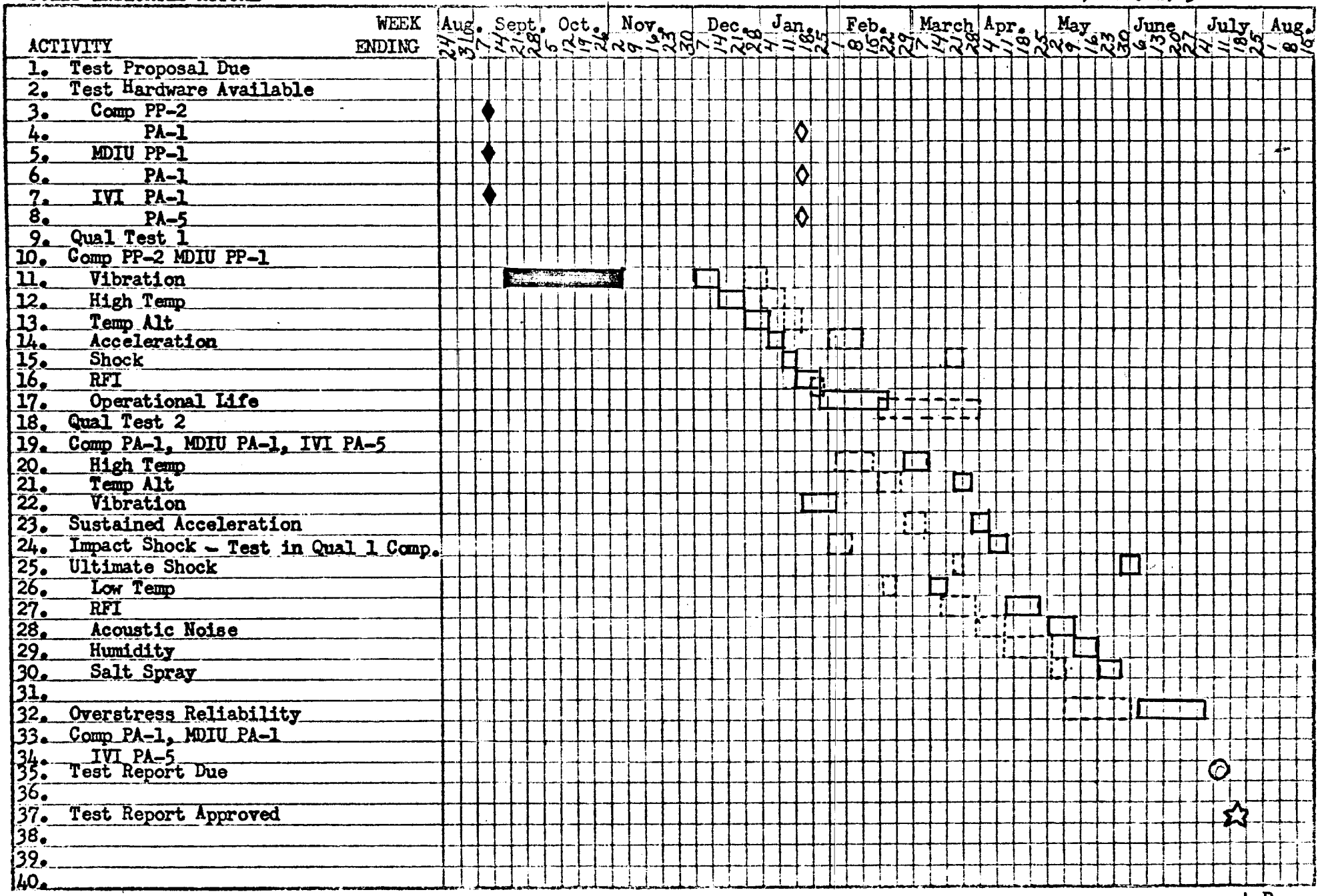

MAC 2274V (27 APR 59)

[illegible]

[illegible]

[illegible]

[illegible]

[illegible]	[illegible]	[illegible]	TEMPOR W/S	AVAILFOR [illegible]	[illegible]
1	SP-1	ESTG			[illegible]
2	SP-2	GCFG			[illegible]
3	SP-3	CCU			[illegible]
4	SP-2	CT [illegible]			[illegible]
5		PARTS SPLMB			[illegible]
6	SP-1	S/G 2 SS[illegible]			[illegible]
7	[illegible]	S/G 3A		03-10-54	[illegible]
8	PA-1	[illegible]			[illegible]
9	PA-2	[illegible]		[illegible]	[illegible]
10	PA-3	S/G 2 PT[illegible]	[illegible]	[illegible]	[illegible]
11	PA-4	S/G 1 PT[illegible]	[illegible]	[illegible]	[illegible]
12	PA-5	[illegible]		[illegible]	[illegible]
13	[illegible]	[illegible]	[illegible]	[illegible]	[illegible]
14	PA-6	S/G [illegible]	[illegible]	[illegible]	[illegible]
15	PA-7	S/G [illegible]	[illegible]	[illegible]	[illegible]
16	PA-8	S/G [illegible]	[illegible]	[illegible]	[illegible]
17	PA-9	S/G 6	06-30-54	[illegible]	[illegible]
18	PA-10	S/G [illegible]	[illegible]	[illegible]	[illegible]
19	PA-11	S/G [illegible]	[illegible]	[illegible]	[illegible]
20	PA-12	S/G [illegible]	[illegible]	[illegible]	[illegible]
21	[illegible]	S/G [illegible]	[illegible]	[illegible]	[illegible]
22	[illegible]	[illegible]	[illegible]	[illegible]	[illegible]
23	[illegible]	[illegible]	[illegible]	[illegible]	[illegible]

[illegible]

[illegible]

VENDOR ACCEPTANCE REPORT

SYSTEM - TGS

VENDOR - IBM

CHART NO. [illegible]

DATE [illegible]

PART NO	NOMENCLATURE	UNIT NO.	VENDOR W/S	AVAIL FOR USAGE	REQ FOR USAGE	[illegible]
			(PRE-INSTALLATION ACCEPTANCE)			
[illegible]	MEMORY LOADED	1		A05-25-63		
[illegible]	BENCH TEST EQUIP.	[illegible]		A12-12-63		
[illegible]	COMP DOLLY BASE	[illegible]		A12-17-63		
[illegible]	MOTU LVL TESTER	1		A05-01-63		
[illegible]	COMP HDL DOLLY	1-2		A08-30-63		
[illegible]	FIXT MTNG. CONS.	4		A08-30-63		
			(SPACECRAFT SYSTEM TEST			
[illegible]	COMP TEST CONS			[illegible]		
[illegible]	COMP TEST CONS.	[illegible]		[illegible]		
[illegible]	C & CS SIMULAT.	[illegible]		A12-01-63		
			(CAPE KENNEDY HANGAR)			
[illegible]	COMP. TEST CONS.	3		A12-10-63		[illegible]
[illegible]	COMP. TEST CONS.	3	01-01-66	01-15-64	05-[illegible]	[illegible]
[illegible]	MEMORY LOADER	3	02-01-63	02-15-64	[illegible]	[illegible]
[illegible]	TEST BENCH EQUIP	1	02-01-63	02-15-64	[illegible]	[illegible]
[illegible]	BENCH TEST EQUIP	1	02-01-64	02-15-66	[illegible]	[illegible]
[illegible]	COMP DOLLY BASE	5	02-01-63	02-15-64	[illegible]	[illegible]
[illegible]	MOTU LVL TESTER	4	02-01-64	02-15-64	[illegible]	[illegible]
[illegible]	C & CS SIMULAT.	2	01-20-64	02-01-66	[illegible]	[illegible]
[illegible]	COMP HDL DOLLY	4	01-20-64	02-01-66	[illegible]	[illegible]
[illegible]	COMP HDL DOLLY	4	01-20-62	02-01-66	[illegible]	[illegible]
			(CAPE KENNEDY PAD)			
[illegible]	COMP. TEST CONS.	2		A12-01-63		

ENGINEERING STATUS

1. Special H-5 vibration tests covered the period 3 Dec through 9 Dec [illegible]. Two types of tests were conducted

   A. Base line gyro drift was established in all three axes with vibration levels from one to twelve point six (12.6) G's RMS

   B. Platform was subjected to vibration spectrum simulating the effects of platform vibration isolators. Gyro drift was obtained at various vibration levels of one through twelve point six (12.6) G's RMS. An analysis indicated that the system experienced a slight [illegible] of gyro drift rates with the simulated isolators.

   Platform was reworked to incorporate isolators and cleaned up [illegible] platform. Platform was used to investigate gyro oscillation [illegible]

2. Gyro oscillation was fixed by a change in the stabilization [illegible]. A 400 cycle trap was installed in the loop to cut down [illegible]

3. The platform oscillation was investigated from 11 Dec through [illegible]. Oscillation problem was isolated to the cold temperature [illegible] minus 40V regulator in tray #1. New minus 30V regulator [illegible] recommended as a fix. Module being [illegible] by Honeywell [illegible] "increment" section of this report for availability [illegible]

4. As a result of a meeting with N H [illegible] Pneudraulics [illegible] components [illegible] bearing [illegible] consist of measuring the gyro and accelerometer characteristics on the [illegible] and GUTU platform every two weeks. The data will help [illegible] stability trends and with data from platforms to be used [illegible] ride flight readiness information and confidence.

PROCUREMENT

1. The rotary component availability problem is increasing in [illegible] has rotary components available for eight (8) months. An [illegible] ition is anticipated by the end of Jan 1966.

2. Availability of replacement minus 30V regulator [illegible] below. There are two modules required per system.

   2 systems not available on 23 Dec for PA [illegible] & 6
   1 system not available on 27 Dec for PA [illegible]
   1 system [illegible] for [illegible]

   [illegible]

3- Preliminary schedule information received from Engineering Magnetics relative to anticipated deliveries of re-designed power supply indicates that delivery will commence in March 1964. It should be noted that PA 8 will be the first unit shipped with the re-designed power supply. A re-designed unit will be supplied for PA-7 for integration at MAC prior to shipment to the Cape.

ASSEMBLY & DELIVERY

1. PA-1 S/C 2 SST
MAC to return GCE to Honeywell for oscillation fix incorporation. Modules for this unit will be available 31 Dec. 1963. Honeywell will return unit to MAC by 7 Jan. 1964.

2. PA 2 Qual Test Unit #[illegible]
Pre-qual testing commenced 3 Dec. and should be concluded 28 Dec. 1963. At this time several malfunctions were detected: platform malfunctions occurred resulting in the replacement of a faulty Z Gyro pre amplifier and out of spec condition existed in the area of accelerometer resulting in the replacement of the "Y" accelerometer. The platform failed during leak test resulting in the replacement of the rubber gasket around the connector; platform failed leak retest resulting in the replacement of "O" rings on end bell covers and top cover. Qual unit will have oscillation fix incorporated prior to final qual. Modules are scheduled to be available 7 Jan. 1964. It is estimated that qual test should start prior to 31 Jan 1964.

3. PA 3 Hanger Spare
This production article was originally allocated to S/C 3 [illegible] usage is no longer required. Vendor will ship for PA [illegible] June 1964. This will ship date is due to all retrofit [illegible] unit flyable. Platform PA-3 has [illegible] ability for flight usage. Anomalies being analyzed. Preliminary analysis indicates that a preload wet [illegible] rotary component [illegible]

4. PA 4 OSR
OSR testing started 30 Nov. and is still in process. During this period several failures were observed: the system electronics [illegible] testing causing the replacement of several relays. Fully qualified pulse driven transformers was replaced prior to temperature altitude checks. The temperature altitude checks were completed with a voltage drop of [illegible] 5V RMS at turn on; this should have read 6.5V RMS. This discrepancy is under investigation by MAC Engineering.

Transistor failures in the output loop Gimbal 4 GCE was noted upon completion of test 6 Dec. Transistor replaced and test resumed.

Power Supply was subjected [illegible] in the vertical [illegible] and failed due to transistor failures in the MAC [illegible] Failures presently under investigation.

5. PA 5 [illegible]
[illegible]

6. [illegible]

[illegible]

1. Goal Test #1 [illegible] 14 Jan [illegible] Plans for [illegible] to be [illegible] under Accuracy & Delivery meeting on this [illegible]

2. Goal Test #2 scheduled start 13 Jan 1966.

NOE

1. The following NOE equipment is being readied for NAO acceptance:

   [illegible]-5282[illegible]006-1 Mounting Reference
   [illegible]-5282[illegible]007-1 Adapter Kit
   [illegible]-5282[illegible]036-1 3 Axis Dolly
   [illegible]-5282[illegible]063-1 Test Bassin

   Due to the size of the above equipment and pending [illegible] Honeywell will have the equipment [illegible] Equipment approximately 3 Jan 1966.

2. Contract W/S [illegible] on the [illegible] Deck.

3. [illegible] NOE [illegible] during [illegible]

   a. Uniform Test Guide [illegible]
      Following the NOE test [illegible] Uniform Test Guide [illegible] failure. Honeywell decided [illegible] change in the calibrating [illegible] derived. This [illegible] shipped.

      The following changes have been [illegible]

      1. The free [illegible] be changed to [illegible] present Temporary [illegible]

      2. A [illegible] null [illegible] a [illegible]

      3. [illegible] for the [illegible]

   [illegible] prior to [illegible] time.

   [illegible]

b. Platform 3-Axis Dolly 52-270,38
Acceptance test halted because Honeywell was unable to [illegible] crude rotational accuracy check. The following discrepancies [illegible]

1. Gear box screws were inadequate. They either came loose [illegible] sheared, allowing the gear box to shift during the test.

2. Paint on the table stop bolts and the dolly frame caused the table zero setting dependent on pressure applied to seat [illegible]

3. The vernier is not level with the dial and for [illegible] the cable making it impossible to read the dial with accuracy.

Upon correction of these malfunctions, acceptance testing will be [illegible] over from beginning.

[illegible] Inverter Chamber
On the 21 of Nov., MAC residents were notified that the inverter was ready for final acceptance. Review of the part and payoff work revealed the following:

1. The test data could not be readily produced.

2. Inverter had been identified as Rev. G of the working drawing. The inverter drawing could not be readily produced to show that was required to update the drawing from Rev. F to Rev. G.

The test data was finally produced 2 days, however, [illegible] test results [illegible] of the drawing [illegible] Rev. F turned out to be a pre-released drawing. Rev. G [illegible] drawing and required the part numbers and revision [illegible] on the inverter. This identification was accomplished. The over-speed test was performed 5 Dec. and the following observations were made:

a. No test procedure was written.

b. Incorrect load had been calculated and was being used to test the inverter.

c. Power Supply not [illegible]

d. Test indicated the possibility that no two inverters had been tested to the same parameters or with the same test equipment in the past. These observations were brought to the attention of Honeywell's Quality Control. Corrective action being investigated to correct deficiencies.

GEMINI SPACECRAFT
CONTRACT NO. NAS 9-170

INERTIAL MEASURING UNIT
(VENDOR: HONEYWELL - ST. PETERSBURG)
STATUS CHART

REPORT NO. 0080-1 - 34
LAST PROGRAM SCHEDULE CHANGE: 15 Nov. 1963
STATUS AS OF: 27 Dec. 1963

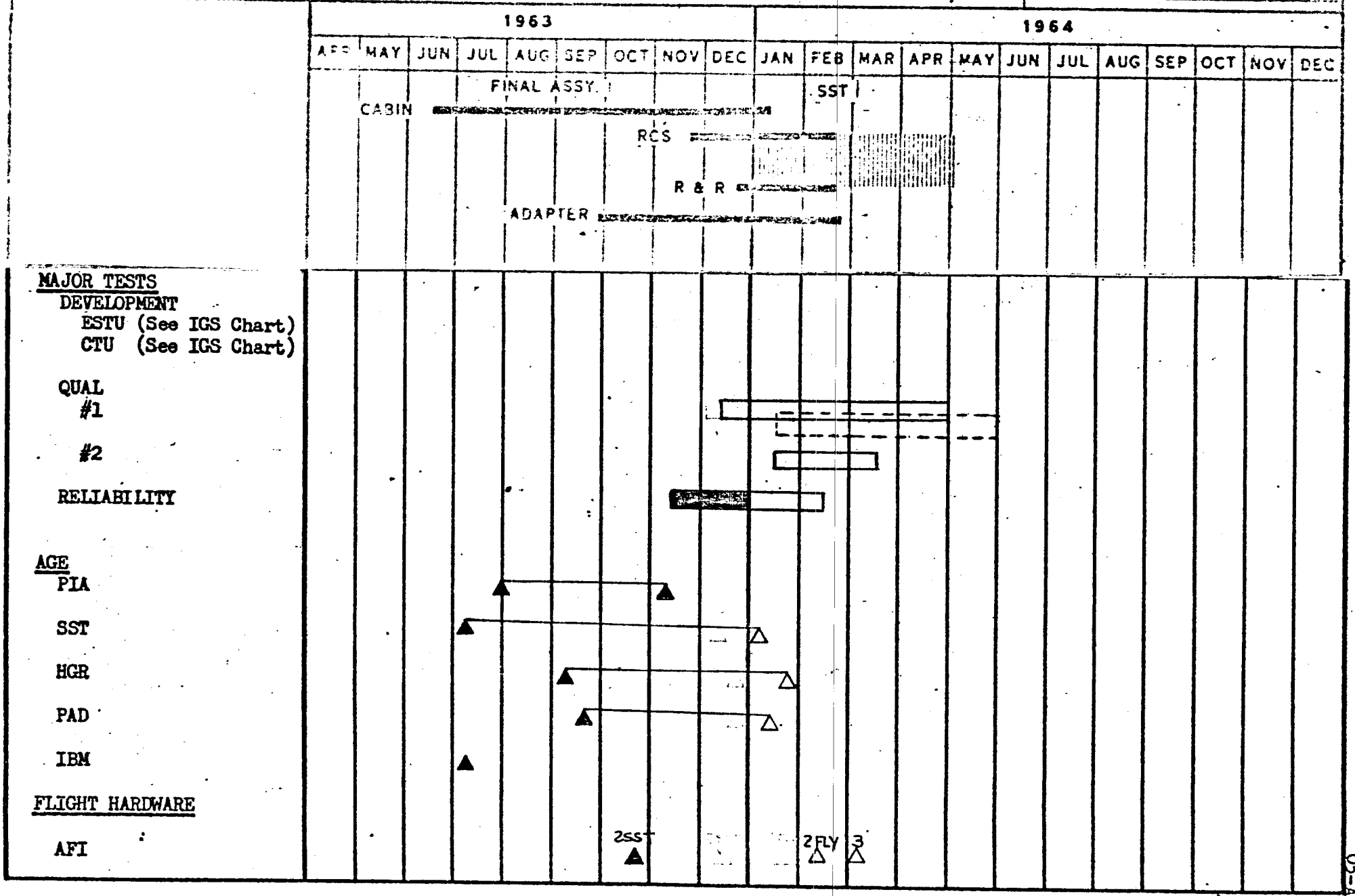

LEGEND
▽ Test Proposal Due
◇ Hardware Available
▭ Test Schedule
○ Report Due
☆ Report Approved
SOLID INDICATES ACTUAL

QUALIFICATION AND DEVELOPMENT TEST STATUS
INERTIAL MEASUREMENT UNIT
MINNEAPOLIS HONEYWELL
SCD 52-87717

DATE: 27 Dec. 1963

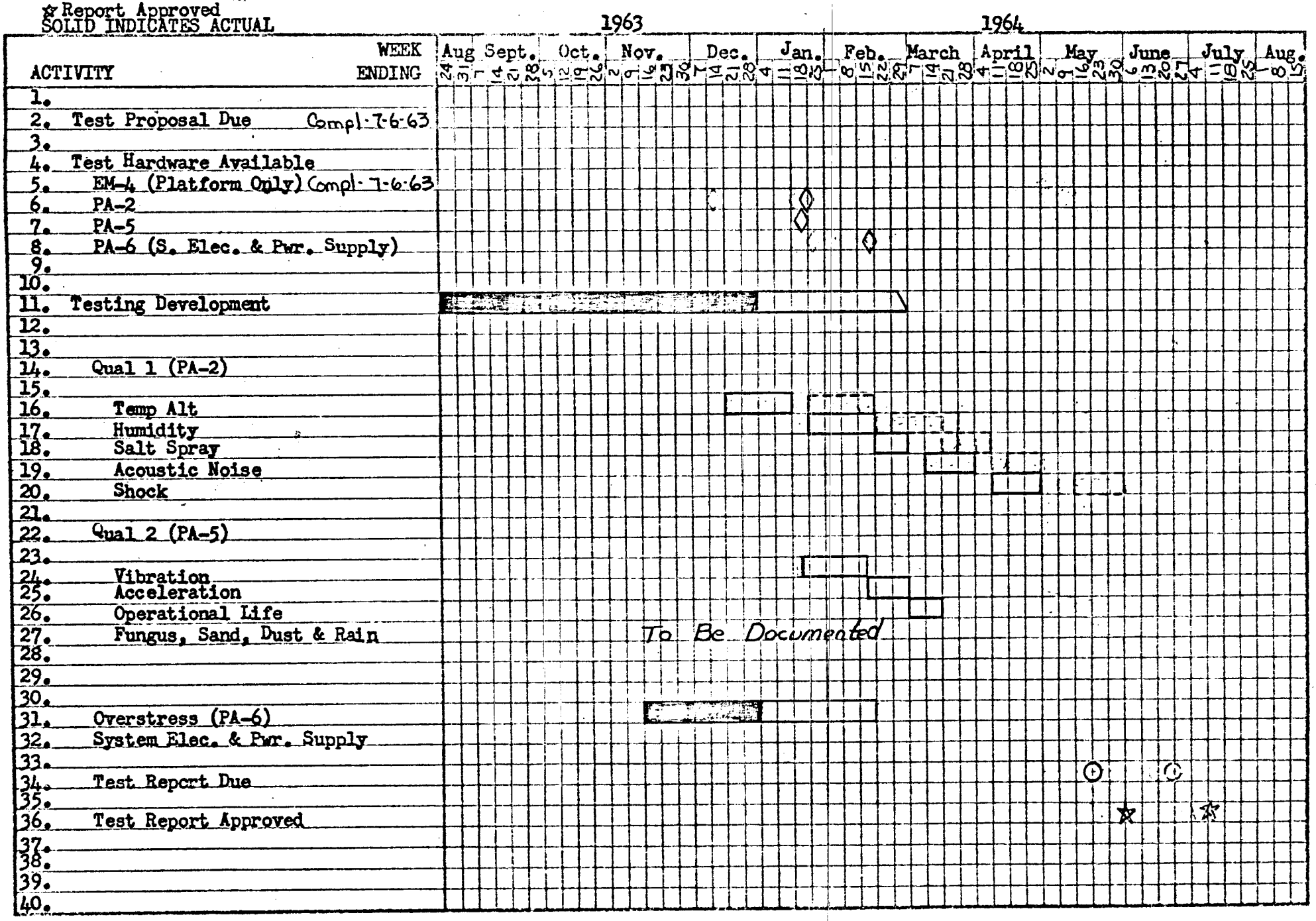

MAC 2274V (27 APR 59)

VENDOR DELIVERY STATUS REPORT

CHART NO. [illegible]

SYSTEM -- LMU

DATE [illegible]

VENDOR -- HONEYWELL, ST. PETE

UNIT NO.	TYPE	USACE	VENDOR W/S	AVAIL FOR INSTL	[illegible] INSTL	[illegible]
1	EP-1	ESTU			[illegible]	
2	EP-2	OCTU			[illegible]	
3	EP-3	CTU			[illegible]	
4	EP-5	VENDOR			[illegible]	
5	PA-1	S/C 2 SST			[illegible]	
6	PA-1	S/C 3A		03-10-64	[illegible]	
7	PA-2	QT. 1		01-10-64		
8	PA-3	SPARE HGR.	06-19-64	07-09-64	[illegible]	
9	PA-4	CSR		11-30-64		
10	PA-10	SPARE	06-26-64	07-07-64	[illegible]	
11	PA-5	QT. 2		01-15-64		
12	PA-6	S/C 2 FLT	02-14-64	02-28-64	[illegible]	
13	PA-7	S/C 3 FLT	03-06-64	03-10-64	[illegible]	
14	PA-8	SPARE	[illegible]	05-07-64	[illegible]	
15	PA-9	S/C 4	05-15-64	05-27-64	[illegible]	
16	PA-11	S/C 5	07-17-64	07-30-64	[illegible]	
17		SPARE	09-21-64	09-22-64	[illegible]	
18	PA-12	S/C 6	06-26-64	08-21-64	[illegible]	
19	PA-13	S/C 7	08-28-64	09-10-64	[illegible]	
20	PA-14	S/C 8	09-18-64	10-01-64	[illegible]	
21	PA-15	S/C 9	10-09-64	10-22-64	[illegible]	
22	PA-16	S/C 10	10-30-64	11-12-64	[illegible]	
23	PA-17	S/C 11	11-20-64	12-12-64	[illegible]	
24	PA-18	S/C 12	12-11-64	12-24-64	[illegible]	

* S/C 2 FLT Installed at MCC 30 March 1964 - [illegible]

* S/C 3 FLT Subsequent to T&M [illegible] Notice.

VENDOR AGE STATUS REPORT

CHART NO: [illegible]

SYSTEM IMU

DATE: [illegible]

VENDOR : HONEYWELL, ST. PETE

PART NO.	COMPONENT	UNIT NO.	VENDOR W/S	AVAIL. FOR USAGE	USED FOR USAGE	STAGE
			(PRE-INSTALLATION ACCEPTANCE)			
52-E270007-1	ADAPTER KIT	1		A09-07-63	11-26-63	[illegible]
52-E270032-1	TEST CONS. IMU-PTA	2		A11-12-63	11-26-63	[illegible]
52-E270020-1	TEST CONS. PLATF.	1		A08-01-63	11-26-63	[illegible]
52-E270053-1	IMU TEST CABLE SET	[illegible]		A11-11-63	11-26-63	[illegible]
			(SPACECRAFT SYSTEM TEST)			
52-E270008-1	TEST PLT PANEL	2		A07-19-63	[illegible]	[illegible]
52-E270035-1	3-AXIS DOLLY	1	SHIP CONSIGNMENT - MAC CAN BE USED FOR FLIGHT VEHICLE			
52-E270036-1	3 AXIS DOLLY	2	SHIP CONSIGNMENT - LBM			
52-E270042-1	TEST CONSOLE	1		A08-09-63	[illegible]	[illegible]
52-E270042-3	TEST CONSOLE IMU	2	[illegible]	[illegible]	[illegible]	[illegible]
52-E270054-1	PLT EXT CABLE SET	[illegible]		A08-09-63	[illegible]	[illegible]
52-E270054-1	PLT EXT CABLE SET	2	01-06-64	01-20-64	[illegible]	[illegible]
52-E270003-1	MT. REF.	1	01-03-64	01-17-64	[illegible]	[illegible]
52-E270059-1	2-AXIS DOLLY	1	01-07-64	01-21-64	[illegible]	[illegible]
			(HANGAR)			
52-E270006-1	MT. REF	2	01-01-64	01-15-64	[illegible]	[illegible]
52-E270007-1	ADAPTER KIT	2	01-01-64	01-15-64	[illegible]	[illegible]
52-E270008-1	TEST PLT PANEL	3	01-06-64	01-20-64	[illegible]	[illegible]
52-E270020-1	TEST CONSOLE	2	01-11-64	01-25-64	[illegible]	[illegible]
52-E270032-1	TEST CONSOLE	2	01-21-64	02-05-64	[illegible]	[illegible]
52-E270036-1	3 AXIS DOLLY	4	01-10-64	02-12-64	[illegible]	[illegible]
52-E270036-1	3 AXIS DOLLY	5	01-17-64	01-31-64	[illegible]	[illegible]
52-E270042-3	TEST CONSOLE	7	A09-06-63	[illegible]	[illegible]	[illegible]
52-E270042-3	TEST CONSOLE IMU	2	01-30-64	02-12-64	[illegible]	[illegible]
52-E270053-1	IMU TEST	2	01-07-64	02-14-64	[illegible]	[illegible]
52-E270054-1	PLT. EXT. CABLE SET	3	01-06-64	01-20-64	[illegible]	[illegible]
52-E270059-1	2 AXIS DOLLY	2	01-07-64	01-21-64	[illegible]	[illegible]
52-E270054-1	PLT. EXT. CABLE SET	4	01-06-64	01-20-64	[illegible]	[illegible]
			(PAD)			
52-E270008-1	TEST PLT PANEL	2	A07-29-63	[illegible]	[illegible]	[illegible]
52-E270042-1	TEST CONSOLE IMU	3	01-15-64	01-29-64	[illegible]	[illegible]
			(LOST)			
[illegible]	3 AXIS DOLLY	[illegible]	[illegible]	[illegible]		

SYSTEM: Guidance & Control
SUBSYSTEM: A.C.E.
VENDOR: Honeywell-Minneapolis
DATE: 27 Dec. 1963

MONTHLY SUMMARY

ENGINEERING STATUS

1. MAC and Honeywell Engineers firmed up the vibration design fix on 18 Dec. 1963. It is believed that the fix, redesign of the mounting assembly and internal strengthening of the ACE package, can be incorporated into a production unit by the middle of Jan. 1964.

2. The Attitude Control Electronics (ACE) low hysteresis switch was modified to eliminate a problem discovered while testing an engineering prototype ACE package at MAC.

3. The fasteners for the ACE and Orbital Attitude and Man uver Electronics (OAME) and the ACE internal structure have been modified to alleviate the difficulties discovered during vibration qualification testing.

PROCUREMENT

1. No Procurement problems exist at this time.

ASSEMBLY & DELIVERY STATUS

1. The problem of correlation between the PIA Test Equipment and the Factory test equipment is still in the process of being resolved between MAC and Honeywell Engineers. It is expected that the PIA test equipment will be in use prior to 20 Dec. in order that hardware delivery can be made on schedule after the first few spacecraft.

TEST STATUS

Qual #1

1. As mentioned in the last monthly report and in the Bi Daily TWX s, the ACE and OAME Packages failed. When the vibration design fixes are incorporated in the Qual Units, the vibration testing will resume. MAC's estimated start date is 27 Jan. 1964.

Qual #2

1. The electrical and electronic interference tests (Line 27) were completed on 9 Dec. 1963. Also the humidity tests (Line 28) were completed on 2[illegible] Dec. 1963. Performance tests (Line 29) started on 26 Dec. 1963 and are scheduled to be completed prior to 6 Jan. 1964.

GSR

1. The start of Operational Reliability Testing (Line 1) was [illegible] approximately one ( ) month because an ACE unit [illegible] first [illegible] with the vibration fix [illegible] West [illegible] and [illegible] [illegible]

AGE

1. No ACE has been shipped since the last report.

NAA PARAGLIDER TESTS

1. One ACE Unit (-23 Configuration) has been shipped on 17 Oct. 1963 to North American Aviation for the Paraglider Tests. Also, three Power Inverters (-29 Configuration) have been delivered on 30 Sept. 1963. The will ship dates for last four ACE Units and four Power Inverters are the following:

COMPONENT	W/S DATE	REQ'D W/S DATE	SLACK
-23 ACE	01-06-64	10-30-63	- 9
-23 ACE	01-21-64	11-04-63	-12
-23 ACE	01-23-64	12-06-63	- 7
-23 ACE	01-28-64	12-17-63	- 6
-29 Pwr. Invr.	01-15-64	10-30-63	-11
-29 Pwr. Invr.	01-15-64	11-05-63	-10
-29 Pwr. Invr.	01-16-64	11-05-63	-10
-29 Pwr. Invr.	02-11-64	11-19-63	[illegible]

GEMINI
SPACECRAFT
CONTRACT NO. NAS 9-170

ATTITUDE CONTROL AND MANEUVER ELECTRONICS

VENDOR: HONEYWELL - MINNEAPOLIS
STATUS CHART

REPORT NO. [illegible] - 35
LAST PROGRAM SCHEDULE CHANGE 15 Nov. 1963
STATUS AS OF: 27 Dec. 1963

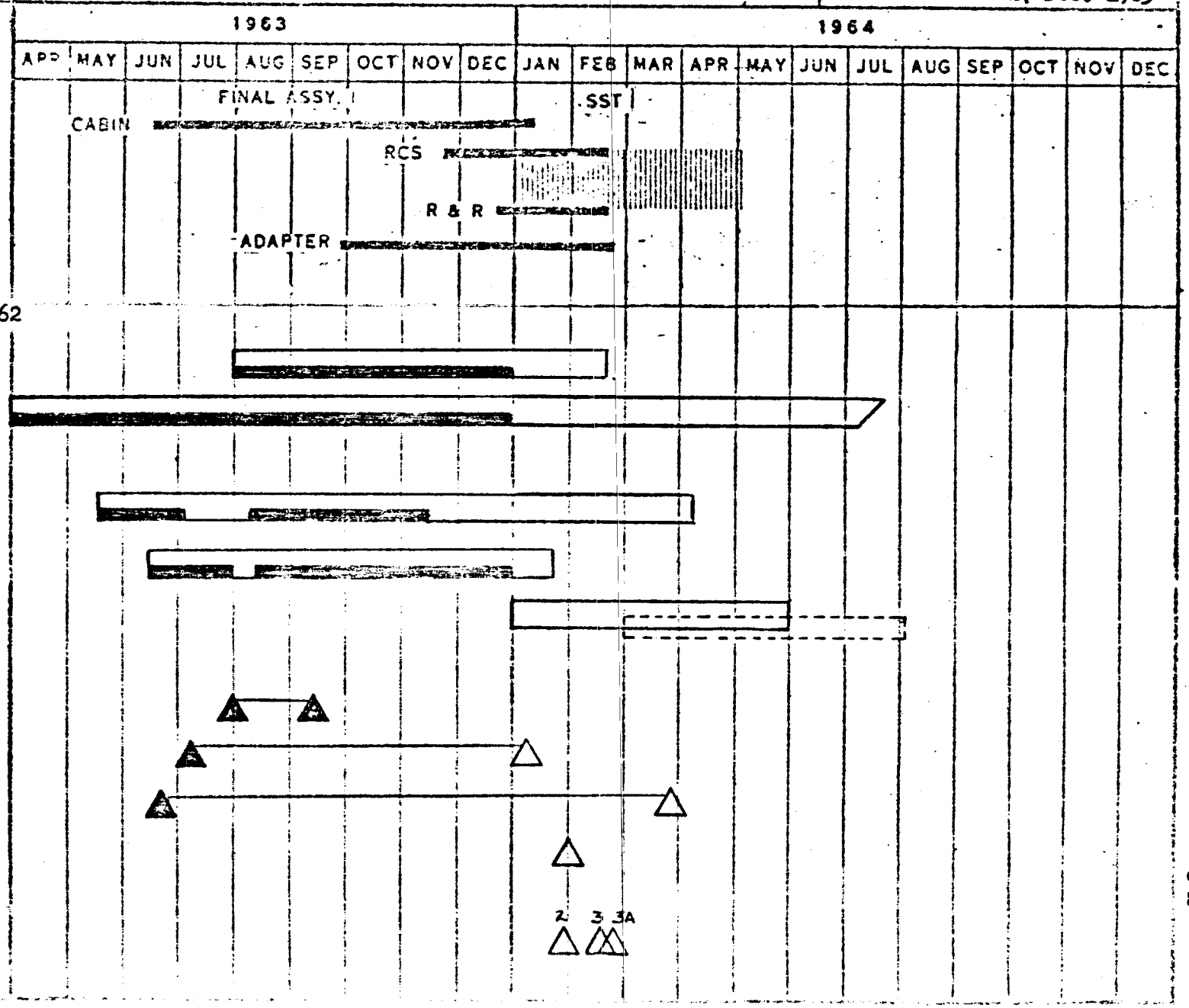

LEGEND
▽ Test Proposal Due
◊ Hardware Available
▭ Test Schedule
○ Report Due
★ Report Approved
SOLID INDICATES ACTUAL

QUALIFICATION AND DEVELOPMENT TEST STATUS
ATTITUDE CONTROL AND MANEUVER ELECTRONICS
HONEYWELL-MINNEAPOLIS
SCD 52-87700

Chart No. 06-B
Rev. C: 29 Nov. 1963
Rev. D: 27 Dec. 1963

ACTIVITY	WEEK ENDING
1. Test Proposal	3-15
2.	
3. Test Hardware Available	
4. Breadboard	5-08-62
5. PA-1	
6. PA-2	
7. PA-4	
8. Testing	
9. Development (Breadboard)	
10.	
11. Qual. 1 (PA-1)	
12. Pre Qual. Accep.	
13. Performance	
14. High Temp./Alt.	
15. Low Temp.	
16. Vibration	
17. Acceleration	
18. Acoustic Noise	
19. Salt Fog	
20. Performance	
21. Pre Qual Accep.	
22. 44.7 G Shock	
23.	
24. Qual 2 (PA-2)	
25. Pre Qual Accep.	
26. Performance	
27. E and E Interference (RFI)	
28. Humidity	
29. Performance	
30. PQA	
31.	
32. Overstress Reliability (PA-4)	
33.	
34. Test Report Due	
35.	
36. Test Report Approved	
37.	
38.	
39.	
40.	

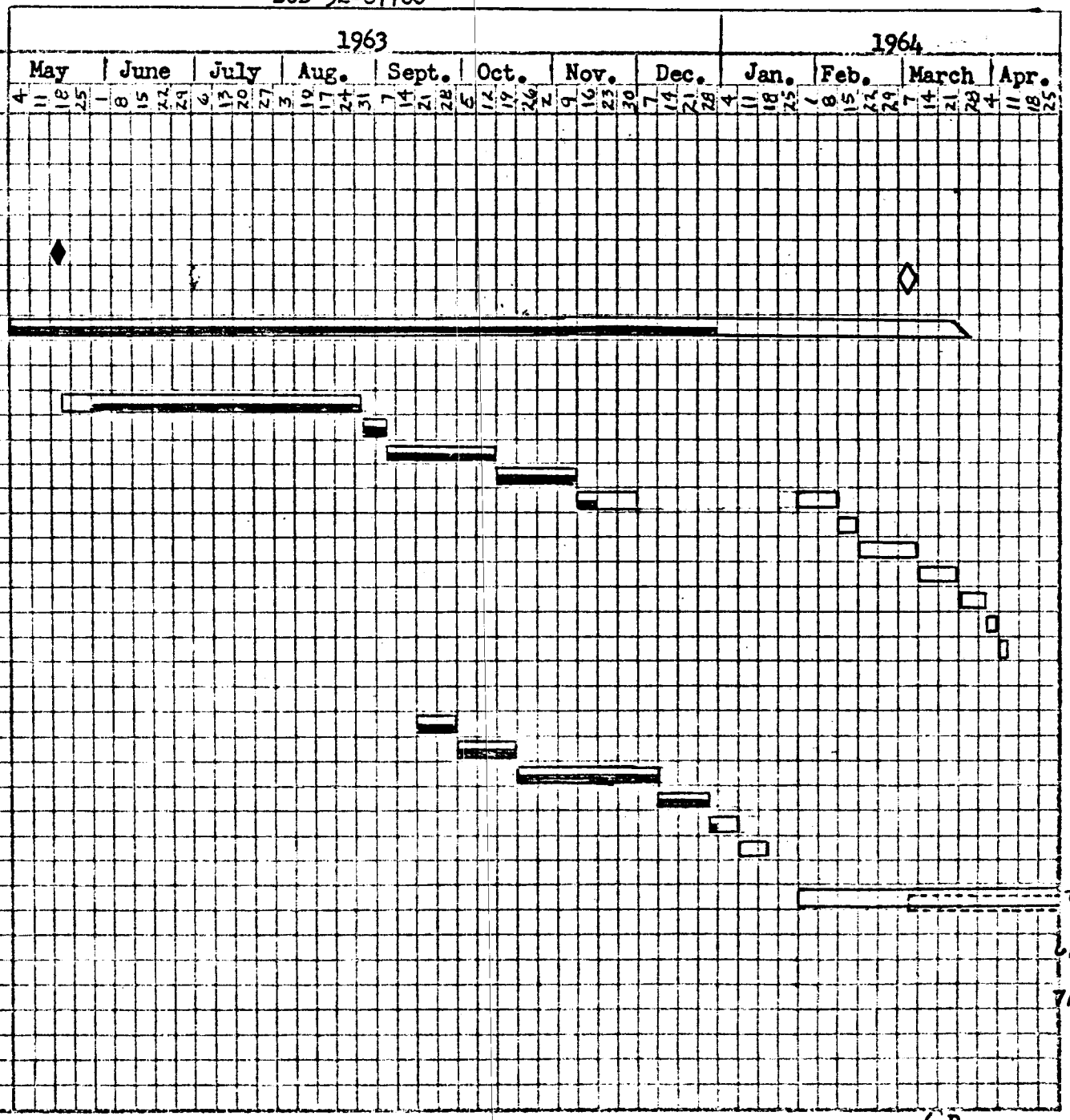

MAC 2274V (27 APR 59)

UNIT NO.	ACT	USAGE	REMARKS	VENDOR NO.	[illegible]	[illegible]
1	EP 1	ESTU				
2	EP 2	TESP	3 AXIS DYNAMIC			
3	PA [illegible]	VEHIC	QUAL 1			
4	PA [illegible]	[illegible]	QUAL 2			
5	PA 3	CUB				
6	PA [illegible]	S/O 1	PROP CUB			
7	PA 4	VEHIC	OSR		03-04-[illegible]	
8	PA 5	S/O 2	25 ACD	[illegible]	02-[illegible]	
9	PA [illegible]	S/O [illegible]	29 [illegible]	[illegible]	[illegible]	
10	PA [illegible]	S/O 2	9 CELL	[illegible]	[illegible]	
11	PA 5	S/O [illegible]	[illegible]	[illegible]	[illegible]	
12	PA 5	S/O 1	29 ACD	[illegible]	[illegible]	
13	PA 5	S/O 1	29 FINAL [illegible]	[illegible]	[illegible]	
14	PA [illegible]	S/O [illegible]	25 [illegible]	[illegible]	[illegible]	
15	PA [illegible]	S/O 1	25 [illegible]	[illegible]	[illegible]	
16	PA 6	S/O 1	12 [illegible]	[illegible]	[illegible]	
17	PA [illegible]	SPARE	15 [illegible]	[illegible]	[illegible]	
18	PA	SPARE	29 [illegible]	[illegible]	[illegible]	
19	PA [illegible]	SPARE	29 [illegible]	[illegible]	[illegible]	
20	PA	[illegible]	7 [illegible]	[illegible]	[illegible]	
21	PA [illegible]	S/O 1	25 ACD	[illegible]	[illegible]	
22	PA [illegible]	S/O 2	25 [illegible]	[illegible]	[illegible]	
23	PA [illegible]	[illegible]	[illegible]	[illegible]	[illegible]	
24	PA [illegible]	[illegible]	[illegible]	[illegible]	[illegible]	
25	PA [illegible]	[illegible]	[illegible]	[illegible]	[illegible]	
26	PA [illegible]	[illegible]	[illegible]	[illegible]	[illegible]	
27	PA [illegible]	SPARE	[illegible]	[illegible]	[illegible]	
28	PA [illegible]	[illegible]	[illegible]	[illegible]	[illegible]	
29	PA [illegible]	[illegible]		[illegible]	[illegible]	
30	PA [illegible]	[illegible]	29 [illegible]	[illegible]	[illegible]	
31	PA [illegible]	[illegible]	29 [illegible]	[illegible]	[illegible]	
32	PA [illegible]	[illegible]	[illegible]	[illegible]	[illegible]	
33	PA [illegible]	S/O		[illegible]	[illegible]	
34	PA [illegible]	[illegible]	[illegible]	[illegible]	[illegible]	
35	PA [illegible]	S/O 1	[illegible]	[illegible]	[illegible]	
36	PA [illegible]	S/O 2	[illegible]	[illegible]	[illegible]	
37	PA [illegible]	[illegible]		[illegible]	[illegible]	
38	PA [illegible]	S/O		[illegible]	[illegible]	
39	PA [illegible]	S/O 1		[illegible]	[illegible]	
40	PA [illegible]	S/O 1		[illegible]	[illegible]	
41	PA [illegible]	[illegible]		[illegible]	[illegible]	
42	PA [illegible]	[illegible]		[illegible]	[illegible]	
43	PA [illegible]	[illegible]		[illegible]	[illegible]	

PART NO.	[illegible]	[illegible]	[illegible]	[illegible]
[illegible]	BOX [illegible]	[illegible]		[illegible]
[illegible]	TEST [illegible]	[illegible]		[illegible]
[illegible]	[illegible]	[illegible]		[illegible]
[illegible]	BOX TEST [illegible]	[illegible]		[illegible]
[illegible]	[illegible]			
[illegible]	[illegible]	[illegible]	[illegible]	[illegible]
[illegible]	[illegible]			[illegible]
[illegible]	[illegible]	[illegible]		[illegible]
[illegible]	[illegible]	[illegible]		[illegible]
[illegible]	[illegible]	[illegible]		[illegible]
[illegible]	[illegible]	[illegible]	[illegible]	[illegible]
[illegible]	TEST [illegible]	[illegible]	[illegible]	[illegible]
[illegible]	TEST CONSOLE	[illegible]	[illegible]	[illegible]
[illegible]	[illegible]		[illegible]	[illegible]

[illegible]

ENGINEERING STATUS

1. [illegible]

2. [illegible]

PROCUREMENT

1. [illegible]

ASSEMBLY [illegible]

1. [illegible]

ALLOCATION	[illegible]	[illegible]
S/C [illegible]	[illegible]	[illegible]
S/C [illegible]	[illegible]	[illegible]
QUAL [illegible]	[illegible]	[illegible]
QUAL [illegible]	[illegible]	[illegible]

TEST STATUS

[illegible]

GEMINI
SPACECRAFT
CONTRACT NO. NAS 9-170

HORIZON SENSOR
(VENDOR: ADVANCED TECHNOLOGY LABORATORIES)
STATUS CHART

REPORT NO. [illegible]-1 - 35
LAST PROGRAM SCHEDULE CHANGE: 15 Nov. 1963
STATUS AS OF: 27 Dec. 1963

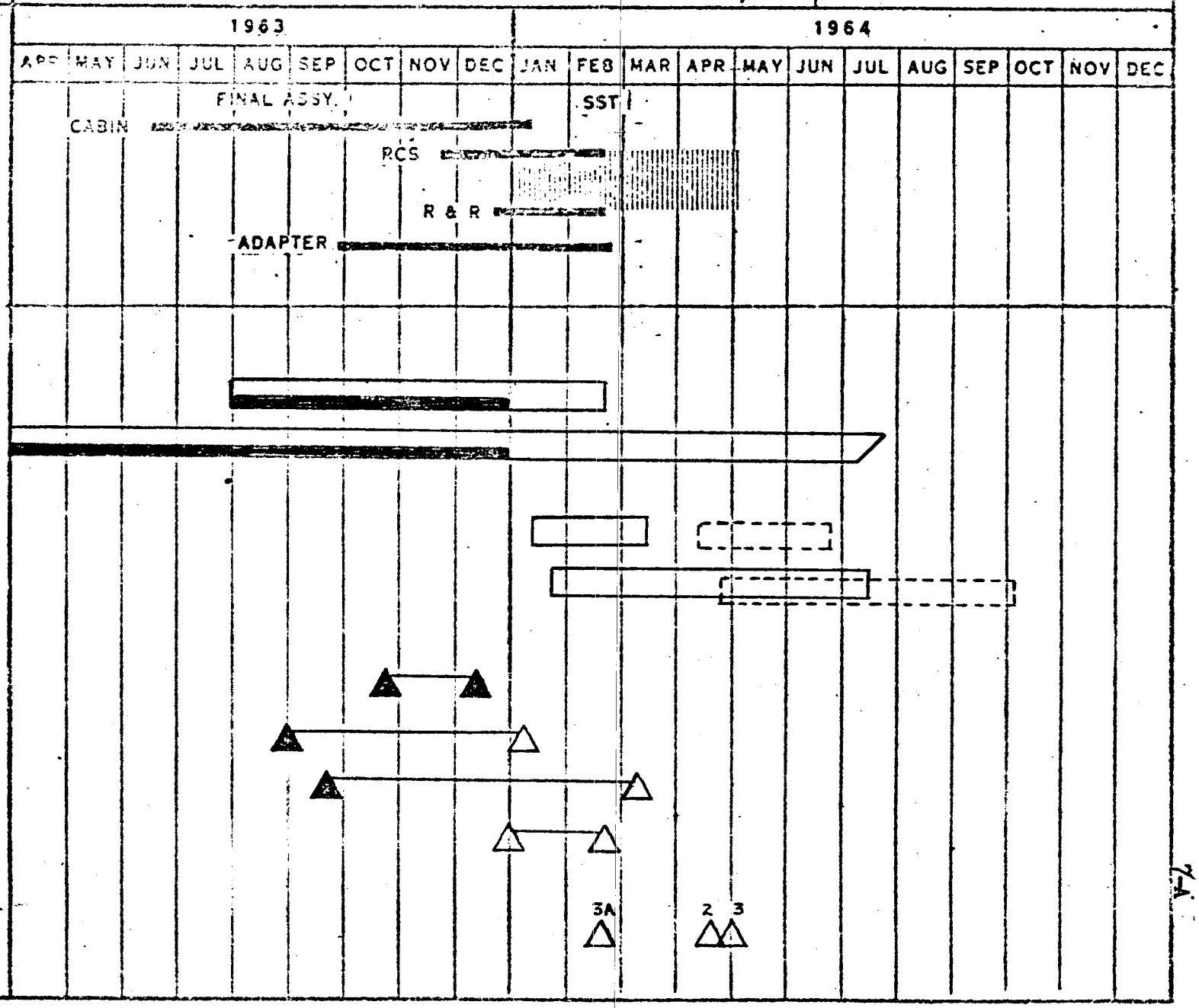

7-A

LEGEND
- ▽ TEST PROPOSAL DUE
- ◊ HARDWARE AVAILABLE
- ▭ TEST SCHEDULE
- ○ REPORT DUE
- ★ REPORT APPROVED

SOLID INDICATES ACTUAL

QUALIFICATION AND DEVELOPMENT TEST STATUS
HORIZON SENSOR SYSTEM
ADVANCE TECHNOLOGY LABS
SCD 52-87703

CHART NO. 7-B

REV. D: 27 DEC. 1963

	ACTIVITY	WEEK ENDING
1	TEST PROPOSAL DUE	7-22-63
2		
3	TEST HARDWARE AVAILABLE (EM-1)	11/62
4	PA-2	
5	PA-4	
6		
7	TESTING	
8	DEVELOPMENT	
9	SENSOR HEAD	
10	ELECTRONICS PACKAGE	
11		
12	QUAL 1 (PA-2)	
13	SENSOR HEAD	
14	VIBRATION	
15	ACOUSTIC NOISE	
16	ACCELERATION	
17	HIGH TEMPERATURE	
18	LOW TEMPERATURE	
19	HUMIDITY	
20	SALT FOG	
21		
22	ELECTRONICS PACKAGE	
23	VIBRATION	
24	ACOUSTIC NOISE	
25	ACCELERATION	
26	HIGH TEMPERATURE	
27	LOW TEMPERATURE	
28	HUMIDITY	
29	SALT SPRAY	
30	44.7 g SHOCK (DUMMY UNIT)	
31	FUNGUS	
32	QUAL 2 (PA-4) - LIFE	
33	SENSOR HEAD	
34	TEMPERATURE-ALTITUDE	
35	RFI	
36	ELECTRONICS PACKAGE	
37	TEMPERATURE-ALTITUDE	
38	RFI	
39	TEST REPORT DUE	
40	TEST REPORT APPROVAL	

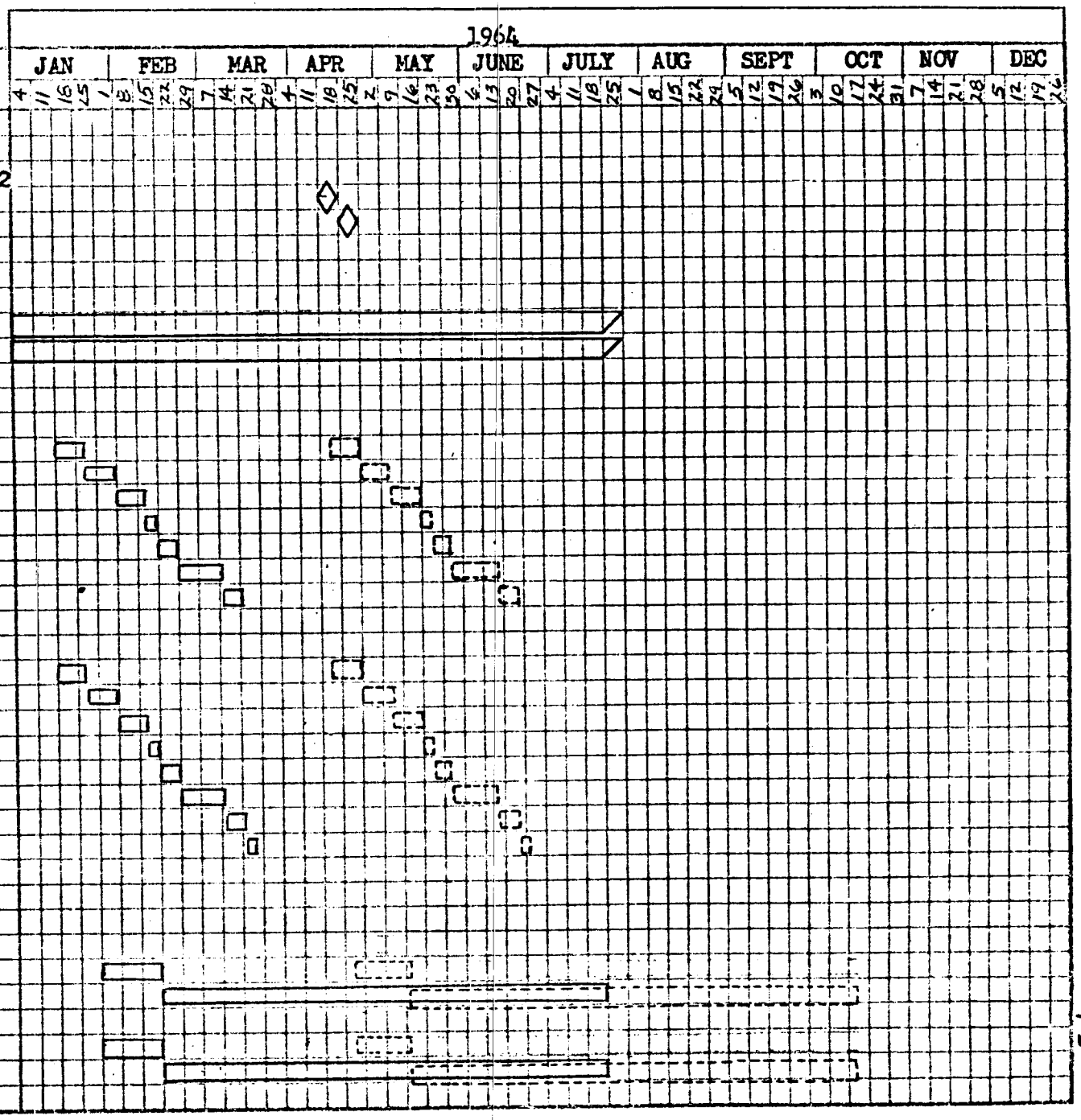

MAC 2274V (27 APR 59)

[illegible]	[illegible]	[illegible]	[illegible]	[illegible]
[illegible]				
[illegible]	[illegible]	[illegible]	[illegible]	[illegible]
[illegible]	[illegible]	[illegible]	[illegible]	[illegible]
[illegible]				
[illegible]	[illegible]	[illegible]	[illegible]	[illegible]
[illegible]	[illegible]	[illegible]	[illegible]	[illegible]
[illegible]	[illegible]	[illegible]	[illegible]	[illegible]
[illegible]	[illegible]	[illegible]	[illegible]	[illegible]
[illegible]	[illegible]	[illegible]	[illegible]	[illegible]
[illegible]	[illegible]	[illegible]	[illegible]	[illegible]
[illegible]				
[illegible]	[illegible]	[illegible]	[illegible]	[illegible]
[illegible]	[illegible]	[illegible]	[illegible]	[illegible]
[illegible]	[illegible]	[illegible]	[illegible]	[illegible]
[illegible]	[illegible]	[illegible]	[illegible]	[illegible]
[illegible]	[illegible]	[illegible]	[illegible]	[illegible]
[illegible]	[illegible]	[illegible]	[illegible]	[illegible]
[illegible]	[illegible]	[illegible]	[illegible]	[illegible]
[illegible]	[illegible]	[illegible]	[illegible]	[illegible]
[illegible]				
[illegible]	[illegible]	[illegible]	[illegible]	[illegible]
[illegible]	[illegible]	[illegible]	[illegible]	[illegible]

[illegible]

[illegible]

[illegible]

[illegible]

[illegible]

which is [illegible]
of [illegible]
oxygen [illegible]
been [illegible]
system before [illegible]
be [illegible]

[illegible]
Many of [illegible]
in [illegible]
[illegible] on board. This problem [illegible]
[illegible]
the problem [illegible]

[illegible]

[illegible]
having [illegible]
flow [illegible]

Both of these [illegible]
view of the [illegible]
an effectivity [illegible]
included any [illegible]

[illegible]
(See [illegible])

[illegible]

[illegible]

[illegible]

[illegible]

PROGRESSED STAGES

[illegible]

ASSEMBLY AND DELIVERY

STACK SUMMARY

Stacks [illegible], [illegible], [illegible], [illegible], [illegible] and [illegible] [illegible] various reasons, [illegible] failure during [illegible] or back stand [illegible] create high-[illegible] cables. While from these vessels [illegible] which have not [illegible] accumulated in a cell [illegible] to any [illegible] for [illegible] handling.

Stack [illegible] – [illegible]

Stack 1[illegible] – [illegible] assembled with [illegible] and [illegible] [illegible] on [illegible] [illegible] in [illegible] of a section.

Stack 1[illegible] – Failed [illegible] Gasket Run due to [illegible] [illegible] problems.

Stack 222 – [illegible] Gasket Run.

Stack 2[illegible] – [illegible] [illegible] for [illegible].

Stack 12[illegible] – [illegible] hydrostatic [illegible] [illegible] [illegible] [illegible] [illegible].

Stack 1[illegible] – [illegible] [illegible] and [illegible] [illegible] [illegible] Gasket Run.

Stack 1[illegible] – [illegible] [illegible] [illegible] [illegible]

GEMINI SPACECRAFT
CONTRACT NO. NAS 9-170

BATTERY FUEL CELL

(VENDOR: GENERAL ELECTRIC)

STATUS CHART

REPORT NO [illegible]-1 - 35
LAST PROGRAM SCHEDULE CHANGE: 15 Nov 1963
STATUS AS OF: 27 December 1963

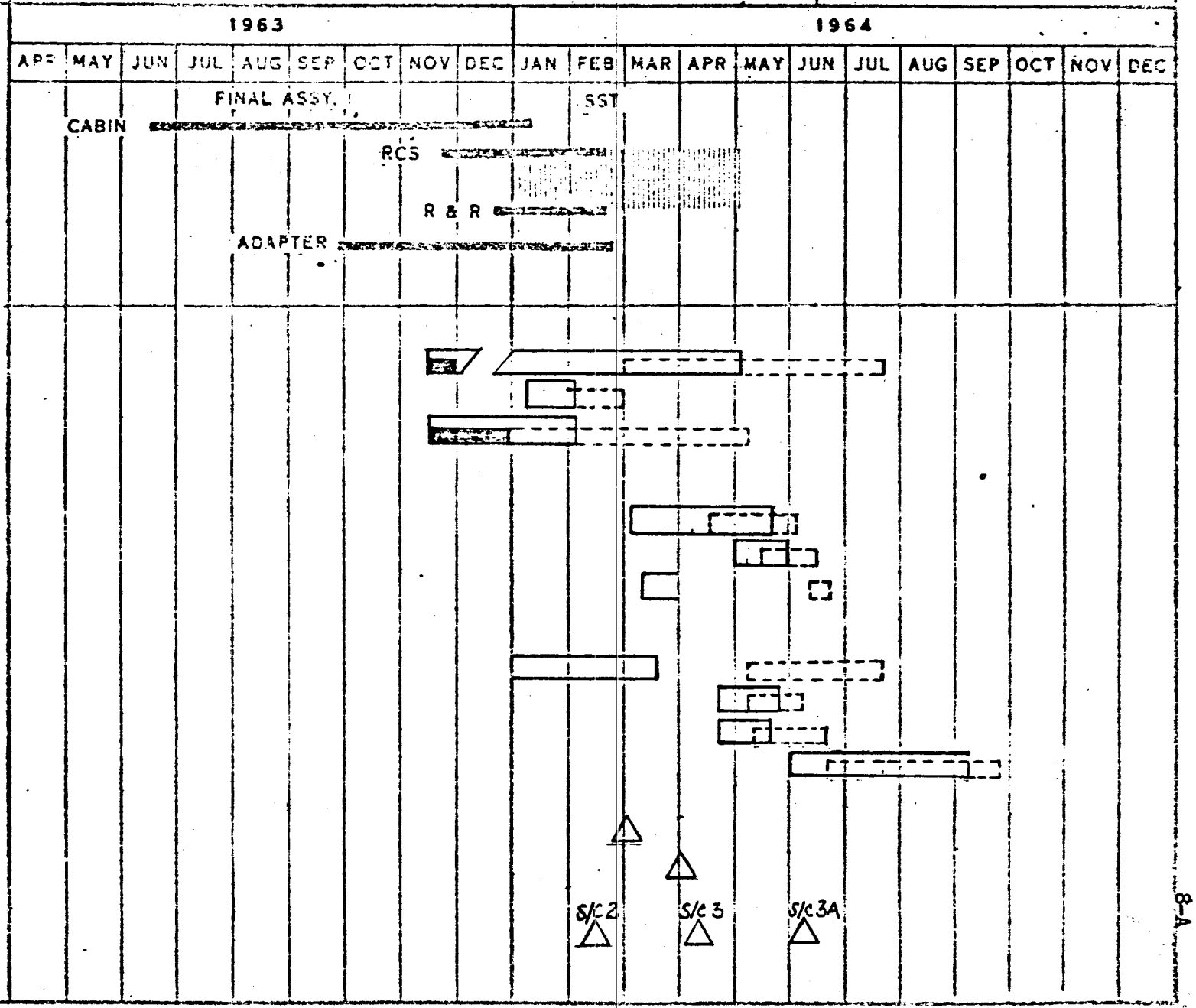

LEGEND:

◊ HARDWARE AVAILABLE

▭ TEST SCHEDULE

○ REPORT DUE

SYSTEM DETAIL TEST CHART
BATTERY FUEL CELL SCD 52-79700
GENERAL ELECTRIC

REPORT NO. 8580-1-35
LAST PROGRAM
SCHEDULE CHANGE: 11-15-63
STATUS AS OF: 12-27-63

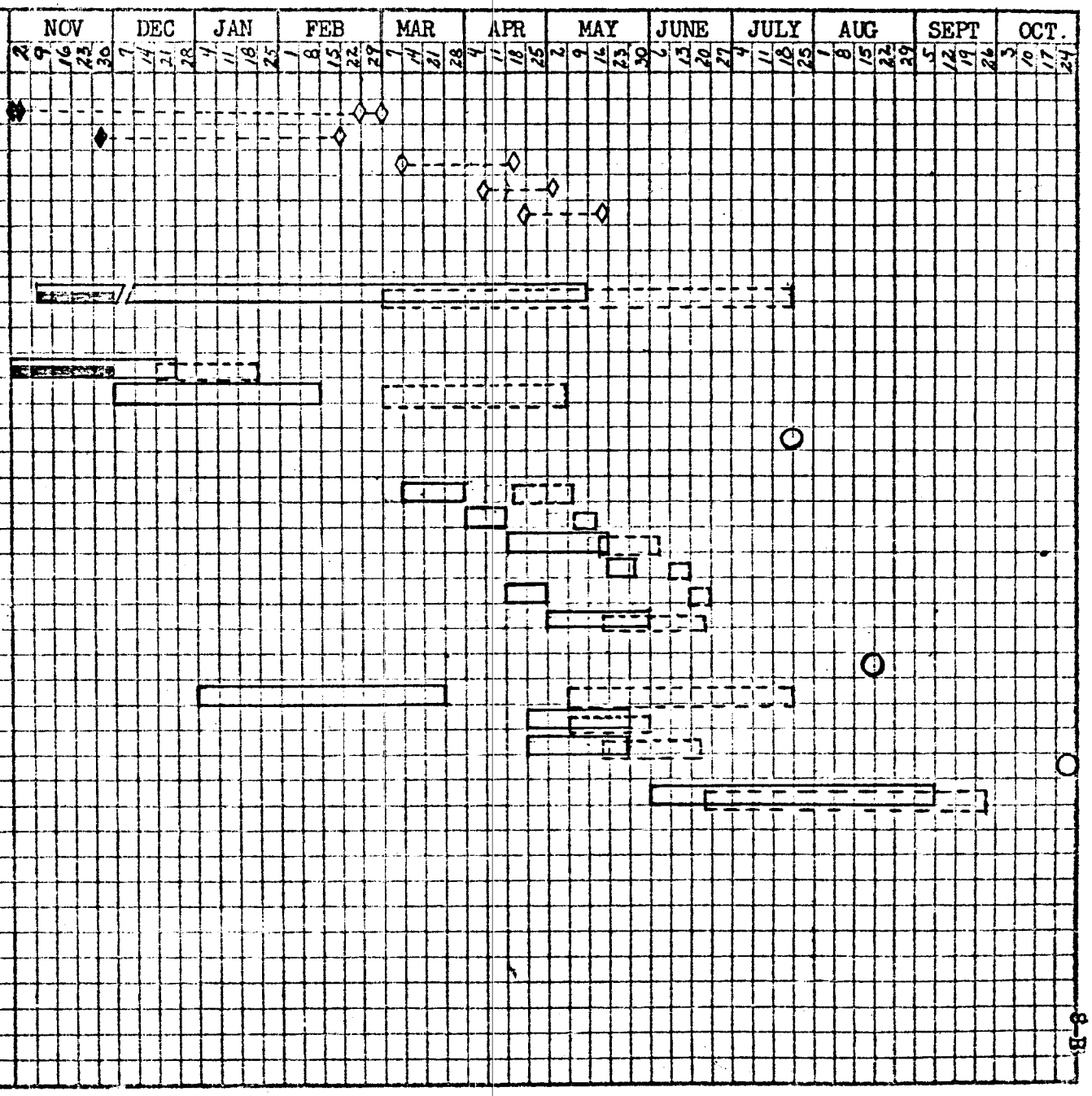

*NOTE: SECTIONS 3B & 501 FAILED MAC-PWR SYSTEM TEST AND WILL B E RERUN UPON RECEIPT OF SECTIONS 506-507 ON 1 MARCH 1964

MAC 2274V (27 APR 59)

[illegible] NO.	[illegible]	[illegible]	[illegible]	[illegible]	[illegible]	[illegible]
1	[illegible]	[illegible]	[illegible]			[illegible]
2	[illegible]	[illegible]	[illegible]			[illegible]
3	[illegible]	[illegible]	[illegible]			[illegible]
4	[illegible]	[illegible]	[illegible]	[illegible]		[illegible]
5	[illegible]	[illegible]	[illegible]	[illegible]		[illegible]
6	[illegible]	[illegible]	[illegible]	[illegible]		[illegible]
7	[illegible]	[illegible]	[illegible]	[illegible]	[illegible]	[illegible]
8	[illegible]	[illegible]	[illegible]	[illegible]		
9	[illegible]	[illegible]	[illegible]	[illegible]		[illegible]
10	[illegible]	[illegible]	[illegible]	[illegible]	[illegible]	[illegible]
11	[illegible]	[illegible]	[illegible]			
12	[illegible]	[illegible]	[illegible]			
13	[illegible]	[illegible]	[illegible]		[illegible]	
14	[illegible]	[illegible]	[illegible]		[illegible]	
15	[illegible]	[illegible]			[illegible]	
16	[illegible]	[illegible]		[illegible]	[illegible]	[illegible]
17	[illegible]	[illegible]		[illegible]	[illegible]	[illegible]
18	[illegible]	[illegible]		[illegible]	[illegible]	[illegible]
19	[illegible]	[illegible]		[illegible]	[illegible]	[illegible]
20	[illegible]	[illegible]		[illegible]	[illegible]	[illegible]
21	[illegible]	[illegible]		[illegible]	[illegible]	[illegible]
22	[illegible]	[illegible]		[illegible]	[illegible]	[illegible]
23	[illegible]	[illegible]		[illegible]	[illegible]	[illegible]
24	[illegible]	[illegible]		[illegible]	[illegible]	[illegible]
25	[illegible]	[illegible]		[illegible]	[illegible]	[illegible]
26	[illegible]	[illegible]		[illegible]	[illegible]	[illegible]
27	[illegible]	[illegible]		[illegible]	[illegible]	[illegible]
28	[illegible]	[illegible]		[illegible]	[illegible]	[illegible]
29	[illegible]	[illegible]		[illegible]	[illegible]	[illegible]

[illegible] Defined by [illegible]
[illegible] Defined by [illegible]
[illegible] Defined by [illegible]

MONTHLY SUMMARY

SYSTEM: Electrical Power
SUBSYSTEM: Reactant Supply System
VENDOR: AiResearch Manufacturing Co.
DATE: 27 December 1963

ENGINEERING STATUS

1. General Engineering - As a result of continued development testing on the -21 Hydrogen Relief Valve and the -23 Oxygen Relief Valve, it is necessary to make some product improvement changes. The changes are in two basic areas:

   A. The Viton O-ring presently used on the Kel-F poppet will be replaced with a silicone O-ring. This is necessary to provide a unit that can be calibrated to operate under extreme temperature conditions and still utilize standard production tolerances. The present production units may start to show impaired performance at approximately 0° F.

   B. Changes are needed in the orifice sizing in the valve housing and/or Kel-F poppet. The changes also are required to accommodate production tolerance compatibility with other parts throughout the valve.

   The units as presently fabricated are very difficult to calibrate; therefore, the improved design should allow AiResearch to realize a better yield of parts.

2. Thermodynamic

   The instrumentation lists for all spacecraft have been checked for compliance with Thermo TN#41 and found adequate. Recommendations of format for reporting flight data have been prepared.

   Work has continued on setting testing limits on No-Go leakrates for all RSS fluids. Concurrently, an investigation is being made to establish a correlation between leakage of a gaseous test pressurant and the inflight leakage of cryogenic oxygen or hydrogen.

   Test activity - A test Request has been issued to evaluate overall performance of several foam insulations for cryogenic lines. Foam-agent samples are in house and testing should begin shortly.

   During next reporting period - continue general analysis of RSS component and system performance. The following studies will be continued to completion: fluid systems leakrate, cryogenic process IBM program, temperature and pressure cryogenic quantity measurement, laboratory testing of cryogenic insulations and analyses of secondary system performance for all trajectories. Review of vendors' data, ATPs, and SEDRs will continue.

ASSEMBLY AND DELIVERY STATUS

The -71 Oxygen Subsystem for S/C 3A slipped from 17 January 1964 to 1 February 1964. S/C 4 from 15 January 1964 to 15 February 1964.

The -73 Oxygen Subsystem for S/C 3 slipped from 31 December 1963 to 23 January 1964.

The -77 Hydrogen Subsystem for S/C 2 shipped on 24 December 1963. The GHe units slipped from 2 January 1964 to 9 January 1964. S/C 3 from 17 January 1964 to 31 January 1964.

The -81 Hydrogen Subsystem for FCC shipped from 26 December 1963 to 17 January 1964, S/C 3A from 14 January 1964 to 20 January 1964, S/C 4 [illegible] 20 January 1964 to 13 February 1964.

The -17 Hydrogen Heat Exchanger for S/C 2 is to ship on 27 December 1963, S/C 3A is to ship on 13 January 1964. Slip caused by lack of data information on MAP. Subvendor has had difficulty with test setup.

The -21 Hydrogen Pressure Relief Valve for S/C 2 shipped on 4 December 1963, S/C 3A and S/C 4 are to ship on 28 December 1963.

The -23 Oxygen Pressure Relief Valve for S/C 3A and S/C 4 is to ship on 28 December 1963.

The -37 Discharge Temperature Sensor for S/C 3 shipped on 13 December 1963, S/C 4 is to ship on 7 January 1964.

~~The -57 Hydrogen Valve, Vent, Quick Disconnect for S/C 2, S/C 3, and S/C 3A~~ shipped on 9 December 1963, S/C 4 is to ship on 24 January 1964.

The -59 Oxygen Valve, Vent, Quick Disconnect for S/C 3 shipped on 9 December 1963, S/C 3A on 11 December 1963. S/C 4 is to ship on 24 January 1964.

The -117 Hydrogen Heat Exchanger for S/C 3 is to ship on 13 January 1964, S/C 4 is to ship on 27 January 1964. Same status on MAPs as -17.

The -125 Hydrogen Indicator, Quantity and Pressure for S/C 2 shipped on 24 December 1963.

The -129 Regulator, Pressure Oxygen and Hydrogen Dual second unit for S/C 2 slipped from 2 January 1964 to 4 January 1964, S/C 3 from 2 January 1964 to 10 January 1964, S/C 3A is to ship on 14 January 1964, S/C 4 is to ship on 18 January 1964. Design review meeting has been held and corrective action and findings have been coordinated with MAC engineering.

The -135 Valve, Solenoid, Shutoff High Pressure for S/C 3 and first unit for S/C 3A shipped on 11 December 1963, second unit for S/C 3A is to ship on 30 December 1963, S/C 4 is to ship on 7 January 1964.

TEST STATUS

Hardware Status for Vendor Test Programs

Part No.	Nomenclature	Total Required	Total Delivered
-71	O_2 Subsystem	4	0
-73	O_2 Subsystem	3	0
-77	H_2 Subsystem	3	0
-81	H_2 Subsystem	4	0
-11	H_2 Container	1	0
-15	O_2 Container	1	0
-17	H_2 Heat Exchanger	2	1
-19	O_2 Heat Exchanger	6	1

Hardware Status for Vendor Test Programs (Continued)

Part No.	Nomenclature	Total Required	Total Delivered
-21	H_2 Press Relief Val	6	3
-23	O_2 Press Relief Val	9	1
-37	Discharge Temp. Sensor	13	7
-57	H_2 Valve Vent Disc	12	5
-59	O_2 Valve Vent Disc	18	3
-95	Valve Check O_2	10	10
-97	Valve Check H_2	10	10
-103	Valve Solenoid, S/O L.P.	5	2
-117	H_2 Heat Exchanger	4	0
-129	Regulator	12	1
-135	Valve Solenoid, S/O H.P.	12	7

GEMINI SPACECRAFT

CONTRACT NO. NAS 9-170

REACTANT SUPPLY SYSTEM (VENDOR: AIRESEARCH)

STATUS CHART

REPORT NO. SS80-1 - 35

LAST PROGRAM SCHEDULE CHANGE: 15 Nov 1963

STATUS AS OF: 27 Dec. 1963

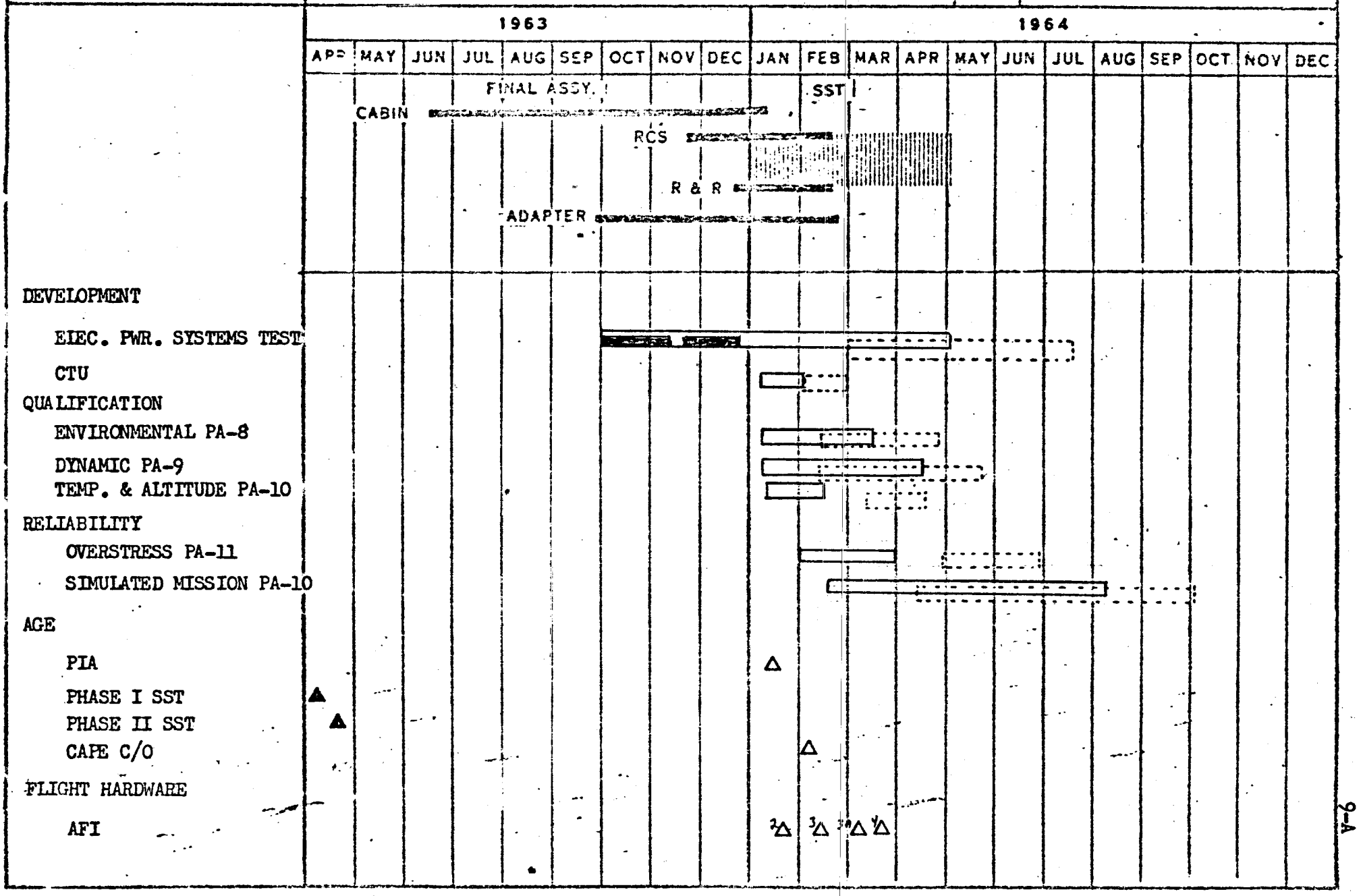

◇ H_2 SUBSYS AVAIL
△ O_2 SUBSYS AVAIL
□ TEST SCHEDULE
○ REPORT DUE

SYSTEM DETAIL TEST CHART
REACTANT SUPPLY SYSTEM
(AIRESEARCH MFG)
SCD 52-83701

REPORT NO. 8580-1-35
LAST PROGRAM
SCHED. CHANGE: 11-15-63
STATUS AS OF: 12-27-63

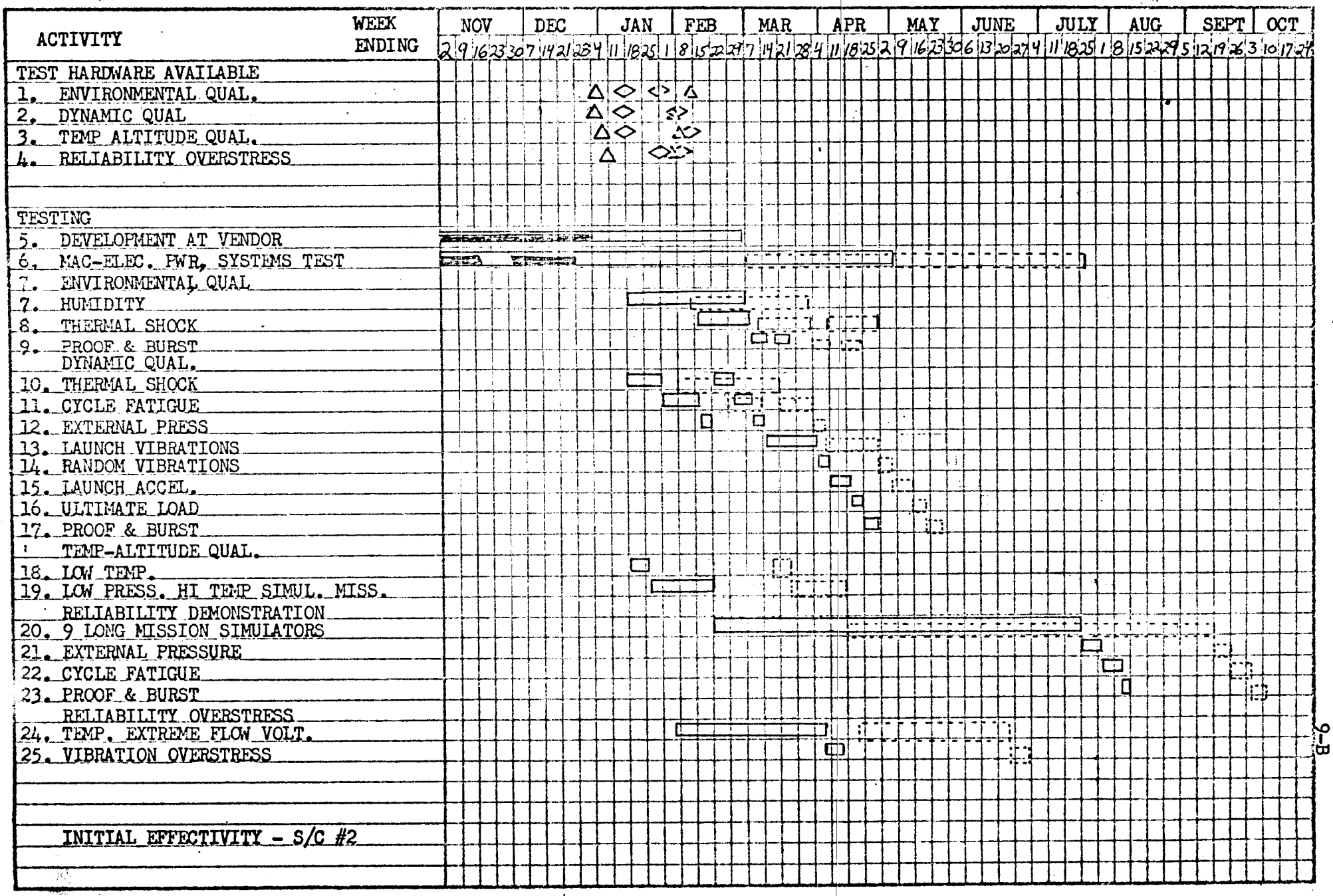

MAC 2278V (27 APR 59)

VENDOR DELIVERY STATUS REPORT
REACTANT SUPPLY SYSTEM
ATRESEARCH

TYPE	USAGE	COMPONENT	VENDOR W/S	AVAIL FOR INSTL	REQ D FOR INSTL	[illegible]
PA-1	PST	163 O2 Sub-IM		A 9-27-63	9-01-63	
		81 H2 Sub-IM	1-17-64	1-22-64	9-01-63	
		17 H2 Ht Xchgr		A10-29-63	9-01-63	
		21 Press Rel Val	A11-09-63	12-30-63	9-01-63	
		37 Temp Sensor		A 9-29-63	9-01-63	
		19 O2 Ht Xchgr		A 9-29-63	9-01-63	
		23 Press Rel Val	A11-08-63	12-30-63	9-01-63	
		37 Temp Sensor		A 9-29-63	9-01-63	
PA-2	CTU	163 O2 Sub-SM	A 9-29-63	12-30-63	11-01-63	
		~~77 H2 Sub-SM~~	~~1-09-64~~	~~1-21-64~~	~~11-01-63~~	
		17 H2 Ht Xchgr		A10-29-63	11-01-63	
		21 Press Rel Val	A11-14-63	12-30-63	11-01-63	
		37 Temp Sensor		A10-29-63	11-01-63	
		19 O2 Ht Xchgr		A 9-29-63	11-01-63	
		23 Press Rel Val		A11-30-63	11-01-63	
		37 Temp Sensor		A10-29-63	11-01-63	
PA-3	S/C 2	153 O2 Sub-SM	A11-11-63	1-25-64	12-13-63	
		77 H2 Sub-SM	A12-26-63	1-25-64	12-13-63	
		17 H2 Ht Xchgr	12-27-63	1-25-64	12-13-63	
		21 Press Rel Val	A12-05-63	1-06-64	12-13-63	
		37 Temp Sensor	A10-29-63	1-06-64	12-13-63	
		19 O2 Ht Xchgr	A10-29-63	1-25-64	12-13-63	
		23 Press Rel Val	A11-14-63	1-06-64	12-13-63	
		37 Temp Sensor	A10-29-63	1-06-64	12-13-63	
PA-4	S/C 3	73 O2 Sub-SM	1-21-64	2-15-64	1-06-64	
		77 H2 Sub-SM	1-31-64	2-15-64	1-06-64	
		21 Press Rel Val	12-28-63	1-27-64	1-06-64	
		37 Temp Sensor	A12-13-63	1-27-64	1-06-64	
		17 H2 Ht Xchgr	1-13-64	2-15-64	1-06-64	
		19 O2 Ht Xchgr	12-30-63	2-15-64	1-06-64	
		23 Press Rel Val	A11-26-63	1-27-64	1-06-64	
		37 Temp Sensor	A12-13-63	1-27-64	1-06-64	
PA-5	SPARE COMPONENTS		2-24-64	3-07-64	12-30-63	
PA-6	S/C 3A	71 O2 Sub-IM	2-01-64	3-07-64	2-01-64	
		81 H2 Sub-IM	1-20-64	3-07-64	2-01-64	
		17 H2 Ht Xchgr	1-13-64	3-07-64	2-01-64	
		21 Press Rel Val	12-28-63	2-17-64	2-01-64	
		37 Temp Sensor	A10-29-63	2-17-64	2-01-64	
		19 O2 Ht Xchgr	1-09-64	3-07-64	2-01-64	
		23 Press Rel Val	12-28-63	2-17-64	2-01-64	
		37 Temp Sensor	A10-29-63	2-17-64	2-01-64	

TYPE	USAGE	COMPONENT	VENDOR W/S	AVAIL FOR INSTL	REQ'D FOR INSTL	STATUS
PA 7	VENDOR DEVELOPMENT					
		71 O2 Sub-LM	2-03-64	2-03-64		
		73 O2 Sub-SM	1-01-64	1-01-64		
		77 H2 Sub-SM	1-28-64	1-28-64		
		81 H2 Sub-LM	2-05-64	2-05-64		
PA 8	VENDOR QUAL-ENVIR					
		71 O2 Sub-LM	2-08-64	2-08-64		
		81 H2 Sub-LM	1-27-64	1-27-64		
PA 9	VENDOR QUAL-DYNAM					
		71 O2 Sub-LM	2-01-64	2-03-64		
		81 H2 Sub-LM	2-03-64	2-09-64		
PA 10	VENDOR QUAL TEMP & ALT					
		71 O2 Sub-LM	2-06-64	2-04-64		
		81 H2 Sub-LM	2-07-64	2-07-64		
PA 11	VENDOR QSR					
		73 O2 Sub-SM	2-01-64	2-01-64		
		77 H2 Sub-SM	2-05-64	2-05-64		
PA 10	VENDOR SMP REPORT & A					
		73 O2 Sub-SM	1-27-64	1-27-64		
		77 H2 Sub-SM	2-03-64	2-01-64		
PA 12	SPARE COMPONENTS		2-[illegible]-64	3-07-64	[illegible]	
PA 13	S/C 4	71 O2 Sub-LM	2-25-64	3-28-64	[illegible]	
		81 H2 Sub-LM	2-25-64	3-28-64	[illegible]	
		23 Press Rel Va	12-28-63	3-09-64	[illegible]	
		37 Temp Sensor	1-07-64	3-09-64	[illegible]	
		117 H2 Ht Xchgr	1-27-64	3-28-64	[illegible]	
		119 O2 Ht Xchgr	2-03-64	3-28-64	[illegible]	+ 2
		23 Press Rel Va	12-28-63	3-09-64	[illegible]	
		37 Temp Sensor	1-07-64	3-09-64	[illegible]	
PA 14	SPARE COMPONENTS		2-21-64	4-02-64	[illegible]	
PA 15	S/C 5		3-15-64	4-18-64	[illegible]	
PA 16	AD 13		4-15-64	5-09-64	[illegible]	
PA 17	S/C 6		5-15-64	5-30-64	[illegible]	
PA 18	S/C 7		6-15-64	6-27-64	[illegible]	
PA 19	SC 8		8-01-64	8-13-64	[illegible]	
PA 20	S/C 9		10-01-64	10-13-64	[illegible]	
PA 21	S/C 10		12-01-64	12-13-64	[illegible]	
PA 22	S/C 11		2-01-65	2-13-65	[illegible]	
PA 23	S/C 12		4-01-65	4-13-65	[illegible]	
PA 24	AD [illegible]		5-01-65	5-13-65	[illegible]	
PA 25	AD [illegible]		6-01-65	8-13-65	[illegible]	

[illegible]

[illegible]

[illegible]

[illegible]

[illegible]

[illegible]

During Next Reporting Period

[illegible]

Unscheduled [illegible]

[illegible]

ECS, PSS, Paraglider Development

[illegible]

[illegible]

[illegible]

[illegible]

[illegible]

[illegible]

[illegible]

[illegible]

[illegible]

[illegible]

A. [illegible]

B. [illegible]

C. [illegible]

D. [illegible]

E. [illegible]

F. [illegible]

[illegible]

A. [illegible]

B. [illegible]

C. [illegible]

[illegible]

A. [illegible]

B. [illegible]

GEMINI
SPACECRAFT
CONTRACT NO. NAS 9-1

ENVIRONMENTAL CONTROL (VENDOR: AIRESEARCH)

STATUS CHART

REPORT NO. [illegible]-1 -35
LAST PROGRAM SCHEDULE CHANGE: 15 Nov. 1963
STATUS AS OF: 27 Dec. 1963

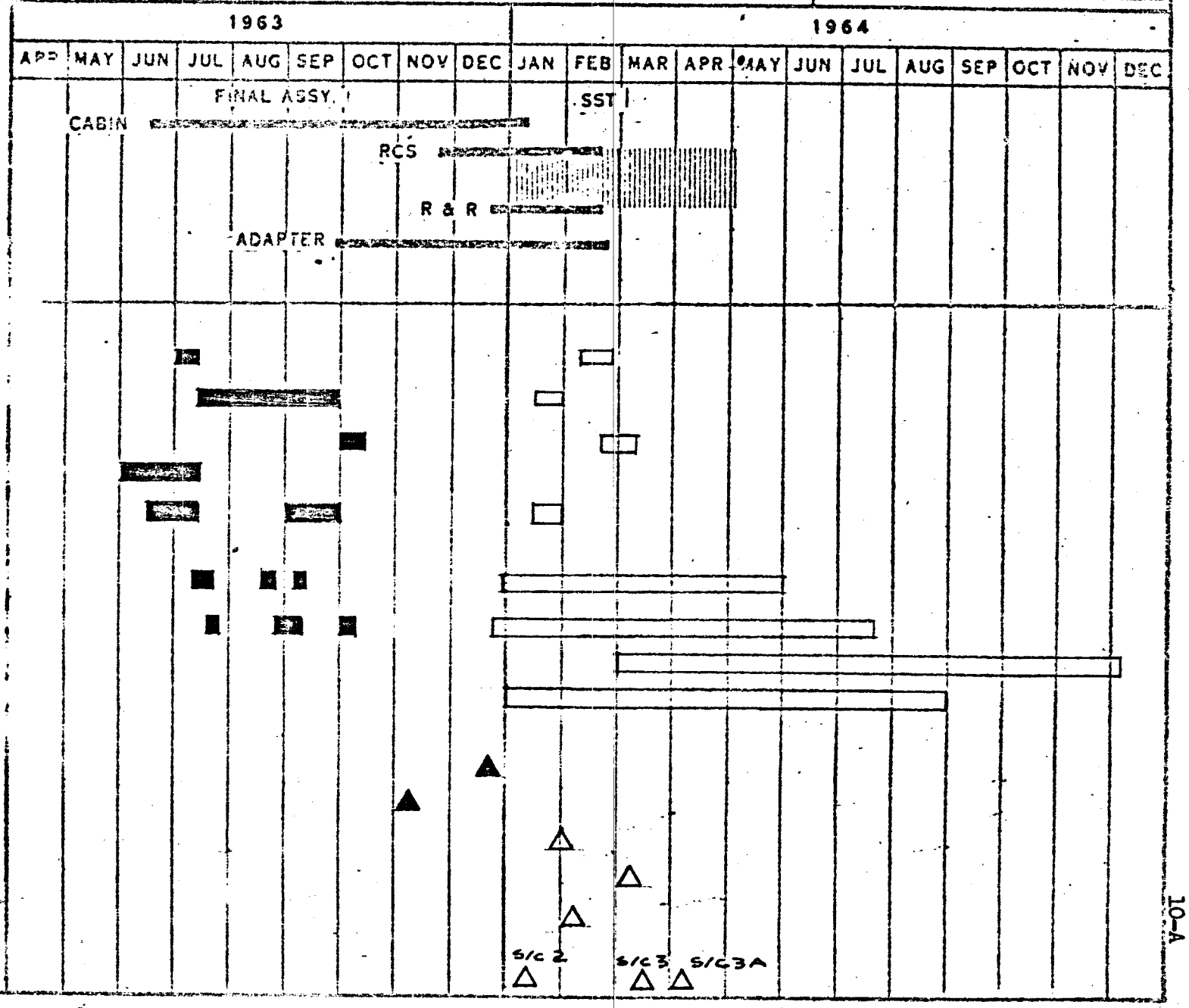

LEGEND:

◊ HARDWARE AVAILABLE

▭ TEST SCHEDULE

SYSTEM DETAIL TEST CHART
ENVIRONMENTAL CONTROL SYSTEM
SCD 52-83700
AIRESEARCH

REPORT NO. [illegible]0-1-35
LAST PROGRAM
SCHEDULE CHANGE: 15 Nov 63
STATUS AS OF: 27 Dec 1963

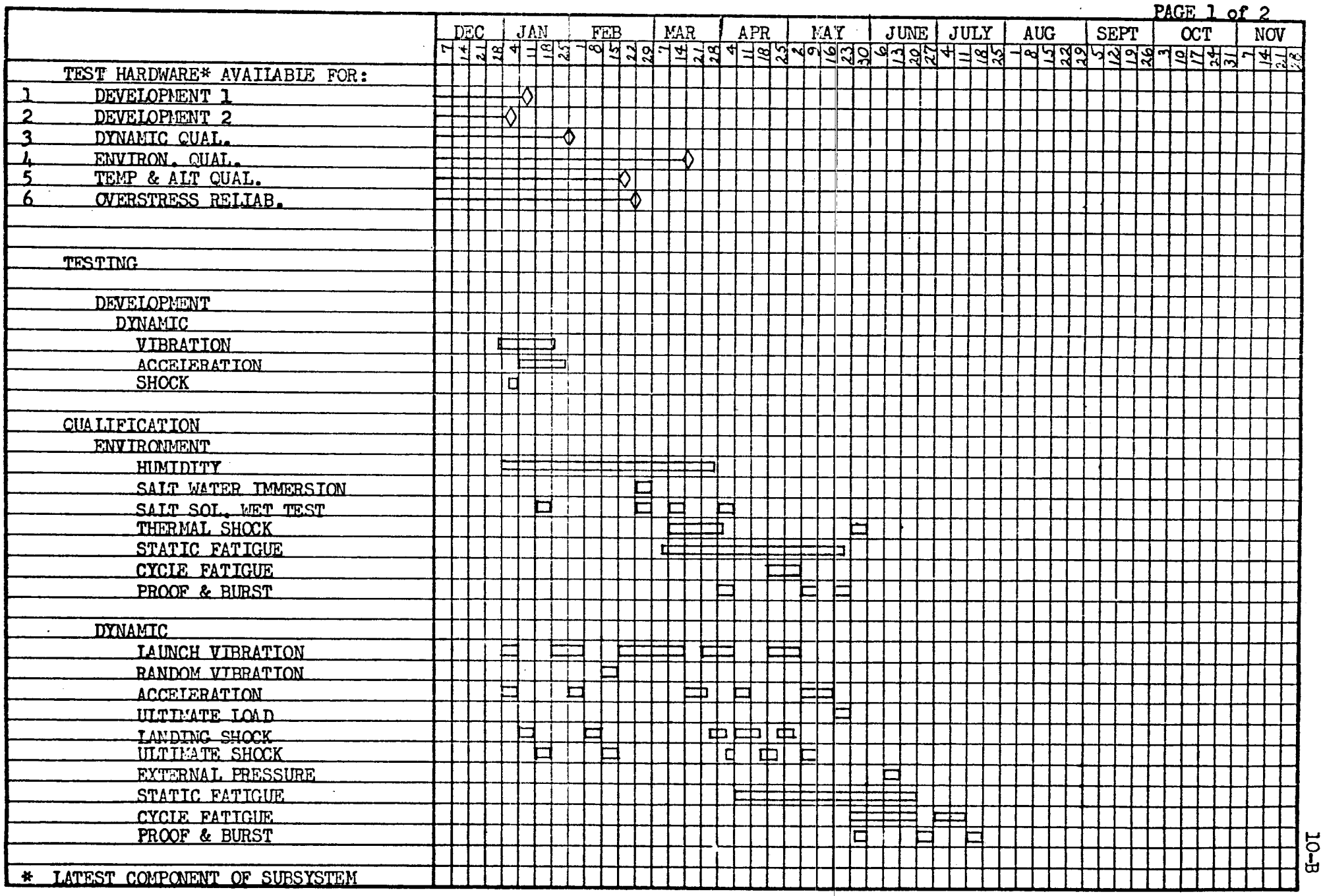

MAC 2274V (27 APR 59)

LEGEND:

◊ HARDWARE AVAILABLE

▭ TEST SCHEDULE

SYSTEM DETAIL TEST CHART
ENVIRONMENTAL CONTROL SYSTEM
SCD 52-83700
AIRESEARCH

REPORT NO. 8580-[illegible]5
LAST PROGRAM
SCHEDULE CHANGE: 15 NOV 1963
STATUS AS OF: 27 DEC 1963

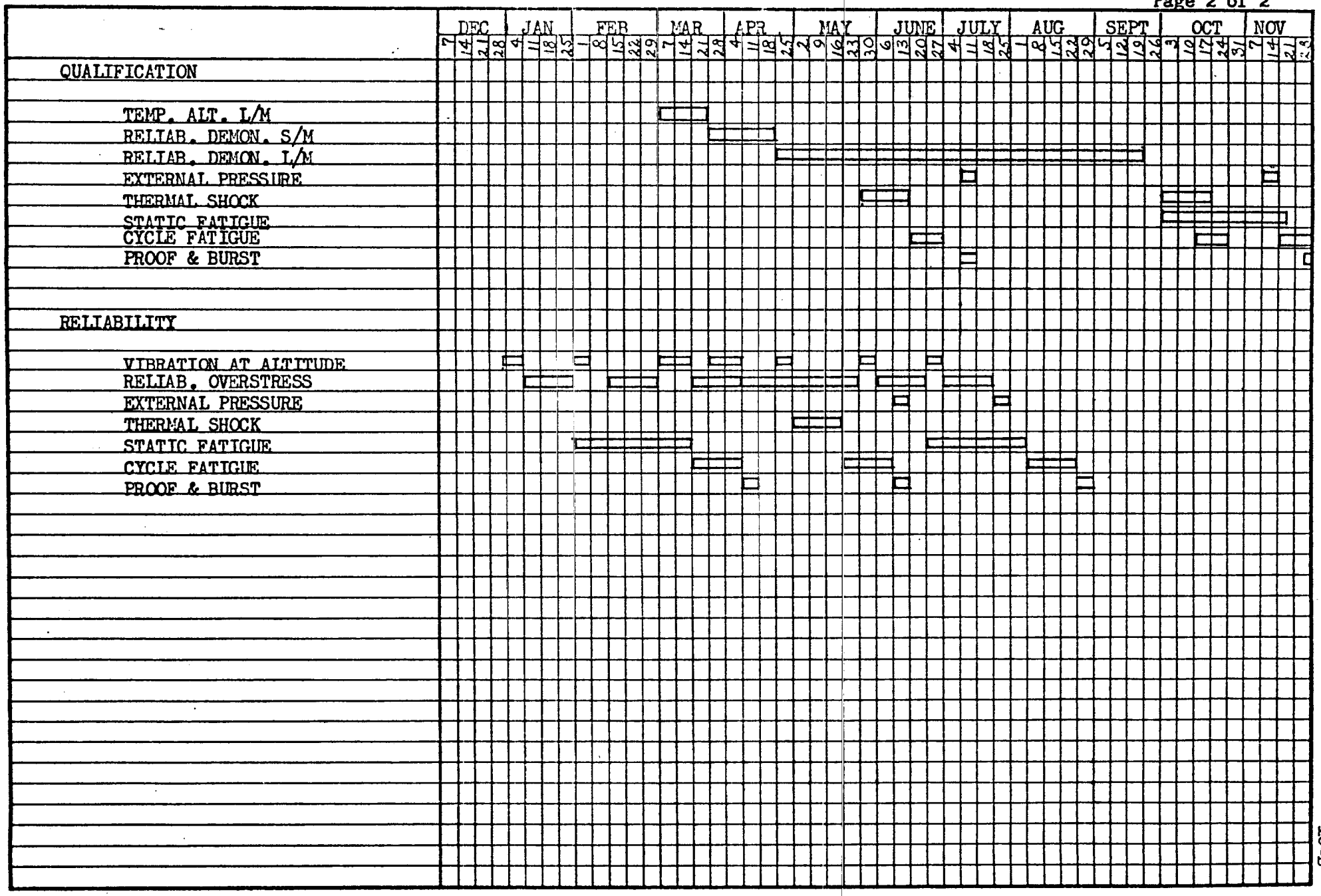

MAC 2274V (27 APR 59)

[illegible]	[illegible]	[illegible]	[illegible]	[illegible]	[illegible]
PP 1	[illegible]	[illegible]			[illegible]
		[illegible]			[illegible]
		[illegible]			[illegible]
		[illegible]			[illegible]
		[illegible]			[illegible]
		[illegible]			[illegible]
		[illegible]			[illegible]
		A-[illegible]	[illegible]	[illegible]	[illegible]
		[illegible]			MOR-[illegible]
		A-[illegible]	[illegible]	[illegible]	[illegible]
[illegible]	[illegible]	[illegible]		[illegible]	[illegible]
		[illegible]		[illegible]	[illegible]
		[illegible]		[illegible]	[illegible]
		[illegible]			[illegible]
		A-[illegible]	[illegible]	[illegible]	[illegible]
		[illegible]			[illegible]
		[illegible]			[illegible]
		[illegible]			[illegible]
		A-[illegible]	[illegible]	[illegible]	[illegible]
		[illegible]			A09-[illegible]
		[illegible]			[illegible]
PP-1A	VENDR	[illegible]			[illegible]
		[illegible]			[illegible]
		[illegible]			[illegible]
		A-[illegible]	[illegible]	[illegible]	
		A-[illegible]	[illegible]	[illegible]	
		[illegible]			[illegible]
		[illegible]			[illegible]
		[illegible]			
		[illegible]			[illegible]
PP 2A	VENDR	[illegible]			[illegible]
		[illegible]			[illegible]
		[illegible]			
		[illegible]			[illegible]
		[illegible]			[illegible]
		[illegible]	[illegible]		
		[illegible]			[illegible]
		[illegible]		[illegible]	
[illegible]	[illegible]	[illegible]			
		[illegible]			
		[illegible]			
		[illegible]			
		[illegible]			
		[illegible]			
		[illegible]			

[illegible]	[illegible]			
	C-265 PUMP [illegible]	[illegible]	[illegible]	[illegible]
	C-2[illegible] SONDRY 02		[illegible] 6[illegible]	[illegible]
	C-[illegible] SONDRY 02		2 02 6[illegible]	[illegible]
	C-[illegible] CABIN [illegible]			[illegible]
	[illegible] EGRESS 02			[illegible]
	A-[illegible] PWR SUP [illegible]	[illegible]	[illegible]	[illegible]
[illegible]	[illegible]	[illegible]	[illegible]	[illegible]
	[illegible]	[illegible]	[illegible]	[illegible]
	[illegible]	[illegible]-11 [illegible]	[illegible] 30 [illegible]	[illegible]
	[illegible]	[illegible]	[illegible] 30 [illegible]	[illegible]
	A [illegible]	[illegible]	[illegible]	[illegible]
	C-255 TEMP VALV	[illegible]-22-6[illegible]	[illegible]	[illegible]
	A-265 PUMP UNIT	[illegible]	[illegible]	[illegible]
	C-275 SONDRY 02	[illegible]	[illegible]	[illegible]
	C-277 SONDRY 02	[illegible]	12-30 6[illegible]	[illegible]
	C-[illegible] SUIT LOOP	[illegible]	[illegible] 07 6[illegible]	[illegible] 06 6[illegible]
	A-[illegible] H.X. [illegible]	[illegible]		[illegible]
	[illegible]	[illegible]	[illegible] 6[illegible]	[illegible]
	[illegible]	[illegible]	[illegible] 6[illegible]	[illegible]
	A-[illegible]	[illegible]	[illegible]	[illegible]
	C-[illegible] EGRESS 02	[illegible]		[illegible] 6[illegible]
	C-[illegible] EGRESS 02	[illegible]		[illegible] 6[illegible]
	A-[illegible]	[illegible]-27-6[illegible]	[illegible] 6[illegible]	[illegible]
	C-2[illegible] VALV [illegible]	[illegible]	[illegible] 6[illegible]	[illegible]
[illegible]	[illegible]	[illegible]	[illegible]	
	C-[illegible]	[illegible]	[illegible]	[illegible]
	[illegible] PRIMARY 02	[illegible] 6[illegible]	[illegible]	[illegible]
	[illegible]	[illegible]	[illegible] 6[illegible]	[illegible]
	[illegible] H.X. [illegible]		[illegible] 6[illegible]	[illegible]
	A-[illegible]	[illegible]	[illegible]	[illegible]
	C-2[illegible] SUIT LOOP	[illegible]-6[illegible]	[illegible]	[illegible] 26 [illegible]
	C-255 TEMP VALV	[illegible]-23-6[illegible]	[illegible]	[illegible]
	A-265 PUMP UNIT	[illegible]	[illegible]	[illegible]
	C-275 SONDRY 02		[illegible]-6[illegible]	[illegible]
	C-277 SONDRY 02		[illegible] 6[illegible]	[illegible] 17 [illegible]
	A-[illegible] H.X. ICH [illegible]	[illegible]		[illegible]
	C-[illegible] CABIN [illegible]	[illegible]	[illegible] 30-6[illegible]	[illegible]
	C-[illegible]3 EGRESS 02	[illegible]		[illegible]
	C-[illegible]4 EGRESS 02	[illegible]		[illegible]
	A-[illegible]7 PWR SUP [illegible]	[illegible]	[illegible]	[illegible]
[illegible] VENDR	[illegible] QUAL		[illegible] 6[illegible]	
	DYN QUAL		[illegible]	
	[illegible]		[illegible]	
	[illegible]		[illegible]	

GEMINI SPACECRAFT
CONTRACT NO. NAS 9-170

ATTITUDE DISPLAY – (VENDOR: LEAR-SIEGLER)

STATUS CHART

REPORT NO. 2560-1 – 34
LAST PROGRAM SCHEDULE CHANGE 27 Dec. 1963
STATUS AS OF: 29 Nov. 1963

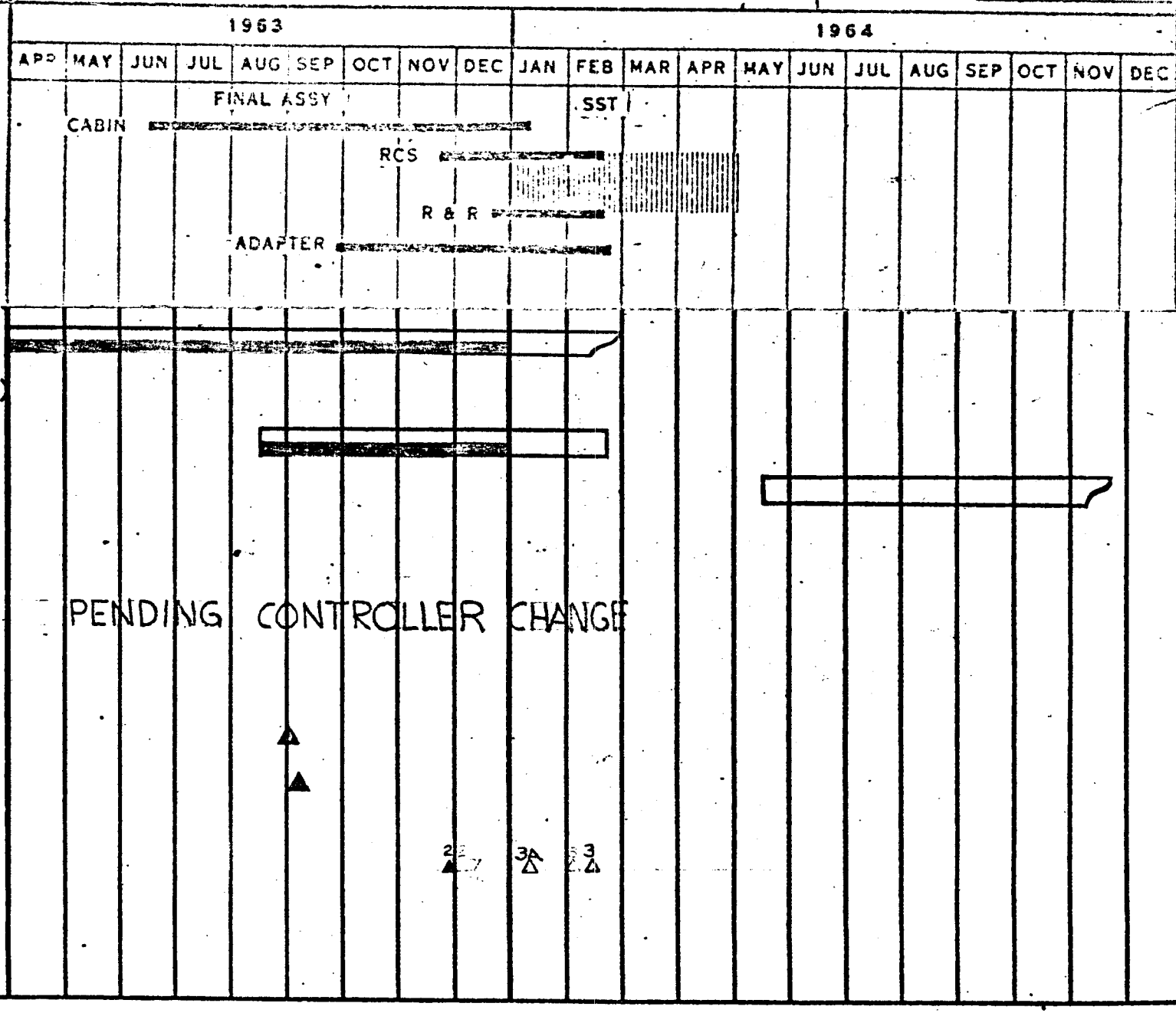

LEGEND
- ▽Test Proposal Due
- ◇Hardware Available
- □Test Schedule
- ○Report Due
- ✩Report Approved

SOLID INDICATES ACTUALS

QUALIFICATION AND DEVELOPMENT TEST STATUS
ATTITUDE DISPLAY GROUP
LEAR SIEGLER, INC.
SCD 52-87702

Date: 27 Dec. 1963

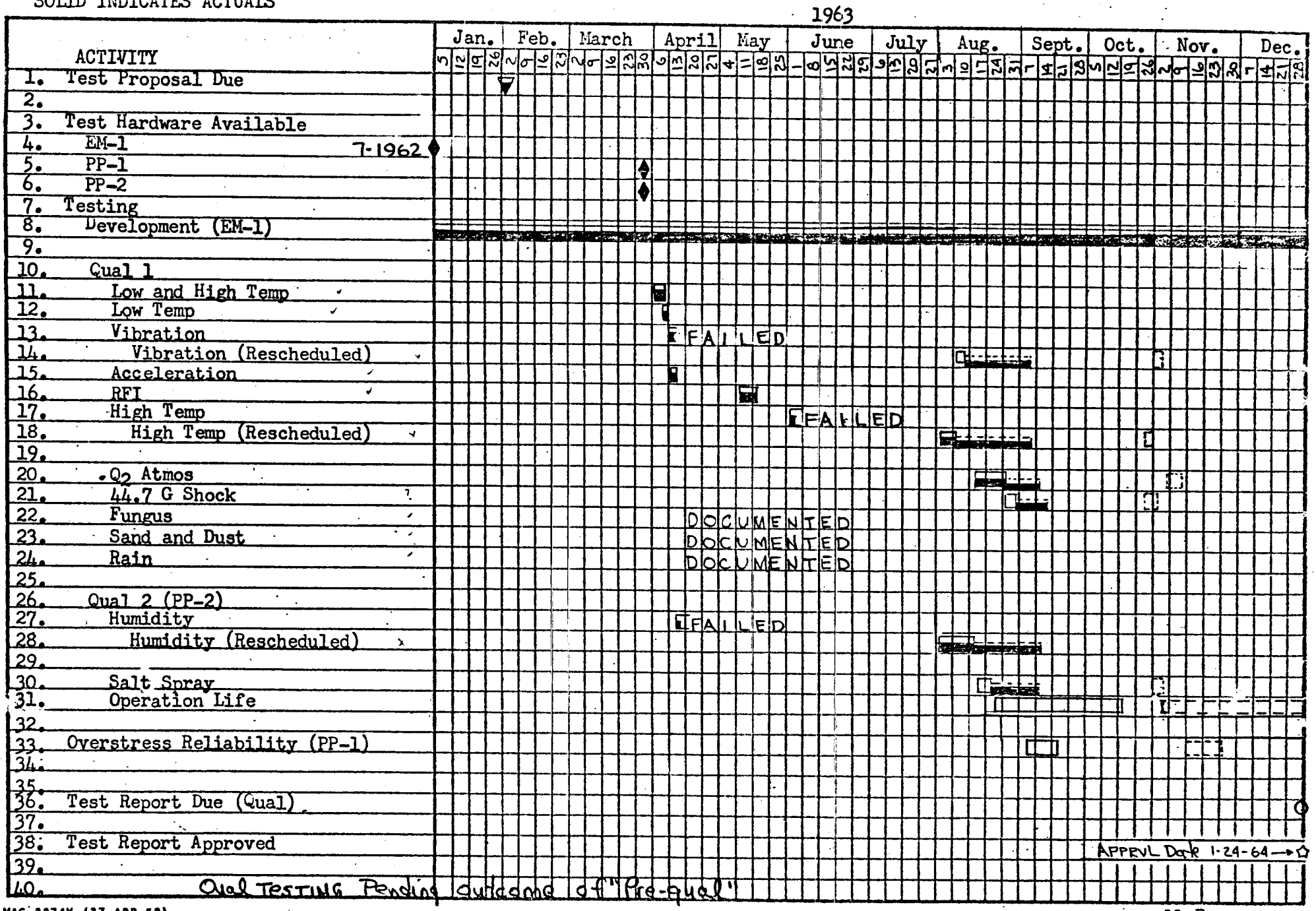

MAC 2274V (27 APR 59)

[illegible]	[illegible]	[illegible]	[illegible]	[illegible]	[illegible]
1-2	[illegible]	[illegible]	[illegible]	[illegible]	[illegible]
3-4	[illegible]	[illegible]	[illegible]	[illegible]	[illegible]
5	[illegible]	[illegible]	[illegible]	[illegible]	[illegible]
6	[illegible]	[illegible]	[illegible]	[illegible]	[illegible]
7-8	[illegible]	[illegible]	[illegible]	[illegible]	[illegible]
9-10	[illegible]	[illegible]	[illegible]	[illegible]	[illegible]
11-12	[illegible]	[illegible]	[illegible]	[illegible]	[illegible]
13	[illegible]	[illegible]	[illegible]	[illegible]	[illegible]
14	[illegible]	[illegible]	[illegible]	[illegible]	[illegible]
15	[illegible]	[illegible]	[illegible]	[illegible]	[illegible]
16	[illegible]	[illegible]	[illegible]	[illegible]	[illegible]
17	[illegible]	[illegible]	[illegible]	[illegible]	[illegible]
18	[illegible]	[illegible]	[illegible]	[illegible]	[illegible]
19	[illegible]	[illegible]	[illegible]	[illegible]	[illegible]
20	[illegible]	[illegible]	[illegible]	[illegible]	[illegible]
21	[illegible]	[illegible]	[illegible]	[illegible]	[illegible]
22	[illegible]	[illegible]	[illegible]	[illegible]	[illegible]
23-24	[illegible]	[illegible]	[illegible]	[illegible]	[illegible]
25-26	[illegible]	[illegible]	[illegible]	[illegible]	[illegible]
27	[illegible]	[illegible]	[illegible]	[illegible]	[illegible]
28	[illegible]	[illegible]	[illegible]	[illegible]	[illegible]
29-30	[illegible]	[illegible]	[illegible]	[illegible]	[illegible]
[illegible]	[illegible]	[illegible]	[illegible]	[illegible]	[illegible]
[illegible]	[illegible]	[illegible]	[illegible]	[illegible]	[illegible]
[illegible]	[illegible]	[illegible]	[illegible]	[illegible]	[illegible]
[illegible]	[illegible]	[illegible]	[illegible]	[illegible]	[illegible]
[illegible]	[illegible]	[illegible]	[illegible]	[illegible]	[illegible]
[illegible]	[illegible]	[illegible]	[illegible]	[illegible]	[illegible]
[illegible]	[illegible]	[illegible]	[illegible]	[illegible]	[illegible]
[illegible]	[illegible]	[illegible]	[illegible]	[illegible]	[illegible]
[illegible]	[illegible]	[illegible]	[illegible]	[illegible]	[illegible]
[illegible]	[illegible]	[illegible]	[illegible]	[illegible]	[illegible]
[illegible]	[illegible]	[illegible]	[illegible]	[illegible]	[illegible]
[illegible]	[illegible]	[illegible]	[illegible]	[illegible]	[illegible]
[illegible]	[illegible]	[illegible]	[illegible]	[illegible]	[illegible]
[illegible]	[illegible]	[illegible]	[illegible]	[illegible]	[illegible]
[illegible]	[illegible]	[illegible]	[illegible]	[illegible]	[illegible]
[illegible]	[illegible]	[illegible]	[illegible]	[illegible]	[illegible]
[illegible]	[illegible]	[illegible]	[illegible]	[illegible]	[illegible]
[illegible]	[illegible]	[illegible]	[illegible]	[illegible]	[illegible]
[illegible]	[illegible]	[illegible]	[illegible]	[illegible]	[illegible]
[illegible]	[illegible]	[illegible]	[illegible]	[illegible]	[illegible]
[illegible]	[illegible]	[illegible]	[illegible]	[illegible]	[illegible]
[illegible]	[illegible]	[illegible]	[illegible]	[illegible]	[illegible]
[illegible]	[illegible]	[illegible]	[illegible]	[illegible]	[illegible]
[illegible]	[illegible]	[illegible]	[illegible]	[illegible]	[illegible]
[illegible]	[illegible]	[illegible]	[illegible]	[illegible]	[illegible]
[illegible]	[illegible]	[illegible]	[illegible]	[illegible]	[illegible]
[illegible]	[illegible]	[illegible]	[illegible]	[illegible]	[illegible]
[illegible]	[illegible]	[illegible]	[illegible]	[illegible]	[illegible]
[illegible]	[illegible]	[illegible]	[illegible]	[illegible]	[illegible]
[illegible]	[illegible]	[illegible]	[illegible]	[illegible]	[illegible]
[illegible]	[illegible]	[illegible]	[illegible]	[illegible]	[illegible]
[illegible]	[illegible]	[illegible]	[illegible]	[illegible]	[illegible]
[illegible]	[illegible]	[illegible]	[illegible]	[illegible]	[illegible]
[illegible]	[illegible]	[illegible]	[illegible]	[illegible]	[illegible]
[illegible]	[illegible]	[illegible]	[illegible]	[illegible]	[illegible]
[illegible]	[illegible]	[illegible]	[illegible]	[illegible]	[illegible]
[illegible]	[illegible]	[illegible]	[illegible]	[illegible]	[illegible]
[illegible]	[illegible]	[illegible]	[illegible]	[illegible]	[illegible]
[illegible]	[illegible]	[illegible]	[illegible]	[illegible]	[illegible]
[illegible]	[illegible]	[illegible]	[illegible]	[illegible]	[illegible]
[illegible]	[illegible]	[illegible]	[illegible]	[illegible]	[illegible]
[illegible]	[illegible]	[illegible]	[illegible]	[illegible]	[illegible]
[illegible]	[illegible]	[illegible]	[illegible]	[illegible]	[illegible]
[illegible]	[illegible]	[illegible]	[illegible]	[illegible]	[illegible]
[illegible]	[illegible]	[illegible]	[illegible]	[illegible]	[illegible]
[illegible]	[illegible]	[illegible]	[illegible]	[illegible]	[illegible]
[illegible]	[illegible]	[illegible]	[illegible]	[illegible]	[illegible]
[illegible]	[illegible]	[illegible]	[illegible]	[illegible]	[illegible]
[illegible]	[illegible]	[illegible]	[illegible]	[illegible]	[illegible]
[illegible]	[illegible]	[illegible]	[illegible]	[illegible]	[illegible]
[illegible]	[illegible]	[illegible]	[illegible]	[illegible]	[illegible]
[illegible]	[illegible]	[illegible]	[illegible]	[illegible]	[illegible]
[illegible]	[illegible]	[illegible]	[illegible]	[illegible]	[illegible]
[illegible]	[illegible]	[illegible]	[illegible]	[illegible]	[illegible]

VENDOR AGE STATUS REPORT

CHANT NO 11-D

SYSTEM - ATTITUDE DISPLAY

DATE: 27 Dec [illegible]

VENDOR - LEAR-SIEGLER

PART NO.	NOMENCLATURE	UNIT NO.	VENDOR W/S	AVAIL. FOR USAGE	REQ'D FOR USAGE
			(PRE-INSTALLATION ACCEPTANCE)		
52-E270035-[illegible]	PIA CMSO ATT	[illegible]	PIA	A11-13-63	
52-E270047-[illegible]	TEMPLATE ATT	[illegible]	PIA	A11-11-63	
			(HANGAR)		
52-E270047-[illegible]	TEMPLATE ATT	2	HGR	A09-24-63	
52-E270035-[illegible]	PIA CONSOLE	2	HGR	A09-24-63	
			(SPACEGRAFT SYSTEM TEST)		
52-E270047-[illegible]	TEMPLATE ATT	[illegible]	SST	A09-24-63	
			(CAPE KENNEDY PAD)		
52-E370001-1	CAMERA CNTRS	[illegible]	PAD	A07-26-63	

NOTE: May be updated due to indicator change.

[illegible]

[illegible]

[illegible]

[illegible]

[illegible]

[illegible]

[illegible]

[illegible]

[illegible]

[illegible]

[illegible]

[illegible] CHART NO. [illegible]

[illegible]

VENDOR: MCDONNELL [illegible] DATE [illegible]

UNIT NO.	TYPE	USAGE	COMPONENT	AVAIL FOR INSTL	REQ'D FOR INSTL	STATUS
1	PP-1	MAC	Development		AC8-01-62	
2	PP-2	MAC	Development		AC2-13-62	
3	PA-1	STATIC-1			AC3-22-63	
4	PA-2	STATIC-3			AC6-10-63	
5	PA-3	SC-1			AC6-22-63	
6	PA-4	SC-2 R			AC2-20-63	
7	PA-5	STATIC-4(2)		07-07-64	07-15-64	[illegible]
8	PA-6	STATIC-2(2)			AC2-05-63	[illegible]
9	PA-7	SC-3		02-10-64	02-17-64	[illegible]
10	PA-8	SC-4		04-03-64	04-10-64	[illegible]
11	PA-9	SC-5		05-22-64	05-29-64	[illegible]
12	PA-10	SC-6		07-01-64	07-08-64	[illegible]
13	PA-11	SC-7		09-24-64	09-11-64	[illegible]
14	PA-12	SC-8		11-07-64	11-10-64	[illegible]
15	PA-13	SC-9		01-07-65	01-14-65	[illegible]
16	PA-14	SC-10		03-10-65	03-17-65	[illegible]
17	PA-15	SC-11		05-10-65	05-17-65	[illegible]
18	PA-16	SC-12		07-08-65	07-15-65	[illegible]

Static 5 and Static 2 to use aluminum skin (52 04212)

MONTHLY SUMMARY

SYSTEM: [illegible]
SUBSYSTEM: UHF [illegible]
VENDOR: Collins Radio
Cedar Rapids
DATE: 27 December [illegible]

PROCUREMENT STATUS

1. Collins Radio Co. has received a shipment of bypass capacitors from Sylvania

ASSEMBLY AND DELIVERY STATUS

1. UHF Voice T/R SN-100 was installed in Spacecraft -2 on 15 December

2. SN 101 (SC-2) is now scheduled for the PDA Test at Collins Radio 7 January 1964 with shipment to MAC scheduled for 6 January

3. SN-12 (Vendor Qual) and SN-13 (Vendor Qual) are expected to be available for Reliability Assurance testing on 6 January and 13 January, respectively. These two prototypes are now being reworked to incorporate the new bypass cap[illegible]

4. SN-102 (SC-3) is now scheduled for shipment 20 January 1964, to allow [illegible] necessary on SN-12 and SN-13. Production articles are scheduled [illegible] thereafter

TEST STATUS

1. The Reliability Assurance Test (Temperature and Vibration) (SN-12, [illegible]) has been rescheduled from 20 January through 4 February because the test is dependent upon the completion of the reworking of the production prototypes (SN 12, [illegible]) (See "Detail Test Chart" lines 31, 32)

2. The CTU Test at MAC on the Communications System is now being [illegible]

3. The Qual Test Report will be transmitted 1 March 1964 and the Reliability Assurance Test Report 15 March 1964. (Lines 33, 35 of "Detail Test Chart")

GEMINI
SPACECRAFT
CONTRACT NO. NAS 9-170

UHF VOICE T/R (VENDOR: COLLINS RADIO)

STATUS CHART

REPORT NO. 0-80-1 -35
LAST PROGRAM SCHEDULE CHANGE: 15 Nov 63
STATUS AS OF: 27 Dec 63

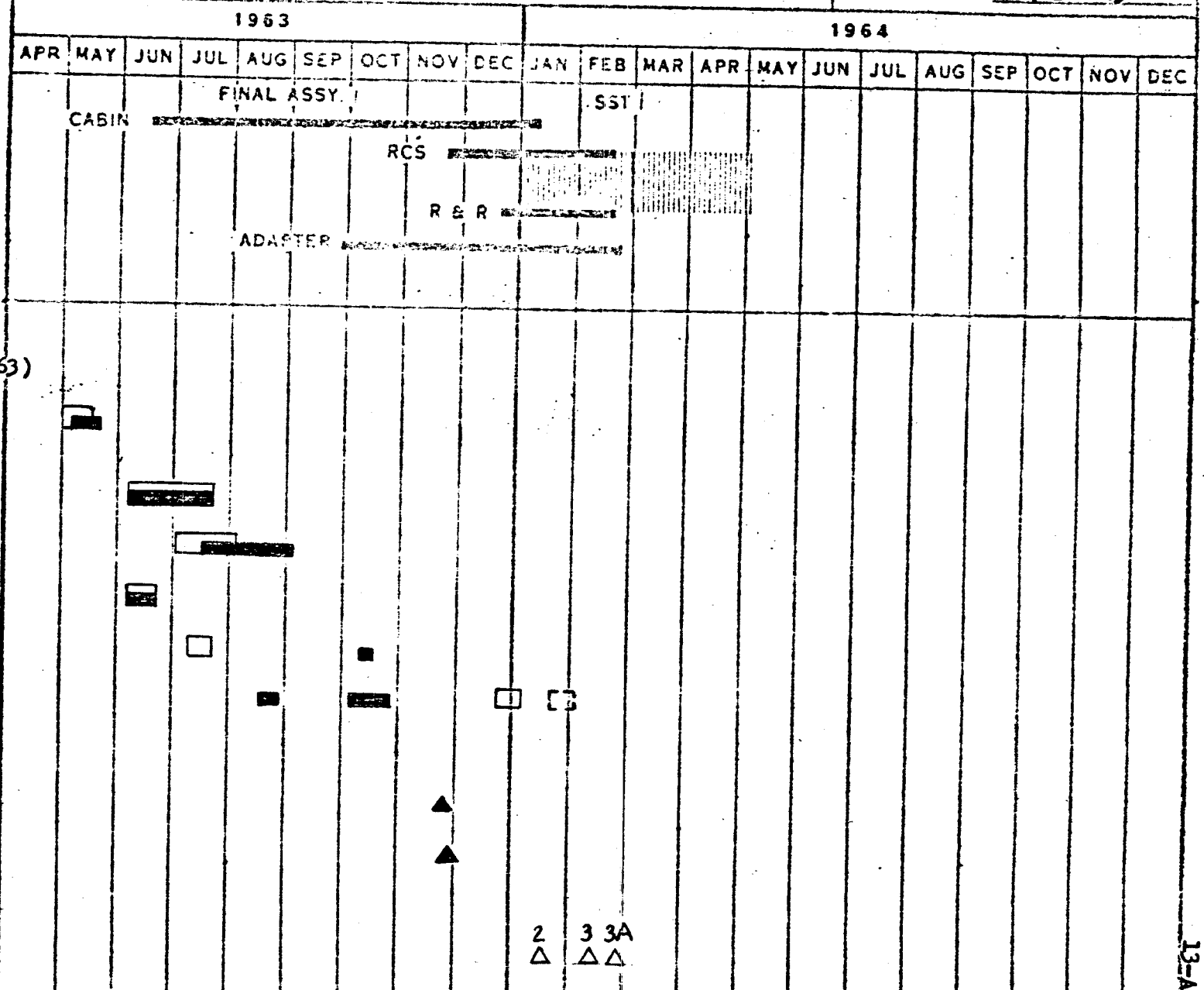

MAJOR TESTS
1. DEVELOPMENT
2. ESTU (100% ON 1-26-63)
3.
4. CTU
5.
6. QUALIFICATION
7. TEST 1
8.
9. TEST 2
10.
11. TEST 3
12.
13. TEST 4
14.
15. RELIABILITY
16.
17.
18. AGE AVAILABILITY
19. PIA
20.
21. CAPE C/O (HGR)
22.
23.
24. FLIGHT HARDWARE
25. AFI
26.

LEGEND
- ▽ TEST PROPOSAL DUE
- ◊ HARDWARE AVAIL.
- ▭ TEST SCHEDULE
- ⊙ REPORT DUE
- ☆ REPORT APPROVED

SOLID INDICATES ACTUAL

QUALIFICATION AND DEVELOPMENT TEST STATUS

UHF VOICE T/R
COLLINS RADIO COMPANY
SCD 52-85709

Rev. E 27 December 1963

	ACTIVITY	WEEK ENDING
1		
2	TEST PROPOSAL DUE	
3		
4	TEST HARDWARE AVAILABLITY	
5	EP-6	1/1/63
6	PP-1	
7	PP-2	
8	PP-3	
9	PP-4	
10		
11		
12	TESTING	
13	DEVELOPMENT (EP-6)	
14		
15	QUAL 1 (PP-1)	
16	High Temp-Temp/Alt-Low Temp	
17	Endurance (Operation Life)	
18		
19	QUAL 2 (PP-2)	
20	RFI	
21	Vibration	
22	Acoustic Noise	
23		
24	QUAL 3 (PP-3)	
25	Thermal Correlation	
26		
27	QUAL 4 (PP-4)	
28	Salt Water Immersion	
29	32.9G Shock	
30	OVERSTRESS REL	
31	Temp Portion (PP-2,3)	
32	Vibration Portion (PP-3,4)	
33	TEST REPORT DUE (Qual)	
34		
35	TEST REPORT DUE (Reliability)	
36	TEST REPORT APPROVED (Qual)	
37	TEST REPORT APPROVED (Reliability)	

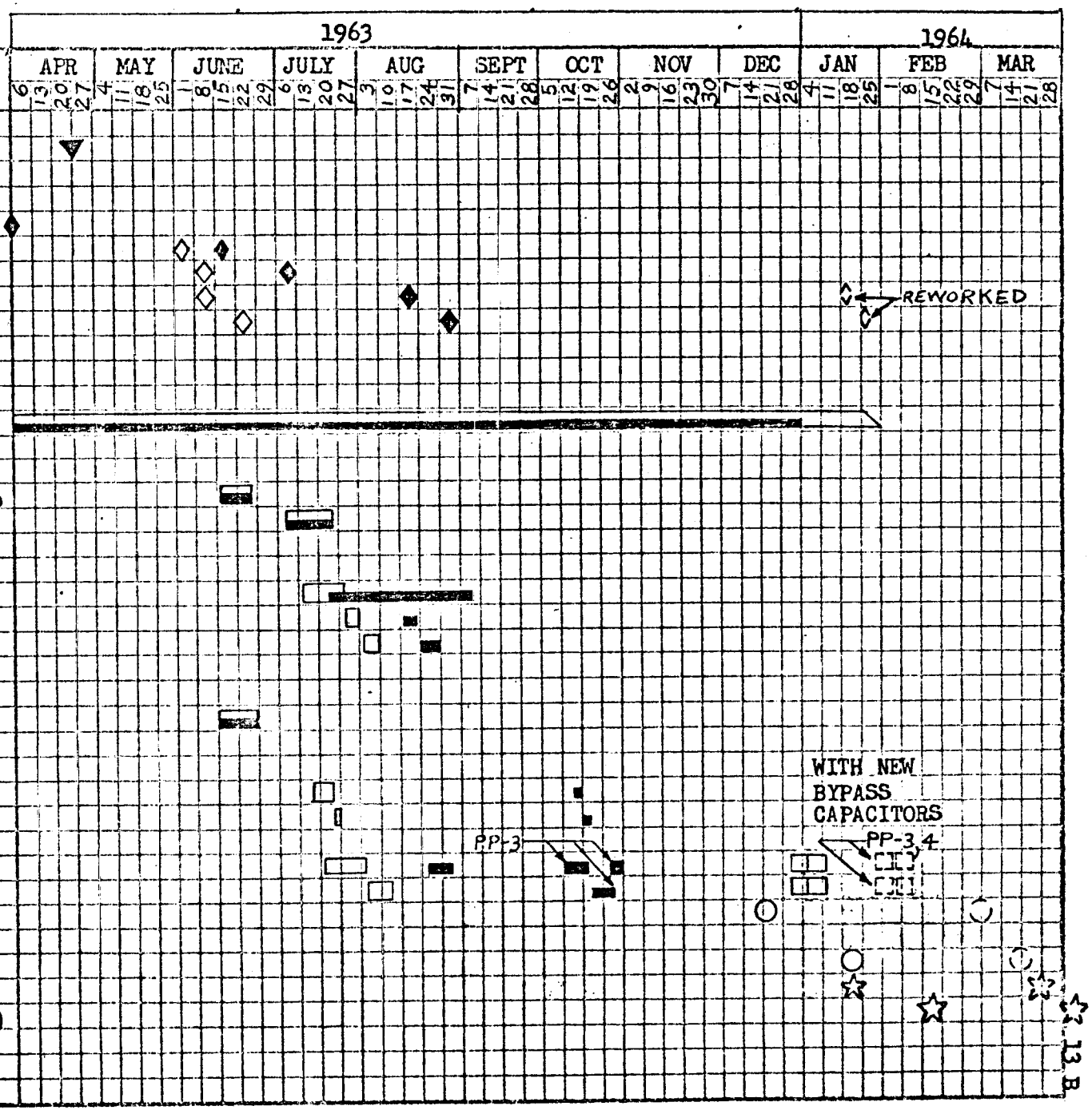

MAC 2274V (27 APR 59)

VENDOR DELIVERY STATUS SUMMARY
UHF MODE 1
COLLINS

SHEET NO. [illegible]

DATE: [illegible]

UNIT NO	TYPE	S/N	USAGE COMPONENT	VENDOR W/S	AVAIL FOR INSTL	REQ D FOR INSTL	SLACK
1	EP-1	1	ESTU			A07-01-63	
2	EP-2	2	ESTU			A07-01-63	
3	EP-3	3	CTU			A04-26-63	
4	EP-4	4	CTU			A04-26-63	
5	EP-5	5	ST-5			A11-19-63	
6	PP-1	10	VENDOR QUAL			A06-03-63	
7	PP-2	11	VENDOR QUAL			A08-01-63	
8	PP-3	12	VENDOR QUAL	*01-13-64		A08-13-63	
9	PP-4	13	VENDOR QUAL	*01-20-64		A08-29-63	
10	PP-5	14	ST-5			A11-19-63	
11	PA-1	100	SC-2			A12-15-63	
12	PA-2	101	SC-2	01-06-64	01-17-64	10-17-63	[illegible]
13	PA-3	102	SC-3	01-27-64	02-05-64	12-20-63	[illegible]
14	PA-4	103	SC-3	02-03-64	02-12-64	12-20-63	[illegible]
15	PA-5	104	SC-3A	02-10-64	02-19-64	01-22-64	[illegible]
16	PA-6	105	SC-3A	02-17-64	02-26-64	01-22-64	[illegible]
17	PA-7	106	SC-4	02-24-64	03-04-64	02-[illegible]-64	[illegible]
18	PA-8	107	SC-4	03-03-64	03-11-64	02-12-64	[illegible]
19	PA-9	108	SC-5	03-09-64	03-18-64	02-21-64	[illegible]
20	PA-10	109	SC-5	03-16-64	03-25-64	02-21-64	[illegible]
21	PA-11	110	SPARE SST	03-23-64	04-01-64	12-31-63	[illegible]
22	PA-12	111	SPARE SST	03-30-64	04-08-64	02-28-64	[illegible]
23	PA-13	112	SPARE HGR	04-06-64	04-15-64	03-31-64	[illegible]
24	PA-14	113	SC-6	04-13-64	04-22-64	05-08-64	[illegible]
25	PA-15	114	SC-6	04-20-64	04-29-64	05-08-64	[illegible]
26	PA-16	115	ST-2	04-27-64	05-06-64	05-13-64	[illegible]
27	PA-17	116	ST-2	05-04-64	05-13-64	05-13-64	[illegible]
28	PA-18	117	SPARE SST	05-11-64	05-20-64	05-29-64	[illegible]
29	PA-19	118	SPARE HGR	05-18-64	05-27-64	05-29-64	[illegible]
30	PA-20	119	SC-7	05-25-64	06-03-64	07-08-64	[illegible]
31	PA-21	120	SC-7	06-01-64	06-10-64	07-08-64	[illegible]
32	PA-22	121	SPARE HGR	06-08-64	06-17-64	07-28-64	[illegible]
33	PA-23	122	SC-8	06-15-64	06-24-64	09-08-64	+21
34	PA-24	123	SC-8	06-22-64	07-01-64	09-08-64	+10
35	PA-25	124	SC-9	06-29-64	07-08-64	11-08-64	+13
36	PA-26	125	SC-9	07-06-64	07-15-64	11-08-64	+17
37	PA-27	126	SC-10	07-13-64	07-22-64	01-08-65	+27
38	PA-28	127	SC-10	07-20-64	07-29-64	01-08-65	+24
39	PA-29	128	SC-11	07-27-64	08-05-64	03-08-65	+37
40	PA-30	129	SC-11	08-03-64	08-12-64	03-08-65	+30
41	PA-31	130	SC-12	08-10-64	08-19-64	05-08-65	+38
42	PA-32	131	SC-12	08-17-64	08-26-64	05-08-65	+37

* Remark [illegible] Reports [illegible] [illegible] Reliability Assurance [illegible]

[illegible] GROUP [illegible] PROGRESS REPORT

COMMUNICATION SYSTEM

GOELONS

PART NUMBER	NOMENCLATURE	UNIT NO	VENDOR W/S	AVAIL. FOR USAGE	REQ'D FOR USAGE	STATUS
			PRE INSTALLATION ACCEPTANCE			
E190002-1	PIA BENCH UHF	1		A11-29-63		
E190001-1	PIA BENCH HF	1	A11-21-63	**01-20-64	10-07-63	*
E190001-1	PIA BENCH VCC	1	01-10-64	01-24-64	12-04-63	
			HANGAR			
E190028-1	TB-UHF-PIA	1		*A11-29-63		
E190028-1	TB-HF PIA	1	A11-26-63	*A12-04-63		
E190028-1	TB VCC-PIA	1	01-14-64	01-28-64	01-06-64	*

* Received at Cape

** FAD has been run Awaiting NASA approval

[illegible]

[illegible]

1. [illegible]

ASSEMBLY AND DELIVERY [illegible]

1. A PTA [illegible]

2. MAC [illegible]

3. SN-102 [illegible]

4. [illegible]

TEST STATUS

1. The Qual Test Report [illegible]

AGE STATUS

1. [illegible]

GEMINI SPACECRAFT
CONTRACT NO. NAS 9-170

HF VOICE T/R - (VENDOR: COLLINS RADIO)

STATUS CHART

REPORT NO. [illegible]-35
LAST PROGRAM SCHEDULE CHANGE: 15 Nov 63
STATUS AS OF: 27 Dec 63

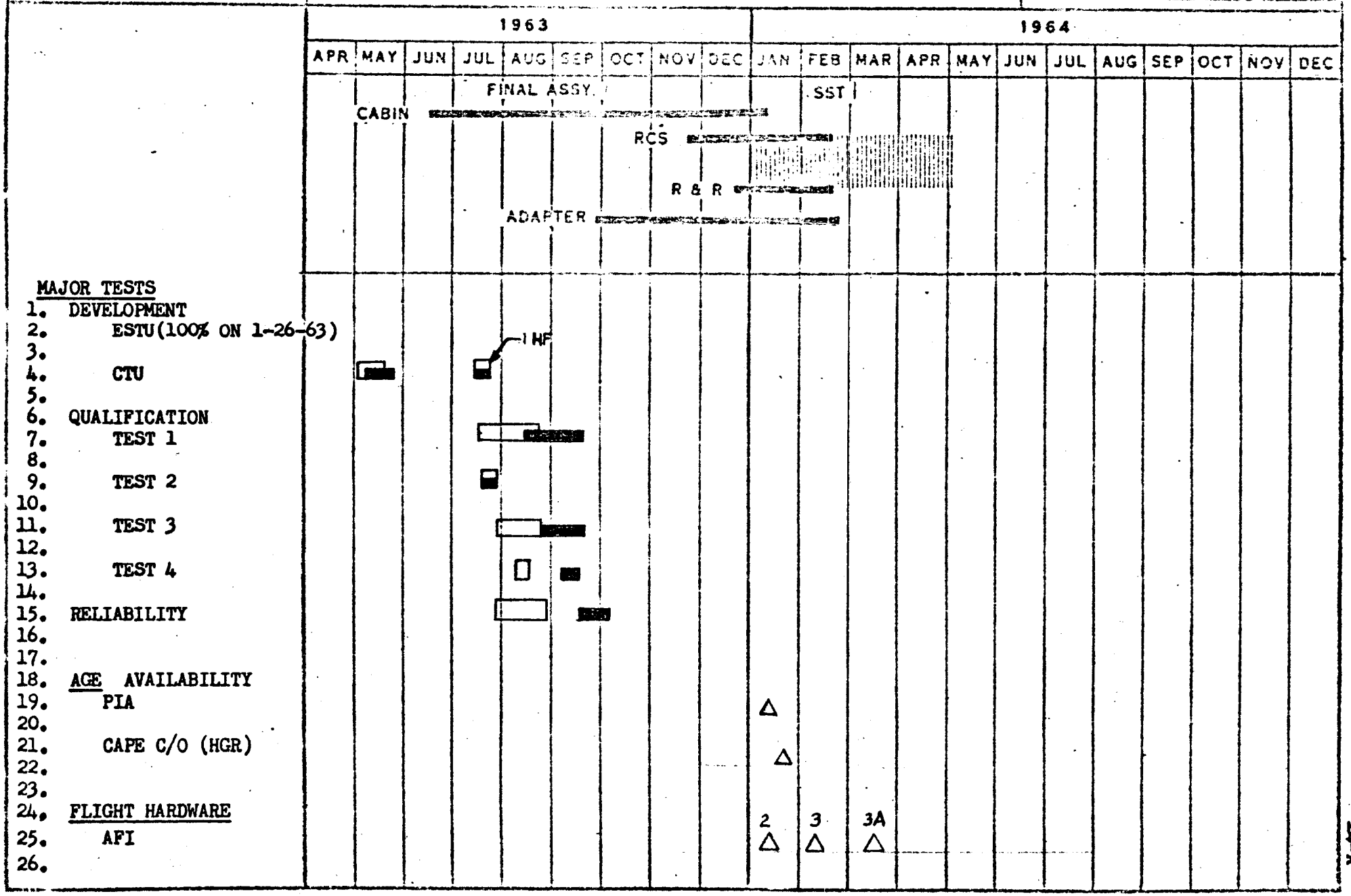

LEGEND

- ▽ TEST PROPOSAL DUE
- ◊ HARDWARE AVAIL.
- ▭ TEST SCHEDULE
- ○ REPORT DUE
- ☆ REPORT APPROVED

SOLID INDICATES ACTUAL

QUALIFICATION AND DEVELOPMENT TEST STATUS

HF VOICE T/R
COLLINS RADIO COMPANY
SCD 52-85710

Rev. F 27 December 1963

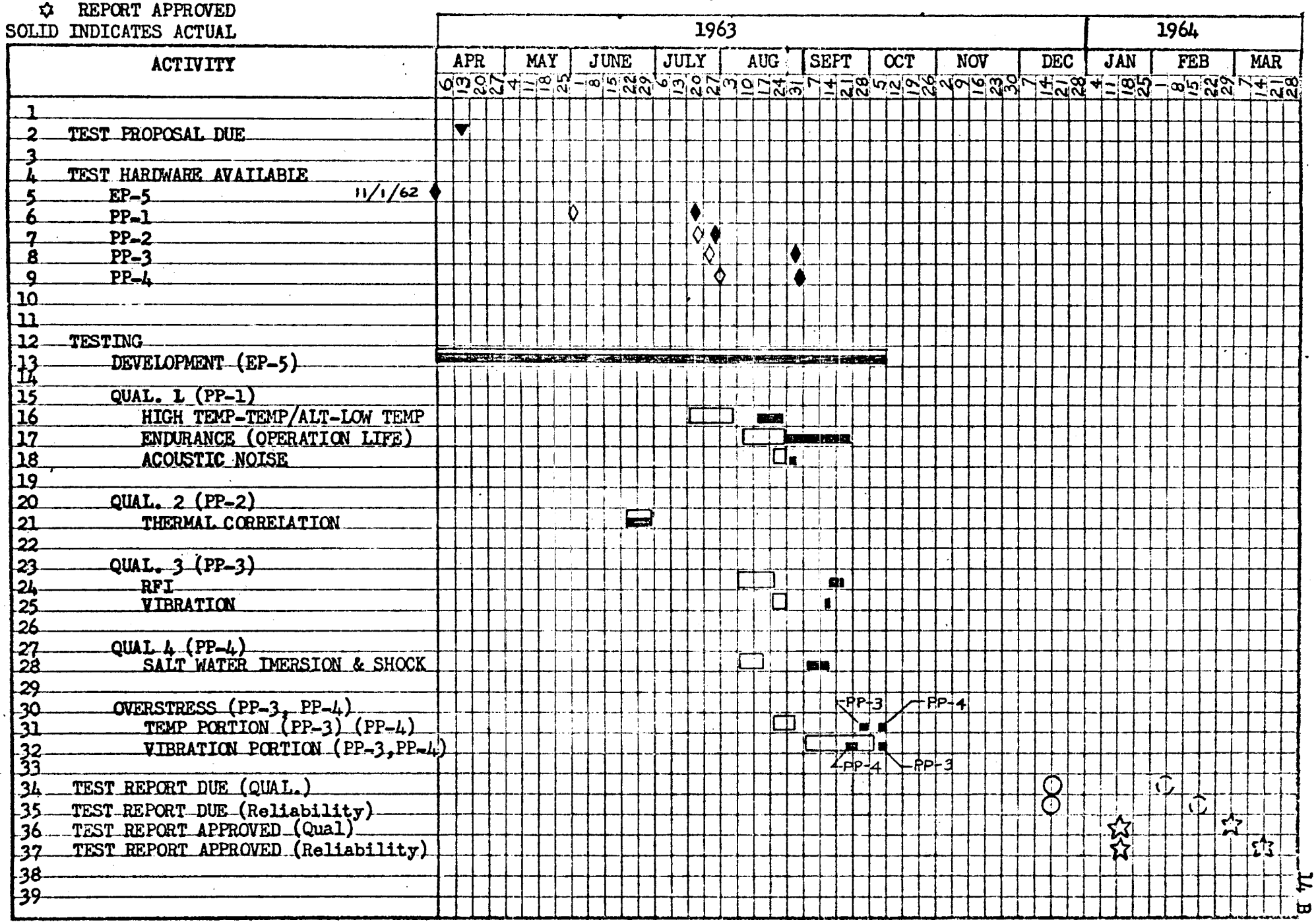

MAC 2274V (27 APR 59)

[illegible] NO.	[illegible]	[illegible]	USAGE CONDITION	[illegible]	[illegible]	[illegible]
[illegible]	EP-[illegible]	[illegible]	EPU			
[illegible]	EP-[illegible]	[illegible]	CPU			
5	PP-1	[illegible]	VENDOR QUAL			
6	PP-2	[illegible]	VENDOR QUAL			
7	PP-3	[illegible]	VENDOR QUAL			
8	PP-4	[illegible]	VENDOR QUAL			
9	PP-5	[illegible]	SPARE			
10	PA-1	[illegible]	SC 2	[illegible]	[illegible]	[illegible]
11	PA-4	[illegible]	SC 2 (AD)	[illegible]	[illegible]	[illegible]
12	PA-1	100	SC 3	[illegible]	[illegible]	[illegible]
13	PA-2	101	SC 3 (AD)	[illegible]	[illegible]	[illegible]
14	PA-5	102	SC 3A	[illegible]	[illegible]	[illegible]
15	PA-6	103	SC 3A (AD)	[illegible]	[illegible]	03-01-66
16	PA-7	104	SC 4	[illegible]	[illegible]	[illegible]
17	PA-8	105	SC 5	[illegible]	[illegible]	[illegible]
18	PA-9	106	SC 4 (AD)	[illegible]	[illegible]	[illegible]
19	PA-10	107	SC 10 [illegible]	[illegible]	[illegible]	[illegible]
20	PA-11	108	SPARE [illegible]	[illegible]	[illegible]	[illegible]
21	PA-12	109	SPARE [illegible]	[illegible]	[illegible]	[illegible]
22	PA-13	110	SC 6	[illegible]	[illegible]	[illegible]
23	PA-14	111	SPARE [illegible]	05-04-66	05-12-66	[illegible]
24	PA-15	112	SPARE [illegible]	05-11-66	05-19-66	[illegible]
25	PA-16	113	SC 6 (AD)	05-19-66	05-26-66	[illegible]
26	PA-17	114	SC 7	05-25-66	06-02-66	[illegible]
27	PA-18	115	SC 6 (AD)	[illegible]	[illegible]	[illegible]
28	PA-19	116	SC 7	[illegible]	[illegible]	[illegible]
29	PA-20	117	SPARE [illegible]	06-15-66	06-24-66	[illegible]
30	PA-21	118	SC 8	06-22-66	[illegible]	[illegible]
31	PA-22	119	SC 7 (AD)	06-30-66	07-07-66	[illegible]
32	PA-23	120	SC 9	07-06-66	[illegible]	[illegible]
33	PA-24	121	SC 8 (AD)	07-13-66	07-20-66	[illegible]
34	PA-25	122	SC 10	07-20-66	07-28-66	[illegible]
35	PA-26	123	SC 9 (AD)	07-27-66	08-04-66	[illegible]
36	PA-27	124	SC 11	08-03-66	08-11-66	[illegible]
37	PA-28	125	SC 10 (AD)	08-10-66	08-18-66	[illegible]
38	PA-29	126	SC 12	08-17-66	08-25-66	[illegible]
39	PA-30	127	SC 11 (AD)	08-24-66	09-01-66	[illegible]
40	PA-31	128	SC 13 (AD)	08-31-66	09-08-66	[illegible]
41	PA-32	129	AD-14	09-07-66	09-15-66	[illegible]
42	PA-33	130	AD-15	09-14-66	09-22-66	[illegible]

AD = ADAP

[illegible]

[illegible] 104 [illegible]

[illegible]

[illegible]

1. [illegible]

2. SN-[illegible], SN [illegible] a possible [illegible] The Headset [illegible]

TEST STATUS

1. MAC Engineering [illegible]

2. The Qual Test [illegible] to MAC on 1 February [illegible]

AGE

1. All [illegible] The [illegible] debugging [illegible]

GEMINI SPACECRAFT
CONTRACT NO. NAS 9-170

VOICE CONTROL CENTER (VENDOR: COLLINS RADIO)

STATUS CHART

REPORT NO. 8580-1 -35
LAST PROGRAM SCHEDULE CHANGE: 15 Nov 63
STATUS AS OF: 27 Dec 63

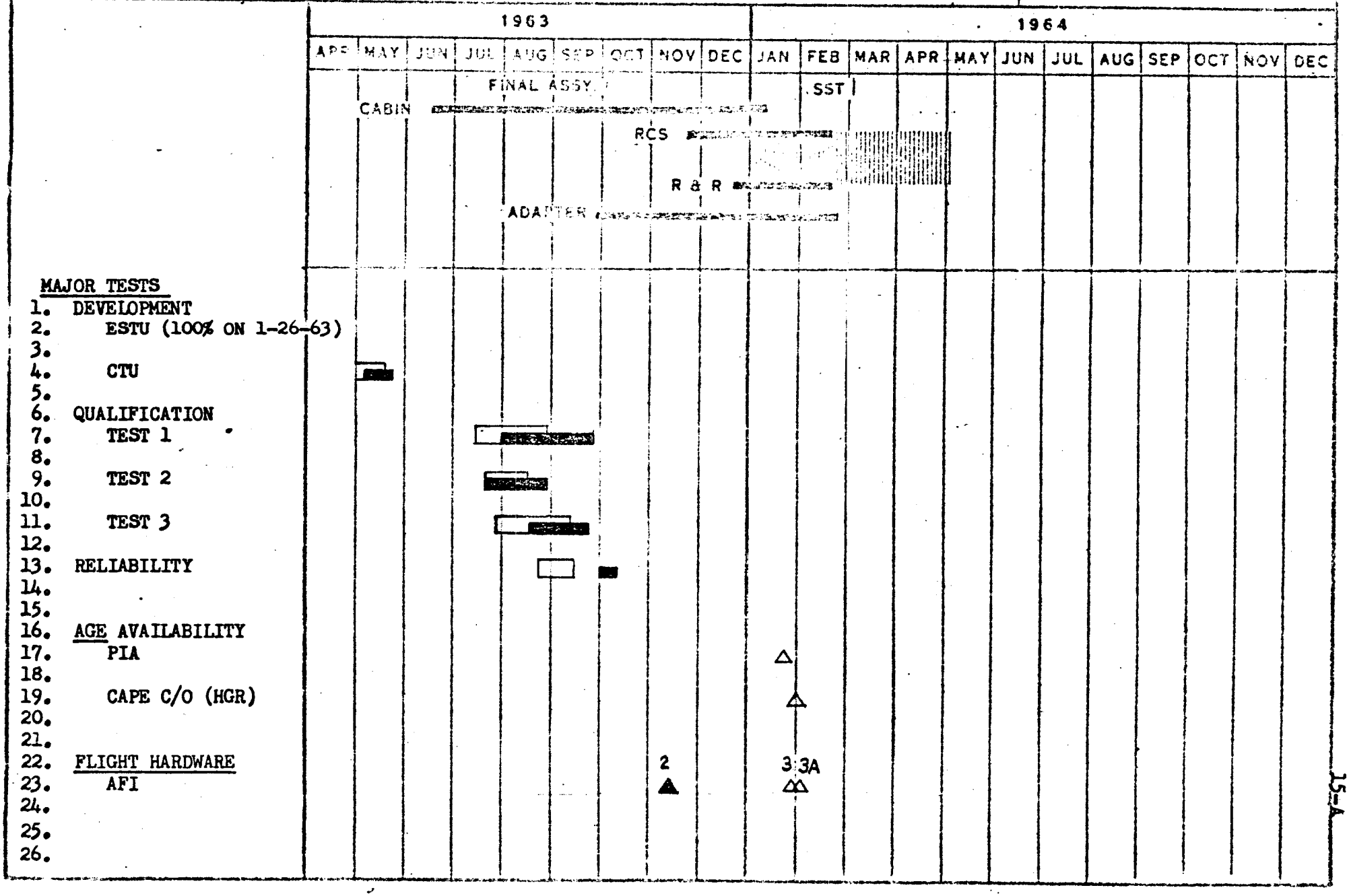

LEGEND

- ▽ TEST PROPOSAL DUE
- ◇ HARDWARE AVAIL.
- ▭ TEST SCHEDULE
- ○ REPORT DUE
- ☆ REPORT APPROVED

SOLID INDICATES ACTUAL

QUALIFICATION AND DEVELOPMENT TEST STATUS

VOICE CONTROL CENTER
COLLINS RADIO COMPANY
SCD 52-85712

Rev. F 27 December 1963

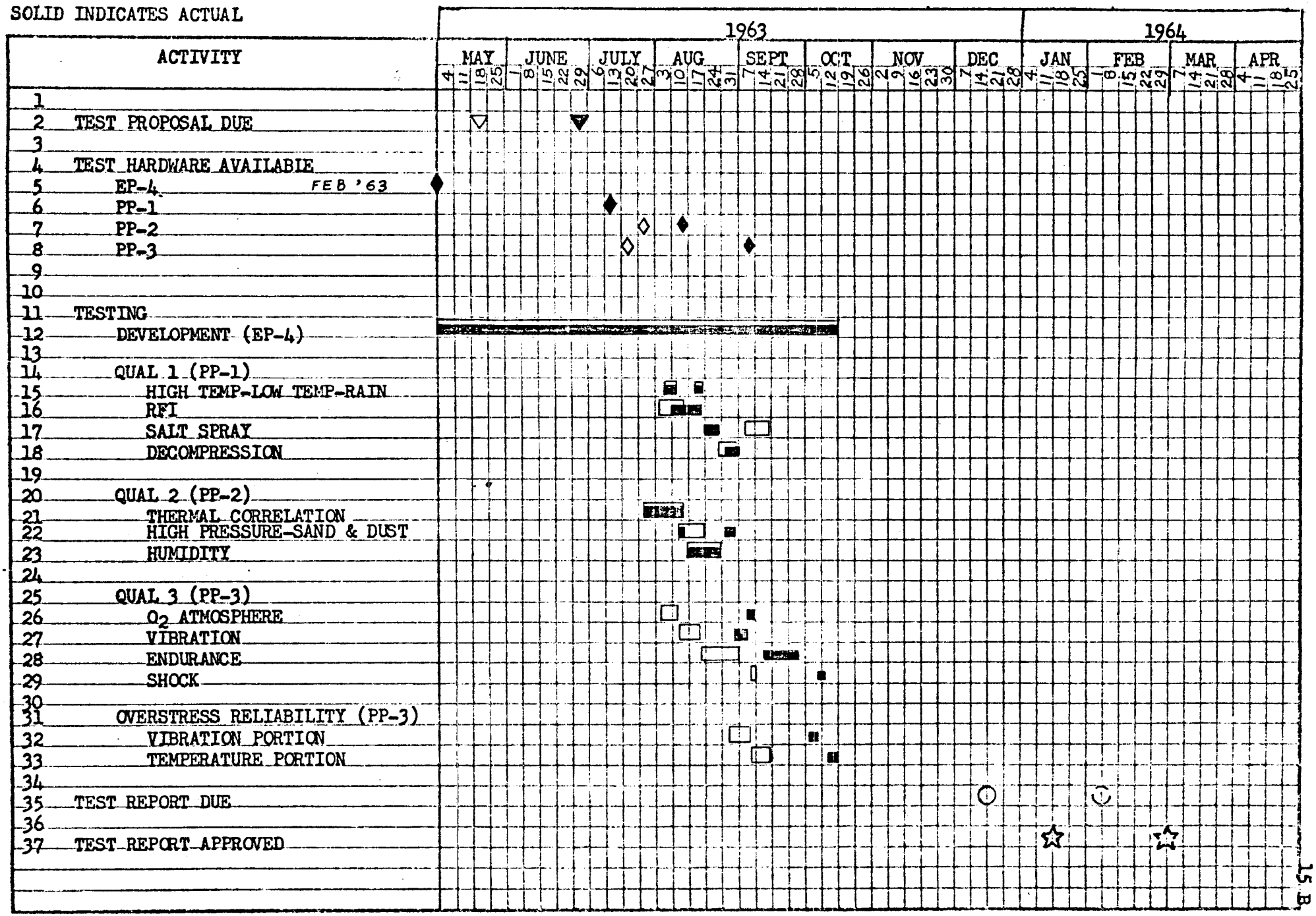

MAC 2274V (27 APR 59)

[illegible]

[illegible]

[illegible]

[illegible]

[illegible]

1. [illegible]
   The [illegible]

   A. [illegible]

   B. [illegible]

2. [illegible]

   A. [illegible]
   102

   B. [illegible]

[illegible]

   A. [illegible]

   B. [illegible]

   C. [illegible]

[illegible]

GEMINI SPACECRAFT
CONTRACT NO. NAS 9-170

DIGITAL COMMAND SYSTEM - (VENDOR: MOTOROLA)

STATUS CHART

REPORT NO. 50-1 -35
LAST PROGRAM SCHEDULE CHANGE: 15 Nov 63
STATUS AS OF: 27 Dec 63

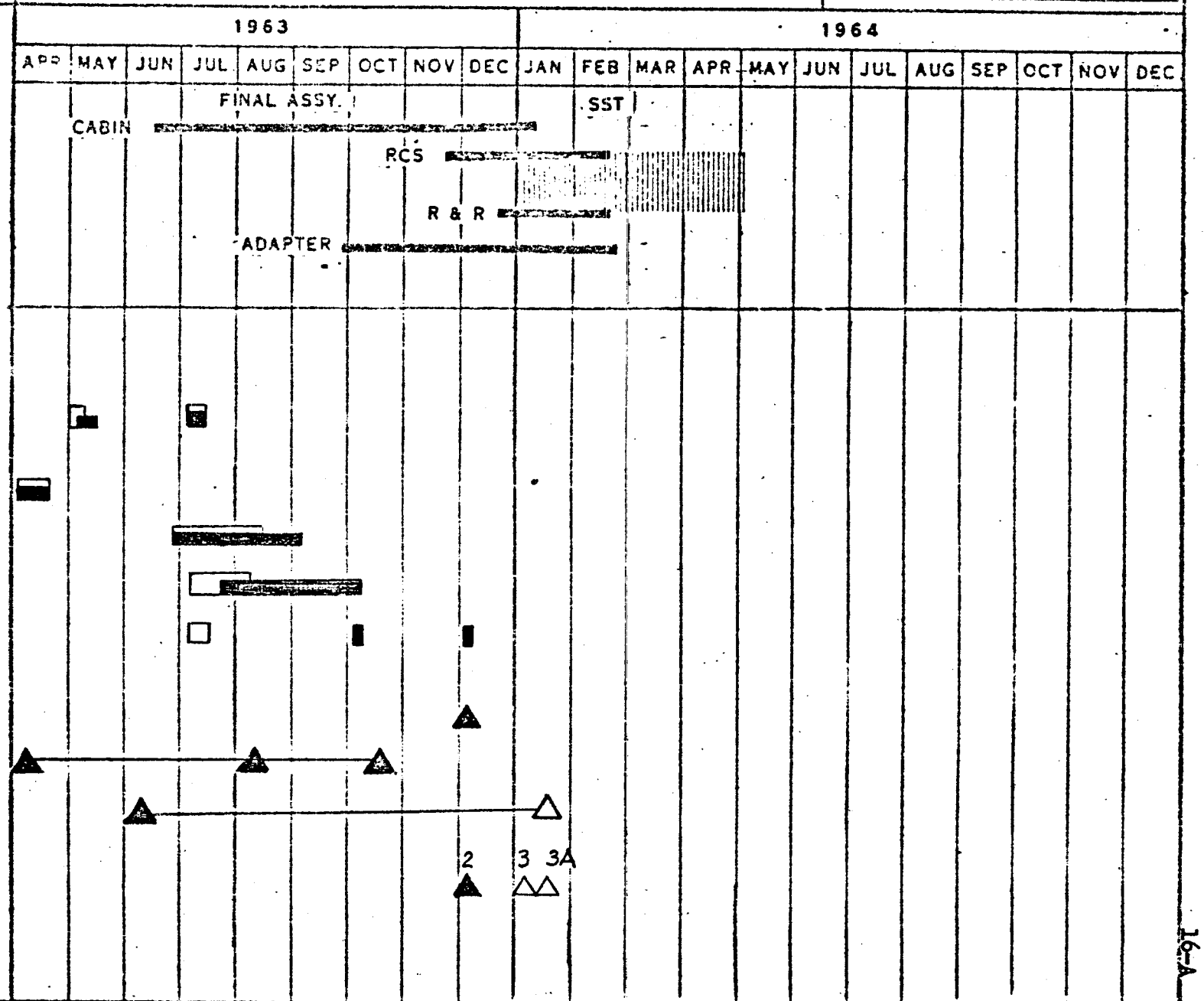

QUALIFICATION AND DEVELOPMENT TEST STATUS

DIGITAL COMMAND SYSTEM
MOTOROLA INC.
SCD 52-85714

27 DEC., 1963

LEGEND
- ▽ TEST PROPOSAL DUE
- ◇ HARDWARE AVAILABLE
- ▭ TEST SCHEDULE
- ○ REPORT DUE
- ☆ REPORT APPROVED

SOLID INDICATES ACTUAL

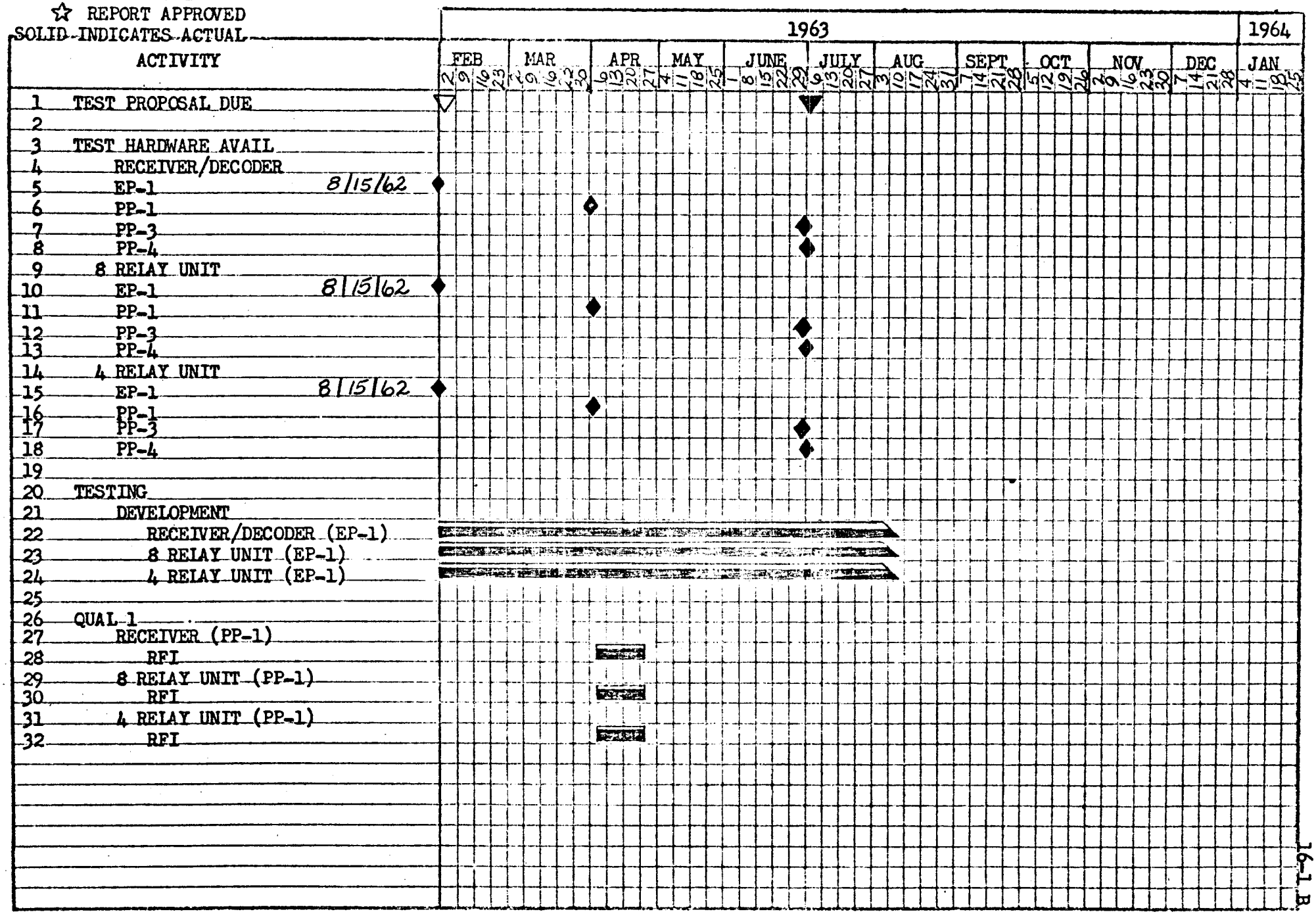

16-1 B

MAC 2274V (27 APR 59)

LEGEND
- ▽ T[illegible] PROPOSAL DUE
- ◇ HARDWARE AVAILABLE
- ▭ TEST SCHEDULE
- ○ REPORT DUE
- ☆ REPORT APPROVED

SOLID INDICATES ACTUAL

QUALIFICATION AND DEVELOPMENT TEST STATUS

DIGITAL COMMAND SYSTEM
MOTOROLA INC.
SCD 52-85714

27 DEC., 1963

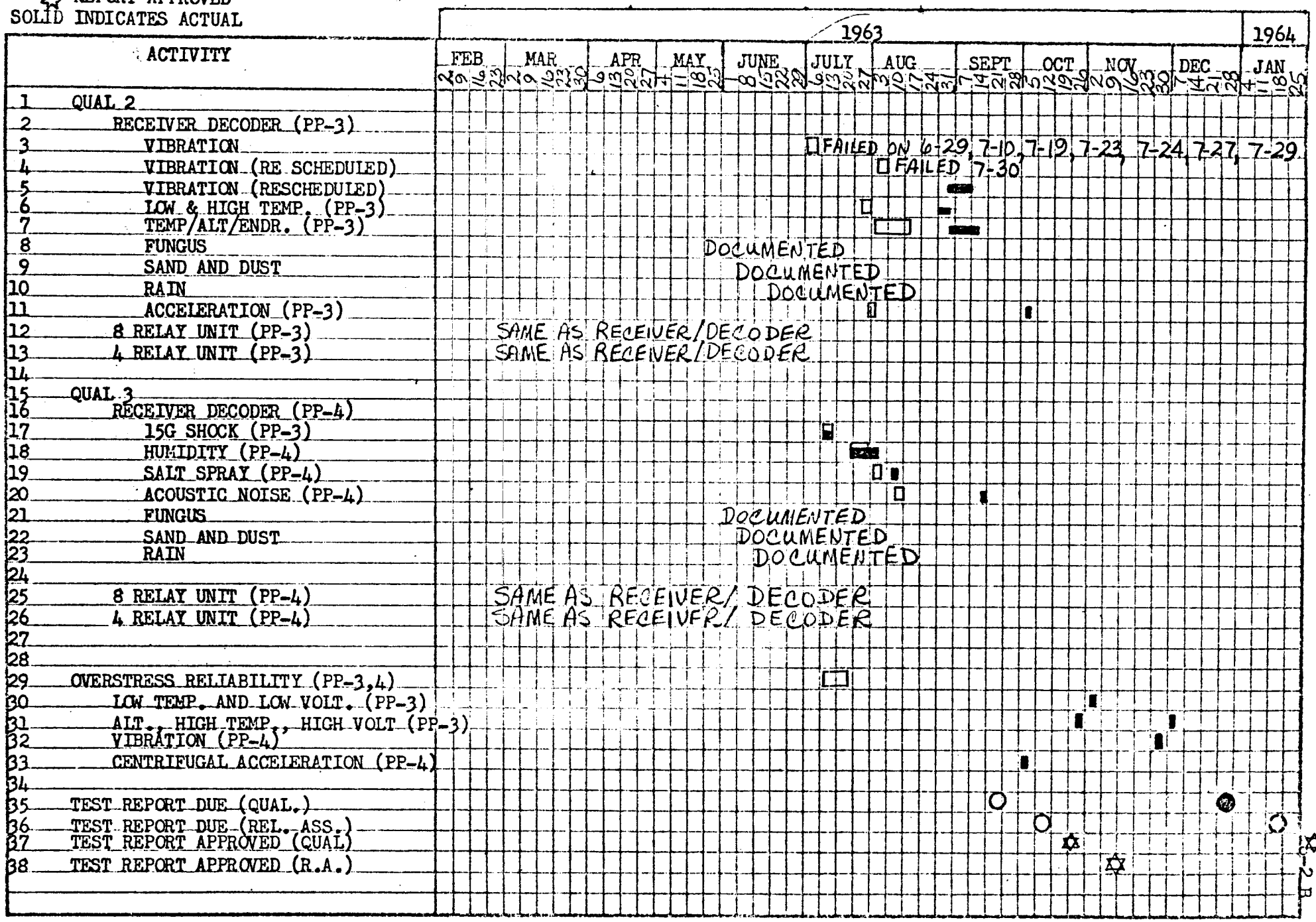

MAC 2274V (27 APR 59)

MONTHLY SUMMARY

SYSTEM [illegible]
SUBSYSTEM C & S Band Radar [illegible]
VENDOR ACF Industries
Paramus, New Jersey
DATE 2[illegible] D[illegible] 196[illegible]

ENGINEERING STATUS

1. Resubmittal of ACF's Qual Test Report is dependent upon ACF completing the extensive re-writing required. ACF's estimated resubmittal date is 31 January 1964.

ASSEMBLY AND DELIVERY STATUS

1. C-Band Radar Beacon SN-104 (SC-2) was shipped by ACF 6 December 1963 and was received by MAC 10 December. While preparing for a combination PIA Test and FAD it was found that the SN-104 Beacon did not respond to interrogation. It is being returned to ACF for rework on MRR 27 December 1963.

2. C-Band Radar Beacon SN-105 (now SC-2) will-ship schedule has slipped from 16 December to 3 January. SN-105 had an intermediate frequency package failure during preliminary testing. There was a delay for rebuilding this package before this unit started thru preliminary testing again.

3. A retrofit unit, SN-101 C-Band Radar Beacon which was returned to ACF from the Cape on 3 December now has a will-ship date of 2 February 1964. This unit was also on MRR.

   A. ACF is writing a failure analysis report on this retrofit unit. Two of the three failure have been verified. The receiver center frequency drift and the R. F. Power Signal Conditioned Voltage out of specification have been verified. The telemetry on input voltage failed at the Cape but passed at ACF.

4. SN-102 S-Band Radar Beacon is being returned to ACF on 27 December 196[illegible] for retrofit to -9 configuration.

5. S-Band Radar Beacon SN-103 (SC-2) was shipped by ACF 12 December and was received at MAC 14 December. SN-103 is scheduled for PIA 20 December 196[illegible] in combination with FAD on the Radar Beacon AGE Bench.

6. S-Band Radar Beacon SN-104 (SC-3) will-ship schedule has now slipped to 14 January 1964. This unit failed during preliminary testing because of a defective power supply. ACF has taken engineering action to prevent recurrence of this particular defect.

TEST STATUS

1. The Overstress Reliability Test for the S Band Radar Beacon is scheduled to begin approximately 13 January 1964.

2. The Overstress Reliability Test for the C Band Beacon will be run approximately 5 February 1964 following a repeat of the RFI Test. A repeat of the RFI Test on SN-10 C Band Beacon is necessary due to the previous test and is a requirement considered valid by the MAC Systems Engineering [illegible] will be [illegible] by other than ACF [illegible] approval [illegible] MAC.

AGE STATUS

[illegible]

GEMINI SPACECRAFT
CONTRACT NO. NAS 9-170

S-BAND RADAR BEACON - (VENDOR: ACF INDUSTRIES)

STATUS CHART

REPORT NO. FE30-1 -35
LAST PROGRAM SCHEDULE CHANGE: 15 Nov. 1963
STATUS AS OF: 27 Dec. 1963

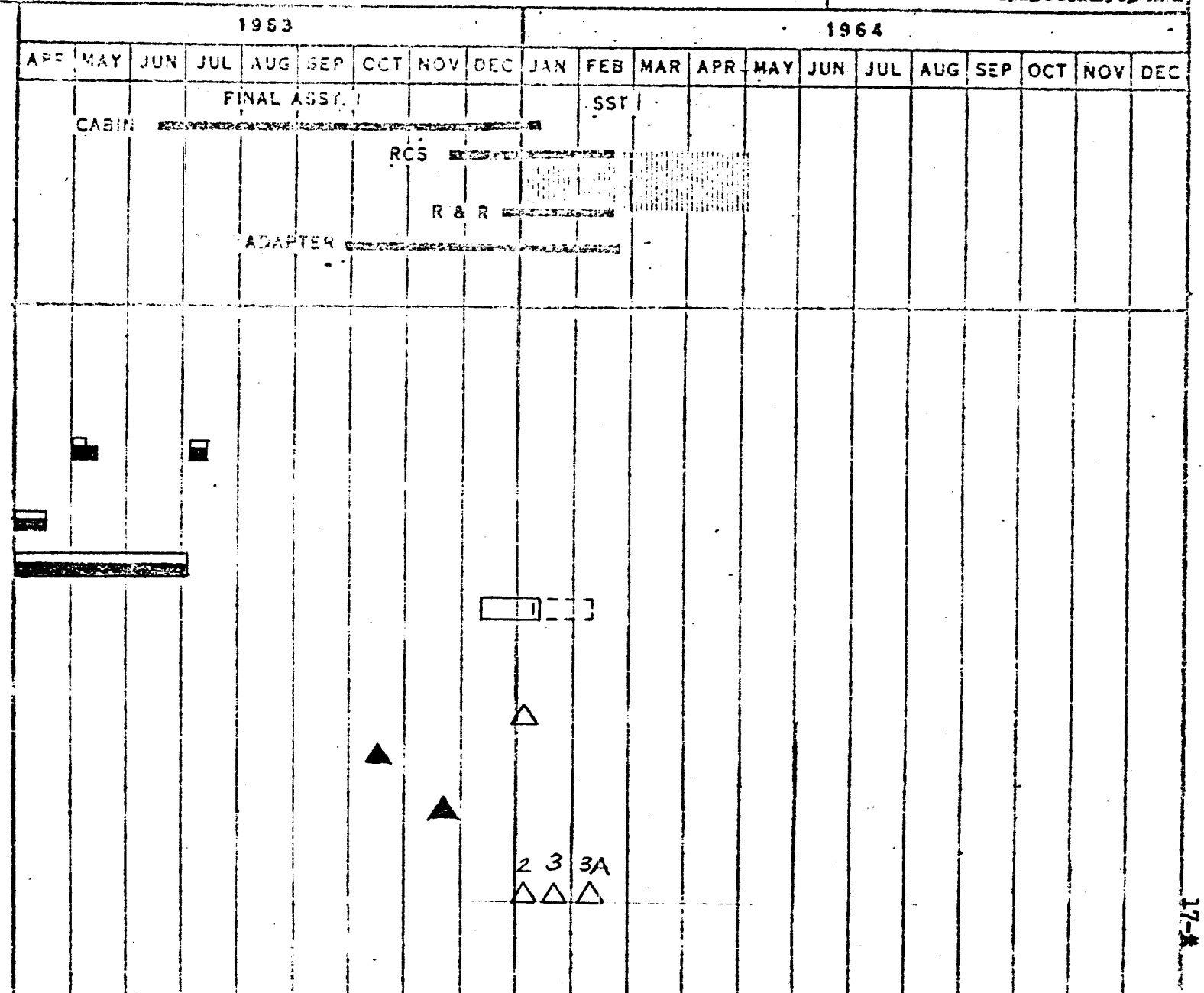

LEGEND
- ▽ TEST PROPOSAL DUE
- ◇ HARDWARE AVAIL.
- ▭ TEST SCHEDULE
- ○ REPORT DUE
- ✡ REPORT APPROVED

SOLID INDICATES ACTUAL

QUALIFICATION AND DEVELOPMENT TEST STATUS

S-BAND RADAR BEACON
ACF ELECTRONICS
SCD 52-85715

27 December 1963

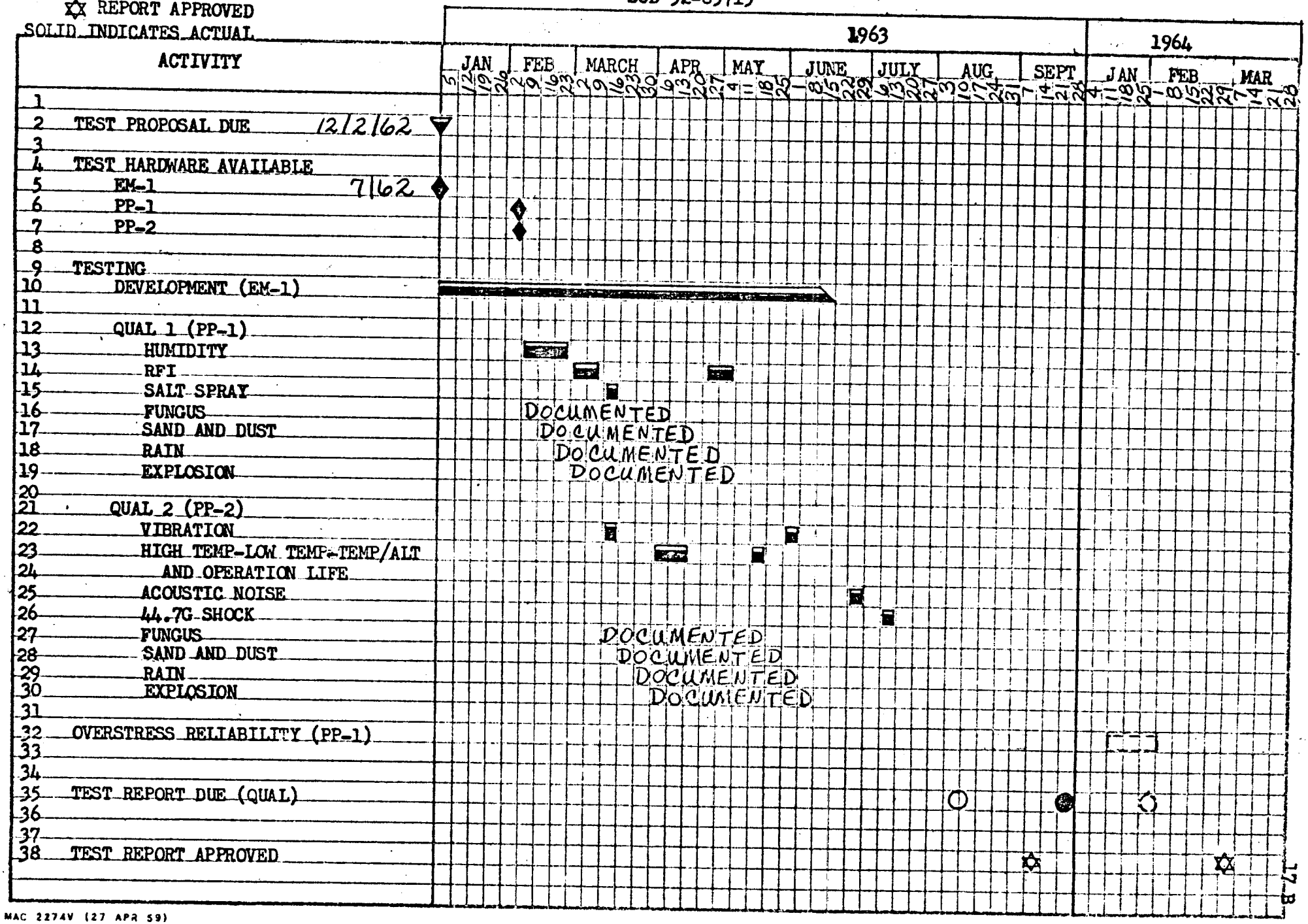

MAC 2274V (27 APR 59)

UNIT NO	TYPE	S/N	DESCR	COMMENT	ORDER W/S	AVAIL FOR INSTL	[illegible] FOR INSTL	[illegible]
	EP	[illegible]	EBPM				[illegible]	
2	PP	30	VENDOR QUAL [illegible]		[illegible]		[illegible]	
3	PP 2	[illegible]	VENDOR QUAL				[illegible]	
4	PA	100	CPU				[illegible] 28 [illegible]	
5	PA 5	0[illegible]	SC 2		[illegible]	3 03 64	[illegible]	
6	PA 6	104	SC 3		[illegible]	[illegible]	[illegible]	
7	PA 6	105	SC 3A		[illegible]	2 10 64	[illegible]	
8	PA 3	101	SPARE [illegible]		[illegible]	[illegible]	[illegible]	
9	PA 1	102	SPARE [illegible]		[illegible]	[illegible]	[illegible]	
10	PA	106	SPARE [illegible]		[illegible]	[illegible]	[illegible]	
[illegible]	PA 9	[illegible]	SC [illegible]		[illegible]	[illegible]	[illegible]	
[illegible]	PA 9	108	SPARE [illegible]		[illegible]	[illegible]	[illegible]	
[illegible]	PA [illegible]	09	SC 5		[illegible]	[illegible]	[illegible]	
[illegible]	PA [illegible]	110	SC 6		[illegible]	[illegible]	[illegible]	
[illegible]	PA [illegible]	[illegible]	AD [illegible]		[illegible]	[illegible]	[illegible]	
[illegible]	PA [illegible]	[illegible]	SC [illegible]		[illegible]	[illegible]	[illegible]	
[illegible]	PA [illegible]	[illegible]	SC 9		[illegible]	[illegible]	[illegible]	
18	PA [illegible]	[illegible]	SC 9		[illegible]	[illegible]	[illegible]	
19	PA [illegible]	[illegible]	SC [illegible]		[illegible]	[illegible]	[illegible]	
20	PA [illegible]	[illegible]	SC 11		[illegible]	[illegible]	[illegible]	
21	PA 18	[illegible]	SC [illegible]		[illegible]	[illegible]	[illegible]	
22	PA 19	118	AD [illegible]		[illegible]	5 20 65	[illegible]	
	PA [illegible]	[illegible]	AD [illegible]		[illegible]	[illegible]	[illegible]	

[illegible] Referred to AFP [illegible]

[illegible] Referred to AFP [illegible]

[illegible] Remark [illegible]

PART NUMBER	NOMENCLATURE	UNIT NO.	CODE W/S	ATACS FOR USAGE	NSSC FOR USAGE
	PRE INSTALLATION ACCEPTANCE				
[illegible]	PTA BENCH C & S BAN	[illegible]	[illegible]	[illegible]	[illegible]
	DEPLOYMENT DISTRIBUTION				
[illegible]	PROBE C BAND ANT			[illegible]	
[illegible]	PROBE C & S ANT	[illegible]		[illegible]	
[illegible]	PROBE ANT C & S ANT			[illegible]	
[illegible]	PROBE C BAND ANT	[illegible]		[illegible]	
	[illegible]				
[illegible]	PROBE C BAND ANT	[illegible]		[illegible]	
[illegible]	PROBE C BAND ANT	[illegible]		[illegible]	
[illegible]	PROBE C & S ANT	[illegible]		[illegible]	
[illegible]	PROBE C & S ANT	[illegible]		[illegible]	
[illegible]	PTA BENCH C & S BAN	[illegible]		[illegible]	

[illegible]

GEMINI SPACECRAFT
CONTRACT NO. NAS 9-170

C-BAND RADAR BEACON - (VENDOR: ACF INDUSTRIES)

STATUS CHART

REPORT NO. [illegible] -35
LAST PROGRAM SCHEDULE CHANGE: 15 Nov. 1963
STATUS AS OF: 27 Dec. 1963

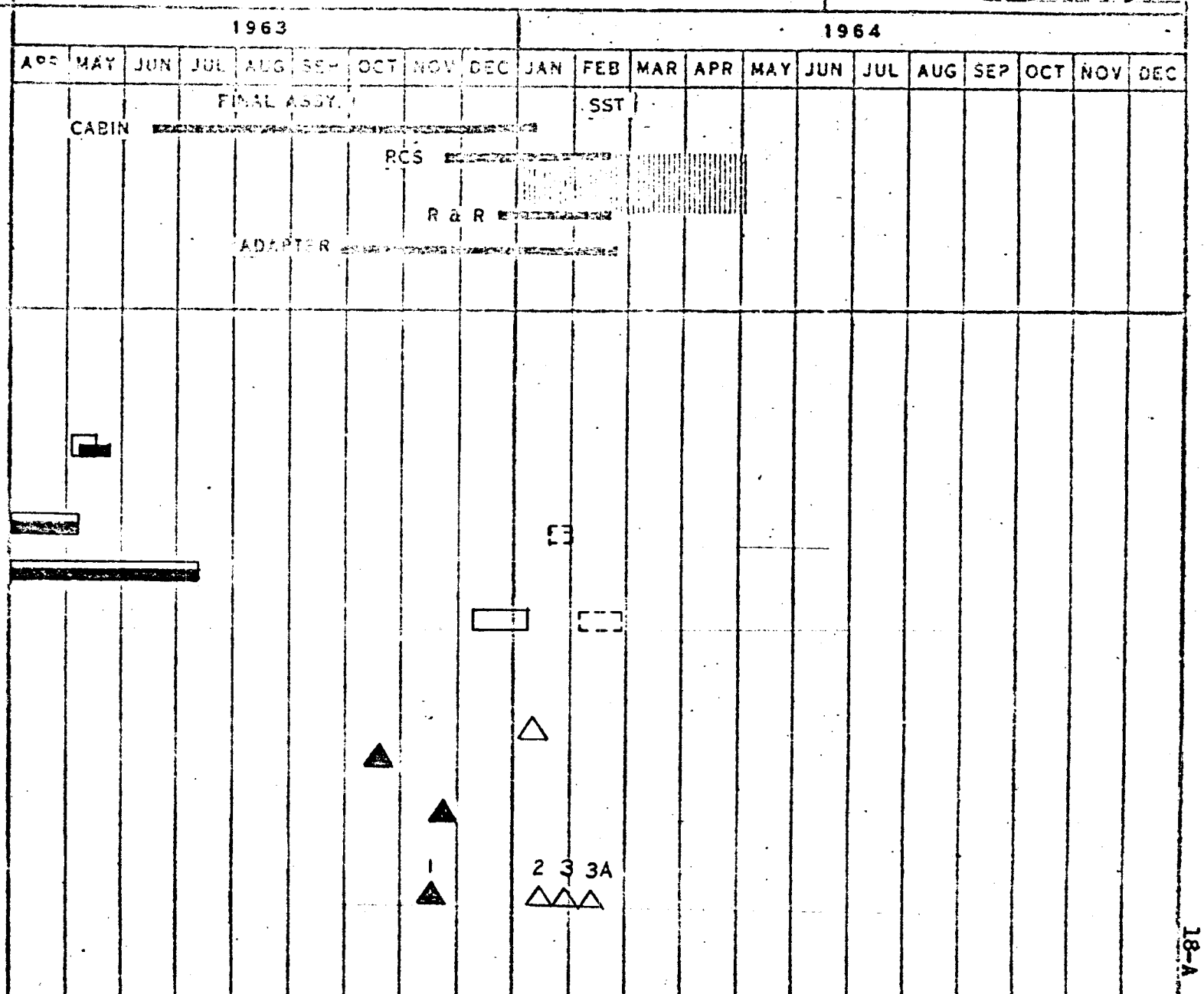

LEGEND
- ▽ TEST PROPOSAL DUE
- ◇ HARDWARE AVAIL.
- ▭ TEST SCHEDULE
- ○ REPORT DUE
- ✡ REPORT APPROVED

SOLID INDICATES ACTUAL

QUALIFICATION AND DEV. TEST STATUS

C-BAND RADAR BEACON
ACF ELECTRONICS
SCD 52-85707

27 December 1963

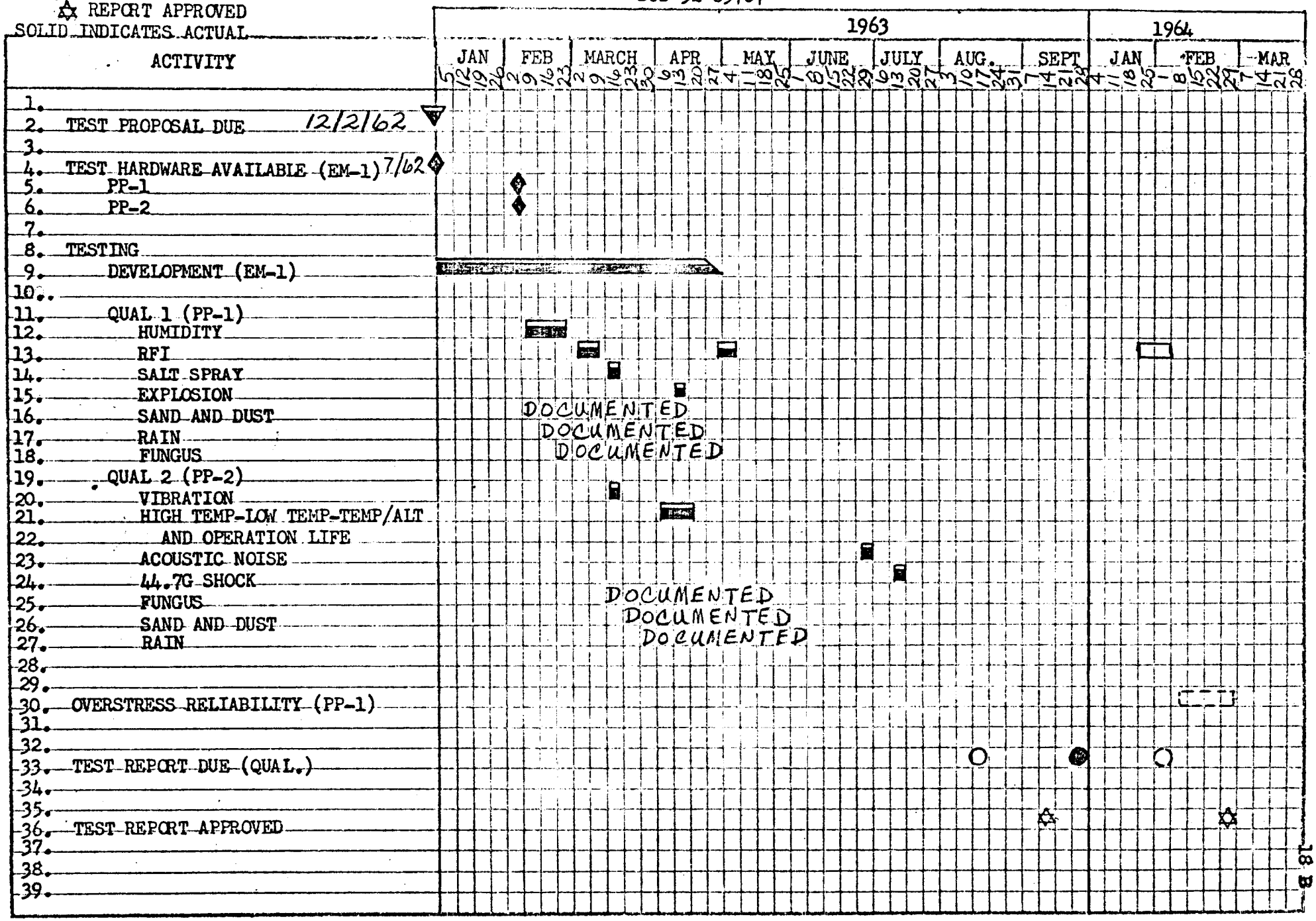

MAC 2274V (27 APR 59)

[illegible] NO	TYPE	P/N	USAGE [illegible]	[illegible]	[illegible]	[illegible]
[illegible]	[illegible]	[illegible]	ESTU			[illegible]
[illegible]	[illegible]	[illegible]	VENDOR QUAL & [illegible] (DPT REPRO)	[illegible]		[illegible]
[illegible]	[illegible]	[illegible]	VENDOR QUAL			[illegible]
[illegible]	[illegible]	[illegible]	LSU			[illegible]
[illegible]	[illegible]	[illegible]	SC [illegible]			[illegible]
[illegible]	[illegible]	[illegible]	SC [illegible]	[illegible]	[illegible]	[illegible]
[illegible]	[illegible]	[illegible]	SC 1A	[illegible]	[illegible]	[illegible]
[illegible]	[illegible]	[illegible]	SC 2	[illegible]	[illegible]	[illegible]
[illegible]	[illegible]	[illegible]	SC 3A	[illegible]	[illegible]	[illegible]
[illegible]	[illegible]	[illegible]	SC [illegible]	[illegible]	[illegible]	[illegible]
[illegible]	[illegible]	[illegible]	SC [illegible]	[illegible]	[illegible]	[illegible]
[illegible]	[illegible]	[illegible]	SPARE (COPY)	[illegible]	[illegible]	[illegible]
[illegible]	[illegible]	[illegible]	SC [illegible]	[illegible]	[illegible]	[illegible]
[illegible]	[illegible]	[illegible]	SPARE (COPY)	[illegible]	[illegible]	[illegible]
[illegible]	[illegible]	[illegible]	SPARE (COPY)	[illegible]	[illegible]	[illegible]
[illegible]	[illegible]	[illegible]	SPARE (COPY)	[illegible]	[illegible]	[illegible]
[illegible]	[illegible]	[illegible]	SC [illegible]	[illegible]	[illegible]	[illegible]
[illegible]	[illegible]	[illegible]	SC 8	[illegible]	[illegible]	[illegible]
[illegible]	[illegible]	[illegible]	SC 9	[illegible]	[illegible]	[illegible]
[illegible]	[illegible]	[illegible]	SC 10	[illegible]	[illegible]	[illegible]
[illegible]	[illegible]	[illegible]	SC 11	[illegible]	[illegible]	[illegible]
[illegible]	[illegible]	[illegible]	SC [illegible]	[illegible]	[illegible]	[illegible]

[illegible] [illegible] ACE [illegible]

** MAC [illegible]

[illegible] [illegible]

[illegible]

ENGINEERING

1. MAC and Westinghouse Engineering [illegible] preparation of procedures for the Radar and Transponder portions of the Navigation Radar System. The P.D.A. Tests are being performed on the CTV Radar and Transponder (see Test [illegible]).

2. MAC and Westinghouse Engineering agreed to test the Transponder [illegible] area. In view of this, Westinghouse has constructed a screened chamber [illegible] added this to their Bonding facility [illegible].

3. MAC Engineering has given authority to Bendix Aerospace to begin [illegible] investigation into the [illegible] dated 29 Nov 1961.

   The major technical problems on the Bendix [illegible] capability and the [illegible] the differences between the MAC and BAC analyses are expected [illegible] resolved during next reporting period. A change to [illegible] been proposed and is under evaluation. A solution has been [illegible] the thermo problem involving [illegible] operation. The R and [illegible] Indicator experienced several failures in 8 hrs x 365 [illegible] Failures were not catastrophic, the allowable tolerances and [illegible] specification were exceeded. An approach has been established to [illegible] Reference System [illegible] under [illegible].

5. A hold has been placed on manufacturing of the Rogers antenna [illegible] testing of one working antenna [illegible] that the [illegible] used as the main structural [illegible] radiating RF energy [illegible] deteriorating the efficiency of the antenna. A double choke has been [illegible] between the two arrays to break up the radiating surface. This reduces bandwidth of the antenna to such a point that when the antenna is tuned to the transmit frequency [illegible] at the receive frequency at a ratio of up to 20 [illegible].

PROCUREMENT

1. Printed circuit boards and many [illegible] delivery of the Nerlinger's Radar by [illegible] months in the delivery schedule. [illegible] dates of printed circuit boards have [illegible] the month [illegible] items which [illegible].

2. [illegible]

[illegible]

3 [illegible]
MAC [illegible] inspection [illegible] with three [illegible] January 1974

4 Amp Start Regulator
Two (2) types of type A have been removed and are in [illegible] one (1) on December [illegible] and one (1) on January 1974. [illegible] types of type B have been received and are in inspection. Ship [illegible] one (1) on December 13 and [illegible] January 1974. None of type [illegible] been received. Ship will ship [illegible] December 17th and 10 on [illegible]

TEST STATUS

1 The pre delivery endurance test on the [illegible] Tower is at [illegible] slight and strike [illegible] The [illegible] ship date [illegible] above test progress [illegible] and will ship [illegible] the CTU [illegible] Power System

2 [illegible]
Engineering change order being [illegible] a decoupling capacitor across the input of the [illegible] Driven [illegible] The [illegible] should be available [illegible] lipticity - adding terminal [illegible] to improve assembly reliability. [illegible] unit has been modified [illegible] if approved by MAC

Goal 2
Same as Goal [illegible] except [illegible]

AGE

1. There have been only minor slips in the delivery status of AGE equipment due to updating. In general AGE [illegible] will have no effect on flight hardware delivery.

GEMINI SPACECRAFT
CONTRACT NO. NAS 9-170

RENDEZVOUS RADAR - (VENDOR: WESTINGHOUSE)

STATUS CHART (52-87701)

REPORT NO. [illegible]-34
LAST PROGRAM SCHEDULE CHANGE: 29 Nov. 1963
STATUS AS OF: 27 Dec. 1963

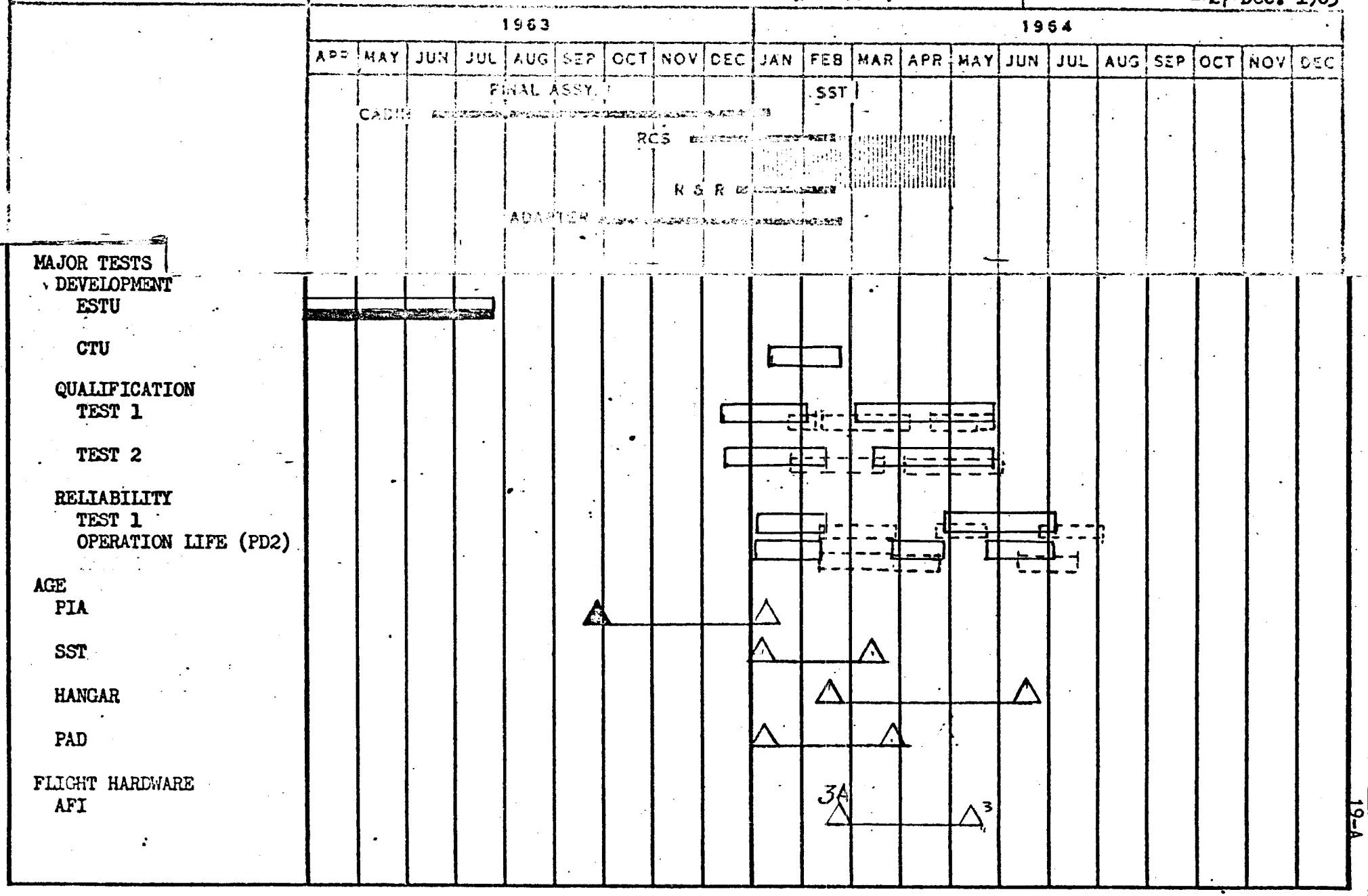

LEGEND
- Test Proposal Due
- Hardware Available
- Test Schedule
- Report Due
- Report Approved

SOLID INDICATES ACTUAL

QUALIFICATION AND DEV. TEST STATUS
RENDEZVOUS RADAR
WESTINGHOUSE ELECTRIC CO.
SCD 52-87701

E: 29 Nov. 1963 F: 27 Dec. 1
D: 25 Oct. 1963
C: 27 Sept. 1963
B

ACTIVITY	WEEK ENDING
1. Test Proposal Due	6-22-63
2.	
3. Test Hardware Available	
4. Radar	
5. EP-3	3-29-63
6. PP-2	
7. PP-3	
8. Indicator - EP-4	10-25-62
9. PP-5	
10. PP-6	
11. PP-7	
12. PP-8	
13. Encoder EM-1	7-04-63
14. PP-2	
15.	
16. Testing	
17. Development	
18. Radar (EP-3)	
19. Indicator (EP-4)	
20. Encoder (EM-1)	
21.	
22. Qual 1	
23. Radar (PP-2)	
24. Acceleration	
25. Vibration	
26. Low Press - Temp. Alt.	
27. Acoustic	
28.	
29. Indicator (PP-5)	
30. High Temp - Low Temp	
31. Salt Fog	
32. Vibration	
33. Decompression	
34.	
35. Radar Mock Up	
36. #2 High Temp	
37. #1 Salt Fog	
38.	
39.	
40.	

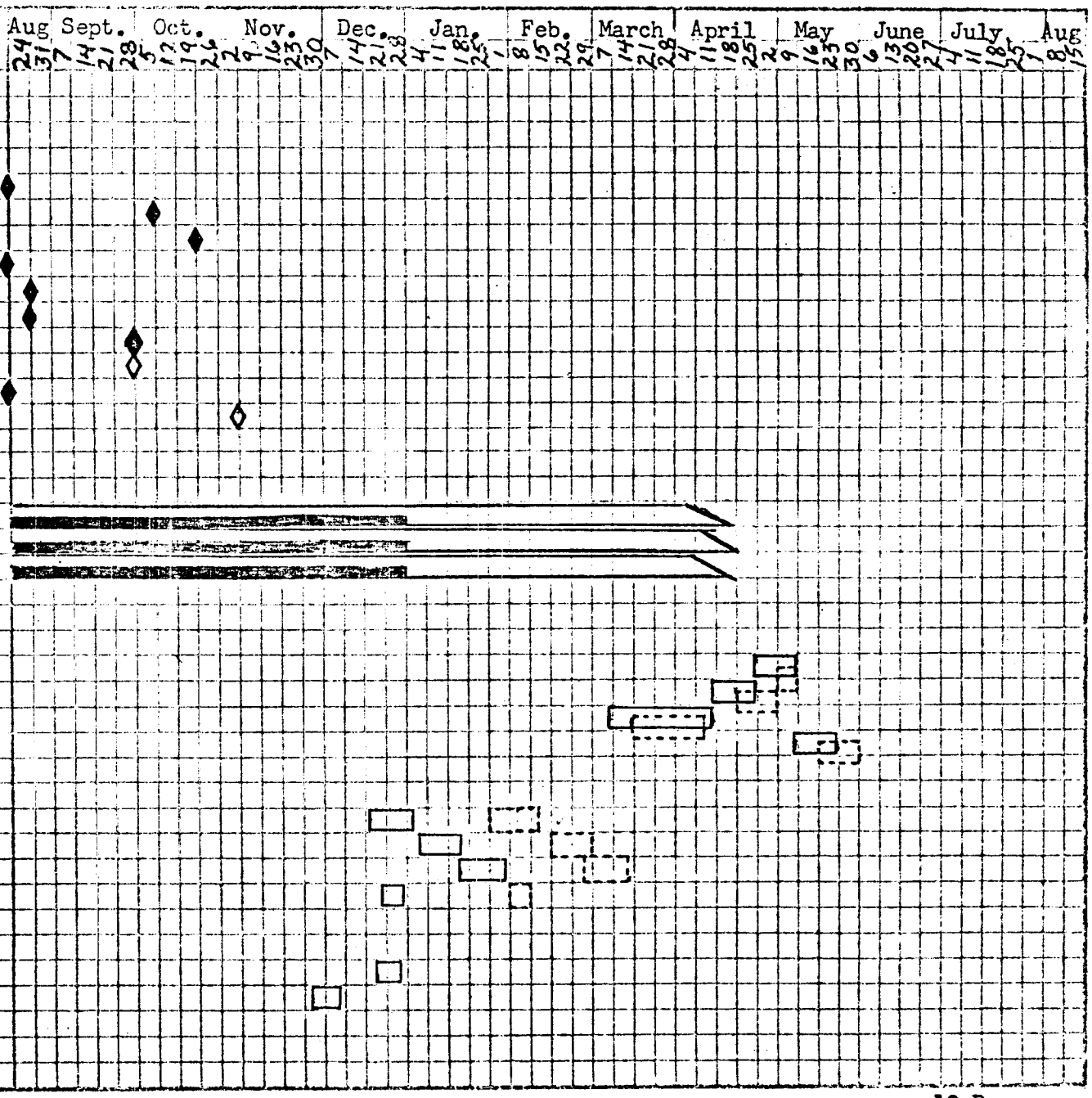

LEGEND
- Test Proposal Due
- Hardware Available
- Test Schedule
- Report Due
- Report Approved

SOLID INDICATES ACTUAL

QUALIFICATION AND DEV. TEST STATUS
RENDEZVOUS RADAR
WESTINGHOUSE ELECTRIC CO.
SCD 52-87701

F: Dec. 1963
E: 29 Nov. 1963
D: 25 Oct. 1963
C: 27 Sept. 1963
B: 3 Sept. 1963
Rev. A: 2 Aug. 1963

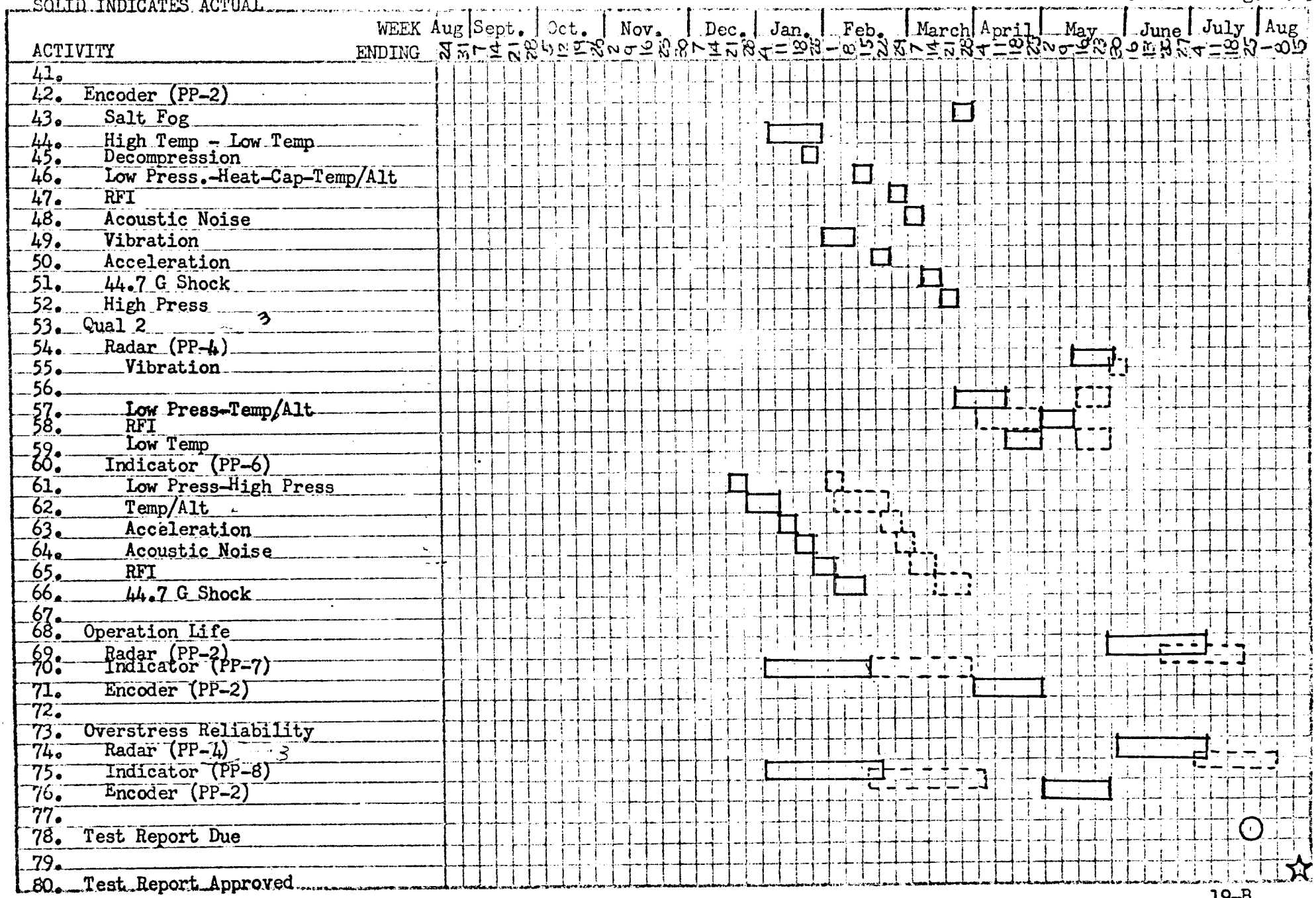

MAC 2274V (27 APR 59)

VENDOR DELIVERY STATUS REPORT

CHART NO: 19-6

SYSTEM - [illegible] RADAR

DATE: 27 [illegible]

VENDOR - [illegible]

UNIT NO.	TYPE	REMARKS	VENDOR W/S	AVAIL. FOR TEST	REQ'D. FOR TEST	[illegible]
1	FP-1	LSTU			A02 [illegible]	
2	FP-2	ELEC. EVAL.			A05 [illegible]	
3	FP-3	MECH. EVAL.			A06 [illegible]	
4	FP-1	CTU	01-17-64	02-03-64	12-01-63	[illegible]
4	FP-1	S/C 3A		02-21-64	02-28-64	[illegible]
5	FP-2	QUAL 1		03-17-64	02-03-64	[illegible]
6	FP-3	QUAL 2		04-10-64	02-17-64	[illegible]
7	PA-1	S/C 3	05-12-64	05-21-64	04-01-64	[illegible]
8	PA-2	S/C 4	06-12-64	06-21-64	05-27-64	[illegible]
9	PA-3	S/C 5	07-12-64	07-19-64	07-25-64	[illegible]
10	PA-3	SPARE	08-12-64	08-21-64	08-28-64	[illegible]
11	PA-4	SPARE	09-12-64	09-19-64	09-31-64	[illegible]
12	PA-5	S/C 7	10-12-64	10-21-64	11-01-64	[illegible]
13	PA-6	SPARE	11-12-64	11-19-64	09-22-64	[illegible]
14	PA-7	S/C 8	12-12-64	12-21-64	01-08-65	[illegible]
15	PA-8	S/C 9	01-12-65	01-21-65	02-08-65	[illegible]
16	PA-9	SPARE	02-12-65	02-19-65	02-31-65	[illegible]
17	PA-10	S/C 10	03-12-65	03-21-65	05-03-65	[illegible]
18	PA-11	S/C 11	04-12-65	04-21-65	07-08-65	[illegible]
19	PA-12	S/C 12	05-12-65	05-21-65	09-08-65	[illegible]

* S/C 3 may be received as late as 04-21-64 for Systems Checkout.

VENDOR AGE STATUS REPORT

CHART NO: 19-D

SYSTEM - RENDEZVOUS RADAR

DATE: 27 Dec. 1963

VENDOR - WESTINGHOUSE

PART NO.	COMPONENT	UNIT NO.	VENDOR W/S	AVAIL. FOR USAGE	REQ'D FOR USAGE	SLACK
			(PRE-INSTALLATION ACCEPTANCE)			
52-E270025-1	PIA CONSOLE	1			ACP-30-63	
52-E270018-1	TEST RADAR INS	1	01-10-64	01-24-64	12-27-63	[illegible]
52-E270018-401	CAL KIT RIST	1	01-10-64	01-24-64	12-27-63	[illegible]
52-E270052-1	DOLLY RADAR	1	01-16-64	01-30-64	12-27-63	[illegible]
52-E270056-001	PRESS LEAK IND.	1	01-15-64	01-29-64	01-01-64	[illegible]
52-E270079-001	CVR RADAR GROUND HNDLG.	1	02-15-64	02-29-64	01-10-64	[illegible]
			(SPACECRAFT SYSTEM TEST)			
52-E270024-1	TEST RADAR INSTR.	1	01-03-64	01-17-64	01-03-64	[illegible]
52-E270018-1	TEST RADAR INSTR.	2	01-03-64	01-17-64	01-03-64	[illegible]
52-E270018-1	TEST RADAR INSTR.	3	01-10-64	01-24-64	01-03-64	[illegible]
52-E270024-1	TEST RADAR INSTR.	2	01-10-64	01-24-64	01-03-64	[illegible]
52-E270073-1	RON. EVAL. POD	1		02-21-64	03-15-64	[illegible]
			(CAPE KENNEDY HANGAR)			
52-E270018-1	TEST RADAR INSTR.	4	01-06-64	01-20-64	02-17-64	[illegible]
52-E270073-1	RON. EVAL. POD	2	02-21-64	03-06-64	04-27-64	[illegible]
52-E270024-1	TEST RADAR INSTR.	4	01-31-64	02-14-64	05-10-64	[illegible]
52-E270024-1	TEST RADAR INSTR.	5	02-14-64	02-28-64	07-10-64	[illegible]
52-E270052-1	DOLLY RADAR	2	01-23-64	02-06-64	06-01-64	[illegible]
52-E270056-001	PRESSURE LEAK IND.	2	01-29-64	02-12-64	06-01-64	[illegible]
52-E270079-001	CVR. RADAR GROUND HNDLG.	2	02-15-64	02-29-64	06-01-64	[illegible]
52-E040081-1	SIM.-S/C ENCR. SUB	1	03-01-64	03-15-64	06-17-64	[illegible]
			(CAPE KENNEDY LAUNCHING PAD)			
52-E270024-1	TEST CONSOLE	3	01-10-64	01-24-64	03-30-64	[illegible]
52-E270018-1	TEST RADAR INSTR.	5	01-10-64	01-24-64	03-30-64	[illegible]
			(CAPE KENNEDY RADAR RANGE)			
52-E270018-401	CAL KIT RIST	2	01-03-64	01-17-64	01-27-64	[illegible]
52-E270018-1	TEST RADAR INSTR.	6	01-17-64	01-31-64	04-27-64	[illegible]
52-E270025-1	PIA CONSOLE RADAR	2	01-03-64	01-17-64	04-27-64	[illegible]
			(VENDOR)			
52-E040081-1	SIM-S/C ENCR. SUB	2	02-15-64	02-29-64	06-30-64	[illegible]

[illegible]

[illegible]

1. [illegible]

2. [illegible]

[illegible]

1. [illegible]

2. [illegible]

3. [illegible]

[illegible]

1. [illegible]

2. [illegible]

3. [illegible]

Attachment #1

PARACHUTE RECOVERY SYSTEM

1. Test planning has been completed for five preliminary tests of the drogue-pilot chute tandem deployment concept on Water Plate #5. An 8.5 [illegible] drogue (shelf item) will be used to extract the Goalin pilot chute. After pilot-chute deployment, the drogue will remain attached to a common riser by a lanyard which passes through the pilot chute apex. Both chutes, in tandem will separate the R & R and deploy the main recovery parachute.

2. A test program for development of the high-altitude stabilizing drogue has been prepared in conjunction with Northrop Ventura. The program includes development of a "gliding" drag chute which will be used to simulate spacecraft drag area during deployment of the drogue from a bomb test vehicle. First drop is scheduled for March, 1964.

GEMINI SPACECRAFT
CONTRACT NO. NAS 9-170

LANDING CHUTE - (VENDOR: NORTHROP-VENTURA)

STATUS CHART

REPORT NO. 6530-1 -34
LAST PROGRAM SCHEDULE CHANGE: 29 Nov. 1963
STATUS AS OF: 27 Dec. 1963

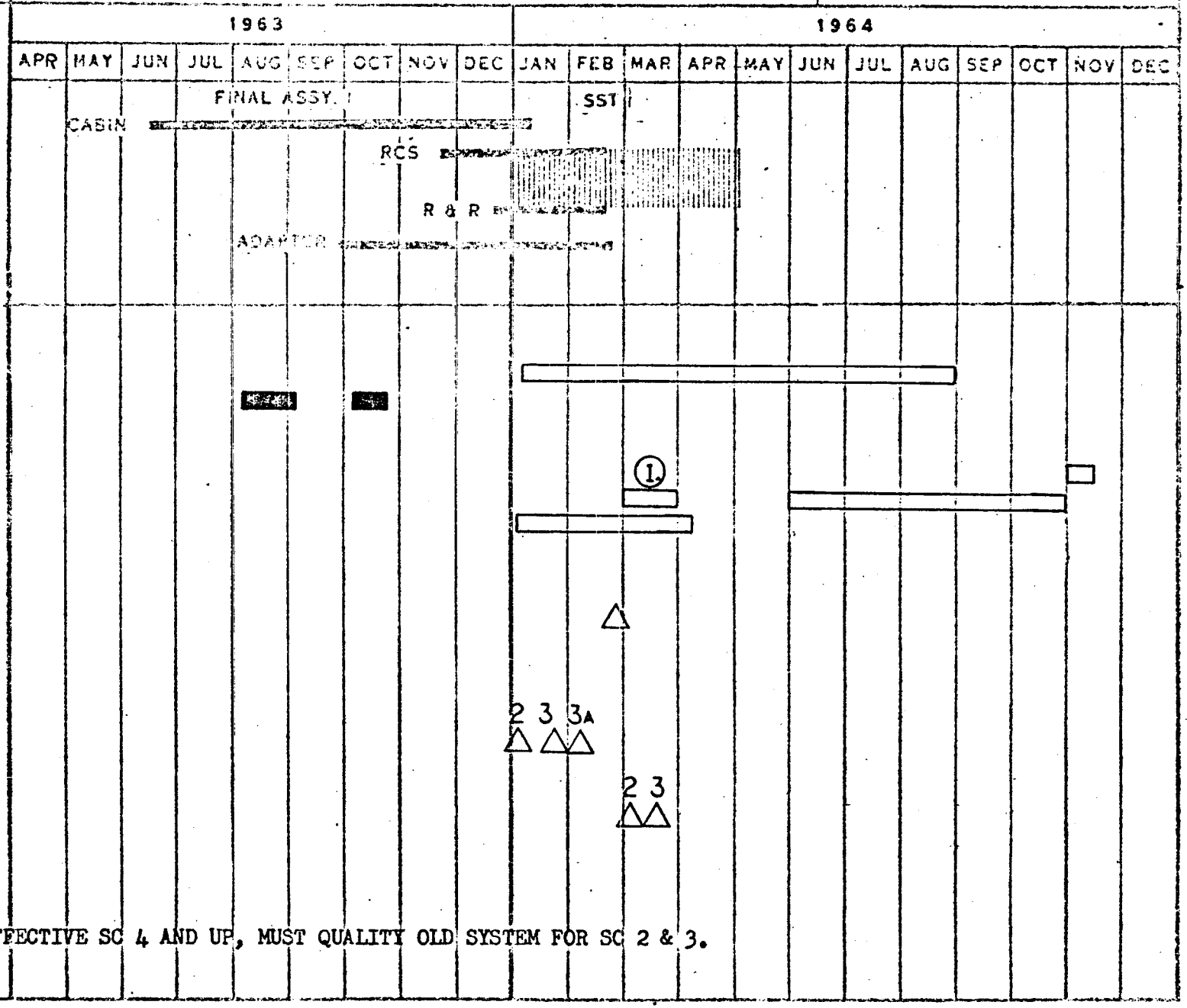

NOTE: LINES 1, 3, & 4 ARE TENTATIVE

(1) BASED ON NEW SYSTEM EFFECTIVE SC 4 AND UP, MUST QUALITY OLD SYSTEM FOR SC 2 & 3.

LEGEND
▽ Test Proposal Due
◊ Hardware Available
▭ Test Activity
○ Report Due
☆ Report Approved
SOLID INDICATES ACTUALS

GEMINI LANDING SYSTEM
PARACHUTE QUALIFICATION AND DEVELOPMENT TESTS
SCD NO. 52-41703

REV. E: 27 Dec. 1963
REV. D: 29 Nov. 1963

-1963- -1964-

MONTH: Dec. | Jan. | Feb. | March | Apr. | May | June | July | Aug. | Sept. | Oct. | Nov.

WEEK ENDING: 7 14 21 28 | 4 11 18 25 | 1 8 15 22 29 | 7 14 21 28 | 4 11 18 25 | 2 9 16 23 30 | 6 13 20 27 | 4 11 18 25 | 1 8 15 22 29 | 5 12 19 26 | 3 10 17 24 31 | 7 14 21 28

ACTIVITY

1. Development Tests
2.
3. Hi-Altitude Drogue Chute
4. Bomb Drops 19 Drops
5.
6. Drogue & Pilot Tandem
7. Deployment (B/P-5)
8. 5 Drops
9.
10. Qualification Tests
11.
12. Recovery System
13. Drop Tests (Static #7)
14. 14 Drops
15.
16. Complete System
17. Drop Tests (Static #4)
18. 2 Drops
19.
20.
21. Drops 8, 9, & 10
22. (Old Configuration) Static #7
23.
24.
25.
26. * NOTE: ALL TEST ACTIVITIES ARE TENTATIVE BASED ON MAC EJS 2445 WHICH
27. CALLS OUT A HIGH ALTITUDE DROGUE CHUTE EFFECTIVITY OF SC-4 AND UP.
28.
29.
30. * THE ABOVE SCHEDULES ARE TENTATIVE
31.
32.
33.
34.
35.
36.
37.
38.
39.
40.

MAC 2274V (27 APR 59)

LEGEND
▽ Test Proposal Due
◊ Hardware Available
▭ Test Activity
○ Report Due
☆ Report Approved
SOLID INDICATES ACTUAL

GEMINI LANDING SYSTEM
HARDWARE QUALIFICATION AND DEVELOPMENT TESTS
SCD NO. 52-41703

REV. E: 27 Dec. 1963
REV. D: 29 Nov. 1963

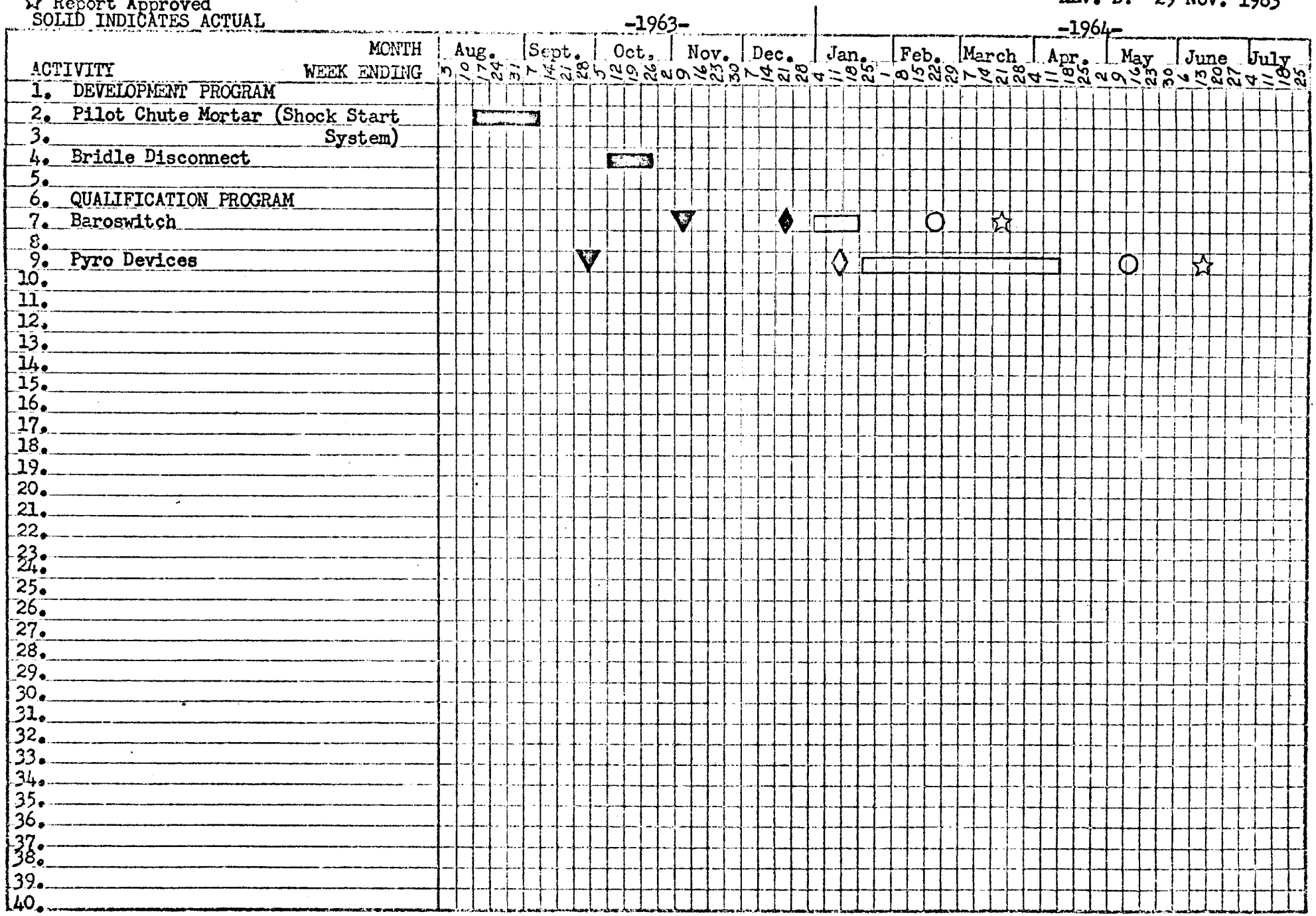

MAC 2274V (27 APR 59)

[illegible]

[illegible]

[illegible] STATUS

[illegible]

[illegible]

[illegible]

[illegible]

[illegible]

[illegible]

[illegible] AND [illegible] STATUS

[illegible]

[illegible]

[illegible]

[illegible]

[illegible]

[illegible]

GEMINI SPACECRAFT
CONTRACT NO. NAS 9-170

EVENT TIMER - (MCDONNELL EED)

STATUS CHART (REPORT 8664)

REPORT NO. [illegible]-1 - 35
LAST PROGRAM SCHEDULE CHANGE 15 Nov 1963
STATUS AS OF: 27 Dec. 1963

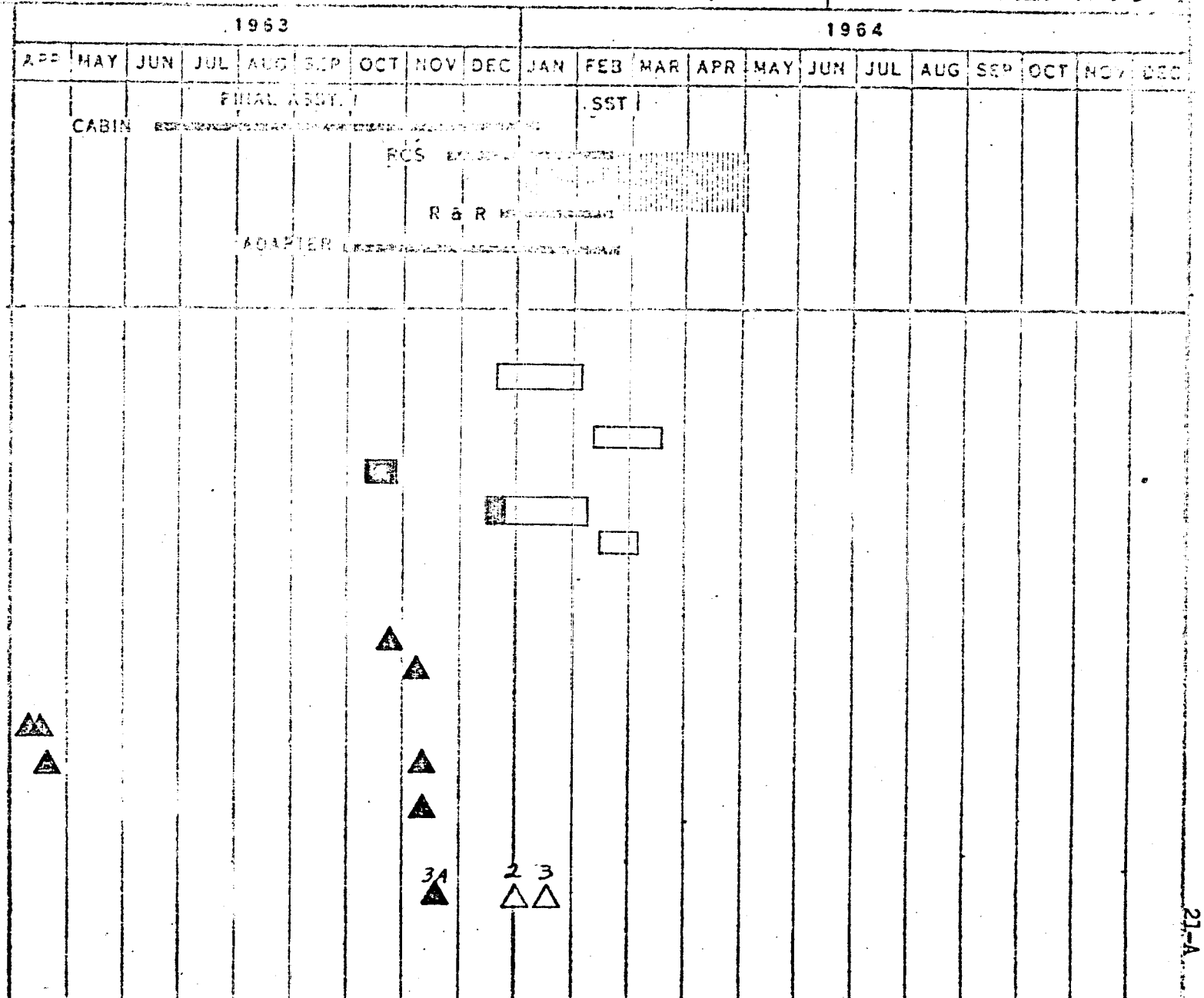

LEGEND
- ▽ TEST PROPOSAL DUE
- ◊ HARDWARE AVAIL
- □ TEST SCHEDULE
- ○ REPORT DUE
- ◇ REPORT APPROVED

SOLID INDICATES ACTUAL

QUALIFICATION AND DEVELOPMENT TEST STATUS

EVENT TIMER

M.A.C. ELECTRONIC ENGINEERING DIVISION

M.A.C. REPORT 8664

12-27-63

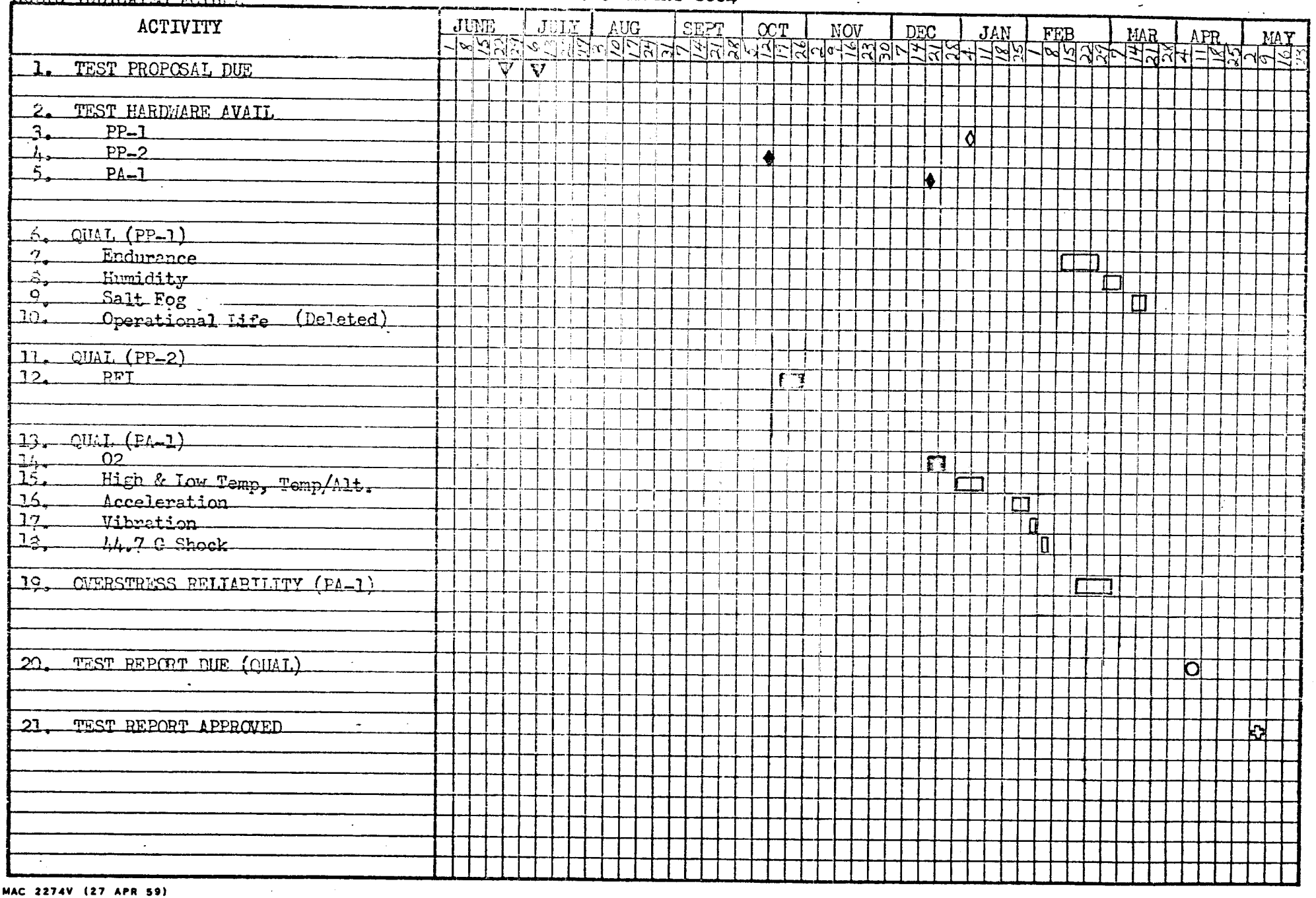

MAC 2274V (27 APR 59)

[illegible]

[illegible] NO.	[illegible]	[illegible]	DESIGN	[illegible] DESCRIPTION	[illegible]
[illegible]	[illegible]		[illegible]		[illegible]
[illegible]	[illegible]		[illegible]		[illegible]
[illegible]	[illegible]	[illegible]	[illegible]	[illegible]	[illegible]
[illegible]	[illegible]	[illegible]	QUAD	[illegible]	[illegible]
[illegible]	[illegible]	[illegible]	[illegible]		[illegible]
[illegible]	[illegible]	[illegible]	[illegible]	[illegible]	[illegible]
[illegible]	[illegible]	[illegible]	[illegible]	[illegible]	[illegible]
[illegible]	[illegible]	[illegible]	QUAD		[illegible]
[illegible]	[illegible]	[illegible]	[illegible]	[illegible]	[illegible]
[illegible]	[illegible]	[illegible]	[illegible]	[illegible]	[illegible]
[illegible]	[illegible]	[illegible]	SPIRE [illegible]	[illegible]	[illegible]
[illegible]	[illegible]	[illegible]	[illegible]	[illegible]	[illegible]
[illegible]	[illegible]	[illegible]	[illegible]	[illegible]	[illegible]
[illegible]	[illegible]	[illegible]	[illegible]	[illegible]	[illegible]
[illegible]	[illegible]	[illegible]	[illegible]	[illegible]	[illegible]
[illegible]	[illegible]	[illegible]	[illegible]	[illegible]	[illegible]
[illegible]	[illegible]	[illegible]	[illegible]	[illegible]	[illegible]
[illegible]	[illegible]	[illegible]	[illegible]	[illegible]	[illegible]
[illegible]	[illegible]	[illegible]	[illegible]	[illegible]	[illegible]
[illegible]	[illegible]	[illegible]	[illegible]	[illegible]	[illegible]
[illegible]	[illegible]	[illegible]	[illegible]	[illegible]	[illegible]
[illegible]	[illegible]	[illegible]	[illegible]	[illegible]	[illegible]
[illegible]	[illegible]	[illegible]	[illegible]	[illegible]	[illegible]

GEMINI SPACECRAFT
CONTRACT NO. NAS 9-170

ELECTRONIC TIMER - (MCDONNELL EED)

STATUS CHART (REPORT 8664)

REPORT NO. [illegible] 35
LAST PRODUCTION
SCHEDULE CHANGE: 15 Nov 1963
STATUS AS OF: 27 Dec. 1963

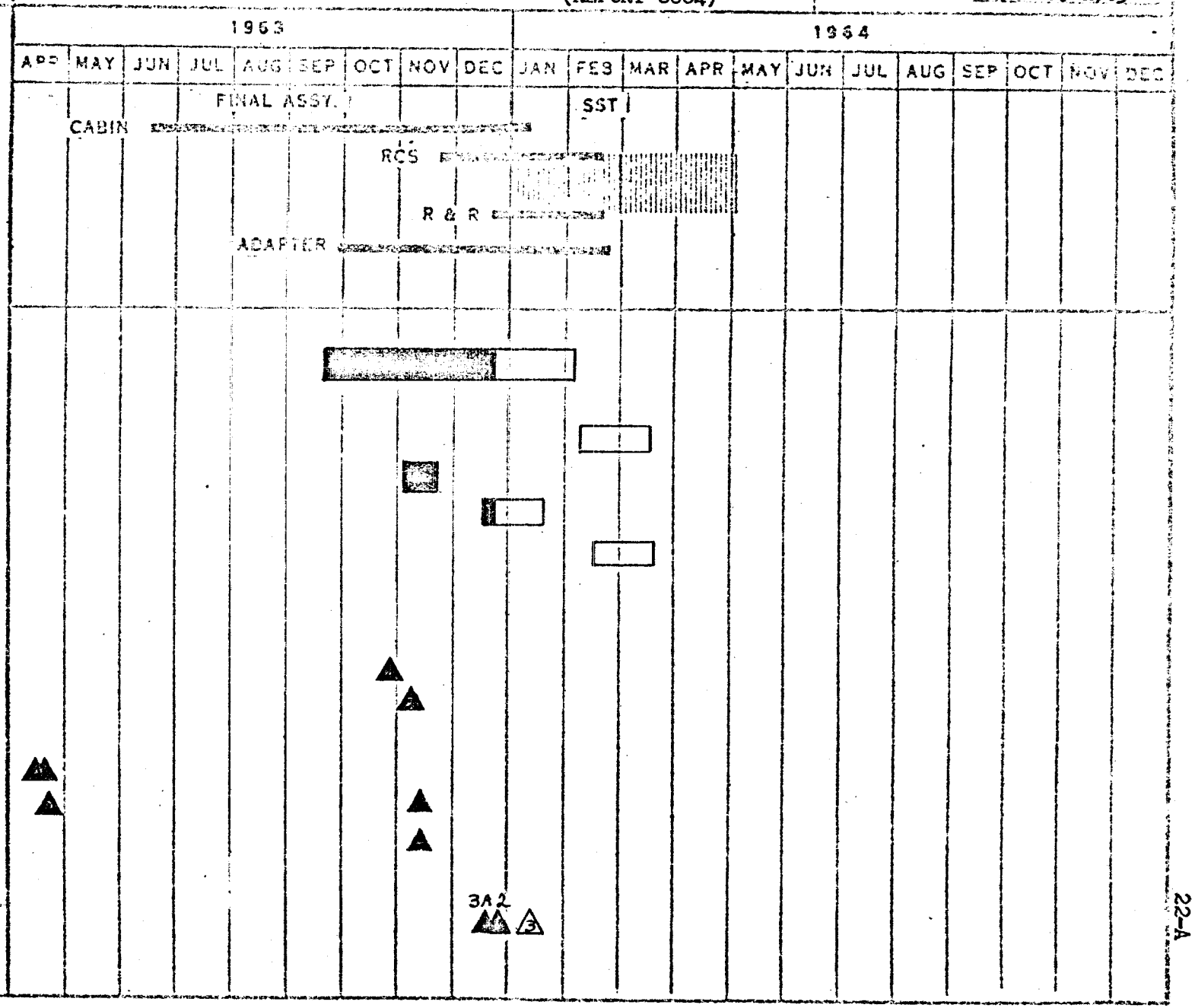

LEGEND
- ▽ TEST PROPOSAL DUE
- ◊ HARDWARE AVAIL
- ☐ TEST SCHEDULE
- ○ REPORT DUE
- ◇ REPORT APPROVED

SOLID INDICATES ACTUAL

QUALIFICATION AND DEVELOPMENT TEST STATUS

ELECTRONIC TIMER

M.A.C. ELECTRONIC ENGINEERING DIVISION

M.A.C. REPORT 8664

12-27-63

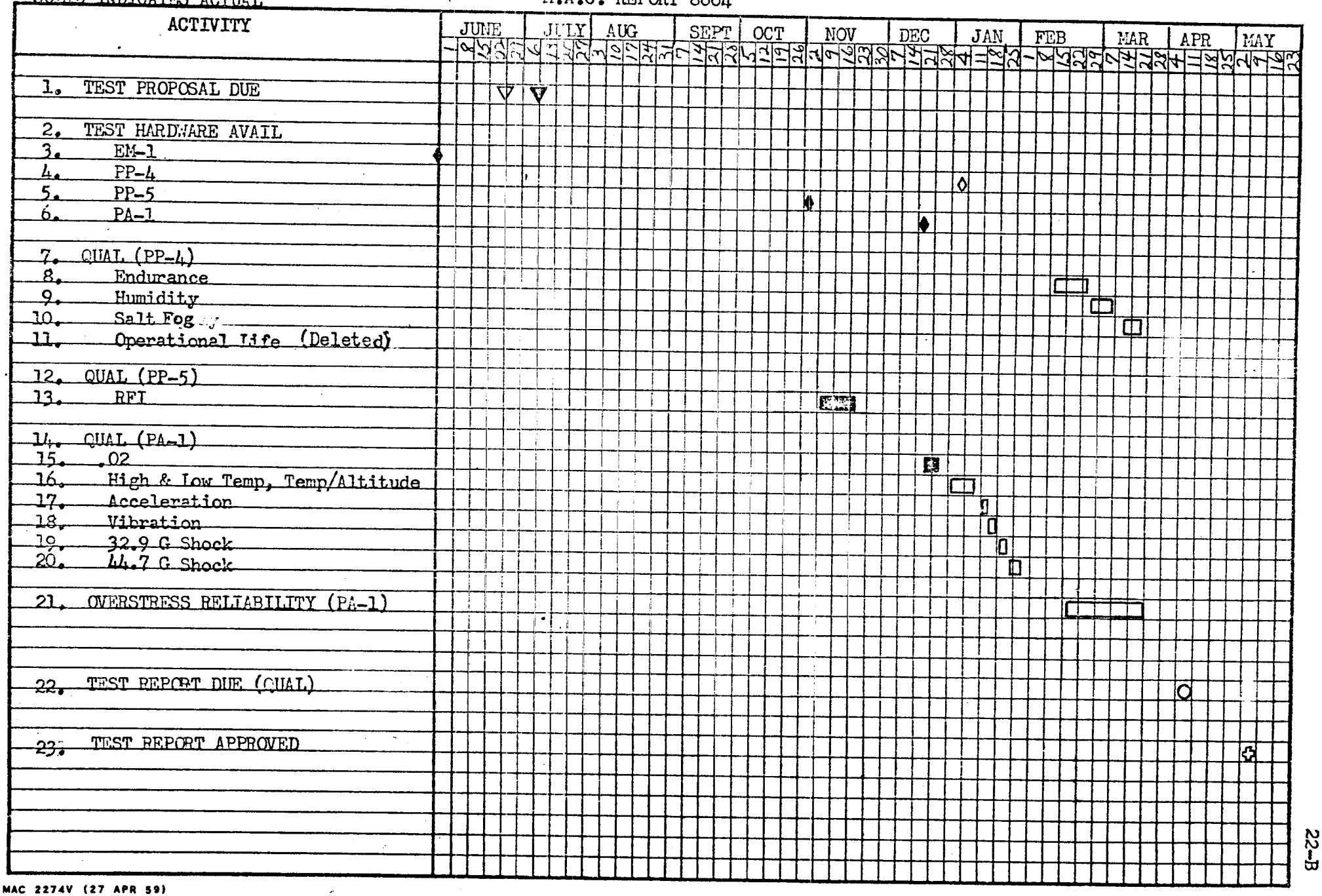

MAC 2274V (27 APR 59)

[illegible]	[illegible]	[illegible]	[illegible]	[illegible]
[illegible]	[illegible]	[illegible]	[illegible]	[illegible]

Monthly Summary

System: Instrumentation
Subsystem: Data Instrumentation
Vendor: [illegible]
Date: 23 December 1966

[illegible] (A/B EQUIPMENT)

A. [illegible]

[illegible]

B. [illegible]

[illegible]

C. [illegible]

[illegible]

ASSEMBLY AND DELIVERY STATUS (A/B EQUIPMENT)

A. PCM

1. Airborne PCM system #4 allocated to OSO SC 2 was shipped to MAC [illegible]
2. MAC has received work plans and schedules for PCM systems [illegible] from EMR during the past period. After evaluation of the plans and following EMR's actual progress to date, MAC feels that the delivery of units can be achieved [illegible] schedule with the reservation that the schedules are optimistic and if delays [illegible] one day slip per one day delay ratio could be involved. This report has [illegible] incorporated EMR's projections and if changes occur during the forecast period they will be incorporated in the bi daily [illegible]

B. Tape Recorder

An initial delivery [illegible] have shipped on the [illegible] [illegible] Because of this [illegible] [illegible] of the [illegible] [illegible]

C. Transmitters

1. Two sets of transmitters have been shipped: (a) one set directly to the Cape for S/C-1 and (b) one set to MAC for S/C-2.

TEST STATUS (A/B EQUIPMENT)

A. PCM

1. Based upon EMR's projection of the Qual test unit (A/B 7) completion, the Qual testing is scheduled to begin 2-14-64.

B. Tape Recorder

1. The acceleration and vibration tests to be performed on unit 6P (-35) have slipped to 1-20-64 because of the motor quality problem.

2. The start of Qual test on unit 12 has also slipped until 2-28-64, because of the same problem.

C. Transmitters

1. The -65 transmitter has been retrofit with the old transistors. The -67 transmitter will incorporate the new transistors. Testing on the -65 will be delayed until delivery of the new transistors.

AGE

A. OII-1 Ground Station

1. Although this station is at MAC it has not yet been accepted from EMR. EMR has not performed a final ATP on the station because of the following:

1. There are 420 inverters to be installed
2. Power supply troubles on the displays.
3. RFI noise
4. Transistor failure.

No date for this final ATP has been given.

2. These problems are not anticipated to affect the subsequent ground stations.

B. OII-3 Ground Stations

1. The printer speed on the OII-3 ground station has been improved by changing the motor speed and will now print in excess of the 600 line per minute requirement.

2. Noise in the "Fabri-Tek" memory case of the printer is still being investigated. The major manifestation of this problem is noted in the inaccuracy of the printed output.

3. Further slip is expected in the shipment of the OII-3 but no exact date can be estimated at this time. The possibility of shipping the ground station minus the printer, thereby expediting matters is being investigated.

C. 040 Test Set

1. No work has been performed on the test set. Engineering drawings are scheduled to be released in February 1964.

GEMINI
SPACECRAFT
CONTRACT NO. NAS 9-170

DATA TRANSMISSION SYSTEM

(VENDOR: ELECTRO-MECHANICAL RESEARCH, INC.)
STATUS CHART

REPORT NO. [illegible]-1 -35
LAST PROGRAM SCHEDULE CHANGE: 15 Nov 1963
STATUS AS OF: 27 Dec 1963

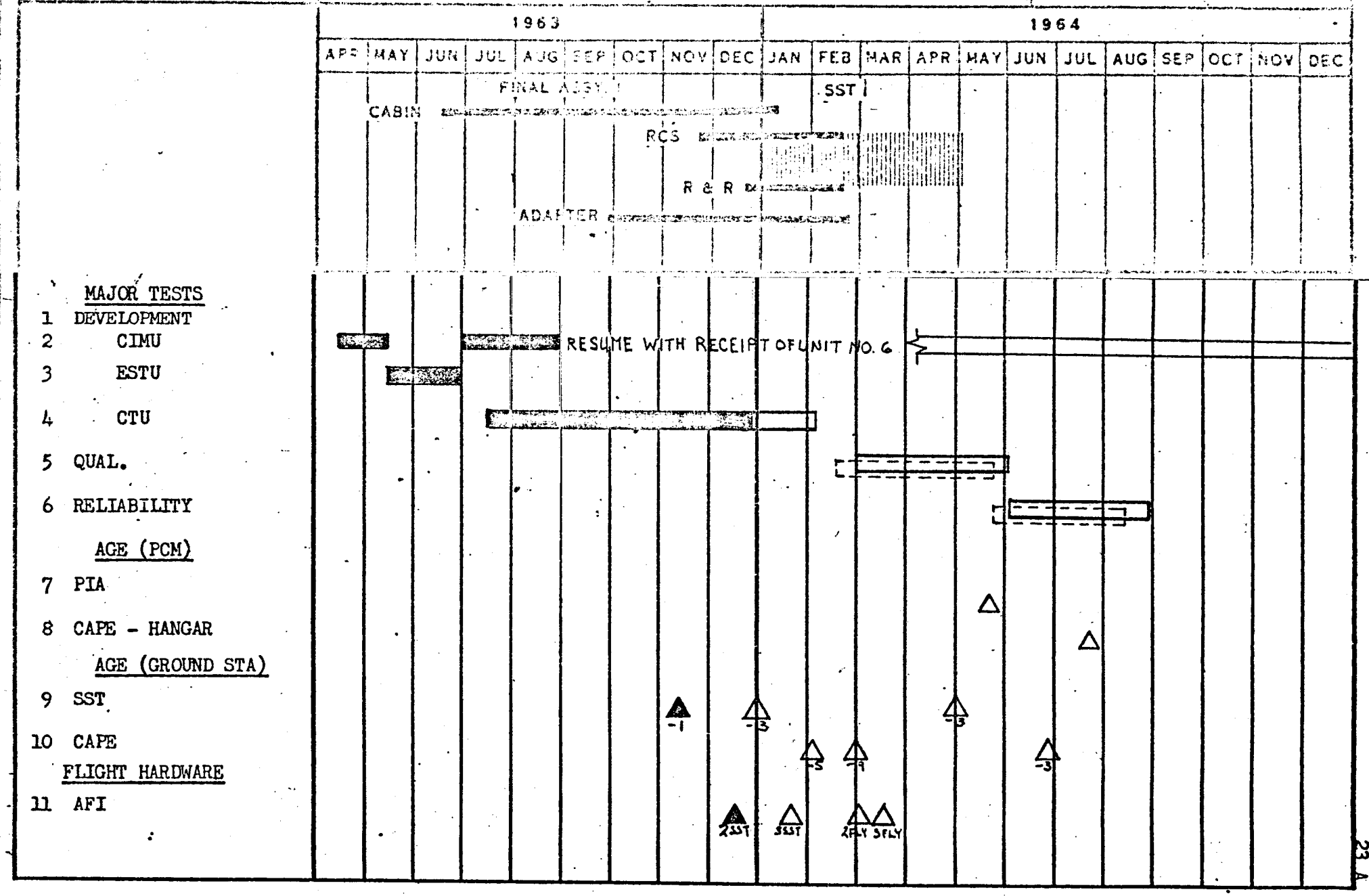

23-A

LEGEND
- ▽ TEST PROCEDURE APPROVED
- △ HARDWARE AVAILABLE
- □ TEST SCHEDULE
- ○ REPORT DUE
- ☆ REPORT APPROVED

SOLID INDICATES ACTUAL

QUALIFICATION AND DEVELOPMENT TEST STATUS

DTS TAPE RECORDER (EMR-RCA)

27 Dec. 1963

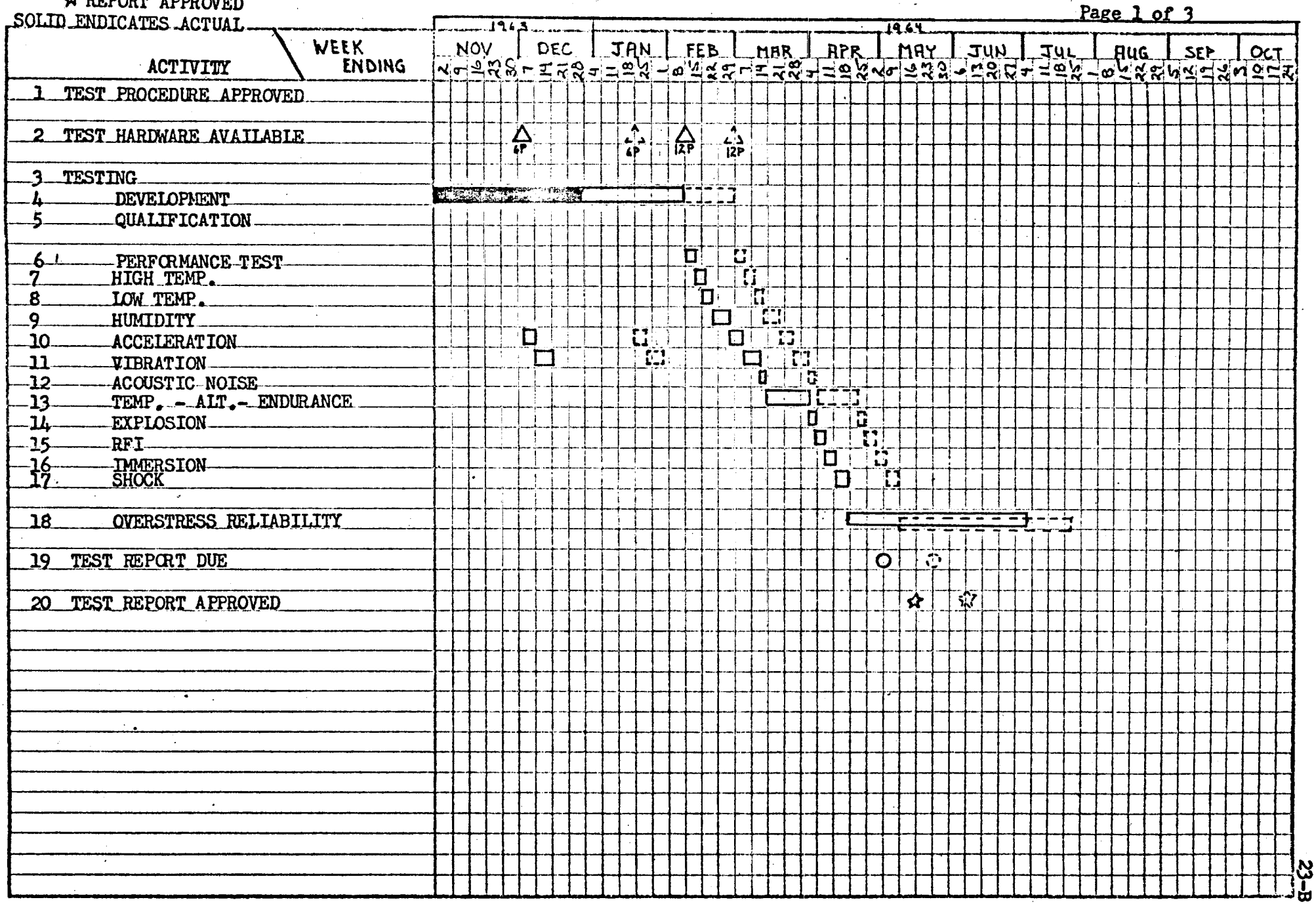

MAC 2274V (27 APR 59)

LEGEND:

- ▽ PROCEDURE APPROVED
- △ HARDWARE AVAILABLE
- □ TEST SCHEDULE
- ○ REPORT DUE
- ☆ REPORT APPROVED

SOLID INDICATES ACTUAL

QUALIFICATION AND DEVELOPMENT TEST STATUS

DTS TRANSMITTERS

EMR-RCA
SCD 52-85713

27 Dec. 1963

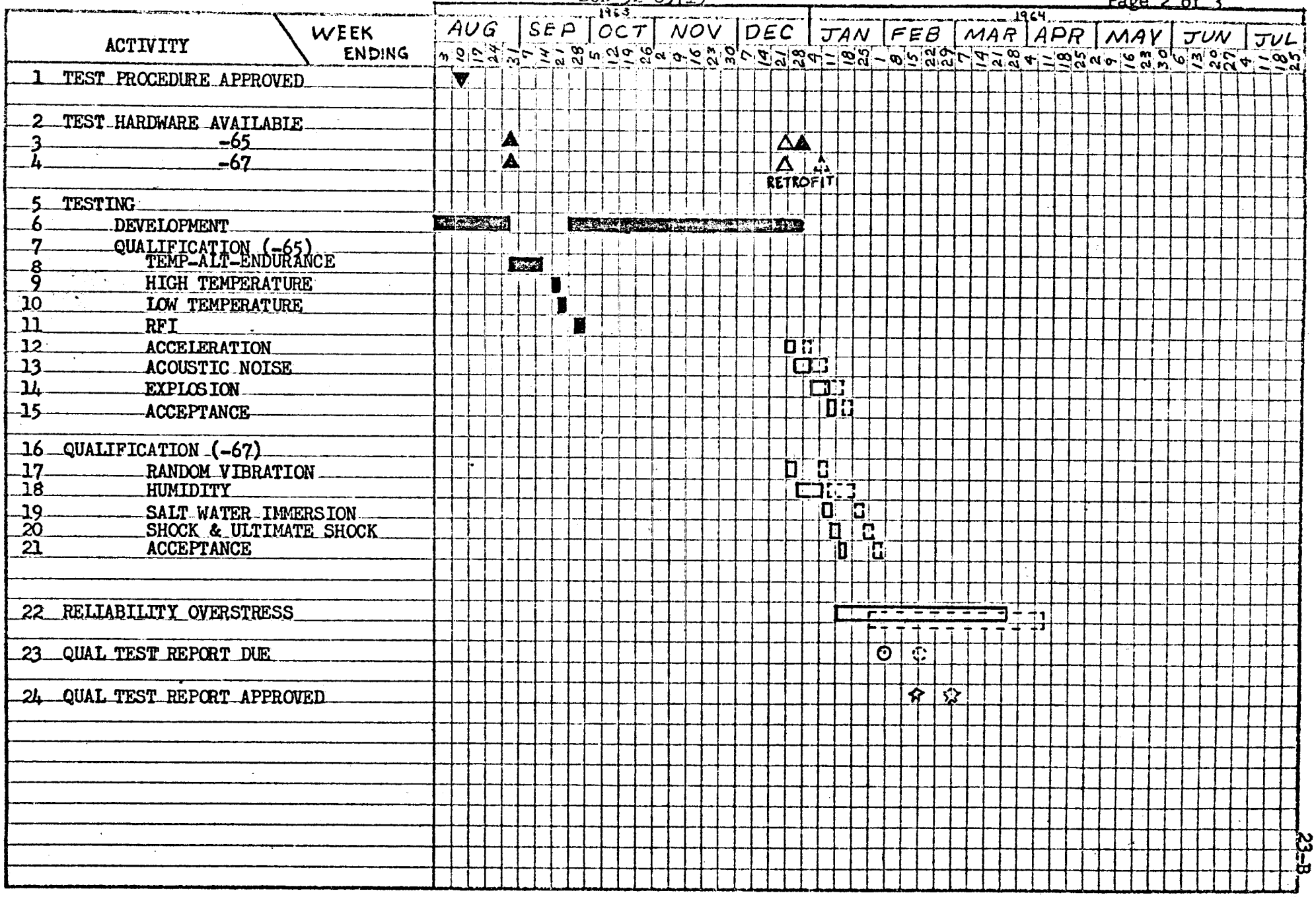

MAC 2274V (27 APR 59)

LEGEND:
- ▽ TEST PROCEDURE APPROVED
- △ HARDWARE AVAILABLE
- □ TEST SCHEDULE
- ○ REPORT DUE
- ☆ REPORT APPROVED

SOLID INDICATES ACTUAL

QUALIFICATION AND DEVELOPMENT TEST STATUS

27 Dec. 1963

DATA TRANSMISSION SYSTEM--PCM
(ELECTRO-MECHANICAL RESEARCH)

SCD 52-85713

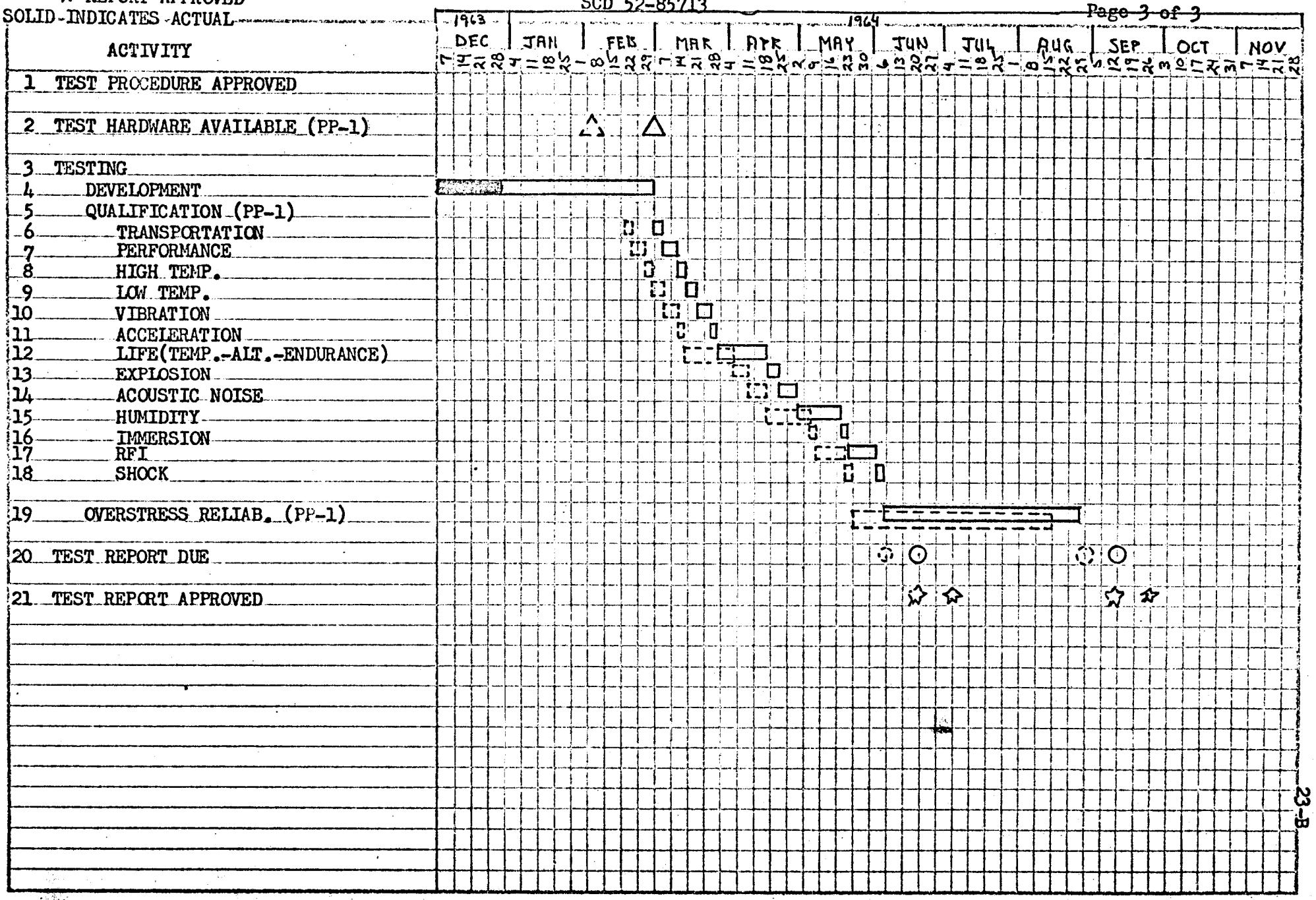

MAC 2[illegible]V (27 APR 59)

[illegible]	[illegible]	[illegible]	[illegible]	[illegible]	[illegible]
[illegible]	[illegible]	[illegible]			
[illegible]	[illegible]	[illegible]			
[illegible]	[illegible]	[illegible]			

UNIT NO.	TYPE	USAGE	COMPONENT	VENDOR W/S	AVAIL. FOR INSTL.	REQ'D. FOR INSTL.	SPARE
11	PP-2	SC-2	PCM A/B 8 1-83, 3-85, 2-87	2-18-64	3-03-64	10-17-63	[illegible]
			TR: 1-35 (7P)	2-01-64	2-11-64	11-14-63	[illegible]
			XMTR: 1-65*, 1-67*		A12-13-63	10-17-63	
	PARTL	SC-2	1-85 (For Spare Pallet)	2-18-64	3-03-64	10-17-63	[illegible]
12	PP-3	SC-3	PCM A/B 9 1-83, 2-85, 2-87	3-04-64	3-18-64	12-20-63	[illegible]
			TR: 1-37 (13)	3-27-64	4-06-64	1-21-64	[illegible]
			XMTR: 1-63*, 1-65*, 1-67*	3-07-64	1-15-64	12-20-63	[illegible]
13	PP-4	GMS-2	PCM A/B 10 1-83, 2-85, 2-87	3-20-64	4-03-64	1-[illegible]-64	[illegible]
14	PP-5	SC-4	PCM A/B 11 1-83, 2-85, 2-87	3-31-64	4-14-64	2-[illegible]-64	[illegible]
			TR: 1-37 (14)	4-17-64	4-27-64	2-[illegible]-64	
			XMTR: 1-63, 1-65, 1-67	3-06-64	3-16-64	2-[illegible]-64	
15	PP-6	SC-5	PCM A/B 12 1-83, 2-85, 2-87	4-14-64	4-24-64	[illegible]	
			TR: 1-37 (15)	5-08-64	5-18-64	4-23-64	
			XMTR: 1-63, 1-65, 1-67	4-07-64	4-17-64	3-23-64	
16	PP-7	SC-6	PCM A/B 13 1-83, 2-85, 2-87	4-28-64	5-12-64	3-[illegible]-64	
			TR: 1-37 (16)	5-29-64	6-01-64	[illegible]	
			XMTR: 1-63, 1-65, 1-67	4-07-64	4-17-64	[illegible]	
17	PP-8	SPR-SST	PCM A/B 14 1-83, 2-85, 2-87	5-12-64	5-26-64	[illegible]	
			TR: 1-35 (11P)	5-04-64	5-14-64	[illegible]	
			XMTR: 1-63, 1-65, 1-67	5-07-64	5-17-64	[illegible]	
18	PP-9	SPR-CAPE	PCM A/B 15 1-83, 2-85, 2-87	5-26-64	6-09-64	[illegible]	
			TR: 1-37 (17)	6-12-64	6-22-64	[illegible]	
			XMTR: 1-63, 1-65, 1-67	6-02-64	6-16-64	[illegible]	
19	PA-1	SC-7	PCM A/B 16 1-83, 2-85, 2-87	6-09-64	6-23-64	[illegible]	
			TR: 1-37 (18)	7-10-64	7-20-64	[illegible]	
			XMTR: 1-63, 1-65, 1-67	6-03-64	6-16-64	[illegible]	
20	PA-2	SPR-SST	PCM A/B 17 1-83, 1-85, 1-87	6-23-64	6-[illegible]	[illegible]	
			TR: 1-37 (20)	8-21-64	8-31-64	[illegible]	
			XMTR: 1-63, 1-65, 1-67	[illegible]	[illegible]	[illegible]	
21	PA-3	SPR-CAPE	PCM A/B 18 [illegible]	[illegible]	[illegible]	[illegible]	
			[illegible]	[illegible]	[illegible]	[illegible]	
			[illegible]	[illegible]	[illegible]	[illegible]	

UNIT NO.	TYPE	USAGE	COMPONENT	VENDOR W/S	AVAIL. FOR INSTL.	REQ'D. FOR INSTL.	SLACK
22	PA-4	SC-8	PCM A/B 19 1-83, 2-85, 2-87	8-03-64	8-10-64	9-08-64	+ 4
			TR: 1-37 (19)	8-03-64	8-10-64	10-12-64	+10
			XMTR: 1-63, 1-65, 1-67	8-07-64	8-17-64	9-08-64	+ 3
23	PA-5	SC-9	PCM A/B 20 1-83, 2-85, 2-87	10-05-64	10-12-64	11-08-64	+ 4
			TR: 1-37 (22)	10-05-64	10-12-64	12-12-64	+ 9
			XMTR: 1-63, 1-65, 1-67	10-05-64	10-12-64	11-08-64	+ 4
24	PA-6	SC-10	PCM A/B 21 1-83, 2-85, 2-87	11-16-64	11-23-64	1-08-65	+ 7
			TR: 1-37 (23)	11-16-64	11-23-64	2-12-65	+12
			XMTR: 1-63, 1-65, 1-67	11-16-64	11-23-64	1-08-65	+ 7
25	PA-7	SC-11	PCM A/B 22 1-83, 2-85, 2-87	1-18-65	1-25-65	3-08-65	+ 4
			TR: 1-37 (24)	1-18-65	1-25-65	4-12-65	+12
			XMTR: 1-63, 1-65, 1-67	1-18-65	1-25-65	3-08-65	+ 6
26	PA-8	SC-12	PCM A/B 23 1-83, 2-85, 2-87	3-02-65	3-09-65	5-08-65	[illegible]
			TR: 1-37 (25)	3-02-65	3-09-65	6-12-65	+13
			XMTR: 1-63, 1-65, 1-67	3-02-65	3-09-65	5-08-65	[illegible]
27	PARTL	ADAP 13	PCM (Partl) 1-85, 1-87	4-24-64	4-28-64	7-31-64	[illegible]
			XMTR: 1-63	7-07-64	7-15-64	7-31-64	+ 2
28	PARTL	ADAP 14	PCM (Partl) 1-85, 1-87	12-03-65	12-10-65	1-21-66	+ 6
			XMTR: 1-63	12-03-65	12-10-65	1-21-66	+ 6

* Items to be used as flight hardware with the SST DMS Systems.

** XMTR B65 is used only for IMCC.

VENDOR AGE STATUS REPORT

SHEET NO. 23-49

DATA TRANSMISSION

EMR

DATE: 12-27-63

PART NUMBER	NOMENCLATURE	UNIT NO.	VENDOR W/S	AVAIL. FOR USAGE	REQ'D. FOR USAGE	SLICK
			PRE-INSTALLATION ACCEPTANCE			
5254A0040-3	TEST SET S/C INS	11	5-22-64	5-29-64	12-02-63	-26
			SPACECRAFT SYSTEM TESTS			
5254A0011-3	GND STA PCM	2	4-30-64	5-07-64	1-13-64	-17
E4A0011-3	GND STA PCM	1	12-30-63	1-07-64	12-15-63	[illegible]
E4A0011-1	GND STA PCM*	1			11-25-63	
			HANGAR			
5254A0011-9	GND STA PCM	1	2-22-64	2-29-64	2-15-64	[illegible]
E4A0040-9	TEST SET S/C INS	12	7-22-64	7-29-64	3-27-64	[illegible]
E4A0011-3	GND STA PCM	3	6-26-64	7-03-64	5-17-64	[illegible]
			PAD			
5254A0011-5	GND STA PCM	1	2-29-64	2-14-64	[illegible]	[illegible]

* Last 3 racks only (3, 4, & 5) completed by the Ground Station as [illegible].

[illegible]

[illegible]

1. [illegible] has been [illegible] parts, pipe and [illegible] in the form of [illegible]

2. Engineering Design Study (Ref. [illegible]) [illegible] and [illegible] [illegible] new [illegible] is to be assigned [illegible] the above study

3. Conferences were held at [illegible] between [illegible] and [illegible] through 26 [illegible]. For purposes of coordination [illegible] [illegible] of the [illegible] [illegible] design [illegible] System [illegible]

[illegible]

[illegible]

1. [illegible]

2. [illegible]

3. [illegible]

4. [illegible]

[illegible]

[illegible]

[illegible]

SUMMARY

[illegible]

Results from the Ballute test flight program [illegible] indicate that the present Ballute system apparently does not provide the [illegible] of stabilization required to stop or prevent spin-up for high speed [illegible]. These tests were conducted by Ft Hunter personnel under the direction of [illegible] and consisted of 4 jumps from an altitude of 12,000 feet at [illegible] knots. [illegible] evaluation of the Ballute system regarding structural [illegible] and [illegible] is being reviewed.

Analysis of in-flight ejections from USAF's labor group of [illegible] indicates that the angular and tumbling motions and the resulting accelerations are within the [illegible] limits established by the Air Force. A definition study of [illegible] covering various GSE malfunctions over the complete range of [illegible] is [illegible]. This data will be published in the [illegible] and [illegible]

[illegible] SEAT EJECTING Series [illegible] Analysis [illegible]

Continue in flight ejection and impact boundary analysis

Results of evaluation of the effect of [illegible] and [illegible] the possibility of early barometric [illegible] indicate that the load carrying capability [illegible] situation does thus reducing the [illegible] 2,000 feet to 1,700 feet [illegible] and worst combination of parameters. The [illegible] load failure load of 5,000 pounds. [illegible] rolling capability is approximately [illegible] effectivity

GEMINI SPACECRAFT
CONTRACT NO. NAS 9-170

ESCAPE SYSTEM - (VENDOR: WEBER AIRCRAFT)

STATUS CHART

REPORT NO. 6860-1 - 34
LAST PROGRAM SCHEDULE CHANGE: 15 Nov. 1963
STATUS AS OF: 27 Dec. 1963

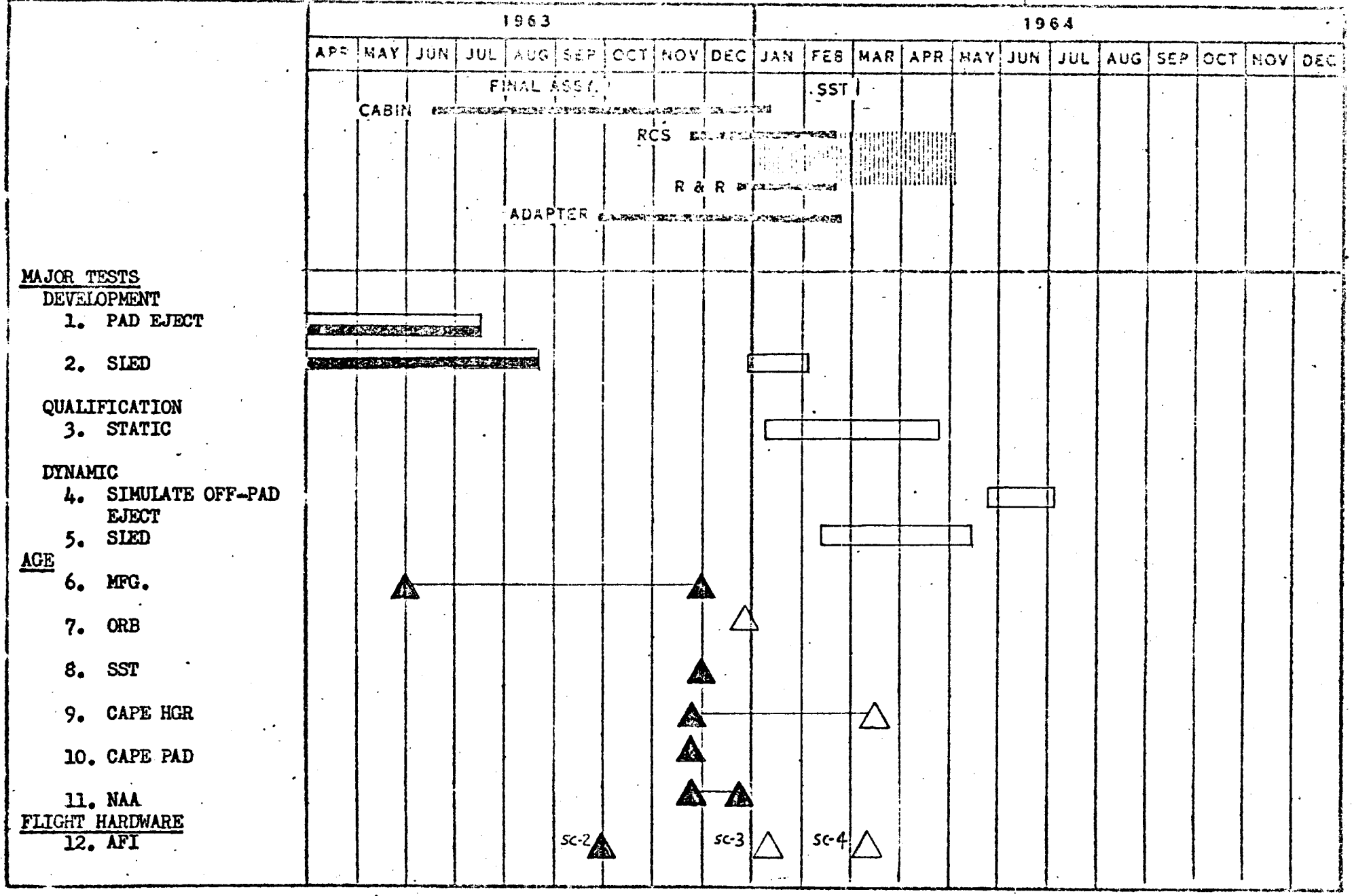

24-A

LEGEND
△ Test Proposal Due
◊ Hardware Available
□ Test Schedule

QUALIFICATION & DEV. TEST STATUS
GEMINI EJECTION SEAT SYSTEM
(WEBER AIRCRAFT)

REV: T
DATE: 27 Dec. 1963

SOLID INDICATES ACTUALS

ACTIVITY	Test No.	Test Seat No.
1. Development Testing		
2. Pad Ejec.Seat (Comp.May63)	9	25
3. (Comp. May 63)	9A	26
4. (Comp. June63)	10	29
5. (Comp. June 63)	10	30
6. (Comp.July 63)	11	25
7. (Comp.July 63)	11	28
8.		
9. Sled Test(Comp.June 63)	2	27
10. (Comp.June 63)	2	28
11. (Comp.Aug. 63)	3	29
12. (Comp.Aug. 63)	3	30
13.	5	31
14.	5	32
15.	4	28
16.	4	30
17.		
18. Qualification Testing		
19. Static Test		37
20. Vibration Test		38
21. Environmental Test		53
22. Environmental Test		51
23. Shock Test		52
24.		
25. Dynamic Testing		
26. Sope Qual. Test	1	62
27.	1	63
28.	2	64
29.	2	65
30.		
31. Sled Test	1	53
32.	1	54
33.	2	56
34.	2	57
35.	3	58
36.	3	59
37.	4	60
38.	4	61
39.		
40. B/P 3A Del. from MAC		

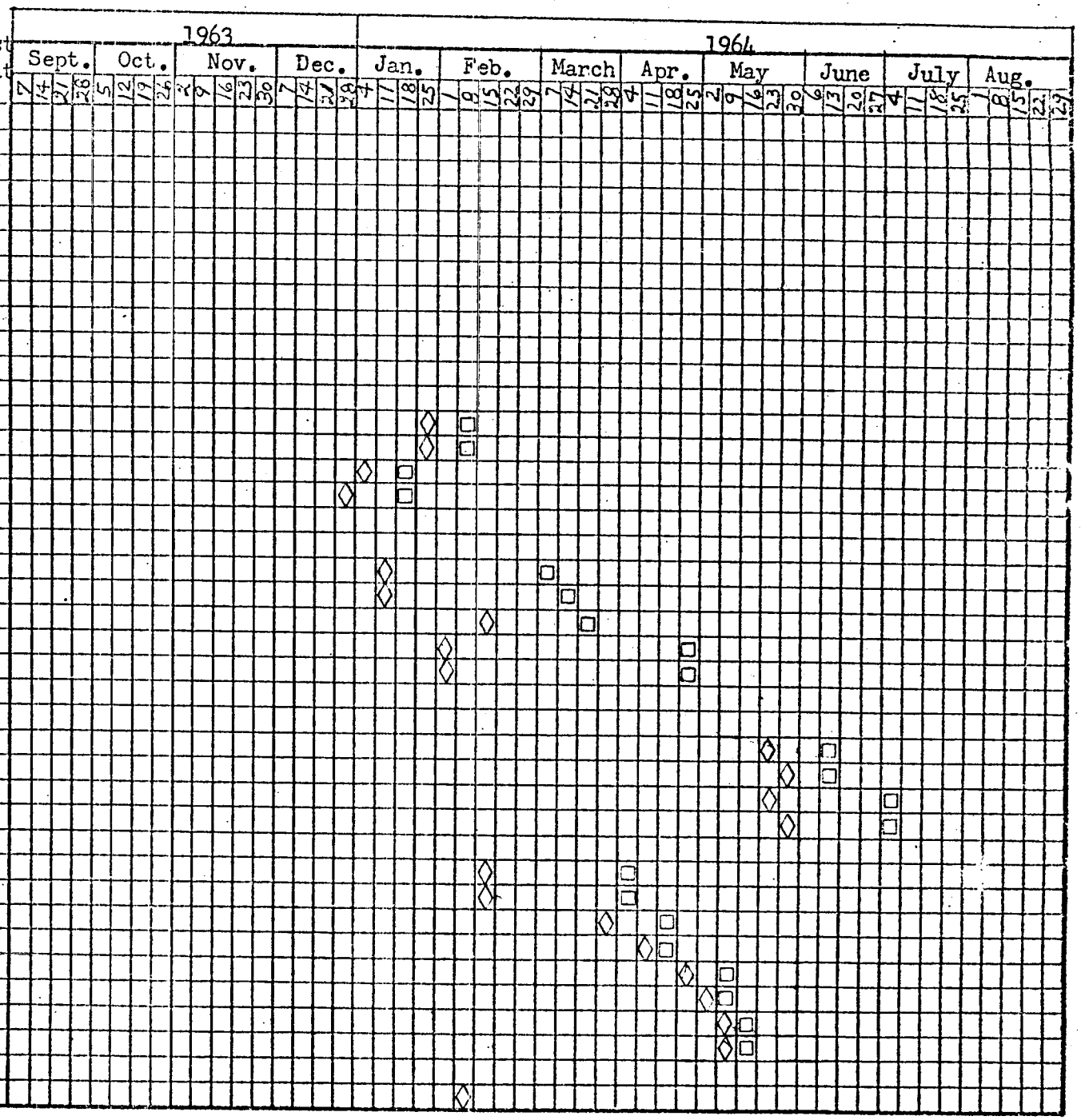

MAC 2274V (27 APR 59)

24-B

Monthly Summary

Systems: Time Reference System
Subsystem: Greenwich Mean Time Clock
Vendor: McDonnell E.E.D.
Date: 27 December 1963

ASSEMBLY AND DELIVERY STATUS

The only clock delivered during this reporting period was S/N 11 to Qual [illegible] EED is purchasing one additional clock to be used in Qual testing. It is anticipated that S/N's 16 and 17 will be delivered to EED on 6 January 1964. S/N 14 is being refurbished and will be made available for use in the Mission Simulator. S/N 16 originally allocated to the Mission Simulator, will be utilized for Qual testing.

The delivery of clocks for flight use is contingent upon the satisfactory completion of the Qual test program. The vendor is prepared to deliver clocks for flight use at the rate of two clocks every two weeks. The first units will be delivered approximately one month after completion of Qual.

TEST STATUS

The Clock failed during Temperature-Altitude and Salt Fog [illegible] It was determined that the Temperature-Altitude test was terminated [illegible] test in error. FSD was applied.

S/N 11 was subjected to [illegible] and Salt Fog tests. After the [illegible] Fog test, it was observed that a paper gasket had [illegible] ing this gasket is being investigated.

Vibration, Temperature-Altitude and Humidity tests [illegible] S/N's 16 and 17. These Qual [illegible] received.

GEMINI SPACECRAFT
CONTRACT NO. NAS 9-170

GREENWICH MEAN TIME CLOCK - (MCDONNELL EED)

STATUS CHART (REPORT 8664)

REPORT NO. [illegible]-1 - 35
LAST PROGRAM SCHEDULE CHANGE: 15 Nov 1963
STATUS AS OF: 27 Dec 1963

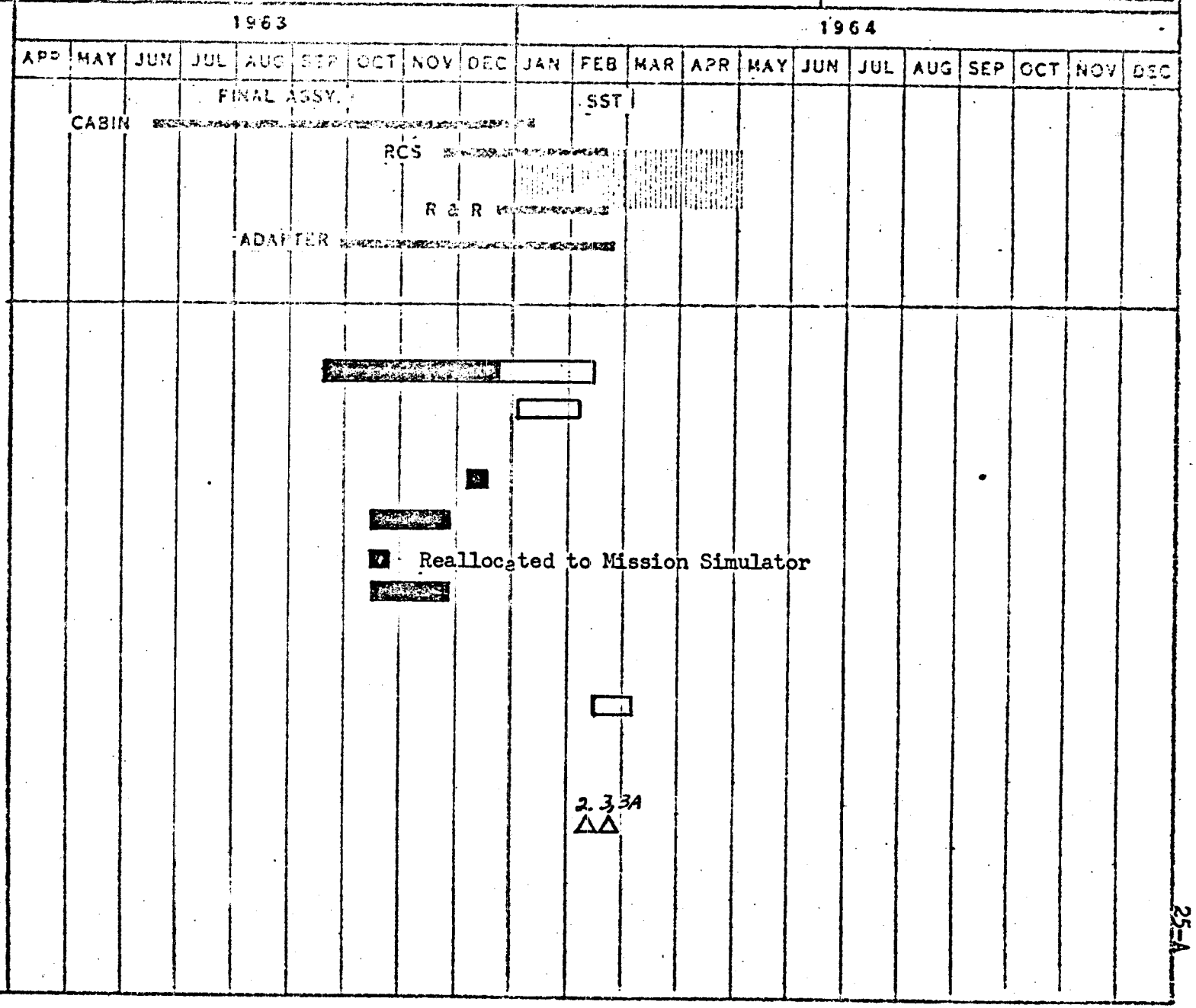

LEGEND

▽ TEST PROPOSAL DUE
◊ HARDWARE AVAILABLE
□ TEST SCHEDULE
SOLID INDICATES ACTUAL

QUALIFICATION AND DEVELOPMENT TEST STATUS
GREENWICH MEAN TIME CLOCK
MAC ELECTRONIC ENGINEERING DIVISION
MAC REPORT 8664

12-27-63

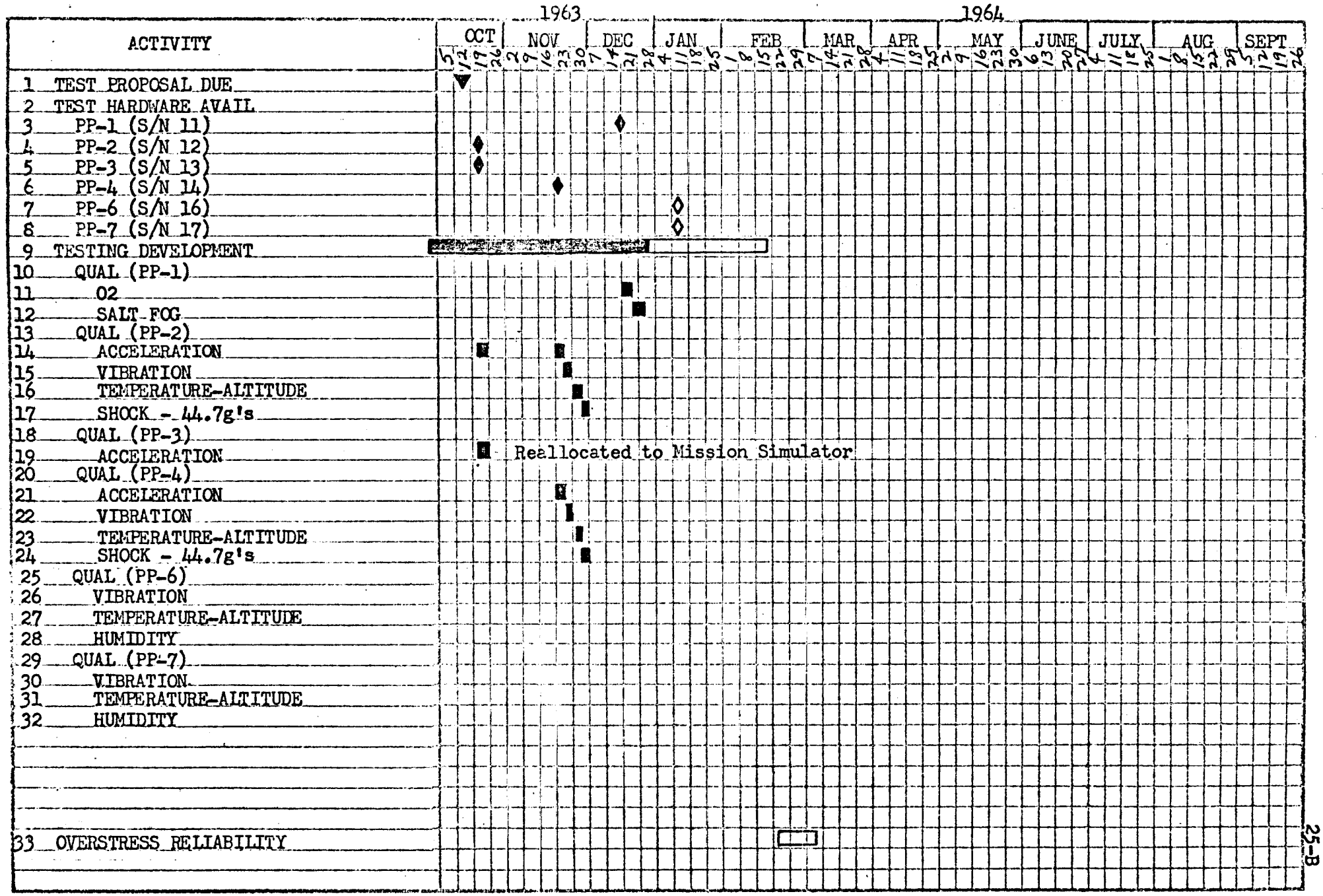

MAC 2274V (27 APR 59)