NASA
National Aeronautics and
Space Administration

Lyndon B. Johnson Space Center
Houston, Texas 77058

DMS-DR-2367
NASA CR-151,773

RESULTS OF A HIGH ANGLE-OF-ATTACK AERO HEATING PRESSURE TEST ON A 0.0175-SCALE MODEL (92-0) OF THE OV-102 CONFIGURATION SPACE SHUTTLE ORBITER IN THE AEDC VKF TUNNEL B (OH57A/B)

SPACE SHUTTLE AEROTHERMODYNAMIC DATA REPORT

Data Management Services
SPACE DIVISION CHRYSLER CORPORATION

April, 1979

DMS-DR-2367
NASA CR-151,773

RESULTS OF A HIGH ANGLE-OF-ATTACK AERO HEATING PRESSURE TEST ON A 0.0175-SCALE MODEL (92-0) OF THE OV-102 CONFIGURATION SPACE SHUTTLE ORBITER IN THE AEDC VKF TUNNEL B (OH57A/B)

by

P. L. Lemoine
Wind Tunnel Operations
Rockwell International Space Division

Prepared under NASA Contract Number NAS9-13247

by

Data Management Services
Chrysler Corporation Michoud Defense-Space Division
New Orleans, La. 70189

for

Engineering Analysis Division

Johnson Space Center
National Aeronautics and Space Administration
Houston, Texas

WIND TUNNEL TEST SPECIFICS:

Test Number:	AEDC V41B-K3A
NASA Series Number:	OH57A and B
Model Number:	92-0
Test Dates:	October 11, 1976; January 4 and 5, 1977
Occupancy Hours:	24

FACILITY COORDINATOR:

L. L. Trimmer
ARO, Inc.
VKF/Projects
Arnold Air Force Station
Tennessee 37389

Phone: (615) 455-2611, ext. 7377

FACILITY PROJECT ENGINEER:

D. Fikes
ARO, Inc.
VKF/Projects
Arnold Air Force Station
Tennessee 37389

Phone: (615) 455-2611

PROJECT ENGINEER:

P. L. Lemoine
Rockwell International
Space Division
D/390-100, Mail Code AD38
12214 Lakewood Boulevard
Downey, CA 90241

Phone: (213) 922-1463

ANALYSIS ENGINEERS:

C. B. Blumer
L. R. Johnson
Rockwell International
Space Division
D/390-300, Mail Code AC78
12214 Lakewood Boulevard
Downey, CA 90241

Phone: (213) 922-3669

DATA MANAGEMENT SERVICES:

Prepared by: Liaison-- D. W. Hersey
Operations-- J. E. Vaughn

Reviewed by: G. G. McDonald

Approved: J. L. Glynn, Manager
Data Operations

Concurrence: N. D. Kemp, Manager
Data Management Services

Chrysler Corporation Michoud Defense-Space Division assumes no responsibility for the data presented other than display characteristics.

RESULTS OF A HIGH ANGLE-OF-ATTACK AERO HEATING PRESSURE TEST ON A 0.0175-SCALE MODEL (92-0) OF THE OV-102 CONFIGURATION SPACE SHUTTLE ORBITER IN THE AEDC VKF TUNNEL B (OH57A/B)

by

P. L. Lemoine, Rockwell International, Space Systems Group

ABSTRACT

High angle-of-attack pressure test OH57A/B was conducted at Mach number 8.0 on a 0.0175-scale model of the OV102 Space Shuttle Orbiter. Its purpose was to obtain static pressure measurements on the upper and lower wing surfaces in the vicinity of the elevon hinge and elevon flipper doors and vertical tail around the speed brake hinge, to determine the local flow field characteristics on these surfaces during simulated vehicle entry flight conditions.

Pressure data were obtained at Mach number 8.0 and freestream unit Reynolds number of 1.0 and 3.6 million per foot. Effects of control surface (body flap, elevons, and speed brake) deflections were investigated. The angle-of-attack range was from 30 to 45 degrees at zero degree sideslip.

(THIS PAGE INTENTIONALLY LEFT BLANK.)

TABLE OF CONTENTS

	Page
ABSTRACT	iii
INDEX OF MODEL FIGURES	2
INTRODUCTION	3
NOMENCLATURE	4
CONFIGURATIONS INVESTIGATED	6
TEST FACILITY DESCRIPTION	8
TEST PROCEDURE	9
DATA REDUCTION	10
TEST DATA QUALITY	11
REFERENCES	13
TABLES	
I. TEST CONDITIONS	14
II. DATA SET/RUN NUMBER COLLATION SUMMARY	15
III. MODEL DIMENSIONAL DATA	16
IV. PRESSURE TAP LOCATIONS	24
FIGURES	
MODEL	30
APPENDIX	
TABULATED SOURCE DATA	

INDEX OF MODEL FIGURES

Figures	Title	Page
1.	Axis systems and sign conventions.	
	a. Axis Systems	30
	b. Control Deflection Sign Conventions	31
2.	Model sketches.	
	a. Model Details	32
	b. Wing Pressure Tap Locations	33
	c. Vertical Tail Pressure Tap Locations	34
	d. Model and 30° Pressure Sting	35
3.	Model photographs.	
	a. Model in AEDC Tunnel B Lower Chamber	36
	b. Model in AEDC Tunnel B Test Section	37

INTRODUCTION

To obtain detailed experimental aerodynamic heating environments affecting the elevon-elevon, elevon-fuselage gaps, elevon hinge and flipper doors, large scale partial models must be used in the wind tunnel. These partial models only approximate the flow field as it exists on the vehicle. So, to apply the large partial model experimentally determined environments to the vehicle hardware, the local flow fields of interest must be determined in the vehicle environment.

The data presented in this report are surface static pressures obtained from tests conducted in the AEDC VKF Tunnel B using the .0175-scale model (92-0) of the space shuttle orbiter (OV-102) configuration. The surface static pressure data were obtained in the vicinity of the elevon hinge (lower surface), elevon gaps (upper and lower surface), elevon flipper doors and around the fin-rudder hinge. These pressures were obtained to determine the local flow fields in the areas. These tests were conducted at M=8, Re=1 and 3.6×10^6/ft. through entry angles-of-attack from 30° to 45°. These tests were conducted in two phases because the first phase (OH57A) resulted in excessive stabilization time for lee side pressures. The second series (OH57B) obtained valid pressure data at Re=1.6 for the lower orbiter surface only and all data at Re=3.6×10^6.

NOMENCLATURE

SYMBOL	PLOT SYMBOL	DEFINITION
C_{P_n}	CPN	pressure coefficient using measured model static pressure, freestream static pressure, and freestream dynamic pressure
$C_{P_{MAX}}$	CPMAX	maximum pressure coefficient, using total pressure across a normal shock, freestream static pressure, and freestream dynamic pressure
M_∞	MACH	test Mach no.
P_{STAG}	PT2	stagnation pressure downstream of a normal shock
P_{T_∞}	PO	test section total pressure
P_∞	P	test section static pressure
P_n	PN	model static pressure for orifice n
q_∞	Q	test section dynamic pressure
μ_∞	MU	test section air viscosity
ρ_∞	RHO	test section air density
R_e	RN/FT	test section Reynolds no. per foot
T_0	TO	test section total temperature
T_∞	T	test section static temperature
α	ALPHA	model angle-of-attack
α_S		angle of the strut sector
α_B		angle of the bent sting adapter
β	BETA	model yaw angle (+ YAW = $-\beta$)
ϕ	PHI	model roll angle

NOMENCLATURE (Concluded)

SYMBOL	PLOT SYMBOL	DEFINITION
L	L	model reference length (1293.3 in f.s.)
V_∞	V	freestream air velocity
δ_{e_L}	ELEVON	left elevon deflection angle
δ_{e_R}	RUDDER	right elevon deflection angle
δ_{BF}	BDFLAP	body flap deflection angle
δ_{SB}	SPDBRK	speed brake deflection angle
P_N/P	PN/P	ratio of model local pressure to freestream static pressure
P_N/P_{STAG}	PN/PT2	ratio of model local pressure to stagnation pressure behind a normal shock
$C_{P_N}/C_{P_{MAX}}$	CPN/MX	ratio of model local pressure coefficient to the stagnation pressure coefficient
X_o	XO	longitudinal orbiter station of pressure orifice; inches, full scale
Y_o	YO	lateral orbiter station of pressure orifice; inches, full scale
Z_o	ZO	vertical orbiter station of pressure orifice; inches, full scale

CONFIGURATIONS INVESTIGATED

The model was a 0.0175-scale simulation of the Rockwell International space shuttle orbiter built to the orbiter 102 lines. The model and its special 30° pre-bent sting (see Figure 2c) were designed and fabricated by Rockwell International. The sting was designed to minimize its interference on the orbiter upper wing surface.

The model was originally instrumented for OH57A with a total of 124 static pressure taps located on the lower left wing surface, upper right wing surface and left-hand vertical tail surface (see Table IV). Elevons, body flap and speed brake were all deflectable per the following schedules:

Elevons (δ_e) : $\pm 15^\circ$, $\pm 10^\circ$, $\pm 5^\circ$, 0°

Body Flap (δ_{BF}): -12.5°, 0°, 10°, 22.5°

Speed Brake (δ_{SB}): 0°, 49.3°

For the second entry (OH57B), the model was instrumented with 109 pressure taps (15 eliminated from the upper surface) and the speed brake fixed at 0° L.H. side, 49.3° R.H. side. This was done to increase the pressure tubing size on the orbiter lee side.

The following nomenclature was used to define the orbiter vehicle 102 configuration:

B_{75}	body
C_{16}	canopy
M_{52}	OMS pods
W_{131}	wing

CONFIGURATIONS INVESTIGATED (Concluded)

E_{64}	elevon
V_{27}	vertical stabilizer
R_{20}	rudder
F_{16}	body flap

Detailed model component dimensional data can be found in Table III of this report.

TEST FACILITY DESCRIPTION

The Arnold Engineering Development Center (AEDC) is an Air Force Facility located in Tullahoma, Tennessee. The tunnel used, Tunnel B, is located in the von Karman Facility portion of this center. Engineering and other technical operations in this tunnel are performed by contractor personnel of ARO, Inc.

Tunnel B is a closed-circuit hypersonic wind tunnel with a 50-inch-diameter test section. Two axisymmetric contoured nozzles are available to provide Mach numbers of 6 and 8 and the tunnel may be operated continuously over a range of pressure levels from 20 to 300 psia at $M_\infty = 6$, and 50 to 900 psia at $M_\infty = 8$, with air supplied by the VKF main compressor plant. Stagnation temperatures sufficient to avoid air liquefaction in the test section (up to 1350°R) are obtained through the use of a natural gas fired combustion heater. The entire tunnel (throat, nozzle, test section, and diffuser) is cooled by integral, external water jackets. The tunnel is equipped with a model injection system, which allows removal of the model from the test section while the tunnel remains in operation. A description of the tunnel may be found in Reference 3.

TEST PROCEDURE

In Tunnel B, the model is mounted on a sting support mechanism located in an installation tank directly underneath the tunnel test area. The installation tank is separated from the tunnel by a pair of fairing doors and a safety door. When closed, the fairing doors, except for a slot for the pitch sector, cover the opening to the tank and the safety door seals the tunnel from tank area. After the model is prepared for a data run, the personnel access door to the installation tank is closed, the tank is vented to the tunnel flow, and the safety and fairing doors are opened. Then the model is injected into the airstream. After the data run is completed, the model is returned into the tank from the tunnel. The tank is then vented to atmosphere with the tunnel running to allow access to the model in preparation for the next run. The sequence is repeated after each configuration change.

Since the Tunnel B standard pressure system was used for this test, sufficient pressure stabilization time was required each time data were obtained. This required waiting a few minutes each time the model was injected into the tunnel or whenever the model attitude was changed. Pressure stabilization time was also required each time the pressure system ported to read a new set of pressuses.

DATA REDUCTION

Measured pressures were converted to coefficients and ratioed to a maximum pressure coefficient using total pressure across a normal shock, freestream static pressure and freestream dynamic pressure. The following equations were used in the calculations:

$$CP_n = \frac{P_n - P_\infty}{q_\infty}$$

$$CP_{MAX} = \frac{P_{STAG} - P_\infty}{q_\infty}$$

where:

$$P_{T_2} = P_{STAG} = (P_{T_\infty}) \frac{\left[\dfrac{\frac{\gamma + 1}{2} M_\infty^2}{1 + \frac{\gamma - 1}{2} M_\infty^2}\right]^{\frac{\gamma}{\gamma - 1}}}{\left[\frac{2\gamma}{\gamma + 1} M_\infty^2 - \frac{\gamma - 1}{\gamma + 1}\right]^{\frac{1}{\gamma - 1}}}$$

$$\frac{CP_n}{CP_{MAX}} = \frac{P_n - P_\infty}{P_{STAG} - P_\infty} \quad \text{OR:}$$

$$\frac{CP_n}{CP_{MAX}} = \frac{\frac{P_n}{P_\infty} - 1}{\left[\dfrac{\left(\frac{\gamma + 1}{2} M_\infty^2\right)^{\frac{\gamma}{\gamma - 1}}}{\left(\frac{2\gamma}{\gamma + 1} M_\infty^2 - \frac{\gamma - 1}{\gamma + 1}\right)^{\frac{1}{\gamma - 1}}}\right] - 1}$$

TEST DATA QUALITY

Surface pressures on the model were measured with the standard Tunnel B pressure system. The system is equipped with 15-psid Wiancko FM transducers and 1-psid MKS Baratron transducers both of which were referenced to a near vacuum. For the purpose of estimating data uncertainties, the precision of these pressure measurements is estimated to be ±0.2% of reading or ±0.01 psi, whichever is greater, for the (model pressures #1 - 73) 15-psid transducers and ±0.2% of reading or ±0.0003 psi, whichever is greater, for the (model pressure #1, 74 - 124) 1-psid transducers.

The above pressure measurement uncertainties were combined with uncertainties in the tunnel parameters (Table I), using the Taylor-series method of error propagation, to estimate the uncertainty of the pressure coefficients, and these are presented below.

Uncertainty (±)

Maximum Measured Coefficient Value, Percent

	$Re_\infty = 1.0 \times 10^6$/ft.	$Re_\infty = 3.6 \times 10^6$/ft.	
Coefficient	Pressure #1 - 73	Pressure #74 - 124	Pressure #1 - 73
P	0.77	0.20	0.20
P/P_∞	2.52	1.61	1.61
P/P_{t_2}	1.96	1.37	1.37
C_p	2.21	1.50	1.42

The basic precision of the pressure coefficients was also computed using only the above pressure measurement uncertainties along with the

nominal test conditions, using the assumption that the freestream flow nonuniformity is a bias type of uncertainty which is constant for all test runs. These values therefore represent the data repeatability expected and are presented below.

Repeatability (±)

Measured Coefficient Value

	$Re_\infty = 1.0 \times 10^6$/ft.	$Re_\infty = 3.6 \times 10^6$/ft.	
Coefficient	Pressure #1 - 73	Pressure #74 - 124	Pressure #1 - 73
P	0.010	0.0003	0.010
P/P_∞	0.455	0.0035	0.115
P/P_{t_2}	0.005	0.00004	0.001
C_P	0.010	0.00008	0.003

The uncertainty in model angle-of-attack as determined from tunnel section calibrations and consideration of the possible errors in model deflection calculations is estimated to be ±0.1 degree.

REFERENCES

1. SAS/WTO/76-078, dated May 25, 1976, and Addenda 1, 2 and 3, Rockwell International Letter, "Model Design Requirements for the 92-0 .0175-Scale Pressure Model."

2. SD76-SH-0197, Rockwell Report, "Pretest Information for Tests of the 0.0175-Scale Space Shuttle Orbiter OV-102 Pressure Model 92-0 in the AEDC VKF Tunnel B (OH57)," by W. H. Dye and P. L. Lemoine, dated September 16, 1976.

3. Test Facilities Handbook (Tenth Edition), "von Karman Gas Dynamics Facility, Vol. 4," Arnold Engineering Development Center, May, 1974.

TABLE I. TEST CONDITIONS

TEST: OH57A and B (V41B-K3A)

Percent uncertainty (±) in parentheses

MACH NUMBER	REYNOLDS NUMBER (Per Foot x 10^6)	TOTAL PRESSURE (psia)	STATIC PRESSURE (psia)	DYNAMIC PRESSURE (psia)	TOTAL TEMPERATURE (^oF)
8.0 (.4)	1.0 (1.2)	210 (.1)	.021 (2.4)	.96 (1.7)	1260 (.4)
8.0 (.4)	3.6 (1.0)	850 (.1)	.087 (1.6)	3.90 (1.1)	1350 (.4)

COMMENTS: Model was instrumented for pressures only.

TABLE II.

JEV

TEST: ØH57 (AEDC V41B-K3A) — DATA SET/RUN NUMBER COLLATION SUMMARY — DATE: 3/8/77

DATA SET IDENTIFIER	CONFIGURATION	CODE	β	P_o	M	RN/FT	PORTS	δ_e	δ_{BF}	δ_{SB}	ANGLE OF ATTACK - α: 30	35	40	44	44.5
R4A()01	ØRBITER (92-Ø)	3315	0	210	7.94	1.0	2→6	-10	-12.5	49.3/0	52	54	51	53**	
02				210	7.94	1.0	2→6						55		
03				850	8.0	3.6	2→9				48	50	47	49	
04*		3355		850	8.0	3.6	ALL		0	0/0	6		7		
05		5515		210	7.94	1.0	2→6	0	-12.5	49.3/0	18	19	20	21	
06		5515		850	8.0	3.6	2→9		-12.5		23		22	24	
07		5555		850	8.0	3.6	All		0		10	11	12	13	
08				850	8.0	3.6	2→9				26	28	25	27	
09*				850	8.0	3.6	ALL			0/0	5	4	2		1
10				210	7.94	1.0	2→6			49.3/0	14	15	16	17	
11		5575		210	7.94	1.0	2→6		10		30	32	29	31	
12		6655		210	7.94	1.0	2→6	5	0		38	40	37	39	
13				210	7.94	1.0	2→6						41		
14				850	8.0	3.6	2→9				34	36	33	35	
15		6695		210	7.94	1.0	2→6		22.5		45		44	46	
16		6695		850	8.0	3.6	2→9		22.5		43		42		

TEST RUN NUMBERS

* ØH57 A; ALL OTHERS ØH57B

** RUN 53 DATA NOT AVAILABLE

()- L - LOWER WING SURFACE, D/S L01-L16
U - UPPER WING SURFACE, D/S U03-U09, U14
V - VERTICAL TAIL SURFACE, D/S V03, V04, V06-V09, V14, V16

α OR β

SCHEDULES

TABLE III. MODEL DIMENSIONAL DATA

MODEL COMPONENT: BODY - B_{75}

GENERAL DESCRIPTION: Orbiter vehicle 102-OML baseline

MODEL SCALE: 0.0175

DRAWING NUMBER: VL70-000003C VC70-000002B

DIMENSION:	FULL SCALE	MODEL SCALE
Ref. Length (IML: FWD Sta X_o = 238), In.	1290.3	22.58
Length (OML: FWD Sta X_o = 235), In.	1293.3	22.63
Max Width, in.	264.0	4.62
Max Depth (At X_o = 1464), In.	250.0	4.38
Fineness Ratio	4.899	4.899
Area		
Max Cross-Sectional	340.885	0.104

TABLE III. MODEL DIMENSIONAL DATA (Continued)

MODEL COMPONENT: CANOPY - C_{16}

GENERAL DESCRIPTION: OV-102 orbiter canopy

MODEL SCALE: 0.0175

DRAWING NUMBER: BCD V70-30-950-01 (VC70-000002B)

DIMENSIONS:	FULL SCALE	MODEL SCALE
Length, in (X_o 432.0798 to X_o 670)	237.920	4.164
Max Width, in. (@ X_o 594)	194.067	3.396
Max Depth, in. (@ X_o 492)	59.790	1.013
Fineness Ratio (length/max width)	1.226	1.226
Area		
Max Cross-Sectional @ X_o 520 in.^{2}	45.66	.01398

TABLE III. MODEL DIMENSIONAL DATA (Continued)

MODEL COMPONENT: OMS POD - M_{52}

GENERAL DESCRIPTION: OV-102 Baseline same @ M_{18}

MODEL SCALE: 0.0175

DRAWING NUMBER: VC70-000003C, VC70-000002B

DIMENSIONS:	FULL SCALE	MODEL SCALE
Length, (OMS FWD Sta X_o = 1311.0), in. includes RCS package	258.64	4.526
Max Width (At X_o = 1511), in.	135.55	2.372
Max Depth (At X_o = 1511), in.	74.36	1.301
Fineness Ratio	1.475	1.475
Area		
Max Cross-Sectional	59.091	0.018

TABLE III. MODEL DIMENSIONAL DATA (Continued)

MODEL COMPONENT: WING - W_{131}

GENERAL DESCRIPTION: OV-102 baseline OML configuration. (NOTE: Includes wing elevon stubs. Dihedral angle is along trailing edge of wing. Geometric twist = 0°

MODEL SCALE: 0.0175 DRAWING NO.: VC70-000002B

DIMENSIONS:	FULL SCALE	MODEL SCALE
TOTAL DATA		
Area (Theo.), ft^2		
Planform	2690.0	0.824
Span (Theo.), in.	935.68	16.392
Aspect Ratio	2.265	2.265
Rate of Taper	1.177	1.177
Taper Ratio	0.200	0.200
Dihedral Angle, degrees	3.500	3.500
Incidence Angle, degrees	0.500	0.500
Aerodynamic Twist, degrees		
Sweep Back Angles, degrees		
Leading Edge	45.000	45.000
Trailing Edge	- 10.056	- 10.056
0.25 Element Line	35.209	35.209
Chords:		
Root (Theo.) B.P.0.0.	689.24	12.062
Tip, (Theo.) B.P. 468.34	137.85	2.412
MAC	474.81	8.309
Fus. Sta. of .25 MAC	1136.83	19.895
W.P. of .25 MAC	290.58	5.085
B.L. of .25 MAC	182.13	3.187
EXPOSED DATA		
Area (Theo.), ft^2	1721.60	0.5272
Span, (Theo.), in. BP111.8	713.003	12.478
Aspect Ratio	2.051	2.051
Taper Ratio	0.193	0.193
Chords		
Root BP 111.8	557.56	9.757
Tip 1.00 b/2	137.85	2.412
MAC	389.92	6.824
Fus. Sta. of .25 MAC	1187.71	20.785
W.P. of .25 MAC	295.27	5.167
B.L. of .25 MAC	254.23	4.449
Airfoil Section (Rockwell Mod NASA) XXXX-64		
Root t/C =	0.1137	0.1137
Tip t/C =	0.120	0.120
Data for (1) of (2) Sides		
Leading Edge Cuff		
Planform Area, ft^2	145.4	.0445
Leading Edge Intersects Fus M.L. @ Sta	427.75	7.486
Leading Edge Intersects Wing @ Sta	1084.00	18.97

TABLE III. MODEL DIMENSIONAL DATA (Continued)

MODEL COMPONENT: Elevon - E_{64}

GENERAL DESCRIPTION: Elevon for OV-102 configuration. Hingeline at X_o = 1387, elevon split line X_o = 312.5, 6.0" tips with 8° beveled edges, and centerbodies same as E_{63} but includes bevel tip.

MODEL SCALE: 0.0175

DRAWING NUMBER: VC70-000002B

DIMENSIONS:	FULL SCALE	MODEL SCALE
Ref. Area, Ft^2	210.0	0.643
Area, Ft^2	206.57	0.0633
Span (equivalent), In.	346.44	6.063
Inb'd equivalent chord, In.	116.50	2.039
Outb'd equivalent chord, In.	55.219	0.966
Ratio movable surface chord/ total surface chord		
At Inb'd equiv. chord	.2137	.2137
At Outb'd equiv. chord	0.3999	0.3999
Sweep Back Angles, degrees		
Leading Edge	0.0	0.0
Trailing Edge	- 10.056	- 10.056
Hingeline	0.0	0.0
Area Moment (Product of area & $\bar{c}$)	1540.74	0.00826
Mean Aerodynamic Chord, In.	89.5	1.566
Hingeline dihedral (origin at Z_o = 261.3509), deg.	5.229	5.229

TABLE III. MODEL DIMENSIONAL DATA (Continued)

MODEL COMPONENT: VERTICAL - V_{27}

GENERAL DESCRIPTION: Basic orbiter OV-102 outer mold line.

MODEL SCALE: 0.0175

DRAWING NUMBER: VC70-000002B

DIMENSIONS:	FULL SCALE	MODEL SCALE
TOTAL DATA		
Area (Theo.), ft^2		
Planform	413.251	0.127
Span (Theo.), in.	315.72	5.350
Aspect Ratio	1.675	1.675
Rate of Taper	0.507	0.507
Taper Ratio	0.404	0.404
Sweep Back Angles, degrees		
Leading Edge	45.000	45.000
Trailing Edge	26.25	26.25
0.25 Element Line	41.13	41.13
Chords:		
Root (Theo.) WP Z_o = 500	268.50	4.699
Tip (Theo.) WP Z_o = 815.72	108.47	1.898
MAC	199.81	3.497
Fus. Sta. of .25 MAC	1463.35	25.609
W.P. of .25 MAC	635.52	11.122
B.L. of .25 MAC	0.0	0.0
Airfoil Section 10° Sym 60-40 Wedge, t/c	13.43	13.43
Leading Wedge Angle, deg.	10.00	10.00
Trailing Wedge Angle, deg.	14.92	14.92
Leading Edge Radius - %C	1.47	1.47
Void Area, Ft^2	31.713	.0097
Covered Area, Ft^2	9.11	0.0028
Blanketed Area, Ft^2	0.0	0.0

TABLE III. MODEL DIMENSIONAL DATA (Continued)

MODEL COMPONENT: RUDDER - R_{20}

GENERAL DESCRIPTION: Orbiter vehicle 102 baseline OML rudder

MODEL SCALE: 0.0175

DRAWING NUMBER: VC70-000002B, MD-V70-20-100.2

DIMENSIONS:	FULL SCALE	MODEL SCALE
Area, Ft^2	98.09	0.030
Span (equivalent), In.	199.09	3.484
Inb'd equivalent chord, In. (WP = Z_o 580.26)	91.13	1.595
Outb'd equivalent chord, In. (WP = Z_o 779.35)	50.76	0.888
Ratio movable surface chord/ total surface chord		
At Inb'd equiv. chord	0.400	0.400
At Outb'd equiv. chord	0.400	0.400
Sweep Back Angles, degrees		
Leading Edge	34.833	34.833
Trailing Edge	26.249	26.249
Hingeline	34.833	34.833
Area Moment (Product of Area & $\bar{c}$), Ft^3	593.889	0.032
Mean Aerodynamic Chord, In.	72.840	1.275

TABLE III. MODEL DIMENSIONAL DATA (Concluded)

MODEL COMPONENT: BODY FLAP - F_{16}

GENERAL DESCRIPTION: Orbiter OV-102 baseline OML at X_o = 1532, Z_o = 287

MODEL SCALE: 0.0175

DRAWING NUMBER: VC72-000003C VC70-000002B

DIMENSIONS:	FULL SCALE	MODEL SCALE
Length (X_o = 1525.5 to X_o = 1613), In.	87.50	1.531
Max Width (At L.E., X_o = 1525.5), In.	256.00	4.480
Max Depth (X_o = 1532), In.	19.798	0.346
Fineness Ratio		
Area, Ft^2		
Max Cross-Sectional (At H.L.)	35.196	0.011
Planform	135.75	0.041
Base (X_o = 1613)	4.89	0.0015

TABLE IV. PRESSURE TAP LOCATIONS

a. OH57A, Runs 1 - 7

TAP NO.	X_o	Y_o	Z_o	COMMENTS
1	1379.029	116.00	--	Lower Wing Surface
2	1379.029	129.429		
3	1398.40	129.429		
4	1379.029	140.514		
5	1398.40	140.514		
6	1379.029	163.943		
7	1190.40	187.314		
8	1240.686			
9	1290.914			
10	1341.20			
11	1353.771			
12	1375.60			
13	1379.029			
14	1398.40			
15	1416.571			
16	1441.714			
17	1466.857			
18	1379.029	210.743		
19	1379.029	234.171		
20	1379.029	257.60		
21	1152.743	281.029		
22	1188.629			
23	1224.457			
24	1260.286			
25	1296.171			
26	1332.00			
27	1358.914			
28	1375.60			
29	1379.029			
30	1398.40			
31	1421.657			
32	1439.60			
33	1457.486			
34	1466.457			
35	1379.029	292.743		
36	1379.029	304.40		
37	1398.40	304.40		
38	1379.029	311.20		
39	1379.029	320.80		
40	1398.40			
41	1421.314			

TABLE IV. PRESSURE TAP LOCATIONS (Continued)

a. CH57A, Runs 1 - 7

TAP NO.	X_o	Y_o	Z_o	COMMENTS
42	1444.229	320.80	--	Lower Wing Surface
43	1375.60	327.829		
44	1379.029			
45	1398.40			
46	1421.314			
47	1444.229			
48	1379.029	351.257		
49	1379.029	374.686		
50	1256.229	398.114		
51	1278.286			
52	1301.429			
53	1322.343			
54	1344.40			
55	1366.457			
56	1375.60			
57	1379.029			
58	1398.40			
59	1410.514			
60	1432.571			
61	1443.60			
62	1379.029	421.486		
63	1343.086	444.914		
64	1358.857			
65	1375.60			
66	1379.029			
67	1398.40			
68	1414.171			
69	1430.00			
70	1379.029	456.629		
71	1398.40			
72	1413.314			
73	1379.029	468.343		Lower Wing Tip
74	1379.029	468.343		Upper Wing Tip
75	1365.029	115.429		Upper Wing Surface
76	1365.029	140.514		
77	1410.00	140.514		
78	1455.143	140.514		
79	1481.20	140.514		
80	1365.029	187.314		
81	1410.00	187.314		
82	1365.029	234.171		

TABLE IV. PRESSURE TAP LOCATIONS (Continued)

a. OH57A, Runs 1 - 7

TAP NO.	X_o	Y_o	Z_o	COMMENTS
83	1410.00	234.171	--	Upper Wing Surface
84	1473.371	234.171		
85	1365.029	281.029		
86	1410.00			
87	1439.60			
88	1466.457			
89	1365.029	311.20		
90	1365.029	327.829		
91	1410.00			
92	1436.686			
93	1459.429			
94	1365.029	374.686		
95	1410.00			
96	1433.943			
97	1452.571			
98	1365.029	398.114		
99	1410.00			
100	1432.686			
101	1449.143			
102	1365.029	421.486		
103	1410.00	421.486		
104	1365.029	444.914		
105	1410.00			
106	1437.886			
107	1365.029	456.289'		
108	1410.00			
109	1425.657			
110	1438.057			
111	1504.229	--	597.886	Vertical Tail Surface
112	1524.00		625.943	
113	1567.943		688.914	
114	1620.686		688.914	
115	1556.343		751.886	
116	1584.686			
117	1604.743			
118	1611.886			
119	1627.20			
120	1655.543			
121	1642.629		796.80	
122	1453.543		625.943	
123	1587.257		625.943	
124	1481.086		562.971	

TABLE IV. PRESSURE TAP LOCATIONS (Continued)

b. OH57B, Runs 10 - 55

TAP NO.	X_o	Y_o	Z_o	COMMENTS
1	1379.029	116.00	--	Lower Wing Surface
2	1379.029	129.429		
3	1398.40	129.429		
4	1379.029	140.514		
5	1398.40	140.514		
6	1379.029	163.943		
7	1190.40	187.314		
8	1240.686			
9	1290.914			
10	1341.20			
11	1353.771			
12	1375.60			
13	1379.029			
14	1398.40			
15	1416.571			
16	1441.714			
17	1466.857			
18	1379.029	210.743		
19	1379.029	234.171		
20	1379.029	257.60		
21	1152.743	281.029		
22	1188.629			
23	1224.457			
24	1260.286			
25	1296.171			
26	1332.00			
27	1358.914			
28	1375.60			
29	1379.029			
30	1398.40			
31	1421.657			
32	1439.60			
33	1457.486			
34	1466.457			
35	1379.029	292.743		
36	1379.029	304.40		
37	1398.40	304.40		
38	1379.029	311.20		
39	1379.029	320.80		
40	1398.40			
41	1421.314			

TABLE IV. PRESSURE TAP LOCATIONS (Continued)

b. OH57B, Runs 10 - 55

TAP NO.	X_o	Y_o	Z_o	COMMENTS
42	1444.229	320.80	--	Lower Wing Surface
43	1375.60	327.829		
44	1379.029			
45	1398.40			
46	1421.314			
47	1444.229			
48	1379.029	351.257		
49	1379.029	374.686		
50	1256.229	398.114		
51	1278.286			
52	1301.429			
53	1322.343			
54	1344.40			
55	1366.457			
56	1375.60			
57	1379.029			
58	1398.40			
59	1410.514			
60	1432.571			
61	1443.60			
62	1379.029	421.486		
63	1343.086	444.914		
64	1358.857			
65	1375.60			
66	1379.029			
67	1398.40			
68	1414.171			
69	1430.00			
70	1379.029	456.629		
71	1398.40			
72	1413.314			
73	1379.029	468.343		Lower Wing Tip
74	1379.029	468.343		Upper Wing Tip
75	1365.029	115.429		Upper Wing Surface
76	1365.029	140.514		
77	1411.43	140.514		
80	1365.029	187.314		
81	1411.43	187.314		
82	1365.029	234.171		
83	1411.43	234.171		

TABLE IV. PRESSURE TAP LOCATIONS (Concluded)

b. OH57B, Runs 10 - 55

TAP NO.	X_o	Y_o	Z_o	COMMENTS
85	1365.029	281.029	--	Upper Wing Surface
86	1411.43	281.029		
89	1365.029	311.20		
90	1365.029	327.829		
91	1411.43			
92	1436.686			
93	1459.429			
94	1365.029	374.686		
95	1411.43	374.686		
98	1365.029	398.114		
99	1411.43	398.114		
103	1411.43	421.486		
104	1365.029	444.914		
107	1365.029	456.289		
108	1411.43	456.289		
111	1495.67	--	597.886	Vertical Tail Surface
112	1515.43		625.943	
113	1559.37		688.914	
114	1620.686		688.914	
115	1556.343		751.886	
116	1584.686			
118	1603.31			
119	1627.20			
120	1655.543			
121	1642.629		796.80	
122	1453.543		625.943	
123	1587.257		625.943	
124	1481.086		562.971	

Notes:

1. Positive directions of force coefficients, moment coefficients, and angles are indicated by arrows
2. For clarity, origins of wind and stability axes have been displaced from the center of gravity

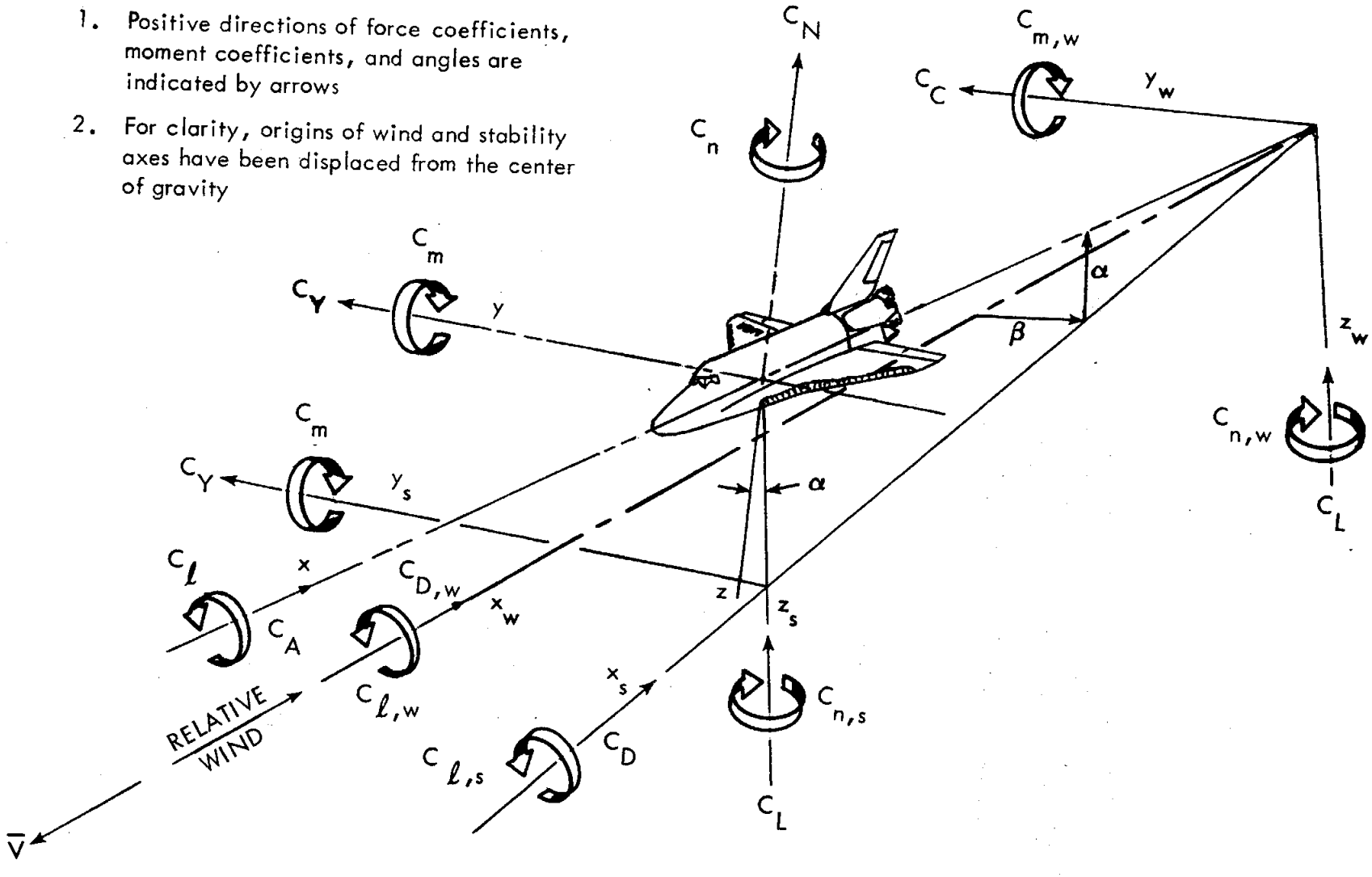

a. Axis Systems

Figure 1. Axis systems and sign conventions.

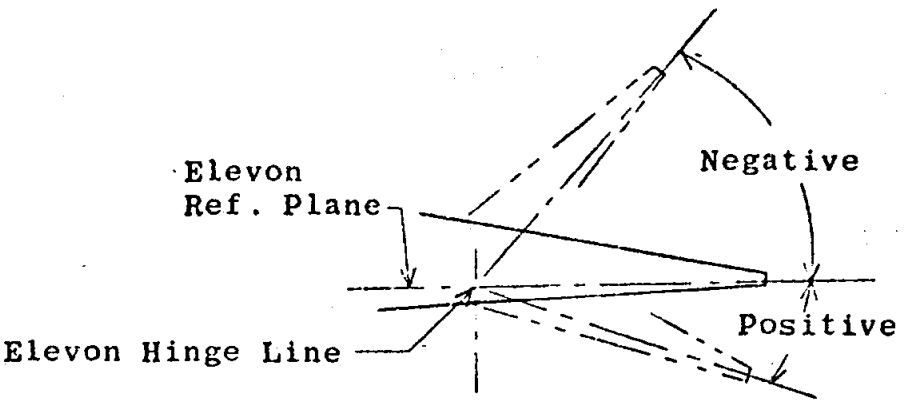

Elevon Deflections

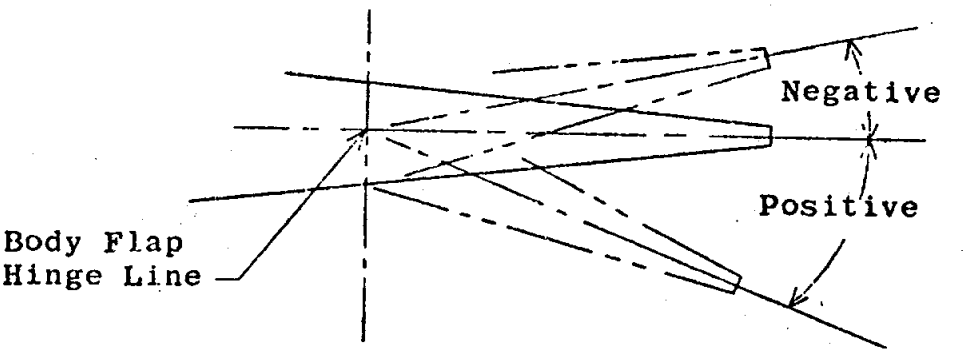

Body Flap Deflections

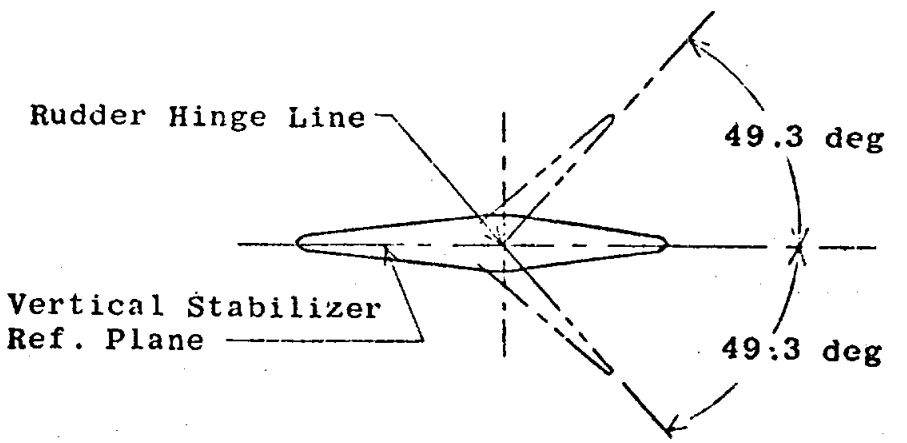

Speed Brake Deflections

b. Control Surface Deflection Sign Conventions
Figure 1. Continued.

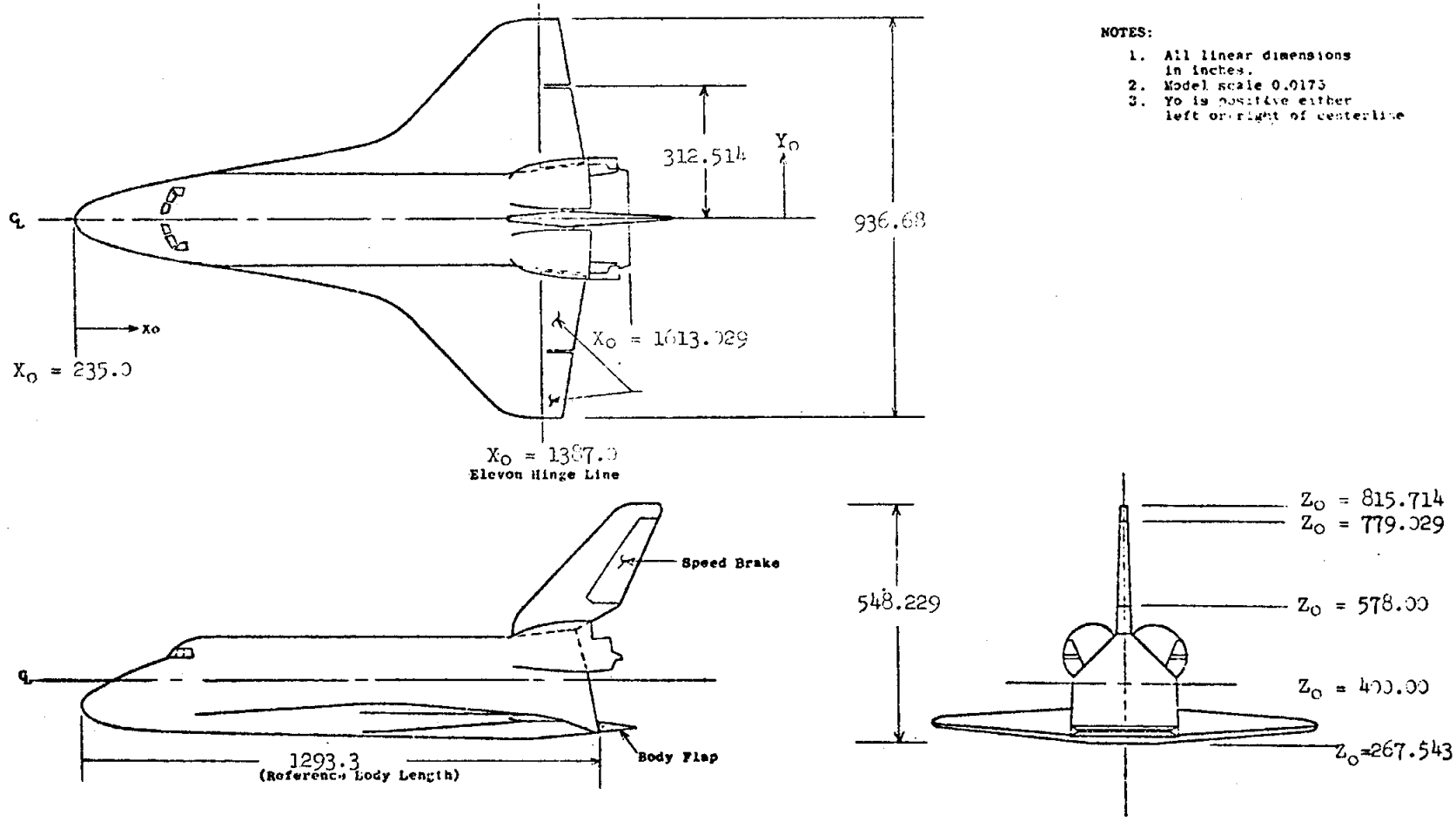

a. Model Details
Figure 2. Model sketches.

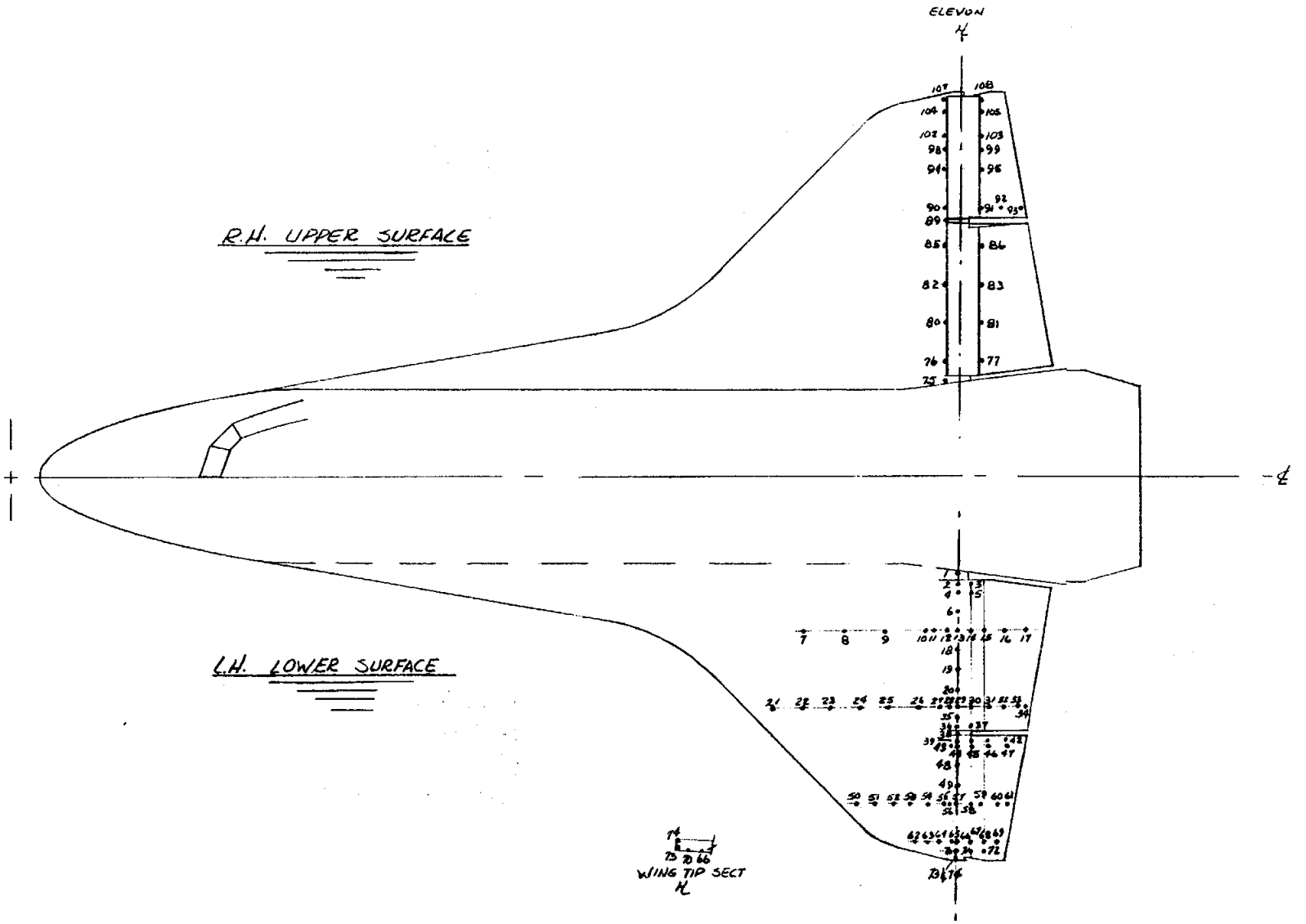

b. Wing Pressure Tap Locations
Figure 2. Continued.

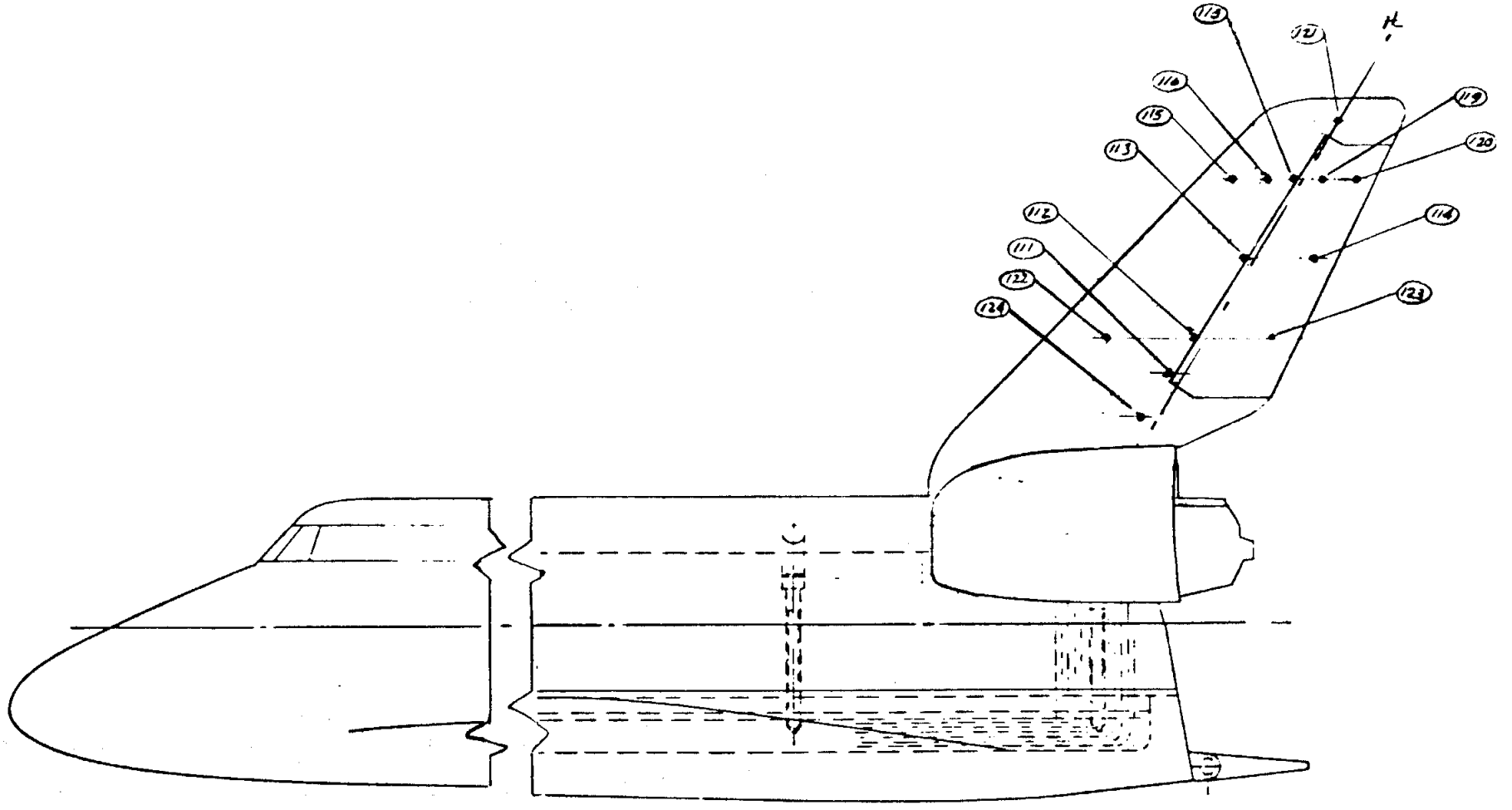

c. Vertical Tail Pressure Tap Locations
Figure 2. Continued.

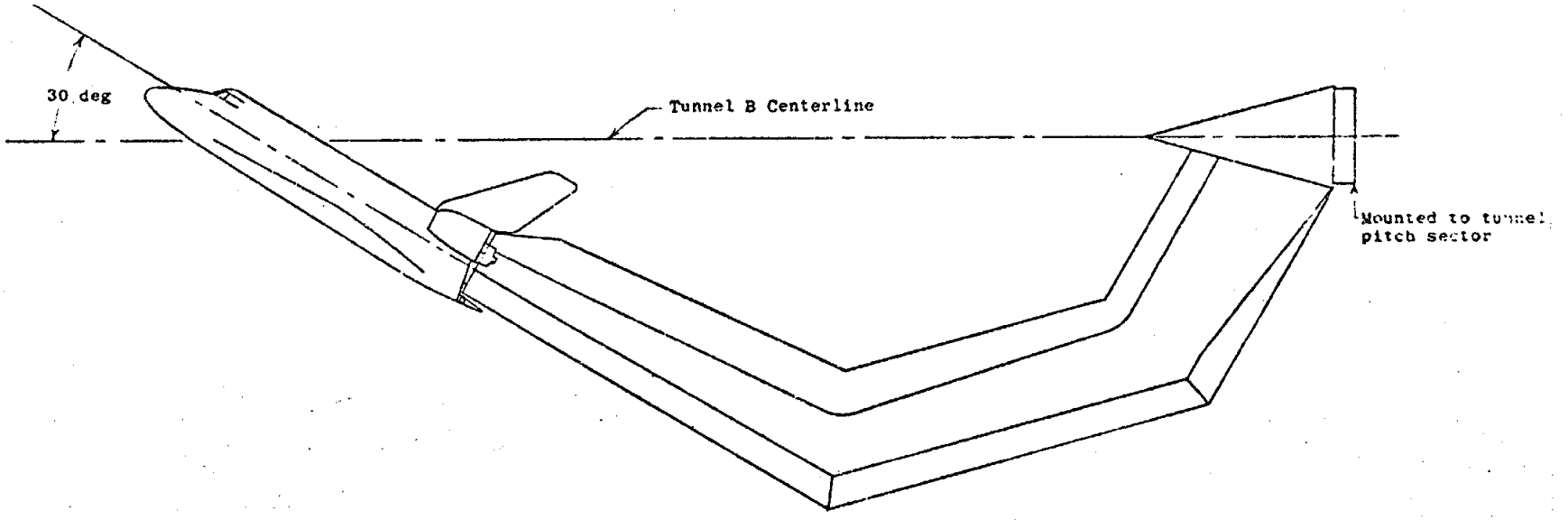

d. Model and 30° Prebend Sting
Figure 2. Concluded.

a. Model in AEDC Tunnel B Lower Chamber
Figure 3. Model photographs.

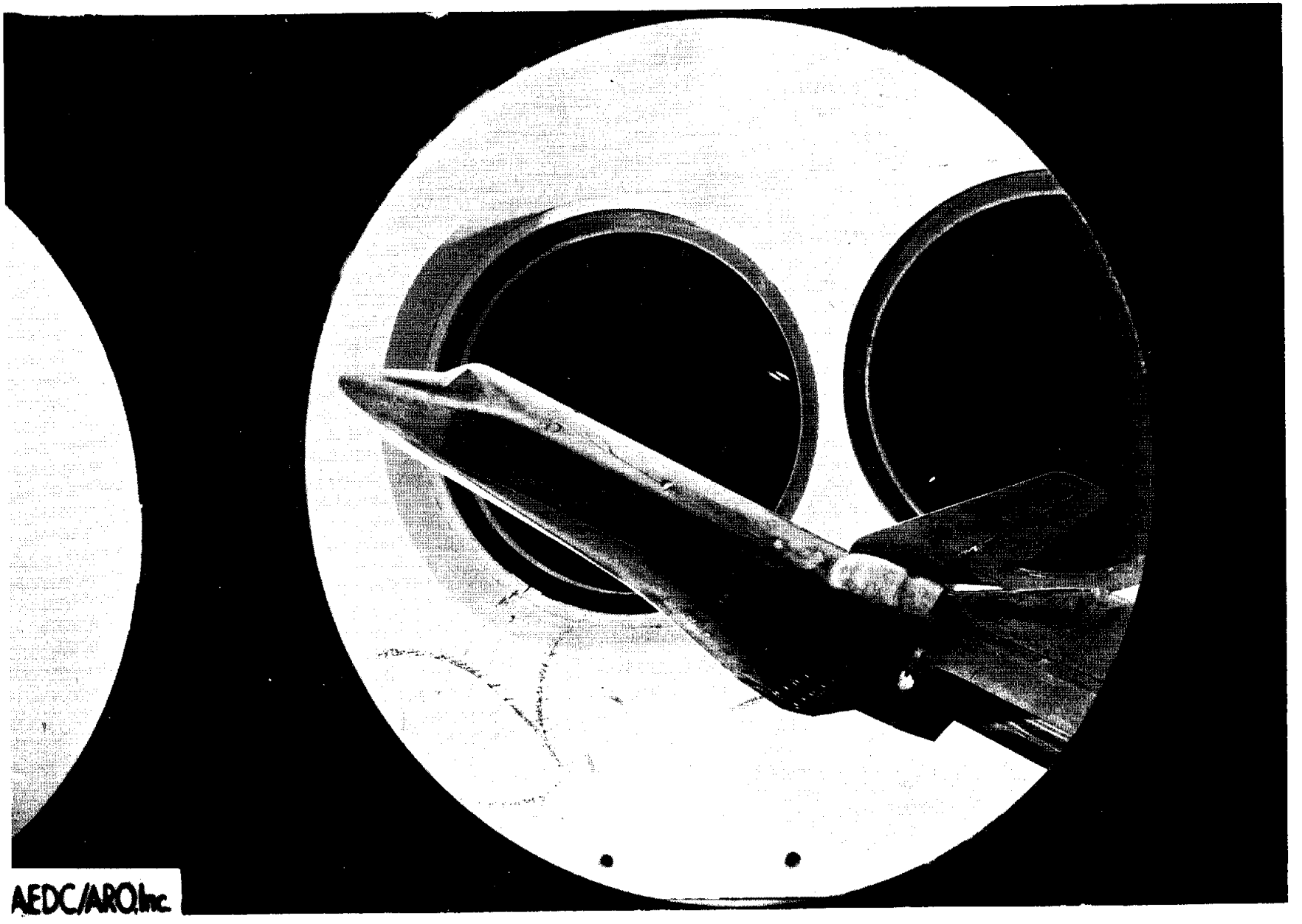

b. Model in AEDC Tunnel B Test Section
Figure 3. Concluded.

APPENDIX

TABULATED SOURCE DATA

OH57,AEDC V41B-K3A, MODEL 92-0, LH WING LWR SURF (R4AL01)

L.H. WING LWR SURF

PARAMETRIC DATA

MACH = 7.940 PO = 210.0 RN/FT = 1.000 ELEVON = -10.00
BDFLAP = -12.50 SPDBRK = 49.30 RUDDER = .0000

TEST CONDITIONS

RUN NUMBER	ALPHA DEG.	BETA DEG.	PO PSIA	TO DEG. R	P PSIA	T DEG. R	Q PSIA	V FT/SEC	CPMAX	PT2 PSIA	RHO SLUGS /FT3	MU LB-SEC /FT2
52	30.01	.0000	209.6	1269.	.2255-01	93.25	.9951	3760.	1.827	1.841	.2027-04	.7504-07

RUN NUMBER	RN/FT /FT X 106
52	1.016

TEST DATA

RUN NUMBER	YO	XO	T/C NO	PN PSIA	PN/P	PN/PT2	CPN	CPN/MX
52	116.00	1379.0	1.0000	.4495	19.93	.2442	.4291	.2348
52	129.43	1379.0	2.0000	.4510	20.00	.2450	.4305	.2356
52	129.43	1398.4	3.0000	.1879	8.335	.1021	.1662	.9097-01
52	140.51	1379.0	4.0000	.4628	20.53	.2514	.4425	.2422
52	140.51	1398.4	5.0000	.2332	10.34	.1267	.2117	.1159
52	163.94	1379.0	6.0000	.4575	20.29	.2486	.4371	.2392
52	187.31	1190.4	7.0000	.5976	26.50	.3246	.5779	.3163
52	187.31	1240.7	8.0000	.5978	26.51	.3248	.5781	.3164
52	187.31	1290.9	9.0000	.5801	25.73	.3152	.5603	.3067
52	187.31	1341.2	10.000	.5365	23.79	.2915	.5165	.2827
52	187.31	1353.8	11.000	.5155	22.86	.2801	.4954	.2711
52	187.31	1375.6	12.000	.4806	21.32	.2611	.4604	.2520
52	187.31	1379.0	13.000	.4796	21.23	.2600	.4583	.2508
52	187.31	1398.4	14.000	.2460	10.91	.1336	.2246	.1229
52	187.31	1416.6	15.000	.2013	8.926	.1093	.1796	.9829-01
52	187.31	1441.7	16.000	.1526	6.769	.8291-01	.1307	.7154-01
52	187.31	1466.9	17.000	.1302	5.789	.7074-01	.1085	.5939-01
52	210.74	1379.0	18.000	.4727	21.01	.2568	.4535	.2482
52	234.17	1379.0	19.000	.5165	22.96	.2806	.4976	.2723
52	257.60	1379.0	20.000	.5361	23.83	.2913	.5174	.2832
52	281.03	1152.7	21.000	.7948	35.33	.4318	.7780	.4258

OH57,AEDC V41B-K3A, MODEL 92-0, LH WING LWR SURF (R4AL01)

RUN NUMBER	YO	XO	T/C NO	PN PSIA	PN/P	PN/PT2	CPN	CPN/MX
52	281.03	1188.6	22.000	.7023	31.22	.3815	.6848	.3748
52	281.03	1224.5	23.000	.6752	30.02	.3668	.6575	.3598
52	281.03	1260.3	24.000	.6716	29.86	.3649	.6539	.3579
52	281.03	1296.2	25.000	.6470	28.76	.3515	.6291	.3443
52	281.03	1332.0	26.000	.6197	27.55	.3367	.6016	.3293
52	281.03	1358.9	27.000	.5792	25.75	.3146	.5608	.3069
52	281.03	1375.6	28.000	.5508	24.49	.2993	.5322	.2913
52	281.03	1379.0	29.000	.5556	24.70	.3019	.5371	.2939
52	281.03	1398.4	30.000	.2455	10.91	.1333	.2246	.1229
52	281.03	1421.7	31.000	.1785	7.935	.9697-01	.1571	.8600-01
52	281.03	1439.6	32.000	.1427	6.346	.7755-01	.1211	.6629-01
52	281.03	1457.5	33.000	.1123	4.974	.6102-01	.9005-01	.4928-01
52	281.03	1466.5	34.000	.1059	4.689	.5752-01	.8360-01	.4575-01
52	292.74	1379.0	35.000	.5758	25.50	.3128	.5552	.3039
52	304.40	1379.0	36.000	.5653	25.03	.3071	.5446	.2981
52	304.40	1398.4	37.000	.2176	9.638	.1182	.1957	.1071
52	311.20	1379.0	38.000	.5568	24.66	.3025	.5361	.2934
52	320.80	1379.0	39.000	.5662	25.08	.3076	.5456	.2986
52	320.80	1398.4	40.000	.2223	9.845	.1208	.2004	.1097
52	320.80	1421.3	41.000	.1822	8.067	.9896-01	.1601	.8764-01
52	320.80	1444.2	42.000	.1510	6.687	.8203-01	.1289	.7052-01
52	327.83	1375.6	43.000	.5960	26.40	.3238	.5755	.3149
52	327.83	1379.0	44.000	.5745	25.44	.3121	.5539	.3031
52	327.83	1398.4	45.000	.2441	10.81	.1326	.2223	.1217
52	327.83	1421.3	46.000	.1735	7.682	.9423-01	.1514	.8286-01
52	327.83	1444.2	47.000	.1424	6.306	.7735-01	.1202	.6580-01
52	351.26	1379.0	48.000	.5920	26.22	.3216	.5714	.3127
52	374.69	1379.0	49.000	.6301	27.85	.3423	.6084	.3330
52	398.11	1256.2	50.000	.8763	38.73	.4761	.8550	.4680
52	398.11	1278.3	51.000	.8665	38.30	.4707	.8452	.4626
52	398.11	1301.4	52.000	.7784	34.41	.4229	.7570	.4143
52	398.11	1322.3	53.000	.7706	34.06	.4187	.7492	.4100
52	398.11	1344.4	54.000	.7351	32.49	.3994	.7136	.3906
52	398.11	1366.5	55.000	.6997	30.93	.3801	.6782	.3712
52	398.11	1375.6	56.000	.6770	29.93	.3678	.6555	.3587
52	398.11	1379.0	57.000	.6517	28.81	.3541	.6301	.3449
52	398.11	1398.4	58.000	.2808	12.41	.1526	.2586	.1415
52	398.11	1410.5	59.000	.2369	10.47	.1287	.2146	.1174
52	398.11	1432.6	60.000	.1863	8.237	.1012	.1640	.8975-01
52	398.11	1443.6	61.000	.1541	6.810	.8370-01	.1317	.7206-01
52	421.49	1379.0	62.000	.6610	29.22	.3591	.6394	.3500
52	444.91	1343.1	63.000	.7232	31.97	.3929	.7017	.3840
52	444.91	1358.9	64.000	.7004	30.96	.3805	.6789	.3715

OH57, AEDC V41B-K3A, MODEL 92-0 AERO HEATING PRESSURE DATA

OH57,AEDC V41B-K3A, MODEL 92-0, LH WING LWR SURF

(R4AL01)

RUN NUMBER	YO	XO	T/C NO	PN PSIA	PN/P	PN/PT2	CPN	CPN/MX
52	444.91	1375.6	65.000	.6803	30.09	.3696	.6591	.3607
52	444.91	1379.0	66.000	.6351	28.08	.3450	.6137	.3359
52	444.91	1398.4	67.000	.3320	14.68	.1803	.3100	.1697
52	444.91	1414.2	68.000	.2536	11.22	.1378	.2315	.1267
52	444.91	1430.0	69.000	.2014	8.905	.1094	.1791	.9803-01
52	456.63	1379.0	70.000	.6222	27.52	.3380	.6009	.3289
52	456.63	1398.4	71.000	.2843	12.57	.1545	.2623	.1435
52	456.63	1413.3	72.000	.2321	10.26	.1261	.2099	.1149
52	468.34	1379.0	73.000	.4366	19.31	.2372	.4149	.2271

OH57,AEDC V41B-K3A, MODEL 92-0, LH WING LWR SURF (R4AL01)

L.H. WING LWR SURF

PARAMETRIC DATA

MACH = 7.940 PO = 210.0 RN/FT = 1.000 ELEVON = -10.00
BDFLAP = -12.50 SPDBRK = 49.30 RUDDER = .0000

TEST CONDITIONS

RUN NUMBER	ALPHA DEG.	BETA DEG.	PO PSIA	TO DEG. R	P PSIA	T DEG. R	Q PSIA	V FT/SEC	CPMAX	PT2 PSIA	RHO SLUGS /FT3	MU LB-SEC /FT2
54	35.00	.0000	210.1	1262.	.2260-01	92.73	.9974	3749.	1.827	1.845	.2043-04	.7462-07

RUN NUMBER	RN/FT /FT X 106
54	1.027

TEST DATA

RUN NUMBER	YO	XO	T/C NO	PN PSIA	PN/P	PN/PT2	CPN	CPN/MX
54	116.00	1379.0	1.0000	.5882	26.03	.3188	.5671	.3104
54	129.43	1379.0	2.0000	.5902	26.11	.3199	.5690	.3114
54	129.43	1398.4	3.0000	.2528	11.19	.1370	.2308	.1263
54	140.51	1379.0	4.0000	.6044	26.74	.3276	.5833	.3192
54	140.51	1398.4	5.0000	.3098	13.71	.1679	.2880	.1576
54	163.94	1379.0	6.0000	.6000	26.55	.3252	.5789	.3168
54	187.31	1190.4	7.0000	.7552	33.41	.4093	.7345	.4020
54	187.31	1240.7	8.0000	.7591	33.59	.4114	.7384	.4041
54	187.31	1290.9	9.0000	.7418	32.82	.4020	.7210	.3946
54	187.31	1341.2	10.000	.6961	30.80	.3773	.6753	.3696
54	187.31	1353.8	11.000	.6717	29.72	.3640	.6508	.3562
54	187.31	1375.6	12.000	.6303	27.89	.3416	.6092	.3334
54	187.31	1379.0	13.000	.6298	27.82	.3408	.6077	.3326
54	187.31	1398.4	14.000	.3240	14.34	.1756	.3022	.1654
54	187.31	1416.6	15.000	.2754	12.19	.1493	.2535	.1387
54	187.31	1441.7	16.000	.2205	9.756	.1195	.1984	.1086
54	187.31	1466.9	17.000	.1798	7.964	.9746-01	.1578	.8636-01
54	210.74	1379.0	18.000	.6219	27.54	.3370	.6014	.3291
54	234.17	1379.0	19.000	.6748	29.88	.3657	.6545	.3582
54	257.60	1379.0	20.000	.6894	30.53	.3737	.6692	.3662
54	281.03	1152.7	21.000	1.045	46.30	.5666	1.027	.5618

OH57,AEDC V41B-K3A, MODEL 92-0, LH WING LWR SURF (R4AL01)

RUN NUMBER	YO	XO	T/C NO	PN PSIA	PN/P	PN/PT2	CPN	CPN/MX
54	281.03	1188.6	22.000	.8918	39.49	.4833	.8723	.4774
54	281.03	1224.5	23.000	.8583	38.01	.4652	.8387	.4590
54	281.03	1260.3	24.000	.8539	37.81	.4628	.8342	.4566
54	281.03	1296.2	25.000	.8372	37.08	.4537	.8175	.4474
54	281.03	1332.0	26.000	.8043	35.62	.4359	.7844	.4293
54	281.03	1358.9	27.000	.7532	33.36	.4082	.7332	.4013
54	281.03	1375.6	28.000	.7187	31.83	.3895	.6986	.3823
54	281.03	1379.0	29.000	.7254	32.13	.3932	.7053	.3860
54	281.03	1398.4	30.000	.3348	14.83	.1815	.3134	.1715
54	281.03	1421.7	31.000	.2587	11.46	.1402	.2369	.1297
54	281.03	1439.6	32.000	.2171	9.614	.1177	.1952	.1068
54	281.03	1457.5	33.000	.1782	7.899	.9658-01	.1563	.8556-01
54	281.03	1466.5	34.000	.1615	7.161	.8755-01	.1396	.7641-01
54	292.74	1379.0	35.000	.7453	33.04	.4039	.7259	.3973
54	304.40	1379.0	36.000	.7274	32.24	.3942	.7080	.3875
54	304.40	1398.4	37.000	.3018	13.38	.1636	.2805	.1535
54	311.20	1379.0	38.000	.7185	31.85	.3894	.6990	.3826
54	320.80	1379.0	39.000	.7299	32.35	.3956	.7105	.3888
54	320.80	1398.4	40.000	.3036	13.46	.1645	.2823	.1545
54	320.80	1421.3	41.000	.2645	11.73	.1434	.2430	.1330
54	320.80	1444.2	42.000	.2250	9.972	.1219	.2033	.1113
54	327.83	1375.6	43.000	.7656	33.94	.4150	.7464	.4085
54	327.83	1379.0	44.000	.7396	32.78	.4008	.7202	.3942
54	327.83	1398.4	45.000	.3371	14.94	.1827	.3159	.1729
54	327.83	1421.3	46.000	.2494	11.06	.1352	.2279	.1247
54	327.83	1444.2	47.000	.2162	9.583	.1172	.1945	.1064
54	351.26	1379.0	48.000	.7558	33.50	.4096	.7365	.4031
54	374.69	1379.0	49.000	.7914	35.15	.4289	.7738	.4235
54	398.11	1256.2	50.000	1.049	46.58	.5684	1.033	.5652
54	398.11	1278.3	51.000	1.043	46.33	.5654	1.027	.5622
54	398.11	1301.4	52.000	.9502	42.20	.5150	.9336	.5110
54	398.11	1322.3	53.000	.9351	41.53	.5068	.9185	.5027
54	398.11	1344.4	54.000	.8936	39.69	.4843	.8766	.4798
54	398.11	1366.5	55.000	.8637	38.36	.4681	.8466	.4633
54	398.11	1375.6	56.000	.8358	37.12	.4530	.8185	.4479
54	398.11	1379.0	57.000	.8126	36.09	.4404	.7951	.4352
54	398.11	1398.4	58.000	.3728	16.56	.2020	.3525	.1929
54	398.11	1410.5	59.000	.3140	13.95	.1702	.2934	.1606
54	398.11	1432.6	60.000	.2498	11.10	.1354	.2288	.1252
54	398.11	1443.6	61.000	.2117	9.402	.1147	.1904	.1042
54	421.49	1379.0	62.000	.7990	35.49	.4331	.7815	.4277
54	444.91	1343.1	63.000	.8680	38.55	.4705	.8509	.4657
54	444.91	1358.9	64.000	.8395	37.29	.4550	.8223	.4500

OH57,AEDC V41B-K3A, MODEL 92-0, LH WING LWR SURF (R4AL01)

RUN NUMBER	YO	XO	T/C NO	PN PSIA	PN/P	PN/PT2	CPN	CPN/MX
54	444.91	1375.6	65.000	.8291	36.87	.4493	.8129	.4449
54	444.91	1379.0	66.000	.7812	34.74	.4234	.7646	.4185
54	444.91	1398.4	67.000	.3921	17.44	.2125	.3726	.2039
54	444.91	1414.2	68.000	.3197	14.22	.1733	.2996	.1640
54	444.91	1430.0	69.000	.2630	11.70	.1425	.2424	.1327
54	456.63	1379.0	70.000	.7547	33.57	.4090	.7380	.4039
54	456.63	1398.4	71.000	.3426	15.24	.1857	.3226	.1766
54	456.63	1413.3	72.000	.2877	12.80	.1559	.2673	.1463
54	468.34	1379.0	73.000	.5122	22.78	.2776	.4935	.2701

OH57,AEDC V41B-K3A, MODEL 92-0, LH WING LWR SURF (R4AL01)

L.H. WING LWR SURF

PARAMETRIC DATA

MACH = 7.940 PO = 210.0 RN/FT = 1.000 ELEVON = -10.00
BDFLAP = -12.50 SPDBRK = 49.30 RUDDER = .0000

TEST CONDITIONS

RUN NUMBER	ALPHA DEG.	BETA DEG.	PO PSIA	TO DEG. R	P PSIA	T DEG. R	Q PSIA	V FT/SEC	CPMAX	PT2 PSIA	RHO SLUGS /FT3	MU LB-SEC /FT2
51	39.99	.0000	210.1	1260.	.2260-01	92.59	.9974	3746.	1.827	1.845	.2047-04	.7451-07

RUN NUMBER	RN/FT /FT X 106
51	1.029

TEST DATA

RUN NUMBER	YO	XO	T/C NO	PN PSIA	PN/P	PN/PT2	CPN	CPN/MX
51	116.00	1379.0	1.0000	.7394	32.71	.4007	.7186	.3933
51	129.43	1379.0	2.0000	.7428	32.86	.4026	.7220	.3952
51	129.43	1398.4	3.0000	.3441	15.23	.1865	.3223	.1764
51	140.51	1379.0	4.0000	.7594	33.60	.4116	.7387	.4043
51	140.51	1398.4	5.0000	.4031	17.84	.2185	.3815	.2088
51	163.94	1379.0	6.0000	.7557	33.44	.4096	.7350	.4023
51	187.31	1190.4	7.0000	.9134	40.41	.4951	.8931	.4888
51	187.31	1240.7	8.0000	.9225	40.81	.5000	.9022	.4938
51	187.31	1290.9	9.0000	.8967	39.68	.4860	.8764	.4796
51	187.31	1341.2	10.000	.8661	38.32	.4694	.8457	.4628
51	187.31	1353.8	11.000	.8395	37.14	.4550	.8190	.4482
51	187.31	1375.6	12.000	.7925	35.06	.4295	.7719	.4225
51	187.31	1379.0	13.000	.7913	35.01	.4289	.7707	.4218
51	187.31	1398.4	14.000	.4244	18.78	.2300	.4029	.2205
51	187.31	1416.6	15.000	.3748	16.58	.2031	.3531	.1932
51	187.31	1441.7	16.000	.3040	13.45	.1648	.2821	.1544
51	187.31	1466.9	17.000	.2533	11.24	.1373	.2321	.1270
51	210.74	1379.0	18.000	.7781	34.54	.4217	.7601	.4160
51	234.17	1379.0	19.000	.8379	37.20	.4541	.8202	.4489
51	257.60	1379.0	20.000	.8165	36.25	.4425	.7987	.4371
51	281.03	1152.7	21.000	1.239	55.00	.6715	1.224	.6697

OH57,AEDC V41B-K3A, MODEL 92-0, LH WING LWR SURF (R4AL01)

RUN NUMBER	YO	XO	T/C NO	PN PSIA	PN/P	PN/PT2	CPN	CPN/MX
51	281.03	1188.6	22.000	1.125	49.95	.6098	1.109	.6071
51	281.03	1224.5	23.000	1.035	45.94	.5609	1.018	.5574
51	281.03	1260.3	24.000	1.026	45.55	.5561	1.009	.5525
51	281.03	1296.2	25.000	.9901	43.95	.5366	.9733	.5327
51	281.03	1332.0	26.000	.9536	42.33	.5169	.9366	.5126
51	281.03	1358.9	27.000	.9108	40.43	.4936	.8935	.4890
51	281.03	1375.6	28.000	.8919	39.59	.4834	.8745	.4786
51	281.03	1379.0	29.000	.8748	38.83	.4741	.8573	.4692
51	281.03	1398.4	30.000	.4450	19.76	.2412	.4250	.2326
51	281.03	1421.7	31.000	.3631	16.12	.1968	.3426	.1875
51	281.03	1439.6	32.000	.3062	13.59	.1660	.2854	.1562
51	281.03	1457.5	33.000	.2573	11.47	.1394	.2371	.1298
51	281.03	1466.5	34.000	.2372	10.57	.1286	.2169	.1187
51	292.74	1379.0	35.000	.9048	40.32	.4904	.8910	.4876
51	304.40	1379.0	36.000	.8622	38.42	.4673	.8480	.4641
51	304.40	1398.4	37.000	.3999	17.82	.2167	.3812	.2086
51	311.20	1379.0	38.000	.8618	38.40	.4671	.8475	.4638
51	320.80	1379.0	39.000	.8835	39.37	.4788	.8695	.4758
51	320.80	1398.4	40.000	.4057	18.08	.2199	.3870	.2118
51	320.80	1421.3	41.000	.3671	16.36	.1989	.3480	.1904
51	320.80	1444.2	42.000	.3115	13.88	.1688	.2919	.1598
51	327.83	1375.6	43.000	.9180	40.91	.4975	.9043	.4949
51	327.83	1379.0	44.000	.9098	40.54	.4931	.8961	.4904
51	327.83	1398.4	45.000	.4457	19.86	.2416	.4274	.2339
51	327.83	1421.3	46.000	.3460	15.42	.1875	.3268	.1788
51	327.83	1444.2	47.000	.3007	13.40	.1630	.2810	.1538
51	351.26	1379.0	48.000	.9016	40.18	.4886	.8877	.4859
51	374.69	1379.0	49.000	.9522	42.35	.5161	.9370	.5128
51	398.11	1256.2	50.000	1.202	53.45	.6513	1.188	.6504
51	398.11	1278.3	51.000	1.174	52.21	.6362	1.160	.6350
51	398.11	1301.4	52.000	1.169	51.99	.6335	1.155	.6324
51	398.11	1322.3	53.000	1.125	50.03	.6097	1.111	.6081
51	398.11	1344.4	54.000	1.091	48.51	.5911	1.077	.5892
51	398.11	1366.5	55.000	1.038	46.16	.5625	1.023	.5601
51	398.11	1375.6	56.000	1.007	44.78	.5457	.9920	.5429
51	398.11	1379.0	57.000	.9587	42.64	.5196	.9436	.5164
51	398.11	1398.4	58.000	.4864	21.63	.2636	.4675	.2559
51	398.11	1410.5	59.000	.4216	18.75	.2285	.4022	.2201
51	398.11	1432.6	60.000	.3356	14.93	.1819	.3156	.1727
51	398.11	1443.6	61.000	.2894	12.87	.1568	.2690	.1472
51	421.49	1379.0	62.000	1.033	45.96	.5600	1.019	.5575
51	444.91	1343.1	63.000	1.029	45.77	.5577	1.014	.5552
51	444.91	1358.9	64.000	1.052	46.79	.5702	1.038	.5679

OH57, AEDC V41B-K3A, MODEL 92-0 AERO HEATING PRESSURE DATA

OH57,AEDC V41B-K3A, MODEL 92-0, LH WING LWR SURF

RUN NUMBER	YO	XO	T/C NO	PN PSIA	PN/P	PN/PT2	CPN	CPN/MX
51	444.91	1375.6	65.000	.9924	43.89	.5379	.9719	.5319
51	444.91	1379.0	66.000	.9269	40.99	.5023	.9062	.4959
51	444.91	1398.4	67.000	.4945	21.87	.2680	.4728	.2588
51	444.91	1414.2	68.000	.4040	17.87	.2190	.3822	.2092
51	444.91	1430.0	69.000	.3329	14.72	.1804	.3109	.1702
51	456.63	1379.0	70.000	.8846	39.12	.4794	.8638	.4727
51	456.63	1398.4	71.000	.4228	18.70	.2291	.4010	.2195
51	456.63	1413.3	72.000	.3590	15.87	.1946	.3371	.1845
51	468.34	1379.0	73.000	.6026	26.65	.3266	.5812	.3181

OH57,AEDC V41B-K3A, MODEL 92-0, LH WING LWR SURF (R4AL02)

L.H. WING LWR SURF

PARAMETRIC DATA

MACH = 7.940 PO = 210.0 RN/FT = 1.000 ELEVON = -10.00
BDFLAP = -12.50 SPDBRK = 49.30 RUDDER = .0000

TEST CONDITIONS

RUN NUMBER	ALPHA DEG.	BETA DEG.	PO PSIA	TO DEG. R	P PSIA	T DEG. R	Q PSIA	V FT/SEC	CPMAX	PT2 PSIA	RHO SLUGS /FT3	MU LB-SEC /FT2
55	40.01	.0000	209.0	1266.	.2248-01	93.03	.9922	3755.	1.827	1.835	.2026-04	.7486-07

RUN NUMBER	RN/FT /FT X 106
55	1.017

TEST DATA

RUN NUMBER	YO	XO	T/C NO	PN PSIA	PN/P	PN/PT2	CPN	CPN/MX
55	116.00	1379.0	1.0000	.7384	32.84	.4023	.7215	.3949
55	129.43	1379.0	2.0000	.7415	32.98	.4040	.7247	.3966
55	129.43	1398.4	3.0000	.3424	15.23	.1866	.3225	.1765
55	140.51	1379.0	4.0000	.7557	33.61	.4117	.7390	.4044
55	140.51	1398.4	5.0000	.4017	17.87	.2189	.3822	.2092
55	163.94	1379.0	6.0000	.7547	33.57	.4112	.7380	.4039
55	187.31	1190.4	7.0000	.9122	40.57	.4970	.8967	.4908
55	187.31	1240.7	8.0000	.9213	40.98	.5019	.9058	.4958
55	187.31	1290.9	9.0000	.8955	39.83	.4879	.8799	.4815
55	187.31	1341.2	10.000	.8639	38.42	.4707	.8480	.4641
55	187.31	1353.8	11.000	.8375	37.25	.4563	.8214	.4495
55	187.31	1375.6	12.000	.7911	35.19	.4310	.7747	.4240
55	187.31	1379.0	13.000	.7901	35.14	.4305	.7736	.4234
55	187.31	1398.4	14.000	.4224	18.79	.2302	.4031	.2206
55	187.31	1416.6	15.000	.3733	16.60	.2034	.3536	.1935
55	187.31	1441.7	16.000	.3026	13.46	.1649	.2823	.1545
55	187.31	1466.9	17.000	.2575	11.43	.1403	.2364	.1294
55	210.74	1379.0	18.000	.7820	34.71	.4260	.7640	.4181
55	234.17	1379.0	19.000	.8425	37.40	.4590	.8249	.4515
55	257.60	1379.0	20.000	.8206	36.43	.4471	.8028	.4394
55	281.03	1152.7	21.000	1.219	54.13	.6644	1.204	.6589

OH57,AEDC V41B-K3A, MODEL 92-0, LH WING LWR SURF

RUN NUMBER	YO	XO	T/C NO	PN PSIA	PN/P	PN/PT2	CPN	CPN/MX
55	281.03	1188.6	22.000	1.056	46.89	.5754	1.040	.5691
55	281.03	1224.5	23.000	1.040	46.18	.5668	1.024	.5603
55	281.03	1260.3	24.000	1.031	45.76	.5616	1.014	.5551
55	281.03	1296.2	25.000	.9950	44.17	.5421	.9782	.5354
55	281.03	1332.0	26.000	.9026	40.07	.4918	.8853	.4845
55	281.03	1358.9	27.000	.9144	40.59	.4982	.8971	.4910
55	281.03	1375.6	28.000	.8515	37.80	.4639	.8339	.4564
55	281.03	1379.0	29.000	.8785	39.00	.4786	.8610	.4712
55	281.03	1398.4	30.000	.4466	19.83	.2433	.4266	.2335
55	281.03	1421.7	31.000	.3650	16.20	.1988	.3445	.1885
55	281.03	1439.6	32.000	.3082	13.68	.1679	.2874	.1573
55	281.03	1457.5	33.000	.2599	11.53	.1416	.2387	.1306
55	281.03	1466.5	34.000	.2398	10.64	.1306	.2184	.1195
55	292.74	1379.0	35.000	.9117	40.45	.4967	.8940	.4893
55	304.40	1379.0	36.000	.8681	38.52	.4730	.8502	.4653
55	304.40	1398.4	37.000	.4035	17.90	.2198	.3831	.2096
55	311.20	1379.0	38.000	.8690	38.56	.4734	.8510	.4658
55	320.80	1379.0	39.000	.8901	39.49	.4849	.8723	.4774
55	320.80	1398.4	40.000	.4085	18.13	.2226	.3881	.2124
55	320.80	1421.3	41.000	.3701	16.42	.2017	.3495	.1913
55	320.80	1444.2	42.000	.3148	13.97	.1715	.2938	.1608
55	327.83	1375.6	43.000	.9258	41.08	.5044	.9082	.4970
55	327.83	1379.0	44.000	.9113	40.44	.4965	.8936	.4891
55	327.83	1398.4	45.000	.4488	19.92	.2445	.4286	.2346
55	327.83	1421.3	46.000	.3488	15.48	.1901	.3281	.1796
55	327.83	1444.2	47.000	.3032	13.45	.1652	.2821	.1544
55	351.26	1379.0	48.000	.8840	39.23	.4817	.8662	.4741
55	374.69	1379.0	49.000	.8976	39.79	.4890	.8789	.4810
55	398.11	1256.2	50.000	1.148	50.88	.6253	1.130	.6185
55	398.11	1278.3	51.000	1.111	49.24	.6051	1.093	.5982
55	398.11	1301.4	52.000	1.116	49.49	.6083	1.099	.6013
55	398.11	1322.3	53.000	1.128	50.00	.6145	1.110	.6077
55	398.11	1344.4	54.000	1.083	48.02	.5902	1.065	.5831
55	398.11	1366.5	55.000	1.044	46.27	.5687	1.026	.5615
55	398.11	1375.6	56.000	1.012	44.87	.5515	.9941	.5440
55	398.11	1379.0	57.000	.9637	42.72	.5250	.9453	.5174
55	398.11	1398.4	58.000	.6128	27.16	.3339	.5929	.3245
55	398.11	1410.5	59.000	.4254	18.86	.2318	.4047	.2215
55	398.11	1432.6	60.000	.3411	15.12	.1858	.3199	.1751
55	398.11	1443.6	61.000	.2925	12.96	.1593	.2711	.1484
55	421.49	1379.0	62.000	.9536	42.27	.5196	.9352	.5119
55	444.91	1343.1	63.000	1.035	45.88	.5640	1.017	.5566
55	444.91	1358.9	64.000	1.009	44.71	.5495	.9905	.5421

OH57,AEDC V41B-K3A, MODEL 92-0, LH WING LWR SURF (R4AL02)

RUN NUMBER	YO	XO	T/C NO	PN PSIA	PN/P	PN/PT2	CPN	CPN/MX
55	444.91	1375.6	65.000	.9942	44.05	.5417	.9756	.5339
55	444.91	1379.0	66.000	.9287	41.15	.5060	.9098	.4979
55	444.91	1398.4	67.000	.4961	21.98	.2703	.4755	.2602
55	444.91	1414.2	68.000	.4036	17.88	.2199	.3826	.2094
55	444.91	1430.0	69.000	.3359	14.88	.1830	.3146	.1722
55	456.63	1379.0	70.000	.8858	39.25	.4826	.8667	.4743
55	456.63	1398.4	71.000	.4240	18.79	.2310	.4030	.2206
55	456.63	1413.3	72.000	.3610	15.99	.1967	.3398	.1859
55	468.34	1379.0	73.000	.6034	26.74	.3288	.5832	.3192

OH57,AEDC V41B-K3A, MODEL 92-0, LH WING LWR SURF (R4AL03)

L.H. WING LWR SURF

PARAMETRIC DATA

MACH = 8.000 PO = 850.0 RN/FT = 3.600 ELEVON = -10.00
BDFLAP = -12.50 SPDBRK = 49.30 RUDDER = .0000

TEST CONDITIONS

RUN NUMBER	ALPHA DEG.	BETA DEG.	PO PSIA	TO DEG. R	P PSIA	T DEG. R	Q PSIA	V FT/SEC	CPMAX	PT2 PSIA	RHO SLUGS /FT3	MU LB-SEC /FT2
48	30.02	.0000	848.6	1355.	.8692-01	98.19	3.894	3887.	1.827	7.203	.7422-04	.7901-07

RUN NUMBER	RN/FT /FT X 106
48	3.652

TEST DATA

RUN NUMBER	YO	XO	T/C NO	PN PSIA	PN/P	PN/PT2	CPN	CPN/MX
48	116.00	1379.0	1.0000	1.838	21.15	.2552	.4498	.2461
48	129.43	1379.0	2.0000	1.841	21.18	.2555	.4504	.2464
48	129.43	1398.4	3.0000	.7380	8.490	.1025	.1672	.9150-01
48	140.51	1379.0	4.0000	1.843	21.20	.2558	.4508	.2467
48	140.51	1398.4	5.0000	.8955	10.30	.1243	.2076	.1136
48	163.94	1379.0	6.0000	1.844	21.21	.2560	.4511	.2469
48	187.31	1190.4	7.0000	2.327	26.77	.3230	.5752	.3148
48	187.31	1240.7	8.0000	2.308	26.55	.3205	.5704	.3122
48	187.31	1290.9	9.0000	2.263	26.04	.3142	.5589	.3058
48	187.31	1341.2	10.000	2.104	24.20	.2921	.5179	.2834
48	187.31	1353.8	11.000	2.039	23.46	.2831	.5013	.2743
48	187.31	1375.6	12.000	1.935	22.26	.2686	.4745	.2597
48	187.31	1379.0	13.000	1.875	21.57	.2603	.4592	.2513
48	187.31	1398.4	14.000	.9748	11.21	.1353	.2280	.1248
48	187.31	1416.6	15.000	.7527	8.660	.1045	.1710	.9356-01
48	187.31	1441.7	16.000	.6920	7.961	.9607-01	.1554	.8502-01
48	187.31	1466.9	17.000	.4531	5.214	.6290-01	.9406-01	.5147-01
48	210.74	1379.0	18.000	1.952	22.46	.2710	.4790	.2621
48	234.17	1379.0	19.000	1.997	22.98	.2773	.4907	.2685
48	257.60	1379.0	20.000	2.158	24.83	.2995	.5319	.2911
48	281.03	1152.7	21.000	3.075	35.38	.4268	.7674	.4199

OH57,AEDC V41B-K3A, MODEL 92-0, LH WING LWR SURF (R4AL03)

RUN NUMBER	YO	XO	T/C NO	PN PSIA	PN/P	PN/PT2	CPN	CPN/MX
48	281.03	1188.6	22.000	2.735	31.47	.3797	.6801	.3722
48	281.03	1224.5	23.000	2.654	30.53	.3684	.6593	.3608
48	281.03	1260.3	24.000	2.647	30.46	.3675	.6576	.3599
48	281.03	1296.2	25.000	2.270	26.12	.3152	.5608	.3069
48	281.03	1332.0	26.000	2.412	27.75	.3348	.5971	.3268
48	281.03	1358.9	27.000	2.309	26.57	.3205	.5707	.3123
48	281.03	1375.6	28.000	2.211	25.45	.3070	.5457	.2986
48	281.03	1379.0	29.000	2.155	24.80	.2992	.5312	.2907
48	281.03	1398.4	30.000	1.018	11.72	.1414	.2392	.1309
48	281.03	1421.7	31.000	.7177	8.258	.9964-01	.1620	.8866-01
48	281.03	1439.6	32.000	.5659	6.511	.7856-01	.1230	.6732-01
48	281.03	1457.5	33.000	.4547	5.228	.6313-01	.9437-01	.5164-01
48	281.03	1466.5	34.000	.3983	4.580	.5530-01	.7990-01	.4373-01
48	292.74	1379.0	35.000	2.208	25.38	.3065	.5443	.2978
48	304.40	1379.0	36.000	2.305	26.50	.3200	.5691	.3115
48	304.40	1398.4	37.000	1.005	11.55	.1395	.2356	.1289
48	311.20	1379.0	38.000	2.291	26.34	.3180	.5656	.3095
48	320.80	1379.0	39.000	2.333	26.82	.3239	.5764	.3154
48	320.80	1398.4	40.000	.8743	10.05	.1214	.2021	.1106
48	320.80	1421.3	41.000	.6755	7.766	.9378-01	.1510	.8265-01
48	320.80	1444.2	42.000	.5421	6.233	.7526-01	.1168	.6392-01
48	327.83	1375.6	43.000	2.430	27.94	.3374	.6014	.3291
48	327.83	1379.0	44.000	2.363	27.16	.3280	.5840	.3196
48	327.83	1398.4	45.000	.9964	11.46	.1383	.2334	.1277
48	327.83	1421.3	46.000	.6424	7.386	.8919-01	.1426	.7801-01
48	327.83	1444.2	47.000	.5278	6.068	.7327-01	.1131	.6190-01
48	351.26	1379.0	48.000	2.487	28.59	.3452	.6159	.3370
48	374.69	1379.0	49.000	2.524	29.05	.3504	.6262	.3427
48	398.11	1256.2	50.000	3.456	39.78	.4798	.8656	.4737
48	398.11	1278.3	51.000	3.249	37.40	.4511	.8124	.4446
48	398.11	1301.4	52.000	3.181	36.61	.4416	.7949	.4350
48	398.11	1322.3	53.000	3.069	35.32	.4260	.7660	.4192
48	398.11	1344.4	54.000	2.933	33.75	.4071	.7311	.4001
48	398.11	1366.5	55.000	2.762	31.78	.3834	.6871	.3760
48	398.11	1375.6	56.000	2.667	30.69	.3702	.6628	.3627
48	398.11	1379.0	57.000	2.278	26.21	.3162	.5628	.3080
48	398.11	1398.4	58.000	1.186	13.65	.1647	.2825	.1546
48	398.11	1410.5	59.000	.8909	10.25	.1237	.2066	.1130
48	398.11	1432.6	60.000	.6822	7.852	.9471-01	.1529	.8370-01
48	398.11	1443.6	61.000	.5759	6.628	.7995-01	.1256	.6875-01
48	421.49	1379.0	62.000	2.633	30.31	.3656	.6542	.3580
48	444.91	1343.1	63.000	2.836	32.65	.3938	.7064	.3866
48	444.91	1358.9	64.000	2.776	31.95	.3854	.6909	.3781

OH57,AEDC V41B-K3A, MODEL 92-0, LH WING LWR SURF (R4AL03)

RUN NUMBER	YO	XO	T/C NO	PN PSIA	PN/P	PN/PT2	CPN	CPN/MX
48	444.91	1375.6	65.000	2.652	30.50	.3681	.6585	.3603
48	444.91	1379.0	66.000	2.484	28.57	.3449	.6154	.3368
48	444.91	1398.4	67.000	1.234	14.19	.1713	.2945	.1611
48	444.91	1414.2	68.000	1.011	11.63	.1404	.2373	.1299
48	444.91	1430.0	69.000	.7670	8.822	.1065	.1746	.9554-01
48	456.63	1379.0	70.000	2.471	28.42	.3430	.6120	.3349
48	456.63	1398.4	71.000	1.153	13.26	.1601	.2737	.1498
48	456.63	1413.3	72.000	.8864	10.19	.1231	.2052	.1123
48	468.34	1379.0	73.000	1.697	19.52	.2356	.4133	.2262

OH57,AEDC V41B-K3A, MODEL 92-0, LH WING LWR SURF (R4AL03)

L.H. WING LWR SURF

PARAMETRIC DATA

MACH = 8.000 PO = 850.0 RN/FT = 3.600 ELEVON = -10.00
BDFLAP = -12.50 SPDBRK = 49.30 RUDDER = .0000

TEST CONDITIONS

RUN NUMBER	ALPHA DEG.	BETA DEG.	PO PSIA	TO DEG. R	P PSIA	T DEG. R	Q PSIA	V FT/SEC	CPMAX	PT2 PSIA	RHO SLUGS /FT3	MU LB-SEC /FT2
50	34.99	.0000	849.6	1355.	.8703-01	98.19	3.899	3887.	1.827	7.212	.7431-04	.7901-07

RUN NUMBER	RN/FT /FT X 106
50	3.656

TEST DATA

RUN NUMBER	YO	XO	T/C NO	PN PSIA	PN/P	PN/PT2	CPN	CPN/MX
50	116.00	1379.0	1.0000	2.443	28.07	.3388	.6043	.3307
50	129.43	1379.0	2.0000	2.457	28.23	.3407	.6079	.3327
50	129.43	1398.4	3.0000	1.005	11.55	.1394	.2356	.1289
50	140.51	1379.0	4.0000	2.459	28.26	.3410	.6084	.3330
50	140.51	1398.4	5.0000	1.249	14.36	.1733	.2981	.1632
50	163.94	1379.0	6.0000	2.468	28.36	.3422	.6106	.3342
50	187.31	1190.4	7.0000	2.965	34.07	.4112	.7383	.4040
50	187.31	1240.7	8.0000	2.982	34.26	.4134	.7424	.4063
50	187.31	1290.9	9.0000	2.922	33.57	.4051	.7270	.3979
50	187.31	1341.2	10.000	2.773	31.87	.3846	.6890	.3771
50	187.31	1353.8	11.000	2.703	31.06	.3748	.6710	.3672
50	187.31	1375.6	12.000	2.585	29.71	.3585	.6408	.3507
50	187.31	1379.0	13.000	2.518	28.93	.3491	.6235	.3412
50	187.31	1398.4	14.000	1.335	15.34	.1851	.3200	.1751
50	187.31	1416.6	15.000	1.098	12.61	.1522	.2592	.1418
50	187.31	1441.7	16.000	.8705	10.00	.1207	.2010	.1100
50	187.31	1466.9	17.000	.6991	8.009	.9681-01	.1564	.8561-01
50	210.74	1379.0	18.000	2.592	29.74	.3595	.6415	.3510
50	234.17	1379.0	19.000	2.643	30.33	.3666	.6546	.3582
50	257.60	1379.0	20.000	2.839	32.57	.3936	.7046	.3856
50	281.03	1152.7	21.000	4.082	46.83	.5661	1.023	.5598

OH57,AEDC V41B-K3A, MODEL 92-0, LH WING LWR SURF (R4AL03)

RUN NUMBER	YO	XO	T/C NO	PN PSIA	PN/P	PN/PT2	CPN	CPN/MX
50	281.03	1188.6	22.000	3.587	41.15	.4974	.8961	.4904
50	281.03	1224.5	23.000	3.417	39.20	.4738	.8526	.4666
50	281.03	1260.3	24.000	3.408	39.09	.4725	.8502	.4653
50	281.03	1296.2	25.000	3.354	38.48	.4651	.8366	.4578
50	281.03	1332.0	26.000	3.210	36.83	.4452	.7998	.4377
50	281.03	1358.9	27.000	3.012	34.55	.4176	.7489	.4098
50	281.03	1375.6	28.000	2.871	32.94	.3981	.7129	.3901
50	281.03	1379.0	29.000	2.796	32.08	.3877	.6937	.3796
50	281.03	1398.4	30.000	1.395	16.00	.1934	.3348	.1832
50	281.03	1421.7	31.000	1.045	11.99	.1449	.2453	.1342
50	281.03	1439.6	32.000	.8498	9.749	.1178	.1953	.1069
50	281.03	1457.5	33.000	.7122	8.204	.9875-01	.1608	.8800-01
50	281.03	1466.5	34.000	.6347	7.312	.8801-01	.1409	.7710-01
50	292.74	1379.0	35.000	2.818	32.46	.3907	.7023	.3843
50	304.40	1379.0	36.000	2.947	33.95	.4086	.7355	.4025
50	304.40	1398.4	37.000	1.311	15.10	.1818	.3148	.1723
50	311.20	1379.0	38.000	2.936	33.82	.4071	.7326	.4009
50	320.80	1379.0	39.000	2.991	34.46	.4147	.7468	.4087
50	320.80	1398.4	40.000	1.222	14.08	.1695	.2920	.1598
50	320.80	1421.3	41.000	.9796	11.29	.1358	.2296	.1256
50	320.80	1444.2	42.000	.9086	10.47	.1260	.2113	.1156
50	327.83	1375.6	43.000	3.120	35.94	.4326	.7800	.4268
50	327.83	1379.0	44.000	3.031	34.92	.4203	.7572	.4144
50	327.83	1398.4	45.000	1.315	15.15	.1824	.3159	.1729
50	327.83	1421.3	46.000	.9988	11.51	.1385	.2345	.1283
50	327.83	1444.2	47.000	.8277	9.535	.1148	.1905	.1043
50	351.26	1379.0	48.000	3.171	36.53	.4397	.7931	.4340
50	374.69	1379.0	49.000	3.232	37.25	.4482	.8091	.4428
50	398.11	1256.2	50.000	4.172	48.07	.5785	1.051	.5750
50	398.11	1278.3	51.000	3.945	45.46	.5470	.9923	.5430
50	398.11	1301.4	52.000	3.868	44.57	.5364	.9726	.5322
50	398.11	1322.3	53.000	3.805	43.84	.5276	.9564	.5234
50	398.11	1344.4	54.000	3.704	42.68	.5136	.9303	.5091
50	398.11	1366.5	55.000	3.514	40.49	.4873	.8815	.4824
50	398.11	1375.6	56.000	3.397	39.14	.4711	.8514	.4659
50	398.11	1379.0	57.000	2.291	26.40	.3177	.5670	.3103
50	398.11	1398.4	58.000	1.497	17.25	.2076	.3628	.1985
50	398.11	1410.5	59.000	1.279	14.74	.1773	.3066	.1678
50	398.11	1432.6	60.000	.9757	11.24	.1353	.2286	.1251
50	398.11	1443.6	61.000	.8186	9.433	.1135	.1882	.1030
50	421.49	1379.0	62.000	3.377	38.91	.4683	.8462	.4631
50	444.91	1343.1	63.000	3.492	40.23	.4842	.8758	.4793
50	444.91	1358.9	64.000	3.429	39.51	.4755	.8597	.4705

OH57,AEDC V41B-K3A, MODEL 92-0, LH WING LWR SURF (R4AL03)

RUN NUMBER	YO	XO	T/C NO	PN PSIA	PN/P	PN/PT2	CPN	CPN/MX
50	444.91	1375.6	65.000	3.272	37.68	.4536	.8187	.4480
50	444 91	1379.0	66.000	3.108	35.80	.4310	.7767	.4250
50	444.91	1398.4	67.000	1.515	17.45	.2101	.3671	.2009
50	444.91	1414.2	68.000	1.198	13.80	.1662	.2857	.1564
50	444.91	1430.0	69.000	1.131	13.02	.1568	.2684	.1469
50	456.63	1379.0	70.000	3.008	34.64	.4171	.7508	.4109
50	456.63	1398.4	71.000	1.433	16.51	.1988	.3461	.1894
50	456.63	1413.3	72.000	1.236	14.23	.1714	.2954	.1617
50	468.34	1379.0	73.000	1.993	22.96	.2764	.4901	.2682

OH57,AEDC V41B-K3A, MODEL 92-0, LH WING LWR SURF (R4AL03)

L.H. WING LWR SURF

PARAMETRIC DATA

MACH = 8.000 PO = 850.0 RN/FT = 3.600 ELEVON = -10.00
BDFLAP = -12.50 SPDBRK = 49.30 RUDDER = .0000

TEST CONDITIONS

RUN NUMBER	ALPHA DEG.	BETA DEG.	PO PSIA	TO DEG. R	P PSIA	T DEG. R	Q PSIA	V FT/SEC	CPMAX	PT2 PSIA	RHO SLUGS /FT3	MU LB-SEC /FT2
47	40.08	.0000	846.6	1353.	.8672-01	98.04	3.885	3884.	1.827	7.186	.7416-04	.7890-07

RUN NUMBER	RN/FT /FT X 106
47	3.651

TEST DATA

RUN NUMBER	YO	XO	T/C NO	PN PSIA	PN/P	PN/PT2	CPN	CPN/MX
47	116.00	1379.0	1.0000	3.094	35.68	.4306	.7742	.4237
47	129.43	1379.0	2.0000	3.110	35.86	.4327	.7781	.4258
47	129.43	1398.4	3.0000	1.353	15.60	.1882	.3259	.1783
47	140.51	1379.0	4.0000	3.112	35.88	.4330	.7786	.4261
47	140.51	1398.4	5.0000	1.593	18.37	.2217	.3877	.2122
47	163.94	1379.0	6.0000	3.128	36.07	.4352	.7827	.4283
47	187.31	1190.4	7.0000	3.671	42.34	.5109	.9227	.5049
47	187.31	1240.7	8.0000	3.692	42.58	.5138	.9281	.5079
47	187.31	1290.9	9.0000	3.636	41.92	.5059	.9135	.4999
47	187.31	1341.2	10.000	3.467	39.98	.4825	.8701	.4762
47	187.31	1353.8	11.000	3.382	39.00	.4707	.8482	.4642
47	187.31	1375.6	12.000	3.256	37.54	.4531	.8157	.4464
47	187.31	1379.0	13.000	3.186	36.74	.4433	.7977	.4365
47	187.31	1398.4	14.000	1.733	19.99	.2412	.4239	.2320
47	187.31	1416.6	15.000	1.460	16.84	.2032	.3536	.1935
47	187.31	1441.7	16.000	1.183	13.64	.1646	.2822	.1544
47	187.31	1466.9	17.000	1.045	12.03	.1454	.2461	.1347
47	210.74	1379.0	18.000	3.275	37.70	.4557	.8192	.4483
47	234.17	1379.0	19.000	3.350	38.56	.4661	.8385	.4588
47	257.60	1379.0	20.000	3.487	40.14	.4852	.8737	.4781
47	281.03	1152.7	21.000	4.879	56.17	.6789	1.231	.6739

OH57,AEDC V41B-K3A, MODEL 92-0, LH WING LWR SURF (R4AL03)

RUN NUMBER	YO	XO	T/C NO	PN PSIA	PN/P	PN/PT2	CPN	CPN/MX
47	281.03	1188.6	22.000	4.365	50.25	.6074	1.099	.6016
47	281.03	1224.5	23.000	4.153	47.81	.5779	1.045	.5718
47	281.03	1260.3	24.000	4.117	47.39	.5729	1.036	.5667
47	281.03	1296.2	25.000	4.014	46.21	.5586	1.009	.5523
47	281.03	1332.0	26.000	3.925	45.19	.5462	.9863	.5398
47	281.03	1358.9	27.000	3.742	43.08	.5207	.9393	.5140
47	281.03	1375.6	28.000	3.601	41.46	.5012	.9031	.4942
47	281.03	1379.0	29.000	3.509	40.40	.4884	.8795	.4813
47	281.03	1398.4	30.000	1.865	21.48	.2596	.4570	.2501
47	281.03	1421.7	31.000	1.472	16.95	.2049	.3560	.1948
47	281.03	1439.6	32.000	1.264	14.55	.1759	.3024	.1655
47	281.03	1457.5	33.000	1.069	12.32	.1487	.2527	.1383
47	281.03	1466.5	34.000	1.061	12.23	.1476	.2506	.1372
47	292.74	1379.0	35.000	3.533	40.73	.4916	.8869	.4853
47	304.40	1379.0	36.000	3.638	41.95	.5063	.9140	.5002
47	304.40	1398.4	37.000	1.707	19.68	.2375	.4169	.2282
47	311.20	1379.0	38.000	3.627	41.82	.5048	.9111	.4986
47	320.80	1379.0	39.000	3.685	42.48	.5128	.9260	.5067
47	320.80	1398.4	40.000	1.633	18.83	.2273	.3980	.2178
47	320.80	1421.3	41.000	1.400	16.14	.1948	.3378	.1849
47	320.80	1444.2	42.000	1.299	14.98	.1808	.3120	.1707
47	327.83	1375.6	43.000	3.823	44.07	.5320	.9614	.5261
47	327.83	1379.0	44.000	3.726	42.95	.5184	.9364	.5124
47	327.83	1398.4	45.000	1.713	19.74	.2383	.4184	.2290
47	327.83	1421.3	46.000	1.404	16.18	.1953	.3389	.1854
47	327.83	1444.2	47.000	1.192	13.74	.1659	.2844	.1556
47	351.26	1379.0	48.000	3.860	44.50	.5371	.9709	.5313
47	374.69	1379.0	49.000	3.935	45.35	.5476	.9899	.5417
47	398.11	1256.2	50.000	4.679	53.92	.6511	1.181	.6464
47	398.11	1278.3	51.000	4.573	52.70	.6364	1.154	.6315
47	398.11	1301.4	52.000	4.543	52.36	.6322	1.146	.6273
47	398.11	1322.3	53.000	4.460	51.40	.6207	1.125	.6157
47	398.11	1344.4	54.000	4.398	50.69	.6120	1.109	.6069
47	398.11	1366.5	55.000	4.234	48.79	.5891	1.067	.5838
47	398.11	1375.6	56.000	4.118	47.46	.5731	1.037	.5675
47	398.11	1379.0	57.000	4.024	46.37	.5599	1.013	.5542
47	398.11	1398.4	58.000	1.933	22.27	.2689	.4748	.2598
47	398.11	1410.5	59.000	1.718	19.80	.2391	.4197	.2297
47	398.11	1432.6	60.000	1.408	16.23	.1959	.3399	.1860
47	398.11	1443.6	61.000	1.153	13.29	.1604	.2743	.1501
47	421.49	1379.0	62.000	4.053	46.71	.5640	1.020	.5584
47	444.91	1343.1	63.000	4.169	48.05	.5802	1.050	.5747
47	444.91	1358.9	64.000	4.134	47.65	.5753	1.041	.5698

OH57,AEDC V41B-K3A, MODEL 92-0, LH WING LWR SURF (R4AL03)

RUN NUMBER	YO	XO	T/C NO	PN PSIA	PN/P	PN/PT2	CPN	CPN/MX
47	444.91	1375.6	65.000	3.992	45.87	.5555	1.002	.5481
47	444.91	1379.0	66.000	3.747	43.06	.5214	.9389	.5138
47	444.91	1398.4	67.000	1.861	21.38	.2589	.4549	.2490
47	444.91	1414.2	68.000	1.609	18.49	.2238	.3903	.2136
47	444.91	1430.0	69.000	1.401	16.10	.1949	.3370	.1844
47	456.63	1379.0	70.000	3.620	41.60	.5037	.9062	.4959
47	456.63	1398.4	71.000	1.730	19.88	.2408	.4215	.2307
47	456.63	1413.3	72.000	1.512	17.37	.2104	.3655	.2000
47	468.34	1379.0	73.000	2.249	25.84	.3129	.5545	.3035

OH57,AEDC V41B-K3A, MODEL 92-0, LH WING LWR SURF (R4AL03)

L.H. WING LWR SURF

PARAMETRIC DATA

MACH = 8.000 PO = 850.0 RN/FT = 3.600 ELEVON = -10.00
BDFLAP = -12.50 SPDBRK = 49.30 RUDDER = .0000

TEST CONDITIONS

RUN NUMBER	ALPHA DEG.	BETA DEG.	PO PSIA	TO DEG. R	P PSIA	T DEG. R	Q PSIA	V FT/SEC	CPMAX	PT2 PSIA	RHO SLUGS /FT3	MU LB-SEC /FT2
49	44.02	.0000	848.1	1355.	.8687-01	98.19	3.892	3887.	1.827	7.199	.7418-04	.7901-07

RUN NUMBER	RN/FT /FT X 106
49	3.650

TEST DATA

RUN NUMBER	YO	XO	T/C NO	PN PSIA	PN/P	PN/PT2	CPN	CPN/MX
49	116.00	1379.0	1.0000	3.614	41.60	.5020	.9062	.4959
49	129.43	1379.0	2.0000	3.633	41.82	.5047	.9112	.4986
49	129.43	1398.4	3.0000	1.575	18.13	.2188	.3824	.2092
49	140.51	1379.0	4.0000	3.643	41.93	.5060	.9137	.5000
49	140.51	1398.4	5.0000	1.939	22.32	.2694	.4760	.2605
49	163.94	1379.0	6.0000	3.677	42.32	.5107	.9224	.5048
49	187.31	1190.4	7.0000	4.177	48.08	.5802	1.051	.5751
49	187.31	1240.7	8.0000	4.229	48.68	.5875	1.064	.5825
49	187.31	1290.9	9.0000	4.165	47.95	.5786	1.048	.5735
49	187.31	1341.2	10.000	4.047	46.58	.5621	1.017	.5568
49	187.31	1353.8	11.000	3.961	45.59	.5502	.9954	.5447
49	187.31	1375.6	12.000	3.823	44.00	.5310	.9599	.5253
49	187.31	1379.0	13.000	3.744	43.10	.5201	.9397	.5142
49	187.31	1398.4	14.000	2.126	24.48	.2954	.5240	.2868
49	187.31	1416.6	15.000	1.846	21.24	.2564	.4519	.2473
49	187.31	1441.7	16.000	1.564	18.00	.2172	.3795	.2077
49	187.31	1466.9	17.000	1.426	16.38	.1981	.3432	.1878
49	210.74	1379.0	18.000	3.818	43.85	.5303	.9564	.5234
49	234.17	1379.0	19.000	3.858	44.31	.5359	.9667	.5290
49	257.60	1379.0	20.000	4.038	46.37	.5609	1.013	.5542
49	281.03	1152.7	21.000	5.201	59.74	.7225	1.311	.7175

OH57,AEDC V41B-K3A, MODEL 92-0, LH WING LWR SURF (R4AL03)

RUN NUMBER	YO	XO	T/C NO	PN PSIA	PN/P	PN/PT2	CPN	CPN/MX
49	281.03	1188.6	22.000	4.898	56.25	.6803	1.233	.6749
49	281.03	1224.5	23.000	4.713	54.13	.6547	1.186	.6490
49	281.03	1260.3	24.000	4.673	53.67	.6492	1.176	.6434
49	281.03	1296.2	25.000	4.549	52.24	.6318	1.144	.6259
49	281.03	1332.0	26.000	4.499	51.67	.6249	1.131	.6189
49	281.03	1358.9	27.000	4.315	49.55	.5993	1.084	.5931
49	281.03	1375.6	28.000	4.161	47.79	.5780	1.044	.5715
49	281.03	1379.0	29.000	4.068	46.72	.5651	1.021	.5585
49	281.03	1398.4	30.000	2.255	25.90	.3133	.5559	.3042
49	281.03	1421.7	31.000	1.846	21.20	.2564	.4508	.2467
49	281.03	1439.6	32.000	1.609	18.48	.2235	.3901	.2135
49	281.03	1457.5	33.000	1.372	15.76	.1906	.3294	.1803
49	281.03	1466.5	34.000	1.269	14.58	.1763	.3031	.1659
49	292.74	1379.0	35.000	4.098	47.07	.5693	1.028	.5628
49	304.40	1379.0	36.000	4.192	48.15	.5823	1.053	.5760
49	304.40	1398.4	37.000	2.017	23.17	.2802	.4949	.2708
49	311.20	1379.0	38.000	4.178	47.99	.5803	1.049	.5740
49	320.80	1379.0	39.000	4.225	48.53	.5869	1.061	.5806
49	320.80	1398.4	40.000	1.984	22.79	.2756	.4864	.2662
49	320.80	1421.3	41.000	1.783	20.48	.2476	.4348	.2379
49	320.80	1444.2	42.000	1.595	18.32	.2215	.3866	.2116
49	327.83	1375.6	43.000	4.382	50.34	.6087	1.101	.6026
49	327.83	1379.0	44.000	4.269	49.03	.5930	1.072	.5867
49	327.83	1398.4	45.000	2.053	23.58	.2852	.5040	.2758
49	327.83	1421.3	46.000	1.768	20.31	.2456	.4310	.2359
49	327.83	1444.2	47.000	1.529	17.57	.2124	.3698	.2024
49	351.26	1379.0	48.000	4.398	50.52	.6110	1.105	.6049
49	374.69	1379.0	49.000	4.464	51.31	.6202	1.123	.6145
49	398.11	1256.2	50.000	5.099	58.59	.7083	1.286	.7035
49	398.11	1278.3	51.000	5.076	58.34	.7052	1.280	.7004
49	398.11	1301.4	52.000	5.095	58.55	.7078	1.285	.7030
49	398.11	1322.3	53.000	5.018	57.67	.6971	1.265	.6922
49	398.11	1344.4	54.000	4.925	56.59	.6841	1.241	.6791
49	398.11	1366.5	55.000	4.767	54.79	.6622	1.201	.6570
49	398.11	1375.6	56.000	4.637	53.29	.6442	1.167	.6388
49	398.11	1379.0	57.000	4.531	52.07	.6294	1.140	.6238
49	398.11	1398.4	58.000	2.320	26.66	.3223	.5728	.3135
49	398.11	1410.5	59.000	2.094	24.07	.2909	.5149	.2818
49	398.11	1432.6	60.000	1.686	19.38	.2342	.4102	.2245
49	398.11	1443.6	61.000	1.428	16.41	.1984	.3441	.1883
49	421.49	1379.0	62.000	4.557	52.37	.6330	1.147	.6275
49	444.91	1343.1	63.000	4.679	53.77	.6500	1.178	.6446
49	444.91	1358.9	64.000	4.640	53.32	.6446	1.168	.6391

OH57,AEDC V41B-K3A, MODEL 92-0, LH WING LWR SURF (R4AL03)

RUN NUMBER	YO	XO	T/C NO	PN PSIA	PN/P	PN/PT2	CPN	CPN/MX
49	444.91	1375.6	65.000	4.451	51.30	.6183	1.123	.6144
49	444.91	1379.0	66.000	4.220	48.63	.5862	1.063	.5818
49	444.91	1398.4	67.000	2.182	25.15	.3031	.5390	.2950
49	444.91	1414.2	68.000	1.895	21.84	.2632	.4652	.2546
49	444.91	1430.0	69.000	1.594	18.37	.2215	.3878	.2122
49	456.63	1379.0	70.000	4.022	46.35	.5587	1.012	.5539
49	456.63	1398.4	71.000	1.988	22.91	.2762	.4891	.2676
49	456.63	1413.3	72.000	1.693	19.52	.2352	.4133	.2262
49	468.34	1379.0	73.000	2.282	26.30	.3170	.5647	.3090

OH57,AEDC V41B-K3A, MODEL 92-0, LH WING LWR SURF (R4AL04)

L.H. WING LWR SURF

PARAMETRIC DATA

MACH = 8.000 PO = 850.0 RN/FT = 3.600 ELEVON = -10.00
BDFLAP = .0000 SPDBRK = .0000 RUDDER = .0000

TEST CONDITIONS

RUN NUMBER	ALPHA DEG.	BETA DEG.	PO PSIA	TO DEG. R	P PSIA	T DEG. R	Q PSIA	V FT/SEC	CPMAX	PT2 PSIA	RHO SLUGS /FT3	MU LB-SEC /FT2
6	29.99	.0000	851.5	1350.	.8721-01	97.83	3.907	3880.	1.827	7.227	.7474-04	.7872-07

RUN NUMBER	RN/FT /FT X 106
6	3.684

TEST DATA

RUN NUMBER	YO	XO	T/C NO	PN PSIA	PN/P	PN/PT2	CPN	CPN/MX
6	116.00	1379.0	1.0000	1.808	20.73	.2501	.4404	.2410
6	129.43	1379.0	2.0000	1.811	20.75	.2506	.4409	.2413
6	129.43	1398.4	3.0000	.6990	8.013	.9672-01	.1565	.8566-01
6	140.51	1379.0	4.0000	1.820	20.87	.2518	.4435	.2427
6	140.51	1398.4	5.0000	.8582	9.838	.1188	.1973	.1080
6	163.94	1379.0	6.0000	1.823	20.91	.2522	.4445	.2433
6	187.31	1190.4	7.0000	2.311	26.50	.3198	.5692	.3115
6	187.31	1240.7	8.0000	2.272	26.04	.3144	.5588	.3058
6	187.31	1290.9	9.0000	2.250	25.80	.3114	.5536	.3030
6	187.31	1341.2	10.000	2.073	23.76	.2869	.5081	.2781
6	187.31	1353.8	11.000	2.006	23.00	.2776	.4910	.2687
6	187.31	1375.6	12.000	1.892	21.70	.2618	.4620	.2528
6	187.31	1379.0	13.000	1.834	21.02	.2537	.4469	.2446
6	187.31	1398.4	14.000	.9015	10.34	.1247	.2086	.1141
6	187.31	1416.6	15.000	.7299	8.370	.1010	.1645	.9002-01
6	187.31	1441.7	16.000	.5637	6.460	.7800-01	.1219	.6669-01
6	187.31	1466.9	17.000	.4611	5.287	.6380-01	.9569-01	.5236-01
6	210.74	1379.0	18.000	1.893	21.69	.2619	.4619	.2527
6	234.17	1379.0	19.000	2.059	23.61	.2850	.5047	.2762
6	257.60	1379.0	20.000	2.127	24.39	.2943	.5222	.2857
6	281.03	1152.7	21.000	3.070	35.19	.4247	.7631	.4176

OH57,AEDC V41B-K3A, MODEL 92-0, LH WING LWR SURF (R4AL04)

RUN NUMBER	YO	XO	T/C NO	PN PSIA	PN/P	PN/PT2	CPN	CPN/MX
6	281.03	1188.6	22.000	2.785	31.96	.3854	.6911	.3782
6	281.03	1224.5	23.000	2.614	29.98	.3617	.6468	.3540
6	281.03	1260.3	24.000	2.566	29.40	.3551	.6340	.3470
6	281.03	1296.2	25.000	2.497	28.64	.3456	.6169	.3376
6	281.03	1332.0	26.000	2.439	27.95	.3375	.6016	.3292
6	281.03	1358.9	27.000	2.343	26.85	.3241	.5771	.3158
6	281.03	1375.6	28.000	2.216	25.42	.3067	.5450	.2983
6	281.03	1379.0	29.000	2.186	25.06	.3025	.5371	.2939
6	281.03	1398.4	30.000	.9452	10.85	.1308	.2198	.1203
6	281.03	1421.7	31.000	.6584	7.550	.9110-01	.1462	.8001-01
6	281.03	1439.6	32.000	.5247	6.013	.7261-01	.1119	.6123-01
6	281.03	1457.5	33.000	.4387	5.030	.6070-01	.8995-01	.4922-01
6	281.03	1466.5	34.000	.3835	4.396	.5307-01	.7580-01	.4148-01
6	292.74	1379.0	35.000	2.224	25.50	.3078	.5468	.2993
6	304.40	1379.0	36.000	2.281	26.16	.3157	.5617	.3074
6	304.40	1398.4	37.000	.9107	10.44	.1260	.2107	.1153
6	311.20	1379.0	38.000	2.296	26.35	.3178	.5659	.3097
6	320.80	1379.0	39.000	2.321	26.61	.3211	.5717	.3128
6	320.80	1398.4	40.000	.9023	10.34	.1248	.2085	.1141
6	320.80	1421.3	41.000	.7001	8.028	.9688-01	.1569	.8585-01
6	320.80	1444.2	42.000	.5633	6.456	.7794-01	.1218	.6667-01
6	327.83	1375.6	43.000	2.377	27.24	.3289	.5858	.3206
6	327.83	1379.0	44.000	2.332	26.74	.3226	.5745	.3144
6	327.83	1398.4	45.000	.9984	11.44	.1381	.2331	.1276
6	327.83	1421.3	46.000	.6933	7.955	.9594-01	.1553	.8496-01
6	327.83	1444.2	47.000	.5493	6.299	.7600-01	.1183	.6473-01
6	351.26	1379.0	48.000	2.440	27.96	.3376	.6017	.3293
6	374.69	1379.0	49.000	2.498	28.64	.3456	.6170	.3376
6	398.11	1256.2	50.000	3.448	39.51	.4770	.8596	.4704
6	398.11	1278.3	51.000	3.273	37.52	.4529	.8152	.4461
6	398.11	1301.4	52.000	3.109	35.66	.4303	.7736	.4233
6	398.11	1322.3	53.000	3.015	34.56	.4172	.7491	.4099
6	398.11	1344.4	54.000	2.934	33.66	.4059	.7290	.3990
6	398.11	1366.5	55.000	2.743	31.45	.3795	.6798	.3720
6	398.11	1375.6	56.000	2.656	30.43	.3675	.6570	.3595
6	398.11	1379.0	57.000	2.600	29.81	.3598	.6431	.3519
6	398.11	1398.4	58.000	1.139	13.05	.1576	.2690	.1472
6	398.11	1410.5	59.000	.9354	10.73	.1296	.2173	.1189
6	398.11	1432.6	60.000	.7212	8.271	.9980-01	.1623	.8881-01
6	398.11	1443.6	61.000	.5922	6.789	.8194-01	.1292	.7071-01
6	421.49	1379.0	62.000	2.707	31.06	.3745	.6709	.3671
6	444.91	1343.1	63.000	2.894	33.19	.4005	.7185	.3932
6	444.91	1358.9	64.000	2.831	32.44	.3918	.7019	.3841

OH57,AEDC V41B-K3A, MODEL 92-0, LH WING LWR SURF (R4AL04)

RUN NUMBER	YO	XO	T/C NO	PN PSIA	PN/P	PN/PT2	CPN	CPN/MX
6	444.91	1375.6	65.000	2.376	27.24	.3287	.5857	.3205
6	444.91	1379.0	66.000	2.376	27.24	.3288	.5856	.3205
6	444.91	1398.4	67.000	1.277	14.63	.1767	.3044	.1666
6	444.91	1414.2	68.000	1.028	11.79	.1422	.2408	.1318
6	444.91	1430.0	69.000	.8165	9.360	.1130	.1866	.1021
6	456.63	1379.0	70.000	2.378	27.28	.3290	.5866	.3210
6	456.63	1398.4	71.000	1.165	13.36	.1612	.2758	.1510
6	456.63	1413.3	72.000	.9406	10.78	.1302	.2183	.1194
6	468.34	1379.0	73.000	.9754	11.18	.1350	.2273	.1244

OH57,AEDC V41B-K3A, MODEL 92-0, LH WING LWR SURF (R4AL04)

L.H. WING LWR SURF

PARAMETRIC DATA

MACH = 8.000 PO = 850.0 RN/FT = 3.600 ELEVON = -10.00
BDFLAP = .0000 SPDBRK = .0000 RUDDER = .0000

TEST CONDITIONS

RUN NUMBER	ALPHA DEG.	BETA DEG.	PO PSIA	TO DEG. R	P PSIA	T DEG. R	Q PSIA	V FT/SEC	CPMAX	PT2 PSIA	RHO SLUGS /FT3	MU LB-SEC /FT2
7	39.99	.0000	850.7	1350.	.8714-01	97.83	3.904	3880.	1.827	7.221	.7468-04	.7872-07

RUN NUMBER	RN/FT /FT X 106
7	3.681

TEST DATA

RUN NUMBER	YO	XO	T/C NO	PN PSIA	PN/P	PN/PT2	CPN	CPN/MX
7	116.00	1379.0	1.0000	3.068	35.21	.4249	.7636	.4179
7	129.43	1379.0	2.0000	3.077	35.31	.4262	.7657	.4190
7	129.43	1398.4	3.0000	1.270	14.57	.1759	.3028	.1657
7	140.51	1379.0	4.0000	3.100	35.56	.4293	.7713	.4221
7	140.51	1398.4	5.0000	1.573	18.04	.2179	.3804	.2082
7	163.94	1379.0	6.0000	3.142	36.02	.4351	.7817	.4278
7	187.31	1190.4	7.0000	3.633	41.72	.5031	.9090	.4974
7	187.31	1240.7	8.0000	3.593	41.21	.4975	.8975	.4911
7	187.31	1290.9	9.0000	3.625	41.60	.5020	.9063	.4960
7	187.31	1341.2	10.000	3.449	39.56	.4776	.8608	.4711
7	187.31	1353.8	11.000	3.369	38.64	.4666	.8403	.4598
7	187.31	1375.6	12.000	3.243	37.20	.4491	.8081	.4422
7	187.31	1379.0	13.000	3.195	36.52	.4411	.7928	.4339
7	187.31	1398.4	14.000	1.700	19.50	.2355	.4129	.2259
7	187.31	1416.6	15.000	1.441	16.55	.1996	.3471	.1900
7	187.31	1441.7	16.000	1.188	13.63	.1645	.2818	.1542
7	187.31	1466.9	17.000	1.027	11.79	.1422	.2408	.1318
7	210.74	1379.0	18.000	3.248	37.27	.4498	.8096	.4430
7	234.17	1379.0	19.000	3.351	38.43	.4640	.8355	.4572
7	257.60	1379.0	20.000	3.483	39.95	.4823	.8694	.4758
7	281.03	1152.7	21.000	4.942	56.67	.6844	1.243	.6800

OH57,AEDC V41B-K3A, MODEL 92-0, LH WING LWR SURF (R4AL04)

RUN NUMBER	YO	XO	T/C NO	PN PSIA	PN/P	PN/PT2	CPN	CPN/MX
7	281.03	1188.6	22.000	4.413	50.60	.6112	1.107	.6058
7	281.03	1224.5	23.000	4.144	47.59	.5739	1.040	.5691
7	281.03	1260.3	24.000	4.084	46.84	.5656	1.023	.5600
7	281.03	1296.2	25.000	4.061	46.61	.5624	1.018	.5571
7	281.03	1332.0	26.000	3.938	45.18	.5454	.9862	.5397
7	281.03	1358.9	27.000	3.771	43.26	.5223	.9433	.5162
7	281.03	1375.6	28.000	3.605	41.35	.4992	.9006	.4928
7	281.03	1379.0	29.000	3.552	40.73	.4919	.8868	.4853
7	281.03	1398.4	30.000	1.814	20.79	.2512	.4418	.2418
7	281.03	1421.7	31.000	1.438	16.52	.1992	.3463	.1895
7	281.03	1439.6	32.000	1.232	14.14	.1707	.2932	.1604
7	281.03	1457.5	33.000	1.018	11.69	.1410	.2385	.1305
7	281.03	1466.5	34.000	.9173	10.52	.1270	.2126	.1163
7	292.74	1379.0	35.000	3.556	40.79	.4924	.8881	.4860
7	304.40	1379.0	36.000	3.614	41.46	.5005	.9031	.4942
7	304.40	1398.4	37.000	1.626	18.65	.2252	.3939	.2156
7	311.20	1379.0	38.000	3.637	41.70	.5037	.9084	.4971
7	320.80	1379.0	39.000	3.664	42.08	.5074	.9169	.5017
7	320.80	1398.4	40.000	1.635	18.76	.2265	.3964	.2169
7	320.80	1421.3	41.000	1.453	16.68	.2013	.3499	.1915
7	320.80	1444.2	42.000	1.260	14.45	.1745	.3003	.1643
7	327.83	1375.6	43.000	3.759	43.12	.5206	.9402	.5145
7	327.83	1379.0	44.000	3.695	42.38	.5117	.9237	.5055
7	327.83	1398.4	45.000	1.763	20.22	.2442	.4290	.2348
7	327.83	1421.3	46.000	1.439	16.49	.1992	.3459	.1893
7	327.83	1444.2	47.000	1.225	14.07	.1697	.2918	.1597
7	351.26	1379.0	48.000	3.814	43.74	.5281	.9541	.5221
7	374.69	1379.0	49.000	3.879	44.51	.5372	.9712	.5315
7	398.11	1256.2	50.000	4.701	53.93	.6510	1.182	.6466
7	398.11	1278.3	51.000	4.621	53.01	.6400	1.161	.6353
7	398.11	1301.4	52.000	4.501	51.63	.6233	1.130	.6184
7	398.11	1322.3	53.000	4.406	50.52	.6102	1.105	.6049
7	398.11	1344.4	54.000	4.357	49.95	.6033	1.093	.5979
7	398.11	1366.5	55.000	4.197	48.08	.5798	1.051	.5751
7	398.11	1375.6	56.000	4.086	46.87	.5659	1.024	.5603
7	398.11	1379.0	57.000	3.991	45.80	.5526	.9999	.5472
7	398.11	1398.4	58.000	1.972	22.63	.2731	.4827	.2642
7	398.11	1410.5	59.000	1.736	19.92	.2405	.4223	.2311
7	398.11	1432.6	60.000	1.388	15.92	.1922	.3331	.1823
7	398.11	1443.6	61.000	1.169	13.40	.1619	.2768	.1515
7	421.49	1379.0	62.000	4.060	46.54	.5622	1.017	.5563
7	444.91	1343.1	63.000	4.112	47.22	.5695	1.032	.5646
7	444.91	1358.9	64.000	4.079	46.79	.5649	1.022	.5593

OH57,AEDC V41B-K3A, MODEL 92-0, LH WING LWR SURF (R4AL04)

RUN NUMBER	YO	XO	T/C NO	PN PSIA	PN/P	PN/PT2	CPN	CPN/MX
7	444.91	1375.6	65.000	2.378	27.28	.3293	.5867	.3211
7	444.91	1379.0	66.000	2.379	27.29	.3294	.5869	.3212
7	444.91	1398.4	67.000	1.885	21.62	.2610	.4602	.2519
7	444.91	1414.2	68.000	1.617	18.55	.2240	.3918	.2144
7	444.91	1430.0	69.000	1.343	15.40	.1860	.3214	.1759
7	456.63	1379.0	70.000	2.381	27.29	.3297	.5869	.3212
7	456.63	1398.4	71.000	1.745	20.04	.2417	.4251	.2326
7	456.63	1413.3	72.000	1.487	17.06	.2060	.3585	.1962
7	468.34	1379.0	73.000	1.241	14.24	.1718	.2955	.1617

L.H. WING LWR SURF

PARAMETRIC DATA

MACH = 7.940 PO = 210.0 RN/FT = 1.000 ELEVON = .0000
BDFLAP = -12.50 SPDBRK = 49.30 RUDDER = .0000

TEST CONDITIONS

RUN NUMBER	ALPHA DEG.	BETA DEG.	PO PSIA	TO DEG. R	P PSIA	T DEG. R	Q PSIA	V FT/SEC	CPMAX	PT2 PSIA	RHO SLUGS /FT3	MU LB-SEC /FT2
18	30.04	.0000	209.6	1263.	.2254-01	92.81	.9949	3751.	1.827	1.840	.2036-04	.7468-07

RUN NUMBER	RN/FT /FT X 106
18	1.023

TEST DATA

RUN NUMBER	YO	XO	T/C NO	PN PSIA	PN/P	PN/PT2	CPN	CPN/MX
18	116.00	1379.0	1.0000	.4544	20.16	.2469	.4341	.2376
18	129.43	1379.0	2.0000	.4606	20.43	.2503	.4403	.2410
18	129.43	1398.4	3.0000	.3449	15.30	.1874	.3240	.1773
18	140.51	1379.0	4.0000	.4744	21.04	.2578	.4542	.2486
18	140.51	1398.4	5.0000	.4035	17.90	.2193	.3829	.2096
18	163.94	1379.0	6.0000	.4699	20.84	.2553	.4497	.2461
18	187.31	1190.4	7.0000	.6001	26.62	.3261	.5806	.3177
18	187.31	1240.7	8.0000	.6021	26.71	.3272	.5825	.3188
18	187.31	1290.9	9.0000	.5828	25.85	.3167	.5631	.3082
18	187.31	1341.2	10.000	.5384	23.88	.2925	.5185	.2838
18	187.31	1353.8	11.000	.5163	22.90	.2806	.4963	.2716
18	187.31	1375.6	12.000	.4862	21.57	.2642	.4660	.2551
18	187.31	1379.0	13.000	.4945	21.93	.2687	.4743	.2596
18	187.31	1398.4	14.000	.4224	18.74	.2295	.4019	.2200
18	187.31	1416.6	15.000	.3938	17.47	.2140	.3732	.2043
18	187.31	1441.7	16.000	.3253	14.43	.1768	.3044	.1666
18	187.31	1466.9	17.000	.2696	11.97	.1465	.2486	.1361
18	210.74	1379.0	18.000	.4870	21.63	.2646	.4674	.2558
18	234.17	1379.0	19.000	.5127	22.76	.2786	.4931	.2699
18	257.60	1379.0	20.000	.5376	23.87	.2921	.5182	.2836
18	281.03	1152.7	21.000	.7940	35.26	.4315	.7762	.4248

OH57,AEDC V41B-K3A, MODEL 92-0, LH WING LWR SURF (R4AL05)

RUN NUMBER	YO	XO	T/C NO	PN PSIA	PN/P	PN/PT2	CPN	CPN/MX
18	281.03	1188.6	22.000	.7039	31.25	.3825	.6855	.3752
18	281.03	1224.5	23.000	.6790	30.15	.3690	.6605	.3615
18	281.03	1260.3	24.000	.6771	30.06	.3679	.6586	.3604
18	281.03	1296.2	25.000	.6473	28.74	.3517	.6286	.3440
18	281.03	1332.0	26.000	.6189	27.48	.3363	.6000	.3284
18	281.03	1358.9	27.000	.5758	25.57	.3129	.5566	.3046
18	281.03	1375.6	28.000	.5482	24.34	.2979	.5289	.2895
18	281.03	1379.0	29.000	.5575	24.75	.3029	.5382	.2946
18	281.03	1398.4	30.000	.4714	20.93	.2562	.4516	.2472
18	281.03	1421.7	31.000	.3959	17.58	.2151	.3756	.2056
18	281.03	1439.6	32.000	.3354	14.89	.1822	.3148	.1723
18	281.03	1457.5	33.000	.2748	12.26	.1493	.2551	.1396
18	281.03	1466.5	34.000	.2475	11.04	.1345	.2274	.1245
18	292.74	1379.0	35.000	.5725	25.53	.3111	.5558	.3042
18	304.40	1379.0	36.000	.5644	25.17	.3067	.5476	.2997
18	304.40	1398.4	37.000	.4382	19.54	.2381	.4201	.2299
18	311.20	1379.0	38.000	.5555	24.77	.3018	.5386	.2948
18	320.80	1379.0	39.000	.5712	25.47	.3104	.5545	.3035
18	320.80	1398.4	40.000	.4562	20.34	.2479	.4383	.2399
18	320.80	1421.3	41.000	.4228	18.85	.2297	.4046	.2214
18	320.80	1444.2	42.000	.3505	15.63	.1904	.3315	.1814
18	327.83	1375.6	43.000	.5920	26.40	.3217	.5756	.3150
18	327.83	1379.0	44.000	.5807	25.89	.3155	.5641	.3087
18	327.83	1398.4	45.000	.5042	22.48	.2740	.4868	.2664
18	327.83	1421.3	46.000	.3948	17.61	.2145	.3763	.2059
18	327.83	1444.2	47.000	.3382	15.08	.1838	.3191	.1746
18	351.26	1379.0	48.000	.6049	26.97	.3287	.5885	.3221
18	374.69	1379.0	49.000	.6292	28.04	.3419	.6128	.3354
18	398.11	1256.2	50.000	.8823	39.33	.4794	.8685	.4753
18	398.11	1278.3	51.000	.8618	38.41	.4683	.8478	.4640
18	398.11	1301.4	52.000	.7760	34.59	.4216	.7610	.4165
18	398.11	1322.3	53.000	.7634	34.02	.4148	.7483	.4096
18	398.11	1344.4	54.000	.7227	32.21	.3927	.7073	.3871
18	398.11	1366.5	55.000	.6874	30.64	.3735	.6716	.3676
18	398.11	1375.6	56.000	.6696	29.84	.3639	.6536	.3577
18	398.11	1379.0	57.000	.6479	28.88	.3521	.6317	.3457
18	398.11	1398.4	58.000	.5574	24.85	.3029	.5403	.2957
18	398.11	1410.5	59.000	.4914	21.90	.2670	.4737	.2592
18	398.11	1432.6	60.000	.3967	17.68	.2155	.3780	.2069
18	398.11	1443.6	61.000	.3433	15.30	.1865	.3240	.1773
18	421.49	1379.0	62.000	.6524	29.08	.3545	.6363	.3482
18	444.91	1343.1	63.000	.7172	31.96	.3897	.7016	.3840
18	444.91	1358.9	64.000	.7032	31.34	.3821	.6875	.3763

OH57,AEDC V41B-K3A, MODEL 92-0, LH WING LWR SURF (R4AL05)

RUN NUMBER	YO	XO	T/C NO	PN PSIA	PN/P	PN/PT2	CPN	CPN/MX
18	444.91	1375.6	65.000	.6743	30.11	.3664	.6597	.3610
18	444.91	1379.0	66.000	.6280	28.05	.3413	.6128	.3354
18	444.91	1398.4	67.000	.5862	26.18	.3185	.5705	.3122
18	444.91	1414.2	68.000	.4836	21.60	.2628	.4667	.2554
18	444.91	1430.0	69.000	.3951	17.64	.2147	.3771	.2064
18	456.63	1379.0	70.000	.6141	27.43	.3337	.5988	.3277
18	456.63	1398.4	71.000	.5101	22.78	.2772	.4935	.2701
18	456.63	1413.3	72.000	.4368	19.51	.2374	.4194	.2295
18	468.34	1379.0	73.000	.4337	19.37	.2356	.4162	.2278

OH57,AEDC V41B-K3A, MODEL 92-0, LH WING LWR SURF (R4AL05)

L.H. WING LWR SURF

PARAMETRIC DATA

MACH = 7.940 PO = 210.0 RN/FT = 1.000 ELEVON = .0000
BDFLAP = -12.50 SPDBRK = 49.30 RUDDER = .0000

TEST CONDITIONS

RUN NUMBER	ALPHA DEG.	BETA DEG.	PO PSIA	TO DEG. R	P PSIA	T DEG. R	Q PSIA	V FT/SEC	CPMAX	PT2 PSIA	RHO SLUGS /FT3	MU LB-SEC /FT2
19	35.00	.0000	208.7	1260.	.2245-01	92.59	.9906	3746.	1.827	1.832	.2033-04	.7451-07

RUN NUMBER	RN/FT /FT X 106
19	1.022

TEST DATA

RUN NUMBER	YO	XO	T/C NO	PN PSIA	PN/P	PN/PT2	CPN	CPN/MX
19	116.00	1379.0	1.0000	.5895	26.26	.3217	.5724	.3133
19	129.43	1379.0	2.0000	.5973	26.61	.3260	.5803	.3176
19	129.43	1398.4	3.0000	.4583	20.42	.2501	.4400	.2408
19	140.51	1379.0	4.0000	.6142	27.36	.3352	.5973	.3269
19	140.51	1398.4	5.0000	.5298	23.60	.2891	.5122	.2803
19	163.94	1379.0	6.0000	.6119	27.26	.3339	.5951	.3257
19	187.31	1190.4	7.0000	.7527	33.53	.4108	.7372	.4034
19	187.31	1240.7	8.0000	.7591	33.82	.4143	.7436	.4070
19	187.31	1290.9	9.0000	.7401	32.97	.4039	.7244	.3965
19	187.31	1341.2	10.000	.6943	30.93	.3789	.6782	.3712
19	187.31	1353.8	11.000	.6690	29.80	.3651	.6526	.3572
19	187.31	1375.6	12.000	.6335	28.22	.3457	.6168	.3376
19	187.31	1379.0	13.000	.6446	28.72	.3518	.6280	.3437
19	187.31	1398.4	14.000	.5572	24.82	.3041	.5398	.2954
19	187.31	1416.6	15.000	.5266	23.46	.2874	.5089	.2785
19	187.31	1441.7	16.000	.4437	19.77	.2421	.4253	.2327
19	187.31	1466.9	17.000	.3716	16.54	.2028	.3521	.1927
19	210.74	1379.0	18.000	.6368	28.34	.3475	.6196	.3391
19	234.17	1379.0	19.000	.6787	30.21	.3704	.6619	.3622
19	257.60	1379.0	20.000	.6913	30.77	.3773	.6746	.3692
19	281.03	1152.7	21.000	1.015	45.19	.5541	1.001	.5480

OH57,AEDC V41B-K3A, MODEL 92-0, LH WING LWR SURF (R4AL05)

RUN NUMBER	YO	XO	T/C NO	PN PSIA	PN/P	PN/PT2	CPN	CPN/MX
19	281.03	1188.6	22.000	.8884	39.54	.4848	.8733	.4779
19	281.03	1224.5	23.000	.8583	38.20	.4684	.8430	.4614
19	281.03	1260.3	24.000	.8562	38.11	.4673	.8409	.4602
19	281.03	1296.2	25.000	.8349	37.16	.4556	.8194	.4484
19	281.03	1332.0	26.000	.8021	35.70	.4377	.7863	.4303
19	281.03	1358.9	27.000	.7485	33.31	.4085	.7322	.4007
19	281.03	1375.6	28.000	.7143	31.79	.3898	.6978	.3819
19	281.03	1379.0	29.000	.7257	32.30	.3960	.7092	.3881
19	281.03	1398.4	30.000	.6198	27.59	.3382	.6024	.3297
19	281.03	1421.7	31.000	.5362	23.86	.2926	.5181	.2835
19	281.03	1439.6	32.000	.4606	20.50	.2514	.4419	.2418
19	281.03	1457.5	33.000	.3892	17.28	.2124	.3689	.2019
19	281.03	1466.5	34.000	.3532	15.68	.1928	.3327	.1821
19	292.74	1379.0	35.000	.7426	32.97	.4052	.7245	.3965
19	304.40	1379.0	36.000	.7254	32.21	.3959	.7072	.3870
19	304.40	1398.4	37.000	.5769	25.62	.3148	.5578	.3053
19	311.20	1379.0	38.000	.7181	31.88	.3919	.6998	.3830
19	320.80	1379.0	39.000	.7363	32.69	.4018	.7182	.3930
19	320.80	1398.4	40.000	.5981	26.55	.3264	.5791	.3169
19	320.80	1421.3	41.000	.5615	24.93	.3064	.5422	.2968
19	320.80	1444.2	42.000	.4802	21.32	.2621	.4605	.2520
19	327.83	1375.6	43.000	.7621	33.84	.4159	.7441	.4073
19	327.83	1379.0	44.000	.7491	33.26	.4088	.7310	.4001
19	327.83	1398.4	45.000	.6573	29.18	.3587	.6386	.3495
19	327.83	1421.3	46.000	.5258	23.35	.2869	.5064	.2771
19	327.83	1444.2	47.000	.4642	20.61	.2533	.4444	.2432
19	351.26	1379.0	48.000	.7755	34.43	.4232	.7576	.4146
19	374.69	1379.0	49.000	.8011	35.54	.4372	.7826	.4283
19	398.11	1256.2	50.000	1.029	45.66	.5618	1.012	.5539
19	398.11	1278.3	51.000	1.048	46.47	.5717	1.030	.5639
19	398.11	1301.4	52.000	.9555	42.38	.5214	.9378	.5132
19	398.11	1322.3	53.000	.9360	41.52	.5108	.918[illegible]	.5025
19	398.11	1344.4	54.000	.8896	39.46	.4855	.8715	.4770
19	398.11	1366.5	55.000	.8599	38.10	.4687	.8407	.4601
19	398.11	1375.6	56.000	.8375	37.15	.4570	.8192	.4483
19	398.11	1379.0	57.000	.8175	36.26	.4461	.7991	.4373
19	398.11	1398.4	58.000	.7123	31.60	.3887	.6933	.3795
19	398.11	1410.5	59.000	.6348	28.16	.3464	.6154	.3368
19	398.11	1432.6	60.000	.5205	23.09	.2840	.5005	.2739
19	398.11	1443.6	61.000	.4570	20.27	.2494	.4367	.2390
19	421.49	1379.0	62.000	.8056	35.74	.4396	.7871	.4308
19	444.91	1343.1	63.000	.8713	38.65	.4755	.8532	.4669
19	444.91	1358.9	64.000	.8535	37.86	.4658	.8352	.4571

OH57,AEDC V41B-K3A, MODEL 92-0, LH WING LWR SURF (R4AL05)

RUN NUMBER	YO	XO	T/C NO	PN PSIA	PN/P	PN/PT2	CPN	CPN/MX
19	444.91	1375.6	65.000	.8338	36.95	.4550	.8147	.4459
19	444.91	1379.0	66.000	.7832	34.71	.4274	.7638	.4180
19	444.91	1398.4	67.000	.7308	32.39	.3988	.7112	.3892
19	444.91	1414.2	68.000	.6118	27.11	.3339	.5917	.3238
19	444.91	1430.0	69.000	.5058	22.41	.2760	.4852	.2656
19	456.63	1379.0	70.000	.7546	33.44	.4118	.7351	.4023
19	456.63	1398.4	71.000	.6339	28.09	.3459	.6139	.3360
19	456.63	1413.3	72.000	.5501	24.38	.3002	.5298	.2899
19	468.34	1379.0	73.000	.5158	22.86	.2815	.4953	.2711

L.H. WING LWR SURF

PARAMETRIC DATA

MACH = 7.940 PO = 210.0 RN/FT = 1.000 ELEVON = .0000
BDFLAP = -12.50 SPDBRK = 49.30 RUDDER = .0000

TEST CONDITIONS

RUN NUMBER	ALPHA DEG.	BETA DEG.	PO PSIA	TO DEG. R	P PSIA	T DEG. R	Q PSIA	V FT/SEC	CPMAX	PT2 PSIA	RHO SLUGS /FT3	MU LB-SEC /FT2
20	40.03	.0000	210.0	1257.	.2259-01	92.37	.9968	3742.	1.827	1.844	.2050-04	.7433-07

RUN NUMBER	RN/FT /FT X 106
20	1.032

TEST DATA

RUN NUMBER	YO	XO	T/C NO	PN PSIA	PN/P	PN/PT2	CPN	CPN/MX
20	116.00	1379.0	1.0000	.7488	33.15	.4061	.7285	.3987
20	129.43	1379.0	2.0000	.7596	33.63	.4120	.7394	.4047
20	129.43	1398.4	3.0000	.5933	26.27	.3218	.5726	.3134
20	140.51	1379.0	4.0000	.7529	33.34	.4084	.7327	.4010
20	140.51	1398.4	5.0000	.6794	30.08	.3685	.6589	.3606
20	163.94	1379.0	6.0000	.7804	34.55	.4233	.7603	.4161
20	187.31	1190.4	7.0000	.9206	40.76	.4993	.9010	.4931
20	187.31	1240.7	8.0000	.9324	41.28	.5057	.9128	.4996
20	187.31	1290.9	9.0000	.9042	40.03	.4904	.8844	.4840
20	187.31	1341.2	10.000	.8741	38.70	.4741	.8543	.4675
20	187.31	1353.8	11.000	.8459	37.45	.4588	.8260	.4520
20	187.31	1375.6	12.000	.8069	35.72	.4376	.7868	.4306
20	187.31	1379.0	13.000	.8213	36.36	.4455	.8014	.4386
20	187.31	1398.4	14.000	.7168	31.74	.3888	.6965	.3812
20	187.31	1416.6	15.000	.6867	30.40	.3724	.6663	.3646
20	187.31	1441.7	16.000	.5860	25.94	.3178	.5652	.3094
20	187.31	1466.9	17.000	.4996	22.08	.2709	.4776	.2614
20	210.74	1379.0	18.000	.8092	35.76	.4389	.7876	.4311
20	234.17	1379.0	19.000	.8467	37.42	.4592	.8252	.4516
20	257.60	1379.0	20.000	.8327	36.80	.4516	.8111	.4439
20	281.03	1152.7	21.000	1.245	55.00	.6751	1.224	.6697

OH57,AEDC V41B-K3A, MODEL 92-0, LH WING LWR SURF (R4AL05)

RUN NUMBER	YO	XO	T/C NO	PN PSIA	PN/P	PN/PT2	CPN	CPN/MX
20	281.03	1188.6	22.000	1.094	48.34	.5933	1.073	.5871
20	281.03	1224.5	23.000	1.049	46.37	.5691	1.028	.5627
20	281.03	1260.3	24.000	1.028	45.41	.5574	1.006	.5508
20	281.03	1296.2	25.000	1.004	44.35	.5444	.9824	.5377
20	281.03	1332.0	26.000	.9709	42.90	.5266	.9495	.5197
20	281.03	1358.9	27.000	.9202	40.66	.4990	.8987	.4919
20	281.03	1375.6	28.000	.8730	38.58	.4734	.8515	.4660
20	281.03	1379.0	29.000	.8893	39.30	.4823	.8679	.4750
20	281.03	1398.4	30.000	.7888	34.86	.4278	.7672	.4199
20	281.03	1421.7	31.000	.6975	30.82	.3783	.6758	.3699
20	281.03	1439.6	32.000	.6081	26.87	.3298	.5863	.3209
20	281.03	1457.5	33.000	.5238	23.14	.2841	.5016	.2745
20	281.03	1466.5	34.000	.4784	21.13	.2595	.4562	.2497
20	292.74	1379.0	35.000	.9185	40.57	.4982	.8967	.4907
20	304.40	1379.0	36.000	.8775	38.76	.4759	.8557	.4683
20	304.40	1398.4	37.000	.7291	32.20	.3954	.7071	.3870
20	311.20	1379.0	38.000	.8776	38.76	.4759	.8557	.4683
20	320.80	1379.0	39.000	.9074	40.08	.4921	.8856	.4847
20	320.80	1398.4	40.000	.7462	32.96	.4047	.7242	.3963
20	320.80	1421.3	41.000	.7026	31.03	.3811	.6806	.3725
20	320.80	1444.2	42.000	.6302	27.84	.3418	.6081	.3328
20	327.83	1375.6	43.000	.9322	41.17	.5056	.9104	.4982
20	327.83	1379.0	44.000	.9179	40.54	.4978	.8960	.4904
20	327.83	1398.4	45.000	.8224	36.32	.4460	.8004	.4381
20	327.83	1421.3	46.000	.6756	29.84	.3664	.6535	.3577
20	327.83	1444.2	47.000	.6098	26.93	.3307	.5877	.3216
20	351.26	1379.0	48.000	.9262	40.91	.5023	.9044	.4950
20	374.69	1379.0	49.000	.8991	39.69	.4876	.8768	.4798
20	398.11	1256.2	50.000	1.164	51.41	.6315	1.142	.6251
20	398.11	1278.3	51.000	1.111	49.05	.6026	1.089	.5960
20	398.11	1301.4	52.000	1.110	49.01	.6021	1.088	.5954
20	398.11	1322.3	53.000	1.137	50.18	.6165	1.115	.6100
20	398.11	1344.4	54.000	1.086	47.96	.5892	1.064	.5824
20	398.11	1366.5	55.000	1.043	46.04	.5656	1.021	.5586
20	398.11	1375.6	56.000	1.019	45.01	.5529	.9972	.5458
20	398.11	1379.0	57.000	.9767	43.12	.5297	.9544	.5223
20	398.11	1398.4	58.000	.8839	39.02	.4794	.8616	.4715
20	398.11	1410.5	59.000	.7796	34.37	.4223	.7562	.4139
20	398.11	1432.6	60.000	.6634	29.29	.3598	.6410	.3508
20	398.11	1443.6	61.000	.5901	26.05	.3200	.5677	.3107
20	421.49	1379.0	62.000	.8162	36.03	.4427	.7939	.4345
20	444.91	1343.1	63.000	1.043	46.02	.5654	1.020	.5584
20	444.91	1358.9	64.000	1.025	45.27	.5561	1.003	.5490

OH57,AEDC V41B-K3A, MODEL 92-0, LH WING LWR SURF (R4AL05)

RUN NUMBER	YO	XO	T/C NO	PN PSIA	PN/P	PN/PT2	CPN	CPN/MX
20	444.91	1375.6	65.000	1.003	44.32	.5440	.9817	.5373
20	444.91	1379.0	66.000	.9346	41.30	.5069	.9132	.4998
20	444.91	1398.4	67.000	.8820	38.97	.4783	.8605	.4709
20	444.91	1414.2	68.000	.7299	32.25	.3959	.7082	.3876
20	444.91	1430.0	69.000	.6319	27.92	.3427	.6100	.3339
20	456.63	1379.0	70.000	.8884	39.26	.4818	.8669	.4745
20	456.63	1398.4	71.000	.7701	34.03	.4176	.7484	.4096
20	456.63	1413.3	72.000	.6767	29.90	.3670	.6549	.3584
20	468.34	1379.0	73.000	.6096	26.94	.3306	.5878	.3217

OH57,AEDC V41B-K3A, MODEL 92-0, LH WING LWR SURF (R4AL05)

L.H. WING LWR SURF

PARAMETRIC DATA

MACH = 7.940 PO = 210.0 RN/FT = 1.000 ELEVON = .0000
BDFLAP = -12.50 SPDBRK = 49.30 RUDDER = .0000

TEST CONDITIONS

RUN NUMBER	ALPHA DEG.	BETA DEG.	PO PSIA	TO DEG. R	P PSIA	T DEG. R	Q PSIA	V FT/SEC	CPMAX	PT2 PSIA	RHO SLUGS /FT3	MU LB-SEC /FT2
21	44.01	.0000	209.7	1258.	.2255-01	92.44	.9953	3744.	1.827	1.841	.2046-04	.7439-07

RUN NUMBER	RN/FT /FT X 106
21	1.030

TEST DATA

RUN NUMBER	YO	XO	T/C NO	PN PSIA	PN/P	PN/PT2	CPN	CPN/MX
21	116.00	1379.0	1.0000	.8754	38.81	.4754	.8568	.4689
21	129.43	1379.0	2.0000	.8799	39.01	.4779	.8613	.4714
21	129.43	1398.4	3.0000	.7016	31.11	.3811	.6823	.3734
21	140.51	1379.0	4.0000	.8864	39.30	.4814	.8679	.4750
21	140.51	1398.4	5.0000	.7985	35.40	.4337	.7795	.4266
21	163.94	1379.0	6.0000	.9016	39.97	.4897	.8832	.4834
21	187.31	1190.4	7.0000	1.057	46.87	.5742	1.039	.5689
21	187.31	1240.7	8.0000	1.073	47.59	.5829	1.056	.5777
21	187.31	1290.9	9.0000	1.049	46.52	.5698	1.031	.5645
21	187.31	1341.2	10.000	1.006	44.59	.5462	.9877	.5406
21	187.31	1353.8	11.000	.9762	43.28	.5302	.9581	.5244
21	187.31	1375.6	12.000	.9323	41.34	.5063	.9140	.5002
21	187.31	1379.0	13.000	.9455	41.92	.5135	.9273	.5075
21	187.31	1398.4	14.000	.8450	37.47	.4589	.8263	.4522
21	187.31	1416.6	15.000	.8155	36.16	.4429	.7967	.4360
21	187.31	1441.7	16.000	.7028	31.16	.3817	.6834	.3740
21	187.31	1466.9	17.000	.6023	26.74	.3271	.5833	.3192
21	210.74	1379.0	18.000	.9272	41.17	.5036	.9102	.4982
21	234.17	1379.0	19.000	.9834	43.66	.5341	.9667	.5291
21	257.60	1379.0	20.000	.9692	43.03	.5264	.9525	.5213
21	281.03	1152.7	21.000	1.315	58.39	.7143	1.301	.7118

OH57,AEDC V41B-K3A, MODEL 92-0, LH WING LWR SURF

RUN NUMBER	YO	XO	T/C NO	PN PSIA	PN/P	PN/PT2	CPN	CPN/MX
21	281.03	1188.6	22.000	1.220	54.17	.6626	1.205	.6593
21	281.03	1224.5	23.000	1.149	51.01	.6240	1.133	.6203
21	281.03	1260.3	24.000	1.152	51.16	.6258	1.137	.6220
21	281.03	1296.2	25.000	1.139	50.57	.6186	1.123	.6147
21	281.03	1332.0	26.000	1.092	48.50	.5933	1.076	.5891
21	281.03	1358.9	27.000	1.035	45.94	.5620	1.018	.5574
21	281.03	1375.6	28.000	.9987	44.34	.5424	.9822	.5375
21	281.03	1379.0	29.000	.9019	40.05	.4899	.8848	.4842
21	281.03	1398.4	30.000	.9038	40.13	.4909	.8867	.4853
21	281.03	1421.7	31.000	.8204	36.43	.4456	.8028	.4394
21	281.03	1439.6	32.000	.7222	32.07	.3923	.7040	.3853
21	281.03	1457.5	33.000	.6264	27.82	.3402	.6078	.3327
21	281.03	1466.5	34.000	.5750	25.54	.3123	.5561	.3043
21	292.74	1379.0	35.000	.9924	44.08	.5390	.9763	.5343
21	304.40	1379.0	36.000	1.020	45.32	.5541	1.004	.5496
21	304.40	1398.4	37.000	.8289	36.82	.4502	.8117	.4443
21	311.20	1379.0	38.000	1.035	45.99	.5623	1.020	.5580
21	320.80	1379.0	39.000	1.038	46.11	.5638	1.022	.5595
21	320.80	1398.4	40.000	.8647	38.41	.4696	.8477	.4640
21	320.80	1421.3	41.000	.8237	36.59	.4473	.8064	.4414
21	320.80	1444.2	42.000	.7332	32.57	.3982	.7154	.3915
21	327.83	1375.6	43.000	1.089	48.36	.5913	1.073	.5874
21	327.83	1379.0	44.000	1.054	46.82	.5725	1.038	.5683
21	327.83	1398.4	45.000	.9212	40.92	.5003	.9046	.4951
21	327.83	1421.3	46.000	.7936	35.25	.4310	.7762	.4248
21	327.83	1444.2	47.000	.7266	32.28	.3946	.7087	.3879
21	351.26	1379.0	48.000	1.060	47.08	.5756	1.044	.5715
21	374.69	1379.0	49.000	1.076	47.92	.5845	1.063	.5819
21	398.11	1256.2	50.000	1.281	57.06	.6960	1.270	.6952
21	398.11	1278.3	51.000	1.270	56.57	.6900	1.259	.6892
21	398.11	1301.4	52.000	1.274	56.71	.6918	1.263	.6910
21	398.11	1322.3	53.000	1.263	56.22	.6858	1.251	.6849
21	398.11	1344.4	54.000	1.220	54.32	.6626	1.208	.6613
21	398.11	1366.5	55.000	1.190	52.56	.6411	1.168	.6395
21	398.11	1375.6	56.000	1.145	50.97	.6217	1.132	.6197
21	398.11	1379.0	57.000	1.102	49.07	.5985	1.089	.5962
21	398.11	1398.4	58.000	1.004	44.70	.5452	.9903	.5420
21	398.11	1410.5	59.000	.8957	39.93	.4870	.8821	.4828
21	398.11	1432.6	60.000	.7559	33.66	.4105	.7400	.4050
21	398.11	1443.6	61.000	.6928	30.85	.3763	.6764	.3702
21	421.49	1379.0	62.000	1.005	44.76	.5459	.9916	.5427
21	444.91	1343.1	63.000	1.157	51.53	.6285	1.145	.6266
21	444.91	1358.9	64.000	1.159	51.60	.6294	1.147	.6276

OH57,AEDC V41B-K3A, MODEL 92-0, LH WING LWR SURF (R4AL05)

RUN NUMBER	YO	XO	T/C NO	PN PSIA	PN/P	PN/PT2	CPN	CPN/MX
21	444.91	1375.6	65.000	1.112	49.62	.6040	1.102	.6029
21	444.91	1379.0	66.000	1.058	47.20	.5746	1.047	.5729
21	444.91	1398.4	67.000	.9960	44.43	.5409	.9842	.5387
21	444.91	1414.2	68.000	.8327	37.15	.4522	.8191	.4483
21	444.91	1430.0	69.000	.7177	32.02	.3898	.7029	.3847
21	456.63	1379.0	70.000	1.023	45.66	.5558	1.012	.5538
21	456.63	1398.4	71.000	.8619	38.45	.4681	.8487	.4645
21	456.63	1413.3	72.000	.7595	33.88	.4125	.7451	.4078
21	468.34	1379.0	73.000	.6760	30.16	.3671	.6607	.3616

OH57,AEDC V41B-K3A, MODEL 92-0, LH WING LWR SURF (R4AL06)

L.H. WING LWR SURF

PARAMETRIC DATA

MACH = 8.000 PO = 850.0 RN/FT = 3.600 ELEVON = .0000
BDFLAP = -12.50 SPDBRK = 49.30 RUDDER = .0000

TEST CONDITIONS

RUN NUMBER	ALPHA DEG.	BETA DEG.	PO PSIA	TO DEG. R	P PSIA	T DEG. R	Q PSIA	V FT/SEC	CFMAX	PT2 PSIA	RHO SLUGS /FT3	MU LB-SEC /FT2
23	30.03	.0000	847.6	1350.	.8682-01	97.83	3.889	3880.	1.827	7.194	.7440-04	.7872-07

RUN NUMBER	RN/FT /FT X 106
23	3.668

TEST DATA

RUN NUMBER	YO	XO	T/C NO	PN PSIA	PN/P	PN/PT2	CPN	CPN/MX
23	116.00	1379.0	1.0000	1.844	21.25	.2564	.4519	.2473
23	129.43	1379.0	2.0000	1.844	21.24	.2563	.4518	.2472
23	129.43	1398.4	3.0000	1.323	15.24	.1839	.3179	.1739
23	140.51	1379.0	4.0000	1.851	21.32	.2573	.4536	.2483
23	140.51	1398.4	5.0000	1.626	18.72	.2260	.3956	.2165
23	163.94	1379.0	6.0000	1.852	21.33	.2574	.4537	.2483
23	187.31	1190.4	7.0000	2.335	26.90	.3246	.5781	.3164
23	187.31	1240.7	8.0000	2.318	26.70	.3222	.5736	.3139
23	187.31	1290.9	9.0000	2.275	26.20	.3162	.5626	.3079
23	187.31	1341.2	10.000	2.099	24.18	.2918	.5174	.2831
23	187.31	1353.8	11.000	2.024	23.32	.2814	.4982	.2726
23	187.31	1375.6	12.000	1.924	22.16	.2674	.4723	.2585
23	187.31	1379.0	13.000	1.861	21.44	.2587	.4561	.2496
23	187.31	1398.4	14.000	1.736	19.99	.2413	.4239	.2320
23	187.31	1416.6	15.000	1.554	17.90	.2160	.3771	.2064
23	187.31	1441.7	16.000	1.298	14.96	.1805	.3115	.1705
23	187.31	1466.9	17.000	1.100	12.66	.1529	.2602	.1424
23	210.74	1379.0	18.000	1.919	22.08	.2668	.4705	.2575
23	234.17	1379.0	19.000	1.991	22.90	.2767	.4888	.2675
23	257.60	1379.0	20.000	2.175	25.02	.3024	.5362	.2934
23	281.03	1152.7	21.000	3.060	35.21	.4254	.7635	.4178

OH57,AEDC V41B-K3A, MODEL 92-0, LH WING LWR SURF (R4AL06)

RUN NUMBER	YO	XO	T/C NO	PN PSIA	PN/P	PN/PT2	CPN	CPN/MX
23	281.03	1188.6	22.000	2.726	31.36	.3790	.6777	.3709
23	281.03	1224.5	23.000	2.662	30.62	.3701	.6613	.3619
23	281.03	1260.3	24.000	2.646	30.44	.3678	.6572	.3596
23	281.03	1296.2	25.000	2.518	28.96	.3500	.6242	.3416
23	281.03	1332.0	26.000	2.425	27.89	.3370	.6003	.3285
23	281.03	1358.9	27.000	2.299	26.44	.3195	.5680	.3108
23	281.03	1375.6	28.000	2.228	25.63	.3097	.5497	.3008
23	281.03	1379.0	29.000	2.166	24.92	.3012	.5340	.2922
23	281.03	1398.4	30.000	1.979	22.76	.2750	.4858	.2658
23	281.03	1421.7	31.000	1.614	18.57	.2244	.3922	.2146
23	281.03	1439.6	32.000	1.372	15.78	.1907	.3300	.1806
23	281.03	1457.5	33.000	1.135	13.06	.1577	.2691	.1473
23	281.03	1466.5	34.000	1.040	11.97	.1446	.2448	.1339
23	292.74	1379.0	35.000	2.206	25.38	.3066	.5442	.2978
23	304.40	1379.0	36.000	2.283	26.27	.3174	.5641	.3087
23	304.40	1398.4	37.000	1.885	21.69	.2620	.4618	.2527
23	311.20	1379.0	38.000	2.291	26.36	.3185	.5661	.3098
23	320.80	1379.0	39.000	2.329	26.80	.3238	.5759	.3152
23	320.80	1398.4	40.000	1.776	20.44	.2469	.4339	.2374
23	320.80	1421.3	41.000	1.588	18.27	.2208	.3856	.2110
23	320.80	1444.2	42.000	1.367	15.73	.1900	.3288	.1799
23	327.83	1375.6	43.000	2.389	27.49	.3320	.5912	.3235
23	327.83	1379.0	44.000	2.349	27.03	.3265	.5810	.3179
23	327.83	1398.4	45.000	1.935	22.26	.2689	.4746	.2597
23	327.83	1421.3	46.000	1.560	17.95	.2169	.3784	.2071
23	327.83	1444.2	47.000	1.312	15.10	.1824	.3148	.1723
23	351.26	1379.0	48.000	2.466	28.38	.3428	.6111	.3344
23	374.69	1379.0	49.000	2.509	28.82	.3488	.6211	.3399
23	398.11	1256.2	50.000	3.479	39.97	.4837	.8699	.4760
23	398.11	1278.3	51.000	3.261	37.46	.4533	.8138	.4454
23	398.11	1301.4	52.000	3.174	36.46	.4412	.7916	.4332
23	398.11	1322.3	53.000	3.086	35.45	.4290	.7690	.4208
23	398.11	1344.4	54.000	2.930	33.66	.4073	.7291	.3990
23	398.11	1366.5	55.000	2.751	31.60	.3824	.6830	.3738
23	398.11	1375.6	56.000	2.655	30.50	.3691	.6585	.3604
23	398.11	1379.0	57.000	2.674	30.71	.3716	.6632	.3629
23	398.11	1398.4	58.000	2.194	25.20	.3049	.5402	.2956
23	398.11	1410.5	59.000	1.958	22.50	.2722	.4799	.2626
23	398.11	1432.6	60.000	1.587	18.23	.2206	.3846	.2105
23	398.11	1443.6	61.000	1.325	15.22	.1842	.3174	.1737
23	421.49	1379.0	62.000	2.742	31.50	.3812	.6808	.3726
23	444.91	1343.1	63.000	2.869	32.95	.3987	.7132	.3903
23	444.91	1358.9	64.000	2.816	32.35	.3914	.6997	.3829

OH57, AEDC V41B-K3A, MODEL 92-0 AERO HEATING PRESSURE DATA

OH57,AEDC V41B-K3A, MODEL 92-0, LH WING LWR SURF

RUN NUMBER	YO	XO	T/C NO	PN PSIA	PN/P	PN/PT2	CPN	CPN/MX
23	444.91	1375.6	65.000	2.670	30.70	.3711	.6630	.3628
23	444.91	1379.0	66.000	2.398	27.57	.3333	.5931	.3246
23	444.91	1398.4	67.000	2.207	25.38	.3068	.5442	.2978
23	444.91	1414.2	68.000	1.902	21.87	.2644	.4660	.2550
23	444.91	1430.0	69.000	1.543	17.75	.2146	.3739	.2046
23	456.63	1379.0	70.000	2.491	28.64	.3462	.6170	.3377
23	456.63	1398.4	71.000	2.050	23.58	.2850	.5040	.2758
23	456.63	1413.3	72.000	1.731	19.91	.2406	.4221	.2310
23	468.34	1379.0	73.000	1.714	19.71	.2383	.4177	.2286

OH57,AEDC V41B-K3A, MODEL 92-0, LH WING LWR SURF (R4AL06)

L.H. WING LWR SURF

PARAMETRIC DATA

MACH = 8.000 PO = 850.0 RN/FT = 3.600 ELEVON = .0000
BDFLAP = -12.50 SPDBRK = 49.30 RUDDER = .0000

TEST CONDITIONS

RUN NUMBER	ALPHA DEG.	BETA DEG.	PO PSIA	TO DEG. R	P PSIA	T DEG. R	Q PSIA	V FT/SEC	CPMAX	PT2 PSIA	RHO SLUGS /FT3	MU LB-SEC /FT2
22	40.12	.0000	848.6	1348.	.8692-01	97.68	3.894	3877.	1.827	7.202	.7460-04	.7860-07

RUN NUMBER	RN/FT /FT X 106
22	3.680

TEST DATA

RUN NUMBER	YO	XO	T/C NO	PN PSIA	PN/P	PN/PT2	CPN	CPN/MX
22	116.00	1379.0	1.0000	3.094	35.60	.4296	.7724	.4227
22	129.43	1379.0	2.0000	3.100	35.66	.4304	.7737	.4234
22	129.43	1398.4	3.0000	2.191	25.20	.3041	.5402	.2956
22	140.51	1379.0	4.0000	3.125	35.95	.4338	.7801	.4269
22	140.51	1398.4	5.0000	2.728	31.38	.3787	.6782	.3711
22	163.94	1379.0	6.0000	3.149	36.23	.4373	.7865	.4304
22	187.31	1190.4	7.0000	3.673	42.26	.5100	.9209	.5040
22	187.31	1240.7	8.0000	3.683	42.37	.5113	.9234	.5053
22	187.31	1290.9	9.0000	3.682	42.36	.5112	.9233	.5052
22	187.31	1341.2	10.000	3.479	40.03	.4831	.8712	.4768
22	187.31	1353.8	11.000	3.372	38.80	.4682	.8437	.4617
22	187.31	1375.6	12.000	3.274	37.67	.4546	.8185	.4479
22	187.31	1379.0	13.000	3.204	36.86	.4448	.8004	.4380
22	187.31	1398.4	14.000	2.993	34.43	.4155	.7462	.4084
22	187.31	1416.6	15.000	2.725	31.35	.3783	.6774	.3707
22	187.31	1441.7	16.000	2.342	26.94	.3251	.5790	.3169
22	187.31	1466.9	17.000	1.991	22.90	.2765	.4889	.2675
22	210.74	1379.0	18.000	3.269	37.60	.4539	.8169	.4470
22	234.17	1379.0	19.000	3.259	37.48	.4525	.8143	.4456
22	257.60	1379.0	20.000	3.483	40.06	.4836	.8718	.4771
22	281.03	1152.7	21.000	4.857	55.85	.6743	1.224	.6700

OH57, AEDC V41B-K3A, MODEL 92-0 AERO HEATING PRESSURE DATA

OH57,AEDC V41B-K3A, MODEL 92-0, LH WING LWR SURF

RUN NUMBER	YO	XO	T/C NO	PN PSIA	PN/P	PN/PT2	CPN	CPN/MX
22	281.03	1188.6	22.000	4.365	50.19	.6060	1.098	.6009
22	281.03	1224.5	23.000	4.174	48.00	.5795	1.049	.5741
22	281.03	1260.3	24.000	4.124	47.42	.5725	1.036	.5670
22	281.03	1296.2	25.000	4.048	46.55	.5620	1.017	.5564
22	281.03	1332.0	26.000	3.916	45.03	.5437	.9829	.5379
22	281.03	1358.9	27.000	3.705	42.61	.5144	.9288	.5083
22	281.03	1375.6	28.000	3.603	41.44	.5003	.9027	.4940
22	281.03	1379.0	29.000	3.506	40.32	.4868	.8777	.4803
22	281.03	1398.4	30.000	3.240	37.26	.4499	.8094	.4429
22	281.03	1421.7	31.000	2.746	31.57	.3812	.6824	.3735
22	281.03	1439.6	32.000	2.427	27.91	.3370	.6007	.3287
22	281.03	1457.5	33.000	2.085	23.98	.2894	.5129	.2807
22	281.03	1466.5	34.000	1.946	22.39	.2702	.4774	.2612
22	292.74	1379.0	35.000	3.522	40.52	.4891	.8822	.4828
22	304.40	1379.0	36.000	3.606	41.48	.5007	.9037	.4945
22	304.40	1398.4	37.000	2.982	34.31	.4141	.7435	.4069
22	311.20	1379.0	38.000	3.623	41.68	.5031	.9081	.4970
22	320.80	1379.0	39.000	3.670	42.22	.5095	.9201	.5035
22	320.80	1398.4	40.000	2.843	32.70	.3947	.7076	.3872
22	320.80	1421.3	41.000	2.798	32.19	.3885	.6961	.3809
22	320.80	1444.2	42.000	2.461	28.31	.3416	.6095	.3336
22	327.83	1375.6	43.000	3.764	43.30	.5226	.9441	.5167
22	327.83	1379.0	44.000	3.705	42.62	.5144	.9291	.5085
22	327.83	1398.4	45.000	3.061	35.21	.4250	.7636	.4179
22	327.83	1421.3	46.000	2.717	31.25	.3772	.6753	.3695
22	327.83	1444.2	47.000	2.372	27.29	.3294	.5868	.3211
22	351.26	1379.0	48.000	3.832	44.08	.5320	.9617	.5263
22	374.69	1379.0	49.000	3.896	44.78	.5409	.9773	.5348
22	398.11	1256.2	50.000	4.710	54.14	.6539	1.186	.6491
22	398.11	1278.3	51.000	4.591	52.78	.6375	1.156	.6325
22	398.11	1301.4	52.000	4.545	52.25	.6311	1.144	.6260
22	398.11	1322.3	53.000	4.453	51.20	.6183	1.120	.6131
22	398.11	1344.4	54.000	4.341	49.90	.6026	1.091	.5973
22	398.11	1366.5	55.000	4.195	48.22	.5824	1.054	.5768
22	398.11	1375.6	56.000	4.092	47.04	.5682	1.028	.5624
22	398.11	1379.0	57.000	4.069	46.77	.5649	1.022	.5591
22	398.11	1398.4	58.000	3.458	39.76	.4802	.8651	.4734
22	398.11	1410.5	59.000	3.143	36.13	.4364	.7842	.4291
22	398.11	1432.6	60.000	2.633	30.27	.3656	.6534	.3576
22	398.11	1443.6	61.000	2.258	25.96	.3135	.5572	.3049
22	421.49	1379.0	62.000	4.077	46.87	.5661	1.024	.5603
22	444.91	1343.1	63.000	4.178	48.02	.5800	1.050	.5744
22	444.91	1358.9	64.000	4.147	47.67	.5758	1.042	.5701

OH57,AEDC V41B-K3A, MODEL 92-0, LH WING LWR SURF (R4AL06)

RUN NUMBER	YO	XO	T/C NO	PN PSIA	PN/P	PN/PT2	CPN	CPN/MX
22	444.91	1375.6	65.000	3.966	45.67	.5507	.9971	.5457
22	444.91	1379.0	66.000	3.638	41.90	.5052	.9128	.4995
22	444.91	1398.4	67.000	3.321	38.24	.4611	.8313	.4549
22	444.91	1414.2	68.000	2.931	33.75	.4070	.7311	.4001
22	444.91	1430.0	69.000	2.479	28.54	.3441	.6148	.3364
22	456.63	1379.0	70.000	3.586	41.29	.4979	.8993	.4922
22	456.63	1398.4	71.000	3.045	35.06	.4227	.7602	.4160
22	456.63	1413.3	72.000	2.643	30.44	.3670	.6570	.3596
22	468.34	1379.0	73.000	2.350	27.06	.3263	.5817	.3183

L.H. WING LWR SURF

PARAMETRIC DATA

MACH = 8.000 PO = 850.0 RN/FT = 3.600 ELEVON = .0000
BDFLAP = -12.50 SPDBRK = 49.30 RUDDER = .0000

TEST CONDITIONS

RUN NUMBER	ALPHA DEG.	BETA DEG.	PO PSIA	TO DEG. R	P PSIA	T DEG. R	Q PSIA	V FT/SEC	CPMAX	PT2 PSIA	RHO SLUGS /FT3	MU LB-SEC /FT2
24	44.10	.0000	848.4	1350.	.8690-01	97.83	3.893	3880.	1.827	7.201	.7447-04	.7872-07

RUN NUMBER	RN/FT /FT X 106
24	3.671

TEST DATA

RUN NUMBER	YO	XO	T/C NO	PN PSIA	PN/P	PN/PT2	CPN	CPN/MX
24	116.00	1379.0	1.0000	3.632	41.79	.5043	.9105	.4983
24	129.43	1379.0	2.0000	3.649	41.99	.5067	.9150	.5007
24	129.43	1398.4	3.0000	2.572	29.60	.3572	.6384	.3494
24	140.51	1379.0	4.0000	3.663	42.16	.5087	.9186	.5027
24	140.51	1398.4	5.0000	3.182	36.62	.4419	.7950	.4351
24	163.94	1379.0	6.0000	3.707	42.66	.5149	.9300	.5089
24	187.31	1190.4	7.0000	4.219	48.55	.5859	1.061	.5808
24	187.31	1240.7	8.0000	4.251	48.92	.5904	1.070	.5854
24	187.31	1290.9	9.0000	4.263	49.06	.5921	1.073	.5871
24	187.31	1341.2	10.000	4.065	46.77	.5645	1.022	.5591
24	187.31	1353.8	11.000	3.959	45.56	.5497	.9945	.5442
24	187.31	1375.6	12.000	3.848	44.28	.5343	.9660	.5286
24	187.31	1379.0	13.000	3.770	43.38	.5235	.9460	.5177
24	187.31	1398.4	14.000	3.543	40.77	.4921	.8878	.4859
24	187.31	1416.6	15.000	3.251	37.41	.4515	.8127	.4448
24	187.31	1441.7	16.000	2.808	32.32	.3900	.6991	.3826
24	187.31	1466.9	17.000	2.367	27.24	.3287	.5858	.3206
24	210.74	1379.0	18.000	3.832	44.11	.5322	.9623	.5266
24	234.17	1379.0	19.000	3.894	44.82	.5407	.9782	.5353
24	257.60	1379.0	20.000	4.038	46.49	.5608	1.015	.5556
24	281.03	1152.7	21.000	5.190	59.74	.7207	1.311	.7175

OH57,AEDC V41B-K3A, MODEL 92-0, LH WING LWR SURF (R4AL06)

RUN NUMBER	YO	XO	T/C NO	PN PSIA	PN/P	PN/PT2	CPN	CPN/MX
24	281.03	1188.6	22.000	4.893	56.32	.6795	1.235	.6758
24	281.03	1224.5	23.000	4.736	54.52	.6577	1.195	.6538
24	281.03	1260.3	24.000	4.697	54.07	.6522	1.185	.6482
24	281.03	1296.2	25.000	4.644	53.46	.6449	1.171	.6408
24	281.03	1332.0	26.000	4.501	51.82	.6251	1.134	.6207
24	281.03	1358.9	27.000	4.279	49.27	.5943	1.077	.5896
24	281.03	1375.6	28.000	4.162	47.91	.5780	1.047	.5730
24	281.03	1379.0	29.000	4.065	46.79	.5645	1.022	.5594
24	281.03	1398.4	30.000	3.786	43.59	.5258	.9506	.5202
24	281.03	1421.7	31.000	3.257	37.49	.4523	.8146	.4458
24	281.03	1439.6	32.000	2.892	33.30	.4017	.7209	.3945
24	281.03	1457.5	33.000	2.491	28.66	.3460	.6174	.3378
24	281.03	1466.5	34.000	2.288	26.32	.3178	.5652	.3093
24	292.74	1379.0	35.000	4.091	47.06	.5681	1.028	.5626
24	304.40	1379.0	36.000	4.166	47.92	.5785	1.047	.5732
24	304.40	1398.4	37.000	3.389	38.98	.4706	.8479	.4640
24	311.20	1379.0	38.000	4.177	48.05	.5801	1.050	.5747
24	320.80	1379.0	39.000	4.217	48.52	.5857	1.061	.5804
24	320.80	1398.4	40.000	3.339	38.41	.4637	.8351	.4570
24	320.80	1421.3	41.000	3.303	38.00	.4587	.8258	.4519
24	320.80	1444.2	42.000	2.914	33.52	.4046	.7259	.3972
24	327.83	1375.6	43.000	4.321	49.71	.6001	1.087	.5950
24	327.83	1379.0	44.000	4.255	48.95	.5909	1.070	.5857
24	327.83	1398.4	45.000	3.490	40.15	.4846	.8738	.4782
24	327.83	1421.3	46.000	3.234	37.21	.4491	.8082	.4423
24	327.83	1444.2	47.000	2.837	32.64	.3940	.7062	.3865
24	351.26	1379.0	48.000	4.368	50.25	.6066	1.099	.6016
24	374.69	1379.0	49.000	4.424	50.90	.6144	1.114	.6095
24	398.11	1256.2	50.000	5.119	58.90	.7109	1.292	.7072
24	398.11	1278.3	51.000	5.083	58.48	.7059	1.283	.7021
24	398.11	1301.4	52.000	5.082	58.47	.7058	1.283	.7020
24	398.11	1322.3	53.000	5.017	57.72	.6968	1.266	.6929
24	398.11	1344.4	54.000	4.906	56.45	.6813	1.238	.6773
24	398.11	1366.5	55.000	4.739	54.53	.6582	1.195	.6538
24	398.11	1375.6	56.000	4.622	53.17	.6418	1.165	.6373
24	398.11	1379.0	57.000	4.584	52.74	.6366	1.155	.6320
24	398.11	1398.4	58.000	3.955	45.50	.5492	.9934	.5436
24	398.11	1410.5	59.000	3.638	41.85	.5052	.9119	.4990
24	398.11	1432.6	60.000	3.084	35.48	.4283	.7697	.4212
24	398.11	1443.6	61.000	2.659	30.59	.3692	.6605	.3614
24	421.49	1379.0	62.000	4.607	53.00	.6397	1.161	.6352
24	444.91	1343.1	63.000	4.687	53.93	.6509	1.181	.6465
24	444.91	1358.9	64.000	4.662	53.64	.6474	1.175	.6430

OH57, AEDC V41B-K3A, MODEL 92-0 AERO HEATING PRESSURE DATA

OH57,AEDC V41B-K3A, MODEL 92-0, LH WING LWR SURF

RUN NUMBER	YO	XO	T/C NO	PN PSIA	PN/P	PN/PT2	CPN	CPN/MX
24	444.91	1375.6	65.000	4.466	51.42	.6202	1.125	.6159
24	444.91	1379.0	66.000	4.053	46.66	.5628	1.019	.5577
24	444.91	1398.4	67.000	3.783	43.55	.5253	.9498	.5197
24	444.91	1414.2	68.000	3.365	38.74	.4673	.8424	.4610
24	444.91	1430.0	69.000	2.866	32.99	.3979	.7141	.3908
24	456.63	1379.0	70.000	4.027	46.36	.5592	1.013	.5541
24	456.63	1398.4	71.000	3.450	39.72	.4790	.8642	.4729
24	456.63	1413.3	72.000	3.015	34.71	.4187	.7526	.4118
24	468.34	1379.0	73.000	2.348	27.04	.3261	.5812	.3180

OH57,AEDC V41B-K3A, MODEL 92-0, LH WING LWR SURF (R4AL07)

L.H. WING LWR SURF

PARAMETRIC DATA

MACH = 8.000 PO = 850.0 RN/FT = 3.600 ELEVON = .0000
BDFLAP = .0000 SPDBRK = 49.30 RUDDER = .0000

TEST CONDITIONS

RUN NUMBER	ALPHA DEG.	BETA DEG.	PO PSIA	TO DEG. R	P PSIA	T DEG. R	Q PSIA	V FT/SEC	CPMAX	PT2 PSIA	RHO SLUGS /FT3	MU LB-SEC /FT2
10	30.00	.0000	848.7	1355.	.8693-01	98.19	3.894	3887.	1.827	7.203	.7422-04	.7901-07

RUN NUMBER	RN/FT /FT X 106
10	3.652

TEST DATA

RUN NUMBER	YO	XO	T/C NO	PN PSIA	PN/P	PN/PT2	CPN	CPN/MX
10	116.00	1379.0	1.0000	1.832	21.08	.2544	.4482	.2453
10	129.43	1379.0	2.0000	1.830	21.06	.2541	.4477	.2450
10	129.43	1398.4	3.0000	1.312	15.10	.1822	.3147	.1722
10	140.51	1379.0	4.0000	1.846	21.24	.2563	.4518	.2473
10	140.51	1398.4	5.0000	1.622	18.66	.2252	.3943	.2158
10	163.94	1379.0	6.0000	1.845	21.23	.2562	.4515	.2471
10	187.31	1190.4	7.0000	2.337	26.88	.3244	.5777	.3161
10	187.31	1240.7	8.0000	2.323	26.73	.3226	.5743	.3143
10	187.31	1290.9	9.0000	2.029	23.34	.2817	.4987	.2729
10	187.31	1341.2	10.000	2.097	24.13	.2912	.5163	.2825
10	187.31	1353.8	11.000	2.038	23.44	.2829	.5009	.2741
10	187.31	1375.6	12.000	1.921	22.09	.2666	.4709	.2577
10	187.31	1379.0	13.000	1.853	21.32	.2573	.4535	.2482
10	187.31	1398.4	14.000	1.734	19.95	.2407	.4229	.2314
10	187.31	1416.6	15.000	1.552	17.85	.2154	.3762	.2059
10	187.31	1441.7	16.000	1.291	14.85	.1792	.3091	.1692
10	187.31	1466.9	17.000	1.080	12.41	.1500	.2548	.1394
10	210.74	1379.0	18.000	1.914	21.99	.2658	.4686	.2564
10	234.17	1379.0	19.000	2.029	23.32	.2817	.4981	.2726
10	257.60	1379.0	20.000	2.173	24.97	.3017	.5351	.2928
10	281.03	1152.7	21.000	3.045	34.99	.4228	.7586	.4152

OH57,AEDC V41B-K3A, MODEL 92-0, LH WING LWR SURF

RUN NUMBER	YO	XO	T/C NO	PN PSIA	PN/P	PN/PT2	CPN	CPN/MX
10	281.03	1188.6	22.000	2.713	31.16	.3766	.6733	.3685
10	281.03	1224.5	23.000	2.657	30.53	.3689	.6592	.3607
10	281.03	1260.3	24.000	2.644	30.38	.3671	.6559	.3589
10	281.03	1296.2	25.000	2.195	25.22	.3048	.5407	.2959
10	281.03	1332.0	26.000	2.424	27.85	.3366	.5994	.3280
10	281.03	1358.9	27.000	2.311	26.55	.3208	.5702	.3120
10	281.03	1375.6	28.000	2.231	25.63	.3097	.5497	.3008
10	281.03	1379.0	29.000	2.168	24.91	.3009	.5336	.2920
10	281.03	1398.4	30.000	1.993	22.90	.2767	.4889	.2676
10	281.03	1421.7	31.000	1.622	18.63	.2251	.3935	.2153
10	281.03	1439.6	32.000	1.387	15.93	.1925	.3333	.1824
10	281.03	1457.5	33.000	1.139	13.09	.1581	.2699	.1477
10	281.03	1466.5	34.000	1.073	12.33	.1489	.2529	.1384
10	292.74	1379.0	35.000	2.216	25.47	.3076	.5462	.2989
10	304.40	1379.0	36.000	2.293	26.36	.3184	.5661	.3098
10	304.40	1398.4	37.000	1.910	21.96	.2652	.4678	.2560
10	311.20	1379.0	38.000	2.312	26.57	.3210	.5709	.3124
10	320.80	1379.0	39.000	2.340	26.89	.3248	.5779	.3163
10	320.80	1398.4	40.000	1.804	20.74	.2505	.4407	.2411
10	320.80	1421.3	41.000	1.440	16.55	.1999	.3472	.1900
10	320.80	1444.2	42.000	1.412	16.23	.1960	.3399	.1860
10	327.83	1375.6	43.000	2.410	27.70	.3345	.5959	.3261
10	327.83	1379.0	44.000	2.358	27.10	.3273	.5826	.3188
10	327.83	1398.4	45.000	1.960	22.53	.2721	.4806	.2630
10	327.83	1421.3	46.000	1.583	18.19	.2197	.3837	.2100
10	327.83	1444.2	47.000	1.329	15.27	.1845	.3186	.1744
10	351.26	1379.0	48.000	2.472	28.41	.3432	.6119	.3349
10	374.69	1379.0	49.000	2.520	28.98	.3498	.6246	.3418
10	398.11	1256.2	50.000	3.476	39.98	.4826	.8702	.4762
10	398.11	1278.3	51.000	3.253	37.42	.4516	.8129	.4449
10	398.11	1301.4	52.000	3.162	36.37	.4390	.7895	.4321
10	398.11	1322.3	53.000	3.080	35.42	.4275	.7684	.4205
10	398.11	1344.4	54.000	2.933	33.74	.4072	.7308	.3999
10	398.11	1366.5	55.000	2.758	31.72	.3829	.6858	.3753
10	398.11	1375.6	56.000	2.668	30.69	.3705	.6628	.3627
10	398.11	1379.0	57.000	2.285	26.29	.3172	.5644	.3089
10	398.11	1398.4	58.000	2.211	25.44	.3070	.5455	.2985
10	398.11	1410.5	59.000	1.970	22.66	.2735	.4835	.2646
10	398.11	1432.6	60.000	1.602	18.42	.2224	.3889	.2128
10	398.11	1443.6	61.000	1.346	15.48	.1868	.3232	.1769
10	421.49	1379.0	62.000	2.745	31.57	.3811	.6825	.3735
10	444.91	1343.1	63.000	2.286	26.29	.3173	.5646	.3090
10	444.91	1358.9	64.000	2.814	32.37	.3907	.7002	.3832

OH57,AEDC V41B-K3A, MODEL 92-0, LH WING LWR SURF (R4AL07)

RUN NUMBER	YO	XO	T/C NO	PN PSIA	PN/P	PN/PT2	CPN	CPN/MX
10	444.91	1375.6	65.000	2.668	30.71	.3704	.6632	.3629
10	444.91	1379.0	66.000	2.397	27.60	.3328	.5937	.3249
10	444.91	1398.4	67.000	2.249	25.89	.3122	.5555	.3040
10	444.91	1414.2	68.000	1.976	22.74	.2742	.4852	.2655
10	444.91	1430.0	69.000	1.709	19.68	.2373	.4169	.2281
10	456.63	1379.0	70.000	2.516	28.96	.3493	.6241	.3415
10	456.63	1398.4	71.000	2.106	24.24	.2923	.5187	.2838
10	456.63	1413.3	72.000	1.830	21.06	.2540	.4479	.2451
10	468.34	1379.0	73.000	1.714	19.73	.2380	.4181	.2288

DATE 28 MAR 79

OH57, AEDC V41B-K3A, MODEL 92-0 AERO HEATING PRESSURE DATA

(R4AL07)

OH57,AEDC V41B-K3A, MODEL 92-0, LH WING LWR SURF

L.H. WING LWR SURF

PARAMETRIC DATA

MACH = 8.000 PO = 850.0 RN/FT = 3.600 ELEVON = .0000
BDFLAP = .0000 SPDBRK = 49.30 RUDDER = .0000

TEST CONDITIONS

RUN NUMBER	ALPHA DEG.	BETA DEG.	PO PSIA	TO DEG. R	P PSIA	T DEG. R	Q PSIA	V FT/SEC	CPMAX	PT2 PSIA	RHO SLUGS /FT3	MU LB-SEC /FT2
11	35.09	.0000	847.5	1354.	.8681-01	98.12	3.889	3886.	1.827	7.193	.7417-04	.7895-07

RUN NUMBER	RN/FT /FT X 106
11	3.651

TEST DATA

RUN NUMBER	YO	XO	T/C NO	PN PSIA	PN/P	PN/PT2	CPN	CPN/MX
11	116.00	1379.0	1.0000	2.455	28.28	.3413	.6090	.3332
11	129.43	1379.0	2.0000	2.451	28.24	.3408	.6081	.3328
11	129.43	1398.4	3.0000	1.757	20.24	.2443	.4296	.2351
11	140.51	1379.0	4.0000	2.473	28.49	.3439	.6137	.3359
11	140.51	1398.4	5.0000	2.183	25.15	.3035	.5391	.2950
11	163.94	1379.0	6.0000	2.489	28.67	.3460	.6177	.3380
11	187.31	1190.4	7.0000	2.990	34.45	.4157	.7466	.4086
11	187.31	1240.7	8.0000	3.002	34.58	.4173	.7495	.4102
11	187.31	1290.9	9.0000	2.853	32.87	.3966	.7113	.3893
11	187.31	1341.2	10.000	2.779	32.01	.3863	.6922	.3788
11	187.31	1353.8	11.000	2.705	31.16	.3760	.6732	.3684
11	187.31	1375.6	12.000	2.576	29.68	.3582	.6402	.3503
11	187.31	1379.0	13.000	2.520	29.03	.3503	.6257	.3424
11	187.31	1398.4	14.000	2.370	27.30	.3295	.5871	.3213
11	187.31	1416.6	15.000	2.137	24.61	.2970	.5271	.2885
11	187.31	1441.7	16.000	1.819	20.96	.2529	.4454	.2438
11	187.31	1466.9	17.000	1.508	17.40	.2097	.3660	.2003
11	210.74	1379.0	18.000	2.582	29.79	.3590	.6426	.3516
11	234.17	1379.0	19.000	2.677	30.89	.3722	.6671	.3651
11	257.60	1379.0	20.000	2.848	32.86	.3960	.7112	.3892
11	281.03	1152.7	21.000	4.039	46.60	.5616	1.018	.5570

OH57,AEDC V41B-K3A, MODEL 92-0, LH WING LWR SURF (R4AL07)

RUN NUMBER	YO	XO	T/C NO	PN PSIA	PN/P	PN/PT2	CPN	CPN/MX
11	281.03	1188.6	22.000	3.565	41.12	.4956	.8956	.4901
11	281.03	1224.5	23.000	3.431	39.58	.4770	.8613	.4713
11	281.03	1260.3	24.000	3.412	39.37	.4744	.8564	.4687
11	281.03	1296.2	25.000	3.177	36.65	.4416	.7957	.4355
11	281.03	1332.0	26.000	3.217	37.11	.4472	.8060	.4411
11	281.03	1358.9	27.000	3.006	34.68	.4173	.7518	.4114
11	281.03	1375.6	28.000	2.874	33.16	.3996	.7178	.3928
11	281.03	1379.0	29.000	2.803	32.34	.3897	.6995	.3828
11	281.03	1398.4	30.000	2.595	29.94	.3608	.6459	.3535
11	281.03	1421.7	31.000	2.152	24.82	.2991	.5317	.2910
11	281.03	1439.6	32.000	1.893	21.83	.2631	.4650	.2545
11	281.03	1457.5	33.000	1.597	18.37	.2220	.3878	.2122
11	281.03	1466.5	34.000	1.446	16.64	.2011	.3492	.1911
11	292.74	1379.0	35.000	2.838	32.66	.3946	.7067	.3868
11	304.40	1379.0	36.000	2.944	33.88	.4093	.7340	.4017
11	304.40	1398.4	37.000	2.443	28.11	.3396	.6051	.3311
11	311.20	1379.0	38.000	2.969	34.17	.4128	.7404	.4052
11	320.80	1379.0	39.000	3.008	34.62	.4182	.7505	.4107
11	320.80	1398.4	40.000	2.314	26.63	.3218	.5722	.3131
11	320.80	1421.3	41.000	2.093	24.09	.2910	.5154	.2821
11	320.80	1444.2	42.000	1.905	21.93	.2649	.4671	.2556
11	327.83	1375.6	43.000	3.105	35.73	.4317	.7753	.4243
11	327.83	1379.0	44.000	3.034	34.92	.4219	.7571	.4143
11	327.83	1398.4	45.000	2.535	29.17	.3524	.6289	.3441
11	327.83	1421.3	46.000	2.138	24.60	.2972	.5267	.2883
11	327.83	1444.2	47.000	1.868	21.50	.2597	.4576	.2504
11	351.26	1379.0	48.000	3.174	36.53	.4413	.7931	.4340
11	374.69	1379.0	49.000	3.228	37.13	.4487	.8065	.4414
11	398.11	1256.2	50.000	4.180	48.08	.5811	1.051	.5751
11	398.11	1278.3	51.000	3.969	45.66	.5517	.9968	.5455
11	398.11	1301.4	52.000	3.872	44.54	.5382	.9718	.5318
11	398.11	1322.3	53.000	3.790	43.60	.5270	.9510	.5204
11	398.11	1344.4	54.000	3.701	42.58	.5146	.9281	.5079
11	398.11	1366.5	55.000	3.517	40.46	.4889	.8807	.4820
11	398.11	1375.6	56.000	3.414	39.27	.4746	.8543	.4675
11	398.11	1379.0	57.000	3.286	37.80	.4569	.8215	.4496
11	398.11	1398.4	58.000	2.840	32.67	.3948	.7070	.3869
11	398.11	1410.5	59.000	2.559	29.44	.3558	.6349	.3474
11	398.11	1432.6	60.000	2.111	24.28	.2934	.5197	.2844
11	398.11	1443.6	61.000	1.800	20.71	.2503	.4400	.2408
11	421.49	1379.0	62.000	3.466	39.88	.4819	.8678	.4749
11	444.91	1343.1	63.000	3.500	40.26	.4865	.8763	.4796
11	444.91	1358.9	64.000	3.481	40.04	.4839	.8714	.4769

(R4AL07)

OH57,AEDC V41B-K3A, MODEL 92-0, LH WING LWR SURF

RUN NUMBER	YO	XO	T/C NO	PN PSIA	PN/P	PN/PT2	CPN	CPN/MX
11	444.91	1375.6	65.000	3.328	38.30	.4627	.8325	.4556
11	444.91	1379.0	66.000	2.918	33.58	.4057	.7272	.3979
11	444.91	1398.4	67.000	2.735	31.46	.3802	.6800	.3721
11	444.91	1414.2	68.000	2.395	27.56	.3330	.5929	.3245
11	444.91	1430.0	69.000	1.997	22.98	.2777	.4906	.2685
11	456.63	1379.0	70.000	3.047	35.06	.4236	.7603	.4161
11	456.63	1398.4	71.000	2.531	29.13	.3519	.6279	.3436
11	456.63	1413.3	72.000	2.167	24.94	.3013	.5344	.2924
11	468.34	1379.0	73.000	2.077	23.90	.2887	.5111	.2797

OH57,AEDC V41B-K3A, MODEL 92-0, LH WING LWR SURF (R4AL07)

L.H. WING LWR SURF

PARAMETRIC DATA

MACH = 8.000 PO = 850.0 RN/FT = 3.600 ELEVON = .0000
BDFLAP = .0000 SPDBRK = 49.30 RUDDER = .0000

TEST CONDITIONS

RUN NUMBER	ALPHA DEG.	BETA DEG.	PO PSIA	TO DEG. R	P PSIA	T DEG. R	Q PSIA	V FT/SEC	CPMAX	PT2 PSIA	RHO SLUGS /FT3	MU LB-SEC /FT2
12	40.12	.0000	847.9	1351.	.8685-01	97.90	3.891	3882.	1.827	7.197	.7437-04	.7878-07

RUN NUMBER	RN/FT /FT X 106
12	3.665

TEST DATA

RUN NUMBER	YO	XO	T/C NO	PN PSIA	PN/P	PN/PT2	CPN	CPN/MX
12	116.00	1379.0	1.0000	3.102	35.72	.4310	.7749	.4241
12	129.43	1379.0	2.0000	3.098	35.67	.4305	.7740	.4235
12	129.43	1398.4	3.0000	2.214	25.50	.3077	.5468	.2992
12	140.51	1379.0	4.0000	3.129	36.03	.4348	.7819	.4279
12	140.51	1398.4	5.0000	2.747	31.63	.3817	.6837	.3741
12	163.94	1379.0	6.0000	3.160	36.38	.4390	.7898	.4322
12	187.31	1190.4	7.0000	3.665	42.20	.5093	.9197	.5033
12	187.31	1240.7	8.0000	3.674	42.30	.5105	.9219	.5045
12	187.31	1290.9	9.0000	3.178	36.60	.4416	.7946	.4348
12	187.31	1341.2	10.000	3.490	40.18	.4849	.8746	.4786
12	187.31	1353.8	11.000	3.410	39.26	.4738	.8540	.4674
12	187.31	1375.6	12.000	3.269	37.65	.4543	.8180	.4476
12	187.31	1379.0	13.000	3.210	36.96	.4460	.8026	.4392
12	187.31	1398.4	14.000	3.022	34.80	.4200	.7545	.4129
12	187.31	1416.6	15.000	2.751	31.68	.3823	.6849	.3748
12	187.31	1441.7	16.000	2.371	27.31	.3295	.5872	.3213
12	187.31	1466.9	17.000	1.987	22.95	.2761	.4900	.2681
12	210.74	1379.0	18.000	3.260	37.66	.4530	.8183	.4478
12	234.17	1379.0	19.000	3.324	38.39	.4619	.8347	.4568
12	257.60	1379.0	20.000	3.495	40.37	.4857	.8788	.4809
12	281.03	1152.7	21.000	4.828	55.77	.6709	1.223	.6690

OH57,AEDC V41B-K3A, MODEL 92-0, LH WING LWR SURF (R4AL07)

RUN NUMBER	YO	XO	T/C NO	PN PSIA	PN/P	PN/PT2	CPN	CPN/MX
12	281.03	1188.6	22.000	4.333	50.05	.6021	1.095	.5992
12	281.03	1224.5	23.000	4.154	47.99	.5772	1.049	.5739
12	281.03	1260.3	24.000	4.110	47.48	.5711	1.037	.5677
12	281.03	1296.2	25.000	3.869	44.69	.5376	.9753	.5337
12	281.03	1332.0	26.000	3.925	45.34	.5454	.9897	.5416
12	281.03	1358.9	27.000	3.741	43.21	.5198	.9423	.5156
12	281.03	1375.6	28.000	3.597	41.55	.4999	.9052	.4954
12	281.03	1379.0	29.000	3.518	40.64	.4889	.8848	.4842
12	281.03	1398.4	30.000	3.265	37.72	.4538	.8197	.4486
12	281.03	1421.7	31.000	2.763	31.92	.3840	.6902	.3777
12	281.03	1439.6	32.000	2.446	28.26	.3400	.6085	.3330
12	281.03	1457.5	33.000	2.099	24.09	.2917	.5155	.2821
12	281.03	1466.5	34.000	1.916	21.99	.2662	.4685	.2564
12	292.74	1379.0	35.000	3.548	40.72	.4930	.8866	.4852
12	304.40	1379.0	36.000	3.628	41.64	.5042	.9072	.4965
12	304.40	1398.4	37.000	2.988	34.30	.4152	.7432	.4067
12	311.20	1379.0	38.000	3.647	41.86	.5068	.9120	.4991
12	320.80	1379.0	39.000	3.680	42.24	.5114	.9205	.5037
12	320.80	1398.4	40.000	2.868	32.92	.3985	.7124	.3899
12	320.80	1421.3	41.000	2.729	31.32	.3792	.6767	.3703
12	320.80	1444.2	42.000	2.460	28.24	.3419	.6080	.3327
12	327.83	1375.6	43.000	3.802	43.64	.5284	.9518	.5209
12	327.83	1379.0	44.000	3.708	42.56	.5153	.9276	.5076
12	327.83	1398.4	45.000	3.085	35.40	.4286	.7679	.4202
12	327.83	1421.3	46.000	2.733	31.37	.3798	.6778	.3709
12	327.83	1444.2	47.000	2.384	27.36	.3313	.5884	.3220
12	351.26	1379.0	48.000	3.847	44.15	.5345	.9631	.5271
12	374.69	1379.0	49.000	3.914	44.97	.5438	.9815	.5371
12	398.11	1256.2	50.000	4.712	54.15	.6548	1.186	.6493
12	398.11	1278.3	51.000	4.602	52.88	.6394	1.158	.6337
12	398.11	1301.4	52.000	4.561	52.42	.6338	1.148	.6281
12	398.11	1322.3	53.000	4.471	51.38	.6213	1.125	.6154
12	398.11	1344.4	54.000	4.357	50.07	.6054	1.095	.5994
12	398.11	1366.5	55.000	4.202	48.29	.5839	1.056	.5777
12	398.11	1375.6	56.000	4.101	47.13	.5699	1.030	.5635
12	398.11	1379.0	57.000	3.934	45.20	.5466	.9867	.5399
12	398.11	1398.4	58.000	3.481	40.00	.4837	.8705	.4764
12	398.11	1410.5	59.000	3.155	36.37	.4398	.7896	.4321
12	398.11	1432.6	60.000	2.627	30.19	.3651	.6516	.3566
12	398.11	1443.6	61.000	2.260	25.97	.3140	.5573	.3050
12	421.49	1379.0	62.000	4.095	47.06	.5690	1.028	.5626
12	444.91	1343.1	63.000	4.183	48.07	.5813	1.051	.5750
12	444.91	1358.9	64.000	4.162	47.83	.5783	1.045	.5720

OH57,AEDC V41B-K3A, MODEL 92-0, LH WING LWR SURF (R4AL07)

RUN NUMBER	YO	XO	T/C NO	PN PSIA	PN/P	PN/PT2	CPN	CPN/MX
12	444.91	1375.6	65.000	3.984	45.78	.5536	.9996	.5470
12	444.91	1379.0	66.000	3.554	40.84	.4939	.8894	.4867
12	444.91	1398.4	67.000	3.342	38.40	.4644	.8349	.4569
12	444.91	1414.2	68.000	2.948	33.87	.4096	.7337	.4015
12	444.91	1430.0	69.000	2.495	28.67	.3467	.6177	.3380
12	456.63	1379.0	70.000	3.599	41.36	.5001	.9009	.4930
12	456.63	1398.4	71.000	3.053	35.09	.4243	.7609	.4164
12	456.63	1413.3	72.000	2.658	30.54	.3693	.6595	.3609
12	468.34	1379.0	73.000	2.251	25.86	.3127	.5550	.3037

L.H. WING LWR SURF

PARAMETRIC DATA

MACH = 8.000 PO = 850.0 RN/FT = 3.600 ELEVON = .0000
BDFLAP = .0000 SPDBRK = 49.30 RUDDER = .0000

TEST CONDITIONS

RUN NUMBER	ALPHA DEG.	BETA DEG.	PO PSIA	TO DEG. R	P PSIA	T DEG. R	Q PSIA	V FT/SEC	CPMAX	PT2 PSIA	RHO SLUGS /FT3	MU LB-SEC /FT2
13	43.98	.0000	848.8	1353.	.8694-01	98.04	3.895	3884.	1.827	7.204	.7434-04	.7890-07

RUN NUMBER	RN/FT /FT X 106
13	3.661

TEST DATA

RUN NUMBER	YO	XO	T/C NO	PN PSIA	PN/P	PN/PT2	CPN	CPN/MX
13	116.00	1379.0	1.0000	3.618	41.62	.5022	.9066	.4961
13	129.43	1379.0	2.0000	3.617	41.61	.5021	.9064	.4960
13	129.43	1398.4	3.0000	2.575	29.62	.3575	.6389	.3496
13	140.51	1379.0	4.0000	3.654	42.03	.5072	.9158	.5012
13	140.51	1398.4	5.0000	3.186	36.65	.4423	.7957	.4355
13	163.94	1379.0	6.0000	3.694	42.49	.5127	.9260	.5068
13	187.31	1190.4	7.0000	4.196	48.27	.5825	1.055	.5774
13	187.31	1240.7	8.0000	4.237	48.74	.5882	1.066	.5832
13	187.31	1290.9	9.0000	4.118	47.37	.5716	1.035	.5664
13	187.31	1341.2	10.000	4.054	46.63	.5627	1.018	.5574
13	187.31	1353.8	11.000	3.967	45.63	.5507	.9963	.5452
13	187.31	1375.6	12.000	3.820	43.94	.5303	.9586	.5246
13	187.31	1379.0	13.000	3.752	43.15	.5207	.9409	.5149
13	187.31	1398.4	14.000	3.537	40.68	.4910	.8858	.4847
13	187.31	1416.6	15.000	3.245	37.32	.4504	.8108	.4437
13	187.31	1441.7	16.000	2.810	32.32	.3900	.6991	.3826
13	187.31	1466.9	17.000	2.365	27.25	.3283	.5859	.3206
13	210.74	1379.0	18.000	3.802	43.80	.5277	.9554	.5228
13	234.17	1379.0	19.000	3.865	44.53	.5365	.9717	.5317
13	257.60	1379.0	20.000	4.027	46.40	.5591	1.013	.5546
13	281.03	1152.7	21.000	5.167	59.53	.7172	1.306	.7150

OH57,AEDC V41B-K3A, MODEL 92-0, LH WING LWR SURF (R4AL07)

RUN NUMBER	YO	XO	T/C NO	PN PSIA	PN/P	PN/PT2	CPN	CPN/MX
13	281.03	1188.6	22.000	4.856	55.95	.6741	1.227	.6713
13	281.03	1224.5	23.000	4.711	54.27	.6539	1.189	.6507
13	281.03	1260.3	24.000	4.674	53.85	.6488	1.180	.6456
13	281.03	1296.2	25.000	4.430	51.03	.6149	1.117	.6112
13	281.03	1332.0	26.000	4.483	51.65	.6223	1.131	.6187
13	281.03	1358.9	27.000	4.291	49.44	.5957	1.081	.5917
13	281.03	1375.6	28.000	4.138	47.67	.5744	1.042	.5701
13	281.03	1379.0	29.000	4.050	46.66	.5621	1.019	.5577
13	281.03	1398.4	30.000	3.777	43.52	.5243	.9490	.5193
13	281.03	1421.7	31.000	3.245	37.38	.4504	.8121	.4444
13	281.03	1439.6	32.000	2.891	33.31	.4013	.7211	.3946
13	281.03	1457.5	33.000	2.489	28.62	.3456	.6164	.3373
13	281.03	1466.5	34.000	2.276	26.16	.3159	.5616	.3073
13	292.74	1379.0	35.000	4.081	46.91	.5665	1.025	.5608
13	304.40	1379.0	36.000	4.158	47.79	.5772	1.044	.5716
13	304.40	1398.4	37.000	3.383	38.88	.4695	.8456	.4627
13	311.20	1379.0	38.000	4.169	47.92	.5787	1.047	.5732
13	320.80	1379.0	39.000	4.208	48.37	.5841	1.057	.5786
13	320.80	1398.4	40.000	3.343	38.43	.4641	.8355	.4572
13	320.80	1421.3	41.000	3.184	36.60	.4420	.7947	.4349
13	320.80	1444.2	42.000	2.912	33.47	.4042	.7248	.3967
13	327.83	1375.6	43.000	4.330	49.77	.6011	1.089	.5958
13	327.83	1379.0	44.000	4.235	48.68	.5879	1.064	.5824
13	327.83	1398.4	45.000	3.493	40.14	.4848	.8738	.4782
13	327.83	1421.3	46.000	3.226	37.09	.4479	.8055	.4408
13	327.83	1444.2	47.000	2.828	32.50	.3925	.7032	.3848
13	351.26	1379.0	48.000	4.353	50.03	.6042	1.094	.5989
13	374.69	1379.0	49.000	4.418	50.80	.6132	1.112	.6084
13	398.11	1256.2	50.000	5.110	58.76	.7093	1.289	.7056
13	398.11	1278.3	51.000	5.074	58.35	.7043	1.280	.7005
13	398.11	1301.4	52.000	5.076	58.37	.7046	1.281	.7008
13	398.11	1322.3	53.000	5.008	57.59	.6952	1.263	.6913
13	398.11	1344.4	54.000	4.891	56.24	.6789	1.233	.6748
13	398.11	1366.5	55.000	4.720	54.27	.6551	1.189	.6507
13	398.11	1375.6	56.000	4.610	53.01	.6398	1.161	.6353
13	398.11	1379.0	57.000	4.349	50.01	.6036	1.094	.5986
13	398.11	1398.4	58.000	3.944	45.36	.5475	.9901	.5418
13	398.11	1410.5	59.000	3.632	41.76	.5041	.9099	.4979
13	398.11	1432.6	60.000	3.054	35.12	.4239	.7616	.4168
13	398.11	1443.6	61.000	2.642	30.38	.3667	.6559	.3589
13	421.49	1379.0	62.000	4.585	52.73	.6365	1.155	.6319
13	444.91	1343.1	63.000	4.663	53.62	.6473	1.175	.6428
13	444.91	1358.9	64.000	4.650	53.47	.6454	1.171	.6409

OH57,AEDC V41B-K3A, MODEL 92-0, LH WING LWR SURF (R4AL07)

RUN NUMBER	YO	XO	T/C NO	PN PSIA	PN/P	PN/PT2	CPN	CPN/MX
13	444.91	1375.6	65.000	4.454	51.28	.6182	1.122	.6141
13	444.91	1379.0	66.000	4.031	46.41	.5596	1.014	.5547
13	444.91	1398.4	67.000	3.779	43.51	.5246	.9489	.5193
13	444.91	1414.2	68.000	3.367	38.77	.4674	.8431	.4614
13	444.91	1430.0	69.000	2.867	33.01	.3979	.7144	.3910
13	456.63	1379.0	70.000	4.013	46.21	.5571	1.009	.5522
13	456.63	1398.4	71.000	3.440	39.61	.4775	.8618	.4716
13	456.63	1413.3	72.000	3.014	34.70	.4183	.7521	.4116
13	468.34	1379.0	73.000	2.282	26.27	.3167	.5641	.3087

OH57,AEDC V41B-K3A, MODEL 92-0, LH WING LWR SURF (R4AL08)

L.H. WING LWR SURF

PARAMETRIC DATA

MACH = 8.000 PO = 850.0 RN/FT = 3.600 ELEVON = .0000
BDFLAP = .0000 SPDBRK = 49.30 RUDDER = .0000

TEST CONDITIONS

RUN NUMBER	ALPHA DEG.	BETA DEG.	PO PSIA	TO DEG. R	P PSIA	T DEG. R	Q PSIA	V FT/SEC	CPMAX	PT2 PSIA	RHO SLUGS /FT3	MU LB-SEC /FT2
26	30.04	.0000	846.9	1351.	.8674-01	97.90	3.886	3882.	1.827	7.188	.7429-04	.7878-07

RUN NUMBER	RN/FT /FT X 106
26	3.661

TEST DATA

RUN NUMBER	YO	XO	T/C NO	PN PSIA	PN/P	PN/PT2	CPN	CPN/MX
26	116.00	1379.0	1.0000	1.850	21.33	.2574	.4538	.2484
26	129.43	1379.0	2.0000	1.856	21.40	.2582	.4553	.2492
26	129.43	1398.4	3.0000	1.322	15.24	.1839	.3178	.1739
26	140.51	1379.0	4.0000	1.854	21.38	.2580	.4548	.2489
26	140.51	1398.4	5.0000	1.627	18.76	.2264	.3964	.2169
26	163.94	1379.0	6.0000	1.853	21.36	.2578	.4545	.2487
26	187.31	1190.4	7.0000	2.337	26.94	.3251	.5790	.3168
26	187.31	1240.7	8.0000	2.319	26.74	.3226	.5745	.3144
26	187.31	1290.9	9.0000	2.272	26.19	.3161	.5623	.3077
26	187.31	1341.2	10.000	2.104	24.25	.2927	.5190	.2840
26	187.31	1353.8	11.000	2.020	23.29	.2810	.4974	.2722
26	187.31	1375.6	12.000	1.928	22.23	.2683	.4739	.2593
26	187.31	1379.0	13.000	1.864	21.49	.2593	.4573	.2503
26	187.31	1398.4	14.000	1.739	20.04	.2419	.4251	.2326
26	187.31	1416.6	15.000	1.557	17.95	.2166	.3782	.2070
26	187.31	1441.7	16.000	1.303	15.02	.1813	.3130	.1713
26	187.31	1466.9	17.000	1.106	12.73	.1539	.2618	.1433
26	210.74	1379.0	18.000	1.919	22.08	.2670	.4706	.2575
26	234.17	1379.0	19.000	1.985	22.84	.2761	.4874	.2667
26	257.60	1379.0	20.000	2.174	25.01	.3024	.5360	.2933
26	281.03	1152.7	21.000	3.066	35.28	.4266	.7653	.4188

OH57, AEDC V41B-K3A, MODEL 92-0 AERO HEATING PRESSURE DATA

OH57,AEDC V41B-K3A, MODEL 92-0, LH WING LWR SURF

RUN NUMBER	YO	XO	T/C NO	PN PSIA	PN/P	PN/PT2	CPN	CPN/MX
26	281.03	1188.6	22.000	2.732	31.44	.3801	.6794	.3718
26	281.03	1224.5	23.000	2.668	30.70	.3712	.6630	.3628
26	281.03	1260.3	24.000	2.649	30.48	.3686	.6581	.3601
26	281.03	1296.2	25.000	2.512	28.90	.3494	.6228	.3408
26	281.03	1332.0	26.000	2.423	27.88	.3371	.6001	.3284
26	281.03	1358.9	27.000	2.288	26.33	.3183	.5654	.3094
26	281.03	1375.6	28.000	2.222	25.56	.3091	.5483	.3001
26	281.03	1379.0	29.000	2.163	24.89	.3010	.5334	.2919
26	281.03	1398.4	30.000	1.977	22.75	.2751	.4855	.2657
26	281.03	1421.7	31.000	1.609	18.52	.2239	.3910	.2140
26	281.03	1439.6	32.000	1.369	15.75	.1905	.3293	.1802
26	281.03	1457.5	33.000	1.136	13.06	.1581	.2691	.1473
26	281.03	1466.5	34.000	1.086	12.49	.1511	.2564	.1403
26	292.74	1379.0	35.000	2.198	25.26	.3058	.5416	.2964
26	304.40	1379.0	36.000	2.280	26.21	.3172	.5626	.3079
26	304.40	1398.4	37.000	1.895	21.78	.2637	.4639	.2539
26	311.20	1379.0	38.000	2.290	26.31	.3185	.5651	.3092
26	320.80	1379.0	39.000	2.326	26.74	.3236	.5744	.3144
26	320.80	1398.4	40.000	1.793	20.60	.2494	.4376	.2395
26	320.80	1421.3	41.000	1.587	18.24	.2208	.3848	.2106
26	320.80	1444.2	42.000	1.409	16.19	.1960	.3391	.1856
26	327.83	1375.6	43.000	2.383	27.38	.3315	.5889	.3223
26	327.83	1379.0	44.000	2.336	26.84	.3249	.5768	.3157
26	327.83	1398.4	45.000	1.929	22.17	.2683	.4725	.2585
26	327.83	1421.3	46.000	1.566	18.00	.2179	.3795	.2077
26	327.83	1444.2	47.000	1.312	15.08	.1826	.3144	.1720
26	351.26	1379.0	48.000	2.454	28.21	.3414	.6073	.3323
26	374.69	1379.0	49.000	2.512	28.84	.3495	.6214	.3401
26	398.11	1256.2	50.000	3.476	39.91	.4836	.8685	.4753
26	398.11	1278.3	51.000	3.265	37.48	.4543	.8144	.4457
26	398.11	1301.4	52.000	3.186	36.58	.4433	.7941	.4346
26	398.11	1322.3	53.000	3.087	35.44	.4295	.7688	.4207
26	398.11	1344.4	54.000	2.932	33.66	.4079	.7289	.3989
26	398.11	1366.5	55.000	2.752	31.59	.3829	.6829	.3737
26	398.11	1375.6	56.000	2.655	30.48	.3694	.6580	.3601
26	398.11	1379.0	57.000	2.656	30.48	.3694	.6581	.3602
26	398.11	1398.4	58.000	2.195	25.20	.3054	.5402	.2956
26	398.11	1410.5	59.000	1.954	22.43	.2718	.4783	.2618
26	398.11	1432.6	60.000	1.580	18.13	.2197	.3824	.2093
26	398.11	1443.6	61.000	1.320	15.16	.1837	.3160	.1729
26	421.49	1379.0	62.000	2.739	31.44	.3811	.6796	.3719
26	444.91	1343.1	63.000	2.872	32.96	.3995	.7135	.3904
26	444.91	1358.9	64.000	2.813	32.29	.3913	.6984	.3822

OH57,AEDC V41B-K3A, MODEL 92-0, LH WING LWR SURF (R4AL08)

RUN NUMBER	YO	XO	T/C NO	PN PSIA	PN/P	PN/PT2	CPN	CPN/MX
26	444.91	1375.6	65.000	2.676	30.78	.3723	.6647	.3637
26	444.91	1379.0	66.000	2.414	27.77	.3359	.5975	.3270
26	444.91	1398.4	67.000	2.198	25.28	.3058	.5420	.2966
26	444.91	1414.2	68.000	1.889	21.72	.2628	.4626	.2532
26	444.91	1430.0	69.000	1.564	17.99	.2176	.3793	.2075
26	456.63	1379.0	70.000	2.488	28.61	.3461	.6164	.3373
26	456.63	1398.4	71.000	2.047	23.55	.2848	.5033	.2754
26	456.63	1413.3	72.000	1.722	19.81	.2396	.4199	.2298
26	468.34	1379.0	73.000	1.707	19.64	.2375	.4160	.2277

L.H. WING LWR SURF

PARAMETRIC DATA

MACH = 8.000 PO = 850.0 RN/FT = 3.600 ELEVON = .0000
BDFLAP = .0000 SPDBRK = 49.30 RUDDER = .0000

TEST CONDITIONS

RUN NUMBER	ALPHA DEG.	BETA DEG.	PO PSIA	TO DEG. R	P PSIA	T DEG. R	Q PSIA	V FT/SEC	CPMAX	PT2 PSIA	RHO SLUGS /FT3	MU LB-SEC /FT2
28	35.00	.0000	847.9	1353.	.8685-01	98.04	3.891	3884.	1.827	7.197	.7426-04	.7890-07

RUN NUMBER	RN/FT /FT X 106
28	3.657

TEST DATA

RUN NUMBER	YO	XO	T/C NO	PN PSIA	PN/P	PN/PT2	CPN	CPN/MX
28	116.00	1379.0	1.0000	2.445	28.15	.3397	.6060	.3316
28	129.43	1379.0	2.0000	.2362	2.717	.3282-01	.3833-01	.2097-01
28	129.43	1398.4	3.0000	.1673	1.924	.2324-01	.2063-01	.1129-01
28	140.51	1379.0	4.0000	.4135-01	.4757	.5746-02	-.1170-01	-.6404-02
28	140.51	1398.4	5.0000	.5837-01	.6715	.8111-02	-.7332-02	-.4012-02
28	163.94	1379.0	6.0000	.3951-01	.4545	.5490-02	-.1218-01	-.6664-02
28	187.31	1190.4	7.0000	.3801-01	.4373	.5282-02	-.1256-01	-.6874-02
28	187.31	1240.7	8.0000	.3757-01	.4322	.5221-02	-.1267-01	-.6936-02
28	187.31	1290.9	9.0000	.4101-01	.4718	.5699-02	-.1179-01	-.6452-02
28	187.31	1341.2	10.000	2.761	31.79	.3836	.6873	.3761
28	187.31	1353.8	11.000	2.668	30.72	.3707	.6633	.3630
28	187.31	1375.6	12.000	2.571	29.60	.3572	.6384	.3493
28	187.31	1379.0	13.000	2.501	28.79	.3475	.6204	.3395
28	187.31	1398.4	14.000	2.336	26.89	.3246	.5780	.3163
28	187.31	1416.6	15.000	2.099	24.17	.2917	.5173	.2831
28	187.31	1441.7	16.000	1.789	20.60	.2486	.4376	.2395
28	187.31	1466.9	17.000	1.511	17.36	.2100	.3651	.1998
28	210.74	1379.0	18.000	2.570	29.52	.3571	.6365	.3483
28	234.17	1379.0	19.000	2.596	29.82	.3608	.6432	.3520
28	257.60	1379.0	20.000	2.825	32.44	.3925	.7017	.3840
28	281.03	1152.7	21.000	4.056	46.58	.5636	1.017	.5567

OH57,AEDC V41B-K3A, MODEL 92-0, LH WING LWR SURF (R4AL08)

RUN NUMBER	YO	XO	T/C NO	PN PSIA	PN/P	PN/PT2	CPN	CPN/MX
28	281.03	1188.6	22.000	3.572	41.02	.4964	.8934	.4889
28	281.03	1224.5	23.000	3.418	39.25	.4750	.8538	.4672
28	281.03	1260.3	24.000	3.389	38.91	.4709	.8463	.4631
28	281.03	1296.2	25.000	3.268	37.53	.4542	.8155	.4463
28	281.03	1332.0	26.000	3.197	36.72	.4443	.7972	.4363
28	281.03	1358.9	27.000	2.968	34.08	.4124	.7383	.4040
28	281.03	1375.6	28.000	2.861	32.85	.3975	.7110	.3891
28	281.03	1379.0	29.000	2.785	31.98	.3870	.6916	.3785
28	281.03	1398.4	30.000	2.561	29.41	.3558	.6341	.3470
28	281.03	1421.7	31.000	2.129	24.45	.2959	.5235	.2865
28	281.03	1439.6	32.000	1.861	21.37	.2586	.4548	.2489
28	281.03	1457.5	33.000	1.571	18.05	.2183	.3807	.2083
28	281.03	1466.5	34.000	1.497	17.21	.2081	.3618	.1980
28	292.74	1379.0	35.000	2.811	32.30	.3907	.6987	.3824
28	304.40	1379.0	36.000	2.921	33.56	.4058	.7268	.3977
28	304.40	1398.4	37.000	2.434	27.96	.3382	.6019	.3294
28	311.20	1379.0	38.000	2.936	33.74	.4080	.7308	.3999
28	320.80	1379.0	39.000	2.989	34.35	.4154	.7443	.4073
28	320.80	1398.4	40.000	2.301	26.44	.3198	.5679	.3108
28	320.80	1421.3	41.000	2.145	24.65	.2980	.5278	.2888
28	320.80	1444.2	42.000	1.916	22.02	.2662	.4691	.2567
28	327.83	1375.6	43.000	3.060	35.17	.4253	.7626	.4173
28	327.83	1379.0	44.000	3.020	34.70	.4196	.7522	.4116
28	327.83	1398.4	45.000	2.499	28.72	.3473	.6187	.3386
28	327.83	1421.3	46.000	2.114	24.29	.2937	.5198	.2845
28	327.83	1444.2	47.000	1.819	20.90	.2528	.4442	.2431
28	351.26	1379.0	48.000	3.145	36.13	.4370	.7842	.4291
28	374.69	1379.0	49.000	3.186	36.72	.4427	.7973	.4363
28	398.11	1256.2	50.000	4.164	47.99	.5785	1.049	.5739
28	398.11	1278.3	51.000	3.945	45.47	.5482	.9926	.5432
28	398.11	1301.4	52.000	3.845	44.31	.5342	.9668	.5291
28	398.11	1322.3	53.000	3.759	43.33	.5224	.9448	.5170
28	398.11	1344.4	54.000	3.668	42.28	.5097	.9214	.5042
28	398.11	1366.5	55.000	3.472	40.02	.4825	.8709	.4766
28	398.11	1375.6	56.000	3.360	38.73	.4669	.8421	.4609
28	398.11	1379.0	57.000	3.285	37.86	.4565	.8228	.4503
28	398.11	1398.4	58.000	2.798	32.25	.3888	.6976	.3817
28	398.11	1410.5	59.000	2.524	29.09	.3507	.6269	.3431
28	398.11	1432.6	60.000	2.060	23.74	.2863	.5077	.2778
28	398.11	1443.6	61.000	1.742	20.08	.2421	.4258	.2330
28	421.49	1379.0	62.000	3.431	39.54	.4767	.8603	.4708
28	444.91	1343.1	63.000	3.489	40.22	.4849	.8754	.4790
28	444.91	1358.9	64.000	3.439	39.63	.4778	.8624	.4719

OH57, AEDC V41B-K3A, MODEL 92-0 AERO HEATING PRESSURE DATA

OH57,AEDC V41B-K3A, MODEL 92-0, LH WING LWR SURF

RUN NUMBER	YO	XO	T/C NO	PN PSIA	PN/P	PN/PT2	CPN	CPN/MX
28	444.91	1375.6	65.000	3.275	37.76	.4550	.8205	.4490
28	444.91	1379.0	66.000	2.957	34.10	.4109	.7388	.4043
28	444.91	1398.4	67.000	2.673	30.82	.3714	.6657	.3643
28	444.91	1414.2	68.000	2.334	26.92	.3243	.5785	.3166
28	444.91	1430.0	69.000	1.973	22.76	.2742	.4856	.2657
28	456.63	1379.0	70.000	3.004	34.64	.4174	.7508	.4109
28	456.63	1398.4	71.000	2.491	28.73	.3462	.6189	.3387
28	456.63	1413.3	72.000	2.133	24.60	.2964	.5267	.2882
28	468.34	1379.0	73.000	1.998	23.04	.2776	.4919	.2692

L.H. WING LWR SURF

PARAMETRIC DATA

MACH = 8.000 PO = 850.0 RN/FT = 3.600 ELEVON = .0000
BDFLAP = .0000 SPDBRK = 49.30 RUDDER = .0000

TEST CONDITIONS

RUN NUMBER	ALPHA DEG.	BETA DEG.	PO PSIA	TO DEG. R	P PSIA	T DEG. R	Q PSIA	V FT/SEC	CPMAX	PT2 PSIA	RHO SLUGS /FT3	MU LB-SEC /FT2
25	40.07	.0000	846.8	1351.	.8673-01	97.90	3.886	3882.	1.827	7.187	.7428-04	.7878-07

RUN NUMBER	RN/FT /FT X 106
25	3.660

TEST DATA

RUN NUMBER	YO	XO	T/C NO	PN PSIA	PN/P	PN/PT2	CPN	CPN/MX
25	116.00	1379.0	1.0000	3.084	35.56	.4291	.7713	.4221
25	129.43	1379.0	2.0000	3.098	35.72	.4311	.7750	.4241
25	129.43	1398.4	3.0000	2.181	25.15	.3035	.5391	.2950
25	140.51	1379.0	4.0000	3.108	35.84	.4325	.7776	.4255
25	140.51	1398.4	5.0000	2.710	31.24	.3770	.6750	.3694
25	163.94	1379.0	6.0000	3.134	36.14	.4361	.7843	.4292
25	187.31	1190.4	7.0000	3.655	42.14	.5085	.9183	.5025
25	187.31	1240.7	8.0000	3.662	42.22	.5095	.9200	.5035
25	187.31	1290.9	9.0000	3.664	42.24	.5098	.9206	.5038
25	187.31	1341.2	10.000	3.466	39.96	.4822	.8696	.4759
25	187.31	1353.8	11.000	3.371	38.86	.4690	.8452	.4625
25	187.31	1375.6	12.000	3.256	37.54	.4531	.8157	.4464
25	187.31	1379.0	13.000	3.190	36.78	.4439	.7987	.4371
25	187.31	1398.4	14.000	2.984	34.40	.4151	.7456	.4080
25	187.31	1416.6	15.000	2.713	31.28	.3774	.6758	.3698
25	187.31	1441.7	16.000	2.330	26.86	.3241	.5772	.3159
25	187.31	1466.9	17.000	1.975	22.77	.2748	.4860	.2659
25	210.74	1379.0	18.000	3.260	37.59	.4536	.8167	.4470
25	234.17	1379.0	19.000	3.286	37.89	.4573	.8235	.4506
25	257.60	1379.0	20.000	3.476	40.07	.4836	.8722	.4773
25	281.03	1152.7	21.000	4.854	55.96	.6753	1.227	.6714

OH57,AEDC V41B-K3A, MODEL 92-0, LH WING LWR SURF (R4AL08)

RUN NUMBER	YC	XO	T/C NO	PN PSIA	PN/P	PN/PT2	CPN	CPN/MX
25	281.03	1188.6	22.000	4.354	50.20	.6058	1.098	.6010
25	281.03	1224.5	23.000	4.163	48.00	.5793	1.049	.5741
25	281.03	1260.3	24.000	4.112	47.41	.5721	1.036	.5669
25	281.03	1296.2	25.000	4.043	46.62	.5625	1.018	.5572
25	281.03	1332.0	26.000	3.907	45.05	.5436	.9832	.5380
25	281.03	1358.9	27.000	3.702	42.68	.5151	.9305	.5092
25	281.03	1375.6	28.000	3.590	41.39	.4995	.9016	.4934
25	281.03	1379.0	29.000	3.502	40.37	.4872	.8789	.4810
25	281.03	1398.4	30.000	3.237	37.32	.4504	.8108	.4437
25	281.03	1421.7	31.000	2.743	31.62	.3816	.6835	.3740
25	281.03	1439.6	32.000	2.420	27.90	.3367	.6004	.3286
25	281.03	1457.5	33.000	2.080	23.95	.2894	.5122	.2803
25	281.03	1466.5	34.000	1.903	21.90	.2647	.4666	.2554
25	292.74	1379.0	35.000	3.519	40.52	.4897	.8821	.4827
25	304.40	1379.0	36.000	3.600	41.45	.5009	.9029	.4941
25	304.40	1398.4	37.000	2.959	34.06	.4116	.7380	.4039
25	311.20	1379.0	38.000	3.613	41.60	.5027	.9062	.4959
25	320.80	1379.0	39.000	3.664	42.18	.5098	.9193	.5031
25	320.80	1398.4	40.000	2.825	32.52	.3930	.7036	.3850
25	320.80	1421.3	41.000	2.790	32.13	.3882	.6948	.3802
25	320.80	1444.2	42.000	2.431	27.99	.3382	.6023	.3296
25	327.83	1375.6	43.000	3.756	43.25	.5226	.9430	.5160
25	327.83	1379.0	44.000	3.701	42.61	.5149	.9288	.5083
25	327.83	1398.4	45.000	3.055	35.17	.4250	.7627	.4174
25	327.83	1421.3	46.000	2.708	31.17	.3767	.6735	.3686
25	327.83	1444.2	47.000	2.366	27.24	.3292	.5858	.3206
25	351.26	1379.0	48.000	3.836	44.17	.5338	.9636	.5273
25	374.69	1379.0	49.000	3.894	44.78	.5418	.9773	.5348
25	398.11	1256.2	50.000	4.704	54.09	.6544	1.185	.6485
25	398.11	1278.3	51.000	4.587	52.75	.6382	1.155	.6321
25	398.11	1301.4	52.000	4.542	52.23	.6320	1.144	.6258
25	398.11	1322.3	53.000	4.450	51.18	.6192	1.120	.6129
25	398.11	1344.4	54.000	4.341	49.92	.6039	1.092	.5975
25	398.11	1366.5	55.000	4.192	48.21	.5832	1.054	.5766
25	398.11	1375.6	56.000	4.089	47.02	.5690	1.027	.5622
25	398.11	1379.0	57.000	4.070	46.81	.5663	1.022	.5595
25	398.11	1398.4	58.000	3.451	39.68	.4801	.8635	.4725
25	398.11	1410.5	59.000	3.149	36.21	.4381	.7860	.4301
25	398.11	1432.6	60.000	2.618	30.11	.3643	.6498	.3556
25	398.11	1443.6	61.000	2.243	25.80	.3121	.5535	.3029
25	421.49	1379.0	62.000	4.080	46.92	.5677	1.025	.5609
25	444.91	1343.1	63.000	4.182	48.09	.5819	1.051	.5752
25	444.91	1358.9	64.000	4.143	47.64	.5764	1.041	.5697

OH57,AEDC V41B-K3A, MODEL 92-0, LH WING LWR SURF (R4AL08)

RUN NUMBER	YO	XO	T/C NO	PN PSIA	PN/P	PN/PT2	CPN	CPN/MX
25	444.91	1375.6	65.000	3.972	45.64	.5527	.9965	.5453
25	444.91	1379.0	66.000	3.629	41.70	.5050	.9086	.4972
25	444.91	1398.4	67.000	3.313	38.07	.4610	.8275	.4529
25	444.91	1414.2	68.000	2.922	33.58	.4066	.7272	.3979
25	444.91	1430.0	69.000	2.473	28.41	.3440	.6119	.3348
25	456.63	1379.0	70.000	3.589	41.24	.4993	.8982	.4915
25	456.63	1398.4	71.000	3.043	34.97	.4234	.7582	.4149
25	456.63	1413.3	72.000	2.637	30.30	.3669	.6541	.3579
25	468.34	1379.0	73.000	2.349	26.99	.3268	.5801	.3175

OH57,AEDC V41B-K3A, MODEL 92-0, LH WING LWR SURF (R4AL08)

L.H. WING LWR SURF

PARAMETRIC DATA

MACH = 8.000 PO = 850.0 RN/FT = 3.600 ELEVON = .0000
BDFLAP = .0000 SPDBRK = 49.30 RUDDER = .0000

TEST CONDITIONS

RUN NUMBER	ALPHA DEG.	BETA DEG.	PO PSIA	TO DEG. R	P PSIA	T DEG. R	Q PSIA	V FT/SEC	CPMAX	PT2 PSIA	RHO SLUGS /FT3	MU LB-SEC /FT2
27	44.07	.0000	847.6	1353.	.8682-01	98.04	3.889	3884.	1.827	7.194	.7424-04	.7890-07

RUN NUMBER	RN/FT /FT X 106
27	3.655

TEST DATA

RUN NUMBER	YO	XO	T/C NO	PN PSIA	PN/P	PN/PT2	CPN	CPN/MX
27	116.00	1379.0	1.0000	3.635	41.87	.5052	.9122	.4992
27	129.43	1379.0	2.0000	3.650	42.05	.5074	.9163	.5014
27	129.43	1398.4	3.0000	2.569	29.60	.3572	.6383	.3493
27	140.51	1379.0	4.0000	3.662	42.18	.5090	.9192	.5030
27	140.51	1398.4	5.0000	3.177	36.60	.4417	.7946	.4349
27	163.94	1379.0	6.0000	3.694	42.55	.5135	.9274	.5075
27	187.31	1190.4	7.0000	4.216	48.56	.5860	1.062	.5810
27	187.31	1240.7	8.0000	4.253	48.99	.5911	1.071	.5862
27	187.31	1290.9	9.0000	4.163	47.95	.5787	1.048	.5735
27	187.31	1341.2	10.000	4.063	46.80	.5648	1.022	.5595
27	187.31	1353.8	11.000	3.944	45.43	.5482	.9916	.5427
27	187.31	1375.6	12.000	3.843	44.27	.5342	.9658	.5285
27	187.31	1379.0	13.000	3.758	43.41	.5238	.9455	.5180
27	187.31	1398.4	14.000	3.536	40.73	.4915	.8868	.4853
27	187.31	1416.6	15.000	2.308	26.59	.3208	.5711	.3126
27	187.31	1441.7	16.000	2.805	32.31	.3900	.6990	.3825
27	187.31	1466.9	17.000	2.370	27.25	.3294	.5860	.3207
27	210.74	1379.0	18.000	3.830	44.05	.5325	.9610	.5259
27	234.17	1379.0	19.000	3.912	44.99	.5438	.9819	.5373
27	257.60	1379.0	20.000	4.041	46.48	.5617	1.015	.5555
27	281.03	1152.7	21.000	5.203	59.84	.7233	1.313	.7188

OH57,AEDC V41B-K3A, MODEL 92-0, LH WING LWR SURF (R4AL08)

RUN NUMBER	YO	XO	T/C NO	PN PSIA	PN/P	PN/PT2	CPN	CPN/MX
27	281.03	1188.6	22.000	4.902	56.37	.6814	1.236	.6764
27	281.03	1224.5	23.000	4.739	54.51	.6588	1.194	.6536
27	281.03	1260.3	24.000	4.700	54.05	.6533	1.184	.6480
27	281.03	1296.2	25.000	4.532	52.12	.6299	1.141	.6244
27	281.03	1332.0	26.000	4.503	51.78	.6259	1.134	.6203
27	281.03	1358.9	27.000	4.278	49.20	.5947	1.076	.5888
27	281.03	1375.6	28.000	4.160	47.85	.5783	1.046	.5723
27	281.03	1379.0	29.000	4.068	46.78	.5654	1.022	.5593
27	281.03	1398.4	30.000	3.786	43.55	.5263	.9497	.5197
27	281.03	1421.7	31.000	3.255	37.44	.4525	.8134	.4451
27	281.03	1439.6	32.000	2.894	33.28	.4023	.7206	.3943
27	281.03	1457.5	33.000	2.484	28.63	.3452	.6167	.3375
27	281.03	1466.5	34.000	2.279	26.27	.3168	.5641	.3087
27	292.74	1379.0	35.000	4.076	46.98	.5665	1.026	.5616
27	304.40	1379.0	36.000	4.149	47.83	.5768	1.045	.5720
27	304.40	1398.4	37.000	3.371	38.86	.4686	.8450	.4624
27	311.20	1379.0	38.000	4.156	47.91	.5777	1.047	.5730
27	320.80	1379.0	39.000	4.196	48.37	.5833	1.057	.5786
27	320.80	1398.4	40.000	3.329	38.37	.4627	.8341	.4565
27	320.80	1421.3	41.000	3.211	37.02	.4464	.8040	.4400
27	320.80	1444.2	42.000	2.899	33.41	.4029	.7235	.3959
27	327.83	1375.6	43.000	4.294	49.50	.5970	1.083	.5925
27	327.83	1379.0	44.000	4.231	48.77	.5881	1.066	.5835
27	327.83	1398.4	45.000	3.475	40.05	.4830	.8717	.4770
27	327.83	1421.3	46.000	3.216	37.07	.4471	.8052	.4406
27	327.83	1444.2	47.000	2.818	32.48	.3917	.7026	.3845
27	351.26	1379.0	48.000	4.347	50.10	.6042	1.096	.5998
27	374.69	1379.0	49.000	4.419	50.87	.6143	1.113	.6092
27	398.11	1256.2	50.000	5.116	58.89	.7112	1.292	.7071
27	398.11	1278.3	51.000	5.083	58.51	.7065	1.284	.7025
27	398.11	1301.4	52.000	5.082	58.50	.7064	1.283	.7024
27	398.11	1322.3	53.000	5.010	57.66	.6964	1.265	.6922
27	398.11	1344.4	54.000	4.896	56.35	.6805	1.236	.6761
27	398.11	1366.5	55.000	4.729	54.43	.6573	1.193	.6527
27	398.11	1375.6	56.000	4.613	53.09	.6412	1.163	.6363
27	398.11	1379.0	57.000	4.457	51.30	.6195	1.123	.6144
27	398.11	1398.4	58.000	3.943	45.39	.5481	.9908	.5422
27	398.11	1410.5	59.000	3.627	41.75	.5042	.9096	.4978
27	398.11	1432.6	60.000	3.063	35.26	.4258	.7647	.4185
27	398.11	1443.6	61.000	2.647	30.47	.3679	.6577	.3599
27	421.49	1379.0	62.000	4.595	52.89	.6387	1.158	.6338
27	444.91	1343.1	63.000	4.683	53.90	.6509	1.181	.6462
27	444.91	1358.9	64.000	4.651	53.54	.6466	1.173	.6418

OH57,AEDC V41B-K3A, MODEL 92-0, LH WING LWR SURF

RUN NUMBER	YO	XO	T/C NO	PN PSIA	PN/P	PN/PT2	CPN	CPN/MX
27	444.91	1375.6	65.000	4.458	51.38	.6197	1.125	.6154
27	444.91	1379.0	66.000	4.077	46.98	.5667	1.026	.5616
27	444.91	1398.4	67.000	3.764	43.38	.5233	.9460	.5177
27	444.91	1414.2	68.000	3.351	38.62	.4658	.8397	.4595
27	444.91	1430.0	69.000	2.858	32.94	.3973	.7129	.3901
27	456.63	1379.0	70.000	4.019	46.32	.5587	1.012	.5536
27	456.63	1398.4	71.000	3.442	39.67	.4785	.8631	.4723
27	456.63	1413.3	72.000	3.011	34.70	.4185	.7521	.4116
27	468.34	1379.0	73.000	2.348	27.05	.3263	.5816	.3183

L.H. WING LWR SURF

PARAMETRIC DATA

MACH = 8.000 PO = 850.0 RN/FT = 3.600 ELEVON = .0000
BDFLAP = .0000 SPDBRK = .0000 RUDDER = .0000

TEST CONDITIONS

RUN NUMBER	ALPHA DEG.	BETA DEG.	PO PSIA	TO DEG. R	P PSIA	T DEG. R	Q PSIA	V FT/SEC	CPMAX	PT2 PSIA	RHO SLUGS /FT3	MU LB-SEC /FT2
5	29.99	.0000	851.7	1351.	.8723-01	97.90	3.908	3882.	1.827	7.229	.7470-04	.7878-07

RUN NUMBER	RN/FT /FT X 106
5	3.681

TEST DATA

RUN NUMBER	YO	XO	T/C NO	PN PSIA	PN/P	PN/PT2	CPN	CPN/MX
5	116.00	1379.0	1.0000	1.820	20.86	.2517	.4433	.2426
5	129.43	1379.0	2.0000	1.814	20.80	.2509	.4421	.2419
5	129.43	1398.4	3.0000	1.277	14.66	.1767	.3049	.1668
5	140.51	1379.0	4.0000	1.815	20.81	.2511	.4422	.2420
5	140.51	1398.4	5.0000	1.566	17.97	.2166	.3787	.2073
5	163.94	1379.0	6.0000	1.814	20.83	.2509	.4427	.2423
5	187.31	1190.4	7.0000	2.296	26.41	.3176	.5673	.3104
5	187.31	1240.7	8.0000	2.249	25.85	.3112	.5548	.3036
5	187.31	1290.9	9.0000	2.246	25.74	.3107	.5523	.3022
5	187.31	1341.2	10.000	2.066	23.70	.2858	.5066	.2772
5	187.31	1353.8	11.000	1.999	22.93	.2765	.4896	.2679
5	187.31	1375.6	12.000	1.886	21.63	.2609	.4604	.2519
5	187.31	1379.0	13.000	1.826	20.96	.2526	.4454	.2438
5	187.31	1398.4	14.000	1.669	19.17	.2309	.4056	.2220
5	187.31	1416.6	15.000	1.485	17.08	.2054	.3590	.1964
5	187.31	1441.7	16.000	1.236	14.21	.1710	.2948	.1613
5	187.31	1466.9	17.000	1.018	11.67	.1408	.2381	.1303
5	210.74	1379.0	18.000	1.885	21.62	.2608	.4603	.2519
5	234.17	1379.0	19.000	2.043	23.44	.2826	.5010	.2742
5	257.60	1379.0	20.000	2.109	24.18	.2918	.5174	.2832
5	281.03	1152.7	21.000	3.044	34.93	.4211	.7573	.4144

OH57,AEDC V41B-K3A, MODEL 92-0, LH WING LWR SURF (R4AL09)

RUN NUMBER	YO	XO	T/C NO	PN PSIA	PN/P	PN/PT2	CPN	CPN/MX
5	281.03	1188.6	22.000	2.764	31.75	.3824	.6865	.3757
5	281.03	1224.5	23.000	2.590	29.80	.3583	.6428	.3517
5	281.03	1260.3	24.000	2.539	29.18	.3512	.6290	.3442
5	281.03	1296.2	25.000	2.484	28.47	.3436	.6132	.3356
5	281.03	1332.0	26.000	2.421	27.77	.3349	.5975	.3270
5	281.03	1358.9	27.000	2.320	26.62	.3210	.5720	.3130
5	281.03	1375.6	28.000	2.195	25.17	.3037	.5395	.2952
5	281.03	1379.0	29.000	2.162	24.81	.2991	.5315	.2909
5	281.03	1398.4	30.000	1.899	21.82	.2628	.4647	.2543
5	281.03	1421.7	31.000	1.549	17.82	.2143	.3755	.2055
5	281.03	1439.6	32.000	1.318	15.15	.1823	.3158	.1728
5	281.03	1457.5	33.000	1.094	12.54	.1514	.2577	.1410
5	281.03	1466.5	34.000	.9617	11.03	.1330	.2239	.1225
5	292.74	1379.0	35.000	2.206	25.32	.3052	.5428	.2971
5	304.40	1379.0	36.000	2.262	25.93	.3129	.5565	.3046
5	304.40	1398.4	37.000	1.798	20.63	.2487	.4381	.2397
5	311.20	1379.0	38.000	2.275	26.14	.3148	.5611	.3070
5	320.80	1379.0	39.000	2.295	26.40	.3175	.5670	.3103
5	320.80	1398.4	40.000	1.719	19.76	.2379	.4188	.2292
5	320.80	1421.3	41.000	1.571	18.01	.2173	.3797	.2078
5	320.80	1444.2	42.000	1.322	15.16	.1828	.3160	.1729
5	327.83	1375.6	43.000	2.353	27.00	.3255	.5803	.3176
5	327.83	1379.0	44.000	2.309	26.47	.3194	.5686	.3111
5	327.83	1398.4	45.000	1.899	21.79	.2627	.4640	.2539
5	327.83	1421.3	46.000	1.509	17.34	.2088	.3647	.1996
5	327.83	1444.2	47.000	1.278	14.70	.1768	.3058	.1674
5	351.26	1379.0	48.000	2.408	27.68	.3331	.5955	.3259
5	374.69	1379.0	49.000	2.468	28.29	.3414	.6091	.3333
5	398.11	1256.2	50.000	3.433	39.37	.4749	.8565	.4687
5	398.11	1278.3	51.000	3.260	37.41	.4509	.8127	.4447
5	398.11	1301.4	52.000	3.096	35.49	.4283	.7700	.4214
5	398.11	1322.3	53.000	2.998	34.40	.4148	.7456	.4080
5	398.11	1344.4	54.000	2.904	33.35	.4017	.7221	.3952
5	398.11	1366.5	55.000	2.702	31.09	.3738	.6716	.3675
5	398.11	1375.6	56.000	2.624	30.16	.3630	.6509	.3562
5	398.11	1379.0	57.000	2.579	29.56	.3568	.6376	.3489
5	398.11	1398.4	58.000	2.137	24.52	.2957	.5249	.2873
5	398.11	1410.5	59.000	1.897	21.65	.2610	.4609	.2522
5	398.11	1432.6	60.000	1.531	17.55	.2118	.3694	.2022
5	398.11	1443.6	61.000	1.281	14.70	.1773	.3059	.1674
5	421.49	1379.0	62.000	2.687	30.86	.3717	.6666	.3648
5	444.91	1343.1	63.000	2.869	33.00	.3969	.7143	.3909
5	444.91	1358.9	64.000	2.803	32.21	.3877	.6967	.3813

OH57,AEDC V41B-K3A, MODEL 92-0, LH WING LWR SURF (R4AL09)

RUN NUMBER	YO	XO	T/C NO	PN PSIA	PN/P	PN/PT2	CPN	CPN/MX
5	444.91	1375.6	65.000	2.378	27.26	.3290	.5862	.3208
5	444.91	1379.0	66.000	2.379	27.28	.3291	.5867	.3211
5	444.91	1398.4	67.000	2.161	24.80	.2990	.5313	.2907
5	444.91	1414.2	68.000	1.860	21.33	.2573	.4537	.2483
5	444.91	1430.0	69.000	1.534	17.60	.2122	.3706	.2028
5	456.63	1379.0	70.000	2.378	27.32	.3290	.5874	.3215
5	456.63	1398.4	71.000	2.003	23.05	.2771	.4921	.2693
5	456.63	1413.3	72.000	1.696	19.49	.2346	.4127	.2258
5	468.34	1379.0	73.000	.9664	11.08	.1337	.2250	.1231

L.H. WING LWR SURF

PARAMETRIC DATA

MACH = 8.000 PO = 850.0 RN/FT = 3.600 ELEVON = .0000
BDFLAP = .0000 SPDBRK = .0000 RUDDER = .0000

TEST CONDITIONS

RUN NUMBER	ALPHA DEG.	BETA DEG.	PO PSIA	TO DEG. R	P PSIA	T DEG. R	Q PSIA	V FT/SEC	CPMAX	PT2 PSIA	RHO SLUGS /FT3	MU LB-SEC /FT2
4	35.03	.0000	849.1	1349.	.8698-01	97.75	3.897	3879.	1.827	7.207	.7460-04	.7866-07

RUN NUMBER	RN/FT /FT X 106
4	3.679

TEST DATA

RUN NUMBER	YO	XO	T/C NO	PN PSIA	PN/P	PN/PT2	CPN	CPN/MX
4	116.00	1379.0	1.0000	2.421	27.83	.3359	.5989	.3278
4	129.43	1379.0	2.0000	2.431	27.89	.3373	.6003	.3285
4	129.43	1398.4	3.0000	1.701	19.56	.2360	.4142	.2267
4	140.51	1379.0	4.0000	2.446	28.06	.3394	.6039	.3305
4	140.51	1398.4	5.0000	2.113	24.25	.2931	.5191	.2840
4	163.94	1379.0	6.0000	2.467	28.31	.3423	.6096	.3336
4	187.31	1190.4	7.0000	2.971	34.11	.4122	.7391	.4045
4	187.31	1240.7	8.0000	2.938	33.73	.4076	.7306	.3998
4	187.31	1290.9	9.0000	2.929	33.67	.4064	.7293	.3991
4	187.31	1341.2	10.000	2.746	31.50	.3810	.6809	.3726
4	187.31	1353.8	11.000	2.668	30.68	.3702	.6624	.3625
4	187.31	1375.6	12.000	2.556	29.31	.3546	.6320	.3458
4	187.31	1379.0	13.000	2.500	28.70	.3469	.6184	.3384
4	187.31	1398.4	14.000	2.279	26.15	.3162	.5613	.3072
4	187.31	1416.6	15.000	2.052	23.57	.2848	.5038	.2757
4	187.31	1441.7	16.000	1.736	19.94	.2409	.4227	.2313
4	187.31	1466.9	17.000	1.442	16.58	.2000	.3477	.1903
4	210.74	1379.0	18.000	2.560	29.37	.3552	.6333	.3466
4	234.17	1379.0	19.000	2.664	30.63	.3696	.6613	.3619
4	257.60	1379.0	20.000	2.823	32.38	.3917	.7004	.3833
4	281.03	1152.7	21.000	4.077	46.80	.5656	1.022	.5594

OH57,AEDC V41B-K3A, MODEL 92-0, LH WING LWR SURF (R4AL09)

RUN NUMBER	YO	XO	T/C NO	PN PSIA	PN/P	PN/PT2	CPN	CPN/MX
4	281.03	1188.6	22.000	3.639	41.76	.5049	.9097	.4978
4	281.03	1224.5	23.000	3.406	39.12	.4726	.8508	.4656
4	281.03	1260.3	24.000	3.384	38.85	.4695	.8449	.4624
4	281.03	1296.2	25.000	3.360	38.63	.4661	.8399	.4596
4	281.03	1332.0	26.000	3.205	36.77	.4447	.7984	.4369
4	281.03	1358.9	27.000	3.014	34.65	.4182	.7512	.4111
4	281.03	1375.6	28.000	2.859	32.79	.3967	.7097	.3884
4	281.03	1379.0	29.000	2.813	32.29	.3903	.6985	.3822
4	281.03	1398.4	30.000	2.517	28.88	.3492	.6223	.3406
4	281.03	1421.7	31.000	2.093	24.04	.2904	.5142	.2814
4	281.03	1439.6	32.000	1.820	20.90	.2525	.4441	.2430
4	281.03	1457.5	33.000	1.533	17.63	.2127	.3711	.2031
4	281.03	1466.5	34.000	1.389	15.93	.1927	.3334	.1824
4	292.74	1379.0	35.000	2.845	32.71	.3947	.7078	.3873
4	304.40	1379.0	36.000	2.932	33.63	.4068	.7283	.3986
4	304.40	1398.4	37.000	2.345	26.91	.3253	.5785	.3166
4	311.20	1379.0	38.000	2.965	34.02	.4114	.7371	.4034
4	320.80	1379.0	39.000	2.997	34.41	.4158	.7458	.4082
4	320.80	1398.4	40.000	2.245	25.78	.3115	.5532	.3027
4	320.80	142'.3	41.000	2.138	24.58	.2966	.5263	.2880
4	320.80	1444.2	42.000	1.852	21.25	.2570	.4520	.2473
4	327.83	1375.6	43.000	3.057	35.15	.4242	.7623	.4172
4	327.83	1379.0	44.000	3.009	34.51	.4175	.7481	.4094
4	327.83	1398.4	45.000	2.483	28.51	.3446	.6140	.3360
4	327.83	1421.3	46.000	2.073	23.79	.2876	.5086	.2783
4	327.83	1444.2	47.000	1.798	20.65	.2495	.4386	.2400
4	351.26	1379.0	48.000	3.124	35.87	.4334	.7783	.4259
4	374.69	1379.0	49.000	3.177	36.53	.4408	.7930	.4340
4	398.11	1256.2	50.000	4.163	47.76	.5776	1.044	.5712
4	398.11	1278.3	51.000	3.989	45.86	.5534	1.001	.5479
4	398.11	1301.4	52.000	3.828	43.90	.5311	.9576	.5240
4	398.11	1322.3	53.000	3.723	42.73	.5165	.9316	.5098
4	398.11	1344.4	54.000	3.674	42.16	.5098	.9188	.5028
4	398.11	1366.5	55.000	3.473	39.88	.4819	.8679	.4750
4	398.11	1375.6	56.000	3.378	38.79	.4687	.8436	.4616
4	398.11	1379.0	57.000	3.295	37.89	.4572	.8234	.4506
4	398.11	1398.4	58.000	2.770	31.78	.3843	.6870	.3759
4	398.11	1410.5	59.000	2.472	28.42	.3430	.6122	.3350
4	398.11	1432.6	60.000	2.034	23.33	.2822	.4983	.2727
4	398.11	1443.6	61.000	1.729	19.85	.2399	.4207	.2302
4	421.49	1379.0	62.000	3.423	39.28	.4749	.8544	.4675
4	444.91	1343.1	63.000	3.485	40.02	.4835	.8709	.4766
4	444.91	1358.9	64.000	3.429	39.37	.4758	.8565	.4687

OH57,AEDC V41B-K3A, MODEL 92-0, LH WING LWR SURF (R4AL09)

RUN NUMBER	YO	XO	T/C NO	PN PSIA	PN/P	PN/PT2	CPN	CPN/MX
4	444.91	1375.6	65.000	3.344	38.45	.4639	.8358	.4574
4	444.91	1379.0	66.000	2.380	27.30	.3302	.5872	.3213
4	444.91	1398.4	67.000	2.380	27.36	.3302	.5885	.3220
4	444.91	1414.2	68.000	2.381	27.30	.3303	.5871	.3213
4	444.91	1430.0	69.000	1.944	22.31	.2697	.4757	.2603
4	456.63	1379.0	70.000	2.378	27.29	.3299	.5868	.3211
4	456.63	1398.4	71.000	2.379	27.32	.3301	.5876	.3215
4	456.63	1413.3	72.000	2.137	24.54	.2965	.5255	.2876
4	468.34	1379.0	73.000	1.073	12.34	.1489	.2530	.1385

OH57,AEDC V41B-K3A, MODEL 92-0, LH WING LWR SURF (R4AL09)

L.H. WING LWR SURF

PARAMETRIC DATA

MACH = 8.000 PO = 850.0 RN/FT = 3.600 ELEVON = .0000
BDFLAP = .0000 SPDBRK = .0000 RUDDER = .0000

TEST CONDITIONS

RUN NUMBER	ALPHA DEG.	BETA DEG.	PO PSIA	TO DEG. R	P PSIA	T DEG. R	Q PSIA	V FT/SEC	CPMAX	PT2 PSIA	RHO SLUGS /FT3	MU LB-SEC /FT2
2	40.01	.0000	850.6	1351.	.8713-01	97.90	3.903	3882.	1.827	7.220	.7462-04	.7878-07

RUN NUMBER	RN/FT /FT X 106
2	3.677

TEST DATA

RUN NUMBER	YO	XO	T/C NO	PN PSIA	PN/P	PN/PT2	CPN	CPN/MX
2	116.00	1379.0	1.0000	3.076	35.30	.4260	.7656	.4190
2	129.43	1379.0	2.0000	3.080	35.38	.4266	.7673	.4199
2	129.43	1398.4	3.0000	2.152	24.74	.2980	.5298	.2899
2	140.51	1379.0	4.0000	3.098	35.57	.4291	.7717	.4223
2	140.51	1398.4	5.0000	2.666	30.59	.3692	.6604	.3614
2	163.94	1379.0	6.0000	3.139	36.01	.4347	.7815	.4277
2	187.31	1190.4	7.0000	3.639	41.75	.5040	.9095	.4977
2	187.31	1240.7	8.0000	3.596	41.26	.4980	.8986	.4917
2	187.31	1290.9	9.0000	3.639	41.76	.5040	.9099	.4979
2	187.31	1341.2	10.000	3.450	39.62	.4778	.8621	.4718
2	187.31	1353.8	11.000	3.360	38.63	.4654	.8399	.4596
2	187.31	1375.6	12.000	3.236	37.15	.4482	.8069	.4416
2	187.31	1379.0	13.000	3.177	36.46	.4401	.7915	.4331
2	187.31	1398.4	14.000	2.908	33.36	.4027	.7223	.3953
2	187.31	1416.6	15.000	2.647	30.37	.3666	.6555	.3587
2	187.31	1441.7	16.000	2.273	26.08	.3148	.5598	.3063
2	187.31	1466.9	17.000	1.912	21.95	.2648	.4675	.2559
2	210.74	1379.0	18.000	3.236	37.17	.4482	.8074	.4418
2	234.17	1379.0	19.000	3.333	38.31	.4616	.8328	.4558
2	257.60	1379.0	20.000	3.472	39.87	.4809	.8675	.4748
2	281.03	1152.7	21.000	4.860	55.76	.6731	1.222	.6689

OH57, AEDC V41B-K3A, MODEL 92-0 AERO HEATING PRESSURE DATA

OH57,AEDC V41B-K3A, MODEL 92-0, LH WING LWR SURF

RUN NUMBER	YO	XO	T/C NO	PN PSIA	PN/P	PN/PT2	CPN	CPN/MX
2	281.03	1188.6	22.000	4.400	50.48	.6094	1.104	.6044
2	281.03	1224.5	23.000	4.141	47.51	.5736	1.038	.5681
2	281.03	1260.3	24.000	4.086	46.88	.5659	1.024	.5604
2	281.03	1296.2	25.000	4.058	46.58	.5621	1.017	.5567
2	281.03	1332.0	26.000	3.932	45.16	.5446	.9857	.5394
2	281.03	1358.9	27.000	3.747	43.08	.5190	.9393	.5140
2	281.03	1375.6	28.000	3.582	41.13	.4961	.8957	.4901
2	281.03	1379.0	29.000	3.539	40.60	.4901	.8840	.4837
2	281.03	1398.4	30.000	3.222	36.96	.4462	.8027	.4393
2	281.03	1421.7	31.000	2.690	30.85	.3725	.6664	.3647
2	281.03	1439.6	32.000	2.371	27.21	.3284	.5850	.3201
2	281.03	1457.5	33.000	2.020	23.18	.2798	.4952	.2710
2	281.03	1466.5	34.000	1.835	21.08	.2542	.4481	.2452
2	292.74	1379.0	35.000	3.544	40.74	.4908	.8870	.4854
2	304.40	1379.0	36.000	3.602	41.36	.4989	.9009	.4930
2	304.40	1398.4	37.000	2.880	33.04	.3988	.7152	.3914
2	311.20	1379.0	38.000	3.640	41.76	.5041	.9098	.4979
2	320.80	1379.0	39.000	3.668	42.08	.5081	.9170	.5018
2	320.80	1398.4	40.000	2.777	31.87	.3847	.6890	.3771
2	320.80	1421.3	41.000	2.739	31.43	.3793	.6793	.3718
2	320.80	1444.2	42.000	2.396	27.52	.3319	.5920	.3239
2	327.83	1375.6	43.000	3.737	42.96	.5176	.9366	.5125
2	327.83	1379.0	44.000	3.674	42.18	.5088	.9192	.5030
2	327.83	1398.4	45.000	3.032	34.79	.4199	.7542	.4127
2	327.83	1421.3	46.000	2.658	30.49	.3681	.6583	.3602
2	327.83	1444.2	47.000	2.335	26.78	.3233	.5755	.3149
2	351.26	1379.0	48.000	3.780	43.38	.5236	.9459	.5176
2	374.69	1379.0	49.000	3.850	44.19	.5333	.9641	.5276
2	398.11	1256.2	50.000	4.693	53.90	.6500	1.181	.6462
2	398.11	1278.3	51.000	4.615	53.06	.6392	1.162	.6359
2	398.11	1301.4	52.000	4.495	51.61	.6226	1.130	.6182
2	398.11	1322.3	53.000	4.403	50.52	.6099	1.105	.6049
2	398.11	1344.4	54.000	4.336	49.74	.6005	1.088	.5954
2	398.11	1366.5	55.000	4.169	47.82	.5774	1.045	.5720
2	398.11	1375.6	56.000	4.067	46.66	.5632	1.019	.5578
2	398.11	1379.0	57.000	3.977	45.65	.5508	.9965	.5453
2	398.11	1398.4	58.000	3.394	38.99	.4701	.8479	.4640
2	398.11	1410.5	59.000	3.091	35.41	.4267	.7682	.4204
2	398.11	1432.6	60.000	2.567	29.47	.3555	.6355	.3478
2	398.11	1443.6	61.000	2.214	25.40	.3066	.5447	.2981
2	421.49	1379.0	62.000	4.046	46.42	.5604	1.014	.5548
2	444.91	1343.1	63.000	4.103	47.07	.5683	1.028	.5628
2	444.91	1358.9	64.000	4.063	46.62	.5627	1.018	.5572

OH57,AEDC V41B-K3A, MODEL 92-0, LH WING LWR SURF (R4AL09)

RUN NUMBER	YO	XO	T/C NO	PN PSIA	PN/P	PN/PT2	CPN	CPN/MX
2	444.91	1375.6	65.000	3.960	45.45	.5485	.9922	.5429
2	444.91	1379.0	66.000	2.371	27.24	.3285	.5856	.3205
2	444.91	1398.4	67.000	2.371	27.26	.3284	.5861	.3207
2	444.91	1414.2	68.000	2.372	27.23	.3285	.5856	.3205
2	444.91	1430.0	69.000	2.382	27.33	.3299	.5877	.3216
2	456.63	1379.0	70.000	2.382	27.33	.3299	.5877	.3216
2	456.63	1398.4	71.000	2.383	27.33	.3300	.5878	.3216
2	456.63	1413.3	72.000	2.382	27.33	.3299	.5877	.3216
2	468.34	1379.0	73.000	1.235	14.17	.1710	.2940	.1609

OH57,AEDC V41B-K3A, MODEL 92-0, LH WING LWR SURF (R4AL09)

L.H. WING LWR SURF

PARAMETRIC DATA

MACH = 8.000 PO = 850.0 RN/FT = 3.600 ELEVON = .0000
BDFLAP = .0000 SPDBRK = .0000 RUDDER = .0000

TEST CONDITIONS

RUN NUMBER	ALPHA DEG.	BETA DEG.	PO PSIA	TO DEG. R	P PSIA	T DEG. R	Q PSIA	V FT/SEC	CPMAX	PT2 PSIA	RHO SLUGS /FT3	MU LB-SEC /FT2
1	44.55	.0000	852.0	1351.	.8726-01	97.90	3.909	3882.	1.827	7.231	.7473-04	.7878-07

RUN NUMBER	RN/FT /FT X 106
1	3.683

TEST DATA

RUN NUMBER	YO	XO	T/C NO	PN PSIA	PN/P	PN/PT2	CPN	CPN/MX
1	116.00	1379.0	1.0000	3.686	42.24	.5097	.9205	.5037
1	129.43	1379.0	2.0000	3.699	42.40	.5116	.9240	.5057
1	129.43	1398.4	3.0000	2.588	29.67	.3578	.6398	.3501
1	140.51	1379.0	4.0000	3.717	42.70	.5141	.9309	.5094
1	140.51	1398.4	5.0000	3.178	36.53	.4395	.7931	.4340
1	163.94	1379.0	6.0000	3.770	43.30	.5213	.9441	.5167
1	187.31	1190.4	7.0000	4.251	48.81	.5878	1.067	.5840
1	187.31	1240.7	8.0000	4.242	48.71	.5866	1.065	.5828
1	187.31	1290.9	9.0000	4.308	49.37	.5958	1.080	.5909
1	187.31	1341.2	10.000	4.118	47.20	.5695	1.031	.5643
1	187.31	1353.8	11.000	4.021	46.10	.5560	1.007	.5509
1	187.31	1375.6	12.000	3.883	44.61	.5370	.9733	.5327
1	187.31	1379.0	13.000	3.810	43.79	.5268	.9551	.5227
1	187.31	1398.4	14.000	3.510	40.31	.4854	.8775	.4802
1	187.31	1416.6	15.000	3.219	36.97	.4452	.8029	.4394
1	187.31	1441.7	16.000	2.785	31.98	.3851	.6916	.3784
1	187.31	1466.9	17.000	2.368	27.13	.3274	.5833	.3192
1	210.74	1379.0	18.000	3.884	44.52	.5371	.9713	.5315
1	234.17	1379.0	19.000	3.968	45.50	.5488	.9932	.5435
1	257.60	1379.0	20.000	4.092	47.00	.5658	1.027	.5619
1	281.03	1152.7	21.000	5.210	59.88	.7205	1.314	.7193

OH57,AEDC V41B-K3A, MODEL 92-0, LH WING LWR SURF (R4AL09)

RUN NUMBER	YO	XO	T/C NO	PN PSIA	PN/P	PN/PT2	CPN	CPN/MX
1	281.03	1188.6	22.000	4.999	57.42	.6914	1.259	.6892
1	281.03	1224.5	23.000	4.784	54.94	.6616	1.204	.6589
1	281.03	1260.3	24.000	4.735	54.37	.6548	1.191	.6520
1	281.03	1296.2	25.000	4.719	54.08	.6526	1.185	.6484
1	281.03	1332.0	26.000	4.590	52.61	.6348	1.152	.6304
1	281.03	1358.9	27.000	4.393	50.37	.6076	1.102	.6031
1	281.03	1375.6	28.000	4.219	48.47	.5835	1.060	.5798
1	281.03	1379.0	29.000	4.162	47.84	.5756	1.046	.5722
1	281.03	1398.4	30.000	3.837	44.07	.5307	.9615	.5262
1	281.03	1421.7	31.000	3.255	37.37	.4501	.8119	.4443
1	281.03	1439.6	32.000	2.889	33.18	.3996	.7183	.3931
1	281.03	1457.5	33.000	2.484	28.47	.3436	.6131	.3355
1	281.03	1466.5	34.000	2.269	26.01	.3138	.5582	.3055
1	292.74	1379.0	35.000	4.193	48.07	.5798	1.051	.5750
1	304.40	1379.0	36.000	4.232	48.62	.5852	1.063	.5816
1	304.40	1398.4	37.000	3.357	38.59	.4643	.8391	.4592
1	311.20	1379.0	38.000	4.262	48.95	.5894	1.070	.5857
1	320.80	1379.0	39.000	4.282	49.17	.5921	1.075	.5884
1	320.80	1398.4	40.000	3.342	38.38	.4622	.8344	.4566
1	32[illegible].80	1421.3	41.000	3.324	38.09	.4596	.8278	.4530
1	320.80	1444.2	42.000	2.945	33.75	.4072	.7310	.4000
1	327.83	1375.6	43.000	4.386	50.29	.6066	1.100	.6020
1	327.83	1379.0	44.000	4.296	49.35	.5941	1.079	.5906
1	327.83	1398.4	45.000	3.517	40.43	.4864	.8802	.4817
1	327.83	1421.3	46.000	3.241	37.22	.4482	.8085	.4425
1	327.83	1444.2	47.000	2.856	32.80	.3950	.7098	.3884
1	351.26	1379.0	48.000	4.388	50.39	.6068	1.102	.6033
1	374.69	1379.0	49.000	4.468	51.20	.6179	1.121	.6132
1	398.11	1256.2	50.000	5.165	59.20	.7143	1.299	.7109
1	398.11	1278.3	51.000	5.183	59.42	.7168	1.304	.7137
1	398.11	1301.4	52.000	5.102	58.61	.7056	1.286	.7037
1	398.11	1322.3	53.000	5.028	57.80	.6954	1.268	.6938
1	398.11	1344.4	54.000	4.959	56.96	.6858	1.249	.6835
1	398.11	1366.5	55.000	4.793	54.93	.6615	1.204	.6588
1	398.11	1375.6	56.000	4.678	53.72	.6470	1.177	.6440
1	398.11	1379.0	57.000	4.576	52.44	.6329	1.148	.6284
1	398.11	1398.4	58.000	3.976	45.56	.5498	.9947	.5444
1	398.11	1410.5	59.000	3.657	41.93	.5058	.9136	.5000
1	398.11	1432.6	60.000	3.076	35.34	.4254	.7664	.4194
1	398.11	1443.6	61.000	2.669	30.68	.3691	.6625	.3625
1	421.49	1379.0	62.000	4.614	52.99	.6381	1.161	.6351
1	444.91	1343.1	63.000	4.626	53.12	.6397	1.163	.6367
1	444.91	1358.9	64.000	4.615	53.00	.6383	1.161	.6352

OH57,AEDC V41B-K3A, MODEL 92-0, LH WING LWR SURF (R4AL09)

RUN NUMBER	YO	XO	T/C NO	PN PSIA	PN/P	PN/PT2	CPN	CPN/MX
1	444.91	1375.6	65.000	4.523	51.84	.6256	1.135	.6210
1	444.91	1379.0	66.000	2.368	27.14	.3274	.5834	.3193
1	444.91	1398.4	67.000	3.747	42.95	.5181	.9365	.5125
1	444.91	1414.2	68.000	3.333	38.29	.4610	.8324	.4555
1	444.91	1430.0	69.000	2.371	27.26	.3280	.5861	.3208
1	456.63	1379.0	70.000	2.373	27.26	.3282	.5861	.3207
1	456.63	1398.4	71.000	2.373	27.25	.3282	.5860	.3207
1	456.63	1413.3	72.000	2.372	27.24	.3280	.5857	.3205
1	468.34	1379.0	73.000	1.394	15.97	.1928	.3342	.1829

OH57,AEDC V41B-K3A, MODEL 92-O, LH WING LWR SURF (R4AL10)

L.H. WING LWR SURF

PARAMETRIC DATA

MACH = 7.940 PO = 210.0 RN/FT = 1.000 ELEVON = .0000
BDFLAP = .0000 SPDBRK = 49.30 RUDDER = .0000

TEST CONDITIONS

RUN NUMBER	ALPHA DEG.	BETA DEG.	PO PSIA	TO DEG. R	P PSIA	T DEG. R	Q PSIA	V FT/SEC	CPMAX	PT2 PSIA	RHO SLUGS /FT3	MU LB-SEC /FT2
14	30.19	.0000	209.8	1259.	.2257-01	92.51	.9958	3745.	1.827	1.842	.2045-04	.7445-07

RUN NUMBER	RN/FT /FT X 106
14	1.029

TEST DATA

RUN NUMBER	YO	XO	T/C NO	PN PSIA	PN/P	PN/PT2	CPN	CPN/MX
14	116.00	1379.0	1.0000	.4578	20.29	.2485	.4370	.2392
14	129.43	1379.0	2.0000	.4645	20.58	.2522	.4438	.2429
14	129.43	1398.4	3.0000	.3493	15.48	.1896	.3281	.1796
14	140.51	1379.0	4.0000	.4786	21.21	.2598	.4580	.2506
14	140.51	1398.4	5.0000	.4082	18.09	.2216	.3873	.2120
14	163.94	1379.0	6.0000	.4751	21.05	.2579	.4544	.2487
14	187.31	1190.4	7.0000	.6060	26.86	.3290	.5859	.3207
14	187.31	1240.7	8.0000	.6089	26.98	.3305	.5888	.3222
14	187.31	1290.9	9.0000	.5882	26.07	.3193	.5680	.3109
14	187.31	1341.2	10.000	.5442	24.12	.2954	.5238	.2867
14	187.31	1353.8	11.000	.5217	23.12	.2832	.5012	.2743
14	187.31	1375.6	12.000	.4915	21.78	.2668	.4709	.2577
14	187.31	1379.0	13.000	.4994	22.13	.2711	.4789	.2621
14	187.31	1398.4	14.000	.4296	19.04	.2332	.4088	.2237
14	187.31	1416.6	15.000	.3996	17.71	.2169	.3786	.2072
14	187.31	1441.7	16.000	.3261	14.45	.1770	.3048	.1668
14	187.31	1466.9	17.000	.2706	12.04	.1469	.2501	.1369
14	210.74	1379.0	18.000	.4930	21.93	.2676	.4743	.2596
14	234.17	1379.0	19.000	.5286	23.51	.2869	.5102	.2792
14	257.60	1379.0	20.000	.5444	24.22	.2955	.5261	.2879
14	281.03	1152.7	21.000	.8008	35.62	.4347	.7846	.4294

OH57,AEDC V41B-K3A, MODEL 92-0, LH WING LWR SURF (R4AL10)

RUN NUMBER	YO	XO	T/C NO	PN PSIA	PN/P	PN/PT2	CPN	CPN/MX
14	281.03	1188.6	22.000	.7095	31.56	.3851	.6925	.3790
14	281.03	1224.5	23.000	.6853	30.49	.3720	.6681	.3657
14	281.03	1260.3	24.000	.6845	30.45	.3716	.6673	.3652
14	281.03	1296.2	25.000	.6544	29.11	.3552	.6370	.3486
14	281.03	1332.0	26.000	.6271	27.90	.3404	.6095	.3336
14	281.03	1358.9	27.000	.5841	25.99	.3171	.5662	.3099
14	281.03	1375.6	28.000	.5559	24.73	.3018	.5377	.2943
14	281.03	1379.0	29.000	.5647	25.12	.3066	.5466	.2992
14	281.03	1398.4	30.000	.4784	21.28	.2597	.4596	.2515
14	281.03	1421.7	31.000	.4037	17.96	.2191	.3843	.2103
14	281.03	1439.6	32.000	.3357	14.94	.1823	.3158	.1728
14	281.03	1457.5	33.000	.2786	12.41	.1512	.2586	.1415
14	281.03	1466.5	34.000	.2514	11.20	.1365	.2311	.1265
14	292.74	1379.0	35.000	.5796	25.82	.3146	.5624	.3078
14	304.40	1379.0	36.000	.5703	25.41	.3096	.5531	.3027
14	304.40	1398.4	37.000	.4417	19.68	.2398	.4233	.2316
14	311.20	1379.0	38.000	.5618	25.03	.3050	.5445	.2980
14	320.80	1379.0	39.000	.5775	25.73	.3135	.5603	.3066
14	320.80	1398.4	40.000	.4626	20.61	.2511	.4443	.2432
14	320.80	1421.3	41.000	.4287	19.10	.2327	.4101	.2244
14	320.80	1444.2	42.000	.3563	15.87	.1934	.3370	.1844
14	327.83	1375.6	43.000	.5986	26.67	.3250	.5816	.3183
14	327.83	1379.0	44.000	.5872	26.16	.3188	.5701	.3120
14	327.83	1398.4	45.000	.5094	22.69	.2766	.4916	.2691
14	327.83	1421.3	46.000	.4014	17.88	.2179	.3826	.2094
14	327.83	1444.2	47.000	.3437	15.31	.1866	.3243	.1775
14	351.26	1379.0	48.000	.6042	26.92	.3280	.5873	.3214
14	374.69	1379.0	49.000	.6363	28.39	.3454	.6206	.3397
14	398.11	1256.2	50.000	.8885	39.64	.4823	.8755	.4792
14	398.11	1278.3	51.000	.8683	38.74	.4714	.8551	.4680
14	398.11	1301.4	52.000	.7826	34.91	.4248	.7684	.4206
14	398.11	1322.3	53.000	.7705	34.37	.4183	.7563	.4139
14	398.11	1344.4	54.000	.7299	32.56	.3962	.7152	.3914
14	398.11	1366.5	55.000	.6941	30.96	.3768	.6790	.3716
14	398.11	1375.6	56.000	.6772	30.21	.3676	.6619	.3623
14	398.11	1379.0	57.000	.6540	29.18	.3550	.6385	.3494
14	398.11	1398.4	58.000	.5632	25.13	.3058	.5467	.2992
14	398.11	1410.5	59.000	.4962	22.14	.2694	.4790	.2621
14	398.11	1432.6	60.000	.4012	17.90	.2178	.3829	.2096
14	398.11	1443.6	61.000	.3474	15.50	.1886	.3286	.1798
14	421.49	1379.0	62.000	.6596	29.43	.3581	.6442	.3526
14	444.91	1343.1	63.000	.7241	32.31	.3931	.7094	.3882
14	444.91	1358.9	64.000	.7007	31.26	.3804	.6857	.3753

OH57,AEDC V41B-K3A, MODEL 92-0, LH WING LWR SURF (R4AL10)

RUN NUMBER	YO	XO	T/C NO	PN PSIA	PN/P	PN/PT2	CPN	CPN/MX
14	444.91	1375.6	65.000	.6831	30.37	.3708	.6656	.3643
14	444.91	1379.0	66.000	.6364	28.30	.3455	.6186	.3385
14	444.91	1398.4	67.000	.5939	26.41	.3224	.5757	.3151
14	444.91	1414.2	68.000	.4920	21.88	.2671	.4731	.2589
14	444.91	1430.0	69.000	.4004	17.80	.2174	.3808	.2084
14	456.63	1379.0	70.000	.6221	27.66	.3377	.6042	.3307
14	456.63	1398.4	71.000	.5166	22.97	.2804	.4978	.2724
14	456.63	1413.3	72.000	.4430	19.70	.2405	.4237	.2319
14	468.34	1379.0	73.000	.4387	19.51	.2381	.4193	.2295

OH57,AEDC V41B-K3A, MODEL 92-0, LH WING LWR SURF

L.H. WING LWR SURF

PARAMETRIC DATA

MACH = 7.940 PO = 210.0 RN/FT = 1.000 ELEVON = .0000
BDFLAP = .0000 SPDBRK = 49.30 RUDDER = .0000

TEST CONDITIONS

RUN NUMBER	ALPHA DEG.	BETA DEG.	PO PSIA	TO DEG. R	P PSIA	T DEG. R	Q PSIA	V FT/SEC	CPMAX	PT2 PSIA	RHO SLUGS /FT3	MU LB-SEC /FT2
15	34.99	.0000	209.6	1259.	.2254-01	92.51	.9949	3745.	1.827	1.840	.2043-04	.7445-07

RUN NUMBER	RN/FT /FT X 106
15	1.028

TEST DATA

RUN NUMBER	YO	XO	T/C NO	PN PSIA	PN/P	PN/PT2	CPN	CPN/MX
15	116.00	1379.0	1.0000	.5900	26.17	.3206	.5704	.3122
15	129.43	1379.0	2.0000	.5985	26.55	.3252	.5789	.3169
15	129.43	1398.4	3.0000	.4591	20.36	.2495	.4388	.2402
15	140.51	1379.0	4.0000	.6152	27.29	.3343	.5957	.3260
15	140.51	1398.4	5.0000	.5309	23.55	.2885	.5110	.2797
15	163.94	1379.0	6.0000	.6141	27.24	.3337	.5946	.3254
15	187.31	1190.4	7.0000	.7550	33.49	.4102	.7362	.4029
15	187.31	1240.7	8.0000	.7620	33.80	.4141	.7433	.4068
15	187.31	1290.9	9.0000	.7418	32.91	.4031	.7230	.3957
15	187.31	1341.2	10.000	.6962	30.88	.3783	.6772	.3706
15	187.31	1353.8	11.000	.6709	29.76	.3645	.6517	.3567
15	187.31	1375.6	12.000	.6356	28.19	.3454	.6162	.3372
15	187.31	1379.0	13.000	.6455	28.68	.3513	.6271	.3432
15	187.31	1398.4	14.000	.5602	24.85	.3044	.5405	.2958
15	187.31	1416.6	15.000	.5288	23.46	.2873	.5089	.2785
15	187.31	1441.7	16.000	.4425	19.63	.2404	.4221	.2310
15	187.31	1466.9	17.000	.3731	16.55	.2027	.3524	.1928
15	210.74	1379.0	18.000	.6395	28.37	.3475	.6201	.3394
15	234.17	1379.0	19.000	.6808	30.20	.3699	.6617	.3621
15	257.60	1379.0	20.000	.6955	30.85	.3779	.6765	.3702
15	281.03	1152.7	21.000	1.080	47.90	.5867	1.063	.5816

OH57,AEDC V41B-K3A, MODEL 92-0, LH WING LWR SURF (R4AL10)

RUN NUMBER	YO	XO	T/C NO	PN PSIA	PN/P	PN/PT2	CPN	CPN/MX
15	281.03	1188.6	22.000	.8910	39.52	.4841	.8729	.4777
15	281.03	1224.5	23.000	.8620	38.24	.4684	.8438	.4618
15	281.03	1260.3	24.000	.8606	38.17	.4676	.8424	.4610
15	281.03	1296.2	25.000	.8371	37.13	.4549	.8188	.4481
15	281.03	1332.0	26.000	.8049	35.70	.4374	.7864	.4304
15	281.03	1358.9	27.000	.7508	33.30	.4080	.7320	.4006
15	281.03	1375.6	28.000	.7165	31.78	.3893	.6975	.3817
15	281.03	1379.0	29.000	.7276	32.27	.3953	.7087	.3878
15	281.03	1398.4	30.000	.6230	27.64	.3385	.6036	.3303
15	281.03	1421.7	31.000	.5380	23.87	.2924	.5181	.2836
15	281.03	1439.6	32.000	.4611	20.46	.2506	.4409	.2413
15	281.03	1457.5	33.000	.3906	17.28	.2122	.3690	.2019
15	281.03	1466.5	34.000	.3543	15.68	.1925	.3326	.1820
15	292.74	1379.0	35.000	.7453	32.98	.4050	.7247	.3966
15	304.40	1379.0	36.000	.7302	32.31	.3968	.7096	.3883
15	304.40	1398.4	37.000	.5783	25.59	.3142	.5572	.3049
15	311.20	1379.0	38.000	.7205	31.88	.3915	.6998	.3830
15	320.80	1379.0	39.000	.7384	32.68	.4012	.7178	.3928
15	320.80	1398.4	40.000	.6010	26.60	.3266	.5800	.3174
15	320.80	1421.3	41.000	.5634	24.93	.3062	.5423	.2968
15	320.80	1444.2	42.000	.4817	21.32	.2618	.4604	.2520
15	327.83	1375.6	43.000	.7647	33.84	.4155	.7441	.4073
15	327.83	1379.0	44.000	.7514	33.25	.4083	.7308	.4000
15	327.83	1398.4	45.000	.6589	29.16	.3581	.6381	.3492
15	327.83	1421.3	46.000	.5282	23.38	.2870	.5070	.2775
15	327.83	1444.2	47.000	.4656	20.61	.2530	.4443	.2431
15	351.26	1379.0	48.000	.7773	34.40	.4224	.7568	.4142
15	374.69	1379.0	49.000	.8035	35.54	.4366	.7827	.4283
15	398.11	1256.2	50.000	1.077	47.66	.5854	1.057	.5786
15	398.11	1278.3	51.000	1.053	46.57	.5721	1.033	.5651
15	398.11	1301.4	52.000	.9615	42.53	.5225	.9410	.5150
15	398.11	1322.3	53.000	.9397	41.57	.5106	.9192	.5031
15	398.11	1344.4	54.000	.8934	39.52	.4854	.8728	.4777
15	398.11	1366.5	55.000	.8614	38.10	.4681	.8407	.4601
15	398.11	1375.6	56.000	.8412	37.21	.4571	.8205	.4491
15	398.11	1379.0	57.000	.8189	36.22	.4450	.7981	.4368
15	398.11	1398.4	58.000	.7139	31.58	.3879	.6928	.3792
15	398.11	1410.5	59.000	.6355	28.11	.3453	.6143	.3362
15	398.11	1432.6	60.000	.5212	23.05	.2832	.4997	.2735
15	398.11	1443.6	61.000	.4572	20.22	.2485	.4356	.2384
15	421.49	1379.0	62.000	.8080	35.74	.4391	.7872	.4308
15	444.91	1343.1	63.000	.8734	38.63	.4746	.8527	.4667
15	444.91	1358.9	64.000	.8542	37.78	.4642	.8335	.4562

OH57,AEDC V41B-K3A, MODEL 92-0, LH WING LWR SURF (R4AL10)

RUN NUMBER	YO	XO	T/C NO	PN PSIA	PN/P	PN/PT2	CPN	CPN/MX
15	444.91	1375.6	65.000	.8352	36.94	.4538	.8144	.4457
15	444.91	1379.0	66.000	.7850	34.72	.4265	.7641	.4182
15	444.91	1398.4	67.000	.7324	32.40	.3980	.7115	.3894
15	444.91	1414.2	68.000	.6168	27.28	.3352	.5956	.3259
15	444.91	1430.0	69.000	.5067	22.41	.2753	.4852	.2655
15	456.63	1379.0	70.000	.7561	33.45	.4109	.7352	.4024
15	456.63	1398.4	71.000	.6348	28.08	.3449	.6136	.3358
15	456.63	1413.3	72.000	.5514	24.39	.2996	.5301	.2901
15	468.34	1379.0	73.000	.5167	22.86	.2808	.4953	.2711

OH57,AEDC V41B-K3A, MODEL 92-0, LH WING LWR SURF (R4AL10)

L.H. WING LWR SURF

PARAMETRIC DATA

MACH = 7.940 PO = 210.0 RN/FT = 1.000 ELEVON = .0000
BDFLAP = .0000 SPDBRK = 49.30 RUDDER = .0000

TEST CONDITIONS

RUN NUMBER	ALPHA DEG.	BETA DEG.	PO PSIA	TO DEG. R	P PSIA	T DEG. R	Q PSIA	V FT/SEC	CPMAX	PT2 PSIA	RHO SLUGS /FT3	MU LB-SEC /FT2
16	40.06	.0000	210.1	1257.	.2260-01	92.37	.9972	3742.	1.827	1.845	.2051-04	.7433-07

RUN NUMBER	RN/FT /FT X 106
16	1.033

TEST DATA

RUN NUMBER	YO	XO	T/C NO	PN PSIA	PN/P	PN/PT2	CPN	CPN/MX
16	116.00	1379.0	1.0000	.7503	33.20	.4067	.7297	.3994
16	129.43	1379.0	2.0000	.7614	33.70	.4128	.7409	.4055
16	129.43	1398.4	3.0000	.5947	26.32	.3224	.5737	.3140
16	140.51	1379.0	4.0000	.7560	33.45	.4098	.7354	.4025
16	140.51	1398.4	5.0000	.6811	30.14	.3692	.6603	.3614
16	163.94	1379.0	6.0000	.7828	34.64	.4243	.7623	.4172
16	187.31	1190.4	7.0000	.9237	40.88	.5007	.9036	.4945
16	187.31	1240.7	8.0000	.9362	41.43	.5075	.9161	.5014
16	187.31	1290.9	9.0000	.9073	40.15	.4919	.8872	.4856
16	187.31	1341.2	10.000	.8760	38.77	.4749	.8558	.4684
16	187.31	1353.8	11.000	.8478	37.52	.4596	.8275	.4529
16	187.31	1375.6	12.000	.8086	35.78	.4383	.7882	.4314
16	187.31	1379.0	13.000	.8230	36.42	.4461	.8026	.4393
16	187.31	1398.4	14.000	.7194	31.84	.3900	.6988	.3824
16	187.31	1416.6	15.000	.6885	30.47	.3732	.6678	.3655
16	187.31	1441.7	16.000	.5876	26.00	.3185	.5665	.3101
16	187.31	1466.9	17.000	.4993	22.12	.2707	.4785	.2619
16	210.74	1379.0	18.000	.8092	35.84	.4386	.7895	.4321
16	234.17	1379.0	19.000	.8444	37.40	.4577	.8248	.4514
16	257.60	1379.0	20.000	.8304	36.78	.4501	.8108	.4438
16	281.03	1152.7	21.000	1.222	54.14	.6625	1.204	.6590

OH57,AEDC V41B-K3A, MODEL 92-0, LH WING LWR SURF (R4AL10)

RUN NUMBER	YO	XO	T/C NO	PN PSIA	PN/P	PN/PT2	CPN	CPN/MX
16	281.03	1188.6	22.000	1.103	48.85	.5979	1.084	.5935
16	281.03	1224.5	23.000	1.048	46.41	.5680	1.029	.5631
16	281.03	1260.3	24.000	1.038	45.99	.5628	1.019	.5579
16	281.03	1296.2	25.000	1.001	44.36	.5428	.9824	.5377
16	281.03	1332.0	26.000	.9904	43.87	.5369	.9714	.5317
16	281.03	1358.9	27.000	.9185	40.68	.4979	.8992	.4921
16	281.03	1375.6	28.000	.9074	40.19	.4919	.8881	.4861
16	281.03	1379.0	29.000	.8881	39.34	.4814	.8687	.4755
16	281.03	1398.4	30.000	.7896	34.98	.4281	.7699	.4214
16	281.03	1421.7	31.000	.6979	30.92	.3783	.6779	.3710
16	281.03	1439.6	32.000	.6050	26.80	.3280	.5846	.3200
16	281.03	1457.5	33.000	.5224	23.22	.2832	.5034	.2755
16	281.03	1466.5	34.000	.4774	21.22	.2588	.4581	.2507
16	292.74	1379.0	35.000	.9162	40.72	.4966	.9000	.4926
16	304.40	1379.0	36.000	.8759	38.93	.4748	.8594	.4703
16	304.40	1398.4	37.000	.7266	32.29	.3939	.7091	.3881
16	311.20	1379.0	38.000	.8747	38.88	.4742	.8583	.4697
16	320.80	1379.0	39.000	.9051	40.23	.4907	.8889	.4865
16	320.80	1398.4	40.000	.7451	33.12	.4039	.7277	.3983
16	320.80	1421.3	41.000	.7009	31.15	.3799	.6832	.3739
16	320.80	1444.2	42.000	.6287	27.94	.3408	.6105	.3341
16	327.87	1375.6	43.000	.9293	41.30	.5038	.9132	.4998
16	327.83	1379.0	44.000	.9298	41.32	.5041	.9138	.5001
16	327.83	1398.4	45.000	.8193	36.41	.4441	.8024	.4392
16	327.83	1421.3	46.000	.6746	29.98	.3657	.6568	.3594
16	327.83	1444.2	47.000	.6088	27.06	.3300	.5904	.3231
16	351.26	1379.0	48.000	.9683	43.03	.5249	.9525	.5213
16	374.69	1379.0	49.000	.9681	43.13	.5248	.9546	.5224
16	398.11	1256.2	50.000	1.197	53.34	.6491	1.186	.6492
16	398.11	1278.3	51.000	1.162	51.78	.6300	1.151	.6297
16	398.11	1301.4	52.000	1.151	51.26	.6238	1.139	.6233
16	398.11	1322.3	53.000	1.122	49.97	.6081	1.110	.6073
16	398.11	1344.4	54.000	1.089	48.53	.5906	1.077	.5895
16	398.11	1366.5	55.000	1.035	46.09	.5608	1.022	.5592
16	398.11	1375.6	56.000	1.013	45.13	.5491	.9999	.5472
16	398.11	1379.0	57.000	.9688	43.16	.5252	.9553	.5228
16	398.11	1398.4	58.000	.8758	39.02	.4748	.8615	.4715
16	398.11	1410.5	59.000	.7733	34.45	.4192	.7580	.4148
16	398.11	1432.6	60.000	.6593	29.37	.3574	.6429	.3518
16	398.11	1443.6	61.000	.5862	26.11	.3178	.5691	.3114
16	421.49	1379.0	62.000	.9902	44.11	.5368	.9769	.5347
16	444.91	1343.1	63.000	1.035	46.12	.5613	1.023	.5596
16	444.91	1358.9	64.000	1.039	46.28	.5631	1.026	.5615

OH57,AEDC V41B-K3A, MODEL 92-0, LH WING LWR SURF (R4AL10)

RUN NUMBER	YO	XO	T/C NO	PN PSIA	PN/P	PN/PT2	CPN	CPN/MX
16	444.91	1375.6	65.000	.9959	44.41	.5399	.9836	.5383
16	444.91	1379.0	66.000	.9290	41.43	.5036	.9161	.5014
16	444.91	1398.4	67.000	.8771	39.11	.4755	.8636	.4726
16	444.91	1414.2	68.000	.7259	32.37	.3935	.7108	.3890
16	444.91	1430.0	69.000	.6282	28.01	.3405	.6121	.3350
16	456.63	1379.0	70.000	.8831	39.38	.4787	.8697	.4760
16	456.63	1398.4	71.000	.7650	34.11	.4147	.7503	.4106
16	456.63	1413.3	72.000	.6728	30.00	.3647	.6571	.3596
16	468.34	1379.0	73.000	.6056	27.01	.3283	.5893	.3225

OH57,AEDC V41B-K3A, MODEL 92-0, LH WING LWR SURF

L.H. WING LWR SURF

PARAMETRIC DATA

MACH = 7.940 PO = 210.0 RN/FT = 1.000 ELEVON = .0000
BDFLAP = .0000 SPDBRK = 49.30 RUDDER = .0000

TEST CONDITIONS

RUN NUMBER	ALPHA DEG.	BETA DEG.	PO PSIA	TO DEG. R	P PSIA	T DEG. R	Q PSIA	V FT/SEC	CPMAX	PT2 PSIA	RHO SLUGS /FT3	MU LB-SEC /FT2
17	44.03	.0000	209.3	1257.	.2251-01	92.37	.9934	3742.	1.827	1.838	.2043-04	.7433-07

RUN NUMBER	RN/FT /FT X 106
17	1.029

TEST DATA

RUN NUMBER	YO	XO	T/C NO	PN PSIA	PN/P	PN/PT2	CPN	CPN/MX
17	116.00	1379.0	1.0000	.8743	38.84	.4758	.8574	.4693
17	129.43	1379.0	2.0000	.8786	39.03	.4781	.8618	.4716
17	129.43	1398.4	3.0000	.7005	31.12	.3812	.6825	.3735
17	140.51	1379.0	4.0000	.8865	39.38	.4824	.8697	.4760
17	140.51	1398.4	5.0000	.7974	35.42	.4339	.7800	.4269
17	163.94	1379.0	6.0000	.9012	40.03	.4904	.8845	.4841
17	187.31	1190.4	7.0000	1.054	46.83	.5737	1.039	.5684
17	187.31	1240.7	8.0000	1.073	47.66	.5838	1.057	.5786
17	187.31	1290.9	9.0000	1.047	46.50	.5696	1.031	.5643
17	187.31	1341.2	10.000	1.003	44.57	.5460	.9873	.5403
17	187.31	1353.8	11.000	.9733	43.24	.5296	.9571	.5238
17	187.31	1375.6	12.000	.9300	41.31	.5061	.9135	.4999
17	187.31	1379.0	13.000	.9430	41.89	.5131	.9266	.5071
17	187.31	1398.4	14.000	.8440	37.49	.4593	.8269	.4526
17	187.31	1416.6	15.000	.8143	36.17	.4431	.7970	.4362
17	187.31	1441.7	16.000	.6995	31.07	.3806	.6814	.3730
17	187.31	1466.9	17.000	.6024	26.74	.3278	.5832	.3192
17	210.74	1379.0	18.000	.9278	41.18	.5049	.9104	.4983
17	234.17	1379.0	19.000	.9817	43.57	.5342	.9645	.5279
17	257.60	1379.0	20.000	.9621	42.70	.5235	.9448	.5171
17	281.03	1152.7	21.000	1.269	56.30	.6904	1.253	.6859

OH57,AEDC V41B-K3A, MODEL 92-0, LH WING LWR SURF (R4AL10)

RUN NUMBER	YO	XO	T/C NO	PN PSIA	PN/P	PN/PT2	CPN	CPN/MX
17	281.03	1188.6	22.000	1.173	52.08	.6385	1.157	.6334
17	281.03	1224.5	23.000	1.146	50.86	.6236	1.130	.6183
17	281.03	1260.3	24.000	1.104	49.00	.6009	1.088	.5953
17	281.03	1296.2	25.000	1.138	50.52	.6195	1.122	.6142
17	281.03	1332.0	26.000	1.065	47.28	.5797	1.049	.5740
17	281.03	1358.9	27.000	1.026	45.52	.5582	1.009	.5522
17	281.03	1375.6	28.000	.9583	42.53	.5215	.9410	.5150
17	281.03	1379.0	29.000	.8598	38.16	.4679	.8420	.4608
17	281.03	1398.4	30.000	.9050	40.16	.4925	.8875	.4857
17	281.03	1421.7	31.000	.8206	36.42	.4466	.8026	.4393
17	281.03	1439.6	32.000	.7200	31.95	.3918	.7014	.3839
17	281.03	1457.5	33.000	.6279	27.81	.3417	.6076	.3325
17	281.03	1466.5	34.000	.5764	25.53	.3136	.5559	.3042
17	292.74	1379.0	35.000	1.053	46.64	.5729	1.034	.5660
17	304.40	1379.0	36.000	1.005	44.53	.5470	.9863	.5398
17	304.40	1398.4	37.000	.8303	36.78	.4518	.8107	.4437
17	311.20	1379.0	38.000	1.041	46.13	.5667	1.023	.5597
17	320.80	1379.0	39.000	1.038	45.98	.5649	1.019	.5579
17	320.80	1398.4	40.000	.8666	38.39	.4716	.8472	.4637
17	320.80	1421.3	41.000	.8250	36.54	.4489	.8054	.4408
17	320.80	1444.2	42.000	.7339	32.51	.3994	.7140	.3908
17	327.83	1375.6	43.000	1.080	47.83	.5876	1.061	.5807
17	327.83	1379.0	44.000	1.051	46.56	.5720	1.032	.5650
17	327.83	1398.4	45.000	.9230	40.89	.5023	.9038	.4947
17	327.83	1421.3	46.000	.7962	35.27	.4333	.7765	.4250
17	327.83	1444.2	47.000	.7288	32.28	.3966	.7089	.3880
17	351.26	1379.0	48.000	1.022	45.28	.5563	1.003	.5492
17	374.69	1379.0	49.000	1.073	47.51	.5839	1.054	.5768
17	398.11	1256.2	50.000	1.281	56.73	.6973	1.263	.6912
17	398.11	1278.3	51.000	1.266	56.05	.6889	1.247	.6827
17	398.11	1301.4	52.000	1.274	56.39	.6931	1.255	.6869
17	398.11	1322.3	53.000	1.263	55.90	.6871	1.244	.6809
17	398.11	1344.4	54.000	1.218	53.95	.6630	1.200	.6566
17	398.11	1366.5	55.000	1.195	52.46	.6448	1.166	.6382
17	398.11	1375.6	56.000	1.151	50.95	.6262	1.132	.6194
17	398.11	1379.0	57.000	1.107	49.01	.6024	1.088	.5955
17	398.11	1398.4	58.000	1.007	44.58	.5479	.9875	.5405
17	398.11	1410.5	59.000	.8998	39.84	.4896	.8801	.4817
17	398.11	1432.6	60.000	.7763	34.37	.4224	.7561	.4138
17	398.11	1443.6	61.000	.6957	30.80	.3786	.6753	.3696
17	421.49	1379.0	62.000	1.013	44.84	.5511	.9933	.5436
17	444.91	1343.1	63.000	1.163	51.49	.6328	1.144	.6262
17	444.91	1358.9	64.000	1.156	51.18	.6290	1.137	.6223

OH57,AEDC V41B-K3A, MODEL 92-0, LH WING LWR SURF (R4AL10)

RUN NUMBER	YO	XO	T/C NO	PN PSIA	PN/P	PN/PT2	CPN	CPN/MX
17	444.91	1375.6	65.000	1.111	49.22	.6044	1.093	.5980
17	444.91	1379.0	66.000	1.071	47.48	.5830	1.053	.5764
17	444.91	1398.4	67.000	1.002	44.40	.5451	.9834	.5382
17	444.91	1414.2	68.000	.8392	37.19	.4567	.8201	.4488
17	444.91	1430.0	69.000	.7220	32.00	.3929	.7024	.3844
17	456.63	1379.0	70.000	1.040	46.08	.5659	1.022	.5591
17	456.63	1398.4	71.000	.8662	38.39	.4713	.8472	.4637
17	456.63	1413.3	72.000	.7719	34.21	.4200	.7525	.4118
17	468.34	1379.0	73.000	.6798	30.13	.3699	.6600	.3612

OH57,AEDC V41B-K3A, MODEL 92-0, LH WING LWR SURF (R4AL11)

L.H. WING LWR SURF

PARAMETRIC DATA

MACH = 7.940 PO = 210.0 RN/FT = 1.000 ELEVON = .0000
BDFLAP = 10.00 SPDBRK = 49.30 RUDDER = .0000

TEST CONDITIONS

RUN NUMBER	ALPHA DEG.	BETA DEG.	PO PSIA	TO DEG. R	P PSIA	T DEG. R	Q PSIA	V FT/SEC	CPMAX	PT2 PSIA	RHO SLUGS /FT3	MU LB-SEC /FT2
30	30.00	.0000	210.3	1268.	.2262-01	93.18	.9982	3758.	1.827	1.846	.2035-04	.7498-07

RUN NUMBER	RN/FT /FT X 106
30	1.020

TEST DATA

RUN NUMBER	YO	XO	T/C NO	PN PSIA	PN/P	PN/PT2	CPN	CPN/MX
30	116.00	1379.0	1.0000	.4525	20.00	.2451	.4306	.2357
30	129.43	1379.0	2.0000	.4592	20.30	.2487	.4374	.2394
30	129.43	1398.4	3.0000	.3441	15.21	.1864	.3221	.1763
30	140.51	1379.0	4.0000	.4746	20.98	.2570	.4528	.2478
30	140.51	1398.4	5.0000	.4026	17.80	.2180	.3806	.2083
30	163.94	1379.0	6.0000	.4684	20.71	.2537	.4466	.2444
30	187.31	1190.4	7.0000	.5996	26.51	.3247	.5780	.3164
30	187.31	1240.7	8.0000	.6023	26.63	.3262	.5808	.3179
30	187.31	1290.9	9.0000	.5816	25.71	.3150	.5600	.3065
30	187.31	1341.2	10.000	.5376	23.77	.2911	.5159	.2823
30	187.31	1353.8	11.000	.5154	22.79	.2791	.4937	.2702
30	187.31	1375.6	12.000	.4850	21.44	.2626	.4632	.2535
30	187.31	1379.0	13.000	.4913	21.72	.2661	.4696	.2570
30	187.31	1398.4	14.000	.4232	18.71	.2292	.4013	.2196
30	187.31	1416.6	15.000	.3933	17.39	.2130	.3713	.2032
30	187.31	1441.7	16.000	.3207	14.18	.1737	.2987	.1635
30	187.31	1466.9	17.000	.2653	11.81	.1442	.2449	.1340
30	210.74	1379.0	18.000	.4854	21.52	.2629	.4650	.2545
30	234.17	1379.0	19.000	.5196	23.04	.2814	.4994	.2733
30	257.60	1379.0	20.000	.5421	24.04	.2936	.5220	.2857
30	281.03	1152.7	21.000	.7939	35.20	.4300	.7750	.4241

OH57,AEDC V41B-K3A, MODEL 92-0, LH WING LWR SURF (R4AL11)

RUN NUMBER	YO	XO	T/C NO	PN PSIA	PN/P	PN/PT2	CPN	CPN/MX
30	281.03	1188.6	22.000	.7023	31.14	.3804	.6830	.3738
30	281.03	1224.5	23.000	.6769	30.01	.3666	.6574	.3598
30	281.03	1260.3	24.000	.6759	29.97	.3661	.6564	.3592
30	281.03	1296.2	25.000	.6465	28.66	.3501	.6269	.3431
30	281.03	1332.0	26.000	.6195	27.47	.3355	.5997	.3282
30	281.03	1358.9	27.000	.5770	25.58	.3125	.5571	.3049
30	281.03	1375.6	28.000	.5488	24.33	.2972	.5287	.2893
30	281.03	1379.0	29.000	.5564	24.67	.3013	.5364	.2935
30	281.03	1398.4	30.000	.4716	20.91	.2554	.4511	.2469
30	281.03	1421.7	31.000	.3965	17.58	.2147	.3757	.2056
30	281.03	1439.6	32.000	.3298	14.62	.1786	.3087	.1689
30	281.03	1457.5	33.000	.2735	12.16	.1481	.2529	.1384
30	281.03	1466.5	34.000	.2471	10.99	.1338	.2263	.1239
30	292.74	1379.0	35.000	.5717	25.42	.3096	.5534	.3029
30	304.40	1379.0	36.000	.5679	25.25	.3076	.5495	.3008
30	304.40	1398.4	37.000	.4352	19.35	.2357	.4159	.2276
30	311.20	1379.0	38.000	.5543	24.65	.3002	.5358	.2933
30	320.80	1379.0	39.000	.5701	25.35	.3087	.5517	.3019
30	320.80	1398.4	40.000	.4556	20.26	.2468	.4364	.2388
30	320.80	1421.3	41.000	.4220	18.76	.2285	.4025	.2203
30	320.80	1444.2	42.000	.3503	15.57	.1897	.3302	.1807
30	327.83	1375.6	43.000	.5909	26.27	.3200	.5727	.3134
30	327.83	1379.0	44.000	.5801	25.79	.3142	.5618	.3075
30	327.83	1398.4	45.000	.5017	22.31	.2717	.4829	.2643
30	327.83	1421.3	46.000	.3950	17.56	.2139	.3753	.2054
30	327.83	1444.2	47.000	.3376	15.01	.1829	.3175	.1738
30	351.26	1379.0	48.000	.5967	26.53	.3231	.5785	.3166
30	374.69	1379.0	49.000	.6286	27.99	.3405	.6116	.3347
30	398.11	1256.2	50.000	.8786	39.12	.4759	.8639	.4728
30	398.11	1278.3	51.000	.8593	38.26	.4654	.8444	.4621
30	398.11	1301.4	52.000	.7789	34.68	.4218	.7633	.4177
30	398.11	1322.3	53.000	.7634	33.99	.4135	.7476	.4092
30	398.11	1344.4	54.000	.7222	32.16	.3911	.7060	.3864
30	398.11	1366.5	55.000	.6857	30.53	.3713	.6692	.3662
30	398.11	1375.6	56.000	.6690	29.79	.3623	.6524	.3571
30	398.11	1379.0	57.000	.6457	28.75	.3497	.6288	.3442
30	398.11	1398.4	58.000	.5546	24.69	.3004	.5369	.2939
30	398.11	1410.5	59.000	.4899	21.77	.2648	.4706	.2576
30	398.11	1432.6	60.000	.3945	17.56	.2136	.3753	.2054
30	398.11	1443.6	61.000	.3410	15.18	.1847	.3214	.1759
30	421.49	1379.0	62.000	.6530	29.08	.3536	.6362	.3482
30	444.91	1343.1	63.000	.7166	31.91	.3881	.7004	.3833
30	444.91	1358.9	64.000	.6919	30.81	.3747	.6755	.3697

OH57,AEDC V41B-K3A, MODEL 92-0, LH WING LWR SURF (R4AL11)

RUN NUMBER	YO	XO	T/C NO	PN PSIA	PN/P	PN/PT2	CPN	CPN/MX
30	444.91	1375.6	65.000	.6754	30.00	.3658	.6572	.3597
30	444.91	1379.0	66.000	.6276	27.88	.3399	.6091	.3334
30	444.91	1398.4	67.000	.5858	26.02	.3172	.5670	.3103
30	444.91	1414.2	68.000	.4880	21.68	.2643	.4685	.2564
30	444.91	1430.0	69.000	.3953	17.56	.2141	.3753	.2054
30	456.63	1379.0	70.000	.6152	27.33	.3332	.5966	.3265
30	456.63	1398.4	71.000	.5100	22.65	.2762	.4907	.2685
30	456.63	1413.3	72.000	.4373	19.42	.2368	.4175	.2285
30	468.34	1379.0	73.000	.4337	19.26	.2349	.4139	.2265

L.H. WING LWR SURF

PARAMETRIC DATA

MACH = 7.940 PO = 210.0 RN/FT = 1.000 ELEVON = .0000
BDFLAP = 10.00 SPDBRK = 49.30 RUDDER = .0000

TEST CONDITIONS

RUN NUMBER	ALPHA DEG.	BETA DEG.	PO PSIA	TO DEG. R	P PSIA	T DEG. R	Q PSIA	V FT/SEC	CPMAX	PT2 PSIA	RHO SLUGS /FT3	MU LB-SEC /FT2
32	35.01	.0000	209.9	1261.	.2258-01	92.66	.9963	3748.	1.827	1.843	.2043-04	.7456-07

RUN NUMBER	RN/FT /FT X 106
32	1.027

TEST DATA

RUN NUMBER	YO	XO	T/C NO	PN PSIA	PN/P	PN/PT2	CPN	CPN/MX
32	116.00	1379.0	1.0000	.5917	26.21	.3211	.5713	.3127
32	129.43	1379.0	2.0000	.6008	26.61	.3260	.5804	.3176
32	129.43	1398.4	3.0000	.4594	20.35	.2493	.4384	.2400
32	140.51	1379.0	4.0000	.6216	27.54	.3373	.6013	.3291
32	140.51	1398.4	5.0000	.5321	23.57	.2887	.5114	.2799
32	163.94	1379.0	6.0000	.6148	27.23	.3336	.5944	.3253
32	187.31	1190.4	7.0000	.7562	33.49	.4103	.7363	.4030
32	187.31	1240.7	8.0000	.7646	33.87	.4149	.7448	.4076
32	187.31	1290.9	9.0000	.7432	32.92	.4033	.7233	.3959
32	187.31	1341.2	10.000	.6979	30.91	.3787	.6779	.3710
32	187.31	1353.8	11.000	.6722	29.78	.3647	.6521	.3569
32	187.31	1375.6	12.000	.6361	28.18	.3451	.6158	.3370
32	187.31	1379.0	13.000	.6456	28.60	.3503	.6254	.3423
32	187.31	1398.4	14.000	.5612	24.86	.3045	.5406	.2959
32	187.31	1416.6	15.000	.5297	23.46	.2874	.5090	.2786
32	187.31	1441.7	16.000	.4451	19.72	.2415	.4241	.2321
32	187.31	1466.9	17.000	.3740	16.53	.2029	.3519	.1926
32	210.74	1379.0	18.000	.6397	28.27	.3471	.6179	.3382
32	234.17	1379.0	19.000	.6798	30.04	.3689	.6581	.3602
32	257.60	1379.0	20.000	.7023	31.04	.3811	.6806	.3725
32	281.03	1152.7	21.000	1.032	45.59	.5598	1.011	.5530

OH57,AEDC V41B-K3A, MODEL 92-0, LH WING LWR SURF (R4AL11)

RUN NUMBER	YO	XO	T/C NO	PN PSIA	PN/P	PN/PT2	CPN	CPN/MX
32	281.03	1188.6	22.000	.8968	39.63	.4866	.8754	.4791
32	281.03	1224.5	23.000	.8638	38.17	.4687	.8423	.4610
32	281.03	1260.3	24.000	.8629	38.13	.4682	.8414	.4605
32	281.03	1296.2	25.000	.8405	37.14	.4560	.8190	.4482
32	281.03	1332.0	26.000	.8086	35.73	.4387	.7870	.4307
32	281.03	1358.9	27.000	.7543	33.33	.4093	.7327	.4010
32	281.03	1375.6	28.000	.7198	31.81	.3905	.6981	.3821
32	281.03	1379.0	29.000	.7298	32.25	.3960	.7082	.3876
32	281.03	1398.4	30.000	.6252	27.63	.3392	.6034	.3302
32	281.03	1421.7	31.000	.5397	23.85	.2928	.5177	.2834
32	281.03	1439.6	32.000	.4626	20.44	.2510	.4406	.2411
32	281.03	1457.5	33.000	.3923	17.31	.2129	.3696	.2023
32	281.03	1466.5	34.000	.3555	15.69	.1929	.3328	.1821
32	292.74	1379.0	35.000	.7479	33.00	.4058	.7251	.3969
32	304.40	1379.0	36.000	.7364	32.50	.3996	.7137	.3906
32	304.40	1398.4	37.000	.5806	25.62	.3150	.5579	.3053
32	311.20	1379.0	38.000	.7228	31.89	.3922	.7001	.3831
32	320.80	1379.0	39.000	.7416	32.72	.4024	.7189	.3934
32	320.80	1398.4	40.000	.6029	26.61	.3272	.5802	.3176
32	320.80	1421.3	41.000	.5648	24.92	.3064	.5421	.2967
32	320.80	1444.2	42.000	.4830	21.32	.2621	.4603	.2519
32	327.83	1375.6	43.000	.7672	33.85	.4163	.7445	.4074
32	327.83	1379.0	44.000	.7547	33.30	.4095	.7320	.4006
32	327.83	1398.4	45.000	.6600	29.12	.3581	.6373	.3488
32	327.83	1421.3	46.000	.5300	23.39	.2876	.5073	.2776
32	327.83	1444.2	47.000	.4671	20.61	.2534	.4444	.2432
32	351.26	1379.0	48.000	.7804	34.43	.4234	.7576	.4146
32	374.69	1379.0	49.000	.8036	35.65	.4360	.7851	.4297
32	398.11	1256.2	50.000	1.047	46.46	.5683	1.030	.5638
32	398.11	1278.3	51.000	1.048	46.47	.5685	1.030	.5639
32	398.11	1301.4	52.000	.9632	42.72	.5226	.9455	.5175
32	398.11	1322.3	53.000	.9372	41.57	.5086	.9194	.5032
32	398.11	1344.4	54.000	.8908	39.52	.4834	.8728	.4777
32	398.11	1366.5	55.000	.8584	38.08	.4658	.8402	.4598
32	398.11	1375.6	56.000	.8387	37.20	.4551	.8204	.4490
32	398.11	1379.0	57.000	.8179	36.28	.4438	.7995	.4376
32	398.11	1398.4	58.000	.7121	31.59	.3864	.6931	.3793
32	398.11	1410.5	59.000	.6347	28.15	.3444	.6153	.3367
32	398.11	1432.6	60.000	.5205	23.09	.2824	.5005	.2739
32	398.11	1443.6	61.000	.4562	20.24	.2475	.4359	.2386
32	421.49	1379.0	62.000	.8092	35.89	.4391	.7907	.4327
32	444.91	1343.1	63.000	.8726	38.71	.4735	.8544	.4676
32	444.91	1358.9	64.000	.8529	37.83	.4628	.8346	.4568

OH57, AEDC V41B-K3A, MODEL 92-0 AERO HEATING PRESSURE DATA

OH57,AEDC V41B-K3A, MODEL 92-0, LH WING LWR SURF

RUN NUMBER	YO	XO	T/C NO	PN PSIA	PN/P	PN/PT2	CPN	CPN/MX
32	444.91	1375.6	65.000	.8333	37.03	.4522	.8165	.4469
32	444.91	1379.0	66.000	.7817	34.74	.4242	.7646	.4185
32	444.91	1398.4	67.000	.7285	32.38	.3953	.7110	.3892
32	444.91	1414.2	68.000	.6173	27.44	.3350	.5990	.3278
32	444.91	1430.0	69.000	.5050	22.44	.2740	.4859	.2659
32	456.63	1379.0	70.000	.7544	33.53	.4094	.7371	.4034
32	456.63	1398.4	71.000	.6328	28.12	.3433	.6146	.3364
32	456.63	1413.3	72.000	.5499	24.44	.2984	.5312	.2907
32	468.34	1379.0	73.000	.5138	22.83	.2788	.4947	.2708

OH57,AEDC V41B-K3A, MODEL 92-0, LH WING LWR SURF (R4AL11)

L.H. WING LWR SURF

PARAMETRIC DATA

MACH = 7.940 PO = 210.0 RN/FT = 1.000 ELEVON = .0000
BDFLAP = 10.00 SPDBRK = 49.30 RUDDER = .0000

TEST CONDITIONS

RUN NUMBER	ALPHA DEG.	BETA DEG.	PO PSIA	TO DEG. R	P PSIA	T DEG. R	Q PSIA	V FT/SEC	CPMAX	PT2 PSIA	RHO SLUGS /FT3	MU LB-SEC /FT2
29	40.00	.0000	209.6	1253.	.2254-01	92.07	.9949	3736.	1.827	1.840	.2053-04	.7409-07

RUN NUMBER	RN/FT /FT X 106
29	1.035

TEST DATA

RUN NUMBER	YO	XO	T/C NO	PN PSIA	PN/P	PN/PT2	CPN	CPN/MX
29	116.00	1379.0	1.0000	.7464	33.11	.4056	.7276	.3982
29	129.43	1379.0	2.0000	.7573	33.59	.4115	.7386	.4042
29	129.43	1398.4	3.0000	.5875	26.06	.3192	.5678	.3108
29	140.51	1379.0	4.0000	.7518	33.35	.4085	.7330	.4012
29	140.51	1398.4	5.0000	.6740	29.90	.3662	.6548	.3584
29	163.94	1379.0	6.0000	.7735	34.31	.4203	.7548	.4131
29	187.31	1190.4	7.0000	.9165	40.65	.4980	.8986	.4918
29	187.31	1240.7	8.0000	.9294	41.23	.5050	.9116	.4989
29	187.31	1290.9	9.0000	.8999	39.92	.4890	.8819	.4826
29	187.31	1341.2	10.000	.8680	38.50	.4716	.8498	.4651
29	187.31	1353.8	11.000	.8395	37.24	.4562	.8212	.4494
29	187.31	1375.6	12.000	.7998	35.48	.4346	.7813	.4276
29	187.31	1379.0	13.000	.8113	35.99	.4409	.7929	.4339
29	187.31	1398.4	14.000	.7116	31.56	.3867	.6926	.3791
29	187.31	1416.6	15.000	.6802	30.17	.3696	.5610	.3618
29	187.31	1441.7	16.000	.5724	25.39	.3110	.5526	.3025
29	187.31	1466.9	17.000	.4934	21.91	.2681	.4738	.2593
29	210.74	1379.0	18.000	.7998	35.51	.4346	.7820	.4280
29	234.17	1379.0	19.000	.8478	37.64	.4607	.8303	.4544
29	257.60	1379.0	20.000	.8297	36.84	.4508	.8121	.4445
29	281.03	1152.7	21.000	1.237	54.93	.6723	1.222	.6689

OH57,AEDC V41B-K3A, MODEL 92-0, LH WING LWR SURF

RUN NUMBER	YO	XO	T/C NO	PN PSIA	PN/P	PN/PT2	CPN	CPN/MX
29	281.03	1188.6	22.000	1.140	50.64	.6197	1.125	.6156
29	281.03	1224.5	23.000	1.043	46.31	.5667	1.027	.5619
29	281.03	1260.3	24.000	1.038	46.10	.5642	1.022	.5593
29	281.03	1296.2	25.000	.9945	44.16	.5404	.9779	.5352
29	281.03	1332.0	26.000	1.017	45.17	.5528	1.001	.5478
29	281.03	1358.9	27.000	.9094	40.38	.4941	.8923	.4883
29	281.03	1375.6	28.000	.9149	40.62	.4971	.8978	.4914
29	281.03	1379.0	29.000	.8781	38.99	.4771	.8608	.4711
29	281.03	1398.4	30.000	.7818	34.71	.4248	.7639	.4181
29	281.03	1421.7	31.000	.6894	30.61	.3746	.6709	.3672
29	281.03	1439.6	32.000	.5923	26.30	.3218	.5732	.3137
29	281.03	1457.5	33.000	.5179	22.94	.2814	.4972	.2721
29	281.03	1466.5	34.000	.4737	20.98	.2574	.4528	.2478
29	292.74	1379.0	35.000	.9078	40.21	.4933	.8886	.4863
29	304.40	1379.0	36.000	.8746	38.74	.4752	.8552	.4680
29	304.40	1398.4	37.000	.7239	32.07	.3934	.7040	.3853
29	311.20	1379.0	38.000	.8686	38.47	.4720	.8492	.4648
29	320.80	1379.0	39.000	.8991	39.63	.4886	.8798	.4815
29	320.80	1398.4	40.000	.7460	33.05	.4054	.7262	.3974
29	320.80	1421.3	41.000	.6934	30.71	.3768	.6733	.3685
29	320.80	1444.2	42.000	.6219	27.55	.3379	.6016	.3292
29	327.83	1375.6	43.000	.9220	40.84	.5010	.9028	.4941
29	327.83	1379.0	44.000	.9194	40.72	.4996	.9001	.4926
29	327.83	1398.4	45.000	.8116	35.95	.4410	.7919	.4334
29	327.83	1421.3	46.000	.6692	29.64	.3636	.6490	.3552
29	327.83	1444.2	47.000	.6020	26.67	.3271	.5816	.3183
29	351.26	1379.0	48.000	1.013	44.88	.5506	.9944	.5442
29	374.69	1379.0	49.000	1.013	44.88	.5505	.9942	.5441
29	398.11	1256.2	50.000	1.206	53.44	.6556	1.188	.6503
29	398.11	1278.3	51.000	1.164	51.55	.6324	1.145	.6269
29	398.11	1301.4	52.000	1.146	50.77	.6228	1.128	.6172
29	398.11	1322.3	53.000	1.122	49.69	.6095	1.103	.6038
29	398.11	1344.4	54.000	1.082	47.92	.5879	1.063	.5819
29	398.11	1366.5	55.000	1.032	45.72	.5608	1.013	.5546
29	398.11	1375.6	56.000	1.011	44.78	.5494	.9922	.5430
29	398.11	1379.0	57.000	.9662	42.80	.5250	.9472	.5184
29	398.11	1398.4	58.000	.8710	38.58	.4733	.8516	.4661
29	398.11	1410.5	59.000	.7684	34.04	.4175	.7486	.4097
29	398.11	1432.6	60.000	.6545	28.99	.3557	.6343	.3472
29	398.11	1443.6	61.000	.5807	25.72	.3156	.5602	.3066
29	421.49	1379.0	62.000	1.092	48.38	.5935	1.074	.5876
29	444.91	1343.1	63.000	1.035	45.83	.5622	1.016	.5559
29	444.91	1358.9	64.000	1.034	45.82	.5620	1.016	.5558

OH57,AEDC V41B-K3A, MODEL 92-0, LH WING LWR SURF (R4AL11)

RUN NUMBER	YO	XO	T/C NO	PN PSIA	PN/P	PN/PT2	CPN	CPN/MX
29	444.91	1375.6	65.000	.9952	44.04	.5408	.9753	.5338
29	444.91	1379.0	66.000	.9266	41.00	.5035	.9065	.4961
29	444.91	1398.4	67.000	.8719	38.59	.4738	.8517	.4661
29	444.91	1414.2	68.000	.7258	32.12	.3944	.7051	.3859
29	444.91	1430.0	69.000	.6251	27.66	.3397	.6042	.3307
29	456.63	1379.0	70.000	.8812	39.00	.4788	.8610	.4712
29	456.63	1398.4	71.000	.7636	33.79	.4149	.7430	.4066
29	456.63	1413.3	72.000	.6707	29.68	.3644	.6499	.3557
29	468.34	1379.0	73.000	.6029	26.68	.3276	.5819	.3185

L.H. WING LWR SURF

PARAMETRIC DATA

MACH = 7.940 PO = 210.0 RN/FT = 1.000 ELEVON = .0000
BDFLAP = 10.00 SPDBRK = 49.30 RUDDER = .0000

TEST CONDITIONS

RUN NUMBER	ALPHA DEG.	BETA DEG.	PO PSIA	TO DEG. R	P PSIA	T DEG. R	Q PSIA	V FT/SEC	CPMAX	PT2 PSIA	RHO SLUGS /FT3	MU LB-SEC /FT2
31	44.02	.0000	210.0	1264.	.2259-01	92.88	.9968	3752.	1.827	1.844	.2039-04	.7474-07

RUN NUMBER	RN/FT /FT X 106
31	1.024

TEST DATA

RUN NUMBER	YO	XO	T/C NO	PN PSIA	PN/P	PN/PT2	CPN	CPN/MX
31	116.00	1379.0	1.0000	.8712	38.57	.4725	.8514	.4660
31	129.43	1379.0	2.0000	.8774	38.85	.4759	.8576	.4694
31	129.43	1398.4	3.0000	.6985	30.93	.3788	.6781	.3711
31	140.51	1379.0	4.0000	.8864	39.24	.4807	.8666	.4743
31	140.51	1398.4	5.0000	.7959	35.24	.4317	.7758	.4246
31	163.94	1379.0	6.0000	.8950	39.63	.4854	.8753	.4790
31	187.31	1190.4	7.0000	1.051	46.52	.5698	1.031	.5645
31	187.31	1240.7	8.0000	1.072	47.44	.5811	1.052	.5759
31	187.31	1290.9	9.0000	1.043	46.18	.5657	1.024	.5603
31	187.31	1341.2	10.000	1.001	44.31	.5428	.9814	.5371
31	187.31	1353.8	11.000	.9702	42.96	.5262	.9507	.5203
31	187.31	1375.6	12.000	.9257	40.98	.5020	.9060	.4959
31	187.31	1379.0	13.000	.9349	41.39	.5070	.9152	.5009
31	187.31	1398.4	14.000	.8444	37.38	.4580	.8245	.4512
31	187.31	1416.6	15.000	.8125	35.97	.4406	.7925	.4337
31	187.31	1441.7	16.000	.6899	30.55	.3742	.6695	.3664
31	187.31	1466.9	17.000	.6026	26.64	.3268	.5810	.3180
31	210.74	1379.0	18.000	.9260	40.94	.5022	.9050	.4953
31	234.17	1379.0	19.000	.9815	43.39	.5323	.9607	.5258
31	257.60	1379.0	20.000	.9673	42.77	.5246	.9464	.5180
31	281.03	1152.7	21.000	1.321	58.41	.7165	1.301	.7120

OH57,AEDC V41B-K3A, MODEL 92-0, LH WING LWR SURF (R4AL11)

RUN NUMBER	YO	XO	T/C NO	PN PSIA	PN/P	PN/PT2	CPN	CPN/MX
31	281.03	1188.6	22.000	1.221	54.00	.6624	1.201	.6573
31	281.03	1224.5	23.000	1.198	52.98	.6500	1.178	.6447
31	281.03	1260.3	24.000	1.164	51.47	.6314	1.144	.6259
31	281.03	1296.2	25.000	1.139	50.35	.6177	1.118	.6121
31	281.03	1332.0	26.000	1.109	49.03	.6014	1.088	.5956
31	281.03	1358.9	27.000	1.020	45.09	.5531	.9990	.5467
31	281.03	1375.6	28.000	1.012	44.75	.5489	.9914	.5426
31	281.03	1379.0	29.000	.9471	41.87	.5137	.9262	.5069
31	281.03	1398.4	30.000	.9062	40.06	.4915	.8852	.4845
31	281.03	1421.7	31.000	.8209	36.29	.4452	.7997	.4377
31	281.03	1439.6	32.000	.7118	31.47	.3861	.6905	.3779
31	281.03	1457.5	33.000	.6272	27.78	.3402	.6069	.3322
31	281.03	1466.5	34.000	.5768	25.55	.3128	.5563	.3045
31	292.74	1379.0	35.000	1.052	46.60	.5706	1.033	.5655
31	304.40	1379.0	36.000	1.005	44.53	.5452	.9863	.5398
31	304.40	1398.4	37.000	.8308	36.80	.4506	.8112	.4440
31	311.20	1379.0	38.000	1.034	45.80	.5607	1.015	.5556
31	320.80	1379.0	39.000	1.038	45.96	.5627	1.019	.5575
31	320.80	1398.4	40.000	.8659	38.36	.4696	.8465	.4633
31	320.80	1421.3	41.000	.8231	36.46	.4464	.8035	.4397
31	320.80	1444.2	42.000	.7326	32.45	.3973	.7127	.3900
31	327.83	1375.6	43.000	1.041	46.10	.5645	1.022	.5593
31	327.83	1379.0	44.000	1.071	47.42	.5806	1.052	.5757
31	327.83	1398.4	45.000	.9199	40.75	.4989	.9007	.4929
31	327.83	1421.3	46.000	.7962	35.27	.4318	.7765	.4250
31	327.83	1444.2	47.000	.7262	32.17	.3938	.7062	.3865
31	351.26	1379.0	48.000	1.060	46.95	.5748	1.041	.5698
31	374.69	1379.0	49.000	1.046	46.38	.5674	1.028	.5628
31	398.11	1256.2	50.000	1.248	55.35	.6771	1.232	.6741
31	398.11	1278.3	51.000	1.231	54.60	.6678	1.215	.6647
31	398.11	1301.4	52.000	1.262	55.94	.6843	1.245	.6813
31	398.11	1322.3	53.000	1.261	55.92	.6840	1.244	.6811
31	398.11	1344.4	54.000	1.208	53.56	.6551	1.191	.6518
31	398.11	1366.5	55.000	1.180	52.34	.6402	1.163	.6367
31	398.11	1375.6	56.000	1.136	50.35	.6159	1.118	.6121
31	398.11	1379.0	57.000	1.101	48.81	.5970	1.083	.5929
31	398.11	1398.4	58.000	1.007	44.64	.5461	.9890	.5412
31	398.11	1410.5	59.000	.8937	39.62	.4847	.8752	.4790
31	398.11	1432.6	60.000	.7711	34.19	.4182	.7521	.4116
31	398.11	1443.6	61.000	.6905	30.62	.3745	.6711	.3673
31	421.49	1379.0	62.000	.9527	42.24	.5167	.9345	.5114
31	444.91	1343.1	63.000	1.158	51.36	.6283	1.141	.6246
31	444.91	1358.9	64.000	1.154	51.18	.6261	1.137	.6223

OH57,AEDC V41B-K3A, MODEL 92-0, LH WING LWR SURF (R4AL11)

RUN NUMBER	YO	XO	T/C NO	PN PSIA	PN/P	PN/PT2	CPN	CPN/MX
31	444.91	1375.6	65.000	1.119	49.81	.6067	1.106	.6053
31	444.91	1379.0	66.000	1.047	46.62	.5679	1.034	.5658
31	444.91	1398.4	67.000	.9935	44.24	.5388	.9798	.5362
31	444.91	1414.2	68.000	.8374	37.29	.4542	.8223	.4500
31	444.91	1430.0	69.000	.7177	31.96	.3892	.7015	.3839
31	456.63	1379.0	70.000	1.017	45.30	.5518	1.004	.5494
31	456.63	1398.4	71.000	.8584	38.22	.4656	.8435	.4616
31	456.63	1413.3	72.000	.7607	33.87	.4126	.7449	.4077
31	468.34	1379.0	73.000	.6750	30.06	.3661	.6584	.3603

OH57,AEDC V41B-K3A, MODEL 92-0, LH WING LWR SURF (R4AL12)

L.H. WING LWR SURF

PARAMETRIC DATA

MACH = 7.940 PO = 210.0 RN/FT = 1.000 ELEVON = 5.000
BDFLAP = .0000 SPDBRK = 49.30 RUDDER = .0000

TEST CONDITIONS

RUN NUMBER	ALPHA DEG.	BETA DEG.	PO PSIA	TO DEG. R	P PSIA	T DEG. R	Q PSIA	V FT/SEC	CPMAX	PT2 PSIA	RHO SLUGS /FT3	MU LB-SEC /FT2
38	30.01	.0000	209.1	1291.	.2249-01	94.87	.9927	3792.	1.827	1.836	.1988-04	.7634-07

RUN NUMBER	RN/FT /FT X 106
38	.9877

TEST DATA

RUN NUMBER	YO	XO	T/C NO	PN PSIA	PN/P	PN/PT2	CPN	CPN/MX
38	116.00	1379.0	1.0000	.4486	19.94	.2443	.4293	.2349
38	129.43	1379.0	2.0000	.4497	19.99	.2449	.4303	.2355
38	129.43	1398.4	3.0000	.4502	20.01	.2452	.4308	.2358
38	140.51	1379.0	4.0000	.4626	20.56	.2519	.4433	.2426
38	140.51	1398.4	5.0000	.5194	23.09	.2828	.5005	.2739
38	163.94	1379.0	6.0000	.4763	21.17	.2594	.4571	.2502
38	187.31	1190.4	7.0000	.5975	26.56	.3254	.5793	.3170
38	187.31	1240.7	8.0000	.5958	26.53	.3250	.5785	.3166
38	187.31	1290.9	9.0000	.5790	25.74	.3153	.5606	.3068
38	187.31	1341.2	10.000	.5345	23.76	.2911	.5158	.2823
38	187.31	1353.8	11.000	.5143	22.87	.2801	.4955	.2712
38	187.31	1375.6	12.000	.4929	21.91	.2684	.4739	.2594
38	187.31	1379.0	13.000	.5059	22.53	.2760	.4879	.2671
38	187.31	1398.4	14.000	.5410	24.05	.2946	.5223	.2859
38	187.31	1416.6	15.000	.5345	23.76	.2911	.5158	.2823
38	187.31	1441.7	16.000	.4552	20.24	.2479	.4359	.2386
38	187.31	1466.9	17.000	.3846	17.14	.2094	.3657	.2001
38	210.74	1379.0	18.000	.4982	22.20	.2713	.4805	.2629
38	234.17	1379.0	19.000	.5297	23.60	.2884	.5122	.2803
38	257.60	1379.0	20.000	.5302	23.63	.2887	.5127	.2806
38	281.03	1152.7	21.000	.7914	35.27	.4310	.7765	.4250

OH57,AEDC V41B-K3A, MODEL 92-0, LH WING LWR SURF

RUN NUMBER	YO	XO	T/C NO	PN PSIA	PN/P	PN/PT2	CPN	CPN/MX
38	281.03	1188.6	22.000	.6990	31.15	.3807	.6832	.3739
38	281.03	1224.5	23.000	.6741	30.04	.3671	.6581	.3602
38	281.03	1260.3	24.000	.6690	29.81	.3643	.6529	.3573
38	281.03	1296.2	25.000	.6433	28.67	.3503	.6269	.3431
38	281.03	1332.0	26.000	.6132	27.32	.3339	.5965	.3265
38	281.03	1358.9	27.000	.5716	25.47	.3113	.5545	.3035
38	281.03	1375.6	28.000	.5447	24.27	.2966	.5273	.2886
38	281.03	1379.0	29.000	.5534	24.66	.3013	.5361	.2934
38	281.03	1398.4	30.000	.6334	28.23	.3449	.6169	.3376
38	281.03	1421.7	31.000	.5686	25.34	.3096	.5515	.3018
38	281.03	1439.6	32.000	.4807	21.42	.2618	.4627	.2533
38	281.03	1457.5	33.000	.4080	18.12	.2222	.3879	.2123
38	281.03	1466.5	34.000	.3656	16.24	.1991	.3452	.1889
38	292.74	1379.0	35.000	.5756	25.56	.3134	.5566	.3046
38	304.40	1379.0	36.000	.5595	24.85	.3047	.5405	.2958
38	304.40	1398.4	37.000	.5978	26.55	.3256	.5790	.3169
38	311.20	1379.0	38.000	.5584	24.80	.3041	.5393	.2951
38	320.80	1379.0	39.000	.5981	26.56	.3257	.5793	.3170
38	320.80	1398.4	40.000	.6443	28.64	.3511	.6262	.3427
38	320.80	1421.3	41.000	.6204	27.55	.3378	.6017	.3293
38	320.80	1444.2	42.000	.5337	23.70	.2907	.5145	.2816
38	327.83	1375.6	43.000	.6045	26.85	.3292	.5857	.3205
38	327.83	1379.0	44.000	.6193	27.50	.3372	.6006	.3287
38	327.83	1398.4	45.000	.6944	30.84	.3782	.6762	.3701
38	327.83	1421.3	46.000	.5828	25.88	.3174	.5639	.3086
38	327.83	1444.2	47.000	.5127	22.77	.2792	.4933	.2700
38	351.26	1379.0	48.000	.6476	28.76	.3526	.6290	.3443
38	374.69	1379.0	49.000	.6811	30.26	.3709	.6631	.3629
38	398.11	1256.2	50.000	.8707	38.69	.4742	.8541	.4674
38	398.11	1278.3	51.000	.8608	38.25	.4687	.8440	.4619
38	398.11	1301.4	52.000	.7701	34.22	.4194	.7527	.4120
38	398.11	1322.3	53.000	.7636	33.93	.4158	.7462	.4084
38	398.11	1344.4	54.000	.7234	32.15	.3940	.7058	.3863
38	398.11	1366.5	55.000	.6905	30.68	.3760	.6726	.3681
38	398.11	1375.6	56.000	.6829	30.34	.3719	.6649	.3639
38	398.11	1379.0	57.000	.6944	30.86	.3782	.6766	.3703
38	398.11	1398.4	58.000	.7502	33.33	.4085	.7327	.4010
38	398.11	1410.5	59.000	.6874	30.54	.3743	.6694	.3664
38	398.11	1432.6	60.000	.5585	24.82	.3041	.5397	.2954
38	398.11	1443.6	61.000	.4846	21.53	.2639	.4652	.2546
38	421.49	1379.0	62.000	.6740	29.95	.3670	.6560	.3590
38	444.91	1343.1	63.000	.7165	31.84	.3902	.6987	.3824
38	444.91	1358.9	64.000	.6927	30.78	.3772	.6749	.3693

OH57,AEDC V41B-K3A, MODEL 92-0, LH WING LWR SURF (R4AL12)

RUN NUMBER	YO	XO	T/C NO	PN PSIA	PN/P	PN/PT2	CPN	CPN/MX
38	444.91	1375.6	65.000	.6799	30.18	.3702	.6612	.3619
38	444.91	1379.0	66.000	.6358	28.23	.3462	.6169	.3376
38	444.91	1398.4	67.000	.7685	34.11	.4185	.7504	.4107
38	444.91	1414.2	68.000	.6223	27.63	.3389	.6033	.3302
38	444.91	1430.0	69.000	.5428	24.10	.2956	.5233	.2864
38	456.63	1379.0	70.000	.6310	28.01	.3436	.6121	.3350
38	456.63	1398.4	71.000	.6731	29.88	.3666	.6545	.3582
38	456.63	1413.3	72.000	.5930	26.32	.3229	.5738	.3141
38	468.34	1379.0	73.000	.4366	19.38	.2377	.4165	.2279

OH57,AEDC V41B-K3A, MODEL 92-0, LH WING LWR SURF

L.H. WING LWR SURF

PARAMETRIC DATA

MACH = 7.940 PO = 210.0 RN/FT = 1.000 ELEVON = 5.000
BDFLAP = .0000 SPDBRK = 49.30 RUDDER = .0000

TEST CONDITIONS

RUN NUMBER	ALPHA DEG.	BETA DEG.	PO PSIA	TO DEG. R	P PSIA	T DEG. R	Q PSIA	V FT/SEC	CPMAX	PT2 PSIA	RHO SLUGS /FT3	MU LB-SEC /FT2
40	34.99	.0000	208.2	1256.	.2240-01	92.29	.9884	3741.	1.827	1.828	.2035-04	.7427-07

RUN NUMBER	RN/FT /FT X 106
40	1.025

TEST DATA

RUN NUMBER	YO	XO	T/C NO	PN PSIA	PN/P	PN/PT2	CPN	CPN/MX
40	116.00	1379.0	1.0000	.5836	26.05	.3192	.5677	.3107
40	129.43	1379.0	2.0000	.5840	26.07	.3194	.5682	.3110
40	129.43	1398.4	3.0000	.5917	26.42	.3236	.5760	.3152
40	140.51	1379.0	4.0000	.5983	26.71	.3272	.5826	.3189
40	140.51	1398.4	5.0000	.6761	30.19	.3698	.6614	.3620
40	163.94	1379.0	6.0000	.6160	27.50	.3369	.6005	.3287
40	187.31	1190.4	7.0000	.7514	33.55	.4109	.7375	.4036
40	187.31	1240.7	8.0000	.7539	33.66	.4123	.7401	.4051
40	187.31	1290.9	9.0000	.7366	32.89	.4029	.7226	.3955
40	187.31	1341.2	10.000	.6900	30.80	.3773	.6754	.3696
40	187.31	1353.8	11.000	.6667	29.77	.3646	.6518	.3567
40	187.31	1375.6	12.000	.6391	28.54	.3495	.6239	.3415
40	187.31	1379.0	13.000	.6546	29.22	.3580	.6396	.3500
40	187.31	1398.4	14.000	.7036	31.41	.3848	.6892	.3772
40	187.31	1416.6	15.000	.6963	31.09	.3808	.6818	.3731
40	187.31	1441.7	16.000	.6040	26.97	.3303	.5884	.3220
40	187.31	1466.9	17.000	.5137	22.91	.2809	.4965	.2718
40	210.74	1379.0	18.000	.6456	28.80	.3531	.6298	.3447
40	234.17	1379.0	19.000	.6890	30.73	.3768	.6738	.3687
40	257.60	1379.0	20.000	.6858	30.59	.3751	.6705	.3670
40	281.03	1152.7	21.000	1.035	46.16	.5661	1.023	.5601

OH57,AEDC V41B-K3A, MODEL 92-0, LH WING LWR SURF (R4AL12)

RUN NUMBER	YO	XO	T/C NO	PN PSIA	PN/P	PN/PT2	CPN	CPN/MX
40	281.03	1188.6	22.000	.8863	39.53	.4848	.8732	.4779
40	281.03	1224.5	23.000	.8617	38.44	.4713	.8483	.4643
40	281.03	1260.3	24.000	.8497	37.90	.4647	.8361	.4576
40	281.03	1296.2	25.000	.8308	37.06	.4544	.8170	.4471
40	281.03	1332.0	26.000	.7957	35.49	.4352	.7815	.4277
40	281.03	1358.9	27.000	.7434	33.16	.4066	.7287	.3988
40	281.03	1375.6	28.000	.7097	31.66	.3882	.6947	.3802
40	281.03	1379.0	29.000	.7182	32.03	.3928	.7032	.3849
40	281.03	1398.4	30.000	.8130	36.26	.4446	.7991	.4373
40	281.03	1421.7	31.000	.7332	32.70	.4010	.7184	.3932
40	281.03	1439.6	32.000	.6365	28.39	.3481	.6207	.3397
40	281.03	1457.5	33.000	.5417	24.17	.2963	.5251	.2874
40	281.03	1466.5	34.000	.4903	21.88	.2682	.4732	.2590
40	292.74	1379.0	35.000	.7379	32.93	.4036	.7235	.3960
40	304.40	1379.0	36.000	.7167	31.98	.3920	.7021	.3843
40	304.40	1398.4	37.000	.7636	34.07	.4176	.7495	.4102
40	311.20	1379.0	38.000	.7166	31.98	.3919	.7020	.3842
40	320.80	1379.0	39.000	.7625	34.03	.4170	.7484	.4096
40	320.80	1398.4	40.000	.8115	36.21	.4438	.7980	.4367
40	320.80	1421.3	41.000	.7837	34.97	.4286	.7698	.4213
40	320.80	1444.2	42.000	.6887	30.74	.3767	.6738	.3688
40	327.83	1375.6	43.000	.7721	34.45	.4223	.7581	.4149
40	327.83	1379.0	44.000	.7897	35.24	.4319	.7759	.4247
40	327.83	1398.4	45.000	.8562	38.21	.4683	.8431	.4614
40	327.83	1421.3	46.000	.7356	32.83	.4023	.7212	.3947
40	327.83	1444.2	47.000	.6622	29.55	.3622	.6470	.3541
40	351.26	1379.0	48.000	.8319	37.12	.4550	.8186	.4480
40	374.69	1379.0	49.000	.8518	38.00	.4659	.8383	.4588
40	398.11	1256.2	50.000	1.035	46.17	.5662	1.024	.5602
40	398.11	1278.3	51.000	1.040	46.39	.5688	1.029	.5629
40	398.11	1301.4	52.000	.9420	42.02	.5152	.9294	.5087
40	398.11	1322.3	53.000	.9279	41.39	.5075	.9152	.5009
40	398.11	1344.4	54.000	.8821	39.35	.4825	.8690	.4756
40	398.11	1366.5	55.000	.8603	38.37	.4705	.8469	.4635
40	398.11	1375.6	56.000	.8485	37.84	.4640	.8349	.4569
40	398.11	1379.0	57.000	.8524	38.02	.4662	.8389	.4591
40	398.11	1398.4	58.000	.9171	40.91	.5016	.9043	.4949
40	398.11	1410.5	59.000	.8482	37.83	.4639	.8346	.4568
40	398.11	1432.6	60.000	.7125	31.78	.3897	.6975	.3817
40	398.11	1443.6	61.000	.6230	27.79	.3407	.6070	.3322
40	421.49	1379.0	62.000	.8584	38.29	.4695	.8450	.4624
40	444.91	1343.1	63.000	.8619	38.45	.4714	.8485	.4644
40	444.91	1358.9	64.000	.8450	37.69	.4621	.8314	.4550

OH57, AEDC V41B-K3A, MODEL 92-0 AERO HEATING PRESSURE DATA

OH57,AEDC V41B-K3A, MODEL 92-0, LH WING LWR SURF

RUN NUMBER	YO	XO	T/C NO	PN PSIA	PN/P	PN/PT2	CPN	CPN/MX
40	444.91	1375.6	65.000	.8338	37.19	.4560	.8201	.4488
40	444.91	1379.0	66.000	.7951	35.47	.4349	.7810	.4274
40	444.91	1398.4	67.000	.9306	41.51	.5089	.9179	.5024
40	444.91	1414.2	68.000	.7695	34.32	.4209	.7551	.4133
40	444.91	1430.0	69.000	.6701	29.89	.3665	.6546	.3583
40	456.63	1379.0	70.000	.7673	34.22	.4196	.7529	.4120
40	456.63	1398.4	71.000	.8220	36.66	.4496	.8082	.4423
40	456.63	1413.3	72.000	.7244	32.31	.3962	.7095	.3883
40	468.34	1379.0	73.000	.5141	22.93	.2812	.4970	.2720

OH57,AEDC V41B-K3A, MODEL 92-0, LH WING LWR SURF (R4AL12)

L.H. WING LWR SURF

PARAMETRIC DATA

MACH = 7.940 PO = 210.0 RN/FT = 1.000 ELEVON = 5.000
BDFLAP = .0000 SPDBRK = 49.30 RUDDER = .0000

TEST CONDITIONS

RUN NUMBER	ALPHA DEG.	BETA DEG.	PO PSIA	TO DEG. R	P PSIA	T DEG. R	Q PSIA	V FT/SEC	CPMAX	PT2 PSIA	RHO SLUGS /FT3	MU LB-SEC /FT2
37	39.99	.0000	208.3	1252.	.2241-01	92.00	.9889	3735.	1.827	1.829	.2042-04	.7403-07

RUN NUMBER	RN/FT /FT X 106
37	1.030

TEST DATA

RUN NUMBER	YO	XO	T/C NO	PN PSIA	PN/P	PN/PT2	CPN	CPN/MX
37	116.00	1379.0	1.0000	.7333	32.72	.4009	.7189	.3934
37	129.43	1379.0	2.0000	.7346	32.78	.4016	.7202	.3941
37	129.43	1398.4	3.0000	.7429	33.15	.4061	.7286	.3988
37	140.51	1379.0	4.0000	.7494	33.44	.4097	.7351	.4023
37	140.51	1398.4	5.0000	.8366	37.33	.4573	.8234	.4506
37	163.94	1379.0	6.0000	.7721	34.45	.4221	.7581	.4149
37	187.31	1190.4	7.0000	.9068	40.47	.4957	.8943	.4894
37	187.31	1240.7	8.0000	.9147	40.82	.5000	.9023	.4938
37	187.31	1290.9	9.0000	.8887	39.66	.4858	.8760	.4794
37	187.31	1341.2	10.000	.8581	38.29	.4691	.8451	.4625
37	187.31	1353.8	11.000	.8329	37.17	.4553	.8196	.4486
37	187.31	1375.6	12.000	.8014	35.76	.4381	.7877	.4311
37	187.31	1379.0	13.000	.8188	36.54	.4476	.8053	.4407
37	187.31	1398.4	14.000	.8732	38.97	.4773	.8603	.4709
37	187.31	1416.6	15.000	.8595	38.35	.4698	.8465	.4633
37	187.31	1441.7	16.000	.7492	33.43	.4095	.7349	.4022
37	187.31	1466.9	17.000	.6516	29.02	.3562	.6350	.3475
37	210.74	1379.0	18.000	.8069	35.94	.4411	.7918	.4333
37	234.17	1379.0	19.000	.8469	37.72	.4630	.8321	.4554
37	257.60	1379.0	20.000	.8200	36.52	.4482	.8049	.4405
37	281.03	1152.7	21.000	1.254	55.85	.6855	1.243	.6802

OH57, AEDC V41B-K3A, MODEL 92-0 AERO HEATING PRESSURE DATA

OH57,AEDC V41B-K3A, MODEL 92-0, LH WING LWR SURF

RUN NUMBER	YO	XO	T/C NO	PN PSIA	PN/P	PN/PT2	CPN	CPN/MX
37	281.03	1188.6	22.000	1.121	49.92	.6126	1.108	.6066
37	281.03	1224.5	23.000	1.034	46.04	.5651	1.021	.5586
37	281.03	1260.3	24.000	1.024	45.59	.5596	1.010	.5530
37	281.03	1296.2	25.000	.9863	43.93	.5392	.9728	.5324
37	281.03	1332.0	26.000	.9897	44.08	.5410	.9762	.5343
37	281.03	1358.9	27.000	.9029	40.22	.4936	.8887	.4864
37	281.03	1375.6	28.000	.9068	40.39	.4957	.8926	.4885
37	281.03	1379.0	29.000	.8704	38.77	.4758	.8559	.4684
37	281.03	1398.4	30.000	1.048	46.69	.5730	1.035	.5666
37	281.03	1421.7	31.000	.8888	39.59	.4859	.8744	.4786
37	281.03	1439.6	32.000	.7841	34.92	.4286	.7687	.4207
37	281.03	1457.5	33.000	.6897	30.59	.3770	.6704	.3669
37	281.03	1466.5	34.000	.6295	27.92	.3441	.6100	.3338
37	292.74	1379.0	35.000	.9048	40.13	.4946	.8866	.4852
37	304.40	1379.0	36.000	.8581	38.06	.4691	.8397	.4596
37	304.40	1398.4	37.000	.9213	40.86	.5036	.9032	.4943
37	311.20	1379.0	38.000	.8701	38.59	.4757	.8518	.4662
37	320.80	1379.0	39.000	.9319	41.33	.5094	.9139	.5002
37	320.80	1398.4	40.000	.9731	43.16	.5319	.9552	.5228
37	320.80	1421.3	41.000	.9427	41.81	.5153	.9247	.5061
37	320.80	1444.2	42.000	.8577	38.04	.4689	.8393	.4593
37	327.83	1375.6	43.000	.9379	41.59	.5127	.9199	.5034
37	327.83	1379.0	44.000	.9757	43.27	.5333	.9578	.5242
37	327.83	1398.4	45.000	1.010	44.79	.5521	.9923	.5431
37	327.83	1421.3	46.000	.8972	39.79	.4905	.8790	.4811
37	327.83	1444.2	47.000	.8274	36.70	.4523	.8089	.4427
37	351.26	1379.0	48.000	1.043	46.26	.5702	1.026	.5613
37	374.69	1379.0	49.000	1.064	46.97	.5817	1.042	.5701
37	398.11	1256.2	50.000	1.212	53.51	.6627	1.190	.6512
37	398.11	1278.3	51.000	1.181	52.14	.6458	1.159	.6343
37	398.11	1301.4	52.000	1.170	51.66	.6398	1.148	.6283
37	398.11	1322.3	53.000	1.131	49.92	.6182	1.109	.6067
37	398.11	1344.4	54.000	1.089	48.08	.5954	1.067	.5838
37	398.11	1366.5	55.000	1.035	45.71	.5660	1.013	.5544
37	398.11	1375.6	56.000	1.031	45.50	.5635	1.008	.5519
37	398.11	1379.0	57.000	1.037	45.78	.5670	1.015	.5554
37	398.11	1398.4	58.000	1.113	49.12	.6083	1.090	.5968
37	398.11	1410.5	59.000	1.026	45.30	.5611	1.004	.5494
37	398.11	1432.6	60.000	.8994	39.70	.4916	.8769	.4799
37	398.11	1443.6	61.000	.7626	33.66	.4169	.7401	.4051
37	421.49	1379.0	62.000	1.069	47.20	.5845	1.047	.5729
37	444.91	1343.1	63.000	1.032	45.55	.5642	1.010	.5525
37	444.91	1358.9	64.000	1.040	45.91	.5686	1.018	.5570

OH57,AEDC V41B-K3A, MODEL 92-0, LH WING LWR SURF (R4AL12)

RUN NUMBER	YO	XO	T/C NO	PN PSIA	PN/P	PN/PT2	CPN	CPN/MX
37	444.91	1375.6	65.000	1.016	44.85	.5555	.9936	.5438
37	444.91	1379.0	66.000	.9555	42.17	.5223	.9330	.5106
37	444.91	1398.4	67.000	1.075	47.43	.5874	1.052	.5759
37	444.91	1414.2	68.000	.9355	41.29	.5114	.9130	.4997
37	444.91	1430.0	69.000	.8090	35.71	.4422	.7865	.4305
37	456.63	1379.0	70.000	.9086	40.10	.4967	.8861	.4849
37	456.63	1398.4	71.000	.9762	43.09	.5337	.9538	.5220
37	456.63	1413.3	72.000	.8629	38.09	.4717	.8404	.4600
37	468.34	1379.0	73.000	.6093	26.89	.3331	.5868	.3211

L.H. WING LWR SURF

PARAMETRIC DATA

MACH = 7.940 PO = 210.0 RN/FT = 1.000 ELEVON = 5.000
BDFLAP = .0000 SPDBRK = 49.30 RUDDER = .0000

TEST CONDITIONS

RUN NUMBER	ALPHA DEG.	BETA DEG.	PO PSIA	TO DEG. R	P PSIA	T DEG. R	Q PSIA	V FT/SEC	CPMAX	PT2 PSIA	RHO SLUGS /FT3	MU LB-SEC /FT2
39	44.03	.0000	209.5	1269.	.2254-01	93.25	.9946	3760.	1.827	1.840	.2026-04	.7504-07

RUN NUMBER	RN/FT /FT X 106
39	1.015

TEST DATA

RUN NUMBER	YO	XO	T/C NO	PN PSIA	PN/P	PN/PT2	CPN	CPN/MX
39	116.00	1379.0	1.0000	.8620	38.25	.4685	.8441	.4620
39	129.43	1379.0	2.0000	.8549	37.93	.4647	.8369	.4580
39	129.43	1398.4	3.0000	.8595	38.14	.4672	.8415	.4606
39	140.51	1379.0	4.0000	.8557	37.97	.4651	.8377	.4585
39	140.51	1398.4	5.0000	.9930	44.06	.5397	.9757	.5340
39	163.94	1379.0	6.0000	.8899	39.49	.4837	.8721	.4773
39	187.31	1190.4	7.0000	1.046	46.42	.5687	1.029	.5633
39	187.31	1240.7	8.0000	1.069	47.45	.5813	1.053	.5761
39	187.31	1290.9	9.0000	1.038	46.08	.5645	1.021	.5590
39	187.31	1341.2	10.000	1.008	44.71	.5477	.9905	.5421
39	187.31	1353.8	11.000	.9656	42.84	.5248	.9482	.5189
39	187.31	1375.6	12.000	.9562	42.43	.5197	.9388	.5138
39	187.31	1379.0	13.000	.9390	41.62	.5098	.9204	.5037
39	187.31	1398.4	14.000	1.078	47.84	.5861	1.061	.5809
39	187.31	1416.6	15.000	1.009	44.79	.5486	.9922	.5430
39	187.31	1441.7	16.000	.8636	38.32	.4694	.8457	.4628
39	187.31	1466.9	17.000	.7691	34.18	.4175	.7519	.4115
39	210.74	1379.0	18.000	.9256	41.19	.5031	.9106	.4984
39	234.17	1379.0	19.000	.9897	44.04	.5379	.9753	.5338
39	257.60	1379.0	20.000	.9844	43.80	.5350	.9699	.5308
39	281.03	1152.7	21.000	1.330	59.20	.7231	1.319	.7218

OH57,AEDC V41B-K3A, MODEL 92-0, LH WING LWR SURF (R4AL12)

RUN NUMBER	YO	XO	T/C NO	PN PSIA	PN/P	PN/PT2	CPN	CPN/MX
39	281.03	1188.6	22.000	1.238	55.07	.6727	1.225	.6706
39	281.03	1224.5	23.000	1.201	53.44	.6528	1.188	.6504
39	281.03	1260.3	24.000	1.180	52.53	.6416	1.168	.6390
39	281.03	1296.2	25.000	1.130	50.28	.6142	1.117	.6112
39	281.03	1332.0	26.000	1.114	49.58	.6057	1.101	.6025
39	281.03	1358.9	27.000	1.071	47.64	.5819	1.057	.5784
39	281.03	1375.6	28.000	1.033	45.94	.5612	1.018	.5574
39	281.03	1379.0	29.000	.9859	43.87	.5358	.9714	.5316
39	281.03	1398.4	30.000	1.180	52.52	.6415	1.167	.6389
39	281.03	1421.7	31.000	1.025	45.62	.5573	1.011	.5534
39	281.03	1439.6	32.000	.9141	40.67	.4968	.8990	.4920
39	281.03	1457.5	33.000	.8036	35.79	.4368	.7884	.4315
39	281.03	1466.5	34.000	.7364	32.80	.4003	.7206	.3944
39	292.74	1379.0	35.000	.9589	42.71	.5212	.9452	.5173
39	304.40	1379.0	36.000	1.017	45.32	.5530	1.004	.5496
39	304.40	1398.4	37.000	1.077	47.97	.5854	1.064	.5825
39	311.20	1379.0	38.000	1.043	46.44	.5667	1.030	.5636
39	320.80	1379.0	39.000	1.068	47.59	.5807	1.056	.5778
39	320.80	1398.4	40.000	1.116	49.71	.6066	1.104	.6040
39	320.80	1421.3	41.000	1.080	48.09	.5868	1.067	.5840
39	320.80	1444.2	42.000	1.003	44.68	.5453	.9899	.5417
39	327.83	1375.6	43.000	1.101	49.02	.5982	1.088	.5955
39	327.83	1379.0	44.000	1.115	49.65	.6059	1.102	.6034
39	327.83	1398.4	45.000	1.127	50.21	.6127	1.115	.6103
39	327.83	1421.3	46.000	1.090	48.56	.5926	1.078	.5898
39	327.83	1444.2	47.000	.9445	42.07	.5134	.9306	.5093
39	351.26	1379.0	48.000	1.148	51.14	.6241	1.136	.6218
39	374.69	1379.0	49.000	1.177	52.38	.6396	1.164	.6372
39	398.11	1256.2	50.000	1.286	57.24	.6988	1.274	.6974
39	398.11	1278.3	51.000	1.276	56.81	.6935	1.265	.6921
39	398.11	1301.4	52.000	1.281	57.05	.6965	1.270	.6951
39	398.11	1322.3	53.000	1.258	56.02	.6840	1.247	.6824
39	398.11	1344.4	54.000	1.226	54.57	.6662	1.214	.6643
39	398.11	1366.5	55.000	1.195	53.20	.6495	1.183	.6474
39	398.11	1375.6	56.000	1.183	52.69	.6432	1.171	.6410
39	398.11	1379.0	57.000	1.181	52.57	.6419	1.169	.6396
39	398.11	1398.4	58.000	1.246	55.49	.6775	1.235	.6758
39	398.11	1410.5	59.000	1.191	52.60	.6422	1.169	.6399
39	398.11	1432.6	60.000	1.028	45.77	.5588	1.014	.5552
39	398.11	1443.6	61.000	.8804	39.19	.4785	.8654	.4737
39	421.49	1379.0	62.000	1.207	53.74	.6562	1.195	.6541
39	444.91	1343.1	63.000	1.153	51.31	.6265	1.140	.6240
39	444.91	1358.9	64.000	1.163	51.78	.6322	1.151	.6298

OH57, AEDC V41B-K3A, MODEL 92-0 AERO HEATING PRESSURE DATA

OH57,AEDC V41B-K3A, MODEL 92-0, LH WING LWR SURF

RUN NUMBER	YO	XO	T/C NO	PN PSIA	PN/P	PN/PT2	CPN	CPN/MX
39	444.91	1375.6	65.000	1.137	50.67	.6177	1.126	.6160
39	444.91	1379.0	66.000	1.083	48.31	.5889	1.072	.5867
39	444.91	1398.4	67.000	1.255	55.93	.6819	1.245	.6812
39	444.91	1414.2	68.000	1.098	48.97	.5970	1.087	.5949
39	444.91	1430.0	69.000	.9243	41.21	.5024	.9111	.4986
39	456.63	1379.0	70.000	1.055	47.02	.5733	1.043	.5707
39	456.63	1398.4	71.000	1.092	48.67	.5934	1.080	.5912
39	456.63	1413.3	72.000	.9761	43.52	.5305	.9634	.5273
39	468.34	1379.0	73.000	.6834	30.47	.3714	.6677	.3654

OH57,AEDC V41B-K3A, MODEL 92-0, LH WING LWR SURF (R4AL13)

L.H. WING LWR SURF

PARAMETRIC DATA

MACH = 7.940 PO = 210.0 RN/FT = 1.000 ELEVON = 5.000
BDFLAP = .0000 SPDBRK = 49.30 RUDDER = .0000

TEST CONDITIONS

RUN NUMBER	ALPHA DEG.	BETA DEG.	PO PSIA	TO DEG. R	P PSIA	T DEG. R	Q PSIA	V FT/SEC	CPMAX	PT2 PSIA	RHO SLUGS /FT3	MU LB-SEC /FT2
41	40.05	.0000	208.7	1259.	.2245-01	92.51	.9908	3745.	1.827	1.833	.2035-04	.7445-07

RUN NUMBER	RN/FT /FT X 106
41	1.024

TEST DATA

RUN NUMBER	YO	XO	T/C NO	PN PSIA	PN/P	PN/PT2	CPN	CPN/MX
41	116.00	1379.0	1.0000	.7407	32.99	.4041	.7249	.3968
41	129.43	1379.0	2.0000	.7409	33.00	.4042	.7251	.3968
41	129.43	1398.4	3.0000	.7505	33.43	.4095	.7348	.4021
41	140.51	1379.0	4.0000	.7562	33.68	.4126	.7406	.4053
41	140.51	1398.4	5.0000	.8456	37.66	.4614	.8308	.4547
41	163.94	1379.0	6.0000	.7757	34.55	.4232	.7602	.4161
41	187.31	1190.4	7.0000	.9128	40.66	.4980	.8986	.4918
41	187.31	1240.7	8.0000	.9231	41.12	.5037	.9090	.4975
41	187.31	1290.9	9.0000	.8973	39.96	.4896	.8829	.4832
41	187.31	1341.2	10.000	.8658	38.56	.4724	.8512	.4658
41	187.31	1353.8	11.000	.8403	37.43	.4585	.8255	.4518
41	187.31	1375.6	12.000	.8066	35.93	.4401	.7914	.4331
41	187.31	1379.0	13.000	.8223	36.63	.4487	.8073	.4418
41	187.31	1398.4	14.000	.8816	39.27	.4810	.8671	.4746
41	187.31	1416.6	15.000	.8687	38.69	.4739	.8541	.4674
41	187.31	1441.7	16.000	.7616	33.92	.4155	.7460	.4083
41	187.31	1466.9	17.000	.6566	29.23	.3583	.6398	.3501
41	210.74	1379.0	18.000	.8092	36.02	.4415	.7936	.4343
41	234.17	1379.0	19.000	.8507	37.87	.4641	.8355	.4573
41	257.60	1379.0	20.000	.8252	36.74	.4503	.8098	.4432
41	281.03	1152.7	21.000	1.231	54.82	.6719	1.220	.6675

OH57,AEDC V41B-K3A, MODEL 92-0, LH WING LWR SURF

RUN NUMBER	YO	XO	T/C NO	PN PSIA	PN/P	PN/PT2	CPN	CPN/MX
41	281.03	1188.6	22.000	1.076	47.89	.5869	1.063	.5815
41	281.03	1224.5	23.000	1.040	46.31	.5676	1.027	.5619
41	281.03	1260.3	24.000	1.000	44.54	.5459	.9866	.5400
41	281.03	1296.2	25.000	.9924	44.18	.5415	.9785	.5355
41	281.03	1332.0	26.000	.9446	42.05	.5154	.9303	.5091
41	281.03	1358.9	27.000	.9090	40.47	.4959	.8943	.4895
41	281.03	1375.6	28.000	.8500	37.84	.4638	.8348	.4569
41	281.03	1379.0	29.000	.8760	39.00	.4780	.8611	.4713
41	281.03	1398.4	30.000	.9688	43.13	.5286	.9547	.5225
41	281.03	1421.7	31.000	.8950	39.84	.4883	.8802	.4817
41	281.03	1439.6	32.000	.7980	35.52	.4354	.7823	.4282
41	281.03	1457.5	33.000	.6921	30.80	.3776	.6752	.3695
41	281.03	1466.5	34.000	.6311	28.08	.3444	.6137	.3359
41	292.74	1379.0	35.000	.9079	40.40	.4954	.8928	.4886
41	304.40	1379.0	36.000	.8610	38.31	.4698	.8455	.4627
41	304.40	1398.4	37.000	.9237	41.10	.5040	.9087	.4973
41	311.20	1379.0	38.000	.8725	38.83	.4761	.8571	.4691
41	320.80	1379.0	39.000	.9343	41.58	.5098	.9194	.5032
41	320.80	1398.4	40.000	.9743	43.35	.5316	.9597	.5253
41	320.80	1421.3	41.000	.9452	42.06	.5157	.9304	.5092
41	320.80	1444.2	42.000	.8726	38.83	.4761	.8572	.4691
41	327.83	1375.6	43.000	.9403	41.84	.5130	.9254	.5065
41	327.83	1379.0	44.000	.9622	42.82	.5250	.9475	.5186
41	327.83	1398.4	45.000	.9482	42.19	.5174	.9335	.5109
41	327.83	1421.3	46.000	.8984	39.98	.4902	.8832	.4834
41	327.83	1444.2	47.000	.8303	36.95	.4530	.8145	.4458
41	351.26	1379.0	48.000	.9591	42.68	.5233	.9444	.5169
41	374.69	1379.0	49.000	1.015	45.13	.5536	.9999	.5472
41	398.11	1256.2	50.000	1.175	52.25	.6409	1.161	.6355
41	398.11	1278.3	51.000	1.139	50.67	.6216	1.126	.6160
41	398.11	1301.4	52.000	1.131	50.32	.6173	1.118	.6117
41	398.11	1322.3	53.000	1.129	50.23	.6162	1.116	.6106
41	398.11	1344.4	54.000	1.086	48.31	.5926	1.072	.5667
41	398.11	1366.5	55.000	1.034	46.00	.5643	1.020	.5581
41	398.11	1375.6	56.000	1.035	46.03	.5647	1.020	.5585
41	398.11	1379.0	57.000	1.037	46.13	.5659	1.023	.5597
41	398.11	1398.4	58.000	1.093	48.63	.5965	1.079	.5906
41	398.11	1410.5	59.000	1.026	45.65	.5600	1.012	.5537
41	398.11	1432.6	60.000	.8979	39.93	.4899	.8822	.4828
41	398.11	1443.6	61.000	.7851	34.92	.4284	.7686	.4207
41	421.49	1379.0	62.000	1.054	46.89	.5752	1.040	.5691
41	444.91	1343.1	63.000	1.030	45.82	.5621	1.016	.5559
41	444.91	1358.9	64.000	1.031	45.86	.5626	1.017	.5563

OH57,AEDC V41B-K3A, MODEL 92-0, LH WING LWR SURF

RUN NUMBER	YO	XO	T/C NO	PN PSIA	PN/P	PN/PT2	CPN	CPN/MX
41	444.91	1375.6	65.000	1.010	44.90	.5511	.9949	.5445
41	444.91	1379.0	66.000	.9797	43.55	.5345	.9642	.5277
41	444.91	1398.4	67.000	1.072	47.64	.5847	1.057	.5784
41	444.91	1414.2	68.000	.9349	41.56	.5101	.9191	.5030
41	444.91	1430.0	69.000	.8078	35.91	.4407	.7911	.4330
41	456.63	1379.0	70.000	.9074	40.34	.4951	.8914	.4878
41	456.63	1398.4	71.000	.9756	43.37	.5323	.9601	.5255
41	456.63	1413.3	72.000	.8611	38.28	.4698	.8448	.4623
41	468.34	1379.0	73.000	.6085	27.05	.3320	.5903	.3231

OH57,AEDC V41B-K3A, MODEL 92-0, LH WING LWR SURF (R4AL14)

L.H. WING LWR SURF

PARAMETRIC DATA

MACH = 8.000 PO = 850.0 RN/FT = 3.600 ELEVON = 5.000
BDFLAP = .0000 SPDBRK = 49.30 RUDDER = .0000

TEST CONDITIONS

RUN NUMBER	ALPHA DEG.	BETA DEG.	PO PSIA	TO DEG. R	P PSIA	T DEG. R	Q PSIA	V FT/SEC	CPMAX	PT2 PSIA	RHO SLUGS /FT3	MU LB-SEC /FT2
34	29.96	.0000	845.2	1353.	.8658-01	98.04	3.879	3884.	1.827	7.174	.7403-04	.7890-07

RUN NUMBER	RN/FT /FT X 106
34	3.645

TEST DATA

RUN NUMBER	YO	XO	T/C NO	PN PSIA	PN/P	PN/PT2	CPN	CPN/MX
34	116.00	1379.0	1.0000	1.826	21.10	.2546	.4486	.2455
34	129.43	1379.0	2.0000	1.827	21.10	.2547	.4488	.2456
34	129.43	1398.4	3.0000	1.730	19.98	.2411	.4237	.2318
34	140.51	1379.0	4.0000	1.828	21.11	.2547	.4489	.2456
34	140.51	1398.4	5.0000	2.113	24.41	.2946	.5225	.2859
34	163.94	1379.0	6.0000	1.820	21.02	.2536	.4468	.2445
34	187.31	1190.4	7.0000	2.321	26.81	.3235	.5760	.3152
34	187.31	1240.7	8.0000	2.299	26.56	.3205	.5705	.3122
34	187.31	1290.9	9.0000	2.266	26.18	.3159	.5620	.3076
34	187.31	1341.2	10.000	2.077	23.99	.2895	.5131	.2808
34	187.31	1353.8	11.000	2.010	23.22	.2802	.4960	.2714
34	187.31	1375.6	12.000	1.909	22.05	.2661	.4699	.2572
34	187.31	1379.0	13.000	1.830	21.14	.2551	.4495	.2460
34	187.31	1398.4	14.000	2.284	26.38	.3183	.5665	.3100
34	187.31	1416.6	15.000	2.142	24.75	.2986	.5300	.2901
34	187.31	1441.7	16.000	1.853	21.41	.2583	.4555	.2493
34	187.31	1466.9	17.000	1.547	17.82	.2157	.3755	.2055
34	210.74	1379.0	18.000	1.887	21.74	.2631	.4629	.2533
34	234.17	1379.0	19.000	2.018	23.25	.2813	.4966	.2718
34	257.60	1379.0	20.000	2.143	24.68	.2987	.5286	.2893
34	281.03	1152.7	21.000	3.051	35.14	.4252	.7621	.4170

OH57,AEDC V41B-K3A, MODEL 92-0, LH WING LWR SURF (R4AL14)

RUN NUMBER	YO	XO	T/C NO	PN PSIA	PN/P	PN/PT2	CPN	CPN/MX
34	281.03	1188.6	22.000	2.715	31.28	.3785	.6758	.3698
34	281.03	1224.5	23.000	2.639	30.39	.3678	.6561	.3591
34	281.03	1260.3	24.000	2.625	30.23	.3658	.6525	.3571
34	281.03	1296.2	25.000	2.499	28.78	.3483	.6201	.3394
34	281.03	1332.0	26.000	2.391	27.54	.3332	.5924	.3242
34	281.03	1358.9	27.000	2.277	26.23	.3174	.5632	.3082
34	281.03	1375.6	28.000	2.199	25.34	.3066	.5432	.2973
34	281.03	1379.0	29.000	2.133	24.56	.2972	.5260	.2878
34	281.03	1398.4	30.000	2.696	31.06	.3758	.6709	.3671
34	281.03	1421.7	31.000	2.310	26.61	.3220	.5717	.3129
34	281.03	1439.6	32.000	1.993	22.96	.2778	.4901	.2682
34	281.03	1457.5	33.000	1.657	19.09	.2309	.4037	.2209
34	281.03	1466.5	34.000	1.497	17.25	.2087	.3627	.1985
34	292.74	1379.0	35.000	2.181	25.12	.3039	.5384	.2946
34	304.40	1379.0	36.000	2.269	26.14	.3162	.5611	.3070
34	304.40	1398.4	37.000	2.578	29.70	.3594	.6407	.3506
34	311.20	1379.0	38.000	2.270	26.15	.3164	.5613	.3072
34	320.80	1379.0	39.000	2.319	26.72	.3233	.5741	.3142
34	320.80	1398.4	40.000	2.547	29.34	.3550	.6326	.3462
34	320.80	1421.3	41.000	2.446	28.18	.3410	.6067	.3320
34	320.80	1444.2	42.000	2.060	23.74	.2872	.5075	.2777
34	327.83	1375.6	43.000	2.393	27.57	.3335	.5930	.3245
34	327.83	1379.0	44.000	2.351	27.08	.3276	.5821	.3186
34	327.83	1398.4	45.000	2.762	31.81	.3849	.6878	.3764
34	327.83	1421.3	46.000	2.327	26.81	.3244	.5761	.3153
34	327.83	1444.2	47.000	2.010	23.16	.2802	.4947	.2707
34	351.26	1379.0	48.000	2.457	28.30	.3424	.6094	.3335
34	374.69	1379.0	49.000	2.496	28.75	.3479	.6195	.3390
34	398.11	1256.2	50.000	3.447	39.72	.4805	.8642	.4729
34	398.11	1278.3	51.000	3.234	37.26	.4508	.8094	.4429
34	398.11	1301.4	52.000	3.166	36.48	.4413	.7919	.4333
34	398.11	1322.3	53.000	3.058	35.23	.4263	.7642	.4182
34	398.11	1344.4	54.000	2.909	33.51	.4054	.7257	.3972
34	398.11	1366.5	55.000	2.726	31.40	.3799	.6786	.3714
34	398.11	1375.6	56.000	2.634	30.34	.3671	.6550	.3584
34	398.11	1379.0	57.000	2.662	30.68	.3711	.6624	.3625
34	398.11	1398.4	58.000	3.057	35.23	.4261	.7640	.4181
34	398.11	1410.5	59.000	2.801	32.27	.3904	.6979	.3819
34	398.11	1432.6	60.000	2.211	25.48	.3082	.5464	.2990
34	398.11	1443.6	61.000	1.850	21.31	.2578	.4534	.2481
34	421.49	1379.0	62.000	2.689	30.98	.3748	.6691	.3662
34	444.91	1343.1	63.000	2.836	32.68	.3954	.7072	.3870
34	444.91	1358.9	64.000	2.775	31.97	.3868	.6913	.3783

OH57,AEDC V41B-K3A, MODEL 92-0, LH WING LWR SURF (R4AL14)

RUN NUMBER	YO	XO	T/C NO	PN PSIA	PN/P	PN/PT2	CPN	CPN/MX
34	444.91	1375.6	65.000	2.635	30.39	.3673	.6561	.3590
34	444.91	1379.0	66.000	2.390	27.56	.3331	.5928	.3244
34	444.91	1398.4	67.000	2.873	33.14	.4005	.7174	.3926
34	444.91	1414.2	68.000	2.519	29.05	.3511	.6262	.3427
34	444.91	1430.0	69.000	2.119	24.44	.2954	.5232	.2863
34	456.63	1379.0	70.000	2.465	28.42	.3435	.6122	.3350
34	456.63	1398.4	71.000	2.691	31.04	.3751	.6704	.3669
34	456.63	1413.3	72.000	2.311	26.65	.3222	.5726	.3134
34	468.34	1379.0	73.000	1.694	19.54	.2362	.4138	.2265

OH57,AEDC V41B-K3A, MODEL 92-0, LH WING LWR SURF (R4AL14)

L.H. WING LWR SURF

PARAMETRIC DATA

MACH = 8.000 PO = 850.0 RN/FT = 3.600 ELEVON = 5.000
BDFLAP = .0000 SPDBRK = 49.30 RUDDER = .0000

TEST CONDITIONS

RUN NUMBER	ALPHA DEG.	BETA DEG.	PO PSIA	TO DEG. R	P PSIA	T DEG. R	Q PSIA	V FT/SEC	CPMAX	PT2 PSIA	RHO SLUGS /FT3	MU LB-SEC /FT2
36	34.97	.0000	848.5	1353.	.8691-01	98.04	3.894	3884.	1.827	7.202	.7432-04	.7890-07

RUN NUMBER	RN/FT /FT X 106
36	3.660

TEST DATA

RUN NUMBER	YO	XO	T/C NO	PN PSIA	PN/P	PN/PT2	CPN	CPN/MX
36	116.00	1379.0	1.0000	2.443	28.11	.3392	.6051	.3312
36	129.43	1379.0	2.0000	2.454	28.24	.3408	.6080	.3327
36	129.43	1398.4	3.0000	2.220	25.54	.3082	.5477	.2997
36	140.51	1379.0	4.0000	2.458	28.28	.3412	.6089	.3332
36	140.51	1398.4	5.0000	2.746	31.60	.3813	.6829	.3737
36	163.94	1379.0	6.0000	2.459	28.29	.3414	.6091	.3333
36	187.31	1190.4	7.0000	2.970	34.17	.4124	.7404	.4052
36	187.31	1240.7	8.0000	2.979	34.27	.4136	.7426	.4064
36	187.31	1290.9	9.0000	2.958	34.04	.4107	.7374	.4035
36	187.31	1341.2	10.000	2.758	31.74	.3830	.6861	.3755
36	187.31	1353.8	11.000	2.685	30.89	.3728	.6673	.3652
36	187.31	1375.6	12.000	2.575	29.63	.3575	.6390	.3497
36	187.31	1379.0	13.000	2.498	28.74	.3469	.6193	.3389
36	187.31	1398.4	14.000	3.024	34.80	.4199	.7544	.4129
36	187.31	1416.6	15.000	2.839	32.67	.3943	.7069	.3869
36	187.31	1441.7	16.000	2.461	28.32	.3417	.6098	.3337
36	187.31	1466.9	17.000	2.050	23.63	.2846	.5050	.2764
36	210.74	1379.0	18.000	2.553	29.42	.3545	.6345	.3472
36	234.17	1379.0	19.000	2.652	30.57	.3683	.6600	.3612
36	257.60	1379.0	20.000	2.813	32.42	.3906	.7014	.3838
36	281.03	1152.7	21.000	4.054	46.72	.5629	1.021	.5585

OH57,AEDC V41B-K3A, MODEL 92-0, LH WING LWR SURF

RUN NUMBER	YO	XO	T/C NO	PN PSIA	PN/P	PN/PT2	CPN	CPN/MX
36	281.03	1188.6	22.000	3.563	41.06	.4947	.8942	.4893
36	281.03	1224.5	23.000	3.411	39.31	.4736	.8550	.4679
36	281.03	1260.3	24.000	3.387	39.03	.4702	.8488	.4645
36	281.03	1296.2	25.000	3.370	38.84	.4679	.8446	.4622
36	281.03	1332.0	26.000	3.182	36.67	.4418	.7962	.4357
36	281.03	1358.9	27.000	2.970	34.23	.4124	.7417	.4059
36	281.03	1375.6	28.000	2.847	32.81	.3953	.7101	.3886
36	281.03	1379.0	29.000	2.765	31.86	.3838	.6888	.3770
36	281.03	1398.4	30.000	3.389	39.05	.4705	.8494	.4648
36	281.03	1421.7	31.000	2.928	33.74	.4065	.7309	.4000
36	281.03	1439.6	32.000	2.572	29.64	.3571	.6394	.3499
36	281.03	1457.5	33.000	2.190	25.21	.3040	.5404	.2957
36	281.03	1466.5	34.000	1.992	22.94	.2766	.4897	.2680
36	292.74	1379.0	35.000	2.797	32.20	.3883	.6964	.3811
36	304.40	1379.0	36.000	2.911	33.51	.4042	.7258	.3972
36	304.40	1398.4	37.000	3.205	36.90	.4450	.8014	.4385
36	311.20	1379.0	38.000	2.912	33.52	.4043	.7260	.3973
36	320.80	1379.0	39.000	2.977	34.28	.4134	.7429	.4065
36	320.80	1398.4	40.000	3.172	36.52	.4404	.7929	.4339
36	320.80	1421.3	41.000	3.132	36.06	.4348	.7825	.4282
36	320.80	1444.2	42.000	2.686	30.93	.3730	.6681	.3656
36	327.83	1375.6	43.000	3.079	35.45	.4276	.7691	.4209
36	327.83	1379.0	44.000	3.018	34.75	.4190	.7533	.4122
36	327.83	1398.4	45.000	3.454	39.77	.4795	.8653	.4735
36	327.83	1421.3	46.000	3.003	34.58	.4170	.7496	.4102
36	327.83	1444.2	47.000	2.622	30.19	.3641	.6516	.3566
36	351.26	1379.0	48.000	3.144	36.20	.4365	.7857	.4300
36	374.69	1379.0	49.000	3.189	36.74	.4428	.7977	.4366
36	398.11	1256.2	50.000	4.160	47.92	.5776	1.047	.5732
36	398.11	1278.3	51.000	3.936	45.34	.5465	.9898	.5416
36	398.11	1301.4	52.000	3.850	44.35	.5346	.9677	.5296
36	398.11	1322.3	53.000	3.760	43.32	.5221	.9446	.5169
36	398.11	1344.4	54.000	3.668	42.25	.5092	.9208	.5039
36	398.11	1366.5	55.000	3.456	39.93	.4813	.8690	.4756
36	398.11	1375.6	56.000	3.363	38.74	.4669	.8424	.4610
36	398.11	1379.0	57.000	3.372	38.84	.4681	.8447	.4623
36	398.11	1398.4	58.000	3.861	44.48	.5360	.9704	.5311
36	398.11	1410.5	59.000	3.585	41.30	.4977	.8995	.4922
36	398.11	1432.6	60.000	2.870	33.06	.3985	.7156	.3916
36	398.11	1443.6	61.000	2.406	27.72	.3341	.5965	.3264
36	421.49	1379.0	62.000	3.389	39.04	.4705	.8491	.4647
36	444.91	1343.1	63.000	3.484	40.14	.4838	.8736	.4781
36	444.91	1358.9	64.000	3.428	39.49	.4759	.8591	.4701

OH57,AEDC V41B-K3A, MODEL 92-0, LH WING LWR SURF (R4AL14)

RUN NUMBER	YO	XO	T/C NO	PN PSIA	PN/P	PN/PT2	CPN	CPN/MX
36	444.91	1375.6	65.000	3.262	37.60	.4530	.8170	.4471
36	444.91	1379.0	66.000	2.972	34.25	.4126	.7422	.4062
36	444.91	1398.4	67.000	3.557	41.00	.4939	.8928	.4886
36	444.91	1414.2	68.000	3.086	35.57	.4285	.7717	.4223
36	444.91	1430.0	69.000	2.632	30.34	.3655	.6549	.3584
36	456.63	1379.0	70.000	2.997	34.55	.4161	.7488	.4098
36	456.63	1398.4	71.000	3.297	38.00	.4577	.8258	.4519
36	456.63	1413.3	72.000	2.832	32.64	.3932	.7062	.3865
36	468.34	1379.0	73.000	1.990	22.94	.2763	.4897	.2680

L.H. WING LWR SURF

PARAMETRIC DATA

MACH = 8.000 PO = 850.0 RN/FT = 3.600 ELEVON = 5.000
BDFLAP = .0000 SPDBRK = 49.30 RUDDER = .0000

TEST CONDITIONS

RUN NUMBER	ALPHA DEG.	BETA DEG.	PO PSIA	TO DEG. R	P PSIA	T DEG. R	Q PSIA	V FT/SEC	CPMAX	PT2 PSIA	RHO SLUGS /FT3	MU LB-SEC /FT2
33	40.02	.0000	847.0	1338.	.8676-01	96.96	3.887	3863.	1.827	7.190	.7502-04	.7802-07

RUN NUMBER	RN/FT /FT X 106
33	3.715

TEST DATA

RUN NUMBER	YO	XO	T/C NO	PN PSIA	PN/P	PN/PT2	CPN	CPN/MX
33	116.00	1379.0	1.0000	3.090	35.61	.4298	.7726	.4228
33	129.43	1379.0	2.0000	3.101	35.74	.4313	.7754	.4243
33	129.43	1398.4	3.0000	2.767	31.89	.3848	.6895	.3773
33	140.51	1379.0	4.0000	3.112	35.87	.4328	.7783	.4259
33	140.51	1398.4	5.0000	3.414	39.34	.4748	.8559	.4684
33	163.94	1379.0	6.0000	3.126	36.03	.4348	.7820	.4279
33	187.31	1190.4	7.0000	3.667	42.27	.5100	.9211	.5041
33	187.31	1240.7	8.0000	3.676	42.37	.5113	.9234	.5053
33	187.31	1290.9	9.0000	3.675	42.36	.5112	.9233	.5053
33	187.31	1341.2	10.000	3.466	39.94	.4820	.8693	.4757
33	187.31	1353.8	11.000	3.378	38.93	.4698	.8467	.4633
33	187.31	1375.6	12.000	3.256	37.53	.4528	.8153	.4462
33	187.31	1379.0	13.000	3.181	36.67	.4425	.7962	.4357
33	187.31	1398.4	14.000	3.798	43.78	.5283	.9549	.5225
33	187.31	1416.6	15.000	3.552	40.93	.4940	.8914	.4878
33	187.31	1441.7	16.000	3.076	35.46	.4279	.7692	.4209
33	187.31	1466.9	17.000	2.602	29.93	.3619	.6458	.3534
33	210.74	1379.0	18.000	3.263	37.53	.4538	.8153	.4462
33	234.17	1379.0	19.000	3.356	38.60	.4668	.8392	.4592
33	257.60	1379.0	20.000	3.487	40.10	.4850	.8729	.4777
33	281.03	1152.7	21.000	4.879	56.11	.6786	1.230	.6732

OH57,AEDC V41B-K3A, MODEL 92-0, LH WING LWR SURF (R4AL14)

RUN NUMBER	YO	XO	T/C NO	PN PSIA	PN/P	PN/PT2	CPN	CPN/MX
33	281.03	1188.6	22.000	4.370	50.26	.6078	1.100	.6017
33	281.03	1224.5	23.000	4.168	47.93	.5797	1.048	.5733
33	281.03	1260.3	24.000	4.120	47.38	.5730	1.035	.5666
33	281.03	1296.2	25.000	4.065	46.75	.5654	1.021	.5589
33	281.03	1332.0	26.000	3.922	45.11	.5455	.9846	.5388
33	281.03	1358.9	27.000	3.733	42.93	.5192	.9360	.5122
33	281.03	1375.6	28.000	3.598	41.39	.5005	.9015	.4933
33	281.03	1379.0	29.000	3.508	40.35	.4879	.8783	.4806
33	281.03	1398.4	30.000	4.190	48.19	.5827	1.053	.5764
33	281.03	1421.7	31.000	3.630	41.74	.5048	.9095	.4977
33	281.03	1439.6	32.000	3.217	37.01	.4475	.8037	.4398
33	281.03	1457.5	33.000	2.773	31.91	.3857	.6899	.3776
33	281.03	1466.5	34.000	2.535	29.17	.3526	.6288	.3441
33	292.74	1379.0	35.000	3.527	40.58	.4906	.8835	.4835
33	304.40	1379.0	36.000	3.616	41.60	.5029	.9063	.4960
33	304.40	1398.4	37.000	3.838	44.16	.5338	.9633	.5272
33	311.20	1379.0	38.000	3.623	41.68	.5039	.9081	.4969
33	320.80	1379.0	39.000	3.685	42.40	.5126	.9241	.5057
33	320.80	1398.4	40.000	3.835	44.12	.5334	.9626	.5268
33	320.80	1421.3	41.000	3.838	44.15	.5338	.9633	.5271
33	320.80	1444.2	42.000	3.362	38.68	.4676	.8411	.4603
33	327.83	1375.6	43.000	3.800	43.73	.5286	.9537	.5219
33	327.83	1379.0	44.000	3.733	42.95	.5192	.9364	.5124
33	327.83	1398.4	45.000	4.095	47.11	.5696	1.029	.5633
33	327.83	1421.3	46.000	3.732	42.94	.5191	.9362	.5123
33	327.83	1444.2	47.000	3.274	37.67	.4554	.8186	.4480
33	351.26	1379.0	48.000	3.855	44.36	.5362	.9678	.5296
33	374.69	1379.0	49.000	3.909	44.91	.5437	.9801	.5364
33	398.11	1256.2	50.000	4.697	53.96	.6533	1.182	.6469
33	398.11	1278.3	51.000	4.585	52.67	.6377	1.153	.6312
33	398.11	1301.4	52.000	4.552	52.29	.6332	1.145	.6266
33	398.11	1322.3	53.000	4.453	51.15	.6193	1.120	.6126
33	398.11	1344.4	54.000	4.346	49.92	.6044	1.092	.5976
33	398.11	1366.5	55.000	4.199	48.12	.5826	1.052	.5756
33	398.11	1375.6	56.000	4.088	46.97	.5687	1.026	.5615
33	398.11	1379.0	57.000	4.081	46.88	.5676	1.024	.5605
33	398.11	1398.4	58.000	4.589	52.72	.6383	1.154	.6317
33	398.11	1410.5	59.000	4.295	49.34	.5974	1.079	.5905
33	398.11	1432.6	60.000	3.580	41.13	.4980	.8958	.4902
33	398.11	1443.6	61.000	3.069	35.25	.4268	.7645	.4184
33	421.49	1379.0	62.000	4.143	47.60	.5763	1.040	.5692
33	444.91	1343.1	63.000	4.180	48.02	.5814	1.049	.5743
33	444.91	1358.9	64.000	4.143	47.60	.5763	1.040	.5692

OH57,AEDC V41B-K3A, MODEL 92-0, LH WING LWR SURF (R4AL14)

RUN NUMBER	YO	XO	T/C NO	PN PSIA	PN/P	PN/PT2	CPN	CPN/MX
33	444.91	1375.6	65.000	3.960	45.78	.5508	.9996	.5470
33	444.91	1379.0	66.000	3.665	42.36	.5097	.9233	.5053
33	444.91	1398.4	67.000	4.320	49.94	.6009	1.093	.5979
33	444.91	1414.2	68.000	3.812	44.07	.5303	.9614	.5261
33	444.91	1430.0	69.000	3.235	37.40	.4500	.8124	.4446
33	456.63	1379.0	70.000	3.597	41.58	.5003	.9059	.4957
33	456.63	1398.4	71.000	3.968	45.87	.5520	1.002	.5481
33	456.63	1413.3	72.000	3.439	39.75	.4783	.8651	.4734
33	468.34	1379.0	73.000	2.249	26.00	.3129	.5581	.3054

OH57,AEDC V41B-K3A, MODEL 92-0, LH WING LWR SURF (R4AL14)

L.H. WING LWR SURF

PARAMETRIC DATA

MACH = 8.000 PO = 850.0 RN/FT = 3.600 ELEVON = 5.000
BDFLAP = .0000 SPDBRK = 49.30 RUDDER = .0000

TEST CONDITIONS

RUN NUMBER	ALPHA DEG.	BETA DEG.	PO PSIA	TO DEG. R	P PSIA	T DEG. R	Q PSIA	V FT/SEC	CPMAX	PT2 PSIA	RHO SLUGS /FT3	MU LB-SEC /FT2
35	44.07	.0000	848.7	1354.	.8693-01	98.12	3.895	3886.	1.827	7.204	.7428-04	.7895-07

RUN NUMBER	RN/FT /FT X 106
35	3.656

TEST DATA

RUN NUMBER	YO	XO	T/C NO	PN PSIA	PN/P	PN/PT2	CPN	CPN/MX
35	116.00	1379.0	1.0000	3.630	41.76	.5039	.9098	.4979
35	129.43	1379.0	2.0000	3.645	41.93	.5060	.9136	.5000
35	129.43	1398.4	3.0000	3.198	36.79	.4439	.7988	.4371
35	140.51	1379.0	4.0000	3.661	42.11	.5082	.9177	.5022
35	140.51	1398.4	5.0000	3.922	45.11	.5444	.9847	.5388
35	163.94	1379.0	6.0000	3.689	42.43	.5120	.9248	.5061
35	187.31	1190.4	7.0000	4.207	48.39	.5839	1.058	.5789
35	187.31	1240.7	8.0000	4.250	48.89	.5900	1.069	.5850
35	187.31	1290.9	9.0000	4.256	48.96	.5908	1.070	.5858
35	187.31	1341.2	10.000	4.059	46.69	.5634	1.020	.5581
35	187.31	1353.8	11.000	3.968	45.65	.5509	.9966	.5454
35	187.31	1375.6	12.000	3.848	44.27	.5342	.9657	.5285
35	187.31	1379.0	13.000	3.755	43.19	.5212	.9417	.5154
35	187.31	1398.4	14.000	4.426	50.92	.6144	1.114	.6097
35	187.31	1416.6	15.000	4.129	47.49	.5731	1.038	.5679
35	187.31	1441.7	16.000	3.570	41.07	.4956	.8943	.4894
35	187.31	1466.9	17.000	3.021	34.83	.4193	.7551	.4132
35	210.74	1379.0	18.000	3.810	43.93	.5289	.9582	.5244
35	234.17	1379.0	19.000	3.897	44.92	.5409	.9804	.5365
35	257.60	1379.0	20.000	4.027	46.43	.5590	1.014	.5549
35	281.03	1152.7	21.000	5.194	59.88	.7210	1.314	.7192

OH57,AEDC V41B-K3A, MODEL 92-0, LH WING LWR SURF (R4AL14)

RUN NUMBER	YO	XO	T/C NO	PN PSIA	PN/P	PN/PT2	CPN	CPN/MX
35	281.03	1188.6	22.000	4.886	56.33	.6782	1.235	.6758
35	281.03	1224.5	23.000	4.724	54.46	.6557	1.193	.6530
35	281.03	1260.3	24.000	4.676	53.91	.6491	1.181	.6463
35	281.03	1296.2	25.000	4.628	53.36	.6424	1.169	.6395
35	281.03	1332.0	26.000	4.484	51.69	.6224	1.131	.6192
35	281.03	1358.9	27.000	4.288	49.43	.5952	1.081	.5916
35	281.03	1375.6	28.000	4.156	47.92	.5770	1.047	.5731
35	281.03	1379.0	29.000	4.050	46.69	.5621	1.020	.5581
35	281.03	1398.4	30.000	4.755	54.82	.6600	1.201	.6574
35	281.03	1421.7	31.000	4.144	47.77	.5752	1.044	.5713
35	281.03	1439.6	32.000	3.689	42.53	.5120	.9269	.5072
35	281.03	1457.5	33.000	3.187	36.70	.4425	.7970	.4361
35	281.03	1466.5	34.000	2.918	33.60	.4050	.7276	.3982
35	292.74	1379.0	35.000	4.077	46.95	.5659	1.026	.5613
35	304.40	1379.0	36.000	4.159	47.89	.5773	1.047	.5728
35	304.40	1398.4	37.000	4.247	48.91	.5896	1.069	.5852
35	311.20	1379.0	38.000	4.157	47.86	.5770	1.046	.5725
35	320.80	1379.0	39.000	4.226	48.66	.5866	1.064	.5822
35	320.80	1398.4	40.000	4.382	50.46	.6083	1.104	.6042
35	320.80	1421.3	41.000	4.380	50.44	.6080	1.103	.6039
35	320.80	1444.2	42.000	3.870	44.56	.5371	.9723	.5321
35	327.83	1375.6	43.000	4.343	50.01	.6029	1.094	.5987
35	327.83	1379.0	44.000	4.287	49.36	.5950	1.079	.5907
35	327.83	1398.4	45.000	4.527	52.13	.6284	1.141	.6245
35	327.83	1421.3	46.000	4.294	49.45	.5961	1.081	.5918
35	327.83	1444.2	47.000	3.785	43.59	.5255	.9507	.5202
35	351.26	1379.0	48.000	4.401	50.68	.6110	1.109	.6069
35	374.69	1379.0	49.000	4.478	51.59	.6216	1.129	.6179
35	398.11	1256.2	50.000	5.102	58.77	.7082	1.290	.7057
35	398.11	1278.3	51.000	5.072	58.43	.7040	1.282	.7015
35	398.11	1301.4	52.000	5.089	58.63	.7065	1.286	.7040
35	398.11	1322.3	53.000	5.005	57.66	.6947	1.265	.6921
35	398.11	1344.4	54.000	4.887	56.30	.6784	1.234	.6755
35	398.11	1366.5	55.000	4.716	54.33	.6547	1.191	.6515
35	398.11	1375.6	56.000	4.604	53.04	.6391	1.162	.6357
35	398.11	1379.0	57.000	4.596	52.95	.6380	1.160	.6346
35	398.11	1398.4	58.000	5.099	58.75	.7079	1.289	.7054
35	398.11	1410.5	59.000	4.809	55.41	.6676	1.214	.6646
35	398.11	1432.6	60.000	4.055	46.71	.5628	1.020	.5584
35	398.11	1443.6	61.000	3.481	40.10	.4832	.8728	.4776
35	421.49	1379.0	62.000	4.669	53.79	.6482	1.178	.6449
35	444.91	1343.1	63.000	4.673	53.83	.6487	1.179	.6454
35	444.91	1358.9	64.000	4.633	53.37	.6431	1.169	.6397

OH57,AEDC V41B-K3A, MODEL 92-0, LH WING LWR SURF (R4AL14)

RUN NUMBER	YO	XO	T/C NO	PN PSIA	PN/P	PN/PT2	CPN	CPN/MX
35	444.91	1375.6	65.000	4.466	51.44	.6199	1.126	.6161
35	444.91	1379.0	66.000	4.170	48.03	.5789	1.050	.5745
35	444.91	1398.4	67.000	4.828	55.61	.6702	1.219	.6671
35	444.91	1414.2	68.000	4.339	49.98	.6023	1.093	.5983
35	444.91	1430.0	69.000	3.715	42.79	.5157	.9328	.5104
35	456.63	1379.0	70.000	4.041	46.55	.5610	1.017	.5563
35	456.63	1398.4	71.000	4.426	50.97	.6143	1.115	.6104
35	456.63	1413.3	72.000	3.905	44.98	.5421	.9817	.5372
35	468.34	1379.0	73.000	2.279	26.25	.3163	.5635	.3084

L.H. WING LWR SURF

PARAMETRIC DATA

MACH = 7.940 PO = 210.0 RN/FT = 1.000 ELEVON = 5.000
BDFLAP = 22.50 SPDBRK = 49.30 RUDDER = .0000

TEST CONDITIONS

RUN NUMBER	ALPHA DEG.	BETA DEG.	PO PSIA	TO DEG. R	P PSIA	T DEG. R	Q PSIA	V FT/SEC	CPMAX	PT2 PSIA	RHO SLUGS /FT3	MU LB-SEC /FT2
45	30.00	.0000	209.4	1264.	.2253-01	92.88	.9941	3752.	1.827	1.839	.2033-04	.7474-07

RUN NUMBER	RN/FT /FT X 106
45	1.021

TEST DATA

RUN NUMBER	YO	XO	T/C NO	PN PSIA	PN/P	PN/PT2	CPN	CPN/MX
45	116.00	1379.0	1.0000	.4488	19.92	.2441	.4288	.2347
45	129.43	1379.0	2.0000	.4501	19.98	.2448	.4301	.2354
45	129.43	1398.4	3.0000	.4514	20.04	.2455	.4315	.2361
45	140.51	1379.0	4.0000	.4641	20.60	.2524	.4442	.2431
45	140.51	1398.4	5.0000	.5202	23.09	.2829	.5006	.2740
45	163.94	1379.0	6.0000	.4789	21.26	.2604	.4591	.2513
45	187.31	1190.4	7.0000	.5975	26.53	.3249	.5784	.3166
45	187.31	1240.7	8.0000	.5968	26.49	.3245	.5777	.3162
45	187.31	1290.9	9.0000	.5792	25.71	.3150	.5600	.3065
45	187.31	1341.2	10.000	.5351	23.76	.2910	.5157	.2822
45	187.31	1353.8	11.000	.5152	22.87	.2801	.4955	.2712
45	187.31	1375.6	12.000	.4947	21.96	.2690	.4750	.2600
45	187.31	1379.0	13.000	.5094	22.61	.2770	.4897	.2680
45	187.31	1398.4	14.000	.5422	24.07	.2948	.5227	.2861
45	187.31	1416.6	15.000	.5359	23.79	.2914	.5164	.2826
45	187.31	1441.7	16.000	.4566	20.27	.2483	.4366	.2390
45	187.31	1466.9	17.000	.3858	17.19	.2103	.3670	.2008
45	210.74	1379.0	18.000	.5013	22.29	.2726	.4823	.2640
45	234.17	1379.0	19.000	.5328	23.69	.2897	.5141	.2813
45	257.60	1379.0	20.000	.5320	23.65	.2893	.5132	.2809
45	281.03	1152.7	21.000	.7928	35.24	.4311	.7760	.4247

OH57,AEDC V41B-K3A, MODEL 92-0, LH WING LWR SURF (R4AL15)

RUN NUMBER	YO	XO	T/C NO	PN PSIA	PN/P	PN/PT2	CPN	CPN/MX
45	281.03	1188.6	22.000	.7010	31.16	.3812	.6835	.3741
45	281.03	1224.5	23.000	.6755	30.03	.3674	.6579	.3600
45	281.03	1260.3	24.000	.6704	29.81	.3646	.6527	.3572
45	281.03	1296.2	25.000	.6453	28.69	.3509	.6274	.3434
45	281.03	1332.0	26.000	.6170	27.43	.3355	.5989	.3278
45	281.03	1358.9	27.000	.5758	25.60	.3131	.5573	.3050
45	281.03	1375.6	28.000	.5487	24.39	.2984	.5301	.2901
45	281.03	1379.0	29.000	.5573	24.77	.3030	.5387	.2948
45	281.03	1398.4	30.000	.6388	28.40	.3474	.6208	.3398
45	281.03	1421.7	31.000	.5735	25.49	.3118	.5550	.3038
45	281.03	1439.6	32.000	.4847	21.55	.2636	.4656	.2548
45	281.03	1457.5	33.000	.4080	18.12	.2219	.3879	.2123
45	281.03	1466.5	34.000	.3662	16.26	.1991	.3458	.1893
45	292.74	1379.0	35.000	.5770	25.63	.3138	.5581	.3054
45	304.40	1379.0	36.000	.5615	24.94	.3053	.5424	.2969
45	304.40	1398.4	37.000	.6010	26.69	.3268	.5822	.3186
45	311.20	1379.0	38.000	.5608	24.90	.3049	.5417	.2965
45	320.80	1379.0	39.000	.5997	26.64	.3261	.5809	.3179
45	320.80	1398.4	40.000	.6478	28.77	.3523	.6293	.3444
45	320.80	1421.3	41.000	.6224	27.64	.3385	.6037	.3304
45	320.80	1444.2	42.000	.5353	23.78	.2911	.5161	.2825
45	327.83	1375.6	43.000	.6069	26.95	.3300	.5881	.3219
45	327.83	1379.0	44.000	.6217	27.61	.3381	.6030	.3300
45	327.83	1398.4	45.000	.6980	31.00	.3795	.6798	.3720
45	327.83	1421.3	46.000	.5850	25.98	.3181	.5661	.3098
45	327.83	1444.2	47.000	.5137	22.81	.2793	.4943	.2705
45	351.26	1379.0	48.000	.6500	28.87	.3534	.6315	.3456
45	374.69	1379.0	49.000	.6823	30.32	.3710	.6643	.3636
45	398.11	1256.2	50.000	.8713	38.72	.4738	.8547	.4678
45	398.11	1278.3	51.000	.8608	38.25	.4681	.8440	.4619
45	398.11	1301.4	52.000	.7719	34.30	.4197	.7545	.4129
45	398.11	1322.3	53.000	.7654	34.01	.4162	.7480	.4094
45	398.11	1344.4	54.000	.7265	32.28	.3950	.7088	.3879
45	398.11	1366.5	55.000	.6913	30.72	.3759	.6734	.3685
45	398.11	1375.6	56.000	.6825	30.33	.3711	.6645	.3637
45	398.11	1379.0	57.000	.6949	30.88	.3779	.6770	.3705
45	398.11	1398.4	58.000	.7516	33.40	.4087	.7341	.4018
45	398.11	1410.5	59.000	.6892	30.58	.3742	.6702	.3668
45	398.11	1432.6	60.000	.5591	24.84	.3040	.5403	.2957
45	398.11	1443.6	61.000	.4856	21.58	.2641	.4663	.2552
45	421.49	1379.0	62.000	.6728	29.90	.3659	.6548	.3584
45	444.91	1343.1	63.000	.7173	31.87	.3901	.6996	.3829
45	444.91	1358.9	64.000	.6937	30.83	.3773	.6759	.3699

OH57,AEDC V41B-K3A, MODEL 92-0, LH WING LWR SURF (R4AL15)

RUN NUMBER	YO	XO	T/C NO	PN PSIA	PN/P	PN/PT2	CPN	CPN/MX
45	444.91	1375.6	65.000	.6765	30.14	.3679	.6604	.3614
45	444.91	1379.0	66.000	.6439	28.70	.3502	.6276	.3435
45	444.91	1398.4	67.000	.7647	34.08	.4158	.7495	.4102
45	444.91	1414.2	68.000	.6188	27.57	.3365	.6022	.3296
45	444.91	1430.0	69.000	.5398	24.05	.2935	.5224	.2859
45	456.63	1379.0	70.000	.6294	28.05	.3423	.6129	.3354
45	456.63	1398.4	71.000	.6688	29.80	.3637	.6526	.3572
45	456.63	1413.3	72.000	.5902	26.30	.3209	.5733	.3138
45	468.34	1379.0	73.000	.4347	19.37	.2364	.4163	.2278

OH57,AEDC V41B-K3A, MODEL 92-0, LH WING LWR SURF (R4AL15)

L.H. WING LWR SURF

PARAMETRIC DATA

MACH = 7.940 PO = 210.0 RN/FT = 1.000 ELEVON = 5.000
BDFLAP = 22.50 SPDBRK = 49.30 RUDDER = .0000

TEST CONDITIONS

RUN NUMBER	ALPHA DEG.	BETA DEG.	PO PSIA	TO DEG. R	P PSIA	T DEG. R	Q PSIA	V FT/SEC	CPMAX	PT2 PSIA	RHO SLUGS /FT3	MU LB-SEC /FT2
44	39.99	.0000	207.7	1262.	.2234-01	92.73	.9861	3749.	1.827	1.824	.2020-04	.7462-07

RUN NUMBER	RN/FT /FT X 106
44	1.015

TEST DATA

RUN NUMBER	YO	XO	T/C NO	PN PSIA	PN/P	PN/PT2	CPN	CPN/MX
44	116.00	1379.0	1.0000	.7311	32.72	.4008	.7188	.3934
44	129.43	1379.0	2.0000	.7330	32.80	.4018	.7207	.3944
44	129.43	1398.4	3.0000	.7421	33.21	.4068	.7299	.3995
44	140.51	1379.0	4.0000	.7511	33.62	.4118	.7391	.4045
44	140.51	1398.4	5.0000	.8342	37.34	.4573	.8234	.4506
44	163.94	1379.0	6.0000	.7749	34.68	.4248	.7632	.4177
44	187.31	1190.4	7.0000	.9044	40.48	.4958	.8945	.4896
44	187.31	1240.7	8.0000	.9117	40.80	.4998	.9019	.4936
44	187.31	1290.9	9.0000	.8856	39.63	.4855	.8755	.4791
44	187.31	1341.2	10.000	.8573	38.37	.4700	.8468	.4634
44	187.31	1353.8	11.000	.8323	37.25	.4563	.8214	.4495
44	187.31	1375.6	12.000	.8026	35.92	.4400	.7913	.4331
44	187.31	1379.0	13.000	.8215	36.76	.4504	.8104	.4435
44	187.31	1398.4	14.000	.8720	39.03	.4781	.8617	.4716
44	187.31	1416.6	15.000	.8595	38.46	.4712	.8490	.4646
44	187.31	1441.7	16.000	.7496	33.55	.4109	.7375	.4036
44	187.31	1466.9	17.000	.6504	29.12	.3566	.6373	.3488
44	210.74	1379.0	18.000	.8063	36.10	.4420	.7954	.4353
44	234.17	1379.0	19.000	.8450	37.84	.4633	.8347	.4568
44	257.60	1379.0	20.000	.8188	36.66	.4489	.8081	.4423
44	281.03	1152.7	21.000	1.240	55.54	.6800	1.236	.6764

OH57,AEDC V41B-K3A, MODEL 92-0, LH WING LWR SURF (R4AL15)

RUN NUMBER	YO	XO	T/C NO	PN PSIA	PN/P	PN/PT2	CPN	CPN/MX
44	281.03	1188.6	22.000	1.104	49.44	.6054	1.098	.6008
44	281.03	1224.5	23.000	1.029	46.10	.5644	1.022	.5593
44	281.03	1260.3	24.000	1.019	45.62	.5586	1.011	.5534
44	281.03	1296.2	25.000	.9820	43.97	.5384	.9737	.5329
44	281.03	1332.0	26.000	.9822	43.98	.5385	.9739	.5330
44	281.03	1358.9	27.000	.9017	40.38	.4944	.8923	.4883
44	281.03	1375.6	28.000	.9053	40.54	.4963	.8959	.4903
44	281.03	1379.0	29.000	.8680	38.86	.4758	.8580	.4696
44	281.03	1398.4	30.000	1.041	46.60	.5706	1.033	.5655
44	281.03	1421.7	31.000	.8876	39.74	.4866	.8779	.4805
44	281.03	1439.6	32.000	.7821	35.02	.4288	.7709	.4219
44	281.03	1457.5	33.000	.6909	30.77	.3788	.6746	.3692
44	281.03	1466.5	34.000	.6303	28.08	.3456	.6135	.3358
44	292.74	1379.0	35.000	.9060	40.36	.4967	.8918	.4881
44	304.40	1379.0	36.000	.8593	38.27	.4711	.8446	.4622
44	304.40	1398.4	37.000	.9207	41.01	.5048	.9066	.4962
44	311.20	1379.0	38.000	.8701	38.76	.4770	.8556	.4682
44	320.80	1379.0	39.000	.9337	41.59	.5119	.9197	.5034
44	320.80	1398.4	40.000	.9725	43.31	.5331	.9588	.5248
44	320.80	1421.3	41.000	.9421	41.96	.5165	.9282	.5080
44	320.80	1444.2	42.000	.8589	38.26	.4709	.8442	.4620
44	327.83	1375.6	43.000	.9379	41.77	.5142	.9239	.5057
44	327.83	1379.0	44.000	.9846	43.86	.5398	.9711	.5315
44	327.83	1398.4	45.000	1.011	45.05	.5545	.9982	.5463
44	327.83	1421.3	46.000	.8978	39.99	.4922	.8835	.4835
44	327.83	1444.2	47.000	.8285	36.90	.4542	.8135	.4452
44	351.26	1379.0	48.000	1.031	45.93	.5653	1.018	.5572
44	374.69	1379.0	49.000	1.057	47.08	.5793	1.044	.5715
44	398.11	1256.2	50.000	1.194	53.22	.6547	1.183	.6476
44	398.11	1278.3	51.000	1.163	51.84	.6377	1.152	.6305
44	398.11	1301.4	52.000	1.154	51.42	.6326	1.143	.6253
44	398.11	1322.3	53.000	1.123	50.06	.6159	1.112	.6085
44	398.11	1344.4	54.000	1.086	48.40	.5955	1.074	.5879
44	398.11	1366.5	55.000	1.033	46.04	.5664	1.021	.5585
44	398.11	1375.6	56.000	1.025	45.70	.5622	1.013	.5543
44	398.11	1379.0	57.000	1.032	46.00	.5660	1.020	.5581
44	398.11	1398.4	58.000	1.108	49.39	.6076	1.096	.6001
44	398.11	1410.5	59.000	1.022	45.52	.5601	1.009	.5522
44	398.11	1432.6	60.000	.9009	40.14	.4939	.8870	.4854
44	398.11	1443.6	61.000	.7583	33.79	.4157	.7430	.4066
44	421.49	1379.0	62.000	1.066	47.51	.5846	1.054	.5769
44	444.91	1343.1	63.000	1.025	45.69	.5621	1.013	.5542
44	444.91	1358.9	64.000	1.037	46.22	.5686	1.025	.5607

OH57,AEDC V41B-K3A, MODEL 92-0, LH WING LWR SURF (R4AL15)

RUN NUMBER	YO	XO	T/C NO	PN PSIA	PN/P	PN/PT2	CPN	CPN/MX
44	444.91	1375.6	65.000	1.012	44.80	.5549	.9926	.5433
44	444.91	1379.0	66.000	.9744	43.13	.5342	.9547	.5225
44	444.91	1398.4	67.000	1.075	47.57	.5891	1.055	.5775
44	444.91	1414.2	68.000	.9390	41.57	.5148	.9192	.5031
44	444.91	1430.0	69.000	.8114	35.92	.4448	.7912	.4330
44	456.63	1379.0	70.000	.9152	40.51	.5017	.8953	.4900
44	456.63	1398.4	71.000	.9828	43.50	.5388	.9631	.5271
44	456.63	1413.3	72.000	.8653	38.30	.4744	.8453	.4626
44	468.34	1379.0	73.000	.6113	27.06	.3352	.5906	.3232

OH57,AEDC V41B-K3A, MODEL 92-0, LH WING LWR SURF (R4AL15)

L.H. WING LWR SURF

PARAMETRIC DATA

MACH = 7.940 PO = 210.0 RN/FT = 1.000 ELEVON = 5.000
BDFLAP = 22.50 SPDBRK = 49.30 RUDDER = .0000

TEST CONDITIONS

RUN NUMBER	ALPHA DEG.	BETA DEG.	PO PSIA	TO DEG. R	P PSIA	T DEG. R	Q PSIA	V FT/SEC	CPMAX	PT2 PSIA	RHO SLUGS /FT3	MU LB-SEC /FT2
46	44.00	.0000	208.7	1264.	.2245-01	92.88	.9908	3752.	1.827	1.833	.2027-04	.7474-07

RUN NUMBER	RN/FT /FT X 106
46	1.018

TEST DATA

RUN NUMBER	YO	XO	T/C NO	PN PSIA	PN/P	PN/PT2	CPN	CPN/MX
46	116.00	1379.0	1.0000	.8590	38.26	.4687	.8444	.4621
46	129.43	1379.0	2.0000	.8524	37.97	.4651	.8377	.4585
46	129.43	1398.4	3.0000	.8582	38.23	.4683	.8435	.4617
46	140.51	1379.0	4.0000	.8540	38.04	.4659	.8392	.4593
46	140.51	1398.4	5.0000	.9765	43.50	.5328	.9629	.5270
46	163.94	1379.0	6.0000	.8893	39.61	.4852	.8749	.4789
46	187.31	1190.4	7.0000	1.043	46.44	.5689	1.030	.5635
46	187.31	1240.7	8.0000	1.063	47.37	.5802	1.051	.5750
46	187.31	1290.9	9.0000	1.034	46.04	.5639	1.021	.5585
46	187.31	1341.2	10.000	.9972	44.42	.5441	.9838	.5384
46	187.31	1353.8	11.000	.9620	42.85	.5249	.9482	.5190
46	187.31	1375.6	12.000	.9398	41.86	.5127	.9258	.5067
46	187.31	1379.0	13.000	.9374	41.75	.5114	.9234	.5054
46	187.31	1398.4	14.000	1.056	47.02	.5760	1.043	.5708
46	187.31	1416.6	15.000	1.007	44.85	.5494	.9937	.5438
46	187.31	1441.7	16.000	.8612	38.36	.4699	.8466	.4633
46	187.31	1466.9	17.000	.7665	34.22	.4182	.7529	.4120
46	210.74	1379.0	18.000	.9219	41.16	.5030	.9101	.4981
46	234.17	1379.0	19.000	.9847	43.96	.5372	.9735	.5328
46	257.60	1379.0	20.000	.9754	43.55	.5322	.9641	.5277
46	281.03	1152.7	21.000	1.318	58.86	.7193	1.311	.7176

OH57,AEDC V41B-K3A, MODEL 92-0, LH WING LWR SURF (R4AL15)

RUN NUMBER	YO	XO	T/C NO	PN PSIA	PN/P	PN/PT2	CPN	CPN/MX
46	281.03	1188.6	22.000	1.223	54.59	.6671	1.214	.6646
46	281.03	1224.5	23.000	1.195	53.35	.6520	1.186	.6493
46	281.03	1260.3	24.000	1.173	52.37	.6400	1.164	.6371
46	281.03	1296.2	25.000	1.124	50.18	.6132	1.114	.6099
46	281.03	1332.0	26.000	1.111	49.62	.6063	1.102	.6029
46	281.03	1358.9	27.000	1.062	47.40	.5792	1.051	.5754
46	281.03	1375.6	28.000	1.028	45.90	.5609	1.017	.5568
46	281.03	1379.0	29.000	.9648	43.07	.5264	.9534	.5218
46	281.03	1398.4	30.000	1.176	52.49	.6415	1.167	.6386
46	281.03	1421.7	31.000	1.022	45.61	.5574	1.011	.5533
46	281.03	1439.6	32.000	.8871	39.61	.4840	.8748	.4788
46	281.03	1457.5	33.000	.8022	35.82	.4377	.7889	.4318
46	281.03	1466.5	34.000	.7348	32.81	.4009	.7207	.3944
46	292.74	1379.0	35.000	.9694	43.28	.5289	.9581	.5244
46	304.40	1379.0	36.000	1.016	45.36	.5543	1.005	.5501
46	304.40	1398.4	37.000	1.072	47.88	.5852	1.062	.5814
46	311.20	1379.0	38.000	1.035	46.22	.5648	1.025	.5608
46	320.80	1379.0	39.000	1.067	47.62	.5819	1.056	.5782
46	320.80	1398.4	40.000	1.116	49.82	.6089	1.106	.6055
46	320.80	1421.3	41.000	1.078	48.15	.5884	1.068	.5847
46	320.80	1444.2	42.000	1.000	44.66	.5457	.9892	.5414
46	327.83	1375.6	43.000	1.098	49.00	.5988	1.088	.5953
46	327.83	1379.0	44.000	1.113	49.71	.6074	1.104	.6040
46	327.83	1398.4	45.000	1.124	50.20	.6134	1.115	.6101
46	327.83	1421.3	46.000	1.087	48.54	.5932	1.077	.5896
46	327.83	1444.2	47.000	.9445	42.17	.5153	.9329	.5106
46	351.26	1379.0	48.000	1.114	49.72	.6076	1.104	.6042
46	374.69	1379.0	49.000	1.183	52.70	.6453	1.172	.6412
46	398.11	1256.2	50.000	1.284	57.23	.7007	1.274	.6973
46	398.11	1278.3	51.000	1.274	56.79	.6954	1.264	.6919
46	398.11	1301.4	52.000	1.278	56.97	.6975	1.268	.6941
46	398.11	1322.3	53.000	1.258	56.08	.6866	1.248	.6831
46	398.11	1344.4	54.000	1.224	54.55	.6679	1.213	.6641
46	398.11	1366.5	55.000	1.195	53.25	.6520	1.184	.6480
46	398.11	1375.6	56.000	1.183	52.74	.6457	1.172	.6416
46	398.11	1379.0	57.000	1.179	52.54	.6433	1.168	.6392
46	398.11	1398.4	58.000	1.246	55.54	.6801	1.236	.6764
46	398.11	1410.5	59.000	1.180	52.58	.6438	1.169	.6397
46	398.11	1432.6	60.000	1.022	45.54	.5576	1.009	.5524
46	398.11	1443.6	61.000	.8779	39.12	.4790	.8638	.4727
46	421.49	1379.0	62.000	1.207	53.80	.6587	1.196	.6548
46	444.91	1343.1	63.000	1.143	50.91	.6234	1.131	.6190
46	444.91	1358.9	64.000	1.160	51.70	.6330	1.149	.6287

OH57,AEDC V41B-K3A, MODEL 92-0, LH WING LWR SURF (R4AL15)

RUN NUMBER	YO	XO	T/C NO	PN PSIA	PN/P	PN/PT2	CPN	CPN/MX
46	444.91	1375.6	65.000	1.141	50.71	.6224	1.126	.6165
46	444.91	1379.0	66.000	1.104	49.09	.6025	1.090	.5964
46	444.91	1398.4	67.000	1.258	55.94	.6866	1.245	.6813
46	444.91	1414.2	68.000	1.066	47.38	.5815	1.051	.5751
46	444.91	1430.0	69.000	.9273	41.22	.5059	.9115	.4988
46	456.63	1379.0	70.000	1.082	48.09	.5902	1.067	.5840
46	456.63	1398.4	71.000	1.095	48.67	.5973	1.080	.5912
46	456.63	1413.3	72.000	.9791	43.53	.5342	.9636	.5274
46	468.34	1379.0	73.000	.6856	30.48	.3741	.6680	.3656

OH57,AEDC V41B-K3A, MODEL 92-0, LH WING LWR SURF (R4AL16)

L.H. WING LWR SURF

PARAMETRIC DATA

MACH = 8.000 PO = 850.0 RN/FT = 3.600 ELEVON = 5.000
BDFLAP = 22.50 SPDBRK = 49.30 RUDDER = .0000

TEST CONDITIONS

RUN NUMBER	ALPHA DEG.	BETA DEG.	PO PSIA	TO DEG. R	P PSIA	T DEG. R	Q PSIA	V FT/SEC	CPMAX	PT2 PSIA	RHO SLUGS /FT3	MU LB-SEC /FT2
43	30.00	.0000	847.3	1352.	.8679-01	97.97	3.888	3883.	1.827	7.192	.7427-04	.7884-07

RUN NUMBER	RN/FT /FT X 106
43	3.659

TEST DATA

RUN NUMBER	YO	XO	T/C NO	PN PSIA	PN/P	PN/PT2	CPN	CPN/MX
43	116.00	1379.0	1.0000	1.843	21.23	.2562	.4516	.2472
43	129.43	1379.0	2.0000	1.847	21.28	.2568	.4526	.2477
43	129.43	1398.4	3.0000	1.731	19.95	.2407	.4229	.2315
43	140.51	1379.0	4.0000	1.844	21.25	.2564	.4519	.2473
43	140.51	1398.4	5.0000	2.119	24.42	.2947	.5227	.2861
43	163.94	1379.0	6.0000	1.833	21.12	.2549	.4491	.2458
43	187.31	1190.4	7.0000	2.333	26.88	.3244	.5776	.3161
43	187.31	1240.7	8.0000	2.314	26.66	.3218	.5729	.3135
43	187.31	1290.9	9.0000	2.274	26.20	.3162	.5626	.3079
43	187.31	1341.2	10.000	2.090	24.08	.2906	.5153	.2820
43	187.31	1353.8	11.000	2.027	23.35	.2818	.4990	.2731
43	187.31	1375.6	12.000	1.914	22.05	.2661	.4699	.2571
43	187.31	1379.0	13.000	1.842	21.22	.2561	.4514	.2470
43	187.31	1398.4	14.000	2.291	26.40	.3186	.5670	.3103
43	187.31	1416.6	15.000	2.151	24.79	.2991	.5310	.2906
43	187.31	1441.7	16.000	1.861	21.44	.2587	.4563	.2497
43	187.31	1466.9	17.000	1.550	17.86	.2156	.3763	.2060
43	210.74	1379.0	18.000	1.899	21.88	.2641	.4661	.2550
43	234.17	1379.0	19.000	2.026	23.34	.2817	.4986	.2729
43	257.60	1379.0	20.000	2.152	24.79	.2992	.5310	.2906
43	281.03	1152.7	21.000	3.073	35.40	.4273	.7679	.4202

OH57,AEDC V41B-K3A, MODEL 92-0, LH WING LWR SURF (R4AL16)

RUN NUMBER	YO	XO	T/C NO	PN PSIA	PN/P	PN/PT2	CPN	CPN/MX
43	281.03	1188.6	22.000	2.732	31.47	.3798	.6801	.3722
43	281.03	1224.5	23.000	2.652	30.55	.3688	.6597	.3610
43	281.03	1260.3	24.000	2.649	30.51	.3683	.6588	.3605
43	281.03	1296.2	25.000	2.519	29.02	.3503	.6255	.3423
43	281.03	1332.0	26.000	2.403	27.68	.3341	.5955	.3259
43	281.03	1358.9	27.000	2.292	26.41	.3187	.5672	.3104
43	281.03	1375.6	28.000	2.201	25.36	.3060	.5437	.2975
43	281.03	1379.0	29.000	2.137	24.62	.2971	.5272	.2885
43	281.03	1398.4	30.000	2.699	31.10	.3753	.6718	.3676
43	281.03	1421.7	31.000	2.309	26.60	.3210	.5714	.3127
43	281.03	1439.6	32.000	1.993	22.96	.2771	.4902	.2682
43	281.03	1457.5	33.000	1.661	19.11	.2310	.4042	.2212
43	281.03	1466.5	34.000	1.491	17.15	.2073	.3605	.1973
43	292.74	1379.0	35.000	2.187	25.15	.3040	.5391	.2950
43	304.40	1379.0	36.000	2.279	26.21	.3169	.5628	.3080
43	304.40	1398.4	37.000	2.590	29.79	.3601	.6427	.3517
43	311.20	1379.0	38.000	2.267	26.07	.3152	.5596	.3062
43	320.80	1379.0	39.000	2.324	26.73	.3231	.5743	.3143
43	320.80	1398.4	40.000	2.557	29.41	.3556	.6342	.3471
43	320.80	1421.3	41.000	2.427	27.91	.3375	.6008	.3288
43	320.80	1444.2	42.000	2.074	23.85	.2883	.5101	.2791
43	327.83	1375.6	43.000	2.408	27.69	.3348	.5958	.3261
43	327.83	1379.0	44.000	2.348	27.00	.3264	.5804	.3176
43	327.83	1398.4	45.000	2.756	31.69	.3831	.6851	.3749
43	327.83	1421.3	46.000	2.326	26.75	.3234	.5748	.3145
43	327.83	1444.2	47.000	2.006	23.07	.2789	.4927	.2696
43	351.26	1379.0	48.000	2.464	28.34	.3426	.6103	.3340
43	374.69	1379.0	49.000	2.508	28.79	.3487	.6203	.3395
43	398.11	1256.2	50.000	3.464	39.77	.4816	.8653	.4736
43	398.11	1278.3	51.000	3.252	37.34	.4522	.8111	.4439
43	398.11	1301.4	52.000	3.181	36.52	.4423	.7929	.4339
43	398.11	1322.3	53.000	3.076	35.32	.4277	.7660	.4192
43	398.11	1344.4	54.000	2.922	33.55	.4063	.7266	.3976
43	398.11	1366.5	55.000	2.736	31.41	.3804	.6789	.3715
43	398.11	1375.6	56.000	2.643	30.34	.3674	.6549	.3584
43	398.11	1379.0	57.000	2.637	30.28	.3666	.6535	.3576
43	398.11	1398.4	58.000	3.101	35.60	.4311	.7723	.4227
43	398.11	1410.5	59.000	2.824	32.43	.3927	.7015	.3839
43	398.11	1432.6	60.000	2.202	25.29	.3062	.5421	.2967
43	398.11	1443.6	61.000	1.850	21.24	.2572	.4517	.2472
43	421.49	1379.0	62.000	2.690	30.89	.3740	.6671	.3651
43	444.91	1343.1	63.000	2.845	32.67	.3956	.7069	.3869
43	444.91	1358.9	64.000	2.782	31.94	.3869	.6907	.3780

OH57,AEDC V41B-K3A, MODEL 92-0, LH WING LWR SURF (R4AL16)

RUN NUMBER	YO	XO	T/C NO	PN PSIA	PN/P	PN/PT2	CPN	CPN/MX
43	444.91	1375.6	65.000	2.641	30.45	.3672	.6573	.3597
43	444.91	1379.0	66.000	2.459	28.34	.3419	.6103	.3340
43	444.91	1398.4	67.000	2.875	33.14	.3997	.7174	.3926
43	444.91	1414.2	68.000	2.512	28.95	.3492	.6239	.3414
43	444.91	1430.0	69.000	2.116	24.39	.2943	.5222	.2858
43	456.63	1379.0	70.000	2.463	28.39	.3425	.6115	.3346
43	456.63	1398.4	71.000	2.690	31.00	.3740	.6697	.3665
43	456.63	1413.3	72.000	2.310	26.62	.3212	.5720	.3130
43	468.34	1379.0	73.000	1.697	19.57	.2360	.4144	.2268

OH57,AEDC V41B-K3A, MODEL 92-0, LH WING LWR SURF

L.H. WING LWR SURF

PARAMETRIC DATA

MACH = 8.000 PO = 850.0 RN/FT = 3.600 ELEVON = 5.000
BDFLAP = 22.50 SPDBRK = 49.30 RUDDER = .0000

TEST CONDITIONS

RUN NUMBER	ALPHA DEG.	BETA DEG.	PO PSIA	TO DEG. R	P PSIA	T DEG. R	Q PSIA	V FT/SEC	CPMAX	PT2 PSIA	RHO SLUGS /FT3	MU LB-SEC /FT2
42	40.06	.0000	847.4	1356.	.8680-01	98.26	3.889	3889.	1.827	7.193	.7406-04	.7907-07

RUN NUMBER	RN/FT /FT X 106
42	3.643

TEST DATA

RUN NUMBER	YO	XO	T/C NO	PN PSIA	PN/P	PN/PT2	CPN	CPN/MX
42	116.00	1379.0	1.0000	3.090	35.60	.4296	.7723	.4226
42	129.43	1379.0	2.0000	3.110	35.83	.4323	.7773	.4254
42	129.43	1398.4	3.0000	2.753	31.72	.3828	.6857	.3752
42	140.51	1379.0	4.0000	3.110	35.83	.4324	.7775	.4255
42	140.51	1398.4	5.0000	3.394	39.10	.4719	.8505	.4654
42	163.94	1379.0	6.0000	3.128	36.03	.4348	.7820	.4279
42	187.31	1190.4	7.0000	3.662	42.19	.5092	.9195	.5032
42	187.31	1240.7	8.0000	3.671	42.30	.5104	.9218	.5044
42	187.31	1290.9	9.0000	3.661	42.18	.5090	.9192	.5030
42	187.31	1341.2	10.000	3.463	39.89	.4814	.8681	.4751
42	187.31	1353.8	11.000	3.381	38.95	.4700	.8470	.4635
42	187.31	1375.6	12.000	3.259	37.54	.4530	.8157	.4464
42	187.31	1379.0	13.000	3.190	36.63	.4421	.7954	.4353
42	187.31	1398.4	14.000	3.786	43.62	.5264	.9513	.5206
42	187.31	1416.6	15.000	3.541	40.79	.4923	.8883	.4861
42	187.31	1441.7	16.000	3.072	35.39	.4271	.7676	.4201
42	187.31	1466.9	17.000	2.587	29.77	.3597	.6423	.3515
42	210.74	1379.0	18.000	3.260	37.51	.4532	.8150	.4460
42	234.17	1379.0	19.000	3.338	38.41	.4640	.8351	.4570
42	257.60	1379.0	20.000	3.478	40.02	.4835	.8711	.4767
42	281.03	1152.7	21.000	4.882	56.18	.6787	1.232	.6740

OH57,AEDC V41B-K3A, MODEL 92-0, LH WING LWR SURF (R4AL16)

RUN NUMBER	YO	XO	T/C NO	PN PSIA	PN/P	PN/PT2	CPN	CPN/MX
42	281.03	1188.6	22.000	4.364	50.22	.6067	1.099	.6012
42	281.03	1224.5	23.000	4.156	47.82	.5778	1.045	.5720
42	281.03	1260.3	24.000	4.111	47.31	.5715	1.034	.5657
42	281.03	1296.2	25.000	4.048	46.58	.5627	1.017	.5568
42	281.03	1332.0	26.000	3.912	45.02	.5438	.9825	.5377
42	281.03	1358.9	27.000	3.727	42.89	.5181	.9351	.5117
42	281.03	1375.6	28.000	3.588	41.29	.4988	.8993	.4922
42	281.03	1379.0	29.000	3.493	40.20	.4856	.8749	.4788
42	281.03	1398.4	30.000	4.161	47.89	.5785	1.047	.5727
42	281.03	1421.7	31.000	3.604	41.48	.5011	.9035	.4944
42	281.03	1439.6	32.000	3.193	36.75	.4440	.7980	.4367
42	281.03	1457.5	33.000	2.746	31.62	.3818	.6836	.3741
42	281.03	1466.5	34.000	2.514	28.95	.3495	.6239	.3414
42	292.74	1379.0	35.000	3.507	40.39	.4876	.8792	.4811
42	304.40	1379.0	36.000	3.608	41.55	.5017	.9052	.4953
42	304.40	1398.4	37.000	3.820	43.99	.5311	.9595	.5251
42	311.20	1379.0	38.000	3.594	41.39	.4997	.9015	.4933
42	320.80	1379.0	39.000	3.667	42.23	.5098	.9202	.5036
42	320.80	1398.4	40.000	3.814	43.92	.5302	.9580	.5242
42	320.80	1421.3	41.000	3.793	43.68	.5273	.9526	.5213
42	320.80	1444.2	42.000	3.361	38.70	.4672	.8414	.4605
42	327.83	1375.6	43.000	3.793	43.68	.5273	.9526	.5213
42	327.83	1379.0	44.000	3.709	42.71	.5157	.9310	.5095
42	327.83	1398.4	45.000	4.059	46.74	.5643	1.021	.5587
42	327.83	1421.3	46.000	3.699	42.60	.5143	.9285	.5081
42	327.83	1444.2	47.000	3.246	37.37	.4512	.8119	.4443
42	351.26	1379.0	48.000	3.837	44.19	.5335	.9640	.5275
42	374.69	1379.0	49.000	3.903	44.87	.5427	.9793	.5359
42	398.11	1256.2	50.000	4.686	53.87	.6515	1.180	.6459
42	398.11	1278.3	51.000	4.576	52.61	.6362	1.152	.6304
42	398.11	1301.4	52.000	4.548	52.28	.6322	1.145	.6264
42	398.11	1322.3	53.000	4.445	51.10	.6180	1.118	.6120
42	398.11	1344.4	54.000	4.331	49.79	.6021	1.089	.5959
42	398.11	1366.5	55.000	4.177	48.02	.5807	1.049	.5743
42	398.11	1375.6	56.000	4.069	46.78	.5657	1.022	.5592
42	398.11	1379.0	57.000	4.030	46.33	.5603	1.012	.5537
42	398.11	1398.4	58.000	4.604	52.93	.6400	1.159	.6343
42	398.11	1410.5	59.000	4.298	49.41	.5975	1.081	.5914
42	398.11	1432.6	60.000	3.550	40.82	.4936	.8888	.4864
42	398.11	1443.6	61.000	3.050	35.07	.4241	.7605	.4162
42	421.49	1379.0	62.000	4.113	47.28	.5718	1.033	.5654
42	444.91	1343.1	63.000	4.168	47.91	.5794	1.047	.5730
42	444.91	1358.9	64.000	4.124	47.41	.5733	1.036	.5669

OH57, AEDC V41B-K3A, MODEL 92-0 AERO HEATING PRESSURE DATA

OH57,AEDC V41B-K3A, MODEL 92-0, LH WING LWR SURF

RUN NUMBER	YO	XO	T/C NO	PN PSIA	PN/P	PN/PT2	CPN	CPN/MX
42	444.91	1375.6	65.000	3.963	45.66	.5510	.9970	.5456
42	444.91	1379.0	66.000	3.735	43.04	.5193	.9383	.5135
42	444.91	1398.4	67.000	4.314	49.71	.5998	1.087	.5950
42	444.91	1414.2	68.000	3.799	43.77	.5282	.9547	.5225
42	444.91	1430.0	69.000	3.235	37.27	.4498	.8097	.4431
42	456.63	1379.0	70.000	3.594	41.41	.4997	.9020	.4936
42	456.63	1398.4	71.000	3.961	45.64	.5507	.9963	.5452
42	456.63	1413.3	72.000	3.435	39.57	.4775	.8610	.4712
42	468.34	1379.0	73.000	2.247	25.89	.3124	.5555	.3040

OH57,AEDC V41B-K3A, MODEL 92-0, RH WING UPR SURF (R4AU03)

R.H. WING UPR SURF

PARAMETRIC DATA

MACH = 8.000 PO = 850.0 RN/FT = 3.600 ELEVON = -10.00
BDFLAP = -12.50 SPDBRK = 49.30 RUDDER = .0000

TEST CONDITIONS

RUN NUMBER	ALPHA DEG.	BETA DEG.	PO PSIA	TO DEG. R	P PSIA	T DEG. R	Q PSIA	V FT/SEC	CPMAX	PT2 PSIA	RHO SLUGS /FT3	MU LB-SEC /FT2
48	30.02	.0000	848.6	1355.	.8692-01	98.19	3.894	3887.	1.827	7.203	.7422-04	.7901-07

RUN NUMBER	RN/FT /FT X 106
48	3.652

TEST DATA

RUN NUMBER	YO	XO	T/C NO	PN PSIA	PN/P	PN/PT2	CPN	CPN/MX
48	115.43	1365.0	75.000	.3517-01	.4052	.4883-02	-.1328-01	-.7266-02
48	140.51	1365.0	76.000	.3508-01	.4041	.4871-02	-.1330-01	-.7278-02
48	140.51	1411.4	77.000	.3666-01	.4222	.5089-02	-.1290-01	-.7057-02
48	187.31	1365.0	80.000	.3502-01	.4034	.4861-02	-.1332-01	-.7288-02
48	187.31	1411.4	81.000	.3499-01	.4030	.4857-02	-.1333-01	-.7292-02
48	234.17	1365.0	82.000	.3518-01	.4052	.4884-02	-.1328-01	-.7266-02
48	234.17	1411.4	83.000	.3514-01	.4048	.4879-02	-.1329-01	-.7270-02
48	281.03	1365.0	85.000	.3535-01	.4072	.4907-02	-.1323-01	-.7241-02
48	281.03	1411.4	86.000	.3576-01	.4119	.4964-02	-.1313-01	-.7184-02
48	311.20	1365.0	89.000	.3542-01	.4080	.4918-02	-.1321-01	-.7231-02
48	327.83	1365.0	90.000	.3528-01	.4064	.4898-02	-.1325-01	-.7251-02
48	327.83	1411.4	91.000	.3604-01	.4151	.5003-02	-.1305-01	-.7144-02
48	327.83	1436.7	92.000	.3794-01	.4370	.5267-02	-.1257-01	-.6877-02
48	327.83	1459.4	93.000	.4131-01	.4759	.5735-02	-.1170-01	-.6402-02
48	374.69	1365.0	94.000	.4384-01	.5051	.6086-02	-.1105-01	-.6046-02
48	374.69	1411.4	95.000	.5802-01	.6684	.8055-02	-.7402-02	-.4051-02
48	398.11	1365.0	98.000	.5035-01	.5801	.6990-02	-.9372-02	-.5129-02
48	398.11	1411.4	99.000	.5524-01	.6365	.7669-02	-.8114-02	-.4440-02
48	421.49	1411.4	103.00	.5025-01	.5789	.6976-02	-.9399-02	-.5143-02
48	444.91	1365.0	104.00	.4820-01	.5553	.6691-02	-.9926-02	-.5432-02
48	456.29	1365.0	107.00	.4777-01	.5504	.6632-02	-.1004-01	-.5492-02

OH57, AEDC V41B-K3A, MODEL 92-0 AERO HEATING PRESSURE DATA

OH57,AEDC V41B-K3A, MODEL 92-0, RH WING UPR SURF

RUN NUMBER	YO	XO	T/C NO	PN PSIA	PN/P	PN/PT2	CPN	CPN/MX
48	456.29	1411.4	108.00	.5140-01	.5923	.7136-02	-.9101-02	-.4981-02
48	468.34	1379.0	74.000	.4882-01	.5625	.6778-02	-.9766-02	-.5344-02

R.H. WING UPR SURF

PARAMETRIC DATA

MACH = 8.000 PO = 850.0 RN/FT = 3.600 ELEVON = -10.00
BDFLAP = -12.50 SPDBRK = 49.30 RUDDER = .0000

TEST CONDITIONS

RUN NUMBER	ALPHA DEG.	BETA DEG.	PO PSIA	TO DEG. R	P PSIA	T DEG. R	Q PSIA	V FT/SEC	CPMAX	PT2 PSIA	RHO SLUGS /FT3	MU LB-SEC /FT2
50	34.99	.0000	849.6	1355.	.8703-01	98.19	3.899	3887.	1.827	7.212	.7431-04	.7901-07

RUN NUMBER	RN/FT /FT X 106
50	3.656

TEST DATA

RUN NUMBER	YO	XO	T/C NO	PN PSIA	PN/P	PN/PT2	CPN	CPN/MX
50	115.43	1365.0	75.000	.3806-01	.4378	.5277-02	-.1255-01	-.6867-02
50	140.51	1365.0	76.000	.3811-01	.4385	.5285-02	-.1253-01	-.6859-02
50	140.51	1411.4	77.000	.4045-01	.4654	.5609-02	-.1193-01	-.6531-02
50	187.31	1365.0	80.000	.3893-01	.4478	.5398-02	-.1233-01	-.6745-02
50	187.31	1411.4	81.000	.3897-01	.4483	.5404-02	-.1231-01	-.6739-02
50	234.17	1365.0	82.000	.3800-01	.4371	.5269-02	-.1256-01	-.6875-02
50	234.17	1411.4	83.000	.3847-01	.4426	.5335-02	-.1244-01	-.6809-02
50	281.03	1365.0	85.000	.3830-01	.4406	.5311-02	-.1249-01	-.6833-02
50	281.03	1411.4	86.000	.3826-01	.4401	.5305-02	-.1250-01	-.6839-02
50	311.20	1365.0	89.000	.3801-01	.4373	.5271-02	-.1256-01	-.6874-02
50	327.83	1365.0	90.000	.3735-01	.4297	.5179-02	-.1273-01	-.6967-02
50	327.83	1411.4	91.000	.3809-01	.4381	.5281-02	-.1254-01	-.6863-02
50	327.83	1436.7	92.000	.4093-01	.4709	.5676-02	-.1181-01	-.6463-02
50	327.83	1459.4	93.000	.4599-01	.5291	.6377-02	-.1051-01	-.5752-02
50	374.69	1365.0	94.000	.3877-01	.4467	.5377-02	-.1235-01	-.6759-02
50	374.69	1411.4	95.000	.4535-01	.5217	.6289-02	-.1068-01	-.5842-02
50	398.11	1365.0	98.000	.4394-01	.5054	.6093-02	-.1104-01	-.6041-02
50	398.11	1411.4	99.000	.4848-01	.5576	.6722-02	-.9876-02	-.5405-02
50	421.49	1411.4	103.00	.4407-01	.5069	.6111-02	-.1101-01	-.6024-02
50	444.91	1365.0	104.00	.4193-01	.4823	.5815-02	-.1156-01	-.6324-02
50	456.29	1365.0	107.00	.4216-01	.4850	.5847-02	-.1150-01	-.6291-02

OH57, AEDC V41B-K3A, MODEL 92-0 AERO HEATING PRESSURE DATA

OH57,AEDC V41B-K3A, MODEL 92-0, RH WING UPR SURF

RUN NUMBER	YO	XO	T/C NO	PN PSIA	PN/P	PN/PT2	CPN	CPN/MX
50	456.29	1411.4	108.00	.4418-01	.5081	.6126-02	-.1098-01	-.6008-02
50	468.34	1379.0	74.000	.4372-01	.5037	.6063-02	-.1108-01	-.6062-02

R.H. WING UPR SURF

PARAMETRIC DATA

MACH = 8.000 PO = 850.0 RN/FT = 3.600 ELEVON = -10.00
BDFLAP = -12.50 SPDBRK = 49.30 RUDDER = .0000

TEST CONDITIONS

RUN NUMBER	ALPHA DEG.	BETA DEG.	PO PSIA	TO DEG. R	P PSIA	T DEG. R	Q PSIA	V FT/SEC	CPMAX	PT2 PSIA	RHO SLUGS /FT3	MU LB-SEC /FT2
47	40.08	.0000	846.6	1353.	.8672-01	98.04	3.885	3884.	1.827	7.186	.7416-04	.7890-07

RUN NUMBER	RN/FT /FT X 106
47	3.651

TEST DATA

RUN NUMBER	YO	XO	T/C NO	PN PSIA	PN/P	PN/PT2	CPN	CPN/MX
47	115.43	1365.0	75.000	.3924-01	.4523	.5460-02	-.1223-01	-.6690-02
47	140.51	1365.0	76.000	.3907-01	.4503	.5437-02	-.1227-01	-.6714-02
47	140.51	1411.4	77.000	.4110-01	.4738	.5720-02	-.1175-01	-.6428-02
47	187.31	1365.0	80.000	.3916-01	.4514	.5450-02	-.1225-01	-.6701-02
47	187.31	1411.4	81.000	.3973-01	.4580	.5529-02	-.1210-01	-.6621-02
47	234.17	1365.0	82.000	.3918-01	.4516	.5452-02	-.1224-01	-.6699-02
47	234.17	1411.4	83.000	.3985-01	.4594	.5545-02	-.1207-01	-.6604-02
47	281.03	1365.0	85.000	.3782-01	.4359	.5263-02	-.1259-01	-.6890-02
47	281.03	1411.4	86.000	.3789-01	.4367	.5272-02	-.1257-01	-.6880-02
47	311.20	1365.0	89.000	.3829-01	.4414	.5329-02	-.1247-01	-.6823-02
47	327.83	1365.0	90.000	.3865-01	.4456	.5379-02	-.1238-01	-.6772-02
47	327.83	1411.4	91.000	.4055-01	.4675	.5643-02	-.1189-01	-.6505-02
47	327.83	1436.7	92.000	.4444-01	.5123	.6185-02	-.1089-01	-.5957-02
47	327.83	1459.4	93.000	.4767-01	.5495	.6634-02	-.1006-01	-.5503-02
47	374.69	1365.0	94.000	.3788-01	.4358	.5271-02	-.1259-01	-.6892-02
47	374.69	1411.4	95.000	.4387-01	.5057	.6104-02	-.1103-01	-.6039-02
47	398.11	1365.0	98.000	.3551-01	.4101	.4956-02	-.1317-01	-.7206-02
47	398.11	1411.4	99.000	.4033-01	.4644	.5612-02	-.1196-01	-.6543-02
47	421.49	1411.4	103.00	.3676-01	.4233	.5115-02	-.1287-01	-.7045-02
47	444.91	1365.0	104.00	.3329-01	.3833	.4632-02	-.1377-01	-.7533-02
47	456.29	1365.0	107.00	.3410-01	.3927	.4746-02	-.1356-01	-.7418-02

OH57, AEDC V41B-K3A, MODEL 92-0 AERO HEATING PRESSURE DATA

OH57,AEDC V41B-K3A, MODEL 92-0, RH WING UPR SURF

RUN NUMBER	YO	XO	T/C NO	PN PSIA	PN/P	PN/PT2	CPN	CPN/MX
47	456.29	1411.4	108.00	.3441-01	.3962	.4788-02	-.1348-01	-.7376-02
47	468.34	1379.0	74.000	.4420-01	.5086	.6151-02	-.1097-01	-.6003-02

OH57,AEDC V41B-K3A, MODEL 92-0, RH WING UPR SURF (R4AU03)

R.H. WING UPR SURF

PARAMETRIC DATA

MACH = 8.000 PO = 850.0 RN/FT = 3.600 ELEVON = -10.00
BDFLAP = -12.50 SPDBRK = 49.30 RUDDER = .0000

TEST CONDITIONS

RUN NUMBER	ALPHA DEG.	BETA DEG.	PO PSIA	TO DEG. R	P PSIA	T DEG. R	Q PSIA	V FT/SEC	CPMAX	PT2 PSIA	RHO SLUGS /FT3	MU LB-SEC /FT2
49	44.02	.0000	848.1	1355.	.8687-01	98.19	3.892	3887.	1.827	7.199	.7418-04	.7901-07

RUN NUMBER	RN/FT /FT X 106
49	3.650

TEST DATA

RUN NUMBER	YO	XO	T/C NO	PN PSIA	PN/P	PN/PT2	CPN	CPN/MX
49	115.43	1365.0	75.000	.4312-01	.4970	.5990-02	-.1123-01	-.6145-02
49	140.51	1365.0	76.000	.4291-01	.4945	.5960-02	-.1128-01	-.6175-02
49	140.51	1411.4	77.000	.4433-01	.5109	.6158-02	-.1092-01	-.5975-02
49	187.31	1365.0	80.000	.4239-01	.4885	.5888-02	-.1142-01	-.6248-02
49	187.31	1411.4	81.000	.4253-01	.4902	.5908-02	-.1138-01	-.6228-02
49	234.17	1365.0	82.000	.4168-01	.4803	.5790-02	-.1160-01	-.6348-02
49	234.17	1411.4	83.000	.4206-01	.4848	.5843-02	-.1150-01	-.6294-02
49	281.03	1365.0	85.000	.4101-01	.4726	.5697-02	-.1177-01	-.6442-02
49	281.03	1411.4	86.000	.4100-01	.4725	.5695-02	-.1178-01	-.6444-02
49	311.20	1365.0	89.000	.4130-01	.4760	.5737-02	-.1170-01	-.6401-02
49	327.83	1365.0	90.000	.4140-01	.4772	.5751-02	-.1167-01	-.6387-02
49	327.83	1411.4	91.000	.3965-01	.4569	.5508-02	-.1212-01	-.6633-02
49	327.83	1436.7	92.000	.4649-01	.5358	.6458-02	-.1036-01	-.5671-02
49	327.83	1459.4	93.000	.5303-01	.6112	.7367-02	-.8679-02	-.4750-02
49	374.69	1365.0	94.000	.4135-01	.4764	.5744-02	-.1169-01	-.6395-02
49	374.69	1411.4	95.000	.4184-01	.4822	.5812-02	-.1156-01	-.6325-02
49	398.11	1365.0	98.000	.4090-01	.4714	.5681-02	-.1180-01	-.6457-02
49	398.11	1411.4	99.000	.4069-01	.4690	.5653-02	-.1185-01	-.6487-02
49	421.49	1411.4	103.00	.4010-01	.4621	.5570-02	-.1201-01	-.6570-02
49	444.91	1365.0	104.00	.3957-01	.4560	.5497-02	-.1214-01	-.6645-02
49	456.29	1365.0	107.00	.3985-01	.4593	.5536-02	-.1207-01	-.6605-02

OH57, AEDC V41B-K3A, MODEL 92-0 AERO HEATING PRESSURE DATA

OH57,AEDC V41B-K3A, MODEL 92-0, RH WING UPR SURF

RUN NUMBER	YO	XO	T/C NO	PN PSIA	PN/P	PN/PT2	CPN	CPN/MX
49	456.29	1411.4	108.00	.3870-01	.4460	.5376-02	-.1237-01	-.6767-02
49	468.34	1379.0	74.000	.4586-01	.5285	.6371-02	-.1052-01	-.5760-02

OH57,AEDC V41B-K3A, MODEL 92-0, RH WING UPR SURF (R4AU04)

R.H. WING UPR SURF

PARAMETRIC DATA

MACH = 8.000 PO = 850.0 RN/FT = 3.600 ELEVON = -10.00
BDFLAP = .0000 SPDBRK = .0000 RUDDER = .0000

TEST CONDITIONS

RUN NUMBER	ALPHA DEG.	BETA DEG.	PO PSIA	TO DEG. R	P PSIA	T DEG. R	Q PSIA	V FT/SEC	CPMAX	PT2 PSIA	RHO SLUGS /FT3	MU LB-SEC /FT2
6	29.99	.0000	851.5	1350.	.8721-01	97.83	3.907	3880.	1.827	7.227	.7474-04	.7872-07

RUN NUMBER	RN/FT /FT X 106
6	3.684

TEST DATA

RUN NUMBER	YO	XO	T/C NO	PN PSIA	PN/P	PN/PT2	CPN	CPN/MX
6	115.43	1365.0	75.000	.3414-01	.3914	.4723-02	-.1358-01	-.7434-02
6	140.51	1365.0	76.000	.3393-01	.3889	.4696-02	-.1364-01	-.7465-02
6	140.51	1410.0	77.000	.3349-01	.3839	.4634-02	-.1375-01	-.7525-02
6	140.51	1455.1	78.000	.3359-01	.3852	.4648-02	-.1372-01	-.7510-02
6	140.51	1481.2	79.000	.3516-01	.4031	.4865-02	-.1332-01	-.7292-02
6	187.31	1365.0	80.000	.3428-01	.3933	.4743-02	-.1354-01	-.7411-02
6	187.31	1410.0	81.000	.3373-01	.3868	.4668-02	-.1369-01	-.7490-02
6	234.17	1365.0	82.000	.3458-01	.3962	.4784-02	-.1348-01	-.7375-02
6	234.17	1410.0	83.000	.3415-01	.3915	.4725-02	-.1358-01	-.7432-02
6	234.17	1437.4	84.000	.3756-01	.4304	.5197-02	-.1271-01	-.6958-02
6	281.03	1365.0	85.000	.3459-01	.3965	.4786-02	-.1347-01	-.7372-02
6	281.03	1410.0	86.000	.3519-01	.4035	.4869-02	-.1331-01	-.7286-02
6	281.03	1439.6	87.000	.3511-01	.4025	.4858-02	-.1334-01	-.7299-02
6	281.03	1466.5	88.000	.3507-01	.4024	.4853-02	-.1334-01	-.7300-02
6	311.20	1365.0	89.000	.3503-01	.4017	.4847-02	-.1335-01	-.7308-02
6	327.83	1365.0	90.000	.3523-01	.4037	.4875-02	-.1331-01	-.7284-02
6	327.83	1410.0	91.000	.1881	2.157	.2603-01	.2582-01	.1413-01
6	327.83	1436.7	92.000	.5768-01	.6610	.7981-02	-.7566-02	-.4141-02
6	327.83	1459.4	93.000	.6280-01	.7199	.8689-02	-.6253-02	-.3422-02
6	374.69	1365.0	94.000	.4945-01	.5671	.6843-02	-.9663-02	-.5288-02
6	374.69	1410.0	95.000	.4645-01	.5325	.6427-02	-.1044-01	-.5711-02

OH57,AEDC V41B-K3A, MODEL 92-0, RH WING UPR SURF

RUN NUMBER	YO	XO	T/C NO	PN PSIA	PN/P	PN/PT2	CPN	CPN/MX
6	374.69	1433.9	96.000	.4869-01	.5587	.6737-02	-.9851-02	-.5391-02
6	374.69	1452.6	97.000	.1154	1.324	.1597-01	.7223-02	.3953-02
6	398.11	1365.0	98.000	.5266-01	.6035	.7287-02	-.8851-02	-.4844-02
6	398.11	1410.0	99.000	.3479-01	.3989	.4814-02	-.1342-01	-.7343-02
6	398.11	1432.7	100.00	.3631-01	.4161	.5024-02	-.1303-01	-.7132-02
6	398.11	1449.1	101.00	.4032-01	.4622	.5578-02	-.1201-01	-.6570-02
6	421.49	1365.0	102.00	.4338-01	.4975	.6002-02	-.1122-01	-.6139-02
6	421.49	1410.0	103.00	.5163-01	.5919	.7144-02	-.9110-02	-.4985-02
6	444.91	1365.0	104.00	.5546-01	.6363	.7674-02	-.8118-02	-.4442-02
6	444.91	1410.0	105.00	.7288-01	.8358	.1008-01	-.3666-02	-.2006-02
6	444.91	1437.9	106.00	.5065-01	.5804	.7008-02	-.9366-02	-.5125-02
6	456.29	1365.0	107.00	.4779-01	.5479	.6612-02	-.1009-01	-.5522-02
6	456.29	1425.7	109.00	.5412-01	.6204	.7488-02	-.8473-02	-.4637-02
6	456.29	1438.1	110.00	.5264-01	.6036	.7283-02	-.8848-02	-.4842-02
6	468.34	1379.0	74.000	.2119	2.428	.2932-01	.3188-01	.1745-01

OH57,AEDC V41B-K3A, MODEL 92-0, RH WING UPR SURF (R4AU04)

R.H. WING UPR SURF

PARAMETRIC DATA

MACH = 8.000 PO = 850.0 RN/FT = 3.600 ELEVON = -10.00
BDFLAP = .0000 SPDBRK = .0000 RUDDER = .0000

TEST CONDITIONS

RUN NUMBER	ALPHA DEG.	BETA DEG.	PO PSIA	TO DEG. R	P PSIA	T DEG. R	Q PSIA	V FT/SEC	CPMAX	PT2 PSIA	RHO SLUGS /FT3	MU LB-SEC /FT2
7	39.99	.0000	850.7	1350.	.8714-01	97.83	3.904	3880.	1.827	7.221	.7468-04	.7872-07

RUN NUMBER	RN/FT /FT X 106
7	3.681

TEST DATA

RUN NUMBER	YO	XO	T/C NO	PN PSIA	PN/P	PN/PT2	CPN	CPN/MX
7	115.43	1365.0	75.000	.3916-01	.4493	.5423-02	-.1229-01	-.6726-02
7	140.51	1365.0	76.000	.3912-01	.4488	.5417-02	-.1230-01	-.6733-02
7	140.51	1410.0	77.000	.3831-01	.4395	.5306-02	-.1251-01	-.6847-02
7	140.51	1455.1	78.000	.3725-01	.4272	.5158-02	-.1278-01	-.6996-02
7	140.51	1481.2	79.000	.3638-01	.4172	.5039-02	-.1301-01	-.7119-02
7	187.31	1365.0	80.000	.3942-01	.4519	.5459-02	-.1223-01	-.6695-02
7	187.31	1410.0	81.000	.3869-01	.4444	.5359-02	-.1240-01	-.6787-02
7	234.17	1365.0	82.000	.3962-01	.4544	.5487-02	-.1218-01	-.6664-02
7	234.17	1410.0	83.000	.3882-01	.4455	.5376-02	-.1238-01	-.6774-02
7	234.17	1437.4	84.000	.4024-01	.4617	.5573-02	-.1202-01	-.6576-02
7	281.03	1365.0	85.000	.3828-01	.4390	.5301-02	-.1252-01	-.6852-02
7	281.03	1410.0	86.000	.3848-01	.4413	.5329-02	-.1247-01	-.6824-02
7	281.03	1439.6	87.000	.3892-01	.4462	.5390-02	-.1236-01	-.6764-02
7	281.03	1466.5	88.000	.3964-01	.4545	.5490-02	-.1218-01	-.6664-02
7	311.20	1365.0	89.000	.3878-01	.4453	.5370-02	-.1238-01	-.6776-02
7	327.83	1365.0	90.000	.3942-01	.4521	.5459-02	-.1223-01	-.6692-02
7	327.83	1410.0	91.000	.5256-01	.6031	.7278-02	-.8859-02	-.4848-02
7	327.83	1436.7	92.000	.4092-01	.4695	.5667-02	-.1184-01	-.6481-02
7	327.83	1459.4	93.000	.5178-01	.5939	.7170-02	-.9065-02	-.4961-02
7	374.69	1365.0	94.000	.3454-01	.3962	.4784-02	-.1348-01	-.7375-02
7	374.69	1410.0	95.000	.3185-01	.3652	.4411-02	-.1417-01	-.7754-02

OH57,AEDC V41B-K3A, MODEL 92-0, RH WING UPR SURF (R4AU04)

RUN NUMBER	YO	XO	T/C NO	PN PSIA	PN/P	PN/PT2	CPN	CPN/MX
7	374.69	1433.9	96.000	.3393-01	.3890	.4698-02	-.1364-01	-.7464-02
7	374.69	1452.6	97.000	.1855	2.130	.2569-01	.2523-01	.1381-01
7	398.11	1365.0	98.000	.3878-01	.4448	.5370-02	-.1239-01	-.6782-02
7	398.11	1410.0	99.000	.4080-01	.4682	.5650-02	-.1187-01	-.6497-02
7	398.11	1432.7	100.00	.4380-01	.5025	.6066-02	-.1110-01	-.6077-02
7	398.11	1449.1	101.00	.4839-01	.5550	.6701-02	-.9933-02	-.5436-02
7	421.49	1365.0	102.00	.3833-01	.4397	.5308-02	-.1251-01	-.6844-02
7	421.49	1410.0	103.00	.4152-01	.4760	.5749-02	-.1170-01	-.6400-02
7	444.91	1365.0	104.00	.4432-01	.5081	.6138-02	-.1098-01	-.6008-02
7	444.91	1410.0	105.00	.4809-01	.5522	.6659-02	-.9995-02	-.5470-02
7	444.91	1437.9	106.00	.3585-01	.4112	.4965-02	-.1314-01	-.7192-02
7	456.29	1365.0	107.00	.3372-01	.3869	.4669-02	-.1368-01	-.7489-02
7	456.29	1425.7	109.00	.3791-01	.4348	.5249-02	-.1262-01	-.6904-02
7	456.29	1438.1	110.00	.3875-01	.4444	.5366-02	-.1240-01	-.6786-02
7	468.34	1379.0	74.000	.1729	1.983	.2394-01	.2195-01	.1201-01

OH57,AEDC V41B-K3A, MODEL 92-0, RH WING UPR SURF (R4AU05)

R.H. WING UPR SURF

PARAMETRIC DATA

MACH = 7.940 PO = 210.0 RN/FT = 1.000 ELEVON = .0000
BDFLAP = -12.50 SPDBRK = 49.30 RUDDER = .0000

TEST CONDITIONS

RUN NUMBER	ALPHA DEG.	BETA DEG.	PO PSIA	TO DEG. R	P PSIA	T DEG. R	Q PSIA	V FT/SEC	CPMAX	PT2 PSIA	RHO SLUGS /FT3	MU LB-SEC /FT2
21	44.01	.0000	209.7	1258.	.2255-01	92.44	.9953	3744.	1.827	1.841	.2046-04	.7439-07

RUN NUMBER	RN/FT /FT X 106
21	1.030

TEST DATA

RUN NUMBER	YO	XO	T/C NO	PN PSIA	PN/P	PN/PT2	CPN	CPN/MX
21	115.43	1365.0	75.000	1.114	49.66	.6048	1.103	.6035
21	140.51	1365.0	76.000	1.056	47.11	.5738	1.045	.5718
21	140.51	1411.4	77.000	.9966	44.44	.5413	.9844	.5387
21	187.31	1365.0	80.000	.8333	37.16	.4526	.8193	.4484
21	187.31	1411.4	81.000	.7177	32.00	.3898	.7025	.3845
21	234.17	1365.0	82.000	1.020	45.50	.5542	1.008	.5519
21	234.17	1411.4	83.000	.8625	38.46	.4685	.8489	.4646
21	281.03	1355.0	85.000	.7601	33.89	.4128	.7454	.4079
21	281.03	1411.4	86.000	.6758	30.13	.3670	.6602	.3613

R.H. WING UPR SURF

PARAMETRIC DATA

MACH = 8.000 PO = 850.0 RN/FT = 3.600 ELEVON = .0000
BDFLAP = -12.50 SPDBRK = 49.30 RUDDER = .0000

TEST CONDITIONS

RUN NUMBER	ALPHA DEG.	BETA DEG.	PO PSIA	TO DEG. R	P PSIA	T DEG. R	Q PSIA	V FT/SEC	CPMAX	PT2 PSIA	RHO SLUGS /FT3	MU LB-SEC /FT2
23	30.03	.0000	847.6	1350.	.8682-01	97.83	3.889	3880.	1.827	7.194	.7440-04	.7872-07

RUN NUMBER	RN/FT /FT X 106
23	3.668

TEST DATA

RUN NUMBER	YO	XO	T/C NO	PN PSIA	PN/P	PN/PT2	CPN	CPN/MX
23	115.43	1365.0	75.000	.3496-01	.4021	.4860-02	-.1335-01	-.7304-02
23	140.51	1365.0	76.000	.3504-01	.4030	.4871-02	-.1333-01	-.7293-02
23	140.51	1411.4	77.000	.3627-01	.4172	.5042-02	-.1301-01	-.7119-02
23	187.31	1365.0	80.000	.3522-01	.4051	.4896-02	-.1328-01	-.7267-02
23	187.31	1411.4	81.000	.3479-01	.4002	.4837-02	-.1339-01	-.7327-02
23	234.17	1365.0	82.000	.3491-01	.4015	.4852-02	-.1336-01	-.7311-02
23	234.17	1411.4	83.000	.3494-01	.4018	.4856-02	-.1335-01	-.7307-02
23	281.03	1365.0	85.000	.3507-01	.4033	.4874-02	-.1332-01	-.7289-02
23	281.03	1411.4	86.000	.3538-01	.4069	.4918-02	-.1324-01	-.7245-02
23	311.20	1365.0	89.000	.3528-01	.4057	.4903-02	-.1327-01	-.7259-02
23	327.83	1365.0	90.000	.3447-01	.3964	.4791-02	-.1347-01	-.7373-02
23	327.83	1411.4	91.000	.3529-01	.4059	.4906-02	-.1326-01	-.7257-02
23	327.83	1436.7	92.000	.3874-01	.4455	.5384-02	-.1238-01	-.6773-02
23	327.83	1459.4	93.000	.4721-01	.5429	.6562-02	-.1020-01	-.5583-02
23	374.69	1365.0	94.000	.3951-01	.4546	.5492-02	-.1217-01	-.6662-02
23	374.69	1411.4	95.000	.4601-01	.5294	.6396-02	-.1050-01	-.5748-02
23	398.11	1365.0	98.000	.4712-01	.5415	.6550-02	-.1023-01	-.5601-02
23	398.11	1411.4	99.000	.4906-01	.5637	.6819-02	-.9738-02	-.5329-02
23	421.49	1411.4	103.00	.4646-01	.5340	.6459-02	-.1040-01	-.5693-02
23	444.91	1365.0	104.00	.4404-01	.5061	.6121-02	-.1103-01	-.6034-02
23	456.29	1365.0	107.00	.4296-01	.4937	.5972-02	-.1130-01	-.6184-02

OH57,AEDC V41B-K3A, MODEL 92-0, RH WING UPR SURF (R4AU06)

RUN NUMBER	YO	XO	T/C NO	PN PSIA	PN/P	PN/PT2	CPN	CPN/MX
23	456.29	1411.4	108.00	.4678-01	.5375	.6502-02	-.1032-01	-.5649-02
23	468.34	1379.0	74.000	.3781-01	.4351	.5256-02	-.1261-01	-.6901-02

R.H. WING UPR SURF

PARAMETRIC DATA

MACH = 8.000 PO = 850.0 RN/FT = 3.600 ELEVON = .0000
BDFLAP = -12.50 SPDBRK = 49.30 RUDDER = .0000

TEST CONDITIONS

RUN NUMBER	ALPHA DEG.	BETA DEG.	PO PSIA	TO DEG. R	P PSIA	T DEG. R	Q PSIA	V FT/SEC	CPMAX	PT2 PSIA	RHO SLUGS /FT3	MU LB-SEC /FT2
22	40.12	.0000	848.6	1348.	.8692-01	97.68	3.894	3877.	1.827	7.202	.7460-04	.7860-07

RUN NUMBER	RN/FT /FT X 106
22	3.680

TEST DATA

RUN NUMBER	YO	XO	T/C NO	PN PSIA	PN/P	PN/PT2	CPN	CPN/MX
22	115.43	1365.0	75.000	.3903-01	.4493	.5419-02	-.1229-01	-.6727-02
22	140.51	1365.0	76.000	.3947-01	.4543	.5479-02	-.1218-01	-.6666-02
22	140.51	1411.4	77.000	.4018-01	.4625	.5578-02	-.1200-01	-.6566-02
22	187.31	1365.0	80.000	.3946-01	.4542	.5478-02	-.1218-01	-.6667-02
22	187.31	1411.4	81.000	.3846-01	.4427	.5340-02	-.1244-01	-.6807-02
22	234.17	1365.0	82.000	.3889-01	.4477	.5400-02	-.1233-01	-.6747-02
22	234.17	1411.4	83.000	.3859-01	.4442	.5358-02	-.1241-01	-.6789-02
22	281.03	1365.0	85.000	.3833-01	.4412	.5322-02	-.1247-01	-.6826-02
22	281.03	1411.4	86.000	.3763-01	.4332	.5225-02	-.1265-01	-.6924-02
22	311.20	1365.0	89.000	.3769-01	.4338	.5233-02	-.1264-01	-.6916-02
22	327.83	1365.0	90.000	.3836-01	.4416	.5326-02	-.1246-01	-.6821-02
22	327.83	1411.4	91.000	.3947-01	.4543	.5480-02	-.1218-01	-.6666-02
22	327.83	1436.7	92.000	.4391-01	.5055	.6097-02	-.1104-01	-.6041-02
22	327.83	1459.4	93.000	.4681-01	.5388	.6499-02	-.1030-01	-.5634-02
22	374.69	1365.0	94.000	.3875-01	.4459	.5380-02	-.1237-01	-.6768-02
22	374.69	1411.4	95.000	.4129-01	.4752	.5733-02	-.1171-01	-.6410-02
22	398.11	1365.0	98.000	.3695-01	.4251	.5130-02	-.1283-01	-.7022-02
22	398.11	1411.4	99.000	.3961-01	.4558	.5499-02	-.1215-01	-.6648-02
22	421.49	1411.4	103.00	.3621-01	.4166	.5027-02	-.1302-01	-.7126-02
22	444.91	1365.0	104.00	.3451-01	.3971	.4792-02	-.1346-01	-.7364-02
22	456.29	1365.0	107.00	.3476-01	.3999	.4826-02	-.1339-01	-.7330-02

OH57,AEDC V41B-K3A, MODEL 92-0, RH WING UPR SURF (R4AU06)

RUN NUMBER	YO	XO	T/C NO	PN PSIA	PN/P	PN/PT2	CPN	CPN/MX
22	456.29	1411.4	108.00	.3831-01	.4408	.5319-02	-.1248-01	-.6830-02
22	468.34	1379.0	74.000	.3691-01	.4248	.5125-02	-.1284-01	-.7027-02

R.H. WING UPR SURF

PARAMETRIC DATA

MACH = 8.000 PO = 850.0 RN/FT = 3.600 ELEVON = .0000
BDFLAP = -12.50 SPDBRK = 49.30 RUDDER = .0000

TEST CONDITIONS

RUN NUMBER	ALPHA DEG.	BETA DEG.	PO PSIA	TO DEG. R	P PSIA	T DEG. R	Q PSIA	V FT/SEC	CPMAX	PT2 PSIA	RHO SLUGS /FT3	MU LB-SEC /FT2
24	44.10	.0000	848.4	1350.	.8690-01	97.83	3.893	3880.	1.827	7.201	.7447-04	.7872-07

RUN NUMBER	RN/FT /FT X 106
24	3.671

TEST DATA

RUN NUMBER	YO	XO	T/C NO	PN PSIA	PN/P	PN/PT2	CPN	CPN/MX
24	115.43	1365.0	75.000	.4142-01	.4768	.5752-02	-.1168-01	-.6391-02
24	140.51	1365.0	76.000	.4182-01	.4814	.5808-02	-.1158-01	-.6335-02
24	140.51	1411.4	77.000	.4327-01	.4980	.6008-02	-.1121-01	-.6132-02
24	187.31	1365.0	80.000	.4182-01	.4814	.5808-02	-.1158-01	-.6335-02
24	187.31	1411.4	81.000	.4177-01	.4808	.5801-02	-.1159-01	-.6342-02
24	234.17	1365.0	82.000	.4120-01	.4742	.5721-02	-.1174-01	-.6423-02
24	234.17	1411.4	83.000	.4153-01	.4780	.5767-02	-.1165-01	-.6377-02
24	281.03	1365.0	85.000	.4015-01	.4621	.5575-02	-.1201-01	-.6571-02
24	281.03	1411.4	86.000	.4021-01	.4629	.5584-02	-.1199-01	-.6561-02
24	311.20	1365.0	89.000	.3961-01	.4560	.5501-02	-.1214-01	-.6645-02
24	327.83	1365.0	90.000	.4025-01	.4633	.5590-02	-.1198-01	-.6556-02
24	327.83	1411.4	91.000	.4125-01	.4749	.5729-02	-.1172-01	-.6415-02
24	327.83	1436.7	92.000	.4626-01	.5325	.6425-02	-.1043-01	-.5710-02
24	327.83	1459.4	93.000	.4629-01	.5328	.6428-02	-.1043-01	-.5707-02
24	374.69	1365.0	94.000	.4137-01	.4755	.5745-02	-.1171-01	-.6407-02
24	374.69	1411.4	95.000	.4337-01	.4986	.6023-02	-.1119-01	-.6125-02
24	398.11	1365.0	98.000	.4058-01	.4681	.5649-02	-.1187-01	-.6498-02
24	398.11	1411.4	99.000	.4211-01	.4845	.5848-02	-.1151-01	-.6297-02
24	421.49	1411.4	103.00	.3952-01	.4547	.5488-02	-.1217-01	-.6661-02
24	444.91	1365.0	104.00	.3971-01	.4569	.5514-02	-.1212-01	-.6634-02
24	456.29	1365.0	107.00	.4005-01	.4608	.5562-02	-.1204-01	-.6586-02

OH57,AEDC V41B-K3A, MODEL 92-0, RH WING UPR SURF (R4AU06)

RUN NUMBER	YO	XO	T/C NO	PN PSIA	PN/P	PN/PT2	CPN	CPN/MX
24	456.29	1411.4	108.00	.4119-01	.4740	.5721-02	-.1174-01	-.6425-02
24	468.34	1379.0	74.000	.4040-01	.4644	.5610-02	-.1196-01	-.6543-02

R.H. WING UPR SURF

PARAMETRIC DATA

MACH = 8.000 PO = 850.0 RN/FT = 3.600 ELEVON = .0000
BDFLAP = .0000 SPDBRK = 49.30 RUDDER = .0000

TEST CONDITIONS

RUN NUMBER	ALPHA DEG.	BETA DEG.	PO PSIA	TO DEG. R	P PSIA	T DEG. R	Q PSIA	V FT/SEC	CPMAX	PT2 PSIA	RHO SLUGS /FT3	MU LB-SEC /FT2
10	30.00	.0000	848.7	1355.	.8693-01	98.19	3.894	3887.	1.827	7.203	.7422-04	.7901-07

RUN NUMBER	RN/FT /FT X 106
10	3.652

TEST DATA

RUN NUMBER	YO	XO	T/C NO	PN PSIA	PN/P	PN/PT2	CPN	CPN/MX
10	115.43	1365.0	75.000	.3474-01	.3999	.4823-02	-.1339-01	-.7330-02
10	140.51	1365.0	76.000	.3475-01	.4000	.4824-02	-.1339-01	-.7329-02
10	140.51	1411.4	77.000	.3614-01	.4160	.5017-02	-.1304-01	-.7133-02
10	187.31	1365.0	80.000	.3422-01	.3939	.4750-02	-.1353-01	-.7404-02
10	187.31	1411.4	81.000	.3476-01	.4002	.4826-02	-.1339-01	-.7327-02
10	234.17	1365.0	82.000	.3514-01	.4045	.4878-02	-.1329-01	-.7274-02
10	234.17	1411.4	83.000	.3539-01	.4074	.4913-02	-.1323-01	-.7238-02
10	281.03	1365.0	85.000	.3475-01	.4000	.4824-02	-.1339-01	-.7329-02
10	281.03	1411.4	86.000	.3519-01	.4051	.4885-02	-.1328-01	-.7267-02
10	311.20	1365.0	89.000	.3486-01	.4013	.4840-02	-.1336-01	-.7313-02
10	327.83	1365.0	90.000	.3423-01	.3941	.4753-02	-.1352-01	-.7401-02
10	327.83	1411.4	91.000	.3497-01	.4026	.4855-02	-.1333-01	-.7297-02
10	327.83	1436.7	92.000	.3792-01	.4366	.5265-02	-.1258-01	-.6882-02
10	327.83	1459.4	93.000	.4542-01	.5229	.6306-02	-.1065-01	-.5828-02
10	374.69	1365.0	94.000	.3836-01	.4416	.5326-02	-.1246-01	-.6821-02
10	374.69	1411.4	95.000	.4677-01	.5384	.6493-02	-.1030-01	-.5638-02
10	398.11	1365.0	98.000	.4634-01	.5331	.6433-02	-.1042-01	-.5704-02
10	398.11	1411.4	99.000	.4860-01	.5591	.6747-02	-.9842-02	-.5386-02
10	421.49	1411.4	103.00	.4447-01	.5116	.6174-02	-.1090-01	-.5966-02
10	444.91	1365.0	104.00	.4358-01	.5014	.6051-02	-.1113-01	-.6091-02
10	456.29	1365.0	107.00	.4258-01	.4898	.5911-02	-.1139-01	-.6232-02

OH57,AEDC V41B-K3A, MODEL 92-0, RH WING UPR SURF (R4AU07)

RUN NUMBER	YO	XO	T/C NO	PN PSIA	PN/P	PN/PT2	CPN	CPN/MX
10	456.29	1411.4	108.00	.4662-01	.5363	.6472-02	-.1035-01	-.5665-02
10	468.34	1379.0	74.000	.8942	10.29	.1241	.2074	.1135

0H57,AEDC V41B-K3A, MODEL 92-0, RH WING UPR SURF

R.H. WING UPR SURF

PARAMETRIC DATA

MACH = 8.000 PO = 850.0 RN/FT = 3.600 ELEVON = .0000
BDFLAP = .0000 SPDBRK = 49.30 RUDDER = .0000

TEST CONDITIONS

RUN NUMBER	ALPHA DEG.	BETA DEG.	PO PSIA	TO DEG. R	P PSIA	T DEG. R	Q PSIA	V FT/SEC	CPMAX	PT2 PSIA	RHO SLUGS /FT3	MU LB-SEC /FT2
11	35.09	.0000	847.5	1354.	.8681-01	98.12	3.889	3886.	1.827	7.193	.7417-04	.7895-07

RUN NUMBER	RN/FT /FT X 106
11	3.651

TEST DATA

RUN NUMBER	YO	XO	T/C NO	PN PSIA	PN/P	PN/PT2	CPN	CPN/MX
11	115.43	1365.0	75.000	.3763-01	.4328	.5231-02	-.1266-01	-.6928-02
11	140.51	1365.0	76.000	.3784-01	.4353	.5261-02	-.1261-01	-.6898-02
11	140.51	1411.4	77.000	.4013-01	.4616	.5579-02	-.1202-01	-.6577-02
11	187.31	1365.0	80.000	.3766-01	.4332	.5236-02	-.1265-01	-.6924-02
11	187.31	1411.4	81.000	.3895-01	.4481	.5415-02	-.1232-01	-.6742-02
11	234.17	1365.0	82.000	.3849-01	.4427	.5350-02	-.1244-01	-.6808-02
11	234.17	1411.4	83.000	.3964-01	.4560	.5511-02	-.1214-01	-.6645-02
11	281.03	1365.0	85.000	.3823-01	.4398	.5315-02	-.1251-01	-.6843-02
11	281.03	1411.4	86.000	.3843-01	.4420	.5342-02	-.1246-01	-.6816-02
11	311.20	1365.0	89.000	.3715-01	.4274	.5165-02	-.1278-01	-.6995-02
11	327.83	1365.0	90.000	.3721-01	.4280	.5173-02	-.1277-01	-.6987-02
11	327.83	1411.4	91.000	.3825-01	.4399	.5317-02	-.1250-01	-.6841-02
11	327.83	1436.7	92.000	.4127-01	.4747	.5738-02	-.1172-01	-.6416-02
11	327.83	1459.4	93.000	.4728-01	.5439	.6573-02	-.1018-01	-.5572-02
11	374.69	1365.0	94.000	.3777-01	.4344	.5251-02	-.1262-01	-.6908-02
11	374.69	1411.4	95.000	.4169-01	.4795	.5796-02	-.1162-01	-.6358-02
11	398.11	1365.0	98.000	.4174-01	.4806	.5803-02	-.1159-01	-.6344-02
11	398.11	1411.4	99.000	.4257-01	.4902	.5919-02	-.1138-01	-.6228-02
11	421.49	1411.4	103.00	.3983-01	.4585	.5537-02	-.1209-01	-.6614-02
11	444.91	1365.0	104.00	.3905-01	.4496	.5429-02	-.1228-01	-.6723-02
11	456.29	1365.0	107.00	.3827-01	.4406	.5320-02	-.1249-01	-.6833-02

OH57,AEDC V41B-K3A, MODEL 92-0, RH WING UPR SURF (R4AU07)

RUN NUMBER	YO	XO	T/C NO	PN PSIA	PN/P	PN/PT2	CPN	CPN/MX
11	456.29	1411.4	108.00	.4164-01	.4794	.5789-02	-.1162-01	-.6359-02
11	468.34	1379.0	74.000	.6144-01	.7070	.8541-02	-.6541-02	-.3580-02

OH57,AEDC V41B-K3A, MODEL 92-0, RH WING UPR SURF (R4AU07)

R.H. WING UPR SURF

PARAMETRIC DATA

MACH = 8.000 PO = 850.0 RN/FT = 3.600 ELEVON = .0000
BDFLAP = .0000 SPDBRK = 49.30 RUDDER = .0000

TEST CONDITIONS

RUN NUMBER	ALPHA DEG.	BETA DEG.	PO PSIA	TO DEG. R	P PSIA	T DEG. R	Q PSIA	V FT/SEC	CPMAX	PT2 PSIA	RHO SLUGS /FT3	MU LB-SEC /FT2
12	40.12	.0000	847.9	1351.	.8685-01	97.90	3.891	3882.	1.827	7.197	.7437-04	.7878-07

RUN NUMBER	RN/FT /FT X 106
12	3.665

TEST DATA

RUN NUMBER	YO	XO	T/C NO	PN PSIA	PN/P	PN/PT2	CPN	CPN/MX
12	115.43	1365.0	75.000	.3932-01	.4514	.5463-02	-.1225-01	-.6701-02
12	140.51	1365.0	76.000	.3956-01	.4542	.5497-02	-.1218-01	-.6667-02
12	140.51	1411.4	77.000	.4061-01	.4662	.5643-02	-.1191-01	-.6520-02
12	187.31	1365.0	80.000	.3973-01	.4561	.5520-02	-.1214-01	-.6644-02
12	187.31	1411.4	81.000	.3891-01	.4468	.5407-02	-.1235-01	-.6758-02
12	234.17	1365.0	82.000	.4011-01	.4605	.5573-02	-.1204-01	-.6590-02
12	234.17	1411.4	83.000	.3911-01	.4490	.5434-02	-.1230-01	-.6731-02
12	281.03	1365.0	85.000	.3862-01	.4433	.5366-02	-.1243-01	-.6800-02
12	281.03	1411.4	86.000	.3779-01	.4339	.5251-02	-.1264-01	-.6915-02
12	311.20	1365.0	89.000	.3823-01	.4389	.5312-02	-.1252-01	-.6854-02
12	327.83	1365.0	90.000	.3871-01	.4445	.5379-02	-.1240-01	-.6786-02
12	327.83	1411.4	91.000	.3917-01	.4497	.5443-02	-.1228-01	-.6722-02
12	327.83	1436.7	92.000	.4292-01	.4927	.5963-02	-.1132-01	-.6197-02
12	327.83	1459.4	93.000	.4576-01	.5254	.6359-02	-.1059-01	-.5797-02
12	374.69	1365.0	94.000	.6447-01	.7402	.8959-02	-.5799-02	-.3173-02
12	374.69	1411.4	95.000	.4092-01	.4698	.5687-02	-.1183-01	-.6476-02
12	398.11	1365.0	98.000	.3651-01	.4208	.5073-02	-.1293-01	-.7076-02
12	398.11	1411.4	99.000	.3966-01	.4571	.5512-02	-.1212-01	-.6631-02
12	421.49	1411.4	103.00	.3548-01	.4089	.4930-02	-.1319-01	-.7221-02
12	444.91	1365.0	104.00	.3440-01	.3965	.4780-02	-.1347-01	-.7372-02
12	456.29	1365.0	107.00	.3479-01	.4010	.4835-02	-.1337-01	-.7317-02

OH57,AEDC V41B-K3A, MODEL 92-0, RH WING UPR SURF (R4AU07)

RUN NUMBER	YO	XO	T/C NO	PN PSIA	PN/P	PN/PT2	CPN	CPN/MX
12	456.29	1411.4	108.00	.3805-01	.4386	.5287-02	-.1253-01	-.6858-02
12	468.34	1379.0	74.000	.7306	8.396	.1015	.1651	.9035-01

OH57,AEDC V41B-K3A, MODEL 92-0, RH WING UPR SURF

R.H. WING UPR SURF

PARAMETRIC DATA

MACH = 8.000 PO = 850.0 RN/FT = 3.600 ELEVON = .0000
BDFLAP = .0000 SPDBRK = 49.30 RUDDER = .0000

TEST CONDITIONS

RUN NUMBER	ALPHA DEG.	BETA DEG.	PO PSIA	TO DEG. R	P PSIA	T DEG. R	Q PSIA	V FT/SEC	CPMAX	PT2 PSIA	RHO SLUGS /FT3	MU LB-SEC /FT2
13	43.98	.0000	848.8	1353.	.8694-01	98.04	3.895	3884.	1.827	7.204	.7434-04	.7890-07

RUN NUMBER	RN/FT /FT X 106
13	3.661

TEST DATA

RUN NUMBER	YO	XO	T/C NO	PN PSIA	PN/P	PN/PT2	CPN	CPN/MX
13	115.43	1365.0	75.000	.3605-01	.4150	.5003-02	-.1306-01	-.7145-02
13	140.51	1365.0	76.000	.3634-01	.4185	.5045-02	-.1298-01	-.7103-02
13	140.51	1411.4	77.000	.3761-01	.4331	.5220-02	-.1266-01	-.6925-02
13	187.31	1365.0	80.000	.3624-01	.4173	.5031-02	-.1301-01	-.7117-02
13	187.31	1411.4	81.000	.3639-01	.4190	.5051-02	-.1297-01	-.7097-02
13	234.17	1365.0	82.000	.3700-01	.4261	.5136-02	-.1281-01	-.7011-02
13	234.17	1411.4	83.000	.3729-01	.4294	.5176-02	-.1274-01	-.6970-02
13	281.03	1365.0	85.000	.3493-01	.4022	.4848-02	-.1334-01	-.7303-02
13	281.03	1411.4	86.000	.3497-01	.4026	.4853-02	-.1333-01	-.7297-02
13	311.20	1365.0	89.000	.4351-01	.5010	.6039-02	-.1114-01	-.6096-02
13	327.83	1365.0	90.000	.3484-01	.4011	.4836-02	-.1337-01	-.7315-02
13	327.83	1411.4	91.000	.3608-01	.4154	.5008-02	-.1305-01	-.7141-02
13	327.83	1436.7	92.000	.4117-01	.4740	.5715-02	-.1174-01	-.6425-02
13	327.83	1459.4	93.000	.4084-01	.4703	.5670-02	-.1182-01	-.6470-02
13	374.69	1365.0	94.000	.1200-01	.1381	.1665-02	-.1924-01	-.1053-01
13	374.69	1411.4	95.000	.3767-01	.4337	.5229-02	-.1264-01	-.6917-02
13	398.11	1365.0	98.000	.3548-01	.4080	.4925-02	-.1322-01	-.7232-02
13	398.11	1411.4	99.000	.3655-01	.4202	.5073-02	-.1294-01	-.7082-02
13	421.49	1411.4	103.00	.3357-01	.3859	.4659-02	-.1371-01	-.7501-02
13	444.91	1365.0	104.00	.3436-01	.3951	.4770-02	-.1350-01	-.7389-02
13	456.29	1365.0	107.00	.3517-01	.4044	.4882-02	-.1330-01	-.7276-02

OH57,AEDC V41B-K3A, MODEL 92-0, RH WING UPR SURF (R4AU07)

RUN NUMBER	YO	XO	T/C NO	PN PSIA	PN/P	PN/PT2	CPN	CPN/MX
13	456.29	1411.4	108.00	.3569-01	.4104	.4955-02	-.1316-01	-.7202-02
13	468.34	1379.0	74.000	.7021	8.084	.9746-01	.1581	.8653-01

R.H. WING UPR SURF

PARAMETRIC DATA

MACH = 8.000 PO = 850.0 RN/FT = 3.600 ELEVON = .0000
BDFLAP = .0000 SPDBRK = 49.30 RUDDER = .0000

TEST CONDITIONS

RUN NUMBER	ALPHA DEG.	BETA DEG.	PO PSIA	TO DEG. R	P PSIA	T DEG. R	Q PSIA	V FT/SEC	CPMAX	PT2 PSIA	RHO SLUGS /FT3	MU LB-SEC /FT2
26	30.04	.0000	846.9	1351.	.8674-01	97.90	3.886	3882.	1.827	7.188	.7429-04	.7878-07

RUN NUMBER	RN/FT /FT X 106
26	3.661

TEST DATA

RUN NUMBER	YO	XO	T/C NO	PN PSIA	PN/P	PN/PT2	CPN	CPN/MX
26	115.43	1365.0	75.000	.3562-01	.4105	.4956-02	-.1316-01	-.7201-02
26	140.51	1365.0	76.000	.3598-01	.4146	.5006-02	-.1307-01	-.7151-02
26	140.51	1411.4	77.000	.3703-01	.4267	.5152-02	-.1280-01	-.7003-02
26	187.31	1365.0	80.000	.3625-01	.4177	.5043-02	-.1300-01	-.7113-02
26	187.31	1411.4	81.000	.3550-01	.4090	.4938-02	-.1319-01	-.7219-02
26	234.17	1365.0	82.000	.3563-01	.4105	.4957-02	-.1316-01	-.7200-02
26	234.17	1411.4	83.000	.3595-01	.4143	.5002-02	-.1307-01	-.7155-02
26	281.03	1365.0	85.000	.3581-01	.4127	.4982-02	-.1311-01	-.7175-02
26	281.03	1411.4	86.000	.3665-01	.4223	.5098-02	-.1290-01	-.7057-02
26	311.20	1365.0	89.000	.3596-01	.4144	.5003-02	-.1307-01	-.7153-02
26	327.83	1365.0	90.000	.3517-01	.4052	.4893-02	-.1328-01	-.7265-02
26	327.83	1411.4	91.000	.3594-01	.4141	.5000-02	-.1308-01	-.7157-02
26	327.83	1436.7	92.000	.3938-01	.4538	.5479-02	-.1219-01	-.6672-02
26	327.83	1459.4	93.000	.4777-01	.5504	.6645-02	-.1004-01	-.5492-02
26	374.69	1365.0	94.000	.3959-01	.4564	.5508-02	-.1213-01	-.6640-02
26	374.69	1411.4	95.000	.4597-01	.5299	.6395-02	-.1049-01	-.5742-02
26	398.11	1365.0	98.000	.4708-01	.5434	.6550-02	-.1019-01	-.5578-02
26	398.11	1411.4	99.000	.4928-01	.5688	.6856-02	-.9625-02	-.5267-02
26	421.49	1411.4	103.00	.4708-01	.5433	.6549-02	-.1019-01	-.5578-02
26	444.91	1365.0	104.00	.4392-01	.5069	.6110-02	-.1101-01	-.6024-02
26	456.29	1365.0	107.00	.4290-01	.4952	.5969-02	-.1127-01	-.6166-02

OH57,AEDC V41B-K3A, MODEL 92-0, RH WING UPR SURF (R4AU08)

RUN NUMBER	YO	XO	T/C NO	PN PSIA	PN/P	PN/PT2	CPN	CPN/MX
26	456.29	1411.4	108.00	.4684-01	.5406	.6516-02	-.1026-01	-.5612-02
26	468.34	1379.0	74.000	.4040-01	.4657	.5620-02	-.1193-01	-.6527-02

OH57,AEDC V41B-K3A, MODEL 92-0, RH WING UPR SURF (R4AU08)

R.H. WING UPR SURF

PARAMETRIC DATA

MACH = 8.000 PO = 850.0 RN/FT = 3.600 ELEVON = .0000
BDFLAP = .0000 SPDBRK = 49.30 RUDDER = .0000

TEST CONDITIONS

RUN NUMBER	ALPHA DEG.	BETA DEG.	PO PSIA	TO DEG. R	P PSIA	T DEG. R	Q PSIA	V FT/SEC	CPMAX	PT2 PSIA	RHO SLUGS /FT3	MU LB-SEC /FT2
28	35.00	.0000	847.9	1353.	.8685-01	98.04	3.891	3884.	1.827	7.197	.7426-04	.7890-07

RUN NUMBER	RN/FT /FT X 106
28	3.657

TEST DATA

RUN NUMBER	YO	XO	T/C NO	PN PSIA	PN/P	PN/PT2	CPN	CPN/MX
28	115.43	1365.0	75.000	.3733-01	.4294	.5187-02	-.1274-01	-.6970-02
28	140.51	1365.0	76.000	.3781-01	.4349	.5253-02	-.1261-01	-.6903-02
28	140.51	1411.4	77.000	.3976-01	.4573	.5525-02	-.1211-01	-.6629-02
28	187.31	1365.0	80.000	.3867-01	.4448	.5373-02	-.1239-01	-.6782-02
28	187.31	1411.4	81.000	.3858-01	.4438	.5361-02	-.1242-01	-.6794-02
28	234.17	1365.0	82.000	.3741-01	.4303	.5198-02	-.1272-01	-.6959-02
28	234.17	1411.4	83.000	.3805-01	.4377	.5287-02	-.1255-01	-.6869-02
28	281.03	1365.0	85.000	.3799-01	.4370	.5279-02	-.1257-01	-.6878-02
28	281.03	1411.4	86.000	.3761-01	.4326	.5226-02	-.1266-01	-.6931-02
28	311.20	1365.0	89.000	.3734-01	.4295	.5189-02	-.1273-01	-.6968-02
28	327.83	1365.0	90.000	.3680-01	.4232	.5113-02	-.1287-01	-.7045-02
28	327.83	1411.4	91.000	.3788-01	.4358	.5264-02	-.1259-01	-.6892-02
28	327.83	1436.7	92.000	.4096-01	.4711	.5692-02	-.1180-01	-.6460-02
28	327.83	1459.4	93.000	.4899-01	.5635	.6807-02	-.9744-02	-.5333-02
28	374.69	1365.0	94.000	.3889-01	.4468	.5404-02	-.1235-01	-.6757-02
28	374.69	1411.4	95.000	.4293-01	.4932	.5965-02	-.1131-01	-.6191-02
28	398.11	1365.0	98.000	.4307-01	.4950	.5984-02	-.1127-01	-.6169-02
28	398.11	1411.4	99.000	.4381-01	.5035	.6088-02	-.1108-01	-.6065-02
28	421.49	1411.4	103.00	.4237-01	.4870	.5888-02	-.1145-01	-.6267-02
28	444.91	1365.0	104.00	.3971-01	.4563	.5517-02	-.1214-01	-.6641-02
28	456.29	1365.0	107.00	.3883-01	.4463	.5396-02	-.1236-01	-.6764-02

OH57,AEDC V41B-K3A, MODEL 92-0, RH WING UPR SURF (R4AU08)

RUN NUMBER	YO	XO	T/C NO	PN PSIA	PN/P	PN/PT2	CPN	CPN/MX
28	456.29	1411.4	108.00	.4287-01	.4927	.5956-02	-.1132-01	-.6197-02
28	468.34	1379.0	74.000	.5578-01	.6409	.7751-02	-.8017-02	-.4387-02

OH57,AEDC V41B-K3A, MODEL 92-0, RH WING UPR SURF

R.H. WING UPR SURF

PARAMETRIC DATA

MACH = 8.000 PO = 850.0 RN/FT = 3.600 ELEVON = .0000
BDFLAP = .0000 SPDBRK = 49.30 RUDDER = .0000

TEST CONDITIONS

RUN NUMBER	ALPHA DEG.	BETA DEG.	PO PSIA	TO DEG. R	P PSIA	T DEG. R	Q PSIA	V FT/SEC	CPMAX	PT2 PSIA	RHO SLUGS /FT3	MU LB-SEC /FT2
25	40.07	.0000	846.8	1351.	.8673-01	97.90	3.886	3882.	1.827	7.187	.7428-04	.7878-07

RUN NUMBER	RN/FT /FT X 106
25	3.660

TEST DATA

RUN NUMBER	YO	XO	T/C NO	PN PSIA	PN/P	PN/PT2	CPN	CPN/MX
25	115.43	1365.0	75.000	.3952-01	.4548	.5498-02	-.1217-01	-.6660-02
25	140.51	1365.0	76.000	.4004-01	.4608	.5571-02	-.1204-01	-.6586-02
25	140.51	1411.4	77.000	.4070-01	.4685	.5663-02	-.1186-01	-.6493-02
25	187.31	1365.0	80.000	.4013-01	.4618	.5583-02	-.1201-01	-.6574-02
25	187.31	1411.4	81.000	.3916-01	.4508	.5449-02	-.1226-01	-.6709-02
25	234.17	1365.0	82.000	.3941-01	.4536	.5484-02	-.1220-01	-.6674-02
25	234.17	1411.4	83.000	.3917-01	.4508	.5450-02	-.1226-01	-.6709-02
25	281.03	1365.0	85.000	.3900-01	.4488	.5426-02	-.1230-01	-.6733-02
25	281.03	1411.4	86.000	.3808-01	.4383	.5299-02	-.1254-01	-.6861-02
25	311.20	1365.0	89.000	.3842-01	.4422	.5345-02	-.1245-01	-.6814-02
25	327.83	1365.0	90.000	.3892-01	.4480	.5416-02	-.1232-01	-.6743-02
25	327.83	1411.4	91.000	.3999-01	.4603	.5564-02	-.1205-01	-.6593-02
25	327.83	1436.7	92.000	.4443-01	.5114	.6182-02	-.1091-01	-.5968-02
25	327.83	1459.4	93.000	.4749-01	.5465	.6607-02	-.1012-01	-.5539-02
25	374.69	1365.0	94.000	.3913-01	.4502	.5444-02	-.1227-01	-.6716-02
25	374.69	1411.4	95.000	.4160-01	.4786	.5788-02	-.1164-01	-.6369-02
25	398.11	1365.0	98.000	.3735-01	.4302	.5196-02	-.1272-01	-.6961-02
25	398.11	1411.4	99.000	.4012-01	.4621	.5582-02	-.1201-01	-.6571-02
25	421.49	1411.4	103.00	.3735-01	.4302	.5197-02	-.1272-01	-.6960-02
25	444.91	1365.0	104.00	.3510-01	.4042	.4883-02	-.1330-01	-.7278-02
25	456.29	1365.0	107.00	.3528-01	.4063	.4908-02	-.1325-01	-.7252-02

OH57,AEDC V41B-K3A, MODEL 92-0, RH WING UPR SURF (R4AU08)

RUN NUMBER	YO	XO	T/C NO	PN PSIA	PN/P	PN/PT2	CPN	CPN/MX
25	456.29	1411.4	108.00	.3912-01	.4505	.5443-02	-.1227-01	-.6712-02
25	468.34	1379.0	74.000	.3801-01	.4373	.5289-02	-.1256-01	-.6873-02

OH57,AEDC V41B-K3A, MODEL 92-0, RH WING UPR SURF (R4AU08)

R.H. WING UPR SURF

PARAMETRIC DATA

MACH = 8.000 PO = 850.0 RN/FT = 3.600 ELEVON = .0000
BDFLAP = .0000 SPDBRK = 49.30 RUDDER = .0000

TEST CONDITIONS

RUN NUMBER	ALPHA DEG.	BETA DEG.	PO PSIA	TO DEG. R	P PSIA	T DEG. R	Q PSIA	V FT/SEC	CPMAX	PT2 PSIA	RHO SLUGS /FT3	MU LB-SEC /FT2
27	44.07	.0000	847.6	1353.	.8682-01	98.04	3.889	3884.	1.827	7.194	.7424-04	.7890-07

RUN NUMBER	RN/FT /FT X 106
27	3.655

TEST DATA

RUN NUMBER	YO	XO	T/C NO	PN PSIA	PN/P	PN/PT2	CPN	CPN/MX
27	115.43	1365.0	75.000	.4168-01	.4796	.5794-02	-.1162-01	-.6357-02
27	140.51	1365.0	76.000	.4229-01	.4867	.5879-02	-.1146-01	-.6271-02
27	140.51	1411.4	77.000	.4358-01	.5015	.6058-02	-.1113-01	-.6090-02
27	187.31	1365.0	80.000	.4276-01	.4921	.5944-02	-.1134-01	-.6204-02
27	187.31	1411.4	81.000	.4211-01	.4846	.5854-02	-.1151-01	-.6296-02
27	234.17	1365.0	82.000	.4148-01	.4773	.5766-02	-.1167-01	-.6385-02
27	234.17	1411.4	83.000	.4188-01	.4819	.5822-02	-.1156-01	-.6328-02
27	281.03	1365.0	85.000	.4043-01	.4652	.5620-02	-.1194-01	-.6533-02
27	281.03	1411.4	86.000	.4046-01	.4655	.5624-02	-.1193-01	-.6529-02
27	311.20	1365.0	89.000	.3984-01	.4584	.5537-02	-.1209-01	-.6616-02
27	327.83	1365.0	90.000	.4051-01	.4661	.5631-02	-.1192-01	-.6521-02
27	327.83	1411.4	91.000	.4164-01	.4791	.5788-02	-.1163-01	-.6363-02
27	327.83	1436.7	92.000	.4658-01	.5371	.6489-02	-.1033-01	-.5654-02
27	327.83	1459.4	93.000	.4709-01	.5418	.6545-02	-.1023-01	-.5597-02
27	374.69	1365.0	94.000	.4159-01	.4795	.5781-02	-.1162-01	-.6358-02
27	374.69	1411.4	95.000	.4361-01	.5028	.6062-02	-.1110-01	-.6073-02
27	398.11	1365.0	98.000	.4106-01	.4725	.5708-02	-.1177-01	-.6443-02
27	398.11	1411.4	99.000	.4272-01	.4917	.5939-02	-.1135-01	-.6209-02
27	421.49	1411.4	103.00	.4042-01	.4652	.5619-02	-.1194-01	-.6533-02
27	444.91	1365.0	104.00	.4011-01	.4615	.5575-02	-.1202-01	-.6577-02
27	456.29	1365.0	107.00	.4051-01	.4661	.5631-02	-.1192-01	-.6521-02

OH57,AEDC V41B-K3A, MODEL 92-0, RH WING UPR SURF (R4AU08)

RUN NUMBER	YO	XO	T/C NO	PN PSIA	PN/P	PN/PT2	CPN	CPN/MX
27	456.29	1411.4	108.00	.4176-01	.4805	.5804-02	-.1160-01	-.6345-02
27	468.34	1379.0	74.000	.4090-01	.4715	.5685-02	-.1180-01	-.6455-02

OH57,AEDC V41B-K3A, MODEL 92-0, RH WING UPR SURF

R.H. WING UPR SURF

PARAMETRIC DATA

MACH = 8.000 PO = 850.0 RN/FT = 3.600 ELEVON = .0000
BDFLAP = .0000 SPDBRK = .0000 RUDDER = .0000

TEST CONDITIONS

RUN NUMBER	ALPHA DEG.	BETA DEG.	PO PSIA	TO DEG. R	P PSIA	T DEG. R	Q PSIA	V FT/SEC	CPMAX	PT2 PSIA	RHO SLUGS /FT3	MU LB-SEC /FT2
5	29.99	.0000	851.7	1351.	.8723-01	97.90	3.908	3882.	1.827	7.229	.7470-04	.7878-07

RUN NUMBER	RN/FT /FT X 106
5	3.681

TEST DATA

RUN NUMBER	YO	XO	T/C NO	PN PSIA	PN/P	PN/PT2	CPN	CPN/MX
5	115.43	1365.0	75.000	.3424-01	.3925	.4736-02	-.1356-01	-.7421-02
5	140.51	1365.0	76.000	.3406-01	.3906	.4711-02	-.1360-01	-.7443-02
5	140.51	1410.0	77.000	.3299-01	.3786	.4564-02	-.1387-01	-.7590-02
5	140.51	1455.1	78.000	.3253-01	.3730	.4500-02	-.1400-01	-.7659-02
5	140.51	1481.2	79.000	.3428-01	.3933	.4742-02	-.1354-01	-.7411-02
5	187.31	1365.0	80.000	.3404-01	.3910	.4709-02	-.1359-01	-.7440-02
5	187.31	1410.0	81.000	.3313-01	.3812	.4584-02	-.1381-01	-.7559-02
5	234.17	1365.0	82.000	.3406-01	.3914	.4711-02	-.1358-01	-.7434-02
5	234.17	1410.0	83.000	.3384-01	.3879	.4681-02	-.1366-01	-.7477-02
5	234.17	1437.4	84.000	.3790-01	.4348	.5244-02	-.1262-01	-.6904-02
5	281.03	1365.0	85.000	.3438-01	.3945	.4756-02	-.1352-01	-.7396-02
5	281.03	1410.0	86.000	.3498-01	.4010	.4839-02	-.1337-01	-.7317-02
5	281.03	1439.6	87.000	.3472-01	.3984	.4803-02	-.1343-01	-.7349-02
5	281.03	1466.5	88.000	.3369-01	.3870	.4661-02	-.1368-01	-.7488-02
5	311.20	1365.0	89.000	.3450-01	.3968	.4772-02	-.1346-01	-.7368-02
5	327.83	1365.0	90.000	.3458-01	.3974	.4783-02	-.1345-01	-.7361-02
5	327.83	1410.0	91.000	.4611-01	.5286	.6379-02	-.1052-01	-.5758-02
5	327.83	1436.7	92.000	.4883-01	.5601	.6755-02	-.9820-02	-.5374-02
5	327.83	1459.4	93.000	.5362-01	.6153	.7418-02	-.8586-02	-.4699-02
5	374.69	1365.0	94.000	.4235-01	.4856	.5859-02	-.1148-01	-.6284-02
5	374.69	1410.0	95.000	.4161-01	.4775	.5756-02	-.1166-01	-.6383-02

OH57,AEDC V41B-K3A, MODEL 92-0, RH WING UPR SURF (R4AU09)

RUN NUMBER	YO	XO	T/C NO	PN PSIA	PN/P	PN/PT2	CPN	CPN/MX
5	374.69	1433.9	96.000	.4190-01	.4813	.5796-02	-.1158-01	-.6336-02
5	374.69	1452.6	97.000	.4225-01	.4860	.5845-02	-.1147-01	-.6278-02
5	398.11	1365.0	98.000	.4482-01	.5151	.6200-02	-.1082-01	-.5923-02
5	398.11	1410.0	99.000	.3432-01	.3934	.4748-02	-.1354-01	-.7409-02
5	398.11	1432.7	100.00	.3566-01	.4091	.4934-02	-.1319-01	-.7218-02
5	398.11	1449.1	101.00	.4259-01	.4888	.5892-02	-.1141-01	-.6245-02
5	421.49	1365.0	102.00	.3656-01	.4192	.5058-02	-.1296-01	-.7095-02
5	421.49	1410.0	103.00	.4359-01	.5002	.6031-02	-.1116-01	-.6105-02
5	444.91	1365.0	104.00	.4546-01	.5221	.6288-02	-.1067-01	-.5837-02
5	444.91	1410.0	105.00	.6376-01	.7335	.8821-02	-.5948-02	-.3255-02
5	444.91	1437.9	106.00	.4411-01	.5070	.6103-02	-.1100-01	-.6022-02
5	456.29	1365.0	107.00	.4084-01	.4681	.5650-02	-.1187-01	-.6497-02
5	456.29	1425.7	109.00	.4593-01	.5271	.6354-02	-.1056-01	-.5777-02
5	456.29	1438.1	110.00	.4551-01	.5217	.6295-02	-.1068-01	-.5842-02
5	468.34	1379.0	74.000	.2314	2.654	.3201-01	.3692-01	.2020-01

R.H. WING UPR SURF

PARAMETRIC DATA

MACH = 8.000 PO = 850.0 RN/FT = 3.600 ELEVON = .0000
BDFLAP = .0000 SPDBRK = .0000 RUDDER = .0000

TEST CONDITIONS

RUN NUMBER	ALPHA DEG.	BETA DEG.	PO PSIA	TO DEG. R	P PSIA	T DEG. R	Q PSIA	V FT/SEC	CPMAX	PT2 PSIA	RHO SLUGS /FT3	MU LB-SEC /FT2
4	35.03	.0000	849.1	1349.	.8698-01	97.75	3.897	3879.	1.827	7.207	.7460-04	.7866-07

RUN NUMBER	RN/FT /FT X 106
4	3.679

TEST DATA

RUN NUMBER	YO	XO	T/C NO	PN PSIA	PN/P	PN/PT2	CPN	CPN/MX
4	115.43	1365.0	75.000	.3641-01	.4186	.5051-02	-.1298-01	-.7102-02
4	140.51	1365.0	76.000	.3641-01	.4177	.5051-02	-.1300-01	-.7113-02
4	140.51	1410.0	77.000	.3635-01	.4179	.5043-02	-.1299-01	-.7111-02
4	140.51	1455.1	78.000	.3502-01	.4017	.4859-02	-.1336-01	-.7309-02
4	140.51	1481.2	79.000	.3343-01	.3838	.4639-02	-.1375-01	-.7527-02
4	187.31	1365.0	80.000	.3667-01	.4207	.5088-02	-.1293-01	-.7076-02
4	187.31	1410.0	81.000	.3683-01	.4229	.5110-02	-.1288-01	-.7049-02
4	234.17	1365.0	82.000	.3659-01	.4201	.5076-02	-.1294-01	-.7083-02
4	234.17	1410.0	83.000	.3650-01	.4197	.5064-02	-.1295-01	-.7089-02
4	234.17	1437.4	84.000	.3736-01	.4287	.5184-02	-.1275-01	-.6979-02
4	281.03	1365.0	85.000	.3694-01	.4247	.5126-02	-.1284-01	-.7027-02
4	281.03	1410.0	86.000	.3676-01	.4216	.5100-02	-.1291-01	-.7065-02
4	281.03	1439.6	87.000	.3690-01	.4236	.5120-02	-.1287-01	-.7041-02
4	281.03	1466.5	88.000	.3690-01	.4234	.5120-02	-.1287-01	-.7043-02
4	311.20	1365.0	89.000	.3688-01	.4235	.5117-02	-.1287-01	-.7042-02
4	327.83	1365.0	90.000	.3670-01	.4214	.5092-02	-.1291-01	-.7067-02
4	327.83	1410.0	91.000	.4102-01	.4716	.5691-02	-.1180-01	-.6455-02
4	327.83	1436.7	92.000	.4484-01	.5144	.6221-02	-.1084-01	-.5931-02
4	327.83	1459.4	93.000	.4848-01	.5574	.6726-02	-.9880-02	-.5407-02
4	374.69	1365.0	94.000	.3740-01	.4289	.5189-02	-.1275-01	-.6976-02
4	374.69	1410.0	95.000	.3612-01	.4147	.5012-02	-.1307-01	-.7150-02

OH57,AEDC V41B-K3A, MODEL 92-0, RH WING UPR SURF (R4AU09)

RUN NUMBER	YO	XO	T/C NO	PN PSIA	PN/P	PN/PT2	CPN	CPN/MX
4	374.69	1433.9	96.000	.3719-01	.4267	.5160-02	-.1280-01	-.7003-02
4	374.69	1452.6	97.000	.3754-01	.4311	.5208-02	-.1270-01	-.6949-02
4	398.11	1365.0	98.000	.4083-01	.4688	.5665-02	-.1186-01	-.6488-02
4	398.11	1410.0	99.000	.3598-01	.4137	.4993-02	-.1309-01	-.7162-02
4	398.11	1432.7	100.00	.3779-01	.4335	.5243-02	-.1264-01	-.6920-02
4	398.11	1449.1	101.00	.4528-01	.5206	.6282-02	-.1070-01	-.5857-02
4	421.49	1365.0	102.00	.3600-01	.4129	.4995-02	-.1310-01	-.7171-02
4	421.49	1410.0	103.00	.3861-01	.4432	.5357-02	-.1243-01	-.6801-02
4	444.91	1365.0	104.00	.4251-01	.4878	.5898-02	-.1143-01	-.6257-02
4	444.91	1410.0	105.00	.5767-01	.6623	.8002-02	-.7538-02	-.4125-02
4	444.91	1437.9	106.00	.3959-01	.4546	.5493-02	-.1217-01	-.6663-02
4	456.29	1365.0	107.00	.3675-01	.4225	.5099-02	-.1289-01	-.7054-02
4	456.29	1425.7	109.00	.4148-01	.4769	.5755-02	-.1168-01	-.6390-02
4	456.29	1438.1	110.00	.4078-01	.4677	.5658-02	-.1188-01	-.6502-02
4	468.34	1379.0	74.000	.2389	2.740	.3314-01	.3885-01	.2126-01

OH57,AEDC V41B-K3A, MODEL 92-0, RH WING UPR SURF (R4AU09)

R.H. WING UPR SURF

PARAMETRIC DATA

MACH = 8.000 PO = 850.0 RN/FT = 3.600 ELEVON = .0000
BDFLAP = .0000 SPDBRK = .0000 RUDDER = .0000

TEST CONDITIONS

RUN NUMBER	ALPHA DEG.	BETA DEG.	PO PSIA	TO DEG. R	P PSIA	T DEG. R	Q PSIA	V FT/SEC	CPMAX	PT2 PSIA	RHO SLUGS /FT3	MU LB-SEC /FT2
2	40.01	.0000	850.6	1351.	.8713-01	97.90	3.903	3882.	1.827	7.220	.7462-04	.7878-07

RUN NUMBER	RN/FT /FT X 106
2	3.677

TEST DATA

RUN NUMBER	YO	XO	T/C NO	PN PSIA	PN/P	PN/PT2	CPN	CPN/MX
2	115.43	1365.0	75.000	.3913-01	.4491	.5420-02	-.1230-01	-.6729-02
2	140.51	1365.0	76.000	.3925-01	.4508	.5436-02	-.1226-01	-.6709-02
2	140.51	1410.0	77.000	.3732-01	.4291	.5169-02	-.1274-01	-.6974-02
2	140.51	1455.1	78.000	.3501-01	.4020	.4849-02	-.1335-01	-.7305-02
2	140.51	1481.2	79.000	.3190-01	.3660	.4418-02	-.1415-01	-.7744-02
2	187.31	1365.0	80.000	.3897-01	.4471	.5397-02	-.1234-01	-.6754-02
2	187.31	1410.0	81.000	.3716-01	.4263	.5147-02	-.1281-01	-.7008-02
2	234.17	1365.0	82.000	.3873-01	.4444	.5364-02	-.1240-01	-.6787-02
2	234.17	1410.0	83.000	.3777-01	.4334	.5231-02	-.1265-01	-.6921-02
2	234.17	1437.4	84.000	.3755-01	.4312	.5200-02	-.1270-01	-.6948-02
2	281.03	1365.0	85.000	.3893-01	.4475	.5392-02	-.1233-01	-.6749-02
2	281.03	1410.0	86.000	.3742-01	.4297	.5183-02	-.1273-01	-.6967-02
2	281.03	1439.6	87.000	.3771-01	.4326	.5222-02	-.1266-01	-.6930-02
2	281.03	1466.5	88.000	.3811-01	.4372	.5278-02	-.1256-01	-.6875-02
2	311.20	1365.0	89.000	.3843-01	.4408	.5322-02	-.1248-01	-.6830-02
2	327.83	1365.0	90.000	.3861-01	.4430	.5347-02	-.1243-01	-.6804-02
2	327.83	1410.0	91.000	.3832-01	.4398	.5307-02	-.1250-01	-.6843-02
2	327.83	1436.7	92.000	.4040-01	.4640	.5595-02	-.1197-01	-.6548-02
2	327.83	1459.4	93.000	.4694-01	.5396	.6501-02	-.1028-01	-.5624-02
2	374.69	1365.0	94.000	.3316-01	.3807	.4592-02	-.1382-01	-.7565-02
2	374.69	1410.0	95.000	.3371-01	.3868	.4669-02	-.1369-01	-.7490-02

OH57,AEDC V41B-K3A, MODEL 92-0, RH WING UPR SURF (R4AU09)

RUN NUMBER	YO	XO	T/C NO	PN PSIA	PN/P	PN/PT2	CPN	CPN/MX
2	374.69	1433.9	96.000	.3207-01	.3679	.4441-02	-.1411-01	-.7721-02
2	374.69	1452.6	97.000	.3285-01	.3768	.4550-02	-.1391-01	-.7612-02
2	398.11	1365.0	98.000	.3606-01	.4137	.4994-02	-.1309-01	-.7161-02
2	398.11	1410.0	99.000	.3911-01	.4489	.5417-02	-.1230-01	-.6732-02
2	398.11	1432.7	100.00	.3991-01	.4584	.5528-02	-.1209-01	-.6616-02
2	398.11	1449.1	101.00	.4428-01	.5090	.6133-02	-.1096-01	-.5997-02
2	421.49	1365.0	102.00	.3805-01	.4369	.5270-02	-.1257-01	-.6879-02
2	421.49	1410.0	103.00	.3953-01	.4536	.5475-02	-.1220-01	-.6674-02
2	444.91	1365.0	104.00	.3915-01	.4492	.5423-02	-.1230-01	-.6728-02
2	444.91	1410.0	105.00	.4764-01	.5465	.6599-02	-.1012-01	-.5539-02
2	444.91	1437.9	106.00	.3503-01	.4019	.4851-02	-.1335-01	-.7306-02
2	456.29	1365.0	107.00	.3270-01	.3753	.4530-02	-.1394-01	-.7630-02
2	456.29	1425.7	109.00	.4142-01	.4762	.5737-02	-.1169-01	-.6399-02
2	456.29	1438.1	110.00	.3795-01	.4358	.5257-02	-.1259-01	-.6892-02
2	468.34	1379.0	74.000	.3169	3.639	.4389-01	.5891-01	.3224-01

OH57,AEDC V41B-K3A, MODEL 92-0, RH WING UPR SURF (R4AU09)

R.H. WING UPR SURF

PARAMETRIC DATA

MACH = 8.000 PO = 850.0 RN/FT = 3.600 ELEVON = .0000
BDFLAP = .0000 SPDBRK = .0000 RUDDER = .0000

TEST CONDITIONS

RUN NUMBER	ALPHA DEG.	BETA DEG.	PO PSIA	TO DEG. R	P PSIA	T DEG. R	Q PSIA	V FT/SEC	CPMAX	PT2 PSIA	RHO SLUGS /FT3	MU LB-SEC /FT2
1	44.55	.0000	852.0	1351.	.8726-01	97.90	3.909	3882.	1.827	7.231	.7473-04	.7878-07

RUN NUMBER	RN/FT /FT X 10E6
1	3.683

TEST DATA

RUN NUMBER	YO	XO	T/C NO	PN PSIA.	PN/P	PN/PT2	CPN	CPN/MX
1	115.43	1365.0	75.000	.4168-01	.4776	.5764-02	-.1166-01	-.6381-02
1	140.51	1365.0	76.000	.4146-01	.4752	.5733-02	-.1172-01	-.6411-02
1	140.51	1410.0	77.000	.3919-01	.4493	.5420-02	-.1229-01	-.6727-02
1	140.51	1455.1	78.000	.3664-01	.4209	.5067-02	-.1293-01	-.7074-02
1	140.51	1481.2	79.000	.3134-01	.3602	.4334-02	-.1428-01	-.7815-02
1	187.31	1365.0	80.000	.4044-01	.4644	.5592-02	-.1196-01	-.6542-02
1	187.31	1410.0	81.000	.3905-01	.4484	.5400-02	-.1231-01	-.6737-02
1	234.17	1365.0	82.000	.4013-01	.4609	.5550-02	-.1203-01	-.6585-02
1	234.17	1410.0	83.000	.3939-01	.4514	.5447-02	-.1225-01	-.6702-02
1	234.17	1437.4	84.000	.3923-01	.4496	.5425-02	-.1229-01	-.6723-02
1	281.03	1365.0	85.000	.4009-01	.4596	.5544-02	-.1206-01	-.6601-02
1	281.03	1410.0	86.000	.3897-01	.4477	.5389-02	-.1233-01	-.6747-02
1	281.03	1439.6	87.000	.3897-01	.4468	.5375-02	-.1235-01	-.6758-02
1	281.03	1466.5	88.000	.3917-01	.4499	.5417-02	-.1228-01	-.6720-02
1	311.20	1365.0	89.000	.3981-01	.4572	.5505-02	-.1212-01	-.6631-02
1	327.83	1365.0	90.000	.3995-01	.4588	.5525-02	-.1208-01	-.6611-02
1	327.83	1410.0	91.000	.3840-01	.4401	.5311-02	-.1250-01	-.6840-02
1	327.83	1436.7	92.000	.4118-01	.4719	.5694-02	-.1179-01	-.6451-02
1	327.83	1459.4	93.000	.4120-01	.4723	.5697-02	-.1178-01	-.6446-02
1	374.69	1365.0	94.000	.3927-01	.4511	.5430-02	-.1225-01	-.6705-02
1	374.69	1410.0	95.000	.3674-01	.4223	.5080-02	-.1290-01	-.7057-02

OH57,AEDC V41B-K3A, MODEL 92-0, RH WING UPR SURF (R4AU09)

RUN NUMBER	YO	XO	T/C NO	PN PSIA	PN/P	PN/PT2	CPN	CPN/MX
1	374.69	1433.9	96.000	.3889-01	.4467	.5379-02	-.1235-01	-.6759-02
1	374.69	1452.6	97.000	.3659-01	.4202	.5060-02	-.1294-01	-.7082-02
1	398.11	1365.0	98.000	.3939-01	.4523	.5447-02	-.1222-01	-.6690-02
1	398.11	1410.0	99.000	.3895-01	.4464	.5387-02	-.1236-01	-.6763-02
1	398.11	1432.7	100.00	.4440-01	.5088	.6140-02	-.1096-01	-.6000-02
1	398.11	1449.1	101.00	.4610-01	.5285	.6375-02	-.1052-01	-.5759-02
1	421.49	1365.0	102.00	.3949-01	.4537	.5461-02	-.1219-01	-.6673-02
1	421.49	1410.0	103.00	.3975-01	.4569	.5497-02	-.1212-01	-.6634-02
1	444.91	1365.0	104.00	.4612-01	.5297	.6378-02	-.1050-01	-.5745-02
1	444.91	1410.0	105.00	.4995-01	.5736	.6907-02	-.9518-02	-.5209-02
1	444.91	1437.9	106.00	.3935-01	.4519	.5442-02	-.1223-01	-.6695-02
1	456.29	1365.0	107.00	.3866-01	.4430	.5346-02	-.1243-01	-.6804-02
1	456.29	1425.7	109.00	.4238-01	.4859	.5861-02	-.1148-01	-.6280-02
1	456.29	1438.1	110.00	.4116-01	.4728	.5692-02	-.1177-01	-.6439-02
1	468.34	1379.0	74.000	.3469	3.975	.4797-01	.6641-01	.3634-01

R.H. WING UPR SURF

PARAMETRIC DATA

MACH = 8.000 PO = 850.0 RN/FT = 3.600 ELEVON = 5.000
BDFLAP = .0000 SPDBRK = 49.30 RUDDER = .0000

TEST CONDITIONS

RUN NUMBER	ALPHA DEG.	BETA DEG.	PO PSIA	TO DEG. R	P PSIA	T DEG. R	Q PSIA	V FT/SEC	CPMAX	PT2 PSIA	RHO SLUGS /FT3	MU LB-SEC /FT2
34	29.96	.0000	845.2	1353.	.8658-01	98.04	3.879	3884.	1.827	7.174	.7403-04	.7890-07

RUN NUMBER	RN/FT /FT X 106
34	3.645

TEST DATA

RUN NUMBER	YO	XO	T/C NO	PN PSIA	PN/P	PN/PT2	CPN	CPN/MX
34	115.43	1365.0	75.000	.3406-01	.3919	.4747-02	-.1357-01	-.7428-02
34	140.51	1365.0	76.000	.3409-01	.3924	.4752-02	-.1356-01	-.7423-02
34	140.51	1411.4	77.000	.3567-01	.4106	.4973-02	-.1316-01	-.7200-02
34	187.31	1365.0	80.000	.3419-01	.3935	.4766-02	-.1354-01	-.7409-02
34	187.31	1411.4	81.000	.3426-01	.3943	.4776-02	-.1352-01	-.7398-02
34	234.17	1365.0	82.000	.3426-01	.3942	.4775-02	-.1352-01	-.7400-02
34	234.17	1411.4	83.000	.3432-01	.3950	.4784-02	-.1350-01	-.7390-02
34	281.03	1365.0	85.000	.3425-01	.3941	.4774-02	-.1352-01	-.7401-02
34	281.03	1411.4	86.000	.3460-01	.3982	.4823-02	-.1343-01	-.7351-02
34	311.20	1365.0	89.000	.3452-01	.3973	.4812-02	-.1345-01	-.7362-02
34	327.83	1365.0	90.000	.3292-01	.3788	.4588-02	-.1387-01	-.7588-02
34	327.83	1411.4	91.000	.3411-01	.3926	.4755-02	-.1356-01	-.7420-02
34	327.83	1436.7	92.000	.3766-01	.4334	.5249-02	-.1265-01	-.6922-02
34	327.83	1459.4	93.000	.4754-01	.5471	.6626-02	-.1011-01	-.5532-02
34	374.69	1365.0	94.000	.3947-01	.4545	.5502-02	-.1218-01	-.6663-02
34	374.69	1411.4	95.000	.4040-01	.4649	.5631-02	-.1194-01	-.6536-02
34	398.11	1365.0	98.000	.4751-01	.5467	.6622-02	-.1012-01	-.5537-02
34	398.11	1411.4	99.000	.4614-01	.5310	.6432-02	-.1047-01	-.5729-02
34	421.49	1411.4	103.00	.4041-01	.4650	.5632-02	-.1194-01	-.6535-02
34	444.91	1365.0	104.00	.4127-01	.4749	.5753-02	-.1172-01	-.6414-02
34	456.29	1365.0	107.00	.3971-01	.4570	.5535-02	-.1212-01	-.6633-02

OH57,AEDC V41B-K3A, MODEL 92-0, RH WING UPR SURF (R4AU14)

RUN NUMBER	YO	XO	T/C NO	PN PSIA	PN/P	PN/PT2	CPN	CPN/MX
34	456.29	1411.4	108.00	.4549-01	.5235	.6340-02	-.1064-01	-.5821-02
34	468.34	1379.0	74.000	.3580-01	.4122	.4990-02	-.1312-01	-.7180-02

R.H. WING UPR SURF

PARAMETRIC DATA

MACH = 8.000 PO = 850.0 RN/FT = 3.600 ELEVON = 5.000
BDFLAP = .0000 SPDBRK = 49.30 RUDDER = .0000

TEST CONDITIONS

RUN NUMBER	ALPHA DEG.	BETA DEG.	PO PSIA	TO DEG. R	P PSIA	T DEG. R	Q PSIA	V FT/SEC	CPMAX	PT2 PSIA	RHO SLUGS /FT3	MU LB-SEC /FT2
36	34.97	.0000	848.5	1353.	.8691-01	98.04	3.894	3884.	1.827	7.202	.7432-04	.7890-07

RUN NUMBER	RN/FT /FT X 106
36	3.660

TEST DATA

RUN NUMBER	YO	XO	T/C NO	PN PSIA	PN/P	PN/PT2	CPN	CPN/MX
36	115.43	1365.0	75.000	.3690-01	.4251	.5123-02	-.1283-01	-.7023-02
36	140.51	1365.0	76.000	.3726-01	.4293	.5174-02	-.1274-01	-.6971-02
36	140.51	1411.4	77.000	.3955-01	.4557	.5492-02	-.1215-01	-.6649-02
36	187.31	1365.0	80.000	.3773-01	.4347	.5239-02	-.1262-01	-.6906-02
36	187.31	1411.4	81.000	.3835-01	.4418	.5324-02	-.1246-01	-.6819-02
36	234.17	1365.0	82.000	.3700-01	.4262	.5137-02	-.1281-01	-.7009-02
36	234.17	1411.4	83.000	.3754-01	.4324	.5212-02	-.1267-01	-.6933-02
36	281.03	1365.0	85.000	.3720-01	.4285	.5165-02	-.1276-01	-.6981-02
36	281.03	1411.4	86.000	.3681-01	.4241	.5111-02	-.1286-01	-.7035-02
36	311.20	1365.0	89.000	.3636-01	.4189	.5048-02	-.1297-01	-.7098-02
36	327.83	1365.0	90.000	.3518-01	.4053	.4885-02	-.1327-01	-.7264-02
36	327.83	1411.4	91.000	.3676-01	.4235	.5104-02	-.1287-01	-.7042-02
36	327.83	1436.7	92.000	.3976-01	.4581	.5521-02	-.1210-01	-.6619-02
36	327.83	1459.4	93.000	.4764-01	.5488	.6615-02	-.1007-01	-.5511-02
36	374.69	1365.0	94.000	.3628-01	.4182	.5037-02	-.1299-01	-.7107-02
36	374.69	1411.4	95.000	.3867-01	.4455	.5369-02	-.1238-01	-.6773-02
36	398.11	1365.0	98.000	.4218-01	.4856	.5857-02	-.1148-01	-.6284-02
36	398.11	1411.4	99.000	.4267-01	.4912	.5924-02	-.1136-01	-.6216-02
36	421.49	1411.4	103.00	.3982-01	.4584	.5529-02	-.1209-01	-.6616-02
36	444.91	1365.0	104.00	.3613-01	.4158	.5016-02	-.1304-01	-.7136-02
36	456.29	1365.0	107.00	.3388-01	.3900	.4705-02	-.1362-01	-.7451-02

OH57,AEDC V41B-K3A, MODEL 92-0, RH WING UPR SURF (R4AU14)

RUN NUMBER	YO	XO	T/C NO	PN PSIA	PN/P	PN/PT2	CPN	CPN/MX
36	456.29	1411.4	108.00	.4069-01	.4684	.5650-02	-.1187-01	-.6494-02
36	468.34	1379.0	74.000	.3492-01	.4025	.4848-02	-.1334-01	-.7299-02

OH57,AEDC V41B-K3A, MODEL 92-0, RH WING UPR SURF

R.H. WING UPR SURF

PARAMETRIC DATA

MACH = 8.000 PO = 850.0 RN/FT = 3.600 ELEVON = 5.000
BDFLAP = .0000 SPDBRK = 49.30 RUDDER = .0000

TEST CONDITIONS

RUN NUMBER	ALPHA DEG.	BETA DEG.	PO PSIA	TO DEG. R	P PSIA	T DEG. R	Q PSIA	V FT/SEC	CPMAX	PT2 PSIA	RHO SLUGS /FT3	MU LB-SEC /FT2
33	40.02	.0000	847.0	1338.	.8676-01	96.96	3.887	3863.	1.827	7.190	.7502-04	.7802-07

RUN NUMBER	RN/FT /FT X 106
33	3.715

TEST DATA

RUN NUMBER	YO	XO	T/C NO	PN PSIA	PN/P	PN/PT2	CPN	CPN/MX
33	115.43	1365.0	75.000	.3860-01	.4449	.5369-02	-.1239-01	-.6781-02
33	140.51	1365.0	76.000	.3893-01	.4487	.5415-02	-.1231-01	-.6734-02
33	140.51	1411.4	77.000	.4064-01	.4685	.5653-02	-.1186-01	-.6493-02
33	187.31	1365.0	80.000	.3843-01	.4430	.5346-02	-.1243-01	-.6804-02
33	187.31	1411.4	81.000	.3821-01	.4404	.5314-02	-.1249-01	-.6836-02
33	234.17	1365.0	82.000	.3850-01	.4437	.5355-02	-.1242-01	-.6795-02
33	234.17	1411.4	83.000	.3797-01	.4377	.5282-02	-.1255-01	-.6869-02
33	281.03	1365.0	85.000	.3740-01	.4310	.5202-02	-.1270-01	-.6950-02
33	281.03	1411.4	86.000	.3701-01	.4266	.5148-02	-.1280-01	-.7004-02
33	311.20	1365.0	89.000	.3707-01	.4272	.5156-02	-.1279-01	-.6996-02
33	327.83	1365.0	90.000	.3813-01	.4395	.5304-02	-.1251-01	-.6846-02
33	327.83	1411.4	91.000	.3902-01	.4498	.5428-02	-.1228-01	-.6721-02
33	327.83	1436.7	92.000	.4102-01	.4728	.5706-02	-.1177-01	-.6439-02
33	327.83	1459.4	93.000	.4320-01	.4979	.6009-02	-.1121-01	-.6133-02
33	374.69	1365.0	94.000	.3760-01	.4327	.5229-02	-.1266-01	-.6930-02
33	374.69	1411.4	95.000	.3959-01	.4563	.5507-02	-.1214-01	-.6641-02
33	398.11	1365.0	98.000	.3538-01	.4078	.4921-02	-.1322-01	-.7234-02
33	398.11	1411.4	99.000	.3804-01	.4384	.5290-02	-.1253-01	-.6860-02
33	421.49	1411.4	103.00	.3470-01	.4000	.4826-02	-.1339-01	-.7329-02
33	444.91	1365.0	104.00	.3256-01	.3754	.4529-02	-.1394-01	-.7630-02
33	456.29	1365.0	107.00	.3197-01	.3685	.4447-02	-.1410-01	-.7714-02

OH57, AEDC V41B-K3A, MODEL 92-0 AERO HEATING PRESSURE DATA

OH57,AEDC V41B-K3A, MODEL 92-0, RH WING UPR SURF

RUN NUMBER	YO	XO	T/C NO	PN PSIA	PN/P	PN/PT2	CPN	CPN/MX
33	456.29	1411.4	108.00	.3485-01	.4017	.4847-02	-.1335-01	-.7308-02
33	468.34	1379.0	74.000	.3758-01	.4325	.5227-02	-.1267-01	-.6933-02

OH57,AEDC V41B-K3A, MODEL 92-0, RH WING UPR SURF

R.H. WING UPR SURF

PARAMETRIC DATA

MACH = 8.000 PO = 850.0 RN/FT = 3.600 ELEVON = 5.000
BDFLAP = .0000 SPDBRK = 49.30 RUDDER = .0000

TEST CONDITIONS

RUN NUMBER	ALPHA DEG.	BETA DEG.	PO PSIA	TO DEG. R	P PSIA	T DEG. R	Q PSIA	V FT/SEC	CPMAX	PT2 PSIA	RHO SLUGS /FT3	MU LB-SEC /FT2
35	44.07	.0000	848.7	1354.	.8693-01	98.12	3.895	3886.	1.827	7.204	.7428-04	.7895-07

RUN NUMBER	RN/FT /FT X 106
35	3.656

TEST DATA

RUN NUMBER	YO	XO	T/C NO	PN PSIA	PN/P	PN/PT2	CPN	CPN/MX
35	115.43	1365.0	75.000	.4056-01	.4684	.5631-02	-.1187-01	-.6494-02
35	140.51	1365.0	76.000	.4094-01	.4728	.5683-02	-.1177-01	-.6440-02
35	140.51	1411.4	77.000	.4324-01	.4994	.6003-02	-.1117-01	-.6115-02
35	187.31	1365.0	80.000	.4082-01	.4714	.5666-02	-.1180-01	-.6457-02
35	187.31	1411.4	81.000	.4135-01	.4775	.5740-02	-.1166-01	-.6382-02
35	234.17	1365.0	82.000	.4098-01	.4732	.5689-02	-.1176-01	-.6435-02
35	234.17	1411.4	83.000	.4125-01	.4763	.5726-02	-.1169-01	-.6397-02
35	281.03	1365.0	85.000	.3832-01	.4425	.5319-02	-.1244-01	-.6810-02
35	281.03	1411.4	86.000	.4031-01	.4655	.5596-02	-.1193-01	-.6529-02
35	311.20	1365.0	89.000	.3907-01	.4511	.5423-02	-.1225-01	-.6704-02
35	327.83	1365.0	90.000	.4008-01	.4628	.5564-02	-.1199-01	-.6561-02
35	327.83	1411.4	91.000	.4059-01	.4687	.5634-02	-.1186-01	-.6490-02
35	327.83	1436.7	92.000	.4608-01	.5322	.6397-02	-.1044-01	-.5715-02
35	327.83	1459.4	93.000	.4874-01	.5628	.6766-02	-.9758-02	-.5340-02
35	374.69	1365.0	94.000	.4037-01	.4654	.5604-02	-.1193-01	-.6530-02
35	374.69	1411.4	95.000	.4176-01	.4822	.5797-02	-.1156-01	-.6324-02
35	398.11	1365.0	98.000	.4006-01	.4614	.5561-02	-.1202-01	-.6580-02
35	398.11	1411.4	99.000	.4078-01	.4696	.5661-02	-.1184-01	-.6479-02
35	421.49	1411.4	103.00	.3828-01	.4408	.5313-02	-.1248-01	-.6831-02
35	444.91	1365.0	104.00	.3953-01	.4552	.5487-02	-.1216-01	-.6654-02
35	456.29	1365.0	107.00	.3877-01	.4465	.5382-02	-.1235-01	-.6761-02

OH57, AEDC V41B-K3A, MODEL 92-0 AERO HEATING PRESSURE DATA

OH57,AEDC V41B-K3A, MODEL 92-0, RH WING UPR SURF

RUN NUMBER	YO	XO	T/C NO	PN PSIA	PN/P	PN/PT2	CPN	CPN/MX
35	456.29	1411.4	108.00	.3979-01	.4582	.5523-02	-.1209-01	-.6618-02
35	468.34	1379.0	74.000	.4148-01	.4780	.5755-02	-.1165-01	-.6377-02

OH57,AEDC V41B-K3A, MODEL 92-0, RH WING UPR SURF

R.H. WING UPR SURF

PARAMETRIC DATA

MACH = 8.000 PO = 850.0 RN/FT = 3.600 ELEVON = 5.000
BDFLAP = 22.50 SPDBRK = 49.30 RUDDER = .0000

TEST CONDITIONS

RUN NUMBER	ALPHA DEG.	BETA DEG.	PO PSIA	TO DEG. R	P PSIA	T DEG. R	Q PSIA	V FT/SEC	CPMAX	PT2 PSIA	RHO SLUGS /FT3	MU LB-SEC /FT2
43	30.00	.0000	847.3	1352.	.8679-01	97.97	3.888	3883.	1.827	7.192	.7427-04	.7884-07

RUN NUMBER	RN/FT /FT X 106
43	3.659

TEST DATA

RUN NUMBER	YO	XO	T/C NO	PN PSIA	PN/P	PN/PT2	CPN	CPN/MX
43	115.43	1365.0	75.000	.3476-01	.4003	.4833-02	-.1339-01	-.7325-02
43	140.51	1365.0	76.000	.3501-01	.4032	.4868-02	-.1332-01	-.7290-02
43	140.51	1411.4	77.000	.3628-01	.4179	.5045-02	-.1299-01	-.7110-02
43	187.31	1365.0	80.000	.3550-01	.4089	.4936-02	-.1319-01	-.7220-02
43	187.31	1411.4	81.000	.3489-01	.4018	.4851-02	-.1335-01	-.7307-02
43	234.17	1365.0	82.000	.3496-01	.4026	.4860-02	-.1333-01	-.7297-02
43	234.17	1411.4	83.000	.3506-01	.4038	.4875-02	-.1331-01	-.7282-02
43	281.03	1365.0	85.000	.3511-01	.4044	.4882-02	-.1329-01	-.7275-02
43	281.03	1411.4	86.000	.3534-01	.4070	.4913-02	-.1324-01	-.7244-02
43	311.20	1365.0	89.000	.3511-01	.4043	.4881-02	-.1330-01	-.7276-02
43	327.83	1365.0	90.000	.3281-01	.3780	.4563-02	-.1388-01	-.7598-02
43	327.83	1411.4	91.000	.3423-01	.3943	.4760-02	-.1352-01	-.7399-02
43	327.83	1436.7	92.000	.3786-01	.4361	.5265-02	-.1259-01	-.6888-02
43	327.83	1459.4	93.000	.4856-01	.5593	.6752-02	-.9837-02	-.5383-02
43	374.69	1365.0	94.000	.4017-01	.4632	.5585-02	-.1198-01	-.6558-02
43	374.69	1411.4	95.000	.4046-01	.4660	.5625-02	-.1192-01	-.6523-02
43	398.11	1365.0	98.000	.4797-01	.5515	.6670-02	-.1001-01	-.5478-02
43	398.11	1411.4	99.000	.4549-01	.5231	.6325-02	-.1065-01	-.5826-02
43	421.49	1411.4	103.00	.4273-01	.4913	.5942-02	-.1135-01	-.6213-02
43	444.91	1365.0	104.00	.4303-01	.4948	.5983-02	-.1128-01	-.6172-02
43	456.29	1365.0	107.00	.4111-01	.4726	.5716-02	-.1177-01	-.6442-02

OH57, AEDC V41B-K3A, MODEL 92-0 AERO HEATING PRESSURE DATA

OH57,AEDC V41B-K3A, MODEL 92-0, RH WING UPR SURF

RUN NUMBER	YO	XO	T/C NO	PN PSIA	PN/P	PN/PT2	CPN	CPN/MX
43	456.29	1411.4	108.00	.4627-01	.5320	.6433-02	-.1045-01	-.5717-02
43	468.34	1379.0	74.000	.3834-01	.4420	.5331-02	-.1245-01	-.6816-02

R.H. WING UPR SURF

PARAMETRIC DATA

MACH = 8.000 PO = 850.0 RN/FT = 3.600 ELEVON = 5.000
BDFLAP = 22.50 SPDBRK = 49.30 RUDDER = .0000

TEST CONDITIONS

RUN NUMBER	ALPHA DEG.	BETA DEG.	PO PSIA	TO DEG. R	P PSIA	T DEG. R	Q PSIA	V FT/SEC	CPMAX	PT2 PSIA	RHO SLUGS /FT3	MU LB-SEC /FT2
42	40.06	.0000	847.4	1356.	.8680-01	98.26	3.889	3889.	1.827	7.193	.7406-04	.7907-07

RUN NUMBER	RN/FT /FT X 106
42	3.643

TEST DATA

RUN NUMBER	YO	XO	T/C NO	PN PSIA	PN/P	PN/PT2	CPN	CPN/MX
42	115.43	1365.0	75.000	.3982-01	.4577	.5536-02	-.1210-01	-.6624-02
42	140.51	1365.0	76.000	.4043-01	.4648	.5621-02	-.1195-01	-.6538-02
42	140.51	1411.4	77.000	.4142-01	.4761	.5758-02	-.1169-01	-.6399-02
42	187.31	1365.0	80.000	.4086-01	.4697	.5680-02	-.1184-01	-.6478-02
42	187.31	1411.4	81.000	.3921-01	.4507	.5451-02	-.1226-01	-.6710-02
42	234.17	1365.0	82.000	.3970-01	.4563	.5519-02	-.1214-01	-.6641-02
42	234.17	1411.4	83.000	.3915-01	.4500	.5443-02	-.1228-01	-.6718-02
42	281.03	1365.0	85.000	.3806-01	.4375	.5291-02	-.1256-01	-.6871-02
42	281.03	1411.4	86.000	.3839-01	.4412	.5337-02	-.1247-01	-.6825-02
42	311.20	1365.0	89.000	.3828-01	.4400	.5322-02	-.1250-01	-.6840-02
42	327.83	1365.0	90.000	.3918-01	.4503	.5447-02	-.1227-01	-.6714-02
42	327.83	1411.4	91.000	.3997-01	.4594	.5556-02	-.1207-01	-.6603-02
42	327.83	1436.7	92.000	.4239-01	.4872	.5893-02	-.1145-01	-.6264-02
42	327.83	1459.4	93.000	.4536-01	.5214	.6306-02	-.1068-01	-.5846-02
42	374.69	1365.0	94.000	.3901-01	.4488	.5424-02	-.1230-01	-.6733-02
42	374.69	1411.4	95.000	.4030-01	.4632	.5602-02	-.1198-01	-.6557-02
42	398.11	1365.0	98.000	.3690-01	.4237	.5116-02	-.1286-01	-.7040-02
42	398.11	1411.4	99.000	.3915-01	.4508	.5443-02	-.1226-01	-.6709-02
42	421.49	1411.4	103.00	.3544-01	.4081	.4927-02	-.1321-01	-.7230-02
42	444.91	1365.0	104.00	.3559-01	.4097	.4947-02	-.1318-01	-.7210-02
42	456.29	1365.0	107.00	.3378-01	.3890	.4697-02	-.1364-01	-.7464-02

OH57,AEDC V41B-K3A, MODEL 92-0, RH WING UPR SURF

RUN NUMBER	YO	XO	T/C NO	PN PSIA	PN/P	PN/PT2	CPN	CPN/MX
42	456.29	1411.4	108.00	.3810-01	.4387	.5297-02	-.1253-01	-.6857-02
42	468.34	1379.0	74.000	.3992-01	.4592	.5550-02	-.1207-01	-.6605-02

OH57,AEDC V41B-K3A, MODEL 92-0, V.TAIL LH SIDE

VERT. TAIL LH SIDE

PARAMETRIC DATA

MACH = 8.000 PO = 850.0 RN/FT = 3.600 ELEVON = -10.00
BDFLAP = -12.50 SPDBRK = 49.30 RUDDER = .0000

TEST CONDITIONS

RUN NUMBER	ALPHA DEG.	BETA DEG.	PO PSIA	TO DEG. R	P PSIA	T DEG. R	Q PSIA	V FT/SEC	CPMAX	PT2 PSIA	RHO SLUGS /FT3	MU LB-SEC /FT2
48	30.02	.0000	848.6	1355.	.8692-01	98.19	3.894	3887.	1.827	7.203	.7422-04	.7901-07

RUN NUMBER	RN/FT /FT X 106
48	3.652

TEST DATA

RUN NUMBER	ZO	XO	T/C NO	PN PSIA	PN/P	PN/PT2	CPN	CPN/MX
48	562.97	1481.1	124.00	.3869-01	.4457	.5371-02	-.1237-01	-.6771-02
48	597.89	1495.7	111.00	.4227-01	.4870	.5868-02	-.1145-01	-.6267-02
48	625.94	1453.5	122.00	.4873-01	.5614	.6766-02	-.9789-02	-.5357-02
48	625.94	1515.4	112.00	.5749-01	.6624	.7982-02	-.7536-02	-.4124-02
48	625.94	1587.3	123.00	.8729-01	1.006	.1212-01	.1265-03	.6923-04
48	688.91	1559.4	113.00	.1480	1.705	.2055-01	.1574-01	.8613-02
48	688.91	1620.7	114.00	.2973	3.426	.4128-01	.5415-01	.2963-01
48	751.87	1556.3	115.00	.9545-01	1.100	.1325-01	.2226-02	.1218-02
48	751.87	1584.7	116.00	.1250	1.440	.1735-01	.9819-02	.5373-02
48	751.87	1603.3	118.00	.1722	1.983	.2390-01	.2195-01	.1201-01
48	751.87	1627.2	119.00	.2267	2.612	.3147-01	.3597-01	.1968-01
48	751.87	1655.5	120.00	.3021	3.481	.4195-01	.5538-01	.3030-01
48	795.80	1642.6	121.00	.1604	1.848	.2227-01	.1892-01	.1035-01

OH57,AEDC V41B-K3A, MODEL 92-0, V.TAIL LH SIDE

VERT. TAIL LH SIDE

PARAMETRIC DATA

MACH = 8.000 PO = 850.0 RN/FT = 3.600 ELEVON = -10.00
BDFLAP = -12.50 SPDBRK = 49.30 RUDDER = .0000

TEST CONDITIONS

RUN NUMBER	ALPHA DEG.	BETA DEG.	PO PSIA	TO DEG. R	P PSIA	T DEG. R	Q PSIA	V FT/SEC	CPMAX	PT2 PSIA	RHO SLUGS /FT3	MU LB-SEC /FT2
50	34.99	.0000	849.6	1355.	.8703-01	98.19	3.899	3887.	1.827	7.212	.7431-04	.7901-07

RUN NUMBER	RN/FT /FT X 106
50	3.656

TEST DATA

RUN NUMBER	ZO	XO	T/C NO	PN PSIA	PN/P	PN/PT2	CPN	CPN/MX
50	562.97	1481.1	124.00	.3879-01	.4469	.5379-02	-.1235-01	-.6756-02
50	597.89	1495.7	111.00	.4053-01	.4661	.5620-02	-.1192-01	-.6521-02
50	625.94	1453.5	122.00	.3974-01	.4578	.5510-02	-.1210-01	-.6623-02
50	625.94	1515.4	112.00	.4539-01	.5220	.6293-02	-.1067-01	-.5839-02
50	625.94	1587.3	123.00	.5725-01	.6595	.7938-02	-.7601-02	-.4159-02
50	688.91	1559.4	113.00	.9476-01	1.090	.1314-01	.2005-02	.1097-02
50	688.91	1620.7	114.00	.7691-01	.8846	.1067-01	-.2575-02	-.1409-02
50	751.87	1556.3	115.00	.1243	1.430	.1724-01	.9596-02	.5252-02
50	751.87	1584.7	116.00	.1427	1.641	.1978-01	.1431-01	.7829-02
50	751.87	1603.3	118.00	.1955	2.252	.2711-01	.2796-01	.1530-01
50	751.87	1627.2	119.00	.3108	3.575	.4310-01	.5748-01	.3145-01
50	751.87	1655.5	120.00	.2393	2.757	.3318-01	.3921-01	.2146-01
50	796.80	1642.6	121.00	.1650	1.912	.2302-01	.2036-01	.1114-01

OH57,AEDC V41B-K3A, MODEL 92-0, V.TAIL LH SIDE (R4AV03)

VERT. TAIL LH SIDE

PARAMETRIC DATA

MACH = 8.000 PO = 850.0 RN/FT = 3.600 ELEVON = -10.00
BDFLAP = -12.50 SPDBRK = 49.30 RUDDER = .0000

TEST CONDITIONS

RUN NUMBER	ALPHA DEG.	BETA DEG.	PO PSIA	TO DEG. R	P PSIA	T DEG. R	Q PSIA	V FT/SEC	CPMAX	PT2 PSIA	RHO SLUGS /FT3	MU LB-SEC /FT2
47	40.08	.0000	846.6	1353.	.8672-01	98.04	3.885	3884.	1.827	7.186	.7416-04	.7890-07

RUN NUMBER	RN/FT /FT X 106
47	3.651

TEST DATA

RUN NUMBER	ZO	XO	T/C NO	PN PSIA	PN/P	PN/PT2	CPN	CPN/MX
47	562.97	1481.1	124.00	.4433-01	.5101	.6169-02	-.1094-01	-.5984-02
47	597.89	1495.7	111.00	.4620-01	.5320	.6429-02	-.1045-01	-.5717-02
47	625.94	1453.5	122.00	.4536-01	.5219	.6312-02	-.1067-01	-.5840-02
47	625.94	1515.4	112.00	.5438-01	.6262	.7567-02	-.8344-02	-.4566-02
47	625.94	1587.3	123.00	.6063-01	.6976	.8437-02	-.6751-02	-.3694-02
47	688.91	1559.4	113.00	.6513-01	.7500	.9063-02	-.5581-02	-.3054-02
47	688.91	1620.7	114.00	.6442-01	.7418	.8964-02	-.5764-02	-.3154-02
47	751.87	1556.3	115.00	.1060	1.220	.1475-01	.4919-02	.2692-02
47	751.87	1584.7	116.00	.1036	1.192	.1441-01	.4295-02	.2350-02
47	751.87	1603.3	118.00	.1207	1.388	.1679-01	.8671-02	.4745-02
47	751.87	1627.2	119.00	.1667	1.919	.2319-01	.2051-01	.1123-01
47	751.87	1655.5	120.00	.1078	1.240	.1500-01	.5366-02	.2936-02
47	796.80	1642.6	121.00	.1528	1.758	.2127-01	.1693-01	.9263-02

OH57,AEDC V41B-K3A, MODEL 92-0, V.TAIL LH SIDE

VERT. TAIL LH SIDE

PARAMETRIC DATA

MACH = 8.000 PO = 850.0 RN/FT = 3.600 ELEVON = -10.00
BDFLAP = -12.50 SPDBRK = 49.30 RUDDER = .0000

TEST CONDITIONS

RUN NUMBER	ALPHA DEG.	BETA DEG.	PO PSIA	TO DEG. R	P PSIA	T DEG. R	Q PSIA	V FT/SEC	CPMAX	PT2 PSIA	RHO SLUGS /FT3	MU LB-SEC /FT2
49	44.02	.0000	848.1	1355.	.8687-01	98.19	3.892	3887.	1.827	7.199	.7418-04	.7901-07

RUN NUMBER	RN/FT /FT X 106
49	3.650

TEST DATA

RUN NUMBER	ZO	XO	T/C NO	PN PSIA	PN/P	PN/PT2	CPN	CPN/MX
49	562.97	1481.1	124.00	.5710-01	.6580	.7933-02	-.7633-02	-.4177-02
49	597.89	1495.7	111.00	.5483-01	.6319	.7617-02	-.8216-02	-.4496-02
49	625.94	1453.5	122.00	.5626-01	.6483	.7815-02	-.7850-02	-.4296-02
49	625.94	1515.4	112.00	.5929-01	.6833	.8236-02	-.7069-02	-.3869-02
49	625.94	1587.3	123.00	.6550-01	.7547	.9098-02	-.5475-02	-.2996-02
49	688.91	1559.4	113.00	.6812-01	.7851	.9463-02	-.4798-02	-.2626-02
49	688.91	1620.7	114.00	.7527-01	.8674	.1046-01	-.2959-02	-.1619-02
49	751.87	1556.3	115.00	.8528-01	.9829	.1185-01	-.3828-03	-.2095-03
49	751.87	1584.7	116.00	.8453-01	.9742	.1174-01	-.5762-03	-.3153-03
49	751.87	1603.3	118.00	.8907-01	1.026	.1237-01	.5890-03	.3223-03
49	751.87	1627.2	119.00	.1032	1.189	.1433-01	.4217-02	.2308-02
49	751.87	1655.5	120.00	.8210-01	.9461	.1140-01	-.1204-02	-.6588-03
49	796.80	1642.6	121.00	.1038	1.196	.1442-01	.4380-02	.2397-02

OH57,AEDC V41B-K3A, MODEL 92-0, V.TAIL LH SIDE

VERT. TAIL LH SIDE

PARAMETRIC DATA

MACH = 8.000 PO = 850.0 RN/FT = 3.600 ELEVON = -10.00
BDFLAP = .0000 SPDBRK = .0000 RUDDER = .0000

TEST CONDITIONS

RUN NUMBER	ALPHA DEG.	BETA DEG.	PO PSIA	TO DEG. R	P PSIA	T DEG. R	Q PSIA	V FT/SEC	CPMAX	PT2 PSIA	RHO SLUGS /FT3	MU LB-SEC /FT2
6	29.99	.0000	851.5	1350.	.8721-01	97.83	3.907	3880.	1.827	7.227	.7474-04	.7872-07

RUN NUMBER	RN/FT /FT X 106
6	3.684

TEST DATA

RUN NUMBER	ZO	XO	T/C NO	PN PSIA	PN/P	PN/PT2	CPN	CPN/MX
6	562.97	1481.1	124.00	.3002-01	.3440	.4154-02	-.1464-01	-.8013-02
6	597.89	1504.2	111.00	.2781-01	.3188	.3848-02	-.1521-01	-.8322-02
6	625.94	1453.5	122.00	.4743-01	.5436	.6564-02	-.1019-01	-.5575-02
6	625.94	1524.0	112.00	.3025-01	.3471	.4186-02	-.1457-01	-.7975-02
6	625.94	1587.3	123.00	.4387-01	.5030	.6070-02	-.1109-01	-.6070-02
6	688.91	1567.9	113.00	.7660-01	.8785	.1060-01	-.2713-02	-.1485-02
6	688.91	1620.7	114.00	.1114	1.278	.1541-01	.6202-02	.3394-02
6	751.89	1556.3	115.00	.9059-01	1.039	.1254-01	.8643-03	.4730-03
6	751.89	1584.7	116.00	.9125-01	1.046	.1263-01	.1023-02	.5597-03
6	751.89	1604.7	117.00	.8921-01	1.023	.1234-01	.5045-03	.2761-03
6	751.89	1611.9	118.00	.7656-01	.8779	.1059-01	-.2724-02	-.1491-02
6	751.89	1627.2	119.00	.5295-01	.6070	.7327-02	-.8771-02	-.4800-02
6	751.89	1655.5	120.00	.4448-01	.5104	.6155-02	-.1093-01	-.5980-02
6	796.80	1642.6	121.00	.7694-01	.8823	.1065-01	-.2627-02	-.1437-02

OH57,AEDC V41B-K3A, MODEL 92-0, V.TAIL LH SIDE (R4AV04)

VERT. TAIL LH SIDE

PARAMETRIC DATA

MACH = 8.000 PO = 850.0 RN/FT = 3.600 ELEVON = -10.00
BDFLAP = .0000 SPDBRK = .0000 RUDDER = .0000

TEST CONDITIONS

RUN NUMBER	ALPHA DEG.	BETA DEG.	PO PSIA	TO DEG. R	P PSIA	T DEG. R	Q PSIA	V FT/SEC	CPMAX	PT2 PSIA	RHO SLUGS /FT3	MU LB-SEC /FT2
7	39.99	.0000	850.7	1350.	.8714-01	97.83	3.904	3880.	1.827	7.221	.7468-04	.7872-07

RUN NUMBER	RN/FT /FT X 106
7	3.681

TEST DATA

RUN NUMBER	ZO	XO	T/C NO	PN PSIA	PN/P	PN/PT2	CPN	CPN/MX
7	562.97	1481.1	124.00	.4087-01	.4688	.5660-02	-.1186-01	-.6489-02
7	597.89	1504.2	111.00	.4115-01	.4719	.5699-02	-.1179-01	-.6451-02
7	625.94	1453.5	122.00	.3746-01	.4297	.5187-02	-.1273-01	-.6967-02
7	625.94	1524.0	112.00	.4344-01	.4980	.6015-02	-.1121-01	-.6132-02
7	625.94	1587.3	123.00	.6637-01	.7621	.9191-02	-.5309-02	-.2905-02
7	688.91	1567.9	113.00	.4686-01	.5382	.6490-02	-.1031-01	-.5641-02
7	688.91	1620.7	114.00	.1699	1.947	.2352-01	.2115-01	.1157-01
7	751.89	1556.3	115.00	.1010	1.159	.1399-01	.3552-02	.1944-02
7	751.89	1584.7	116.00	.1061	1.217	.1469-01	.4841-02	.2649-02
7	751.89	1604.7	117.00	.9583-01	1.099	.1327-01	.2214-02	.1211-02
7	751.89	1611.9	118.00	.7999-01	.9175	.1108-01	-.1841-02	-.1007-02
7	751.89	1627.2	119.00	.5538-01	.6350	.7670-02	-.8147-02	-.4458-02
7	751.89	1655.5	120.00	.6032-01	.6916	.8354-02	-.6885-02	-.3767-02
7	796.80	1642.6	121.00	.1176	1.350	.1628-01	.7815-02	.4277-02

OH57,AEDC V41B-K3A, MODEL 92-0, V.TAIL LH SIDE (R4AV06)

VERT. TAIL LH SIDE

PARAMETRIC DATA

MACH = 8.000 PO = 850.0 RN/FT = 3.600 ELEVON = .0000
BDFLAP = -12.50 SPDBRK = 49.30 RUDDER = .0000

TEST CONDITIONS

RUN NUMBER	ALPHA DEG.	BETA DEG.	PO PSIA	TO DEG. R	P PSIA	T DEG. R	Q PSIA	V FT/SEC	CPMAX	PT2 PSIA	RHO SLUGS /FT3	MU LB-SEC /FT2
23	30.03	.0000	847.6	1350.	.8682-01	97.83	3.889	3880.	1.827	7.194	.7440-04	.7872-07

RUN NUMBER	RN/FT /FT X 106
23	3.668

TEST DATA

RUN NUMBER	ZO	XO	T/C NO	PN PSIA	PN/P	PN/PT2	CPN	CPN/MX
23	562.97	1481.1	124.00	.3790-01	.4361	.5269-02	-.1259-01	-.6888-02
23	597.89	1495.7	111.00	.4173-01	.4795	.5800-02	-.1162-01	-.6358-02
23	625.94	1453.5	122.00	.4740-01	.5454	.6589-02	-.1015-01	-.5553-02
23	625.94	1515.4	112.00	.5599-01	.6435	.7783-02	-.7959-02	-.4355-02
23	625.94	1587.3	123.00	.8621-01	.9920	.1198-01	-.1793-03	-.9814-04
23	688.91	1559.4	113.00	.1456	1.674	.2024-01	.1503-01	.8227-02
23	688.91	1620.7	114.00	.2931	3.368	.4074-01	.5286-01	.2893-01
23	751.87	1556.3	115.00	.9650-01	1.109	.1341-01	.2432-02	.1331-02
23	751.87	1584.7	116.00	.1254	1.441	.1743-01	.9846-02	.5388-02
23	751.87	1603.3	118.00	.1732	1.990	.2407-01	.2209-01	.1209-01
23	751.87	1627.2	119.00	.2305	2.649	.3204-01	.3680-01	.2014-01
23	751.87	1655.5	120.00	.3066	3.528	.4262-01	.5643-01	.3088-01
23	796.80	1642.6	121.00	.1612	1.854	.2240-01	.1907-01	.1044-01

OH57,AEDC V41B-K3A, MODEL 92-0, V.TAIL LH SIDE (R4AV06)

VERT. TAIL LH SIDE

PARAMETRIC DATA

MACH = 8.000 PO = 850.0 RN/FT = 3.600 ELEVON = .0000
BDFLAP = -12.50 SPDBRK = 49.30 RUDDER = .0000

TEST CONDITIONS

RUN NUMBER	ALPHA DEG.	BETA DEG.	PO PSIA	TO DEG. R	P PSIA	T DEG. R	Q PSIA	V FT/SEC	CPMAX	PT2 PSIA	RHO SLUGS /FT3	MU LB-SEC /FT2
22	40.12	.0000	848.6	1348.	.8692-01	97.68	3.894	3877.	1.827	7.202	.7460-04	.7860-07

RUN NUMBER	RN/FT /FT X 106
22	3.680

TEST DATA

RUN NUMBER	ZO	XO	T/C NO	PN PSIA	PN/P	PN/PT2	CPN	CPN/MX
22	562.97	1481.1	124.00	.4464-01	.5137	.6198-02	-.1086-01	-.5940-02
22	597.89	1495.7	111.00	.4609-01	.5303	.6399-02	-.1048-01	-.5737-02
22	625.94	1453.5	122.00	.4515-01	.5196	.6269-02	-.1072-01	-.5868-02
22	625.94	1515.4	112.00	.5415-01	.6231	.7518-02	-.8414-02	-.4604-02
22	625.94	1587.3	123.00	.6099-01	.7019	.8468-02	-.6654-02	-.3641-02
22	688.91	1559.4	113.00	.6557-01	.7545	.9104-02	-.5480-02	-.2999-02
22	688.91	1620.7	114.00	.6379-01	.7340	.8857-02	-.5937-02	-.3249-02
22	751.87	1556.3	115.00	.1034	1.190	.1436-01	.4243-02	.2322-02
22	751.87	1584.7	116.00	.1041	1.198	.1445-01	.4417-02	.2417-02
22	751.87	1603.3	118.00	.1396	1.607	.1939-01	.1354-01	.7411-02
22	751.87	1627.2	119.00	.1688	1.942	.2344-01	.2103-01	.1151-01
22	751.87	1655.5	120.00	.1122	1.291	.1558-01	.6496-02	.3555-02
22	796.80	1642.6	121.00	.1531	1.762	.2126-01	.1701-01	.9308-02

OH57,AEDC V41B-K3A, MODEL 92-0, V.TAIL LH SIDE

VERT. TAIL LH SIDE

PARAMETRIC DATA

MACH = 8.000 PO = 850.0 RN/FT = 3.600 ELEVON = .0000
BDFLAP = -12.50 SPDBRK = 49.30 RUDDER = .0000

TEST CONDITIONS

RUN NUMBER	ALPHA DEG.	BETA DEG.	PO PSIA	TO DEG. R	P PSIA	T DEG. R	Q PSIA	V FT/SEC	CPMAX	PT2 PSIA	RHO SLUGS /FT3	MU LB-SEC /FT2
24	44.10	.0000	848.4	1350.	.8690-01	97.83	3.893	3880.	1.827	7.201	.7447-04	.7872-07

RUN NUMBER	RN/FT /FT X 106
24	3.671

TEST DATA

RUN NUMBER	ZO	XO	T/C NO	PN PSIA	PN/P	PN/PT2	CPN	CPN/MX
24	562.97	1481.1	124.00	.5597-01	.6434	.7772-02	-.7961-02	-.4356-02
24	597.89	1495.7	111.00	.5406-01	.6220	.7507-02	-.8437-02	-.4617-02
24	625.94	1453.5	122.00	.5576-01	.6410	.7743-02	-.8014-02	-.4386-02
24	625.94	1515.4	112.00	.5905-01	.6795	.8201-02	-.7154-02	-.3915-02
24	625.94	1587.3	123.00	.6566-01	.7548	.9118-02	-.5474-02	-.2995-02
24	688.91	1559.4	113.00	.6744-01	.7760	.9365-02	-.5000-02	-.2736-02
24	688.91	1620.7	114.00	.7427-01	.8546	.1031-01	-.3247-02	-.1777-02
24	751.87	1556.3	115.00	.8976-01	1.033	.1247-01	.7340-03	.4016-03
24	751.87	1584.7	116.00	.8689-01	.9997	.1207-01	-.5648-05	-.3091-05
24	751.87	1603.3	118.00	.1261	1.451	.1752-01	.1008-01	.5515-02
24	751.87	1627.2	119.00	.1094	1.259	.1519-01	.5780-02	.3163-02
24	751.87	1655.5	120.00	.8420-01	.9679	.1169-01	-.7162-03	-.3919-03
24	796.80	1642.6	121.00	.1100	1.264	.1527-01	.5894-02	.3225-02

VERT. TAIL LH SIDE

PARAMETRIC DATA

MACH = 8.000 PO = 850.0 RN/FT = 3.600 ELEVON = .0000
BDFLAP = .0000 SPDBRK = 49.30 RUDDER = .0000

TEST CONDITIONS

RUN NUMBER	ALPHA DEG.	BETA DEG.	PO PSIA	TO DEG. R	P PSIA	T DEG. R	Q PSIA	V FT/SEC	CPMAX	PT2 PSIA	RHO SLUGS /FT3	MU LB-SEC /FT2
10	30.00	.0000	848.7	1355.	.8693-01	98.19	3.894	3887.	1.827	7.203	.7422-04	.7901-07

RUN NUMBER	RN/FT /FT X 106
10	3.652

TEST DATA

RUN NUMBER	ZO	XO	T/C NO	PN PSIA	PN/P	PN/PT2	CPN	CPN/MX
10	562.97	1481.1	124.00	.3887-01	.4473	.5397-02	-.1234-01	-.6751-02
10	597.89	1495.7	111.00	.4166-01	.4793	.5784-02	-.1162-01	-.6361-02
10	625.94	1453.5	122.00	.5029-01	.5787	.6981-02	-.9405-02	-.5147-02
10	625.94	1515.4	112.00	.5785-01	.6655	.8031-02	-.7466-02	-.4086-02
10	625.94	1587.3	123.00	.8851-01	1.018	.1229-01	.4111-03	.2250-03
10	688.91	1559.4	113.00	.1470	1.692	.2041-01	.1544-01	.8448-02
10	688.91	1620.7	114.00	.2965	3.411	.4116-01	.5382-01	.2945-01
10	751.87	1556.3	115.00	.9602-01	1.105	.1333-01	.2336-02	.1278-02
10	751.87	1584.7	116.00	.1230	1.415	.1708-01	.9274-02	.5075-02
10	751.87	1603.3	118.00	.1706	1.962	.2368-01	.2147-01	.1175-01
10	751.87	1627.2	119.00	.2257	2.597	.3133-01	.3564-01	.1950-01
10	751.87	1655.5	120.00	.3009	3.462	.4177-01	.5496-01	.3008-01
10	796.80	1642.6	121.00	.1632	1.878	.2266-01	.1960-01	.1073-01

OH57,AEDC V41B-K3A, MODEL 92-0, V.TAIL LH SIDE (R4AV07)

VERT. TAIL LH SIDE

PARAMETRIC DATA

MACH = 8.000 PO = 850.0 RN/FT = 3.600 ELEVON = .0000
BDFLAP = .0000 SPDBRK = 49.30 RUDDER = .0000

TEST CONDITIONS

RUN NUMBER	ALPHA DEG.	BETA DEG.	PO PSIA	TO DEG. R	P PSIA	T DEG. R	Q PSIA	V FT/SEC	CPMAX	PT2 PSIA	RHO SLUGS /FT3	MU LB-SEC /FT2
11	35.09	.0000	847.5	1354.	.8681-01	98.12	3.889	3886.	1.827	7.193	.7417-04	.7895-07

RUN NUMBER	RN/FT /FT X 106
11	3.651

TEST DATA

RUN NUMBER	ZO	XO	T/C NO	PN PSIA	PN/P	PN/PT2	CPN	CPN/MX
11	562.97	1481.1	124.00	.3925-01	.4521	.5457-02	-.1223-01	-.6693-02
11	597.89	1495.7	111.00	.4068-01	.4684	.5655-02	-.1187-01	-.6494-02
11	625.94	1453.5	122.00	.4132-01	.4759	.5745-02	-.1170-01	-.6402-02
11	625.94	1515.4	112.00	.4567-01	.5258	.6349-02	-.1059-01	-.5793-02
11	625.94	1587.3	123.00	.5620-01	.6473	.7814-02	-.7874-02	-.4309-02
11	688.91	1559.4	113.00	.9391-01	1.081	.1306-01	.1814-02	.9925-03
11	688.91	1620.7	114.00	.7607-01	.8759	.1058-01	-.2771-02	-.1516-02
11	751.87	1556.3	115.00	.1248	1.437	.1735-01	.9747-02	.5334-02
11	751.87	1584.7	116.00	.1403	1.616	.1951-01	.1374-01	.7520-02
11	751.87	1603.3	118.00	.1935	2.228	.2690-01	.2741-01	.1500-01
11	751.87	1627.2	119.00	.3106	3.576	.4317-01	.5749-01	.3146-01
11	751.87	1655.5	120.00	.2352	2.708	.3270-01	.3813-01	.2087-01
11	796.80	1642.6	121.00	.1660	1.912	.2308-01	.2035-01	.1114-01

VERT. TAIL LH SIDE

PARAMETRIC DATA

MACH = 8.000 PO = 850.0 RN/FT = 3.600 ELEVON = .0000
BDFLAP = .0000 SPDBRK = 49.30 RUDDER = .0000

TEST CONDITIONS

RUN NUMBER	ALPHA DEG.	BETA DEG.	PO PSIA	TO DEG. R	P PSIA	T DEG. R	Q PSIA	V FT/SEC	CPMAX	PT2 PSIA	RHO SLUGS /FT3	MU LB-SEC /FT2
12	40.12	.0000	847.9	1351.	.8685-01	97.90	3.891	3882.	1.827	7.197	.7437-04	.7878-07

RUN NUMBER	RN/FT /FT X 106
12	3.665

TEST DATA

RUN NUMBER	ZO	XO	T/C NO	PN PSIA	PN/P	PN/PT2	CPN	CPN/MX
12	562.97	1481.1	124.00	.4525-01	.5209	.6288-02	-.1069-01	-.5852-02
12	597.89	1495.7	111.00	.4621-01	.5326	.6421-02	-.1043-01	-.5709-02
12	625.94	1453.5	122.00	.4605-01	.5301	.6399-02	-.1049-01	-.5740-02
12	625.94	1515.4	112.00	.5359-01	.6177	.7447-02	-.8534-02	-.4670-02
12	625.94	1587.3	123.00	.5977-01	.6880	.8305-02	-.6963-02	-.3811-02
12	688.91	1559.4	113.00	.6474-01	.7461	.8996-02	-.5667-02	-.3101-02
12	688.91	1620.7	114.00	.6441-01	.7424	.8951-02	-.5750-02	-.3146-02
12	751.87	1556.3	115.00	.9983-01	1.151	.1387-01	.3361-02	.1839-02
12	751.87	1584.7	116.00	.1017	1.173	.1414-01	.3854-02	.2109-02
12	751.87	1603.3	118.00	.1185	1.365	.1646-01	.8152-02	.4461-02
12	751.87	1627.2	119.00	.1652	1.904	.2295-01	.2017-01	.1104-01
12	751.87	1655.5	120.00	.1150	1.324	.1598-01	.7224-02	.3953-02
12	796.80	1642.6	121.00	.1494	1.720	.2076-01	.1607-01	.8793-02

OH57,AEDC V41B-K3A, MODEL 92-0, V.TAIL LH SIDE (R4AV07)

VERT. TAIL LH SIDE

PARAMETRIC DATA

MACH = 8.000 PO = 850.0 RN/FT = 3.600 ELEVON = .0000
BDFLAP = .0000 SPDBRK = 49.30 RUDDER = .0000

TEST CONDITIONS

RUN NUMBER	ALPHA DEG.	BETA DEG.	PO PSIA	TO DEG. R	P PSIA	T DEG. R	Q PSIA	V FT/SEC	CPMAX	PT2 PSIA	RHO SLUGS /FT3	MU LB-SEC /FT2
13	43.98	.0000	848.8	1353.	.8694-01	98.04	3.895	3884.	1.827	7.204	.7434-04	.7890-07

RUN NUMBER	RN/FT /FT X 106
13	3.661

TEST DATA

RUN NUMBER	ZO	XO	T/C NO	PN PSIA	PN/P	PN/PT2	CPN	CPN/MX
13	562.97	1481.1	124.00	.5022-01	.5774	.6971-02	-.9433-02	-.5162-02
13	597.89	1495.7	111.00	.4867-01	.5595	.6756-02	-.9832-02	-.5380-02
13	625.94	1453.5	122.00	.4974-01	.5719	.6905-02	-.9556-02	-.5229-02
13	625.94	1515.4	112.00	.5303-01	.6096	.7361-02	-.8713-02	-.4768-02
13	625.94	1587.3	123.00	.6000-01	.6899	.8329-02	-.6923-02	-.3788-02
13	688.91	1559.4	113.00	.6098-01	.7011	.8465-02	-.6672-02	-.3651-02
13	688.91	1620.7	114.00	.6829-01	.7851	.9479-02	-.4797-02	-.2625-02
13	751.87	1556.3	115.00	.8409-01	.9668	.1167-01	-.7419-03	-.4060-03
13	751.87	1584.7	116.00	.8148-01	.9368	.1131-01	-.1410-02	-.7717-03
13	751.87	1603.3	118.00	.3299-01	.3793	.4579-02	-.1386-01	-.7583-02
13	751.87	1627.2	119.00	.1031	1.186	.1432-01	.4148-02	.2270-02
13	751.87	1655.5	120.00	.7888-01	.9069	.1095-01	-.2078-02	-.1137-02
13	796.80	1642.6	121.00	.1035	1.190	.1437-01	.4249-02	.2325-02

OH57,AEDC V41B-K3A, MODEL 92-0, V.TAIL LH SIDE (R4AV08)

VERT. TAIL LH SIDE

PARAMETRIC DATA

MACH = 8.000 PO = 850.0 RN/FT = 3.600 ELEVON = .0000
BDFLAP = .0000 SPDBRK = 49.30 RUDDER = .0000

TEST CONDITIONS

RUN NUMBER	ALPHA DEG.	BETA DEG.	PO PSIA	TO DEG. R	P PSIA	T DEG. R	Q PSIA	V FT/SEC	CPMAX	PT2 PSIA	RHO SLUGS /FT3	MU LB-SEC /FT2
26	30.04	.0000	846.9	1351.	.8674-01	97.90	3.886	3882.	1.827	7.188	.7429-04	.7878-07

RUN NUMBER	RN/FT /FT X 106
26	3.661

TEST DATA

RUN NUMBER	ZO	XO	T/C NO	PN PSIA	PN/P	PN/PT2	CPN	CPN/MX
26	562.97	1481.1	124.00	.3844-01	.4432	.5348-02	-.1243-01	-.6802-02
26	597.89	1495.7	111.00	.4208-01	.4856	.5854-02	-.1148-01	-.6283-02
26	625.94	1453.5	122.00	.4704-01	.5423	.6545-02	-.1022-01	-.5590-02
26	625.94	1515.4	112.00	.5538-01	.6392	.7705-02	-.8053-02	-.4407-02
26	625.94	1587.3	123.00	.8580-01	.9891	.1194-01	-.2440-03	-.1335-03
26	688.91	1559.4	113.00	.1436	1.658	.1998-01	.1469-01	.8036-02
26	688.91	1620.7	114.00	.2877	3.320	.4002-01	.5180-01	.2835-01
26	751.87	1556.3	115.00	.9613-01	1.109	.1337-01	.2444-02	.1337-02
26	751.87	1584.7	116.00	.1254	1.447	.1745-01	.9987-02	.5465-02
26	751.87	1603.3	118.00	.1727	1.993	.2402-01	.2216-01	.1213-01
26	751.87	1627.2	119.00	.2318	2.675	.3225-01	.3740-01	.2046-01
26	751.87	1655.5	120.00	.3064	3.532	.4263-01	.5653-01	.3093-01
26	796.80	1642.6	121.00	.1596	1.840	.2220-01	.1874-01	.1026-01

OH57,AEDC V41B-K3A, MODEL 92-0, V.TAIL LH SIDE (R4AV08)

VERT. TAIL LH SIDE

PARAMETRIC DATA

MACH = 8.000 PO = 850.0 RN/FT = 3.600 ELEVON = .0000
BDFLAP = .0000 SPDBRK = 49.30 RUDDER = .0000

TEST CONDITIONS

RUN NUMBER	ALPHA DEG.	BETA DEG.	PO PSIA	TO DEG. R	P PSIA	T DEG. R	Q PSIA	V FT/SEC	CPMAX	PT2 PSIA	RHO SLUGS /FT3	MU LB-SEC /FT2
28	35.00	.0000	847.9	1353.	.8685-01	98.04	3.891	3884.	1.827	7.197	.7426-04	.7890-07

RUN NUMBER	RN/FT /FT X 106
28	3.657

TEST DATA

RUN NUMBER	ZO	XO	T/C NO	PN PSIA	PN/P	PN/PT2	CPN	CPN/MX
28	562.97	1481.1	124.00	.3977-01	.4569	.5526-02	-.1212-01	-.6634-02
28	597.89	1495.7	111.00	.4109-01	.4723	.5710-02	-.1178-01	-.6446-02
28	625.94	1453.5	122.00	.2960	3.401	.4114-01	.5360-01	.2933-01
28	625.94	1515.4	112.00	.4612-01	.5301	.6409-02	-.1049-01	-.5740-02
28	625.94	1587.3	123.00	.4257-01	.4891	.5915-02	-.1141-01	-.6241-02
28	688.91	1559.4	113.00	.9449-01	1.086	.1313-01	.1918-02	.1050-02
28	688.91	1620.7	114.00	.7657-01	.8801	.1064-01	-.2677-02	-.1465-02
28	751.87	1556.3	115.00	.1249	1.436	.1736-01	.9733-02	.5326-02
28	751.87	1584.7	116.00	.1422	1.634	.1976-01	.1416-01	.7749-02
28	751.87	1603.3	118.00	.1943	2.233	.2699-01	.2751-01	.1506-01
28	751.87	1627.2	119.00	.3069	3.527	.4264-01	.5641-01	.3087-01
28	751.87	1655.5	120.00	.4311-01	.4953	.5990-02	-.1127-01	-.6166-02
28	796.80	1642.6	121.00	.4397-01	.5040	.6096-02	-.1107-01	-.6058-02

OH57,AEDC V41B-K3A, MODEL 92-0, V.TAIL LH SIDE (R4AV08)

VERT. TAIL LH SIDE

PARAMETRIC DATA

MACH = 8.000 PO = 850.0 RN/FT = 3.600 ELEVON = .0000
BDFLAP = .0000 SPDBRK = 49.30 RUDDER = .0000

TEST CONDITIONS

RUN NUMBER	ALPHA DEG.	BETA DEG.	PO PSIA	TO DEG. R	P PSIA	T DEG. R	Q PSIA	V FT/SEC	CPMAX	PT2 PSIA	RHO SLUGS /FT3	MU LB-SEC /FT2
25	40.07	.0000	846.8	1351.	.8673-01	97.90	3.886	3882.	1.827	7.187	.7428-04	.7878-07

RUN NUMBER	RN/FT /FT X 106
25	3.660

TEST DATA

RUN NUMBER	ZO	XO	T/C NO	PN PSIA	PN/P	PN/PT2	CPN	CPN/MX
25	562.97	1481.1	124.00	.4634-01	.5332	.6448-02	-.1042-01	-.5702-02
25	597.89	1495.7	111.00	.4740-01	.5459	.6595-02	-.1014-01	-.5546-02
25	625.94	1453.5	122.00	.4686-01	.5391	.6519-02	-.1029-01	-.5630-02
25	625.94	1515.4	112.00	.5514-01	.6351	.7672-02	-.8145-02	-.4458-02
25	625.94	1587.3	123.00	.6229-01	.7167	.8667-02	-.6324-02	-.3461-02
25	688.91	1559.4	113.00	.6551-01	.7545	.9115-02	-.5480-02	-.2999-02
25	688.91	1620.7	114.00	.6439-01	.7416	.8959-02	-.5767-02	-.3156-02
25	751.87	1556.3	115.00	.1009	1.162	.1403-01	.3610-02	.1976-02
25	751.87	1584.7	116.00	.1031	1.188	.1435-01	.4196-02	.2296-02
25	751.87	1603.3	118.00	.1396	1.608	.1943-01	.1358-01	.7430-02
25	751.87	1627.2	119.00	.1640	1.889	.2281-01	.1983-01	.1085-01
25	751.87	1655.5	120.00	.1124	1.293	.1563-01	.6536-02	.3577-02
25	796.80	1642.6	121.00	.1499	1.725	.2086-01	.1618-01	.8854-02

VERT. TAIL LH SIDE

PARAMETRIC DATA

MACH = 8.000 PO = 850.0 RN/FT = 3.600 ELEVON = .0000
BDFLAP = .0000 SPDBRK = 49.30 RUDDER = .0000

TEST CONDITIONS

RUN NUMBER	ALPHA DEG.	BETA DEG.	PO PSIA	TO DEG. R	P PSIA	T DEG. R	Q PSIA	V FT/SEC	CPMAX	PT2 PSIA	RHO SLUGS /FT3	MU LB-SEC /FT2
27	44.07	.0000	847.6	1353.	.8682-01	98.04	3.889	3884.	1.827	7.194	.7424-04	.7890-07

RUN NUMBER	RN/FT /FT X 106
27	3.655

TEST DATA

RUN NUMBER	ZO	XO	T/C NO	PN PSIA	PN/P	PN/PT2	CPN	CPN/MX
27	562.97	1481.1	124.00	.5693-01	.6563	.7913-02	-.7671-02	-.4198-02
27	597.89	1495.7	111.00	.5463-01	.6287	.7594-02	-.8288-02	-.4536-02
27	625.94	1453.5	122.00	.5618-01	.6477	.7809-02	-.7864-02	-.4303-02
27	625.94	1515.4	112.00	.5934-01	.6829	.8248-02	-.7079-02	-.3874-02
27	625.94	1587.3	123.00	.6688-01	.7711	.9296-02	-.5110-02	-.2796-02
27	688.91	1559.4	113.00	.6788-01	.7812	.9436-02	-.4885-02	-.2673-02
27	688.91	1620.7	114.00	.7503-01	.8634	.1043-01	-.3048-02	-.1668-02
27	751.87	1556.3	115.00	.8920-01	1.027	.1240-01	.5924-03	.3242-03
27	751.87	1584.7	116.00	.8473-01	.9750	.1178-01	-.5579-03	-.3053-03
27	751.87	1603.3	118.00	.1306	1.503	.1816-01	.1124-01	.6149-02
27	751.87	1627.2	119.00	.1053	1.212	.1464-01	.4730-02	.2589-02
27	751.87	1655.5	120.00	.8225-01	.9493	.1143-01	-.1153-02	-.6312-03
27	796.80	1642.6	121.00	.1053	1.225	.1477-01	.5028-02	.2751-02

OH57,AEDC V41B-K3A, MODEL 92-0, V.TAIL LH SIDE

VERT. TAIL LH SIDE

PARAMETRIC DATA

MACH = 8.000 PO = 850.0 RN/FT = 3.600 ELEVON = .0000
BDFLAP = .0000 SPDBRK = .0000 RUDDER = .0000

TEST CONDITIONS

RUN NUMBER	ALPHA DEG.	BETA DEG.	PO PSIA	TO DEG. R	P PSIA	T DEG. R	Q PSIA	V FT/SEC	CPMAX	PT2 PSIA	RHO SLUGS /FT3	MU LB-SEC /FT2
5	29.99	.0000	851.7	1351.	.8723-01	97.90	3.908	3882.	1.827	7.229	.7470-04	.7878-07

RUN NUMBER	RN/FT /FT X 106
5	3.681

TEST DATA

RUN NUMBER	ZO	XO	T/C NO	PN PSIA	PN/P	PN/PT2	CPN	CPN/MX
5	562.97	1481.1	124.00	.3337-01	.3835	.4616-02	-.1376-01	-.7531-02
5	597.89	1504.2	111.00	.2707-01	.3106	.3745-02	-.1539-01	-.8421-02
5	625.94	1453.5	122.00	.4744-01	.5453	.6563-02	-.1015-01	-.5555-02
5	625.94	1524.0	112.00	.2905-01	.3337	.4019-02	-.1487-01	-.8139-02
5	625.94	1587.3	123.00	.6037-01	.6945	.8351-02	-.6820-02	-.3732-02
5	688.91	1567.9	113.00	.7717-01	.8878	.1068-01	-.2505-02	-.1371-02
5	688.91	1620.7	114.00	.1264	1.452	.1748-01	.1008-01	.5515-02
5	751.89	1556.3	115.00	.8705-01	.9978	.1204-01	-.4819-04	-.2637-04
5	751.89	1584.7	116.00	.8994-01	1.032	.1244-01	.7049-03	.3858-03
5	751.89	1604.7	117.00	.8855-01	1.016	.1225-01	.3610-03	.1976-03
5	751.89	1611.9	118.00	.7621-01	.8737	.1054-01	-.2819-02	-.1543-02
5	751.89	1627.2	119.00	.5318-01	.6102	.7357-02	-.8700-02	-.4761-02
5	751.89	1655.5	120.00	.4467-01	.5131	.6180-02	-.1087-01	-.5947-02
5	796.80	1642.6	121.00	.7526-01	.8658	.1041-01	-.2995-02	-.1639-02

VERT. TAIL LH SIDE

PARAMETRIC DATA

MACH = 8.000 PO = 850.0 RN/FT = 3.600 ELEVON = .0000
BDFLAP = .0000 SPDBRK = .0000 RUDDER = .0000

TEST CONDITIONS

RUN NUMBER	ALPHA DEG.	BETA DEG.	PO PSIA	TO DEG. R	P PSIA	T DEG. R	Q PSIA	V FT/SEC	CPMAX	PT2 PSIA	RHO SLUGS /FT3	MU LB-SEC /FT2
4	35.03	.0000	849.1	1349.	.8698-01	97.75	3.897	3879.	1.827	7.207	.7460-04	.7866-07

RUN NUMBER	RN/FT /FT X 106
4	3.679

TEST DATA

RUN NUMBER	ZO	XO	T/C NO	PN PSIA	PN/P	PN/PT2	CPN	CPN/MX
4	562.97	1481.1	124.00	.3337-01	.3831	.4630-02	-.1377-01	-.7535-02
4	597.89	1504.2	111.00	.3394-01	.3897	.4710-02	-.1362-01	-.7455-02
4	625.94	1453.5	122.00	.3355-01	.3853	.4655-02	-.1372-01	-.7509-02
4	625.94	1524.0	112.00	.3433-01	.3939	.4762-02	-.1353-01	-.7404-02
4	625.94	1587.3	123.00	.6037-01	.6932	.8376-02	-.6847-02	-.3747-02
4	688.91	1567.9	113.00	.4966-01	.5702	.6890-02	-.9593-02	-.5250-02
4	688.91	1620.7	114.00	.1129	1.295	.1566-01	.6586-02	.3604-02
4	751.89	1556.3	115.00	.1168	1.343	.1620-01	.7652-02	.4187-02
4	751.89	1584.7	116.00	.1233	1.415	.1711-01	.9254-02	.5064-02
4	751.89	1604.7	117.00	.1244	1.431	.1727-01	.9614-02	.5261-02
4	751.89	1611.9	118.00	.1103	1.265	.1530-01	.5913-02	.3236-02
4	751.89	1627.2	119.00	.6348-01	.7287	.8808-02	-.6055-02	-.3314-02
4	751.89	1655.5	120.00	.4995-01	.5732	.6931-02	-.9528-02	-.5214-02
4	796.80	1642.6	121.00	.9764-01	1.121	.1355-01	.2708-02	.1482-02

OH57,AEDC V41B-K3A, MODEL 92-0, V.TAIL LH SIDE (R4AV09)

VERT. TAIL LH SIDE

PARAMETRIC DATA

MACH = 8.000 PO = 850.0 RN/FT = 3.600 ELEVON = .0000
BDFLAP = .0000 SPDBRK = .0000 RUDDER = .0000

TEST CONDITIONS

RUN NUMBER	ALPHA DEG	BETA DEG.	PO PSIA	TO DEG. R	P PSIA	T DEG. R	Q PSIA	V FT/SEC	CPMAX	PT2 PSIA	RHO SLUGS /FT3	MU LB-SEC /FT2
2	40.01	.0000	850.6	1351.	.8713-01	97.90	3.903	3882.	1.827	7.220	.7462-04	.7878-07

RUN NUMBER	RN/FT /FT X 106
2	3.677

TEST DATA

RUN NUMBER	ZO	XO	T/C NO	PN PSIA	PN/P	PN/PT2	CPN	CPN/MX
2	562.97	1481.1	124.00	.4837-01	.5550	.6699-02	-.9934-02	-.5436-02
2	597.89	1504.2	111.00	.4180-01	.4796	.5790-02	-.1161-01	-.6356-02
2	625.94	1453.5	122.00	.3826-01	.4390	.5298-02	-.1252-01	-.6853-02
2	625.94	1524.0	112.00	.4425-01	.5076	.6128-02	-.1099-01	-.6014-02
2	625.94	1587.3	123.00	.1069	1.226	.1480-01	.5043-02	.2760-02
2	688.91	1567.9	113.00	.4894-01	.5614	.6778-02	-.9791-02	-.5358-02
2	688.91	1620.7	114.00	.2404	2.758	.3329-01	.3923-01	.2147-01
2	751.89	1556.3	115.00	.9960-01	1.143	.1379-01	.3193-02	.1748-02
2	751.89	1584.7	116.00	.1050	1.205	.1454-01	.4585-02	.2509-02
2	751.89	1604.7	117.00	.9418-01	1.083	.1304-01	.1845-02	.1010-02
2	751.89	1611.9	118.00	.7822-01	.8980	.1083-01	-.2276-02	-.1245-02
2	751.89	1627.2	119.00	.5678-01	.6515	.7864-02	-.7778-02	-.4257-02
2	751.89	1655.5	120.00	.6056-01	.6948	.8387-02	-.6814-02	-.3729-02
2	796.80	1642.6	121.00	.1180	1.353	.1634-01	.7884-02	.4315-02

OH57,AEDC V41B-K3A, MODEL 92-0, V.TAIL LH SIDE

VERT. TAIL LH SIDE

PARAMETRIC DATA

MACH = 8.000 PO = 850.0 RN/FT = 3.600 ELEVON = .0000
BDFLAP = .0000 SPDBRK = .0000 RUDDER = .0000

TEST CONDITIONS

RUN NUMBER	ALPHA DEG.	BETA DEG.	PO PSIA	TO DEG. R	P PSIA	T DEG. R	Q PSIA	V FT/SEC	CPMAX	PT2 PSIA	RHO SLUGS /FT3	MU LB-SEC /FT2
1	44.55	.0000	852.0	1351.	.8726-01	97.90	3.909	3882.	1.827	7.231	.7473-04	.7878-07

RUN NUMBER	RN/FT /FT X 106
1	3.683

TEST DATA

RUN NUMBER	ZO	XO	T/C NO	PN PSIA	PN/P	PN/PT2	CPN	CPN/MX
1	562.97	1481.1	124.00	.5287-01	.6071	.7311-02	-.8770-02	-.4799-02
1	597.89	1504.2	111.00	.5162-01	.5934	.7139-02	-.9077-02	-.4967-02
1	625.94	1453.5	122.00	.4907-01	.5636	.6787-02	-.9742-02	-.5331-02
1	625.94	1524.0	112.00	.5435-01	.6242	.7516-02	-.8389-02	-.4591-02
1	625.94	1587.3	123.00	.1159	1.331	.1602-01	.7379-02	.4038-02
1	688.91	1567.9	113.00	.6116-01	.7024	.8458-02	-.6644-02	-.3636-02
1	688.91	1620.7	114.00	.2239	2.571	.3096-01	.3507-01	.1919-01
1	751.89	1556.3	115.00	.7515-01	.8612	.1039-01	-.3099-02	-.1696-02
1	751.89	1584.7	116.00	.7772-01	.8907	.1075-01	-.2440-02	-.1335-02
1	751.89	1604.7	117.00	.7408-01	.8494	.1025-01	-.3362-02	-.1840-02
1	751.89	1611.9	118.00	.7003-01	.8045	.9684-02	-.4364-02	-.2388-02
1	751.89	1627.2	119.00	.6931-01	.7967	.9585-02	-.4539-02	-.2484-02
1	751.89	1655.5	120.00	.7306-01	.8391	.1010-01	-.3591-02	-.1965-02
1	796.80	1642.6	121.00	.8539-01	.9805	.1181-01	-.4344-03	-.2377-03

OH57,AEDC V41B-K3A, MODEL 92-0, V.TAIL LH SIDE

VERT. TAIL LH SIDE

PARAMETRIC DATA

MACH = 8.000 PO = 850.0 RN/FT = 3.600 ELEVON = 5.000
BDFLAP = .0000 SPDBRK = 49.30 RUDDER = .0000

TEST CONDITIONS

RUN NUMBER	ALPHA DEG.	BETA DEG.	PO PSIA	TO DEG. R	P PSIA	T DEG. R	Q PSIA	V FT/SEC	CPMAX	PT2 PSIA	RHO SLUGS /FT3	MU LB-SEC /FT2
34	29.96	.0000	845.2	1353.	.8658-01	98.04	3.879	3884.	1.827	7.174	.7403-04	.7890-07

RUN NUMBER	RN/FT /FT X 106
34	3.645

TEST DATA

RUN NUMBER	ZO	XO	T/C NO	PN PSIA	PN/P	PN/PT2	CPN	CPN/MX
34	562.97	1481.1	124.00	.3993-01	.4598	.5566-02	-.1206-01	-.6599-02
34	597.89	1495.7	111.00	.4303-01	.4952	.5998-02	-.1127-01	-.6166-02
34	625.94	1453.5	122.00	.4928-01	.5675	.6869-02	-.9654-02	-.5283-02
34	625.94	1515.4	112.00	.5790-01	.6664	.8071-02	-.7447-02	-.4075-02
34	625.94	1587.3	123.00	.8747-01	1.007	.1219-01	.1602-03	.8765-04
34	688.91	1559.4	113.00	.1481	1.705	.2065-01	.1573-01	.8608-02
34	688.91	1620.7	114.00	.2998	3.450	.4178-01	.5469-01	.2993-01
34	751.87	1556.3	115.00	.9506-01	1.094	.1325-01	.2098-02	.1148-02
34	751.87	1584.7	116.00	.1240	1.427	.1728-01	.9527-02	.5213-02
34	751.87	1603.3	118.00	.1710	1.969	.2383-01	.2162-01	.1183-01
34	751.87	1627.2	119.00	.2238	2.576	.3120-01	.3517-01	.1925-01
34	751.87	1655.5	120.00	.3013	3.469	.4199-01	.5512-01	.3016-01
34	796.80	1642.6	121.00	.1606	1.850	.2239-01	.1897-01	.1038-01

OH57,AEDC V41B-K3A, MODEL 92-0, V.TAIL LH SIDE

VERT. TAIL LH SIDE

PARAMETRIC DATA

MACH = 8.000 PO = 850.0 RN/FT = 3.600 ELEVON = 5.000
BDFLAP = .0000 SPDBRK = 49.30 RUDDER = .0000

TEST CONDITIONS

RUN NUMBER	ALPHA DEG.	BETA DEG.	PO PSIA	TO DEG. R	P PSIA	T DEG. R	Q PSIA	V FT/SEC	CPMAX	PT2 PSIA	RHO SLUGS /FT3	MU LB-SEC /FT2
36	34.97	.0000	848.5	1353.	.8691-01	98.04	3.894	3884.	1.827	7.202	.7432-04	.7890-07

RUN NUMBER	RN/FT /FT X 106
36	3.660

TEST DATA

RUN NUMBER	ZO	XO	T/C NO	PN PSIA	PN/P	PN/PT2	CPN	CPN/MX
36	562.97	1481.1	124.00	.3983-01	.4591	.5530-02	-.1207-01	-.6607-02
36	597.89	1495.7	111.00	.4144-01	.4770	.5753-02	-.1167-01	-.6389-02
36	625.94	1453.5	122.00	.4104-01	.4731	.5699-02	-.1176-01	-.6436-02
36	625.94	1515.4	112.00	.4693-01	.5402	.6516-02	-.1026-01	-.5616-02
36	625.94	1587.3	123.00	.5783-01	.6666	.8029-02	-.7442-02	-.4073-02
36	688.91	1559.4	113.00	.9050-01	1.042	.1257-01	.9324-03	.5103-03
36	688.91	1620.7	114.00	.7705-01	.8869	.1070-01	-.2524-02	-.1381-02
36	751.87	1556.3	115.00	.1246	1.435	.1730-01	.9699-02	.5308-02
36	751.87	1584.7	116.00	.1394	1.605	.1936-01	.1350-01	.7386-02
36	751.87	1603.3	118.00	.1905	2.196	.2645-01	.2669-01	.1461-01
36	751.87	1627.2	119.00	.2986	3.437	.4146-01	.5439-01	.2977-01
36	751.87	1655.5	120.00	.2277	2.625	.3161-01	.3626-01	.1985-01
36	796.80	1642.6	121.00	.1645	1.897	.2284-01	.2001-01	.1095-01

OH57,AEDC V41B-K3A, MODEL 92-0, V.TAIL LH SIDE (R4AV14)

VERT. TAIL LH SIDE

PARAMETRIC DATA

MACH = 8.000 PO = 850.0 RN/FT = 3.600 ELEVON = 5.000
BDFLAP = .0000 SPDBRK = 49.30 RUDDER = .0000

TEST CONDITIONS

RUN NUMBER	ALPHA DEG.	BETA DEG.	PO PSIA	TO DEG. R	P PSIA	T DEG. R	Q PSIA	V FT/SEC	CPMAX	PT2 PSIA	RHO SLUGS /FT3	MU LB-SEC /FT2
33	40.02	.0000	847.0	1338.	.8676-01	96.96	3.887	3863.	1.827	7.190	.7502-04	.7802-07

RUN NUMBER	RN/FT /FT X 106
33	3.715

TEST DATA

RUN NUMBER	ZO	XO	T/C NO	PN PSIA	PN/P	PN/PT2	CPN	CPN/MX
33	562.97	1481.1	124.00	.4687-01	.5394	.6520-02	-.1028-01	-.5626-02
33	597.89	1495.7	111.00	.4811-01	.5546	.6691-02	-.9943-02	-.5441-02
33	625.94	1453.5	122.00	.4832-01	.5561	.6721-02	-.9909-02	-.5423-02
33	625.94	1515.4	112.00	.5584-01	.6437	.7767-02	-.7953-02	-.4352-02
33	625.94	1587.3	123.00	.6008-01	.6914	.8356-02	-.6889-02	-.3770-02
33	688.91	1559.4	113.00	.6471-01	.7459	.9001-02	-.5671-02	-.3104-02
33	688.91	1620.7	114.00	.6556-01	.7557	.9119-02	-.5453-02	-.2984-02
33	751.87	1556.3	115.00	.9996-01	1.152	.1390-01	.3398-02	.1860-02
33	751.87	1584.7	116.00	.9818-01	1.132	.1366-01	.2941-02	.1609-02
33	751.87	1603.3	118.00	.1155	1.329	.1607-01	.7354-02	.4025-02
33	751.87	1627.2	119.00	.1567	1.806	.2180-01	.1800-01	.9850-02
33	751.87	1655.5	120.00	.1071	1.232	.1490-01	.5188-02	.2839-02
33	796.80	1642.6	121.00	.1445	1.663	.2010-01	.1481-01	.8103-02

OH57,AEDC V41B-K3A, MODEL 92-0, V.TAIL LH SIDE (R4AV14)

VERT. TAIL LH SIDE

PARAMETRIC DATA

MACH = 8.000 PO = 850.0 RN/FT = 3.600 ELEVON = 5.000
BDFLAP = .0000 SPDBRK = 49.30 RUDDER = .0000

TEST CONDITIONS

RUN NUMBER	ALPHA DEG.	BETA DEG.	PO PSIA	TO DEG. R	P PSIA	T DEG. R	Q PSIA	V FT/SEC	CPMAX	PT2 PSIA	RHO SLUGS /FT3	MU LB-SEC /FT2
35	44.07	.0000	848.7	1354.	.8693-01	98.12	3.895	3886.	1.827	7.204	.7428-04	.7895-07

RUN NUMBER	RN/FT /FT X 106
35	3.656

TEST DATA

RUN NUMBER	ZO	XO	T/C NO	PN PSIA	PN/P	PN/PT2	CPN	CPN/MX
35	562.97	1481.1	124.00	.5930-01	.6837	.8232-02	-.7060-02	-.3864-02
35	597.89	1495.7	111.00	.5517-01	.6353	.7658-02	-.8140-02	-.4454-02
35	625.94	1453.5	122.00	.5660-01	.6525	.7857-02	-.7756-02	-.4244-02
35	625.94	1515.4	112.00	.5976-01	.6883	.8296-02	-.6959-02	-.3808-02
35	625.94	1587.3	123.00	.6526-01	.7523	.9059-02	-.5529-02	-.3025-02
35	688.91	1559.4	113.00	.6939-01	.7991	.9632-02	-.4485-02	-.2454-02
35	688.91	1620.7	114.00	.7627-01	.8783	.1059-01	-.2716-02	-.1486-02
35	751.87	1556.3	115.00	.8936-01	1.029	.1240-01	.6499-03	.3557-03
35	751.87	1584.7	116.00	.8510-01	.9800	.1181-01	-.4456-03	-.2438-03
35	751.87	1603.3	118.00	.8861-01	1.022	.1230-01	.4815-03	.2635-03
35	751.87	1627.2	119.00	.1034	1.191	.1435-01	.4256-02	.2329-02
35	751.87	1655.5	120.00	.8196-01	.9449	.1138-01	-.1229-02	-.6728-03
35	796.80	1642.6	121.00	.1047	1.207	.1454-01	.4629-02	.2533-02

OH57,AEDC V41B-K3A, MODEL 92-0, V.TAIL LH SIDE (R4AV16)

VERT. TAIL LH SIDE

PARAMETRIC DATA

MACH = 8.000 PO = 850.0 RN/FT = 3.600 ELEVON = 5.000
BDFLAP = 22.50 SPDBRK = 49.30 RUDDER = .0000

TEST CONDITIONS

RUN NUMBER	ALPHA DEG.	BETA DEG.	PO PSIA	TO DEG. R	P PSIA	T DEG. R	Q PSIA	V FT/SEC	CPMAX	PT2 PSIA	RHO SLUGS /FT3	MU LB-SEC /FT2
43	30.00	.0000	847.3	1352.	.8679-01	97.97	3.888	3883.	1.827	7.192	.7427-04	.7884-07

RUN NUMBER	RN/FT /FT X 106
43	3.659

TEST DATA

RUN NUMBER	ZO	XO	T/C NO	PN PSIA	PN/P	PN/PT2	CPN	CPN/MX
43	562.97	1481.1	124.00	.4053-01	.4673	.5635-02	-.1189-01	-.6507-02
43	597.89	1495.7	111.00	.4377-01	.5032	.6086-02	-.1109-01	-.6068-02
43	625.94	1453.5	122.00	.4794-01	.5528	.6666-02	-.9983-02	-.5463-02
43	625.94	1515.4	112.00	.5699-01	.6553	.7925-02	-.7694-02	-.4211-02
43	625.94	1587.3	123.00	.8424-01	.9713	.1171-01	-.6409-03	-.3507-03
43	688.91	1559.4	113.00	.1457	1.675	.2026-01	.1508-01	.8250-02
43	688.91	1620.7	114.00	.2938	3.377	.4084-01	.5307-01	.2904-01
43	751.87	1556.3	115.00	.9568-01	1.100	.1330-01	.2234-02	.1223-02
43	751.87	1584.7	116.00	.1260	1.448	.1751-01	.1000-01	.5475-02
43	751.87	1603.3	118.00	.1733	1.998	.2410-01	.2229-01	.1220-01
43	751.87	1627.2	119.00	.2321	2.669	.3227-01	.3725-01	.2038-01
43	751.87	1655.5	120.00	.3023	3.485	.4203-01	.5548-01	.3036-01
43	796.80	1642.6	121.00	.1590	1.833	.2211-01	.1860-01	.1018-01

OH57,AEDC V41B-K3A, MODEL 92-0, V.TAIL LH SIDE (R4AV16)

VERT. TAIL LH SIDE

PARAMETRIC DATA

MACH = 8.000 PO = 850.0 RN/FT = 3.600 ELEVON = 5.000
BDFLAP = 22.50 SPDBRK = 49.30 RUDDER = .0000

TEST CONDITIONS

RUN NUMBER	ALPHA DEG.	BETA DEG.	PO PSIA	TO DEG. R	P PSIA	T DEG. R	Q PSIA	V FT/SEC	CPMAX	PT2 PSIA	RHO SLUGS /FT3	MU LB-SEC /FT2
42	40.06	.0000	847.4	1356.	.8680-01	98.26	3.889	3889.	1.827	7.193	.7406-04	.7907-07

RUN NUMBER	RN/FT /FT X 106
42	3.643

TEST DATA

RUN NUMBER	ZO	XO	T/C NO	PN PSIA	PN/P	PN/PT2	CPN	CPN/MX
42	562.97	1481.1	124.00	.5150-01	.5924	.7160-02	-.9097-02	-.4978-02
42	597.89	1495.7	111.00	.5060-01	.5826	.7035-02	-.9316-02	-.5098-02
42	625.94	1453.5	122.00	.5167-01	.5945	.7184-02	-.9052-02	-.4954-02
42	625.94	1515.4	112.00	.5782-01	.6658	.8039-02	-.7461-02	-.4083-02
42	625.94	1587.3	123.00	.6268-01	.7210	.8714-02	-.6227-02	-.3408-02
42	688.91	1559.4	113.00	.6511-01	.7497	.9052-02	-.5588-02	-.3058-02
42	688.91	1620.7	114.00	.6762-01	.7786	.9402-02	-.4942-02	-.2704-02
42	751.87	1556.3	115.00	.9692-01	1.116	.1347-01	.2588-02	.1416-02
42	751.87	1584.7	116.00	.9632-01	1.109	.1339-01	.2433-02	.1331-02
42	751.87	1603.3	118.00	.1111	1.278	.1544-01	.6200-02	.3393-02
42	751.87	1627.2	119.00	.1458	1.679	.2027-01	.1515-01	.8290-02
42	751.87	1655.5	120.00	.1052	1.210	.1462-01	.4684-02	.2563-02
42	796.80	1642.6	121.00	.1391	1.600	.1933-01	.1339-01	.7325-02