April, 1979

DMS-DR-2210
NASA CR-151,372

CONVECTIVE HEAT-TRANSFER TEST RESULTS FOR A GAP, CYLINDRICAL-PROTUBERANCE, AND SHOCK-IMPINGEMENT FLAP-PLATE MODEL (15-0 INSERT VIII) IN THE NASA-AMES 3.5-FOOT HYPERSONIC WIND TUNNEL (IH27)

by

T. F. Foster and W. H. Dye
Shuttle Aero Sciences
Rockwell International Space Division

Prepared under NASA Contract Number NAS9-13247

by

Data Management Services
Chrysler Corporation Michoud Defense-Space Division
New Orleans, La. 70189

for

Engineering Analysis Division

Johnson Space Center
National Aeronautics and Space Administration
Houston, Texas

WIND TUNNEL TEST SPECIFICS:

Test Number:	ARC 3.5 HWT 200
NASA Series Number:	IH27
Model Number:	15-0 Insert VIII
Test Dates:	September 9 through September 25, 1974
Occupancy Hours:	212

FACILITY COORDINATOR:

Joseph G. Marvin
Mail Stop 229-1
NASA-Ames Research Center
Moffett Field, California 94035

Phone: (415) 965-5390

PROJECT ENGINEERS:

T. F. Foster, W. H. Dye,
and F. Hung
Mail Code AC07
Rockwell International
Space Division
12214 Lakewood Boulevard
Downey, California 90241

Phone: (213) 922-4898

William K. Lockman
Mail Stop 229-1
NASA-Ames Research Center
Moffett Field, California 94035

Phone: (415) 965-6255

DATA MANAGEMENT SERVICES:

Prepared by: Liaison--D. W. Hersey
Operations--J. E. Vaughn

Reviewed by: G. G. McDonald

Approved: J. L. Glynn, Manager
Data Operations

Concurrence: N. D. Kemp, Manager
Data Management Services

Chrysler Corporation Michoud Defense-Space Division assumes no responsibility for the data presented other than display characteristics.

CONVECTIVE HEAT-TRANSFER TEST RESULTS FOR A GAP, CYLINDRICAL-PROTUBERANCE, AND SHOCK-IMPINGEMENT FLAP-PLATE MODEL (15-0 INSERT VIII) IN THE NASA-AMES 3.5-FOOT HYPERSONIC WIND TUNNEL (IH27)

by

T. F. Foster and W. H. Dye
Rockwell International Space Division

ABSTRACT

This report presents convective heat-transfer data from a test program (IH27) conducted with a Rockwell flat-plate, thin-skin thermocouple model (No. 15-0 with insert VIII) in the NASA-Ames 3.5-Foot Hypersonic Wind Tunnel. This was a parametric study to determine the effects of surface protuberances and shock impingement on the surface heating and the heating in simulated thermal protection system (TPS) tile gaps of the Space Shuttle Orbiter. The model was a flat-plate with gaps, various cylindrical protuberances, and an oblique-shock generator to simulate strut-attachment and shock-impingement effects on surface and gap heating for the Orbiter when mated to the External tank. Data were obtained at Mach 5.2 for laminar and turbulent boundary-layer flows.

Mr. W. K. Lockman, Ames Research Center, is acknowledged for his technical assistance applicable to data reduction and to the preparation of this report.

(THIS PAGE INTENIONALLY LEFT BLANK.)

TABLE OF CONTENTS

	Page
ABSTRACT	iii
INDEX OF MODEL FIGURES	2
NOMENCLATURE	4
INTRODUCTION	8
CONFIGURATIONS INVESTIGATED	9
INSTRUMENTATION	11
TEST FACILITY DESCRIPTION	12
TEST PROCEDURES	13
DATA REDUCTION	15
REMARKS	19
REFERENCES	21
TABLES	
I. MODEL CONFIGURATION NOMENCLATURE	22
II. NOMINAL TEST CONDITIONS	23
III. DATA SET/RUN NUMBER COLLATION SUMMARY	24
IV. THERMOCOUPLE LOCATIONS	27
V. THERMOCOUPLE PLUG HOOKUP SCHEDULE	35
VI. FLAT PLATE THEORETICAL REFERENCE DATA, $\phi = 0$	37
VII. FLAT PLATE THEORETICAL REFERENCE DATA, $\phi = 45$	45
VIII. ADJUSTMENT FACTORS FOR TURBULENT REFERENCE DATA	53
FIGURES	
MODEL	54
APPENDIX	
TABULATED SOURCE DATA	74

INDEX OF MODEL FIGURES

Figure		Title	Page
1.		Model notation and axis systems.	
	a.	Flat Plate Coordinate Systems and Protuberences	54
	b.	Gap and Protuberence Orientations	55
	c.	Protuberence Model Nomenclature	56
	d.	Oblique-Shock Impingement Testing	57
	e.	Wedge Nomenclature	58
	f.	Turntable Reference System	59
2.		Thermocouple locations.	
	a.	Sections 1 and 2 Surface Thermocouples	60
	b.	Section 3 Surface Thermocouples	61
	c.	Gap Between Sections 1 and 2	62
	d.	Gap Adjacent to Section 3	63
3.		Model photographs.	
	a.	Flat-Plate Model Installation in NASA-Ames 3.5-Foot Hypersonic Wind Tunnel - Overall Side View	64
	b.	Gap Configuration B Control Installation - 3/4 Rear View	65
	c.	Two-Inch Diameter Right Cylinder With Gap Configuration C - 3/4 Rear View	66
	d.	Two-Inch Diameter Right Cylinder With Gap Configuration C - Side View	67
	e.	Two-Inch Diameter 45° Cylinder With Gap Configuration C - 3/4 Rear View	68
	f.	Two-Inch Diameter 45° Cylinder With Gap Configuration C - Side View	69
	g.	Wedge Shock Generator With Gap Configuration C - 3/4 Rear View	70

INDEX OF MODEL FIGURES (Concluded)

Figure	Title	Page
h.	Wedge Shock Generation With Gap Configuration C - 3/4 Front View	71
i.	Oil-Flow Pattern Around 2-Inch Diameter Right Cylinder With Gap Configuration B (filled) - Side View	72
j.	Oil-Flow Pattern Around 2-Inch Diameter Right Cylinder With Gap Configuration B (0.050-In. Gap Width) - Side View	73

NOMENCLATURE

Plot Symbol	Mnemonic Symbol	Definition
b		thickness of model skin, in
C		specific heat of model skin material, BTU/lbm
C_o, C_1, C_2		constants in curve fit for C over model wall temperature range
C_p		specific heat of air stream (perfect gas value) BTU/lbm
D		cylinder diameter, in
d	D	distance from gap centerline to leading edge of wedge shock generator, in
CHAN	CHAN	recording-system channel
H_{aw}	HAW	adiabatic wall enthalpy, BTU/lbm
H_t	HT	free-stream total enthalpy, BTU/lbm
H_w		instantaneous local wall enthalpy, BTU/lbm
H_{w_i}	HW	enthalpy based on model wall temperature for given T/C location at initial time, BTU/lbm
h	H	heat-transfer coefficient at model wall for given T/C location, lbm/ft^2-sec
h/h_{FP}	H/HFP	ratio of heat transfer coefficient data to theoretical flat plate data
h_s	HS	stagnation-point heat-transfer coefficient for reference sphere, lbm/ft^2-sec
h/h_s	H/HS	ratio of model heat-transfer coefficient to heat-transfer coefficient of reference sphere for H_{aw}/H_t = 0.873 (laminar) or 0.907 (turbulent)
h_2		vertical distance from flat plate surface to wedge trailing edge, in
L	Length	model reference length, in
LE		leading edge

NOMENCLATURE (Continued)

Plot Symbol	Mnemonic Symbol	Definition
M_∞	MACH	free-stream Mach number
P_t	PT	free-stream total pressure, psia
P		free-stream static pressure, psia
P_1		flat plate surface pressure, psia
P_2		wedge lower surface pressure, psia
$\dot{q}$		heat-transfer rate, BTU/ft^2-sec
$\dot{q}_i$	Q	heat-transfer rate at model wall for given T/C location at initial time, BTU/ft^2-sec
$\dot{q}_s$	QS	stagnation-point heat-transfer rate for reference sphere at initial time, BTU/ft^2-sec
R		radius, inches
R_s	RS	reference sphere radius at model scale equivalent to 0.305 m (1 ft) for full-scale vehicle
Re_∞/ft	RE/FT	free-stream unit Reynolds number, ft^{-1}
$Re_{\infty,L}$	REL	free-stream Reynolds number based on model reference length, length, L
St	ST	Stanton number based on free-stream flow conditions and the model heat-transfer coefficient for H_{aw}/H_t = 0.873 (laminar) or 0.907 (turbulent)
T		temperature, °R
T_t	TT	free-stream total temperature, °R
T_w		model wall temperature, °R
T_{w_i}	TW	model wall temperature for given T/C location at initial time, °R

NOMENCLATURE (Continued)

Plot Symbol	Mnemonic Symbol	Definition
T/C	T/C	thermocouple
TE		trailing edge
t		time, sec.
t_i	TIME	initial time (before model insertion into flow) extrapolated from $f(T_w)$ vs time, sec
TPS		thermal protection system
u		velocity, ft/sec
W		density of model skin material
w	W	gap width, in.
X		distance downstream from flat plate, in.
Y		spanwise distance from flat plate centerline, in.
Z		vertical distance from flat plate surface, in.
X_I	XI	axial distance measured from gap centerline intersection, in.
Y_I	YI	spanwise distance from gap centerline intersection, in
Z_I	ZI	vertical distance from flat plate surface, in. ($Z_I \equiv Z$)
α		wedge angle of attack, deg
β		wedge sideslip angle, deg
δ		wedge flow deflection angle, deg
Θ		shock angle, deg
μ		viscosity of air, lb-sec/ft^2
ρ		density of air, lbm/ft^3 or slug/ft^3

NOMENCLATURE (Concluded)

Plot Symbol	Mnemonic Symbol	Definition
ϕ	PHI	turntable rotation angle, deg

Subscripts

aw	adiabatic wall
i	initial value before model insertion into tunnel flow
PG	perfect gas (calorically and thermally perfect gas)
s	reference sphere
t	free-stream total condition
w	wall
∞	free-stream
1	conditions upstream of shock
2	conditions downstream of shock

INTRODUCTION

The thermal environment of the Space Shuttle Orbiter TPS tiles during ascent must be modeled to support their design. These tiles are in a complex flow field influenced by Orbiter/tank attach struts and oblique shocks generated by the Orbiter and solid-rocket boosters. The gaps between TPS tiles are an especially critical heating region.

This aeroheating environment was experimentally investigated during test IH27 in the NASA-Ames 3.5-Foot Hypersonic Wind Tunnel. The TPS tiles were simulated by a flat-plate, thin-skin model with gaps on its surface instrumented with thermocouples. Cylindrical protuberances and an oblique-shock generator were tested with the model to simulate strut-attachment and shock-impingement effects on surface and gap heating with laminar and turbulent boundary-layer flows.

Model gap configurations investigated were as follows:

1) Single transverse gap (perpendicular to freestream flow)
2) Single longitudinal gap (parallel to freestream flow)
3) Single gap inclined 45° to freestream flow
4) Orthogonal intersecting gaps parallel and perpendicular to freestream flow
5) Orthogonal intersecting gaps inclined 45° to the flow

The gaps were tested alone, with a cylindrical protuberance immediately downstream of their intersection point, or with an oblique shock wave impinging the model at various locations. A wedge was used to generate the oblique shock, with the shock location controlled by vertical and/or horizontal translation of the wedge.

CONFIGURATIONS INVESTIGATED

The 15-0 VIII model is a flat-plate, thin-skin thermocouple model simulating full-scale TPS gaps in the vicinity of tank-to-Orbiter structure attachments. The model consists of the 15-0 flat plate carrier used in previous tests, three 6-x 24-inch instrumented modules of model 15-0 insert III, a three-piece circular turntable section with two orthogonal intersecting gaps, various size circular cylindrical protuberances, and a wedge shock generator (figures 1 and 3). Model nomenclature is summarized in Table I . Three 6-inch modules of the 15-0 insert VIII were located in front of the turntable insert from model station 12 thru 30 to provide surface centerline instrumentation. The first 6-inch module was not instrumented. All instrumented areas of the model were constructed of 17-4 PH stainless steel.

The turntable section was an eleven-inch radius, three-piece circular section which was rotated counterclockwise to 0° and 45° to provide the gap configurations as shown in figure 1b. Gaps were filled with stainless steel shims and dental plaster to provide configurations with closed gaps. Gap widths of 0.050 inch and 0.100 inch were provided by sliding the three pieces of the turntable outward. The gap depth was constant at 1.25 inches. The corner radii were 0.060 inch except for one 4.5 inch (from y = -3.0 to y = -7.5) long section with 0.120 inch radius. The turntable section was interchanged with 6-x 24-inch modules to provide turntable center locations at model stations 24 and 42 for both laminar and turbulent testing.

Various circular cross-section cylinders were located near the gap

intersection of the turntable test area to simulate several Orbiter strut attachment configurations as shown in figures 1a, 1b, and 1c. The circular cylinders used for this test were as follows:

1-in. diameter right cylinder - 8-in. high

2-in. diameter right cylinder - 8-in. high

4-in. diameter right cylinder - 8-in. high

2-in. diameter cylinder inclined into flow - 8-in. high

To reduce heat-sink effects, each cylinder had an insulation pad the same diameter as the cylinder between the cylinder base and the flat-plate surface. The two-inch right circular cylinder also had an insulation pad one inch in diameter and 0.25 inch thick. See figure 1c for protuberance definition.

The oblique-shock generator was a 15° wedge, fully spanning the flat plate, with pitch capability to provide flow turning angles of $\delta = 5°$ and 10° (see figure 1d and 1e). The leading-edge radius was 0.005 in. and the trailing edge was adjustable to 0.5, 1.0, 1.5, and 2.0 in. above the model surface. The wedge had a yaw capability of 0° and 3° about the model centerline, but it was only set to 0° for this test. For each combination of wedge α and vertical displacement, the shock impingement point was adjustable by fore and aft movement of approximately eight inches from the turntable center. Wedge leading-edge position (d) for shock impingement at the gap centerline for inviscid flow was computed using : $d = \frac{6 \sin \delta + h_2}{\tan \Theta}$. The wedge and support apparatus were located for testing with gap intersection at model stations 24 and 42.

INSTRUMENTATION

The thin-skin model was instrumented with 330 chromel-constantan thermocouples (0.005 in. wire diameter) spot welded to the model inner surface at the locations given in figure 2 and Table IV. The nominal skin thickness was 0.015 in. for all instrumented areas except for the region near the gap intersection where the thickness was 0.025 in. to reduce gap wall deflections under high pressure loading caused by the protuberances. The 330 thermocouples were connected to 66 plugs with 5 thermocouples per plug. These plugs were stowed inside an aft extension compartment of the model. Plugs attached to chromel-constantan extension leads from the data acquisition system, through a thermocouple reference-temperature box, were also stowed in this compartment. Thus, all thermocouple changes were made by plug changes at the model.

Two static pressure taps were located on the model to verify the shock strength for the two wedge angles. One tap (P_1) was located on the flat plate surface of section 1. Another tap (P_2) was located on the wedge bottom surface. The P_2 tap was positioned such that it was not in the region of the reflected shock impingement point on the wedge. When the turntable was rotated for gap configurations C & F, the P_1 pressure tap rotated to a region which may have been influenced by the disturbed boundary layer region in front of the shock.

TEST FACILITY DESCRIPTION

The NASA-Ames 3.5-Foot Hypersonic Wind Tunnel is a closed-circuit, blowdown-type tunnel capable of operating at nominal Mach numbers of 5, 7, and 10 at pressures to 1800 psia and temperatures to 3400°R for run times to four minutes. The major components of the facility include a gas storage system where the test gas is stored at 3000 psi, a storage heater filled with aluminum-oxide pebbles capable of heating the test gas to 3400°R, axisymmetric contoured nozzles with exit diameters of 42 inches for generating the desired Mach number, and a 900,000 ft^3 vacuum storage system which operates to pressures of 0.3 psia. The test section itself is an open-jet type enclosed within a chamber approximately 12 feet in diameter and 40 feet in length, arranged transversally to the flow direction.

A model support system is provided that can pitch models through an angle-of-attack range of -20 to +20 degrees, in a vertical plane, about a fixed point of rotation on the tunnel centerline. This rotation point is adjustable from 1 to 5 feet from the nozzle exit plane. The model normally is out of the test stream (strut centerline 37 inches from tunnel centerline) until the tunnel test conditions are established, after which it is inserted. Insertion time is adjustable to as little as 1/2 second and models may be inserted at any strut angle.

A high-speed, analog-to-digital data acquistion system is used to record test data on magnetic tape. The present system is equipped to measure and record the outputs from 80 transducers in addition to 20 channels of tunnel parameters.

TEST PROCEDURES

The model was mounted at 0° angle of attack on a base sting to the tunnel quick-insert support mechanism. This mechanism injected the model into the air stream when steady-state test conditions were established and retracted the model at the completion of data acquisition. The model injection time, time on tunnel centerline, and retraction time were each set at about 1 second to give a total test duration of about 3 seconds. The nominal test conditions are given in Table II.

Dental plaster was used to fill in the ring spacer around the turntable circumference when the gap width was changed. The three turntable sections slid outward to increase the gap width. The forward transverse gaps of the 6" x 24" modules of insert VIII were filled with plaster for the entire test. Plaster and aluminum tape were used to seal the bottom-surface bolt holes from pressure leakage to or from the model interior. O-rings were used in all instrumented gaps to seal the sliding joint of the gap wall and floor.

The model wall temperature and pressure data along with the tunnel conditions were recorded on magnetic tape at 0.07-second intervals during the test duration of about 3 seconds. The heat-transfer data were reduced using the techniques given in the Data Reduction section of this report. The combination of 330 model thermocouples, a 75-thermocouple input limit to the data acquisition system per run, and the number of different model configurations necessitated 18 different thermocouple plug hookup schedules for this test as given in Table V.

TEST PROCEDURES (Concluded)

Shadowgraph photographs were taken for each cylinder or oblique-shock generator run. The oblique-shock run shadowgraphs were analyzed on site to determine shock impingement location. Any deviation in the actual impingement location from the calculated inviscid location was alleviated by fore and aft positioning of the wedge leading edge. Some runs were also made to determine the surface oil-flow patterns around the cylinder protuberances with and without open gap configurations (see figures 3i and 3j).

DATA REDUCTION

All test data were reduced at the NASA/Ames Research Center using the data-reduction techniques outlined below. The thermocouple data were reduced using the one-dimensional, thin-wall equation:

$$\dot{q} = WCb \frac{dT_w}{dt} = h\ (H_{aw} - H_w) \equiv hH_t\ (\frac{H_{aw}}{H_t} - \frac{H_w}{H_t}) \tag{1}$$

which neglects heat-conduction losses.

Assuming that W and h are constant and

$$C = C_o + C_1\ T_w + C_2\ T_w^{\ 2} \text{ for } T_w \text{ ranges} \tag{2}$$

the integration of equation (1) for $t = t_i$ to t and $T_w = T_{w_i}$ to T_w yields the linear equation:

$$f\ (T_w) = -\ \ln\left(\frac{T'_{aw} - T_w}{T'_{aw} - T_{w_i}}\right) - \left[\frac{C_1}{C'_{aw}} + \frac{C_2}{C'_{aw}}\left(T'_{aw} + \frac{T_w + T_{w_i}}{2}\right)\right]\ (T_w - T_{w_i})$$

$$= \frac{hc_p}{WC'_{aw}b}\ (t - t_i) \tag{3}$$

where it is defined that:

$$T'_{aw} \equiv \frac{H_{aw}}{c_p} \equiv \frac{H_{aw}}{H_t}\ \frac{H_t}{c_p} \geq (T_{aw})_{PG} \tag{4}$$

$$C'_{aw} \equiv C_o + C_1\ T'_{aw} + C_2\ T'^{\ 2}_{aw} \tag{5}$$

c_p specific heat at adiabatic wall temperature

The form of Eq (3) is $f(T_w) = mt + a$ where m is the slope and a is the intercept for a straight line if heat-conduction errors are negligible. Thus, deviations from a straight line can indicate heat-conduction effects.

The slope, m, of $f(T_w)$ vs t from Eq (3) is computed by a least-squares, straight-line fit over a finite time interval (approx 1 sec) beginning when the model reaches uniform tunnel flow. The value of the heat-transfer coefficient, h, is then determined from:

$$h = \frac{WC'_{aw}b}{c_p} m \tag{6}$$

Using this value of h, the heat-transfer rate is evaluated at the initial time, t_i, when the model is isothermal at the initial wall enthalpy, H_{w_i}

$$\dot{q} = \dot{q}_i = h\,(H_{aw} - H_{w_i}) \equiv hH_t\,\left(\frac{H_{aw}}{H_t} - \frac{H_{wi}}{H_t}\right) \tag{7}$$

where H_{aw}/H_t is the same value used to evaluate h. The resultant value of $\dot{q}$ is independent of the value of H_{aw}/H_t used for both the h and $\dot{q}$ evaluations.

The reference sphere heating is also evaluated at the inital wall enthalpy by the method of Fay and Riddell (ref. 2):

$$\dot{q}_s = h_s\,(H_t - H_{w_i}) \equiv h_s\,H_t\,\left(1.0 - \frac{H_{w_i}}{H_t}\right) \tag{8}$$

The model-to-sphere ratio of heat-transfer coefficients is then determined from Eqs. (7) and (8) as

$$\frac{h}{h_s} = \frac{\dot{q}_i}{\dot{q}_s}\left[\frac{1.0 - H_{w_i}/H_t}{H_{aw}/H_t - H_{w_i}/H_t}\right] \tag{9}$$

where $\dot{q}_i$ is constant for all values of H_{aw}/H_t.

To determine h/h_s for various values of H_{aw}/H_t, the particular value of H_{aw}/H_t is substituted into Eq. (9).

The Stanton number is defined as

$$St \equiv \frac{h}{\rho u} = \frac{\dot{q}_i}{\rho u(H_{aw} - H_{w_i})} \tag{10}$$

where for free-stream conditions, $\rho u = \rho_\infty V_\infty$.

The calculations of the model heating, reference sphere heating, and Reynolds number included the corrections of NACA report 1135 (ref. 3) for calorically imperfect, thermally perfect air. Keyes' equation for viscosity (see ref. 4) was also used for the sphere heating and Reynolds number computations:

$$\mu = \frac{0.0232 \times 10^{-6}\ T^{0.5}}{1 + \frac{220}{T} \times 10^{-9/T}} \tag{11}$$

where the units for T and μ are °R and lb-sec/ft^2, respectively.

Final reduced heat-transfer coefficient data were referenced to theoretical flat-plate data. Values of h/h_s from laminar test data (gap at X = 24 in) were ratioed to the value of h/h_s predicted by Eckert Laminar Theory (ref. 5) for a corresponding X (distance from leading edge). Values of h/h_s from turbulent test data (gap at X = 42 in) were ratioed to the value of h/h_s predicted by Spalding-Chi Turbulent Theory (ref. 6) for a corresponding X. Resulting coefficients were labeled H/HFP. Tables VI and VII provide theoretical reference data used in this computation for $\phi = 0^{\circ}$ and $\phi = 45^{\circ}$, respectively. Turbulent reference data from Tables VI and VII were multiplied by the factor given in Table VIII to account for difference in freestream flow between runs.

REMARKS

The various gap configurations were generated by filling one or more of the intersecting gaps with stainless steel filler plates and dental plaster. In addition, all gaps and joints between mating surfaces were filled with dental plaster. The plaster surface deflections were $\leq$ .001 inch and should not have affected transition. As can be seen from plots of h vs X, however, a local discontinuity in heating does occur at the filled transverse gap station for the flat plate control runs. At this station the T/C instrumentation was approximately 0.1 to 0.2 in. from the plaster; this could have affected the measurements.

The wedge oblique-shock generator was designed to be tested at four vertical displacement locations (h_2). It was initially planned to test with h_2 = 0.5 inch to keep the wedge as close to the flat-plate surface as possible without choking the flow. This would permit maximum separation between the impingements of the wedge oblique shock and the wedge trailing edge expansion fan with the flat plate surface. The shadowgraph from the first run using a wedge demonstrated that flow aft of the shock between the wedge and the plate was irregular. The shock wave was curved forward and the impingement point could not be detected. To avoid this problem, remaining test data were obtained with h_2 = 1.5". Since the theoretical shock impingement point was computed for inviscid flow, the actual impingement point was adjusted(by fore and aft displacement of the wedge leading edge) to bracket the peak heating region aft of the shock about the theoretical impingement point. This was done for gap

configuration B during runs 31-35, 49, and 60.

One current design consideration for the heating in the TPS gaps is to fill them with a loose fiber material called "monkey fur." Runs 61 and 62 were conceived during the test period to simulate this configuration. For these additional data points, fiberglass insulation was loosly packed into the gaps of configuration B to qualitatively determine the reduction in gap heating with a gap filler.

REFERENCES

1. Foster, T. F.; "Pretest Report for Aerodynamic Heating Tests Space Shuttle Flat Plate Protuberance and Shock Impingement Model in the Ames Research Center 3.5 Ft. Hypersonic Wind Tunnel Model 15-0 (insert VIII), Test IH27," May 9, 1974, SD74-SH-0170.

2. Fay, J. A.; and Riddell, F. R.; "Theory of Stagnation Point Heat Transfer in Dissociated Air." J. Aeron. Sci,; Vol. 25, No. 1, February 1958, pp. 73-85.

3. Ames Research Staff; "Equations, Tables, and Charts for Compressible Flow," NACA 1135, 1953.

4. Bertram, Mitchel H.; Comment on "Viscosity of Air," J. Spacecraft Rockets, Vol. 4, No. 2, February 1967, pp. 287-288.

5. Eckert, E. R. G.; "Survey of B.L. Heat Transfer at High Velocities and High Temperatures," WADC Tech. Report, pp 59-624, 1960.

6. Spalding, D. B. and Chi, S. W.; "The Drag of a Compressible Turbulent B.L. on a Smooth Flat Plate with and without Heat Transfer," Journal of Fluid Mech., Vol. 18, Part 1, Page 117, January 1964.

TABLE I. - MODEL CONFIGURATION NOMENCLATURE

Symbol		Description	Gap Configuration (refer to Figure 1b)	Cylinder Configuration (refer to Figure 1c)
FP	B	Flat plate (control configuration)	gap filled	none
FP/cyl	B	Flat plate + cylinder protuberance (Control)	gap filled	a or b
FP/gap	A	Flat plate w/gap	A	none
	B		B	
	C		C	
	F		F	
FP/cyl/gap	A	Flat plate w/gap + cylinder protuberance	A	a or b
	B		B	
	C		C	
	D		D	
	F		F	
FP/wedge/gap	B	Flat plate w/gap + wedge shock generator	B	none
	B@45		B rotated 45°	
	C		C	
	F		F	
FP/cyl1/4"/gap	B	Flat plate w/gap + cylinder protuberance	B	C
FP/wedge	B	Flat plate + wedge shock generator (control)	gap filled	none

TABLE II. - NOMINAL TEST CONDITIONS

Data	Model Station, (inch)	Mach No.	Reynolds No. (per foot)	Reynolds No. Based on X	Total Pressure (pounds/sq. inch)	Total Temperature (degrees Rankine)
Laminar	24	5.22	1.0×10^6	2.0×10^6	98	1500
Turbulent	42	5.24	3.5×10^6	12.25×10^6	347	1500

TABLE III

TEST: IH27

DATA SET/RUN NUMBER COLLATION SUMMARY

DATE: 9/25/74

DATA SET IDENTIFIER	CONFIGURATION	SCHD. α	SCHD. β	GAP	W	CYL	δ	β	H_2	d	Re	CONST	SET	NO. OF RUNS	[redacted] X 24	42			
RE3*01	CONTROL (F.P.) FILLED			B	0.05						3.5	10				1			
02	↓			B	0.05						1.0	10			46				
03	CONTROL (F.P. W/GAP)			B	0.05						3.5	20				6			
04				C	0.05						3.5	30				19			
05				F	0.05						3.5	40				22			
06				A	0.05						3.5	150				53			
07				B	0.10						3.5	20				47			
08				C	0.10						3.5	30				64			
09				B	0.05						1.0	20			43				
10				C	0.05						1.0	30			36				
11	↓			A	0.05						1.0	150			45				
12	CONTROL F.P. CYL FILLED			B	0.05	2/RT					3.5	50				2			
13	↓			B	0.05	2/45					3.5	51				56			
14	CONTROL F.P. WEDGE FILLED			B	0.05		5°	0	1.5	7.294	3.5	50				29			
15	↓			B	0.05		10°	0	1.5	6.937	3.5	50				30			

TEST RUN NUMBERS

1 7 13 19 25 31 37 43 49 55 61 67 75 76

H/HREF MACH HAW/HT

COEFFICENTS IDVAR (1) IDVAR (2) NDV

α OR β SCHEDULES

*⇒T — Surface

R — LONG. GAP; RIGHT FACE and BOTTOM ℄

F - TRAN. GAP, FWD FACE

Δ TRAN. GAP; AFT FACE and BOTTOM

TABLE III (Continued)

TEST: IH27

DATA SET/RUN NUMBER COLLATION SUMMARY

DATE: 9/25/74

DATA SET IDENTIFIER	CONFIGURATION	SCHD. α	SCHD. β	PARAMETERS/VALUES GAP	W	CYL	S	P	H2	d	RE	CONST	SFT	NO. OF RUNS	[redacted] X 24	24	42	42
RE3*16	FP/CYL/GAP			B	.05	2/RT					3.5	61	71				12	11
17				B	.10	2/RT					3.5	61	73				14	15
18				C	.05	2/RT					3.5	81					17	
19				C	.10	2/RT					3.5	81					16	
20				F	.05	2/RT					3.5	91					20	
21				A	.05	2/RT					3.5	161					51	
22				D	.05	2/RT					3.5	172					54	
23	W/1/4" SP			B	.05	2/RT					3.5	21					7	
24				B	.05	1/RT					3.5	21					8	
25				B	.05	4/RT					3.5	21					9	
26				B	.05	2/RT					1.0	21			42			
27				A	.05	2/RT					1.0	161			44			
28				C	.05	2/RT					1.0	80			38			
29				F	.05	2/RT					1.0	90			39			

TEST RUN NUMBERS

1 7 13 19 25 31 37 43 49 55 61 67 75 76

COEFFICENTS IDVAR (1) IDVAR (2) NDV

α OR β SCHEDULES

TABLE III (Continued)

TEST: IH27 — DATA SET/RUN NUMBER COLLATION SUMMARY — DATE: 9/25/74

DATA SET IDENTIFIER	CONFIGURATION	SCHD. α	SCHD. β	GAP	W	CYL	δ	β	H2	d	Re	CONST	SET	NO. OF RUNS	[redacted] X				TEST RUN NUMBERS
RE3 *30	F.P./CYL/GAP			B	0.05	2/45					3.5	61	71				13	63	
31				C							3.5	81					18		
32				F							3.5	91					21		
33				C							1.0	80			37				
34				B							1.0	21			41				
35	F.P./NEDGE/GAP			B_1			5°	0	1.5	7.294	3.5	100					31	32	
36		45		B_1					1.5	8.794		120					26	27	
37				C					0.5	4.941		140					24		
38				C	0.10				1.5	8.772		140					65		
39				F	0.05				0.5	4.941		40					23		
40				B_2					1.5	8.294		100	110				34	33	
41				B_3						9.294		100	110				50	60	
42				C			10°			8.437		140					25		
43				C			5°			8.772	1.0	140			35				
44				F			5°			8.772	1.0	40			40				

1 7 13 19 25 31 37 43 49 55 61 67 75 76

COEFFICENTS — IDVAR (1) — IDVAR (2) — NDV

α OR β SCHEDULES

TABLE IV. - THERMOCOUPLE LOCATIONS

T/C No.	Plug No.	X_I Turntable ℄ Location X = 24	X= 42	All	Y_I	Z_I	Comments
1	III-1	-18.50	23.50	NA	0	0	Existing T/C's of
2		-19.45	22.55				Module III
3		-20.95	21.05				
4		-22.45	19.55				
5		-23.40	18.60				
6	III-6	-24.50	17.50				
7		-25.45	16.55				
8		-26.95	15.05				
9		-28.45	13.55				
10		-29.40	12.60				
21	VIII-21	NA	NA	10	0.5		Surface Section 2
22				8.5			
23				7.0			
24				6.0			
25				4.0			
26	VIII-26			2.0			
27				1.3			
28				1.0			
29				0.750			
30				0.500			
31	VIII-31			0.500	0.250		
32				0.250	0.500		
33				0.500	0.750		
34				0.500	1.000		
35				0.500	1.500		
36	VIII-36			0.500	2.000		
37				0.500	3.000		
38				0.500	4.000		
39				0.500	6.000		
40				0.500	7.000		
41	VIII-41			0.500	9.000		
42				0.500	10.000		
43				7.000	7.000		
44				6.000	6.000		
45				5.000	5.000		

Note: All dimensions in inches

TABLE IV. T/C LOCATIONS (Continued)

T/C No.	Plug No.	X_I	Y_I	Z_I	Comments
46	VIII-46	4.000	4.000	0	Surface Section 2
47		3.000	3.000		
48		2.000	2.000		
49		1.500	1.500		
50		1.000	1.000		
51	VIII-51	1.500	3.000		
52		1.250			
53		1.000			
54		0.750			
55		0.250			
56	VIII-56	10.000	-0.025	0.0176	Gap Sections 1-2
57				0.125	
58				0.250	
59				0.500	
60				1.000	
61	VIII-61	10.000	0.000	1.250	
62			+0.025	0.750	
63				0.250	
64				0.125	
65				0.0176	
66	VIII-66	7.000	-0.025	0.0176	
67				0.125	
68				0.250	
69				0.500	
70				1.000	
71	VIII-71	7.000	0.000	1.250	
72			+0.025	0.750	
73				0.250	
74				0.125	
75				0.0176	
76	VIII-76	4.000	-0.025	0.0176	
77				0.125	
78				0.250	
79				0.500	
80				1.000	
81	VIII-81		0.000	1.250	
82			+0.025	0.750	
83				0.250	
84				0.125	
85				0.0176	
86	VIII-86	2.000	-0.025	0.0176	
87				0.125	
88				0.250	
89				0.500	
90				1.000	

TABLE IV. T/C LOCATIONS (Continued)

T/C No.	Plug No.	X_I	Y_I	Z_I	Comments
91	VIII-91	2.000	0.000	1.250	Gap Sections 1-2
92			+0.025	0.750	
93				0.250	
94				0.125	
95				0.0176	
96	VIII-96	1.000	-0.025	0.0176	
97				0.125	
98				0.250	
99				0.500	
100				1.000	
101	VIII-101	1.000	0.025	0.750	
102				0.250	
103				0.125	
104				0.0176	
105				Open	
106	VIII-106	0.25	-0.025	0.0176	
107				0.0713	
108				0.125	
109				0.250	
110				0.375	
111	VIII-111			0.500	
112				0.625	
113				0.875	
114				1.000	
115			Open	Open	
116	VIII-116	0.25	0.025	0.750	
117				0.250	
118				0.125	
119				0.0713	
120				0.0176	
121	VIII-121	9.000	-0.025	0.500	
122		8.000			
123		6.000			
124		5.000			
125		3.000			
126	VIII-126	9.000	0.000	1.250	
127		8.000			
128		6.000			
129		5.000			
130		3.000			
131	VIII-131	9.000	+0.025	0.750	
132		8.000			
133		6.000			
134		5.000			
135		3.000			

TABLE IV. T/C LOCATIONS (Continued)

T/C No.	Plug No.	X_I	Y_I	Z_I	Comments
136	VIII-136	+0.025	10.000	0.0176	Gap Sections 1, 2-3
137				0.125	
138				0.250	
139				0.500	
140				1.000	
141	VIII-141	0.000	10.000	1.250	
142		-0.025		0.750	
143				0.250	
144				0.125	
145				0.0176	
146	VIII-146	+0.025	7.000	0.0176	
147				0.125	
148				0.250	
149				0.500	
150				1.000	
151	VIII-151	0.000		1.250	
152		-0.025		0.750	
153				0.250	
154				0.125	
155				0.0176	
156	VIII-156	+0.025	3.000	0.0176	
157				0.125	
158				0.250	
159				0.500	
160				1.000	
161	VIII-161	0.000		1.250	
162		-0.025		1.000	
163				0.875	
164				0.750	
165				0.625	
166	VIII-166			0.375	
167				0.250	
168				0.125	
169				0.0713	
170				0.0176	
171	VIII-171	+0.025	2.000	0.0176	
172				0.125	
173				0.250	
174				0.500	
175				1.000	
176	VIII-176	0.000	2.000	1.250	
177		-0.025		0.750	
178				0.250	
179				0.125	
180				0.0176	

TABLE IV. T/C LOCATIONS (Continued)

T/C No.	Plug No.	X_I	Y_I	Z_I	Comments
181	VIII-181	+0.025	1.500	0.0176	Gap Sections 1, 2, -3
182				0.125	
183				0.250	
184				0.500	
185				1.000	
186	VIII-186	0.000		1.250	
187		-0.025		0.750	
188				0.250	
189				0.125	
190				0.0176	
191	VIII-191	+0.025	1.000	0.0176	
192				0.125	
193				0.250	
194				0.500	
195				1.000	
196	VIII-196	0.000		1.250	
197		-0.025		0.750	
198				0.250	
199				0.125	
200				0.0176	
201	VIII-201	+0.025	0.750	0.0176	
202				0.125	
203				0.250	
204				0.500	
205				1.000	
206	VIII-206	0.000		1.250	
207		-0.025		0.750	
208				0.250	
209				0.125	
210				0.0176	
211	VIII-211	+0.025	0.500	0.0176	
212				0.125	
213				0.250	
214				0.500	
215				1.000	
216	VIII-216	0.000		1.250	
217		-0.025		0.750	
218				0.250	
219				0.125	
220				0.0176	
221	VIII-221	+0.025	0.250	0.0176	
222				0.125	
223				0.250	
224				0.500	
225				1.000	

TABLE IV. T/C LOCATIONS (Continued)

T/C No.	Plug No.	X_I	Y_I	Z_I	Comments
226	VIII-226	0.000	0.250	1.250	Gap Sections 1, 2, -3
227		-0.025		1.000	
228				0.875	
229				0.750	
230				0.625	
231	VIII-231			0.375	
232				0.250	
233				0.125	
234				0.0713	
235				0.0176	
236	VIII-236	+0.025	-0.500	0.0176	
237				0.125	
238				0.250	
239				0.500	
240				1.000	
241	VIII-241	0.000		1.250	
242		-0.025		0.750	
243				0.250	
244				0.125	
245				0.0176	
246	VIII-246	+0.025	-1.500	0.0176	
247				0.125	
248				0.250	
249				0.500	
250				1.000	
251	VIII-251	0.000		1.250	
252		-0.025		0.750	
253				0.250	
254				0.125	
255				0.0176	
256	VIII-256	0.000	-2.500	1.250	
257		-0.025	-2.500	0.750	
258			-3.500		
259			-4.500		
260			-6.000		
261	VIII-261		9.000	0.500	
262			8.000		
263			6.000		
264			5.000		
265			4.000		
266	VIII-266	0.000	9.000	1.250	
267			8.000		
268			6.000		
269			5.000		
270			4.000		

TABLE IV. T/C LOCATIONS (Continued)

T/C No.	Plug No.	X_I	Y_I	Z_I	Comments
271	VIII-271	-0.025	9.000	0.750	Gap Sections 1, 2, -3
272			8.000		
273			6.000		
274			5.000		
275			4.000		
276	VIII-276	-0.250	-1.500	0.000	Surface Section 3
277		-0.500			
278		-0.750			
279		-1.000			
280		-1.500			
281	VIII-281	-0.250	+1.500	0.000	
282		-0.500			
283		-0.750			
284		-1.000			
285		-1.500			
286	VIII-286	-0.250	+3.000		
287		-0.500			
288		-0.750			
289		-1.000			
290		-1.500			
291	VIII-291	-0.500	+7.000		
292		-1.000			
293		-1.500			
294		-2.000			
295		-3.000			
296	VIII-296	-2.000	-1.500		
297		-3.250	0.000		
298		-4.250			
299		-5.250			
300		-6.250			
301	VIII-301	-2.000	+1.500		
302		-3.000			
303		-4.000			
304		-2.000	+3.000		
305		-3.000			
306	VIII-306	+1.250	-5.25		Surface Section 1, 3
307		+1.000			
308		+0.750			
309		+0.500			
310		+0.250			
311	VIII-311	-0.250			
312		-0.500			
313		-0.750			
314		-1.000			
315		-1.250			

TABLE IV. T/C LOCATIONS (Concluded)

T/C No.	Plug No.	X_I	Y_I	Z_I	Comments
316	VIII-316	+0.025	-5.25	0.0176	Gap Section 1, 3
317				0.125	(Edge Radius = 0.12")
318				0.250	
319				0.500	
320				1.000	
321	VIII-321	0.000		1.250	
322		-0.025		1.000	
323				0.875	
324				0.750	
325				0.625	
326	VIII-326			0.375	
327				0.250	
328				0.125	
329				0.0713	
330				0.0176	
331	VIII-331	1.000	0.000	1.250	Gap Section 1, 2-3
332		0.250			
333		0.000			
334		-0.025		0.875	
335		-0.025		0.750	
336	VIII-336	-0.025	0.000	0.375	
337				0.250	
338				0.125	
339				0.0713	
340				0.0176	

TABLE V. - THERMOCOUPLE PLUG HOOKUP SCHEDULE

Hookup No.	Constant Set	Model Plug No's
1	10	III-1, III-6, III-11, VIII-21, 26, 31, 36, 51, 276, 281, 286, 291, 296, 301, 306
2	20	VIII-21, 71, 101, 106, 111, 151, 191, 196, 221, 226, 231, 321, 326, 331, 336
3	30	VIII-46, 146, 151, 201, 206, 221, 226, 231, 266, 271, 316, 321, 326, 331, 336
4	40	III-6 , VIII-46, 141, 151, 171, 176, 201, 206, 221, 226, 231, 261, 266, 271, 281
5	50	III-6 , VIII-21, 26, 31, 36, 41, 46, 276, 281, 286, 291, 296, 301, 306, 311
6	60	III-6 , VIII-21, 26, 31, 36, 46, 61, 71, 91, 101, 106, 111, 126, 131, 141
7	70	VIII-146, 151, 191, 196, 201, 206, 221, 226, 231, 261, 266, 271, 281, 331, 336
8	80	III-6 , VIII-146, 151, 201, 206, 221, 226, 231, 246, 251, 271, 321, 326, 331, 336
9	90	III-6 , VIII-136, 141, 146, 151, 171, 176, 201, 206, 221, 226, 231, 261, 266, 271
10	100	VIII-21, 26, 51, 71, 101, 106, 111, 141, 146, 151, 156, 161, 166, 171, 176
11	110	VIII-181, 186, 191, 196, 221, 226, 231, 246, 251, 266, 271, 286, 296, 331, 336
12	120	III-6 , VIII-46, 51, 71, 91, 96, 101, 106, 111, 116, 146, 151, 171, 176, 191
13	130	VIII-196, 211, 216, 236, 241, 246, 251, 281, 286, 301, 316, 321, 326, 331, 336
14	140	III-6 , VIII-46, 151, 161, 166, 171, 176, 201, 206, 246, 251, 321, 326, 331, 336
15	150	III-6 , VIII-21, 26, 146, 151, 181, 186, 201, 206, 276, 281, 296, 316, 321, 326
16	160	III-6 , VIII-21, 26, 146, 151, 181, 186, 201, 206, 221, 226, 231, 296, 331, 336
17	170	III-6 , VIII-21, 26, 56, 61, 76, 81, 96, 101, 106, 111, 116, 126, 131, 296

TABLE V. - Concluded

Hookup No.	Constant Set	Model Plugs
18	180	111-6, VIII-71, 91, 101, 106, 111, 146 151, 191, 196, 221, 226, 237, 331, 336

Note: Amplifier gains were changed to keep output from T/C's in the vicinity of the cylinder from exceeding data system limits during the high Reynolds number runs. These runs are denoted by the digit "1" in the units column of the constant set numbers.

TABLE VI. - FLAT PLATE THEORETICAL REFERENCE DATA, $\phi = 0°$

T/C No.	X_I	h/hs_{Lam}	h/hs_{Turb}
21	10.000	.10205	.39540
22	8.500	.09686	.39278
23	9.900	.09206	.39025
24	6.000	.08907	.38862
25	4.000	.08362	.30546
26	2.000	.07887	.38245
27	1.300	.07737	.38143
28	1.000	.07675	.38100
29	0.758	.07625	.38065
30	0.508	.07576	.38029
31	0.500	.07576	.38029
32	0.250	.07528	.37994
33	0.500	.07576	.38029
34	0.500	.07576	.38029
35	0.500	.07576	.38029
36	0.500	.07576	.38029
37	0.500	.07576	.38029
38	0.500	.07576	.38029
39	0.500	.07576	.38029
40	0.500	.07576	.38029
41	0.500	.07576	.38029
42	0.500	.07576	.38029
43	7.000	.09206	.39025
44	6.000	.08907	.38862
45	5.000	.08626	.38702
46	4.000	.08362	.38546
47	3.000	.08116	.38393
48	2.000	.07887	.38245
49	1.500	.07779	.38172
50	1.000	.07675	.38100
51	1.500	.07779	.38172
52	1.250	.07726	.38136
53	1.000	.07675	.38100
54	0.750	.07625	.38065
55	0.250	.07528	.37994
56	10.000	.10205	.39540
57	10.000	.10205	.39540
58	10.000	.10205	.39540
59	10.000	.10205	.39540
60	10.000	.10205	.39540
61	10.000	.10205	.39540

TABLE VI. - Continued

T/C No.	X_I	h/hs_{Lam}	h/hs_{Turb}
62	10.000	.10205	.39540
63	10.000	.10205	.39540
64	10.000	.10205	.39540
65	10.000	.10205	.39540
66	7.000	.09206	.39025.
67	7.000	.09206	.39025
68	7.000	.09206	.39025
69	7.000	.09206	.39025
70	7.000	.09206	.39025
71	7.000	.09206	.39025
72	7.000	.09206	.39025
73	7.000	.09206	.39025
74	7.000	.09206	.39025
75	7.000	.09206	.39025
76	4.000	.08362	.38546
77	4.000	.08362	.38546
78	4.000	.08362	.38546
79	4.000	.08362	.38546
80	4.000	.08362	.38546
81	4.000	.08362	.38546
82	4.000	.08362	.38546
83	4.000	.08362	.38546
84	4.000	.08362	.38546
85	4.000	.08362	.38546
86	2.000	.07887	.38246
87	2.000	.07887	.38245
88	2.000	.07887	.38245
89	2.000	.07887	.38245
90	2.000	.07887	.38245
91	2.000	.07887	.38245
92	2.000	.07887	.38245
93	2.000	.07887	.38245
94	2.000	.07887	.38245
95	2.000	.07887	.38245
96	1.000	.07675	.38100
97	1.000	.07675	.38100
98	1.000	.07675	.38100
99	1.000	.07675	.38100
100	1.000	.07675	.38100
101	1.000	.07675	.38100
102	1.000	.07675	.38100
103	1.000	.07675	.38100

TABLE VI. - Continued

T/C No.	X_I	h/hs_{Lam}	h/hs_{Turb}
104	1.000	.07675	.38100
105	open	——	——
106	0.250	.07528	.37994
107	0.250	.07528	.37994
108	0.250	.07528	.37994
109	0.250	.07528	.37994
110	0.250	.07528	.37994
111	0.250	.07528	.37994
112	0.250	.07528	.37994
113	0.250	.07528	.37994
114	0.250	.07528	.37994
115	open	——	——
116	0.250	.07528	.37994
117	0.250	.07528	.37994
118	0.250	.07528	.37994
119	0.250	.07528	.37994
120	0.250	.07528	.37994
121	9.000	.09855	.39364
122	8.000	.09521	.39193
123	6.000	.08907	.38862
124	5.000	.08626	.38702
125	3.000	.08116	.38393
126	9.000	.09855	.39364
127	8.000	.09521	.39193
128	6.000	.08907	.38862
129	5.000	.08626	.38702
130	3.000	.08116	.38393
131	9.000	.09855	.39364
132	8.000	.09521	.39193
133	6.000	.08907	.38862
134	5.000	.08626	.38702
135	3.000	.08116	.38393
136	0.025	.07485	.37963
137	0.025	.07485	.37963
138	0.025	.07485	.37963
139	0.025	.07485	.37963
140	0.025	.07485	.37963
141	0.000	.07481	.37960
142	-0.025	.07476	.37956
143	-0.025	.07476	.37956
144	-0.025	.07476	.37956
145	-0.025	.07476	.37956

TABLE VI. - Continued

T/C No.	X_I	h/hs_{Lam}	h/hs_{Turb}
146	+0.025	.07485	.37963
147	+0.025	.07485	.37963
148	+0.025	.07485	.37963
149	+0.025	.07485	.37963
150	+0.025	.07485	.37963
151	0.000	.07481	.37960
152	-0.023	.07476	.37956
153	0.023	.07476	.37956
154	0.025	.07476	.37956
155	0.025	.07476	.37956
156	+0.025	.07485	.37963
157	+0.025	.07485	.37963
158	+0.025	.07485	.37963
159	+0.025	.07485	.37963
160	+0.025	.07485	.37963
161	0.000	.07481	.37960
162	-0.025	.07476	.37956
163	-0.025	.07476	.37956
164	-0.025	.07476	.37956
165	-0.025	.07476	.37956
166	-0.025	.07476	.37956
167	-0.025	.07476	.37956
168	-0.025	.07476	.37956
169	-0.025	.07476	.37956
170	-0.025	.07476	.37956
171	-0.025	.07485	.37963
172	+0.025	.07485	.37963
173	+0.025	.07485	.37963
174	+0.025	.07485	.37963
175	+0.025	.07485	.37963
176	0.000	.07481	.37960
177	-0.025	.07476	.37956
178	-0.025	.07476	.37956
179	-0.025	.07476	.37956
180	-0.025	.07476	.37956
181	+0.025	.07485	.37963
182	+0.025	.07485	.37963
183	+0.025	.07485	.37963
184	+0.025	.07485	.37963
185	+0.025	.07485	.37963
186	0.000	.07481	.37960
187	-0.025	.07476	.37956
188	-0.025	.07476	.37956

TABLE VI. - Continued

T/C No.	X_I	h/hs_{Lam}	h/hs_{Turb}
189	-0.025	.07476	.37956
190	-0.025	.07476	.37956
191	+0.025	.07485	.37963
192	+0.025	.07485	.37963
193	+0.025	.07485	.37963
194	+0.025	.07485	.37963
195	+0.025	.07485	.37963
196	0.000	.07481	.37960
197	-0.025	.07476	.37956
198	-0.025	.07476	.37956
199	-0.025	.07476	.37956
200	-0.025	.07476	.37956
201	+0.025	.07485	.37963
202	+0.025	.07485	.37963
203	+0.025	.07485	.37963
204	+0.025	.07485	.37963
205	+0.025	.07485	.37963
206	+0.000	.07481	.37956
207	-0.025	.07476	.37956
208	-0.025	.07476	.37956
209	-0.025	.07476	.37956
210	-0.025	.07476	.37956
211	+0.025	.07485	.37963
212	+0.025	.07485	.37963
213	+0.025	.07485	.37963
214	+0.025	.07485	.37963
215	+0.025	.07485	.37963
216	0.000	.07481	.37960
217	-0.025	.07476	.37956
218	-0.025	.07476	.37956
219	-0.025	.07476	.37956
220	-0.025	.07476	.37956
221	+0.025	.07485	.37963
222	+0.025	.07485	.37963
223	+0.025	.07485	.37963
224	+0.025	.07485	.37963
225	+0.025	.07485	.37963
226	0.000	.07481	.37960
227	-0.025	.07476	.37956
228	-0.025	.07476	.37956
229	-0.025	.07476	.37956
230	-0.025	.07476	.37956
231	-0.025	.07476	.37956

TABLE VI. - Continued

T/C No.	X_I	h/hs_{Lam}	h/hs_{Turb}
232	-0.025	.07476	.37956
233	-0.025	.07476	.37956
234	-0.025	.07476	.37956
235	-0.025	.07476	.37956
236	+0.025	.07485	.37963
237	+0.025	.07485	.37963
238	+0.025	.07485	.37963
239	+0.025	.07485	.37963
240	+0.025	.07485	.37963
241	0.000	.07481	.37960
242	-0.025	.07476	.37956
243	-0.025	.07476	.37956
244	-0.025	.07476	.37956
245	-0.025	.07476	.37956
246	+0.025	.07485	.37963
247	+0.025	.07485	.37963
248	+0.025	.07485	.37963
249	+0.025	.07485	.37963
250	+0.025	.07485	.37963
251	0.000	.07481	.37960
252	-0.025	.07476	.37956
253	-0.025	.07476	.37956
254	-0.025	.07476	.37956
255	-0.025	.07476	.37956
256	0.000	.07481	.37960
257	-0.025	.07476	.37956
258	-0.025	.07476	.37956
259	-0.025	.07476	.37956
260	-0.025	.07476	.37956
261	-0.025	.07476	.37956
262	-0.025	.07476	.37956
263	-0.025	.07476	.37956
264	-0.025	.07476	.37956
265	-0.025	.07476	.37956
266	0.000	.07481	.37960
267	0.000	.07481	.37960
268	0.000	.07481	.37960
269	0.000	.07481	.37960
270	0.000	.07481	.37960
271	-0.025	.07476	.03756
272	-0.025	.07476	.03756
273	-0.025	.07476	.03756

TABLE VI. - Continued.

T/C No.	X_I	h/hs_{Lam}	h/hs_{Turb}
274	-0.025	.07476	.03756
275	--0.025	.07476	.03756
276	-0.050	.07435	.37891
277	-0.500	.07390	.37891
278	-0.750	.07346	.37856
279	-1.000	.07303	.37823
280	-1.500	.07303	.37823
281	-1.250	.07435	.37925
282	-0.500	.07390	.37891
283	-0.750	.07346	.37856
284	-1.000	.07303	.37823
285	-1.500	.07221	.37756
286	-0.250	.07435	.37925
287	-0.500	.07390	.37891
288	-0.750	.07346	.39856
289	-1.000	.07303	.37823
290	-1.500	.07221	.37756
291	-0.500	.07390	.37891
292	-1.000	.07303	.37823
293	-1.500	.07221	.37756
294	-2.000	.07143	.37690
295	-3.000	.07001	.37560
296	-2.000	.07143	.37690
297	-3.250	.06968	.37529
298	-4.250	.06847	.37404
299	-5.250	.06743	.37284
300	-6.250	.06657	.37167
301	-2.000	.07143	.37670
302	-3.000	.07001	.37560
303	-4.000	.06876	.37435
304	-2.000	.07143	.37690
305	-3.000	.07001	.37560
306	+1.250	.07726	.33136
307	+1.000	.07675	.35100
308	+0.750	.07625	.38065
309	+0.500	.07576	.38029
310	+0.250	.07528	.37994
311	+0.250	.07435	.37925
312	-0.500	.07390	.37891
313	-0.750	.07346	.37856
314	-1.000	.07303	.37823
315	-1.250	.07262	.37789

TABLE VI. - Concluded.

T/C No.	X_I	h/hs_{Lam}	h/hs_{Turb}
316	+0.025	.07485	.37963
317	+0.025	.07485	.37963
318	+0.025	.07485	.37963
319	+0.025	.07485	.37963
320	+0.025	.07485	.37963
321	0.000	.07481	.37963
322	-0.025	.07476	.37956
323	-0.025	.07476	.37956
324	-0.025	.07476	.37956
325	-0.025	.07476	.37956
326	-0.025	.07476	.37956
327	-0.025	.07476	.37956
328	-0.025	.07476	.37956
329	-0.025	.07476	.37956
330	-0.025	.07476	.37956
331	1.000	.07675	.38100
332	0.250	.07528	.37994
333	0.000	.07481	.37960
334	-0.025	.07476	.37956
335	-0.025	.07476	.37956
336	-0.025	.07476	.37956
337	-0.025	.07476	.37956
338	-0.025	.07476	.37956
339	-0.025	.07476	.37956
340	-0.025	.07476	.37956

TABLE VII.- FLAT PLATE THEORETICAL REFERENCE DATA, $\phi = 45°$

T/C No.	X_I	h/hs_{Lam}	h/hs_{Turb}
21	7.425	0.09340	0.3947
22	6.364	0.09014	0.3919
23	5.303	0.08710	0.3894
24	4.596	0.08518	0.3878
25	3.182	0.08160	0.3849
26	1.768	0.07836	0.3823
27	1.233	0.07731	0.3815
28	1.061	0.07688	0.38108
29	0.884	0.07652	0.38084
30	0.707	0.07617	0.38059
31	0.530	0.07562	0.39034
32	0.530	0.07582	0.38034
33	0.884	0.07652	0.38084
34	1.061	0.07704	0.38121
35	1.414	0.07704	0.38121
36	1.768	0.07836	0.38230
37	2.475	0.07994	0.38315
38	3.182	0.08160	0.38490
39	4.k96	0.08518	0.38780
40	5.303	0.08710	0.38940
41	6.718	0.09120	0.38979
42	7.425	0.09340	0.39470
43	9.900	0.10169	0.39523
44	8.485	0.09681	0.39276
45	7.071	0.09228	0.39038
46	5.657	0.08809	0.38807
47	4.243	0.08425	0.38584
48	2.828	0.08076	0.38368
49	2.121	0.07914	0.38263
50	1.414	0.07704	0.38121
51	3.182	0.08160	0.38490
52	3.005	0.08118	0.38395
53	2.828	0.08076	0.38368
54	2.652	0.08035	0.38342
55	2.298	0.07954	0.38289
56	7.053	0.09223	0.39035
57	7.053	0.09223	0.39035
58	7.053	0.09223	0.39035
59	7.053	0.09223	0.39035
60	7.053	0.09223	0.39035
61	7.071	0.09228	0.39038

TABLE VII. - Continued.

T/C No.	X_I	h/hs_{Lam}	h/hs_{Turb}
62	7.089	0.09223	0.39038
63	7.089	0.09234	0.39041
64	7.089	0.09234	0.39041
65	7.089	0.09234	0.39041
66	4.032	0.08608	0.38691
67	4.932	0.08608	0.38691
68	4.932	0.08608	0.38691
69	4.932	0.08608	0.38691
70	4.932	0.08608	0.38691
71	4.950	0.08613	0.38694
72	4.967	0.086177	0.38691
73	4.967	0.086177	0.38691
74	4.967	0.086177	0.38691
75	4.967	0.086177	0.38691
76	2.811	0.08072	0.38365
77	2.811	0.08072	0.38365
78	2.811	0.08072	0.38365
79	2.811	0.08072	0.38365
80	2.811	0.08072	0.38365
81	2.828	0.08076	0.38368
82	2.846	0.08080	0.38371
83	2.846	0.08080	0.38371
84	2.846	0.08080	0.38371
85	2.846	0.08080	0.38371
86	1.397	0.07758	0.38158
87	1.397	0.07758	0.38158
88	1.397	0.07758	0.38158
89	1.397	0.07758	0.38158
90	1.397	0.07758	0.38158
91	1.414	0.07704	0.38121
92	1.432	0.07765	0.38163
93	1.432	0.07765	0.38163
94	1.432	0.07765	0.38163
95	1.432	0.07765	0.38163
96	0.689	0.07613	0.38057
97	0.689	0.07613	0.38057
98	0.689	0.07613	0.38057
99	0.689	0.07613	0.38057
99	0.689	0.07613	0.38057
100	0.725	0.07620	0.38057
101	0.725	0.07620	0.38062

TABLE VII. - Continued

T/C No.	X_I	h/hs_{Lam}	h/hs_{Turb}
102	0.725	0.07620	0.38062
103	0.725	0.07620	0.38062
104	0.725	0.07620	0.38062
105	OPEN	OPEN	OPEN
106	0.159	0.07511	0.37982
107	0.159	0.07511	0.37982
108	0.159	0.07511	0.37982
109	0.159	0.07511	0.37982
110	0.159	0.07511	0.37982
111	0.159	0.07511	0.37982
112	0.159	0.07511	0.37982
113	0.159	0.07511	0.37982
114	0.159	0.07511	0.37982
115	OPEN	OPEN	OPEN
116	0.159	0.07518	0.37987
117	0.195	0.07518	0.37987
118	0.195	0.07518	0.37987
119	0.195	0.07518	0.37987
120	0.195	0.07518	0.37987
121	6.346	0.09009	0.38918
122	5.639	0.08805	0.38804
123	4.225	0.08421	0.38581
124	3.518	0.08242	0.38472
125	2.104	0.07910	0.38261
126	6.364	0.09014	0.38921
127	5.657	0.08809	0.38807
128	4.243	0.08425	0.38584
129	3.536	0.08246	0.38475
130	2.121	0.07914	0.38263
131	6.382	0.09100	0.38924
132	5.675	0.08815	0.38810
133	4.260	0.08430	0.38586
134	3.553	0.08251	0.38477
135	2.139	0.07910	0.38226
136	7.089	0.09234	0.39041
137	7.089	0.09234	0.39041
138	7.089	0.09234	0.39041
139	7.089	0.09234	0.39041
140	7.089	0.09234	0.39041
141	7.071	0.09228	0.39038
142	7.053	0.09223	0.39035
143	7.053	0.09223	0.39035
144	7.053	0.09223	0.39035

TABLE VII. - Continued

T/C No.	X_I	h/hs_{Lam}	h/hs_{Turb}
145	7.053	0.09223	0.39035
146	4.967	0.08618	0.38697
147	4.967	0.08618	0.38697
148	4.967	0.08618	0.38697
149	4.967	0.08618	0.38697
150	4.967	0.08618	0.38697
151	4.950	0.08613	0.38684
152	4.932	0.08608	0.38691
153	4.932	0.08608	0.38691
154	4.932	0.08608	0.38691
155	4.932	0.08608	0.38691
156	2.139	0.07918	0.38266
157	2.139	0.07918	0.38266
158	2.139	0.07918	0.38266
159	2.139	0.07918	0.38266
160	2.139	0.07918	0.38266
161	2.121	0.07914	0.38263
162	2.104	0.07910	0.38261
163	2.104	0.07910	0.38261
164	2.104	0.07910	0.38261
165	2.104	0.07910	0.38261
166	2.104	0.07910	0.38261
167	2.104	0.07910	0.38261
168	2.104	0.07910	0.38261
169	2.104	0.07910	0.38261
170	2.104	0.07910	0.38261
171	1.432	0.07765	0.38163
172	1.432	0.07765	0.38163
173	1.432	0.07765	0.38163
174	1.432	0.07765	0.38163
175	1.432	0.07765	0.38163
176	1.414	0.07704	0.38121
177	1.397	0.07758	0.38158
178	1.397	0.07758	0.38158
179	1.397	0.07758	0.38158
180	1.397	0.07758	0.38158
181	1.078	0.07691	0.38112
182	1.078	0.07691	0.38112
183	1.078	0.07691	0.38112
184	1.078	0.07691	0.38112
185	1.078	0.07691	0.38109
186	1.061	0.07688	0.38109
187	1.043	0.07684	0.38107

TABLE VII. - Continued

T/C No.	X_I	h/hs_{Lam}	h/hs_{Turb}
188	1.043	0.07684	0.38107
189	1.043	0.07684	0.38107
190	0.725	0.07620	0.38062
191	0.725	0.07620	0.38062
192	0.725	0.07620	0.38062
193	0.725	0.07620	0.38062
194	0.725	0.07620	0.38062
195	0.707	0.07617	0.38059
196	0.707	0.07617	0.38059
197	0.689	0.07613	0.38059
198	0.689	0.07613	0.38059
199	0.689	0.07613	0.38059
200	0.548	0.07585	0.38037
201	0.548	0.07585	0.38037
202	0.548	0.07585	0.38037
203	0.548	0.07585	0.38037
204	0.548	0.07585	0.38037
205	0.548	0.07582	0.38037
206	0.530	0.07582	0.38034
207	0.513	0.07579	0.38032
208	0.513	0.07579	0.38032
209	0.513	0.07579	0.38032
210	0.513	0.07579	0.38032
211	0.371	0.07551	0.38012
212	0.371	0.07551	0.38012
213	0.371	0.07551	0.38012
214	0.371	0.07551	0.38012
215	0.371	0.07551	0.38012
216	0.354	0.07548	0.38009
217	0.336	0.07544	0.38007
218	0.336	0.07544	0.38007
219	0.336	0.07544	0.38007
220	0.336	0.07544	0.38007
221	0.195	0.07518	0.37987
222	0.195	0.07518	0.37987
223	0.195	0.07518	0.37987
224	0.195	0.07518	0.37987
225	0.195	0.07518	0.37987
226	0.1777	0.07514	0.37985
227	+0.159	0.07511	0.37982
228	+0.159	0.07511	0.37982
229	+0.159	0.07511	0.37982
230	+0.159	0.07511	0.37982

TABLE VII. - Continued

T/C No.	X_I	h/hs_{Lam}	h/hs_{Turb}
231	+0.159	0.07511	0.37982
232	+0.159	0.07511	0.37982
233	+0.159	0.07511	0.37982
234	+0.159	0.07511	0.37982
235	+0.159	0.07511	0.37982
236	-0.336	0.07419	0.37914
237	-0.336	0.07419	0.37914
238	-0.336	0.07419	0.37914
239	-0.336	0.07419	0.37914
240	-0.336	0.07419	0.37914
241	-0.354	0.07416	0.37911
242	-0.371	0.07413	0.37909
243	-0.371	0.07413	0.37909
244	-0.371	0.07413	0.37909
245	-0.371	0.07413	0.37909
246	-1.043	0.07296	0.37817
247	-1.043	0.07296	0.37817
248	-1.043	0.07296	0.37817
249	-1.043	0.07296	0.37817
250	-1.043	0.07296	0.37817
251	-1.061	0.07294	0.37815
252	-1.078	0.07291	0.37815
253	-1.078	0.07291	0.37815
254	-1.078	0.07291	0.37815
255	-1.078	0.07291	0.37815
256	-1.768	0.07179	0.37721
257	-1.785	0.07177	0.37718
258	-2.493	0.07071	0.37626
259	-3.200	0.06975	0.37535
260	-4.260	0.06846	0.37403
261	+6.346	0.09007	0.38918
262	5.639	0.08805	0.38804
263	4.225	0.08421	0.38581
264	3.518	0.08241	0.38472
265	2.811	0.08072	0.38365
266	6.364	0.09014	0.38921
267	5.657	0.08809	0.38807
268	4.243	0.08425	0.38584
269	3.536	0.08246	0.38475
270	2.828	0.08076	0.38368
271	6.346	0.09009	0.38918
272	5.639	0.08805	0.38804
273	4.225	0.08421	0.38581

TABLE VII. - Continued

T/C No.	X_I	h/hs_{Lam}	h/hs_{Turb}
274	3.518	0.08242	0.38472
275	+2.811	0.08072	0.38365
276	-1.078	0.07291	0.37813
277	-1.414	0.07236	0.37768
278	-1.591	0.07207	0.37744
279	-1.768	0.07179	0.37721
280	-2.121	0.07126	0.37674
281	+1.043	0.07684	0.38107
282	0.707	0.07617	0.38059
283	0.530	0.07582	0.38034
284	0.354	0.07548	0.38009
285	0.000	0.074810	0.37960
286	1.945	0.07875	0.38237
287	1.768	0.07836	0.38230
288	1.591	0.07799	0.38186
289	1.414	0.07704	0.38121
290	1.061	0.07688	0.38109
291	4.596	0.08518	0.38780
292	4.243	0.08425	0.38584
293	3.889	0.08335	0.38529
294	3.536	0.08246	0.38475
295	+2.828	0.08076	0.38368
296	-2.475	0.07074	0.37628
297	-2.298	0.07100	0.37651
298	-3.005	0.07001	0.37560
299	-3.712	0.06910	0.37471
300	-4.419	0.068287	0.37384
301	-0.354	0.07416	0.37911
302	-1.061	0.07294	0.37815
303	-1.768	0.07294	0.37721
304	+0.707	0.07617	0.38059
305	+0.000	0.074810	0.37960
306	-2.828	0.07025	0.37583
307	-3.005	0.07001	0.37560
308	-3.182	0.06977	0.37538
309	-3.359	0.06954	0.37515
310	-3.536	0.06932	0.37493
311	-3.889	0.06889	0.37449
312	-4.066	0.06868	0.37427
313	-4.243	0.06848	0.37406
314	-4.419	0.06829	0.37384
315	-4.596	0.06809	0.37363
316	-3.695	0.06912	0.37473

TABLE VII. - Concluded

T/C No.	X_I	h/hs_{Lam}	h/hs_{Turb}
317	3.695	0.06912	0.37473
318	3.695	0.06912	0.37473
319	3.695	0.06912	0.37473
320	3.695	0.06912	0.37473
321	-3.712	0.06910	0.37471
322	-3.730	0.06908	0.37469
323	-3.730	0.06908	0.37469
324	-3.730	0.06908	0.37469
325	-3.730	0.06908	0.37469
326	-3.730	0.06908	0.37469
327	-3.730	0.06908	0.37469
328	-3.730	0.06908	0.37469
329	-3.730	0.06908	0.37469
330	-3.730	0.06908	0.37469
331	+0.707	0.07617	0.38059
332	+0.177	0.07514	0.37985
333	+0.000	0.07451	0.37960
334	-0.018	0.07478	0.37958
335	-0.018	0.07478	0.37958
336	-0.018	0.07478	0.37958
337	-0.018	0.07478	0.37958
338	-0.018	0.07478	0.37958
339	-0.018	0.07478	0.37958
340	-0.018	0.07478	0.37958

TABLE VIII. - ADJUSTMENT FACTORS FOR TURBULENT REFERENCE DATA

Run No.	Adjustment Factors	Run No.	Adjustment Factor
1(control)	1.0	33	1.040
2	1.016	34	1.050
5	0.980	47	1.050
6	1.030	49	1.050
7	1.040	50	1.040
8	1.040	51	1.040
9	1.044	52	1.000
10	1.030	53	1.030
11	1.040	54	1.040
12	1.038	56	1.040
13	1.040	57	1.040
14	1.033	58	1.040
15	1.033	59	1.040
16	1.022	60	1.050
17	1.035	61	1.050
18	1.045	62	1.050
19	1.043	63	1.060
20	1.037	64	1.030
21	1.040	65	1.030
22	1.030		
23	1.000		
24	1.010		
25	1.020		
26	1.040		
27	1.040		
28	1.060		
29	1.050		
30	1.030		
31	1.040		
32	1.050		

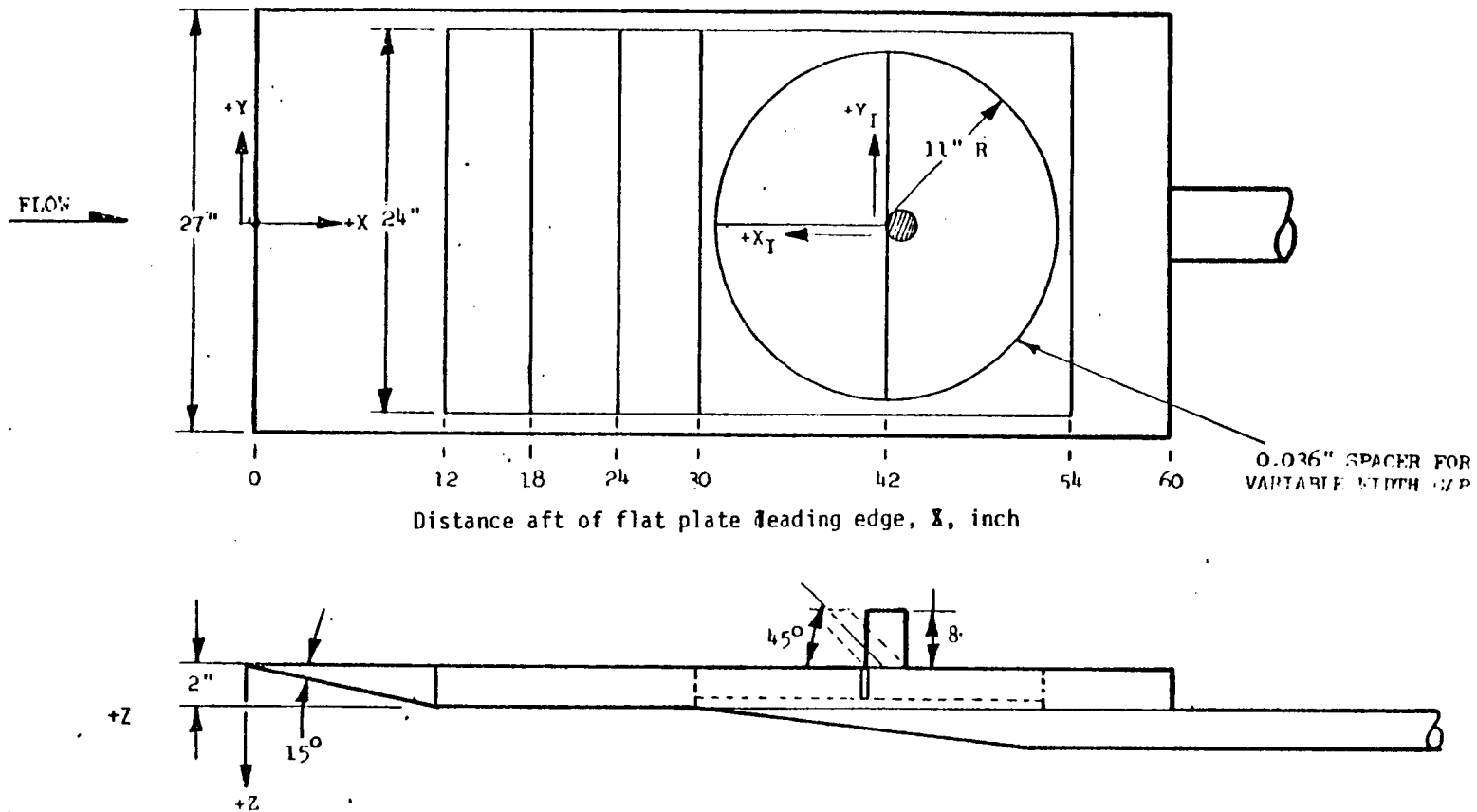

Notes:

X_I, Y_I DEFINED FOR GAP WIDTH = 0.050" CONFIGURATION B, figure 1b) measured from gap centerline

X, Y measured from flat plate leading edge

X, Y locate gap centerline; X_I, Y_I locate thermocouples

a. Flat Plate Coordinate Systems and Protuberences

Figure 1. - Model notation and axis systems.

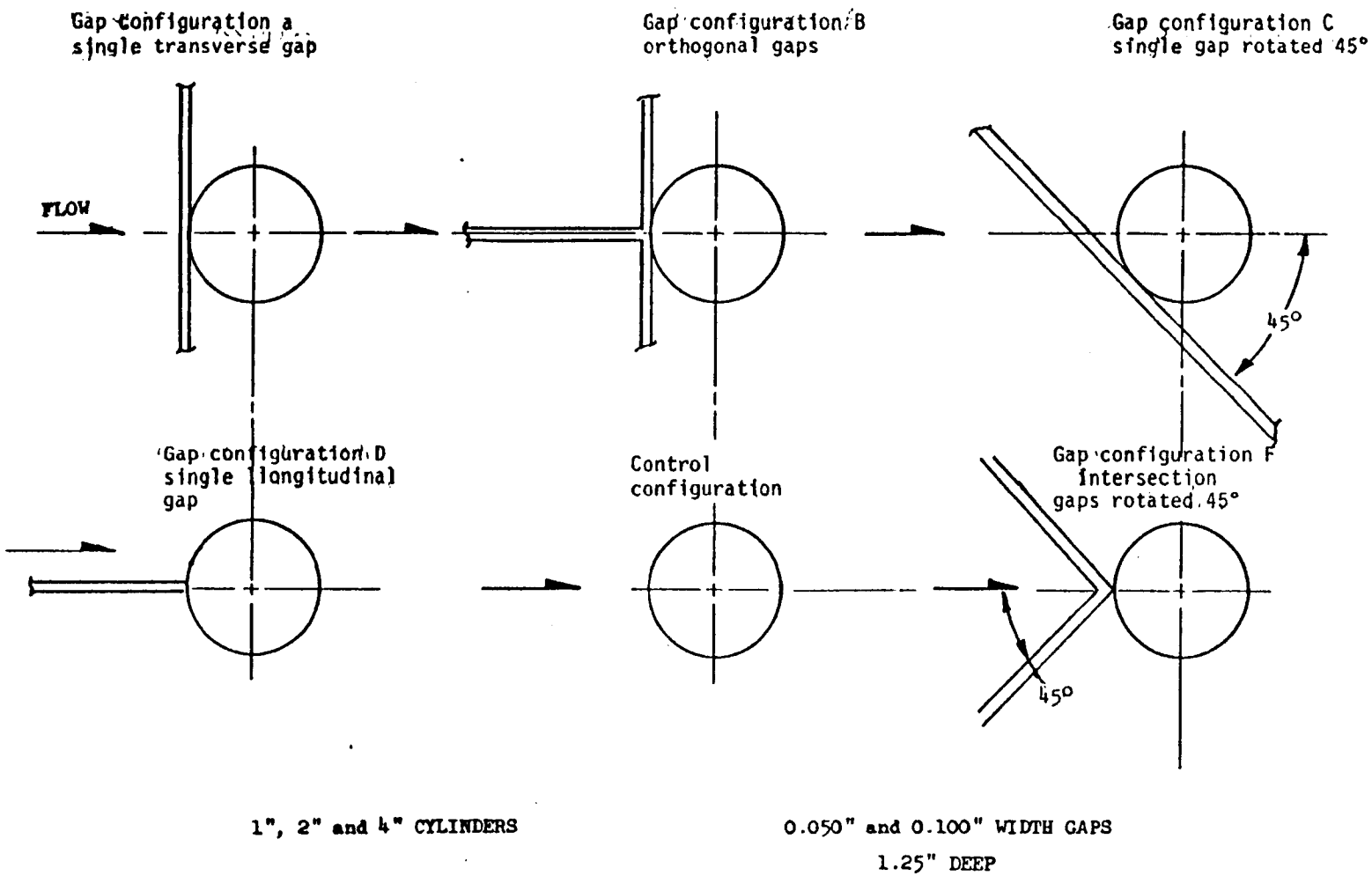

b. Gap and Protuberance Orientations

Figure 1. - Continued.

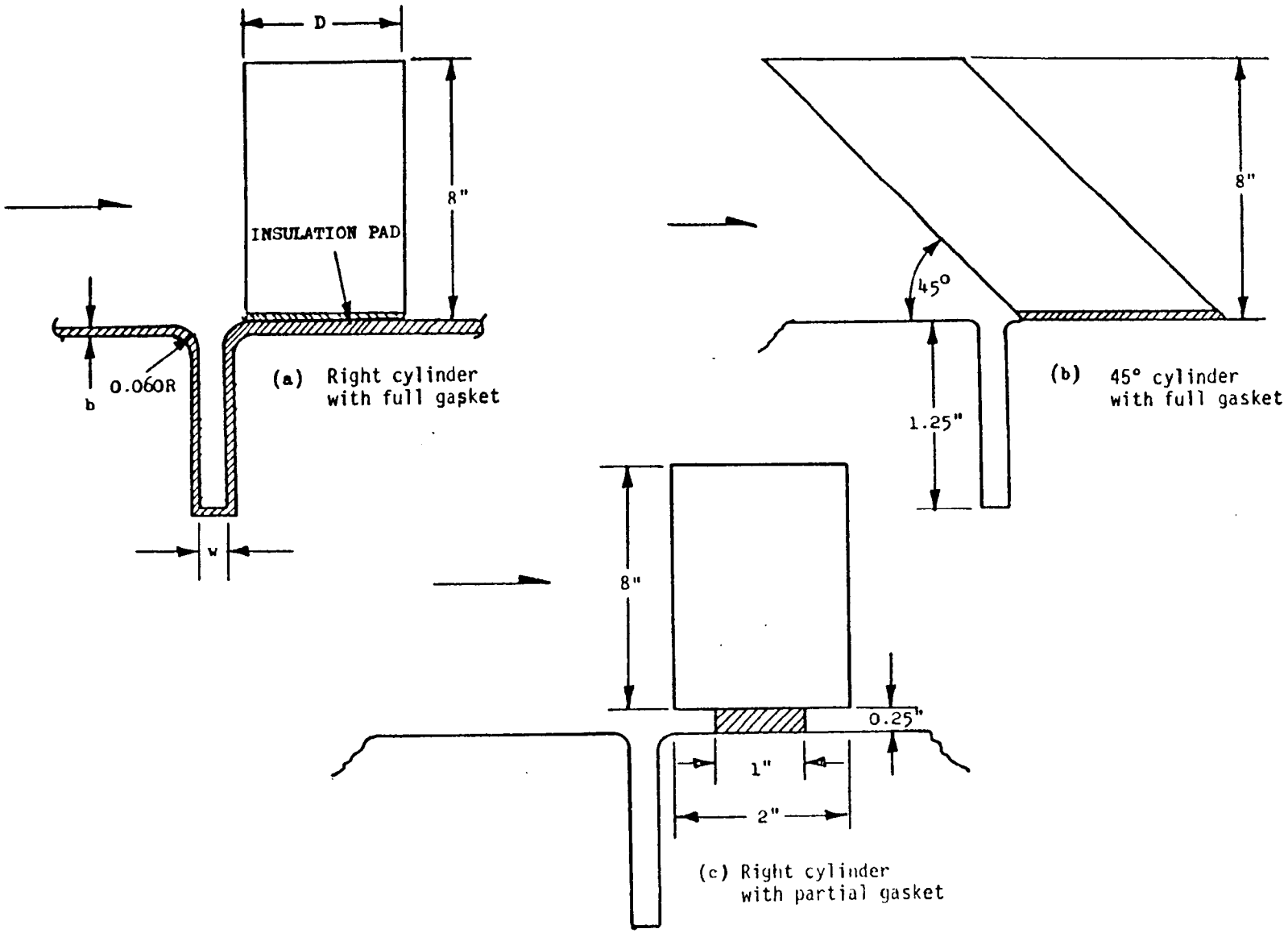

c. Protuberence Model Nomenclature

Figure 1. - Continued.

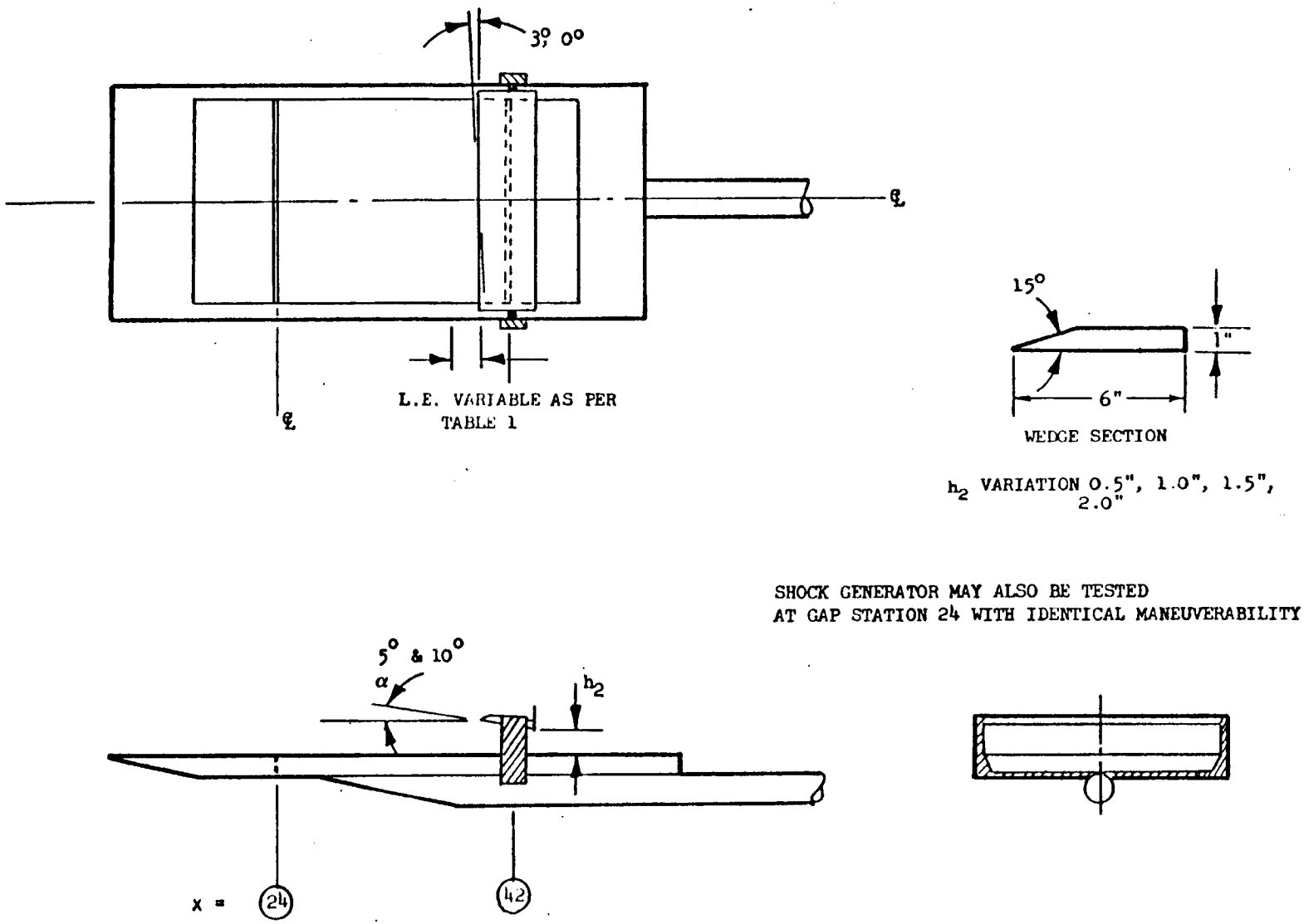

d. Oblique-Shock Impingement Testing

Figure 1. - Continued.

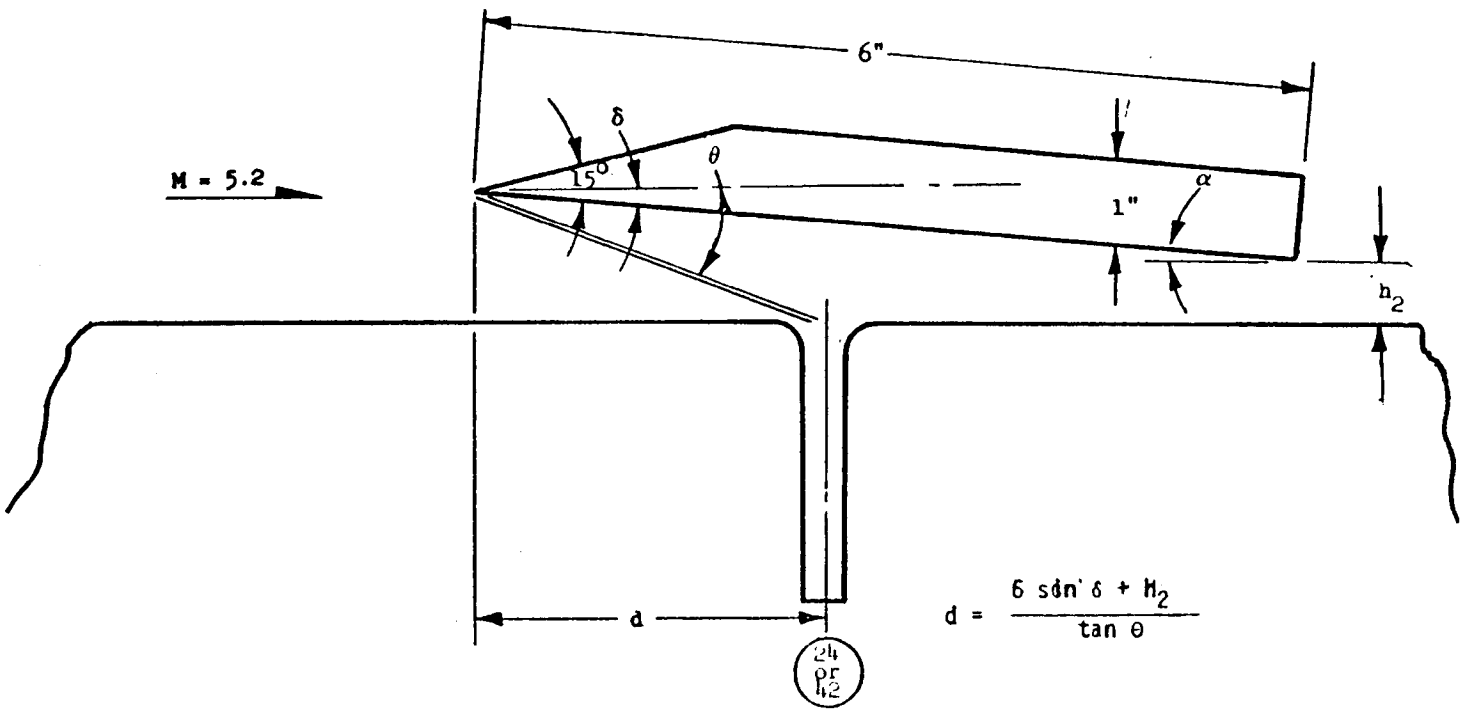

e. Wedge Nomenclature

Figure 1. - Continued

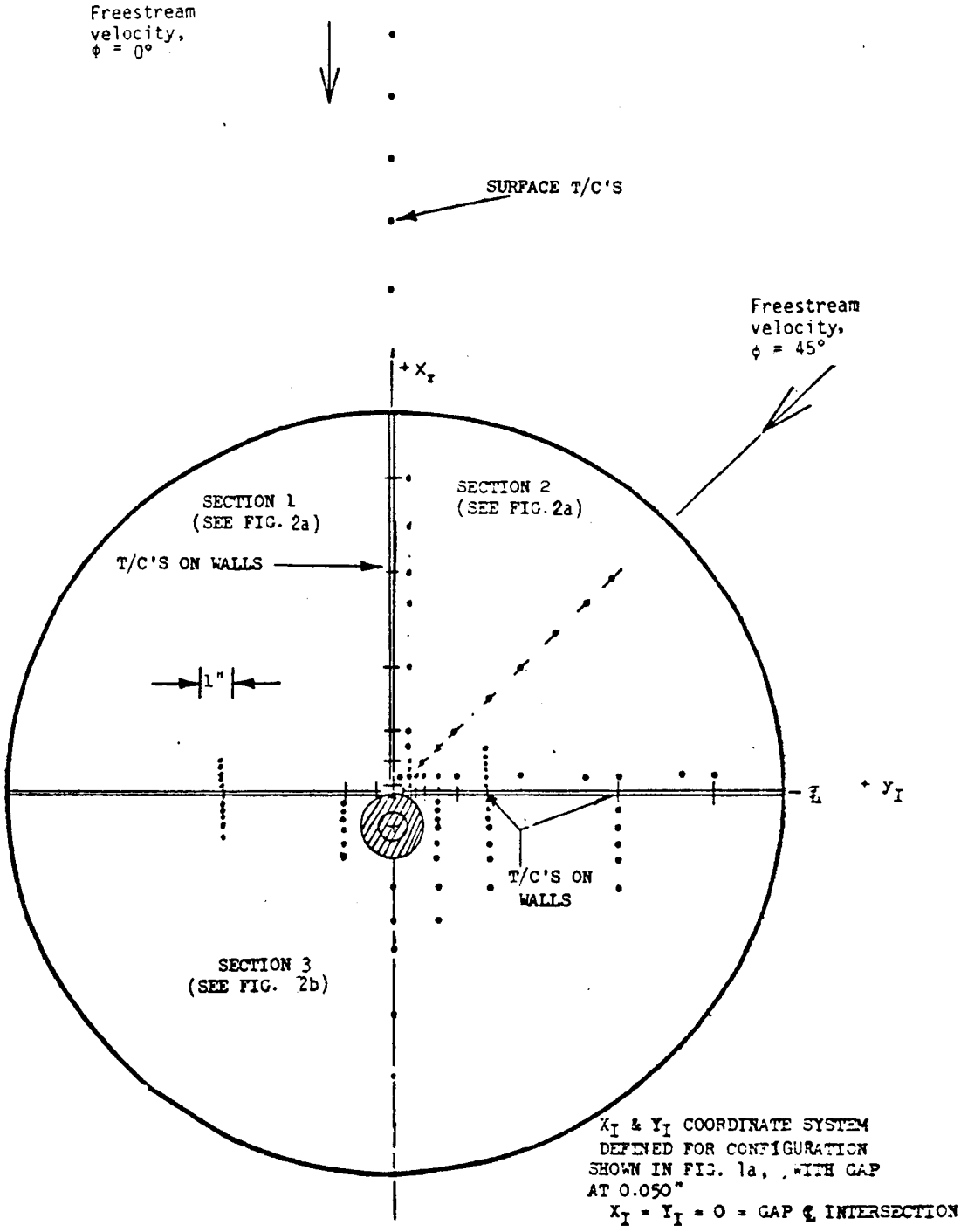

f. Turntable Reference System

Figure 1. - Concluded.

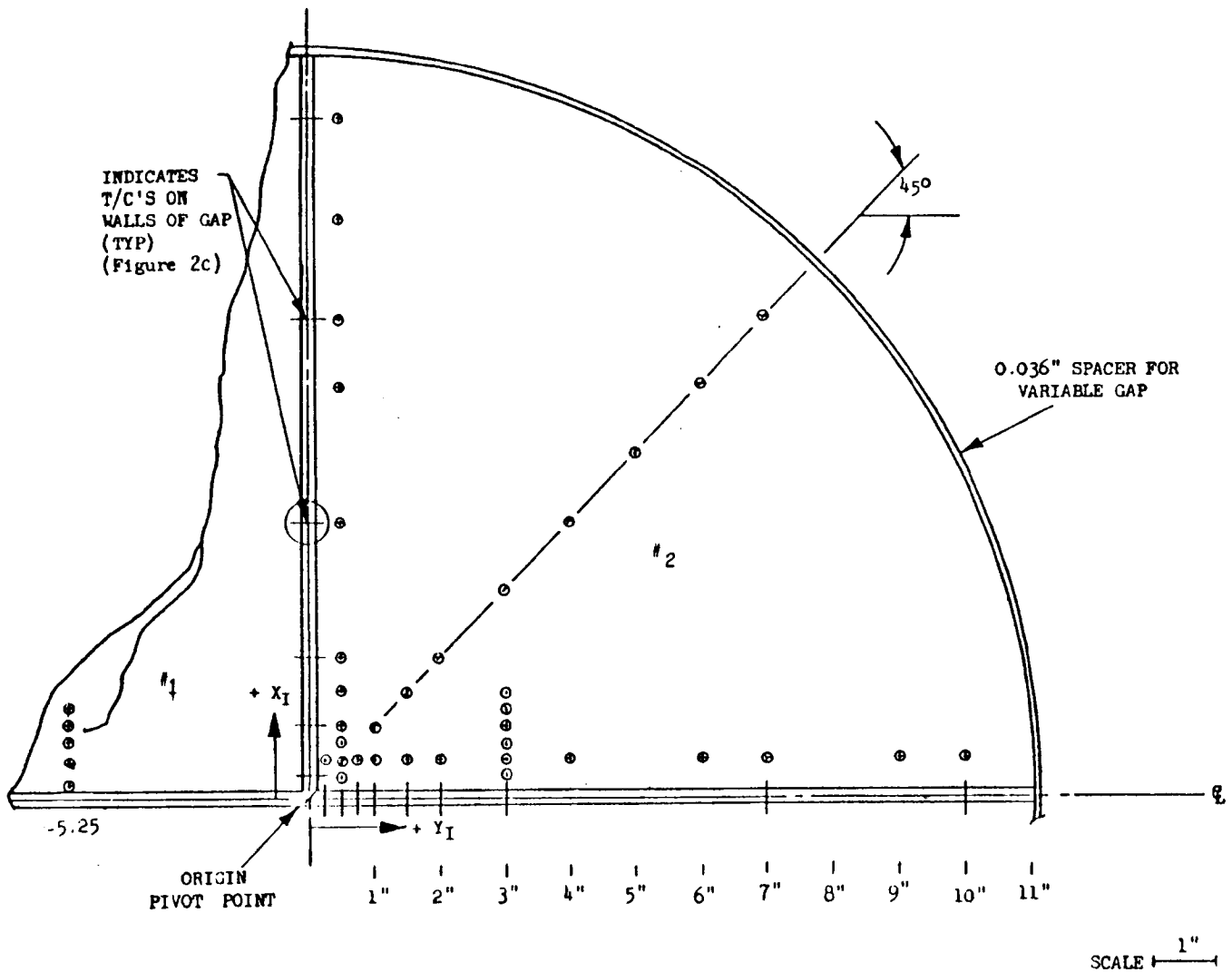

a. Sections 1 and 2 Surface Thermocouples

Figure 2. - Thermocouple locations.

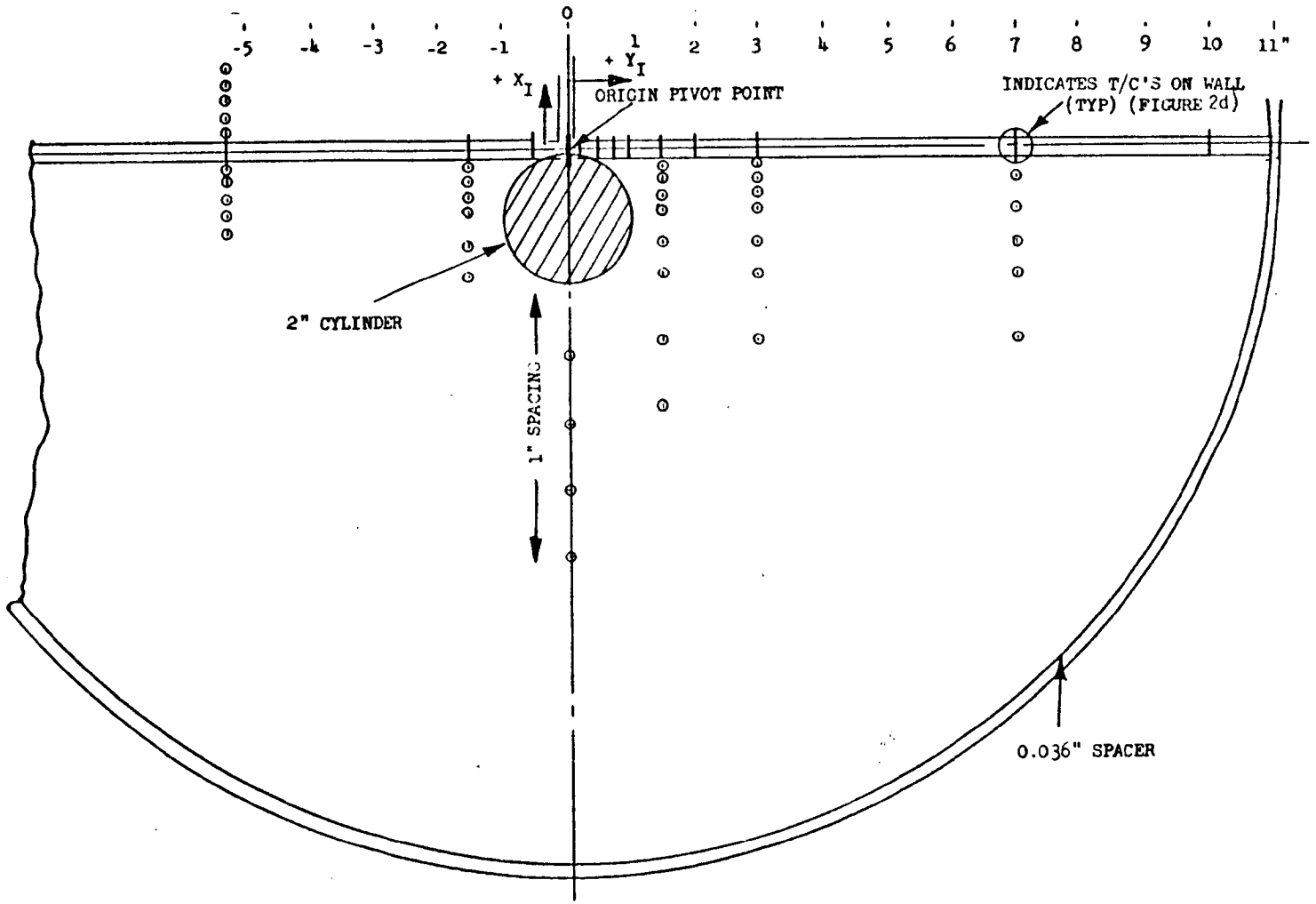

b. Section 3 Surface Thermocouples

Figure 2. - Continued.

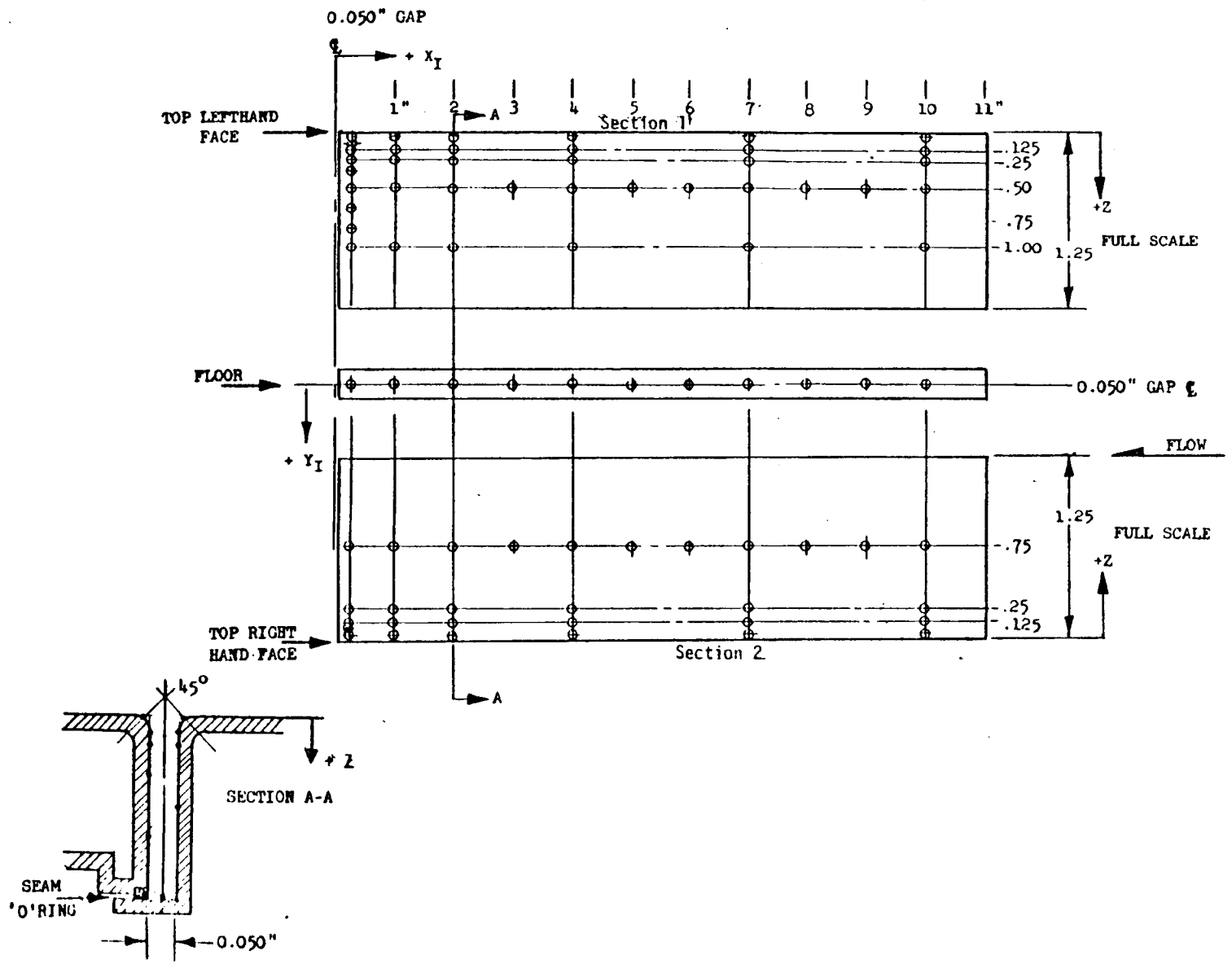

c. Gap Between Sections 1 and 2

Figure 2. - Continued.

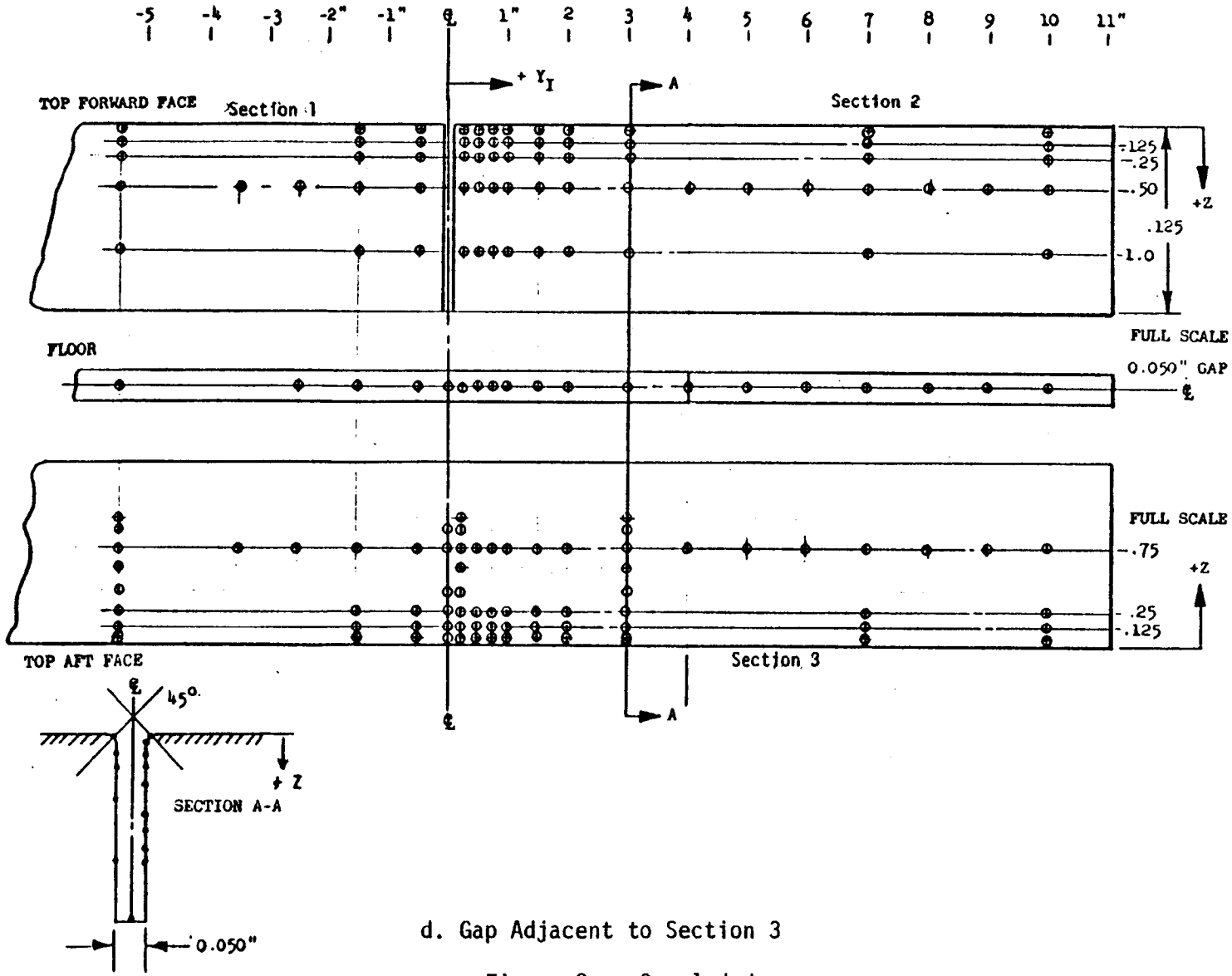

d. Gap Adjacent to Section 3

Figure 2. - Concluded.

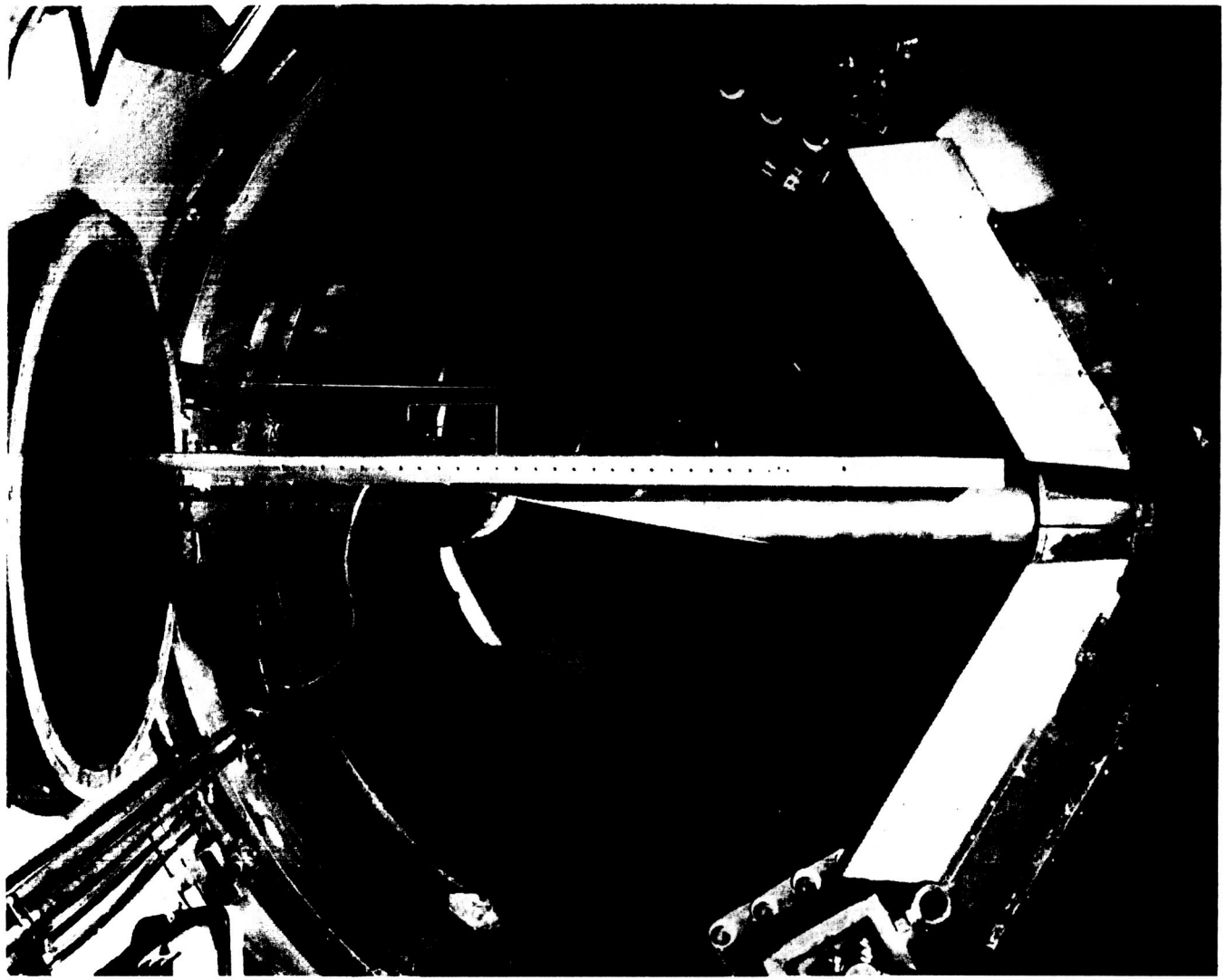

a. Flat-Plate Model Installation in NASA-Ames 3.5-Foot Hypersonic Wind Tunnel-Overall Side View

Figure 3. - Model photographs.

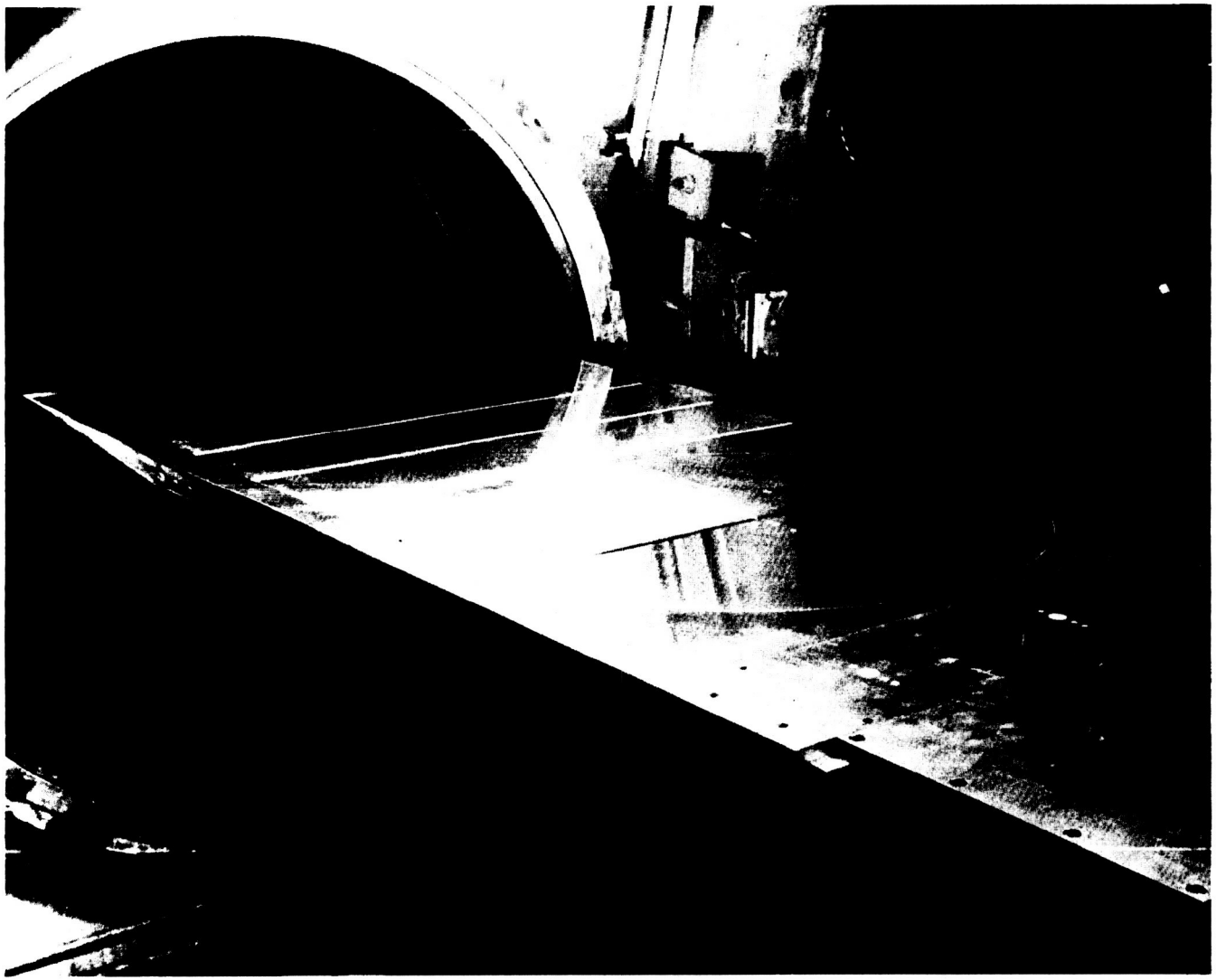

b. Gap Configuration B Control Installation - 3/4 Rear View

Figure 3. - Continued.

c. Two-Inch Diameter Right Cylinder With Gap Configuration C - 3/4 Rear View

Figure 3. - Continued.

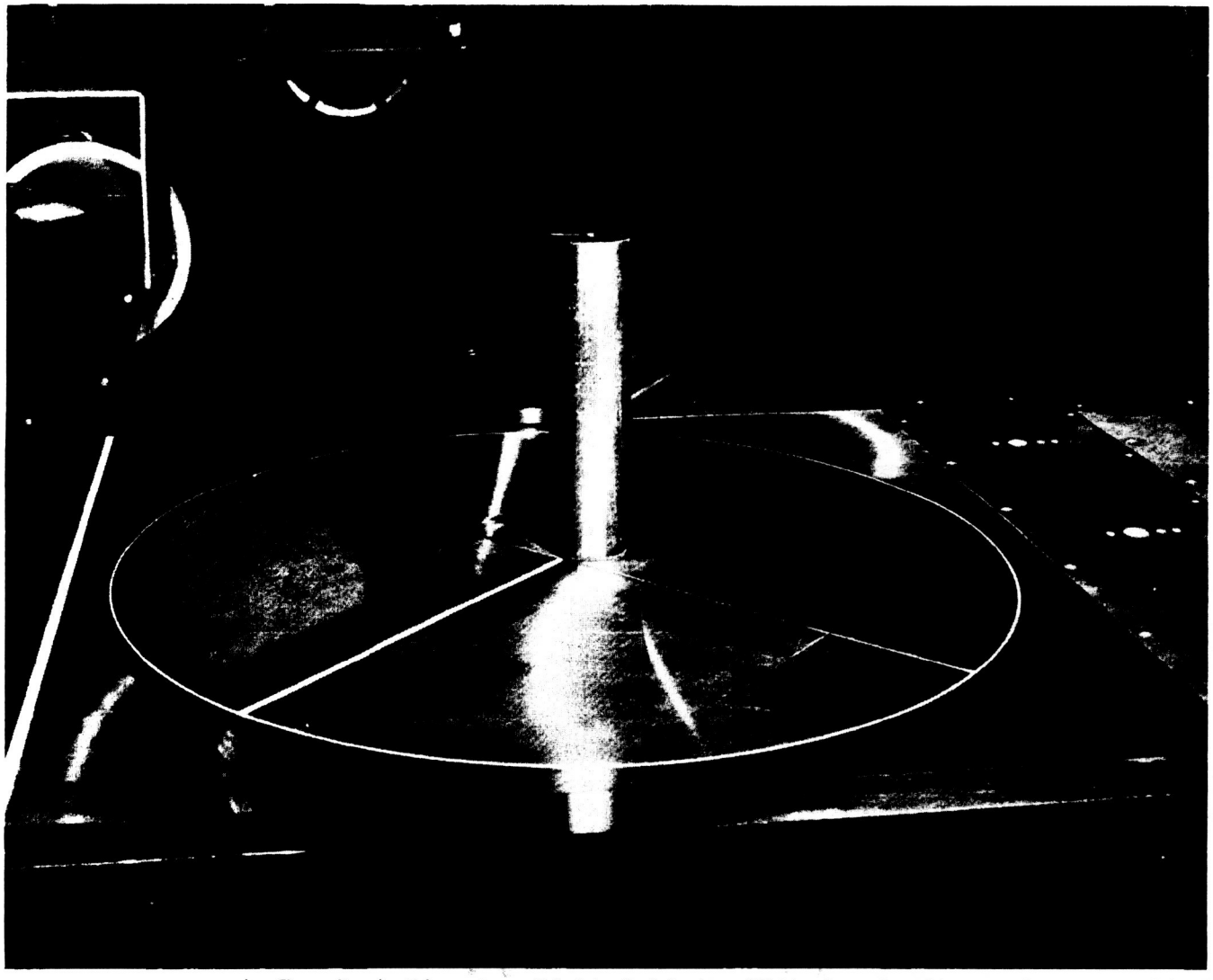

d. Two-Inch Diameter Right Cylinder With Gap Configuration C - Side View

Figure 3. - Continued.

e. Two-Inch Diameter 45° Cylinder With Gap Configuration C - 3/4 Rear View

Figure 3. - Continued.

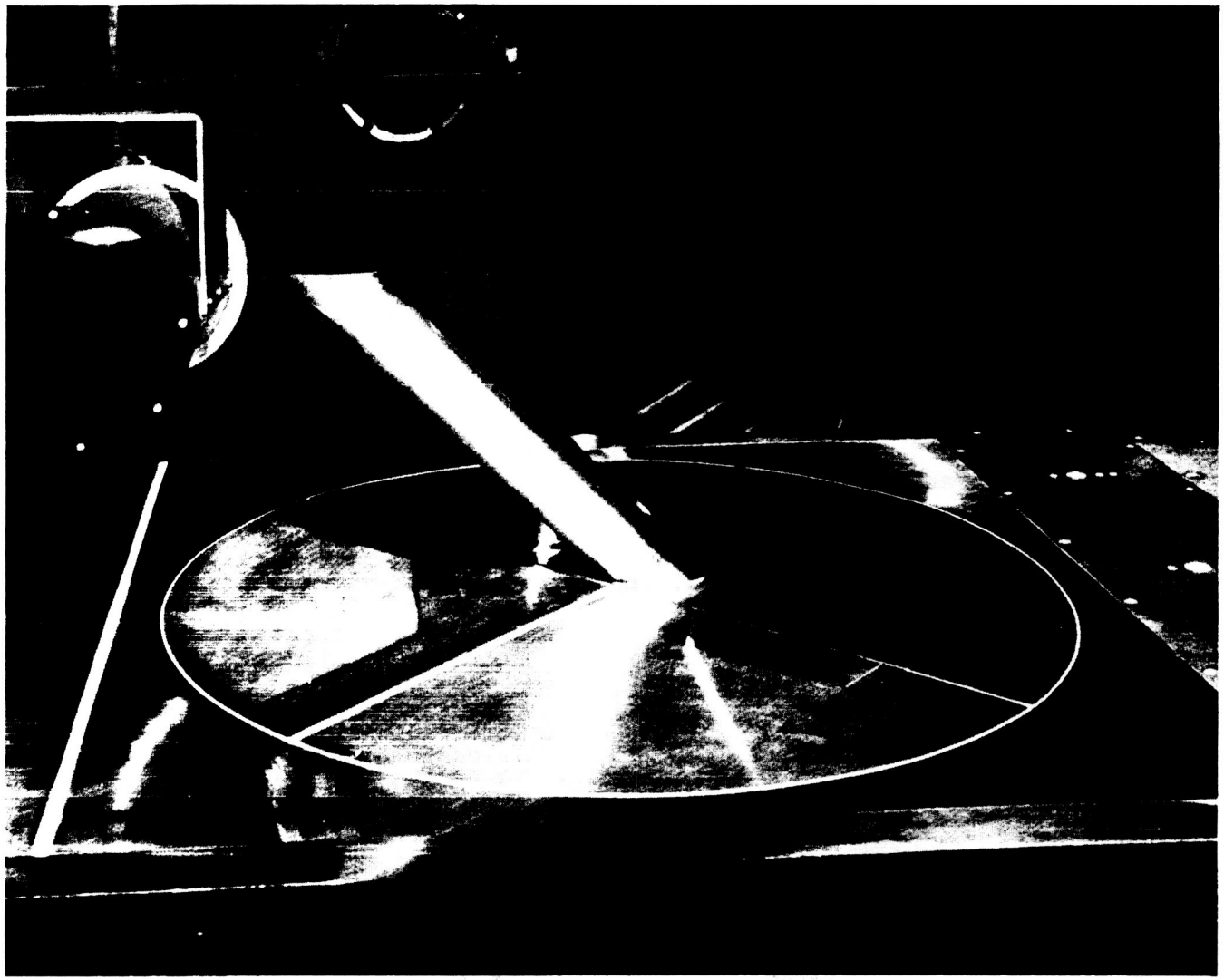

f. Two-Inch Diameter 45° Cylinder With Gap Configuration C - Side View

Figure 3. - Continued.

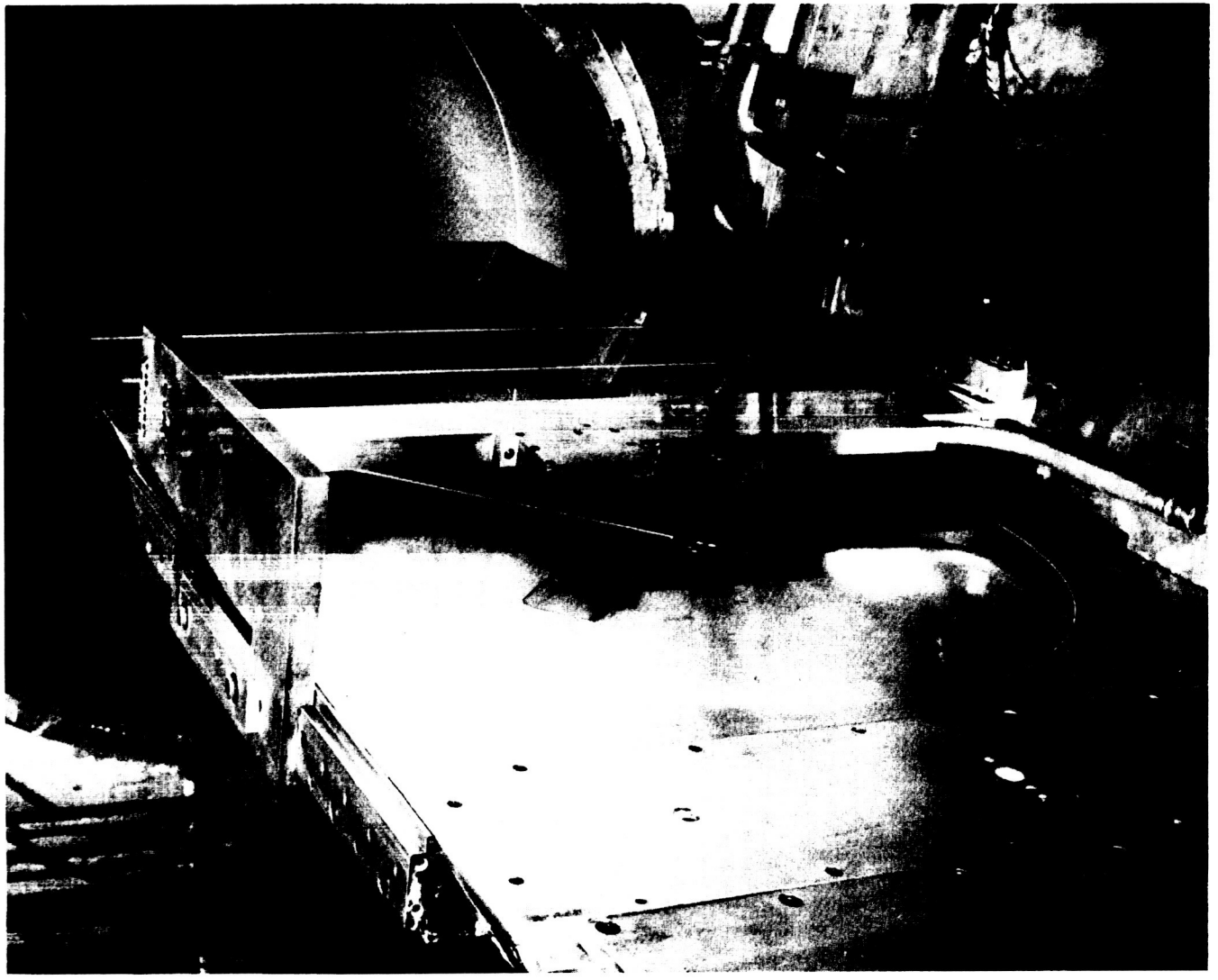

g. Wedge Shock Generator With Gap Configuration C - 3/4 Rear View

Figure 3. - Continued.

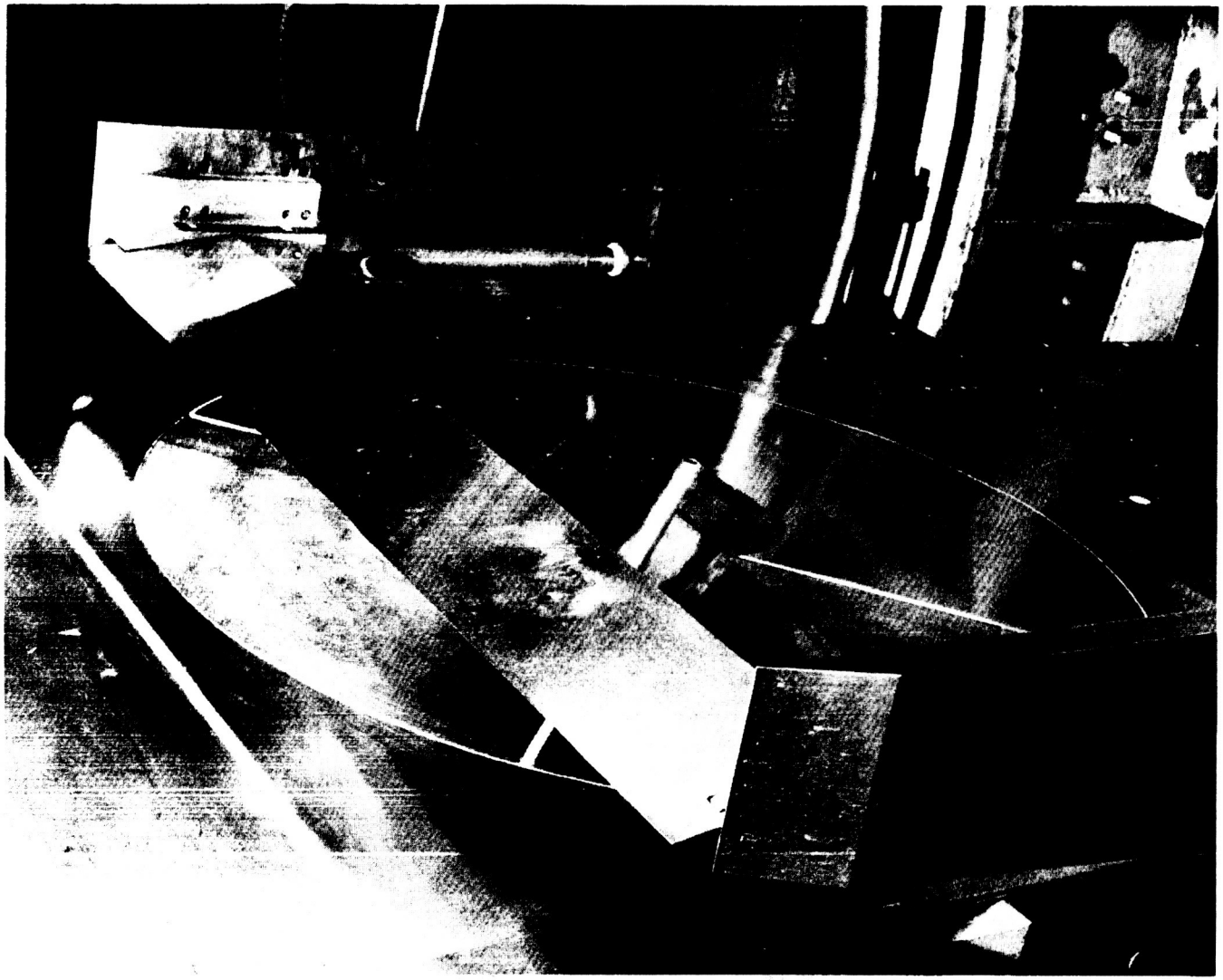

h. Wedge Shock Generation With Gap Configuration C - 3/4 Front View

Figure 3. - Continued.

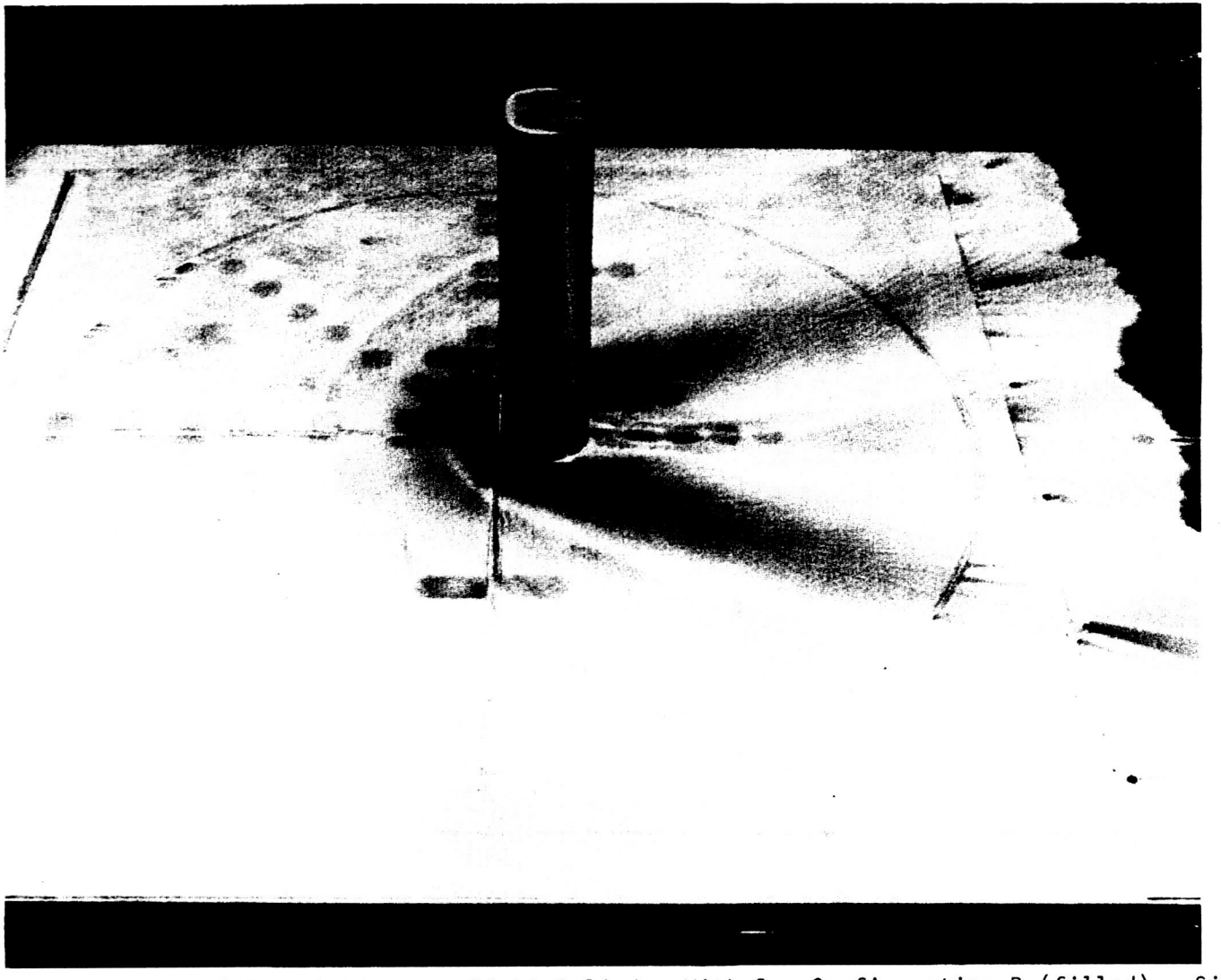

i. Oil-Flow Pattern Around 2-Inch Diameter Right Cylinder With Gap Configuration B (filled) - Side View

Figure 3. - Continued.

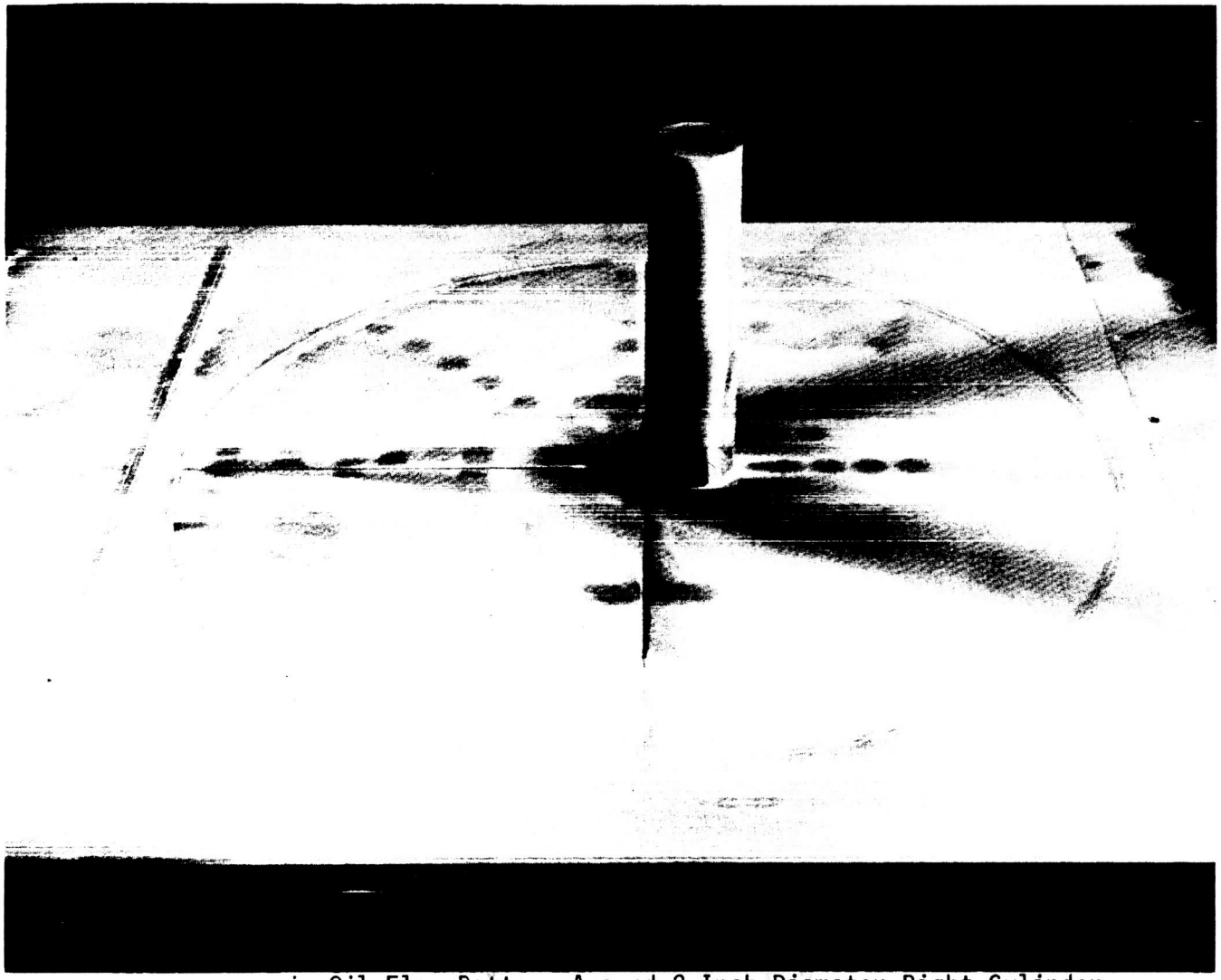

j. Oil-Flow Pattern Around 2-Inch Diameter Right Cylinder
With Gap Configuration B (0.050-In. Gap Width) - Side View

Figure 3. - Concluded.

(Reverse of this page is blank.)

APPENDIX

TABULATED SOURCE DATA

ARC35-200IH27 FP/GAP B FILLED SURFACE (RE3T01) (28 FEB 75)

REFERENCE DATA

SREF = 11.2500 SQ.FT. XMRP = .0000 IN.
LREF = 60.0000 IN. YMRP = .0000 IN.
BREF = 27.0000 IN. ZMRP = .0000 IN.
SCALE = 1.0000

PARAMETRIC DATA

W = .050 RN/L = 3.500

MACH (1) = 5.240 HAW/HT(1) = .907 RN/L = 3.2136 PO = 338.87 TO = 1559.1 HO = 385.05

SECTION (1)SURFACE DEPENDENT VARIABLE H/HREF

XI	-6.2500	-5.2500	-4.2500	-4.0000	-3.2500	-3.0000	-2.0000	-1.5000	-1.2500	-1.0000	-.7500	-.5000	-.2500	.2500	.5000
YI															
-5.250									.0000	.0000	.0000	.0000	.0000	.3681	.4393
-1.500							.3562	.3929		.3923	.3801	.4083	.4356		
.000	.2949	.2769	.3281		.0000										
.250															.3724
.500														.3641	.3668
.750															.3450
1.000															.3762
1.500				.3474		.3711	.3819	.3770		.4088	.4146	.4410	.4325		.3834
2.000															.4056
3.000						.3770	.3565	.3655		.3904	.3556	.3794	.0000	.3346	.3452
4.000															.4128
6.000															.3833
7.000						.3738	.3752	.3801		.3849		.3516			.3961
9.000															.0000
10.000															.0000

XI	.7500	1.0000	1.2500	1.5000	2.0000	3.0000	4.0000	5.0000	6.0000	7.0000	8.5000	10.0000
YI												
-5.250	.3969	.3646	.3314									
.500	.0000	.3722		.3712	.3903		.3835		.3793	.3665	.3742	.3742
1.000		.0000										
1.500				.0000								
2.000					.0000							
3.000	.3683	.3434	.3489	.3676		.0000						
4.000							.0000					
5.000								.0000				
6.000									.0000			
7.000										.0000		

ARC35-200IH27 FP/GAP B FILLED SURFACE (RE3T02) (28 FEB 75)

REFERENCE DATA

SREF = 11.2500 SQ.FT. XMRP = .0000 IN.
LREF = 60.0000 IN. YMRP = .0000 IN.
BREF = 27.0000 IN. ZMRP = .0000 IN.
SCALE = 1.0000

PARAMETRIC DATA

W = .050 RN/L = 1.000

MACH (1) = 5.220 HAW/HT(1) = .873 RN/L = 1.1172 PO = 106.42 TO = 1473.0 HO = 362.39

SECTION (1)SURFACE DEPENDENT VARIABLE H/HREF

XI	-6.2500	-5.2500	-4.2500	-4.0000	-3.2500	-3.0000	-2.0000	-1.5000	-1.2500	-1.0000	-.7500	-.5000	-.2500	.2500	.5000
YI															
-5.250									.0000	.0000	.0000	.0000	.0000	.0801	.1003
-1.500							.0856	.0000		.0793	.0000	.0833	.0000		
.000	.0000	.0656	.0685		.0723										
.250															.0671
.500														.0640	.0697
.750															.0000
1.000															.0726
1.500				.0713		.0708	.0711	.0675		.0725	.0723	.0762	.0000		.0678
2.000															.0732
3.000						.0760	.0738	.0791		.0779	.0627	.0000	.0000	.0636	.0698
4.000															.0822
6.000															.0738
7.000						.0662	.0681	.0800		.0711		.0680			.0722
9.000															.0000
10.000															.0000

XI	.7500	1.0000	1.2500	1.5000	2.0000	3.0000	4.0000	5.0000	6.0000	7.0000	8.5000	10.0000
YI												
-5.250	.0962	.0963	.0859									
.500	.0000	.0000		.0688	.0711		.0000		.0837	.0000	.0892	.0944
1.000		.0000										
1.500				.0000								
2.000					.0000							
3.000	.0763	.0708	.0712	.0732		.0000						
4.000							.0000					
5.000								.0000				
6.000									.0000			
7.000										.0000		

ARC35-2001H27 FP/GAP B SURFACE (RE3T03) (28 FEB 75)

REFERENCE DATA

SREF = 11.2500 SQ.FT. XMRP = .0000 IN.
LREF = 60.0000 IN. YMRP = .0000 IN.
BREF = 27.0000 IN. ZMRP = .0000 IN
SCALE = 1.0000

PARAMETRIC DATA

W = .050 RN/L = 3.500

MACH (1) = 5.240 HAW/HT(1) = .907 RN/L = 3.4796 PO = 342.45 TO = 1494.2 HO = 367.94

SECTION (1)SURFACE DEPENDENT VARIABLE H/HREF

XI	-6.2500	-5.2500	-4.2500	-4.0000	-3.2500	-3.0000	-2.0000	-1.5000	-1.2500	-1.0000	-.7500	-.5000	-.2500	.2500	.5000
YI															
-5.250									.0000	.0000	.0000	.0000	.0000	.0000	.0000
-1.500							.0000	.0000		.0000	.0000	.0000	.0000		
.000	.0000	.0000	.0000		.0000										
.250															.0000
.500														.0000	.0000
.750															.0000
1.000															.0000
1.500				.0000		.0000	.0000	.0000		.0000	.0000	.0000	.0000		.0000
2.000															.0000
3.000						.0000	.0000	.0000		.0000	.0000	.0000	.0000	.0000	.0000
4.000															.0000
6.000															.0000
7.000						.0000	.0000	.0000		.0000		.0000			.0000
9.000															.0000
10.000															.0000

XI	.7500	1.0000	1.2500	1.5000	2.0000	3.0000	4.0000	5.0000	6.0000	7.0000	8.5000	10.0000
YI												
-5.250	.0000	.0000	.0000									
.500	.0000	.0000		.0000	.0000		.3920		.3895	.3758	.3874	.3919
1.000		.0000										
1.500				.0000								
2.000					.0000							
3.000	.0000	.0000	.0000	.0000		.0000						
4.000							.0000					
5.000								.0000				
6.000									.0000			
7.000										.0000		

ARC35-200IH27 FP/GAP C SURFACE (RE3T04) (28 FEB 75)

REFERENCE DATA

SREF = 11.2500 SQ.FT. XMRP = .0000 IN.
LREF = 60.0000 IN. YMRP = .0000 IN.
BREF = 27.0000 IN. ZMRP = .0000 IN.
SCALE = 1.0000

PARAMETRIC DATA

W = .050 RN/L = 3.500

MACH (1) = 5.240 HAW/HT(1) = .907 RN/L = 3.6120 PO = 349.35 TO = 1478.2 HO = 363.75

SECTION (1)SURFACE DEPENDENT VARIABLE H/HREF

XI	-6.2500	-5.2500	-4.2500	-4.0000	-3.2500	-3.0000	-2.0000	-1.5000	-1.2500	-1.0000	-.7500	-.5000	-.2500	.2500	.5000
YI															
-5.250									.0000	.0000	.0000	.0000	.0000	.0000	.0000
-1.500							.0000	.0000		.0000	.0000	.0000	.0000		
.000	.0000	.0000	.0000		.0000										
.250															.0000
.500														.0000	.0000
.750															.0000
1.000															.0000
1.500				.0000		.0000	.0000	.0000		.0000	.0000	.0000	.0000		.0000
2.000															.0000
3.000						.0000	.0000	.0000		.0000	.0000	.0000	.0000	.0000	.0000
4.000															.0000
6.000															.0000
7.000						.0000	.0000	.0000		.0000		.0000			.0000
9.000															.0000
10.000															.0000

XI	.7500	1.0000	1.2500	1.5000	2.0000	3.0000	4.0000	5.0000	6.0000	7.0000	8.5000	10.0000
YI												
-5.250	.0000	.0000	.0000									
.500	.0000	.0000		.0000	.0000		.0000		.0000	.0000	.0000	.0000
1.000		.3510										
1.500				.3538								
2.000					.3572							
3.000	.0000	.0000	.0000	.0000		.3719						
4.000							.3444					
5.000								.0000				
6.000									.0000			
7.000										.0000		

ARC35-200 1H27 FP/GAP F SURFACE (RE3T05) (28 FEB 75)

REFERENCE DATA

SREF = 11.2500 SQ.FT. XMRP = .0000 IN.
LREF = 60.0000 IN. YMRP = .0000 IN.
BREF = 27.0000 IN. ZMRP = .0000 IN.
SCALE = 1.0000

PARAMETRIC DATA

W = .050 RN/L = 3.500

MACH (1) = 5.240 HAW/HT(1) = .907 RN/L = 3.4695 PO = 352.78 TO = 1524.6 HO = 375.94

SECTION (1)SURFACE DEPENDENT VARIABLE H/HREF

XI	-6.2500	-5.2500	-4.2500	-4.0000	-3.2500	-3.0000	-2.0000	-1.5000	-1.2500	-1.0000	-.7500	-.5000	-.2500	.2500	.5000
YI															
-5.250									.0000	.0000	.0000	.0000	.0000	.0000	.0000
-1.500							.0000	.0000		.0000	.0000	.0000	.0000		
.000	.0000	.0000	.0000		.0000										
.250															.0000
.500														.0000	.0000
.750															.0000
1.000															.0000
1.500				.0000		.0000	.0000	.3632		.3900	.3958	.4296	.4579		.0000
2.000															.0000
3.000						.0000	.0000	.0000		.0000	.0000	.0000	.0000	.0000	.0000
4.000															.0000
6.000															.0000
7.000						.0000	.0000	.0000		.0000		.0000			.0000
9.000															.0000
10.000															.0000

XI	.7500	1.0000	1.2500	1.5000	2.0000	3.0000	4.0000	5.0000	6.0000	7.0000	8.5000	10.0000
YI												
-5.250	.0000	.0000	.0000									
.500	.0000	.0000		.0000	.0000		.0000		.0000	.0000	.0000	.0000
1.000		.3393										
1.500				.3425								
2.000					.3472							
3.000	.0000	.0000	.0000	.0000		.3574						
4.000							.3302					
5.000								.0000				
6.000									.0000			
7.000										.0000		

ARC35-200(H27 FP/GAP A SURFACE (RE3T06) (28 FEB 75)

REFERENCE DATA

SREF = 11.2500 SQ.FT. XMRP = .0000 IN.
LREF = 60.0000 IN. YMRP = .0000 IN.
BREF = 27.0000 IN. ZMRP = .0000 IN.
SCALE = 1.0000

PARAMETRIC DATA

W = .050 RN/L = 3.500

MACH (1) = 5.240 HAW/HT(1) = .907 RN/L = 3.3940 PO = 353.31 TO = 1546.8 HO = 381.80

SECTION (1)SURFACE DEPENDENT VARIABLE H/HREF

XI	-6.2500	-5.2500	-4.2500	-4.0000	-3.2500	-3.0000	-2.0000	-1.5000	-1.2500	-1.0000	-.7500	-.5000	-.2500	.2500	.5000
YI															
-5.250									.0000	.0000	.0000	.0000	.0000	.0000	.0000
-1.500							.3415	.0000		.3939	.0000	.4023	.4625		
.000	.0000	.2692	.0000		.3526										
.250															.0000
.500														.0000	.3325
.750															.0000
1.000															.0000
1.500				.0000		.0000	.0000	.3459		.3734	.3798	.0868	.0000		.0000
2.000															.0000
3.000						.0000	.0000	.0000		.0000	.0000	.0000	.0000	.0000	.0000
4.000															.0000
6.000															.0000
7.000						.0000	.0000	.0000		.0000		.0000			.0000
9.000															.0000
10.000															.0000

XI	.7500	1.0000	1.2500	1.5000	2.0000	3.0000	4.0000	5.0000	6.0000	7.0000	8.5000	10.0000
YI												
-5.250	.0000	.0000	.0000									
.500	.0000	.0000		.0000	.3673		.3565		.3536	.0000	.3563	.3671
1.000		.0000										
1.500				.0000								
2.000					.0000							
3.000	.0000	.0000	.0000	.0000		.0000						
4.000							.0000					
5.000								.0000				
6.000									.0000			
7.000										.0000		

ARC35-200IH27 FP/GAP B SURFACE (RE3T07) (28 FEB 75)

REFERENCE DATA

SREF = 11.2500 SQ.FT. XMRP = .0000 IN.
LREF = 60.0000 IN. YMRP = .0000 IN.
BREF = 27.0000 IN. ZMRP = .0000 IN.
SCALE = 1.0000

PARAMETRIC DATA

W = .100 RN/L = 3.500

MACH (1) = 5.240 HAW/HT(1) = .907 RN/L = 3.7415 PO = 350.08 TO = 1448.1 HO = 355.89

SECTION (1)SURFACE DEPENDENT VARIABLE H/HREF

XI	-6.2500	-5.2500	-4.2500	-4.0000	-3.2500	-3.0000	-2.0000	-1.5000	-1.2500	-1.0000	-.7500	-.5000	-.2500	.2500	.5000
YI															
-5.250									.0000	.0000	.0000	.0000	.0000	.0000	.0000
-1.500							.0000	.0000		.0000	.0000	.0000	.0000		
.000	.0000	.0000	.0000		.0000										.0000
.250														.0000	.0000
.500															.0000
.750															.0000
1.000															.0000
1.500				.0000		.0000	.0000	.0000		.0000	.0000	.0000	.0000		.0000
2.000															.0000
3.000						.0000	.0000	.0000		.0000	.0000	.0000	.0000	.0000	.0000
4.000															.0000
6.000															.0000
7.000						.0000	.0000	.0000		.0000		.0000			.0000
9.000															.0000
10.000															.0000

XI	.7500	1.0000	1.2500	1.5000	2.0000	3.0000	4.0000	5.0000	6.0000	7.0000	8.5000	10.0000
YI												
-5.250	.0000	.0000	.0000									
.500	.0000	.0000		.0000	.0000		.3724		.3626	.0000	.3616	.0000
1.000		.0000										
1.500				.0000								
2.000					.0000							
3.000	.0000	.0000	.0000	.0000		.0000						
4.000							.0000					
5.000								.0000				
6.000									.0000			
7.000										.0000		

ARC35-200IH27 FP/GAP C SURFACE (RE3T06) (28 FEB 75)

REFERENCE DATA

SREF = 11.2500 SQ.FT. XMRP = .0000 IN.
LREF = 60.0000 IN. YMRP = .0000 IN.
BREF = 27.0000 IN. ZMRP = .0000 IN.
SCALE = 1.0000

PARAMETRIC DATA

W = .100 RN/L = 3.500

MACH (1) = 5.240 HAW/HT(1) = .907 RN/L = 3.4306 PO = 348.32 TO = 1523.2 HO = 375.58

SECTION (1)SURFACE DEPENDENT VARIABLE H/HREF

XI	-6.2500	-5.2500	-4.2500	-4.0000	-3.2500	-3.0000	-2.0000	-1.5000	-1.2500	-1.0000	-.7500	-.5000	-.2500	.2500	.5000
YI															
-5.250									.0000	.0000	.0000	.0000	.0000	.0000	.0000
-1.500							.0000	.0000		.0000	.0000	.0000	.0000		
.000	.0000	.0000	.0000		.0000										
.250															.0000
.500														.0000	.0000
.750															.0000
1.000															.0000
1.500				.0000		.0000	.0000	.0000		.0000	.0000	.0000	.0000		.0000
2.000															.0000
3.000						.0000	.0000	.0000		.0000	.0000	.0000	.0000	.0000	.0000
4.000															.0000
6.000															.0000
7.000						.0000	.0000	.0000		.0000		.0000			.0000
9.000															.0000
10.000															.0000

XI	.7500	1.0000	1.2500	1.5000	2.0000	3.0000	4.0000	5.0000	6.0000	7.0000	8.5000	10.0000
YI												
-5.250	.0000	.0000	.0000									
.500	.0000	.0000		.0000	.0000		.0000		.0000	.0000	.0000	.0000
1.000		.3557										
1.500				.3528								
2.000					.0000							
3.000	.0000	.0000	.0000	.0000		.3725						
4.000							.0000					
5.000								.0000				
6.000									.0000			
7.000										.0000		

ARC35-2001H27 FP/GAP B SURFACE (RE3T09) (28 FEB 75)

REFERENCE DATA

SREF = 11.2500 SQ.FT. XMRP = .0000 IN.
LREF = 60.0000 IN. YMRP = .0000 IN.
BREF = 27.0000 IN. ZMRP = .0000 IN.
SCALE = 1.0000

PARAMETRIC DATA

W = .050 RN/L = 1.000

MACH (1) = 5.220 HAW/HT(1) = .873 RN/L = 1.0476 PO = 102.37 TO = 1496.5 HO = 368.55

SECTION (1)SURFACE DEPENDENT VARIABLE H/HREF

XI	-6.2500	-5.2500	-4.2500	-4.0000	-3.2500	-3.0000	-2.0000	-1.5000	-1.2500	-1.0000	-.7500	-.5000	-.2500	.2500	.5000
YI															
-5.250									.0000	.0000	.0000	.0000	.0000	.0000	.0000
-1.500							.0000	.0000		.0000	.0000	.0000	.0000		
.000	.0000	.0000	.0000		.0000										
.250															.0000
.500														.0000	.0000
.750															.0000
1.000															.0000
1.500				.0000		.0000	.0000	.0000		.0000	.0000	.0000	.0000		.0000
2.000															.0000
3.000						.0000	.0000	.0000		.0000	.0000	.0000	.0000	.0000	.0000
4.000															.0000
6.000															.0000
7.000						.0000	.0000	.0000		.0000		.0000			.0000
9.000															.0000
10.000															.0000

XI	.7500	1.0000	1.2500	1.5000	2.0000	3.0000	4.0000	5.0000	6.0000	7.0000	8.5000	10.0000
YI												
-5.250	.0000	.0000	.0000									
.500	.0000	.0000		.0000	.0000		.0710		.0774	.0000	.0838	.0891
1.000		.0000										
1.500				.0000								
2.000					.0000							
3.000	.0000	.0000	.0000	.0000		.0000						
4.000							.0000					
5.000								.0000				
6.000									.0000			
7.000										.0000		

ARC35-200(H27 FP/GAP C SURFACE (RE3T10) (28 FEB 75)

REFERENCE DATA

SREF = 11.2500 SQ.FT. XMRP = .0000 IN.
LREF = 60.0000 IN. YMRP = .0000 IN.
BREF = 27.0000 IN. ZMRP = .0000 IN.
SCALE = 1.0000

PARAMETRIC DATA

W = .050 RN/L = 1.000

MACH (1) = 5.220 HAW/HT(1) = .873 RN/L = .98501 PO = 95.049 TO = 1484.9 HO = 365.51

SECTION (1)SURFACE DEPENDENT VARIABLE H/HREF

XI	-6.2500	-5.2500	-4.2500	-4.0000	-3.2500	-3.0000	-2.0000	-1.5000	-1.2500	-1.0000	-.7500	-.5000	-.2500	.2500	.5000
YI															
-5.250									.0000	.0000	.0000	.0000	.0000	.0000	.0000
-1.500							.0000	.0000		.0000	.0000	.0000	.0000		
.000	.0000	.0000	.0000		.0000										
.250															.0000
.500														.0000	.0000
.750															.0000
1.000															.0000
1.500				.0000		.0000	.0000	.0000		.0000	.0000	.0000	.0000		.0000
2.000															.0000
3.000						.0000	.0000	.0000		.0000	.0000	.0000	.0000	.0000	.0000
4.000															.0000
6.000															.0000
7.000						.0000	.0000	.0000		.0000		.0000			.0000
9.000															.0000
10.000															.0000

XI	.7500	1.0000	1.2500	1.5000	2.0000	3.0000	4.0000	5.0000	6.0000	7.0000	8.5000	10.0000
YI												
-5.250	.0000	.0000	.0000									
.500	.0000	.0000		.0000	.0000		.0000		.0000	.0000	.0000	.0000
1.000		.0671										
1.500				.0695								
2.000					.0717							
3.000	.0000	.0000	.0000	.0000		.0791						
4.000							.0747					
5.000								.0000				
6.000									.0000			
7.000										.0000		

ARC35-200(H27 FP/GAP A SURFACE (RE3T11) (28 FEB 75)

REFERENCE DATA

SREF = 11.2500 SQ.FT. XMRP = .0000 IN.
LREF = 60.0000 IN. YMRP = .0000 IN.
BREF = 27.0000 IN. ZMRP = .0000 IN.
SCALE = 1.0000

PARAMETRIC DATA

W = .050 RN/L = 1.000

MACH (1) = 5.220 HAW/HT(1) = .873 RN/L = 1.1677 PO = 111.47 TO = 1475.0 HO = 362.91

SECTION (1)SURFACE DEPENDENT VARIABLE H/HREF

XI	-6.2500	-5.2500	-4.2500	-4.0000	-3.2500	-3.0000	-2.0000	-1.5000	-1.2500	-1.0000	-.7500	-.5000	-.2500	.2500	.5000
YI															
-5.250									.0000	.0000	.0000	.0000	.0000	.0000	.0000
-1.500							.0829	.0000		.0760	.0000	.0820	.0896		
.000	.0716	.0000	.0000		.0711										
.250															.0000
.500														.0000	.0675
.750															.0000
1.000															.0000
1.500				.0000		.0000	.0000	.0729		.0754	.0715	.0786	.0773		.0000
2.000															.0000
3.000						.0000	.0000	.0000		.0000	.0000	.0000	.0000	.0000	.0000
4.000															.0000
6.000															.0000
7.000						.0000	.0000	.0000		.0000		.0000			.0000
9.000															.0000
10.000															.0000

XI	.7500	1.0000	1.2500	1.5000	2.0000	3.0000	4.0000	5.0000	6.0000	7.0000	8.5000	10.0000
YI												
-5.250	.0000	.0000	.0000									
.500	.0000	.0000		.0000	.0721		.0747		.0799	.0000	.0844	.0912
1.000		.0000										
1.500				.0000								
2.000					.0000							
3.000	.0000	.0000	.0000	.0000		.0000						
4.000							.0000					
5.000								.0000				
6.000									.0000			
7.000										.0000		

ARC35-200IH27 FP/CYL(2RT)/GAP 8 FILLED SURFACE (RE3T12) (28 FEB 75)

REFERENCE DATA

SREF = 11.2500 SQ.FT. XMRP = .0000 IN.
LREF = 60.0000 IN. YMRP = .0000 IN.
BREF = 27.0000 IN. ZMRP = .0000 IN.
SCALE = 1.0000

PARAMETRIC DATA

W = .050 RN/L = 3.500

MACH (1) = 5.240 HAW/HT(1) = .907 RN/L = 3.3517 PO = 351.28 TO = 1553.2 HO = 383.50

SECTION (1)SURFACE DEPENDENT VARIABLE H/HREF

XI	-6.2500	-5.2500	-4.2500	-4.0000	-3.2500	-3.0000	-2.0000	-1.5000	-1.2500	-1.0000	-.7500	-.5000	-.2500	.2500	.5000
YI															
-5.250									.6024	.6458	.7022	.6911	.7209	.6893	.8351
-1.500							1.9189	3.2147		4.2117	3.7863	3.2237	2.3335		
.000	.0000	.3935	.0000		.4113										
.250															1.9657
.500														3.1467	1.4773
.750															1.9886
1.000															.9165
1.500				.6198		1.0757	.4617	2.8630		4.0839	4.1136	3.3866	2.3107		.5066
2.000															.8324
3.000						.2460	.5915	.4696		.5048	.5693	.7778	.0000	.0000	.7367
4.000															.8381
6.000															.6079
7.000						.5269	.5408	.5466		.5354		.4832			.5791
9.000															.4129
10.000															.4410

XI	.7500	1.0000	1.2500	1.5000	2.0000	3.0000	4.0000	5.0000	6.0000	7.0000	8.5000	10.0000
YI												
-5.250	.7824	.7047	.5650									
.500	.2758	.6382		1.1340	.9840		.8314		.3865	.3706	.3701	.3855
1.000		.7586										
1.500				.9320								
2.000					.8801							
3.000	.0000	.0000	.0000	.0000		.8026						
4.000							.3807					
5.000								.2752				
6.000									.3890			
7.000										.4153		

ARC35-200(H27 FP/CYL(2-45)/GAP B FILLED SURFACE (RE3T13) (28 FEB 75)

REFERENCE DATA

SREF = 11.2500 SQ.FT. XMRP = .0000 IN.
LREF = 60.0000 IN. YMRP = .0000 IN.
BREF = 27.0000 IN. ZMRP = .0000 IN.
SCALE = 1.0000

PARAMETRIC DATA

W = .050 RN/L = 3.500

MACH (1) = 5.240 HAW/HT(1) = .907 RN/L = 3.5898 PO = 349.71 TO = 1484.8 HO = 365.48

SECTION (1)SURFACE DEPENDENT VARIABLE H/HREF

XI	-6.2500	-5.2500	-4.2500	-4.0000	-3.2500	-3.0000	-2.0000	-1.5000	-1.2500	-1.0000	-.7500	-.5000	-.2500	.2500	.5000
YI															
-5.250									.0000	.7717	.9112	.9054	.8647	.6977	.8195
-1.500							.4961	.0000		2.6032	.0000	4.6903	8.1971		
.000	.3597	.2718	.0000		.1844										
.250															14.2351
.500														8.3882	13.3372
.750															7.9678
1.000															7.2850
1.500				.2063		.2751	.5725	.9637		2.0318	2.7523	4.3128	.0000		3.5436
2.000															1.8090
3.000						.4063	1.8153	1.8788		1.4234	1.1329	1.0456	.0000	.0000	.4945
4.000															.6515
6.000															.6738
7.000						.5879	.5276	.5518		.5843		.5938			.7241
9.000															.6961
10.000															.6631

XI	.7500	1.0000	1.2500	1.5000	2.0000	3.0000	4.0000	5.0000	6.0000	7.0000	8.5000	10.0000
YI												
-5.250	.8028	.8176	.7078									
.500	.0000	.0000		.0000	.3129		.9723		.7185	.0000	.3634	.3730
1.000		3.4706										
1.500				.8434								
2.000					.0000							
3.000	.0000	.0000	.0000	.0000		.9248						
4.000							.0000					
5.000								.0000				
6.000									.3914			
7.000										.3911		

ARC35-2001H27 FP/WEDGE/GAP B FILLED SURFACE (RE3T14) (28 FEB 75)

REFERENCE DATA

SREF =	11.2500 SQ.FT.	XMRP =	.0000 IN.		
LREF =	60.0000 IN.	YMRP =	.0000 IN.		
BREF =	27.0000 IN.	ZMRP =	.0000 IN.		
SCALE =	1.0000				

PARAMETRIC DATA

W =	.050	RN/L =	3.500		
DELTA =	5.000	BETA =	.000		
H2 =	1.500	D =	7.294		

MACH (1) = 5.240 HAW/HT(1) = .907 RN/L = 3.6491 PO = 350.87 TO = 1472.8 HO = 362.34

SECTION (1)SURFACE DEPENDENT VARIABLE H/HREF

XI	-6.2500	-5.2500	-4.2500	-4.0000	-3.2500	-3.0000	-2.0000	-1.5000	-1.2500	-1.0000	-.7500	-.5000	-.2500	.2500	.5000
YI															
-5.250									.0000	1.0265	1.0870	1.0191	.9797	.9738	1.1703
-1.500							.8559	.0000		1.0193	.0000	.9616	1.0196		
.000	.3410	.4017	.6143		.8609										
.250															.8244
.500														.7716	.8087
.750															.7364
1.000															.8191
1.500				.6757		.9248	.0000	.8769		.9651	.9674	.9911	.0000		.8269
2.000															.8838
3.000						.0000	.8547	.8996		.9493	.8584	.0000	.0000	.0000	.7879
4.000															.9589
6.000															.9383
7.000						1.0034	.9710	.9518		.9794		.8349			.9545
9.000															1.0072
10.000															1.0223

XI	.7500	1.0000	1.2500	1.5000	2.0000	3.0000	4.0000	5.0000	6.0000	7.0000	8.5000	10.0000
YI												
-5.250	.6463	.3631	.3497									
.500	.0000	.0000		.0000	.3747		.3674		.3588	.0000	.3560	.3664
1.000		.3270										
1.500				.3388								
2.000					.3376							
3.000	.0000	.0000	.0000	.0000		.3813						
4.000							.3415					
5.000								.0000				
6.000									.3751			
7.000										.4058		

ARC35-200(H27 FP/WEDGE/GAP B FILLED SURFACE (RE3T15) (28 FEB 75)

REFERENCE DATA

SREF =	11.2500 SQ.FT.	XMRP =	.0000 IN.		
LREF =	60.0000 IN.	YMRP =	.0000 IN.		
BREF =	27.0000 IN.	ZMRP =	.0000 IN.		
SCALE =	1.0000				

PARAMETRIC DATA

W =	.050	RN/L =	3.500
DELTA =	10.000	BETA =	.000
H2 =	1.500	D =	6.937

MACH (1) = 5.240 HAW/HT(1) = .907 RN/L = 3.4471 PO = 352.03 TO = 1528.7 HO = 377.02

SECTION (1)SURFACE DEPENDENT VARIABLE H/HREF

XI	-6.2500	-5.2500	-4.2500	-4.0000	-3.2500	-3.0000	-2.0000	-1.5000	-1.2500	-1.0000	-.7500	-.5000	-.2500	.2500	.5000
YI															
-5.250									1.8930	1.9570	2.0346	1.8520	1.6795	1.1034	.9978
-1.500							1.7534	.0000		1.8335	.0000	1.7191	1.8171		
.000	.4782	.5377	.8439		1.2392										
.250															.8738
.500														.9873	.8375
.750															.0000
1.000															.8773
1.500				.9481		1.3851	.0000	1.7987		1.8011	1.7548	1.7948	.0000		.8568
2.000															.8997
3.000						.3058	1.7117	1.8550		1.7691	1.5579	1.5694	.0000	.0000	.8015
4.000															.9557
6.000															.9096
7.000						1.5155	1.9218	1.9587		1.8329		1.5278			.9410
9.000															1.0039
10.000															1.1363

XI	.7500	1.0000	1.2500	1.5000	2.0000	3.0000	4.0000	5.0000	6.0000	7.0000	8.5000	10.0000
YI												
-5.250	.8689	.4602	.3321									
.500	.0000	.0000		.3593	.3765		.3787		.3704	.0000	.3634	.3735
1.000		.3286										
1.500				.3365								
2.000					.3392							
3.000	.0000	.0000	.0000	.0000		.3788						
4.000							.3430					
5.000								.0000				
6.000									.3782			
7.000										.4110		

ARC35-200IH27 FP/CYL(2RT)/GAP B SURFACE (PE3T16) (18 NOV 75)

REFERENCE DATA

SREF = 11.2500 SQ.FT. XMRP = .0000 IN.
LREF = 60.0000 IN. YMRP = .0000 IN.
BREF = 27.0000 IN. ZMRP = .0000 IN.
SCALE = 1.0000

PARAMETRIC DATA

W = .050 RN/L = 3.500

MACH (1) = 5.240 HAW/HT(1) = .907 RN/L = 3.5001 PO = 349.54 TO = 1507.7 HO = 371.51

SECTION (1) DEPENDENT VARIABLE H/HREF

XI	-6.2500	-5.2500	-4.2500	-4.0000	-3.2500	-3.0000	-2.0000	-1.5000	-1.2500	-1.0000	-.7500	-.5000	-.2500	.2500	.5000
YI															
-5.250									.0000	.0000	.0000	.0000	.0000	.0000	.0000
-1.500							.0000	.0000		.0000	.0000	.0000	.0000		
.000	.0000	.0000	.0000		.0000										
.250															2.8443
.500														3.6109	2.0798
.750															2.1585
1.000															.9967
1.500				.0000		.0000	.0000	2.5731		3.2044	3.0629	2.4868	.0000		.6019
2.000															.8993
3.000						.0000	.0000	.0000		.0000	.0000	.0000	.0000	.0000	.6542
4.000															.7116
6.000															.4749
7.000						.0000	.0000	.0000		.0000		.0000			.4551
9.000															.0000
10.000															.0000

XI	.7500	1.0000	1.2500	1.5000	2.0000	3.0000	4.0000	5.0000	6.0000	7.0000	8.5000	10.0000
YI												
-5.250	.0000	.0000	.0000									
.500	.2793	.0000		.0000	.7902		.6671		.6349	.4090	.3510	.4073
1.000		.0000										
1.500				.7875								
2.000					.7875							
3.000	.0000	.0000	.0000	.0000		.6800						
4.000							.3344					
5.000								.0000				
6.000									.0000			
7.000										.0000		

ARC35-200IH27 FP/CYL(2RT)/GAP 8 SURFACE (PE3T17) (18 NOV 75)

REFERENCE DATA

SREF = 11.2500 SQ.FT. XMRP = .0000 IN.
LREF = 60.0000 IN. YMRP = .0000 IN.
BREF = 27.0000 IN. ZMRP = .0000 IN.
SCALE = 1.0000

PARAMETRIC DATA

W = .100 RN/L = 3.500

MACH (1) = 5.240 HAW/HT(1) = .907 RN/L = 3.5702 PO = 348.81 TO = 1488.2 HO = 366.39

SECTION (1) DEPENDENT VARIABLE H/HREF

XI	-6.2500	-5.2500	-4.2500	-4.0000	-3.2500	-3.0000	-2.0000	-1.5000	-1.2500	-1.0000	-.7500	-.5000	-.2500	.2500	.5000
YI															
-5.250									.0000	.0000	.0000	.0000	.0000	.0000	.0000
-1.500							.0000	.0000		.0000	.0000	.0000	.0000		
.000	.0000	.0000	.0000		.0000										
.250															2.3490
.500														2.9370	1.7660
.750															1.7915
1.000															.9217
1.500				.0000		.0000	.0000	.4637		2.9057	2.8113	2.3078	1.6637		.6639
2.000															.0000
3.000						.0000	.0000	.0000		.0000	.0000	.0000	.0000	.0000	.6325
4.000															.6745
6.000															.4728
7.000						.0000	.0000	.0000		.0000		.0000			.3736
9.000															.0000
10.000															.0000

XI	.7500	1.0000	1.2500	1.5000	2.0000	3.0000	4.0000	5.0000	6.0000	7.0000	8.5000	10.0000
YI												
-5.250	.0000	.0000	.0000									
.500	.0000	.0000		.0000	.7094		.5915		.5716	.0000	.4335	.4419
1.000		.0000										
1.500				.7237								
2.000					.7298							
3.000	.0000	.0000	.0000	.0000		.6179						
4.000							.3311					
5.000								.0000				
6.000									.0000			
7.000										.0000		

ARC35-200IH27 FP/CYL(2RT)/GAP A SURFACE (RE3T21) (28 FEB 75)

REFERENCE DATA

SREF = 11.2500 SQ.FT. XMRP = .0000 IN.
LREF = 60.0000 IN. YMRP = .0000 IN.
BREF = 27.0000 IN. ZMRP = .0000 IN.
SCALE = 1.0000

PARAMETRIC DATA

W = .050 RN/L = 3.500

MACH (1) = 5.240 HAW/HT(1) = .907 RN/L = 3.5572 PO = 351.58 TO = 1498.1 HO = 368.98

SECTION (1)SURFACE DEPENDENT VARIABLE H/HREF

XI	-6.2500	-5.2500	-4.2500	-4.0000	-3.2500	-3.0000	-2.0000	-1.5000	-1.2500	-1.0000	-.7500	-.5000	-.2500	.2500	.5000
YI															
-5.250									.0000	.0000	.0000	.0000	.0000	.0000	.0000
-1.500							1.8881	.0000		.0000	.0000	.0000	.0000		
.000	.4570	.4188	.5108		.4081										
.250															.0000
.500														.0000	1.5841
.750															.0000
1.000															.0000
1.500				.0000		.0000	.0000	.0000		.0000	.0000	.0000	.0000		.0000
2.000															.0000
3.000						.0000	.0000	.0000		.0000	.0000	.0000	.0000	.0000	.0000
4.000															.0000
6.000															.0000
7.000						.0000	.0000	.0000		.0000		.0000			.0000
9.000															.0000
10.000															.0000

XI	.7500	1.0000	1.2500	1.5000	2.0000	3.0000	4.0000	5.0000	6.0000	7.0000	8.5000	10.0000
YI												
-5.250	.0000	.0000	.0000									
.500	.0000	.0000		.0000	.9704		.7797		.3696	.0000	.3678	.3783
1.000		.0000										
1.500				.0000								
2.000					.0000							
3.000	.0000	.0000	.0000	.0000		.0000						
4.000							.0000					
5.000								.0000				
6.000									.0000			
7.000										.0000		

ARC35-2001H27 FP/CYL(2RT)/GAP D SURFACE (RE3T22) (28 FEB 75)

REFERENCE DATA

SREF = 11.2500 SQ.FT. XMRP = .0000 IN.
LREF = 60.0000 IN. YMRP = .0000 IN.
BREF = 27.0000 IN. ZMRP = .0000 IN.
SCALE = 1.0000

PARAMETRIC DATA

W = .050 RN/L = 3.500

MACH (1) = 5.240 HAW/HT(1) = .907 RN/L = 3.5406 PO = 349.10 TO = 1495.9 HO = 368.40

SECTION (1)SURFACE DEPENDENT VARIABLE H/HREF

XI	-6.2500	-5.2500	-4.2500	-4.0000	-3.2500	-3.0000	-2.0000	-1.5000	-1.2500	-1.0000	-.7500	-.5000	-.2500	.2500	.5000
YI															
-5.250									.0000	.0000	.0000	.0000	.0000	.0000	.0000
-1.500							1.8009	.0000		.0000	.0000	.0000	.0000		
.000	.5179	.4853	.0000		.4681										
.250															.0000
.500														.0000	2.3857
.750															.0000
1.000															.0000
1.500				.0000		.0000	.0000	.0000		.0000	.0000	.0000	.0000		.0000
2.000															.0000
3.000						.0000	.0000	.0000		.0000	.0000	.0000	.0000	.0000	.0000
4.000															.0000
6.000															.0000
7.000						.0000	.0000	.0000		.0000		.0000			.0000
9.000															.0000
10.000															.0000

XI	.7500	1.0000	1.2500	1.5000	2.0000	3.0000	4.0000	5.0000	6.0000	7.0000	8.5000	10.0000
YI												
-5.250	.0000	.0000	.0000									
.500	.0000	.0000		.0000	.8206		.6952		.6655	.0000	.3511	.3954
1.000		.0000										
1.500				.0000								
2.000					.0000							
3.000	.0000	.0000	.0000	.0000		.0000						
4.000							.0000					
5.000								.0000				
6.000									.0000			
7.000										.0000		

ARC35-200(H27 FP/CYL(2RT+1/4 SPACE)GAP B SURFACE (RE3T23) (28 FEB 75)

REFERENCE DATA

SREF = 11.2500 SQ.FT. XMRP = .0000 IN.
LREF = 60.0000 IN. YMRP = .0000 IN.
BREF = 27.0000 IN. ZMRP = .0000 IN.
SCALE = 1.0000

PARAMETRIC DATA

W = .050 RN/L = 3.500

MACH (1) = 5.240 HAW/HT(1) = .907 RN/L = 3.5791 PO = 354.77 TO = 1500.8 HO = 369.68

SECTION (1)SURFACE DEPENDENT VARIABLE H/HREF

XI	-6.2500	-5.2500	-4.2500	-4.0000	-3.2500	-3.0000	-2.0000	-1.5000	-1.2500	-1.0000	-.7500	-.5000	-.2500	.2500	.5000
YI															
-5.250									.0000	.0000	.0000	.0000	.0000	.0000	.0000
-1.500							.0000	.0000		.0000	.0000	.0000	.0000		
.000	.0000	.0000	.0000		.0000										
.250															.0000
.500														.0000	.0000
.750															.0000
1.000															.0000
1.500				.0000		.0000	.0000	.0000		.0000	.0000	.0000	.0000		.0000
2.000															.0000
3.000						.0000	.0000	.0000		.0000	.0000	.0000	.0000	.0000	.0000
4.000															.0000
6.000															.0000
7.000						.0000	.0000	.0000		.0000		.0000			.0000
9.000															.0000
10.000															.0000

XI	.7500	1.0000	1.2500	1.5000	2.0000	3.0000	4.0000	5.0000	6.0000	7.0000	8.5000	10.0000
YI												
-5.250	.0000	.0000	.0000									
.500	.0000	.0000		.0000	.0000		.6565		.6175	.3318	.3744	.4307
1.000		.0000										
1.500				.0000								
2.000					.0000							
3.000	.0000	.0000	.0000	.0000		.0000						
4.000							.0000					
5.000								.0000				
6.000									.0000			
7.000										.0000		

ARC35-200IH27 FP/CYL(IRT)/GAP B SURFACE (RE3T24) (28 FEB 75)

REFERENCE DATA

SREF = 11.2500 SQ.FT. XMRP = .0000 IN.
LREF = 60.0000 IN. YMRP = .0000 IN.
BREF = 27.0000 IN. ZMRP = .0000 IN.
SCALE = 1.0000

PARAMETRIC DATA

W = .050 RN/L = 3.500

MACH (1) = 5.240 HAW/HT(1) = .907 RN/L = 3.5372 PO = 353.26 TO = 1507.8 HO = 371.52

SECTION (1)SURFACE DEPENDENT VARIABLE H/HREF

XI	-6.2500	-5.2500	-4.2500	-4.0000	-3.2500	-3.0000	-2.0000	-1.5000	-1.2500	-1.0000	-.7500	-.5000	-.2500	.2500	.5000
YI															
-5.250									.0000	.0000	.0000	.0000	.0000	.0000	.0000
-1.500							.0000	.0000		.0000	.0000	.0000	.0000		
.000	.0000	.0000	.0000		.0000										
.250															.0000
.500														.0000	.0000
.750															.0000
1.000															.0000
1.500				.0000		.0000	.0000	.0000		.0000	.0000	.0000	.0000		.0000
2.000															.0000
3.000						.0000	.0000	.0000		.0000	.0000	.0000	.0000	.0000	.0000
4.000															.0000
6.000															.0000
7.000						.0000	.0000	.0000		.0000		.0000			.0000
9.000															.0000
10.000															.0000

YI	.7500	1.0000	1.2500	1.5000	2.0000	3.0000	4.0000	5.0000	6.0000	7.0000	8.5000	10.0000
YI												
-5.250	.0000	.0000	.0000									
.500	.0000	.0000		.0000	.0000		.3610		.3618	.3583	.3849	.3931
1.000		.0000										
1.500				.0000								
2.000					.0000							
3.000	.0000	.0000	.0000	.0000		.0000						
4.000							.0000					
5.000								.0000				
6.000									.0000			
7.000										.0000		

ARC35-2001H27 FP/CYL(4RT)/GAP 8 SURFACE (RE3T25) (28 FEB 75)

REFERENCE DATA

SREF = 11.2500 SQ.FT. XMRP = .0000 IN.
LREF = 60.0000 IN. YMRP = .0000 IN.
BREF = 27.0000 IN. ZMRP = .0000 IN.
SCALE = 1.0000

PARAMETRIC DATA

W = .050 RN/L = 3.500

MACH (1) = 5.240 HAW/HT(1) = .907 RN/L = 3.6076 PO = 350.73 TO = 1483.0 HO = 365.02

SECTION (1)SURFACE DEPENDENT VARIABLE H/HREF

XI	-6.2500	-5.2500	-4.2500	-4.0000	-3.2500	-3.0000	-2.0000	-1.5000	-1.2500	-1.0000	-.7500	-.5000	-.2500	.2500	.5000
YI															
-5.250									.0000	.0000	.0000	.0000	.0000	.0000	.0000
-1.500							.0000	.0000		.0000	.0000	.0000	.0000		
.000	.0000	.0000	.0000		.0000										
.250															.0000
.500														.0000	.0000
.750															.0000
1.000															.0000
1.500				.0000		.0000	.0000	.0000		.0000	.0000	.0000	.0000		.0000
2.000															.0000
3.000						.0000	.0000	.0000		.0000	.0000	.0000	.0000	.0000	.0000
4.000															.0000
6.000															.0000
7.000						.0000	.0000	.0000		.0000		.0000			.0000
9.000															.0000
10.000															.0000

XI	.7500	1.0000	1.2500	1.5000	2.0000	3.0000	4.0000	5.0000	6.0000	7.0000	8.5000	10.0000
YI												
-5.250	.0000	.0000	.0000									
.500	.0000	.0000		.0000	.0000		.8569		.8224	.7589	.6588	.6694
1.000		.0000										
1.500				.0000								
2.000					.0000							
3.000	.0000	.0000	.0000	.0000		.0000						
4.000							.0000					
5.000								.0000				
6.000									.0000			
7.000										.0000		

ARC35-200TH27 FP/CYL(2RT)/GAP B SURFACE (RE3T26) (28 FEB 75)

REFERENCE DATA

SREF = 11.2500 SQ.FT. XMRP = .0000 IN.
LREF = 60.0000 IN. YMRP = .0000 IN.
BREF = 27.0000 IN. ZMRP = .0000 IN.
SCALE = 1.0000

PARAMETRIC DATA

W = .050 RN/L = 1.000

MACH (1) = 5.220 HAW/HT(1) = .873 RN/L = 1.0370 PO = 101.79 TO = 1500.6 HO = 369.64

SECTION (1)SURFACE DEPENDENT VARIABLE H/HREF

XI	-6.2500	-5.2500	-4.2500	-4.0000	-3.2500	-3.0000	-2.0000	-1.5000	-1.2500	-1.0000	-.7500	-.5000	-.2500	.2500	.5000
YI															
-5.250									.0000	.0000	.0000	.0000	.0000	.0000	.0000
-1.500							.0000	.0000		.0000	.0000	.0000	.0000		
.000	.0000	.0000	.0000		.0000										
.250															.0000
.500														.0000	.0000
.750															.0000
1.000															.0000
1.500				.0000		.0000	.0000	.0000		.0000	.0000	.0000	.0000		.0000
2.000															.0000
3.000						.0000	.0000	.0000		.0000	.0000	.0000	0000	.0000	.0000
4.000															.0000
6.000															.0000
7.000						.0000	.0000	.0000		.0000		.0000			.0000
9.000															.0000
10.000															.0000

XI	.7500	1.0000	1.2500	1.5000	2.0000	3.0000	4.0000	5.0000	6.0000	7.0000	8.5000	10.0000
YI												
-5.250	.0000	.0000	.0000									
.500	.0000	.0000		.0000	.0000		.6456		.2507	.0000	.0415	.0426
1.000		.0000										
1.500				.0000								
2.000					.0000							
3.000	.0000	.0000	.0000	.0000		.0000						
4.000							.0000					
5.000								.0000				
6.000									.0000			
7.000										.0000		

ARC35-200(H27 FP/CYL(2RT)/GAP A SURFACE (RE3T27) (28 FEB 75)

REFERENCE DATA

SREF = 11.2500 SQ.FT. XMRP = .0000 IN.
LREF = 60.0000 IN. YMRP = .0000 IN.
BREF = 27.0000 IN. ZMRP = .0000 IN.
SCALE = 1.0000

PARAMETRIC DATA

W = .050 RN/L = 1.000

MACH (1) = 5.220 HAW/HT(1) = .873 RN/L = 1.0521 PO = 102.72 TO = 1495 7 HO = 368.35

SECTION (1)SURFACE DEPENDENT VARIABLE H/HREF

XI	-6.2500	-5.2500	-4.2500	-4.0000	-3.2500	-3.0000	-2.0000	-..5000	-1.2500	-1.0000	-.7500	-.5000	-.2500	.2500	.5000
YI															
-5.250									.0000	.0000	.0000	.0000	.0000	.0000	.0000
-1.500							1.6213	.0000		.0000	.0000	.0000	.0000		
.000	.1280	.5400	.4467		.2966										
.250															.0000
.500														.0000	1.2910
.750															.0000
1.000															.0000
1.500				.0000		.0000	.0000	.0000		.0000	.0000	.0000	.0000		.0000
2.000															.0000
3.000						.0000	.0000	.0000		.0000	.0000	.0000	.0000	.0000	.0000
4.000															.0000
6.000															.0000
7.000						.0000	.0000	.0000		.0000		.0000			.0000
9.000															.0000
10.000															.0000

XI	.7500	1.0000	1.2500	1.5000	2.0000	3.0000	4.0000	5.0000	6.0000	7.0000	8.5000	10.0000
YI												
-5.250	.0000	.0000	.0000									
.500	.0000	.0000		.6038	.6527		.5176		.2187	.0000	.0621	.0402
1.000		.0000										
1.500				.0000								
2.000					.0000							
3.000	.0000	.0000	.0000	.0000		.0000						
4.000							.0000					
5.000								.0000				
6.000									.0000			
7.000										.0000		

ARC35-2001H27 FP/CYL(2-45)/GAP 8 SURFACE (PE3T30) (18 NOV 75)

REFERENCE DATA

SREF = 11.2500 SQ.FT. XMRP = .0000 IN.
LREF = 60.0000 IN. YMRP = .0000 IN.
BREF = 27.0000 IN. ZMRP = .0000 IN.
SCALE = 1.0000

PARAMETRIC DATA

W = .050 RN/L = 3.500

MACH (1) = 5.240 HAW/HT(1) = .907 RN/L = 3.6909 PO = 348.81 TO = 1457.8 HO = 358.42

SECTION (1) DEPENDENT VARIABLE H/HREF

XI	-6.2500	-5.2500	-4.2500	-4.0000	-3.2500	-3.0000	-2.0000	-1.5000	-1.2500	-1.0000	-.7500	-.5000	-.2500	.2500	.5000
YI															
-5.250									.0000	.0000	.0000	.0000	.0000	.0000	.0000
-1.500							.0000	.0000		.0000	.0000	.0000	.0000		
.000	.0000	.0000	.0000		0000										
.250															6.2548
.500														5.1202	7.3344
.750															6.3440
1.000															5.8939
1.500				.0000		.0000	.0000	.2319		2.2218	3.0762	4.5565	5.8276		2.4430
2.000															.0000
3.000						.0000	.0000	.0000		.0000	.0000	.0000	.0000	.0000	.5657
4.000															.9197
6.000															.7432
7.000						.0000	.0000	.0000		.0000		.0000			.7339
9.000															.0000
10.000															.0000

XI	.7500	1.0000	1.2500	1.5000	2.0000	3.0000	4.0000	5.0000	6.0000	7.0000	8.5000	10.0000
YI												
-5.250	.0000	.0000	.0000									
.500	1.1556	.0000		.0000	1.2865		.8434		.6180	.5238	.5450	.4759
1.000		.0000										
1.500				.7314								
2.000					.7843							
3.000	.0000	.0000	.0000	.0000		.8998						
4.000							.6711					
5.000								.0000				
6.000									.0000			
7.000										.0000		

ARC35-200IH27 FP/CYL(2-45)/GAP B SURFACE (RE3T34) (28 FEB 75)

REFERENCE DATA

SREF = 11.2500 SQ.FT. XMRP = .0000 IN.
LREF = 60.0000 IN. YMRP = .0000 IN.
BREF = 27.0000 IN. ZMRP = .0000 IN.
SCALE = 1.0000

PARAMETRIC DATA

W = .050 RN/L = 1.000

MACH (1) = 5.220 HAW/HT(1) = .873 RN/L = 1.0390 PO = 102.54 TO = 1505.6 HO = 370.95

SECTION (1)SURFACE DEPENDENT VARIABLE H/HREF

XI	-6.2500	-5.2500	-4.2500	-4.0000	-3.2500	-3.0000	-2.0000	-1.5000	-1.2500	-1.0000	-.7500	-.5000	-.2500	.2500	.5000
YI															
-5.250									.0000	.0000	.0000	.0000	.0000	.0000	.0000
-1.500							.0000	.0000		.0000	.0000	.0000	.0000		
.000	.0000	.0000	.0000		.0000										
.250															.0000
.500														.0000	.0000
.750															.0000
1.000															.0000
1.500				.0000		.0000	.0000	.0000		.0000	.0000	.0000	.0000		.0000
2.000															.0000
3.000						.0000	.0000	.0000		.0000	.0000	.0000	.0000	.0000	.0000
4.000															.0000
6.000															.0000
7.000						.0000	.0000	.0000		.0000		.0000			.0000
9.000															.0000
10.000															.0000

XI	.7500	1.0000	1.2500	1.5000	2.0000	3.0000	4.0000	5.0000	6.0000	7.0000	8.5000	10.0000
YI												
-5.250	.0000	.0000	.0000									
.500	.0000	.0000		.0000	.0000		.8521		.8299	.0000	.4662	.2618
1.000		.0000										
1.500				.0000								
2.000					.0000							
3.000	.0000	.0000	.0000	.0000		.0000						
4.000							.0000					
5.000								.0000				
6.000									.0000			
7.000										.0000		

ARC35-200IH27 FP/WEDGE/GAP B1 SURFACE (PE3T35) (18 NOV 75)

REFERENCE DATA

SREF = 11.2500 SQ.FT. XMRP = .0000 IN.
LREF = 60.0000 IN. YMRP = .0000 IN.
BREF = 27.0000 IN. ZMRP = .0000 IN.
SCALE = 1.0000

PARAMETRIC DATA

W = .050 RN/L = 3.500
DELTA = 5.000 BETA = .000
H2 = 1.500 D = 7.294

MACH (1) = 5.240 HAW/HT(1) = .907 RN/L = 3.6916 PO = 353.10 TO = 1468.9 HO = 361.33

SECTION (1) DEPENDENT VARIABLE H/HREF

XI	-6.2500	-5.2500	-4.2500	-4.0000	-3.2500	-3.0000	-2.0000	-1.5000	-1.2500	-1.0000	-.7500	-.5000	-.2500	.2500	.5000
YI															
-5.250									.0000	.0000	.0000	.0000	.0000	.0000	.0000
-1.500							.7874	.0000		.0000	.0000	.0000	.0000		
.000	.0637	.4115	.0000		.8995										
.250															.0000
.500														.0000	.6806
.750															.0000
1.000															.0000
1.500				.0000		.0000	.0000	.0000		.0000	.0000	.0000	.0000		.0000
2.000															.0000
3.000						.0000	.0000	.8362		.8869	.8033	.8401	.0000	.7132	.0000
4.000															.0000
6.000															.0000
7.000						.0000	.0000	.0000		.0000		.0000			.0000
9.000															.0000
10.000															.0000

XI	.7500	1.0000	1.2500	1.5000	2.0000	3.0000	4.0000	5.0000	6.0000	7.0000	8.5000	10.0000
YI												
-5.250	.0000	.0000	.0000									
.500	.0000	.0000		.0000	.3442		.3511		.3471	.0000	.3492	.3532
1.000		.0000										
1.500				.0000								
2.000					.0000							
3.000	.4548	.2984	.3136	.3272		.0000						
4.000							.0000					
5.000								.0000				
6.000									.0000			
7.000										.0000		

ARC35-2001H27 FP/WEDGE/GAP B1 REVOLVE 45 SURFACE (PE3T36) (18 NOV 75)

REFERENCE DATA

SREF =	11.2500 SQ.FT.	XMRP =	.0000 IN.		
LREF =	60.0000 IN.	YMRP =	.0000 IN.		
BREF =	27.0000 IN.	ZMRP =	.0000 IN.		
SCALE =	1.0000				

PARAMETRIC DATA

W =	.050	RN/L =	3.500		
DELTA =	5.000	BETA =	.000		
H2 =	1.500	D =	8.794		

MACH (1) = 5.240 HAW/HT(1) = .907 RN/L = 3.5395 PO = 353.15 TO = 1506.9 HO = 371.28

SECTION (1)SURFACE DEPENDENT VARIABLE H/HREF

XI	-6.2500	-5.2500	-4.2500	-4.0000	-3.2500	-3.0000	-2.0000	-1.5000	-1.2500	-1.0000	-.7500	-.5000	-.2500	.2500	.5000
YI															
-5.250									.0000	.0000	.0000	.0000	.0000	.0000	.0000
-1.500							.0000	.0000		.0000	.0000	.0000	.0000		
.000	.0000	.0000	.0000		.0000										
.250															.0000
.500														.0000	.0000
.750															.0000
1.000															.0000
1.500				.8011		.0000	.0000	.9372		.9071	.8963	.9456	.9910		.0000
2.000															.0000
3.000						.0000	.7677	.7728		.7732	.7047	.7810	.0000	.4709	.0000
4.000															.0000
6.000															.0000
7.000						.0000	.0000	.0000		.0000		.0000			.0000
9.000															.0000
10.000															.0000

XI	.7500	1.0000	1.2500	1.5000	2.0000	3.0000	4.0000	5.0000	6.0000	7.0000	8.5000	10.0000
YI												
-5.250	.0000	.0000	.0000									
.500	.0000	.0000		.0000	.0000		.0000		.0000	.0000	.0000	.0000
1.000		.7370										
1.500				.6976								
2.000					.3461							
3.000	.3392	.3127	.3128	.3259		.3619						
4.000							.3335					
5.000								.0000				
6.000									.0000			
7.000										.0000		

ARC35-200IH27 FP/WEDGE/GAP C SURFACE (RE3T37) (28 FEB 75)

REFERENCE DATA

SREF =	11.2500 SQ.FT.	XMRP =	.0000 IN.		
LREF =	60.0000 IN.	YMRP =	.0000 IN.		
BREF =	27.0000 IN.	ZMRP =	.0000 IN.		
SCALE =	1.0000				

PARAMETRIC DATA

W =	.050	RN/L =	3.500		
DELTA =	5.000	BETA =	.000		
H2 =	.500	D =	4.941		

MACH (1) = 5.240 HAW/HT(1) = .907 RN/L = 3.3242 PO = 353.06 TO = 1566.0 HO = 386.88

SECTION (1)SURFACE DEPENDENT VARIABLE H/HREF

XI	-6.2500	-5.2500	-4.2500	-4.0000	-3.2500	-3.0000	-2.0000	-1.7000	-1.2500	-1.0000	-.7500	-.5000	-.2500	.2500	.5000
YI															
-5.250									.0000	.0000	.0000	.0000	.0000	.0000	.0000
-1.500							.0000	.0000		.0000	.0000	.0000	.0000		
.000	.0000	.0000	.0000		.0000										
.250															.0000
.500														.0000	.0000
.750															.0000
1.000															.0000
1.500				.0000		.0000	.0000	.0000		.0000	.0000	.0000	.0000		.0000
2.000															.0000
3.000						.0000	.0000	.0000		.0000	.0000	.0000	.0000	.0000	.0000
4.000															.0000
6.000															.0000
7.000						.0000	.0000	.0000		.0000		.0000			.0000
9.000															.0000
10.000															.0000

XI	.7500	1.0000	1.2500	1.5000	2.0000	3.0000	4.0000	5.0000	6.0000	7.0000	8.5000	10.0000
YI												
-5.250	.0000	.0000	.0000									
.500	.0000	.0000		.0000	.0000		.0000		.0000	.0000	.0000	.0000
1.000		.7916										
1.500				.5789								
2.000					.3605							
3.000	.0000	.0000	.0000	.0000		.3840						
4.000							.3668					
5.000								.0000				
6.000									.0000			
7.000										.0000		

ARC35-200IH27 FP/WEDGE/GAP C SURFACE (RE3T38) (28 FEB 75)

REFERENCE DATA

SREF =	11.2500 SQ.FT.	XMRP =	.0000 IN.		
LREF =	60.0000 IN.	YMRP =	.0000 IN.		
BREF =	27.0000 IN.	ZMRP =	.0000 IN.		
SCALE =	1.0000				

PARAMETRIC DATA

W =	.100	RN/L =	3.500		
DELTA =	5.000	BETA =	.000		
H2 =	1.500	D =	8.772		

MACH (1) = 5.240 HAW/HT(1) = .907 RN/L = 3.4696 PO = 348.87 TO = 1514.1 HO = 373.18

SECTION (1)SURFACE DEPENDENT VARIABLE H/HREF

XI	-6.2500	-5.2500	-4.2500	-4.0000	-3.2500	-3.0000	-2.0000	1.5000	-1.2500	-1.0000	-.7500	-.5000	-.2500	.2500	.5000
YI															
-5.250									.0000	.0000	.0000	.0000	.0000	.0000	.0000
-1.500							.0000	.0000		.0000	.0000	.0000	.0000		
.000	.0000	.0000	.0000		.0000										
.250															.0000
.500														.0000	.0000
.750															.0000
1.000															.0000
1.500				.0000		.0000	.0000	.0000		.0000	.0000	.0000	.0000		.0000
2.000															.0000
3.000						.0000	.0000	.0000		.0000	.0000	.0000	.0000	.0000	.0000
4.000															.0000
6.000															.0000
7.000						.0000	.0000	.0000		.0000		.0000			.0000
9.000															.0000
10.000															.0000

XI	.7500	1.0000	1.2500	1.5000	2.0000	3.0000	4.0000	5.0000	6.0000	7.0000	8.5000	10.0000
YI												
-5.250	.0000	.0000	.0000									
.500	.0000	.0000		.0000	.0000		.0000		.0000	.0000	.0000	.0000
1.000		.7827										
1.500				.4779								
2.000					.0000							
3.000	.0000	.0000	.0000	.0000		.3653						
4.000							.0000					
5.000								.0000				
6.000									.0000			
7.000										.0000		

ARC35-200IH27 FP/WEDGE/GAP F SURFACE (RE3T39) (28 FEB 75)

REFERENCE DATA

SREF =	11.2500 SQ.FT.	XMRP =	.0000 IN.		
LREF =	60.0000 IN.	YMRP =	.0000 IN.		
BREF =	27.0000 IN.	ZMRP =	.0000 IN.		
SCALE =	1.0000				

PARAMETRIC DATA

W =	.050	RN/L =	3.500
DELTA =	5.000	BETA =	.000
H2 =	.500	D =	4.941

MACH (1) = 5.240 HAW/HT(1) = .907 RN/L = 3.2084 PO = 352.76 TO = 1599.6 HO = 395.78

SECTION (1)SURFACE DEPENDENT VARIABLE H/HREF

XI	-6.2500	-5.2500	-4.2500	-4.0000	-3.2500	-3.0000	-2.0000	-1.5000	-1.2500	-1.0000	-.7500	-.5000	-.2500	.2500	.5000
YI															
-5.250									.0000	.0000	.0000	.0000	.0000	.0000	.0000
-1.500							.0000	.0000		.0000	.0000	.0000	.0000		
.000	.0000	.0000	.0000		.0000										
.250															.0000
.500														.0000	.0000
.750															.0000
1.000															.0000
1.500				.0000		.0000	.0000	.9372		.9742	.9585	1.0137	1.0530		.0000
2.000															.0000
3.000						.0000	.0000	.0000		.0000	.0000	.0000	.0000	.0000	.0000
4.000															.0000
6.000															.0000
7.000						.0000	.0000	.0000		.0000		.0000			.0000
9.000															.0000
10.000															.0000

XI	.7500	1.0000	1.2500	1.5000	2.0000	3.0000	4.0000	5.0000	6.0000	7.0000	8.5000	10.0000
YI												
-5.250	.0000	.0000	.0000									
.500	.0000	.0000		.0000	.0000		.0000		.0000	.0000	.0000	.0000
1.000		.7614										
1.500				.5975								
2.000					.3376							
3.000	.0000	.0000	.0000	.0000		.3533						
4.000							.3306					
5.000								.0000				
6.000									.0000			
7.000										.0000		

ARC35-200(H27 FP/WEDGE/GAP B2 SURFACE (PE3T40) (18 NOV 75)

REFERENCE DATA

SREF = 11.2500 SQ.FT. XMRP = .0000 IN.
LREF = 60.0000 IN. YMRP = .0000 IN.
BREF = 27.0000 IN. ZMRP = .0000 IN.
SCALE = 1.0000

PARAMETRIC DATA

W = .050 RN/L = 3.500
DELTA = 5.000 BETA = .000
H2 = 1.500 D = 8.294

MACH (1) = 5.240 HAW/HT(1) = .907 RN/L = 3.5869 PO = 354.17 TO = 1497.3 HO = 368.77

SECTION (1) DEPENDENT VARIABLE H/HREF

XI	-6.2500	-5.2500	-4.2500	-4.0000	-3.2500	-3.0000	-2.0000	-1.3000	-1.2500	-1.0000	-.7500	-.5000	-.2500	.2500	.5000
YI															
-5.250									.0000	.0000	.0000	.0000	.0000	.0000	.0000
-1.500							.8397	.0000		.0000	.0000	.0000	.0000		
.000	.0000	.0000	.5634		.7210										.0000
.250														.0000	.6776
.500															.0000
.750															.0000
1.000				.0000		.0000	.0000	.0000		.0000	.0000	.0000	.0000		.0000
1.500															.0000
2.000						.0000	.0000	.8882		.9079	.8520	.9502	.0000	.7312	.0000
3.000															.0000
4.000															.0000
6.000						.0000	.0000	.0000		.0000		.0000			.0000
7.000															.0000
9.000															.0000
10.000															

XI	.7500	1.0000	1.2500	1.5000	2.0000	3.0000	4.0000	5.0000	6.0000	7.0000	8.5000	10.0000
YI												
-5.250	.0000	.0000	.0000									
.500	.0000	.0000		.7031	.3110		.3357		.3370	.0000	.3387	.3447
1.000		.0000										
1.500				.0000								
2.000					.0000							
3.000	.7744	.7047	.7289	.7779		.0000						
4.000							.0000					
5.000								.0000				
6.000									.0000			
7.000										.0000		

ARC35-200IH27 FP/WEDGE/GAP B3 SURFACE (PE3T41) (18 NOV 75)

REFERENCE DATA

SREF =	11.2500 SQ.FT.	XMRP =	.0000 IN.		
LREF =	60.0000 IN.	YMRP =	.0000 IN.		
BREF =	27.0000 IN.	ZMRP =	.0000 IN.		
SCALE =	1.0000				

PARAMETRIC DATA

W =	.050	RN/L =	3.500
DELTA =	5.000	BETA =	.000
H2 =	1.500	D =	9.294

MACH (1) = 5.240 HAW/HT(1) = .907 RN/L = 3.6340 PO = 350.05 TO = 1474.6 HO = 362.81

SECTION (1) DEPENDENT VARIABLE H/HREF

XI	-6.2500	-5.2500	-4.2500	-4.0000	-3.2500	-3.0000	-2.0000	-1.5000	-1.2500	-1.0000	-.7500	-.5000	-.2500	.2500	.5000
YI															
-5.250									.0000	.0000	.0000	.0000	.0000	.0000	.0000
-1.500							.6275	.0000		.0000	.0000	.0000	.0000		
.000	.0000	.2813	.4039		.5612										
.250															.0000
.500														.0000	.7879
.750															.0000
1.000															.0000
1.500				.0000		.0000	.0000	.0000		.0000	.0000	.0000	.0000		.0000
2.000															.0000
3.000						.0000	.0000	.7719		.0000	.7995	.8739	.0000	.7910	.0000
4.000															.0000
6.000															.0000
7.000						.0000	.0000	.0000		.0000		.0000			.0000
9.000															.0000
10.000															.0000

XI	.7500	1.0000	1.2500	1.5000	2.0000	3.0000	4.0000	5.0000	6.0000	7.0000	8.5000	10.0000
YI												
-5.250	.0000	.0000	.0000									
.500	.0000	.0000		.0000	.7261		.3351		.3413	.0000	.3518	.3588
1.000		.0000										
1.500				.0000								
2.000					.0000							
3.000	.6309	.7730	.7662	.7821		.0000						
4.000							.0000					
5.000								.0000				
6.000									.0000			
7.000										.0000		

ARC35-200 1H27 FP/WEDGE/GAP C SURFACE (RE3T42) (28 FEB 75)

REFERENCE DATA

SREF =	11.2500 SQ.FT.	XMRP =	.0000 IN.		
LREF =	60.0000 IN.	YMRP =	.0000 IN.		
BREF =	27.0000 IN.	ZMRP =	.0000 IN.		
SCALE =	1.0000				

PARAMETRIC DATA

W =	.050	RN/L =	3.500		
DELTA =	10.000	BETA =	.000		
H2 =	1.500	D =	8.437		

MACH (1) = 5.240 HAW/HT(1) = .907 RN/L = 3.3600 PO = 353.06 TO = 1555.7 HO = 384.16

SECTION (1)SURFACE DEPENDENT VARIABLE H/HREF

XI	-6.2500	-5.2500	-4.2500	-4.0000	-3.2500	-3.0000	-2.0000	-1.5000	-1.2500	-1.0000	-.7500	-.5000	-.2500	.2500	.5000
YI															
-5.250									.0000	.0000	.0000	.0000	.0000	.0000	.0000
-1.500							.0000	.0000		.0000	.0000	.0000	.0000		
.000	.0000	.0000	.0000		.0000										
.250															.0000
.500														.0000	.0000
.750															.0000
1.000															.0000
1.500				.0000		.0000	.0000	.0000		.0000	.0000	.0000	.0000		.0000
2.000															.0000
3.000						.0000	.0000	.0000		.0000	.0000	.0000	.0000	.0000	.0000
4.000															.0000
6.000															.0000
7.000						.0000	.0000	.0000		.0000		.0000			.0000
9.000															.0000
10.000															.0000

XI	.7500	1.0000	1.2500	1.5000	2.0000	3.0000	4.0000	5.0000	6.0000	7.0000	8.5000	10.0000
YI												
-5.250	.0000	.0000	.0000									
.500	.0000	.0000		.0000	.0000		.0000		.0000	.0000	.0000	.0000
1.000		1.3323										
1.500				.6464								
2.000					.3635							
3.000	.0000	.0000	.0000	.0000		.3782						
4.000							.3533					
5.000								.0000				
6.000									.0000			
7.000										.0000		

ARC35-200 1H27 FP/WEDGE/GAP C SURFACE (RE3T43) (28 FEB 75)

REFERENCE DATA

SREF =	11.2500 SQ.FT.	XMRP =	.0000 IN.		
LREF =	60.0000 IN.	YMRP =	.0000 IN.		
BREF =	27.0000 IN.	ZMRP =	.0000 IN.		
SCALE =	1.0000				

PARAMETRIC DATA

W =	.050	RN/L =	1.000		
DELTA =	5.000	BETA =	.000		
H2 =	1.500	D =	8.772		

MACH (1) = 5.220 HAW/HT(1) = .873 RN/L = 1.0706 PO = 108.39 TO = 1529.6 HO = 377.25

SECTION (1)SURFACE DEPENDENT VARIABLE H/HREF

XI	-6.2500	-5.2500	-4.2500	-4.0000	-3.2500	-3.0000	-2.0000	-1.5000	-1.2500	-1.0000	-.7500	-.5000	-.2500	.2500	.5000
YI															
-5.250									.0000	.0000	.0000	.0000	.0000	.0000	.0000
-1.500							.0000	.0000		.0000	.0000	.0000	.0000		
.000	.0000	.0000	.0000		.0000										
.250															.0000
.500														.0000	.0000
.750															.0000
1.000															.0000
1.500				.0000		.0000	.0000	.0000		.0000	.0000	.0000	.0000		.0000
2.000															.0000
3.000						.0000	.0000	.0000		.0000	.0000	.0000	.0000	.0000	.0000
4.000															.0000
6.000															.0000
7.000						.0000	.0000	.0000		.0000		.0000			.0000
9.000															.0000
10.000															.0000

XI	.7500	1.0000	1.2500	1.5000	2.0000	3.0000	4.0000	5.0000	6.0000	7.0000	8.5000	10.0000
YI												
-5.250	.0000	.0000	.0000									
.500	.0000	.0000		.0000	.0000		.0000		.0000	.0000	.0000	.0000
1.000		.4035										
1.500				.1975								
2.000					.0827							
3.000	.0000	.0000	.0000	.0000		.0268						
4.000							.0121					
5.000								.0000				
6.000									.0000			
7.000										.0000		

ARC35-200IH27 FP/WEDGE/GAP F SURFACE (RE3T44) (28 FEB 75)

REFERENCE DATA

SREF = 11.2500 SQ.FT. XMRP = .0000 IN.
LREF = 60.0000 IN. YMRP = .0000 IN.
BREF = 27.0000 IN. ZMRP = .0000 IN.
SCALE = 1.0000

PARAMETRIC DATA

W = .050 RN/L = 1.000
DELTA = 5.000 BETA = .000
H2 = 1.500 D = 8.772

MACH (1) = 5.220 HAW/HT(1) = .873 RN/L = 1.0002 PO = 103.68 TO = 1552.0 HO = 383.17

SECTION (1)SURFACE DEPENDENT VARIABLE H/HREF

XI	-6.2500	-5.2500	-4.2500	-4.0000	-3.2500	-3.0000	-2.0000	-1.5000	-1.2500	-1.0000	-.7500	-.5000	-.2500	.2500	.5000
YI															
-5.250									.0000	.0000	.0000	.0000	.0000	.0000	.0000
-1.500							.0000	.0000		.0000	.0000	.0000	.0000		
.000	.0000	.0000	.0000		.0000										
.250															.0000
.500														.0000	.0000
.750															.0000
1.000															.0000
1.500				.0000		.0000	.0000	.9265		.9544	.8180	.7278	.6747		.0000
2.000															.0000
3.000						.0000	.0000	.0000		.0000	.0000	.0000	.0000	.0000	.0000
4.000															.0000
6.000															.0000
7.000						.0000	.0000	.0000		.0000		.0000			.0000
9.000															.0000
10.000															.0000

XI	.7500	1.0000	1.2500	1.5000	2.0000	3.0000	4.0000	5.0000	6.0000	7.0000	8.5000	10.0000
YI												
-5.250	.0000	.0000	.0000									
.500	.0000	.0000		.0000	.0000		.0000		.0000	.0000	.0000	.0000
1.000		.3597										
1.500				.1788								
2.000					.0754							
3.000	.0000	.0000	.0000	.0000		.0252						
4.000							.0126					
5.000								.0000				
6.000									.0000			
7.000										.0000		

ARC35-200(H27 FP/GAP B GAP RT (RE3R03) (28 FEB 75)

REFERENCE DATA

SREF = 11.2500 SQ.FT. XMRP = .0000 IN.
LREF = 60.0000 IN. YMRP = .0000 IN.
BREF = 27.0000 IN. ZMRP = .0000 IN.
SCALE = 1.0000

PARAMETRIC DATA

W = .050 RN/L = 3.500

MACH (1) = 5.240 HAW/HT(1) = .907 RN/L = 3.4796 PO = 342.45 TO = 1494.2 HO = 367.94

SECTION (1)GAP RT DEPENDENT VARIABLE H/HREF

XI	.2500	1.0000	2.0000	3.0000	4.0000	5.0000	6.0000	7.0000	8.0000	9.0000	10.0000
ZI/D											
.014	.0000	.4524	.0000		.0000			.4776			.0000
.057	.0000										
.100	.0000	.2477	.0000		.0000			.2391			.0000
.200	.0000	.1414	.0000		.0000			.0960			.0000
.500	.0000	.0000	.0000	.0000	.0000	.0000	.0000	.0013	.0000	.0000	.0000
1.000	.0000	.0000	.0000	.0000	.0000	.0000	.0000	.0000	.0000	.0000	.0000

ARC35-200(H27 FP/GAP B GAP RT (RE3R07) (28 FEB 75)

REFERENCE DATA

SREF = 11.2500 SQ.FT. XMRP = .0000 IN.
LREF = 60.0000 IN. YMRP = .0000 IN.
BREF = 27.0000 IN. ZMRP = .0000 IN.
SCALE = 1.0000

PARAMETRIC DATA

W = .100 RN/L = 3.500

MACH (1) = 5.240 HAW/HT(1) = .907 RN/L = 3.7415 PO = 350.08 TO = 1448.1 HO = 355.89

SECTION (1)GAP RT DEPENDENT VARIABLE H/HREF

XI	.2500	1.0000	2.0000	3.0000	4.0000	5.0000	6.0000	7.0000	8.0000	9.0000	10.0000
ZI/D											
.014	.0000	.5703	.0000		.0000			.4697			.0000
.057	.0000										
.100	.0000	.3506	.0000		.0000			.2842			.0000
.200	.0000	.2483	.0000		.0000			.1343			.0000
.500	.0000	.1024	.0000	.0000	.0000	.0000	.0000	.0065	.0000	.0000	.0000
1.000	.0000	.0000	.0000	.0000	.0000	.0000	.0000	.0009	.0000	.0000	.0000

ARC35-200IH27 FP/GAP B GAP RT (RE3R09) (28 FEB 75)

REFERENCE DATA

SREF = 11.2500 SQ.FT. XMRP = .0000 IN.
LREF = 60.0000 IN. YMRP = .0000 IN.
BREF = 27.0000 IN. ZMRP = .0000 IN.
SCALE = 1.0000

PARAMETRIC DATA

W = .050 RN/L = 1.000

MACH (1) = 5.220 HAW/HT(1) = .873 RN/L = 1.0476 PO = 102.37 TO = 1496.5 HO = 368.55

SECTION (1)GAP RT DEPENDENT VARIABLE H/HREF

XI	.2500	1.0000	2.0000	3.0000	4.0000	5.0000	6.0000	7.0000	8.0000	9.0000	10.0000
ZI/D											
.014	.0000	.0862	.0000		.0000			.0684			.0000
.057	.0000										
.100	.0000	.0396	.0000		.0000			.0292			.0000
.200	.0000	.0150	.0000		.0000			.0069			.0000
.500	.0000	.0000	.0000	.0000	.0000	.0000	.0000	.0000	.0000	.0000	.0000
1.000	.0000	.0000	.0000	.0000	.0000	.0000	.0000	.0000	.0000	.0000	.0000

ARC35-2001H27 FP/CYL(2RT)/GAP B GAP RT (PE3R16) (18 NOV 75)

REFERENCE DATA

SREF = 11.2500 SQ.FT. XMRP = .0000 IN.
LREF = 60.0000 IN. YMRP = .0000 IN.
BREF = 27.0000 IN. ZMRP = .0000 IN.
SCALE = 1.0000

PARAMETRIC DATA

W = .050 RN/L = 3.500

MACH (1) = 5.240 HAW/HT(1) = .907 RN/L = 3.5001 PO = 349.54 TO = 1507.7 HO = 371.51

SECTION (1) DEPENDENT VARIABLE H/HREF

XI	.2500	1.0000	2.0000	3.0000	4.0000	5.0000	6.0000	7.0000	8.0000	9.0000	10.0000
ZI/D											
.014	.0000	1.8306	.8195		.0000			.4418			.0000
.057	.0000										
.100	.0000	1.3205	.7893		.0000			.2091			.0858
.200	.0000	1.2583	.5953		.0000			.1137			.0404
.500	.0000	1.1076	.4207	.2456	.0000	.1971	.1439	.0000	.0484	.0320	.0292
1.000	.2699	.2804	.2047	.0000	.0000	.0436	.0354	.0242	.0132	.0047	.0049

ARC35-200IH27 FP/CYL(2RT)/GAP B GAP RT (PE3R17) (18 NOV 75)

REFERENCE DATA

SREF = 11.2500 SQ.FT. XMRP = .0000 IN.
LREF = 60.0000 IN. YMRP = .0000 IN.
BREF = 27.0000 IN. ZMRP = .0000 IN.
SCALE = 1.0000

PARAMETRIC DATA

W = .100 RN/L = 3.500

MACH (1) = 5.240 HAW/HT(1) = .907 RN/L = 3.5702 PO = 348.81 TO = 1480.2 HO = 366.39

SECTION (1) DEPENDENT VARIABLE H/HREF

XI	.2500	1.0000	2.0000	3.0000	4.0000	5.0000	6.0000	7.0000	8.0000	9.0000	10.0000
ZI/D											
.014	.0000	1.7158	.8248		.0000			.4824			.2813
.057	.0000										
.100	.0000	1.2433	.7595		.0000			.3030			.0000
.200	.0000	1.1940	.6348		.0000			.2319			.1501
.500	.0000	1.3143	.5347	.2856	.0000	.2975	.2990	.0000	.1640	.1343	.1751
1.000	.6498	.5323	.4107	.0000	.0000	.1049	.1287	.1012	.0706	.0567	.0525

ARC35-200(H27 FP/CYL(2RT)/GAP D GAP RT (RE3R22) (28 FEB 75)

REFERENCE DATA

SREF = 11.2500 SQ.FT. XMRP = .0000 IN.
LREF = 60.0000 IN. YMRP = .0000 IN.
BREF = 27.0000 IN. ZMRP = .0000 IN.
SCALE = 1.0000

PARAMETRIC DATA

W = .050 RN/L = 3.500

MACH (1) = 5.240 HAW/HT(1) = .907 RN/L = 3.5406 PO = 349.10 TO = 1495.9 HO = 368.40

SECTION (1)GAP RT DEPENDENT VARIABLE H/HREF

XI	.2500	1.0000	2.0000	3.0000	4.0000	5.0000	6.0000	7.0000	8.0000	9.0000	10.0000
ZI/D											
.014	5.6623	1.7494	.0000		.0000			.0000			.0000
.057	3.3811										
.100	2.2251	1.1449	.0000		.4104			.0000			.0742
.200	1.4373	1.0598	.0000		.2754			.0000			.0360
.500	.8925	.0000	.0000	.0000	.2126	.1903	.1335	.0000	.0449	.0000	.0191
1.000	.0000	.0000	.0000	.0000	.0681	.0466	.0343	.0000	.0098	.0034	.0028

ARC35-200(H27 FP/CYL(2RT+1/4 SPACE)GAP B GAP RT (RE3R23) (28 FEB 75)

REFERENCE DATA

SREF = 11.2500 SQ.FT. XMRP = .0000 IN.
LREF = 60.0000 IN. YMRP = .0000 IN.
BREF = 27.0000 IN. ZMRP = .0000 IN.
SCALE = 1.0000

PARAMETRIC DATA

W = .050 RN/L = 3.500

MACH (1) = 5.240 HAW/HT(1) = .907 RN/L = 3.5791 PO = 354.77 TO = 1500.8 HO = 369.68

SECTION (1)GAP RT DEPENDENT VARIABLE H/HREF

XI	.2500	1.0000	2.0000	3.0000	4.0000	5.0000	6.0000	7.0000	8.0000	9.0000	10.0000
ZI/D											
.014	.0000	1.9017	.0000		.0000			.4295			.0000
.057	.0000										
.100	.0000	1.3782	.0000		.0000			.2097			.0000
.200	.0000	1.3743	.0000		.0000			.1232			.0000
.500	.0000	1.2270	.0000	.0000	.0000	.0000	.0000	.1105	.0000	.0000	.0000
1.000	.4611	.3676	.0000	.0000	.0000	.0000	.0000	.0284	.0000	.0000	.0000

ARC35-200IH27 FP/CYL(IRT)/GAP B GAP RT (RE3R24) (28 FEB 75)

REFERENCE DATA

SREF = 11.2500 SQ.FT. XMRP = .0000 IN.
LREF = 60.0000 IN. YMRP = .0000 IN.
BREF = 27.0000 IN. ZMRP = .0000 IN.
SCALE = 1.0000

PARAMETRIC DATA

W = .050 RN/L = 3.500

MACH (1) = 5.240 HAW/HT(1) = .907 RN/L = 3.5372 PO = 353.26 TO = 1507.8 HO = 371.52

SECTION (1)GAP RT DEPENDENT VARIABLE H/HREF

XI	.2500	1.0000	2.0000	3.0000	4.0000	5.0000	6.0000	7.0000	8.0000	9.0000	10.0000
ZI/D											
.014	.0000	1.1944	.0000		.0000			.3133			.0000
.057	.0000										
.100	.0000	.8524	.0000		.0000			.1242			.0000
.200	.0000	.8555	.0000		.0000			.0539			.0000
.500	.0000	.6812	.0000	.0000	.0000	.0000	.0000	.0431	.0000	.0000	.0000
1.000	.1993	.1681	.0000	.0000	.0000	.0000	.0000	.0021	.0000	.0000	.0000

ARC35-200IH27 FP/CYL(4RT)/GAP B GAP RT (RE3R25) (28 FEB 75)

REFERENCE DATA

SREF = 11.2500 SQ.FT. XMRP = .0000 IN.
LREF = 60.0000 IN. YMRP = .0000 IN.
BREF = 27.0000 IN. ZMRP = .0000 IN.
SCALE = 1.0000

PARAMETRIC DATA

W = .050 RN/L = 3.500

MACH (1) = 5.240 HAW/HT(1) = .907 RN/L = 3.6076 PO = 350.78 TO = 1483.0 HO = 365.02

SECTION (1)GAP RT DEPENDENT VARIABLE H/HREF

XI	.2500	1.0000	2.0000	3.0000	4.0000	5.0000	6.0000	7.0000	8.0000	9.0000	10.0000
ZI/D											
.014	.0000	4.2449	.0000		.0000			.7323			.0000
.057	.0000										
.100	.0000	2.5584	.0000		.0000			.4122			.0000
.200	.0000	2.0424	.0000		.0000			.2814			.0000
.500	.0000	1.8923	.0000	.0000	.0000	.0000	.0000	.0000	.0000	.0000	.0000
1.000	.2894	.4683	.0000	.0000	.0000	.0000	.0000	.0655	.0000	.0000	.0000

ARC35-200(H27 FP/CYL(2RT)/GAP B GAP RT (RE3R26) (28 FEB 75)

REFERENCE DATA

SREF = 11.2500 SQ.FT. XMRP = .0000 IN.
LREF = 60.0000 IN. YMRP = .0000 IN.
BREF = 27.0000 IN. ZMRP = .0000 IN.
SCALE = 1.0000

PARAMETRIC DATA

W = .050 RN/L = 1.000

MACH (1) = 5.220 HAW/HT(1) = .873 RN/L = 1.0370 PO = 101.79 TO = 1500.6 HO = 369.64

SECTION (1)GAP RT DEPENDENT VARIABLE H/HREF

XI	.2500	1.0000	2.0000	3.0000	4.0000	5.0000	6.0000	7.0000	8.0000	9.0000	10.0000
ZI/D											
.014	.0000	1.4108	.0000		.0000			.2041			.0000
.057	.0000										
.100	.0000	1.0652	.0000		.0000			.0911			.0000
.200	.0000	1.0220	.0000		.0000			.0506			.0000
.500	.0000	1.1903	.0000	.0000	.0000	.0000	.0000	.0000	.0000	.0000	.0000
1.000	.1710	.1561	.0000	.0000	.0000	.0000	.0000	.0112	.0000	.0000	.0000

ARC35-200IH27 FP/CYL(2-45)/GAP B GAP RT (PE3R30) (18 NOV 75)

REFERENCE DATA

SREF = 11.2500 SQ.FT. XMRP = .0000 IN.
LREF = 60.0000 IN. YMRP = .0000 IN.
BREF = 27.0000 IN. ZMRP = .0000 IN.
SCALE - 1.0000

PARAMETRIC DATA

W = .050 RN/L = 3.500

MACH (1) = 5.240 HAW/HT(1) = .907 RN/L = 3.6909 PO = 348.81 TO = 1457.8 HO = 358.42

SECTION (1) DEPENDENT VARIABLE H/HREF

XI	.2500	1.0000	2.0000	3.0000	4.0000	5.0000	6.0000	7.0000	8.0000	9.0000	10.0000
ZI/D											
.014	.0000	10.0796	2.4603		.0000			.5051			.0000
.057	.0000										
.100	.0000	5.2820	2.2972		.0000			.3293			.0000
.200	.0000	4.1088	2.0749		.0000			.2892			.0863
.500	.0000	3.2103	1.5604	.8200	.0000	.4739	.3783	.0000	.1628	.1000	.0836
1.000	.4720	.9398	.8197	.0000	.0000	.1098	.0924	.0764	.0404	.0219	.0177

ARC35-200(H27 FP/CYL(2-45)/GAP B GAP RT (RE3R34) (28 FEB 75)

REFERENCE DATA

SREF = 11.2500 SQ.FT. XMRP = .0000 IN.
LREF = 60.0000 IN. YMRP = .0000 IN.
BREF = 27.0000 IN. ZMRP = .0000 IN.
SCALE = 1.0000

PARAMETRIC DATA

W = .050 RN/L = 1.000

MACH (1) = 5.220 HAW/HT(1) = .873 RN/L = 1.0390 PO = 102.54 TO = 1505.6 HO = 370.95

SECTION (1)GAP RT DEPENDENT VARIABLE H/HREF

XI	.2500	1.0000	2.0000	3.0000	4.0000	5.0000	6.0000	7.0000	8.0000	9.0000	10.0000
ZI/D											
.014	.0000	9.9450	.0000		.0000			.5610			.0000
.057	.0000										
.100	.0000	5.3618	.0000		.0000			.2755			.0000
.200	.0000	3.4605	.0000		.0000			.1850			.0000
.500	.0000	3.1465	.0000	.0000	.0000	.0000	.0000	.0000	.0000	.0000	.0000
1.000	.3705	.6734	.0000	.0000	.0000	.0000	.0000	.0449	.0000	.0000	.0000

ARC35-2001H27 FP/WEDGE/GAP B1 GAP RT (PE3R35) (18 NOV 75)

REFERENCE DATA

SREF =	11.2500 SQ.FT.	XMRP =	.0000 IN.		
LREF =	60.0000 IN.	YMRP =	.0000 IN.		
BREF =	27.0000 IN.	ZMRP =	.0000 IN.		
SCALE =	1.0000				

PARAMETRIC DATA

W =	.050	RN/L =	3.500
DELTA =	5.000	BETA =	.000
H2 =	1.500	D =	7.294

MACH (1) = 5.240 HAW/HT(1) = .907 RN/L = 3.6916 PO = 353.10 TO = 1468.9 HO = 361.33

SECTION (1) DEPENDENT VARIABLE H/HREF

XI	.2500	1.0000	2.0000	3.0000	4.0000	5.0000	6.0000	7.0000	8.0000	9.0000	10.0000
ZI/D											
.014	.0000	.3036	.0000		.0000			.3178			.0000
.057	.0000										
.100	.0000	.1278	.0000		.0000			.1236			.0000
.200	.0000	.0435	.0000		.0000			.0300			.0000
.500	.0000	.0643	.0000	.0000	.0000	.0000	.0000	.0000	.0000	.0000	.0000
1.000	.0349	.0000	.0000	.0000	.0000	.0000	.0000	.0000	.0000	.0000	.0000

ARC35-2001H27 FP/WEDGE/GAP B1 REVOLVE 45 GAP RT (PE3R36) (18 NOV 75)

REFERENCE DATA

SREF =	11.2500 SQ.FT.	XMRP =	.0000 IN.		
LREF =	60.0000 IN.	YMRP =	.0000 IN.		
BREF =	27.0000 IN.	ZMRP =	.0000 IN.		
SCALE =	1.0000				

PARAMETRIC DATA

W =	.050	RN/L =	3.500		
DELTA =	5.000	BETA =	.000		
H2 =	1.500	D =	8.794		

MACH (1) = 5.240 HAW/HT(1) = .907 RN/L = 3.5395 PO = 353.15 TO = 1506.9 HO = 371.28

SECTION (1)GAP RT DEPENDENT VARIABLE H/HREF

XI	.2500	1.0000	2.0000	3.0000	4.0000	5.0000	6.0000	7.0000	8.0000	9.0000	10.0000
ZI/D											
.014	.9250	.8060	.9346		.0000			.1945			.0000
.057	.6093										
.100	.4245	.4372	.8856		.0000			.0521			.0000
.200	.0000	.2424	.5934		.0000			.0159			.0000
.500	.0240	.0687	.1672	.0000	.0000	.0000	.0000	.0000	.0000	.0000	.0000
1.000	.0000	.0000	.0118	.0000	.0000	.0000	.0000	.0000	.0203	.0000	.0000

ARC35-200(H27 F P/WEDGE/GAP B2 GAP RT (PE3R40) (18 NOV 75)

REFERENCE DATA

SREF =	11.2500 SQ.FT.	XMRP =	.0080 IN.		
LREF =	60.0000 IN.	YMRP =	.0000 IN.		
BREF =	27.0000 IN.	ZMRP =	.0000 IN.		
SCALE =	1.0000				

PARAMETRIC DATA

W =	.050	RN/L =	3.500
DELTA =	5.000	BETA =	.000
H2 =	1.500	D =	8.294

MACH (1) = 5.240 HAW/HT(1) = .907 RN/L = 3.5869 PO = 354.17 TO = 1497.3 HO = 368.77

SECTION (1) DEPENDENT VARIABLE H/HREF

XI	.2500	1.0000	2.0000	3.0000	4.0000	5.0000	6.0000	7.0000	8.0000	9.0000	10.0000
ZI/D											
.014	.0000	.9598	.0000		.0000			.2734			.0000
.057	.0000										
.100	.0000	.5782	.0000		.0000			.0887			.0000
.200	.0000	.3821	.0000		.0000			.0191			.0000
.500	.0000	.1437	.0000	.0000	.0000	.0000	.0000	.0000	.0000	.0000	.0000
1.000	.0270	.0000	.0000	.0000	.0000	.0000	.0000	.0000	.0000	.0000	.0000

ARC35-2001H27 FP/WEDGE/GAP B3 GAP RT (PE3R41) (18 NOV 75)

REFERENCE DATA

SREF = 11.2500 SQ.FT. XMRP = .0000 IN.
LREF = 60.0000 IN. YMRP = .0000 IN.
BREF = 27.0000 IN. ZMRP = .0000 IN.
SCALE = 1.0000

PARAMETRIC DATA

W = .050 RN/L = 3.500
DELTA = 5.000 BETA = .000
H2 = 1.500 D = 9.294

MACH (1) = 5.240 HAW/HT(1) = .907 RN/L = 3.6340 PO = 350.05 TO = 1474.6 HO = 362.81

SECTION (1) DEPENDENT VARIABLE H/HREF

XI	.2500	1.0000	2.0000	3.0000	4.0000	5.0000	6.0000	7.0000	8.0000	9.0000	10.0000
ZI/D											
.014	.0000	1.0926	.0000		.0000			.2760			.0000
.057	.0000										
.100	.0000	.5956	.0000		.0000			.0882			.0000
.200	.0000	.3862	.0000		.0000			.0191			.0000
.500	.0000	.3540	.0000	.0000	.0000	.0000	.0000	.0000	.0000	.0000	.0000
1.000	.0000	.0173	.0000	.0000	.0000	.0000	.0000	.0000	.0000	.0000	.0000

ARC35-200IH27 FP/GAP B GAP LT (RE3L03) (28 FEB 75)

REFERENCE DATA

SREF = 11.2500 SQ.FT. XMRP = .0000 IN.
LREF = 60.0000 IN. YMRP = .0000 IN.
BREF = 27.0000 IN. ZMRP = .0000 IN.
SCALE = 1.0000

PARAMETRIC DATA

W = .050 RN/L = 3.500

MACH (1) = 5.240 HAW/HT(1) = .907 RN/L = 3.4796 PO = 342.45 TO = 1494.2 HO = 367.94

SECTION (1)GAP LT DEPENDENT VARIABLE H/HREF

XI	.2500	1.0000	2.0000	3.0000	4.0000	5.0000	6.0000	7.0000	8.0000	9.0000	10.0000
ZI/D											
.014	.4772	.0000	.0000		.0000			.0000			.0000
.057	.3083										
.100	.1695	.0000	.0000		.0000			.0000			.0000
.200	.1538	.0000	.0000		.0000			.0000			.0000
.300	.0828										
.400	.0457	.0000	.0000	.0000	.0000	.0000	.0000	.0000	.0000	.0000	.0000
.500	.0241										
.700	.0012										
.800	.0000	.0000	.0000		.0000			.0000			.0000

ARC35-2001H27 FP/GAP B GAP LT (RE3L07) (28 FEB 75)

REFERENCE DATA

SREF = 11.2500 SQ.FT. XMRP = .0000 IN.
LREF = 60.0000 IN. YMRP = .0000 IN.
BREF = 27.0000 IN. ZMRP = .0000 IN.
SCALE = 1.0000

PARAMETRIC DATA

W = .100 RN/L = 3.500

MACH (1) = 5.240 HAW/HT(1) = .907 RN/L = 3.7415 PO = 350.08 TO = 1448.1 HO = 355.89

SECTION (1)GAP LT DEPENDENT VARIABLE H/HREF

X1	.2500	1.0000	2.0000	3.0000	4.0000	5.0000	6.0000	7.0000	8.0000	9.0000	10.0000
Z1/D											
.014	.6396	.0000	.0000		.0000			.0000			.0000
.057	.4683										
.100	.4204	.0000	.0000		.0000			.0000			.0000
.200	.0000	.0000	.0000		.0000			.0000			.0000
.300	.3068										
.400	.2365	.0000	.0000	.0000	.0000	.0000	.0000	.0000	.0000	.0000	.0000
.500	.1912										
.700	.0715										
.800	.0484	.0000	.0000		.0000			.0000			.0000

ARC35-200IH27 FP/GAP B GAP LT (RE3L09) (28 FEB 75)

REFERENCE DATA

SREF = 11.2500 SQ.FT. XMRP = .0000 IN.
LREF = 60.0000 IN. YMRP = .0000 IN.
BREF = 27.0000 IN. ZMRP = .0000 IN.
SCALE = 1.0000

PARAMETRIC DATA

W = .050 RN/L = 1.000

MACH (1) = 5.220 HAW/HT(1) = .873 RN/L = 1.0476 PO = 102.37 TO = 1496.5 HO = 368.55

SECTION (1)GAP LT DEPENDENT VARIABLE Z/HREF

XI	.2500	1.0000	2.0000	3.0000	4.0000	5.0000	6.0000	7.0000	8.0000	9.0000	10.0000
ZI/D											
.014	.0732	.0000	.0000		.0000			.0000			.0000
.057	.0426										
.100	.0164	.0000	.0000		.0000			.0000			.0000
.200	.0000	.0000	.0000		.0000			.0000			.0000
.300	.0000										
.400	.0000	.0000	.0000	.0000	.0000	.0000	.0000	.0000	.0000	.0000	.0000
.500	.0000										
.700	.0000										
.800	.0000	.0000	.0000		.0000			.0000			.0000

ARC35-2001H27 FP/CYL(2RT)/GAP B GAP LT (PE3L16) (18 NOV 75)

REFERENCE DATA

SREF = 11.2500 SQ.FT. XMRP = .0000 IN.
LREF = 60.0000 IN. YMRP = .0000 IN.
BREF = 27.0000 IN. ZMRP = .0000 IN.
SCALE = 1.0000

PARAMETRIC DATA

W = .050 RN/L = 3.500

MACH (1) = 5.240 HAW/HT(1) = .907 RN/L = 3.5001 PO = 349.54 TO = 1507.7 HO = 371.51

SECTION (1)GAP LT DEPENDENT VARIABLE H/HREF

XI	.2500	1.0000	2.0000	3.0000	4.0000	5.0000	6.0000	7.0000	8.0000	9.0000	10.0000
ZI/D											
.014	6.0253	.0000	.0000		.0000			.0000			.0000
.057	3.6326										
.100	2.1344	.0000	.0000		.0000			.0000			.0000
.200	.0000	.0000	.0000		.0000			.0000			.0000
.300	1.8499										
.400	1.6073	.0000	.0000	.0000	.0000	.0000	.0000	.0000	.0000	.0000	.0000
.500	1.5909										
.700	1.0837										
.800	.9163	.0000	.0000		.0000			.0000			.0000

ARC35-2001H27 FP/CYL(2RT)/GAP 8 GAP LT (PE3L17) (18 NOV 75)

REFERENCE DATA

SREF = 11.2500 SQ.FT. XMRP = .0000 IN.
LREF = 60.0000 IN. YMRP = .0000 IN.
BREF = 27.0000 IN. ZMRP = .0000 IN.
SCALE = 1.0000

PARAMETRIC DATA

W = .100 RN/L = 3.500

MACH (1) = 5.240 HAW/HT(1) = .907 RN/L = 3.5702 PO = 348.81 TO = 1488.2 HO = 366.39

SECTION (1)GAP LT DEPENDENT VARIABLE H/HREF

XI	.2500	1.0000	2.0000	3.0000	4.0000	5.0000	6.0000	7.0000	8.0000	9.0000	10.0000
ZI/D											
.014	4.7514	.0000	.0000		.0000			.0000			.0000
.057	2.9746										
.100	1.8209	.0000	.0000		.0000			.0000			.0000
.200	.0000	.0000	.0000		.0000			.0000			.0000
.300	1.8328										
.400	1.6770	.0000	.0000	.0000	.0000	.0000	.0000	.0000	.0000	.0000	.0000
.500	1.8145										
.700	1.5463										
.800	1.3530	.0000	.0000		.0000			.0000			.0000

ARC35-200IH27 FP/CYL.(2RT)/GAP D GAP LT (RE3L22) (28 FEB 75)

REFERENCE DATA

SREF = 11.2500 SQ.FT. XMRP = .0000 IN.
LREF = 60.0000 IN. YMRP = .0000 IN.
BREF = 27.0000 IN. ZMRP = .0000 IN.
SCALE = 1.0000

PARAMETRIC DATA

W = .050 RN/L = 3.500

MACH (1) = 5.240 HAW/HT(1) = .907 RN/L = 3.5406 PO = 349.10 TO = 1495.9 HO = 368.40

SECTION (1)GAP LT DEPENDENT VARIABLE H/HREF

XI	.2500	1.0000	2.0000	3.0000	4.0000	5.0000	6.0000	7.0000	8.0000	9.0000	10.0000
ZI/D											
.014	5.2733	1.8678	.0000		.6407			.0000			.1388
.057	3.1475										
.100	1.9297	.8927	.0000		.3459			.0000			.0748
.200	.0000	.9615	.0000		.2562			.0000			.0385
.300	1.3910										
.400	1.1876	1.6796	.0000	.0000	.0000	.0000	.0000	.0000	.0000	.0000	.0000
.500	.0000										
.700	.6527										
.800	.5104	.7629	.0000		.1977			.0000			.0073

ARC35-200(H27 FP/CYL.(2RT+1/4 SPACE)GAP B GAP LT (RE3L23) (28 FEB 75)

REFERENCE DATA

SREF = 11.2500 SQ.FT. XMRP = .0000 IN.
LREF = 60.0000 IN. YMRP = .0000 IN.
BREF = 27.0000 IN. ZMRP = .0000 IN.
SCALE = 1.0000

PARAMETRIC DATA

W = .050 RN/L = 3.500

MACH (1) = 5.240 HAW/HT(1) = .907 RN/L = 3.5791 PO = 354.77 TO = 1500.8 HO = 369.68

SECTION (1)GAP LT DEPENDENT VARIABLE H/HREF

X1	.2500	1.0000	2.0000	3.0000	4.0000	5.0000	6.0000	7.0000	8.0000	9.0000	10.0000
Z1/D											
.014	6.0401	.0000	.0000		.0000			.0000			.0000
.057	3.8323										
.100	2.2017	.0000	.0000		.0000			.0000			.0000
.200	2.0933	.0000	.0000		.0000			.0000			.0000
.300	2.1304										
.400	2.0452	.0000	.0000	.0000	.0000	.0000	.0000	.0000	.0000	.0000	.0000
.500	2.4067										
.700	1.9252										
.800	1.6259	.0000	.0000		.0000			.0000			.0000

ARC35-200(H27 FP/CYL(1RT)/GAP B GAP LT (RE3L24) (28 FEB 75)

REFERENCE DATA

SREF = 11.2500 SQ.FT. XMRP = .0000 IN.
LREF = 60.0000 IN. YMRP = .0000 IN.
BREF = 27.0000 IN. ZMRP = .0000 IN.
SCALE = 1.0000

PARAMETRIC DATA

W = .050 RN/L = 3.500

MACH (1) = 5.240 HAW/HT(1) = .907 RN/L = 3.5372 PO = 353.26 TO = 1507.8 HO = 371.52

SECTION (1)GAP LT DEPENDENT VARIABLE H/HREF

XI	.2500	1.0000	2.0000	3.0000	4.0000	5.0000	6.0000	7.0000	8.0000	9.0000	10.0000
ZI/D											
.014	2.8042	.0000	.0000		.0000			.0000			.0000
.057	1.9555										
.100	1.1524	.0000	.0000		.0000			.0000			.0000
.200	1.0310	.0000	.0000		.0000			.0000			.0000
.300	.8260										
.400	.7984	.0000	.0000	.0000	.0000	.0000	.0000	.0000	.0000	.0000	.0000
.500	1.1488										
.700	1.2130										
.800	.9605	.0000	.0000		.0000			.0000			.0000

ARC35-200(H27 FP/CYL(4RT)/GAP B GAP LT (RE3L25) (28 FEB 75)

REFERENCE DATA

SREF = 11.2500 SQ.FT. XMRP = .0000 IN.
LREF = 60.0000 IN. YMRP = .0000 IN.
BREF = 27.0000 IN. ZMRP = .0000 IN
SCALE = 1.0000

PARAMETRIC DATA

W = .050 RN/L = 3.500

MACH (1) = 5.240 HAW/HT(1) = .907 RN/L = 3.6076 PO = 350.78 TO = 1483.0 HO = 365.02

SECTION (1)GAP LT DEPENDENT VARIABLE H/HREF

XI	.2500	1.0000	2.0000	3.0000	4.0000	5.0000	6.0000	7.0000	8.0000	9.0000	10.0000
ZI/D											
.014	7.1061	.0000	.0000		.0000			.0000			.0000
.057	4.2553										
.100	2.6719	.0000	.0000		.0000			.0000			.0000
.200	2.5917	.0000	.0000		.0000			.0000			.0000
.300	2.1765										
.400	1.7483	.0000	.0000	.0000	.0000	.0000	.0000	.0000	.0000	.0000	.0000
.500	1.5077										
.700	1.0396										
.800	.9086	.0000	.0000		.0000			.0000			.0000

ARC35-2001H27 FP/CYL(2RT)/GAP B GAP LT (RE3L26) (28 FEB 75)

REFERENCE DATA

SREF = 11.2500 SQ.FT. XMRP = .0000 IN.
LREF = 60.0000 IN. YMRP = .0000 IN.
BREF = 27.0000 IN. ZMRP = .0000 IN.
SCALE = 1.0000

PARAMETRIC DATA

W = .050 RN/L = 1.000

MACH (1) = 5.220 HAW/HT(1) = .873 RN/L = 1.0370 PO = 101.79 TO = 1500.6 HO = 369.64

SECTION (1)GAP LT DEPENDENT VARIABLE H/HREF

XI	.2500	1.0000	2.0000	3.0000	4.0000	5.0000	6.0000	7.0000	8.0000	9.0000	10.0000
ZI/D											
.014	5.7818	.0000	.0000		.0000			.0000			.0000
.057	3.7054										
.100	2.1676	.0000	.0000		.0000			.0000			.0000
.200	.0000	.0000	.0000		.0000			.0000			.0000
.300	1.2500										
.400	1.5215	.0000	.0000	.0000	.0000	.0000	.0000	.0000	.0000	.0000	.0000
.500	1.5152										
.700	.9583										
.800	.7778	.0000	.0000		.0000			.0000			.0000

ARC35-200(H27 FP/CYL(2-45)/GAP B GAP LT (PE3L30) (18 NOV 75)

REFERENCE DATA

SREF = 11.2500 SQ.FT. XMRP = .0000 IN.
LREF = 60.0000 IN. YMRP = .0000 IN.
BREF = 27.0000 IN. ZMRP = .0000 IN.
SCALE = 1.0000

PARAMETRIC DATA

W = .050 RN/L = 3.500

MACH (1) = 5.240 HAW/HT(1) = .907 RN/L = 3.6909 PO = 348.81 TO = 1457.8 HO = 358.42

SECTION (1)GAP LT DEPENDENT VARIABLE H/HREF

XI	.2500	1.0000	2.0000	3.0000	4.0000	5.0000	6.0000	7.0000	8.0000	9.0000	10.0000
ZI/D											
.014	11.5197	.0000	.0000		.0000			.0000			.0000
.057	9.1140										
.100	6.8467	.0000	.0000		.0000			.0000			.0000
.200	.0000	.0000	.0000		.0000			.0000			.0000
.300	5.7974										
.400	4.4249	.0000	.0000	.0000	.0000	.0000	.0000	.0000	.0000	.0000	.0000
.500	3.5054										
.700	2.0130										
.800	1.6371	.0000	.0000		.0000			.0000			.0000

ARC35-200IH27 FP/CYL(2-45)/GAP B GAP LT (RE3L34) (28 FEB 75)

REFERENCE DATA

SREF = 11.2500 SQ.FT. XMRP = .0000 IN.
LREF = 60.0000 IN. YMRP = .0000 IN.
BREF = 27.0000 IN. ZMRP = .0000 IN.
SCALE = 1.0000

PARAMETRIC DATA

W = .050 RN/L = 1.000

MACH (1) = 5.220 HAW/HT(1) = .873 RN/L = 1.0390 PO = 102.54 TO = 1505.6 HO = 370.95

SECTION (1)GAP LT DEPENDENT VARIABLE H/HREF

XI	.2500	1.0000	2.0000	3.0000	4.0000	5.0000	6.0000	7.0000	8.0000	9.0000	10.0000
ZI/D											
.014	9.1705	.0000	.0000		.0000			.0000			.0000
.057	7.4607										
.100	6.5271	.0000	.0000		.0000			.0000			.0000
.200	.0000	.0000	.0000		.0000			.0000			.0000
.300	3.8200										
.400	4.4281	.0000	.0000	.0000	.0000	.0000	.0000	.0000	.0000	.0000	.0000
.500	3.5507										
.700	1.9307										
.800	1.5626	.0000	.0000		.0000			.0000			.0000

ARC35-2001H27 FP/WEDGE/GAP B1 GAP LT (PE3L35) (18 NOV 75)

REFERENCE DATA

SREF =	11.2500 SQ.FT.	XMRP =	.0000 IN.		
LREF =	60.0000 IN.	YMRP =	.0000 IN.		
BREF =	27.0000 IN.	ZMRP =	.0000 IN.		
SCALE =	1.0000				

PARAMETRIC DATA

W =	.050	RN/L =	3.500
DELTA =	5.000	BETA =	.000
H2 =	1.500	D =	7.294

MACH (1) = 5.240 HAW/HT(1) = .907 RN/L = 3.6916 PO = 353.10 TO = 1468.9 HO = 361.33

SECTION (1)GAP LT DEPENDENT VARIABLE H/HREF

X1	.2500	1.0000	2.0000	3.0000	4.0000	5.0000	6.0000	7.0000	8.0000	9.0000	10.0000
ZI/D											
.014	.9043	.0000	.0000		.0000			.0000			.0000
.057	.5962										
.100	.4147	.0000	.0000		.0000			.0000			.0000
.200	.0000	.0000	.0000		.0000			.0000			.0000
.300	.3023										
.400	.2161	.0000	.0000	.0000	.0000	.0000	.0000	.0000	.0000	.0000	.0000
.500	.2258										
.700	.2154										
.800	.1669	.0000	.0000		.0000			.0000			.0000

ARC35-200(H27 FP/WEDGE/GAP B1 REVOLVE 45 GAP LT (PE3L36) (18 NOV 75)

REFERENCE DATA

SREF =	11.2500 SQ.FT.	XMRP =	.0000 IN.		
LREF =	60.0000 IN.	YMRP =	.0000 IN.		
BREF =	27.0000 IN.	ZMRP =	.0000 IN.		
SCALE =	1.0000				

PARAMETRIC DATA

W =	.050	RN/L =	3.500
DELTA =	5.000	BETA =	.000
H2 =	1.500	D =	8.794

MACH (1) = 5.240 HAW/HT(1) = .907 RN/L = 3.5395 PO = 353.15 TO = 1506.9 HO = 371.28

SECTION (1)GAP LT DEPENDENT VARIABLE H/HREF

XI	.2500	1.0000	2.0000	3.0000	4.0000	5.0000	6.0000	7.0000	8.0000	9.0000	10.0000
ZI/D											
.014	1.3058	1.3820	.0000		.0000			.0000			.0000
.057	.7806										
.100	.3945	.4117	.0000		.0000			.0000			.0000
.200	.0000	.2215	.0000		.0000			.0000			.0000
.300	.1466										
.400	.0000	.1182	.0000	.0000	.0000	.0000	.0000	.0000	.0000	.0000	.0000
.500	.0535										
.700	.0183										
.800	.0172	.0307	.0000		.0000			.0000			.0000

ARC35-200IH27 FP/WEDGE/GAP B2 GAP LT (PE3L40) (18 NOV 75)

REFERENCE DATA

SREF =	11.2500 SQ.FT.	XMRP =	.0000 IN.		
LREF =	60.0000 IN.	YMRP =	.0000 IN.		
BREF =	27.0000 IN.	ZMRP =	.0000 IN.		
SCALE =	1.0000				

PARAMETRIC DATA

W =	.050	RN/L =	3.500
DELTA =	5.000	BETA =	.000
H2 =	1.500	D =	8.294

MACH (1) = 5.240 HAW/HT(1) = .907 RN/L = 3.5869 PO = 354.17 TO = 1497.3 HO = 368.77

SECTION (1)GAP LT DEPENDENT VARIABLE H/HREF

XI	.2500	1.0000	2.0000	3.0000	4.0000	5.0000	6.0000	7.0000	8.0000	9.0000	10.0000
ZI/D											
.014	1.1547	.0000	.0000		.0000			.0000			.0000
.057	.7933										
.100	.5971	.0000	.0000		.0000			.0000			.0000
.200	.0000	.0000	.0000		.0000			.0000			.0000
.300	.6182										
.400	.5675	.0000	.0000	.0000	.0000	.0000	.0000	.0000	.0000	.0000	.0000
.500	.5592										
.700	.2873										
.800	.2157	.0000	.0000		.0000			.0000			.0000

ARC35-200IH27 FP/WEDGE/GAP B3 GAP LT (PE3L41) (18 NOV 75)

REFERENCE DATA

SREF =	11.2500 SQ.FT.	XMRP =	.0000 IN.		
LREF =	60.0000 IN.	YMRP =	.0000 IN.		
BREF =	27.0000 IN.	ZMRP =	.0000 IN.		
SCALE =	1.0000				

PARAMETRIC DATA

W =	.050	RN/L =	3.500		
DELTA =	5.000	BETA =	.000		
H2 =	1.500	D =	9.294		

MACH (1) = 5.240 HAW/HT(1) = .907 RN/L = 3.6340 PO = 350.05 TO = 1474.6 HO = 362.81

SECTION (1)GAP LT DEPENDENT VARIABLE H/HREF

XI	.2500	1.0000	2.0000	3.0000	4.0000	5.0000	6.0000	7.0000	8.0000	9.0000	10.0000
ZI/D											
.014	1.3849	.0000	.0000		.0000			.0000			.0000
.057	1.0103										
.100	1.0502	.0000	.0000		.0000			.0000			.0000
.200	.0000	.0000	.0000		.0000			.0000			.0000
.300	1.2044										
.400	.9864	.0000	.0000	.0000	.0000	.0000	.0000	.0000	.0000	.0000	.0000
.500	.8429										
.700	.4342										
.800	.3313	.0000	.0000		.0000			.0000			.0000

ARC35-200IH27 FP/GAP B GAP FWD (RE3F03) (28 FEB 75)

REFERENCE DATA

SREF = 11.2500 SQ.FT. XMRP = .0000 IN.
LREF = 60.0000 IN. YMRP = .0000 IN.
BREF = 27.0000 IN. ZMRP = .0000 IN.
SCALE = 1.0000

PARAMETRIC DATA

W = .050 RN/L = 3.500

MACH (1) = 5.240 HAW/HT(1) = .907 RN/L = 3.4796 PO = 342.45 TO = 1494.2 HO = 367.94

SECTION (1)GAP FWD DEPENDENT VARIABLE H/HREF

YI	-5.2500	-1.5000	-.5000	.2500	.5000	.7500	1.0000	1.5000	2.0000	3.0000	4.0000	5.0000	6.0000	7.0000	8.0000
ZI/D															
.014	.0000	.0000	.0000	.4345	.0000	.0000	.2991	.0000	.0000	.0000				.0000	
.100	.0000	.0000	.0000	.2855	.0000	.0000	.1288	.0000	.0000	.0000				.0000	
.200	.0000	.0000	.0000	.2053	.0000	.0000	.0000	.0000	.0000	.0000				.0000	
.400	.0000	.0000	.0000	.0553	.0000	.0000	.0341	.0000	.0000	.0000	.0000	.0000	.0000	.0000	.0000
.800	.0000	.0000	.0000	.0000	.0000	.0000	.0000	.0000	.0000	.0000				.0000	

YI	9.0000	10.0000
ZI/D		
.014		.0000
.100		.0000
.200		.0000
.400	.0000	.0000
.800		.0000

ARC35-200(H27 FP/GAP C GAP FWD (RE3F04) (28 FEB 75)

REFERENCE DATA

SREF = 11.2500 SQ.FT. XMRP = .0000 IN.
LREF = 60.0000 IN. YMRP = .0000 IN.
BREF = 27.0000 IN. ZMRP = .0000 IN.
SCALE = 1.0000

PARAMETRIC DATA

W = .050 RN/L = 3.500

MACH (1) = 5.240 HAW/HT(1) = .907 RN/L = 3.6120 PO = 349.35 TO = 1478.2 HO = 363.75

SECTION (1)GAP FWD DEPENDENT VARIABLE H/HREF

YI	-5.2500	-1.5000	-.5000	.2500	.5000	.7500	1.0000	1.5000	2.0000	3.0000	4.0000	5.0000	6.0000	7.0000	8.0000
ZI/D															
.014	.1873	.0000	.0000	.3036	.0000	.0000	.0000	.0000	.0000	.0000				.2902	
.100	.0646	.0000	.0000	.1104	.0000	.1429	.0000	.0000	.0000	.0000				.0509	
.200	.0188	.0000	.0000	.0000	.0000	.0249	.0000	.0000	.0000	.0000				.0000	
.400	.0000	.0000	.0000	.0000	.0000	.0013	.0000	.0000	.0000	.0000	.0000	.0000	.0000	.0000	.0000
.800	.0000	.0000	.0000	.0000	.0000	.0000	.0000	.0000	.0000	.0000				.0000	

YI	9.0000	10.0000
ZI/D		
.014		.0000
.100		.0000
.200		.0000
.400	.0000	.0000
.800		.0000

ARC35-2001H27 FP/GAP F GAP FWD (RE3F05) (28 FEB 75)

REFERENCE DATA

SREF = 11.2500 SQ.FT. XMRP = .0000 IN.
LREF = 60.0000 IN. YMRP = .0000 IN.
BREF = 27.0000 IN. ZMRP = .0000 IN.
SCALE = 1.0000

PARAMETRIC DATA

W = .050 RN/L = 3.500

MACH (1) = 5.240 HAW/HT(1) = .907 RN/L = 3.4695 PO = 352.78 TO = 1524.6 HO = 375.94

SECTION (1)GAP FWD DEPENDENT VARIABLE H/HREF

YI	-5.2500	-1.5000	-.5000	.2500	.5000	.7500	1.0000	1.5000	2.0000	3.0000	4.0000	5.0000	6.0000	7.0000	8.0000
ZI/D															
.014	.0000	.0000	.0000	.2696	.0000	.0000	.0000	.0000	.2080	.0000				.0000	
.100	.0000	.0000	.0000	.0912	.0000	.1244	.0000	.0000	.0907	.0000				.0000	
.200	.0000	.0000	.0000	.0000	.0000	.0103	.0000	.0000	.0117	.0000				.0000	
.400	.0000	.0000	.0000	.0040	.0000	.0000	.0000	.0000	.0000	.0000	.0000	.0000	.0000	.0000	.0000
.800	.0000	.0000	.0000	.0046	.0000	.0000	.0000	.0000	.0000	.0000				.0000	

YI	9.0000	10.0000
ZI/D		
.014		.0000
.100		.0000
.200		.0000
.400	.0000	.0000
.800		.0000

ARC35-200(H27 FP/GAP A GAP FWD (RE3F06) (28 FEB 75)

REFERENCE DATA

SREF = 11.2500 SQ.FT. XMRP = .0000 IN.
LREF = 60.0000 IN. YMRP = .0000 IN.
BREF = 27.0000 IN. ZMRP = .0000 IN.
SCALE = 1.0000

PARAMETRIC DATA

W = .050 RN/L = 3.500

MACH (1) = 5.240 HAW/HT(1) = .907 RN/L = 3.3940 PO = 353.31 TO = 1546.8 HO = 381.80

SECTION (1)GAP FWD DEPENDENT VARIABLE H/HREF

YI	-5.2500	-1.5000	-.5000	.2500	.5000	.7500	1.0000	1.5000	2.0000	3.0000	4.0000	5.0000	6.0000	7.0000	8.0000
ZI/D															
.014	.1902	.0000	.0000	.0000	.0000	.0000	.0000	.2620	.0000	.0000				.2354	
.100	.0694	.0000	.0000	.0000	.0000	.1252	.0000	.0993	.0000	.0000				.0344	
.200	.0107	.0000	.0000	.0000	.0000	.0149	.0000	.0169	.0000	.0000				.0000	
.400	.0000	.0000	.0000	.0000	.0000	.0000	.0000	.0000	.0000	.0000	.0000	.0000	.0000	.0000	.0000
.800	.0000	.0000	.0000	.0000	.0000	.0000	.0000	.0000	.0000	.0000				.0000	

YI	9.0000	10.0000
ZI/D		
.014		.0000
.100		.0000
.200		.0000
.400	.0000	.0000
.800		.0000

ARC35-200IH27 FP/GAP B GAP FWD (RE3F07) (28 FEB 75)

REFERENCE DATA

SREF = 11.2500 SQ.FT. XMRP = .0000 IN.
LREF = 60.0000 IN. YMRP = .0000 IN.
BREF = 27.0000 IN. ZMRP = .0000 IN.
SCALE = 1.0000

PARAMETRIC DATA

W = .100 RN/L = 3.500

MACH (1) = 5.240 HAW/HT(1) = .907 RN/L = 3.7415 PO = 350.08 TO = 1448.1 HO = 355.89

SECTION (1)GAP FWD DEPENDENT VARIABLE H/HREF

YI	-5.2500	-1.5000	-.5000	.2500	.5000	.7500	1.0000	1.5000	2.0000	3.0000	4.0000	5.0000	6.0000	7.0000	8.0000
ZI/D															
.014	.0000	.0000	.0000	.0000	.0000	.0000	.4101	.0000	.0000	.0000				.0000	
.100	.0000	.0000	.0000	.4296	.0000	.0000	.2893	.0000	.0000	.0000				.0000	
.200	.0000	.0000	.0000	.0000	.0000	.0000	.2285	.0000	.0000	.0000				.0000	
.400	.0000	.0000	.0000	.1924	.0000	.0000	.0000	.0000	.0000	.0000	.0000	.0000	.0000	.0000	.0000
.800	.0000	.0000	.0000	.0963	.0000	.0000	.0771	.0000	.0000	.0000				.0000	

YI	9.0000	10.0000
ZI/D		
.014		.0000
.100		.0000
.200		.0000
.400	.0000	.0000
.800		.0000

ARC35-200IH27 FP/GAP C GAP FWD (RE3F08) (28 FEB 75)

REFERENCE DATA

SREF = 11.2500 SQ.FT. XMRP = .0000 IN.
LREF = 60.0000 IN. YMRP = .0000 IN.
BREF = 27.0000 IN. ZMRP = .0000 IN.
SCALE = 1.0000

PARAMETRIC DATA

W = .100 RN/L = 3.500

MACH (1) = 5.240 HAW/HT(1) = .907 RN/L = 3.4306 PO = 348.32 TO = 1523.2 HO = 375.58

SECTION (1)GAP FWD DEPENDENT VARIABLE H/HREF

YI	-5.2500	-1.5000	-.5000	.2500	.5000	.7500	1.0000	1.5000	2.0000	3.0000	4.0000	5.0000	6.0000	7.0000	8.0000
ZI/D															
.014	.1993	.0000	.0000	.3185	.0000	.0000	.0000	.0000	.0000	.0000				.0000	
.100	.0179	.0000	.0000	.1355	.0000	.1700	.0000	.0000	.0000	.0000				.0610	
.200	.0281	.0000	.0000	.0000	.0000	.0451	.0000	.0000	.0000	.0000				.0000	
.400	.0000	.0000	.0000	.0000	.0000	.0121	.0000	.0000	.0000	.0000	.0000	.0000	.0000	.0000	.0000
.800	.0000	.0000	.0000	.0000	.0000	.0000	.0000	.0000	.0000	.0000				.0000	

YI	9.0000	10.0000
ZI/D		
.014		.0000
.100		.0000
.200		.0000
.400	.0000	.0000
.800		.0000

ARC35-2001H27 FP/GAP B GAP FWD (RE3F09) (28 FEB 75)

REFERENCE DATA

SREF = 11.2500 SQ.FT. XMRP = .0000 IN.
LREF = 60.0000 IN. YMRP = .0000 IN.
BREF = 27.0000 IN. ZMRP = .0000 IN.
SCALE = 1.0000

PARAMETRIC DATA

W = .050 RN/L = 1.000

MACH (1) = 5.220 HAW/HT(1) = .873 RN/L = 1.0476 PO = 102.37 TO = 1496.5 HO = 368.55

SECTION (1)GAP FWD DEPENDENT VARIABLE H/HREF

YI	-5.2500	-1.5000	-.5000	.2500	.5000	.7500	1.0000	1.5000	2.0000	3.0000	4.0000	5.0000	6.0000	7.0000	8.0000
ZI/D															
.014	.0000	.0000	.0000	.0000	.0000	.0000	.0554	.0000	.0000	.0000				.0000	
.100	.0000	.0000	.0000	.0310	.0000	.0000	.0264	.0000	.0000	.0000				.0000	
.200	.0000	.0000	.0000	.0000	.0000	.0000	.0000	.0000	.0000	.0000				.0000	
.400	.0000	.0000	.0000	.0000	.0000	.0000	.0000	.0000	.0000	.0000	.0000	.0000	.0000	.0000	.0000
.800	.0000	.0000	.0000	.0000	.0000	.0000	.0000	.0000	.0000	.0000				.0000	

YI	9.0000	10.0000
ZI/D		
.014		.0000
.100		.0000
.200		.0000
.400	.0000	.0000
.800		.0000

ARC35-200IH27 FP/GAP C GAP FWD (RE3F10) (28 FEB 75)

REFERENCE DATA

SREF = 11.2500 SQ.FT. XMRP = .0000 IN.
LREF = 60.0000 IN. YMRP = .0000 IN.
BREF = 27.0000 IN. ZMRP = .0000 IN.
SCALE = 1.0000

PARAMETRIC DATA

W = .050 RN/L = 1.000

MACH (1) = 5.220 HAW/HT(1) = .873 RN/L = .98501 PO = 95.049 TO = 1484.9 HO = 365.51

SECTION (1)GAP FWD DEPENDENT VARIABLE H/HREF

YI	-5.2500	-1.5000	-.5000	.2500	.5000	.7500	1.0000	1.5000	2.0000	3.0000	4.0000	5.0000	6.0000	7.0000	8.0000
ZI/D															
.014	.0426	.0000	.0000	.0585	.0000	.0000	.0000	.0000	.0000	.0000				.0764	
.100	.0193	.0000	.0000	.0000	.0000	.0253	.0000	.0000	.0000	.0000				.0159	
.200	.0000	.0000	.0000	.0000	.0000	.0037	.0000	.0000	.0000	.0000				.0000	
.400	.0000	.0000	.0000	.0000	.0000	.0001	.0000	.0000	.0000	.0000	.0000	.0000	.0000	.0000	.0000
.800	.0000	.0000	.0000	.0000	.0000	.0000	.0000	.0000	.0000	.0000				.0000	

YI	9.0000	10.0000
ZI/D		
.014		.0000
.100		.0000
.200		.0000
.400	.0000	.0000
.800		.0000

ARC35-200IH27 FP/GAP A GAP FWD (RE3F11) (28 FEB 75)

REFERENCE DATA

SREF = 11.2500 SQ.FT. XMRP = .0000 IN.
LREF = 60.0000 IN. YMRP = .0000 IN.
BREF = 27.0000 IN. ZMRP = .0000 IN.
SCALE = 1.0000

PARAMETRIC DATA

W = .050 RN/L = 1.000

MACH (1) = 5.220 HAW/HT(1) = .873 RN/L = 1.1677 PO = 111.47 TO = 1475.0 HO = 362.91

SECTION (1)GAP FWD DEPENDENT VARIABLE H/HREF

YI	-5.2500	-1.5000	-.5000	.2500	.5000	.7500	1.0000	1.5000	2.0000	3.0000	4.0000	5.0000	6.0000	7.0000	8.0000
ZI/D															
.014	.0468	.0000	.0000	.0000	.0000	.0000	.0000	.0587	.0000	.0000				.0000	
.100	.0196	.0000	.0000	.0000	.0000	.0292	.0000	.0000	.0000	.0000				.0136	
.200	.0032	.0000	.0000	.0000	.0000	.0036	.0000	.0000	.0000	.0000				.0000	
.400	.0000	.0000	.0000	.0000	.0000	.0000	.0000	.0000	.0000	.0000	.0000	.0000	.0000	.0000	.0000
.800	.0000	.0000	.0000	.0000	.0000	.0000	.0000	.0000	.0000	.0000				.0000	

YI	9.0000	10.0000
ZI/D		
.014		.0000
.100		.0000
.200		.0000
.400	.0000	.0000
.800		.0000

ARC35-2001H27 FP/CYL(2RT)/GAP B GAP FWD (PE3F16) (18 NOV 75)

REFERENCE DATA

SREF = 11.2500 SQ.FT. XMRP = .0000 IN.
LREF = 60.0000 IN. YMRP = .0000 IN.
BREF = 27.0000 IN. ZMRP = .0000 IN.
SCALE = 1.0000

PARAMETRIC DATA

W = .050 RN/L = 3.500

MACH (1) = 5.240 HAW/HT(1) = .907 RN/L = 3.5001 PO = 349.54 TO = 1507.7 HO = 371.51

SECTION (1) DEPENDENT VARIABLE H/HREF

YI	-5.2500	-1.5000	-.5000	.2500	.5000	.7500	1.0000	1.5000	2.0000	3.0000	4.0000	5.0000	6.0000	7.0000	8.0000
ZI/D															
.014	.0000	.0000	.0000	6.1184	.0000	.0000	3.9814	.0000	.0000	.0000				.5873	
.100	.0000	.0000	.0000	3.1516	.0000	3.5797	2.5850	.0000	.0000	.0000				.1875	
.200	.0000	.0000	.0000	2.1476	.0000	2.0129	1.6180	.0000	.0000	.0000				.1487	
.400	.0000	.0000	.0000	1.4949	.0000	1.6077	1.4615	.0000	.0000	.0000	.2033	.1877	.1987	.1260	.0000
.800	.0000	.0000	.0000	.8691	.0000	.8838	.9915	.0000	.0000	.0000				.1047	

YI	9.0000	10.0000
ZI/D		
.014		.0000
.100		.0000
.200		.0000
.400	.0442	.0000
.800		.0000

ARC35-200IH27 FP/CYL(2RT)/GAP B GAP FWD (PE3F17) (18 NOV 75)

REFERENCE DATA

SREF = 11.2500 SQ.FT. XMRP = .0000 IN.
LREF = 60.0000 IN. YMRP = .0000 IN.
BREF = 27.0000 IN. ZMRP = .0000 IN.
SCALE = 1.0000

PARAMETRIC DATA

W = .100 RN/L = 3.500

MACH (1) = 5.240 HAW/HT(1) = .907 RN/L = 3.5702 PO = 348.81 TO = 1488.2 HO = 366.39

SECTION (1) DEPENDENT VARIABLE H/HREF

YI	-5.2500	-1.5000	-.5000	.2500	.5000	.7500	1.0000	1.5000	2.0000	3.0000	4.0000	5.0000	6.0000	7.0000	8.0000
ZI/D															
.014	.0000	.0000	.0000	6.0198	.0000	.0000	3.5087	.0000	.0000	.0000				.6589	
.100	.0000	.0000	.0000	2.9894	.0000	3.1473	2.2649	.0000	.0000	.0000				.2795	
.200	.0000	.0000	.0000	.0000	.0000	1.7581	1.3771	.0000	.0000	.0000				.2921	
.400	.0000	.0000	.0000	1.7081	.0000	1.6740	1.4838	.0000	.0000	.0000	.2732	.3978	.4000	.2684	.0000
.800	.0000	.0000	.0000	1.2871	.0000	1.2907	1.3485	.0000	.0000	.0000				.2693	

YI	9.0000	10.0000
ZI/D		
.014		.0000
.100		.0000
.200		.0000
.400	.1772	.0000
.800		.0000

ARC35-200(H27 FP/CYL(2RT)/GAP C GAP FWD (RE3F18) (28 FEB 75)

REFERENCE DATA

SREF = 11.2500 SQ.FT. XMRP = .0000 IN.
LREF = 60.0000 IN. YMRP = .0000 IN.
BREF = 27.0000 IN. ZMRP = .0000 IN.
SCALE = 1.0000

PARAMETRIC DATA

W = .050 RN/L = 3.500

MACH (1) = 5.240 HAW/HT(1) = .907 RN/L = 3.4655 PO = 349.96 TO = 1518.1 HO = 374.24

SECTION (1)GAP FWD DEPENDENT VARIABLE H/HREF

YI	-5.2500	-1.5000	-.5000	.2500	.5000	.7500	1.0000	1.5000	2.0000	3.0000	4.0000	5.0000	6.0000	7.0000	8.0000
ZI/D															
.014	.0000	3.0547	.0000	9.4635	.0000	.0000	.0000	.0000	.0000	.0000				.5234	
.100	.0000	2.5369	.0000	4.4784	.0000	4.6612	.0000	.0000	.0000	.0000				.1721	
.200	.0000	2.0054	.0000	.0000	.0000	2.2790	.0000	.0000	.0000	.0000				.1343	
.400	.0000	.0000	.0000	2.4842	.0000	2.1851	.0000	.0000	.0000	.0000	.0000	.0000	.0000	.1208	.0000
.800	.0000	.6101	.0000	1.5973	.0000	1.1108	.0000	.0000	.0000	.0000				.1065	

YI	9.0000	10.0000
ZI/D		
.014		.0000
.100		.0000
.200		.0000
.400	.0000	.0000
.800		.0000

ARC35-200(H27 FP/CYL(2RT)/GAP C GAP FWD (RE3F19) (28 FEB 75)

REFERENCE DATA

SREF = 11.2500 SQ.FT. XMRP = .0000 IN.
LREF = 60.0000 IN. YMRP = .0000 IN.
BREF = 27.0000 IN. ZMRP = .0000 IN.
SCALE = 1.0000

PARAMETRIC DATA

W = .100 RN/L = 3.500

MACH (1) = 5.240 HAW/HT(1) = .907 RN/L = 3.4339 PO = 350.76 TO = 1528.9 HO = 377.07

SECTION (1)GAP FWD DEPENDENT VARIABLE H/HREF

Y1	-5.2500	-1.5000	-.5000	.2500	.5000	.7500	1.0000	1.5000	2.0000	3.0000	4.0000	5.0000	6.0000	7.0000	8.0000
Z1/D															
.014	.0000	2.7430	.0000	9.3240	.0000	.0000	.0000	.0000	.0000	.0000				.8981	
.100	.0000	2.4018	.0000	4.5647	.0000	4.5945	.0000	.0000	.0000	.0000				.3069	
.200	.0000	2.1702	.0000	.0000	.0000	2.0879	.0000	.0000	.0000	.0000				.2393	
.400	.0000	.0000	.0000	2.6903	.0000	2.4786	.0000	.0000	.0000	.0000	.0000	.0000	.0000	.2141	.0000
.800	.0000	1.3610	.0000	2.5384	.0000	1.6461	.0000	.0000	.0000	.0000				.2159	

Y1	9.0000	10.0000
Z1/D		
.014		.0000
.100		.0000
.200		.0000
.400	.0000	.0000
.800		.0000

ARC35-200IH27 FP/CYL(2RT)/GAP F GAP FWD (RE3F20) (28 FEB 75)

REFERENCE DATA

SREF = 11.2500 SQ.FT. XMRP = .0000 IN.
LREF = 60.0000 IN. YMRP = .0000 IN.
BREF = 27.0000 IN. ZMRP = .0000 IN.
SCALE = 1.0000

PARAMETRIC DATA

W = .050 RN/L = 3.500

MACH (1) = 5.240 HAW/HT(1) = .907 RN/L = 3.4951 PO = 350.94 TO = 1512.8 HO = 372.84

SECTION (1)GAP FWD DEPENDENT VARIABLE H/HREF

YI	-5.2500	-1.5000	-.5000	.2500	.5000	.7500	1.0000	1.5000	2.0000	3.0000	4.0000	5.0000	6.0000	7.0000	8.0000
ZI/D															
.014	.0000	.0000	.0000	6.6796	.0000	.0000	.0000	.0000	1.1138	.0000				.4422	
.100	.0000	.0000	.0000	3.5989	.0000	1.5862	.0000	.0000	.8146	.0000				.1384	
.200	.0000	.0000	.0000	.0000	.0000	1.0147	.0000	.0000	.7639	.0000				.1061	
.400	.0000	.0000	.0000	1.3529	.0000	1.1029	.0000	.0000	.5882	.0000	.0716	.2167	.1347	.0933	.0000
.800	.0000	.0000	.0000	1.1175	.0000	1.6041	.0000	.0000	.5336	.0000				.0000	

YI	9.0000	10.0000
ZI/D		
.014		.3186
.100		.0000
.200		.0431
.400	.0000	.0338
.800		.0111

ARC35-200IH27 FP/CYL(2RT)/GAP A GAP FWD (RE3F21) (28 FEB 75)

REFERENCE DATA

SREF = 11.2500 SQ.FT. XMRP = .0000 IN.
LREF = 60.0000 IN. YMRP = .0000 IN.
BREF = 27.0000 IN. ZMRP = .0000 IN.
SCALE = 1.0000

PARAMETRIC DATA

W = .050 RN/L = 3.500

MACH (1) = 5.240 HAW/HT(1) = .907 RN/L = 3.5572 PO = 351.58 TO = 1498.1 HO = 368.98

SECTION (1)GAP FWD DEPENDENT VARIABLE H/HREF

YI	-5.2500	-1.5000	-.5000	.2500	.5000	.7500	1.0000	1.5000	2.0000	3.0000	4.0000	5.0000	6.0000	7.0000	8.0000
ZI/D															
.014	.0000	.0000	.0000	8.8084	.0000	.0000	.0000	2.2668	.0000	.0000				.0000	
.100	.0000	.0000	.0000	4.4624	.0000	4.2637	.0000	1.8140	.0000	.0000				.2254	
.200	.0000	.0000	.0000	.0000	.0000	2.5703	.0000	1.7696	.0000	.0000				.2007	
.400	.0000	.0000	.0000	1.4725	.0000	2.0497	.0000	1.6542	.0000	.0000	.0000	.0000	.0000	.1709	.0000
.800	.0000	.0000	.0000	.6109	.0000	.9392	.0000	.0000	.0000	.0000				.1391	

YI	9.0000	10.0000
ZI/D		
.014		.0000
.100		.0000
.200		.0000
.400	.0000	.0000
.800		.0000

ERROR THERE IS NO AERO DATASET NAMED RE3F22

ARC35-200(H27 FP/CYL(2RT+1/4 SPACE)GAP B GAP FWD (RE3F23) (28 FEB 75)

REFERENCE DATA

SREF = 11.2500 SQ.FT. XMRP = .0000 IN.
LREF = 60.0000 IN. YMRP = .0000 IN.
BREF = 27.0000 IN. ZMRP = .0000 IN.
SCALE = 1.0000

PARAMETRIC DATA

W = .050 RN/L = 3.500

MACH (1) = 5.240 HAW/HT(1) = .907 RN/L = 3.5791 PO = 354.77 TO = 1500.8 HO = 369.68

SECTION (1)GAP FWD DEPENDENT VARIABLE H/HREF

YI	-5.2500	-1.5000	-.5000	.2500	.5000	.7500	1.0000	1.5000	2.0000	3.0000	4.0000	5.0000	6.0000	7.0000	8.0000
ZI/D															
.014	.0000	.0000	.0000	8.3429	.0000	.0000	3.6056	.0000	.0000	.0000				.0000	
.100	.0000	.0000	.0000	4.2773	.0000	.0000	2.3793	.0000	.0000	.0000				.0000	
.200	.0000	.0000	.0000	2.6921	.0000	.0000	1.5798	.0000	.0000	.0000				.0000	
.400	.0000	.0000	.0000	2.0410	.0000	.0000	1.7262	.0000	.0000	.0000	.0000	.0000	.0000	.0000	.0000
.800	.0000	.0000	.0000	1.5191	.0000	.0000	1.2864	.0000	.0000	.0000				.0000	

YI	9.0000	10.0000
ZI/D		
.014		.0000
.100		.0000
.200		.0000
.400	.0000	.0000
.800		.0000

ARC35-200IH27 FP/CYL(IRT)/GAP B GAP FWD (RE3F24) (28 FEB 75)

REFERENCE DATA

SREF = 11.2500 SQ.FT. XMRP = .0000 IN.
LREF = 60.0000 IN. YMRP = .0000 IN.
BREF = 27.0000 IN. ZMRP = .0000 IN.
SCALE = 1.0000

PARAMETRIC DATA

W = .050 RN/L = 3.500

MACH (1) = 5.240 HAW/HT(1) = .907 RN/L = 3.5372 PO = 353.26 TO = 1507.8 HO = 371.52

SECTION (1)GAP FWD DEPENDENT VARIABLE H/HREF

YI	-5.2500	-1.5000	-.5000	.2500	.5000	.7500	1.0000	1.5000	2.0000	3.0000	4.0000	5.0000	6.0000	7.0000	8.0000
ZI/D															
.014	.0000	.0000	.0000	5.0765	.0000	.0000	1.5901	.0000	.0000	.0000				.0000	
.100	.0000	.0000	.0000	2.8541	.0000	.0000	1.1508	.0000	.0000	.0000				.0000	
.200	.0000	.0000	.0000	1.5700	.0000	.0000	.9499	.0000	.0000	.0000				.0000	
.400	.0000	.0000	.0000	.8324	.0000	.0000	1.0307	.0000	.0000	.0000	.0000	.0000	.0000	.0000	.0000
.800	.0000	.0000	.0000	.9130	.0000	.0000	.7105	.0000	.0000	.0000				.0000	

YI	9.0000	10.0000
ZI/D		
.014		.0000
.100		.0000
.200		.0000
.400	.0000	.0000
.800		.0000

ARC35-200(H27 FP/CYL(4RT)/GAP B GAP FWD (RE3F25) (28 FEB 75)

REFERENCE DATA

SREF = 11.2500 SQ.FT. XMRP = .0000 IN.
LREF = 60.0000 IN. YMRP = .0000 IN.
BREF = 27.0000 IN. ZMRP = .0000 IN.
SCALE = 1.0000

PARAMETRIC DATA

W = .050 RN/L = 3.500

MACH (1) = 5.240 HAW/HT(1) = .907 RN/L = 3.6076 PO = 350.78 TO = 1483.0 HO = 365.02

SECTION (1)GAP FWD DEPENDENT VARIABLE H/HREF

YI	-5.2500	-1.5000	-.5000	.2500	.5000	.7500	1.0000	1.5000	2.0000	3.0000	4.0000	5.0000	6.0000	7.0000	8.0000
ZI/D															
.014	.0000	.0000	.0000	4.0611	.0000	.0000	6.6592	.0000	.0000	.0000				.0000	
.100	.0000	.0000	.0000	2.0791	.0000	.0000	3.9131	.0000	.0000	.0000				.0000	
.200	.0000	.0000	.0000	1.3605	.0000	.0000	2.2813	.0000	.0000	.0000				.0000	
.400	.0000	.0000	.0000	.7479	.0000	.0000	1.4367	.0000	.0000	.0000	.0000	.0000	.0000	.0000	.0000
.800	.0000	.0000	.0000	.6849	.0000	.0000	.8655	.0000	.0000	.0000				.0000	

YI	9.0000	10.0000
ZI/D		
.014		.0000
.100		.0000
.200		.0000
.400	.0000	.0000
.800		.0000

ARC35-2001H27 FP/CYL(2RT)/GAP B GAP FWD (RE3F26) (28 FEB 75)

REFERENCE DATA

SREF = 11.2500 SQ.FT. XMRP = .0000 IN.
LREF = 60.0000 IN. YMRP = .0000 IN.
BREF = 27.0000 IN. ZMRP = .0000 IN.
SCALE = 1.0000

PARAMETRIC DATA

W = .050 RN/L = 1.000

MACH (1) = 5.220 HAW/HT(1) = .873 RN/L = 1.0370 PO = 101.79 TO = 1500.6 HO = 369.64

SECTION (1)GAP FWD DEPENDENT VARIABLE H/HREF

YI	-5.2500	-1.5000	-.5000	.2500	.5000	.7500	1.0000	1.5000	2.0000	3.0000	4.0000	5.0000	6.0000	7.0000	8.0000
ZI/D															
.014	.0000	.0000	.0000	.0000	.0000	.0000	4.0965	.0000	.0000	.0000				.0000	
.100	.0000	.0000	.0000	3.4926	.0000	.0000	2.6192	.0000	.0000	.0000				.0000	
.200	.0000	.0000	.0000	.0000	.0000	.0000	1.4545	.0000	.0000	.0000				.0000	
.400	.0000	.0000	.0000	1.4529	.0000	.0000	.0000	.0000	.0000	.0000	.0000	.0000	.0000	.0000	.0000
.800	.0000	.0000	.0000	.7541	.0000	.0000	1.0864	.0000	.0000	.0000				.0000	

YI	9.0000	10.0000
ZI/D		
.014		.0000
.100		.0000
.200		.0000
.400	.0000	.0000
.800		.0000

ARC35-2001H27 FP/CYL(2RT)/GAP A GAP FWD (RE3F27) (28 FEB 75)

REFERENCE DATA

SREF = 11.2500 SQ.FT. XMRP = .0000 IN.
LREF = 60.0000 IN. YMRP = .0000 IN.
BREF = 27.0000 IN. ZMRP = .0000 IN.
SCALE = 1.0000

PARAMETRIC DATA

W = .050 RN/L = 1.000

MACH (1) = 5.220 HAW/HT(1) = .873 RN/L = 1.0521 PO = 102.72 TO = 1495.7 HO = 368.35

SECTION (1)GAP FWD DEPENDENT VARIABLE H/HREF

YI	-5.2500	-1.5000	-.5000	.2500	.5000	.7500	1.0000	1.5000	2.0000	3.0000	4.0000	5.0000	6.0000	7.0000	8.0000
ZI/D															
.014	.0000	.0000	.0000	8.1665	.0000	.0000	.0000	2.1903	.0000	.0000				.0000	
.100	.0000	.0000	.0000	4.1443	.0000	4.1985	.0000	1.6921	.0000	.0000				.1049	
.200	.0000	.0000	.0000	.0000	.0000	2.3442	.0000	1.5107	.0000	.0000				.0743	
.400	.0000	.0000	.0000	1.2712	.0000	1.7303	.0000	1.4052	.0000	.0000	.0000	.0000	.0000	.0621	.0000
.800	.0000	.0000	.0000	.4124	.0000	.6162	.0000	.0000	.0000	.0000				.0581	

YI	9.0000	10.0000
ZI/D		
.014		.0000
.100		.0000
.200		.0000
.400	.0000	.0000
.800		.0000

ARC35-2001H27 FP/CYL(2RT)/GAP C GAP FWD (RE3F28) (28 FEB 75)

REFERENCE DATA

SREF = 11.2500 SQ.FT. XMRP = .0000 IN.
LREF = 60.0000 IN. YMRP = .0000 IN.
BREF = 27.0000 IN. ZMRP = .0000 IN.
SCALE = 1.0000

PARAMETRIC DATA

W = .050 RN/L = 1.000

MACH (1) = 5.220 HAW/HT(1) = .873 RN/L = 1.0201 PO = 102.23 TO = 1519.9 HO = 374.72

SECTION (1)GAP FWD DEPENDENT VARIABLE H/HREF

YI	-5.2500	-1.5000	-.5000	.2500	.5000	.7500	1.0000	1.5000	2.0000	3.0000	4.0000	5.0000	6.0000	7.0000	8.0000
ZI/D															
.014	.0000	.0000	.0000	7.2485	.0000	.0000	.0000	.0000	.0000	.0000				.2484	
.100	.0000	2.2981	.0000	3.5958	.0000	4.9232	.0000	.0000	.0000	.0000				.0659	
.200	.0000	1.3845	.0000	.0000	.0000	2.0580	.0000	.0000	.0000	.0000				.0000	
.400	.0000	.0000	.0000	1.6498	.0000	1.4983	.0000	.0000	.0000	.0000	.0000	.0000	.0000	.0422	.0000
.800	.0000	.2153	.0000	.9256	.0000	1.1663	.0000	.0000	.0000	.0000				.0415	

YI	9.0000	10.0000
ZI/D		
.014		.0000
.100		.0000
.200		.0000
.400	.0000	.0000
.800		.0000

ARC35-200IH27 FP/CYL(2RT)/GAP F GAP FWD (RE3F29) (28 FEB 75)

REFERENCE DATA

SREF = 11.2500 SQ.FT. XMRP = .0000 IN.
LREF = 60.0000 IN. YMRP = .0000 IN.
BREF = 27.0000 IN. ZMRP = .0000 IN.
SCALE = 1.0000

PARAMETRIC DATA

W = .050 RN/L = 1.000

MACH (1) = 5.220 HAW/HT(1) = .873 RN/L = 1.0109 PO = 104.60 TO = 1550.2 HO = 382.70

SECTION (1)GAP FWD DEPENDENT VARIABLE H/HREF

YI	-5.2500	-1.5000	-.5000	.2500	.5000	.7500	1.0000	1.5000	2.0000	3.0000	4.0000	5.0000	6.0000	7.0000	8.0000
ZI/D															
.014	.0000	.0000	.0000	6.8408	.0000	.0000	.0000	.0000	.7367	.0000				.0000	
.100	.0000	.0000	.0000	3.7486	.0000	1.7645	.0000	.0000	.5753	.0000				.0389	
.200	.0000	.0000	.0000	.0000	.0000	1.0184	.0000	.0000	.6021	.0000				.0235	
.400	.0000	.0000	.0000	1.1442	.0000	.7724	.0000	.0000	.5044	.0000	.0000	.0912	.0524	.0197	.0000
.800	.0000	.0000	.0000	.5945	.0000	1.1810	.0000	.0000	.4351	.0000				.0000	

YI	9.0000	10.0000
ZI/D		
.014		.0362
.100		.0000
.200		.0000
.400	.0000	.0000
.800		.0000

ARC35-200IH27 FP/CYL(2-45)/GAP B GAP FWD (PE3F30) (18 NOV 75)

REFERENCE DATA

SREF = 11.2500 SQ.FT. XMRP = .0000 IN.
LREF = 60.0000 IN. YMRP = .0000 IN.
BREF = 27.0000 IN. ZMRP = .0000 IN.
SCALE = 1.0000

PARAMETRIC DATA

W = .050 RN/L = 3.500

MACH (1) = 5.240 HAW/HT(1) = .907 RN/L = 3.6909 PO = 348.81 TO = 1457.8 HO = 358.42

SECTION (1) DEPENDENT VARIABLE H/HREF

YI	-5.2500	-1.5000	-.5000	.2500	.5000	.7500	1.0000	1.5000	2.0000	3.0000	4.0000	5.0000	6.0000	7.0000	8.0000
ZI/D															
.014	.0000	.0000	.0000	11.2624	.0000	4.7093	7.1263	.0000	.0000	.0000				.9529	
.100	.0000	.0000	.0000	6.6911	.0000	4.8347	4.8879	.0000	.0000	.0000				.3368	
.200	.0000	.0000	.0000	.0000	.0000	4.7950	3.7902	.0000	.0000	.0000				.3002	
.400	.0000	.0000	.0000	4.2622	.0000	4.3984	.0000	.0000	.0000	.0000	.8841	.5393	.0000	.2607	.0000
.800	.0000	.0000	.0000	1.8782	.0000	2.5955	.0000	.0000	.0000	.0000				.2401	

YI	9.0000	10.0000
ZI/D		
.014		.0000
.100		.0000
.200		.0000
.400	.1498	.0000
.800		.0000

ARC35-2001H27 FP/CYL(2-45)/GAP C GAP FWD (RE3F31) (28 FEB 75)

REFERENCE DATA

SREF = 11.2500 SQ.FT. XMRP = .0000 IN.
LREF = 60.0000 IN. YMRP = .0000 IN.
BREF = 27.0000 IN. ZMRP = .0000 IN.
SCALE = 1.0000

PARAMETRIC DATA

W = .050 RN/L = 3.500

MACH (1) = 5.240 HAW/HT(1) = .907 RN/L = 3.6531 PO = 349.60 TO = 1468.5 HO = 361.21

SECTION (1)GAP FWD DEPENDENT VARIABLE H/HREF

YI	-5.2500	-1.5000	-.5000	.2500	.5000	.7500	1.0000	1.5000	2.0000	3.0000	4.0000	5.0000	6.0000	7.0000	8.0000
ZI/D															
.014	.0000	3.4893	.0000	9.8850	.0000	.0000	.0000	.0000	.0000	.0000				1.1617	
.100	.0000	2.5378	.0000	6.7619	.0000	7.2614	.0000	.0000	.0000	.0000				.4781	
.200	.0000	1.7851	.0000	.0000	.0000	6.7676	.0000	.0000	.0000	.0000				.4996	
.400	.0000	.0000	.0000	5.0516	.0000	7.4515	.0000	.0000	.0000	.0000	.0000	.0000	.0000	.4691	.0000
.800	.0000	1.3131	.0000	2.7138	.0000	2.3034	.0000	.0000	.0000	.0000				.3986	

YI	9.0000	10.0000
ZI/D		
.014		.0000
.100		.0000
.200		.0000
.400	.0000	.0000
.800		.0000

ARC35-200(H27 FP/CYL(2-45)/GAP F GAP FWD (RE3F32) (28 FEB 75)

REFERENCE DATA

SREF = 11.2500 SQ.FT. XMRP = .0000 IN.
LREF = 60.0000 IN. YMRP = .0000 IN.
BREF = 27.0000 IN. ZMRP = .0000 IN.
SCALE = 1.0000

PARAMETRIC DATA

W = .050 RN/L = 3.500

MACH (1) = 5.240 HAW/HT(1) = .907 RN/L = 3.6317 PO = 350.58 TO = 1476.4 HO = 363.28

SECTION (1)GAP FWD DEPENDENT VARIABLE H/HREF

YI	-5.2500	-1.5000	-.5000	.2500	.5000	.7500	1.0000	1.5000	2.0000	3.0000	4.0000	5.0000	6.0000	7.0000	8.0000
ZI/D															
.014	.0000	.0000	.0000	12.9172	.0000	.0000	.0000	.0000	1.9240	.0000				1.0775	
.100	.0000	.0000	.0000	9.0304	.0000	7.2939	.0000	.0000	1.7440	.0000				.4082	
.200	.0000	.0000	.0000	.0000	.0000	6.3829	.0000	.0000	2.2719	.0000				.4086	
.400	.0000	.0000	.0000	4.6134	.0000	5.5925	.0000	.0000	2.1716	.0000	.1893	.6030	.4835	.3961	.0000
.800	.0000	.0000	.0000	4.4679	.0000	2.7842	.0000	.0000	1.8285	.0000				.2288	

YI	9.0000	10.0000
ZI/D		
.014		.6798
.100		.0000
.200		.1412
.400	.0000	.1277
.800		.0585

ARC35-200(H27 FP/CYL(2-45)/GAP C GAP FWD (RE3F33) (28 FEB 75)

REFERENCE DATA

SREF = 11.2500 SQ.FT. XMRP = .0000 IN.
LREF = 60.0000 IN. YMRP = .0000 IN.
BREF = 27.0000 IN. ZMRP = .0000 IN.
SCALE = 1.0000

PARAMETRIC DATA

W = .050 RN/L = 1.000

MACH (1) = 5.220 HAW/HT(1) = .873 RN/L = 1.1681 PO = 110.39 TO = 1465.8 HO = 360.51

SECTION (1)GAP FWD DEPENDENT VARIABLE H/HREF

YI	-5.2500	-1.5000	-.5000	.2500	.5000	.7500	1.0000	1.5000	2.0000	3.0000	4.0000	5.0000	6.0000	7.0000	8.0000
ZI/D															
.014	.0000	.0000	.0000	8.2291	.0000	.0000	.0000	.0000	.0000	.0000				.6589	
.100	.0000	1.8035	.0000	5.6853	.0000	6.8355	.0000	.0000	.0000	.0000				.2414	
.200	.0000	1.3770	.0000	.0000	.0000	6.0334	.0000	.0000	.0000	.0000				.0439	
.400	.0000	.0000	.0000	2.9141	.0000	4.4230	.0000	.0000	.0000	.0000	.0000	.0000	.0000	.2044	.0000
.800	.0000	.6651	.0000	1.6801	.0000	2.6503	.0000	.0000	.0000	.0000				.2187	

YI	9.0000	10.0000
ZI/D		
.014		.0000
.100		.0000
.200		.0000
.400	.0000	.0000
.800		.0000

ARC35-200(H27 FP/CYL(2-45)/GAP 8 GAP FWD (RE3F34) (28 FEB 75)

REFERENCE DATA

SREF = 11.2500 SQ.FT. XMRP = .0000 IN.
LREF = 60.0000 IN. YMRP = .0000 IN.
BREF = 27.0000 IN. ZMRP = .0000 IN.
SCALE = 1.0000

PARAMETRIC DATA

W = .050 RN/L = 1.000

MACH (1) = 5.220 HAW/HT(1) = .873 RN/L = 1.0390 PO = 102.54 TO = 1505.6 HO = 370.95

SECTION (1)GAP FWD DEPENDENT VARIABLE H/HREF

YI	-5.2500	-1.5000	-.5000	.2500	.5000	.7500	1.0000	1.5000	2.0000	3.0000	4.0000	5.0000	6.0000	7.0000	8.0000
ZI/D															
.014	.0000	.0000	.0000	.0000	.0000	.0000	6.5938	.0000	.0000	.0000				.0000	
.100	.0000	.0000	.0000	6.1867	.0000	.0000	4.3900	.0000	.0000	.0000				.0000	
.200	.0000	.0000	.0000	.0000	.0000	.0000	3.1827	.0000	.0000	.0000				.0000	
.400	.0000	.0000	.0000	3.6568	.0000	.0000	.0000	.0000	.0000	.0000	.0000	.0000	.0000	.0000	.0000
.800	.0000	.0000	.0000	1.7681	.0000	.0000	2.3411	.0000	.0000	.0000				.0000	

YI	9.0000	10.0000
ZI/D		
.014		.0000
.100		.0000
.200		.0000
.400	.0000	.0000
.800		.0000

ARC35-200IH27 FP/WEDGE/GAP B1 GAP FWD (PE3F35) (18 NOV 75)

REFERENCE DATA

SREF =	11.2500 SQ.FT.	XMRP =	.0000 IN.		
LREF =	60.0000 IN.	YMRP =	.0000 IN.		
BREF =	27.0000 IN.	ZMRP =	.0000 IN.		
SCALE =	1.0000				

PARAMETRIC DATA

W =	.050	RN/L =	3.500		
DELTA =	5.000	BETA =	.000		
H2 =	1.500	D =	7.294		

MACH (1) = 5.240 HAW/H1(1) = .907 RN/L = 3.6916 PO = 353.10 TO = 1468.9 HO = 361.33

SECTION (1) DEPENDENT VARIABLE H/HREF

YI	-5.2500	-1.5000	-.5000	.2500	.5000	.7500	1.0000	1.5000	2.0000	3.0000	4.0000	5.0000	6.0000	7.0000	8.0000
ZI/D															
.014	.0000	.5740	.0000	.6430	.0000	.0000	.6110	.5899	.4544	.6145				.0000	
.100	.0000	.2394	.0000	.4248	.0000	.0000	.2615	.2360	.2030	.1009				.1678	
.200	.0000	.0259	.0000	.0000	.0000	.0000	.0352	.0387	.0000	.0188				.0366	
.400	.0000	.0000	.0000	.3431	.0000	.0000	.0000	.0013	.0000	.0000	.0000	.0000	.0000	.0000	.0000
.800	.0000	.0937	.0000	.1998	.0000	.0000	.0367	.0231	.0089	.0000				.0000	

YI	9.0000	10.0000
ZI/D		
.014		.0000
.100		.0000
.200		.0000
.400	.0000	.0000
.800		.0000

ARC35-200IH27 FP/WEDGE/GAP B1 REVOLVE 45 GAP FWD (PE3F36) (18 NOV 75)

REFERENCE DATA

SREF =	11.2500 SQ.FT.	XMRP =	.0000 IN.		
LREF =	60.0000 IN.	YMRP =	.0000 IN.		
BREF =	27.0000 IN.	ZMRP =	.0000 IN.		
SCALE =	1.0000				

PARAMETRIC DATA

W =	.050	RN/L =	3.500		
DELTA =	5.000	BETA =	.000		
H2 =	1.500	D =	8.794		

MACH (1) = 5.240 HAW/HT(1) = .907 RN/L = 3.5395 PO = 353.15 TO = 1506.9 HO = 371.28

SECTION (1)GAP FWD DEPENDENT VARIABLE H/HREF

YI	-5.2500	-1.5000	-.5000	.2500	.5000	.7500	1.0000	1.5000	2.0000	3.0000	4.0000	5.0000	6.0000	7.0000	8.0000
ZI/D															
.014	.2841	.9166	1.3599	.0000	.8570	.0000	.7918	.0000	.8982	.0000				.2053	
.100	.1265	.5928	.6717	.0000	.4928	.0000	.4066	.0000	.6370	.0000				.0349	
.200	.0474	.2665	.3816	.0000	.1709	.0000	.1029	.0000	.3703	.0000				.0000	
.400	.0000	.0000	.1936	.0000	.0442	.0000	.0125	.0000	.1752	.0000	.0000	.0000	.0000	.0009	.0000
.800	.0000	.0434	.0650	.0000	.0000	.0000	.0199	.0000	.0000	.0000				.0000	

YI	9.0000	10.0000
ZI/D		
.014		.0000
.100		.0000
.200		.0000
.400	.0000	.0000
.800		.0000

ARC35-200IH27 FP/WEDGE/GAP C GAP FWD (RE3F37) (28 FEB 75)

REFERENCE DATA

SREF =	11.2500 SQ.FT.	XMRP =	.0000 IN.		
LREF =	60.0000 IN.	YMRP =	.0000 IN.		
BREF =	27.0000 IN.	ZMRP =	.0000 IN.		
SCALE =	1.0000				

PARAMETRIC DATA

W =	.050	RN/L =	3.500		
DELTA =	5.000	BETA =	.006		
H2 =	.500	D =	4.941		

MACH (1) = 5.240 HAW/HT(1) = .907 RN/L = 3.3242 PO = 353.06 TO = 1566.0 HO = 386.88

SECTION (1)GAP FWD DEPENDENT VARIABLE H/HREF

YI	-5.2500	-1.5000	-.5000	.2500	.5000	.7500	1.0000	1.5000	2.0000	3.0000	4.0000	5.0000	6.0000	7.0000	8.0000
ZI/D															
.014	.0000	.9479	.0000	.0000	.0000	.0000	.0000	.0000	1.0730	.0000				.0000	
.100	.0000	.5672	.0000	.0000	.0000	.5302	.0000	.0000	.7838	.0000				.0000	
.200	.0000	.2420	.0000	.0000	.0000	.1466	.0000	.0000	.5030	.0000				.0000	
.400	.0000	.0000	.0000	.0000	.0000	.0128	.0000	.0000	.2308	.0000	.0000	.0000	.0000	.0000	.0000
.800	.0000	.0375	.0000	.0000	.0000	.0064	.0000	.0000	.0545	.0000				.0000	

YI	9.0000	10.0000
ZI/D		
.014		.0000
.100		.0000
.200		.0000
.400	.0000	.0000
.800		.0000

ARC35-2001H27 FP/WEDGE/GAP C GAP FWD (RE3F38) (28 FEB 75)

REFERENCE DATA

SREF =	11.2500 SQ.FT.	XMRP =	.0000 IN.		
LREF =	60.0000 IN.	YMRP =	.0000 IN.		
BREF =	27.0000 IN.	ZMRP =	.0000 IN.		
SCALE =	1.0000				

PARAMETRIC DATA

W =	.100	RN/L =	3.500		
DELTA =	5.000	BETA =	.000		
H2 =	1.500	D =	8.772		

MACH (1) = 5.240 HAW/HT(1) = .907 RN/L = 3.4696 PO = 348.87 TO = 1514.1 HO = 373.18

SECTION (1)GAP FWD DEPENDENT VARIABLE H/HREF

YI	-5.2500	-1.5000	-.5000	.2500	.5000	.7500	1.0000	1.5000	2.0000	3.0000	4.0000	5.0000	6.0000	7.0000	8.0000
ZI/D															
.014	.0000	.8556	.0000	.0000	.0000	.0000	.0000	.0000	.6835	.0000				.0000	
.100	.0000	.6539	.0000	.0000	.0000	.6802	.0000	.0000	.5216	.0000				.0000	
.200	.0000	.4124	.0000	.0000	.0000	.5129	.0000	.0000	.6601	.0000				.0000	
.400	.0000	.0000	.0000	.0000	.0000	.2499	.0000	.0000	.4622	.0000	.0000	.0000	.0000	.0000	.0000
.800	.0000	.0000	.0000	.0000	.0000	.1051	.0000	.0000	.2117	.0000				.0000	

YI	9.0000	10.0000
ZI/D		
.014		.0000
.100		.0000
.200		.0000
.400	.0000	.0000
.800		.0000

ARC35-200IH27 FP/WEDGE/GAP F GAP FWD (RE3F39) (28 FEB 75)

REFERENCE DATA

SREF =	11.2500 SQ.FT.	XMRP =	.0000 IN.		
LREF =	60.0000 IN.	YMRP =	.0000 IN.		
BREF =	27.0000 IN.	ZMRP =	.0000 IN.		
SCALE =	1.0000				

PARAMETRIC DATA

W =	.050	RN/L =	3.500		
DELTA =	5.000	BETA =	.000		
H2 =	.500	D =	4.941		

MACH (1) = 5.240 HAW/HT(1) = .907 RN/L = 3.2084 PO = 352.76 TO = 1599.6 HO = 395.78

SECTION (1)GAP FWD DEPENDENT VARIABLE H/HREF

YI	-5.2500	-1.5000	-.5000	.2500	.5000	.7500	1.0000	1.5000	2.0000	3.0000	4.0000	5.0000	6.0000	7.0000	8.0000
ZI/D															
.014	.0000	.0000	.0000	.8948	.0000	.0000	.0000	.0000	.9436	.0000				.0000	
.100	.0000	.0000	.0000	.4823	.0000	.4623	.0000	.0000	.6383	.0000				.0000	
.200	.0000	.0000	.0000	.0000	.0000	.1257	.0000	.0000	.3828	.0000				.0000	
.400	.0000	.0000	.0000	.0934	.0000	.0161	.0000	.0000	.1871	.0000	.0538	.0278	.0000	.0000	.0000
.800	.0000	.0000	.0000	.1082	.0000	.0690	.0000	.0000	.0298	.0000				.0000	

YI	9.0000	10.0000
ZI/D		
.014		.0000
.100		.0000
.200		.0000
.400	.0000	.0000
.800		.0000

ARC35-200(H27 FP/WEDGE/GAP B2 GAP FWD (PE3F40) (18 NOV 75)

REFERENCE DATA

SREF =	11.2500 SQ.FT.	XMRP =	.0000 IN.		
LREF =	60.0000 IN.	YMRP =	.0000 IN.		
BREF =	27.0000 IN.	ZMRP =	.0000 IN.		
SCALE =	1.0000				

PARAMETRIC DATA

W =	.050	RN/L =	3.500
DELTA =	5.000	BETA =	.000
H2 =	1.500	D =	8.294

MACH (1) = 5.240 HAW/HT(1) = .907 RN/L = 3.5869 PO = 354.17 TO = 1497.3 HO = 368.77

SECTION (1) DEPENDENT VARIABLE H/HREF

YI	-5.2500	-1.5000	-.5000	.2500	.5000	.7500	1.0000	1.5000	2.0000	3.0000	4.0000	5.0000	6.0000	7.0000	8.0000
ZI/D															
.014	.0000	.6262	.0000	1.0105	.0000	.0000	.6597	.6316	.4536	.5560				.0000	
.100	.0000	.2567	.0000	.8113	.0000	.0000	.2852	.2579	.2091	.1209				.1486	
.200	.0000	.0594	.0000	.0000	.0000	.0000	.0650	.0615	.0609	.0681				.0237	
.400	.0000	.0000	.0000	.8306	.0000	.0000	.1438	.0882	.0940	.0954	.0000	.0000	.0000	.0042	.0000
.800	.0000	.2151	.0000	.2819	.0000	.0000	.3057	.2210	.1782	.0939				.0000	

YI	9.0000	10.0000
ZI/D		
.014		.0000
.100		.0000
.200		.0000
.400	.0000	.0000
.800		.0000

ARC35-2001H27 FP/WEDGE/GAP B3 GAP FWD (PE3F41) (18 NOV 75)

REFERENCE DATA

SREF =	11.2500 SQ.FT.	XMRP =	.0000 IN.		
LREF =	60.0000 IN.	YMRP =	.0000 IN.		
BREF =	27.0000 IN.	ZMRP =	.0000 IN:		
SCALE =	1.0000				

PARAMETRIC DATA

W =	.050	RN/L =	3.500
DELTA =	5.000	BETA =	.000
H2 =	1.500	D =	9.294

MACH (1) = 5.240 HAW/HT(1) = .907 RN/L = 3.6340 PO = 350.05 TO = 1474.6 HO = 362.81

SECTION (1) DEPENDENT VARIABLE H/HREF

YI	-5.2500	-1.5000	-.5000	.2500	.5000	.7500	1.0000	1.5000	2.0000	3.0000	4.0000	5.0000	6.0000	7.0000	8.0000
ZI/D															
.014	.0000	.6219	.0000	.0000	.0000	.0000	.6829	.6299	.5768	.7625				.0000	
.100	.0000	.3493	.0000	1.1650	.0000	.0000	.3904	.3779	.3606	.0000				.1251	
.200	.0000	.3391	.0000	.0000	.0000	.0000	.0000	.3703	.3282	.2745				.0304	
.400	.0000	.0000	.0000	.8975	.0000	.0000	.0000	.3371	.2705	.0000	.0000	.0000	.0000	.0175	.0000
.800	.0000	.1772	.0000	.4905	.0000	.0000	.0000	.0000	.1400	.0812				.0065	

YI	9.0000	10.0000
ZI/D		
.014		.0000
.100		.0000
.200		.0000
.400	.0000	.0000
.800		.0000

ARC35-200IH27 FP/WEDGE/GAP C GAP FWD (RE3F42) (28 FEB 75)

REFERENCE DATA

SREF =	11.2500 SQ.FT.	XMRP =	.0000 IN.		
LREF =	60.0000 IN.	YMRP =	.0000 IN.		
BREF =	27.0000 IN.	ZMRP =	.0000 IN.		
SCALE =	1.0000				

PARAMETRIC DATA

W =	.050	RN/L =	3.500		
DELTA =	10.000	BETA =	.000		
H2 =	1.500	D =	8.437		

MACH (1) = 5.240 HAW/HT(1) = .907 RN/L = 3.3600 PO = 353.06 TO = 1555.7 HO = 384.16

SECTION (1)GAP FWD DEPENDENT VARIABLE H/HREF

YI	-5.2500	-1.5000	-.5000	.2500	.5000	.7500	1.0000	1.5000	2.0000	3.0000	4.0000	5.0000	6.0000	7.0000	8.0000
ZI/D															
.014	.0000	1.9811	.0000	.0000	.0000	.0000	.0000	.0000	1.4114	.0000				.0000	
.100	.0000	1.5296	.0000	.0000	.0000	1.5997	.0000	.0000	1.0132	.0000				.0000	
.200	.0000	.8277	.0000	.0000	.0000	1.1400	.0000	.0000	.7649	.0000				.0000	
.400	.0000	.0000	.0000	.0000	.0000	.5733	.0000	.0000	.3702	.0000	.0000	.0000	.0000	.0000	.0000
.800	.0000	.1835	.0000	.0000	.0000	.2784	.0000	.0000	.2640	.0000				.0000	

YI	9.0000	10.0000
ZI/D		
.014		.0000
.100		.0000
.200		.0000
.400	.0000	.0000
.800		.0000

ARC35-200(H27 FP/WEDGE/GAP C GAP FWD (RE3F43) (28 FEB 75)

REFERENCE DATA

SREF =	11.2500 SQ.FT.	XMRP =	.0000 IN.		
LREF =	60.0000 IN.	YMRP =	.0000 IN.		
BREF =	27.0000 IN.	ZMRP =	.0000 IN.		
SCALE =	1.0000				

PARAMETRIC DATA

W =	.050	RN/L =	1.000		
DELTA =	5.000	BETA =	.000		
H2 =	1.500	D =	8.772		

MACH (1) = 5.220 HAW/HT(1) = .873 RN/L = 1.0706 PO = 108.39 TO = 1529.6 HO = 377.25

SECTION (1)GAP FWD DEPENDENT VARIABLE H/HREF

Y1	-5.2500	-1.5000	-.5000	.2500	.5000	.7500	1.0000	1.5000	2.0000	3.0000	4.0000	5.0000	6.0000	7.0000	8.0000
Z1/D															
.014	.0000	1.0015	.0000	.0000	.0000	.0000	.0000	.0000	.3865	.0000				.0000	
.100	.0000	.5654	.0000	.0000	.0000	.5296	.0000	.0000	.2553	.0000				.0000	
.200	.0000	.1446	.0000	.0000	.0000	.3171	.0000	.0000	.1362	.0000				.0000	
.400	.0000	.0000	.0000	.0000	.0000	.1137	.0000	.0000	.0354	.0000	.0000	.0000	.0000	.0000	.0000
.800	.0000	.0000	.0000	.0000	.0000	.0171	.0000	.0000	.0093	.0000				.0000	

Y1	9.0000	10.0000
Z1/D		
.014		.0000
.100		.0000
.200		.0000
.400	.0000	.0000
.800		.0000

ARC35-2001H27 FP/WEDGE/GAP F GAP FWD (RE3F44) (28 FEB 75)

REFERENCE DATA

SREF =	11.2500 SQ.FT.	XMRP =	.0000 IN.		
LREF =	60.0000 IN.	YMRP =	.0000 IN.		
BREF =	27.0000 IN.	ZMRP =	.0000 IN.		
SCALE =	1.0000				

PARAMETRIC DATA

W =	.050	RN/L =	1.000
DELTA =	5.000	BETA =	.000
H2 =	1.500	D =	8.772

MACH (1) = 5.220 HAW/HT(1) = .873 RN/L = 1.0002 PO = 103.68 TO = 1552.0 HO = 383.17

SECTION (1)GAP FWD DEPENDENT VARIABLE H/HREF

YI	-5.2500	-1.5000	-.5000	.2500	.5000	.7500	1.0000	1.5000	2.0000	3.0000	4.0000	5.0000	6.0000	7.0000	8.0000
ZI/D															
.014	.0000	.0000	.0000	.0000	.0000	.0000	.0000	.0000	.2831	.0000				.0000	
.100	.0000	.0000	.0000	.4650	.0000	.5068	.0000	.0000	.2292	.0000				.0000	
.200	.0000	.0000	.0000	.0000	.0000	.2693	.0000	.0000	.1131	.0000				.0000	
.400	.0000	.0000	.0000	.0980	.0000	.0957	.0000	.0000	.0298	.0000	.0000	.0000	.0000	.0000	.0000
.800	.0000	.0000	.0000	.0476	.0000	.0324	.0000	.0000	.0119	.0000				.0000	

YI	9.0000	10.0000
ZI/D		
.014		.0000
.100		.0000
.200		.0000
.400	.0000	.0000
.800		.0000

ARC35-2001H27 FP/GAP B GAP AFT (RE3A03) (28 FEB 75)

REFERENCE DATA

SREF = 11.2500 SQ.FT. XMRP = .0000 IN.
LREF = 60.0000 IN. YMRP = .0000 IN.
BREF = 27.0000 IN. ZMRP = .0000 IN.
SCALE = 1.0000

PARAMETRIC DATA

W = .050 RN/L = 3.500

MACH (1) = 5.240 HAW/HT(1) = .907 RN/L = 3.4796 PO = 342.45 TO = 1494.2 HO = 367.94

SECTION (1)GAP AFT DEPENDENT VARIABLE H/HREF

YI	-6.0000	-5.2500	-4.5000	-3.5000	-2.5000	-1.5000	-.5000	.0000	.2500	.5000	.7500	1.0000	1.5000	2.0000	3.0000
ZI/D															
.014		.0886				.0000	.0000	1.3148	.6411	.0000	.0000	.4305	.0000	.0000	.0000
.057		.2748						1.7356	.5564						.0000
.100		.1171				.0000	.0000	.9532	.3935	.0000	.0000	.1624	.0000	.0000	.0000
.200		.0133				.0000	.0000	.5356	.2055	.0000	.0000	.0668	.0000	.0000	.0000
.300		.0000						.3038	.1153						.0000
.500		.0000							.0000						.0000
.600	.0000	.0000	.0000	.0000	.0000	.0000	.0000	.0000	.0000	.0000	.0000	.0122	.0000	.0000	.0000
.700		.0000						.0000	.0000						.0000
.800		.0000							.0000						.0000
1.000		.0000			.0000	.0000	.0000	.0000	.0000	.0000	.0000	.0000	.0000	.0000	.0000

YI	4.0000	5.0000	6.0000	7.0000	8.0000	9.0000	10.0000
ZI/D							
.014				.2864			.0000
.100				.0707			.0000
.200				.0040			.0000
.600	.0000	.0000	.0000	.0000	.0000	.0000	.0000
1.000	.0000	.0000	.0000	.0000	.0000	.0000	.0000

ARC35-200IH27 FP/GAP C GAP AFT (RE3A04) (28 FEB 75)

REFERENCE DATA

SREF = 11.2500 SQ.FT. XMRP = .0000 IN.
LREF = 60.0000 IN. YMRP = .0000 IN.
BREF = 27.0000 IN. ZMRP = .0000 IN.
SCALE = 1.0000

PARAMETRIC DATA

W = .050 RN/L = 3.500

MACH (1) = 5.240 HAW/HT(1) = .907 RN/L = 3.6120 PO = 349.35 TO = 1478.2 HO = 363.75

SECTION (1)GAP AFT DEPENDENT VARIABLE H/HREF

YI	-6.0000	-5.2500	-4.5000	-3.5000	-2.5000	-1.5000	-.5000	.0000	.2500	.5000	.7500	1.0000	1.5000	2.0000	3.0000
ZI/D															
.014		.4506				.0000	.0000	.5005	.4888	.0000	.4359	.0000	.0000	.0000	.0000
.057		.3314						.3783	.3810						.0000
.100		.1546				.0000	.0000	.2161	.2217	.0000	.1815	.0000	.0000	.0000	.0000
.200		.0315				.0000	.0000	.0327	.0000	.0000	.0283	.0000	.0000	.0000	.0000
.300		.0000						.0000	.0000						.0000
.500		.0000							.0000						.0000
.600	.0000	.0000	.0000	.0000	.0000	.0000	.0000	.0000	.0000	.0000	.0000	.0000	.0000	.0000	.0000
.700		.0000						.0000	.0000						.0000
.800		.0000							.0000						.0000
1.000		.0000			.0000	.0000	.0000	.0000	.0000	.0000	.0000	.0000	.0000	.0000	.0000

YI	4.0000	5.0000	6.0000	7.0000	8.0000	9.0000	10.0000
ZI/D							
.014				.2731			.0000
.100				.1010			.0000
.200				.0000			.0000
.600	.0000	.0000	.0000	.0000	.0000	.0000	.0000
1.000	.0000	.0000	.0000	.0000	.0000	.0000	.0000

ARC35-200(H27 FP/GAP F GAP AFT (RE3A05) (28 FEB 75)

REFERENCE DATA

SREF = 11.2500 SQ.FT. XMRP = .0000 IN.
LREF = 60.0000 IN. YMRP = .0000 IN.
BREF = 27.0000 IN. ZMRP = .0000 IN.
SCALE = 1.0000

PARAMETRIC DATA

W = .050 RN/L = 3.500

MACH (1) = 5.240 HAW/HT(1) = .907 RN/L = 3.4695 PO = 352.78 TO = 1524.6 HO = 375.94

SECTION (1)GAP AFT DEPENDENT VARIABLE H/HREF

YI	-6.0000	-5.2500	-4.5000	-3.5000	-2.5000	-1.5000	-.5000	.0000	.2500	.5000	.7500	1.0000	1.5000	2.0000	3.0000
ZI/D															
.014		.0000				.0000	.0000	.0000	.4538	.0000	.4156	.0000	.0000	.4878	.0000
.057		.0000						.0000	.3436						.0000
.100		.0000				.0000	.0000	.0000	.1889	.0000	.1559	.0000	.0000	.1882	.0000
.200		.0000				.0000	.0000	.0000	.0000	.0000	.0166	.0000	.0000	.0223	.0000
.300		.0000						.0000	.0000						.0000
.500		.0000							.0127						.0000
.600	.0000	.0000	.0000	.0000	.0000	.0000	.0000	.0000	.0100	.0000	.0000	.0000	.0000	.0000	.0000
.700		.0000						.0000	.0066						.0000
.800		.0000							.0000						.0000
1.000		.0000			.0000	.0000	.0000	.0000	.0000	.0000	.0000	.0000	.0000	.0000	.0000

YI	4.0000	5.0000	6.0000	7.0000	8.0000	9.0000	10.0000
ZI/D							
.014				.2037			.4002
.100				.0910			.1082
.200				.0077			.0000
.600	.0000	.0000	.0000	.0000	.0000	.0000	.0000
1.000	.0000	.0000	.0000	.0000	.0000	.0000	.0000

ARC35-2001H27 FP/GAP A GAP AFT (RE3A06) (28 FEB 75)

REFERENCE DATA

SREF = 11.2500 SQ.FT. XMRP = .0000 IN.
LREF = 60.0000 IN. YMRP = .0000 IN.
BREF = 27.0000 IN. ZMRP = .0000 IN.
SCALE = 1.0000

PARAMETRIC DATA

W = .050 RN/L = 3.500

MACH (1) = 5.240 HAW/HT(1) = .907 RN/L = 3.3940 PO = 353.31 TO = 1546.8 HO = 381.80

SECTION (1)GAP AFT DEPENDENT VARIABLE H/HREF

YI	-6.0000	-5.2500	-4.5000	-3.5000	-2.5000	-1.5000	-.5000	.0000	.2500	.5000	.7500	1.0000	1.5000	2.0000	3.0000
ZI/D															
.014		.4629				.0000	.0000	.0000	.0000	.0000	.4235	.0000	.4617	.0000	.0000
.057		.2995						.0000	.0000						.0000
.100		.1250				.0000	.0000	.0000	.0000	.0000	.1514	.0000	.0000	.0000	.0000
.200		.0183				.0000	.0000	.0000	.0000	.0000	.0144	.0000	.0226	.0000	.0000
.300		.0000						.0000	.0000						.0000
.500		.0000							.0000						.0000
.600	.0000	.0000	.0000	.0000	.0000	.0000	.0000	.0000	.0000	.0000	.0000	.0000	.0000	.0000	.0000
.700		.0000						.0000	.0000						.0000
.800		.0000							.0000						.0000
1.000		.0000			.0000	.0000	.0000	.0000	.0000	.0000	.0000	.0000	.0000	.0000	.0000

YI	4.0000	5.0000	6.0000	7.0000	8.0000	9.0000	10.0000
ZI/D							
.014				.2577			.0000
.100				.0762			.0000
.200				.0000			.0000
.600	.0000	.0000	.0000	.0000	.0000	.0000	.0000
1.000	.0000	.0000	.0000	.0000	.0000	.0000	.0000

ARC35-200(H27 FP/GAP B GAP AFT (RE3A07) (28 FEB 75)

REFERENCE DATA

SREF = 11.2500 SQ.FT. XMRP = .0000 IN.
LREF = 60.0000 IN. YMRP = .0000 IN.
BREF = 27.0000 IN. ZMRP = .0000 IN.
SCALE = 1.0000

PARAMETRIC DATA

W = .100 RN/L = 3.500

MACH (1) = 5.240 HAW/HT(1) = .907 RN/L = 3.7415 PO = 350.08 TO = 1448.1 HO = 355.89

SECTION (1)GAP AFT DEPENDENT VARIABLE H/HREF

YI	-6.0000	-5.2500	-4.5000	-3.5000	-2.5000	-1.5000	-.5000	.0000	.2500	.5000	.7500	1.0000	1.5000	2.0000	3.0000
ZI/D															
.014		.3768				.0000	.0000	1.8887	1.0997	.0000	.0000	.0000	.0000	.0000	.0000
.057		.2674						2.1635	1.0171						.0000
.100		.1291				.0000	.0000	1.7207	.7377	.0000	.0000	.3621	.0000	.0000	.0000
.200		.0396				.0000	.0000	1.3569	.0000	.0000	.0000	.2520	.0000	.0000	.0000
.300		.0216						1.0384	.2808						.0000
.500		.0130							.2793						.0000
.600	.0000	.0000	.0000	.0000	.0000	.0000	.0000	.4534	.2202	.0000	.0000	.1140	.0000	.0000	.0000
.700		.0000						.3109	.1692						.0000
.800		.0000							.0951						.0000
1.000		.0000			.0000	.0000	.0000	.0000	.0085	.0000	.0000	.0000	.0000	.0000	.0000

YI	4.0000	5.0000	6.0000	7.0000	8.0000	9.0000	10.0000
ZI/D							
.014				.2376			.0000
.100				.0000			.0000
.200				.0173			.0000
.600	.0000	.0000	.0000	.0000	.0000	.0000	.0000
1.000	.0000	.0000	.0000	.0000	.0000	.0000	.0000

ARC35-200IH27 FP/GAP C GAP AFT (RE3A08) (28 FEB 75)

REFERENCE DATA

SREF = 11.2500 SQ.FT. XMRP = .0000 IN.
LREF = 60.0000 IN. YMRP = .0000 IN.
BREF = 27.0000 IN. ZMRP = .0000 IN.
SCALE = 1.0000

PARAMETRIC DATA

W = .100 RN/L = 3.500

MACH (1) = 5.240 HAW/HT(1) = .907 RN/L = 3.4306 PO = 348.32 TO = 1523.2 HO = 375.58

SECTION (1)GAP AFT DEPENDENT VARIABLE H/HREF

YI	-6.0000	-5.2500	-4.5000	-3.5000	-2.5000	-1.5000	-.5000	.0000	.2500	.5000	.7500	1.0000	1.5000	2.0000	3.0000
ZI/D															
.014		.0960				.0000	.0000	.5707	.5773	.0000	.5228	.0000	.0000	.0000	.0000
.057		.3764						.4266	.4447						.0000
.100		.1782				.0000	.0000	.2354	.2509	.0000	.2187	.0000	.0000	.0000	.0000
.200		.0341				.0000	.0000	.0509	.0593	.0000	.0506	.0000	.0000	.0000	.0000
.300		.0000						.0000	.0000						.0000
.500		.0067							.0000						.0000
.600	.0000	.0056	.0000	.0000	.0000	.0000	.0000	.0000	.0000	.0000	.0000	.0000	.0000	.0000	.0000
.700		.0000						.0000	.0000						.0000
.800		.0000							.0000						.0000
1.000		.0000			.0000	.0000	.0000	.0000	.0000	.0000	.0000	.0000	.0000	.0000	.0000

YI	4.0000	5.0000	6.0000	7.0000	8.0000	9.0000	10..000
ZI/D							
.014				.3411			.0000
.100				.0988			.0000
.200				.0235			.0000
.600	.0000	.0000	.0000	.0000	.0000	.0000	.0000
1.000	.0000	.0000	.0000	.0000	.0000	.0000	.0000

ARC35-200IH27 FP/GAP B GAP AFT (RE3A09) (28 FEB 75)

REFERENCE DATA

SREF = 11.2500 SQ.FT. XMRP = .0000 IN.
LREF = 60.0000 IN. YMRP = .0000 IN.
BREF = 27.0000 IN. ZMRP = .0000 IN.
SCALE = 1.0000

PARAMETRIC DATA

W = .050 RN/L = 1.000

MACH (1) = 5.220 HAW/HT(1) = .873 RN/L = 1.0476 PO = 102.37 TO = 1496.5 HO = 368.55

SECTION (1)GAP AFT DEPENDENT VARIABLE H/HREF

YI	-6.0000	-5.2500	-4.5000	-3.5000	-2.5000	-1.5000	-.5000	.0000	.2500	.5000	.7500	1.0000	1.5000	2.0000	3.0000
ZI/D															
.014		.0000				.0000	.0000	.1359	.0927	.0000	.0000	.0000	.0000	.0000	.0000
.057		.0000						.1102	.0807						.0000
.100		.0279				.0000	.0000	.0712	.0467	.0000	.0000	.0328	.0000	.0000	.0000
.200		.0053				.0000	.0000	.0161	.0000	.0000	.0000	.0000	.0000	.0000	.0000
.300		.0000						.0086	.0000						.0000
.500		.0000							.0000						.0000
.600	.0000	.0000	.0000	.0000	.0000	.0000	.0000	.0000	.0000	.0000	.0000	.0000	.0000	.0000	.0000
.700		.0000						.0000	.0000						.0000
.800		.0000							.0000						.0000
1.000		.0000			.0000	.0000	.0000	.0000	.0000	.0000	.0000	.0000	.0000	.0000	.0000

YI	4.0000	5.0000	6.0000	7.0000	8.0000	9.0000	10.0000
ZI/D							
.014				.0041			.0000
.100				.0000			.0000
.200				.0000			.0000
.600	.0000	.0000	.0000	.0000	.0000	.0000	.0000
1.000	.0000	.0000	.0000	.0000	.0000	.0000	.0000

ARC35-2001H27 FP/GAP C GAP AFT (RE3A10) (28 FEB 75)

REFERENCE DATA

SREF = 11.2500 SQ.FT. XMRP = .0000 IN.
LREF = 60.0000 IN. YMRP = .0000 IN.
BREF = 27.0000 IN. ZMRP = .0000 IN.
SCALE = 1.0000

PARAMETRIC DATA

W = .050 RN/L = 1.000

MACH (1) = 5.220 HAW/HT(1) = .873 RN/L = .98501 PO = 95.049 TO = 1484.9 HO = 365.51

SECTION (1)GAP AFT DEPENDENT VARIABLE H/HREF

YI	-6.0000	-5.2500	-4.5000	-3.5000	-2.5000	-1.5000	-.5000	.0000	.2500	.5000	.7500	1.0000	1.5000	2.0000	3.0000
ZI/D															
.014		.0000				.0000	.0000	.0793	.0723	.0000	.0705	.0000	.0000	.0000	.0000
.057		.0511						.0564	.0566						.0000
.100		.0244				.0000	.0000	.0325	.0354	.0000	.0307	.0000	.0000	.0000	.0000
.200		.0000				.0000	.0000	.0000	.0065	.0000	.0051	.0000	.0000	.0000	.0000
.300		.0000						.0000	.0000						.0000
.500		.0000							.0000						.0000
.600	.0000	.0000	.0000	.0000	.0000	.0000	.0000	.0000	.0000	.0000	.0000	.0000	.0000	.0000	.0000
.700		.0000						.0000	.0000						.0000
.800		.0000							.0000						.0000
1.000		.0000			.0000	.0000	.0000	.0000	.0000	.0000	.0000	.0000	.0000	.0000	.0000

YI	4.0000	5.0000	6.0000	7.0000	8.0000	9.0000	10.0000
ZI/D							
.014				.0541			.0000
.100				.0238			.0000
.200				.0020			.0000
.600	.0000	.0000	.0000	.0000	.0000	.0000	.0000
1.000	.0000	.0000	.0000	.0000	.0000	.0000	.0000

ARC35-2001H27 FP/GAP A GAP AFT (RE3A11) (28 FEB 75)

REFERENCE DATA

SREF = 11.2500 SQ.FT. XMRP = .0000 IN.
LREF = 60.0000 IN. YMRP = .0000 IN.
BREF = 27.0000 IN. ZMRP = .0000 IN.
SCALE = 1.0000

PARAMETRIC DATA

W = .050 RN/L = 1.000

MACH (1) = 5.220 HAW/HT(1) = .873 RN/L = 1.1677 PO = 111.47 TO = 1475.0 HO = 362.91

SECTION (1)GAP AFT DEPENDENT VARIABLE H/HREF

YI	-6.0000	-5.2500	-4.5000	-3.5000	-2.5000	-1.5000	-.5000	.0000	.2500	.5000	.7500	1.0000	1.5000	2.0000	3.0000
ZI/D															
.014		.0897				.0000	.0000	.0000	.0000	.0000	.0570	.0000	.0660	.0000	.0000
.057		.0602						.0000	.0000						.0000
.100		.0266				.0000	.0000	.0000	.0000	.0000	.0300	.0000	.0000	.0000	.0000
.200		.0056				.0000	.0000	.0000	.0000	.0000	.0000	.0000	.0000	.0000	.0000
.300		.0000						.0000	.0000						.0000
.500		.0000							.0000						.0000
.600	.0000	.0000	.0000	.0000	.0000	.0000	.0000	.0000	.0000	.0000	.0000	.0000	.0000	.0000	.0000
.700		.0000						.0000	.0000						.0000
.800		.0000							.0000						.0000
1.000		.0000			.0000	.0000	.0000	.0000	.0000	.0000	.0000	.0000	.0000	.0000	.0000

YI	4.0000	5.0000	6.0000	7.0000	8.0000	9.0000	10.0000
ZI/D							
.014				.0000			.0000
.100				.0215			.0000
.200				.0016			.0000
.600	.0000	.0000	.0000	.0000	.0000	.0000	.0000
1.000	.0000	.0000	.0000	.0000	.0000	.0000	.0000

ARC35-2001H27 FP/CYL (2RT)/GAP 8 GAP AFT (PE3A16) (18 NOV 75)

REFERENCE DATA

SREF = 11.2500 SQ.FT. XMRP = .0000 IN.
LREF = 60.0000 IN. YMRP = .0000 IN.
BREF = 27.0000 IN. ZMRP = .0000 IN.
SCALE = 1.0000

PARAMETRIC DATA

W = .050 RN/L = 3.500

MACH (1) = 5.240 HAW/HT(1) = .907 RN/L = 3.5001 PO = 349.54 TO = 1507.7 HO = 371.51

SECTION (1) DEPENDENT VARIABLE H/HREF

YI	-6.0000	-5.2500	-4.5000	-3.5000	-2.5000	-1.5000	-.5000	.0000	.2500	.5000	.7500	1.0000	1.5000	2.0000	3.0000
ZI/D															
.014		.0000				.0000	.0000	2.5711	2.9068	.0000	4.0533	3.9160	.0000	.0000	.0000
.057		.0000						2.9606	3.2129						.0000
.100		.0000				.0000	.0000	2.4789	2.8078	.0000	3.1137	2.3250	.0000	.0000	.0000
.200		.0000				.0000	.0000	1.8851	1.9773	.0000	1.7650	1.5100	.0000	.0000	.0000
.300		.0000						1.5607	1.5600						.0000
.500		.0000							1.2620						.0000
.600	.0000	.0000	.0000	.0000	.0000	.0000	.0000	1.0517	1.0883	.0000	1.2547	1.2169	.0000	.0000	.0000
.700		.0000						.9093	.9610						.0000
.800		.2090							.8236						.0000
1.000		.0000			.0000	.0000	.0000	.0000	.4261	.0000	.4039	.3788	.0000	.0000	.0000

YI	4.0000	5.0000	6.0000	7.0000	8.0000	9.0000	10.0000
ZI/D							
.014				.4417			.2140
.100				.2593			.0678
.200				.1395			.0371
.600	.0000	.1971	.1915	.1164	.0699	.0405	.0295
1.000	.0614	.0769	.0000	.0294	.0125	.0000	.0000

ARC35-2001H27 FP/CYL(2RT)/GAP B GAP AFT (PE3A17) (18 NOV 75)

REFERENCE DATA

SREF = 11.2500 SQ.FT. XMRP = .0000 IN.
LREF = 60.0000 IN. YMRP = .0000 IN.
BREF = 27.0000 IN. ZMRP = .0000 IN.
SCALE = 1.0000

PARAMETRIC DATA

W = .100 RN/L = 3.500

MACH (1) = 5.240 HAW/HT(1) = .907 RN/L = 3.5702 PO = 348.81 TO = 1488.2 HO = 366.39

SECTION (1) DEPENDENT VARIABLE H/HREF

YI	-6.0000	-5.2500	-4.5000	-3.5000	-2.5000	-1.5000	-.5000	.0000	.2500	.5000	.7500	1.0000	1.5000	2.0000	3.0000
ZI/D															
.014		.0000				.0000	.0000	1.9285	2.5682	.0000	4.3606	.3567	.0000	.0000	.0000
.057		.0000						2.3259	2.7969						.0000
.100		.0000				.0000	.0000	1.9787	2.4474	.0000	2.6153	1.9459	.0000	.0000	.0000
.200		.0000				.0000	.0000	1.6644	1.8272	.0000	1.6067	1.3767	.0000	.0000	.0000
.300		.0000						1.4937	1.5727						.0000
.500		.0000							1.4603						.0000
.600	.0000	.0000	.0000	.0000	.0000	.0000	.0000	1.2671	1.3901	.0000	1.4504	1.3910	.0000	.0000	.0000
.700		.0000						1.1917	1.3261						.0000
.800		.0498							1.2359						.0000
1.000		.0000			.0000	.0000	.0000	.0000	.8845	.0000	.8079	.7323	.0000	.0000	.0000

YI	4.0000	5.0000	6.0000	7.0000	8.0000	9.0000	10.0000
ZI/D							
.014				.5232			.4767
.100				.3743			.3070
.200				.2732			.2586
.600	.2350	.3614	.4323	.2686	.1755	.1782	.2140
1.000	.1061	.1932	.0000	.1151	.0538	.0934	0426

ARC35-2001H27 FP/CYL(2RT)/GAP C GAP AFT (RE3A18) (28 FEB 75)

REFERENCE DATA

SREF = 11.2500 SQ.FT. XMRP = .0000 IN.
LREF = 60.0000 IN. YMRP = .0000 IN.
BREF = 27.0000 IN. ZMRP = .0000 IN.
SCALE = 1.0000

PARAMETRIC DATA

W = .050 RN/L = 3.500

MACH (1) = 5.240 HAW/HT(1) = .907 RN/L = 3.4655 PO = 349.96 TO = 1518.1 HO = 374.24

SECTION (1)GAP AFT DEPENDENT VARIABLE H/HREF

YI	-6.0000	-5.2500	-4.5000	-3.5000	-2.5000	-1.5000	-.5000	.0000	.2500	.5000	.7500	1.0000	1.5000	2.0000	3.0000
ZI/D															
.014		.1150				2.7736	.0000	3.2754	3.8176	.0000	6.4137	.0000	.0000	.0000	.0000
.057		.4343						4.0452	4.1824						.0000
.100		.2683				2.0450	.0000	3.3961	3.6333	.0000	3.6610	.0000	.0000	.0000	.0000
.200		.2306				.0000	.0000	2.9553	.0000	.0000	1.9759	.0000	.0000	.0000	.0000
.300		.2426						2.5026	2.2986						.0000
.500		.2196							2.3463						.0000
.600	.0000	.1983	.0000	.0000	.0000	1.0131	.0000	1.6127	2.0646	.0000	2.2329	.0000	.0000	.0000	.0000
.700		.1870						1.3725	1.7867						.0000
.800		.4428							1.5303						.0000
1.000		.0000			.0000	.2672	.0000	.0000	.9670	.0000	.8266	.0000	.0000	.0000	.0000

YI	4.0000	5.0000	6.0000	7.0000	8.0000	9.0000	10.0000
ZI/D							
.014				.2899			.0000
.100				.1804			.0000
.200				.1212			.0000
.600	.0846	.3663	.2038	.1213	.0827	.0532	.0000
1.000	.0000	.0000	.0000	.0233	.0000	.0000	.0000

ARC35-200IH27 FP/CYL(2RT)/GAP C GAP AFT (RE3A19) (28 FEB 75)

REFERENCE DATA

SREF = 11.2500 SQ.FT. XMRP = .0000 IN.
LREF = 60.0000 IN. YMRP = .0000 IN.
BREF = 27.0000 IN. ZMRP = .0000 IN.
SCALE = 1.0000

PARAMETRIC DATA

W = .100 RN/L = 3.500

MACH (1) = 5.240 HAW/HT(1) = .907 RN/L = 3.4339 PO = 350.76 TO = 1528.9 HO = 377.07

SECTION (1)GAP AFT DEPENDENT VARIABLE H/HREF

YI	-6.0000	-5.2500	-4.5000	-3.5000	-2.5000	-1.5000	-.5000	.0000	.2500	.5000	.7500	1.0000	1.5000	2.0000	3.0000
ZI/D															
.014		.1205				2.7011	.0000	2.3452	2.9487	.0000	5.6750	.0000	.0000	.0000	.0000
.057		.5182						3.1778	3.4065						.0000
.100		.3539				2.0826	.0000	3.1487	3.2165	.0000	3.1786	.0000	.0000	.0000	.0000
.200		.3773				.0000	.0000	3.4890	.0000	.0000	2.2028	.0000	.0000	.0000	.0000
.300		.4432						3.2463	2.6290						.0000
.500		.4530							2.5384						.0000
.600	.0000	.4301	.0000	.0000	.0000	2.0628	.0000	1.9590	2.4501	.0000	2.3155	.0000	.0000	.0000	.0000
.700		.3860						1.6456	2.3690						.0000
.800		.8095							2.2484						.0000
1.000		.0000			.0000	.5844	.0000	.0000	2.0911	.0000	1.8089	.0000	.0000	.0000	.0000

YI	4.0000	5.0000	6.0000	7.0000	8.0000	9.0000	10.0000
ZI/D							
.014				.4583			.0000
.100				.3219			.0000
.200				.2199			.0000
.600	.3215	.5869	.3336	.2188	.1849	.3007	.0000
1.000	.0000	.0000	.0000	.0796	.0000	.0000	.0000

ARC35-2001H27 FP/CYL(2RT)/GAP F GAP AFT (RE3A20) (28 FEB 75)

REFERENCE DATA

SREF = 11.2500 SQ.FT. XMRP = .0000 IN.
LREF = 60.0000 IN. YMRP = .0000 IN.
BREF = 27.0000 IN. ZMRP = .0000 IN.
SCALE = 1.0000

PARAMETRIC DATA

W = .050 RN/L = 3.500

MACH (1) = 5.240 HAW/HT(1) = .907 RN/L = 3.4951 PO = 350.94 TO = 1512.8 HO = 372.84

SECTION (1)GAP AFT DEPENDENT VARIABLE H/HREF

YI	-6.0000	-5.2500	-4.5000	-3.5000	-2.5000	-1.5000	-.5000	.0000	.2500	.5000	.7500	1.0000	1.5000	2.0000	3.0000
ZI/D															
.014		.0000				.0000	.0000	.0000	7.0518	.0000	1.5644	.0000	.0000	1.1898	.0000
.057		.0000						.0000	5.3882						.0000
.100		.0000				.0000	0000	.0000	3.6612	.0000	1.1610	.0000	.0000	.8752	.0000
.200		.0000				.0000	.0000	.0000	1.7152	.0000	.8401	.0000	.0000	.7460	.0000
.300		.0000						.0000	1.2056						.0000
.500		.0000							1.3725						.0000
.600	.0000	.0000	.0000	.0000	.0000	.0000	.0000	.0000	1.2822	.0000	1.6567	.0000	.0000	.5440	.0000
.700		.0000						.0000	1.1544						.0000
.800		.0000							1.0134						.0000
1.000		.0000			.0000	.0000	.0000	.0000	.5837	.0000	.7708	.0000	.0000	.0000	.0000

YI	4.0000	5.0000	6.0000	7.0000	8.0000	9.0000	10.0000
ZI/D							
.014				.2875			.2632
.100				.1597			.0928
.200				.0975			.0433
.600	.3425	.2629	.1367	.0885	.0672	.0453	.0270
1.000	.1153	.0707	.0000	.0161	.0000	.0000	.0000

ARC35-200(H27 FP/CYL(2RT)/GAP A GAP AFT (RE3A21) (28 FEB 75)

REFERENCE DATA

SREF = 11.2500 SQ.FT. XMRP = .0000 IN.
LREF = 60.0000 IN. YMRP = .0000 IN.
BREF = 27.0000 IN. ZMRP = .0000 IN.
SCALE = 1.0000

PARAMETRIC DATA

W = .050 RN/L = 3.500

MACH (1) = 5.240 HAW/HT(1) = .907 RN/L = 3.5572 PO = 351.58 TO = 1498.1 HO = 368.98

SECTION (1)GAP AFT DEPENDENT VARIABLE H/HREF

YI	-6.0000	-5.2500	-4.5000	-3.5000	-2.5000	-1.5000	-.5000	.0000	.2500	.5000	.7500	1.0000	1.5000	2.0000	3.0000
ZI/D															
.014		.0000				.0000	.0000	4.0836	4.4866	.0000	6.3066	.0000	1.8030	.0000	.0000
.057		.0000						5.1014	4.8892						.0000
.100		.0000				.0000	.0000	4.1457	4.2996	.0000	3.9543	.0000	1.5011	.0000	.0000
.200		.0000				.0000	.0000	1.5633	2.8134	.0000	2.3130	.0000	1.4558	.0000	.0000
.300		.0000						1.2214	1.9631						.0000
.500		.0000							1.0587						.0000
.600	.0000	.0000	.0000	.0000	.0000	.0000	.0000	.7006	.8158	.0000	1.4021	.0000	1.3548	.0000	.0000
.700		.0000						.5637	.6776						.0000
.800		.2070							.0000						.0000
1.000		.0000			.0000	.0000	.0000	.0000	.2783	.0000	.0000	.0000	.3255	.0000	.0000

YI	4.0000	5.0000	6.0000	7.0000	8.0000	9.0000	10.0000
ZI/D							
.014				.3948			.0000
.100				.2694			.0000
.200				.1844			.0000
.600	.0000	.0000	.0000	.1512	.0000	.0000	.0000
1.000	.0000	.0000	.0000	.0344	.0000	.0000	.0000

ARC35-200(H27 FP/CYL(2RT+1/4 SPACE)GAP B GAP AFT (RE3A23) (28 FEB 75)

REFERENCE DATA

SREF = 11.2500 SQ.FT. XMRP = .0000 IN.
LREF = 60.0000 IN. YMRP = .0000 IN.
BREF = 27.0000 IN. ZMRP = .0000 IN.
SCALE = 1.0000

PARAMETRIC DATA

W = .050 RN/L = 3.500

MACH (1) = 5.240 HAW/HT(1) = .907 RN/L = 3.5791 PO = 354.77 TO = 1500.8 HO = 369.68

SECTION (1)GAP AFT DEPENDENT VARIABLE H/HREF

YI	-6.0000	-5.2500	-4.5000	-3.5000	-2.5000	-1.5000	-.5000	.0000	.2500	.5000	.7500	1.0000	1.5000	2.0000	3.0000
ZI/D															
.014		.1264				.0000	.0000	5.1846	5.9185	.0000	.0000	3.4082	.0000	.0000	.0000
.057		.6157						5.2285	5.6916						.0000
.100		.4028				.0000	.0000	3.9678	4.3868	.0000	.0000	2.0373	.0000	.0000	.0000
.200		.3201				.0000	.0000	2.4098	2.5293	.0000	.0000	1.4767	.0000	.0000	.0000
.300		.0000						1.9256	1.9089						.0000
.500		.3305							2.0828						.0000
.600	.0000	.3171	.0000	.0000	.0000	.0000	.0000	1.8970	1.9758	.0000	.0000	1.5526	.0000	.0000	.0000
.700		.3133						1.6460	1.7321						.0000
.800		.4611							1.4531						.0000
1.000		.0000			.0000	.0000	.0000	.0000	.6949	.0000	.0000	.5051	.0000	.0000	.0000

YI	4.0000	5.0000	6.0000	7.0000	8.0000	9.0000	10.0000
ZI/D							
.014				.3484			.0000
.100				.2098			.0000
.200				.1389			.0000
.600	.0000	.0000	.0000	.1306	.0000	.0000	.0000
1.000	.0000	.0000	.0000	.0331	.0000	.0000	.0000

ARC35-200(H27 FP/CYL(1RT)/GAP B GAP AFT (RE3A24) (28 FEB 75)

REFERENCE DATA

SREF = 11.2500 SQ.FT. XMRP = .0000 IN.
LREF = 60.0000 IN. YMRP = .0000 IN.
BREF = 27.0000 IN. ZMRP = .0000 IN.
SCALE = 1.0000

PARAMETRIC DATA

W = .050 RN/L = 3.500

MACH (1) = 5.240 HAW/HT(1) = .907 RN/L = 3.5372 PO = 353.26 TO = 1507.8 HO = 371.52

SECTION (1)GAP AFT DEPENDENT VARIABLE H/HREF

YI	-6.0000	-5.2500	-4.5000	-3.5000	-2.5000	-1.5000	-.5000	.0000	.2500	.5000	.7500	1.0000	1.5000	2.0000	3.0000
ZI/D															
.014		.0686				.0000	.0000	2.6629	3.8794	.0000	.0000	1.1375	.0000	.0000	.0000
.057		.2271						2.6475	3.4754						.0000
.100		.1297				.0000	.0000	2.0471	2.5972	.0000	.0000	.8607	.0000	.0000	.0000
.200		.0919				.0000	.0000	1.2082	1.3592	.0000	.0000	.7813	.0000	.0000	.0000
.300		.0000						.8513	.8368						.0000
.500		.0999							1.0759						.0000
.600	.0000	.0993	.0000	.0000	.0000	.0000	.0000	1.2784	1.3262	.0000	.0000	.9041	.0000	.0000	.0000
.700		.0961						1.1275	1.2099						.0000
.800		.1993							.8933						.0000
1.000		.0000			.0000	.0000	.0000	.0000	.3255	.0000	.0000	.2402	.0000	.0000	.0000

YI	4.0000	5.0000	6.0000	7.0000	8.0000	9.0000	10.0000
ZI/D							
.014				.1948			.0000
.100				.0935			.0000
.200				.0569			.0000
.600	.0000	.0000	.0000	.0542	.0000	.0000	.0000
1.000	.0000	.0000	.0000	.0064	.0000	.0000	.0000

ARC35-2001H27 FP/CYL(4RT)/GAP B GAP AFT (RE3A25) (28 FEB 75)

REFERENCE DATA

SREF = 11.2500 SQ.FT. XMRP = .0000 IN.
LREF = 60.0000 IN. YMRP = .0000 IN.
BREF = 27.0000 IN. ZMRP = .0000 IN.
SCALE = 1.0000

PARAMETRIC DATA

W = .050 RN/L = 3.500

MACH (1) = 5.240 HAW/HT(1) = .907 RN/L = 3.6076 PO = 350.78 TO = 1483.0 HO = 365.02

SECTION (1)GAP AFT DEPENDENT VARIABLE H/HREF

YI	-6.0000	-5.2500	-4.5000	-3.5000	-2.5000	-1.5000	-.5000	.0000	.2500	.5000	.7500	1.0000	1.5000	2.0000	3.0000
ZI/D															
.014		.1423				.0000	.0000	1.8859	1.8283	.0000	.0000	5.3362	.0000	.0000	.0000
.057		.6378						2.2355	1.8896						.0000
.100		.4094				.0000	.0000	1.9275	1.7697	.0000	.0000	3.6299	.0000	.0000	.0000
.200		.3194				.0000	.0000	1.4836	1.2744	.0000	.0000	2.1689	.0000	.0000	.0000
.300		.0000						1.1705	.8664						.0000
.500		.3326							.6443						.0000
.600	.0000	.3237	.0000	.0000	.0000	.0000	.0000	.7775	.6104	.0000	.0000	.8737	.0000	.0000	.0000
.700		.3007						.7951	.6251						.0000
.800		.2894							.6725						.0000
1.000		.0000			.0000	.0000	.0000	.0000	.4150	.0000	.0000	.4096	.0000	.0000	.0000

YI	4.0000	5.0000	6.0000	7.0000	8.0000	9.0000	10.0000
ZI/D							
.014				.5668			.0000
.100				.4265			.0000
.200				.3213			.0000
.600	.0000	.0000	.0000	.2805	.0000	.0000	.0000
1.000	.0000	.0000	.0000	.0837	.0000	.0000	.0000

ARC35-200(H27 FP/CYL(2RT)/GAP B GAP AFT (RE3A26) (28 FEB 75)

REFERENCE DATA

SREF = 11.2500 SQ.FT. XMRP = .0000 IN.
LREF = 60.0000 IN. YMRP = .0000 IN.
BREF = 27.0000 IN. ZMRP = .0000 IN.
SCALE = 1.0000

PARAMETRIC DATA

W = .050 RN/L = 1.000

MACH (1) = 5.220 HAW/HT(1) = .873 RN/L = 1.0370 PO = 101.79 TO = 1500.6 HO = 369.64

SECTION (1)GAP AFT DEPENDENT VARIABLE H/HREF

YI	-6.0000	-5.2500	-4.5000	-3.5000	-2.5000	-1.5000	-.5000	.0000	.2500	.5000	.7500	1.0000	1.5000	2.0000	3.0000
ZI/D															
.014		.0000				.0000	.0000	2.4943	3.1515	.0000	.0000	.0000	.0000	.0000	.0000
.057		.0000						3.0428	3.5409						.0000
.100		.1523				.0000	0000	2.5538	3.0736	.0000	.0000	2.2023	.0000	.0000	.0000
.200		.1189				.0000	.0000	1 8966	2.0639	.0000	.0000	.0000	.0000	.0000	.0000
.300		.1286						1.5038	1.5782						.0000
.500		.1213							1.1576						.0000
.600	.0000	.1178	.0000	.0000	.0000	.0000	.0000	.9434	.9928	.0000	.0000	1.3027	.0000	.0000	.0000
.700		.0939						.7749	.8604						.0000
.800		.1710							.7122						.0000
1.000		.0000			.0000	.0000	.0000	.0000	.3180	.0000	.0000	.3218	.0000	.0000	.0000

YI	4.0000	5.0000	6.0000	7.0000	8.0000	9.0000	10.0000
ZI/D							
.014				.0977			.0000
.100				.0000			.0000
.200				.0526			.0000
.600	.0000	.0000	.0000	.0476	.0000	.0000	.0000
1.000	.0000	.0000	.0000	.0088	.0000	.0000	.0000

ARC35-2001H27 FP/CYL(2RT)/GAP A GAP AFT (RE3A27) (28 FEB 75)

REFERENCE DATA

SREF = 11.2500 SQ.FT. XMRP = .0000 IN.
LREF = 60.0000 IN. YMRP = .0000 IN.
BREF = 27.0000 IN. ZMRP = .0000 IN.
SCALE = 1.0000

PARAMETRIC DATA

W = .050 RN/L = 1.000

MACH (1) = 5.220 HAW/HT(1) = .873 RN/L = 1.0521 PO = 102.72 TO = 1495.7 HO = 368.35

SECTION (1)GAP AFT DEPENDENT VARIABLE H/HREF

YI	-6.0000	-5.2500	-4.5000	-3.5000	-2.5000	-1.5000	-.5000	.0000	.2500	.5000	.7500	1.0000	1.5000	2.0000	3.0000
ZI/D															
.014		.0000				.0000	.0000	3.2752	3.8097	.0000	5.9060	.0000	1.5439	.0000	.0000
.057		.0000						3.9949	4.4090						.0000
.100		.0000				.0000	.0000	3.2800	3.8121	.0000	3.7834	.0000	.0000	.0000	.0000
.200		.0000				.0000	.0000	2.1805	.0000	.0000	2.1409	.0000	1.2112	.0000	.0000
.300		.0000						1.5406	1.6877						.0000
.500		.0000							.8611						.0000
.600	.0000	.0000	.0000	.0000	.0000	.0000	.0000	.6337	.6543	.0000	1.0208	.0000	.0000	.0000	.0000
.700		.0000						.4719	.5211						.0000
.800		.0438							.0000						.0000
1.000		.0000			.0000	.0000	.0000	.0000	.1344	.0000	.0000	.0000	.1908	.0000	.0000

YI	4.0000	5.0000	6.0000	7.0000	8.0000	9.0000	10.0000
ZI/D							
.014				.0000			.0000
.100				.0860			.0000
.200				.0672			.0000
.600	.0000	.0000	.0000	.0576	.0000	.0000	.0000
1.000	.0000	.0000	.0000	.0080	.0000	.0000	.0000

ARC35-200IH27 FP/CYL(2RT)/GAP C GAP AFT (RE3A28) (28 FEB 75)

REFERENCE DATA

SREF = 11.2500 SQ.FT. XMRP = .0000 IN.
LREF = 60.0000 IN. YMRP = .0000 IN.
BREF = 27.0000 IN. ZMRP = .0000 IN.
SCALE = 1.0000

PARAMETRIC DATA

W = .050 RN/L = 1.000

MACH (1) = 5.220 HAW/HT(1) = .873 RN/L = 1.0201 PO = 102.23 TO = 1519.9 HO = 374.72

SECTION (1)GAP AFT DEPENDENT VARIABLE H/HREF

YI	-6.0000	-5.2500	-4.5000	-3.5000	-2.5000	-1.5000	-.5000	.0000	.2500	.5000	.7500	1.0000	1.5000	2.0000	3.0000
ZI/D															
.014		.0000				2.5755	.0000	2.5298	2.7627	.0000	5.5238	.0000	.0000	.0000	.0000
.057		.3015						3.1496	3.1833						.0000
.100		.1825				1.7506	.0000	2.6763	2.9268	.0000	3.2417	.0000	.0000	.0000	.0000
.200		.1495				.0000	.0000	2.0418	2.1650	.0000	1.5739	.0000	.0000	.0000	.0000
.300		.0000						1.6452	1.7730						.0000
.500		.1126							1.3654						.0000
.600	.0000	.0904	.0000	.0000	.0000	.3720	.0000	.7835	1.1645	.0000	1.6768	.0000	.0000	.0000	.0000
.700		.0805						.6724	1.0172						.0000
.800		.0910							.8978						.0000
1.000		.0000			.0000	.0998	.0000	.0000	.5008	.0000	.5214	.0000	.0000	.0000	.0000

YI	4.0000	5.0000	6.0000	7.0000	8.0000	9.0000	10.0000
ZI/D							
.014				.0995			.0000
.100				.0541			.0000
.200				.0398			.0000
.600	.1651	.1244	.0781	.0407	.0144	.0000	.0000
1.000	.0000	.0000	.0000	.0046	.0000	.0000	.0000

ARC35-200(H27 FP/CYL(ERT)/GAP F GAP AFT (RE3A29) (28 FEB 75)

REFERENCE DATA

SREF = 11.2500 SQ.FT. XMRP = .0000 IN.
LREF = 60.0000 IN. YMRP = .0000 IN.
BREF = 27.0000 IN. ZMRP = .0000 IN.
SCALE = 1.0000

PARAMETRIC DATA

W = .050 RN/L = 1.000

MACH (1) = 5.220 HAW/HT(1) = .873 RN/L = 1.0109 PO = 164.60 TO = 1550.2 HO = 382.70

SECTION (1)GAP AFT DEPENDENT VARIABLE H/HREF

YI	-6.0000	-5.2500	-4.5000	-3.5000	-2.5000	-1.5000	-.5000	.0000	.2500	.5000	.7500	1.0000	1.5000	2.0000	3.0000
ZI/D															
.014		.0000				.0000	.0000	.0000	.0000	.0000	1.5165	.0000	.0000	.7586	.0000
.057		.0000						.0000	5.0569						.0000
.100		.0000				.0000	.0000	.0000	3.5301	.0000	1.0826	.0000	.0000	.5976	.0000
.200		.0000				.0000	.0000	.0000	1.6392	.0000	.7285	.0000	.0000	.5578	.0000
.300		.0000						.0000	1.1030						.0000
.500		.0000							.9575						.0000
.600	.0000	.0000	.0000	.0000	.0000	.0000	.0000	.0000	.8498	.0000	1.1005	.0000	.0000	.4666	.0000
.700		.0000						.0000	.7131						.0000
.800		.0000							.5623						.0000
1.000		.0000			.0000	.0000	.0000	.0000	.2704	.0000	.0000	.0000	.0000	.0000	.0000

YI	4.0000	5.0000	6.0000	7.0000	8.0000	9.0000	10.0000
ZI/D							
.014				.0382			.0000
.100				.0266			.0101
.200				.0197			.0000
.600	.1444	.1016	.0557	.0247	.0057	.0000	.0000
1.000	.0000	.0173	.0000	.0000	.0000	.0000	.0000

ARC35-2001H27 FP/CYL(2-45)/GAP B GAP AFT (PE3A30) (18 NOV 75)

REFERENCE DATA

SREF = 11.2500 SQ.FT. XMRP = .0000 IN.
LREF = 60.0000 IN. YMRP = .0000 IN.
BREF = 27.0000 IN. ZMRP = .0000 IN.
SCALE = 1.0000

PARAMETRIC DATA

W = .050 RN/L = 3.500

MACH (1) = 5.240 HAW/HT(1) = .907 RN/L = 3.6909 PO = 348.81 TO = 1457.8 HO = 358.42

SECTION (1) DEPENDENT VARIABLE H/HREF

YI	-6.0000	-5.2500	-4.5000	-3.5000	-2.5000	-1.5000	-.5000	.0000	.2500	.5000	.7500	1.0000	1.5000	2.0000	3.0000
ZI/D															
.014		.0000				.0000	.0000	5.5815	6.7858	.0000	7.8074	.0000	.0000	.0000	.0000
.057		.0000						8.9864	8.6836						.0000
.100		.0000				.0000	.0000	7.5959	7.8930	.0000	6.1535	5.8560	.0000	.0000	.0000
.200		.0000				.0000	.0000	7.8511	.0000	.0000	4.7749	.0000	.0000	.0000	.0000
.300		.0000						6.8882	.0000						.0000
.500		.0000							4.0450						.0000
.600	.0000	.0000	.0000	.0000	.0000	.0000	.0000	3.6435	3.1463	.0000	3.5309	3.2842	.0000	.0000	.0000
.700		.0000						2.5114	2.4462						.0000
.800		.4720							1.7256						.0000
1.000		.0000			.0000	.0000	.0000	.0000	.6282	.0000	.8804	.0000	.0000	.0000	.0000

YI	4.0000	5.0000	6.0000	7.0000	8.0000	9.0000	10.0000
ZI/D							
.014				.3671			.5491
.100				.3230			.1851
.200				.2713			.1150
.600	.9075	.0000	.3635	.0000	.2598	.1296	.0977
1.000	.0000	.0000	.0799	.0558	.0000	.0000	.0151

ARC35-200IH27 FP/CYL(2-45)/GAP C GAP AFT (RE3A31) (28 FEB 75)

REFERENCE DATA

SREF = 11.2500 SQ.FT. XMRP = .0000 IN.
LREF = 60.0000 IN. YMRP = .0000 IN.
BREF = 27.0000 IN. ZMRP = .0000 IN.
SCALE = 1.0000

PARAMETRIC DATA

W = .050 RN/L = 3.500

MACH (1) = 5.240 HAW/HT(1) = .907 RN/L = 3.6531 PO = 349.60 TO = 1468.5 HO = 361.21

SECTION (1)GAP AFT DEPENDENT VARIABLE H/HREF

YI	-6.0000	-5.2500	-4.5000	-3.5000	-2.5000	-1.5000	-.5000	.0000	.2500	.5000	.7500	1.0000	1.5000	2.0000	3.0000
ZI/D															
.014		.1221				2.3405	.0000	4.5730	5.2762	.0000	12.8641	.0000	.0000	.0000	.0000
.057		.5387						6.2521	6.1835						.0000
.100		.3847				1.9860	.0000	5.6117	6.0388	.0000	8.9333	.0000	.0000	.0000	.0000
.200		.4340				.0000	.0000	6.4830	.0000	.0000	7.4374	.0000	.0000	.0000	.0000
.300		.5236						5.7979	5.9185						.0000
.500		.5578							3.9808						.0000
.600	.0000	.5496	.0000	.0000	.0000	1.5294	.0000	3.3353	3.3785	.0000	4.6402	.0000	.0000	.0000	.0000
.700		.5171						2.8065	3.0161						.0000
.800		.9522							2.5691						.0000
1.000		.0000			.0000	.5478	.0000	.0000	1.4653	.0000	1.6769	.0000	.0000	.0000	.0000

YI	4.0000	5.0000	6.0000	7.0000	8.0000	9.0000	10.0000
ZI/D							
.014				.5559			.0000
.100				.4985			.0000
.200				.4502			.0000
.600	.9862	.7985	.5335	.4643	.2843	.1427	.0000
1.000	.0000	.0000	.0000	.0728	.0000	.0000	.0000

ARC35-200IH27 FP/CYL(2-45)/GAP F GAP AFT (RE3A32) (28 FEB 75)

REFERENCE DATA

SREF = 11.2500 SQ.FT. XMRP = .0000 IN.
LREF = 60.0000 IN. YMRP = .0000 IN.
BREF = 27.0000 IN. ZMRP = .0000 IN.
SCALE = 1.0000

PARAMETRIC DATA

W = .050 RN/L = 3.500

MACH (1) = 5.240 HAW/HT(1) = .907 RN/L = 3.6317 PO = 350.58 TO = 1476.4 HO = 363.28

SECTION (1)GAP AFT DEPENDENT VARIABLE H/HREF

YI	-6.0000	-5.2500	-4.5000	-3.5000	-2.5000	-1.5000	-.5000	.0000	.2500	.5000	.7500	1.0000	1.5000	2.0000	3.0000
ZI/D															
.014		.0000				.0000	.0000	.0000	18.6917	.0000	13.9293	.0000	.0000	1.9727	.0000
.057		.0000						.0000	15.3440						.0000
.100		.0000				.0000	.0000	.0000	11.4612	.0000	9.5236	.0000	.0000	1.9956	.0000
.200		.0000				.0000	.0000	.0000	7.3357	.0000	6.9209	.0000	.0000	2.2116	.0000
.300		.0000						.0000	5.5606						.0000
.500		.0000							4.3017						.0000
.600	.0000	.0000	.0000	.0000	.0000	.0000	.0000	.0000	4.0042	.0000	2.9558	.0000	.0000	2.0153	.0000
.700		.0000						.0000	3.9444						.0000
.800		.0000							4.0919						.0000
1.000		.0000			.0000	.0000	.0000	.0000	3.9475	.0000	2.3594	.0000	.0000	.0000	.0000

YI	4.0000	5.0000	6.0000	7.0000	8.0000	9.0000	10.0000
ZI/D							
.014				.4358			.2442
.100				.3960			.1475
.200				.3688			.1314
.600	.9456	.7457	.4837	.3902	.2244	.1155	.1071
1.000	.2064	.1509	.0000	.0572	.0237	.0000	.0121

ARC35-2001H27 FP/CYL(2-45)/GAP C GAP AFT (RE3A33) (28 FEB 75)

REFERENCE DATA

SREF = 11.2500 SQ.FT. XMRP = .0000 IN.
LREF = 60.0000 IN. YMRP = .0000 IN.
BREF = 27.0000 IN. ZMRP = .0000 IN.
SCALE = 1.0000

PARAMETRIC DATA

W = .050 RN/L = 1.000

MACH (1) = 5.220 HAW/HT(1) = .873 RN/L = 1.1681 PO = 110.39 TO = 1465.8 HO = 360.51

SECTION (1)GAP AFT DEPENDENT VARIABLE H/HREF

YI	-6.0000	-5.2500	-4.5000	-3.5000	-2.5000	-1.5000	-.5000	.0000	.2500	.5000	.7500	1.0000	1.5000	2.0000	3.0000
ZI/D															
.014		.0000				1.8144	.0000	3.4193	4.1970	.0000	9.9879	.0000	.0000	.0000	.0000
.057		.3965						4.5886	4.9688						.0000
.100		.2504				1.5524	.0000	4.3587	4.8775	.0000	7.4718	.0000	.0000	.0000	.0000
.200		.2372				.0000	.0000	4.9955	4.8243	.0000	5.6658	.0000	.0000	.0000	.0000
.300		.0000						4.3758	4.0600						.0000
.500		.2530							2.2117						.0000
.600	.0000	.2512	.0000	.0000	.0000	.8893	.0000	1.8960	1.7210	.0000	3.0573	.0000	.0000	.0000	.0000
.700		.2418						1.5837	1.6016						.0000
.800		.2738							1.6072						.0000
1.000		.0000			.0000	.3032	.0000	.0000	.9801	.0000	1.2675	.0000	.0000	.0000	.0000

YI	4.0000	5.0000	6.0000	7.0000	8.0000	9.0000	10.0000
ZI/D							
.014				.2735			.0000
.100				.2357			.0000
.200				.2018			.0000
.600	.5352	.3606	.2649	.2094	.1738	.1216	.0000
1.000	.0000	.0000	.0000	.0487	.0000	.0000	.0000

ARC35-200(H27 FP/CYL(2-45)/GAP B GAP AFT (RE3A34) (28 FEB 75)

REFERENCE DATA

SREF = 11.2500 SQ.FT. XMRP = .0000 IN.
LREF = 60.0000 IN. YMRP = .0000 IN.
BREF = 27.0000 IN. ZMRP = .0000 IN.
SCALE = 1.0000

PARAMETRIC DATA

W = .050 RN/L = 1.000

MACH (1) = 5.220 HAW/HT(1) = .873 RN/L = 1.0390 PO = 102.54 TO = 1505.6 HO = 370.95

SECTION (1)GAP AFT DEPENDENT VARIABLE H/HREF

YI	-6.0000	-5.2500	-4.5000	-3.5000	-2.5000	-1.5000	-.5000	.0000	.2500	.5000	.7500	1.0000	1.5000	2.0000	3.0000
ZI/D															
.014		.0000				.0000	.0000	7.7644	9.0106	.0000	.0000	.0000	.0000	.0000	.0000
.057		.0000						9.8741	9.7738						.0000
.100		.2637				.0000	.0000	8.0689	8.1739	.0000	.0000	5.3561	.0000	.0000	.0000
.200		.2642				.0000	.0000	6.0876	5.3198	.0000	.0000	.0000	.0000	.0000	.0000
.300		.2930						5.7659	4.2159						.0000
.500		.3008							3.3444						.0000
.600	.0000	.2938	.0000	.0000	.0000	.0000	.0000	3.4506	2.6573	.0000	.0000	2.3821	.0000	.0000	.0000
.700		.2707						2.5078	2.1485						.0000
.800		.3705							1.6150						.0000
1.000		.0000			.0000	.0000	.0000	.0000	.5794	.0000	.0000	.6845	.0000	.0000	.0000

YI	4.0000	5.0000	6.0000	7.0000	8.0000	9.0000	10.0000
ZI/D							
.014				.2191			.0000
.100				.0000			.0000
.200				.1813			.0000
.600	.0000	.0000	.0000	.1727	.0000	.0000	.0000
1.000	.0000	.0000	.0000	.0379	.0000	.0000	.0000

ARC35-200IH27 FP/WEDGE/GAP B1 GAP AFT (PE3A35) (18 NOV 75)

REFERENCE DATA

SREF =	11.2500 SQ.FT.	XMRP =	.0000 IN.		
LREF =	60.0000 IN.	YMRP =	.0000 IN.		
BREF =	27.0000 IN.	ZMRP =	.0000 IN.		
SCALE =	1.0000				

PARAMETRIC DATA

W =	.050	RN/L =	3.500
DELTA =	5.000	BETA =	.000
H2 =	1.500	D =	7.294

MACH (1) = 5.240 HAW/HT(1) = .907 RN/L = 3.6916 PO = 353.10 TO = 1468.9 HO = 361.33

SECTION (1) DEPENDENT VARIABLE H/HREF

YI	-6.0000	-5.2500	-4.5000	-3.5000	-2.5000	-1.5000	-.5000	.0000	.2500	.5000	.7500	1.0000	1.5000	2.0000	3.0000
ZI/D															
.014		.0000				.8775	.0000	2.2161	1.1038	.0000	.0000	1.0373	1.0928	1.1789	.0000
.057		.0000						2.2152	.9589						.6316
.100		.0000				.3245	.0000	1.6976	.7098	.0000	.0000	.4415	.0000	.5061	.3020
.200		.0000				.0000	.0000	1.2234	.0000	.0000	.0000	.0751	.0000	.0710	.0000
.300		.0000						1.0017	.3944						.0016
.500		.0000							.3338						.0000
.600	.0000	.0000	.0000	.0000	.0000	.0418	.0000	.2998	.2687	.0000	.0000	.0154	.0088	.0032	.0000
.700		.0000						.1980	.2304						.0000
.800		.0349							.1979						.0000
1.000		.0000			.0000	.0000	.0000	.0000	.1260	.0000	.0000	.0266	.0070	.0000	.0000

YI	4.0000	5.0000	6.0000	7.0000	8.0000	9.0000	10.0000
ZI/D							
.014				.9270			2.0039
.100				.3851			.7304
.200				.0548			.2236
.600	.0000	.0000	.0000	.0000	.0000	.0000	.0000
1.000	.0000	.0000	.0000	.0000	.0000	.0000	.0000

ARC35-200IH27 FP/WEDGE/GAP BI REVOLVE 45 GAP AFT (PE3A36) (18 NOV 75)

REFERENCE DATA

SREF = 11.2500 SQ.FT. XMRP = .0000 IN.
LREF = 60.0000 IN. YMRP = .0000 IN.
BREF = 27.0000 IN. ZMRP = .0000 IN.
SCALE = 1.0000

PARAMETRIC DATA

W = .050 RN/L = 3.500
DELTA = 5.000 BETA = .000
H2 = 1.500 D = 8.794

MACH (1) = 5.240 HAW/HT(1) = .907 RN/L = 3.5395 PO = 353.15 TO = 1506.9 HO = 371.28

SECTION (1)GAP AFT DEPENDENT VARIABLE H/HREF

YI	-6.0000	-5.2500	-4.5000	-3.5000	-2.5000	-1.5000	-.5000	.0000	.2500	.5000	.7500	1.0000	1.5000	2.0000	3.0000
ZI/D															
.014		.0000				1.1705	1.6695	1.3296	.0000	.0000	.0000	1.2239	.0000	1.3369	.0000
.057		.3593						1.1666	.0000						.0000
.100		.1645				.5880	.9906	.8316	.0000	.8286	.0000	.5826	.0000	.8346	.0000
.200		.0621				.0000	.4623	.4222	.0000	.0000	.0000	.1498	.0000	.3948	.0000
.300		.0460						.2831	.0000						.0000
.500		.0364							.0000						.0000
.600	.0000	.0260	.0000	.0000	.0000	.0657	.1079	.1179	.0000	.0000	.0000	.0119	.0000	.0830	.0000
.700		.0188						.0916	.0000						.0000
.800		.0000							.0000						.0000
1.000		.0000			.0000	.0090	.0107	.0000	.0000	.0094	.0000	.0053	.0000	.0000	.0000

YI	4.0000	5.0000	6.0000	7.0000	8.0000	9.0000	10.0000
ZI/D							
.014				.1794			.0000
.100				.0548			.0000
.200				.0106			.0000
.600	.0000	.0000	.0000	.0000	.0000	.0000	.0000
1.000	.0000	.0000	.0000	.0000	.0000	.0000	.0000

ARC35-200IH27 FP/WEDGE/GAP C GAP AFT (RE3A37) (28 FEB 75)

REFERENCE DATA

SREF =	11.2500 SQ.FT.	XMRP =	.0000 IN.		
LREF =	60.0000 IN.	YMRP =	.0000 IN.		
BREF =	27.0000 IN.	ZMRP =	.0000 IN.		
SCALE =	1.0000				

PARAMETRIC DATA

W =	.050	RN/L =	3.500
DELTA =	5.000	BETA =	.000
H2 =	.500	D =	4.941

MACH (1) = 5.240 HAW/HT(1) = .907 RN/L = 3.3242 PO = 353.06 TO = 1566.0 HO = 386.88

SECTION (1)GAP AFT DEPENDENT VARIABLE H/HREF

YI	-6.0000	-5.2500	-4.5000	-3.5000	-2.5000	-1.5000	-.5000	.0000	.2500	.5000	.7500	1.0000	1.5000	2.0000	3.0000
ZI/D															
.014		.4866				1.3617	.0000	1.5226	.0000	.0000	1.2714	.0000	.0000	1.5397	.8261
.057		.3666						1.2921	.0000						.7944
.100		.2032				.6449	.0000	.8400	.0000	.0000	.6472	.0000	.0000	1.0125	.4504
.200		.1315				.0000	.0000	.2896	.0000	.0000	.1439	.0000	.0000	.5106	.1632
.300		.0000						.1448	.0000						.0979
.500		.1048							.0000						.1282
.600	.0000	.0842	.0000	.0000	.0000	.0821	.0000	.0208	.0000	.0000	.0000	.0000	.0000	.1251	.0000
.700		.0609						.0155	.0000						.1093
.800		.0000							.0000						.0597
1.000		.0000			.0000	.0044	.0000	.0000	.0000	.0000	.0000	.0000	.0000	.0000	.0000

YI	4.0000	5.0000	6.0000	7.0000	8.0000	9.0000	10.0000
ZI/D							
.014				.1960			.0000
.100				.0640			.0000
.200				.0110			.0000
.600	.0000	.0000	.0000	.0071	.0000	.0000	.0000
1.000	.0000	.0000	.0000	.0000	.0000	.0000	.0000

ARC35-2001H27 FP/WEDGE/GAP C GAP AFT (RE3A38) (28 FEB 75)

REFERENCE DATA

SREF = 11.2500 SQ.FT. XMRP = .0000 IN.
LREF = 60.0000 IN. YMRP = .0000 IN.
BREF = 27.0000 IN. ZMRP = .0000 IN.
SCALE = 1.0000

PARAMETRIC DATA

W = .100 RN/L = 3.500
DELTA = 5.000 BETA = .000
H2 = 1.500 D = 8.772

MACH (1) = 5.240 HAW/HT(1) = .907 RN/L = 3.4696 PO = 348.87 TO = 1514.1 HO = 373.18

SECTION (1)GAP AFT DEPENDENT VARIABLE H/HREF

YI	-6.0000	-5.2500	-4.5000	-3.5000	-2.5000	-1.5000	-.5000	.0000	.2500	.5000	.7500	1.0000	1.5000	2.0000	3.0000
ZI/D															
.014		.1164				1.3922	.0000	1.5660	.0000	.0000	1.4354	.0000	.0000	1.5958	.0000
.057		.4669						1.3786	.0000						.8940
.100		.2642				.7997	.0000	.9369	.0000	.0000	.9184	.0000	.0000	.0000	.0000
.200		.1604				.0000	.0000	.3760	.0000	.0000	.3908	.0000	.0000	.6729	.1362
.300		.1422						.2502	.0000						.0437
.500		.1229							.0000						.0698
.600	.0000	.0958	.0000	.0000	.0000	.0277	.0000	.1154	.0000	.0000	.1305	.0000	.0000	.0000	.0000
.700		.0772						.0944	.0000						.1148
.800		.0089							.0000						.1082
1.000		.0000			.0000	.0200	.0000	.0000	.0000	.0000	.0000	.0000	.0000	.0000	.0427

YI	4.0000	5.0000	6.0000	7.0000	8.0000	9.0000	10.0000
ZI/D							
.014				.2608			.0000
.100				.1095			.0000
.200				.0383			.0000
.600	.0000	.0000	.0000	.0000	.0000	.0000	.0000
1.000	.0000	.0000	.0000	.0130	.0000	.0000	.0000

ARC35-2001H27 FP/WEDGE/GAP F GAP AFT (RE3A39) (28 FEB 75)

REFERENCE DATA

SREF =	11.2500 SQ.FT.	XMRP =	.0000 IN.		
LREF =	60.0000 IN.	YMRP =	.0000 IN.		
BREF =	27.0000 IN.	ZMRP =	.0000 IN.		
SCALE =	1.0000				

PARAMETRIC DATA

W =	.050	RN/L =	3.500
DELTA =	5.000	BETA =	.000
H2 =	.500	D =	4.941

MACH (1) = 5.240 HAW/HT(1) = .907 RN/L = 3.2084 PO = 352.76 TO = 1599.6 HO = 395.78

SECTION (1)GAP AFT DEPENDENT VARIABLE H/HREF

YI	-6.0000	-5.2500	-4.5000	-3.5000	-2.5000	-1.5000	-.5000	.0000	.2500	.5000	.7500	1.0000	1.5000	2.0000	3.0000
ZI/D															
.014		.0000				.0000	.0000	.0000	.0000	.0000	1.1727	.0000	.0000	1.3315	.0000
.057		.0000						.0000	.0000						.0000
.100		.0000				.0000	.0000	.0000	.7372	.0000	.6038	.0000	.0000	.0000	.0000
.200		.0000				.0000	.0000	.0000	.3021	.0000	.1441	.0000	.0000	.4085	.0000
.300		.0000						.0000	.1587						.0000
.500		.0000							.1148						.0000
.600	.0000	.0000	.0000	.0000	.0000	.0000	.0000	.0000	.1047	.0000	.0281	.0000	.0000	.0657	.0000
.700		.0000						.0000	.1036						.0000
.800		.0000							.1057						.0000
1.000		.0000			.0000	.0000	.0000	.0000	.0000	.0000	.0466	.0000	.0000	.0000	.0000

YI	4.0000	5.0000	6.0000	7.0000	8.0000	9.0000	10.0000
ZI/D							
.014				.1318			.2387
.100				.0645			.0545
.200				.0139			.0000
.600	.0000	.0177	.0000	.0047	.0000	.0000	.0000
1.000	.0000	.0000	.0000	.0000	.0000	.0000	.0000

ARC35-2001H27 FP/WEDGE/GAP B2 GAP AFT (PE3A40) (18 NOV 75)

REFERENCE DATA

SREF =	11.2500 SQ.FT.	XMRP =	.0000 IN.		
LREF =	60.0000 IN.	YMRP =	.0000 IN.		
BREF =	27.0000 IN.	ZMRP =	.0000 IN.		
SCALE =	1.0000				

PARAMETRIC DATA

W =	.050	RN/L =	3.500		
DELTA =	5.000	BETA =	.000		
H2 =	1.500	D =	8.294		

MACH (1) = 5.240 HAW/HT(1) = .907 RN/L = 3.5869 PO = 354.17 TO = 1497.3 HO = 368.77

SECTION (1) DEPENDENT VARIABLE H/HREF

YI	-6.0000	-5.2500	-4.5000	-3.5000	-2.5000	-1.5000	-.5000	.0000	.2500	.5000	.7500	1.0000	1.5000	2.0000	3.0000
ZI/D															
.014		.0000				1.0180	.0000	3.1911	1.5947	.0000	.0000	1.2921	1.2883	1.2528	.1178
.057		.0000						3.3228	1.4459						.6185
.100		.0000				.3549	.0000	2.5697	1.1642	.0000	.0000	.4865	.0000	.5321	.3040
.200		.0000				.0000	.0000	2.1420	.0000	.0000	.0000	.1009	.0000	.1019	.0000
.300		.0000						1.9211	.8929						.0765
.500		.0000							.7341						.1055
.600	.0000	.0000	.0000	.0000	.0000	.2543	.0000	.9683	.5510	.0000	.0000	.2954	.1964	.1696	.0000
.700		.0000						.5695	.4080						.1041
.800		.0270							.2543						.0811
1.000		.0000			.0000	.0000	.0000	.0000	.0831	.0000	.0000	.0866	.0559	.0000	.0162

YI	4.0000	5.0000	6.0000	7.0000	8.0000	9.0000	10.0000
ZI/D							
.014				.9634			.0000
.100				.3644			.7322
.200				.0393			.2143
.600	.0000	.0260	.0000	.0022	.0000	.0000	.0000
1.000	.0000	.0000	.0000	.0000	.0000	.0000	.0000

ARC35-200(H27 FP/WEDGE/GAP B3 GAP AFT (PE3A41) (18 NOV 75)

REFERENCE DATA

SREF = 11.2500 SQ.FT. XMRP = .0000 IN.
LREF = 60.0000 IN. YMRP = .0000 IN.
BREF = 27.0000 IN. ZMRP = .0000 IN.
SCALE = 1.0000

PARAMETRIC DATA

W = .050 RN/L = 3.500
DELTA = 5.000 BETA = .000
H2 = 1.500 D = 9.294

MACH (1) = 5.240 HAW/HT(1) = .907 RN/L = 3.6340 PO = 350.05 TO = 1474.6 HO = 362.81

SECTION (1) DEPENDENT VARIABLE H/HREF

YI	-6.0000	-5.2500	-4.5000	-3.5000	-2.5000	-1.5000	-.5000	.0000	.2500	.5000	.7500	1.0000	1.5000	2.0000	3.0000
ZI/D															
.014		.0000				.9077	.0000	3.5359	2.0412	.0000	.0000	.0000	1.1846	1.2691	.7956
.057		.0000						3.8522	2.0151						.7366
.100		.0000				.4524	.0000	3.0257	1.7350	.0000	.0000	.6444	.0000	.6567	.0000
.200		.0000				.0000	.0000	2.6398	1.2387	.0000	.0000	.4259	.3634	.3461	.0000
.300		.0000						2.1172	.0000						.2212
.500		.0000							.9515						.0000
.600	.0000	.0000	.0000	.0000	.0000	.2535	.0000	1.2280	.0000	.0000	.0000	.3533	.0000	.1868	.0000
.700		.0000						1.0585	.7385						.0991
.800		.0000							.5594						.0709
1.000		.0000			.0000	.0000	.0000	.0000	.0955	.0000	.0000	.0000	.0517	.0000	.0145

YI	4.0000	5.0000	6.0000	7.0000	8.0000	9.0000	10.0000
ZI/D							
.014				.9139			.0000
.100				.3206			.6195
.200				.0438			.0000
.600	.0688	.0394	.0140	.0142	.0054	.0000	.0000
1.000	.0000	.0000	.0000	.0000	.0000	.0000	.0000

ARC35-2001H27 FP/WEDGE/GAP C GAP AFT (RE3A42) (28 FEB 75)

REFERENCE DATA

SREF =	11.2500 SQ.FT.	XMRP =	.0000 IN.		
LREF =	60.0000 IN.	YMRP =	.0000 IN.		
BREF =	27.0000 IN.	ZMRP =	.0000 IN.		
SCALE =	1.0000				

PARAMETRIC DATA

W =	.050	RN/L =	3.500
DELTA =	10.000	BETA =	.000
H2 =	1.500	D =	8.437

MACH (1) = 5.240 HAW/HT(1) = .907 RN/L = 3.3600 PO = 353.06 TO = 1555.7 HO = 384.16

SECTION (1)GAP AFT DEPENDENT VARIABLE H/HREF

YI	-6.0000	-5.2500	-4.5000	-3.5000	-2.5000	-1.5000	-.5000	.0000	.2500	.5000	.7500	1.0000	1.5000	2.0000	3.0000
ZI/D															
.014		.7111				2.2905	.0000	2.9301	.0000	.0000	2.7370	.0000	.0000	2.4130	.6550
.057		.5133						2.7843	.0000						.6667
.100		.2702				1.3482	.0000	1.9885	.0000	.0000	1.9165	.0000	.0000	1.5669	.4591
.200		.1659				.0000	.0000	.8932	.0000	.0000	.9715	.0000	.0000	.7962	.3168
.300		.0000						.6274	.0000						.2360
.500		.1654							.0000						.1778
.600	.0000	.1295	.0000	.0000	.0000	.0000	.0000	.2977	.0000	.0000	.3535	.0000	.0000	.2822	.0000
.700		.0000						.2427	.0000						.1562
.800		.0259							.0000						.1435
1.000		.0000			.0000	.0550	.0000	.0000	.0000	.0000	.0791	.0000	.0000	.0000	.0486

YI	4.0000	5.0000	6.0000	7.0000	8.0000	9.0000	10.0000
ZI/D							
.014				.2344			.0000
.100				.0995			.0000
.200				.0452			.0000
.600	.0000	.0000	.0000	.0419	.0000	.0000	.0000
1.000	.0000	.0000	.0000	.0000	.0000	.0000	.0000

ARC35-200IH27 FP/WEDGE/GAP C GAP AFT (RE3A43) (28 FEB 75)

REFERENCE DATA

SREF =	11.2500 SQ.FT.	XMRP =	.0000 IN.		
LREF =	60.0000 IN.	YMRP =	.0000 IN.		
BREF =	27.0000 IN.	ZMRP =	.0000 IN.		
SCALE =	1.0000				

PARAMETRIC DATA

W =	.050	RN/L =	1.000		
DELTA =	5.000	BETA =	.000		
H2 =	1.500	D =	8.772		

MACH (1) = 5.220 HAW/HT(1) = .873 RN/L = 1.0706 PO = 108.39 TO = 1529.6 HO = 377.25

SECTION (1)GAP AFT DEPENDENT VARIABLE H/HREF

YI	-6.0000	-5.2500	-4.5000	-3.5000	-2.5000	-1.5000	-.5000	.0000	.2500	.5000	.7500	1.0000	1.5000	2.0000	3.0000
ZI/D															
.014		.4316				1.4245	.0000	1.5228	.0000	.0000	1.3012	.0000	.0000	.6444	.1570
.057		.2610						1.2432	.0000						.1450
.100		.1046				.5591	.0000	.7500	.0000	.0000	.7579	.0000	.0000	.0000	.0895
.200		.0206				.0000	.0000	.2479	.0000	.0000	.2720	.0000	.0000	.1435	.0379
.300		.0103						.1425	.0000						.0169
.500		.0021							.0000						.0000
.600	.0000	.0000	.0000	.0000	.0000	.0142	.0000	.0354	.0000	.0000	.0397	.0000	.0000	.0204	.0000
.700		.0000						.0173	.0000						.0048
.800		.0000							.0000						.0033
1.000		.0000			.0000	.0000	.0000	.0000	.0000	.0000	.0000	.0000	.0000	.0000	.0000

YI	4.0000	5.0000	6.0000	7.0000	8.0000	9.0000	10.0000
ZI/D							
.014				.0061			.0000
.100				.0035			.0000
.200				.0000			.0000
.600	.0000	.0000	.0000	.0000	.0000	.0000	.0000
1.000	.0000	.0000	.0000	.0000	.0000	.0000	.0000

ARC35-200IH27 FP/WEDGE/GAP 5 GAP AFT (RE3A44) (28 FEB 75)

REFERENCE DATA

SREF =	11.2500 SQ.FT.	XMRP =	.0000 IN.		
LREF =	60.0000 IN.	YMRP =	.0000 IN.		
BREF =	27.0000 IN.	ZMRP =	.0000 IN.		
SCALE =	1.0000				

PARAMETRIC DATA

W =	.050	RN/L =	1.000
DELTA =	5.000	BETA =	.000
H2 =	1.500	D =	8.772

MACH (1) = 5.220 HAW/HT(1) = .873 RN/L = 1.0002 PO = 103.68 TO = 1552 0 HO = 383.17

SECTION (1)GAP AFT DEPENDENT VARIABLE H/HREF

Y1	-6.0000	-5.2500	-4.5000	-3.5000	-2.5000	-1.5000	-.5000	0000	.2500	.5000	.7500	1.0000	1.5000	2.0000	3.0000
ZI/D															
.014		.0000				.0000	.0000	.0000	1.4511	.0000	1.1833	.0000	.0000	.5775	.0000
.057		.0000						.0000	.0000						.0000
.100		.0000				.0000	.0000	.0000	.7347	.0000	.6915	.0000	.0000	.0000	.0000
.200		.0000				.0000	.0000	.0000	.2689	.0000	.2468	.0000	.0000	.0000	.0000
.300		.0000						.0000	.1558						.0000
.500		.0000							.0833						.0000
.600	.0000	.0000	.0000	.0000	.0000	.0000	.0000	.0000	.0636	.0000	.0440	.0000	.0000	.0275	.0000
.700		.0000						.0000	.0554						.0000
.800		.0000							.0452						.0000
1.000		.0000			.0000	.0000	.0000	.0000	.0000	.0000	.0092	.0000	.0000	.0000	.0000

Y1	4.0000	5.0000	6.0000	7.0000	8.0000	9.0000	10.0000
ZI/D							
.014				.0000			.0000
.100				.0067			.0076
.200				.0017			.0000
.600	.0000	.0000	.0000	.0000	.0000	.0000	.0000
1.000	.0000	.0000	.0000	.0000	.0000	.0000	.0000

ARC35-2001H27 FP/GAP B FILLED FP CL (RE3101) (28 FEB 75)

REFERENCE DATA

SREF = 11.2500 SQ.FT. XMRP = .0000 IN.
LREF = 60.0000 IN. YMRP = .0000 IN.
BREF = 27.0000 IN. ZMRP = .0000 IN.
SCALE = 1.0000

PARAMETRIC DATA

W = .050 RN/L = 3.500

MACH (1) = 5.240 HAW/HT(1) = .907 RN/L = 3.2136 PO = 338.87 TO = 1559.1 HO = 385.05

SECTION (1)FP CL DEPENDENT VARIABLE H/HREF

XI	12.6000	13.5500	15.0500	16.5500	17.5000	18.6000	19.5500	21.0500	22.5500	23.5000
YI										
.000	.3254	.3007	.2442	.1952	.1666	.1418	.1140	.0901	.0757	.0685

ARC35-2001H27 FP/GAP B FILLED FP CL (RE3102) (28 FEB 75)

REFERENCE DATA

SREF = 11.2500 SQ.FT. XMRP = .0000 IN.
LREF = 60.0000 IN. YMRP = .0000 IN.
BREF = 27.0000 IN. ZMRP = .0000 IN.
SCALE = 1.0000

PARAMETRIC DATA

W = .050 RN/L = 1.000

MACH (1) = 5.220 HAW/HT(1) = .873 RN/L = 1.1172 PO = 106.42 TO = 1473.0 HO = 362.39

SECTION (1)FP CL DEPENDENT VARIABLE H/HREF

XI	-29.4000	-28.4500	-26.9500	-25.4500	-24.5000	-23.4000	-22.4500	-20.9500	-19.4500	-18.5000
YI	.000	.3240	.3261	.3137	.3116	.3188	.3180	.2927	.2999	.2752	.2590

ARC35-2001H27 FP/GAP F FP CL (RE3105) (28 FEB 75)

REFERENCE DATA

SREF = 11.2500 SQ.FT. XMRP = .0000 IN.
LREF = 60.0000 IN. YMRP = .0000 IN.
BREF = 27.0000 IN. ZMRP = .0000 IN.
SCALE = 1.0000

PARAMETRIC DATA

W = .050 RN/L = 3.500

MACH (1) = 5.240 HAW/HT(1) = .907 RN/L = 3.4695 PO = 352.78 TO = 1524.6 HO = 375.94

SECTION (1)FP CL DEPENDENT VARIABLE H/HREF

XI	12.6000	13.5500	15.0500	16.5500	17.5000	18.6000	19.5500	21.0500	22.5500	23.5000
YI										
.000	.3536	.3585	.3492	.3606	.3762	.0000	.0000	.0000	.0000	.0000

ARC35-2001H27 FP/GAP A FP CL (RE3106) (28 FEB 75)

REFERENCE DATA

SREF = 11.2500 SQ.FT. XMRP = .0000 IN.
LREF = 60.0000 IN. YMRP = .0000 IN.
BREF = 27.0000 IN. ZMRP = .0000 IN.
SCALE = 1.0000

PARAMETRIC DATA

W = .050 RN/L = 3.500

MACH (1) = 5.240 HAW/HT(1) = .907 RN/L = 3.3940 PO = 353.31 TO = 1546.8 HO = 381.80

SECTION (1)FP CL DEPENDENT VARIABLE H/HREF

XI	12.6000	13.5500	15.0500	16.5500	17.5000	18.6000	19.5500	21.0500	22.5500	23.5000
YI										
.000	.3635	.3733	.3611	.3637	.3836	.0000	.0000	.0000	.0000	.0000

ARC35-200IH27 FP/GAP A FP CL (RE3111) (28 FEB 75)

REFERENCE DATA

SREF = 11.2500 SQ.FT. XMRP = .0000 IN.
LREF = 60.0000 IN. YMRP = .0000 IN.
BREF = 27.0000 IN. ZMRP = .0000 IN.
SCALE = 1.0000

PARAMETRIC DATA

W = .050 RN/L = 1.000

MACH (1) = 5.220 HAW/HT(1) = .873 RN/L = 1.1677 PO = 111.47 TO = 1475.0 HO = 362.91

SECTION (1)FP CL DEPENDENT VARIABLE H/HREF

XI	-29.4000	-28.4500	-26.9500	-25.4500	-24.5000	-23.4000	-22.4500	-20.9500	-19.4500	-18.5000
YI										
.000	.3232	.3266	.3158	.3162	.3236	.0000	.0000	.0000	.0000	.0000

ARC35-2001H27 FP/CYL(2RT)/GAP B FILLED FP CL (RE3112) (28 FEB 75)

REFERENCE DATA

SREF = 11.2500 SQ.FT. XMRP = .0000 IN.
LREF = 60.0000 IN. YMRP = .0000 IN.
BREF = 27.0000 IN. ZMRP = .0000 IN.
SCALE = 1.0000

PARAMETRIC DATA

W = .050 RN/L = 3.500

MACH (1) = 5.240 HAW/HT(1) = .907 RN/L = 3.3517 PO = 351.28 TO = 1553.2 HO = 383.50

SECTION (1)FP CL DEPENDENT VARIABLE H/HREF

XI	12.6000	13.5500	15.0500	16.5500	17.5000	18.6000	19.5500	21.0500	22.5500	23.5000
YI										
.000	.3527	.3338	.2838	.2348	.2027	.0000	.0000	.0000	.0000	.0000

ARC35-200(H27 FP/CYL(2-45)/GAP B FILLED FP CL (RE3113) (28 FEB 75)

REFERENCE DATA

SREF = 11.2500 SQ.FT. XMRP = .0000 IN.
LREF = 60.0000 IN. YMRP = .0000 IN.
BREF = 27.0000 IN. ZMRP = .0000 IN.
SCALE = 1.0000

PARAMETRIC DATA

W = .050 RN/L = 3.500

MACH (1) = 5.240 HAW/HT(1) = .907 RN/L = 3.5898 PO = 349.71 TO = 1484.8 HO = 365.48

SECTION (1)FP CL DEPENDENT VARIABLE H/HREF

XI	12.6000	13.5500	15.0500	16.5500	17.5000	18.6000	19.5000	21.0500	22.5500	23.5000
YI										
.000	.3682	.3776	.3641	.3695	.3877	.0000	.0000	.0000	.0000	.0000

ARC35-2001H27 FP/WEDGE/GAP B FILLED FP CL (RE3114) (28 FEB 75)

REFERENCE DATA

SREF =	11.2500 SQ.FT.	XMRP =	.0000 IN.		
LREF =	60.0000 IN.	YMRP =	.0000 IN.		
BREF =	27.0000 IN.	ZMRP =	.0000 IN.		
SCALE =	1.0000				

PARAMETRIC DATA

W =	.050	RN/L =	3.500		
DELTA =	5.000	BETA =	.000		
H2 =	1.500	D =	7.294		

MACH (1) = 5.240 HAW/HT(1) = .907 RN/L = 3.6491 PO = 350.87 TO = 1472.8 HO = 362.34

SECTION (1)FP CL DEPENDENT VARIABLE H/HREF

XI	12.6000	13.5500	15.0500	16.5500	17.5000	18.6000	19.5500	21.0500	22.5500	23.5000
YI										
.000	.3672	.3771	.3671	.3728	.3989	.0000	.0000	.0000	.0000	.0000

ARC35-2001H27 FP/WEDGE/GAP B FILLED FP CL (RE3115) (28 FEB 75)

REFERENCE DATA

SREF =	11.2500 SQ.FT.	XMRP =	.0000 IN.		
LREF =	60.0000 IN.	YMRP =	.0000 IN.		
BREF =	27.0000 IN.	ZMRP =	.0000 IN.		
SCALE =	1.0000				

PARAMETRIC DATA

W =	.050	RN/L =	3.500		
DELTA =	10.000	BETA =	.000		
H2 =	1.500	D =	6.937		

MACH (1) = 5.240 HAW/HT(1) = .907 RN/L = 3.4471 PO = 352.03 TO = 1528.7 HO = 377.02

SECTION (1)FP CL DEPENDENT VARIABLE H/HREF

XI	12.6000	13.5500	15.0500	16.5500	17.5000	18.6000	19.5500	21.0500	22.5500	23.5000
YI										
.000	.3687	.3789	.3668	.3721	.4014	.0000	.0000	.0000	.0000	.0000

ARC35-2001H27 FP/CYL(2RT)/GAP B FP.CL (PE3116) (18 NOV 75)

REFERENCE DATA

SREF = 11.2500 SQ.FT. XMRP = .0000 IN.
LREF = 60.0000 IN. YMRP = .0000 IN.
BREF = 27.0000 IN. ZMRP = .0000 IN.
SCALE = 1.0000

PARAMETRIC DATA

W = .050 RN/L = 3.500

MACH (1) = 5.240 HAW/HT(1) = .907 RN/L = 3.5001 PO = 349.54 TO = 1507.7 HO = 371.51

SECTION (1)FP CL DEPENDENT VARIABLE H/HREF

XI	12.6000	13.5500	15.0500	16.5500	17.5000	18.6000	19.5500	21.0500	22.5500	23.5000
YI	.000	.3696	.3703	3449	.3183	.2923	.0000	.0000	.0000	.0000	.0000

ARC35-200(H27 FP/CYL(2RT)/GAP B FP CL (PE3117) (18 NOV 75)

REFERENCE DATA

SREF = 11.2500 SQ.FT. XMRP = .0000 IN.
LREF = 60.0000 IN. YMRP = .0000 IN.
BREF = 27.0000 IN. ZMRP = .0000 IN.
SCALE = 1.0000

PARAMETRIC DATA

W = .100 RN/L = 3.500

MACH (1) = 5.240 HAW/HT(1) = .907 RN/L = 3.5702 PO = 348.81 TO = 1488.2 HO = 366.39

SECTION (1)FP CL DEPENDENT VARIABLE H/HREF

X1	12.6000	13.5500	15.0500	16.5500	17.5000	18.6000	19.5500	21.0500	22.5500	23.5000
Y1										
.000	.3689	.3626	.3237	.2793	.2442	.0000	.0000	.0000	.0000	.0000

ARC35-200(H27 FP/CYL(2RT)/GAP C FP CL (RE3118) (28 FEB 75)

REFERENCE DATA

SREF = 11.2500 SQ.FT. XMRP = .0000 IN.
LREF = 60.0000 IN. YMRP = .0000 IN.
BREF = 27.0000 IN. ZMRP = .0000 IN.
SCALE = 1.0000

PARAMETRIC DATA

W = .050 RN/L = 3.500

MACH (1) = 5.240 HAW/HT(1) = .907 RN/L = 3.4655 PO = 349.96 TO = 1518.1 HO = 374.24

SECTION (1)FP CL DEPENDENT VARIABLE H/HREF

XI	12.6000	13.5500	15.0500	16.5500	17.5000	18.6000	19.5500	21.0500	22.5500	23.5000
YI										
.000	.3889	.3820	.3369	.2865	.2506	.0000	.0000	.0000	.0000	.0000

ARC35-200(H27 FP/CYL(2RT)/GAP C FP CL (RE3119) (28 FEB 75)

REFERENCE DATA

SREF = 11.2500 SQ.FT. XMRP = .0000 IN.
LREF = 60.0000 IN. YMRP = .0000 IN.
BREF = 27.0000 IN. ZMRP = .0000 IN.
SCALE = 1.0000

PARAMETRIC DATA

W = .100 RN/L = 3.500

MACH (1) = 5.240 HAW/HT(1) = .907 RN/L = 3.4339 PO = 350.76 TO = 1528.9 HO = 377.07

SECTION (1)FP CL DEPENDENT VARIABLE H/HREF

XI	12.6000	13.5500	15.0500	16.5500	17.5000	18.6000	19.5000	21.0500	22.5500	23.5000
YI	.000	.3863	.3732	.3152	.2512	.2093	.0000	.0000	.0000	.0000	.0000

ARC35-200(H27 FP/CYL(2RT)/GAP F FP CL (RE3120) (28 FEB 75)

REFERENCE DATA

SREF = 11.2500 SQ.FT. XMRP = .0000 IN.
LREF = 60.0000 IN. YMRP = .0000 IN.
BREF = 27.0000 IN. ZMRP = .0000 IN.
SCALE = 1.0000

PARAMETRIC DATA

W = .050 RN/L = 3.500

MACH (1) = 5.240 HAW/HT(1) = .907 RN/L = 3.4951 PO = 350.94 TO = 1512.8 HO = 372.84

SECTION (1)FP CL DEPENDENT VARIABLE H/HREF

XI	12.6000	13.5500	15.0500	16.5500	17.5000	18.6000	19.5500	21.0500	22.5500	23.5000
YI										
.000	.3617	.3664	.3580	.3680	.3850	.0000	.0000	.0000	.0000	.0000

ARC35-200(H27 FP/CYL(2RT)/GAP A FP CL (RE3121) (28 FEB 75)

REFERENCE DATA

SREF = 11.2500 SQ.FT. XMRP = .0000 IN.
LREF = 60.0000 IN. YMRP = .0000 IN.
BREF = 27.0000 IN. ZMRP = .0000 IN.
SCALE = 1.0000

PARAMETRIC DATA

W = .050 RN/L = 3.500

MACH (1) = 5.240 HAW/HT(1) = .907 RN/L = 3.5572 PO = 351.58 TO = 1498.1 HO = 368.98

SECTION (1)FP CL DEPENDENT VARIABLE H/HREF

XI	12.6000	13.5500	15.0500	16.5500	17.5000	18.6000	19.5500	21.0500	22.5500	23.5000
YI										
.000	.3725	.3838	3722	.3785	.3997	.0000	.0000	.0000	.0000	.0000

ARC35-2001H27 FP/CYL(2RT)/GAP 0 FP CL (RE3122) (28 FEB 75)

REFERENCE DATA

SREF = 11.2500 SQ.FT. XMRP = .0000 IN.
LREF = 60.0000 IN. YMRP = .0000 IN.
BREF = 27.0000 IN. ZMRP = .0000 IN.
SCALE = 1.0000

PARAMETRIC DATA

H = .050 RN/L = 3.500

MACH (1) = 5.240 HAW/HT(1) = .907 RN/L = 3.5403 PO = 349.10 TO = 1495.9 HO = 368.40

SECTION (1)FP CL DEPENDENT VARIABLE H/HREF

XI	12.6000	13.5500	15.0500	16.5500	17.5000	18.6000	19.5500	21.0500	22.5500	23.5000
YI										
.000	.3638	.3731	.3620	.3688	.3907	.0000	.0000	.0000	.0000	.0000

ARC35-200IH27 FP/CYL(ERT)/GAP A FP CL (RE3127) (28 FEB 75)

REFERENCE DATA

SREF = 11.2500 SQ.FT. XMRP = .0000 IN.
LREF = 60.0000 IN. YMRP = .0000 IN.
BREF = 27.0000 IN. ZMRP = .0000 IN.
SCALE = 1.0000

PARAMETRIC DATA

W = .050 RN/L = 1.000

MACH (1) = 5.220 HAW/HT(1) = .873 RN/L = 1.0521 PO = 102.72 TO = 1495.7 HO = 368.35

SECTION (1)FP CL DEPENDENT VARIABLE H/HREF

XI	-29.4000	-28.4500	-26.9500	-25.4500	-24.5000	-23.4000	-22.4500	-20.9500	-19.4500	-18.5000
YI										
.000	.2469	.2477	.2428	.2483	.2596	.0000	.0000	.0000	.0000	.0000

ARC35-200(H27 FP/CYL(2RT)/GAP C FP CL (RE3128) (28 FEB 75)

REFERENCE DATA

SREF = 11.2500 SQ.FT. XMRP = .0000 IN.
LREF = 60.0000 IN. YMRP = .0000 IN.
BREF = 27.0000 IN. ZMRP = .0000 IN.
SCALE = 1.0000

PARAMETRIC DATA

W = .050 RN/L = 1.000

MACH (1) = 5.220 HAW/HT(1) = .873 RN/L = 1.0201 PO = 102.23 TO = 1519.9 HO = 374.72

SECTION (1)FP CL DEPENDENT VARIABLE H/HREF

XI	-29.4000	-28.4500	-26.9500	-25.4500	-24.5000	-23.4000	-22.4500	-20.9500	-19.4500	-18.5000
YI										
	.000	.2506	.2514	.2441	.2486	.2607	.0000	.0000	.0000	.0000	.0000

ARC35-200IH27 FP/CYL(2RT)/GAP F FP CL (RE3129) (28 FEB 75)

REFERENCE DATA

SREF = 11.2500 SQ.FT. XMRP = .0000 IN.
LREF = 60.0000 IN. YMRP = .0000 IN.
BREF = 27.0000 IN. ZMRP = .0000 IN.
SCALE = 1.0000

PARAMETRIC DATA

W = .050 RN/L = 1.000

MACH (1) = 5.220 HAW/HT(1) = .873 RN/L = 1.0109 PO = 104.60 TO = 1550.2 HO = 382.70

SECTION (1)FP CL DEPENDENT VARIABLE H/HREF

XI	-29.4000	-28.4500	-26.9500	-25.4500	-24.5000	-23.4000	-22.4500	-20.9500	-19.4500	-18.5000
YI										
.000	.2378	.2388	.2339	.2412	.2522	.0000	.0000	.0000	.0000	.0000

ARC35-2001H27 FP/CYL(2-45)/GAP B FP CL (PE3130) (18 NOV 75)

REFERENCE DATA

SREF = 11.2500 SQ.FT. XMRP = .0000 IN.
LREF = 60.0000 IN. YMRP = .0000 IN.
BREF = 27.0000 IN. ZMRP = .0000 IN.
SCALE = 1.0000

PARAMETRIC DATA

W = .050 RN/L = 3.500

MACH (1) = 5.240 HAW/HT(1) = .907 RN/L = 3.6909 PO = 348.81 TO = 1457.8 HO = 358.42

SECTION (1)FP CL DEPENDENT VARIABLE H/HREF

XI	12.6000	13.5500	15.0500	16.5500	17.5000	18.6000	19.5500	21.0500	22.5500	23.5000
YI										
.000	.3738	.3703	.3372	.2976	.2571	.0000	.0000	.0000	.0000	.0000

ARC35-200(H27 FP/CYL(2-45)/GAP C FP CL (RE3131) (28 FEB 75)

REFERENCE DATA

SREF = 11.2500 SQ.FT. XMRP = .0000 IN.
LREF = 60.0000 IN. YMRP = .0000 IN.
BREF = 27.0000 IN. ZMRP = .0000 IN.
SCALE = 1.0000

PARAMETRIC DATA

W = .050 RN/L = 3.500

MACH (1) = 5.240 HAW/HT(1) = .907 RN/L = 3.6531 PO = 349.60 TO = 1468.5 HO = 361.21

SECTION (1)FP CL DEPENDENT VARIABLE H/HREF

XI	12.6000	13.5500	15.0500	16.5500	17.5000	18.6000	19.5500	21.0500	22.5500	23.5000
YI										
.000	.3908	.3891	.3617	.3334	.3049	.0000	.0000	.0000	.0000	.0000

ARC35-200IH27 FP/CYL(2-45)/GAP F FP CL (RE3132) (28 FEB 75)

REFERENCE DATA

SREF = 11.2500 SQ.FT. XMRP = .0000 IN.
LREF = 60.0000 IN. YMRP = .0000 IN.
BREF = 27.0000 IN. ZMRP = .0000 IN.
SCALE = 1.0000

PARAMETRIC DATA

W = .050 RN/L = 3.500

MACH (1) = 5.240 HAW/HT(1) = .907 RN/L = 3.6317 PO = 350.58 TO = 1476.4 HO = 363.28

SECTION (1)FP CL DEPENDENT VARIABLE H/HREF

XI	12.6000	13.5500	15.0500	16.5500	17.5000	18.6000	19.5500	21.0500	22.5500	23.5000
YI										
.000	.3566	.3597	.3500	.3610	.3758	.0000	.0000	.0000	.0000	.0000

ARC35-200(H27 FP/CYL(2-45)/GAP C FP CL (RE3133) (28 FEB 75)

REFERENCE DATA

SREF = 11.2500 SQ.FT. XMRP = .0000 IN.
LREF = 60.0000 IN. YMRP = .0000 IN.
BREF = 27.0000 IN. ZMRP = .0000 IN.
SCALE = 1.0000

PARAMETRIC DATA

W = .050 RN/L = 1.000

MACH (1) = 5.220 HAW/HT(1) = .673 RN/L = 1.1681 PO = 110.39 TO = 1465.8 HO = 360.51

SECTION (1)FP CL DEPENDENT VARIABLE H/HREF

XI	-29.4000	-28.4500	-26.9500	-25.4500	-24.5000	-23.4000	-22.4500	-20.9500	-19.4500	-18.5000	
YI	.000	.2632	.2593	.2551	.2450	.2505	.0000	.0000	.0000	.0000	.0000

ARC35-2001H27 FP/WEDGE/GAP B1 REVOLVE 45 FP CL (PE3136) (18 NOV 75)

REFERENCE DATA

SREF =	11.2500 SQ.FT.	XMRP =	.0000 IN.		
LREF =	60.0000 IN.	YMRP =	.0000 IN.		
BREF =	27.0000 IN.	ZMRP =	.0000 IN.		
SCALE =	1.0000				

PARAMETRIC DATA

W =	.050	RN/L =	3.500
DELTA =	5.000	BETA =	.000
H2 =	1.500	D =	8.794

MACH (1) = 5.240 HAW/HT(1) = .907 RN/L = 3.5395 PO = 353.15 TO = 1506.9 HO = 371.28

SECTION (1)FP CL DEPENDENT VARIABLE H/HREF

XI	12.6000	13.5500	15.0500	16.5500	17.5000	18.6000	19.5500	21.0500	22.5500	23.5000
YI	.000	.3497	.3576	.3483	.3525	.3789	.0000	.0000	.0000	.0000	.0000

ARC35-2001H27 FP/WEDGE/GAP C FP CL (RE3137) (28 FEB 75)

REFERENCE DATA

SREF =	11.2500 SQ.FT.	XMRP =	.0000 IN.		
LREF =	60.0000 IN.	YMRP =	.0000 IN.		
BREF =	27.0000 IN.	ZMRP =	.0000 IN.		
SCALE =	1.0000				

PARAMETRIC DATA

W =	.050	RN/L =	3.500		
DELTA =	5.000	BETA =	.000		
H2 =	.500	D =	4.941		

MACH (1) = 5.240 HAW/HT(1) = .907 RN/L = 3.3242 PO = 353.06 TO = 1566.0 HO = 386.88

SECTION (1)FP CL DEPENDENT VARIABLE H/HREF

XI	12.6000	13.5500	15.0500	16.5500	17.5000	18.6000	19.5500	21.0500	22.5500	23.5000
YI										
.000	.3704	.3787	.3685	.3717	.3992	.0000	.0000	.0000	.0000	.0000

ARC35-200IH27 FP/WEDGE/GAP C FP CL (RE3138) (28 FEB 75)

REFERENCE DATA

SREF =	11.2500 SQ.FT.	XMRP =	.0000 IN.		
LREF =	60.0000 IN.	YMRP =	.0000 IN.		
BREF =	27.0000 IN.	ZMRP =	.0000 IN.		
SCALE =	1.0000				

PARAMETRIC DATA

W =	.100	RN/L =	3.500
DELTA =	5.000	BETA =	.000
H2 =	1.500	D =	8.772

MACH (1) = 5.240 HAW/HT(1) = .907 RN/L = 3.4690 PO = 348.87 TO = 1514.1 HO = 373.18

SECTION (1)FP CL DEPENDENT VARIABLE H/HREF

XI	12.6000	13.5500	15.0500	16.5500	17.5000	18.6000	19.5500	21.0500	22.5500	23.5000
YI										
.000	.3670	.3767	.3633	.3658	.3864	.0000	.0000	.0000	.0000	.0000

ARC35-2001H27 FP/WEDGE/GAP F FP CL (RE3139) (28 FEB 75)

REFERENCE DATA

SREF =	11.2500 SQ.FT.	XMRP =	.0000 IN.		
LREF =	60.0000 IN.	YMRP =	.0000 IN.		
BREF =	27.0000 IN.	ZMRP =	.0000 IN.		
SCALE =	1.0000				

PARAMETRIC DATA

W =	.050	RN/L =	3.500		
DELTA =	5.000	BETA =	.000		
H2 =	.500	D =	4.941		

MACH (1) = 5.240 HAW/HT(1) = .907 RN/L = 3.2084 PO = 352.76 TO = 1599.6 HO = 395.78

SECTION (1)FP CL DEPENDENT VARIABLE H/HREF

XI	12.6000	13.5500	15.0500	16.5500	17.5000	18.6000	19.5500	21.0500	22.5500	23.5000
YI										
.000	.3575	.3622	.3525	.3636	.3791	.0000	.0000	.0000	.0000	.0000

ARC35-2001H27 FP/WEDGE/GAP C FP CL (RE3142) (28 FEB 75)

REFERENCE DATA

SREF =	11.2500 SQ.FT.	XMRP =	.0000 IN.		
LREF =	60.0000 IN.	YMRP =	.0000 IN.		
BREF =	27.0000 IN.	ZMRP =	.0000 IN.		
SCALE =	1.0000				

PARAMETRIC DATA

W =	.050	RN/L =	3.500		
DELTA =	10.000	BETA =	.000		
H2 =	1.500	D =	8.437		

MACH (1) = 5.240 HAW/HT(1) = .907 RN/L = 3.3600 PO = 353.06 TO = 1555.7 HO = 384.16

SECTION (1)FP CL DEPENDENT VARIABLE H/HREF

XI	12.6000	13.5500	15.0500	16.5500	17.5000	18.6000	19.5500	21.0500	22.5500	23.5000
YI										
.000	.3695	.3781	.3670	.3706	.4009	.0000	.0000	.0000	.0000	.0000

ARC35-2001H27 FP/WEDGE/GAP C FP CL (RE3143) (28 FEB 75)

REFERENCE DATA

SREF =	11.2500 SQ.FT.	XMRP =	.0000 IN.		
LREF =	60.0000 IN.	YMRP =	.0000 IN.		
BREF =	27.0000 IN.	ZMRP =	.0000 IN.		
SCALE =	1.0000				

PARAMETRIC DATA

W =	.050	RN/L =	1.000		
DELTA =	5.000	BETA =	.000		
H2 =	1.500	D =	8.772		

MACH (1) = 5.220 HAW/HT(1) = .873 RN/L = 1.0706 PO = 108.39 TO = 1529.6 HO = 377.25

SECTION (1)FP CL DEPENDENT VARIABLE H/HREF

XI	-29.4000	-28.4500	-26.9500	-25.4500	-24.5000	-23.4000	-22.4500	-20.9500	-19.4500	-18.5000	
YI	.000	.2916	.2930	.2863	.2886	.2990	.0000	.0000	.0000	.0000	.0000

ARC35-2001H27 FP/WEDGE/GAP F FP CL (RE3144) (28 FEB 75)

REFERENCE DATA

SREF =	11.2500 SQ.FT.	XMRP =	.0000 IN.		
LREF =	60.0000 IN.	YMRP =	.0000 IN.		
BREF =	27.0000 IN.	ZMRP =	.0000 IN.		
SCALE =	1.0000				

PARAMETRIC DATA

W =	.050	RN/L =	1.000
DELTA =	5.000	BETA =	.000
H2 =	1.500	D =	8.772

MACH (1) = 5.220 HAW/HT(1) = .873 RN/L = 1.0002 PO = 103.68 TO = 1552.0 HO = 383.17

SECTION (1)FP CL DEPENDENT VARIABLE H/HREF

XI	-29.4000	-28.4500	-26.9500	-25.4500	-24.5000	-23.4000	-22.4500	-20.9500	-19.4500	-18.5000	
YI											
	.000	.2829	.2869	.2794	.2829	.2954	.0000	.0000	.0000	.0000	.0000