National Aeronautics and
Space Administration

**Lyndon B. Johnson Space Center**
Houston, Texas 77058

(NASA-CR-151-786) A VERFICATION STUDY OF THREE AMES RESEARCH CENTER PITOT-STATIC PROBES IN THE ROCKWELL INTERNATIONAL NAAL LOW-SPEED WIND TUNNEL (OA236) (Rockwell International Corp., Los Angeles) 198 p

N80-70922

Unclas
00/16 46262

# SPACE SHUTTLE AEROTHERMODYNAMIC DATA REPORT

RECEIVED
NASA STI FACILITY
ACCESS DEPT.

Data Management SERVICES

SPACE DIVISION CHRYSLER CORPORATION

November 1979

DMS-DR-2337
NASA-CR 151,786

# A VERIFICATION STUDY OF THREE AMES RESEARCH CENTER PITOT-STATIC PROBES IN THE ROCKWELL INTERNATIONAL NAAL LOW-SPEED WIND TUNNEL (OA236)

by

J. G. LeFevre
Rockwell International, Space Systems Group

Prepared under NASA Contract Number NAS9-13247

by

Data Management Services
Chrysler Corporation Huntsville Electronics Division
Slidell Engineering Office
Slidell, Louisiana 70458

for

Engineering Analysis Division

Johnson Space Center
National Aeronautics and Space Administration
Houston, Texas

WIND TUNNEL TEST SPECIFICS:

| | |
|---|---|
| Test Number: | NRLAD LSWT 759 |
| NASA Series Number: | OA236 |
| Model Number: | --- |
| Test Dates: | May 27, 1976 to June 2, 1976 |
| Occupancy Hours: | 36.3 |

FACILITY COORDINATOR:

R. B. Russell
Mail Code BD02
Rockwell International
Los Angeles Division
International Airport
Los Angeles, CA 90009

Phone: (213) 670-3343

PROJECT ENGINEER:

J. G. LeFevre
Mail Code BD02
Rockwell International
Los Angeles Division
International Airport
Los Angeles, CA 90009

Phone: (213) 670-3343

AERODYNAMICS ANALYSIS ENGINEER:

H. August
Mail Code AC07
Rockwell International
Space Systems Group
12214 Lakewood Boulevard
Downey, CA 90241

Phone: (213) 922-4184

DATA MANAGEMENT SERVICES:

Prepared by: Liaison-- D. W. Hersey
Operations-- G. R. Lutz

Reviewed by: G. G. McDonald

Approved: J. L. Glynn
J. L. Glynn, Manager
Data Operations

Concurrence: J. L. Glynn
FOR N. D. Kemp, Manager
Data Management Services

Chrysler Corporation Huntsville Electronics Division/Slidell Engineering Office assumes no responsibility for the data presented other than display characteristics.

# A VERIFICATION STUDY OF THREE AMES RESEARCH CENTER PITOT-STATIC PROBES IN THE ROCKWELL INTERNATIONAL NAAL LOW-SPEED WIND TUNNEL (OA236)

by

J. G. LeFevre

## ABSTRACT

This report presents calibration data for five pitot-static probes and two static pressure probes. The pitot-static probes tested were:

1. The NAAL calibration standard single pitot-static probe.
2. The Ames Research Center calibration standard pitot-static probe, Number 10.
3. Two Ames Research Center tunnel calibration probes, Numbers 3 and 4.
4. 0.36-scale, 92AF system Rosemount model, flight test, air data probe.

The static pressure probes tested were:

1. A Rosemount static pressure probe.
2. A NAAL special static pressure probe.

The NAAL calibration standard probe and the Ames Research Center (ARC) calibration standard probe were tested on their regular supports. The Rosemount probe, the SSV 0.36-scale pitot-static probe, and the NAAL special static pressure probe were tested only on the tunnel centerline boom. The ARC tunnel calibration probes were tested on the tunnel centerline boom, on a streamlined, floor-to-ceiling support and a

customized floor mount made of streamlined aircraft tubing, built for use at the Ames Research Center's 40 x 80-foot tunnel.

The primary purpose for the test was to verify the calibration data obtained using the Ames Research Center probes. All data obtained from the various probes tested were compared to the Rosemount probe data.

The tests were conducted in the Rockwell International NAAL low-speed 7.75 x 11-foot wind tunnel during the time period from May 27, 1976 to June 2, 1976. There were 36.3 hours charged for the tests.

TABLE OF CONTENTS


| | Page |
|---|---|
| ABSTRACT | iii |
| INDEX OF MODEL FIGURES | 2 |
| NOMENCLATURE | 5 |
| REMARKS | 8 |
| CONFIGURATIONS INVESTIGATED | 10 |
| OA236 CONFIGURATIONS INVESTIGATED | 11 |
| INSTRUMENTATION | 13 |
| TEST FACILITY DESCRIPTION | 14 |
| DATA REDUCTION | 15 |
| TABLES | |
| I. TEST CONDITIONS | 17 |
| II. DATA SET/RUN NUMBER COLLATION SUMMARY | 18 |
| III. OA236 RUN INDEX | 21 |
| FIGURES | 23 |
| MODEL | 24 |
| APPENDIX | |
| TABULATED SOURCE DATA | 40 |

## INDEX OF MODEL FIGURES


| Figure | Title | Page |
|---|---|---|
| 1. | Full-scale flight test air data probe. | 23 |
| 2. | Model sketches. | |
| | a. Installation Drawing Showing the Center-line Boom and the NAAL Calibration Standard Probe | 24 |
| | b. Installation Drawing Showing the Ames Floor Support Frame with the Ames Tunnel Calibration Pitot-Static Probe Number 4 | 25 |
| | c. Schematic of the Transducer Hook-Up for the Tunnel Instrumentation Used During the Pitot-Static Probe Calibration Test | 26 |
| | d. Schematic of the Transducer Hook-Up with Two Pitot-Static Probes Tested Simultaneously | 27 |
| | e. Schematic of the Transducer Hook-Up with the Rosemount Static or NAAL Special Static Pressure Probe Tested with the NAAL Calibration Standard Probe | 28 |
| | f. NAAL Calibration Standard Pitot-Static Probe for the Rockwell International Low-Speed Wind Tunnel | 29 |
| | g. Ames Research Center Calibration Standard Pitot-Static Probe Number 10 | 30 |
| | h. Ames Research Center Tunnel Calibration Pitot-Static Probes Numbers 3 and 4 | 31 |
| | i. Rosemount Static Pressure Probe | 32 |
| | j. 0.36-Scale 92 AF System Rosemount Model Flight Test Air Data Probe | 33 |
| | k. NAAL Special Static Pressure Probe | 34 |

INDEX OF MODEL FIGURES (Continued)


| Figure | Title | Page |
|---|---|---|
| 3. | Model photographs. | |
| | a. Three-Quarter Front View Showing the Ames Tunnel Calibration Probe Number 3 on the Tunnel Centerline Boom and the NAAL Calibration Standard Pitot-Static Probe Installed Two Feet South of the Tunnel Centerline | 35 |
| | b. Three-Quarter Front Closeup View of the Rosemount Static Probe on the Tunnel Centerline Boom and the NAAL Calibration Standard Probe Two Feet South of the Tunnel Centerline | 35 |
| | c. Three-Quarter Front View of the Rosemount Static Probe Installed on the Centerline Boom with the NAAL Calibration Standard Pitot-Static Probe Installed Two Feet South of the Tunnel Centerline | 36 |
| | d. The Ames Research Center Calibration Standard Pitot-Static Probe Number 10, Installed on the Tunnel Centerline | 36 |
| | e. Three-Quarter Front Closeup View of the Ames Calibration Standard Pitot-Static Probe Number 10 Installed on the Tunnel Centerline Showing the Two Sets of Supporting Guy Wires Used to Steady the Probe at High Tunnel Dynamic Pressures | 37 |
| | f. Three-Quarter Front View of the 0.36-Scale SSV Flight Probe Mounted on the Centerline Boom with the NAAL Calibration Standard Probe Installed Two Feet South of the Tunnel Centerline | 37 |
| | g. Three-Quarter Front View of the Ames Tunnel Calibration Probe Number 3 or 4 Mounted in the Center of the Wind Tunnel on the Ames Streamlined-Tube Floor Mount | 38 |

INDEX OF MODEL FIGURES (Concluded)


| Figure | Title | Page |
|---|---|---|
| 3. | Model photographs. (Continued) | |
| | h. Three-Quarter Front View of One of the Ames Tunnel Calibration Pitot-Static Probes on the Tunnel Centerline Mounted on a Streamlined Aircraft Tube Supported at the Tunnel Floor and Ceiling | 38 |
| | i. Rear View of the Tunnel Test Section with the NAAL Calibration Standard Pitot-Static Probe on the Tunnel Centerline | 39 |

## NOMENCLATURE

| SYMBOL | MNEMONIC | DEFINITION |
|---|---|---|
| $A_T$ | | cross section area in test section, 85.25 ft.$^2$ |
| $A_{27}$ | | cross section area in the 27-foot section of the tunnel, 637 ft.$^2$ |
| C | | compressibility factor, $1 + \frac{M^2}{4} + \frac{M^4}{40} + \ldots$ |
| K | | $q_o$ ratio for any run, $\frac{q_o}{q_{o_{REF}}} \quad \frac{(P_{27} - P_{12})}{(P_{27} - P_{12})_{REF}}$ |
| M | | Mach number |
| $P_{ATM}$ | | barometric pressure, inches of Hg, or psf |
| $P_o$ | | correct ambient static pressure measured with the aft orifices on the Rosemount static pressure probe, psf |
| $P_S$ | | static pressure, psf |
| $\frac{P_{SB}-P_o}{q_o}$ | | static pressure coefficient, differential pressure between the static pressure measured with the probe on the tunnel centerline and the tunnel freestream static pressure divided by freestream dynamic pressure |
| $(P_{SB}-P_{SBI})$ | | pressure differential between the static pressure measured with probe B on the tunnel centerline and the static pressure measured with the NAAL calibration standard probe located 2 feet south of the tunnel centerline, psf |
| $P_T$ | | total pressure, psf |
| $(P_{TB}-P_{SB})$ | | impact pressure measured by probe B, psf |
| $(P_{TB}-P_{TBI})$ | | pressure differential between the total pressures measured on probe B located on the tunnel centerline and the NAAL calibration standard probe located 2 feet south of the tunnel centerline, psf |

NOMENCLATURE (Continued)

| PLOT SYMBOL | MNEMONIC | DEFINITION |
|---|---|---|
| $\frac{P_{TB}-P_{TO}}{q_o}$ | | total pressure coefficient, differential between the total pressure measured with the pitot probe on the tunnel centerline and freestream tunnel total pressure divided by tunnel test section dynamic pressure |
| $(P_{TB1}-P_{SB1})$ | | impact pressure measured by the NAAL calibration standard pitot-static probe, psf |
| $P_{12}$ | | pressure measured by the static ring at the 12-foot section of the tunnel, psf |
| $(P_{12}-P_{ATM})$ | | pressure differential between $P_{12}$ and atmospheric, psf |
| $(P_{12}-P_{OA})$ | | pressure differential between $P_{12}$ and the static pressure measured with the Rosemount probe, Run 12, psf |
| $(P_{12}-P_{SB})$ | | pressure differential between $P_{12}$ and the static pressure measured with the probe on the tunnel centerline, psf |
| $\frac{P_{12}-P_{SBI}}{q_o}$ | | differential pressure between tunnel static pressure at the 12-foot section and the static pressure measured with the NAAL calibration standard probe, psf |
| $P_{27}$ | | pressure measured by the static ring at the 27-foot section of the tunnel, psf |
| $(P_{27}-P_{12})$ | | pressure differential between $P_{27}$ and $P_{12}$, psf |
| $(P_{27}-P_{ATM})$ | | pressure differential between $P_{27}$ and atmospheric, psf |
| $q$ | | dynamic pressure indicated by probe, psf |
| $q_o$ | | correct dynamic pressure, psf |
| $q_{27}$ | | average dynamic pressure calculated at the 27-foot section of the tunnel, psf |

## NOMENCLATURE (Concluded)

| PLOT SYMBOL | MNEMONIC | DEFINITION |
|---|---|---|
| R/FT, RN/L | | Reynolds number |
| $T_{T_O}$ | | tunnel total temperature, $^{o}R$ |
| $W_{SET}$ | | setting for the tunnel "q" balance |
| **SUBSCRIPTS** | | |
| A | | Rosemount probe identification |
| B | | subscript designation for probes other than the Rosemount probe |
| $B_I$ | | subscript designates data measured with the NAAL calibration standard pitot-static probe |
| REF | | indicates the tunnel conditions measured when the Rosemount probe was first installed alone on the tunnel centerline boom |
| S | | static conditions |
| T | | total conditions except when used in "$A_T$" where "$A_T$" is the test section cross-sectional area |
| 12 | | pertaining to the 12-foot section in the wind tunnel circuit, forward of the test section |
| 27 | | pertaining to the 27-foot section in the wind tunnel circuit, (the settling chamber) |

## REMARKS

This test was run as a verification study of three Ames Research Center pitot-static probes in the Rockwell International NAAL low-speed wind tunnel. The static pressures measured with these probes in addition to the static pressures measured with three other probes tested were all compared to the static pressures measured with the aft static pressure ring on the Rosemount static pressure probe. The Rosemount static pressure probe was considered to be the reference standard for all static pressures measured.

The data show that the static pressures measured with the Ames tunnel calibration probe number 4 when mounted on the tunnel centerline boom; and the static pressures measured with the NAAL calibration standard pitot-static probe, with no instrument correction; and the NAAL special static probe,all compare very closely to the static pressures measured with the aft set of orifices on the Rosemount static pressure probe.

The data also show that there is a very noticeable influence on the static pressure readings due to the size, shape and proximity of the support to the static pressure orifices on the static pressure probe. The Ames tunnel calibration probe number 4, when mounted on the Ames floor mount, (see Figures 2b and 3g) gave a static pressure coefficient reading that was high by about +.01, when compared to the Rosemount static probe. When the same probe was mounted on the streamlined aircraft tubing, supported at the floor and ceiling, (see Figure 3h) the

static pressure coefficients were high by about .005.

Near the end of the test it was discovered that there was a very slight leak in the static pressure ring at the 12-foot section of the wind tunnel. In reviewing the data, before and after the leak was corrected, the following conclusions were made:

1. The leak in the static pressure ring was fairly constant during the test from Run 1 to Run 17.

2. The leak varied as a function of tunnel dynamic pressure.

3. Because the final data were incremental and were presented in coefficient form, the test results can still be considered valid.

The most significant conclusion obtained from this study is that: The size, shape and proximity of a support for a static pressure probe can have an adverse influence on the static pressure readings obtained with that probe.

## CONFIGURATIONS INVESTIGATED

Seven individual probes of various designs were used in this test. Five probes were pitot-static probes and two were for measuring static pressures only.

The probes tested were:

1. The NAAL calibration standard pitot-static probe, (See Figures 2a, 2f, 3a, 3b, 3c, 3f and 3i).

2. The Ames Research Center calibration standard pitot-static probe Number 10, (See Figures 2g, 3d and 3e).

3. The Ames Research Center tunnel calibration pitot-static probe Number 3, (See Figures 2h, 3a and 3g).

4. The Ames Research Center tunnel calibration probe Number 4, (See Figures 2b, 2h and 3g).

5. The Rosemount static pressure probe, (See Figures 2e, 2i, 3b and 3c).

6. The 0.36-scale 92 AF system Rosemount model flight test air data probe, (See Figures 2j and 3f).

7. The NAAL special static pressure probe, (See Figures 2e, 2k and 3g).

The NAAL standard calibration pitot-static probe and the ARC standard calibration pitot-static probe were both supported from the floor of the tunnel and adjusted so that the probes were at the vertical centerline of the tunnel. These two probes were both tested on the tunnel spanwise centerline. The NAAL calibration standard pitot-static probe was also tested two feet south of the tunnel centerline.

## OA236 CONFIGURATIONS TESTED

| CONFIGURATION | DESCRIPTION |
|---|---|
| 1 | NAAL Calibration Std. Pitot - static probe located on the tunnel centerline, X = -48.8, with the sting strut support in the tunnel. |
| 2 | Ames Research Center Tunnel Calibration Pitot - Static Probe No. 4 on the tunnel centerline mounted on the Ames floor support frame, X = -48.5, with the sting strut support in the tunnel. |
| 3 | Ames Research Center Calibration Standard Pitot - static probe No. 10 on the tunnel centerline, X = -48.6, with the sting strut support in the tunnel. |
| 4 | NAAL Calibration Std. Pitot - static probe 2 ft. south of the tunnel centerline, X = -48.96, with the sting strut support in the tunnel. |
| 5 | Rosemount Static Pressure Probe mounted on the tunnel centerline boom, X = -48.80, and the NAAL Calibration Std. Pitot - static probe 2 ft. south of tunnel centerline, X = -48.96 with the sting strut support in the tunnel. |
| 6 | Ames Research Center Tunnel Calibration Pitot - static probe No. 3 mounted on the tunnel centerline boom and the NAAL Calibration Std. Pitot - static probe 2 ft. south of tunnel centerline, with the sting strut support in the tunnel. |
| 7 | Ames Research Center Tunnel Calibration Pitot - static probe No. 4 mounted on the tunnel centerline boom and the NAAL Calibration Std. Pitot - static probe 2 ft. south of the tunnel centerline, with the sting strut support in the tunnel. |
| 8 | NAAL Special Static Probe mounted on the tunnel centerline boom (boom faired), X = -48.8, and the NAAL Calibration Std. Pitot - static probe mounted 2 ft. south of the tunnel centerline, with the sting strut support in the tunnel. |

## OA236 CONFIGURATIONS TESTED (Concluded)

| CONFIGURATION | DESCRIPTION |
|---|---|
| 9 | NAAL Special Static Probe mounted on the tunnel centerline boom, X = -48.8, and the NAAL Calibration Std. Pitot - static probe mounted 2 ft. south of the tunnel centerline, with the sting strut support in the tunnel. (Same as Config. 8 but without the fairings on the boom). |
| 10 | 0.36 Scale SSV Flight Test Probe mounted on the tunnel centerline boom, x = -48.9, and the NAAL Calibration Std. Pitot - static probe 2 ft. south of the tunnel centerline with the sting strut support in the tunnel. |
| 11 | Rosemount Static Pressure Probe mounted on the tunnel centerline boom, X = -48.9, with the sting strut support in the tunnel. |
| 12 | Ames Research Center Tunnel Calibration Pitot - static probe No. 4 mounted on the tunnel centerline boom with the sting strut support in the tunnel. |
| 13 | Ames Research Center Tunnel Calibration Pitot - static probe No. 4 mounted on a floor to ceiling streamlined support, with the sting strut support in the tunnel. |
| 14 | Same as Config. 3 except it has two sets of supporting guy wires on the probe to minimize vibration. |

## INSTRUMENTATION

Each pressure obtained for this test was measured with two individual differential transducers. The computed data from each pair was averaged and tabulated as noted in the Data Reduction section of this report.

The pressure ranges for the transducers used were as follows:

| PRESSURE | TRANSDUCER RANGE IN PSI |
|---|---|
| $P_{27} - P_A$ | 1.0 |
| $P_{27} - P_{12}$ | 1.0 |
| $P_T - P_S$ | 1.0 |
| $P_{12} - P_S$ | 0.3 or 0.25 |
| $P_{T_B} - P_{T_{B1}}$ | 0.15 |
| $P_{S_B} - P_{S_{B1}}$ | 0.15 |

All pressure transducers were calibrated prior to the test.

## TEST FACILITY DESCRIPTION

North American Aerodynamics Laboratory (NAAL) 7.75 x 11-foot wind tunnel is a continuous-flow, closed-circuit, single-return tunnel capable of speeds up to 200 miles per hour.

The test section is vented to atmospheric pressure and is 7.75 x 11 feet wide and 12 feet long. Power is supplied by a 1250-horsepower nacelle-mounted synchronous motor driving a 19-foot, seven-blade, laminated birch propeller. Airspeed is controlled by using a magnetic clutch to vary the degree of coupling between the motor and propeller. Turbulence is minimized by a damping screen and a honeycomb section in the settling chamber upstream from the contraction cone (ratio 7.53 to 1).

Tests may be conducted using a variety of mounting systems: single strut, double strut, sting strut, reflection plane, cable suspension, or two-dimensional wall. Aerodynamic data may be measured by a planar type external balance system or sting-mounted internal balances. An Astrodata Automatic Data Acquisition System collects, multiplexes, digitizes, and records on magnetic tape 50 channels of force or pressure data or both. Data are then reduced and plotted using automatic data processing equipment and an automatic digital plotter.

The NAAL wind tunnel has been operating since June 1943. Calibrations are available over a wide range of test conditions.

## DATA REDUCTION

Each parameter recorded was measured with two pressure transducers. Thirty samples of data were averaged for each data point and three data points were taken at each of the four tunnel "q" settings. The data points were taken at about two-second intervals.

The static pressure data obtained with the Rosemount probe were used, without corrections, as the reference for all other static pressure data.

The tunnel dynamic pressure for data taken with the Rosemount probe was obtained by subtracting the Rosemount static pressure from the sum of $P_{27}$ and the calculated dynamic pressure in the 27-foot section of the tunnel. All data were corrected for compressibility. The dynamic pressure, $q_{o_{REF}}$, was used as a reference for the dynamic pressures obtained with other probes being tested.

The following data reduction equations were used:

$$q_{o_{REF}} = \left[(P_{12} - P_{SA}) + (P_{27} - P_{12}) + q_{27}\right]_{REF} \frac{1}{C}$$

$$q_o = \frac{(P_{27} - P_{12})}{(P_{27} - P_{12})_{REF}} \times q_{o_{REF}}$$

$$\frac{P_{SB} - P_o}{q_o} = \frac{(P_{12} - P_{SA})_{REF} \times K - (P_{12} - P_{SB})}{q_{o_{REF}} \times K}$$

$$q_{27} = q_o \left(\frac{A_T}{A_{27}}\right)^2 = .0179\ q_o$$

$$q_B = (P_T - P_S)_B \frac{1}{C}, \text{ uncorrected for probe error}$$

The reference run is the first run using the Rosemount probe.

## DATA REDUCTION (Concluded)

Average of each of three 30-sample data groups was computed for one set of transducers in Data Selection 1, as well as the average of the averages. The data for the second set of transducers are similarly reduced in Data Selection 2. Data Selection 3 averages the data of Selections 1 and 2.

TABLE I.

TEST : OA236 (NAAL 759)

DATE : 5-27-76

TEST CONDITIONS

| MACH NUMBER | REYNOLDS NUMBER (per foot) | DYNAMIC PRESSURE (PSF) | STAGNATION TEMPERATURE (°R) |
|---|---|---|---|
| 0.186 | $1.28 \times 10^6$ | 53 | 533 → 542 |
| 0.228 | $1.56 \times 10^6$ | 79 | 535 → 544 |
| 0.246 | $1.68 \times 10^6$ | 92 | 537 → 545 |
| 0.262 | $1.79 \times 10^6$ | 105 | 539 → 547 |
| | | | |
| | | | |
| | | | |
| | | | |
| | | | |
| | | | |
| | | | |
| | | | |
| | | | |
| | | | |
| | | | |
| | | | |

BALANCE UTILIZED: NO BALANCE WAS REQUIRED

| | CAPACITY: | ACCURACY: | COEFFICIENT TOLERANCE: |
|---|---|---|---|
| NF | — | | |
| SF | — | | |
| AF | — | | |
| PM | — | | |
| RM | — | | |
| YM | — | | |

COMMENTS:

TEST: NAAL 759 (OA236)

# DATA SET/RUN NUMBER COLLATION SUMMARY

DATE: June 1976

| | DATA SET IDENTIFIER | CONFIGURATION | SCHD. α | SCHD. β | CONTROL DEFLECTION | | | | NO. OF RUNS | MACH NUMBER (OR ALTERNATE INDEPENDENT VARIABLE) .186 | | .228 | .246 | .262 | | | | | | | TEST RUN NUMBERS |
|---|---|---|---|---|---|---|---|---|---|---|---|---|---|---|---|---|---|---|---|---|---|
| * | FM101 | CONFIG.1 DATA SELECT 1 | 0 | 0 | | | | | 4 | 1011 | | 1012 | 1013 | 1014 | | | | | | | |
| | 102 | 2 | | | | | | | 4 | 1021 | | 1022 | 1023 | 1024 | | | | | | | |
| | 103 | 3 | | | | | | | 4 | 1031 | | 1032 | 1033 | 1034 | | | | | | | |
| | 104 | 4 | | | | | | | 4 | 1041 | | 1042 | 1043 | 1044 | | | | | | | |
| | 105 | 5 | | | | | | | 4 | 1051 | | 1052 | 1053 | 1054 | | | | | | | |
| | 106 | 6 | | | | | | | 4 | 1061 | | 1062 | 1063 | 1064 | | | | | | | |
| | 107 | 7 | | | | | | | 4 | 1071 | | 1072 | 1073 | 1074 | | | | | | | |
| | 108 | 8 | | | | | | | 4 | 1081 | | 1082 | 1083 | 1084 | | | | | | | |
| | 109 | 9 | | | | | | | 4 | 1091 | | 1092 | 1093 | 1095 | | | | | | | |
| | 110 | 10 | | | | | | | 4 | 1101 | | 1102 | 1103 | 1104 | | | | | | | |
| | 111 | 5 | | | | | | | 4 | 1111 | | 1112 | 1113 | 1114 | | | | | | | |
| | 112 | 11 | | | | | | | 4 | 1121 | | 1122 | 1123 | 1124 | | | | | | | |
| | 113 | 12 | | | | | | | 4 | 1131 | | 1132 | 1133 | 1134 | | | | | | | |
| | 114 | 13 | | | | | | | 4 | 1141 | | 1142 | 1143 | 1144 | | | | | | | |
| | 115 | 1 | | | | | | | 4 | 1151 | | 1152 | 1153 | 1154 | | | | | | | |
| | 116 | 3 | | | | | | | 4 | 1161 | | 1162 | 1163 | 1164 | | | | | | | |
| | 117 | 14 | | | | | | | 4 | 1171 | | 1172 | 1173 | 1174 | | | | | | | |

1 7 13 19 25 31 37 43 49 55 61 67 75 76

*R 27-12 12-AT M27-AT MT BI SB IT B-SB TB-TB IS B-SB I12-PØ 12-SB MACH ALPHA

COEFFICIENTS IDVAR (1) IDVAR (2) NDV.

α OR β SCHEDULES

S TBTØ/Q QBI/QØ QB/QØ SBPØ/Q SBSBIQ TBTBIQ 2712/Q 12SBIQ 12SB/Q P12PØQ MACH ALPHA

T TTØ QØ QBI QB PAC MACH ALPHA



ORIGINAL PAGE IS OF POOR QUALITY

NASA-MSFC-MAF

TEST: NRLAD (ØA236)

# DATA SET/RUN NUMBER COLLATION SUMMARY

DATE: June 1976

| DATA SET IDENTIFIER | CONFIGURATION | SCHD. CONTROL DEFLECTION α | SCHD. CONTROL DEFLECTION β | | | | | NO. OF RUNS | MACH NUMBERS (OR ALTERNATE INDEPENDENT VARIABLE) .188 | | .230 | .248 | .265 | | | | | | | |
|---|---|---|---|---|---|---|---|---|---|---|---|---|---|---|---|---|---|---|---|---|
| * FM201 | CONFIG 1 DATA SELECT 2 | 0 | 0 | | | | | 4 | 2011 | | 2012 | 2013 | 2014 | | | | | | | |
| 202 | 2 | | | | | | | 4 | 2021 | | 2022 | 2023 | 2024 | | | | | | | |
| 203 | 3 | | | | | | | 4 | 2031 | | 2032 | 2033 | 2034 | | | | | | | |
| 204 | 4 | | | | | | | 4 | 2041 | | 2042 | 2043 | 2044 | | | | | | | |
| 205 | 5 | | | | | | | 4 | 2051 | | 2052 | 2053 | 2054 | | | | | | | |
| 206 | 6 | | | | | | | 4 | 2061 | | 2062 | 2063 | 2064 | | | | | | | |
| 207 | 7 | | | | | | | 4 | 2071 | | 2072 | 2073 | 2074 | | | | | | | |
| 208 | 8 | | | | | | | 4 | 2081 | | 2082 | 2083 | 2084 | | | | | | | |
| 209 | 9 | | | | | | | 4 | 2091 | | 1091 | 1092 | 1093 | | | | | | | |
| 210 | 10 | | | | | | | 4 | 2101 | | 2102 | 2103 | 2104 | | | | | | | |
| 211 | 5 | | | | | | | 4 | 2111 | | 2112 | 2113 | 2114 | | | | | | | |
| 212 | 11 | | | | | | | 4 | 2121 | | 2122 | 2123 | 2124 | | | | | | | |
| 213 | 12 | | | | | | | 4 | 2131 | | 2132 | 2133 | 2134 | | | | | | | |
| 214 | 13 | | | | | | | 4 | 2141 | | 2143 | 2143 | 2144 | | | | | | | |
| 215 | 1 | | | | | | | 4 | 2151 | | 2152 | 2153 | 2154 | | | | | | | |
| 216 | 3 | | | | | | | 4 | 2161 | | 2162 | 2163 | 2164 | | | | | | | |
| 217 | 14 | | | | | | | 4 | 2171 | | 2172 | 2173 | 2174 | | | | | | | |

TEST RUN NUMBERS

1 7 13 19 25 31 37 43 49 55 61 67 75 76

COEFFICIENTS IDVAR (1) IDVAR (2) NDV

α OR β SCHEDULES



NASA-MSFC-MAF

TEST: NRLAD (ØA236)

# DATA SET/RUN NUMBER COLLATION SUMMARY

DATE: June 1976

| DATA SET IDENTIFIER | CONFIGURATION | SCHD. CONTROL DEFLECTION α | SCHD. CONTROL DEFLECTION β | NO. OF RUNS | MACH NUMBER (OR ALTERNATE INDEPENDENT VARIABLE) .188 | .230 | .248 | .265 |
|---|---|---|---|---|---|---|---|---|
| FM301 | CONFIG 1 DATA SELECT. 3 | 0 | 0 | 4 | 3011 | 3012 | 3013 | 3014 |
| 302 | 2 | | | 4 | 3021 | 3022 | 3023 | 3024 |
| 303 | 3 | | | 4 | 3031 | 3032 | 3033 | 3034 |
| 304 | 4 | | | 4 | 3041 | 3042 | 3043 | 3044 |
| 305 | 5 | | | 4 | 3051 | 3052 | 3053 | 3054 |
| 306 | 6 | | | 4 | 3061 | 3062 | 3063 | 3064 |
| 307 | 7 | | | 4 | 3071 | 3072 | 3073 | 3074 |
| 308 | 8 | | | 4 | 3081 | 3082 | 3083 | 3084 |
| 309 | 9 | | | 4 | 3091 | 3092 | 3093 | 3094 |
| 310 | 10 | | | 4 | 3101 | 3102 | 3103 | 3104 |
| 311 | 5 | | | 4 | 3111 | 3112 | 3113 | 3114 |
| 312 | 11 | | | 4 | 3121 | 3122 | 3123 | 3124 |
| 313 | 12 | | | 4 | 3131 | 3132 | 3133 | 3134 |
| 314 | 13 | | | 4 | 3141 | 3142 | 3143 | 3144 |
| 315 | 1 | | | 4 | 3151 | 3152 | 3153 | 3154 |
| 316 | 3 | | | 4 | 3161 | 3162 | 3163 | 3164 |
| 317 | 14 | | | 4 | 3171 | 3172 | 3173 | 3174 |

TEST RUN NUMBERS

1 7 13 19 25 31 37 43 49 55 61 67 75 76

COEFFICIENTS IDVAR (1) IDVAR (2) NDV

α OR β SCHEDULES

NASA-MSFC-MAF

TABLE III. OA236 RUN INDEX

| RUN NUMBER | PROBE ON TUNNEL CENTERLINE | PROBE 2 FEET SOUTH OF TUNNEL CENTERLINE | REMARKS |
|---|---|---|---|
| 1 | NAAL calibration standard X = -48.8 | NONE | |
| 2 | ARC T. C. probe #4 mounted on the Ames floor support frame | NONE | |
| 3 | ARC calibration standard pitot-static probe No. 10 X = -48.6 | NONE | |
| 4 | NONE | NAAL calibration standard pitot-static probe X = -48.96 | |
| 5 | Rosemount static probe mounted on the centerline boom X = -48.8 | NAAL calibration standard pitot-static probe X = -48.96 | |
| 6 | ARC T.C. probe #3 mounted on the centerline boom | NAAL calibration standard pitot-static probe | |
| 7 | ARC T.C. probe #4 mounted on the centerline boom | NAAL calibration standard pitot-static probe | |
| 8 | NAAL special static probe mounted on the tunnel centerline boom | NAAL calibration standard pitot-static probe | The junctions between the forward end of the cable support and boom, and between the probe and boom were faired with clay. |
| 9 | NAAL special static probe mounted on the tunnel centerline boom | NAAL calibration standard pitot-static probe | No fairing between the boom and probe or cable support |

TABLE III. OA236 RUN INDEX (Concluded)

| RUN NUMBER | PROBE ON TUNNEL CENTERLINE | PROBE 2 FEET SOUTH OF TUNNEL CENTERLINE | REMARKS |
|---|---|---|---|
| 10 | 0.36-scale SSV flight test probe mounted on the centerline boom | NAAL calibration standard pitot-static probe | |
| 11 | Rosemount static probe mounted on the centerline boom | NAAL calibration standard pitot-static probe | |
| 12 | Rosemount static probe mounted on the centerline boom | NONE | |
| 13 | ARC T.C. probe #4 mounted on the centerline boom | NONE | |
| 14 | ARC T.C. probe #4 mounted on a floor to ceiling streamlined support | NONE | |
| 15 | NAAL calibration standard pitot-static probe | NONE | Rerun of Run 1. |
| 16 | ARC calibration standard pitot-static probe No. 10 | NONE | Rerun of Run 3 (one set of supporting guy wires). |
| 17 | ARC calibration standard pitot-static probe No. 10 | | With two sets of supporting guy wires. |
| 18 | NAAL calibration standard pitot-static probe | NONE | No leak in the $P_{12}$ static pressure ring. |
| 19 | NAAL calibration standard pitot-static probe | NONE | Rerun of Run 18. |
| 20 | NAAL calibration standard pitot-static probe | NONE | Two wall pitot-static probes were in the tunnel. |

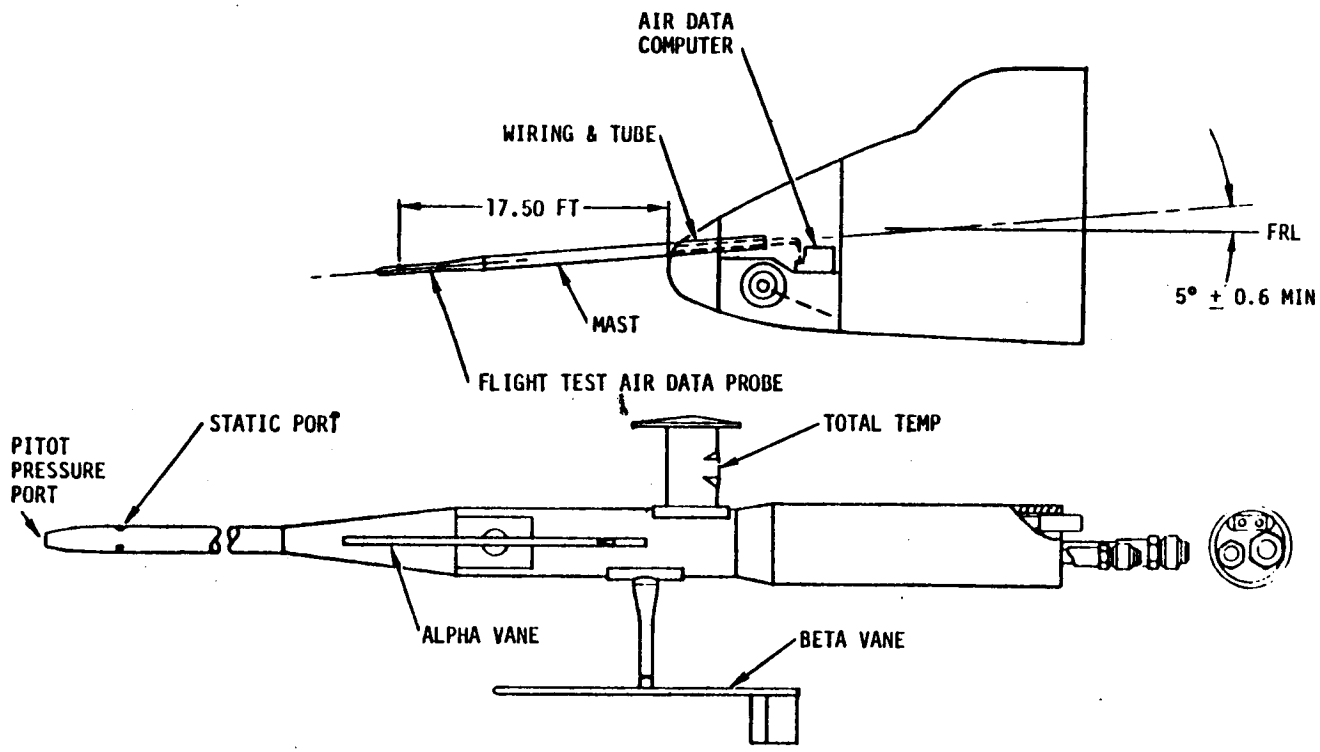


Figure 1. Full-scale flight test air data probe.

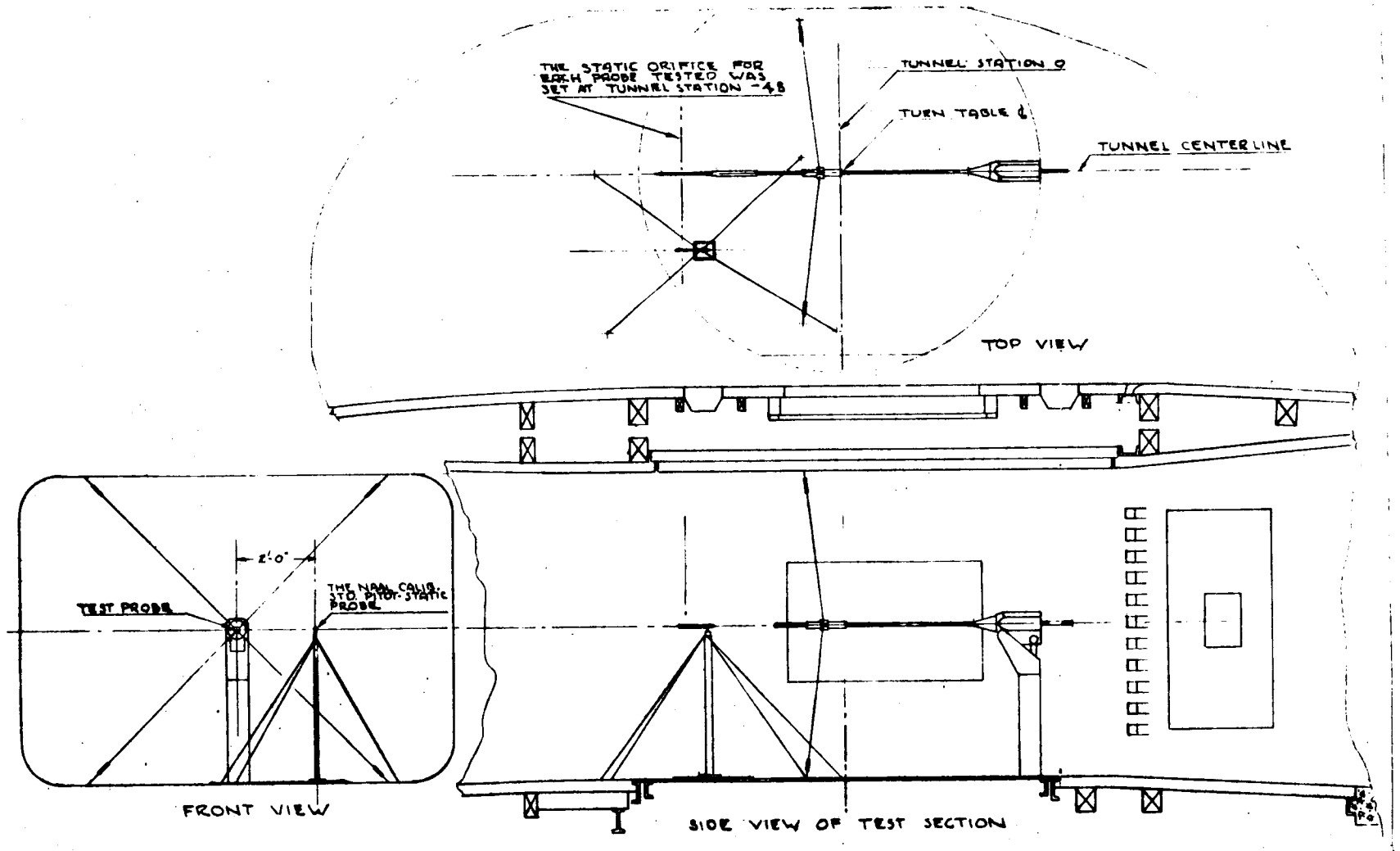


a. Installation Drawing Showing the Centerline Boom and the NAAL Calibration Standard Probe

**Figure 2. Model sketches.**

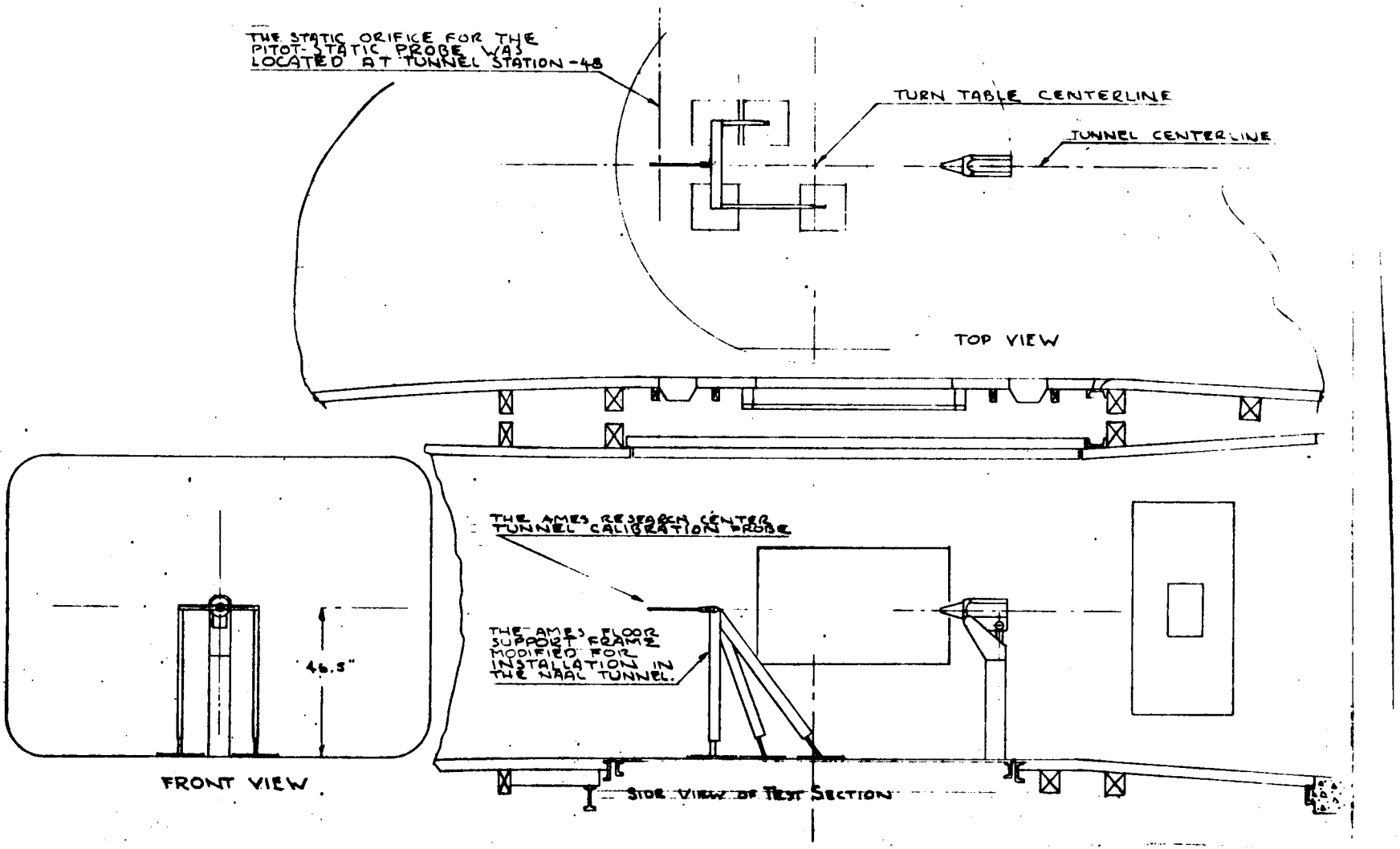


b. Installation Drawing Showing the Ames Floor Support Frame with the Ames Tunnel Calibration Pitot-Static Probe Number 4
Figure 2. Continued.

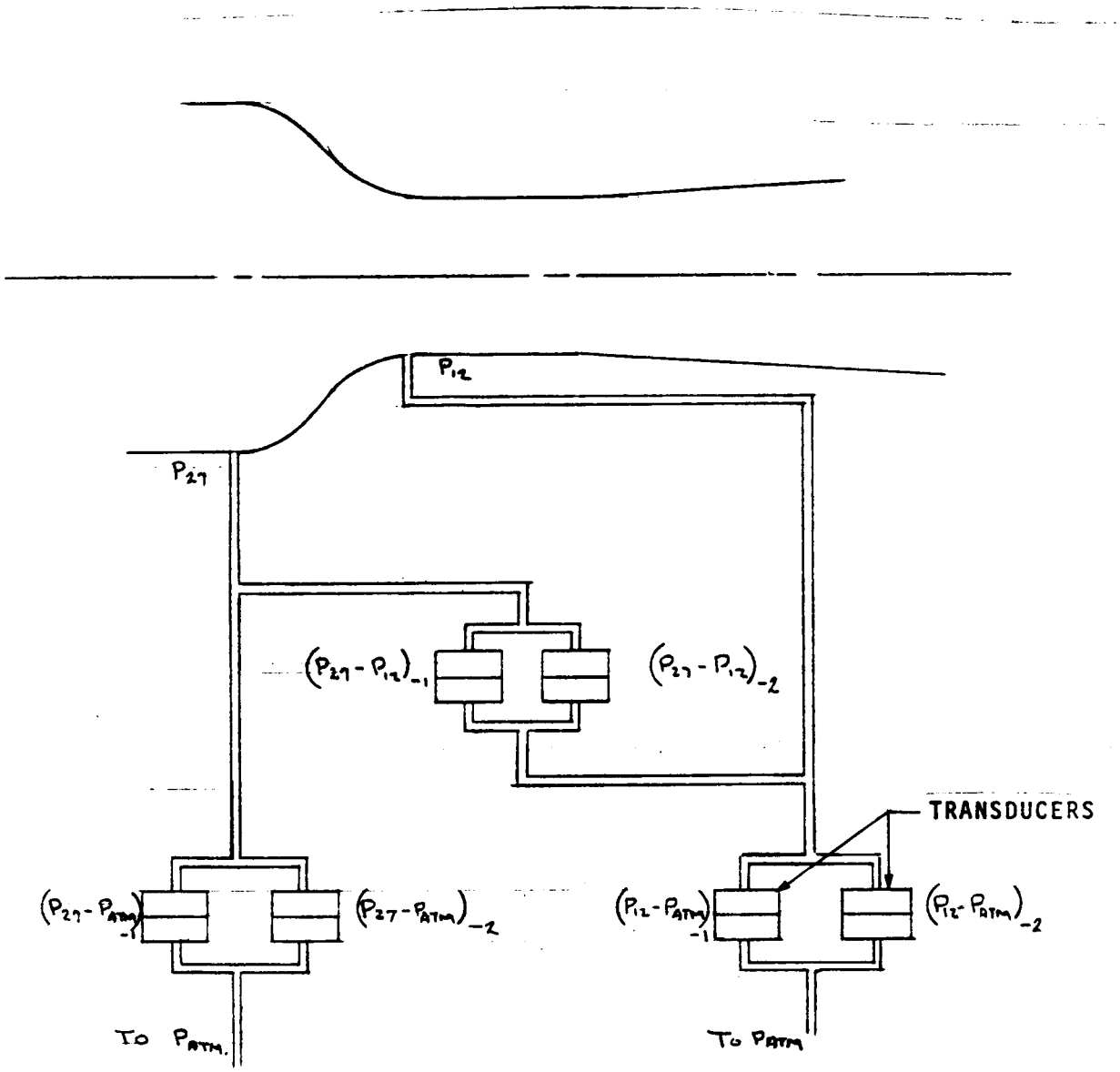


c. Schematic of the Transducer Hook-Up for the Tunnel Instrumentation Used During the Pitot-Static Probe Calibration Test
Figure 2. Continued.



ORIGINAL PAGE IS
OF POOR QUALITY

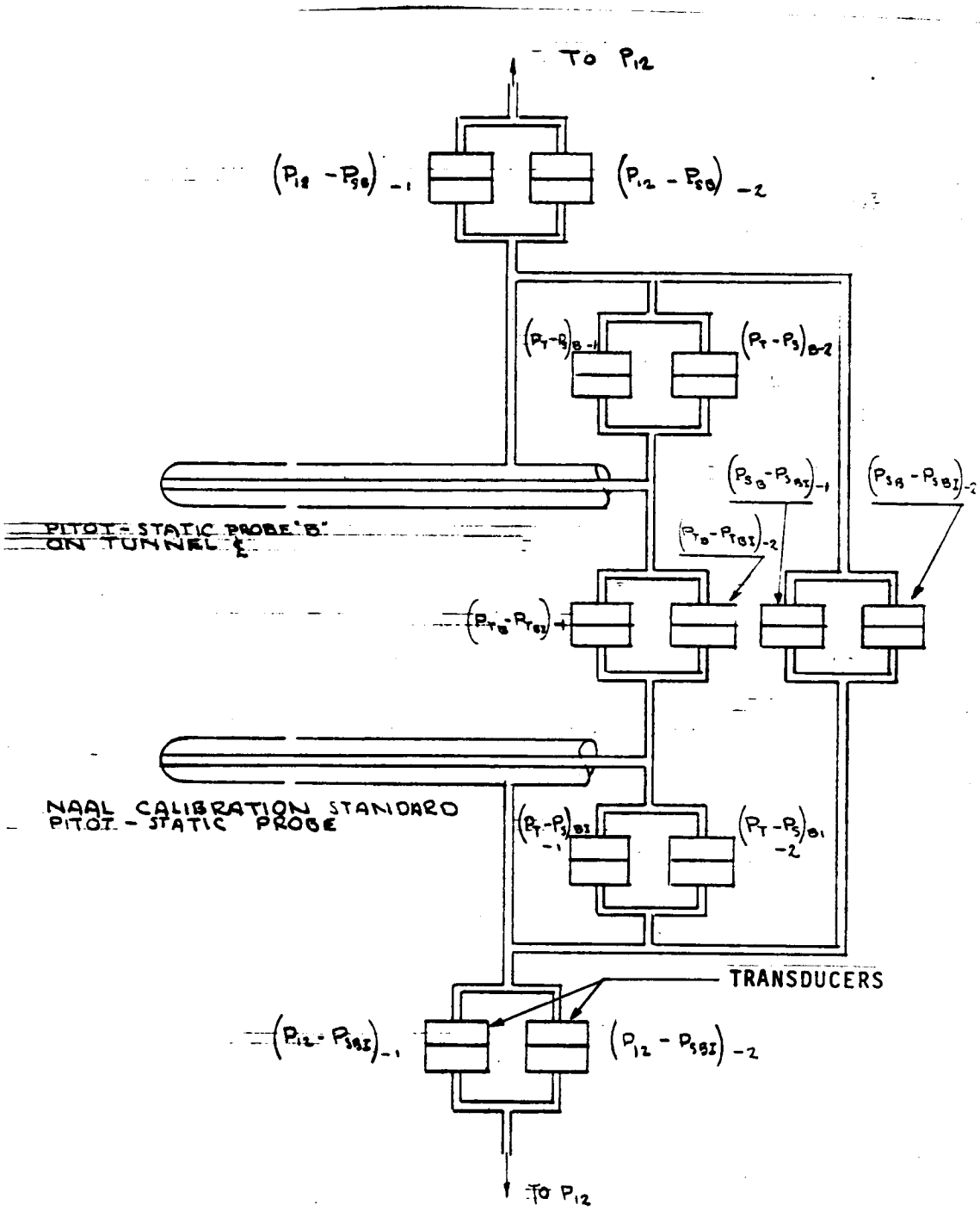


d. Schematic of the Transducer Hook-Up with Two Pitot-Static Probes Tested Simultaneously
Figure 2. Continued.

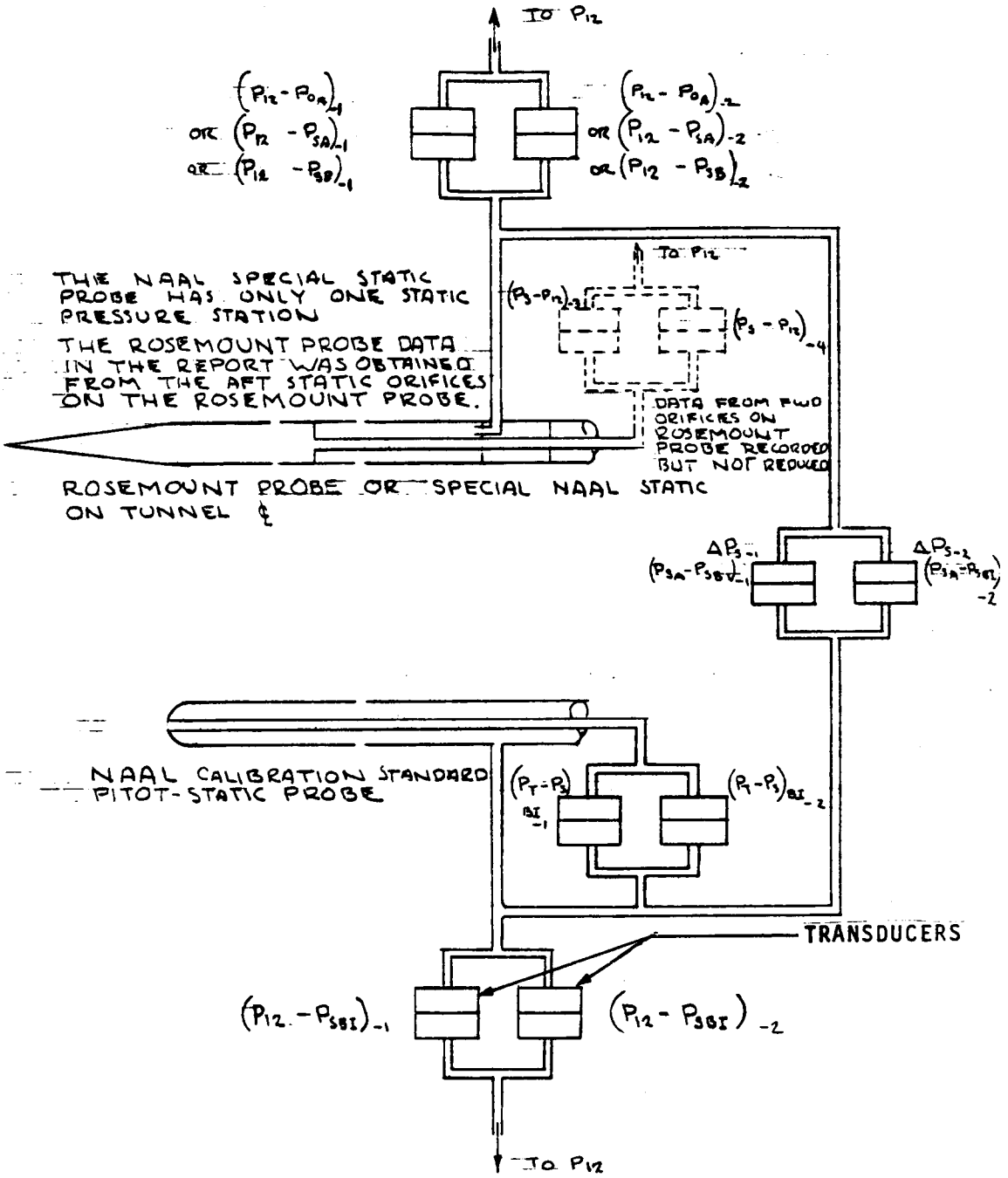


e. Schematic of the Transducer Hook-Up with the Rosemount Static or NAAL Special Static Pressure Probe Tested with the NAAL Calibration Standard Probe
**Figure 2. Continued.**

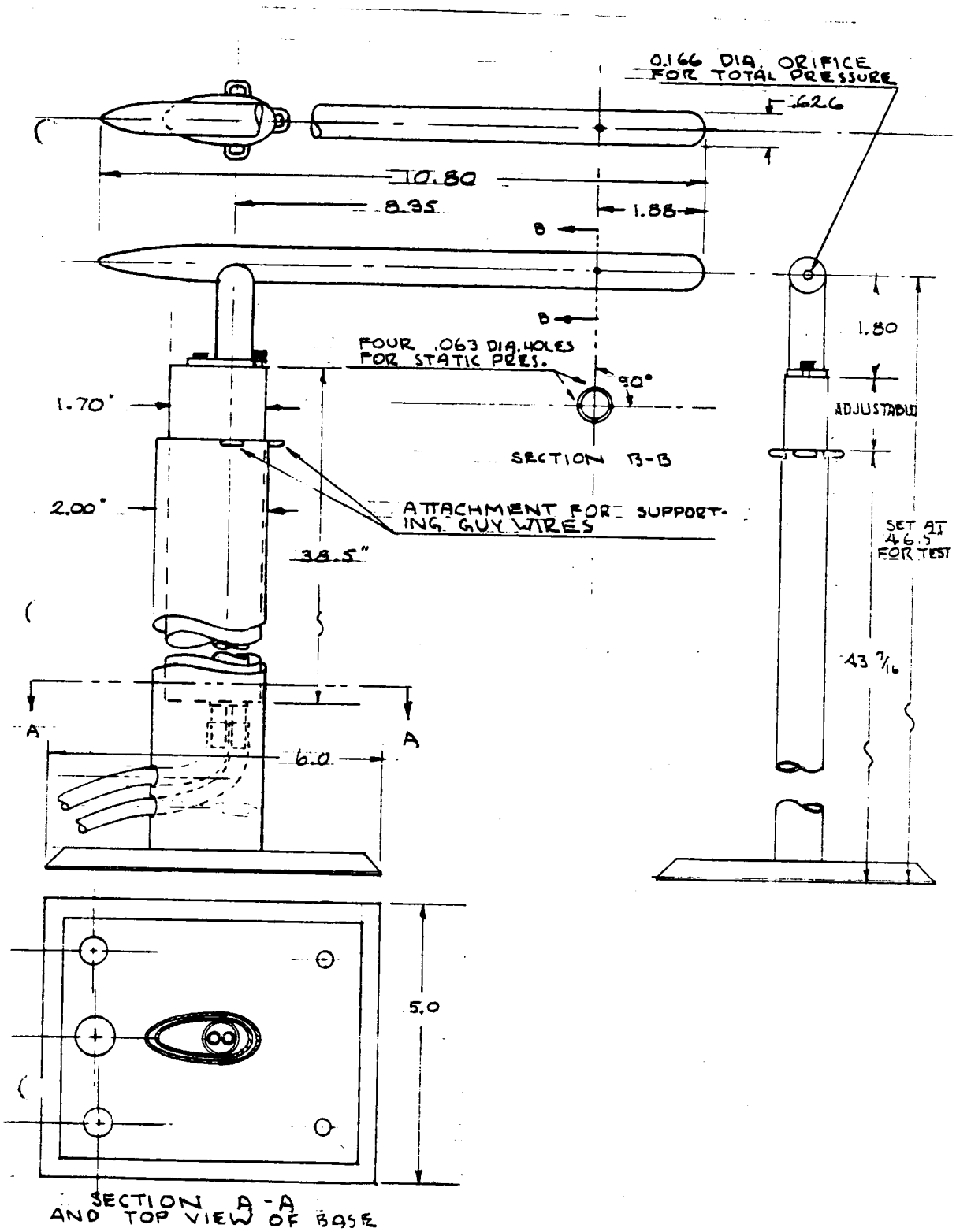


f. NAAL Calibration Standard Pitot-Static Probe for the Rockwell International Low-Speed Wind Tunnel Figure 2. Continued.

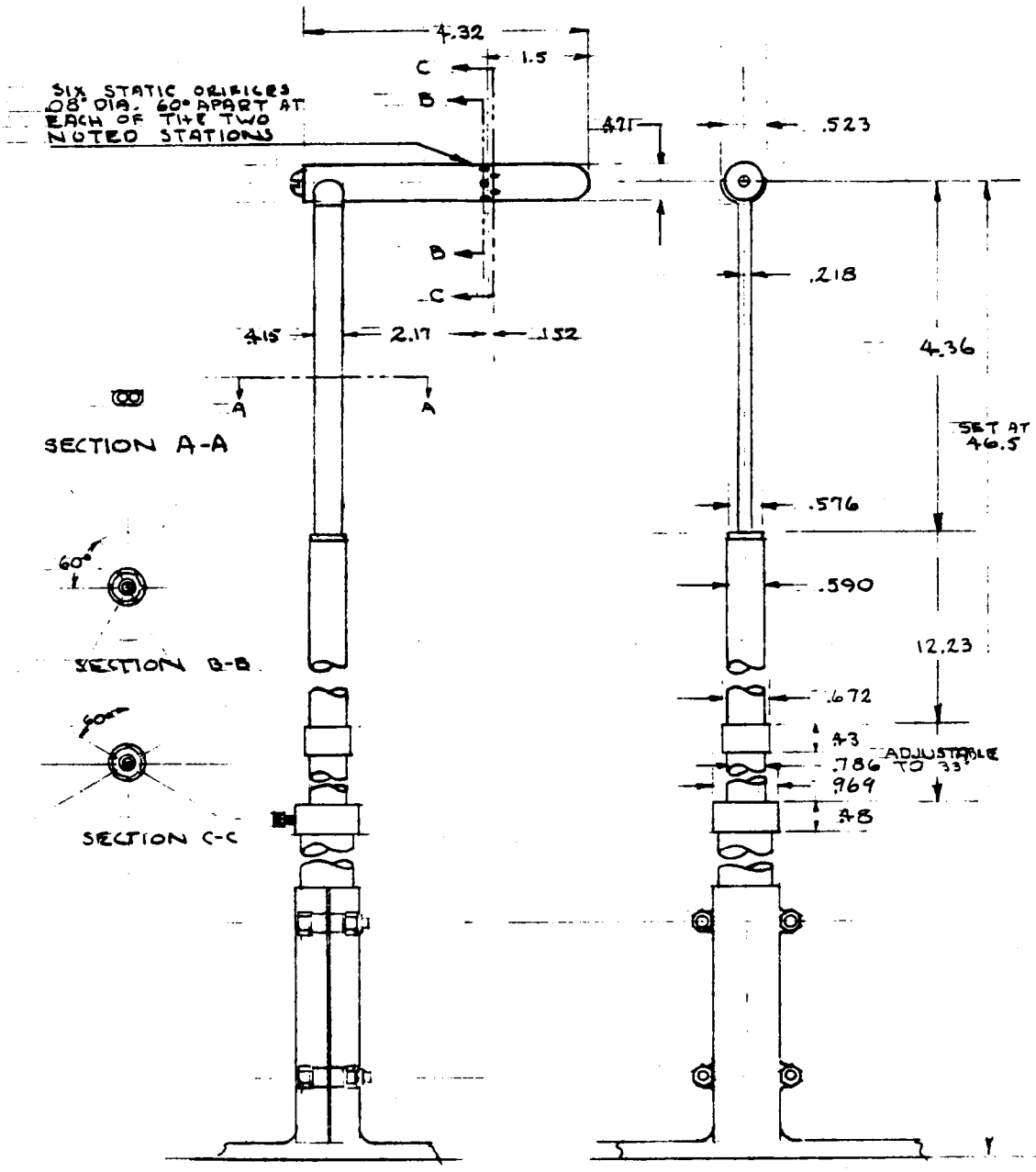


Note: All Dimensions are given in inches.

g. Ames Research Center Calibration Standard
Pitot-Static Probe Number 10
Figure 2. Continued.

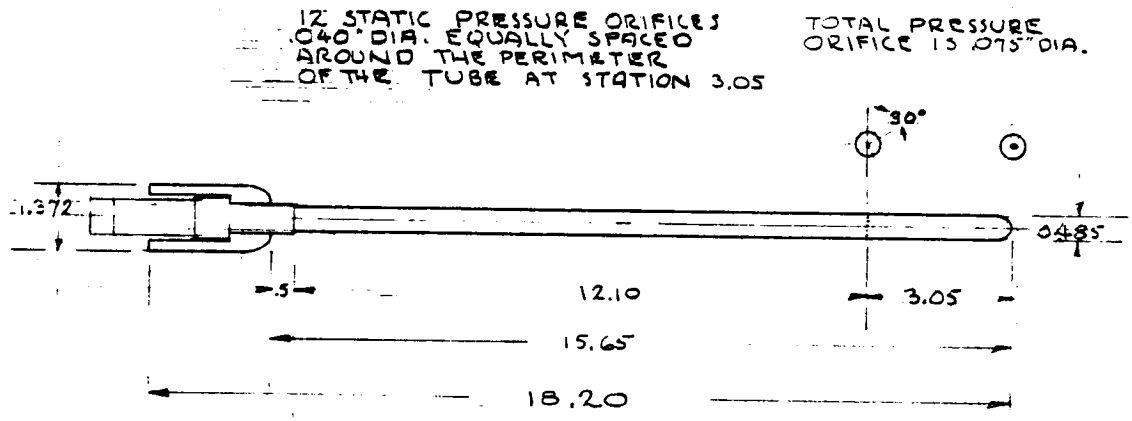


**Note: All Dimensions are given in inches.**

h. Ames Research Center Tunnel Calibration
Pitot-Static Probes Numbers 3 and 4
Figure 2. Continued.

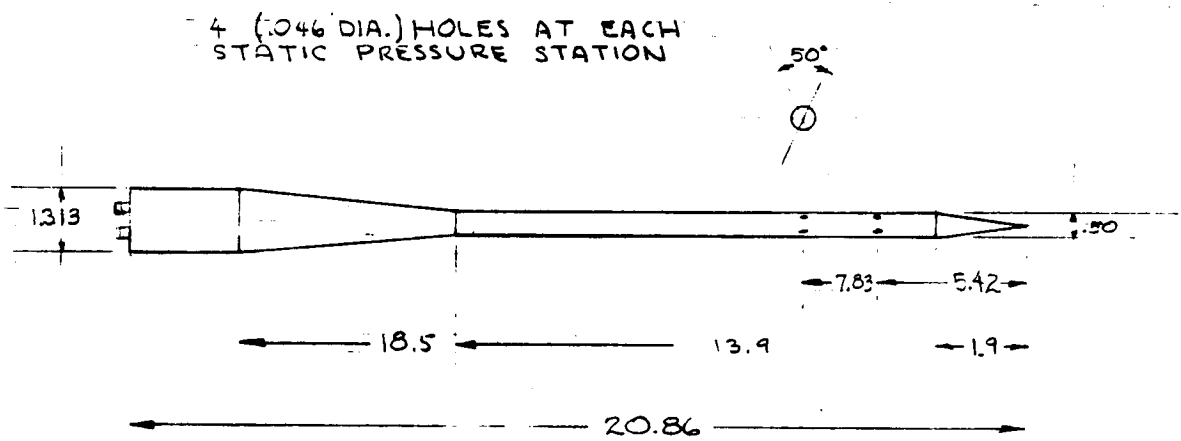


Note: All Dimensions are given in inches.

Note: The static pressures measured with the aft set of orifices on this probe, were used as the reference static pressure for all other static pressure readings.

i. Rosemount Static Pressure Probe
**Figure 2. Continued.**



ORIGINAL PAGE IS
OF POOR QUALITY

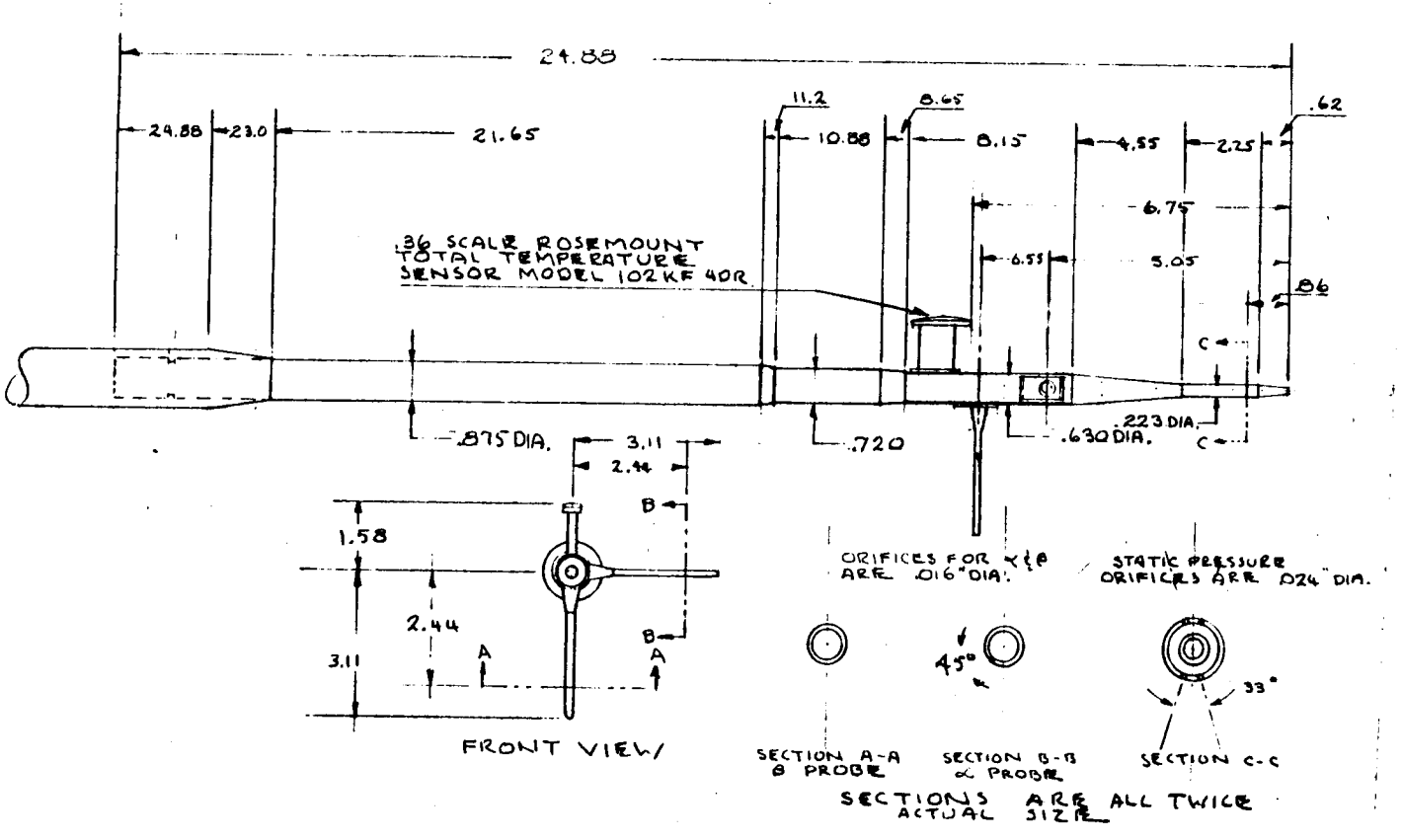


Note: All Dimensions are given in inches.

j. 0.36-Scale 92AF System Rosemount Model Flight Test Air Data Probe
**Figure 2. Continued.**

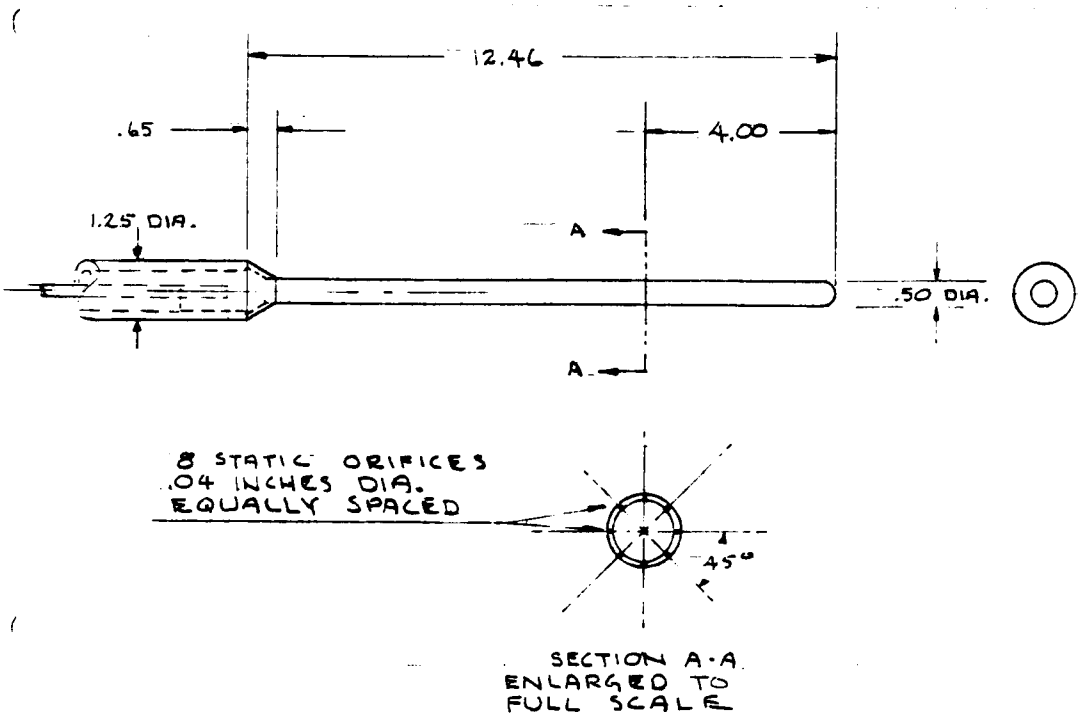


Note: All Dimensions are given in inches.

k. NAAL Special Static Pressure Probe
Figure 2. Concluded.

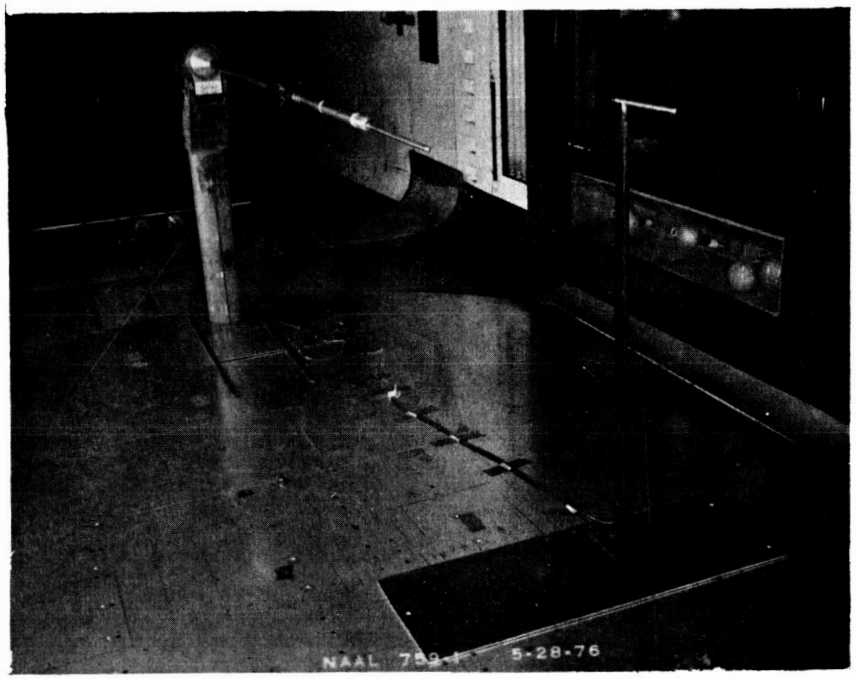


a. Three-Quarter Front View Showing the Ames Tunnel Calibration Probe Number 3 on the Tunnel Centerline Boom and the NAAL Calibration Standard Pitot-Static Probe Installed Two Feet South of the Tunnel Centerline

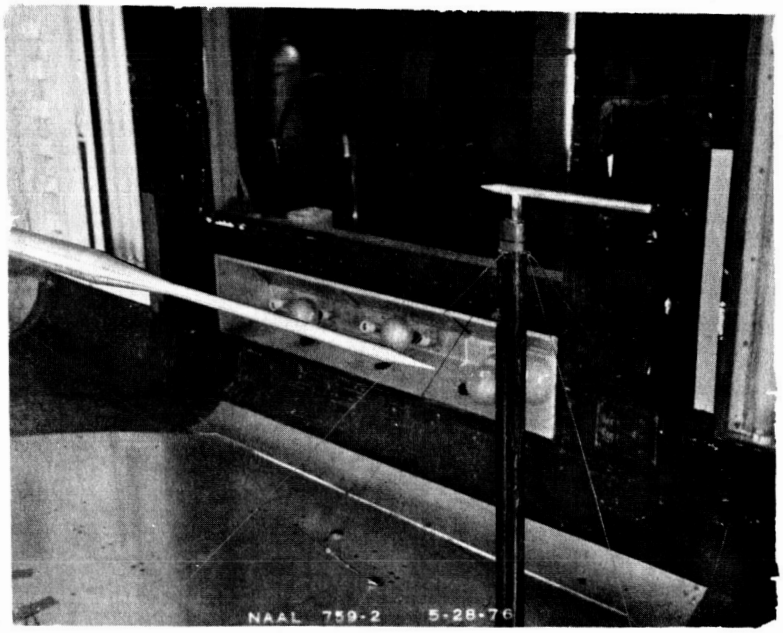


b. Three-Quarter Front Closeup View of the Rosemount Static Probe on the Tunnel Centerline Boom and the NAAL Calibration Standard Probe Two Feet South of the Tunnel Centerline

Figure 3. Model photographs.



ORIGINAL PAGE IS
OF POOR QUALITY

c. Three-Quarter Front View of the Rosemount Static Probe Installed on the Centerline Boom with the NAAL Calibration Standard Pitot-Static Probe Installed Two Feet South of the Tunnel Centerline

d. The Ames Research Center Calibration Standard Pitot-Static Probe Number 10, Installed on the Tunnel Centerline
Figure 3. Continued.

e. Three-Quarter Front Closeup View of the Ames Calibration Standard Pitot-Static Probe Number 10 Installed on the Tunnel Centerline Showing the Two Sets of Supporting Guy Wires Used to Steady the Probe at High Tunnel Dynamic Pressures

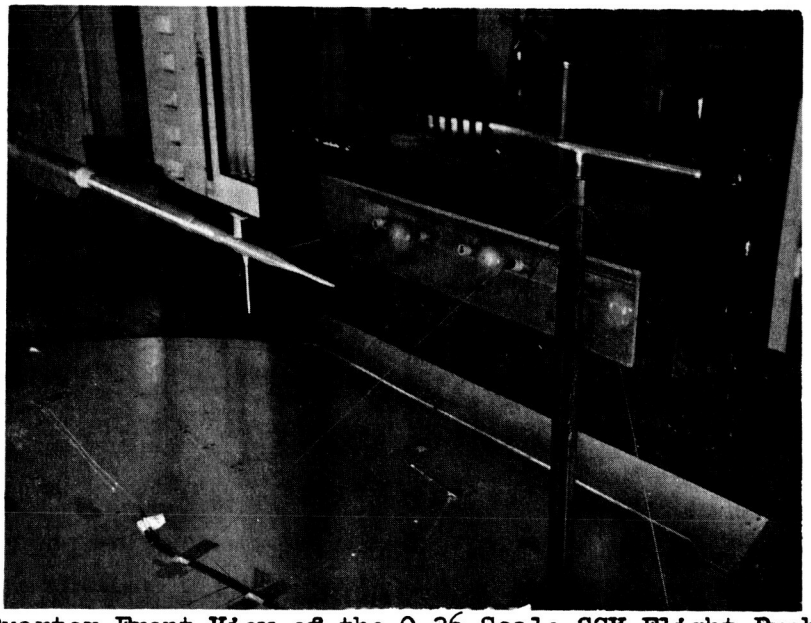

f. Three-Quarter Front View of the 0.36-Scale SSV Flight Probe Mounted on the Centerline Boom with the NAAL Calibration Standard Probe Installed Two Feet South of the Tunnel Centerline

Figure 3. Continued.

g. Three-Quarter Front View of the Ames Tunnel Calibration Probe Number 3 or 4 Mounted in the Center of the Wind Tunnel on the Ames Streamlined-Tube Floor Mount

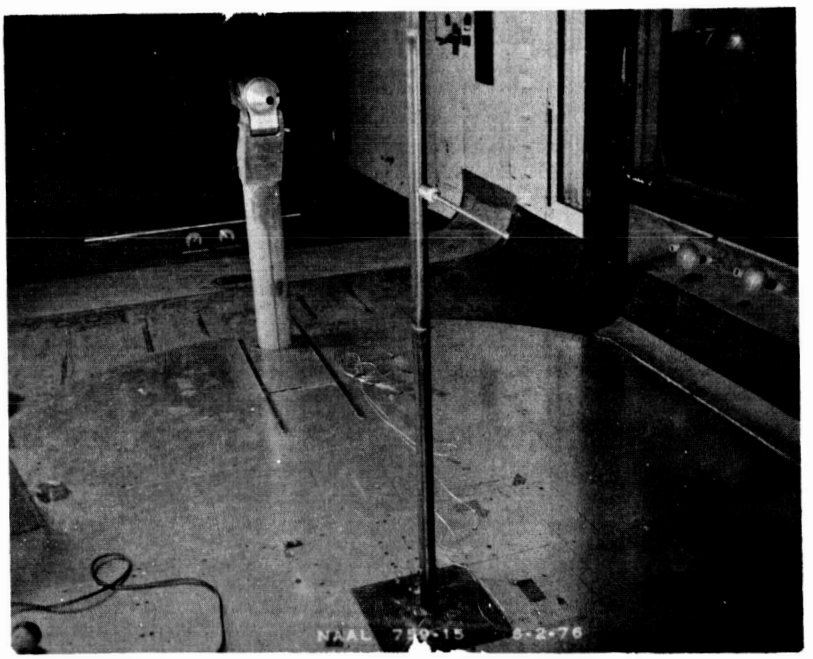

h. Three-Quarter Front View of One of the Ames Tunnel Calibration Pitot-Static Probes on the Tunnel Centerline Mounted on a Streamlined Aircraft Tube Supported at the Tunnel Floor and Ceiling
Figure 3. Continued.



ORIGINAL PAGE IS
OF POOR QUALITY

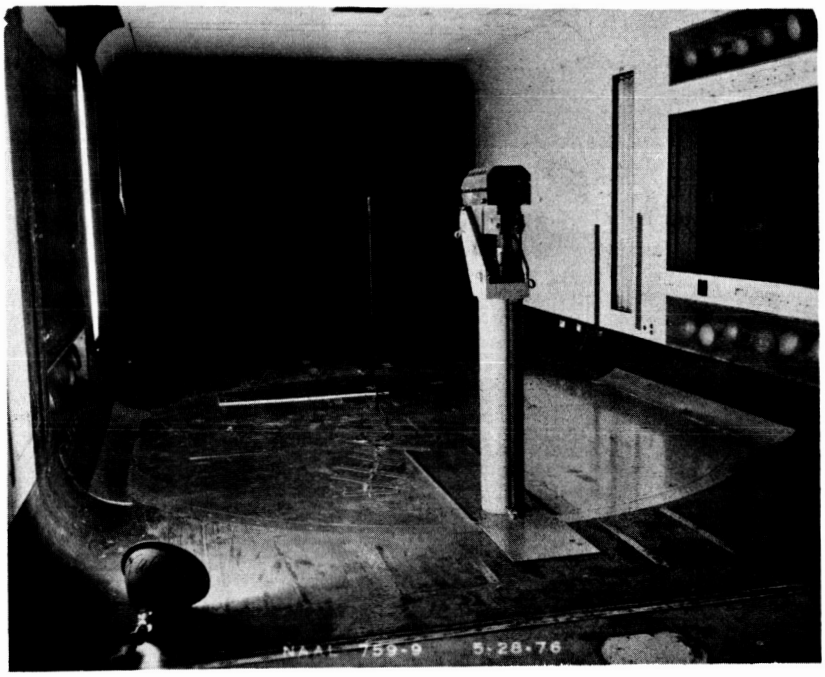


i. Rear View of the Tunnel Test Section with the NAAL Calibration Standard Pitot-Static Probe on the Tunnel Centerline

Figure 3. Concluded.

# APPENDIX

## TABULATED SOURCE DATA

Tabulations of plotted data are available on request from Data Management Services

OA236 (NAAL 759) CONFIGURATION 1 DATA SELECT 1 (RFM101) ( 28 JUN 79 )

REFERENCE DATA

SREF = .0000 SQ.FT. XMRP = .0000 IN. XT
LREF = .0000 INCHES YMRP = .0000 IN. YT
BREF = .0000 INCHES ZMRP = .0000 IN. ZT
SCALE = 1.0000

PARAMETRIC DATA

ALPHA = .000 BETA = .000

RUN NO. 1011/ 0 RN/L = 1.29 GRADIENT INTERVAL = -5.00/ 5.00

| MACH | ALPHA | 27-12 | 12-ATM | 27-ATM | TBISBI | TB-SB | TB-TBI | SB-SBI | 12-PO | 12-SB |
|---|---|---|---|---|---|---|---|---|---|---|
| .188 | .000 | 43.52020 | 9.90320 | 53.43740 | 53.05190 | 53.03110 | -.00810 | .00000 | 9.38780 | 9.29710 |
| .188 | .000 | 43.45940 | 9.91110 | 53.38890 | 52.99150 | 52.98120 | -.00320 | .00000 | 9.37460 | 9.28620 |
| .188 | .000 | 43.48370 | 9.84390 | 53.36460 | 53.03980 | 53.04360 | -.00160 | -.01050 | 9.37990 | 9.32440 |
| .188 | .000 | 43.48780 | 9.88610 | 53.39700 | 53.02770 | 53.01860 | -.00430 | -.00350 | 9.38080 | 9.30260 |
| | GRADIENT | .00000 | .00000 | .00000 | .00000 | .00000 | .00000 | .00000 | .00000 | .00000 |

RUN NO. 1012/ 0 RN/L = 1.58 GRADIENT INTERVAL = -5.00/ 5.00

| MACH | ALPHA | 27-12 | 12-ATM | 27-ATM | TBISBI | TB-SB | TB-TBI | SB-SBI | 12-PO | 12-SB |
|---|---|---|---|---|---|---|---|---|---|---|
| .229 | .000 | 65.23170 | 14.99520 | 80.25320 | 79.87420 | 79.87130 | -.00160 | .00450 | 14.13140 | 14.24330 |
| .230 | .000 | 65.29250 | 14.99120 | 80.32600 | 79.91050 | 79.90870 | -.00160 | .01200 | 14.14570 | 14.22140 |
| .229 | .000 | 65.23170 | 14.90820 | 80.20470 | 79.83790 | 79.84630 | .00480 | .00000 | 14.13140 | 14.24870 |
| .230 | .000 | 65.25200 | 14.96490 | 80.26130 | 79.87420 | 79.87540 | .00050 | .00550 | 14.13610 | 14.23780 |
| | GRADIENT | .00000 | .00000 | .00000 | .00000 | .00000 | .00000 | .00000 | .00000 | .00000 |

RUN NO. 1013/ 0 RN/L = 1.70 GRADIENT INTERVAL = -5.00/ 5.00

| MACH | ALPHA | 27-12 | 12-ATM | 27-ATM | TBISBI | TB-SB | TB-TBI | SB-SBI | 12-PO | 12-SB |
|---|---|---|---|---|---|---|---|---|---|---|
| .248 | .000 | 76.13000 | 17.58070 | 93.79460 | 93.38210 | 93.37870 | -.00650 | .00300 | 16.73630 | 16.81460 |
| .248 | .000 | 76.20300 | 17.67560 | 93.94020 | 93.43040 | 93.42870 | -.00810 | .00150 | 16.75380 | 16.82550 |
| .248 | .000 | 76.15430 | 17.57280 | 93.79460 | 93.41830 | 93.44120 | .01460 | .00150 | 16.74210 | 16.80910 |
| .248 | .000 | 76.16240 | 17.60970 | 93.84310 | 93.41030 | 93.41620 | .00000 | .00200 | 16.74400 | 16.81640 |
| | GRADIENT | .00000 | .00000 | .00000 | .00000 | .00000 | .00000 | .00000 | .00000 | .00000 |

RUN NO. 1014/ 0 RN/L = 1.81 GRADIENT INTERVAL = -5.00/ 5.00

| MACH | ALPHA | 27-12 | 12-ATM | 27-ATM | TBISBI | TB-SB | TB-TBI | SB-SBI | 12-PO | 12-SB |
|---|---|---|---|---|---|---|---|---|---|---|
| .265 | .000 | 87.05270 | 20.39550 | 107.53000 | 106.95000 | 106.94800 | .00000 | .01660 | 19.35130 | 19.36950 |
| .265 | .000 | 87.10130 | 20.32830 | 107.53000 | 107.04700 | 107.08600 | .00810 | -.00450 | 19.36290 | 19.44600 |
| .265 | .000 | 87.18650 | 20.26110 | 107.53000 | 107.14300 | 107.16000 | .00320 | -.00900 | 19.38330 | 19.48960 |
| .265 | .000 | 87.11350 | 20.32830 | 107.53000 | 107.04700 | 107.06500 | .00380 | .00090 | 19.36580 | 19.43500 |
| | GRADIENT | .00000 | .00000 | .00000 | .00000 | .00000 | .00000 | .00000 | .00000 | .00000 |

OA23G (NAAL 759) CONFIGURATION 2 DATA SELECT 1 (RFM102) ( 28 JUN 79 )

REFERENCE DATA

SREF = .0000 SQ.FT. XMRP = .0000 IN. XT
LREF = .0000 INCHES YMRP = .0000 IN. YT
BREF = .0000 INCHES ZMRP = .0000 IN. ZT
SCALE = 1.0000

PARAMETRIC DATA

ALPHA = .000 BETA = .000

RUN NO. 1021/ 0 RN/L = 1.28 GRADIENT INTERVAL = -5.00/ 5.00

| MACH | ALPHA | 27-12 | 12-ATM | 27-ATM | TBISBI | TB-SB | TB-TBI | SB-SBI | 12-PO | 12-SB |
|---|---|---|---|---|---|---|---|---|---|---|
| .188 | .000 | 43.24050 | 10.23530 | 53.51020 | 52.25380 | 52.23220 | .00000 | .00150 | 9.32700 | 8.79490 |
| .188 | .000 | 43.20400 | 10.19580 | 53.46170 | 52.16910 | 52.15730 | .00000 | .00150 | 9.31910 | 8.75670 |
| .187 | .000 | 43.14320 | 10.22340 | 53.41310 | 52.12080 | 52.10730 | .00320 | .00150 | 9.30590 | 8.77300 |
| .188 | .000 | 43.19580 | 10.21820 | 53.46170 | 52.18120 | 52.16560 | .00100 | .00150 | 9.31730 | 8.77490 |
| | GRADIENT | .00000 | .00000 | .00000 | .00000 | .00000 | .00000 | .00000 | .00000 | .00000 |

RUN NO. 1022/ 0 RN/L = 1.57 GRADIENT INTERVAL = -5.00/ 5.00

| MACH | ALPHA | 27-12 | 12-ATM | 27-ATM | TBISBI | TB-SB | TB-TBI | SB-SBI | 12-PO | 12-SB |
|---|---|---|---|---|---|---|---|---|---|---|
| .229 | .000 | 65.18300 | 15.69490 | 80.95700 | 79.02770 | 79.00990 | -.00320 | .00300 | 14.12000 | 13.46800 |
| .229 | .000 | 65.17090 | 15.47350 | 80.71430 | 78.71330 | 78.71030 | .00320 | -.00300 | 14.11710 | 13.30430 |
| .229 | .000 | 65.14660 | 15.55260 | 80.76280 | 78.83420 | 78.82260 | .00000 | .00000 | 14.11150 | 13.38610 |
| .229 | .000 | 65.16680 | 15.57370 | 80.81140 | 78.85840 | 78.84760 | .00000 | .00000 | 14.11620 | 13.38610 |
| | GRADIENT | .00000 | .00000 | .00000 | .00000 | .00000 | .00000 | .00000 | .00000 | .00000 |

RUN NO. 1023/ 0 RN/L = 1.69 GRADIENT INTERVAL = -5.00/ 5.00

| MACH | ALPHA | 27-12 | 12-ATM | 27-ATM | TBISBI | TB-SB | TB-TBI | SB-SBI | 12-PO | 12-SB |
|---|---|---|---|---|---|---|---|---|---|---|
| .248 | .000 | 76.10570 | 18.26070 | 94.49840 | 92.23320 | 92.23020 | .00160 | .00000 | 16.73050 | 15.76640 |
| .248 | .000 | 75.99620 | 18.34770 | 94.35280 | 92.20900 | 92.20530 | -.00320 | .00000 | 16.70430 | 15.78820 |
| .248 | .000 | 76.09350 | 18.17770 | 94.37700 | 91.99140 | 91.99310 | .00480 | -.00150 | 16.72760 | 15.65180 |
| .248 | .000 | 76.06510 | 18.26200 | 94.40940 | 92.14450 | 92.14280 | .00100 | -.00050 | 16.72070 | 15.73550 |
| | GRADIENT | .00000 | .00000 | .00000 | .00000 | .00000 | .00000 | .00000 | .00000 | .00000 |

RUN NO. 1024/ 0 RN/L = 1.80 GRADIENT INTERVAL = -5.00/ 5.00

| MACH | ALPHA | 27-12 | 12-ATM | 27-ATM | TBISBI | TB-SB | TB-TBI | SB-SBI | 12-PO | 12-SB |
|---|---|---|---|---|---|---|---|---|---|---|
| .264 | .000 | 86.93100 | 21.15850 | 108.18500 | 105.51100 | 105.51300 | .00160 | -.00150 | 19.32220 | 18.17940 |
| .264 | .000 | 86.95530 | 21.17040 | 108.20900 | 105.57100 | 105.57500 | .00160 | .00000 | 19.32800 | 18.15210 |
| .264 | .000 | 86.94320 | 21.15060 | 108.18500 | 105.48700 | 105.48800 | .00160 | -.00450 | 19.32510 | 18.11390 |
| .264 | .000 | 86.94320 | 21.15980 | 108.19300 | 105.52300 | 105.52500 | .00160 | -.00200 | 19.32510 | 18.14850 |
| | GRADIENT | .00000 | .00000 | .00000 | .00000 | .00000 | .00000 | .00000 | .00000 | .00000 |

OA236 (NAAL 759) CONFIGURATION 3 DATA SELECT 1 (RFM103) ( 28 JUN 79 )

REFERENCE DATA

SREF = .0000 SQ.FT. XMRP = .0000 IN. XT
LREF = .0000 INCHES YMRP = .0000 IN. YT
BREF = .0000 INCHES ZMRP = .0000 IN. ZT
SCALE = 1.0000

PARAMETRIC DATA

ALPHA = .000 BETA = .000

RUN NO. 1031/ 0 RN/L = 1.29 GRADIENT INTERVAL = -5.00/ 5.00

| MACH | ALPHA | 27-12 | 12-ATM | 27-ATM | TBISBI | TB-SB | TB-TBI | SB-SBI | 12-PO | 12-SB |
|---|---|---|---|---|---|---|---|---|---|---|
| .188 | .000 | 43.52020 | 10.03760 | 53.60730 | 53.81380 | 53.80510 | -.00490 | -.00600 | 9.38780 | 10.07240 |
| .188 | .000 | 43.47160 | 10.04550 | 53.55880 | 53.75330 | 53.74270 | -.00650 | .00450 | 9.37730 | 10.03410 |
| .188 | .000 | 43.44720 | 9.96650 | 53.48600 | 53.72910 | 53.74270 | .00160 | -.00150 | 9.37200 | 10.03960 |
| .188 | .000 | 43.47970 | 10.01650 | 53.55070 | 53.76540 | 53.76350 | -.00320 | -.00100 | 9.37900 | 10.04870 |
| | GRADIENT | .00000 | .00000 | .00000 | .00000 | .00000 | .00000 | .00000 | .00000 | .00000 |

RUN NO. 1032/ 0 RN/L = 1.56 GRADIENT INTERVAL = -5.00/ 5.00

| MACH | ALPHA | 27-12 | 12-ATM | 27-ATM | TBISBI | TB-SB | TB-TBI | SB-SBI | 12-PO | 12-SB |
|---|---|---|---|---|---|---|---|---|---|---|
| .230 | .000 | 65.25600 | 15.16520 | 80.52020 | 80.96260 | 80.96990 | .00000 | -.00150 | 14.13710 | 15.37880 |
| .230 | .000 | 65.38980 | 15.05450 | 80.54440 | 81.15600 | 81.16960 | .00480 | -.00450 | 14.16870 | 15.42250 |
| .229 | .000 | 65.17090 | 15.31940 | 80.52020 | 80.87790 | 80.85750 | -.01300 | .00600 | 14.11710 | 15.35700 |
| .230 | .000 | 65.27220 | 15.17970 | 80.52830 | 80.99880 | 80.99900 | -.00270 | .00000 | 14.14100 | 15.38610 |
| | GRADIENT | .00000 | .00000 | .00000 | .00000 | .00000 | .00000 | .00000 | .00000 | .00000 |

RUN NO. 1033/ 0 RN/L = 1.68 GRADIENT INTERVAL = -5.00/ 5.00

| MACH | ALPHA | 27-12 | 12-ATM | 27-ATM | TBISBI | TB-SB | TB-TBI | SB-SBI | 12-PO | 12-SB |
|---|---|---|---|---|---|---|---|---|---|---|
| .248 | .000 | 76.26380 | 17.92070 | 94.27990 | 94.77280 | 94.78940 | .00650 | -.00300 | 16.76830 | 18.08660 |
| .248 | .000 | 75.99620 | 17.88910 | 93.96450 | 94.41000 | 94.42740 | .00480 | .00450 | 16.70430 | 18.02110 |
| .248 | .000 | 76.13000 | 17.79810 | 93.98880 | 94.59140 | 94.61470 | .00650 | .00300 | 16.73630 | 18.05930 |
| .248 | .000 | 76.13000 | 17.86930 | 94.07770 | 94.59140 | 94.61050 | .00590 | .00150 | 16.73630 | 18.05560 |
| | GRADIENT | .00000 | .00000 | .00000 | .00000 | .00000 | .00000 | .00000 | .00000 | .00000 |

RUN NO. 1034/ 0 RN/L = 1.79 GRADIENT INTERVAL = -5.00/ 5.00

| MACH | ALPHA | 27-12 | 12-ATM | 27-ATM | TBISBI | TB-SB | TB-TBI | SB-SBI | 12-PO | 12-SB |
|---|---|---|---|---|---|---|---|---|---|---|
| .265 | .000 | 87.13780 | 20.42320 | 107.72400 | 108.42500 | 108.49600 | .03260 | -.01660 | 19.37170 | 20.83260 |
| .264 | .000 | 86.96750 | 20.56550 | 107.65100 | 108.22000 | 108.25900 | .00970 | -.00600 | 19.33090 | 20.78900 |
| .264 | .000 | 86.95530 | 20.67230 | 107.72400 | 108.22000 | 108.23400 | .00320 | .00600 | 19.32800 | 20.77800 |
| .265 | .000 | 87.02020 | 20.55360 | 107.70000 | 108.28800 | 108.33000 | .01520 | -.00550 | 19.34350 | 20.79990 |
| | GRADIENT | .00000 | .00000 | .00000 | .00000 | .00000 | .00000 | .00000 | .00000 | .00000 |

OA236 (NAAL 759) CONFIGURATION 4 DATA SELECT 1 (RFM104) ( 28 JUN 79 )

REFERENCE DATA

SREF = .0000 SQ.FT. XMRP = .0000 IN. XT
LREF = .0000 INCHES YMRP = .0000 IN. YT
BREF = .0000 INCHES ZMRP = .0000 IN. ZT
SCALE = 1.0000

PARAMETRIC DATA

ALPHA = .000 BETA = .000

RUN NO. 1041/ 0 RN/L = 1.28 GRADIENT INTERVAL = -5.00/ 5.00

| MACH | ALPHA | 27-12 | 12-ATM | 27-ATM | TBISBI | TB-SB | TB-TBI | SB-SBI | 12-PO | 12-SB |
|---|---|---|---|---|---|---|---|---|---|---|
| .188 | .000 | 43.53240 | 10.11670 | 53.70440 | 53.33010 | 53.30580 | -.00320 | .01050 | 9.39050 | 9.45000 |
| .188 | .000 | 43.43510 | 10.06530 | 53.55880 | 53.24540 | 53.21840 | .00320 | .00450 | 9.36930 | 9.43910 |
| .188 | .000 | 43.48370 | 10.00600 | 53.55880 | 53.30590 | 53.30580 | .00810 | .00450 | 9.37990 | 9.44450 |
| .188 | .000 | 43.48370 | 10.06270 | 53.60730 | 53.29380 | 53.27660 | .00270 | .00650 | 9.37990 | 9.44450 |
| | GRADIENT | .00000 | .00000 | .00000 | .00000 | .00000 | .00000 | .00000 | .00000 | .00000 |

RUN NO. 1042/ 0 RN/L = 1.56 GRADIENT INTERVAL = -5.00/ 5.00

| MACH | ALPHA | 27-12 | 12-ATM | 27-ATM | TBISBI | TB-SB | TB-TBI | SB-SBI | 12-PO | 12-SB |
|---|---|---|---|---|---|---|---|---|---|---|
| .230 | .000 | 65.28040 | 15.44980 | 80.76280 | 80.24910 | 80.22080 | -.01300 | .00450 | 14.14280 | 14.47250 |
| .230 | .000 | 65.31680 | 15.24820 | 80.61720 | 80.35790 | 80.35820 | .00480 | -.00900 | 14.15140 | 14.51620 |
| .230 | .000 | 65.26820 | 15.46960 | 80.78710 | 80.23700 | 80.22080 | -.00490 | .00600 | 14.14000 | 14.46160 |
| .230 | .000 | 65.29250 | 15.38260 | 80.73860 | 80.27330 | 80.25830 | .00810 | .02260 | 14.14570 | 14.42340 |
| .230 | .000 | 65.28950 | 15.38760 | 80.72640 | 80.27930 | 80.26450 | -.00120 | .00600 | 14.14500 | 14.46850 |
| | GRADIENT | .00000 | .00000 | .00000 | .00000 | .00000 | .00000 | .00000 | .00000 | .00000 |

RUN NO. 1043/ 0 RN/L = 1.68 GRADIENT INTERVAL = -5.00/ 5.00

| MACH | ALPHA | 27-12 | 12-ATM | 27-ATM | TBISBI | TB-SB | TB-TBI | SB-SBI | 12-PO | 12-SB |
|---|---|---|---|---|---|---|---|---|---|---|
| .248 | .000 | 76.19080 | 17.92070 | 94.18290 | 93.90210 | 93.90310 | .00650 | .00600 | 16.75090 | 17.07120 |
| .248 | .000 | 76.10570 | 18.06300 | 94.23140 | 93.75690 | 93.75330 | .00650 | .01350 | 16.73050 | 17.03840 |
| .248 | .000 | 76.14220 | 18.04330 | 94.23140 | 93.85370 | 93.85310 | -.01140 | -.00600 | 16.73920 | 17.09850 |
| .248 | .000 | 76.14620 | 18.00900 | 94.21520 | 93.83760 | 93.83650 | .00050 | .00450 | 16.74020 | 17.06930 |
| | GRADIENT | .00000 | .00000 | .00000 | .00000 | .00000 | .00000 | .00000 | .00000 | .00000 |

RUN NO. 1044/ 0 RN/L = 1.79 GRADIENT INTERVAL = -5.00/ 5.00

| MACH | ALPHA | 27-12 | 12-ATM | 27-ATM | TBISBI | TB-SB | TB-TBI | SB-SBI | 12-PO | 12-SB |
|---|---|---|---|---|---|---|---|---|---|---|
| .265 | .000 | 87.02830 | 20.90550 | 108.01500 | 107.45800 | 107.44800 | .00650 | .00750 | 19.34550 | 19.71350 |
| .265 | .000 | 87.04050 | 20.78300 | 107.91800 | 107.44600 | 107.43500 | .00650 | .01810 | 19.34840 | 19.65890 |
| .265 | .000 | 87.10130 | 20.96480 | 108.13600 | 107.50600 | 107.49700 | -.00980 | -.00300 | 19.36290 | 19.75170 |
| .265 | .000 | 87.05670 | 20.88440 | 108.02300 | 107.47000 | 107.46000 | .00100 | .00750 | 19.35230 | 19.70800 |
| | GRADIENT | .00000 | .00000 | .00000 | .00000 | .00000 | .00000 | .00000 | .00000 | .00000 |

OA236 (NAAL 759) CONFIGURATION 5 DATA SELECT 1 (RFM105) ( 28 JUN 79 )

REFERENCE DATA

SREF = .0000 SQ.FT. XMRP = .0000 IN. XT
LREF = .0000 INCHES YMRP = .0000 IN. YT
BREF = .0000 INCHES ZMRP = .0000 IN. ZT
SCALE = 1.0000

PARAMETRIC DATA

ALPHA = .000 BETA = .000

RUN NO. 1051/ 0 RN/L = 1.29 GRADIENT INTERVAL = -5.00/ 5.00

| MACH | ALPHA | 27-12 | 12-ATM | 27-ATM | TBISBI | TB-SB | TB-TBI | SB-SBI | 12-PO | 12-SB |
|---|---|---|---|---|---|---|---|---|---|---|
| .188 | .000 | 43.37430 | 10.14040 | 53.55880 | 53.08820 | 52.98120 | -.00160 | .13880 | 9.35610 | 9.28080 |
| .188 | .000 | 43.41070 | 10.07320 | 53.55880 | 53.17280 | 53.00610 | .00320 | .22030 | 9.36400 | 9.23160 |
| .188 | .000 | 43.42290 | 10.06130 | 53.55880 | 53.19700 | 53.00610 | .00320 | .23240 | 9.36670 | 9.22620 |
| .188 | .000 | 43.40260 | 10.09170 | 53.55880 | 53.15270 | 52.99780 | .00160 | .19720 | 9.36230 | 9.24620 |
| | GRADIENT | .00000 | .00000 | .00000 | .00000 | .00000 | .00000 | .00000 | .00000 | .00000 |

RUN NO. 1052/ 0 RN/L = 1.58 GRADIENT INTERVAL = -5.00/ 5.00

| MACH | ALPHA | 27-12 | 12-ATM | 27-ATM | TBISBI | TB-SB | TB-TBI | SB-SBI | 12-PO | 12-SB |
|---|---|---|---|---|---|---|---|---|---|---|
| .229 | .000 | 65.18300 | 15.34310 | 80.56870 | 80.11600 | 79.88380 | .00160 | .27620 | 14.12000 | 14.17770 |
| .229 | .000 | 65.17090 | 15.36680 | 80.61720 | 80.09190 | 79.84630 | -.00160 | .27010 | 14.11710 | 14.17230 |
| .230 | .000 | 65.20740 | 15.33910 | 80.64150 | 80.21280 | 79.92120 | .02280 | .36220 | 14.12570 | 14.13950 |
| .229 | .000 | 65.18710 | 15.34970 | 80.60910 | 80.14020 | 79.88370 | .00760 | .30280 | 14.12090 | 14.16320 |
| | GRADIENT | .00000 | .00000 | .00000 | .00000 | .00000 | .00000 | .00000 | .00000 | .00000 |

RUN NO. 1053/ 0 RN/L = 1.70 GRADIENT INTERVAL = -5.00/ 5.00

| MACH | ALPHA | 27-12 | 12-ATM | 27-ATM | TBISBI | TB-SB | TB-TBI | SB-SBI | 12-PO | 12-SB |
|---|---|---|---|---|---|---|---|---|---|---|
| .248 | .000 | 76.10570 | 18.16970 | 94.30420 | 93.70860 | 93.40370 | -.00160 | .34560 | 16.73050 | 16.67810 |
| .248 | .000 | 76.05700 | 17.99180 | 94.15860 | 93.69650 | 93.29140 | .00970 | .44820 | 16.71880 | 16.60170 |
| .248 | .000 | 76.11790 | 18.16180 | 94.37700 | 93.73280 | 93.50360 | .00650 | .26560 | 16.73340 | 16.75450 |
| .248 | .000 | 76.09350 | 18.10780 | 94.27990 | 93.71260 | 93.39950 | .00480 | .35310 | 16.72750 | 16.67810 |
| | GRADIENT | .00000 | .00000 | .00000 | .00000 | .00000 | .00000 | .00000 | .00000 | .00000 |

RUN NO. 1054/ 0 RN/L = 1.81 GRADIENT INTERVAL = -5.00/ 5.00

| MACH | ALPHA | 27-12 | 12-ATM | 27-ATM | TBISBI | TB-SB | TB-TBI | SB-SBI | 12-PO | 12-SB |
|---|---|---|---|---|---|---|---|---|---|---|
| .265 | .000 | 87.05270 | 20.77510 | 107.89400 | 107.38500 | 106.99800 | -.00320 | .41650 | 19.35130 | 19.25490 |
| .265 | .000 | 86.97970 | 20.91340 | 107.99100 | 107.31300 | 107.04800 | .01460 | .31540 | 19.33380 | 19.34770 |
| .265 | .000 | 87.05270 | 20.81850 | 107.94200 | 107.40900 | 106.99800 | -.00160 | .45430 | 19.35130 | 19.23850 |
| .265 | .000 | 87.06480 | 20.96480 | 108.08800 | 107.40900 | 107.11000 | .00000 | .33050 | 19.35420 | 19.34220 |
| .265 | .000 | 87.03740 | 20.86790 | 107.97900 | 107.37900 | 107.03900 | .00240 | .37920 | 19.34760 | 19.29580 |
| | GRADIENT | .00000 | .00000 | .00000 | .00000 | .00000 | .00000 | .00000 | .00000 | .00000 |

OA236 (NAAL 759) CONFIGURATION 6 DATA SELECT 1 (RFM106) ( 28 JUN 79 )

REFERENCE DATA

SREF = .0000 SQ.FT. XMRP = .0000 IN. XT
LREF = .0000 INCHES YMRP = .0000 IN. YT
BREF = .0000 INCHES ZMRP = .0000 IN. ZT
SCALE = 1.0000

PARAMETRIC DATA

ALPHA = .000 BETA = .000

RUN NO. 1061/ 0 RN/L = 1.29 GRADIENT INTERVAL = -5.00/ 5.00

| MACH | ALPHA | 27-12 | 12-ATM | 27-ATM | TBISBI | TB-SB | TB-TBI | SB-SBI | 12-PO | 12-SB |
|---|---|---|---|---|---|---|---|---|---|---|
| .188 | .000 | 43.25260 | 10.08110 | 53.38890 | 52.95520 | 52.58170 | -.14370 | .23540 | 9.32970 | 9.11700 |
| .188 | .000 | 43.37430 | 10.03370 | 53.46170 | 53.10030 | 52.66910 | -.15350 | .28220 | 9.35610 | 9.10060 |
| .188 | .000 | 43.32560 | 10.12860 | 53.48600 | 53.06400 | 52.75650 | -.10620 | .21280 | 9.34550 | 9.18250 |
| .188 | .000 | 43.31750 | 10.08110 | 53.44550 | 53.03980 | 52.66910 | -.13450 | .24350 | 9.34380 | 9.13340 |
| | GRADIENT | .00000 | .00000 | .00000 | .00000 | .00000 | .00000 | .00000 | .00000 | .00000 |

RUN NO. 1062/ 0 RN/L = 1.57 GRADIENT INTERVAL = -5.00/ 5.00

| MACH | ALPHA | 27-12 | 12-ATM | 27-ATM | TBISBI | TB-SB | TB-TBI | SB-SBI | 12-PO | 12-SB |
|---|---|---|---|---|---|---|---|---|---|---|
| .229 | .000 | 65.09790 | 15.35490 | 80.52020 | 80.04350 | 79.40940 | -.23850 | .42560 | 14.10020 | 13.97030 |
| .229 | .000 | 65.09790 | 15.31540 | 80.47160 | 80.00720 | 79.30950 | -.20580 | .50560 | 14.10020 | 13.89930 |
| .229 | .000 | 65.15870 | 15.34310 | 80.56870 | 80.10400 | 79.42190 | -.24500 | .45880 | 14.11430 | 13.95940 |
| .229 | .000 | 65.11820 | 15.33780 | 80.52020 | 80.05150 | 79.38020 | -.22980 | .46330 | 14.10490 | 13.94300 |
| | GRADIENT | .00000 | .00000 | .00000 | .00000 | .00000 | .00000 | .00000 | .00000 | .00000 |

RUN NO. 1063/ 0 RN/L = 1.70 GRADIENT INTERVAL = -5.00/ 5.00

| MACH | ALPHA | 27-12 | 12-ATM | 27-ATM | TBISBI | TB-SB | TB-TBI | SB-SBI | 12-PO | 12-SB |
|---|---|---|---|---|---|---|---|---|---|---|
| .248 | .000 | 76.02050 | 18.16180 | 94.23140 | 93.62390 | 93.10410 | -.23520 | .30180 | 16.71010 | 16.65080 |
| .248 | .000 | 75.95970 | 18.07490 | 94.08580 | 93.49090 | 92.85440 | -.18130 | .47990 | 16.69550 | 16.46520 |
| .248 | .000 | 76.05700 | 18.10650 | 94.18290 | 93.59970 | 92.91690 | -.23520 | .46030 | 16.71880 | 16.49250 |
| .248 | .000 | 76.01240 | 18.11440 | 94.16670 | 93.57150 | 92.95840 | -.21730 | .41400 | 16.70810 | 16.53610 |
| | GRADIENT | .00000 | .00000 | .00000 | .00000 | .00000 | .00000 | .00000 | .00000 | .00000 |

RUN NO. 1064/ 0 RN/L = 1.81 GRADIENT INTERVAL = -5.00/ 5.00

| MACH | ALPHA | 27-12 | 12-ATM | 27-ATM | TBISBI | TB-SB | TB-TBI | SB-SBI | 12-PO | 12-SB |
|---|---|---|---|---|---|---|---|---|---|---|
| .265 | .000 | 86.94320 | 20.89760 | 107.91800 | 107.24000 | 106.39900 | -.19600 | .67310 | 19.32510 | 18.97100 |
| .264 | .000 | 86.88240 | 21.00040 | 107.91800 | 107.11900 | 106.43600 | -.21560 | .48750 | 19.31050 | 19.05830 |
| .265 | .000 | 86.99180 | 20.88970 | 107.94200 | 107.34900 | 106.48600 | -.28260 | .59920 | 19.33670 | 19.00370 |
| .264 | .000 | 86.93910 | 20.92920 | 107.92600 | 107.23600 | 106.44000 | -.23140 | .58660 | 19.32410 | 19.01100 |
| | GRADIENT | .00000 | .00000 | .00000 | .00000 | .00000 | .00000 | .00000 | .00000 | .00000 |

ORIGINAL PAGE IS OF POOR QUALITY

OA236 (NAAL 759) CONFIGURATION 7 DATA SELECT 1 (RFM107) ( 28 JUN 79 )

REFERENCE DATA

SREF = .0000 SQ.FT. XMRP = .0000 IN. XT
LREF = .0000 INCHES YMRP = .0000 IN. YT
BREF = .0000 INCHES ZMRP = .0000 IN. ZT
SCALE = 1.0000

PARAMETRIC DATA

ALPHA = .000 BETA = .000

RUN NO. 1071/ 0 RN/L = 1.28 GRADIENT INTERVAL = -5.00/ 5.00

| MACH | ALPHA | 27-12 | 12-ATM | 27-ATM | TBISBI | TB-SB | TB-TBI | SB-SBI | 12-PO | 12-SB |
|---|---|---|---|---|---|---|---|---|---|---|
| .188 | .000 | 43.53240 | 10.07320 | 53.68010 | 53.33010 | 52.98120 | -.20420 | .16600 | 9.39050 | 9.28080 |
| .188 | .000 | 43.49590 | 10.23530 | 53.75290 | 53.28170 | 53.18090 | -.09640 | .02110 | 9.38260 | 9.41720 |
| .188 | .000 | 43.48370 | 10.17200 | 53.68010 | 53.24540 | 53.06860 | -.12090 | .06940 | 9.37990 | 9.34630 |
| .188 | .000 | 43.50400 | 10.16020 | 53.70430 | 53.28570 | 53.07690 | -.14050 | .08550 | 9.38430 | 9.34810 |
| | GRADIENT | .00000 | .00000 | .00000 | .00000 | .00000 | .00000 | .00000 | .00000 | .00000 |

RUN NO. 1072/ 0 RN/L = 1.56 GRADIENT INTERVAL = -5.00/ 5.00

| MACH | ALPHA | 27-12 | 12-ATM | 27-ATM | TBISBI | TB-SB | TB-TBI | SB-SBI | 12-PO | 12-SB |
|---|---|---|---|---|---|---|---|---|---|---|
| .230 | .000 | 65.20740 | 15.31940 | 80.56870 | 80.15230 | 79.50930 | -.29080 | .37430 | 14.12570 | 14.05760 |
| .229 | .000 | 65.18300 | 15.43400 | 80.66580 | 80.09190 | 79.62160 | -.23690 | .26410 | 14.12000 | 14.15590 |
| .229 | .000 | 65.13440 | 15.42220 | 80.61720 | 80.01930 | 79.53420 | -.20580 | .30790 | 14.10870 | 14.09590 |
| .229 | .000 | 65.17490 | 15.39180 | 80.61720 | 80.08780 | 79.55500 | -.24450 | .31540 | 14.11810 | 14.10310 |
| | GRADIENT | .00000 | .00000 | .00000 | .00000 | .00000 | .00000 | .00000 | .00000 | .00000 |

RUN NO. 1073/ 0 RN/L = 1.68 GRADIENT INTERVAL = -5.00/ 5.00

| MACH | ALPHA | 27-12 | 12-ATM | 27-ATM | TBISBI | TB-SB | TB-TBI | SB-SBI | 12-PO | 12-SB |
|---|---|---|---|---|---|---|---|---|---|---|
| .248 | .000 | 76.03270 | 18.28840 | 94.40130 | 93.59970 | 93.10410 | -.19930 | .33350 | 16.71300 | 16.67810 |
| .248 | .000 | 76.02050 | 18.25280 | 94.32850 | 93.58760 | 93.05420 | -.18460 | .37730 | 16.71010 | 16.61800 |
| .248 | .000 | 76.00840 | 18.26070 | 94.32850 | 93.55140 | 93.02920 | -.20090 | .34860 | 16.70710 | 16.62350 |
| .248 | .000 | 76.02050 | 18.26730 | 94.35270 | 93.57960 | 93.06250 | -.19490 | .35310 | 16.71010 | 16.63990 |
| | GRADIENT | .00000 | .00000 | .00000 | .00000 | .00000 | .00000 | .00000 | .00000 | .00000 |

RUN NO. 1074/ 0 RN/L = 1.79 GRADIENT INTERVAL = -5.00/ 5.00

| MACH | ALPHA | 27-12 | 12-ATM | 27-ATM | TBISBI | TB-SB | TB-TBI | SB-SBI | 12-PO | 12-SB |
|---|---|---|---|---|---|---|---|---|---|---|
| .265 | .000 | 86.95530 | 20.93710 | 107.96600 | 107.24000 | 106.48600 | -.30710 | .46940 | 19.32800 | 19.11840 |
| .265 | .000 | 86.96750 | 20.94900 | 107.99100 | 107.30100 | 106.53600 | -.26960 | .52820 | 19.33090 | 19.11840 |
| .264 | .000 | 86.90670 | 21.01220 | 107.99100 | 107.16800 | 106.53600 | -.22380 | .45130 | 19.31630 | 19.16210 |
| .265 | .000 | 86.94320 | 20.96610 | 107.98300 | 107.23600 | 106.52000 | -.26680 | .48300 | 19.32510 | 19.13300 |
| | GRADIENT | .00000 | .00000 | .00000 | .00000 | .00000 | .00000 | .00000 | .00000 | .00000 |

OA236 (NAAL 759) CONFIGURATION 8 DATA SELECT 1 (RFM108) ( 28 JUN 79 )

REFERENCE DATA

SREF = .0000 SQ.FT. XMRP = .0000 IN. XT
LREF = .0000 INCHES YMRP = .0000 IN. YT
BREF = .0000 INCHES ZMRP = .0000 IN. ZT
SCALE = 1.0000

PARAMETRIC DATA

ALPHA = .000 BETA = .000

RUN NO. 1081/ 0 RN/L = 1.28 GRADIENT INTERVAL = -5.00/ 5.00

| MACH | ALPHA | 27-12 | 12-ATM | 27-ATM | TBISBI | TB-SB | TB-TBI | SB-SBI | 12-PO | 12-SB |
|---|---|---|---|---|---|---|---|---|---|---|
| .188 | .000 | 43.24050 | 10.24320 | 53.53450 | 52.99150 | 52.93120 | .00000 | .06940 | 9.32700 | 9.34630 |
| .188 | .000 | 43.33780 | 10.13250 | 53.55880 | 53.11240 | 52.95620 | .00000 | .16450 | 9.34820 | 9.26440 |
| .188 | .000 | 43.42290 | 10.13650 | 53.63160 | 53.22120 | 53.09350 | .00810 | .13880 | 9.36670 | 9.30810 |
| .188 | .000 | 43.33370 | 10.17070 | 53.57490 | 53.10830 | 52.99360 | .00270 | .12420 | 9.34730 | 9.30620 |
| | GRADIENT | .00000 | .00000 | .00000 | .00000 | .00000 | .00000 | .00000 | .00000 | .00000 |

RUN NO. 1082/ 0 RN/L = 1.56 GRADIENT INTERVAL = -5.00/ 5.00

| MACH | ALPHA | 27-12 | 12-ATM | 27-ATM | TBISBI | TB-SB | TB-TBI | SB-SBI | 12-PO | 12-SB |
|---|---|---|---|---|---|---|---|---|---|---|
| .230 | .000 | 65.18300 | 15.43400 | 80.66580 | 80.22490 | 80.00860 | .00650 | .23240 | 14.12000 | 14.26510 |
| .230 | .000 | 65.24390 | 15.50120 | 80.81140 | 80.24910 | 80.10850 | .00970 | .16600 | 14.13420 | 14.34700 |
| .229 | .000 | 65.15870 | 15.63170 | 80.81140 | 80.07980 | 80.04610 | -.01300 | .04220 | 14.11430 | 14.41250 |
| .230 | .000 | 65.19520 | 15.52230 | 80.76280 | 80.18460 | 80.05440 | .00100 | .14690 | 14.12280 | 14.34150 |
| | GRADIENT | .00000 | .00000 | .00000 | .00000 | .00000 | .00000 | .00000 | .00000 | .00000 |

RUN NO. 1083/ 0 RN/L = 1.68 GRADIENT INTERVAL = -5.00/ 5.00

| MACH | ALPHA | 27-12 | 12-ATM | 27-ATM | TBISBI | TB-SB | TB-TBI | SB-SBI | 12-PO | 12-SB |
|---|---|---|---|---|---|---|---|---|---|---|
| .248 | .000 | 75.95970 | 18.25670 | 94.25570 | 93.53930 | 93.39120 | -.00490 | .15390 | 16.69550 | 16.85830 |
| .248 | .000 | 76.03270 | 18.12630 | 94.25570 | 93.73280 | 93.41620 | .01460 | .33810 | 16.71300 | 16.74360 |
| .248 | .000 | 76.06920 | 18.18950 | 94.35280 | 93.74490 | 93.50360 | .00810 | .25960 | 16.72170 | 16.82000 |
| .248 | .000 | 76.02050 | 18.19080 | 94.28800 | 93.67230 | 93.43700 | .00590 | .25050 | 16.71010 | 16.80730 |
| | GRADIENT | .00000 | .00000 | .00000 | .00000 | .00000 | .00000 | .00000 | .00000 | .00000 |

RUN NO. 1084/ 0 RN/L = 1.79 GRADIENT INTERVAL = -5.00/ 5.00

| MACH | ALPHA | 27-12 | 12-ATM | 27-ATM | TBISBI | TB-SB | TB-TBI | SB-SBI | 12-PO | 12-SB |
|---|---|---|---|---|---|---|---|---|---|---|
| .265 | .000 | 86.95530 | 21.05570 | 108.08800 | 107.34900 | 107.13500 | .00160 | .22790 | 19.32800 | 19.47870 |
| .265 | .000 | 86.99180 | 21.04390 | 108.13600 | 107.39700 | 107.13500 | .01790 | .30480 | 19.33670 | 19.42960 |
| .265 | .000 | 86.99180 | 21.10710 | 108.16100 | 107.42200 | 107.13500 | -.00320 | .30030 | 19.33670 | 19.44050 |
| .265 | .000 | 86.97960 | 21.06890 | 108.12800 | 107.38900 | 107.13500 | .00540 | .27770 | 19.33380 | 19.44960 |
| | GRADIENT | .00000 | .00000 | .00000 | .00000 | .00000 | .00000 | .00000 | .00000 | .00000 |

OA236 (NAAL 759) CONFIGURATION 9 DATA SELECT 1 (RFM109) ( 28 JUN 79 )

REFERENCE DATA

SREF = .0000 SQ.FT. XMRP = .0000 IN. XT
LREF = .0000 INCHES YMRP = .0000 IN. YT
BREF = .0000 INCHES ZMRP = .0000 IN. ZT
SCALE = 1.0000

PARAMETRIC DATA

ALPHA = .000 BETA = .000

RUN NO. 1091/ 0 RN/L = 1.27 GRADIENT INTERVAL = -5.00/ 5.00

| MACH | ALPHA | 27-12 | 12-ATM | 27-ATM | TBISBI | TB-SB | TB-TBI | SB-SBI | 12-PO | 12-SB |
|---|---|---|---|---|---|---|---|---|---|---|
| .188 | .000 | 43.48370 | 10.14830 | 53.68010 | 53.29380 | 53.14350 | -.00490 | .14330 | 9.37990 | 9.32990 |
| .188 | .000 | 43.47160 | 10.19580 | 53.70440 | 53.24540 | 53.15600 | .00320 | .08450 | 9.37730 | 9.36260 |
| .188 | .000 | 43.49590 | 10.15230 | 53.70440 | 53.29380 | 53.14350 | .00480 | .14790 | 9.38260 | 9.30810 |
| .188 | .000 | 43.48370 | 10.16550 | 53.69620 | 53.27760 | 53.14760 | .00100 | .12520 | 9.37990 | 9.33350 |
| | GRADIENT | .00000 | .00000 | .00000 | .00000 | .00000 | .00000 | .00000 | .00000 | .00000 |

RUN NO. 1092/ 0 RN/L = 1.55 GRADIENT INTERVAL = -5.00/ 5.00

| MACH | ALPHA | 27-12 | 12-ATM | 27-ATM | TBISBI | TB-SB | TB-TBI | SB-SBI | 12-PO | 12-SB |
|---|---|---|---|---|---|---|---|---|---|---|
| .229 | .000 | 65.12220 | 15.51700 | 80.69000 | 80.06770 | 79.88380 | -.00650 | .18560 | 14.10580 | 14.27600 |
| .230 | .000 | 65.20740 | 15.47350 | 80.71430 | 80.20070 | 79.99610 | .00650 | .22160 | 14.12570 | 14.26510 |
| .229 | .000 | 65.14660 | 15.54350 | 80.81140 | 80.09190 | 80.04610 | -.01470 | .04070 | 14.11150 | 14.41250 |
| .230 | .000 | 65.15870 | 15.54470 | 80.73860 | 80.12010 | 79.97530 | -.00490 | .14940 | 14.11430 | 14.31790 |
| | GRADIENT | .00000 | .00000 | .00000 | .00000 | .00000 | .00000 | .00000 | .00000 | .00000 |

RUN NO. 1093/ 0 RN/L = 1.67 GRADIENT INTERVAL = -5.00/ 5.00

| MACH | ALPHA | 27-12 | 12-ATM | 27-ATM | TBISBI | TB-SB | TB-TBI | SB-SBI | 12-PO | 12-SB |
|---|---|---|---|---|---|---|---|---|---|---|
| .248 | .000 | 76.13000 | 18.20050 | 94.49840 | 93.82950 | 93.66590 | .01630 | .19320 | 16.73630 | 16.90190 |
| .248 | .000 | 75.98410 | 18.45440 | 94.44980 | 93.55140 | 93.55350 | -.01790 | -.01660 | 16.70140 | 17.00020 |
| .248 | .000 | 76.04490 | 18.20530 | 94.30420 | 93.70860 | 93.47860 | .00650 | .25200 | 16.71590 | 16.80370 |
| .248 | .000 | 76.05300 | 18.31340 | 94.41750 | 93.69650 | 93.56600 | .00160 | .14280 | 16.71780 | 16.90190 |
| | GRADIENT | .00000 | .00000 | .00000 | .00000 | .00000 | .00000 | .00000 | .00000 | .00000 |

RUN NO. 1094/ 0 RN/L = 1.78 GRADIENT INTERVAL = -5.00/ 5.00

| MACH | ALPHA | 27-12 | 12-ATM | 27-ATM | TBISBI | TB-SB | TB-TBI | SB-SBI | 12-PO | 12-SB |
|---|---|---|---|---|---|---|---|---|---|---|
| .265 | .000 | 87.05270 | 21.23760 | 108.35500 | 107.42200 | 107.33500 | -.00320 | .09050 | 19.35130 | 19.62070 |
| .265 | .000 | 87.10130 | 21.19410 | 108.33100 | 107.47000 | 107.29800 | -.00320 | .17350 | 19.36290 | 19.54420 |
| .265 | .000 | 87.01620 | 21.24550 | 108.30600 | 107.38500 | 107.23500 | -.01470 | .14640 | 19.34260 | 19.56060 |
| .265 | .000 | 87.05670 | 21.22570 | 108.33000 | 107.42600 | 107.28900 | -.00700 | .13680 | 19.35220 | 19.57520 |
| | GRADIENT | .00000 | .00000 | .00000 | .00000 | .00000 | .00000 | .00000 | .00000 | .00000 |

OA236 (NAAL 759) CONFIGURATION 10 DATA SELECT 1 (RFM110) ( 28 JUN 79 )

REFERENCE DATA

SREF = .0000 SQ.FT. XMRP = .0000 IN. XT
LREF = .0000 INCHES YMRP = .0000 IN. YT
BREF = .0000 INCHES ZMRP = .0000 IN. ZT
SCALE = 1.0000

PARAMETRIC DATA

ALPHA = .000 BETA = .000

RUN NO. 1101/ 0 RN/L = 1.29 GRADIENT INTERVAL = -5.00/ 5.00

| MACH | ALPHA | 27-12 | 12-ATM | 27-ATM | TBISBI | TB-SB | TB-TBI | SB-SBI | 12-PO | 12-SB |
|---|---|---|---|---|---|---|---|---|---|---|
| .188 | .000 | 43.26460 | 10.14040 | 53.48600 | 53.03980 | 53.04360 | -.15030 | -.17390 | 9.33230 | 9.59740 |
| .188 | .000 | 43.21610 | 10.18790 | 53.46170 | 52.94310 | 53.05610 | -.09800 | -.22070 | 9.32170 | 9.63020 |
| .188 | .000 | 43.16750 | 10.20760 | 53.43740 | 52.89470 | 53.03110 | -.08980 | -.24190 | 9.31110 | 9.63560 |
| .188 | .000 | 43.21610 | 10.17860 | 53.46170 | 52.95920 | 53.04360 | -.11270 | -.21220 | 9.32170 | 9.62110 |
| | GRADIENT | .00000 | .00000 | .00000 | .00000 | .00000 | .00000 | .00000 | .00000 | .00000 |

RUN NO. 1102/ 0 RN/L = 1.57 GRADIENT INTERVAL = -5.00/ 5.00

| MACH | ALPHA | 27-12 | 12-ATM | 27-ATM | TBISBI | TB-SB | TB-TBI | SB-SBI | 12-PO | 12-SB |
|---|---|---|---|---|---|---|---|---|---|---|
| .229 | .000 | 65.03710 | 15.47350 | 80.56870 | 79.97090 | 80.00860 | -.17320 | -.21470 | 14.08620 | 14.67450 |
| .229 | .000 | 65.12220 | 15.48540 | 80.71430 | 80.07960 | 80.10850 | -.19110 | -.22220 | 14.10580 | 14.70180 |
| .229 | .000 | 65.03710 | 15.59210 | 80.71430 | 79.92260 | 80.12100 | -.14540 | -.35230 | 14.08620 | 14.77830 |
| .229 | .000 | 65.06550 | 15.51700 | 80.66580 | 79.99110 | 80.07930 | -.16990 | -.26310 | 14.09270 | 14.71820 |
| | GRADIENT | .00000 | .00000 | .00000 | .00000 | .00000 | .00000 | .00000 | .00000 | .00000 |

RUN NO. 1103/ 0 RN/L = 1.69 GRADIENT INTERVAL = -5.00/ 5.00

| MACH | ALPHA | 27-12 | 12-ATM | 27-ATM | TBISBI | TB-SB | TB-TBI | SB-SBI | 12-PO | 12-SB |
|---|---|---|---|---|---|---|---|---|---|---|
| .248 | .000 | 75.89890 | 18.26070 | 94.23140 | 93.47880 | 93.62840 | -.14860 | -.29940 | 16.68100 | 17.35510 |
| .247 | .000 | 75.72860 | 18.40300 | 94.18290 | 93.28530 | 93.61590 | -.13390 | -.45970 | 16.64020 | 17.45330 |
| .248 | .000 | 75.88670 | 18.24090 | 94.23140 | 93.46670 | 93.51610 | -.20910 | -.26610 | 16.67810 | 17.31140 |
| .248 | .000 | 75.83810 | 18.30150 | 94.21520 | 93.41030 | 93.58680 | -.16390 | -.34170 | 16.66640 | 17.37320 |
| | GRADIENT | .00000 | .00000 | .00000 | .00000 | .00000 | .00000 | .00000 | .00000 | .00000 |

RUN NO. 1104/ 0 RN/L = 1.81 GRADIENT INTERVAL = -5.00/ 5.00

| MACH | ALPHA | 27-12 | 12-ATM | 27-ATM | TBISBI | TB-SB | TB-TBI | SB-SBI | 12-PO | 12-SB |
|---|---|---|---|---|---|---|---|---|---|---|
| .264 | .000 | 86.82150 | 21.13090 | 108.06400 | 107.22800 | 107.37300 | -.14860 | -.30090 | 19.29600 | 20.07380 |
| .264 | .000 | 86.79720 | 21.17040 | 108.06400 | 107.09500 | 107.36000 | -.16830 | -.43400 | 19.29010 | 20.09560 |
| .264 | .000 | 86.79720 | 21.08340 | 107.96600 | 107.13100 | 107.24800 | -.20260 | -.33260 | 19.29010 | 20.03010 |
| .264 | .000 | 86.80530 | 21.12820 | 108.03100 | 107.15100 | 107.32700 | -.17320 | -.35580 | 19.29210 | 20.06650 |
| | GRADIENT | .00000 | .00000 | .00000 | .00000 | .00000 | .00000 | .00000 | .00000 | .00000 |

OA236 (NAAL 759) CONFIGURATION 5 DATA SELECT 1 (RFM111) ( 28 JUN 79 )

REFERENCE DATA

SREF = .0000 SQ.FT. XMRP = .0000 IN. XT
LREF = .0000 INCHES YMRP = .0000 IN. YT
BREF = .0000 INCHES ZMRP = .0000 IN. ZT
SCALE = 1.0000

PARAMETRIC DATA

ALPHA = .000 BETA = .000

RUN NO. 1111/ 0 RN/L = 1.29 GRADIENT INTERVAL = -5.00/ 5.00

| MACH | ALPHA | 27-12 | 12-ATM | 27-ATM | TBISBI | TB-SB | TB-TBI | SB-SBI | 12-PO | 12-SB |
|---|---|---|---|---|---|---|---|---|---|---|
| .188 | .000 | 43.48370 | 10.16410 | 53.68010 | 53.29380 | 53.20590 | -.00320 | .09200 | 9.37990 | 9.38990 |
| .188 | .000 | 43.48370 | 10.29460 | 53.80140 | 53.28170 | 53.26830 | -.01470 | .00000 | 9.37990 | 9.47730 |
| .188 | .000 | 43.49590 | 10.14830 | 53.70440 | 53.33010 | 53.15600 | .00000 | .17350 | 9.38260 | 9.32990 |
| .188 | .000 | 43.48780 | 10.20230 | 53.72860 | 53.30180 | 53.21000 | -.00590 | .08850 | 9.38080 | 9.39900 |
| | GRADIENT | .00000 | .00000 | .00000 | .00000 | .00000 | .00000 | .00000 | .00000 | .00000 |

RUN NO. 1112/ 0 RN/L = 1.57 GRADIENT INTERVAL = -5.00/ 5.00

| MACH | ALPHA | 27-12 | 12-ATM | 27-ATM | TBISBI | TB-SB | TB-TBI | SB-SBI | 12-PO | 12-SB |
|---|---|---|---|---|---|---|---|---|---|---|
| .229 | .000 | 65.07360 | 15.49730 | 80.59300 | 80.04350 | 79.78390 | -.00650 | .28070 | 14.09460 | 14.21600 |
| .230 | .000 | 65.18300 | 15.35100 | 80.61720 | 80.20070 | 79.82130 | .01140 | .40450 | 14.12000 | 14.11770 |
| .230 | .000 | 65.21950 | 15.41420 | 80.71430 | 80.29740 | 79.97120 | .00970 | .35770 | 14.12850 | 14.19410 |
| .230 | .000 | 65.15870 | 15.42080 | 80.64150 | 80.18050 | 79.85880 | .00480 | .34760 | 14.11440 | 14.17590 |
| | GRADIENT | .00000 | .00000 | .00000 | .00000 | .00000 | .00000 | .00000 | .00000 | .00000 |

RUN NO. 1113/ 0 RN/L = 1.69 GRADIENT INTERVAL = -5.00/ 5.00

| MACH | ALPHA | 27-12 | 12-ATM | 27-ATM | TBISBI | TB-SB | TB-TBI | SB-SBI | 12-PO | 12-SB |
|---|---|---|---|---|---|---|---|---|---|---|
| .248 | .000 | 76.02050 | 18.12230 | 94.23140 | 93.68440 | 93.31630 | -.01300 | .35770 | 16.71010 | 16.73270 |
| .248 | .000 | 76.00840 | 18.14600 | 94.25570 | 93.68440 | 93.32880 | -.00980 | .37580 | 16.70710 | 16.74910 |
| .248 | .000 | 76.02050 | 18.13810 | 94.20710 | 93.72070 | 93.35380 | -.00160 | .37730 | 16.71010 | 16.72720 |
| .248 | .000 | 76.01650 | 18.13550 | 94.23140 | 93.69650 | 93.33300 | -.00810 | .37030 | 16.70910 | 16.73630 |
| | GRADIENT | .00000 | .00000 | .00000 | .00000 | .00000 | .00000 | .00000 | .00000 | .00000 |

RUN NO. 1114/ 0 RN/L = 1.80 GRADIENT INTERVAL = -5.00/ 5.00

| MACH | ALPHA | 27-12 | 12-ATM | 27-ATM | TBISBI | TB-SB | TB-TBI | SB-SBI | 12-PO | 12-SB |
|---|---|---|---|---|---|---|---|---|---|---|
| .265 | .000 | 86.94320 | 20.99640 | 108.01500 | 107.36100 | 106.98600 | -.00810 | .39690 | 19.32510 | 19.34220 |
| .265 | .000 | 87.00400 | 20.94110 | 108.03900 | 107.43400 | 106.94800 | -.01630 | .50560 | 19.33960 | 19.29860 |
| .265 | .000 | 87.01620 | 20.97670 | 108.11200 | 107.49400 | 107.06100 | -.00320 | .46330 | 19.34260 | 19.34220 |
| .265 | .000 | 86.98780 | 20.97140 | 108.05500 | 107.43000 | 106.99800 | -.00920 | .45530 | 19.33580 | 19.32770 |
| | GRADIENT | .00000 | .00000 | .00000 | .00000 | .00000 | .00000 | .00000 | .00000 | .00000 |

OA236 (NAAL 759) CONFIGURATION 11 DATA SELECT 1 (RFM112) ( 28 JUN 79 )

REFERENCE DATA

SREF = .0000 SQ.FT. XMRP = .0000 IN. XT
LREF = .0000 INCHES YMRP = .0000 IN. YT
BREF = .0000 INCHES ZMRP = .0000 IN. ZT
SCALE = 1.0000

PARAMETRIC DATA

ALPHA = .000 BETA = .000

RUN NO. 1121/ 0 RN/L = 1.28 GRADIENT INTERVAL = -5.00/ 5.00

| MACH | ALPHA | 27-12 | 12-ATM | 27-ATM | TBISBI | TB-SB | TB-TBI | SB-SBI | 12-PO | 12-SB |
|---|---|---|---|---|---|---|---|---|---|---|
| .188 | .000 | 43.36210 | 10.08510 | 53.48600 | -.13300 | -.13730 | .00320 | .00150 | 9.35350 | 9.38990 |
| .188 | .000 | 43.26480 | 10.05740 | 53.38890 | -.12090 | -.13730 | .00160 | -.00300 | 9.33230 | 9.32440 |
| .188 | .000 | 43.28910 | 10.06530 | 53.38890 | -.13300 | -.13730 | .00160 | .00000 | 9.33760 | 9.34080 |
| .188 | .000 | 43.30530 | 10.06930 | 53.42120 | -.12890 | -.13730 | .00210 | -.00050 | 9.34110 | 9.35170 |
| | GRADIENT | .00000 | .00000 | .00000 | .00000 | .00000 | .00000 | .00000 | .00000 | .00000 |

RUN NO. 1122/ 0 RN/L = 1.56 GRADIENT INTERVAL = -5.00/ 5.00

| MACH | ALPHA | 27-12 | 12-ATM | 27-ATM | TBISBI | TB-SB | TB-TBI | SB-SBI | 12-PO | 12-SB |
|---|---|---|---|---|---|---|---|---|---|---|
| .229 | .000 | 65.14660 | 15.41820 | 80.61720 | -.03620 | -.04990 | .00320 | .00000 | 14.11150 | 14.21050 |
| .229 | .000 | 65.06140 | 15.34310 | 80.47160 | -.03620 | -.04990 | .00000 | -.00150 | 14.09180 | 14.10130 |
| .230 | .000 | 65.20740 | 15.26800 | 80.59300 | -.03620 | -.04990 | -.00160 | -.00300 | 14.12570 | 14.05220 |
| .229 | .000 | 65.13840 | 15.34310 | 80.56060 | -.03620 | -.04990 | .00050 | -.00150 | 14.10960 | 14.12130 |
| | GRADIENT | .00000 | .00000 | .00000 | .00000 | .00000 | .00000 | .00000 | .00000 | .00000 |

RUN NO. 1123/ 0 RN/L = 1.68 GRADIENT INTERVAL = -5.00/ 5.00

| MACH | ALPHA | 27-12 | 12-ATM | 27-ATM | TBISBI | TB-SB | TB-TBI | SB-SBI | 12-PO | 12-SB |
|---|---|---|---|---|---|---|---|---|---|---|
| .248 | .000 | 76.04490 | 18.13020 | 94.25570 | .12090 | .11230 | .00320 | .00150 | 16.71590 | 16.82000 |
| .248 | .000 | 75.99620 | 18.01560 | 94.13430 | .06040 | .06240 | -.00160 | -.00300 | 16.70430 | 16.60710 |
| .248 | .000 | 76.04490 | 18.16580 | 94.27990 | .07250 | .06240 | .00160 | .00150 | 16.71590 | 16.73820 |
| .248 | .000 | 76.02860 | 18.10390 | 94.22330 | .08460 | .07900 | .00100 | .00000 | 16.71200 | 16.72180 |
| | GRADIENT | .00000 | .00000 | .00000 | .00000 | .00000 | .00000 | .00000 | .00000 | .00000 |

RUN NO. 1124/ 0 RN/L = 1.79 GRADIENT INTERVAL = -5.00/ 5.00

| MACH | ALPHA | 27-12 | 12-ATM | 27-ATM | TBISBI | TB-SB | TB-TBI | SB-SBI | 12-PO | 12-SB |
|---|---|---|---|---|---|---|---|---|---|---|
| .265 | .000 | 86.89450 | 21.04780 | 107.99100 | .09670 | .08730 | .00320 | .00300 | 19.31340 | 19.41320 |
| .264 | .000 | 86.88240 | 20.98850 | 107.94200 | .09670 | .08730 | .00160 | .00150 | 19.31050 | 19.32590 |
| .265 | .000 | 86.88240 | 20.88180 | 107.84500 | .08460 | .07490 | -.00160 | -.00150 | 19.31050 | 19.21670 |
| .265 | .000 | 86.88640 | 20.97270 | 107.92600 | .09270 | .08320 | .00100 | .00100 | 19.31150 | 19.31860 |
| | GRADIENT | .00000 | .00000 | .00000 | .00000 | .00000 | .00000 | .00000 | .00000 | .00000 |

OA236 (NAAL 759) CONFIGURATION 12 DATA SELECT 1 (RFM113) ( 28 JUN 79 )

REFERENCE DATA

SREF = .0000 SQ.FT. XMRP = .0000 IN. XT
LREF = .0000 INCHES YMRP = .0000 IN. YT
BREF = .0000 INCHES ZMRP = .0000 IN. ZT
SCALE = 1.0000

PARAMETRIC DATA

ALPHA = .000 BETA = .000

RUN NO. 1131/ 0 RN/L = 1.27 GRADIENT INTERVAL = -5.00/ 5.00

| MACH | ALPHA | 27-12 | 12-ATM | 27-ATM | TBISBI | TB-SB | TB-TBI | SB-SBI | 12-PO | 12-SB |
|---|---|---|---|---|---|---|---|---|---|---|
| .198 | .000 | 43.20400 | 10.15620 | 53.38890 | 52.94310 | 52.93120 | -.00160 | .00150 | 9.31910 | 9.43910 |
| .188 | .000 | 43.26480 | 10.04950 | 53.36460 | 52.88260 | 52.86880 | -.00160 | .00000 | 9.33230 | 9.32440 |
| .188 | .000 | 43.24050 | 10.01790 | 53.31610 | 52.72540 | 52.71900 | .00000 | -.00150 | 9.32700 | 9.26440 |
| .188 | .000 | 43.23640 | 10.07450 | 53.35650 | 52.85040 | 52.83970 | -.00100 | .00000 | 9.32610 | 9.34260 |
| | GRADIENT | .00000 | .00000 | .00000 | .00000 | .00000 | .00000 | .00000 | .00000 | .00000 |

RUN NO. 1132/ 0 RN/L = 1.56 GRADIENT INTERVAL = -5.00/ 5.00

| MACH | ALPHA | 27-12 | 12-ATM | 27-ATM | TBISBI | TB-SB | TB-TBI | SB-SBI | 12-PO | 12-SB |
|---|---|---|---|---|---|---|---|---|---|---|
| .229 | .000 | 64.93980 | 15.38260 | 80.35030 | 79.39050 | 79.39690 | .00160 | .00150 | 14.06380 | 14.13410 |
| .229 | .000 | 64.95190 | 15.36290 | 80.37460 | 79.41470 | 79.40940 | .00160 | .00150 | 14.06660 | 14.12320 |
| .229 | .000 | 65.06140 | 15.26800 | 80.37460 | 79.31790 | 79.32200 | .00480 | .00000 | 14.09180 | 14.01400 |
| .229 | .000 | 64.98440 | 15.33780 | 80.36650 | 79.37430 | 79.37610 | .00270 | .00100 | 14.07400 | 14.09040 |
| | GRADIENT | .00000 | .00000 | .00000 | .00000 | .00000 | .00000 | .00000 | .00000 | .00000 |

RUN NO. 1133/ 0 RN/L = 1.68 GRADIENT INTERVAL = -5.00/ 5.00

| MACH | ALPHA | 27-12 | 12-ATM | 27-ATM | TBISBI | TB-SB | TB-TBI | SB-SBI | 12-PO | 12-SB |
|---|---|---|---|---|---|---|---|---|---|---|
| .248 | .000 | 75.93540 | 17.98390 | 94.01300 | 92.81370 | 92.81700 | .00650 | .00150 | 16.68970 | 16.59620 |
| .248 | .000 | 75.88670 | 18.03930 | 94.01300 | 92.83790 | 92.84190 | .00320 | .00150 | 16.67810 | 16.54710 |
| .248 | .000 | 75.89890 | 18.12630 | 94.06150 | 92.92250 | 92.91690 | .00160 | .00150 | 16.68100 | 16.60710 |
| .248 | .000 | 75.90700 | 18.04980 | 94.02920 | 92.85800 | 92.85860 | .00380 | .00150 | 16.68290 | 16.58350 |
| | GRADIENT | .00000 | .00000 | .00000 | .00000 | .00000 | .00000 | .00000 | .00000 | .00000 |

RUN NO. 1134/ 0 RN/L = 1.78 GRADIENT INTERVAL = -5.00/ 5.00

| MACH | ALPHA | 27-12 | 12-ATM | 27-ATM | TBISBI | TB-SB | TB-TBI | SB-SBI | 12-PO | 12-SB |
|---|---|---|---|---|---|---|---|---|---|---|
| .265 | .000 | 86.88240 | 20.91740 | 107.84500 | 106.55100 | 106.56100 | -.00320 | .00000 | 19.31050 | 19.04740 |
| .265 | .000 | 86.88240 | 20.99250 | 107.89400 | 106.50300 | 106.51100 | .00320 | .00450 | 19.31050 | 19.18390 |
| .265 | .000 | 86.97970 | 20.81460 | 107.86900 | 106.46600 | 106.47400 | .00320 | -.00150 | 19.33380 | 19.00370 |
| .265 | .000 | 86.91480 | 20.90810 | 107.86900 | 106.50700 | 106.51500 | .00100 | .00100 | 19.31830 | 19.07830 |
| | GRADIENT | .00000 | .00000 | .00000 | .00000 | .00000 | .00000 | .00000 | .00000 | .00000 |

OA236 (NAAL 759) CONFIGURATION 13 DATA SELECT 1 (RFM114) ( 28 JUN 79 )

REFERENCE DATA

SREF = .0000 SQ.FT. XMRP = .0000 IN. XT
LREF = .0000 INCHES YMRP = .0000 IN. YT
BREF = .0000 INCHES ZMRP = .0000 IN. ZT
SCALE = 1.0000

PARAMETRIC DATA

ALPHA = .000 BETA = .000

RUN NO. 1141/ 0 RN/L = 1.27 GRADIENT INTERVAL = -5.00/ 5.00

| MACH | ALPHA | 27-12 | 12-ATM | 27-ATM | TBISBI | TB-SB | TB-TBI | SB-SBI | 12-PO | 12-SB |
|---|---|---|---|---|---|---|---|---|---|---|
| .189 | .000 | 43 54450 | 10.09300 | 53.70440 | 52.91890 | 52.90630 | .00160 | .00300 | 9.39310 | 9.16070 |
| .188 | .000 | 43.41070 | 10.10480 | 53.55880 | 52.79800 | 52.79390 | -.00320 | .00300 | 9.36400 | 9.12790 |
| .188 | .000 | 43.34990 | 10.08110 | 53.48600 | 52.68910 | 52.68160 | -.00160 | .00150 | 9.35080 | 9.10060 |
| .188 | .000 | 43.43510 | 10.09300 | 53.58300 | 52.80200 | 52.79390 | -.00100 | .00250 | 9.36930 | 9.12970 |
| | GRADIENT | .00000 | .00000 | .00000 | .00000 | .00000 | .00000 | .00000 | .00000 | .00000 |

RUN NO. 1142/ 0 RN/L = 1.55 GRADIENT INTERVAL = -5.00/ 5.00

| MACH | ALPHA | 27-12 | 12-ATM | 27-ATM | TBISBI | TB-SB | TB-TBI | SB-SBI | 12-PO | 12-SB |
|---|---|---|---|---|---|---|---|---|---|---|
| .230 | .000 | 65.20740 | 15.11770 | 80.39880 | 79.17280 | 79.18470 | .00480 | -.00150 | 14.12570 | 13.73550 |
| .230 | .000 | 65.31680 | 15.02680 | 80.44740 | 79.18490 | 79.20960 | .01140 | -.00300 | 14.15140 | 13.67550 |
| .230 | .000 | 65.21950 | 15.27590 | 80.54440 | 79.42670 | 79.42190 | -.00160 | .00450 | 14.12850 | 13.86110 |
| .230 | .000 | 65.24790 | 15.14010 | 80.46350 | 79.26150 | 79.27200 | .00480 | .00000 | 14.13520 | 13.75740 |
| | GRADIENT | .00000 | .00000 | .00000 | .00000 | .00000 | .00000 | .00000 | .00000 | .00000 |

RUN NO. 1143/ 0 RN/L = 1.68 GRADIENT INTERVAL = -5.00/ 5.00

| MACH | ALPHA | 27-12 | 12-ATM | 27-ATM | TBISBI | TB-SB | TB-TBI | SB-SBI | 12-PO | 12-SB |
|---|---|---|---|---|---|---|---|---|---|---|
| .248 | .000 | 76.14220 | 17.77840 | 94.03730 | 92.60810 | 92.61720 | .00810 | -.00150 | 16.73920 | 16.15400 |
| .248 | .000 | 76.09350 | 17.79810 | 93.94020 | 92.59600 | 92.60480 | .00160 | -.00150 | 16.72760 | 16.13760 |
| .248 | .000 | 76.17870 | 17.74280 | 94.03730 | 92.57180 | 92.59230 | .01300 | -.00150 | 16.74790 | 16.12120 |
| .248 | .000 | 76.13810 | 17.77310 | 94.00490 | 92.59200 | 92.60470 | .00760 | -.00150 | 16.73820 | 16.13760 |
| | GRADIENT | .00000 | .00000 | .00000 | .00000 | .00000 | .00000 | .00000 | .00000 | .00000 |

RUN NO. 1144/ 0 RN/L = 1.79 GRADIENT INTERVAL = -5.00/ 5.00

| MACH | ALPHA | 27-12 | 12-ATM | 27-ATM | TBISBI | TB-SB | TB-TBI | SB-SBI | 12-PO | 12-SB |
|---|---|---|---|---|---|---|---|---|---|---|
| .265 | .000 | 87.00400 | 20.66040 | 107.74800 | 106.03100 | 106.03700 | .00000 | .00000 | 19.33960 | 18.58340 |
| .265 | .000 | 87.11350 | 20.51410 | 107.74800 | 106.05500 | 106.08700 | .01140 | -.00150 | 19.36590 | 18.58340 |
| .265 | .000 | 87.10130 | 20.54180 | 107.74800 | 106.07900 | 106.09900 | .00810 | -.00150 | 19.36290 | 18.60520 |
| .265 | .000 | 87.07290 | 20.57210 | 107.74800 | 106.05500 | 106.07400 | .00650 | -.00100 | 19.35610 | 18.59070 |
| | GRADIENT | .00000 | .00000 | .00000 | .00000 | .00000 | .00000 | .00000 | .00000 | .00000 |

OA236 (NAAL 759) CONFIGURATION 1 DATA SELECT 1 (RFM115) ( 28 JUN 79 )

REFERENCE DATA

SREF = .0000 SQ.FT. XMRP = .0000 IN. XT
LREF = .0000 INCHES YMRP = .0000 IN. YT
BREF = .0000 INCHES ZMRP = .0000 IN. ZT
SCALE = 1.0000

PARAMETRIC DATA

ALPHA = .000 BETA = .000

RUN NO. 1151/ 0 RN/L = 1.27 GRADIENT INTERVAL = -5.00/ 5.00

| MACH | ALPHA | 27-12 | 12-ATM | 27-ATM | TBISBI | TB-SB | TB-TBI | SB-SBI | 12-PO | 12-SB |
|---|---|---|---|---|---|---|---|---|---|---|
| .188 | .000 | 43.42290 | 10.14040 | 53.58300 | 53.00360 | 52.99370 | -.00810 | .00000 | 9.36670 | 9.35720 |
| .188 | .000 | 43.39860 | 10.12060 | 53.53450 | 52.96730 | 52.95620 | -.00650 | -.00150 | 9.36140 | 9.35720 |
| .188 | .000 | 43.19180 | 10.14830 | 53.38890 | 52.71330 | 52.69410 | -.01140 | -.00150 | 9.31640 | 9.32440 |
| .188 | .000 | 43.33770 | 10.13650 | 53.50210 | 52.89470 | 52.88130 | -.00870 | -.00100 | 9.34820 | 9.34630 |
| | GRADIENT | .00000 | .00000 | .00000 | .00000 | .00000 | .00000 | .00000 | .00000 | .00000 |

RUN NO. 1152/ 0 RN/L = 1.55 GRADIENT INTERVAL = -5.00/ 5.00

| MACH | ALPHA | 27-12 | 12-ATM | 27-ATM | TBISBI | TB-SB | TB-TBI | SB-SBI | 12-PO | 12-SB |
|---|---|---|---|---|---|---|---|---|---|---|
| .230 | .000 | 65.25600 | 15.24030 | 80.59300 | 79.99510 | 80.02110 | .01460 | -.00300 | 14.13710 | 14.37970 |
| .230 | .000 | 65.21950 | 15.35490 | 80.64150 | 79.89840 | 79.89630 | -.00490 | .00600 | 14.12850 | 14.34150 |
| .230 | .000 | 65.20740 | 15.27190 | 80.59300 | 79.91050 | 79.93370 | .01460 | .00000 | 14.12570 | 14.33060 |
| .230 | .000 | 65.22760 | 15.28910 | 80.60910 | 79.93460 | 79.95030 | .00810 | .00100 | 14.13040 | 14.35060 |
| | GRADIENT | .00000 | .00000 | .00000 | .00000 | .00000 | .00000 | .00000 | .00000 | .00000 |

RUN NO. 1153/ 0 RN/L = 1.67 GRADIENT INTERVAL = -5.00/ 5.00

| MACH | ALPHA | 27-12 | 12-ATM | 27-ATM | TBISBI | TB-SB | TB-TBI | SB-SBI | 12-PO | 12-SB |
|---|---|---|---|---|---|---|---|---|---|---|
| .248 | .000 | 76.04490 | 17.96420 | 94.06150 | 93.35790 | 93.35380 | -.00320 | .00450 | 16.71590 | 16.90740 |
| .248 | .000 | 76.00840 | 18.05120 | 94.11010 | 93.28530 | 93.29140 | -.00160 | .00750 | 16.70710 | 16.86370 |
| .248 | .000 | 76.04490 | 17.99580 | 94.11010 | 93.38210 | 93.40370 | .00810 | .00000 | 16.71590 | 16.90190 |
| .248 | .000 | 76.03270 | 18.00370 | 94.09390 | 93.34170 | 93.34960 | .00100 | .00400 | 16.71300 | 16.89100 |
| | GRADIENT | .00000 | .00000 | .00000 | .00000 | .00000 | .00000 | .00000 | .00000 | .00000 |

RUN NO. 1154/ 0 RN/L = 1.78 GRADIENT INTERVAL = -5.00/ 5.00

| MACH | ALPHA | 27-12 | 12-ATM | 27-ATM | TBISBI | TB-SB | TB-TBI | SB-SBI | 12-PO | 12-SB |
|---|---|---|---|---|---|---|---|---|---|---|
| .265 | .000 | 87.02830 | 21.01220 | 108.11200 | 107.05900 | 107.04800 | -.00980 | .01660 | 19.34550 | 19.51150 |
| .265 | .000 | 86.94320 | 20.85810 | 107.86900 | 106.93800 | 106.94800 | -.00980 | -.00300 | 19.32510 | 19.53330 |
| .265 | .000 | 86.94320 | 20.86600 | 107.86900 | 106.92600 | 106.92300 | -.00490 | .00750 | 19.32510 | 19.50060 |
| .265 | .000 | 86.97160 | 20.91210 | 107.95000 | 106.97400 | 106.97300 | -.00810 | .00700 | 19.33190 | 19.51510 |
| | GRADIENT | .00000 | .00000 | .00000 | .00000 | .00000 | .00000 | .00000 | .00000 | .00000 |

OA236 (NAAL 759) CONFIGURATION 3 DATA SELECT 1 (RFM116) ( 28 JUN 79 )

REFERENCE DATA

SREF = .0000 SQ.FT. XMRP = .0000 IN. XT
LREF = .0000 INCHES YMRP = .0000 IN. YT
BREF = .0000 INCHES ZMRP = .0000 IN. ZT
SCALE = 1.0000

PARAMETRIC DATA

ALPHA = .000 BETA = .000

RUN NO. 1161/ 0 RN/L = 1.26 GRADIENT INTERVAL = -5.00/ 5.00

| MACH | ALPHA | 27-12 | 12-ATM | 27-ATM | TBISBI | TB-SB | TB-TBI | SB-SBI | 12-PO | 12-SB |
|---|---|---|---|---|---|---|---|---|---|---|
| .188 | .000 | 43.43510 | 9.97440 | 53.46170 | 53.68080 | 53.68030 | .00650 | .00300 | 9.36930 | 10.03960 |
| .188 | .000 | 43.42290 | 10.05340 | 53.48600 | 53.68080 | 53.68030 | .00480 | .00450 | 9.36670 | 10.04510 |
| .188 | .000 | 43.34990 | 10.07320 | 53.43740 | 53.58400 | 53.58040 | -.00490 | .00150 | 9.35080 | 10.02870 |
| .188 | .000 | 43.40260 | 10.03370 | 53.46170 | 53.64850 | 53.64700 | .00210 | .00300 | 9.36230 | 10.03780 |
| | GRADIENT | .00000 | .00000 | .00000 | .00000 | .00000 | .00000 | .00000 | .00000 | .00000 |

RUN NO. 1162/ 0 RN/L = 1.54 GRADIENT INTERVAL = -5.00/ 5.00

| MACH | ALPHA | 27-12 | 12-ATM | 27-ATM | TBISBI | TB-SB | TB-TBI | SB-SBI | 12-PO | 12-SB |
|---|---|---|---|---|---|---|---|---|---|---|
| .229 | .000 | 65.04930 | 15.33910 | 80.44740 | 80.70860 | 80.72020 | .00320 | .00000 | 14.08900 | 15.31870 |
| .230 | .000 | 65.21950 | 15.25610 | 80.54440 | 80.89000 | 80.90740 | .00970 | -.00450 | 14.12850 | 15.36790 |
| .230 | .000 | 65.23170 | 15.41420 | 80.69000 | 80.91420 | 80.91990 | .00000 | .00300 | 14.13140 | 15.36240 |
| .230 | .000 | 65.16680 | 15.33650 | 80.56060 | 80.83760 | 80.84920 | .00430 | -.00050 | 14.11630 | 15.34970 |
| | GRADIENT | .00000 | .00000 | .00000 | .00000 | .00000 | .00000 | .00000 | .00000 | .00000 |

RUN NO. 1163/ 0 RN/L = 1.66 GRADIENT INTERVAL = -5.00/ 5.00

| MACH | ALPHA | 27-12 | 12-ATM | 27-ATM | TBISBI | TB-SB | TB-TBI | SB-SBI | 12-PO | 12-SB |
|---|---|---|---|---|---|---|---|---|---|---|
| .248 | .000 | 76.08140 | 18.08280 | 94.23140 | 94.53090 | 94.52730 | .00320 | .01200 | 16.72460 | 18.02110 |
| .248 | .000 | 76.06920 | 18.01160 | 94.15860 | 94.48250 | 94.50230 | .00810 | -.00300 | 16.72170 | 18.05380 |
| .248 | .000 | 76.02050 | 18.13810 | 94.20710 | 94.41000 | 94.42740 | -.00490 | .00000 | 16.71010 | 18.03200 |
| .248 | .000 | 76.05700 | 18.07750 | 94.19900 | 94.47450 | 94.48560 | .00210 | .00300 | 16.71880 | 18.03560 |
| | GRADIENT | .00000 | .00000 | .00000 | .00000 | .00000 | .00000 | .00000 | .00000 | .00000 |

RUN NO. 1164/ 0 RN/L = 1.77 GRADIENT INTERVAL = -5.00/ 5.00

| MACH | ALPHA | 27-12 | 12-ATM | 27-ATM | TBISBI | TB-SB | TB-TBI | SB-SBI | 12-PO | 12-SB |
|---|---|---|---|---|---|---|---|---|---|---|
| .265 | .000 | 87.16210 | 20.90950 | 108.18500 | 108.42500 | 108.44600 | -.00490 | -.01810 | 19.37750 | 20.85990 |
| .265 | .000 | 86.87020 | 20.94500 | 107.84500 | 108.01400 | 108.02200 | -.00810 | .01200 | 19.30760 | 20.72340 |
| .265 | .000 | 86.97970 | 20.93320 | 107.99100 | 108.20800 | 108.22200 | .00970 | .01350 | 19.33380 | 20.77260 |
| .265 | .000 | 87.00400 | 20.92920 | 108.00700 | 108.21600 | 108.23000 | -.00100 | .00250 | 19.33960 | 20.78530 |
| | GRADIENT | .00000 | .00000 | .00000 | .00000 | .00000 | .00000 | .00000 | .00000 | .00000 |

OA236 (NAAL 759) CONFIGURATION 14 DATA SELECT 1 (RFM117) ( 28 JUN 79 )

REFERENCE DATA

SREF = .0000 SQ.FT. XMRP = .0000 IN. XT
LREF = .0000 INCHES YMRP = .0000 IN. YT
BREF = .0000 INCHES ZMRP = .0000 IN. ZT
SCALE = 1.0000

PARAMETRIC DATA

ALPHA = .000 BETA = .000

RUN NO. 1171/ 0 RN/L = 1.28 GRADIENT INTERVAL = -5.00/ 5.00

| MACH | ALPHA | 27-12 | 12-ATM | 27-ATM | TBISBI | TB-SB | TB-TBI | SB-SBI | 12-PO | 12-SB |
|---|---|---|---|---|---|---|---|---|---|---|
| .188 | .000 | 43.42290 | 9.99410 | 53.46170 | 53.74120 | 53.73020 | .00000 | .00750 | 9.36670 | 10.07780 |
| .188 | .000 | 43.39860 | 9.92300 | 53.38890 | 53.69290 | 53.70520 | .00480 | -.00150 | 9.36140 | 10.07780 |
| .188 | .000 | 43.43510 | 9.95070 | 53.43740 | 53.75330 | 53.75520 | .00160 | .00450 | 9.36930 | 10.07780 |
| .188 | .000 | 43.41880 | 9.95590 | 53.42930 | 53.72910 | 53.73020 | .00210 | .00350 | 9.36580 | 10.07780 |
| | GRADIENT | .00000 | .00000 | .00000 | .00000 | .00000 | .00000 | .00000 | .00000 | .00000 |

RUN NO. 1172/ 0 RN/L = 1.57 GRADIENT INTERVAL = -5.00/ 5.00

| MACH | ALPHA | 27-12 | 12-ATM | 27-ATM | TBISBI | TB-SB | TB-TBI | SB-SBI | 12-PO | 12-SB |
|---|---|---|---|---|---|---|---|---|---|---|
| .230 | .000 | 65.15870 | 15.29560 | 80.47160 | 80.76910 | 80.75760 | -.00650 | .01050 | 14.11430 | 15.25320 |
| .230 | .000 | 65.14660 | 15.10980 | 80.32600 | 80.74490 | 80.77010 | .00810 | -.00300 | 14.11150 | 15.27510 |
| .230 | .000 | 65.18300 | 15.20870 | 80.42310 | 80.79330 | 80.79510 | -.00650 | .00450 | 14.12000 | 15.28050 |
| .230 | .000 | 65.16280 | 15.20470 | 80.40690 | 80.76910 | 80.77430 | -.00160 | .00400 | 14.11530 | 15.26960 |
| | GRADIENT | .00000 | .00000 | .00000 | .00000 | .00000 | .00000 | .00000 | .00000 | .00000 |

RUN NO. 1173/ 0 RN/L = 1.69 GRADIENT INTERVAL = -5.00/ 5.00

| MACH | ALPHA | 27-12 | 12-ATM | 27-ATM | TBISBI | TB-SB | TB-TBI | SB-SBI | 12-PO | 12-SB |
|---|---|---|---|---|---|---|---|---|---|---|
| .248 | .000 | 76.02050 | 17.90090 | 93.96450 | 94.28900 | 94.29010 | -.00980 | .00450 | 16.71010 | 17.86280 |
| .248 | .000 | 76.06920 | 18.03140 | 94.15860 | 94.34950 | 94.36500 | -.01140 | -.00600 | 16.72170 | 17.92280 |
| .248 | .000 | 75.97190 | 17.97210 | 93.98880 | 94.22860 | 94.24010 | -.00490 | .00150 | 16.69840 | 17.86820 |
| .248 | .000 | 76.02050 | 17.96810 | 94.03730 | 94.28900 | 94.29840 | -.00870 | .00000 | 16.71010 | 17.88460 |
| | GRADIENT | .00000 | .00000 | .00000 | .00000 | .00000 | .00000 | .00000 | .00000 | .00000 |

RUN NO. 1174/ 0 RN/L = 1.80 GRADIENT INTERVAL = -5.00/ 5.00

| MACH | ALPHA | 27-12 | 12-ATM | 27-ATM | TBISBI | TB-SB | TB-TBI | SB-SBI | 12-PO | 12-SB |
|---|---|---|---|---|---|---|---|---|---|---|
| .265 | .000 | 86.93100 | 20.73160 | 107.72400 | 107.85700 | 107.85900 | -.01140 | .00450 | 19.32220 | 20.46690 |
| .265 | .000 | 87.02830 | 20.46270 | 107.60200 | 108.03800 | 108.08400 | .01950 | -.00750 | 19.34550 | 20.56510 |
| .265 | .000 | 86.99180 | 20.54570 | 107.65100 | 107.99000 | 108.03400 | .01630 | -.01200 | 19.33670 | 20.54330 |
| .265 | .000 | 86.98370 | 20.58000 | 107.65900 | 107.96200 | 107.99300 | .00810 | -.00500 | 19.33480 | 20.52510 |
| | GRADIENT | .00000 | .00000 | .00000 | .00000 | .00000 | .00000 | .00000 | .00000 | .00000 |

OA236 (NAAL 759) CONFIGURATION 1 DATA SELECT 1 (SFM101) ( 28 JUN 79 )

REFERENCE DATA

SREF = .0000 SQ.FT. XMRP = .0000 IN. XT
LREF = .0000 INCHES YMRP = .0000 IN. YT
BREF = .0000 INCHES ZMRP = .0000 IN. ZT
SCALE = 1.0000

PARAMETRIC DATA

ALPHA = .000 BETA = .000

RUN NO. 1011/ 0 RN/L = 1.29 GRADIENT INTERVAL = -5.00/ 5.00

| MACH | ALPHA | TBTO/Q | QBI/QO | QB/QO | SBPO/Q | SBSBIQ | TBTBIQ | 2712/Q | 12SBIQ | 12SB/Q | P12POQ |
|---|---|---|---|---|---|---|---|---|---|---|---|
| .188 | .000 | -.00040 | .99790 | .99750 | .00170 | .00000 | -.00010 | .82590 | .17590 | .17640 | .17810 |
| .188 | .000 | .00000 | .99810 | .99790 | .00160 | .00000 | .00000 | .82580 | .17600 | .17640 | .17810 |
| .188 | .000 | .00000 | .99850 | .99860 | .00100 | -.00020 | .00000 | .82590 | .17640 | .17710 | .17810 |
| .188 | .000 | -.00010 | .99820 | .99800 | .00140 | .00000 | .00000 | .82590 | .17610 | .17660 | .17810 |
| | GRADIENT | .00000 | .00000 | .00000 | .00000 | .00000 | .00000 | .00000 | .00000 | .00000 | .00000 |

RUN NO. 1012/ 0 RN/L = 1.58 GRADIENT INTERVAL = -5.00/ 5.00

| MACH | ALPHA | TBTO/Q | QBI/QO | QB/QO | SBPO/Q | SBSBIQ | TBTBIQ | 2712/Q | 12SBIQ | 12SB/Q | P12POQ |
|---|---|---|---|---|---|---|---|---|---|---|---|
| .229 | .000 | .00050 | 1.00170 | 1.00170 | -.00140 | .00000 | .00000 | .82890 | .18070 | .18100 | .17950 |
| .230 | .000 | .00050 | 1.00120 | 1.00120 | -.00090 | .00010 | .00000 | .82890 | .18030 | .18050 | .17950 |
| .229 | .000 | .00010 | 1.00130 | 1.00140 | -.00140 | .00000 | .00000 | .82890 | .18070 | .18100 | .17950 |
| .230 | .000 | .00040 | 1.00140 | 1.00140 | -.00120 | .00000 | .00000 | .82890 | .18060 | .18080 | .17950 |
| | GRADIENT | .00000 | .00000 | .00000 | .00000 | .00000 | .00000 | .00000 | .00000 | .00000 | .00000 |

RUN NO. 1013/ 0 RN/L = 1.70 GRADIENT INTERVAL = -5.00/ 5.00

| MACH | ALPHA | TBTO/Q | QBI/QO | QB/QO | SBPO/Q | SBSBIQ | TBTBIQ | 2712/Q | 12SBIQ | 12SB/Q | P12POQ |
|---|---|---|---|---|---|---|---|---|---|---|---|
| .248 | .000 | .00020 | 1.00080 | 1.00080 | -.00080 | .00000 | .00000 | .82850 | .18260 | .18300 | .18210 |
| .248 | .000 | -.00010 | 1.00040 | 1.00030 | -.00070 | .00000 | .00000 | .82850 | .18260 | .18290 | .18210 |
| .248 | .000 | .00060 | 1.00090 | 1.00110 | -.00070 | .00000 | .00010 | .82850 | .18250 | .18280 | .18210 |
| .248 | .000 | .00020 | 1.00070 | 1.00070 | -.00070 | .00000 | .00000 | .82850 | .18260 | .18290 | .18210 |
| | GRADIENT | .00000 | .00000 | .00000 | .00000 | .00000 | .00000 | .00000 | .00000 | .00000 | .00000 |

RUN NO. 1014/ 0 RN/L = 1.81 GRADIENT INTERVAL = -5.00/ 5.00

| MACH | ALPHA | TBTO/Q | QBI/QO | QB/QO | SBPO/Q | SBSBIQ | TBTBIQ | 2712/Q | 12SBIQ | 12SB/Q | P12POQ |
|---|---|---|---|---|---|---|---|---|---|---|---|
| .265 | .000 | .00050 | 1.00040 | 1.00040 | -.00010 | .00010 | .00000 | .82860 | .18420 | .18430 | .18420 |
| .265 | .000 | .00060 | 1.00080 | 1.00110 | -.00070 | .00000 | .00000 | .82860 | .18460 | .18500 | .18420 |
| .265 | .000 | .00010 | 1.00070 | 1.00080 | -.00100 | .00000 | .00000 | .82860 | .18480 | .18520 | .18420 |
| .265 | .000 | .00040 | 1.00060 | 1.00080 | -.00060 | .00000 | .00000 | .82860 | .18450 | .18480 | .18420 |
| | GRADIENT | .00000 | .00000 | .00000 | .00000 | .00000 | .00000 | .00000 | .00000 | .00000 | .00000 |

OA236 (NAAL 759) CONFIGURATION 2 DATA SELECT 1 (SFM102) ( 28 JUN 79 )

REFERENCE DATA

SREF = .0000 SQ.FT. XMRP = .0000 IN. XT
LREF = .0000 INCHES YMRP = .0000 IN. YT
BREF = .0000 INCHES ZMRP = .0000 IN. ZT
SCALE = 1.0000

PARAMETRIC DATA

ALPHA = .000 BETA = .000

RUN NO. 1021/ 0 RN/L = 1.28 GRADIENT INTERVAL = -5.00/ 5.00

| MACH | ALPHA | TBTO/Q | QBI/QO | QB/QO | SBPO/Q | SBSBIQ | TBTBIQ | 2712/Q | 12SBIQ | 12SB/Q | P12POQ |
|---|---|---|---|---|---|---|---|---|---|---|---|
| .188 | .000 | -.00070 | .98920 | .98880 | .01010 | .00000 | .00000 | .82580 | .16810 | .16790 | .17810 |
| .188 | .000 | -.00070 | .98840 | .98820 | .01070 | .00000 | .00000 | .82580 | .16750 | .16730 | .17810 |
| .187 | .000 | -.00080 | .98890 | .98870 | .01010 | .00000 | .00000 | .82580 | .16800 | .16790 | .17810 |
| .188 | .000 | -.00070 | .98880 | .98860 | .01030 | .00000 | .00000 | .82580 | .16790 | .16770 | .17810 |
| | GRADIENT | .00000 | .00000 | .00000 | .00000 | .00000 | .00000 | .00000 | .00000 | .00000 | .00000 |

RUN NO. 1022/ 0 RN/L = 1.57 GRADIENT INTERVAL = -5.00/ 5.00

| MACH | ALPHA | TBTO/Q | QBI/QO | QB/QO | SBPO/Q | SBSBIQ | TBTBIQ | 2712/Q | 12SBIQ | 12SB/Q | P12POQ |
|---|---|---|---|---|---|---|---|---|---|---|---|
| .229 | .000 | .00000 | .99190 | .99160 | .00820 | .00000 | .00000 | .82890 | .17110 | .17120 | .17950 |
| .229 | .000 | -.00150 | .98810 | .98810 | .01030 | .00000 | .00000 | .82890 | .16910 | .16920 | .17950 |
| .229 | .000 | -.00080 | .99000 | .98980 | .00920 | .00000 | .00000 | .82890 | .17020 | .17030 | .17950 |
| .229 | .000 | -.00070 | .99000 | .98980 | .00920 | .00000 | .00000 | .82890 | .17010 | .17020 | .17950 |
| | GRADIENT | .00000 | .00000 | .00000 | .00000 | .00000 | .00000 | .00000 | .00000 | .00000 | .00000 |

RUN NO. 1023/ 0 RN/L = 1.69 GRADIENT INTERVAL = -5.00/ 5.00

| MACH | ALPHA | TBTO/Q | QBI/QO | QB/QO | SBPO/Q | SBSBIQ | TBTBIQ | 2712/Q | 12SBIQ | 12SB/Q | P12POQ |
|---|---|---|---|---|---|---|---|---|---|---|---|
| .248 | .000 | -.00050 | .98880 | .98880 | .01040 | .00000 | .00000 | .82850 | .17150 | .17160 | .18210 |
| .248 | .000 | .00000 | .99000 | .99000 | .00990 | .00000 | .00000 | .82850 | .17190 | .17210 | .18210 |
| .248 | .000 | -.00180 | .98640 | .98640 | .01170 | .00000 | .00000 | .82850 | .17020 | .17040 | .18210 |
| .248 | .000 | -.00070 | .98840 | .98840 | .01070 | .00000 | .00000 | .82850 | .17120 | .17140 | .18210 |
| | GRADIENT | .00000 | .00000 | .00000 | .00000 | .00000 | .00000 | .00000 | .00000 | .00000 | .00000 |

RUN NO. 1024/ 0 RN/L = 1.80 GRADIENT INTERVAL = -5.00/ 5.00

| MACH | ALPHA | TBTO/Q | QBI/QO | QB/QO | SBPO/Q | SBSBIQ | TBTBIQ | 2712/Q | 12SBIQ | 12SB/Q | P12POQ |
|---|---|---|---|---|---|---|---|---|---|---|---|
| .264 | .000 | -.00060 | .98840 | .98840 | .01080 | .00000 | .00000 | .82860 | .17310 | .17330 | .18410 |
| .264 | .000 | .00000 | .98870 | .98870 | .01120 | .00000 | .00000 | .82860 | .17280 | .17290 | .18410 |
| .264 | .000 | -.00030 | .98800 | .98800 | .01150 | .00000 | .00000 | .82860 | .17250 | .17260 | .18410 |
| .264 | .000 | -.00030 | .98830 | .98840 | .01120 | .00000 | .00000 | .82860 | .17280 | .17290 | .18410 |
| | GRADIENT | .00000 | .00000 | .00000 | .00000 | .00000 | .00000 | .00000 | .00000 | .00000 | .00000 |

OA236 (NAAL 759) CONFIGURATION 3 DATA SELECT 1 (SFM103) ( 28 JUN 79 )

REFERENCE DATA

SREF = .0000 SQ.FT. XMRP = .0000 IN. XT
LREF = .0000 INCHES YMRP = .0000 IN. YT
BREF = .0000 INCHES ZMRP = .0000 IN. ZT
SCALE = 1.0000

PARAMETRIC DATA

ALPHA = .000 BETA = .000

RUN NO. 1031/ 0 RN/L = 1.29 GRADIENT INTERVAL = -5.00/ 5.00

| MACH | ALPHA | TBTO/Q | QBI/QO | QB/QO | SBPO/Q | SBSBIQ | TBTBIQ | 2712/Q | 12SBIQ | 12SB/Q | P12POQ |
|---|---|---|---|---|---|---|---|---|---|---|---|
| .188 | .000 | -.00040 | 1.01220 | 1.01200 | -.01290 | -.00010 | .00000 | .82590 | .19100 | .19110 | .17810 |
| .188 | .000 | .00000 | 1.01220 | 1.01200 | -.01240 | .00000 | -.00010 | .82580 | .19080 | .19060 | .17810 |
| .188 | .000 | .00030 | 1.01230 | 1.01260 | -.01260 | .00000 | .00000 | .82580 | .19080 | .19080 | .17810 |
| .188 | .000 | .00000 | 1.01220 | 1.01220 | -.01270 | .00000 | .00000 | .82590 | .19090 | .19080 | .17810 |
| | GRADIENT | .00000 | .00000 | .00000 | .00000 | .00000 | .00000 | .00000 | .00000 | .00000 | .00000 |

RUN NO. 1032/ 0 RN/L = 1.56 GRADIENT INTERVAL = -5.00/ 5.00

| MACH | ALPHA | TBTO/Q | QBI/QO | QB/QO | SBPO/Q | SBSBIQ | TBTBIQ | 2712/Q | 12SBIQ | 12SB/Q | P12POQ |
|---|---|---|---|---|---|---|---|---|---|---|---|
| .230 | .000 | -.00020 | 1.01500 | 1.01510 | -.01570 | .00000 | .00000 | .82890 | .19530 | .19530 | .17950 |
| .230 | .000 | .00000 | 1.01530 | 1.01550 | -.01580 | .00000 | .00000 | .82890 | .19540 | .19550 | .17960 |
| .229 | .000 | -.00030 | 1.01530 | 1.01500 | -.01570 | .00000 | -.00010 | .82890 | .19540 | .19530 | .17950 |
| .230 | .000 | -.00010 | 1.01520 | 1.01520 | -.01580 | .00000 | .00000 | .82890 | .19540 | .19540 | .17950 |
| | GRADIENT | .00000 | .00000 | .00000 | .00000 | .00000 | .00000 | .00000 | .00000 | .00000 | .00000 |

RUN NO. 1033/ 0 RN/L = 1.68 GRADIENT INTERVAL = -5.00/ 5.00

| MACH | ALPHA | TBTO/Q | QBI/QO | QB/QO | SBPO/Q | SBSBIQ | TBTBIQ | 2712/Q | 12SBIQ | 12SB/Q | P12POQ |
|---|---|---|---|---|---|---|---|---|---|---|---|
| .248 | .000 | .00020 | 1.01390 | 1.01410 | -.01430 | .00000 | .00000 | .82850 | .19640 | .19640 | .18210 |
| .248 | .000 | .00000 | 1.01360 | 1.01380 | -.01430 | .00000 | .00000 | .82850 | .19650 | .19640 | .18210 |
| .248 | .000 | .00010 | 1.01380 | 1.01400 | -.01430 | .00000 | .00000 | .82850 | .19650 | .19650 | .18210 |
| .248 | .000 | .00010 | 1.01380 | 1.01400 | -.01430 | .00000 | .00000 | .82850 | .19650 | .19650 | .18210 |
| | GRADIENT | .00000 | .00000 | .00000 | .00000 | .00000 | .00000 | .00000 | .00000 | .00000 | .00000 |

RUN NO. 1034/ 0 RN/L = 1.79 GRADIENT INTERVAL = -5.00/ 5.00

| MACH | ALPHA | TBTO/Q | QBI/QO | QB/QO | SBPO/Q | SBSBIQ | TBTBIQ | 2712/Q | 12SBIQ | 12SB/Q | P12POQ |
|---|---|---|---|---|---|---|---|---|---|---|---|
| .265 | .000 | .00050 | 1.01320 | 1.01390 | -.01380 | -.00010 | .00030 | .82860 | .19800 | .19810 | .18420 |
| .264 | .000 | .00020 | 1.01330 | 1.01370 | -.01380 | .00000 | .00000 | .82860 | .19800 | .19800 | .18420 |
| .264 | .000 | .00020 | 1.01340 | 1.01360 | -.01380 | .00000 | .00000 | .82860 | .19810 | .19800 | .18410 |
| .265 | .000 | .00030 | 1.01330 | 1.01370 | -.01380 | .00000 | .00010 | .82860 | .19800 | .19800 | .18420 |
| | GRADIENT | .00000 | .00000 | .00000 | .00000 | .00000 | .00000 | .00000 | .00000 | .00000 | .00000 |

OA236 (NAAL 759) CONFIGURATION 4 DATA SELECT 1 (SFM104) ( 28 JUN 79 )

REFERENCE DATA

SREF = .0000 SQ.FT. XMRP = .0000 IN. XT
LREF = .0000 INCHES YMRP = .0000 IN. YT
BREF = .0000 INCHES ZMRP = .0000 IN. ZT
SCALE = 1.0000

PARAMETRIC DATA

ALPHA = .000 BETA = .000

RUN NO. 1041/ 0 RN/L = 1.28 GRADIENT INTERVAL = -5.00/ 5.00

| MACH | ALPHA | TBTO/Q | QBI/QO | QB/QO | SBPO/Q | SBSBIQ | TBTBIQ | 2712/Q | 12SBIQ | 12SB/Q | P12POQ |
|---|---|---|---|---|---|---|---|---|---|---|---|
| .188 | .000 | .00160 | 1.00280 | 1.00240 | -.00110 | .00020 | .00000 | .82590 | .17940 | .17920 | .17810 |
| .188 | .000 | .00200 | 1.00350 | 1.00300 | -.00130 | .00000 | .00000 | .82580 | .17950 | .17940 | .17810 |
| .188 | .000 | .00260 | 1.00350 | 1.00350 | -.00120 | .00000 | .00010 | .82590 | .17950 | .17930 | .17810 |
| .188 | .000 | .00210 | 1.00330 | 1.00290 | -.00120 | .00010 | .00000 | .82590 | .17950 | .17930 | .17810 |
| | GRADIENT | .00000 | .00000 | .00000 | .00000 | .00000 | .00000 | .00000 | .00000 | .00000 | .00000 |

RUN NO. 1042/ 0 RN/L = 1.56 GRADIENT INTERVAL = -5.00/ 5.00

| MACH | ALPHA | TBTO/Q | QBI/QO | QB/QO | SBPO/Q | SBSBIQ | TBTBIQ | 2712/Q | 12SBIQ | 12SB/Q | P12POQ |
|---|---|---|---|---|---|---|---|---|---|---|---|
| .230 | .000 | .00140 | 1.00570 | 1.00530 | -.00410 | .00000 | -.00010 | .82890 | .18380 | .18370 | .17950 |
| .230 | .000 | .00210 | 1.00650 | 1.00650 | -.00460 | -.00010 | .00000 | .82890 | .18400 | .18420 | .17960 |
| .230 | .000 | .00170 | 1.00570 | 1.00550 | -.00400 | .00000 | .00000 | .82890 | .18370 | .18360 | .17950 |
| .230 | .000 | .00230 | 1.00580 | 1.00560 | -.00350 | .00020 | .00010 | .82890 | .18330 | .18310 | .17950 |
| .230 | .000 | .00190 | 1.00590 | 1.00570 | -.00410 | .00000 | .00000 | .82890 | .18370 | .18370 | .17950 |
| | GRADIENT | .00000 | .00000 | .00000 | .00000 | .00000 | .00000 | .00000 | .00000 | .00000 | .00000 |

RUN NO. 1043/ 0 RN/L = 1.68 GRADIENT INTERVAL = -5.00/ 5.00

| MACH | ALPHA | TBTO/Q | QBI/QO | QB/QO | SBPO/Q | SBSBIQ | TBTBIQ | 2712/Q | 12SBIQ | 12SB/Q | P12POQ |
|---|---|---|---|---|---|---|---|---|---|---|---|
| .248 | .000 | .00240 | 1.00560 | 1.00560 | -.00340 | .00000 | .00000 | .82850 | .18560 | .18560 | .18210 |
| .248 | .000 | .00210 | 1.00510 | 1.00510 | -.00330 | .00010 | .00000 | .82850 | .18560 | .18540 | .18210 |
| .248 | .000 | .00210 | 1.00570 | 1.00570 | -.00390 | .00000 | -.00010 | .82850 | .18590 | .18600 | .18210 |
| .248 | .000 | .00220 | 1.00550 | 1.00550 | -.00350 | .00000 | .00000 | .82850 | .18570 | .18570 | .18210 |
| | GRADIENT | .00000 | .00000 | .00000 | .00000 | .00000 | .00000 | .00000 | .00000 | .00000 | .00000 |

RUN NO. 1044/ 0 RN/L = 1.79 GRADIENT INTERVAL = -5.00/ 5.00

| MACH | ALPHA | TBTO/Q | QBI/QO | QB/QO | SBPO/Q | SBSBIQ | TBTBIQ | 2712/Q | 12SBIQ | 12SB/Q | P12POQ |
|---|---|---|---|---|---|---|---|---|---|---|---|
| .265 | .000 | .00220 | 1.00550 | 1.00540 | -.00350 | .00000 | .00000 | .82860 | .18780 | .18770 | .18420 |
| .265 | .000 | .00250 | 1.00520 | 1.00510 | -.00290 | .00010 | .00000 | .82860 | .18730 | .18710 | .18420 |
| .265 | .000 | .00160 | 1.00510 | 1.00500 | -.00360 | .00000 | .00000 | .82860 | .18780 | .18790 | .18420 |
| .265 | .000 | .00210 | 1.00520 | 1.00510 | -.00330 | .00000 | .00000 | .82860 | .18760 | .18760 | .18420 |
| | GRADIENT | .00000 | .00000 | .00000 | .00000 | .00000 | .00000 | .00000 | .00000 | .00000 | .00000 |

OA236 (NAAL 759) CONFIGURATION 5 DATA SELECT 1 (SFM105) ( 28 JUN 79 )

REFERENCE DATA

SREF = .0000 SQ.FT. XMRP = .0000 IN. XT
LREF = .0000 INCHES YMRP = .0000 IN. YT
BREF = .0000 INCHES ZMRP = .0000 IN. ZT
SCALE = 1.0000

PARAMETRIC DATA

ALPHA = .000 BETA = .000

RUN NO. 1051/ 0 RN/L = 1.29 GRADIENT INTERVAL = -5.00/ 5.00

| MACH | ALPHA | TBTO/Q | QBI/QO | QB/QO | SBPO/Q | SBSBIQ | TBTBIQ | 2712/Q | 12SBIQ | 12SB/Q | P12POQ |
|---|---|---|---|---|---|---|---|---|---|---|---|
| .189 | .000 | .00170 | 1.00190 | .99990 | .00140 | .00260 | .00000 | .82580 | .17790 | .17670 | .17810 |
| .188 | .000 | .00240 | 1.00270 | .99950 | .00250 | .00410 | .00000 | .82580 | .17820 | .17560 | .17810 |
| .188 | .000 | .00230 | 1.00280 | .99920 | .00260 | .00440 | .00000 | .82580 | .17850 | .17540 | .17810 |
| .188 | .000 | .00210 | 1.00250 | .99950 | .00220 | .00370 | .00000 | .82580 | .17820 | .17590 | .17810 |
| | GRADIENT | .00000 | .00000 | .00000 | .00000 | .00000 | .00000 | .00000 | .00000 | .00000 | .00000 |

RUN NO. 1052/ 0 RN/L = 1.58 GRADIENT INTERVAL = -5.00/ 5.00

| MACH | ALPHA | TBTO/Q | QBI/QO | QB/QO | SBPO/Q | SBSBIQ | TBTBIQ | 2712/Q | 12SBIQ | 12SB/Q | P12POQ |
|---|---|---|---|---|---|---|---|---|---|---|---|
| .229 | .000 | .00210 | 1.00550 | 1.00260 | -.00070 | .00350 | .00000 | .82890 | .18290 | .18030 | .17950 |
| .229 | .000 | .00190 | 1.00540 | 1.00230 | -.00070 | .00340 | .00000 | .82890 | .18280 | .18020 | .17950 |
| .230 | .000 | .00280 | 1.00630 | 1.00270 | -.00010 | .00460 | .00020 | .82890 | .18350 | .17970 | .17950 |
| .229 | .000 | .00220 | 1.00570 | 1.00250 | -.00050 | .00380 | .00000 | .82890 | .18310 | .18010 | .17950 |
| | GRADIENT | .00000 | .00000 | .00000 | .00000 | .00000 | .00000 | .00000 | .00000 | .00000 | .00000 |

RUN NO. 1053/ 0 RN/L = 1.70 GRADIENT INTERVAL = -5.00/ 5.00

| MACH | ALPHA | TBTO/Q | QBI/QO | QB/QO | SBPO/Q | SBSBIQ | TBTBIQ | 2712/Q | 12SBIQ | 12SB/Q | P12POQ |
|---|---|---|---|---|---|---|---|---|---|---|---|
| .248 | .000 | .00220 | 1.00460 | 1.00140 | .00050 | .00370 | .00000 | .82850 | .18460 | .18150 | .18210 |
| .248 | .000 | .00230 | 1.00510 | 1.00080 | .00120 | .00480 | .00010 | .82850 | .18520 | .18080 | .18210 |
| .248 | .000 | .00230 | 1.00470 | 1.00230 | -.00020 | .00280 | .00000 | .82850 | .18470 | .18230 | .18210 |
| .248 | .000 | .00230 | 1.00480 | 1.00150 | .00050 | .00380 | .00000 | .82850 | .18480 | .18160 | .18210 |
| | GRADIENT | .00000 | .00000 | .00000 | .00000 | .00000 | .00000 | .00000 | .00000 | .00000 | .00000 |

RUN NO. 1054/ 0 RN/L = 1.81 GRADIENT INTERVAL = -5.00/ 5.00

| MACH | ALPHA | TBTO/Q | QBI/QO | QB/QO | SBPO/Q | SBSBIQ | TBTBIQ | 2712/Q | 12SBIQ | 12SB/Q | P12POQ |
|---|---|---|---|---|---|---|---|---|---|---|---|
| .265 | .000 | .00200 | 1.00450 | 1.00090 | .00090 | .00390 | .00000 | .82860 | .18670 | .18320 | .18420 |
| .265 | .000 | .00230 | 1.00470 | 1.00220 | -.00010 | .00300 | .00010 | .82860 | .18670 | .18430 | .18420 |
| .265 | .000 | .00220 | 1.00470 | 1.00090 | .00100 | .00430 | .00000 | .82860 | .18690 | .18310 | .18420 |
| .265 | .000 | .00210 | 1.00460 | 1.00180 | .00010 | .00310 | .00000 | .82860 | .18670 | .18410 | .18420 |
| .265 | .000 | .00220 | 1.00460 | 1.00140 | .00040 | .00360 | .00000 | .82860 | .18670 | .18370 | .18420 |
| | GRADIENT | .00000 | .00000 | .00000 | .00000 | .00000 | .00000 | .00000 | .00000 | .00000 | .00000 |

OA236 (NAAL 759) CONFIGURATION 6 DATA SELECT 1 (SFM106) ( 28 JUN 79 )

REFERENCE DATA

SREF = .0000 SQ.FT. XMRP = .0000 IN. XT
LREF = .0000 INCHES YMRP = .0000 IN. YT
BREF = .0000 INCHES ZMRP = .0000 IN. ZT
SCALE = 1.0000

PARAMETRIC DATA

ALPHA = .000 BETA = .000

RUN NO. 1061/ 0 RN/L = 1.29 GRADIENT INTERVAL = -5.00/ 5.00

| MACH | ALPHA | TBTO/Q | QBI/QO | QB/QO | SBPO/Q | SBSBIQ | TBTBIQ | 2712/Q | 12SBIQ | 12SB/Q | P12POQ |
|---|---|---|---|---|---|---|---|---|---|---|---|
| .188 | .000 | -.00040 | 1.00220 | .99510 | .00400 | .00440 | -.00270 | .82580 | .17790 | .17400 | .17810 |
| .188 | .000 | -.00070 | 1.00210 | .99400 | .00480 | .00530 | -.00290 | .82580 | .17800 | .17320 | .17810 |
| .188 | .000 | .00020 | 1.00260 | .99680 | .00310 | .00400 | -.00200 | .82580 | .17830 | .17500 | .17810 |
| .188 | .000 | -.00030 | 1.00230 | .99530 | .00400 | .00460 | -.00250 | .82580 | .17810 | .17410 | .17810 |
| | GRADIENT | .00000 | .00000 | .00000 | .00000 | .00000 | .00000 | .00000 | .00000 | .00000 | .00000 |

RUN NO. 1062/ 0 RN/L = 1.57 GRADIENT INTERVAL = -5.00/ 5.00

| MACH | ALPHA | TBTO/Q | QBI/QO | QB/QO | SBPO/Q | SBSBIQ | TBTBIQ | 2712/Q | 12SBIQ | 12SB/Q | P12POQ |
|---|---|---|---|---|---|---|---|---|---|---|---|
| .229 | .000 | -.00010 | 1.00590 | .99790 | .00160 | .00540 | -.00300 | .82890 | .18270 | .17780 | .17950 |
| .229 | .000 | -.00050 | 1.00550 | .99670 | .00250 | .00640 | -.00260 | .82890 | .18290 | .17690 | .17950 |
| .229 | .000 | -.00060 | 1.00570 | .99720 | .00190 | .00580 | -.00310 | .82890 | .18290 | .17750 | .17950 |
| .229 | .000 | -.00040 | 1.00570 | .99730 | .00200 | .00580 | -.00290 | .82890 | .18280 | .17740 | .17950 |
| | GRADIENT | .00000 | .00000 | .00000 | .00000 | .00000 | .00000 | .00000 | .00000 | .00000 | .00000 |

RUN NO. 1063/ 0 RN/L = 1.70 GRADIENT INTERVAL = -5.00/ 5.00

| MACH | ALPHA | TBTO/Q | QBI/QO | QB/QO | SBPO/Q | SBSBIQ | TBTBIQ | 2712/Q | 12SBIQ | 12SB/Q | P12POQ |
|---|---|---|---|---|---|---|---|---|---|---|---|
| .248 | .000 | .00020 | 1.00490 | .99930 | .00060 | .00320 | -.00250 | .82850 | .18430 | .18140 | .18210 |
| .248 | .000 | .00010 | 1.00420 | .99740 | .00250 | .00520 | -.00190 | .82850 | .18430 | .17960 | .18210 |
| .248 | .000 | -.00040 | 1.00410 | .99680 | .00240 | .00500 | -.00250 | .82850 | .18410 | .17960 | .18210 |
| .248 | .000 | .00000 | 1.00440 | .99780 | .00180 | .00450 | -.00230 | .82850 | .18430 | .18020 | .18210 |
| | GRADIENT | .00000 | .00000 | .00000 | .00000 | .00000 | .00000 | .00000 | .00000 | .00000 | .00000 |

RUN NO. 1064/ 0 RN/L = 1.81 GRADIENT INTERVAL = -5.00/ 5.00

| MACH | ALPHA | TBTO/Q | QBI/QO | QB/QO | SBPO/Q | SBSBIQ | TBTBIQ | 2712/Q | 12SBIQ | 12SB/Q | P12POQ |
|---|---|---|---|---|---|---|---|---|---|---|---|
| .265 | .000 | .00010 | 1.00440 | .99650 | .00330 | .00640 | -.00180 | .82860 | .18680 | .18080 | .18410 |
| .264 | .000 | .00020 | 1.00400 | .99760 | .00240 | .00460 | -.00200 | .82860 | .18590 | .18170 | .18410 |
| .265 | .000 | .00010 | 1.00480 | .99680 | .00310 | .00570 | -.00260 | .82860 | .18630 | .18100 | .18420 |
| .264 | .000 | .00010 | 1.00440 | .99700 | .00290 | .00550 | -.00220 | .82860 | .18640 | .18120 | .18410 |
| | GRADIENT | .00000 | .00000 | .00000 | .00000 | .00000 | .00000 | .00000 | .00000 | .00000 | .00000 |

OA236 (NAAL 759) CONFIGURATION 7 DATA SELECT 1 (SFM107) ( 28 JUN 79 )

REFERENCE DATA

SREF = .0000 SQ.FT. XMRP = .0000 IN. XT
LREF = .0000 INCHES YMRP = .0000 IN. YT
BREF = .0000 INCHES ZMRP = .0000 IN. ZT
SCALE = 1.0000

PARAMETRIC DATA

ALPHA = .000 BETA = .000

RUN NO. 1071/ 0 RN/L = 1.28 GRADIENT INTERVAL = -5.00/ 5.00

| MACH | ALPHA | TBTO/Q | QBI/QO | QB/QO | SBPO/Q | SBSBIQ | TBTBIQ | 2712/Q | 12SBIQ | 12SB/Q | P12POQ |
|---|---|---|---|---|---|---|---|---|---|---|---|
| .188 | .000 | -.00120 | 1.00280 | .99630 | .00200 | .00310 | -.00380 | .82590 | .17850 | .17600 | .17810 |
| .188 | .000 | .00060 | 1.00270 | 1.00080 | -.00060 | .00040 | -.00180 | .82590 | .17850 | .17880 | .17810 |
| .188 | .000 | .00000 | 1.00230 | .99900 | .00060 | .00130 | -.00220 | .82590 | .17810 | .17750 | .17810 |
| .188 | .000 | -.00020 | 1.00260 | .99870 | .00060 | .00160 | -.00260 | .82590 | .17840 | .17740 | .17810 |
| | GRADIENT | .00000 | .00000 | .00000 | .00000 | .00000 | .00000 | .00000 | .00000 | .00000 | .00000 |

RUN NO. 1072/ 0 RN/L = 1.56 GRADIENT INTERVAL = -5.00/ 5.00

| MACH | ALPHA | TBTO/Q | QBI/QO | QB/QO | SBPO/Q | SBSBIQ | TBTBIQ | 2712/Q | 12SBIQ | 12SB/Q | P12POQ |
|---|---|---|---|---|---|---|---|---|---|---|---|
| .230 | .000 | -.00130 | 1.00560 | .99750 | .00080 | .00470 | -.00360 | .82890 | .18280 | .17870 | .17950 |
| .229 | .000 | -.00090 | 1.00520 | .99930 | -.00040 | .00330 | -.00300 | .82890 | .18270 | .18000 | .17950 |
| .229 | .000 | -.00060 | 1.00510 | .99900 | .00010 | .00390 | -.00260 | .82890 | .18270 | .17930 | .17950 |
| .229 | .000 | -.00090 | 1.00530 | .99860 | .00010 | .00400 | -.00310 | .82890 | .18270 | .17930 | .17950 |
| | GRADIENT | .00000 | .00000 | .00000 | .00000 | .00000 | .00000 | .00000 | .00000 | .00000 | .00000 |

RUN NO. 1073/ 0 RN/L = 1.68 GRADIENT INTERVAL = -5.00/ 5.00

| MACH | ALPHA | TBTO/Q | QBI/QO | QB/QO | SBPO/Q | SBSBIQ | TBTBIQ | 2712/Q | 12SBIQ | 12SB/Q | P12POQ |
|---|---|---|---|---|---|---|---|---|---|---|---|
| .248 | .000 | -.00020 | 1.00440 | .99910 | .00030 | .00360 | -.00210 | .82850 | .18480 | .18170 | .18210 |
| .248 | .000 | .00000 | 1.00450 | .99870 | .00100 | .00410 | -.00200 | .82850 | .18470 | .18110 | .18210 |
| .248 | .000 | -.00010 | 1.00420 | .99860 | .00090 | .00390 | -.00210 | .82850 | .18440 | .18120 | .18210 |
| .248 | .000 | -.00010 | 1.00440 | .99880 | .00070 | .00380 | -.00210 | .82850 | .18460 | .18130 | .18210 |
| | GRADIENT | .00000 | .00000 | .00000 | .00000 | .00000 | .00000 | .00000 | .00000 | .00000 | .00000 |

RUN NO. 1074/ 0 RN/L = 1.79 GRADIENT INTERVAL = -5.00/ 5.00

| MACH | ALPHA | TBTO/Q | QBI/QO | QB/QO | SBPO/Q | SBSBIQ | TBTBIQ | 2712/Q | 12SBIQ | 12SB/Q | P12POQ |
|---|---|---|---|---|---|---|---|---|---|---|---|
| .265 | .000 | -.00050 | 1.00430 | .99720 | .00190 | .00440 | -.00290 | .82860 | .18620 | .18220 | .18410 |
| .265 | .000 | -.00020 | 1.00470 | .99750 | .00200 | .00500 | -.00250 | .82860 | .18670 | .18210 | .18420 |
| .264 | .000 | .00000 | 1.00410 | .99820 | .00140 | .00430 | -.00210 | .82860 | .18640 | .18270 | .18410 |
| .265 | .000 | -.00020 | 1.00440 | .99770 | .00180 | .00460 | -.00250 | .82860 | .18640 | .18230 | .18410 |
| | GRADIENT | .00000 | .00000 | .00000 | .00000 | .00000 | .00000 | .00000 | .00000 | .00000 | .00000 |

OA236 (NAAL 759) CONFIGURATION 8 DATA SELECT 1 (SFM108) ( 28 JUN 79 )

REFERENCE DATA

SREF = .0000 SQ.FT. XMRP = .0000 IN. XT
LREF = .0000 INCHES YMRP = .0000 IN. YT
BREF = .0000 INCHES ZMRP = .0000 IN. ZT
SCALE = 1.0000

PARAMETRIC DATA

ALPHA = .000 BETA = .000

RUN NO. 1081/ 0 RN/L = 1.28 GRADIENT INTERVAL = -5.00/ 5.00

| MACH | ALPHA | TBTO/Q | QBI/QO | QB/QO | SBPO/Q | SBSBIQ | TBTBIQ | 2712/Q | 12SBIQ | 12SB/Q | P12POQ |
|---|---|---|---|---|---|---|---|---|---|---|---|
| .188 | .000 | .00210 | 1.00320 | 1.00200 | -.00030 | .00130 | .00000 | .82580 | .17930 | .17850 | .17810 |
| .188 | .000 | .00220 | 1.00320 | 1.00020 | .00150 | .00310 | .00000 | .82580 | .17910 | .17650 | .17810 |
| .188 | .000 | .00240 | 1.00330 | 1.00090 | .00110 | .00260 | .00010 | .82580 | .17910 | .17700 | .17810 |
| .188 | .000 | .00220 | 1.00320 | 1.00100 | .00070 | .00230 | .00000 | .82580 | .17920 | .17730 | .17810 |
| | GRADIENT | .00000 | .00000 | .00000 | .00000 | .00000 | .00000 | .00000 | .00000 | .00000 | .00000 |

RUN NO. 1082/ 0 RN/L = 1.56 GRADIENT INTERVAL = -5.00/ 5.00

| MACH | ALPHA | TBTO/Q | QBI/QO | QB/QO | SBPO/Q | SBSBIQ | TBTBIQ | 2712/Q | 12SBIQ | 12SB/Q | P12POQ |
|---|---|---|---|---|---|---|---|---|---|---|---|
| .230 | .000 | .00260 | 1.00690 | 1.00420 | -.00180 | .00290 | .00000 | .82890 | .18390 | .18140 | .17950 |
| .230 | .000 | .00200 | 1.00620 | 1.00450 | -.00270 | .00210 | .00010 | .82890 | .18400 | .18220 | .17950 |
| .229 | .000 | .00150 | 1.00540 | 1.00500 | -.00370 | .00050 | -.00010 | .82890 | .18350 | .18330 | .17950 |
| .230 | .000 | .00200 | 1.00620 | 1.00450 | -.00270 | .00180 | .00000 | .82890 | .18380 | .18230 | .17950 |
| | GRADIENT | .00000 | .00000 | .00000 | .00000 | .00000 | .00000 | .00000 | .00000 | .00000 | .00000 |

RUN NO. 1083/ 0 RN/L = 1.68 GRADIENT INTERVAL = -5.00/ 5.00

| MACH | ALPHA | TBTO/Q | QBI/QO | QB/QO | SBPO/Q | SBSBIQ | TBTBIQ | 2712/Q | 12SBIQ | 12SB/Q | P12POQ |
|---|---|---|---|---|---|---|---|---|---|---|---|
| .248 | .000 | .00170 | 1.00480 | 1.00320 | -.00170 | .00160 | .00000 | .82850 | .18520 | .18380 | .18210 |
| .248 | .000 | .00240 | 1.00590 | 1.00250 | -.00030 | .00360 | .00010 | .82850 | .18570 | .18240 | .18210 |
| .248 | .000 | .00210 | 1.00550 | 1.00290 | -.00100 | .00280 | .00000 | .82850 | .18570 | .18320 | .18210 |
| .248 | .000 | .00210 | 1.00540 | 1.00280 | -.00100 | .00270 | .00000 | .82850 | .18550 | .18310 | .18210 |
| | GRADIENT | .00000 | .00000 | .00000 | .00000 | .00000 | .00000 | .00000 | .00000 | .00000 | .00000 |

RUN NO. 1084/ 0 RN/L = 1.79 GRADIENT INTERVAL = -5.00/ 5.00

| MACH | ALPHA | TBTO/Q | QBI/QO | QB/QO | SBPO/Q | SBSBIQ | TBTBIQ | 2712/Q | 12SBIQ | 12SB/Q | P12POQ |
|---|---|---|---|---|---|---|---|---|---|---|---|
| .265 | .000 | .00210 | 1.00530 | 1.00330 | -.00140 | .00210 | .00000 | .82860 | .18740 | .18560 | .18410 |
| .265 | .000 | .00230 | 1.00530 | 1.00280 | -.00080 | .00290 | .00010 | .82860 | .18770 | .18500 | .18420 |
| .265 | .000 | .00220 | 1.00550 | 1.00280 | -.00090 | .00280 | .00000 | .82860 | .18770 | .18510 | .18420 |
| .265 | .000 | .00220 | 1.00540 | 1.00300 | -.00110 | .00260 | .00000 | .82860 | .18760 | .18530 | .18420 |
| | GRADIENT | .00000 | .00000 | .00000 | .00000 | .00000 | .00000 | .00000 | .00000 | .00000 | .00000 |

OA236 (NAAL 759) CONFIGURATION 9 DATA SELECT 1 (SFM109) ( 28 JUN 79 )

REFERENCE DATA

SREF = .0000 SQ.FT. XMRP = .0000 IN. XT
LREF = .0000 INCHES YMRP = .0000 IN. YT
BREF = .0000 INCHES ZMRP = .0000 IN. ZT
SCALE = 1.0000

PARAMETRIC DATA

ALPHA = .000 BETA = .000

RUN NO. 1091/ 0 RN/L = 1.27 GRADIENT INTERVAL = -5.00/ 5.00

| MACH | ALPHA | TBTO/Q | QBI/QO | QB/QO | SBPO/Q | SBSBIQ | TBTBIQ | 2712/Q | 12SBIQ | 12SB/Q | P12POQ |
|---|---|---|---|---|---|---|---|---|---|---|---|
| .188 | .000 | .00170 | 1.00320 | 1.00040 | .00090 | .00270 | .00000 | .82590 | .17930 | .17720 | .17810 |
| .188 | .000 | .00160 | 1.00260 | 1.00090 | .00020 | .00160 | .00000 | .82580 | .17890 | .17780 | .17810 |
| .188 | .000 | .00190 | 1.00300 | 1.00010 | .00140 | .00280 | .00000 | .82590 | .17890 | .17670 | .17810 |
| .188 | .000 | .00180 | 1.00290 | 1.00050 | .00080 | .00230 | .00000 | .82590 | .17900 | .17720 | .17810 |
| | GRADIENT | .00000 | .00000 | .00000 | .00000 | .00000 | .00000 | .00000 | .00000 | .00000 | .00000 |

RUN NO. 1092/ 0 RN/L = 1.55 GRADIENT INTERVAL = -5.00/ 5.00

| MACH | ALPHA | TBTO/Q | QBI/QO | QB/QO | SBPO/Q | SBSBIQ | TBTBIQ | 2712/Q | 12SBIQ | 12SB/Q | P12POQ |
|---|---|---|---|---|---|---|---|---|---|---|---|
| .229 | .000 | .00160 | 1.00580 | 1.00350 | -.00210 | .00230 | .00000 | .82890 | .18370 | .18170 | .17950 |
| .230 | .000 | .00210 | 1.00620 | 1.00360 | -.00170 | .00280 | .00000 | .82890 | .18380 | .18130 | .17950 |
| .229 | .000 | .00160 | 1.00580 | 1.00520 | -.00380 | .00050 | -.00010 | .82890 | .18350 | .18330 | .17950 |
| .230 | .000 | .00180 | 1.00590 | 1.00410 | -.00250 | .00190 | .00000 | .82890 | .18370 | .18210 | .17950 |
| | GRADIENT | .00000 | .00000 | .00000 | .00000 | .00000 | .00000 | .00000 | .00000 | .00000 | .00000 |

RUN NO. 1093/ 0 RN/L = 1.67 GRADIENT INTERVAL = -5.00/ 5.00

| MACH | ALPHA | TBTO/Q | QBI/QO | QB/QO | SBPO/Q | SBSBIQ | TBTBIQ | 2712/Q | 12SBIQ | 12SB/Q | P12POQ |
|---|---|---|---|---|---|---|---|---|---|---|---|
| .248 | .000 | .00240 | 1.00560 | 1.00380 | -.00180 | .00210 | .00010 | .82850 | .18570 | .18390 | .18210 |
| .248 | .000 | .00170 | 1.00460 | 1.00460 | -.00320 | -.00010 | -.00010 | .82850 | .18490 | .18530 | .18210 |
| .248 | .000 | .00230 | 1.00540 | 1.00300 | -.00090 | .00270 | .00000 | .82850 | .18550 | .18300 | .18210 |
| .248 | .000 | .00210 | 1.00520 | 1.00380 | -.00200 | .00150 | .00000 | .82850 | .18540 | .18410 | .18210 |
| | GRADIENT | .00000 | .00000 | .00000 | .00000 | .00000 | .00000 | .00000 | .00000 | .00000 | .00000 |

RUN NO. 1094/ 0 RN/L = 1.78 GRADIENT INTERVAL = -5.00/ 5.00

| MACH | ALPHA | TBTO/Q | QBI/QO | QB/QO | SBPO/Q | SBSBIQ | TBTBIQ | 2712/Q | 12SBIQ | 12SB/Q | P12POQ |
|---|---|---|---|---|---|---|---|---|---|---|---|
| .265 | .000 | .00180 | 1.00480 | 1.00400 | -.00250 | .00080 | .00000 | .82860 | .18730 | .18670 | .18420 |
| .265 | .000 | .00170 | 1.00470 | 1.00310 | -.00170 | .00160 | .00000 | .82860 | .18730 | .18590 | .18420 |
| .265 | .000 | .00170 | 1.00490 | 1.00350 | -.00200 | .00130 | -.00010 | .82860 | .18740 | .18620 | .18420 |
| .265 | .000 | .00170 | 1.00480 | 1.00350 | -.00210 | .00130 | .00000 | .82860 | .18730 | .18630 | .18420 |
| | GRADIENT | .00000 | .00000 | .00000 | .00000 | .00000 | .00000 | .00000 | .00000 | .00000 | .00000 |

OA236 (NAAL 759) CONFIGURATION 10 DATA SELECT 1 (SFM110) ( 28 JUN 79 )

REFERENCE DATA

SREF = .0000 SQ.FT. XMRP = .0000 IN. XT
LREF = .0000 INCHES YMRP = .0000 IN. YT
BREF = .0000 INCHES ZMRP = .0000 IN. ZT
SCALE = 1.0000

PARAMETRIC DATA

ALPHA = .000 BETA = .000

RUN NO. 1101/ 0 RN/L = 1.29 GRADIENT INTERVAL = -5.00/ 5.00

| MACH | ALPHA | TBTO/Q | QBI/QO | QB/QO | SBPO/Q | SBSBIQ | TBTBIQ | 2712/Q | 12SBIQ | 12SB/Q | P12POQ |
|---|---|---|---|---|---|---|---|---|---|---|---|
| .188 | .000 | -.00100 | 1.00350 | 1.00360 | -.00500 | -.00330 | -.00280 | .82580 | .17900 | .18310 | .17810 |
| .188 | .000 | -.00040 | 1.00280 | 1.00490 | -.00580 | -.00420 | -.00180 | .82580 | .17900 | .18400 | .17810 |
| .188 | .000 | -.00010 | 1.00300 | 1.00560 | -.00620 | -.00460 | -.00170 | .82580 | .17890 | .18430 | .17810 |
| .188 | .000 | -.00050 | 1.00310 | 1.00470 | -.00570 | -.00400 | -.00210 | .82580 | .17900 | .18380 | .17810 |
| | GRADIENT | .00000 | .00000 | .00000 | .00000 | .00000 | .00000 | .00000 | .00000 | .00000 | .00000 |

RUN NO. 1102/ 0 RN/L = 1.57 GRADIENT INTERVAL = -5.00/ 5.00

| MACH | ALPHA | TBTO/Q | QBI/QO | QB/QO | SBPO/Q | SBSBIQ | TBTBIQ | 2712/Q | 12SBIQ | 12SB/Q | P12POQ |
|---|---|---|---|---|---|---|---|---|---|---|---|
| .229 | .000 | -.00070 | 1.00590 | 1.00640 | -.00740 | -.00270 | -.00220 | .82890 | .18360 | .18700 | .17950 |
| .229 | .000 | -.00080 | 1.00600 | 1.00630 | -.00750 | -.00280 | -.00240 | .82890 | .18360 | .18710 | .17950 |
| .229 | .000 | -.00060 | 1.00530 | 1.00780 | -.00880 | -.00440 | -.00180 | .82890 | .18310 | .18830 | .17950 |
| .229 | .000 | -.00070 | 1.00580 | 1.00690 | -.00790 | -.00330 | -.00210 | .82890 | .18340 | .18750 | .17950 |
| | GRADIENT | .00000 | .00000 | .00000 | .00000 | .00000 | .00000 | .00000 | .00000 | .00000 | .00000 |

RUN NO. 1103/ 0 RN/L = 1.69 GRADIENT INTERVAL = -5.00/ 5.00

| MACH | ALPHA | TBTO/Q | QBI/QO | QB/QO | SBPO/Q | SBSBIQ | TBTBIQ | 2712/Q | 12SBIQ | 12SB/Q | P12POQ |
|---|---|---|---|---|---|---|---|---|---|---|---|
| .248 | .000 | -.00040 | 1.00490 | 1.00650 | -.00730 | -.00320 | -.00160 | .82850 | .18560 | .18940 | .18200 |
| .247 | .000 | .00020 | 1.00510 | 1.00870 | -.00880 | -.00500 | -.00140 | .82850 | .18530 | .19090 | .18200 |
| .248 | .000 | -.00100 | 1.00500 | 1.00550 | -.00690 | -.00290 | -.00220 | .82850 | .18540 | .18900 | .18200 |
| .248 | .000 | -.00030 | 1.00500 | 1.00690 | -.00770 | -.00370 | -.00170 | .82850 | .18540 | .18980 | .18200 |
| | GRADIENT | .00000 | .00000 | .00000 | .00000 | .00000 | .00000 | .00000 | .00000 | .00000 | .00000 |

RUN NO. 1104/ 0 RN/L = 1.81 GRADIENT INTERVAL = -5.00/ 5.00

| MACH | ALPHA | TBTO/Q | QBI/QO | QB/QO | SBPO/Q | SBSBIQ | TBTBIQ | 2712/Q | 12SBIQ | 12SB/Q | P12POQ |
|---|---|---|---|---|---|---|---|---|---|---|---|
| .264 | .000 | .00000 | 1.00570 | 1.00710 | -.00740 | -.00280 | -.00140 | .82860 | .18810 | .19150 | .18410 |
| .264 | .000 | .00000 | 1.00470 | 1.00720 | -.00760 | -.00410 | -.00160 | .82860 | .18710 | .19180 | .18410 |
| .264 | .000 | -.00040 | 1.00510 | 1.00620 | -.00700 | -.00310 | -.00190 | .82860 | .18740 | .19120 | .18410 |
| .264 | .000 | -.00010 | 1.00520 | 1.00680 | -.00730 | -.00330 | -.00160 | .82860 | .18750 | .19150 | .18410 |
| | GRADIENT | .00000 | .00000 | .00000 | .00000 | .00000 | .00000 | .00000 | .00000 | .00000 | .00000 |

OA236 (NAAL 759) CONFIGURATION 5 DATA SELECT 1 (SFM111) ( 28 JUN 79 )

REFERENCE DATA

SREF = .0000 SQ.FT. XMRP = .0000 IN. XT
LREF = .0000 INCHES YMRP = .0000 IN. YT
BREF = .0000 INCHES ZMRP = .0000 IN. ZT
SCALE = 1.0000

PARAMETRIC DATA

ALPHA = .000 BETA = .000

RUN NO. 1111/ 0 RN/L = 1.29 GRADIENT INTERVAL = -5.00/ 5.00

| MACH | ALPHA | TBTO/Q | QBI/QO | QB/QO | SBPO/Q | SBSBIQ | TBTBIQ | 2712/Q | 12SBIQ | 12SB/Q | P12POQ |
|---|---|---|---|---|---|---|---|---|---|---|---|
| .188 | .000 | .00180 | 1.00320 | 1.00160 | -.00010 | .00170 | .00000 | .82590 | .17920 | .17830 | .17810 |
| .188 | .000 | .00130 | 1.00300 | 1.00280 | -.00180 | .00000 | -.00020 | .82590 | .17910 | .18000 | .17810 |
| .188 | .000 | .00170 | 1.00360 | 1.00040 | .00090 | .00320 | .00000 | .82590 | .17960 | .17710 | .17810 |
| .188 | .000 | .00160 | 1.00330 | 1.00160 | -.00030 | .00160 | -.00010 | .82590 | .17930 | .17850 | .17810 |
| | GRADIENT | .00000 | .00000 | .00000 | .00000 | .00000 | .00000 | .00000 | .00000 | .00000 | .00000 |

RUN NO. 1112/ 0 RN/L = 1.57 GRADIENT INTERVAL = -5.00/ 5.00

| MACH | ALPHA | TBTO/Q | QBI/QO | QB/QO | SBPO/Q | SBSBIQ | TBTBIQ | 2712/Q | 12SBIQ | 12SB/Q | P12POQ |
|---|---|---|---|---|---|---|---|---|---|---|---|
| .229 | .000 | .00170 | 1.00630 | 1.00300 | -.00150 | .00350 | .00000 | .82890 | .18400 | .18100 | .17950 |
| .230 | .000 | .00210 | 1.00660 | 1.00180 | .00000 | .00510 | .00010 | .82890 | .18400 | .17950 | .17950 |
| .230 | .000 | .00250 | 1.00720 | 1.00310 | -.00080 | .00450 | .00010 | .82890 | .18430 | .18040 | .17950 |
| .230 | .000 | .00210 | 1.00670 | 1.00260 | -.00070 | .00440 | .00000 | .82890 | .18410 | .18030 | .17950 |
| | GRADIENT | .00000 | .00000 | .00000 | .00000 | .00000 | .00000 | .00000 | .00000 | .00000 | .00000 |

RUN NO. 1113/ 0 RN/L = 1.69 GRADIENT INTERVAL = -5.00/ 5.00

| MACH | ALPHA | TBTO/Q | QBI/QO | QB/QO | SBPO/Q | SBSBIQ | TBTBIQ | 2712/Q | 12SBIQ | 12SB/Q | P12POQ |
|---|---|---|---|---|---|---|---|---|---|---|---|
| .248 | .000 | .00160 | 1.00550 | 1.00150 | -.00020 | .00380 | -.00010 | .82850 | .18560 | .18230 | .18210 |
| .248 | .000 | .00170 | 1.00570 | 1.00180 | -.00040 | .00400 | -.00010 | .82850 | .18600 | .18250 | .18210 |
| .248 | .000 | .00210 | 1.00590 | 1.00190 | -.00010 | .00410 | .00000 | .82850 | .18570 | .18230 | .18210 |
| .248 | .000 | .00180 | 1.00570 | 1.00180 | -.00020 | .00400 | .00000 | .82850 | .18580 | .18240 | .18210 |
| | GRADIENT | .00000 | .00000 | .00000 | .00000 | .00000 | .00000 | .00000 | .00000 | .00000 | .00000 |

RUN NO. 1114/ 0 RN/L = 1.80 GRADIENT INTERVAL = -5.00/ 5.00

| MACH | ALPHA | TBTO/Q | QBI/QO | QB/QO | SBPO/Q | SBSBIQ | TBTBIQ | 2712/Q | 12SBIQ | 12SB/Q | P12POQ |
|---|---|---|---|---|---|---|---|---|---|---|---|
| .265 | .000 | .00210 | 1.00550 | 1.00200 | -.00010 | .00370 | .00000 | .82860 | .18750 | .18430 | .18410 |
| .265 | .000 | .00160 | 1.00550 | 1.00090 | .00030 | .00480 | -.00010 | .82860 | .18800 | .18380 | .18420 |
| .265 | .000 | .00210 | 1.00590 | 1.00180 | .00000 | .00440 | .00000 | .82860 | .18800 | .18420 | .18420 |
| .265 | .000 | .00200 | 1.00560 | 1.00160 | .00000 | .00430 | .00000 | .82860 | .18760 | .18410 | .18420 |
| | GRADIENT | .00000 | .00000 | .00000 | .00000 | .00000 | .00000 | .00000 | .00000 | .00000 | .00000 |

OA236 (NAAL 759) CONFIGURATION 11 DATA SELECT 1 (SFM112) ( 28 JUN 79 )

REFERENCE DATA

SREF = .0000 SQ.FT. XMRP = .0000 IN. XT
LREF = .0000 INCHES YMRP = .0000 IN. YT
BREF = .0000 INCHES ZMRP = .0000 IN. ZT
SCALE = 1.0000

PARAMETRIC DATA

ALPHA = .000 BETA = .000

RUN NO. 1121/ 0 RN/L = 1.28 GRADIENT INTERVAL = -5.00/ 5.00

| MACH | ALPHA | TBTO/Q | QBI/QO | QB/QO | SBPO/Q | SBSBIQ | TBTBIQ | 2712/Q | 12SBIQ | 12SB/Q | P12POQ |
|---|---|---|---|---|---|---|---|---|---|---|---|
| .188 | .000 | -1.01180 | -.00250 | -.00250 | -.00060 | .00000 | .00000 | .82580 | .17920 | .17880 | .17810 |
| .188 | .000 | -1.01090 | -.00220 | -.00250 | .00010 | .00000 | .00000 | .82580 | .17820 | .17790 | .17810 |
| .188 | .000 | -1.01110 | -.00250 | -.00250 | .00000 | .00000 | .00000 | .82580 | .17840 | .17820 | .17810 |
| .188 | .000 | -1.01120 | -.00240 | -.00250 | -.00020 | .00000 | .00000 | .82580 | .17860 | .17830 | .17810 |
| | GRADIENT | .00000 | .00000 | .00000 | .00000 | .00000 | .00000 | .00000 | .00000 | .00000 | .00000 |

RUN NO. 1122/ 0 RN/L = 1.56 GRADIENT INTERVAL = -5.00/ 5.00

| MACH | ALPHA | TBTO/Q | QBI/QO | QB/QO | SBPO/Q | SBSBIQ | TBTBIQ | 2712/Q | 12SBIQ | 12SB/Q | P12POQ |
|---|---|---|---|---|---|---|---|---|---|---|---|
| .229 | .000 | -1.01490 | -.00040 | -.00060 | -.00120 | .00000 | .00000 | .82890 | .18100 | .18090 | .17950 |
| .229 | .000 | -1.01370 | -.00040 | -.00060 | -.00010 | .00000 | .00000 | .82890 | .17980 | .17960 | .17950 |
| .230 | .000 | -1.01270 | -.00040 | -.00060 | .00090 | .00000 | .00000 | .82890 | .17880 | .17860 | .17950 |
| .229 | .000 | -1.01380 | -.00040 | -.00060 | -.00010 | .00000 | .00000 | .82890 | .17990 | .17970 | .17950 |
| | GRADIENT | .00000 | .00000 | .00000 | .00000 | .00000 | .00000 | .00000 | .00000 | .00000 | .00000 |

RUN NO. 1123/ 0 RN/L = 1.68 GRADIENT INTERVAL = -5.00/ 5.00

| MACH | ALPHA | TBTO/Q | QBI/QO | QB/QO | SBPO/Q | SBSBIQ | TBTBIQ | 2712/Q | 12SBIQ | 12SB/Q | P12POQ |
|---|---|---|---|---|---|---|---|---|---|---|---|
| .248 | .000 | -1.01500 | .00120 | .00120 | -.00110 | .00000 | .00000 | .82850 | .18320 | .18320 | .18210 |
| .248 | .000 | -1.01340 | .00060 | .00060 | .00100 | .00000 | .00000 | .82850 | .18100 | .18100 | .18210 |
| .248 | .000 | -1.01470 | .00070 | .00060 | -.00020 | .00000 | .00000 | .82850 | .18230 | .18230 | .18210 |
| .248 | .000 | -1.01440 | .00090 | .00080 | -.00010 | .00000 | .00000 | .82850 | .18220 | .18220 | .18210 |
| | GRADIENT | .00000 | .00000 | .00000 | .00000 | .00000 | .00000 | .00000 | .00000 | .00000 | .00000 |

RUN NO. 1124/ 0 RN/L = 1.79 GRADIENT INTERVAL = -5.00/ 5.00

| MACH | ALPHA | TBTO/Q | QBI/QO | QB/QO | SBPO/Q | SBSBIQ | TBTBIQ | 2712/Q | 12SBIQ | 12SB/Q | P12POQ |
|---|---|---|---|---|---|---|---|---|---|---|---|
| .265 | .000 | -1.01740 | .00090 | .00080 | -.00090 | .00000 | .00000 | .82860 | .18510 | .18510 | .18410 |
| .264 | .000 | -1.01660 | .00090 | .00080 | -.00010 | .00000 | .00000 | .82860 | .18430 | .18430 | .18410 |
| .265 | .000 | -1.01570 | .00070 | .00070 | .00080 | .00000 | .00000 | .82860 | .18320 | .18320 | .18410 |
| .265 | .000 | -1.01660 | .00080 | .00070 | .00000 | .00000 | .00000 | .82860 | .18420 | .18420 | .18410 |
| | GRADIENT | .00000 | .00000 | .00000 | .00000 | .00000 | .00000 | .00000 | .00000 | .00000 | .00000 |

OA236 (NAAL 759) CONFIGURATION 12 DATA SELECT 1 (SFM113) ( 28 JUN 79 )

REFERENCE DATA

SREF = .0000 SQ.FT. XMRP = .0000 IN. XT
LREF = .0000 INCHES YMRP = .0000 IN. YT
BREF = .0000 INCHES ZMRP = .0000 IN. ZT
SCALE = 1.0000

PARAMETRIC DATA

ALPHA = .000 BETA = .000

RUN NO. 1131/ 0 RN/L = 1.27 GRADIENT INTERVAL = -5.00/ 5.00

| MACH | ALPHA | TBTO/Q | QBI/QO | QB/QO | SBPO/Q | SBSBIQ | TBTBIQ | 2712/Q | 12SBIQ | 12SB/Q | P12POQ |
|---|---|---|---|---|---|---|---|---|---|---|---|
| .188 | .000 | .00100 | 1.00310 | 1.00290 | -.00220 | .00000 | .00000 | .82580 | .18000 | .18040 | .17810 |
| .189 | .000 | .00080 | 1.00050 | 1.00030 | .00010 | .00000 | .00000 | .82580 | .17750 | .17790 | .17810 |
| .189 | .000 | -.00030 | .99810 | .99800 | .00110 | .00000 | .00000 | .82580 | .17650 | .17690 | .17810 |
| .188 | .000 | .00050 | 1.00060 | 1.00040 | -.00030 | .00000 | .00000 | .82580 | .17800 | .17840 | .17810 |
| | GRADIENT | .00000 | .00000 | .00000 | .00000 | .00000 | .00000 | .00000 | .00000 | .00000 | .00000 |

RUN NO. 1132/ 0 RN/L = 1.56 GRADIENT INTERVAL = -5.00/ 5.00

| MACH | ALPHA | TBTO/Q | QBI/QO | QB/QO | SBPO/Q | SBSBIQ | TBTBIQ | 2712/Q | 12SBIQ | 12SB/Q | P12POQ |
|---|---|---|---|---|---|---|---|---|---|---|---|
| .229 | .000 | -.00030 | 1.00010 | 1.00020 | -.00080 | .00000 | .00000 | .82890 | .18010 | .18040 | .17950 |
| .229 | .000 | -.00020 | 1.00030 | 1.00020 | -.00070 | .00000 | .00000 | .82890 | .18000 | .18020 | .17950 |
| .229 | .000 | -.00130 | .99730 | .99740 | .00090 | .00000 | .00000 | .82890 | .17830 | .17850 | .17950 |
| .229 | .000 | -.00060 | .99920 | .99930 | -.00020 | .00000 | .00000 | .82890 | .17950 | .17970 | .17950 |
| | GRADIENT | .00000 | .00000 | .00000 | .00000 | .00000 | .00000 | .00000 | .00000 | .00000 | .00000 |

RUN NO. 1133/ 0 RN/L = 1.68 GRADIENT INTERVAL = -5.00/ 5.00

| MACH | ALPHA | TBTO/Q | QBI/QO | QB/QO | SBPO/Q | SBSBIQ | TBTBIQ | 2712/Q | 12SBIQ | 12SB/Q | P12POQ |
|---|---|---|---|---|---|---|---|---|---|---|---|
| .248 | .000 | -.00130 | .99730 | .99730 | .00100 | .00000 | .00000 | .82850 | .18080 | .18100 | .18210 |
| .248 | .000 | .00000 | .99820 | .99820 | .00140 | .00000 | .00000 | .82850 | .18030 | .18060 | .18200 |
| .248 | .000 | .00000 | .99890 | .99890 | .00080 | .00000 | .00000 | .82850 | .18100 | .18120 | .18200 |
| .248 | .000 | -.00040 | .99810 | .99810 | .00100 | .00000 | .00000 | .82850 | .18070 | .18100 | .18210 |
| | GRADIENT | .00000 | .00000 | .00000 | .00000 | .00000 | .00000 | .00000 | .00000 | .00000 | .00000 |

RUN NO. 1134/ 0 RN/L = 1.78 GRADIENT INTERVAL = -5.00/ 5.00

| MACH | ALPHA | TBTO/Q | QBI/QO | QB/QO | SBPO/Q | SBSBIQ | TBTBIQ | 2712/Q | 12SBIQ | 12SB/Q | P12POQ |
|---|---|---|---|---|---|---|---|---|---|---|---|
| .265 | .000 | .00150 | .99860 | .99870 | .00250 | .00000 | .00000 | .82860 | .18140 | .18160 | .18410 |
| .265 | .000 | -.00020 | .99820 | .99830 | .00120 | .00000 | .00000 | .82860 | .18270 | .18290 | .18410 |
| .265 | .000 | .00010 | .99670 | .99680 | .00310 | .00000 | .00000 | .82860 | .18080 | .18100 | .18420 |
| .265 | .000 | .00040 | .99780 | .99790 | .00220 | .00000 | .00000 | .82860 | .18160 | .18190 | .18410 |
| | GRADIENT | .00000 | .00000 | .00000 | .00000 | .00000 | .00000 | .00000 | .00000 | .00000 | .00000 |

OA236 (NAAL 759) CONFIGURATION 13 DATA SELECT 1 (SFM114) ( 28 JUN 79 )

REFERENCE DATA

SREF = .0000 SQ.FT. XMRP = .0000 IN. XT
LREF = .0000 INCHES YMRP = .0000 IN. YT
BREF = .0000 INCHES ZMRP = .0000 IN. ZT
SCALE = 1.0000

PARAMETRIC DATA

ALPHA = .000 BETA = .000

RUN NO. 1141/ 0 RN/L = 1.27 GRADIENT INTERVAL = -5.00/ 5.00

| MACH | ALPHA | TBTO/Q | QBI/QO | QB/QO | SBPO/Q | SBSBIQ | TBTBIQ | 2712/Q | 12SBIQ | 12SB/Q | P12POQ |
|---|---|---|---|---|---|---|---|---|---|---|---|
| .189 | .000 | -.00060 | .99480 | .99460 | .00440 | .00000 | .00000 | .82590 | .17390 | .17370 | .17810 |
| .188 | .000 | .00030 | .99560 | .99550 | .00440 | .00000 | .00000 | .82580 | .17390 | .17360 | .17810 |
| .188 | .000 | .00000 | .99490 | .99480 | .00470 | .00000 | .00000 | .82580 | .17360 | .17330 | .17810 |
| .188 | .000 | -.00010 | .99510 | .99490 | .00450 | .00000 | .00000 | .82580 | .17380 | .17350 | .17810 |
| | GRADIENT | .00000 | .00000 | .00000 | .00000 | .00000 | .00000 | .00000 | .00000 | .00000 | .00000 |

RUN NO. 1142/ 0 RN/L = 1.55 GRADIENT INTERVAL = -5.00/ 5.00

| MACH | ALPHA | TBTO/Q | QBI/QO | QB/QO | SBPO/Q | SBSBIQ | TBTBIQ | 2712/Q | 12SBIQ | 12SB/Q | P12POQ |
|---|---|---|---|---|---|---|---|---|---|---|---|
| .230 | .000 | -.00140 | .99330 | .99340 | .00490 | .00000 | .00000 | .82890 | .17470 | .17460 | .17950 |
| .230 | .000 | -.00170 | .99170 | .99200 | .00600 | .00000 | .00010 | .82890 | .17350 | .17350 | .17960 |
| .230 | .000 | -.00010 | .99630 | .99620 | .00330 | .00000 | .00000 | .82890 | .17630 | .17610 | .17950 |
| .230 | .000 | -.00110 | .99370 | .99390 | .00470 | .00000 | .00000 | .82890 | .17480 | .17470 | .17950 |
| | GRADIENT | .00000 | .00000 | .00000 | .00000 | .00000 | .00000 | .00000 | .00000 | .00000 | .00000 |

RUN NO. 1143/ 0 RN/L = 1.68 GRADIENT INTERVAL = -5.00/ 5.00

| MACH | ALPHA | TBTO/Q | QBI/QO | QB/QO | SBPO/Q | SBSBIQ | TBTBIQ | 2712/Q | 12SBIQ | 12SB/Q | P12POQ |
|---|---|---|---|---|---|---|---|---|---|---|---|
| .248 | .000 | -.00100 | .99230 | .99240 | .00630 | .00000 | .00000 | .82850 | .17570 | .17570 | .18210 |
| .248 | .000 | -.00040 | .99280 | .99290 | .00640 | .00000 | .00000 | .82850 | .17570 | .17570 | .18210 |
| .248 | .000 | -.00130 | .99140 | .99170 | .00680 | .00000 | .00010 | .82850 | .17530 | .17530 | .18210 |
| .248 | .000 | -.00090 | .99220 | .99230 | .00650 | .00000 | .00000 | .82850 | .17560 | .17560 | .18210 |
| | GRADIENT | .00000 | .00000 | .00000 | .00000 | .00000 | .00000 | .00000 | .00000 | .00000 | .00000 |

RUN NO. 1144/ 0 RN/L = 1.79 GRADIENT INTERVAL = -5.00/ 5.00

| MACH | ALPHA | TBTO/Q | QBI/QO | QB/QO | SBPO/Q | SBSBIQ | TBTBIQ | 2712/Q | 12SBIQ | 12SB/Q | P12POQ |
|---|---|---|---|---|---|---|---|---|---|---|---|
| .265 | .000 | -.00020 | .99230 | .99240 | .00720 | .00000 | .00000 | .82860 | .17700 | .17700 | .18420 |
| .265 | .000 | -.00070 | .99130 | .99160 | .00740 | .00000 | .00010 | .82860 | .17670 | .17670 | .18420 |
| .265 | .000 | -.00070 | .99170 | .99180 | .00720 | .00000 | .00000 | .82860 | .17690 | .17700 | .18420 |
| .265 | .000 | -.00050 | .99180 | .99190 | .00720 | .00000 | .00000 | .82860 | .17690 | .17690 | .18420 |
| | GRADIENT | .00000 | .00000 | .00000 | .00000 | .00000 | .00000 | .00000 | .00000 | .00000 | .00000 |

OA236 (NAAL 759) CONFIGURATION 1 DATA SELECT 1 (SFM115) ( 28 JUN 79 )

REFERENCE DATA

SREF = .0000 SQ.FT. XMRP = .0000 IN. XT
LREF = .0000 INCHES YMRP = .0000 IN. YT
BREF = .0000 INCHES ZMRP = .0000 IN. ZT
SCALE = 1.0000

PARAMETRIC DATA

ALPHA = .000 BETA = .000

RUN NO. 1151/ 0 RN/L = 1.27 GRADIENT INTERVAL = -5.00/ 5.00

| MACH | ALPHA | TBTO/Q | QBI/QO | QB/QO | SBPO/Q | SBSBIQ | TBTBIQ | 2712/Q | 12SBIQ | 12SB/Q | P12POQ |
|---|---|---|---|---|---|---|---|---|---|---|---|
| .188 | .000 | -.00040 | .99920 | .99900 | .00010 | .00000 | -.00010 | .82580 | .17780 | .17790 | .17810 |
| .188 | .000 | -.00060 | .99900 | .99880 | .00000 | .00000 | -.00010 | .82580 | .17790 | .17800 | .17810 |
| .188 | .000 | -.00100 | .99900 | .99860 | -.00010 | .00000 | -.00020 | .82580 | .17800 | .17820 | .17810 |
| .188 | .000 | -.00070 | .99910 | .99880 | .00000 | .00000 | -.00010 | .82580 | .17790 | .17810 | .17810 |
| | GRADIENT | .00000 | .00000 | .00000 | .00000 | .00000 | .00000 | .00000 | .00000 | .00000 | .00000 |

RUN NO. 1152/ 0 RN/L = 1.55 GRADIENT INTERVAL = -5.00/ 5.00

| MACH | ALPHA | TBTO/Q | QBI/QO | QB/QO | SBPO/Q | SBSBIQ | TBTBIQ | 2712/Q | 12SBIQ | 12SB/Q | P12POQ |
|---|---|---|---|---|---|---|---|---|---|---|---|
| .230 | .000 | .00030 | 1.00280 | 1.00310 | -.00300 | .00000 | .00010 | .82890 | .18260 | .18260 | .17950 |
| .230 | .000 | -.00020 | 1.00220 | 1.00220 | -.00270 | .00000 | .00000 | .82890 | .18230 | .18220 | .17950 |
| .230 | .000 | .00050 | 1.00250 | 1.00280 | -.00260 | .00000 | .00010 | .82890 | .18220 | .18210 | .17950 |
| .230 | .000 | .00020 | 1.00250 | 1.00270 | -.00270 | .00000 | .00010 | .82890 | .18240 | .18230 | .17950 |
| | GRADIENT | .00000 | .00000 | .00000 | .00000 | .00000 | .00000 | .00000 | .00000 | .00000 | .00000 |

RUN NO. 1153/ 0 RN/L = 1.67 GRADIENT INTERVAL = -5.00/ 5.00

| MACH | ALPHA | TBTO/Q | QBI/QO | QB/QO | SBPO/Q | SBSBIQ | TBTBIQ | 2712/Q | 12SBIQ | 12SB/Q | P12POQ |
|---|---|---|---|---|---|---|---|---|---|---|---|
| .248 | .000 | -.00010 | 1.00160 | 1.00160 | -.00200 | .00000 | .00000 | .82850 | .18420 | .18420 | .18210 |
| .248 | .000 | .00000 | 1.00140 | 1.00140 | -.00170 | .00000 | .00000 | .62850 | .18390 | .18380 | .18210 |
| .248 | .000 | .00040 | 1.00190 | 1.00210 | -.00200 | .00000 | .00000 | .82850 | .18420 | .18410 | .18210 |
| .248 | .000 | .00010 | 1.00160 | 1.00170 | -.00190 | .00000 | .00000 | .82850 | .18410 | .18400 | .18210 |
| | GRADIENT | .00000 | .00000 | .00000 | .00000 | .00000 | .00000 | .00000 | .00000 | .00000 | .00000 |

RUN NO. 1154/ 0 RN/L = 1.78 GRADIENT INTERVAL = -5.00/ 5.00

| MACH | ALPHA | TBTO/Q | QBI/QO | QB/QO | SBPO/Q | SBSBIQ | TBTBIQ | 2712/Q | 12SBIQ | 12SB/Q | P12POQ |
|---|---|---|---|---|---|---|---|---|---|---|---|
| .265 | .000 | .00030 | 1.00170 | 1.00160 | -.00150 | .00010 | .00000 | .82860 | .18580 | .18570 | .18420 |
| .265 | .000 | .00000 | 1.00150 | 1.00160 | -.00190 | .00000 | .00000 | .82860 | .18610 | .18610 | .18410 |
| .265 | .000 | .00000 | 1.00140 | 1.00140 | -.00160 | .00000 | .00000 | .82860 | .18590 | .18580 | .18410 |
| .265 | .000 | .00010 | 1.00150 | 1.00150 | -.00170 | .00000 | .00000 | .82860 | .18590 | .18590 | .18420 |
| | GRADIENT | .00000 | .00000 | .00000 | .00000 | .00000 | .00000 | .00000 | .00000 | .00000 | .00000 |

OA236 (NAAL 759) CONFIGURATION 3 DATA SELECT 1 (SFM116) ( 28 JUN 79 )

REFERENCE DATA

SREF = .0000 SQ.FT. XMRP = .0000 IN. XT
LREF = .0000 INCHES YMRP = .0000 IN. YT
BREF = .0000 INCHES ZMRP = .0000 IN. ZT
SCALE = 1.0000

PARAMETRIC DATA

ALPHA = .000 BETA = .000

RUN NO. 1161/ 0 RN/L = 1.26 GRADIENT INTERVAL = -5.00/ 5.00

| MACH | ALPHA | TBTO/Q | QBI/QO | QB/QO | SBPO/Q | SBSBIQ | TBTBIQ | 2712/Q | 12SBIQ | 12SB/Q | P12POQ |
|---|---|---|---|---|---|---|---|---|---|---|---|
| .188 | .000 | -.00050 | 1.01160 | 1.01160 | -.01270 | .00000 | .00010 | .82580 | .19100 | .19080 | .17810 |
| .188 | .000 | -.00040 | 1.01190 | 1.01190 | -.01290 | .00000 | .00000 | .82580 | .19120 | .19100 | .17810 |
| .188 | .000 | -.00060 | 1.01180 | 1.01170 | -.01290 | .00000 | .00000 | .82580 | .19100 | .19100 | .17810 |
| .188 | .000 | -.00050 | 1.01180 | 1.01180 | -.01280 | .00000 | .00000 | .82580 | .19110 | .19100 | .17810 |
| | GRADIENT | .00000 | .00000 | .00000 | .00000 | .00000 | .00000 | .00000 | .00000 | .00000 | .00000 |

RUN NO. 1162/ 0 RN/L = 1.54 GRADIENT INTERVAL = -5.00/ 5.00

| MACH | ALPHA | TBTO/Q | QBI/QO | QB/QO | SBPO/Q | SBSBIQ | TBTBIQ | 2712/Q | 12SBIQ | 12SB/Q | P12POQ |
|---|---|---|---|---|---|---|---|---|---|---|---|
| .229 | .000 | .00000 | 1.01500 | 1.01520 | -.01560 | .00000 | .00000 | .82890 | .19530 | .19520 | .17950 |
| .230 | .000 | -.00040 | 1.01460 | 1.01480 | -.01570 | .00000 | .00010 | .82890 | .19530 | .19530 | .17950 |
| .230 | .000 | -.00030 | 1.01470 | 1.01480 | -.01560 | .00000 | .00000 | .82890 | .19530 | .19520 | .17950 |
| .230 | .000 | -.00020 | 1.01480 | 1.01490 | -.01560 | .00000 | .00000 | .82890 | .19530 | .19520 | .17950 |
| | GRADIENT | .00000 | .00000 | .00000 | .00000 | .00000 | .00000 | .00000 | .00000 | .00000 | .00000 |

RUN NO. 1163/ 0 RN/L = 1.66 GRADIENT INTERVAL = -5.00/ 5.00

| MACH | ALPHA | TBTO/Q | QBI/QO | QB/QO | SBPO/Q | SBSBIQ | TBTBIQ | 2712/Q | 12SBIQ | 12SB/Q | P12POQ |
|---|---|---|---|---|---|---|---|---|---|---|---|
| .248 | .000 | .00010 | 1.01370 | 1.01370 | -.01410 | .00010 | .00000 | .82850 | .19630 | .19620 | .18210 |
| .248 | .000 | -.00030 | 1.01340 | 1.01360 | -.01450 | .00000 | .00000 | .82850 | .19650 | .19660 | .18210 |
| .248 | .000 | -.00040 | 1.01330 | 1.01340 | -.01440 | .00000 | .00000 | .82850 | .19650 | .19650 | .18210 |
| .248 | .000 | -.00020 | 1.01350 | 1.01360 | -.01430 | .00000 | .00000 | .82850 | .19640 | .19640 | .18210 |
| | GRADIENT | .00000 | .00000 | .00000 | .00000 | .00000 | .00000 | .00000 | .00000 | .00000 | .00000 |

RUN NO. 1164/ 0 RN/L = 1.77 GRADIENT INTERVAL = -5.00/ 5.00

| MACH | ALPHA | TBTO/Q | QBI/QO | QB/QO | SBPO/Q | SBSBIQ | TBTBIQ | 2712/Q | 12SBIQ | 12SB/Q | P12POQ |
|---|---|---|---|---|---|---|---|---|---|---|---|
| .265 | .000 | -.00040 | 1.01290 | 1.01310 | -.01400 | -.00010 | .00000 | .82860 | .19810 | .19830 | .18420 |
| .265 | .000 | -.00040 | 1.01250 | 1.01250 | -.01350 | .00010 | .00000 | .82860 | .19780 | .19760 | .18410 |
| .265 | .000 | .00000 | 1.01300 | 1.01310 | -.01370 | .00010 | .00000 | .82860 | .19800 | .19790 | .18420 |
| .265 | .000 | -.00030 | 1.01280 | 1.01290 | -.01370 | .00000 | .00000 | .82860 | .19800 | .19790 | .18420 |
| | GRADIENT | .00000 | .00000 | .00000 | .00000 | .00000 | .00000 | .00000 | .00000 | .00000 | .00000 |

OA236 (NAAL 759) CONFIGURATION 14 DATA SELECT 1 (SFM117) ( 28 JUN 79 )

REFERENCE DATA

SREF = .0000 SQ.FT. XMRP = .0000 IN. XT
LREF = .0000 INCHES YMRP = .0000 IN. YT
BREF = .0000 INCHES ZMRP = .0000 IN. ZT
SCALE = 1.0000

PARAMETRIC DATA

ALPHA = .000 BETA = .000

RUN NO. 1171/ 0 RN/L = 1.28 GRADIENT INTERVAL = -5.00/ 5.00

| MACH | ALPHA | TBTO/Q | QBI/QO | QB/QO | SBPO/Q | SBSBIQ | TBTBIQ | 2712/Q | 12SBIQ | 12SB/Q | P12POQ |
|---|---|---|---|---|---|---|---|---|---|---|---|
| .188 | .000 | -.00010 | 1.01310 | 1.01290 | -.01350 | .00010 | .00000 | .82580 | .19120 | .19160 | .17810 |
| .188 | .000 | -.00010 | 1.01270 | 1.01300 | -.01360 | .00000 | .00000 | .82580 | .19100 | .19170 | .17810 |
| .188 | .000 | .00010 | 1.01300 | 1.01310 | -.01340 | .00000 | .00000 | .82580 | .19110 | .19160 | .17810 |
| .188 | .000 | .00000 | 1.01290 | 1.01300 | -.01350 | .00000 | .00000 | .82580 | .19110 | .19160 | .17810 |
| | GRADIENT | .00000 | .00000 | .00000 | .00000 | .00000 | .00000 | .00000 | .00000 | .00000 | .00000 |

RUN NO. 1172/ 0 RN/L = 1.57 GRADIENT INTERVAL = -5.00/ 5.00

| MACH | ALPHA | TBTO/Q | QBI/QO | QB/QO | SBPO/Q | SBSBIQ | TBTBIQ | 2712/Q | 12SBIQ | 12SB/Q | P12POQ |
|---|---|---|---|---|---|---|---|---|---|---|---|
| .230 | .000 | -.00010 | 1.01410 | 1.01390 | -.01440 | .00010 | .00000 | .82890 | .19380 | .19400 | .17950 |
| .230 | .000 | .00000 | 1.01400 | 1.01430 | -.01480 | .00000 | .00010 | .82890 | .19390 | .19430 | .17950 |
| .230 | .000 | -.00020 | 1.01400 | 1.01400 | -.01470 | .00000 | .00000 | .82890 | .19400 | .19430 | .17950 |
| .230 | .000 | -.00010 | 1.01400 | 1.01410 | -.01460 | .00000 | .00000 | .82890 | .19390 | .19420 | .17950 |
| | GRADIENT | .00000 | .00000 | .00000 | .00000 | .00000 | .00000 | .00000 | .00000 | .00000 | .00000 |

RUN NO. 1173/ 0 RN/L = 1.69 GRADIENT INTERVAL = -5.00/ 5.00

| MACH | ALPHA | TBTO/Q | QBI/QO | QB/QO | SBPO/Q | SBSBIQ | TBTBIQ | 2712/Q | 12SBIQ | 12SB/Q | P12POQ |
|---|---|---|---|---|---|---|---|---|---|---|---|
| .248 | .000 | .00000 | 1.01200 | 1.01200 | -.01250 | .00000 | -.00010 | .82850 | .19430 | .19460 | .18210 |
| .248 | .000 | -.00040 | 1.01200 | 1.01210 | -.01300 | .00000 | -.00010 | .82850 | .19480 | .19520 | .18210 |
| .248 | .000 | -.00010 | 1.01200 | 1.01210 | -.01270 | .00000 | .00000 | .82850 | .19450 | .19480 | .18210 |
| .248 | .000 | -.00020 | 1.01200 | 1.01210 | -.01280 | .00000 | .00000 | .82850 | .19450 | .19490 | .18210 |
| | GRADIENT | .00000 | .00000 | .00000 | .00000 | .00000 | .00000 | .00000 | .00000 | .00000 | .00000 |

RUN NO. 1174/ 0 RN/L = 1.80 GRADIENT INTERVAL = -5.00/ 5.00

| MACH | ALPHA | TBTO/Q | QBI/QO | QB/QO | SBPO/Q | SBSBIQ | TBTBIQ | 2712/Q | 12SBIQ | 12SB/Q | P12POQ |
|---|---|---|---|---|---|---|---|---|---|---|---|
| .265 | .000 | .00000 | 1.01030 | 1.01030 | -.01090 | .00000 | -.00010 | .82860 | .19470 | .19510 | .18410 |
| .265 | .000 | .00010 | 1.01090 | 1.01130 | -.01160 | .00000 | .00010 | .82860 | .19530 | .19580 | .18420 |
| .265 | .000 | .00020 | 1.01080 | 1.01130 | -.01140 | -.00010 | .00010 | .82860 | .19520 | .19560 | .18420 |
| .265 | .000 | .00010 | 1.01070 | 1.01100 | -.01130 | .00000 | .00000 | .82860 | .19510 | .19550 | .18420 |
| | GRADIENT | .00000 | .00000 | .00000 | .00000 | .00000 | .00000 | .00000 | .00000 | .00000 | .00000 |

OA236 (NAAL 759) CONFIGURATION 1 DATA SELECT 1 (TFM101) ( 28 JUN 79 )

REFERENCE DATA

SREF = .0000 SQ.FT. XMRP = .0000 IN. XT
LREF = .0000 INCHES YMRP = .0000 IN. YT
BREF = .0000 INCHES ZMRP = .0000 IN. ZT
SCALE = 1.0000

PARAMETRIC DATA

ALPHA = .000 BETA = .000

RUN NO. 1011/ 0 RN/L = 1.29 GRADIENT INTERVAL = -5.00/ 5.00

| MACH | ALPHA | TTO | QO | QBI | QB | PAC |
|---|---|---|---|---|---|---|
| .188 | .000 | 533.14100 | 52.69370 | 52.58420 | 52.56360 | 2104.10999 |
| .188 | .000 | 533.05400 | 52.62090 | 52.52490 | 52.51480 | 2104.10999 |
| .188 | .000 | 533.18400 | 52.65000 | 52.57260 | 52.57640 | 2104.10999 |
| .188 | .000 | 533.12600 | 52.65480 | 52.56060 | 52.55160 | 2104.10999 |
| | GRADIENT | .00000 | .00000 | .00000 | .00000 | .00000 |

RUN NO. 1012/ 0 RN/L = 1.58 GRADIENT INTERVAL = -5.00/ 5.00

| MACH | ALPHA | TTO | QO | QBI | QB | PAC |
|---|---|---|---|---|---|---|
| .229 | .000 | 535.91700 | 78.69060 | 78.83000 | 78.82720 | 2104.10999 |
| .230 | .000 | 536.09000 | 78.76400 | 78.86490 | 78.86320 | 2104.10999 |
| .229 | .000 | 536.09000 | 78.69060 | 78.79410 | 78.80240 | 2104.10999 |
| .230 | .000 | 536.03200 | 78.71500 | 78.82970 | 78.83090 | 2104.10999 |
| | GRADIENT | .00000 | .00000 | .00000 | .00000 | .00000 |

RUN NO. 1013/ 0 RN/L = 1.70 GRADIENT INTERVAL = -5.00/ 5.00

| MACH | ALPHA | TTO | QO | QBI | Q3 | PAC |
|---|---|---|---|---|---|---|
| .248 | .000 | 537.86500 | 91.08290 | 91.96160 | 91.95830 | 2104.10999 |
| .248 | .000 | 537.90800 | 91.97100 | 92.00800 | 92.00630 | 2104.10999 |
| .248 | .000 | 538.16700 | 91.91220 | 91.99690 | 92.01930 | 2104.10999 |
| .248 | .000 | 537.98000 | 91.92200 | 91.98880 | 91.99460 | 2104.10999 |
| | GRADIENT | .00000 | .00000 | .00000 | .00000 | .00000 |

RUN NO. 1014/ 0 RN/L = 1.81 GRADIENT INTERVAL = -5.00/ 5.00

| MACH | ALPHA | TTO | QO | QBI | QB | PAC |
|---|---|---|---|---|---|---|
| .265 | .000 | 540.15500 | 105.04700 | 105.09700 | 105.09500 | 2104.10999 |
| .265 | .000 | 540.19800 | 105.10600 | 105.19100 | 105.22900 | 2104.10999 |
| .265 | .000 | 540.02500 | 105.20800 | 105.28400 | 105.30000 | 2104.10999 |
| .265 | .000 | 540.12600 | 105.12000 | 105.19000 | 105.20800 | 2104.10999 |
| | GRADIENT | .00000 | .00000 | .00000 | .00000 | .00000 |

OA236 (NAAL 759) CONFIGURATION 2 DATA SELECT 1 (TFM102) ( 28 JUN 79 )

REFERENCE DATA

SREF = .0000 SQ.FT. XMRP = .0000 IN. XT
LREF = .0000 INCHES YMRP = .0000 IN. YT
BREF = .0000 INCHES ZMRP = .0000 IN. ZT
SCALE = 1.0000

PARAMETRIC DATA

ALPHA = .000 BETA = .000

RUN NO. 1021/ 0 RN/L = 1.28 GRADIENT INTERVAL = -5.00/ 5.00

| MACH | ALPHA | TTO | QO | QBI | QB | PAC |
|---|---|---|---|---|---|---|
| .188 | .000 | 535.05000 | 52.35870 | 51.79610 | 51.77470 | 2104.10999 |
| .188 | .000 | 535.13700 | 52.31500 | 51.71250 | 51.70080 | 2104.10999 |
| .187 | .000 | 535.26700 | 52.24220 | 51.66520 | 51.65190 | 2104.10999 |
| .188 | .000 | 535.15100 | 52.30530 | 51.72460 | 51.70910 | 2104.10999 |
| | GRADIENT | .00000 | .00000 | .00000 | .00000 | .00000 |

RUN NO. 1022/ 0 RN/L = 1.57 GRADIENT INTERVAL = -5.00/ 5.00

| MACH | ALPHA | TTO | QO | QBI | QB | PAC |
|---|---|---|---|---|---|---|
| .229 | .000 | 537.17300 | 78.63190 | 77.99570 | 77.97810 | 2104.10999 |
| .229 | .000 | 537.90800 | 78.61720 | 77.68540 | 77.68250 | 2104.10999 |
| .229 | .000 | 537.69200 | 78.58790 | 77.80520 | 77.79380 | 2104.10999 |
| .229 | .000 | 537.59100 | 78.61230 | 77.82880 | 77.81810 | 2104.10999 |
| | GRADIENT | .00000 | .00000 | .00000 | .00000 | .00000 |

RUN NO. 1023/ 0 RN/L = 1.69 GRADIENT INTERVAL = -5.00/ 5.00

| MACH | ALPHA | TTO | QO | QBI | QB | PAC |
|---|---|---|---|---|---|---|
| .248 | .000 | 538.81600 | 91.85350 | 90.83110 | 90.82820 | 2104.10999 |
| .248 | .000 | 539.37800 | 91.72120 | 90.80940 | 90.80560 | 2104.10999 |
| .248 | .000 | 539.33400 | 91.83880 | 90.59310 | 90.59480 | 2104.10999 |
| .248 | .000 | 539.17600 | 91.80450 | 90.74450 | 90.74290 | 2104.10999 |
| | GRADIENT | .00000 | .00000 | .00000 | .00000 | .00000 |

RUN NO. 1024/ 0 RN/L = 1.80 GRADIENT INTERVAL = -5.00/ 5.00

| MACH | ALPHA | TTO | QO | QBI | QB | PAC |
|---|---|---|---|---|---|---|
| .264 | .000 | 541.79500 | 104.90100 | 103.68600 | 103.68700 | 2104.10999 |
| .264 | .000 | 541.70800 | 104.93000 | 103.74500 | 103.74800 | 2104.10999 |
| .264 | .000 | 541.49300 | 104.91600 | 103.66200 | 103.66200 | 2104.10999 |
| .264 | .000 | 541.66500 | 104.91600 | 103.69700 | 103.69900 | 2104.10999 |
| | GRADIENT | .00000 | .00000 | .00000 | .00000 | .00000 |

OA236 (NAAL 759) CONFIGURATION 3 DATA SELECT 1 (TFM103) ( 28 JUN 79 )

REFERENCE DATA

SREF = .0000 SQ.FT. XMRP = .0000 IN. XT
LREF = .0000 INCHES YMRP = .0000 IN. YT
BREF = .0000 INCHES ZMRP = .0000 IN. ZT
SCALE = 1.0000

PARAMETRIC DATA

ALPHA = .000 BETA = .000

RUN NO. 1031/ 0 RN/L = 1.29 GRADIENT INTERVAL = -5.00/ 5.00

| MACH | ALPHA | TTO | QO | QBI | QB | PAC |
|---|---|---|---|---|---|---|
| .188 | .000 | 535.61400 | 52.69370 | 53.33940 | 53.33080 | 2104.10999 |
| .188 | .000 | 535.52700 | 52.63540 | 53.28000 | 53.26950 | 2104.10999 |
| .188 | .000 | 535.70000 | 52.60630 | 53.25630 | 53.26970 | 2104.10999 |
| .188 | .000 | 535.61400 | 52.64510 | 53.29190 | 53.29000 | 2104.10999 |
| | GRADIENT | .00000 | .00000 | .00000 | .00000 | .00000 |

RUN NO. 1032/ 0 RN/L = 1.56 GRADIENT INTERVAL = -5.00/ 5.00

| MACH | ALPHA | TTO | QO | QBI | QB | PAC |
|---|---|---|---|---|---|---|
| .230 | .000 | 538.77300 | 78.71990 | 79.90390 | 79.91110 | 2104.10999 |
| .230 | .000 | 539.20500 | 78.88140 | 80.09260 | 80.10600 | 2104.10999 |
| .229 | .000 | 539.29100 | 78.61720 | 79.82170 | 79.80160 | 2104.10999 |
| .230 | .000 | 539.09000 | 78.73950 | 79.93940 | 79.93960 | 2104.10999 |
| | GRADIENT | .00000 | .00000 | .00000 | .00000 | .00000 |

RUN NO. 1033/ 0 RN/L = 1.68 GRADIENT INTERVAL = -5.00/ 5.00

| MACH | ALPHA | TTO | QO | QBI | QB | PAC |
|---|---|---|---|---|---|---|
| .248 | .000 | 540.45700 | 92.04450 | 93.32890 | 93.34530 | 2104.10999 |
| .248 | .000 | 541.14800 | 91.72120 | 92.97650 | 92.99370 | 2104.10999 |
| .248 | .000 | 541.10400 | 91.88290 | 93.15260 | 93.17560 | 2104.10999 |
| .248 | .000 | 540.90300 | 91.88290 | 93.15270 | 93.17150 | 2104.10999 |
| | GRADIENT | .00000 | .00000 | .00000 | .00000 | .00000 |

RUN NO. 1034/ 0 RN/L = 1.79 GRADIENT INTERVAL = -5.00/ 5.00

| MACH | ALPHA | TTO | QO | QBI | QB | PAC |
|---|---|---|---|---|---|---|
| .265 | .000 | 542.91600 | 105.15000 | 106.54500 | 106.61400 | 2104.10999 |
| .264 | .000 | 543.08800 | 104.94500 | 106.34600 | 106.38500 | 2104.10999 |
| .264 | .000 | 543.21800 | 104.93000 | 106.34700 | 106.36100 | 2104.10999 |
| .265 | .000 | 543.07300 | 105.00800 | 106.41200 | 106.45300 | 2104.10999 |
| | GRADIENT | .00000 | .00000 | .00000 | .00000 | .00000 |

OA236 (NAAL 759) CONFIGURATION 4 DATA SELECT 1 (TFM104) ( 28 JUN 79 )

REFERENCE DATA

SREF = .0000 SQ.FT. XMRP = .0000 IN. XT
LREF = .0000 INCHES YMRP = .0000 IN. YT
BREF = .0000 INCHES ZMRP = .0000 IN. ZT
SCALE = 1.0000

PARAMETRIC DATA

ALPHA = .000 BETA = .000

RUN NO. 1041/ 0 RN/L = 1.28 GRADIENT INTERVAL = -5.00/ 5.00

| MACH | ALPHA | TTO | QO | QBI | QB | PAC |
|---|---|---|---|---|---|---|
| .188 | .000 | 538.29700 | 52.70820 | 52.85970 | 52.83560 | 2103.39999 |
| .188 | .000 | 538.38400 | 52.59170 | 52.77680 | 52.75000 | 2103.39999 |
| .188 | .000 | 538.38400 | 52.65000 | 52.83620 | 52.83610 | 2103.39999 |
| .188 | .000 | 538.35400 | 52.65000 | 52.82420 | 52.80720 | 2103.39999 |
| | GRADIENT | .00000 | .00000 | .00000 | .00000 | .00000 |

RUN NO. 1042/ 0 RN/L = 1.56 GRADIENT INTERVAL = -5.00/ 5.00

| MACH | ALPHA | TTO | QO | QBI | QB | PAC |
|---|---|---|---|---|---|---|
| .230 | .000 | 540.32800 | 78.74930 | 79.19910 | 79.17120 | 2103.39999 |
| .230 | .000 | 540.71600 | 78.79330 | 79.30590 | 79.30610 | 2103.39999 |
| .230 | .000 | 540.50000 | 78.73460 | 79.18740 | 79.17150 | 2103.39999 |
| .230 | .000 | 540.80200 | 78.76400 | 79.22280 | 79.20800 | 2103.39999 |
| .230 | .000 | 540.58600 | 78.76030 | 79.22880 | 79.21420 | 2103.39999 |
| | GRADIENT | .00000 | .00000 | .00000 | .00000 | .00000 |

RUN NO. 1043/ 0 RN/L = 1.68 GRADIENT INTERVAL = -5.00/ 5.00

| MACH | ALPHA | TTO | QO | QBI | QB | PAC |
|---|---|---|---|---|---|---|
| .248 | .000 | 542.01000 | 91.95630 | 92.47230 | 92.47330 | 2103.39999 |
| .248 | .000 | 542.31200 | 91.85350 | 92.33110 | 92.32740 | 2103.39999 |
| .248 | .000 | 542.35500 | 91.89760 | 92.42570 | 92.42510 | 2103.39999 |
| .248 | .000 | 542.22600 | 91.90240 | 92.40970 | 92.40860 | 2103.39999 |
| | GRADIENT | .00000 | .00000 | .00000 | .00000 | .00000 |

RUN NO. 1044/ 0 RN/L = 1.79 GRADIENT INTERVAL = -5.00/ 5.00

| MACH | ALPHA | TTO | QO | QBI | QB | PAC |
|---|---|---|---|---|---|---|
| .265 | .000 | 543.34700 | 105.01800 | 105.59600 | 105.58600 | 2103.39999 |
| .265 | .000 | 543.95000 | 105.03300 | 105.58400 | 105.57300 | 2103.39999 |
| .265 | .000 | 544.25100 | 105.10600 | 105.64200 | 105.63300 | 2103.39999 |
| .265 | .000 | 543.84900 | 105.05200 | 105.60700 | 105.59800 | 2103.39999 |
| | GRADIENT | .00000 | .00000 | .00000 | .00000 | .00000 |

OA236 (NAAL 759) CONFIGURATION 5 DATA SELECT 1 (TFM105) ( 28 JUN 79 )

REFERENCE DATA

SREF = .0000 SQ.FT. XMRP = .0000 IN. XT
LREF = .0000 INCHES YMRP = .0000 IN. YT
BREF = .0000 INCHES ZMRP = .0000 IN. ZT
SCALE = 1.0000

PARAMETRIC DATA

ALPHA = .000 BETA = .000

RUN NO. 1051/ 0 RN/L = 1.29 GRADIENT INTERVAL = -5.00/ 5.00

| MACH | ALPHA | TTO | QO | QBI | QB | PAC |
|---|---|---|---|---|---|---|
| .188 | .000 | 533.31400 | 52.51890 | 52.62130 | 52.51530 | 2101.98999 |
| .188 | .000 | 533.31400 | 52.56260 | 52.70480 | 52.53960 | 2101.98999 |
| .188 | .000 | 533.35800 | 52.57720 | 52.72870 | 52.53950 | 2101.98999 |
| .188 | .000 | 533.32900 | 52.55290 | 52.68490 | 52.53140 | 2101.98999 |
| | GRADIENT | .00000 | .00000 | .00000 | .00000 | .00000 |

RUN NO. 1052/ 0 RN/L = 1.58 GRADIENT INTERVAL = -5.00/ 5.00

| MACH | ALPHA | TTO | QO | QBI | QB | PAC |
|---|---|---|---|---|---|---|
| .229 | .000 | 535.48400 | 78.63190 | 79.06860 | 78.83940 | 2101.98999 |
| .229 | .000 | 535.39700 | 78.61720 | 79.04500 | 78.80270 | 2101.98999 |
| .230 | .000 | 535.57000 | 78.66130 | 79.16380 | 78.87600 | 2101.98999 |
| .229 | .000 | 535.48300 | 78.63680 | 79.09250 | 78.83930 | 2101.98999 |
| | GRADIENT | .00000 | .00000 | .00000 | .00000 | .00000 |

RUN NO. 1053/ 0 RN/L = 1.70 GRADIENT INTERVAL = -5.00/ 5.00

| MACH | ALPHA | TTO | QO | QBI | QB | PAC |
|---|---|---|---|---|---|---|
| .248 | .000 | 537.38900 | 91.65350 | 92.28260 | 91.98240 | 2101.98999 |
| .248 | .000 | 537.77800 | 91.79470 | 92.27140 | 91.87250 | 2101.98999 |
| .248 | .000 | 537.73500 | 91.86820 | 92.30610 | 92.08040 | 2101.98999 |
| .248 | .000 | 537.63400 | 91.83880 | 92.28670 | 91.97840 | 2101.98999 |
| | GRADIENT | .00000 | .00000 | .00000 | .00000 | .00000 |

RUN NO. 1054/ 0 RN/L = 1.81 GRADIENT INTERVAL = -5.00/ 5.00

| MACH | ALPHA | TTO | QO | QBI | QB | PAC |
|---|---|---|---|---|---|---|
| .265 | .000 | 538.94600 | 105.04700 | 105.52300 | 105.14200 | 2101.98999 |
| .265 | .000 | 539.63700 | 104.95900 | 105.45300 | 105.19300 | 2101.98999 |
| .265 | .000 | 539.63700 | 105.04700 | 105.54700 | 105.14200 | 2101.98999 |
| .265 | .000 | 539.85300 | 105.06200 | 105.54700 | 105.25300 | 2101.98999 |
| .265 | .000 | 539.51800 | 105.02900 | 105.51700 | 105.18300 | 2101.98999 |
| | GRADIENT | .00000 | .00000 | .00000 | .00000 | .00000 |

OA236 (NAAL 759) CONFIGURATION 6 DATA SELECT 1 (TFM106) ( 28 JUN 79 )

REFERENCE DATA

SREF = .0000 SQ.FT. XMRP = .0000 IN. XT
LREF = .0000 INCHES YMRP = .0000 IN. YT
BREF = .0000 INCHES ZMRP = .0000 IN. ZT
SCALE = 1.0000

PARAMETRIC DATA

ALPHA = .000 BETA = .000

RUN NO. 1061/ 0 RN/L = 1.29 GRADIENT INTERVAL = -5.00/ 5.00

| MACH | ALPHA | TTO | QO | QBI | QB | PAC |
|---|---|---|---|---|---|---|
| .188 | .000 | 533.83500 | 52.37330 | 52.49070 | 52.12050 | 2101.98999 |
| .188 | .000 | 533.79200 | 52.51890 | 52.63330 | 52.20590 | 2101.98999 |
| .188 | .000 | 533.74900 | 52.46070 | 52.59790 | 52.29300 | 2101.98999 |
| .188 | .000 | 533.79200 | 52.45090 | 52.57390 | 52.20640 | 2101.98999 |
| | GRADIENT | .00000 | .00000 | .00000 | .00000 | .00000 |

RUN NO. 1062/ 0 RN/L = 1.57 GRADIENT INTERVAL = -5.00/ 5.00

| MACH | ALPHA | TTO | QO | QBI | QB | PAC |
|---|---|---|---|---|---|---|
| .229 | .000 | 535.78700 | 78.52960 | 78.99840 | 78.37250 | 2101.98999 |
| .229 | .000 | 536.22000 | 78.52960 | 78.96260 | 78.27400 | 2101.98999 |
| .229 | .000 | 536.04700 | 78.60260 | 79.05710 | 78.38390 | 2101.98999 |
| .229 | .000 | 536.01800 | 78.55390 | 79.00600 | 78.34350 | 2101.98999 |
| | GRADIENT | .00000 | .00000 | .00000 | .00000 | .00000 |

RUN NO. 1063/ 0 RN/L = 1.70 GRADIENT INTERVAL = -5.00/ 5.00

| MACH | ALPHA | TTO | QO | QBI | QB | PAC |
|---|---|---|---|---|---|---|
| .248 | .000 | 537.08600 | 91.75070 | 92.20080 | 91.68890 | 2101.98999 |
| .243 | .000 | 537.56200 | 91.67720 | 92.07080 | 91.44400 | 2101.98999 |
| .248 | .000 | 537.82200 | 91.79470 | 92.17630 | 91.50380 | 2101.98999 |
| .248 | .000 | 537.49000 | 91.74080 | 92.14930 | 91.54550 | 2101.98999 |
| | GRADIENT | .00000 | .00000 | .00000 | .00000 | .00000 |

RUN NO. 1064/ 0 RN/L = 1.81 GRADIENT INTERVAL = -5.00/ 5.00

| MACH | ALPHA | TTO | QO | QBI | QB | PAC |
|---|---|---|---|---|---|---|
| .265 | .000 | 539.16200 | 104.91600 | 105.38300 | 104.55600 | 2101.98999 |
| .264 | .000 | 539.59300 | 104.84200 | 105.26500 | 104.59400 | 2101.98999 |
| .265 | .000 | 539.50700 | 104.97400 | 105.48900 | 104.64100 | 2101.98999 |
| .264 | .000 | 539.42100 | 104.91100 | 105.37900 | 104.59700 | 2101.98999 |
| | GRADIENT | .00000 | .00000 | .00000 | .00000 | .00000 |

OA236 (NAAL 759) CONFIGURATION 7 DATA SELECT 1 (TFM107) ( 28 JUN 79 )

REFERENCE DATA

SREF = .0000 SQ.FT. XMRP = .0000 IN. XT
LREF = .0000 INCHES YMRP = .0000 IN. YT
BREF = .0000 INCHES ZMRP = .0000 IN. ZT
SCALE = 1.0000

PARAMETRIC DATA

ALPHA = .000 BETA = .000

RUN NO. 1071/ 0 RN/L = 1.28 GRADIENT INTERVAL = -5.00/ 5.00

| MACH | ALPHA | TTO | QO | QBI | QB | PAC |
|---|---|---|---|---|---|---|
| .188 | .000 | 537.77800 | 52.70820 | 52.85940 | 52.51360 | 2101.98999 |
| .188 | .000 | 537.47600 | 52.66460 | 52.81180 | 52.71190 | 2101.98999 |
| .188 | .000 | 537.82200 | 52.65000 | 52.77600 | 52.60070 | 2101.98999 |
| .188 | .000 | 537.69200 | 52.67420 | 52.81570 | 52.60870 | 2101.98999 |
| | GRADIENT | .00000 | .00000 | .00000 | .00000 | .00000 |

RUN NO. 1072/ 0 RN/L = 1.56 GRADIENT INTERVAL = -5.00/ 5.00

| MACH | ALPHA | TTO | QO | QBI | QB | PAC |
|---|---|---|---|---|---|---|
| .230 | .000 | 539.24800 | 78.66130 | 79.10400 | 78.46940 | 2101.98999 |
| .229 | .000 | 539.29100 | 78.63190 | 79.04480 | 78.58070 | 2101.98999 |
| .229 | .000 | 539.72300 | 78.57320 | 78.97400 | 78.49520 | 2101.98999 |
| .229 | .000 | 539.42100 | 78.62210 | 79.04090 | 78.51510 | 2101.98999 |
| | GRADIENT | .00000 | .00000 | .00000 | .00000 | .00000 |

RUN NO. 1073/ 0 RN/L = 1.68 GRADIENT INTERVAL = -5.00/ 5.00

| MACH | ALPHA | TTO | QO | QBI | QB | PAC |
|---|---|---|---|---|---|---|
| .248 | .000 | 541.23400 | 91.76530 | 92.17680 | 91.68870 | 2101.98999 |
| .248 | .000 | 541.27700 | 91.75070 | 92.16510 | 91.63980 | 2101.98999 |
| .248 | .000 | 541.10400 | 91.73590 | 92.12960 | 91.61540 | 2101.98999 |
| .248 | .000 | 541.20500 | 91.75060 | 92.15710 | 91.64790 | 2101.98999 |
| | GRADIENT | .00000 | .00000 | .00000 | .00000 | .00000 |

RUN NO. 1074/ 0 RN/L = 1.79 GRADIENT INTERVAL = -5.00/ 5.00

| MACH | ALPHA | TTO | QO | QBI | QB | PAC |
|---|---|---|---|---|---|---|
| .265 | .000 | 542.83000 | 104.93000 | 105.38200 | 104.64200 | 2101.98999 |
| .265 | .000 | 543.04500 | 104.94500 | 105.44200 | 104.69000 | 2101.98999 |
| .264 | .000 | 542.83000 | 104.87200 | 105.31200 | 104.69200 | 2101.98999 |
| .265 | .000 | 542.90100 | 104.91600 | 105.37900 | 104.67500 | 2101.98999 |
| | GRADIENT | .00000 | .00000 | .00000 | .00000 | .00000 |

OA236 (NAAL 759) CONFIGURATION 8 DATA SELECT 1 (TFM108) ( 28 JUN 79 )

REFERENCE DATA

SREF = .0000 SQ.FT. XMRP = .0000 IN. XT
LREF = .0000 INCHES YMRP = .0000 IN. YT
BREF = .0000 INCHES ZMRP = .0000 IN. ZT
SCALE = 1.0000

PARAMETRIC DATA

ALPHA = .000 BETA = .000

RUN NO. 1081/ 0 RN/L = 1.28 GRADIENT INTERVAL = -5.00/ 5.00

| MACH | ALPHA | TTO | QO | QBI | QB | PAC |
|---|---|---|---|---|---|---|
| .188 | .000 | 538.34000 | 52.35870 | 52.52670 | 52.46700 | 2101.28000 |
| .188 | .000 | 538.38400 | 52.47520 | 52.64550 | 52.49070 | 2101.28000 |
| .188 | .000 | 538.47000 | 52.57720 | 52.75250 | 52.62590 | 2101.28000 |
| .188 | .000 | 538.39800 | 52.47040 | 52.64150 | 52.52790 | 2101.28000 |
| | GRADIENT | .00000 | .00000 | .00000 | .00000 | .00000 |

RUN NO. 1082/ 0 RN/L = 1.56 GRADIENT INTERVAL = -5.00/ 5.00

| MACH | ALPHA | TTO | QO | QBI | QB | PAC |
|---|---|---|---|---|---|---|
| .230 | .000 | 540.19800 | 78.63190 | 79.17580 | 78.96230 | 2101.28000 |
| .230 | .000 | 540.28400 | 78.70530 | 79.19870 | 79.05990 | 2101.28000 |
| .229 | .000 | 540.58700 | 78.60260 | 79.03300 | 78.99970 | 2101.28000 |
| .230 | .000 | 540.35600 | 78.64660 | 79.13580 | 79.00730 | 2101.28000 |
| | GRADIENT | .00000 | .00000 | .00000 | .00000 | .00000 |

RUN NO. 1083/ 0 RN/L = 1.68 GRADIENT INTERVAL = -5.00/ 5.00

| MACH | ALPHA | TTO | QO | QBI | QB | PAC |
|---|---|---|---|---|---|---|
| .248 | .000 | 541.62200 | 91.67720 | 92.11810 | 91.97230 | 2101.28000 |
| .248 | .000 | 541.79500 | 91.76530 | 92.30730 | 91.99550 | 2101.28000 |
| .248 | .000 | 541.53600 | 91.80940 | 92.31850 | 92.08090 | 2101.28000 |
| .248 | .000 | 541.65100 | 91.75060 | 92.24790 | 92.01620 | 2101.28000 |
| | GRADIENT | .00000 | .00000 | .00000 | .00000 | .00000 |

RUN NO. 1084/ 0 RN/L = 1.79 GRADIENT INTERVAL = -5.00/ 5.00

| MACH | ALPHA | TTO | QO | QBI | QB | PAC |
|---|---|---|---|---|---|---|
| .265 | .000 | 543.00200 | 104.93000 | 105.48900 | 105.27900 | 2101.28000 |
| .265 | .000 | 543.34700 | 104.97400 | 105.53600 | 105.27800 | 2101.28000 |
| .265 | .000 | 543.60500 | 104.97400 | 105.55900 | 105.27800 | 2101.28000 |
| .265 | .000 | 543.31800 | 104.95900 | 105.52800 | 105.27800 | 2101.28000 |
| | GRADIENT | .00000 | .00000 | .00000 | .00000 | .00000 |

OA236 (NAAL 759) CONFIGURATION 9 DATA SELECT 1 (TFM109) ( 28 JUN 79 )

REFERENCE DATA

SREF = .0000 SQ.FT. XMRP = .0000 IN. XT
LREF = .0000 INCHES YMRP = .0000 IN. YT
BREF = .0000 INCHES ZMRP = .0000 IN. ZT
SCALE = 1.0000

PARAMETRIC DATA

ALPHA = .000 BETA = .000

RUN NO. 1091/ 0 RN/L = 1.27 GRADIENT INTERVAL = -5.00/ 5.00

| MACH | ALPHA | TTO | QO | QBI | QB | PAC |
|---|---|---|---|---|---|---|
| .188 | .000 | 540.97500 | 52.65000 | 52.82360 | 52.67460 | 2100.57999 |
| .188 | .000 | 540.97500 | 52.63540 | 52.77580 | 52.68710 | 2100.57999 |
| .188 | .000 | 541.23400 | 52.66460 | 52.82350 | 52.67450 | 2100.57999 |
| .188 | .000 | 541.06100 | 52.65000 | 52.80760 | 52.67880 | 2100.57999 |
| | GRADIENT | .00000 | .00000 | .00000 | .00000 | .00000 |

RUN NO. 1092/ 0 RN/L = 1.55 GRADIENT INTERVAL = -5.00/ 5.00

| MACH | ALPHA | TTO | QO | QBI | QB | PAC |
|---|---|---|---|---|---|---|
| .229 | .000 | 542.44200 | 78.55870 | 79.02130 | 78.83980 | 2100.57999 |
| .230 | .000 | 542.35500 | 78.66130 | 79.15110 | 78.94920 | 2100.57999 |
| .229 | .000 | 542.44200 | 78.58790 | 79.04480 | 78.99960 | 2100.57999 |
| .230 | .000 | 542.41300 | 78.60260 | 79.07240 | 78.92950 | 2100.57999 |
| | GRADIENT | .00000 | .00000 | .00000 | .00000 | .00000 |

RUN NO. 1093/ 0 RN/L = 1.67 GRADIENT INTERVAL = -5.00/ 5.00

| MACH | ALPHA | TTO | QO | QBI | QB | PAC |
|---|---|---|---|---|---|---|
| .248 | .000 | 543.77800 | 91.88290 | 92.40040 | 92.23920 | 2100.57999 |
| .248 | .000 | 543.30400 | 91.70660 | 92.12920 | 92.13140 | 2100.57999 |
| .248 | .000 | 543.86400 | 91.78000 | 92.28270 | 92.05630 | 2100.57999 |
| .248 | .000 | 543.64800 | 91.78980 | 92.27070 | 92.14230 | 2100.57999 |
| | GRADIENT | .00000 | .00000 | .00000 | .00000 | .00000 |

RUN NO. 1094/ 0 RN/L = 1.78 GRADIENT INTERVAL = -5.00/ 5.00

| MACH | ALPHA | TTO | QO | QBI | QB | PAC |
|---|---|---|---|---|---|---|
| .265 | .000 | 545.07000 | 105.04700 | 105.55800 | 105.47300 | 2100.57999 |
| .265 | .000 | 544.85400 | 105.10600 | 105.60400 | 105.43500 | 2100.57999 |
| .265 | .000 | 544.98300 | 105.00300 | 105.52300 | 105.37500 | 2100.57999 |
| .265 | .000 | 544.96900 | 105.05200 | 105.56200 | 105.42800 | 2100.57999 |
| | GRADIENT | .00000 | .00000 | .00000 | .00000 | .00000 |

OA236 (NAAL 759) CONFIGURATION 10 DATA SELECT 1 (TFM110) ( 28 JUN 79 )

REFERENCE DATA

SREF = .0000 SQ.FT. XMRP = .0000 IN. XT
LREF = .0000 INCHES YMRP = .0000 IN. YT
BREF = .0000 INCHES ZMRP = .0000 IN. ZT
SCALE = 1.0000

PARAMETRIC DATA

ALPHA = .000 BETA = .000

RUN NO. 1101/ 0 RN/L = 1.29 GRADIENT INTERVAL = -5.00/ 5.00

| MACH | ALPHA | TTO | QO | QBI | QB | PAC |
|---|---|---|---|---|---|---|
| .188 | .000 | 533.22800 | 52.38780 | 52.57410 | 52.57780 | 2099.87000 |
| .188 | .000 | 533.22800 | 52.32960 | 52.47870 | 52.59070 | 2099.87000 |
| .188 | .000 | 533.27100 | 52.27130 | 52.43130 | 52.56650 | 2099.87000 |
| .188 | .000 | 533.24200 | 52.32960 | 52.49470 | 52.57830 | 2099.87000 |
| | GRADIENT | .00000 | .00000 | .00000 | .00000 | .00000 |

RUN NO. 1102/ 0 RN/L = 1.57 GRADIENT INTERVAL = -5.00/ 5.00

| MACH | ALPHA | TTO | QO | QBI | QB | PAC |
|---|---|---|---|---|---|---|
| .229 | .000 | 535.52700 | 78.45680 | 78.92680 | 78.96390 | 2099.87000 |
| .229 | .000 | 535.39700 | 78.55870 | 79.03280 | 79.06120 | 2099.87000 |
| .229 | .000 | 535.39700 | 78.45680 | 78.87900 | 79.07480 | 2099.87000 |
| .229 | .000 | 535.44000 | 78.49070 | 78.94620 | 79.03330 | 2099.87000 |
| | GRADIENT | .00000 | .00000 | .00000 | .00000 | .00000 |

RUN NO. 1103/ 0 RN/L = 1.69 GRADIENT INTERVAL = -5.00/ 5.00

| MACH | ALPHA | TTO | QO | QBI | QB | PAC |
|---|---|---|---|---|---|---|
| .248 | .000 | 537.00000 | 91.60370 | 92.05880 | 92.20620 | 2099.87000 |
| .247 | .000 | 537.04300 | 91.39800 | 91.87150 | 92.19710 | 2099.87000 |
| .248 | .000 | 537.21600 | 91.58900 | 92.04710 | 92.09570 | 2099.87000 |
| .248 | .000 | 537.09600 | 91.53020 | 91.99240 | 92.16630 | 2099.87000 |
| | GRADIENT | .00000 | .00000 | .00000 | .00000 | .00000 |

RUN NO. 1104/ 0 RN/L = 1.81 GRADIENT INTERVAL = -5.00/ 5.00

| MACH | ALPHA | TTO | QO | QBI | QB | PAC |
|---|---|---|---|---|---|---|
| .264 | .000 | 538.68600 | 104.76900 | 105.37200 | 105.51400 | 2099.87000 |
| .264 | .000 | 538.60000 | 104.74000 | 105.24100 | 105.50200 | 2099.87000 |
| .264 | .000 | 538.94600 | 104.74000 | 105.27700 | 105.39200 | 2099.87000 |
| .264 | .000 | 538.74400 | 104.75000 | 105.29700 | 105.46900 | 2099.87000 |
| | GRADIENT | .00000 | .00000 | .00000 | .00000 | .00000 |

OA236 (NAAL 759) CONFIGURATION 5 DATA SELECT 1 (TFM111) ( 28 JUN 79 )

REFERENCE DATA

SREF = .0000 SQ.FT. XMRP = .0000 IN. XT
LREF = .0000 INCHES YMRP = .0000 IN. YT
BREF = .0000 INCHES ZMRP = .0000 IN. ZT
SCALE = 1.0000

PARAMETRIC DATA

ALPHA = .000 BETA = .000

RUN NO. 1111/ 0 RN/L = 1.29 GRADIENT INTERVAL = -5.00/ 5.00

| MACH | ALPHA | TTO | QO | QBI | QB | PAC |
|---|---|---|---|---|---|---|
| .188 | .000 | 535.57000 | 52.65000 | 52.82350 | 52.73630 | 2099.87000 |
| .188 | .000 | 535.87400 | 52.65000 | 52.81150 | 52.79830 | 2099.87000 |
| .188 | .000 | 535.96000 | 52.66460 | 52.85930 | 52.68670 | 2099.87000 |
| .188 | .000 | 535.80100 | 52.65480 | 52.83140 | 52.74040 | 2099.87000 |
| | GRADIENT | .00000 | .00000 | .00000 | .00000 | .00000 |

RUN NO. 1112/ 0 RN/L = 1.57 GRADIENT INTERVAL = -5.00/ 5.00

| MACH | ALPHA | TTO | QO | QBI | QB | PAC |
|---|---|---|---|---|---|---|
| .229 | .000 | 537.69200 | 78.50050 | 78.99780 | 78.74160 | 2099.87000 |
| .230 | .000 | 537.82200 | 78.63190 | 79.15110 | 78.77680 | 2099.87000 |
| .230 | .000 | 537.99400 | 78.67590 | 79.24610 | 78.92410 | 2099.87000 |
| .230 | .000 | 537.83600 | 78.60270 | 79.13170 | 78.81410 | 2099.87000 |
| | GRADIENT | .00000 | .00000 | .00000 | .00000 | .00000 |

RUN NO. 1113/ 0 RN/L = 1.69 GRADIENT INTERVAL = -5.00/ 5.00

| MACH | ALPHA | TTO | QO | QBI | QB | PAC |
|---|---|---|---|---|---|---|
| .248 | .000 | 539.16200 | 91.75070 | 92.25890 | 91.89650 | 2099.87000 |
| .248 | .000 | 539.20500 | 91.73590 | 92.25910 | 91.90890 | 2099.87000 |
| .248 | .000 | 539.16200 | 91.75070 | 92.29470 | 91.93340 | 2099.87000 |
| .248 | .000 | 539.17600 | 91.74570 | 92.27090 | 91.91290 | 2099.87000 |
| | GRADIENT | .00000 | .00000 | .00000 | .00000 | .00000 |

RUN NO. 1114/ 0 RN/L = 1.80 GRADIENT INTERVAL = -5.00/ 5.00

| MACH | ALPHA | TTO | QO | QBI | QB | PAC |
|---|---|---|---|---|---|---|
| .265 | .000 | 540.45700 | 104.91600 | 105.50000 | 105.13100 | 2099.87000 |
| .265 | .000 | 540.45700 | 104.98900 | 105.57000 | 105.09300 | 2099.87000 |
| .265 | .000 | 540.41400 | 105.00300 | 105.62900 | 105.20300 | 2099.87000 |
| .265 | .000 | 540.44300 | 104.96900 | 105.56600 | 105.14200 | 2099.87000 |
| | GRADIENT | .00000 | .00000 | .00000 | .00000 | .00000 |

OA236 (NAAL 759) CONFIGURATION 11 DATA SELECT 1 (TFM112) ( 28 JUN 79 )

REFERENCE DATA

SREF = .0000 SQ.FT. XMRP = .0000 IN. XT
LREF = .0000 INCHES YMRP = .0000 IN. YT
BREF = .0000 INCHES ZMRP = .0000 IN. ZT
SCALE = 1.0000

PARAMETRIC DATA

ALPHA = .000 BETA = .000

RUN NO. 1121/ 0 RN/L = 1.28 GRADIENT INTERVAL = -5.00/ 5.00

| MACH | ALPHA | TTO | QO | QBI | QB | PAC |
|---|---|---|---|---|---|---|
| .188 | .000 | 537.86500 | 52.50430 | -.13180 | -.13610 | 2100.57999 |
| .188 | .000 | 537.82200 | 52.38780 | -.11980 | -.13610 | 2100.57999 |
| .188 | .000 | 537.86500 | 52.41700 | -.13180 | -.13610 | 2100.57999 |
| .188 | .000 | 537.85000 | 52.43640 | -.12780 | -.13610 | 2100.57999 |
| | GRADIENT | .00000 | .00000 | .00000 | .00000 | .00000 |

RUN NO. 1122/ 0 RN/L = 1.56 GRADIENT INTERVAL = -5.00/ 5.00

| MACH | ALPHA | TTO | QO | QBI | QB | PAC |
|---|---|---|---|---|---|---|
| .229 | .000 | 539.50700 | 78.58790 | -.03580 | -.04920 | 2100.57999 |
| .229 | .000 | 539.72300 | 78.48590 | -.03580 | -.04920 | 2100.57999 |
| .230 | .000 | 539.93900 | 78.66130 | -.03580 | -.04920 | 2100.57999 |
| .229 | .000 | 539.72300 | 78.57830 | -.03580 | -.04920 | 2100.57999 |
| | GRADIENT | .00000 | .00000 | .00000 | .00000 | .00000 |

RUN NO. 1123/ 0 RN/L = 1.68 GRADIENT INTERVAL = -5.00/ 5.00

| MACH | ALPHA | TTO | QO | QBI | QB | PAC |
|---|---|---|---|---|---|---|
| .248 | .000 | 541.32000 | 91.78000 | .11900 | .11060 | 2100.57999 |
| .248 | .000 | 541.06200 | 91.72120 | .05950 | .06140 | 2100.57999 |
| .248 | .000 | 541.19100 | 91.78000 | .07140 | .06140 | 2100.57999 |
| .248 | .000 | 541.19100 | 91.76040 | .08330 | .07780 | 2100.57999 |
| | GRADIENT | .00000 | .00000 | .00000 | .00000 | .00000 |

RUN NO. 1124/ 0 RN/L = 1.79 GRADIENT INTERVAL = -5.00/ 5.00

| MACH | ALPHA | TTO | QO | QBI | QB | PAC |
|---|---|---|---|---|---|---|
| .265 | .000 | 542.44200 | 104.85700 | .09500 | .08580 | 2100.57999 |
| .264 | .000 | 542.61400 | 104.84200 | .09500 | .08580 | 2100.57999 |
| .265 | .000 | 542.74300 | 104.84200 | .08310 | .07360 | 2100.57999 |
| .265 | .000 | 542.59900 | 104.84700 | .09110 | .08170 | 2100.57999 |
| | GRADIENT | .00000 | .00000 | .00000 | .00000 | .00000 |

OA236 (NAAL 759) CONFIGURATION 12 DATA SELECT 1 (TFM113) ( 28 JUN 79 )

REFERENCE DATA

SREF = .0000 SQ.FT. XMRP = .0000 IN. XT
LREF = .0000 INCHES YMRP = .0000 IN. YT
BREF = .0000 INCHES ZMRP = .0000 IN. ZT
SCALE = 1.0000

PARAMETRIC DATA

ALPHA = .000 BETA = .000

RUN NO. 1131/ 0 RN/L = 1.27 GRADIENT INTERVAL = -5.00/ 5.00

| MACH | ALPHA | TTO | QO | QBI | QB | PAC |
|---|---|---|---|---|---|---|
| .188 | .000 | 538.08100 | 52.31500 | 52.47880 | 52.46710 | 2099.87000 |
| .188 | .000 | 537.99400 | 52.38780 | 52.41820 | 52.40450 | 2099.87000 |
| .188 | .000 | 538.08100 | 52.35870 | 52.26260 | 52.25630 | 2099.87000 |
| .188 | .000 | 538.05200 | 52.35380 | 52.38650 | 52.37600 | 2099.87000 |
| | GRADIENT | .00000 | .00000 | .00000 | .00000 | .00000 |

RUN NO. 1132/ 0 RN/L = 1.56 GRADIENT INTERVAL = -5.00/ 5.00

| MACH | ALPHA | TTO | QO | QBI | QB | PAC |
|---|---|---|---|---|---|---|
| .229 | .000 | 539.81000 | 78.34030 | 78.35540 | 78.36170 | 2099.87000 |
| .229 | .000 | 540.06900 | 78.35480 | 78.37900 | 78.37380 | 2099.87000 |
| .229 | .000 | 540.41400 | 78.48590 | 78.28180 | 78.28580 | 2099.87000 |
| .229 | .000 | 540.09700 | 78.39360 | 78.33870 | 78.34040 | 2099.87000 |
| | GRADIENT | .00000 | .00000 | .00000 | .00000 | .00000 |

RUN NO. 1133/ 0 RN/L = 1.68 GRADIENT INTERVAL = -5.00/ 5.00

| MACH | ALPHA | TTO | QO | QBI | QB | PAC |
|---|---|---|---|---|---|---|
| .248 | .000 | 541.75200 | 91.64780 | 91.40290 | 91.40620 | 2099.87000 |
| .248 | .000 | 541.88100 | 91.58900 | 91.42760 | 91.43160 | 2099.87000 |
| .248 | .000 | 542.44200 | 91.60370 | 91.51090 | 91.50530 | 2099.87000 |
| .248 | .000 | 542.02500 | 91.61350 | 91.44710 | 91.44770 | 2099.87000 |
| | GRADIENT | .00000 | .00000 | .00000 | .00000 | .00000 |

RUN NO. 1134/ 0 RN/L = 1.78 GRADIENT INTERVAL = -5.00/ 5.00

| MACH | ALPHA | TTO | QO | QBI | QB | PAC |
|---|---|---|---|---|---|---|
| .265 | .000 | 544.25100 | 104.84200 | 104.70500 | 104.71500 | 2099.87000 |
| .265 | .000 | 544.68200 | 104.84200 | 104.65700 | 104.66600 | 2099.87000 |
| .265 | .000 | 544.76800 | 104.95900 | 104.62000 | 104.62700 | 2099.87000 |
| .265 | .000 | 544.56700 | 104.88100 | 104.66100 | 104.66900 | 2099.87000 |
| | GRADIENT | .00000 | .00000 | .00000 | .00000 | .00000 |

OA236 (NAAL 759) CONFIGURATION 13 DATA SELECT 1 (TFM114) ( 28 JUN 79 )

REFERENCE DATA

SREF = .0000 SQ.FT. XMRP = .0000 IN. XT
LREF = .0000 INCHES YMRP = .0000 IN. YT
BREF = .0000 INCHES ZMRP = .0000 IN. ZT
SCALE = 1.0000

PARAMETRIC DATA

ALPHA = .000 BETA = .000

RUN NO. 1141/ 0 RN/L = 1.27 GRADIENT INTERVAL = -5.00/ 5.00

| MACH | ALPHA | TTO | QO | QBI | QB | PAC |
|---|---|---|---|---|---|---|
| .189 | .000 | 539.29100 | 52.72280 | 52.45080 | 52.43830 | 2097.75000 |
| .188 | .000 | 539.29100 | 52.56260 | 52.33230 | 52.32830 | 2097.75000 |
| .188 | .000 | 539.29100 | 52.48980 | 52.22510 | 52.21760 | 2097.75000 |
| .188 | .000 | 539.29100 | 52.59170 | 52.33610 | 52.32800 | 2097.75000 |
| | GRADIENT | .00000 | .00000 | .00000 | .00000 | .00000 |

RUN NO. 1142/ 0 RN/L = 1.55 GRADIENT INTERVAL = -5.00/ 5.00

| MACH | ALPHA | TTO | QO | QBI | QB | PAC |
|---|---|---|---|---|---|---|
| .230 | .000 | 540.93200 | 78.66130 | 78.13510 | 78.14690 | 2097.75000 |
| .230 | .000 | 541.49300 | 78.79330 | 78.14530 | 78.16970 | 2097.75000 |
| .230 | .000 | 541.45000 | 78.67590 | 78.38570 | 78.38090 | 2097.75000 |
| .230 | .000 | 541.29100 | 78.71020 | 78.22200 | 78.23250 | 2097.75000 |
| | GRADIENT | .00000 | .00000 | .00000 | .00000 | .00000 |

RUN NO. 1143/ 0 RN/L = 1.68 GRADIENT INTERVAL = -5.00/ 5.00

| MACH | ALPHA | TTO | QO | QBI | QB | PAC |
|---|---|---|---|---|---|---|
| .248 | .000 | 542.35500 | 91.89760 | 91.19520 | 91.20420 | 2097.75000 |
| .248 | .000 | 542.52800 | 91.83880 | 91.18410 | 91.19270 | 2097.75000 |
| .248 | .000 | 542.78600 | 91.94160 | 91.15880 | 91.17890 | 2097.75000 |
| .248 | .000 | 542.55600 | 91.89270 | 91.17930 | 91.19190 | 2097.75000 |
| | GRADIENT | .00000 | .00000 | .00000 | .00000 | .00000 |

RUN NO. 1144/ 0 RN/L = 1.79 GRADIENT INTERVAL = -5.00/ 5.00

| MACH | ALPHA | TTO | QO | QBI | QB | PAC |
|---|---|---|---|---|---|---|
| .265 | .000 | 543.99300 | 104.98900 | 104.18900 | 104.19500 | 2097.75000 |
| .265 | .000 | 544.46700 | 105.12100 | 104.21100 | 104.24200 | 2097.75000 |
| .265 | .000 | 544.63900 | 105.10600 | 104.23500 | 104.25400 | 2097.75000 |
| .265 | .000 | 544.36600 | 105.07200 | 104.21100 | 104.23000 | 2097.75000 |
| | GRADIENT | .00000 | .00000 | .00000 | .00000 | .00000 |

OA236 (NAAL 759) CONFIGURATION 1 DATA SELECT 1 (TFM115) ( 28 JUN 79 )

REFERENCE DATA

SREF = .0000 SQ.FT. XMRP = .0000 IN. XT
LREF = .0000 INCHES YMRP = .0000 IN. YT
BREF = .0000 INCHES ZMRP = .0000 IN. ZT
SCALE = 1.0000

PARAMETRIC DATA

ALPHA = .000 BETA = .000

RUN NO. 1151/ 0 RN/L = 1.27 GRADIENT INTERVAL = -5.00/ 5.00

| MACH | ALPHA | TTO | QO | QBI | QB | PAC |
|---|---|---|---|---|---|---|
| .188 | .000 | 541.19100 | 52.57720 | 52.53600 | 52.52620 | 2097.75000 |
| .188 | .000 | 541.36400 | 52.54800 | 52.50030 | 52.48930 | 2097.75000 |
| .188 | .000 | 541.40600 | 52.30050 | 52.25070 | 52.23160 | 2097.75000 |
| .188 | .000 | 541.32000 | 52.47520 | 52.42900 | 52.41570 | 2097.75000 |
| | GRADIENT | .00000 | .00000 | .00000 | .00000 | .00000 |

RUN NO. 1152/ 0 RN/L = 1.55 GRADIENT INTERVAL = -5.00/ 5.00

| MACH | ALPHA | TTO | QO | QBI | QB | PAC |
|---|---|---|---|---|---|---|
| .230 | .000 | 543.00200 | 78.71990 | 78.94600 | 78.97170 | 2097.75000 |
| .230 | .000 | 542.83000 | 78.67590 | 78.85110 | 78.84910 | 2097.75000 |
| .230 | .000 | 543.04500 | 78.66130 | 78.86320 | 78.88620 | 2097.75000 |
| .230 | .000 | 542.95900 | 78.68570 | 78.88680 | 78.90230 | 2097.75000 |
| | GRADIENT | .00000 | .00000 | .00000 | .00000 | .00000 |

RUN NO. 1153/ 0 RN/L = 1.67 GRADIENT INTERVAL = -5.00/ 5.00

| MACH | ALPHA | TTO | QO | QBI | QB | PAC |
|---|---|---|---|---|---|---|
| .248 | .000 | 544.29400 | 91.78000 | 91.93540 | 91.93140 | 2097.75000 |
| .248 | .000 | 544.20800 | 91.73590 | 91.86470 | 91.87060 | 2097.75000 |
| .248 | .000 | 544.25100 | 91.78000 | 91.95920 | 91.98050 | 2097.75000 |
| .248 | .000 | 544.25100 | 91.76530 | 91.91970 | 91.92750 | 2097.75000 |
| | GRADIENT | .00000 | .00000 | .00000 | .00000 | .00000 |

RUN NO. 1154/ 0 RN/L = 1.78 GRADIENT INTERVAL = -5.00/ 5.00

| MACH | ALPHA | TTO | QO | QBI | QB | PAC |
|---|---|---|---|---|---|---|
| .265 | .000 | 545.58600 | 105.01800 | 105.19900 | 105.18900 | 2097.75000 |
| .265 | .000 | 546.18900 | 104.91600 | 105.08200 | 105.09200 | 2097.75000 |
| .265 | .000 | 545.93000 | 104.91600 | 105.07000 | 105.06700 | 2097.75000 |
| .265 | .000 | 545.90100 | 104.95000 | 105.11700 | 105.11600 | 2097.75000 |
| | GRADIENT | .00000 | .00000 | .00000 | .00000 | .00000 |

OA236 (NAAL 759) CONFIGURATION 3 DATA SELECT 1 (TFM116) ( 28 JUN 79 )

REFERENCE DATA

SREF = .0000 SQ.FT. XMRP = .0000 IN. XT
LREF = .0000 INCHES YMRP = .0000 IN. YT
BREF = .0000 INCHES ZMRP = .0000 IN. ZT
SCALE = 1.0000

PARAMETRIC DATA

ALPHA = .000 BETA = .000

RUN NO. 1161/ 0 RN/L = 1.26 GRADIENT INTERVAL = -5.00/ 5.00

| MACH | ALPHA | TTO | QO | QBI | QB | PAC |
|---|---|---|---|---|---|---|
| .188 | .000 | 542.83000 | 52.59170 | 53.20700 | 53.20650 | 2097.75000 |
| .188 | .000 | 543.00200 | 52.57720 | 53.20720 | 53.20670 | 2097.75000 |
| .188 | .000 | 543.00200 | 52.48980 | 53.11210 | 53.10850 | 2097.75000 |
| .188 | .000 | 542.94400 | 52.55290 | 53.17540 | 53.17390 | 2097.75000 |
| | GRADIENT | .00000 | .00000 | .00000 | .00000 | .00000 |

RUN NO. 1162/ 0 RN/L = 1.54 GRADIENT INTERVAL = -5.00/ 5.00

| MACH | ALPHA | TTO | QO | QBI | QB | PAC |
|---|---|---|---|---|---|---|
| .229 | .000 | 544.29400 | 78.47130 | 79.65350 | 79.66490 | 2097.75000 |
| .230 | .000 | 544.55300 | 78.67590 | 79.82980 | 79.84700 | 2097.75000 |
| .230 | .000 | 544.46700 | 78.69060 | 79.85350 | 79.85920 | 2097.75000 |
| .230 | .000 | 544.43800 | 78.61260 | 79.77890 | 79.79030 | 2097.75000 |
| | GRADIENT | .00000 | .00000 | .00000 | .00000 | .00000 |

RUN NO. 1163/ 0 RN/L = 1.66 GRADIENT INTERVAL = -5.00/ 5.00

| MACH | ALPHA | TTO | QO | QBI | QB | PAC |
|---|---|---|---|---|---|---|
| .248 | .000 | 545.28500 | 91.82410 | 93.08990 | 93.08640 | 2097.75000 |
| .248 | .000 | 545.50000 | 91.80940 | 93.04250 | 93.06190 | 2097.75000 |
| .248 | .000 | 545.67200 | 91.75070 | 92.97200 | 92.98910 | 2097.75000 |
| .248 | .000 | 545.48600 | 91.79470 | 93.03480 | 93.04580 | 2097.75000 |
| | GRADIENT | .00000 | .00000 | .00000 | .00000 | .00000 |

RUN NO. 1164/ 0 RN/L = 1.77 GRADIENT INTERVAL = -5.00/ 5.00

| MACH | ALPHA | TTO | QO | QBI | QB | PAC |
|---|---|---|---|---|---|---|
| .265 | .000 | 546.87700 | 105.17900 | 106.53900 | 106.55900 | 2097.75000 |
| .265 | .000 | 547.47900 | 104.82800 | 106.14100 | 106.14900 | 2097.75000 |
| .265 | .000 | 547.30700 | 104.95900 | 106.32900 | 106.34300 | 2097.75000 |
| .265 | .000 | 547.22100 | 104.98900 | 106.33600 | 106.35000 | 2097.75000 |
| | GRADIENT | .00000 | .00000 | .00000 | .00000 | .00000 |

OA236 (NAAL 759) CONFIGURATION 14 DATA SELECT 1 (TFM117) ( 28 JUN 79 )

REFERENCE DATA

SREF = .0000 SQ.FT. XMRP = .0000 IN. XT
LREF = .0000 INCHES YMRP = .0000 IN. YT
BREF = .0000 INCHES ZMRP = .0000 IN. ZT
SCALE = 1.0000

PARAMETRIC DATA

ALPHA = .000 BETA = .000

RUN NO. 1171/ 0 RN/L = 1.28 GRADIENT INTERVAL = -5.00/ 5.00

| MACH | ALPHA | TTO | QO | QBI | QB | PAC |
|---|---|---|---|---|---|---|
| .188 | .000 | 535.57000 | 52.57720 | 53.26780 | 53.25680 | 2100.57999 |
| .188 | .000 | 535.57000 | 52.54800 | 53.22000 | 53.23230 | 2100.57999 |
| .188 | .000 | 535.61400 | 52.59170 | 53.27960 | 53.28140 | 2100.57999 |
| .188 | .000 | 535.58500 | 52.57230 | 53.25580 | 53.25680 | 2100.57999 |
| | GRADIENT | .00000 | .00000 | .00000 | .00000 | .00000 |

RUN NO. 1172/ 0 RN/L = 1.57 GRADIENT INTERVAL = -5.00/ 5.00

| MACH | ALPHA | TTO | QO | QBI | QB | PAC |
|---|---|---|---|---|---|---|
| .230 | .000 | 537.82200 | 78.60260 | 79.71280 | 79.70150 | 2100.57999 |
| .230 | .000 | 537.95100 | 78.58790 | 79.68900 | 79.71400 | 2100.57999 |
| .230 | .000 | 538.03800 | 78.63190 | 79.73620 | 79.73810 | 2100.57999 |
| .230 | .000 | 537.93700 | 78.60740 | 79.71270 | 79.71780 | 2100.57999 |
| | GRADIENT | .00000 | .00000 | .00000 | .00000 | .00000 |

RUN NO. 1173/ 0 RN/L = 1.69 GRADIENT INTERVAL = -5.00/ 5.00

| MACH | ALPHA | TTO | QO | QBI | QB | PAC |
|---|---|---|---|---|---|---|
| .248 | .000 | 539.07500 | 91.75070 | 92.85460 | 92.85560 | 2100.57999 |
| .248 | .000 | 539.76600 | 91.80940 | 92.91340 | 92.92860 | 2100.57999 |
| .248 | .000 | 539.85300 | 91.69190 | 92.79610 | 92.80740 | 2100.57999 |
| .248 | .000 | 539.56400 | 91.75060 | 92.85470 | 92.86390 | 2100.57999 |
| | GRADIENT | .00000 | .00000 | .00000 | .00000 | .00000 |

RUN NO. 1174/ 0 RN/L = 1.80 GRADIENT INTERVAL = -5.00/ 5.00

| MACH | ALPHA | TTO | QO | QBI | QB | PAC |
|---|---|---|---|---|---|---|
| .265 | .000 | 541.19100 | 104.90100 | 105.98800 | 105.99000 | 2100.57999 |
| .265 | .000 | 541.66500 | 105.01800 | 106.16400 | 106.20900 | 2100.57999 |
| .265 | .000 | 541.49300 | 104.97400 | 106.11700 | 106.16000 | 2100.57999 |
| .265 | .000 | 541.44900 | 104.96400 | 106.08900 | 106.12000 | 2100.57999 |
| | GRADIENT | .00000 | .00000 | .00000 | .00000 | .00000 |

OA236 (NAAL 759) CONFIGURATION 1 DATA SELECT 2 (RFM201) ( 28 JUN 79 )

REFERENCE DATA

SREF = .0000 SQ.FT. XMRP = .0000 IN. XT
LREF = .0000 INCHES YMRP = .0000 IN. YT
BREF = .0000 INCHES ZMRP = .0000 IN. ZT
SCALE = 1.0000

PARAMETRIC DATA

ALPHA = .000 BETA = .000

RUN NO. 2011/ 0 RN/L = 1.29 GRADIENT INTERVAL = -5.00/ 5.00

| MACH | ALPHA | 27-12 | 12-ATM | 27-ATM | TBISBI | TB-SB | TB-TBI | SB-SBI | 12-PO | 12-SB |
|---|---|---|---|---|---|---|---|---|---|---|
| .188 | .000 | 43.51650 | 9.90470 | 53.44090 | 53.03850 | 53.06560 | -.00950 | .00000 | 9.38700 | 9.29760 |
| .188 | .000 | 43.46660 | 9.91640 | 53.40300 | 52.98970 | 53.00500 | -.00470 | .00000 | 9.37620 | 9.28630 |
| .188 | .000 | 43.49150 | 9.84590 | 53.38410 | 53.03850 | 53.07780 | -.00310 | -.01150 | 9.38160 | 9.32590 |
| .188 | .000 | 43.49150 | 9.88900 | 53.40930 | 53.02220 | 53.04940 | -.00580 | -.00380 | 9.38160 | 9.30320 |
| | GRADIENT | .00000 | .00000 | .00000 | .00000 | .00000 | .00000 | .00000 | .00000 | .00000 |

RUN NO. 2012/ 0 RN/L = 1.58 GRADIENT INTERVAL = -5.00/ 5.00

| MACH | ALPHA | 27-12 | 12-ATM | 27-ATM | TBISBI | TB-SB | TB-TBI | SB-SBI | 12-PO | 12-SB |
|---|---|---|---|---|---|---|---|---|---|---|
| .229 | .000 | 65.23110 | 14.99810 | 80.27510 | 79.87510 | 79.88350 | -.00150 | .00490 | 14.13120 | 14.24050 |
| .230 | .000 | 65.29360 | 14.99410 | 80.35090 | 79.91170 | 79.91990 | -.00310 | .01310 | 14.14590 | 14.21790 |
| .229 | .000 | 65.23110 | 14.90790 | 80.23720 | 79.83850 | 79.84710 | .00470 | .00000 | 14.13120 | 14.24610 |
| .230 | .000 | 65.25190 | 14.96670 | 80.28770 | 79.87510 | 79.88350 | .00000 | .00600 | 14.13610 | 14.23480 |
| | GRADIENT | .00000 | .00000 | .00000 | .00000 | .00000 | .00000 | .00000 | .00000 | .00000 |

RUN NO. 2013/ 0 RN/L = 1.70 GRADIENT INTERVAL = -5.00/ 5.00

| MACH | ALPHA | 27-12 | 12-ATM | 27-ATM | TBISBI | TB-SB | TB-TBI | SB-SBI | 12-PO | 12-SB |
|---|---|---|---|---|---|---|---|---|---|---|
| .248 | .000 | 76.12590 | 17.58780 | 93.80590 | 93.39720 | 93.38340 | -.00630 | .00320 | 16.73530 | 16.81370 |
| .248 | .000 | 76.20080 | 17.68190 | 93.93850 | 93.44600 | 93.43190 | -.00790 | .00160 | 16.75320 | 16.82510 |
| .248 | .000 | 76.15090 | 17.58000 | 93.82480 | 93.43380 | 93.44410 | .01590 | .00160 | 16.74130 | 16.80810 |
| .248 | .000 | 76.15920 | 17.61660 | 93.85640 | 93.42560 | 93.41980 | .00050 | .00210 | 16.74330 | 16.81560 |
| | GRADIENT | .00000 | .00000 | .00000 | .00000 | .00000 | .00000 | .00000 | .00000 | .00000 |

RUN NO. 2014/ 0 RN/L = 1.81 GRADIENT INTERVAL = -5.00/ 5.00

| MACH | ALPHA | 27-12 | 12-ATM | 27-ATM | TBISBI | TB-SB | TB-TBI | SB-SBI | 12-PO | 12-SB |
|---|---|---|---|---|---|---|---|---|---|---|
| .265 | .000 | 87.04560 | 20.40490 | 107.54500 | 106.96800 | 106.93100 | .00150 | .01810 | 19.34960 | 19.37000 |
| .265 | .000 | 87.09560 | 20.33040 | 107.54500 | 107.07700 | 107.06500 | .00790 | -.00490 | 19.36160 | 19.43790 |
| .265 | .000 | 87.18310 | 20.26380 | 107.56400 | 107.15100 | 107.15000 | .00310 | -.00820 | 19.38250 | 19.48310 |
| .265 | .000 | 87.10810 | 20.33300 | 107.55100 | 107.06500 | 107.04900 | .00420 | .00160 | 19.36450 | 19.43030 |
| | GRADIENT | .00000 | .00000 | .00000 | .00000 | .00000 | .00000 | .00000 | .00000 | .00000 |

OA236 (NAAL 759) CONFIGURATION 2 DATA SELECT 2 (RFM202) ( 28 JUN 79 )

REFERENCE DATA

SREF = .0000 SQ.FT. XMRP = .0000 IN. XT
LREF = .0000 INCHES YMRP = .0000 IN. YT
BREF = .0000 INCHES ZMRP = .0000 IN. ZT
SCALE = 1.0000

PARAMETRIC DATA

ALPHA = .000 BETA = .000

RUN NO. 2021/ 0 RN/L = 1.28 GRADIENT INTERVAL = -5.00/ 5.00

| MACH | ALPHA | 27-12 | 12-ATM | 27-ATM | TBISBI | TB-SB | TB-TBI | SB-SBI | 12-PO | 12-SB |
|---|---|---|---|---|---|---|---|---|---|---|
| .188 | .000 | 43.24170 | 10.23770 | 53.47880 | 52.24530 | 52.26510 | .00000 | .00000 | 9.32730 | 8.78290 |
| .188 | .000 | 43.20420 | 10.20240 | 53.42200 | 52.15980 | 52.19230 | .00000 | -.00160 | 9.31910 | 8.74330 |
| .187 | .000 | 43.15420 | 10.22980 | 53.38410 | 52.11100 | 52.14380 | .00310 | .00000 | 9.30830 | 8.76600 |
| .188 | .000 | 43.20000 | 10.22330 | 53.42820 | 52.17200 | 52.20040 | .00100 | -.00050 | 9.31820 | 8.76410 |
| | GRADIENT | .00000 | .00000 | .00000 | .00000 | .00000 | .00000 | .00000 | .00000 | .00000 |

RUN NO. 2022/ 0 RN/L = 1.57 GRADIENT INTERVAL = -5.00/ 5.00

| MACH | ALPHA | 27-12 | 12-ATM | 27-ATM | TBISBI | TB-SB | TB-TBI | SB-SBI | 12-PO | 12-SB |
|---|---|---|---|---|---|---|---|---|---|---|
| .229 | .000 | 65.19360 | 15.70330 | 80.91940 | 79.02080 | 79.03450 | -.00310 | .00160 | 14.12250 | 13.46000 |
| .229 | .000 | 65.16860 | 15.48000 | 80.69200 | 78.70350 | 78.73120 | .00470 | -.00330 | 14.11660 | 13.29600 |
| .229 | .000 | 65.14360 | 15.55830 | 80.74890 | 78.82560 | 78.85250 | .00150 | -.00160 | 14.11080 | 13.37520 |
| .229 | .000 | 65.16860 | 15.58050 | 80.78680 | 78.85000 | 78.87270 | .00100 | -.00110 | 14.11660 | 13.37710 |
| | GRADIENT | .00000 | .00000 | .00000 | .00000 | .00000 | .00000 | .00000 | .00000 | .00000 |

RUN NO. 2023/ 0 RN/L = 1.69 GRADIENT INTERVAL = -5.00/ 5.00

| MACH | ALPHA | 27-12 | 12-ATM | 27-ATM | TBISBI | TB-SB | TB-TBI | SB-SBI | 12-PO | 12-SB |
|---|---|---|---|---|---|---|---|---|---|---|
| .248 | .000 | 76.11340 | 18.26960 | 94.45020 | 92.23780 | 92.24330 | .00150 | .00000 | 16.73230 | 15.75050 |
| .248 | .000 | 76.00090 | 18.35180 | 94.31760 | 92.21340 | 92.21900 | -.00470 | .00000 | 16.70540 | 15.77310 |
| .248 | .000 | 76.10090 | 18.19120 | 94.33650 | 91.99370 | 92.01280 | .00630 | -.00330 | 16.72930 | 15.64310 |
| .248 | .000 | 76.07170 | 18.27090 | 94.36810 | 92.14820 | 92.15840 | .00100 | -.00110 | 16.72230 | 15.72220 |
| | GRADIENT | .00000 | .00000 | .00000 | .00000 | .00000 | .00000 | .00000 | .00000 | .00000 |

RUN NO. 2024/ 0 RN/L = 1.80 GRADIENT INTERVAL = -5.00/ 5.00

| MACH | ALPHA | 27-12 | 12-ATM | 27-ATM | TBISBI | TB-SB | TB-TBI | SB-SBI | 12-PO | 12-SB |
|---|---|---|---|---|---|---|---|---|---|---|
| .264 | .000 | 86.94570 | 21.16890 | 108.13200 | 105.51500 | 105.51200 | .00310 | .00160 | 19.32570 | 18.16540 |
| .264 | .000 | 86.97070 | 21.18060 | 108.17000 | 105.57600 | 105.57300 | .00150 | .00160 | 19.33170 | 18.13710 |
| .264 | .000 | 86.94570 | 21.16110 | 108.13200 | 105.49100 | 105.50000 | .00000 | .00000 | 19.32570 | 18.10320 |
| .264 | .000 | 86.95400 | 21.17020 | 108.14500 | 105.52700 | 105.52800 | .00150 | .00100 | 19.32770 | 18.13520 |
| | GRADIENT | .00000 | .00000 | .00000 | .00000 | .00000 | .00000 | .00000 | .00000 | .00000 |

C-1

OA236 (NAAL 759) CONFIGURATION 3 DATA SELECT 2 (RFM203) ( 28 JUN 79 )

REFERENCE DATA

SREF = .0000 SQ.FT. XMRP = .0000 IN. XT
LREF = .0000 INCHES YMRP = .0000 IN. YT
BREF = .0000 INCHES ZMRP = .0000 IN. ZT
SCALE = 1.0000

PARAMETRIC DATA

ALPHA = .000 BETA = .000

RUN NO. 2031/ 0 RN/L = 1.29 GRADIENT INTERVAL = -5.00/ 5.00

| MACH | ALPHA | 27-12 | 12-ATM | 27-ATM | TBISBI | TB-SB | TB-TBI | SB-SBI | 12-PO | 12-SB |
|---|---|---|---|---|---|---|---|---|---|---|
| .188 | .000 | 43.52900 | 10.04180 | 53.57360 | 53.80740 | 53.82980 | -.00470 | -.00660 | 9.38980 | 10.07240 |
| .188 | .000 | 43.47910 | 10.04960 | 53.53570 | 53 74630 | 53.76910 | -.00630 | .00650 | 9.37890 | 10.03850 |
| .188 | .000 | 43.46660 | 9.96730 | 53.45990 | 53.73410 | 53.75700 | .00150 | -.00160 | 9.37620 | 10.03850 |
| .188 | .000 | 43.49150 | 10.01960 | 53.52300 | 53.76260 | 53.78530 | -.00310 | -.00050 | 9.38160 | 10.04980 |
| | GRADIENT | .00000 | .00000 | .00000 | .00000 | .00000 | .00000 | .00000 | .00000 | .00000 |

RUN NO. 2032/ 0 RN/L = 1.56 GRADIENT INTERVAL = -5.00/ 5.00

| MACH | ALPHA | 27-12 | 12-ATM | 27-ATM | TBISBI | TB-SB | TB-TBI | SB-SBI | 12-PO | 12-SB |
|---|---|---|---|---|---|---|---|---|---|---|
| .230 | .000 | 65.26860 | 15.17040 | 80.48350 | 80.97350 | 80.97510 | -.00150 | .00160 | 14.14000 | 15.38290 |
| .230 | .000 | 65.40600 | 15.05680 | 80.52140 | 81.15650 | 81.16920 | .00470 | -.00490 | 14.17250 | 15.[illegible]2250 |
| .229 | .000 | 65.19360 | 15.32320 | 80.50250 | 80.87590 | 80.85380 | -.01270 | .00820 | 14.12250 | 15.36030 |
| .230 | .000 | 65.28940 | 15.18350 | 80.50250 | 81.00190 | 80.99940 | -.00310 | .00160 | 14.14500 | 15.38860 |
| | GRADIENT | .00000 | .00000 | .00000 | .00000 | .00000 | .00000 | .00000 | .00000 | .00000 |

RUN NO. 2033/ 0 RN/L = 1.68 GRADIENT INTERVAL = -5.00/ 5.00

| MACH | ALPHA | 27-12 | 12-ATM | 27-ATM | TBISBI | TB-SB | TB-TBI | SB-SBI | 12-PO | 12-SB |
|---|---|---|---|---|---|---|---|---|---|---|
| .248 | .000 | 76.27580 | 17.92480 | 94.24180 | 94.77620 | 94.77830 | .00630 | -.00330 | 16.77120 | 18.08620 |
| .248 | .000 | 76.00090 | 17.89340 | 93.91960 | 94.41010 | 94.40230 | .00470 | .00490 | 16.70540 | 18.02400 |
| .248 | .000 | 76.13840 | 17.79940 | 93.95750 | 94.60530 | 94.59640 | .00790 | .00320 | 16.73830 | 18.06360 |
| .248 | .000 | 76.13830 | 17.87250 | 94.03960 | 94.59720 | 94.59230 | .00630 | .00160 | 16.73830 | 18.05790 |
| | GRADIENT | .00000 | .00000 | .00000 | .00000 | .00000 | .00000 | .00000 | .00000 | .00000 |

RUN NO. 2034/ 0 RN/L = 1.79 GRADIENT INTERVAL = -5.00/ 5.00

| MACH | ALPHA | 27-12 | 12-ATM | 27-ATM | TBISBI | TB-SB | TB-TBI | SB-SBI | 12-PO | 12-SB |
|---|---|---|---|---|---|---|---|---|---|---|
| .265 | .000 | 87.14560 | 20.42450 | 107.65800 | 108.44400 | 108.47200 | .03010 | -.01480 | 19.37350 | 20.83480 |
| .264 | .000 | 86.98320 | 20.56940 | 107.62000 | 108.23700 | 108.22900 | .00790 | -.00490 | 19.33470 | 20.78950 |
| .264 | .000 | 86.95820 | 20.67520 | 107.67700 | 108.23700 | 108.20500 | .00310 | .00820 | 19.32870 | 20.77820 |
| .265 | .000 | 87.02900 | 20.55640 | 107.65200 | 108.30600 | 108.30200 | .01370 | -.00380 | 19.34560 | 20.80090 |
| | GRADIENT | .00000 | .00000 | .00000 | .00000 | .00000 | .00000 | .00000 | .00000 | .00000 |

OA236 (NAAL 759) CONFIGURATION 4 DATA SELECT 2 (RFM204) ( 28 JUN 79 )

REFERENCE DATA

SREF = .0000 SQ.FT. XMRP = .0000 IN. XT
LREF = .0000 INCHES YMRP = .0000 IN. YT
BREF = .0000 INCHES ZMRP = .0000 IN. ZT
SCALE = 1.0000

PARAMETRIC DATA

ALPHA = .000 BETA = .000

RUN NO. 2041/ 0 RN/L = 1.28 GRADIENT INTERVAL = -5.00/ 5.00

| MACH | ALPHA | 27-12 | 12-ATM | 27-ATM | TBISBI | TB-SB | TB-TBI | SB-SBI | 12-PO | 12-SB |
|---|---|---|---|---|---|---|---|---|---|---|
| .188 | .000 | 43.54150 | 10.12410 | 53.64940 | 53.31920 | 53.32030 | -.00310 | -.01310 | 9.39250 | 9.44460 |
| .188 | .000 | 43.44160 | 10.06920 | 53.51670 | 53.22160 | 53.24760 | .00150 | .00490 | 9.37070 | 9.43900 |
| .188 | .000 | 43.49150 | 10.01040 | 53.53570 | 53.29480 | 53.32030 | .00790 | .00490 | 9.38160 | 9.44460 |
| .188 | .000 | 43.49150 | 10.06790 | 53.56720 | 53.27850 | 53.29610 | .00210 | .00760 | 9.38160 | 9.44270 |
| | GRADIENT | .00000 | .00000 | .00000 | .00000 | .00000 | .00000 | .00000 | .00000 | .00000 |

RUN NO. 2042/ 0 RN/L = 1.56 GRADIENT INTERVAL = -5.00/ 5.00

| MACH | ALPHA | 27-12 | 12-ATM | 27-ATM | TBISBI | TB-SB | TB-TBI | SB-SBI | 12-PO | 12-SB |
|---|---|---|---|---|---|---|---|---|---|---|
| .230 | .000 | 65.29360 | 15.45250 | 80.71100 | 80.24120 | 80.22310 | -.01420 | .00650 | 14.14590 | 14.47240 |
| .230 | .000 | 65.33110 | 15.24880 | 80.59730 | 80.35110 | 80.36870 | .00470 | -.00660 | 14.15480 | 14.51200 |
| .230 | .000 | 65.28110 | 15.47600 | 80.74890 | 80.22900 | 80.22310 | -.00470 | .00980 | 14.14300 | 14.45540 |
| .230 | .000 | 65.30610 | 15.38590 | 80.69200 | 80.27780 | 80.25950 | .00790 | .02630 | 14.14890 | 14.42150 |
| .230 | .000 | 65.30290 | 15.39080 | 80.68730 | 80.27480 | 80.26860 | -.00150 | .00900 | 14.14810 | 14.46530 |
| | GRADIENT | .00000 | .00( 0 | .00000 | .00000 | .00000 | .00000 | .00000 | .00000 | .00000 |

RUN NO. 2043/ 0 RN/L = 1.68 GRADIENT INTERVAL = -5.00/ 5.00

| MACH | ALPHA | 27-12 | 12-ATM | 27-ATM | TBISBI | TB-SB | TB-TBI | SB-SBI | 12-PO | 12-SB |
|---|---|---|---|---|---|---|---|---|---|---|
| .248 | .000 | 76.20080 | 17.92480 | 94.14700 | 93.89750 | 93.89280 | .00470 | .00980 | 16.75320 | 17.06260 |
| .248 | .000 | 76.12590 | 18.06580 | 94.20390 | 93.76330 | 93.74730 | .00790 | .01640 | 16.73530 | 17.03430 |
| .248 | .000 | 76.15090 | 18.04620 | 94.18490 | 93.86090 | 93.84430 | -.01270 | -.00330 | 16.74130 | 17.09090 |
| .248 | .000 | 76.15920 | 18.01230 | 94.17860 | 93.84050 | 93.82810 | .00000 | .00760 | 16.74330 | 17.06260 |
| | GRADIENT | .00000 | .00000 | .00000 | .00000 | .00000 | .00000 | .00000 | .00000 | .00000 |

RUN NO. 2044/ 0 RN/L = 1.79 GRADIENT INTERVAL = -5.00/ 5.00

| MACH | ALPHA | 27-12 | 12-ATM | 27-ATM | TBISBI | TB-SB | TB-TBI | SB-SBI | 12-PO | 12-SB |
|---|---|---|---|---|---|---|---|---|---|---|
| .265 | .000 | 87.03310 | 20.91030 | 107.96200 | 107.45600 | 107.42900 | .00630 | .01150 | 19.34660 | 19.70370 |
| .265 | .000 | 87.04560 | 20.78880 | 107.86700 | 107.45600 | 107.41700 | .00630 | .02140 | 19.34960 | 19.65280 |
| .265 | .000 | 87.12060 | 20.96520 | 108.09400 | 107.50500 | 107.47700 | -.00950 | -.00160 | 19.36750 | 19.74330 |
| .265 | .000 | 87.06640 | 20.88810 | 107.97400 | 107.47200 | 107.44100 | .00100 | .01040 | 19.35460 | 19.69990 |
| | GRADIENT | .00000 | .00000 | .00000 | .00000 | .00000 | .00000 | .00000 | .00000 | .00000 |

OA236 (NAAL 759) CONFIGURATION 5 DATA SELECT 2 (RFM205) ( 28 JUN 79 )

REFERENCE DATA

SREF = .0000 SQ.FT. XMRP = .0000 IN. XT
LREF = .0000 INCHES YMRP = .0000 IN. YT
BREF = .0000 INCHES ZMRP = .0000 IN. ZT
SCALE = 1.0000

PARAMETRIC DATA

ALPHA = .000 BETA = .000

RUN NO. 2051/ 0 RN/L = 1.29 GRADIENT INTERVAL = -5.00/ 5.00

| MACH | ALPHA | 27-12 | 12-ATM | 27-ATM | TBISBI | TB-SB | TB-TBI | SB-SBI | 12-PO | 12-SB |
|---|---|---|---|---|---|---|---|---|---|---|
| .188 | .000 | 43.35410 | 10.14370 | 53.51670 | 53.08730 | 53.01710 | -.00310 | .08900 | 9.35170 | 9.27500 |
| .188 | .000 | 43.39160 | 10.07310 | 53.49780 | 53.16060 | 53.02920 | .00470 | .16810 | 9.35990 | 9.22410 |
| .188 | .000 | 43.40410 | 10.06530 | 53.51670 | 53.19720 | 53.04140 | .00310 | .18290 | 9.36260 | 9.22410 |
| .188 | .000 | 43.38330 | 10.09400 | 53.51040 | 53.14830 | 53.02920 | .00150 | .14660 | 9.35810 | 9.24100 |
| | GRADIENT | .00000 | .00000 | .00000 | .00000 | .00000 | .00000 | .00000 | .00000 | .00000 |

RUN NO. 2052/ 0 RN/L = 1.58 GRADIENT INTERVAL = -5.00/ 5.00

| MACH | ALPHA | 27-12 | 12-ATM | 27-ATM | TBISBI | TB-SB | TB-TBI | SB-SBI | 12-PO | 12-SB |
|---|---|---|---|---|---|---|---|---|---|---|
| .229 | .000 | 65.15610 | 15.34280 | 80.52140 | 80.11920 | 79.89560 | .00310 | .23400 | 14.11370 | 14.17260 |
| .229 | .000 | 65.14360 | 15.37030 | 80.55940 | 80.09480 | 79.87140 | .00000 | .23070 | 14.11080 | 14.16700 |
| .229 | .000 | 65.18110 | 15.33890 | 80.59730 | 80.21680 | 79.93200 | .02370 | .32130 | 14.11950 | 14.13870 |
| .229 | .000 | 65.16030 | 15.35070 | 80.55940 | 80.14360 | 79.89970 | .00890 | .26200 | 14.11470 | 14.15940 |
| | GRADIENT | .00000 | .00000 | .00000 | .00000 | .00000 | .00000 | .00000 | .00000 | .00000 |

RUN NO. 2053/ 0 RN/L = 1.70 GRADIENT INTERVAL = -5.00/ 5.00

| MACH | ALPHA | 27-12 | 12-ATM | 27-ATM | TBISBI | TB-SB | TB-TBI | SB-SBI | 12-PO | 12-SB |
|---|---|---|---|---|---|---|---|---|---|---|
| .248 | .000 | 76.07590 | 18.17550 | 94.26070 | 93.71440 | 93.39550 | -.00150 | .30320 | 16.72330 | 16.67230 |
| .248 | .000 | 76.02590 | 17.99530 | 94.10910 | 93.70230 | 93.29850 | .01260 | .41690 | 16.71140 | 16.59320 |
| .248 | .000 | 76.08840 | 18.16770 | 94.31760 | 93.73890 | 93.50470 | .00630 | .23230 | 16.72630 | 16.75150 |
| .248 | .000 | 76.06340 | 18.11280 | 94.22910 | 93.71850 | 93.39960 | .00580 | .31750 | 16.72030 | 16.67230 |
| | GRADIENT | .00000 | .00000 | .00000 | .00000 | .00000 | .00000 | .00000 | .00000 | .00000 |

RUN NO. 2054/ 0 RN/L = 1.81 GRADIENT INTERVAL = -5.00/ 5.00

| MACH | ALPHA | 27-12 | 12-ATM | 27-ATM | TBISBI | TB-SB | TB-TBI | SB-SBI | 12-PO | 12-SB |
|---|---|---|---|---|---|---|---|---|---|---|
| .265 | .000 | 87.02060 | 20.77710 | 107.82900 | 107.39500 | 106.99200 | -.00150 | .38400 | 19.34360 | 19.25130 |
| .264 | .000 | 86.93320 | 20.91420 | 107.92400 | 107.32100 | 107.04100 | .01420 | .28180 | 19.32270 | 19.34170 |
| .265 | .000 | 87.00810 | 20.82020 | 107.88600 | 107.41900 | 106.98000 | -.00150 | .41860 | 19.34060 | 19.22860 |
| .265 | .000 | 87.02060 | 20.96910 | 108.03700 | 107.41900 | 107.10100 | .00150 | .29660 | 19.34360 | 19.33610 |
| .265 | .000 | 86.99560 | 20.87010 | 107.91900 | 107.38900 | 107.02800 | .00310 | .34520 | 19.33760 | 19.28940 |
| | GRADIENT | .00000 | .00000 | .00000 | .00000 | .00000 | .00000 | .00000 | .00000 | .00000 |

OA236 (NAAL 759) CONFIGURATION 6 DATA SELECT 2 (RFM206) ( 28 JUN 79 )

REFERENCE DATA

SREF = .0000 SQ.FT. XMRP = .0000 IN. XT
LREF = .0000 INCHES YMRP = .0000 IN. YT
BREF = .0000 INCHES ZMRP = .0000 IN. ZT
SCALE = 1.0000

PARAMETRIC DATA

ALPHA = .000 BETA = .000

RUN NO. 2061/ 0 RN/L = 1.29 GRADIENT INTERVAL = -5.00/ 5.00

| MACH | ALPHA | 27-12 | 12-ATM | 27-ATM | TBISBI | TB-SB | TB-TBI | SB-SBI | 12-PO | 12-SB |
|---|---|---|---|---|---|---|---|---|---|---|
| .188 | .000 | 43.22920 | 10.08100 | 53.34620 | 52.94090 | 52.60470 | -.14450 | .23070 | 9.32460 | 9.11660 |
| .188 | .000 | 43.35410 | 10.03390 | 53.42200 | 53.08730 | 52.68960 | -.15560 | .27520 | 9.35170 | 9.09960 |
| .188 | .000 | 43.31660 | 10.12800 | 53.44090 | 53.05070 | 52.77450 | -.10800 | .20600 | 9.34360 | 9.17880 |
| .188 | .000 | 43.30000 | 10.08100 | 53.40300 | 53.02630 | 52.68960 | -.13600 | .23730 | 9.34000 | 9.13170 |
| | GRADIENT | .00000 | .00000 | .00000 | .00000 | .00000 | .00000 | .00000 | .00000 | .00000 |

RUN NO. 2062/ 0 RN/L = 1.57 GRADIENT INTERVAL = -5.00/ 5.00

| MACH | ALPHA | 27-12 | 12-ATM | 27-ATM | TBISBI | TB-SB | TB-TBI | SB-SBI | 12-PO | 12-SB |
|---|---|---|---|---|---|---|---|---|---|---|
| .229 | .000 | 65.08120 | 15.35460 | 80.48350 | 80.04600 | 79.41050 | -.23830 | .42020 | 14.09630 | 13.96900 |
| .229 | .000 | 65.06870 | 15.31540 | 80.42670 | 79.99720 | 79.32560 | -.20650 | .50100 | 14.09340 | 13.90120 |
| .229 | .000 | 65.14360 | 15.34680 | 80.52140 | 80.10700 | 79.43470 | -.24620 | .45320 | 14.11080 | 13.95770 |
| .229 | .000 | 65.09780 | 15.33890 | 80.47720 | 80.05000 | 79.39020 | -.23030 | .45810 | 14.10020 | 13.94260 |
| | GRADIENT | .00000 | .00000 | .00000 | .00000 | .00000 | .00000 | .00000 | .00000 | .00000 |

RUN NO. 2063/ 0 RN/L = 1.70 GRADIENT INTERVAL = -5.00/ 5.00

| MACH | ALPHA | 27-12 | 12-ATM | 27-ATM | TBISBI | TB-SB | TB-TBI | SB-SBI | 12-PO | 12-SB |
|---|---|---|---|---|---|---|---|---|---|---|
| .248 | .000 | 75.98840 | 18.16770 | 94.16600 | 93.61680 | 93.10440 | -.23670 | .29830 | 16.70240 | 16.65540 |
| .248 | .000 | 75.92600 | 18.08150 | 94.03330 | 93.49480 | 92.84970 | -.18110 | .47300 | 16.68740 | 16.46310 |
| .248 | .000 | 76.02590 | 18.10890 | 94.14700 | 93.59240 | 92.92250 | -.23830 | .45490 | 16.71140 | 16.49140 |
| .248 | .000 | 75.98010 | 18.11940 | 94.11540 | 93.56800 | 92.95890 | -.21870 | .40870 | 16.70040 | 16.53660 |
| | GRADIENT | .00000 | .00000 | .00000 | .00000 | .00000 | .00000 | .00000 | .00000 | .00000 |

RUN NO. 2064/ 0 RN/L = 1.81 GRADIENT INTERVAL = -5.00/ 5.00

| MACH | ALPHA | 27-12 | 12-ATM | 27-ATM | TBISBI | TB-SB | TB-TBI | SB-SBI | 12-PO | 12-SB |
|---|---|---|---|---|---|---|---|---|---|---|
| .264 | .000 | 86.90820 | 20.90640 | 107.84800 | 107.24800 | 106.38600 | -.19540 | .66420 | 19.31670 | 18.96850 |
| .264 | .000 | 86.84570 | 21.00430 | 107.84800 | 107.12600 | 106.43400 | -.21600 | .48290 | 19.30170 | 19.05900 |
| .265 | .000 | 86.95820 | 20.89460 | 107.86700 | 107.34600 | 106.47000 | -.28910 | .59330 | 19.32870 | 19.00810 |
| .264 | .000 | 86.90400 | 20.93510 | 107.85400 | 107.24000 | 106.43000 | -.23350 | .58010 | 19.31570 | 19.01180 |
| | GRADIENT | .00000 | .00000 | .00000 | .00000 | .00000 | .00000 | .00000 | .00000 | .00000 |

OA236 (NAAL 759) CONFIGURATION 7 DATA SELECT 2 (RFM207) ( 28 JUN 79 )

REFERENCE DATA

SREF = .0000 SQ.FT. XMRP = .0000 IN. XT
LREF = .0000 INCHES YMRP = .0000 IN. YT
BREF = .0000 INCHES ZMRP = .0000 IN. ZT
SCALE = 1.0000

PARAMETRIC DATA

ALPHA = .000 BETA = .000

RUN NO. 2071/ 0 RN/L = 1.28 GRADIENT INTERVAL = -5.00/ 5.00

| MACH | ALPHA | 27-12 | 12-ATM | 27-ATM | TBISBI | TB-SB | TB-TBI | SB-SBI | 12-PO | 12-SB |
|---|---|---|---|---|---|---|---|---|---|---|
| .188 | .000 | 43.51650 | 10.07310 | 53.66830 | 53.33140 | 52.99290 | -.19850 | .15980 | 9.38700 | 9.28060 |
| .188 | .000 | 43.47910 | 10.23380 | 53.72520 | 53.27040 | 53.18690 | -.09530 | .01970 | 9.37890 | 9.41640 |
| .188 | .000 | 43.46660 | 10.17500 | 53.66930 | 53.23380 | 53.07780 | -.11910 | .06420 | 9.37620 | 9.34280 |
| .188 | .000 | 43.48740 | 10.16060 | 53.68730 | 53.27850 | 53.08580 | -.13760 | .08130 | 9.38070 | 9.34660 |
| | GRADIENT | .00000 | .00000 | .00000 | .00000 | .00000 | .00000 | .00000 | .00000 | .00000 |

RUN NO. 2072/ 0 RN/L = 1.56 GRADIENT INTERVAL = -5.00/ 5.00

| MACH | ALPHA | 27-12 | 12-ATM | 27-ATM | TBISBI | TB-SB | TB-TBI | SB-SBI | 12-PO | 12-SB |
|---|---|---|---|---|---|---|---|---|---|---|
| .229 | .000 | 65.18110 | 15.31930 | 80.54040 | 80.15580 | 79.50750 | -.28910 | .36910 | 14.11950 | 14.05390 |
| .229 | .000 | 65.16860 | 15.44060 | 80.63520 | 80.09480 | 79.61670 | -.23510 | .25540 | 14.11660 | 14.15570 |
| .229 | .000 | 65.11870 | 15.42510 | 80.57830 | 80.02160 | 79.51960 | -.20330 | .30160 | 14.10500 | 14.09340 |
| .229 | .000 | 65.15610 | 15.39510 | 80.58460 | 80.09070 | 79.54790 | -.24250 | .30870 | 14.11370 | 14.10100 |
| | GRADIENT | .00000 | .00000 | .00000 | .00000 | .00000 | .00000 | .00000 | .00000 | .00000 |

RUN NO. 2073/ 0 RN/L = 1.68 GRADIENT INTERVAL = -5.00/ 5.00

| MACH | ALPHA | 27-12 | 12-ATM | 27-ATM | TBISBI | TB-SB | TB-TBI | SB-SBI | 12-PO | 12-SB |
|---|---|---|---|---|---|---|---|---|---|---|
| .248 | .000 | 76.00090 | 18.29310 | 94.33650 | 93.60460 | 93.09230 | -.19690 | .32790 | 16.70540 | 16.67800 |
| .248 | .000 | 75.98840 | 18.25390 | 94.26070 | 93.59240 | 93.03170 | -.18270 | .37080 | 16.70240 | 16.61580 |
| .248 | .000 | 75.97590 | 18.26570 | 94.27970 | 93.55580 | 93.01950 | -.19850 | .34110 | 16.69940 | 16.62710 |
| .248 | .000 | 75.98840 | 18.27090 | 94.29230 | 93.58430 | 93.04780 | -.19270 | .34660 | 16.70240 | 16.64030 |
| | GRADIENT | .00000 | .00000 | .00000 | .00000 | .00000 | .00000 | .00000 | .00000 | .00000 |

RUN NO. 2074/ 0 RN/L = 1.79 GRADIENT INTERVAL = -5.00/ 5.00

| MACH | ALPHA | 27-12 | 12-ATM | 27-ATM | TBISBI | TB-SB | TB-TBI | SB-SBI | 12-PO | 12-SB |
|---|---|---|---|---|---|---|---|---|---|---|
| .264 | .000 | 86.93320 | 20.94560 | 107.90500 | 107.24800 | 106.45800 | -.30500 | .46470 | 19.32270 | 19.11550 |
| .264 | .000 | 86.93320 | 20.95340 | 107.94300 | 107.30900 | 106.50700 | -.26690 | .52240 | 19.32270 | 19.11550 |
| .264 | .000 | 86.88320 | 21.01610 | 107.92400 | 107.18700 | 106.50700 | -.22080 | .44660 | 19.31070 | 19.16090 |
| .264 | .000 | 86.91650 | 20.97170 | 107.92400 | 107.24800 | 106.49100 | -.26420 | .47790 | 19.31870 | 19.13060 |
| | GRADIENT | .00000 | .00000 | .00000 | .00000 | 00000 | .00000 | .00000 | .00000 | .00000 |

OA236 (NAAL 759) CONFIGURATION 8 DATA SELECT 2 (RFM208) ( 28 JUN 79 )

REFERENCE DATA

SREF = .0000 SQ.FT. XMRP = .0000 IN. XT
LREF = .0000 INCHES YMRP = .0000 IN. YT
BREF = .0000 INCHES ZMRP = .0000 IN. ZT
SCALE = 1.0000

PARAMETRIC DATA

ALPHA = .000 BETA = .000

RUN NO. 2081/ 0 RN/L = 1.28 GRADIENT INTERVAL = -5.00/ 5.00

| MACH | ALPHA | 27-12 | 12-ATM | 27-ATM | TBISBI | TB-SB | TB-TBI | SB-SBI | 12-PO | 12-SB |
|---|---|---|---|---|---|---|---|---|---|---|
| .188 | .000 | 43.22920 | 10.24160 | 53.49780 | 52.98970 | 52.93220 | .00000 | .06420 | 9.32460 | 9.34850 |
| .188 | .000 | 43.32910 | 10.13580 | 53.49780 | 53.11180 | 52.96860 | .00000 | .15820 | 9.34630 | 9.26930 |
| .188 | .000 | 43.41660 | 10.13580 | 53.57360 | 53.20940 | 53.10200 | .00790 | .13350 | 9.36530 | 9.31460 |
| .188 | .000 | 43.32490 | 10.17110 | 53.52300 | 53.10360 | 53.00090 | .00260 | .11860 | 9.34540 | 9.31080 |
| | GRADIENT | .00000 | .00000 | .00000 | .00000 | .00000 | .00000 | .00000 | .00000 | .00000 |

RUN NO. 2082/ 0 RN/L = 1.56 GRADIENT INTERVAL = -5.00/ 5.00

| MACH | ALPHA | 27-12 | 12-ATM | 27-ATM | TBISBI | TB-SB | TB-TBI | SB-SBI | 12-PO | 12-SB |
|---|---|---|---|---|---|---|---|---|---|---|
| .229 | .000 | 65.16860 | 15.43690 | 80.63520 | 80.21680 | 80.00480 | .00470 | .22740 | 14.11660 | 14.26880 |
| .230 | .000 | 65.21860 | 15.50350 | 80.74890 | 80.24120 | 80.10180 | .01110 | .15980 | 14.12830 | 14.35360 |
| .229 | .000 | 65.13120 | 15.63670 | 80.74890 | 80.08260 | 80.04120 | -.01270 | .03790 | 14.10790 | 14.41580 |
| .229 | .000 | 65.17280 | 15.52570 | 80.71100 | 80.18020 | 80.04930 | .00100 | .14170 | 14.11760 | 14.34610 |
| | GRADIENT | .00000 | .00000 | .00000 | .00000 | .00000 | .00000 | .00000 | .00000 | .00000 |

RUN NO. 2083/ 0 RN/L = 1.68 GRADIENT INTERVAL = -5.00/ 5.00

| MACH | ALPHA | 27-12 | 12-ATM | 27-ATM | TBISBI | TB-SB | TB-TBI | SB-SBI | 12-PO | 12-SB |
|---|---|---|---|---|---|---|---|---|---|---|
| .248 | .000 | 75.92600 | 18.26170 | 94.18490 | 93.54360 | 93.37130 | -.00310 | .14830 | 16.68740 | 16.85900 |
| .248 | .000 | 76.00090 | 18.12850 | 94.18490 | 93.72660 | 93.40770 | .01580 | .32960 | 16.70540 | 16.74020 |
| .248 | .000 | 76.03840 | 18.19510 | 94.29860 | 93.75110 | 93.49260 | .00950 | .25380 | 16.71440 | 16.82510 |
| .248 | .000 | 75.98840 | 18.19510 | 94.22280 | 93.67380 | 93.42380 | .00740 | .24390 | 16.70240 | 16.80810 |
| | GRADIENT | .00000 | .00000 | .00000 | .00000 | .00000 | .00000 | .00000 | .00000 | .00000 |

RUN NO. 2084/ 0 RN/L = 1.79 GRADIENT INTERVAL = -5.00/ 5.00

| MACH | ALPHA | 27-12 | 12-ATM | 27-ATM | TBISBI | TB-SB | TB-TBI | SB-SBI | 12-PO | 12-SB |
|---|---|---|---|---|---|---|---|---|---|---|
| .265 | .000 | 86.92070 | 21.05530 | 108.01800 | 107.35800 | 107.11300 | .00150 | .22250 | 19.31970 | 19.47750 |
| .265 | .000 | 86.95820 | 21.04350 | 108.07500 | 107.40700 | 107.10100 | .01900 | .29830 | 19.32870 | 19.43220 |
| .265 | .000 | 86.95820 | 21.11400 | 108.09400 | 107.41900 | 107.10100 | -.00150 | .29500 | 19.32870 | 19.44350 |
| .265 | .000 | 86.94570 | 21.07090 | 108.06300 | 107.39500 | 107.10500 | .00630 | .27190 | 19.32570 | 19.45110 |
| | GRADIENT | .00000 | .00000 | .00000 | .00000 | .00000 | .00000 | .00000 | .00000 | .00000 |

OA236 (NAAL 759) CONFIGURATION 9 DATA SELECT 2 (RFM209) ( 28 JUN 79 )

REFERENCE DATA

SREF = .0000 SQ.FT. XMRP = .0000 IN. XT
LREF = .0000 INCHES YMRP = .0000 IN. YT
BREF = .0000 INCHES ZMRP = .0000 IN. ZT
SCALE = 1.0000

PARAMETRIC DATA

ALPHA = .000 BETA = .000

RUN NO. 2091/ 0 RN/L = 1.27 GRADIENT INTERVAL = -5.00/ 5.00

| MACH | ALPHA | 27-12 | 12-ATM | 27-ATM | TBISBI | TB-SB | TB-TBI | SB-SBI | 12-PO | 12-SB |
|---|---|---|---|---|---|---|---|---|---|---|
| .188 | .000 | 43.46660 | 10.14760 | 53.63040 | 53.29480 | 53.16270 | -.00470 | .13840 | 9.37620 | 9.32590 |
| .188 | .000 | 43.45410 | 10.19460 | 53.66830 | 53.24600 | 53.17480 | .00150 | .07910 | 9.37350 | 9.35980 |
| .188 | .000 | 43.47910 | 10.15150 | 53.66830 | 53.29480 | 53.16270 | .00310 | .14330 | 9.37890 | 9.30890 |
| .188 | .000 | 43.46650 | 10.16450 | 53.65570 | 53.27850 | 53.16670 | .00000 | .12030 | 9.37620 | 9.33150 |
| | GRADIENT | .00000 | .00000 | .00000 | .00000 | .00000 | .00000 | .00000 | .00000 | .00000 |

RUN NO. 2092/ 0 RN/L = 1.55 GRADIENT INTERVAL = -5.00/ 5.00

| MACH | ALPHA | 27-12 | 12-ATM | 27-ATM | TBISBI | TB-SB | TB-TBI | SB-SBI | 12-PO | 12-SB |
|---|---|---|---|---|---|---|---|---|---|---|
| .229 | .000 | 65.10620 | 15.52310 | 80.65410 | 80.08260 | 79.88350 | -.00630 | .17960 | 14.10210 | 14.28010 |
| .230 | .000 | 65.18110 | 15.47600 | 80.67310 | 80.20460 | 80.00480 | .00790 | .21590 | 14.11950 | 14.26310 |
| .229 | .000 | 65.13120 | 15.64450 | 80.76780 | 80.10700 | 80.05330 | -.01420 | .03620 | 14.10790 | 14.41020 |
| .229 | .000 | 65.13950 | 15.54790 | 80.69830 | 80.13140 | 79.98050 | -.00420 | .14390 | 14.10980 | 14.31780 |
| | GRADIENT | .00000 | .00000 | .00000 | .00000 | .00000 | .00000 | .00000 | .00000 | .00000 |

RUN NO. 2093/ 0 RN/L = 1.67 GRADIENT INTERVAL = -5.00/ 5.00

| MACH | ALPHA | 27-12 | 12-ATM | 27-ATM | TBISBI | TB-SB | TB-TBI | SB-SBI | 12-PO | 12-SB |
|---|---|---|---|---|---|---|---|---|---|---|
| .248 | .000 | 76.10090 | 18.29130 | 94.45020 | 93.84870 | 93.66240 | .01740 | .18780 | 16.72930 | 16.90420 |
| .248 | .000 | 75.95100 | 18.46160 | 94.39340 | 93.56800 | 93.55320 | -.01740 | -.01650 | 16.69340 | 17.00040 |
| .248 | .000 | 76.01340 | 18.21080 | 94.27970 | 93.72660 | 93.46830 | .00630 | .24720 | 16.70840 | 16.80240 |
| .248 | .000 | 76.02170 | 18.31790 | 94.37440 | 93.71440 | 93.56130 | .00210 | .13950 | 16.71040 | 16.90230 |
| | GRADIENT | .00000 | .00000 | .00000 | .00000 | .00000 | .00000 | .00000 | .00000 | .00000 |

RUN NO. 2094/ 0 RN/L = 1.78 GRADIENT INTERVAL = -5.00/ 5.00

| MACH | ALPHA | 27-12 | 12-ATM | 27-ATM | TBISBI | TB-SB | TB-TBI | SB-SBI | 12-PO | 12-SB |
|---|---|---|---|---|---|---|---|---|---|---|
| .265 | .000 | 87.02060 | 21.24330 | 108.30300 | 107.43100 | 107.32000 | .00000 | .08900 | 19.34360 | 19.62450 |
| .265 | .000 | 87.08310 | 21.19630 | 108.28400 | 107.48000 | 107.28300 | -.00150 | .16970 | 19.35860 | 19.54530 |
| .265 | .000 | 86.99320 | 21.25120 | 108.26500 | 107.39500 | 107.21000 | -.01270 | .14330 | 19.33470 | 19.55670 |
| .265 | .000 | 87.02900 | 21.23030 | 108.28400 | 107.43500 | 107.27100 | -.00470 | .13400 | 19.34560 | 19.57550 |
| | GRADIENT | .00000 | .00000 | .00000 | .00000 | .00000 | .00000 | .00000 | .00000 | .00000 |

OA236 (NAAL 759) CONFIGURATION 10 DATA SELECT 2 (RFM210) ( 28 JUN 79 )

REFERENCE DATA

SREF = .0000 SQ.FT. XMRP = .0000 IN. XT
LREF = .0000 INCHES YMRP = .0000 IN. YT
BREF = .0000 INCHES ZMRP = .0000 IN. ZT
SCALE = 1.0000

PARAMETRIC DATA

ALPHA = .000 BETA = .000

RUN NO. 2101/ 0 RN/L = 1.29 GRADIENT INTERVAL = -5.00/ 5.00

| MACH | ALPHA | 27-12 | 12-ATM | 27-ATM | TBISBI | TB-SB | TB-TBI | SB-SBI | 12-PO | 12-SB |
|---|---|---|---|---|---|---|---|---|---|---|
| .188 | .000 | 43.25420 | 10.13970 | 53.44090 | 53.01410 | 53.06990 | -.14930 | -.17820 | 9.33000 | 9.59170 |
| .188 | .000 | 43.21670 | 10.18670 | 53.40300 | 52.92870 | 53.10200 | -.09690 | -.22610 | 9.32180 | 9.62000 |
| .188 | .000 | 43.16670 | 10.20630 | 53.40300 | 52.86770 | 53.07780 | -.09050 | -.24590 | 9.31100 | 9.62560 |
| .188 | .000 | 43.21250 | 10.17760 | 53.41560 | 52.93680 | 53.08990 | -.11220 | -.21680 | 9.32090 | 9.61240 |
| | GRADIENT | .00000 | .00000 | .00000 | .00000 | .00000 | .00000 | .00000 | .00000 | .00000 |

RUN NO. 2102/ 0 RN/L = 1.57 GRADIENT INTERVAL = -5.00/ 5.00

| MACH | ALPHA | 27-12 | 12-ATM | 27-ATM | TBISBI | TB-SB | TB-TBI | SB-SBI | 12-PO | 12-SB |
|---|---|---|---|---|---|---|---|---|---|---|
| .229 | .000 | 65.01870 | 15.47600 | 80.50250 | 79.94830 | 80.02910 | -.17470 | -.21950 | 14.08190 | 14.66470 |
| .229 | .000 | 65.11870 | 15.48780 | 80.65410 | 80.05820 | 80.15040 | -.19060 | -.22780 | 14.10500 | 14.68730 |
| .229 | .000 | 65.03120 | 15.59360 | 80.65410 | 79.89950 | 80.15040 | -.14450 | -.35490 | 14.08480 | 14.76650 |
| .229 | .000 | 65.05620 | 15.51910 | 80.60360 | 79.96870 | 80.10990 | -.16990 | -.26740 | 14.09060 | 14.70610 |
| | GRADIENT | .00000 | .00000 | .00000 | .00000 | .00000 | .00000 | .00000 | .00000 | .00000 |

RUN NO. 2103/ 0 RN/L = 1.69 GRADIENT INTERVAL = -5.00/ 5.00

| MACH | ALPHA | 27-12 | 12-ATM | 27-ATM | TBISBI | TB-SB | TB-TBI | SB-SBI | 12-PO | 12-SB |
|---|---|---|---|---|---|---|---|---|---|---|
| .248 | .000 | 75.88850 | 18.26570 | 94.18490 | 93.47040 | 93.65030 | -.14770 | -.30530 | 16.67850 | 17.33970 |
| .247 | .000 | 75.71360 | 18.40670 | 94.12800 | 93.27510 | 93.63810 | -.13340 | -.46380 | 16.63660 | 17.43580 |
| .248 | .000 | 75.86350 | 18.24610 | 94.16600 | 93.44600 | 93.54110 | -.20810 | -.27230 | 16.67250 | 17.29450 |
| .248 | .000 | 75.82180 | 18.30610 | 94.15960 | 93.39710 | 93.60980 | -.16310 | -.34720 | 16.66250 | 17.35670 |
| | GRADIENT | .00000 | .00000 | .00000 | .00000 | .00000 | .00000 | .00000 | .00000 | .00000 |

RUN NO. 2104/ 0 RN/L = 1.81 GRADIENT INTERVAL = -5.00/ 5.00

| MACH | ALPHA | 27-12 | 12-ATM | 27-ATM | TBISBI | TB-SB | TB-TBI | SB-SBI | 12-PO | 12-SB |
|---|---|---|---|---|---|---|---|---|---|---|
| .264 | .000 | 86.82070 | 21.12580 | 108.00000 | 107.21200 | 107.40400 | -.15250 | -.30700 | 19.29580 | 20.06000 |
| .264 | .000 | 86.78320 | 21.17280 | 107.98100 | 107.07700 | 107.38000 | -.16840 | -.43910 | 19.28680 | 20.07700 |
| .264 | .000 | 86.78320 | 21.08660 | 107.92400 | 107.11400 | 107.27100 | -.20330 | -.33840 | 19.28680 | 20.00910 |
| .264 | .000 | 86.79570 | 21.12840 | 107.96800 | 107.13400 | 107.35200 | -.17470 | -.36150 | 19.28980 | 20.04870 |
| | GRADIENT | .00000 | .00000 | .00000 | .00000 | .00000 | .00000 | .00000 | .00000 | .00000 |

OA236 (NAAL 759) CONFIGURATION 5 DATA SELECT 2 (RFM211) ( 28 JUN 79 )

REFERENCE DATA

SREF = .0000 SQ.FT. XMRP = .0000 IN. XT
LREF = .0000 INCHES YMRP = .0000 IN. YT
BREF = .0000 INCHES ZMRP = .0000 IN. ZT
SCALE = 1.0000

PARAMETRIC DATA

ALPHA = .000 BETA = .000

RUN NO. 2111/ 0 RN/L = 1.28 GRADIENT INTERVAL = -5.00/ 5.00

| MACH | ALPHA | 27-12 | 12-ATM | 27-ATM | TBISBI | TB-SB | TB-TBI | SB-SBI | 12-PO | 12-SB |
|---|---|---|---|---|---|---|---|---|---|---|
| .188 | .000 | 43.47910 | 10.16720 | 53.64940 | 53.28260 | 53.23540 | -.00150 | .08730 | 9.37890 | 9.37680 |
| .188 | .000 | 43.47910 | 10.29650 | 53.76310 | 53.25820 | 53.29610 | -.01110 | -.00330 | 9.37890 | 9.46730 |
| .188 | .000 | 43.49150 | 10.14760 | 53.66830 | 53.30700 | 53.18690 | .00150 | .16810 | 9.38160 | 9.32020 |
| .188 | .000 | 43.48320 | 10.20370 | 53.69360 | 53.28260 | 53.23950 | -.00370 | .08400 | 9.37980 | 9.38810 |
| | GRADIENT | .00000 | .00000 | .00000 | .00000 | .00000 | .00000 | .00000 | .00000 | .00000 |

RUN NO. 2112/ 0 RN/L = 1.57 GRADIENT INTERVAL = -5.00/ 5.00

| MACH | ALPHA | 27-12 | 12-ATM | 27-ATM | TBISBI | TB-SB | TB-TBI | SB-SBI | 12-PO | 12-SB |
|---|---|---|---|---|---|---|---|---|---|---|
| .229 | .000 | 65.05620 | 15.49960 | 80.54040 | 80.03380 | 79.77430 | -.00150 | .27680 | 14.09060 | 14.20660 |
| .230 | .000 | 65.16860 | 15.35850 | 80.55940 | 80.19240 | 79.84710 | .01580 | .39880 | 14.11660 | 14.10480 |
| .230 | .000 | 65.20610 | 15.41730 | 80.69200 | 80.29010 | 79.99270 | .01420 | .35270 | 14.12540 | 14.18390 |
| .230 | .000 | 65.14360 | 15.42510 | 80.59730 | 80.17210 | 79.87140 | .00950 | .34280 | 14.11090 | 14.16510 |
| | GRADIENT | .00000 | .00000 | .00000 | .00000 | .00000 | .00000 | .00000 | .00000 | .00000 |

RUN NO. 2113/ 0 RN/L = 1.69 GRADIENT INTERVAL = -5.00/ 5.00

| MACH | ALPHA | 27-12 | 12-ATM | 27-ATM | TBISBI | TB-SB | TB-TBI | SB-SBI | 12-PO | 12-SB |
|---|---|---|---|---|---|---|---|---|---|---|
| .248 | .000 | 76.00090 | 18.12850 | 94.16600 | 93.66560 | 93.33490 | -.00310 | .35600 | 16.70540 | 16.71760 |
| .248 | .000 | 75.98840 | 18.15200 | 94.20390 | 93.67780 | 93.33490 | .00000 | .37240 | 16.70240 | 16.73460 |
| .248 | .000 | 76.00090 | 18.14030 | 94.16600 | 93.70230 | 93.37130 | .00630 | .37410 | 16.70540 | 16.71190 |
| .248 | .000 | 75.99670 | 18.14030 | 94.17860 | 93.68190 | 93.34700 | .00100 | .36750 | 16.70440 | 16.72140 |
| | GRADIENT | .00000 | .00000 | .00000 | .00000 | .00000 | .00000 | .00000 | .00000 | .00000 |

RUN NO. 2114/ 0 RN/L = 1.80 GRADIENT INTERVAL = -5.00/ 5.00

| MACH | ALPHA | 27-12 | 12-ATM | 27-ATM | TBISBI | TB-SB | TB-TBI | SB-SBI | 12-PO | 12-SB |
|---|---|---|---|---|---|---|---|---|---|---|
| .265 | .000 | 86.93320 | 21.00040 | 107.96200 | 107.35800 | 106.99200 | .00150 | .39390 | 19.32270 | 19.32480 |
| .265 | .000 | 86.98320 | 20.94560 | 107.98100 | 107.43100 | 106.94400 | -.00470 | .50100 | 19.33470 | 19.28520 |
| .265 | .000 | 87.00810 | 20.98080 | 108.05600 | 107.48000 | 107.06500 | .00630 | .45980 | 19.34060 | 19.32480 |
| .265 | .000 | 86.97480 | 20.97560 | 107.99900 | 107.42300 | 107.00000 | .00100 | .45160 | 19.33270 | 19.31160 |
| | GRADIENT | .00000 | .00000 | .00000 | .00000 | .00000 | .00000 | .00000 | .00000 | .00000 |

OA236 (NAAL 759) CONFIGURATION 11 DATA SELECT 2 (RFM212) ( 28 JUN 79 )

REFERENCE DATA

SREF = .0000 SQ.FT. XMRP = .0000 IN. XT
LREF = .0000 INCHES YMRP = .0000 IN. YT
BREF = .0000 INCHES ZMRP = .0000 IN. ZT
SCALE = 1.0000

PARAMETRIC DATA

ALPHA = .000 BETA = .000

RUN NO. 2121/ 0 RN/L = 1.28 GRADIENT INTERVAL = -5.00/ 5.00

| MACH | ALPHA | 27-12 | 12-ATM | 27-ATM | TBISBI | TB-SB | TB-TBI | SB-SBI | 12-PO | 12-SB |
|---|---|---|---|---|---|---|---|---|---|---|
| .188 | .000 | 43.36660 | 10.08490 | 53.45990 | -.13420 | -.13340 | .00150 | .00160 | 9.35440 | 9.38240 |
| .188 | .000 | 43.26670 | 10.05350 | 53.34620 | -.13420 | -.13340 | .00000 | .00000 | 9.33270 | 9.31460 |
| .188 | .000 | 43.29170 | 10.06530 | 53.36510 | -.13420 | -.13340 | .00000 | .00000 | 9.33810 | 9.33150 |
| .188 | .000 | 43.30830 | 10.06790 | 53.39030 | -.13420 | -.13340 | .00050 | .00050 | 9.34180 | 9.34280 |
| | GRADIENT | .00000 | .00000 | .00000 | .00000 | .00000 | .00000 | .00000 | .00000 | .00000 |

RUN NO. 2122/ 0 RN/L = 1.56 GRADIENT INTERVAL = -5.00/ 5.00

| MACH | ALPHA | 27-12 | 12-ATM | 27-ATM | TBISBI | TB-SB | TB-TBI | SB-SBI | 12-PO | 12-SB |
|---|---|---|---|---|---|---|---|---|---|---|
| .230 | .000 | 65.15610 | 15.41730 | 80.57830 | -.04880 | -.04850 | .00150 | .00160 | 14.11370 | 14.20090 |
| .229 | .000 | 65.06870 | 15.34280 | 80.44560 | -.04880 | -.04850 | .00000 | -.00160 | 14.09340 | 14.09340 |
| .230 | .000 | 65.20610 | 15.26840 | 80.54040 | -.04880 | -.04850 | -.00150 | -.00330 | 14.12540 | 14.04250 |
| .229 | .000 | 65.14360 | 15.34280 | 80.52140 | -.04880 | -.04850 | .00000 | -.00110 | 14.11080 | 14.11230 |
| | GRADIENT | .00000 | .00000 | .00000 | .00000 | .00000 | .00000 | .00000 | .00000 | .00000 |

RUN NO. 2123/ 0 RN/L = 1.68 GRADIENT INTERVAL = -5.00/ 5.00

| MACH | ALPHA | 27-12 | 12-ATM | 27-ATM | TBISBI | TB-SB | TB-TBI | SB-SBI | 12-PO | 12-SB |
|---|---|---|---|---|---|---|---|---|---|---|
| .248 | .000 | 76.03840 | 18.13640 | 94.22280 | .10980 | .10910 | .00150 | .00160 | 16.71440 | 16.80810 |
| .248 | .000 | 75.98840 | 18.01490 | 94.09020 | .06100 | .06060 | -.00150 | -.00160 | 16.70240 | 16.59320 |
| .248 | .000 | 76.03840 | 18.16380 | 94.24180 | .07320 | .06060 | .00150 | .00160 | 16.71440 | 16.72320 |
| .248 | .000 | 76.02170 | 18.10500 | 94.18490 | .08130 | .07680 | .00050 | .00050 | 16.71040 | 16.70820 |
| | GRADIENT | .00000 | .00000 | .00000 | .00000 | .00000 | .00000 | .00000 | .00000 | .00000 |

RUN NO. 2124/ 0 RN/L = 1.79 GRADIENT INTERVAL = -5.00/ 5.00

| MACH | ALPHA | 27-12 | 12-ATM | 27-ATM | TBISBI | TB-SB | TB-TBI | SB-SBI | 12-PO | 12-SB |
|---|---|---|---|---|---|---|---|---|---|---|
| .264 | .000 | 86.88320 | 21.05530 | 107.94300 | .08540 | .08490 | .00150 | .00320 | 19.31070 | 19.39830 |
| .264 | .000 | 86.87070 | 20.99260 | 107.90500 | .09760 | .09700 | .00150 | .00160 | 19.30770 | 19.30780 |
| .265 | .000 | 86.88320 | 20.88290 | 107.79100 | .07320 | .07270 | -.00150 | -.00160 | 19.31070 | 19.20040 |
| .264 | .000 | 86.87900 | 20.97690 | 107.87900 | .08540 | .08490 | .00050 | .00100 | 19.30970 | 19.30220 |
| | GRADIENT | .00000 | .00000 | .00000 | .00000 | .00000 | .00000 | .00000 | .00000 | .00000 |

OA236 (NAAL 759) CONFIGURATION 12 DATA SELECT 2 (RFM213) ( 28 JUN 79 )

REFERENCE DATA

SREF = .0000 SQ.FT. XMRP = .0000 IN. XT
LREF = .0000 INCHES YMRP = .0000 IN. YT
BREF = .0000 INCHES ZMRP = .0000 IN. ZT
SCALE = 1.0000

PARAMETRIC DATA

ALPHA = .000 BETA = .000

RUN NO. 2131/ 0 RN/L = 1.27 GRADIENT INTERVAL = -5.00/ 5.00

| MACH | ALPHA | 27-12 | 12-ATM | 27-ATM | TBISBI | TB-SB | TB-TBI | SB-SBI | 12-PO | 12-SB |
|---|---|---|---|---|---|---|---|---|---|---|
| .188 | .000 | 43.19170 | 10.15150 | 53.36510 | 52.92870 | 52.96860 | -.00150 | .00160 | 9.31640 | 9.43330 |
| .188 | .000 | 43.25420 | 10.04960 | 53.34620 | 52.86770 | 52.89580 | -.00150 | .00000 | 9.33000 | 9.31460 |
| .188 | .000 | 43.22920 | 10.01830 | 53.30830 | 52.70900 | 52.75030 | .00000 | -.00160 | 9.32460 | 9.25800 |
| .188 | .000 | 43.22500 | 10.07310 | 53.33980 | 52.83510 | 52.87150 | -.00100 | .00000 | 9.32370 | 9.33530 |
| | GRADIENT | .00000 | .00000 | .00000 | .00000 | .00000 | .00000 | .00000 | .00000 | .00000 |

RUN NO. 2132/ 0 RN/L = 1.56 GRADIENT INTERVAL = -5.00/ 5.00

| MACH | ALPHA | 27-12 | 12-ATM | 27-ATM | TBISBI | TB-SB | TB-TBI | SB-SBI | 12-PO | 12-SB |
|---|---|---|---|---|---|---|---|---|---|---|
| .229 | .000 | 64.91880 | 15.38590 | 80.33200 | 79.38700 | 79.41050 | .00150 | .00160 | 14.05900 | 14.12740 |
| .229 | .000 | 64.94370 | 15.37030 | 80.35090 | 79.39920 | 79.42260 | .00000 | .00160 | 14.06470 | 14.11610 |
| .229 | .000 | 65.04370 | 15.27230 | 80.36990 | 79.31370 | 79.33770 | .00310 | .00000 | 14.08770 | 14.00860 |
| .229 | .000 | 64.96870 | 15.34280 | 80.35090 | 79.36660 | 79.39020 | .00150 | .00100 | 14.07040 | 14.08400 |
| | GRADIENT | .00000 | .00000 | .00000 | .00000 | .00000 | .00000 | .00000 | .00000 | .00000 |

RUN NO. 2133/ 0 RN/L = 1.69 GRADIENT INTERVAL = -5.00/ 5.00

| MACH | ALPHA | 27-12 | 12-ATM | 27-ATM | TBISBI | TB-SB | TB-TBI | SB-SBI | 12-PO | 12-SB |
|---|---|---|---|---|---|---|---|---|---|---|
| .248 | .000 | 75.91350 | 17.99140 | 93.97650 | 92.81140 | 92.82550 | .00630 | .00160 | 16.68450 | 16.59320 |
| .248 | .000 | 75.87600 | 18.04620 | 93.99540 | 92.83580 | 92.84970 | .00150 | .00000 | 16.67550 | 16.53660 |
| .248 | .000 | 75.87600 | 18.12460 | 94.03330 | 92.92120 | 92.93460 | .00000 | .00000 | 16.67550 | 16.59880 |
| .248 | .000 | 75.88850 | 18.05410 | 94.00170 | 92.85610 | 92.86990 | .00260 | .00050 | 16.67850 | 16.57620 |
| | GRADIENT | .00000 | .00000 | .00000 | .00000 | .00000 | .00000 | .00000 | .00000 | .00000 |

RUN NO. 2134/ 0 RN/L = 1.78 GRADIENT INTERVAL = -5.00/ 5.00

| MACH | ALPHA | 27-12 | 12-ATM | 27-ATM | TBISBI | TB-SB | TB-TBI | SB-SBI | 12-PO | 12-SB |
|---|---|---|---|---|---|---|---|---|---|---|
| .265 | .000 | 86.87070 | 20.92210 | 107.84800 | 106.55300 | 106.54300 | -.00150 | .00000 | 19.30770 | 19.03630 |
| .265 | .000 | 86.87070 | 21.00040 | 107.86700 | 106.50400 | 106.49500 | .00310 | .00320 | 19.30770 | 19.17210 |
| .265 | .000 | 86.95820 | 20.81240 | 107.84800 | 106.45500 | 106.47000 | .00150 | -.00160 | 19.32870 | 18.99680 |
| .265 | .000 | 86.89980 | 20.91160 | 107.85400 | 106.50400 | 106.50300 | .00100 | .00050 | 19.31470 | 19.06840 |
| | GRADIENT | .00000 | .00000 | .00000 | .00000 | .00000 | .00000 | .00000 | .00000 | .00000 |

OA236 (NAAL 759) CONFIGURATION 13 DATA SELECT 2 (RFM214) ( 28 JUN 79 )

REFERENCE DATA

SREF = .0000 SQ.FT. XMRP = .0000 IN. XT
LREF = .0000 INCHES YMRP = .0000 IN. YT
BREF = .0000 INCHES ZMRP = .0000 IN. ZT
SCALE = 1.0000

PARAMETRIC DATA

ALPHA = .000 BETA = .000

RUN NO. 2141/ 0 RN/L = 1.27 GRADIENT INTERVAL = -5.00/ 5.00

| MACH | ALPHA | 27-12 | 12-ATM | 27-ATM | TBISBI | TB-SB | TB-TBI | SB-SBI | 12-PO | 12-SB |
|---|---|---|---|---|---|---|---|---|---|---|
| .189 | .000 | 43.54150 | 10.09660 | 53.64940 | 52.90430 | 52.93220 | .00000 | .00320 | 9.39250 | 9.15050 |
| .188 | .000 | 43.40410 | 10.10840 | 53.51670 | 52.79440 | 52.81090 | -.00310 | .00320 | 9.36260 | 9.11660 |
| .188 | .000 | 43.34160 | 10.08490 | 53.42200 | 52.68460 | 52.68960 | -.00150 | .00160 | 9.34900 | 9.08830 |
| .188 | .000 | 43.42910 | 10.09660 | 53.52930 | 52.79440 | 52.81090 | -.00150 | .00270 | 9.36800 | 9.11850 |
| | GRADIENT | .00000 | .00000 | .00000 | .00000 | .00000 | .00000 | .00000 | .00000 | .00000 |

RUN NO. 2142/ 0 RN/L = 1.55 GRADIENT INTERVAL = -5.00/ 5.00

| MACH | ALPHA | 27-12 | 12-ATM | 27-ATM | TBISBI | TB-SB | TB-TBI | SB-SBI | 12-PO | 12-SB |
|---|---|---|---|---|---|---|---|---|---|---|
| .230 | .000 | 65.19360 | 15.11950 | 80.35090 | 79.17950 | 79.19210 | .00470 | .00000 | 14.12250 | 13.72580 |
| .230 | .000 | 65.30610 | 15.02940 | 80.38880 | 79.19170 | 79.21640 | .01110 | -.00490 | 14.14890 | 13.65800 |
| .230 | .000 | 65.20610 | 15.27620 | 80.48350 | 79.42360 | 79.42260 | -.00150 | .00490 | 14.12540 | 13.85030 |
| .230 | .000 | 65.23530 | 15.14170 | 80.40770 | 79.26490 | 79.27700 | .00470 | .00000 | 14.13220 | 13.74470 |
| | GRADIENT | .00000 | .00000 | .00000 | .00000 | .00000 | .00000 | .00000 | .00000 | .00000 |

RUN NO. 2143/ 0 RN/L = 1.68 GRADIENT INTERVAL = -5.00/ 5.00

| MACH | ALPHA | 27-12 | 12-ATM | 27-ATM | TBISBI | TB-SB | TB-TBI | SB-SBI | 12-PO | 12-SB |
|---|---|---|---|---|---|---|---|---|---|---|
| .248 | .000 | 76.12590 | 17.78370 | 93.97650 | 92.60390 | 92.61930 | .00630 | -.00160 | 16.73530 | 16.14070 |
| .248 | .000 | 76.07590 | 17.80330 | 93.90060 | 92.60390 | 92.60710 | .00150 | -.00160 | 16.72330 | 16.12380 |
| .248 | .000 | 76.16340 | 17.74850 | 93.97650 | 92.57950 | 92.58290 | .01110 | -.00160 | 16.74430 | 16.10680 |
| .248 | .000 | 76.12170 | 17.77850 | 93.95120 | 92.59570 | 92.60310 | .00630 | -.00160 | 16.73430 | 16.12370 |
| | GRADIENT | .00000 | .00000 | .00000 | .00000 | .00000 | .00000 | .00000 | .00000 | .00000 |

RUN NO. 2144/ 0 RN/L = 1.79 GRADIENT INTERVAL = -5.00/ 5.00

| MACH | ALPHA | 27-12 | 12-ATM | 27-ATM | TBISBI | TB-SB | TB-TBI | SB-SBI | 12-PO | 12-SB |
|---|---|---|---|---|---|---|---|---|---|---|
| .265 | .000 | 86.98320 | 20.66740 | 107.69600 | 106.04000 | 106.02200 | -.00150 | .00000 | 19.33470 | 18.57260 |
| .265 | .000 | 87.09560 | 20.51850 | 107.69600 | 106.07700 | 106.07000 | .00950 | -.00160 | 19.36160 | 18.56690 |
| .265 | .000 | 87.08310 | 20.54200 | 107.67700 | 106.08900 | 106.08200 | .00630 | -.00160 | 19.35860 | 18.58960 |
| .265 | .000 | 87.05390 | 20.57600 | 107.69000 | 106.06800 | 106.05800 | .00470 | -.00110 | 19.35160 | 18.57640 |
| | GRADIENT | .00000 | .00000 | .00000 | .00000 | .00000 | .00000 | .00000 | .00000 | .00000 |

OA236 (NAAL 759) CONFIGURATION 1 DATA SELECT 2 (RFM215) ( 28 JUN 79 )

REFERENCE DATA

SREF = .0000 SQ.FT. XMRP = .0000 IN. XT
LREF = .0000 INCHES YMRP = .0000 IN. YT
BREF = .0000 INCHES ZMRP = .0000 IN. ZT
SCALE = 1.0000

PARAMETRIC DATA

ALPHA = .000 BETA = .000

RUN NO. 2151/ 0 RN/L = 1.27 GRADIENT INTERVAL = -5.00/ 5.00

| MACH | ALPHA | 27-12 | 12-ATM | 27-ATM | TBISBI | TB-SB | TB-TBI | SB-SBI | 12-PO | 12-SB |
|---|---|---|---|---|---|---|---|---|---|---|
| .188 | .000 | 43.41660 | 10.13580 | 53.55460 | 53.00190 | 53.00500 | -.00630 | .00160 | 9.36530 | 9.34850 |
| .188 | .000 | 43.39160 | 10.12010 | 53.49780 | 52.95310 | 52.98070 | -.00470 | .00000 | 9.35990 | 9.34850 |
| .188 | .000 | 43.19170 | 10.14760 | 53.34620 | 52.69680 | 52.71390 | -.00950 | -.00160 | 9.31640 | 9.31460 |
| .188 | .000 | 43.33330 | 10.13450 | 53.46620 | 52.88390 | 52.89980 | -.00680 | .00000 | 9.34720 | 9.33720 |
| | GRADIENT | .00000 | .00000 | .00000 | .00000 | .00000 | .00000 | .00000 | .00000 | .00000 |

RUN NO. 2152/ 0 RN/L = 1.55 GRADIENT INTERVAL = -5.00/ 5.00

| MACH | ALPHA | 27-12 | 12-ATM | 27-ATM | TBISBI | TB-SB | TB-TBI | SB-SBI | 12-PO | 12-SB |
|---|---|---|---|---|---|---|---|---|---|---|
| .230 | .000 | 65.24360 | 15.23700 | 80.55940 | 79.99720 | 80.01690 | .01580 | -.00160 | 14.13420 | 14.37060 |
| .230 | .000 | 65.20610 | 15.35460 | 80.59730 | 79.89950 | 79.89560 | -.00310 | .00820 | 14.12540 | 14.33100 |
| .230 | .000 | 65.19360 | 15.26840 | 80.54040 | 79.91170 | 79.93200 | .01420 | .00160 | 14.12250 | 14.31970 |
| .230 | .000 | 65.21440 | 15.28670 | 80.56570 | 79.93610 | 79.94820 | .00890 | .00270 | 14.12730 | 14.34040 |
| | GRADIENT | .00000 | .00000 | .00000 | .00000 | .00000 | .00000 | .00000 | .00000 | .00000 |

RUN NO. 2153/ 0 RN/L = 1.67 GRADIENT INTERVAL = -5.00/ 5.00

| MACH | ALPHA | 27-12 | 12-ATM | 27-ATM | TBISBI | TB-SB | TB-TBI | SB-SBI | 12-PO | 12-SB |
|---|---|---|---|---|---|---|---|---|---|---|
| .248 | .000 | 76.02590 | 17.96400 | 94.03330 | 93.36050 | 93.34700 | -.00150 | .00650 | 16.71140 | 16.89290 |
| .248 | .000 | 75.98840 | 18.05020 | 94.07120 | 93.28730 | 93.27430 | .00000 | .01150 | 16.70240 | 16.85330 |
| .248 | .000 | 76.03840 | 17.99530 | 94.05230 | 93.39720 | 93.39550 | .00790 | .00490 | 16.71440 | 16.89290 |
| .248 | .000 | 76.01760 | 18.00310 | 94.05230 | 93.34830 | 93.33890 | .00210 | .00760 | 16.70940 | 16.87970 |
| | GRADIENT | .00000 | .00000 | .00000 | .00000 | .00000 | .00000 | .00000 | .00000 | .00000 |

RUN NO. 2154/ 0 RN/L = 1.78 GRADIENT INTERVAL = -5.00/ 5.00

| MACH | ALPHA | 27-12 | 12-ATM | 27-ATM | TBISBI | TB-SB | TB-TBI | SB-SBI | 12-PO | 12-SB |
|---|---|---|---|---|---|---|---|---|---|---|
| .265 | .000 | 87.02060 | 21.01220 | 108.05600 | 107.06500 | 107.02800 | -.00790 | .01810 | 19.34360 | 19.48880 |
| .265 | .000 | 86.92070 | 20.85940 | 107.82900 | 106.95500 | 106.93100 | -.00790 | .00000 | 19.31970 | 19.52270 |
| .265 | .000 | 86.93320 | 20.86720 | 107.82900 | 106.93100 | 106.90700 | -.00310 | .01150 | 19.32270 | 19.48880 |
| .265 | .000 | 86.95920 | 20.91290 | 107.90500 | 106.98400 | 106.95600 | -.00630 | .00980 | 19.32870 | 19.50010 |
| | GRADIENT | .00000 | .00000 | .00000 | .00000 | .00000 | .00000 | .00000 | .00000 | .00000 |

OA236 (NAAL 759) CONFIGURATION 3 DATA SELECT 2 (RFM216) ( 28 JUN 79 )

REFERENCE DATA

SREF = .0000 SQ.FT. XMRP = .0000 IN. XT
LREF = .0000 INCHES YMRP = .0000 IN. YT
BREF = .0000 INCHES ZMRP = .0000 IN. ZT
SCALE = 1.0000

PARAMETRIC DATA

ALPHA = .000 BETA = .000

RUN NO. 2161/ 0 RN/L = 1.26 GRADIENT INTERVAL = -5.00/ 5.00

| MACH | ALPHA | 27-12 | 12-ATM | 27-ATM | TBISBI | TB-SB | TB-TBI | SB-SBI | 12-PO | 12-SB |
|---|---|---|---|---|---|---|---|---|---|---|
| .188 | .000 | 43.41660 | 9.97130 | 53.42200 | 53.67310 | 53.69630 | .00630 | .00650 | 9.36530 | 10.03280 |
| .188 | .000 | 43.41660 | 10.04960 | 53.45990 | 53.67310 | 53.68420 | .00470 | .00650 | 9.36530 | 10.03280 |
| .188 | .000 | 43.34160 | 10.07310 | 53.42200 | 53.58770 | 53.58720 | -.00470 | .00320 | 9.34900 | 10.01580 |
| .188 | .000 | 43.39160 | 10.03130 | 53.43460 | 53.64460 | 53.65590 | .00210 | .00540 | 9.35990 | 10.02710 |
| | GRADIENT | .00000 | .00000 | .00000 | .00000 | .00000 | .00000 | .00000 | .00000 | .00000 |

RUN NO. 2162/ 0 RN/L = 1.54 GRADIENT INTERVAL = -5.00/ 5.00

| MACH | ALPHA | 27-12 | 12-ATM | 27-ATM | TBISBI | TB-SB | TB-TBI | SB-SBI | 12-PO | 12-SB |
|---|---|---|---|---|---|---|---|---|---|---|
| .229 | .000 | 65.04370 | 15.34280 | 80.40780 | 80.70500 | 80.72040 | .00470 | .00320 | 14.08770 | 15.30370 |
| .230 | .000 | 65.20610 | 15.25660 | 80.50250 | 80.88800 | 80.90240 | .00950 | -.00330 | 14.12540 | 15.35460 |
| .230 | .000 | 65.23110 | 15.40940 | 80.67310 | 80.92470 | 80.91450 | .00150 | .00490 | 14.13120 | 15.34900 |
| .230 | .000 | 65.16030 | 15.33630 | 80.52780 | 80.83920 | 80.84570 | .00520 | .00160 | 14.11480 | 15.33580 |
| | GRADIENT | .00000 | .00000 | .00000 | .00000 | .00000 | .00000 | .00000 | .00000 | .00000 |

RUN NO. 2163/ 0 RN/L = 1.66 GRADIENT INTERVAL = -5.00/ 5.00

| MACH | ALPHA | 27-12 | 12-ATM | 27-ATM | TBISBI | TB-SB | TB-TBI | SB-SBI | 12-PO | 12-SB |
|---|---|---|---|---|---|---|---|---|---|---|
| .248 | .000 | 76.06340 | 18.08150 | 94.18490 | 94.53210 | 94.51140 | .00310 | .01480 | 16.72030 | 18.01270 |
| .248 | .000 | 76.05090 | 18.01100 | 94.12800 | 94.49550 | 94.49930 | .00790 | -.00160 | 16.71730 | 18.04100 |
| .248 | .000 | 76.00090 | 18.13640 | 94.14700 | 94.42230 | 94.40230 | -.00470 | .00160 | 16.70540 | 18.02400 |
| .248 | .000 | 76.03840 | 18.07630 | 94.15330 | 94.48330 | 94.47100 | .00210 | .00490 | 16.71430 | 18.02590 |
| | GRADIENT | .00000 | .00000 | .00000 | .00000 | .00000 | .00000 | .00000 | .00000 | .00000 |

RUN NO. 2164/ 0 RN/L = 1.77 GRADIENT INTERVAL = -5.00/ 5.00

| MACH | ALPHA | 27-12 | 12-ATM | 27-ATM | TBISBI | TB-SB | TB-TBI | SB-SBI | 12-PO | 12-SB |
|---|---|---|---|---|---|---|---|---|---|---|
| .265 | .000 | 87.14560 | 20.90640 | 108.15100 | 108.43200 | 108.42300 | -.00470 | -.01480 | 19.37350 | 20.84610 |
| .265 | .000 | 86.85820 | 20.94560 | 107.79100 | 108.02900 | 107.98700 | -.00790 | .01480 | 19.30470 | 20.71040 |
| .265 | .000 | 86.97070 | 20.93380 | 107.94300 | 108.22500 | 108.19300 | .00790 | .01640 | 19.33170 | 20.76130 |
| .265 | .000 | 86.99150 | 20.92860 | 107.96200 | 108.22900 | 108.20100 | -.00150 | .00540 | 19.33660 | 20.77260 |
| | GRADIENT | .00000 | .00000 | .00000 | .00000 | .00000 | .00000 | .00000 | .00000 | .00000 |

OA236 (NAAL 759) CONFIGURATION 14 DATA SELECT 2 (RFM217) ( 28 JUN 79 )

REFERENCE DATA

SREF = .0000 SQ.FT. XMRP = .0000 IN. XT
LREF = .0000 INCHES YMRP = .0000 IN. YT
BREF = .0000 INCHES ZMRP = .0000 IN. ZT
SCALE = 1.0000

PARAMETRIC DATA

ALPHA = .000 BETA = .000

RUN NO. 2171/ 0 RN/L = 1.28 GRADIENT INTERVAL = -5.00/ 5.00

| MACH | ALPHA | 27-12 | 12-ATM | 27-ATM | TBISBI | TB-SB | TB-TBI | SB-SBI | 12-PO | 12-SB |
|---|---|---|---|---|---|---|---|---|---|---|
| .188 | .000 | 43.40410 | 9.99080 | 53.42200 | 53.73410 | 53.75700 | .00000 | .00980 | 9.36260 | 10.06110 |
| .188 | .000 | 43.37910 | 9.92420 | 53.34620 | 53.69750 | 53.73270 | .00630 | .00000 | 9.35720 | 10.06670 |
| .188 | .000 | 43.42910 | 9.94780 | 53.40300 | 53.74630 | 53.78130 | .00150 | .00490 | 9.36800 | 10.06670 |
| .188 | .000 | 43.40410 | 9.95430 | 53.39030 | 53.72600 | 53.75700 | .00260 | .00490 | 9.36260 | 10.06480 |
| | GRADIENT | .00000 | .00000 | .00000 | .00000 | .00000 | .00000 | .00000 | .00000 | .00000 |

RUN NO. 2172/ 0 RN/L = 1.57 GRADIENT INTERVAL = -5.00/ 5.00

| MACH | ALPHA | 27-12 | 12-ATM | 27-ATM | TBISBI | TB-SB | TB-TBI | SB-SBI | 12-PO | 12-SB |
|---|---|---|---|---|---|---|---|---|---|---|
| .229 | .000 | 65.13120 | 15.29580 | 80.44560 | 80.77820 | 80.76890 | -.00470 | .01150 | 14.10790 | 15.24150 |
| .229 | .000 | 65.11870 | 15.10780 | 80.29400 | 80.74160 | 80.76890 | .00950 | -.00330 | 14.10500 | 15.25850 |
| .230 | .000 | 65.15610 | 15.20960 | 80.38880 | 80.80260 | 80.80530 | -.00630 | .00490 | 14.11370 | 15.26980 |
| .229 | .000 | 65.13530 | 15.20440 | 80.37620 | 80.77410 | 80.78100 | -.00050 | .00430 | 14.10890 | 15.25660 |
| | GRADIENT | .00000 | .00000 | .00000 | .00000 | .00000 | .00000 | .00000 | .00000 | .00000 |

RUN NO. 2173/ 0 RN/L = 1.69 GRADIENT INTERVAL = -5.00/ 5.00

| MACH | ALPHA | 27-12 | 12-ATM | 27-ATM | TBISBI | TB-SB | TB-TBI | SB-SBI | 12-PO | 12-SB |
|---|---|---|---|---|---|---|---|---|---|---|
| .248 | .000 | 75.98840 | 17.90130 | 93.93850 | 94.30020 | 94.29310 | -.00950 | .00650 | 16.70240 | 17.84870 |
| .248 | .000 | 76.03840 | 18.02670 | 94.10910 | 94.36130 | 94.35380 | -.01270 | -.00490 | 16.71440 | 17.91090 |
| .248 | .000 | 75.93850 | 17.96790 | 93.97650 | 94.23920 | 94.23250 | -.00470 | .00320 | 16.69040 | 17.85440 |
| .248 | .000 | 75.98840 | 17.96530 | 94.00800 | 94.30020 | 94.29310 | -.00900 | .00160 | 16.70240 | 17.87130 |
| | GRADIENT | .00000 | .00000 | .00000 | .00000 | .00000 | .00000 | .00000 | .00000 | .00000 |

RUN NO. 2174/ 0 RN/L = 1.80 GRADIENT INTERVAL = -5.00/ 5.00

| MACH | ALPHA | 27-12 | 12-ATM | 27-ATM | TBISBI | TB-SB | TB-TBI | SB-SBI | 12-PO | 12-SB |
|---|---|---|---|---|---|---|---|---|---|---|
| .265 | .000 | 86.90820 | 20.73400 | 107.69600 | 107.87100 | 107.84100 | -.01270 | .00650 | 19.31670 | 20.45020 |
| .265 | .000 | 86.99560 | 20.45970 | 107.58300 | 108.04100 | 108.09600 | .01900 | -.00660 | 19.33760 | 20.54640 |
| .265 | .000 | 86.97070 | 20.54200 | 107.60200 | 108.00500 | 108.02300 | .01420 | -.01150 | 19.33170 | 20.52940 |
| .265 | .000 | 86.95820 | 20.57860 | 107.62700 | 107.97200 | 107.98700 | .00680 | -.00380 | 19.32870 | 20.50860 |
| | GRADIENT | .00000 | .00000 | .00000 | .00000 | .00000 | .00000 | .00000 | .00000 | .00000 |

OA236 (NAAL 759) CONFIGURATION 1 DATA SELECT 2 (SFM201) ( 28 JUN 79 )

REFERENCE DATA

SREF = .0000 SQ.FT. XMRP = .0000 IN. XT
LREF = .0000 INCHES YMRP = .0000 IN. YT
BREF = .0000 INCHES ZMRP = .0000 IN. ZT
SCALE = 1.0000

PARAMETRIC DATA

ALPHA = .000 BETA = .000

RUN NO. 2011/ 0 RN/L = 1.29 GRADIENT INTERVAL = -5.00/ 5.00

| MACH | ALPHA | TBTO/Q | QBI/QO | QB/QO | SBPO/Q | SBSBIQ | TBTBIQ | 2712/Q | 12SBIQ | 12SB/Q | P12POQ |
|---|---|---|---|---|---|---|---|---|---|---|---|
| .188 | .000 | .00030 | .99770 | .99820 | .00160 | .00000 | -.00010 | .82590 | .17690 | .17640 | .17810 |
| .188 | .000 | .00030 | .99790 | .99820 | .00170 | .00000 | .00000 | .82580 | .17700 | .17640 | .17810 |
| .188 | .000 | .00040 | .99830 | .99900 | .00100 | -.00020 | .00000 | .82590 | .17730 | .17700 | .17810 |
| .188 | .000 | .00030 | .99800 | .99850 | .00140 | .00000 | -.00010 | .82590 | .17700 | .17660 | .17810 |
| | GRADIENT | .00000 | .00000 | .00000 | .00000 | .00000 | .00000 | .00000 | .00000 | .00000 | .00000 |

RUN NO. 2012/ 0 RN/L = 1.58 GRADIENT INTERVAL = -5.00/ 5.00

| MACH | ALPHA | TBTO/Q | QBI/QO | QB/QO | SBPO/Q | SBSBIQ | TBTBIQ | 2712/Q | 12SBIQ | 12SB/Q | P12POQ |
|---|---|---|---|---|---|---|---|---|---|---|---|
| .229 | .000 | .00070 | 1.00170 | 1.00180 | -.00130 | .00000 | .00000 | .82890 | .18190 | .18090 | .17950 |
| .230 | .000 | .00060 | 1.00120 | 1.00130 | -.00090 | .00010 | .00000 | .82890 | .18160 | .18050 | .17950 |
| .229 | .000 | .00020 | 1.00130 | 1.00140 | -.00140 | .00000 | .00000 | .82890 | .18210 | .18100 | .17950 |
| .230 | .000 | .00050 | 1.00140 | 1.00150 | -.00120 | .00000 | .00000 | .82890 | .18190 | .18080 | .17950 |
| | GRADIENT | .00000 | .00000 | .00000 | .00000 | .00000 | .00000 | .00000 | .00000 | .00000 | .00000 |

RUN NO. 2013/ 0 RN/L = 1.70 GRADIENT INTERVAL = -5.00/ 5.00

| MACH | ALPHA | TBTO/Q | QBI/QO | QB/QO | SBPO/Q | SBSBIQ | TBTBIQ | 2712/Q | 12SBIQ | 12SB/Q | P12POQ |
|---|---|---|---|---|---|---|---|---|---|---|---|
| .248 | .000 | .00030 | 1.00100 | 1.00090 | -.00080 | .00000 | .00000 | .82850 | .18350 | .18300 | .18210 |
| .248 | .000 | .00000 | 1.00050 | 1.00040 | -.00070 | .00000 | .00000 | .82850 | .18350 | .18290 | .18210 |
| .248 | .000 | .00070 | 1.00110 | 1.00120 | -.00070 | .00000 | .00010 | .82850 | .18340 | .18267 | .18210 |
| .248 | .000 | .00030 | 1.00090 | 1.00080 | -.00070 | .00000 | .00000 | .82850 | .18350 | .18290 | .18210 |
| | GRADIENT | .00000 | .00000 | .00000 | .00000 | .00000 | .00000 | .00000 | .00000 | .00000 | .00000 |

RUN NO. 2014/ 0 RN/L = 1.81 GRADIENT INTERVAL = -5.00/ 5.00

| MACH | ALPHA | TBTO/Q | QBI/QO | QB/QO | SBPO/Q | SBSBIQ | TBTBIQ | 2712/Q | 12SBIQ | 12SB/Q | P12POQ |
|---|---|---|---|---|---|---|---|---|---|---|---|
| .265 | .000 | .00040 | 1.00070 | 1.00030 | -.00010 | .00010 | .00000 | .82860 | .18470 | .18440 | .18420 |
| .265 | .000 | .00050 | 1.00110 | 1.00100 | -.00070 | .00000 | .00000 | .82860 | .18510 | .18490 | .18420 |
| .265 | .000 | .00000 | 1.00080 | 1.00080 | -.00090 | .00000 | .00000 | .82860 | .18530 | .18510 | .18420 |
| .265 | .000 | .00030 | 1.00080 | 1.00070 | -.00060 | .00000 | .00000 | .82860 | .18500 | .18480 | .18420 |
| | GRADIENT | .00000 | .00000 | .00000 | .00000 | .00000 | .00000 | .00000 | .00000 | .00000 | .00000 |

OA236 (NAAL 759) CONFIGURATION 2 DATA SELECT 2 (SFM202) ( 28 JUN 79 )

REFERENCE DATA

SREF = .0000 SQ.FT. XMRP = .0000 IN. XT
LREF = .0000 INCHES YMRP = .0000 IN. YT
BREF = .0000 INCHES ZMRP = .0000 IN. ZT
SCALE = 1.0000

PARAMETRIC DATA

ALPHA = .000 BETA = .000

RUN NO. 2021/ 0 RN/L = 1.28 GRADIENT INTERVAL = -5.00/ 5.00

| MACH | ALPHA | TBTO/Q | QBI/QO | QB/QO | SBPO/Q | SBSBIQ | TBTBIQ | 2712/Q | 12SBIQ | 12SB/Q | P12POQ |
|---|---|---|---|---|---|---|---|---|---|---|---|
| .188 | .000 | .00010 | .98900 | .98940 | .01030 | .00000 | .00000 | .82580 | .16830 | .16770 | .17810 |
| .188 | .000 | .00020 | .98830 | .98890 | .01100 | .00000 | .00000 | .82580 | .16770 | .16710 | .17810 |
| .187 | .000 | -.00010 | .98850 | .98910 | .01030 | .00000 | .00000 | .82580 | .16830 | .16770 | .17810 |
| .188 | .000 | .00000 | .98860 | .98910 | .01050 | .00000 | .00000 | .82580 | .16810 | .16750 | .17810 |
| | GRADIENT | .00000 | .00000 | .00000 | .00000 | .00000 | .00000 | .00000 | .00000 | .00000 | .00000 |

RUN NO. 2022/ 0 RN/L = 1.57 GRADIENT INTERVAL = -5.00/ 5.00

| MACH | ALPHA | TBTO/Q | QBI/QO | QB/QO | SBPO/Q | SBSBIQ | TBTBIQ | 2712/Q | 12SBIQ | 12SB/Q | P12POQ |
|---|---|---|---|---|---|---|---|---|---|---|---|
| .229 | .000 | .00030 | .99160 | .99180 | .00840 | .00000 | .00000 | .82890 | .17170 | .17110 | .17950 |
| .229 | .000 | -.00110 | .98800 | .98840 | .01040 | .00000 | .00000 | .82890 | .16970 | .16910 | .17950 |
| .229 | .000 | -.00020 | .98990 | .99030 | .00930 | .00000 | .00000 | .82890 | .17080 | .17020 | .17950 |
| .229 | .000 | -.00030 | .98980 | .99010 | .00940 | .00000 | .00000 | .82890 | .17070 | .17010 | .17950 |
| | GRADIENT | .00000 | .00000 | .00000 | .00000 | .00000 | .00000 | .00000 | .00000 | .00000 | .00000 |

RUN NO. 2023/ 0 RN/L = 1.69 GRADIENT INTERVAL = -5.00/ 5.00

| MACH | ALPHA | TBTO/Q | QBI/QO | QB/QO | SBPO/Q | SBSBIQ | TBTBIQ | 2712/Q | 12SBIQ | 12SB/Q | P12POQ |
|---|---|---|---|---|---|---|---|---|---|---|---|
| .248 | .000 | -.00030 | .98880 | .98880 | .01060 | .00000 | .00000 | .82850 | .17200 | .17140 | .18210 |
| .248 | .000 | .00030 | .99000 | .99010 | .01010 | .00000 | .00000 | .82850 | .17250 | .17190 | .18210 |
| .248 | .000 | -.00150 | .98630 | .98650 | .01180 | .00000 | .00000 | .82850 | .17090 | .17030 | .18210 |
| .248 | .000 | -.00050 | .98840 | .98850 | .01080 | .00000 | .00000 | .82850 | .17180 | .17120 | .18210 |
| | GRADIENT | .00000 | .00000 | .00000 | .00000 | .00000 | .00000 | .00000 | .00000 | .00000 | .00000 |

RUN NO. 2024/ 0 RN/L = 1.80 GRADIENT INTERVAL = -5.00/ 5.00

| MACH | ALPHA | TBTO/Q | QBI/QO | QB/QO | SBPO/Q | SBSBIQ | TBTBIQ | 2712/Q | 12SBIQ | 12SB/Q | P12POQ |
|---|---|---|---|---|---|---|---|---|---|---|---|
| .264 | .000 | -.00060 | .98820 | .98820 | .01100 | .00000 | .00000 | .82860 | .17370 | .17310 | .18410 |
| .264 | .000 | .00000 | .98850 | .98850 | .01130 | .00000 | .00000 | .82860 | .17340 | .17280 | .18420 |
| .264 | .000 | -.00010 | .98800 | .98810 | .01160 | .00000 | .00000 | .82860 | .17310 | .17250 | .18410 |
| .264 | .000 | -.00030 | .98830 | .98830 | .01130 | .00000 | .00000 | .82860 | .17340 | .17280 | .18410 |
| | GRADIENT | .00000 | .00000 | .00000 | .00000 | .00000 | .00000 | .00000 | .00000 | .00000 | .00000 |

OA236 (NAAL 759) CONFIGURATION 3 DATA SELECT 2 (SFM203) ( 28 JUN 79 )

REFERENCE DATA

SREF = .0000 SQ.FT. XMRP = .0000 IN. XT
LREF = .0000 INCHES YMRP = .0000 IN. YT
BREF = .0000 INCHES ZMRP = .0000 IN. ZT
SCALE = 1.0000

PARAMETRIC DATA

ALPHA = .000 BETA = .000

RUN NO. 2031/ 0 RN/L = 1.29 GRADIENT INTERVAL = -5.00/ 5.00

| MACH | ALPHA | TBTO/Q | QBI/QO | QB/QO | SBPO/Q | SBSBIQ | TBTBIQ | 2712/Q | 12SBIQ | 12SB/Q | P12POQ |
|---|---|---|---|---|---|---|---|---|---|---|---|
| .188 | .000 | -.00010 | 1.01190 | 1.01230 | -.01290 | -.00010 | .00000 | .82590 | .19340 | .19110 | .17810 |
| .188 | .000 | .00030 | 1.01190 | 1.01230 | -.01250 | .00010 | -.00010 | .82590 | .19320 | .19060 | .17810 |
| .188 | .000 | .00030 | 1.01200 | 1.01240 | -.01250 | .00000 | .00000 | .82580 | .19300 | .19070 | .17810 |
| .188 | .000 | .00010 | 1.01190 | 1.01230 | -.01260 | .00000 | .00000 | .82590 | .19320 | .19080 | .17810 |
| | GRADIENT | .00000 | .00000 | .00000 | .00000 | .00000 | .00000 | .00000 | .00000 | .00000 | .00000 |

RUN NO. 2032/ 0 RN/L = 1.56 GRADIENT INTERVAL = -5.00/ 5.00

| MACH | ALPHA | TBTO/Q | QBI/QO | QB/QO | SBPO/Q | SBSBIQ | TBTBIQ | 2712/Q | 12SBIQ | 12SB/Q | P12POQ |
|---|---|---|---|---|---|---|---|---|---|---|---|
| .230 | .000 | -.00030 | 1.01490 | 1.01490 | -.01570 | .00000 | .00000 | .82890 | .19890 | 19530 | .17950 |
| .230 | .000 | -.00010 | 1.01510 | 1.01520 | -.01580 | .00000 | .00000 | .82890 | .19890 | .19540 | .17960 |
| .229 | .000 | -.00060 | 1.01490 | 1.01460 | -.01570 | .00010 | -.00010 | .82890 | .19900 | .19530 | .17950 |
| .230 | .000 | -.00040 | 1.01500 | 1.01490 | -.01570 | .00000 | .00000 | .82890 | .19890 | .19530 | .17950 |
| | GRADIENT | .00000 | .00000 | .00000 | .00000 | .00000 | .00000 | .00000 | .00000 | .00000 | .00000 |

RUN NO. 2033/ 0 RN/L = 1.68 GRADIENT INTERVAL = -5.00/ 5.00

| MACH | ALPHA | TBTO/Q | QBI/QO | QB/QO | SBPO/Q | SBSBIQ | TBTBIQ | 2712/Q | 12SBIQ | 12SB/Q | P12POQ |
|---|---|---|---|---|---|---|---|---|---|---|---|
| .248 | .000 | .00000 | 1.01380 | 1.01380 | -.01420 | .00000 | .00000 | .82850 | .20030 | .19640 | .18210 |
| .248 | .000 | -.00030 | 1.01350 | 1.01350 | -.01430 | .00000 | .00000 | .82850 | .20040 | .19640 | .18210 |
| .248 | .000 | -.00020 | 1.01380 | 1.01370 | -.01440 | .00000 | .00000 | .82850 | .20040 | .19650 | .18210 |
| .248 | .000 | -.00010 | 1.01370 | 1.01370 | -.01430 | .00000 | .00000 | .82850 | .20030 | .19650 | .18210 |
| | GRADIENT | .00000 | .00000 | .00000 | .00000 | .00000 | .00000 | .00000 | .00000 | .00000 | .00000 |

RUN NO. 2034/ 0 RN/L = 1.79 GRADIENT INTERVAL = -5.00/ 5.00

| MACH | ALPHA | TBTO/Q | QBI/QO | QB/QO | SBPO/Q | SBSBIQ | TBTBIQ | 2712/Q | 12SBIQ | 12SB/Q | P12POQ |
|---|---|---|---|---|---|---|---|---|---|---|---|
| .265 | .000 | .00010 | 1.01330 | 1.01360 | -.01380 | -.00010 | .00020 | .82860 | .20160 | .19810 | .18420 |
| .264 | .000 | -.00010 | 1.01330 | 1.01320 | -.01380 | .00000 | .00000 | .82860 | .20160 | .19800 | .18420 |
| .264 | .000 | .00000 | 1.01360 | 1.01330 | -.01380 | .00000 | .00000 | .82860 | .20170 | .19800 | .18410 |
| .265 | .000 | .00000 | 1.01340 | 1.01330 | -.01380 | .00000 | .00010 | .82860 | .20170 | .19800 | .18420 |
| | GRADIENT | .00000 | .00000 | .00000 | .00000 | .00000 | .00000 | .00000 | .00000 | .00000 | .00000 |

OA236 (NAAL 759) CONFIGURATION 4 DATA SELECT 2 (SFM204) ( 28 JUN 79 )

REFERENCE DATA

SREF = .0000 SQ.FT. XMRP = .0000 IN. XT
LREF = .0000 INCHES YMRP = .0000 IN. YT
BREF = .0000 INCHES ZMRP = .0000 IN. ZT
SCALE = 1.0000

PARAMETRIC DATA

ALPHA = .000 BETA = .000

RUN NO. 2041/ 0 RN/L = 1.28 GRADIENT INTERVAL = -5.00/ 5.00

| MACH | ALPHA | TBTO/Q | QBI/QO | QB/QO | SBPO/Q | SBSBIQ | TBTBIQ | 2712/Q | 12SBIQ | 12SB/Q | P12POQ |
|---|---|---|---|---|---|---|---|---|---|---|---|
| .189 | .000 | .00180 | 1.00240 | 1.00240 | -.00090 | .00020 | .00000 | .82590 | .17960 | .17910 | .17810 |
| .188 | .000 | .00250 | 1.00290 | 1.00340 | -.00120 | .00000 | .00000 | .82580 | .17970 | .17940 | .17810 |
| .188 | .000 | .00280 | 1.00310 | 1.00360 | -.00110 | .00000 | .00010 | .82590 | .17960 | .17930 | .17810 |
| .188 | .000 | .00230 | 1.00280 | 1.00310 | -.00110 | .00010 | .00000 | .82590 | .17960 | .17930 | .17810 |
| | GRADIENT | .00000 | .00000 | .00000 | .00000 | .00000 | .00000 | .00000 | .00000 | .00000 | .00000 |

RUN NO. 2042/ 0 RN/L = 1.56 GRADIENT INTERVAL = -5.00/ 5.00

| MACH | ALPHA | TBTO/Q | QBI/QO | QB/QO | SBPO/Q | SBSBIQ | TBTBIQ | 2712/Q | 12SBIQ | 12SB/Q | P12POQ |
|---|---|---|---|---|---|---|---|---|---|---|---|
| .230 | .000 | .00130 | 1.00540 | 1.00510 | -.00410 | .00000 | -.00010 | .82890 | .18390 | .18370 | .17950 |
| .230 | .000 | .00210 | 1.00610 | 1.00640 | -.00450 | .00000 | .00000 | .82890 | .18420 | .18410 | .17960 |
| .230 | .000 | .00160 | 1.00540 | 1.00530 | -.00390 | .00010 | .00000 | .82890 | .18370 | .18350 | .17950 |
| .230 | .000 | .00220 | 1.00560 | 1.00540 | -.00340 | .00030 | .00010 | .82890 | .18340 | .18300 | .17950 |
| .230 | .000 | .00180 | 1.00560 | 1.00560 | -.00400 | .00010 | .00000 | .82890 | .18380 | .18360 | .17950 |
| | GRADIENT | .00000 | .00000 | .00000 | .00000 | .00000 | .00000 | .00000 | .00000 | .00000 | .00000 |

RUN NO. 2043/ 0 RN/L = 1.68 GRADIENT INTERVAL = -5.00/ 5.00

| MACH | ALPHA | TBTO/Q | QBI/QO | QB/QO | SBPO/Q | SBSBIQ | TBTBIQ | 2712/Q | 12SBIQ | 12SB/Q | P12POQ |
|---|---|---|---|---|---|---|---|---|---|---|---|
| .248 | .000 | .00230 | 1.00540 | 1.00530 | -.00330 | .00010 | .00000 | .82850 | .18560 | .18550 | .18210 |
| .248 | .000 | .00180 | 1.00490 | 1.00480 | -.00320 | .00010 | .00000 | .82850 | .18560 | .18540 | .18210 |
| .248 | .000 | .00200 | 1.00570 | 1.00550 | -.00380 | .00000 | -.00010 | .82850 | .18590 | .18590 | .18210 |
| .248 | .000 | .00200 | 1.00530 | 1.00520 | -.00340 | .00000 | .00000 | .82850 | .18570 | .18560 | .18210 |
| | GRADIENT | .00000 | .00000 | .00000 | .00000 | .00000 | .00000 | .00000 | .00000 | .00000 | .00000 |

RUN NO. 2044/ 0 RN/L = 1.79 GRADIENT INTERVAL = -5.00/ 5.00

| MACH | ALPHA | TBTO/Q | QBI/QO | QB/QO | SBPO/Q | SBSBIQ | TBTBIQ | 2712/Q | 12SBIQ | 12SB/Q | P12POQ |
|---|---|---|---|---|---|---|---|---|---|---|---|
| .265 | .000 | .00200 | 1.00540 | 1.00510 | -.00340 | .00010 | .00000 | .82860 | .18780 | .18760 | .18420 |
| .265 | .000 | .00230 | 1.00520 | 1.00490 | -.00280 | .00020 | .00000 | .82860 | .18730 | .18700 | .18420 |
| .265 | .000 | .00130 | 1.00480 | 1.00460 | -.00350 | .00000 | .00000 | .82860 | .18790 | .18770 | .18420 |
| .265 | .000 | .00190 | 1.00510 | 1.00480 | -.00320 | .00000 | .00000 | .82860 | .18770 | .18750 | .18420 |
| | GRADIENT | .00000 | .00000 | .00000 | .00000 | .00000 | .00000 | .00000 | .00000 | .00000 | .00000 |

OA236 (NAAL 759) CONFIGURATION 5 DATA SELECT 2 (SFM205) ( 28 JUN 79 )

REFERENCE DATA

SREF = .0000 SQ.FT. XMRP = .0000 IN. XT
LREF = .0000 INCHES YMRP = .0000 IN. YT
BREF = .0000 INCHES ZMRP = .0000 IN. ZT
SCALE = 1.0000

PARAMETRIC DATA

ALPHA = .000 BETA = .000

RUN NO. 2051/ 0 RN/L = 1.29 GRADIENT INTERVAL = -5.00/ 5.00

| MACH | ALPHA | TBTO/Q | QBI/QO | QB/QO | SBPO/Q | SBSBIQ | TBTBIQ | 2712/Q | 12SBIQ | 12SB/Q | P12POQ |
|---|---|---|---|---|---|---|---|---|---|---|---|
| .188 | .000 | .00290 | 1.00230 | 1.00100 | .00140 | .00160 | .00000 | .82580 | .17210 | .17660 | .17810 |
| .188 | .000 | .00330 | 1.00290 | 1.00040 | .00250 | .00310 | .00000 | .82580 | .17230 | .17550 | .17810 |
| .188 | .000 | .00330 | 1.00330 | 1.00030 | .00260 | .00340 | .00000 | .82580 | .17260 | .17550 | .17810 |
| .188 | .000 | .00320 | 1.00280 | 1.00060 | .00220 | .00270 | .00000 | .82580 | .17230 | .17590 | .17810 |
| | GRADIENT | .00000 | .00000 | .00000 | .00000 | .00000 | .00000 | .00000 | .00000 | .00000 | .00000 |

RUN NO. 2052/ 0 RN/L = 1.58 GRADIENT INTERVAL = -5.00/ 5.00

| MACH | ALPHA | TBTO/Q | QBI/QO | QB/QO | SBPO/Q | SBSBIQ | TBTBIQ | 2712/Q | 12SBIQ | 12SB/Q | P12POQ |
|---|---|---|---|---|---|---|---|---|---|---|---|
| .229 | .000 | .00270 | 1.00600 | 1.00320 | -.00070 | .00290 | .00000 | .82890 | .17670 | .18030 | .17950 |
| .229 | .000 | .00260 | 1.00590 | 1.00300 | -.00070 | .00290 | .00000 | .82890 | .17660 | .18020 | .17950 |
| .229 | .000 | .00320 | 1.00680 | 1.00320 | -.00020 | .00400 | .00030 | .82890 | .17730 | .17980 | .17950 |
| .229 | .000 | .00280 | 1.00620 | 1.00310 | -.00050 | .00330 | .00010 | .82890 | .17690 | .18010 | .17950 |
| | GRADIENT | .00000 | .00000 | .00000 | .00000 | .00000 | .00000 | .00000 | .00000 | .00000 | .00000 |

RUN NO. 2053/ 0 RN/L = 1.70 GRADIENT INTERVAL = -5.00/ 5.00

| MACH | ALPHA | TBTO/Q | QBI/QO | QB/QO | SBPO/Q | SBSBIQ | TBTBIQ | 2712/Q | 12SBIQ | 12SB/Q | P12POQ |
|---|---|---|---|---|---|---|---|---|---|---|---|
| .248 | .000 | .00250 | 1.00510 | 1.00170 | .00050 | .00330 | .00000 | .82850 | .17820 | .18150 | .18210 |
| .248 | .000 | .00290 | 1.00560 | 1.00130 | .00120 | .00450 | .00010 | .82850 | .17870 | .18080 | .18210 |
| .248 | .000 | .00270 | 1.00520 | 1.00270 | -.00020 | .00250 | .00000 | .82850 | .17820 | .18240 | .18210 |
| .248 | .000 | .00270 | 1.00530 | 1.00190 | .00050 | .00340 | .00000 | .82850 | .17840 | .18160 | .18210 |
| | GRADIENT | .00000 | .00000 | .00000 | .00000 | .00000 | .00000 | .00000 | .00000 | .00000 | .00000 |

RUN NO. 2054/ 0 RN/L = 1.81 GRADIENT INTERVAL = -5.00/ 5.00

| MACH | ALPHA | TBTO/Q | QBI/QO | QB/QO | SBPO/Q | SBSBIQ | TBTBIQ | 2712/Q | 12SBIQ | 12SB/Q | P12POQ |
|---|---|---|---|---|---|---|---|---|---|---|---|
| .265 | .000 | .00230 | 1.00490 | 1.00120 | .00080 | .00360 | .00000 | .82860 | .18020 | .18330 | .18420 |
| .264 | .000 | .00280 | 1.00530 | 1.00260 | -.00010 | .00260 | .00010 | .82860 | .18020 | .18430 | .18410 |
| .265 | .000 | .00250 | 1.00530 | 1.00120 | .00100 | .00390 | .00000 | .82860 | .18040 | .18310 | .18420 |
| .265 | .000 | .00250 | 1.00520 | 1.00220 | .00000 | .00280 | .00000 | .82860 | .18010 | .18410 | .18420 |
| .265 | .000 | .00250 | 1.00520 | 1.00180 | .00040 | .00320 | .00000 | .82860 | .18020 | .18370 | .18420 |
| | GRADIENT | .00000 | .00000 | .00000 | .00000 | .00000 | .00000 | .00000 | .00000 | .00000 | .00000 |

OA236 (NAAL 759) CONFIGURATION 6 DATA SELECT 2 (SFM206) ( 28 JUN 79 )

REFERENCE DATA

SREF = .0000 SQ.FT. XMRP = .0000 IN. XT
LREF = .0000 INCHES YMRP = .0000 IN. YT
BREF = .0000 INCHES ZMRP = .0000 IN. ZT
SCALE = 1.0000

PARAMETRIC DATA

ALPHA = .000 BETA = .000

RUN NO. 2061/ 0 RN/L = 1.29 GRADIENT INTERVAL = -5.00/ 5.00

| MACH | ALPHA | TBTO/Q | QBI/QO | QB/QO | SBPO/Q | SBSBIQ | TBTBIQ | 2712/Q | 12SBIQ | 12SB/Q | P12POQ |
|---|---|---|---|---|---|---|---|---|---|---|---|
| .188 | .000 | .00040 | 1.00250 | .99610 | .00390 | .00440 | -.00270 | .82580 | .17230 | .17410 | .17810 |
| .188 | .000 | .00000 | 1.00230 | .99480 | .00480 | .00520 | -.00290 | .82580 | .17250 | .17330 | .17810 |
| .188 | .000 | .00080 | 1.00250 | .99730 | .00310 | .00390 | -.00200 | .82580 | .17270 | .17500 | .17810 |
| .188 | .000 | .00040 | 1.00240 | .99610 | .00390 | .00450 | -.00250 | .82580 | .17250 | .17410 | .17810 |
| | GRADIENT | .00000 | .00000 | .00000 | .00000 | .00000 | .00000 | .00000 | .00000 | .00000 | .00000 |

RUN NO. 2062/ 0 RN/L = 1.57 GRADIENT INTERVAL = -5.00/ 5.00

| MACH | ALPHA | TBTO/Q | QBI/QO | QB/QO | SBPO/Q | SBSBIQ | TBTBIQ | 2712/Q | 12SBIQ | 12SB/Q | P12POQ |
|---|---|---|---|---|---|---|---|---|---|---|---|
| .229 | .000 | .00000 | 1.00620 | .99820 | .00160 | .00530 | -.00300 | .82890 | .17690 | .17790 | .17950 |
| .229 | .000 | .00000 | 1.00580 | .99740 | .00240 | .00630 | -.00260 | .82890 | .17700 | .17700 | .17950 |
| .229 | .000 | -.00020 | 1.00600 | .99760 | .00190 | .00570 | -.00310 | .82890 | .17690 | .17760 | .17950 |
| .229 | .000 | .00000 | 1.00600 | .99770 | .00200 | .00580 | -.00290 | .82890 | .17690 | .17750 | .17950 |
| | GRADIENT | .00000 | .00000 | .00000 | .00000 | .00000 | .00000 | .00000 | .00000 | .00000 | .00000 |

RUN NO. 2063/ 0 RN/L = 1.70 GRADIENT INTERVAL = -5.00/ 5.00

| MACH | ALPHA | TBTO/Q | QBI/QO | QB/QO | SBPO/Q | SBSBIQ | TBTBIQ | 2712/Q | 12SBIQ | 12SB/Q | P12POQ |
|---|---|---|---|---|---|---|---|---|---|---|---|
| .248 | .000 | .00050 | 1.00520 | .99970 | .00050 | .00320 | -.00250 | .82850 | .17830 | .18160 | .18210 |
| .248 | .000 | .00050 | 1.00470 | .99780 | .00240 | .00510 | -.00190 | .82850 | .17830 | .17960 | .18210 |
| .248 | .000 | .00000 | 1.00440 | .99730 | .00230 | .00490 | -.00250 | .82850 | .17820 | .17970 | .18210 |
| .248 | .000 | .00030 | 1.00480 | .99830 | .00170 | .00440 | -.00230 | .82850 | .17830 | .18030 | .18210 |
| | GRADIENT | .00000 | .00000 | .00000 | .00000 | .00000 | .00000 | .00000 | .00000 | .00000 | .00000 |

RUN NO. 2064/ 0 RN/L = 1.81 GRADIENT INTERVAL = -5.00/ 5.00

| MACH | ALPHA | TBTO/Q | QBI/QO | QB/QO | SBPO/Q | SBSBIQ | TBTBIQ | 2712/Q | 12SBIQ | 12SB/Q | P12POQ |
|---|---|---|---|---|---|---|---|---|---|---|---|
| .264 | .000 | .00030 | 1.00490 | .99680 | .00330 | .00630 | -.00180 | .82860 | .18060 | .18080 | .18410 |
| .264 | .000 | .00050 | 1.00450 | .99800 | .00230 | .00460 | -.00200 | .82860 | .17990 | .18180 | .18410 |
| .265 | .000 | .00030 | 1.00520 | .99700 | .00300 | .00560 | -.00270 | .82860 | .18010 | .18110 | .18410 |
| .264 | .000 | .00040 | 1.00490 | .99730 | .00280 | .00550 | -.00220 | .82860 | .18020 | .18120 | .18410 |
| | GRADIENT | .00000 | .00000 | .00000 | .00000 | .00000 | .00000 | .00000 | .00000 | .00000 | .00000 |

OA236 (NAAL 759) CONFIGURATION 7 DATA SELECT 2 (SFM207) ( 28 JUN 79 )

REFERENCE DATA

SREF = .0000 SQ.FT. XMRP = .0000 IN. XT
LREF = .0000 INCHES YMRP = .0000 IN. YT
BREF = .0000 INCHES ZMRP = .0000 IN. ZT
SCALE = 1.0000

PARAMETRIC DATA

ALPHA = .000 BETA = .000

RUN NO. 2071/ 0 RN/L = 1.28 GRADIENT INTERVAL = -5.00/ 5.00

| MACH | ALPHA | TBTO/Q | QBI/QO | QB/QO | SBPO/Q | SBSBIQ | TBTBIQ | 2712/Q | 12SBIQ | 12SB/Q | P12POQ |
|---|---|---|---|---|---|---|---|---|---|---|---|
| .188 | .000 | -.00070 | 1.00320 | .99680 | .00200 | .00300 | -.00370 | .82590 | .17520 | .17610 | .17810 |
| .188 | .000 | .00100 | 1.00290 | 1.00130 | -.00070 | .00030 | -.00180 | .82590 | .17520 | .17880 | .17810 |
| .188 | .000 | .00060 | 1.00250 | .99960 | .00060 | .00120 | -.00220 | .82580 | .17490 | .17750 | .17810 |
| .188 | .000 | .00030 | 1.00290 | .99930 | .00060 | .00150 | -.00260 | .82590 | .17510 | .17750 | .17810 |
| | GRADIENT | .00000 | .00000 | .00000 | .00000 | .00000 | .00000 | .00000 | .00000 | .00000 | .00000 |

RUN NO. 2072/ 0 RN/L = 1.56 GRADIENT INTERVAL = -5.00/ 5.00

| MACH | ALPHA | TBTO/Q | QBI/QO | QB/QO | SBPO/Q | SBSBIQ | TBTBIQ | 2712/Q | 12SBIQ | 12SB/Q | P12POQ |
|---|---|---|---|---|---|---|---|---|---|---|---|
| .229 | .000 | -.00100 | 1.00600 | .99790 | .00080 | .00460 | -.00360 | .82890 | .17950 | .17870 | .17950 |
| .229 | .000 | -.00070 | 1.00550 | .99950 | -.00040 | .00320 | -.00290 | .82890 | .17940 | .18000 | .17950 |
| .229 | .000 | -.00050 | 1.00530 | .99900 | .00010 | .00380 | -.00250 | .82890 | .17960 | .17940 | .17950 |
| .229 | .000 | -.00070 | 1.00560 | .99880 | .00010 | .00390 | -.00300 | .82890 | .17950 | .17940 | .17950 |
| | GRADIENT | .00000 | .00000 | .00000 | .00000 | .00000 | .00000 | .00000 | .00000 | .00000 | .00000 |

RUN NO. 2073/ 0 RN/L = 1.68 GRADIENT INTERVAL = -5.00/ 5.00

| MACH | ALPHA | TBTO/Q | QBI/QO | QB/QO | SBPO/Q | SBSBIQ | TBTBIQ | 2712/Q | 12SBIQ | 12SB/Q | P12POQ |
|---|---|---|---|---|---|---|---|---|---|---|---|
| .248 | .000 | .00000 | 1.00490 | .99940 | .00020 | .00350 | -.00210 | .82850 | .18220 | .18180 | .18210 |
| .248 | .000 | .00010 | 1.00500 | .99890 | .00090 | .00400 | -.00190 | .82850 | .18210 | .18110 | .18210 |
| .248 | .000 | .00000 | 1.00470 | .99900 | .00070 | .00370 | -.00210 | .82850 | .18180 | .18130 | .18210 |
| .248 | .000 | .00000 | 1.00490 | .99910 | .00060 | .00370 | -.00210 | .82850 | .18200 | .18140 | .18210 |
| | GRADIENT | .00000 | .00000 | .00000 | .00000 | .00000 | .00000 | .00000 | .00000 | .00000 | .00000 |

RUN NO. 2074/ 0 RN/L = 1.79 GRADIENT INTERVAL = -5.00/ 5.00

| MACH | ALPHA | TBTO/Q | QBI/QO | QB/QO | SBPO/Q | SBSBIQ | TBTBIQ | 2712/Q | 12SBIQ | 12SB/Q | P12POQ |
|---|---|---|---|---|---|---|---|---|---|---|---|
| .264 | .000 | -.00050 | 1.00460 | .99720 | .00190 | .00440 | -.00290 | .82860 | .18140 | .18220 | .18410 |
| .264 | .000 | -.00010 | 1.00520 | .99770 | .00190 | .00490 | -.00250 | .82860 | .18180 | .18220 | .18410 |
| .264 | .000 | .00000 | 1.00460 | .99820 | .00140 | .00420 | -.00210 | .82860 | .18160 | .18270 | .18410 |
| .264 | .000 | -.00020 | 1.00480 | .99770 | .00170 | .00450 | -.00250 | .82860 | .18160 | .18230 | .18410 |
| | GRADIENT | .00000 | .00000 | .00000 | .00000 | .00000 | .00000 | .00000 | .00000 | .00000 | .00000 |

OA236 (NAAL 759) CONFIGURATION 8 DATA SELECT 2 (SFM208) ( 28 JUN 79 )

REFERENCE DATA

SREF = .0000 SQ.FT. XMRP = .0000 IN. XT
LREF = .0000 INCHES YMRP = .0000 IN. YT
BREF = .0000 INCHES ZMRP = .0000 IN. ZT
SCALE = 1.0000

PARAMETRIC DATA

ALPHA = .000 BETA = .000

RUN NO. 2081/ 0 RN/L = 1.28 GRADIENT INTERVAL = -5.00/ 5.00

| MACH | ALPHA | TBTO/Q | QBI/QO | QB/QO | SBPO/Q | SBSBIQ | TBTBIQ | 2712/Q | 12SBIQ | 12SB/Q | P12POQ |
|---|---|---|---|---|---|---|---|---|---|---|---|
| .188 | .000 | .00230 | 1.00340 | 1.00230 | -.00040 | .00120 | .00000 | .82580 | .17680 | .17850 | .17810 |
| .188 | .000 | .00250 | 1.00340 | 1.00070 | .00140 | .00300 | .00000 | .82580 | .17660 | .17660 | .17810 |
| .188 | .000 | .00250 | 1.00320 | 1.00120 | .00090 | .00250 | .00010 | .82580 | .17650 | .17710 | .17810 |
| .188 | .000 | .00240 | 1.00330 | 1.00140 | .00060 | .00220 | .00000 | .82580 | .17660 | .17740 | .17810 |
| | GRADIENT | .00000 | .00000 | .00000 | .00000 | .00000 | .00000 | .00000 | .00000 | .00000 | .00000 |

RUN NO. 2082/ 0 RN/L = 1.56 GRADIENT INTERVAL = -5.00/ 5.00

| MACH | ALPHA | TBTO/Q | QBI/QO | QB/QO | SBPO/Q | SBSBIQ | TBTBIQ | 2712/Q | 12SBIQ | 12SB/Q | P12POQ |
|---|---|---|---|---|---|---|---|---|---|---|---|
| .229 | .000 | .00270 | 1.00700 | 1.00430 | -.00190 | .00280 | .00000 | .82890 | .18100 | .18150 | .17950 |
| .230 | .000 | .00220 | 1.00650 | 1.00480 | -.00280 | .00200 | .00010 | .82890 | .18100 | .18240 | .17950 |
| .229 | .000 | .00170 | 1.00590 | 1.00540 | -.00390 | .00040 | -.00010 | .82890 | .18060 | .18340 | .17950 |
| .229 | .000 | .00220 | 1.00650 | 1.00480 | -.00290 | .00180 | .00000 | .82890 | .18090 | .18240 | .17950 |
| | GRADIENT | .00000 | .00000 | .00000 | .00000 | .00000 | .00000 | .00000 | .00000 | .00000 | .00000 |

RUN NO. 2083/ 0 RN/L = 1.68 GRADIENT INTERVAL = -5.00/ 5.00

| MACH | ALPHA | TBTO/Q | QBI/QO | QB/QO | SBPO/Q | SBSBIQ | TBTBIQ | 2712/Q | 12SBIQ | 12SB/Q | P12POQ |
|---|---|---|---|---|---|---|---|---|---|---|---|
| .248 | .000 | .00180 | 1.00530 | 1.00340 | -.00180 | .00160 | .00000 | .82850 | .18210 | .18390 | .18210 |
| .248 | .000 | .00270 | 1.00620 | 1.00280 | -.00030 | .00350 | .00010 | .82850 | .18270 | .18250 | .18210 |
| .248 | .000 | .00230 | 1.00600 | 1.00320 | -.00120 | .00270 | .00010 | .82850 | .18260 | .18330 | .18210 |
| .248 | .000 | .00230 | 1.00580 | 1.00310 | -.00110 | .00260 | .00000 | .82850 | .18250 | .18320 | .18210 |
| | GRADIENT | .00000 | .00000 | .00000 | .00000 | .00000 | .00000 | .00000 | .00000 | .00000 | .00000 |

RUN NO. 2084/ 0 RN/L = 1.79 GRADIENT INTERVAL = -5.00/ 5.00

| MACH | ALPHA | TBTO/Q | QBI/QO | QB/QO | SBPO/Q | SBSBIQ | TBTBIQ | 2712/Q | 12SBIQ | 12SB/Q | P12POQ |
|---|---|---|---|---|---|---|---|---|---|---|---|
| .265 | .000 | .00230 | 1.00580 | 1.00350 | -.00150 | .00210 | .00000 | .82860 | .18430 | .18560 | .18410 |
| .265 | .000 | .00220 | 1.00580 | 1.00290 | -.00090 | .00280 | .00010 | .82860 | .18450 | .18510 | .18410 |
| .265 | .000 | .00210 | 1.00590 | 1.00290 | -.00100 | .00280 | .00000 | .82860 | .18450 | .18520 | .18410 |
| .265 | .000 | .00220 | 1.00580 | 1.00310 | -.00110 | .00250 | .00000 | .82860 | .18440 | .18530 | .18410 |
| | GRADIENT | .00000 | .00000 | .00000 | .00000 | .00000 | .00000 | .00000 | .00000 | .00000 | .00000 |

OA236 (NAAL 759) CONFIGURATION 9 DATA SELECT 2 (SFM209) ( 28 JUN 79 )

REFERENCE DATA

SREF = .0000 SQ.FT. XMRP = .0000 IN. XT
LREF = .0000 INCHES YMRP = .0000 IN. YT
BREF = .0000 INCHES ZMRP = .0000 IN. ZT
SCALE = 1.0000

PARAMETRIC DATA

ALPHA = .000 BETA = .000

RUN NO. 2091/ 0 RN/L = 1.27 GRADIENT INTERVAL = -5.00/ 5.00

| MACH | ALPHA | TBTO/Q | QBI/QO | QB/QO | SBPO/Q | SBSBIQ | TBTBIQ | 2712/Q | 12SBIQ | 12SB/Q | P12POQ |
|---|---|---|---|---|---|---|---|---|---|---|---|
| .188 | .000 | .00250 | 1.00370 | 1.00120 | .00090 | .00260 | .00000 | .82580 | .17650 | .17710 | .17810 |
| .188 | .000 | .00230 | 1.00300 | 1.00170 | .00020 | .00150 | .00000 | .82580 | .17610 | .17780 | .17810 |
| .188 | .000 | .00260 | 1.00340 | 1.00090 | .00130 | .00270 | .00000 | .82590 | .17620 | .17680 | .17810 |
| .188 | .000 | .00250 | 1.00340 | 1.00120 | .00080 | .00220 | .00000 | .82580 | .17630 | .17730 | .17810 |
| | GRADIENT | .00000 | .00000 | .00000 | .00000 | .00000 | .00000 | .00000 | .00000 | .00000 | .00000 |

RUN NO. 2092/ 0 RN/L = 1.55 GRADIENT INTERVAL = -5.00/ 5.00

| MACH | ALPHA | TBTO/Q | QBI/QO | QB/QO | SBPO/Q | SBSBIQ | TBTBIQ | 2712/Q | 12SBIQ | 12SB/Q | P12POQ |
|---|---|---|---|---|---|---|---|---|---|---|---|
| .229 | .000 | .00180 | 1.00630 | 1.00380 | -.00220 | .00220 | .00000 | .82890 | .18060 | .18180 | .17950 |
| .230 | .000 | .00260 | 1.00660 | 1.00410 | -.00180 | .00270 | .00010 | .82890 | .18070 | .18130 | .17950 |
| .229 | .000 | .00200 | 1.00620 | 1.00550 | -.00380 | .00040 | -.00010 | .82890 | .18040 | .18340 | .17950 |
| .229 | .000 | .00210 | 1.00640 | 1.00450 | -.00260 | .00180 | .00000 | .82890 | .18060 | .18220 | .17950 |
| | GRADIENT | .00000 | .00000 | .00000 | .00000 | .00000 | .00000 | .00000 | .00000 | .00000 | .00000 |

RUN NO. 2093/ 0 RN/L = 1.67 GRADIENT INTERVAL = -5.00/ 5.00

| MACH | ALPHA | TBTO/Q | QBI/QO | QB/QO | SBPO/Q | SBSBIQ | TBTBIQ | 2712/Q | 12SBIQ | 12SB/Q | P12POQ |
|---|---|---|---|---|---|---|---|---|---|---|---|
| .248 | .000 | .00260 | 1.00620 | 1.00420 | -.00190 | .00200 | .00010 | .82850 | .18250 | .18400 | .18210 |
| .248 | .000 | .00200 | 1.00520 | 1.00500 | -.00330 | -.00010 | -.00010 | .82850 | .18170 | .18540 | .18210 |
| .248 | .000 | .00260 | 1.00600 | 1.00330 | -.00100 | .00260 | .00000 | .82850 | .18240 | .18310 | .18210 |
| .248 | .000 | .00240 | 1.00580 | 1.00420 | -.00200 | .00150 | .00000 | .82850 | .18220 | .18420 | .18210 |
| | GRADIENT | .00000 | .00000 | .00000 | .00000 | .00000 | .00000 | .00000 | .00000 | .00000 | .00000 |

RUN NO. 2094/ 0 RN/L = 1.78 GRADIENT INTERVAL = -5.00/ 5.00

| MACH | ALPHA | TBTO/Q | QBI/QO | QB/QO | SBPO/Q | SBSBIQ | TBTBIQ | 2712/Q | 12SBIQ | 12SB/Q | P12POQ |
|---|---|---|---|---|---|---|---|---|---|---|---|
| .265 | .000 | .00190 | 1.00530 | 1.00420 | -.00260 | .00080 | .00000 | .82860 | .18410 | .18680 | .18420 |
| .265 | .000 | .00170 | 1.00500 | 1.00320 | -.00170 | .00160 | .00000 | .82860 | .18400 | .18590 | .18420 |
| .265 | .000 | .00180 | 1.00540 | 1.00360 | -.00210 | .00130 | -.00010 | .82860 | .18410 | .18630 | .18420 |
| .265 | .000 | .00180 | 1.00520 | 1.00370 | -.00210 | .00120 | .00000 | .82860 | .18410 | .18630 | .18420 |
| | GRADIENT | .00000 | .00000 | .00000 | .00000 | .00000 | .00000 | .00000 | .00000 | .00000 | .00000 |

OA236 (NAAL 759) CONFIGURATION 10 DATA SELECT 2 (SFM210) ( 28 JUN 79 )

REFERENCE DATA

SREF = .0000 SQ.FT. XMRP = .0000 IN. XT
LREF = .0000 INCHES YMRP = .0000 IN. YT
BREF = .0000 INCHES ZMRP = .0000 IN. ZT
SCALE = 1.0000

PARAMETRIC DATA

ALPHA = .000 BETA = .000

RUN NO. 2101/ 0 RN/L = 1.29 GRADIENT INTERVAL = -5.00/ 5.00

| MACH | ALPHA | TBTO/Q | QBI/QO | QB/QO | SBPO/Q | SBSBIQ | TBTBIQ | 2712/Q | 12SBIQ | 12SB/Q | P12POQ |
|---|---|---|---|---|---|---|---|---|---|---|---|
| .188 | .000 | .00010 | 1.00330 | 1.00470 | -.00490 | -.00340 | -.00280 | .82580 | .17950 | .18310 | .17810 |
| .188 | .000 | .00050 | 1.00250 | 1.00580 | -.00560 | -.00430 | -.00180 | .82580 | .17940 | .18380 | .17810 |
| .188 | .000 | .00090 | 1.00250 | 1.00650 | -.00600 | -.00470 | -.00170 | .82580 | .17930 | .18410 | .17810 |
| .188 | .000 | .00050 | 1.00280 | 1.00570 | -.00550 | -.00410 | -.00210 | .82580 | .17940 | .18370 | .17810 |
| | GRADIENT | .00000 | .00000 | .00000 | .00000 | .00000 | .00000 | .00000 | .00000 | .00000 | .00000 |

RUN NO. 2102/ 0 RN/L = 1.57 GRADIENT INTERVAL = -5.00/ 5.00

| MACH | ALPHA | TBTO/Q | QBI/QO | QB/QO | SBPO/Q | SBSBIQ | TBTBIQ | 2712/Q | 12SBIQ | 12SB/Q | P12POQ |
|---|---|---|---|---|---|---|---|---|---|---|---|
| .229 | .000 | .00000 | 1.00590 | 1.00700 | -.00740 | -.00270 | -.00220 | .82890 | .18390 | .18690 | .17950 |
| .229 | .000 | -.00010 | 1.00580 | 1.00690 | -.00740 | -.00290 | -.00240 | .82890 | .18380 | .18690 | .17950 |
| .229 | .000 | .00000 | 1.00510 | 1.00830 | -.00860 | -.00450 | -.00180 | .82890 | .18350 | .18820 | .17950 |
| .229 | .000 | .00000 | 1.00560 | 1.00740 | -.00780 | -.00340 | -.00210 | .82890 | .18370 | .18730 | .17950 |
| | GRADIENT | .00000 | .00000 | .00000 | .00000 | .00000 | .00000 | .00000 | .00000 | .00000 | .00000 |

RUN NO. 2103/ 0 RN/L = 1.69 GRADIENT INTERVAL = -5.00/ 5.00

| MACH | ALPHA | TBTO/Q | QBI/QO | QB/QO | SBPO/Q | SBSBIQ | TBTBIQ | 2712/Q | 12SBIQ | 12SB/Q | P12POQ |
|---|---|---|---|---|---|---|---|---|---|---|---|
| .248 | .000 | .00010 | 1.00500 | 1.00690 | -.00720 | -.00330 | -.00160 | .82850 | .18570 | .18930 | .18200 |
| .247 | .000 | .00080 | 1.00520 | 1.00910 | -.00870 | -.00500 | -.00140 | .82850 | .18540 | .19080 | .18200 |
| .248 | .000 | -.00030 | 1.00500 | 1.00610 | -.00670 | -.00290 | -.00220 | .82850 | .18570 | .18880 | .18200 |
| .248 | .000 | .00020 | 1.00510 | 1.00740 | -.00750 | -.00370 | -.00170 | .82850 | .18560 | .18960 | .18200 |
| | GRADIENT | .00000 | .00000 | .00000 | .00000 | .00000 | .00000 | .00000 | .00000 | .00000 | .00000 |

RUN NO. 2104/ 0 RN/L = 1.81 GRADIENT INTERVAL = -5.00/ 5.00

| MACH | ALPHA | TBTO/Q | QBI/QO | QB/QO | SBPO/Q | SBSBIQ | TBTBIQ | 2712/Q | 12SBIQ | 12SB/Q | P12POQ |
|---|---|---|---|---|---|---|---|---|---|---|---|
| .264 | .000 | .00050 | 1.00560 | 1.00740 | -.00720 | -.00290 | -.00140 | .82860 | .18830 | .19140 | .18410 |
| .264 | .000 | .00040 | 1.00470 | 1.00760 | -.00750 | -.00410 | -.00160 | .82860 | .18720 | .19170 | .18410 |
| .264 | .000 | .00000 | 1.00510 | 1.00660 | -.00680 | -.00320 | -.00190 | .82860 | .18750 | .19100 | .18410 |
| .264 | .000 | .00030 | 1.00510 | 1.00720 | -.00720 | -.00340 | -.00160 | .82860 | .18770 | .19140 | .18410 |
| | GRADIENT | .00000 | .00000 | .00000 | .00000 | .00000 | .00000 | .00000 | .00000 | .00000 | .00000 |

OA236 (NAAL 759) CONFIGURATION 5 DATA SELECT 2 (SFM211) ( 28 JUN 79 )

REFERENCE DATA

SREF = .0000 SQ.FT. XMRP = .0000 IN. XT
LREF = .0000 INCHES YMRP = .0000 IN. YT
BREF = .0000 INCHES ZMRP = .0000 IN. ZT
SCALE = 1.0000

PARAMETRIC DATA

ALPHA = .000 BETA = .000

RUN NO. 2111/ 0 RN/L = 1.28 GRADIENT INTERVAL = -5.00/ 5.00

| MACH | ALPHA | TBTO/Q | QBI/QO | QB/QO | SBPO/Q | SBSBIQ | TBTBIQ | 2712/Q | 12SBIQ | 12SB/Q | P12POQ |
|---|---|---|---|---|---|---|---|---|---|---|---|
| .188 | .000 | .00270 | 1.00310 | 1.00230 | .00000 | .00160 | .00000 | .82590 | .17940 | .17810 | .17810 |
| .188 | .000 | .00210 | 1.00270 | 1.00340 | -.00160 | .00000 | -.00020 | .82590 | .17930 | .17980 | .17810 |
| .188 | .000 | .00260 | 1.00330 | 1.00110 | .00110 | .00310 | .00000 | .82590 | .17980 | .17690 | .17810 |
| .188 | .000 | .00250 | 1.00300 | 1.00220 | -.00010 | .00150 | .00000 | .82590 | .17950 | .17830 | .17810 |
| | GRADIENT | .00000 | .00000 | .00000 | .00000 | .00000 | .00000 | .00000 | .00000 | .00000 | .00000 |

RUN NO. 2112/ 0 RN/L = 1.57 GRADIENT INTERVAL = -5.00/ 5.00

| MACH | ALPHA | TBTO/Q | QBI/QO | QB/QO | SBPO/Q | SBSBIQ | TBTBIQ | 2712/Q | 12SBIQ | 12SB/Q | P12POQ |
|---|---|---|---|---|---|---|---|---|---|---|---|
| .229 | .000 | .00200 | 1.00640 | 1.00320 | -.00140 | .00350 | .00000 | .82890 | .18400 | .18100 | .17950 |
| .230 | .000 | .00270 | 1.00670 | 1.00230 | .00010 | .00500 | .00020 | .82890 | .18410 | .17940 | .17950 |
| .230 | .000 | .00310 | 1.00730 | 1.00360 | -.00070 | .00440 | .00010 | .82890 | .18430 | .18030 | .17950 |
| .230 | .000 | .00260 | 1.00680 | 1.00300 | -.00060 | .00430 | .00010 | .82890 | .18410 | .18020 | .17950 |
| | GRADIENT | .00000 | .00000 | .00000 | .00000 | .00000 | .00000 | .00000 | .00000 | .00000 | .00000 |

RUN NO. 2113/ 0 RN/L = 1.69 GRADIENT INTERVAL = -5.00/ 5.00

| MACH | ALPHA | TBTO/Q | QBI/QO | QB/QO | SBPO/Q | SBSBIQ | TBTBIQ | 2712/Q | 12SBIQ | 12SB/Q | P12POQ |
|---|---|---|---|---|---|---|---|---|---|---|---|
| .248 | .000 | .00220 | 1.00560 | 1.00200 | -.00010 | .00380 | .00000 | .82850 | .18560 | .18220 | .18210 |
| .248 | .000 | .00210 | 1.00590 | 1.00220 | -.00030 | .00400 | .00000 | .82850 | .18600 | .18240 | .18210 |
| .248 | .000 | .00260 | 1.00590 | 1.00240 | .00000 | .00400 | .00000 | .82850 | .18580 | .18210 | .18210 |
| .248 | .000 | .00230 | 1.00580 | 1.00220 | -.00010 | .00400 | .00000 | .82850 | .18580 | .18230 | .18210 |
| | GRADIENT | .00000 | .00000 | .00000 | .00000 | .00000 | .00000 | .00000 | .00000 | .00000 | .00000 |

RUN NO. 2114/ 0 RN/L = 1.80 GRADIENT INTERVAL = -5.00/ 5.00

| MACH | ALPHA | TBTO/Q | QBI/QO | QB/QO | SBPO/Q | SBSBIQ | TBTBIQ | 2712/Q | 12SBIQ | 12SB/Q | P12POQ |
|---|---|---|---|---|---|---|---|---|---|---|---|
| .265 | .000 | .00250 | 1.00560 | 1.00220 | .00000 | .00370 | .00000 | .82860 | .18750 | .18420 | .18410 |
| .265 | .000 | .00190 | 1.00570 | 1.00110 | .00040 | .00470 | .00000 | .82860 | .18800 | .18370 | .18420 |
| .265 | .000 | .00240 | 1.00590 | 1.00200 | .00010 | .00430 | .00000 | .82860 | .18790 | .18400 | .18420 |
| .265 | .000 | .00230 | 1.00570 | 1.00180 | .00020 | .00430 | .00000 | .82860 | .18780 | .18400 | .18420 |
| | GRADIENT | .00000 | .00000 | .00000 | .00000 | .00000 | .00000 | .00000 | .00000 | .00000 | .00000 |

OA236 (NAAL 759) CONFIGURATION 11 DATA SELECT 2 (SFM212) ( 28 JUN 79 )

REFERENCE DATA

SREF = .0000 SQ.FT. XMRP = .0000 IN. XT
LREF = .0000 INCHES YMRP = .0000 IN. YT
BREF = .0000 INCHES ZMRP = .0000 IN. ZT
SCALE = 1.0000

PARAMETRIC DATA

ALPHA = .000 BETA = .000

RUN NO. 2121/ 0 RN/L = 1.28 GRADIENT INTERVAL = -5.00/ 5.00

| MACH | ALPHA | TBTO/Q | QBI/QO | QB/QO | SBPO/Q | SBSBIQ | TBTBIQ | 2712/Q | 12SBIQ | 12SB/Q | P12POQ |
|---|---|---|---|---|---|---|---|---|---|---|---|
| .188 | .000 | -1.01150 | -.00250 | -.00250 | -.00050 | .00000 | .00000 | .82580 | .17860 | .17860 | .17810 |
| .188 | .000 | -1.01060 | -.00250 | -.00250 | .00030 | .00000 | .00000 | .82580 | .17780 | .17770 | .17810 |
| .188 | .000 | -1.01080 | -.00250 | -.00250 | .00010 | .00000 | .00000 | .82580 | .17800 | .17800 | .17810 |
| .188 | .000 | -1.01100 | -.00250 | -.00250 | .00000 | .00000 | .00000 | .82580 | .17810 | .17810 | .17810 |
| | GRADIENT | .00000 | .00000 | .00000 | .00000 | .00000 | .00000 | .00000 | .00000 | .00000 | .00000 |

RUN NO. 2122/ 0 RN/L = 1.56 GRADIENT INTERVAL = -5.00/ 5.00

| MACH | ALPHA | TBTO/Q | QBI/QO | QB/QO | SBPO/Q | SBSBIQ | TBTBIQ | 2712/Q | 12SBIQ | 12SB/Q | P12POQ |
|---|---|---|---|---|---|---|---|---|---|---|---|
| .230 | .000 | -1.01470 | -.00060 | -.00060 | -.00110 | .00000 | .00000 | .82890 | .18050 | .18060 | .17950 |
| .229 | .000 | -1.01360 | -.00060 | -.00060 | .00000 | .00000 | .00000 | .82890 | .17940 | .17950 | .17950 |
| .230 | .000 | -1.01260 | -.00060 | -.00060 | .00100 | .00000 | .00000 | .82890 | .17830 | .17850 | .17950 |
| .229 | .000 | -1.01360 | -.00060 | -.00060 | .00000 | .00000 | .00000 | .82890 | .17940 | .17950 | .17950 |
| | GRADIENT | .00000 | .00000 | .00000 | .00000 | .00000 | .00000 | .00000 | .00000 | .00000 | .00000 |

RUN NO. 2123/ 0 RN/L = 1.68 GRADIENT INTERVAL = -5.00/ 5.00

| MACH | ALPHA | TBTO/Q | QBI/QO | QB/QO | SBPO/Q | SBSBIQ | TBTBIQ | 2712/Q | 12SBIQ | 12SB/Q | P12POQ |
|---|---|---|---|---|---|---|---|---|---|---|---|
| .248 | .000 | -1.01500 | .00110 | .00110 | -.00100 | .00000 | .00000 | .82850 | .18300 | .18310 | .18210 |
| .248 | .000 | -1.01330 | .00060 | .00060 | .00110 | .00000 | .00000 | .82850 | .18070 | .18090 | .18210 |
| .248 | .000 | -1.01460 | .00070 | .00060 | .00000 | .00000 | .00000 | .82850 | .18210 | .18220 | .18210 |
| .248 | .000 | -1.01430 | .00080 | .00080 | .00000 | .00000 | .00000 | .82850 | .18190 | .18210 | .18210 |
| | GRADIENT | .00000 | .00000 | .00000 | .00000 | .00000 | .00000 | .00000 | .00000 | .00000 | .00000 |

RUN NO. 2124/ 0 RN/L = 1.79 GRADIENT INTERVAL = -5.00/ 5.00

| MACH | ALPHA | TBTO/Q | QBI/QO | QB/QO | SBPO/Q | SBSBIQ | TBTBIQ | 2712/Q | 12SBIQ | 12SB/Q | P12POQ |
|---|---|---|---|---|---|---|---|---|---|---|---|
| .264 | .000 | -1.01740 | .00080 | .00070 | -.00080 | .00000 | .00000 | .82860 | .18490 | .18500 | .18410 |
| .264 | .000 | -1.01640 | .00090 | .00090 | .00000 | .00000 | .00000 | .82860 | .18400 | .18410 | .18410 |
| .265 | .000 | -1.01560 | .00060 | .00060 | .00100 | .00000 | .00000 | .82860 | .18290 | .18310 | .18410 |
| .264 | .000 | -1.01640 | .00080 | .00070 | .00000 | .00000 | .00000 | .82860 | .18390 | .18410 | .18410 |
| | GRADIENT | .00000 | .00000 | .00000 | .00000 | .00000 | .00000 | .00000 | .00000 | .00000 | .00000 |

OA236 (NAAL 759) CONFIGURATION 12 DATA SELECT 2 (SFM213) ( 28 JUN 79 )

REFERENCE DATA

SREF = .0000 SQ.FT. XMRP = .0000 IN. XT
LREF = .0000 INCHES YMRP = .0000 IN. YT
BREF = .0000 INCHES ZMRP = .0000 IN. ZT
SCALE = 1.0000

PARAMETRIC DATA

ALPHA = .000 BETA = .000

RUN NO. 2131/ 0 RN/L = 1.27 GRADIENT INTERVAL = -5.00/ 5.00

| MACH | ALPHA | TBTO/Q | QBI/QO | QB/QO | SBPO/Q | SBSBIQ | TBTBIQ | 2712/Q | 12SBIQ | 12SB/Q | P12POQ |
|---|---|---|---|---|---|---|---|---|---|---|---|
| .188 | .000 | .00200 | 1.00310 | 1.00380 | -.00220 | .00000 | .00000 | .82580 | .18050 | .18030 | .17810 |
| .188 | .000 | .00170 | 1.00050 | 1.00100 | .00020 | .00000 | .00000 | .82580 | .17790 | .17780 | .17810 |
| .188 | .000 | .00050 | .99810 | .99880 | .00120 | .00000 | .00000 | .82580 | .17690 | .17680 | .17810 |
| .188 | .000 | .00140 | 1.00050 | 1.00120 | -.00020 | .00000 | .00000 | .82580 | .17840 | .17830 | .17810 |
| | GRADIENT | .00000 | .00000 | .00000 | .00000 | .00000 | .00000 | .00000 | .00000 | .00000 | .00000 |

RUN NO. 2132/ 0 RN/L = 1.56 GRADIENT INTERVAL = -5.00/ 5.00

| MACH | ALPHA | TBTO/Q | QBI/QO | QB/QO | SBPO/Q | SBSBIQ | TBTBIQ | 2712/Q | 12SBIQ | 12SB/Q | P12POQ |
|---|---|---|---|---|---|---|---|---|---|---|---|
| .229 | .000 | .00010 | 1.00040 | 1.00070 | -.00080 | .00000 | .00000 | .82890 | .18040 | .18030 | .17950 |
| .229 | .000 | .00010 | 1.00020 | 1.00050 | -.00060 | .00000 | .00000 | .82890 | .18020 | .18010 | .17950 |
| .229 | .000 | -.00080 | .99760 | .99790 | .00100 | .00000 | .00000 | .82890 | .17850 | .17850 | .17950 |
| .229 | .000 | -.00010 | .99940 | .99970 | -.00010 | .00000 | .00000 | .82890 | .17970 | .17970 | .17950 |
| | GRADIENT | .00000 | .00000 | .00000 | .00000 | .00000 | .00000 | .00000 | .00000 | .00000 | .00000 |

RUN NO. 2133/ 0 RN/L = 1.68 GRADIENT INTERVAL = -5.00/ 5.00

| MACH | ALPHA | TBTO/Q | QBI/QO | QB/QO | SBPO/Q | SBSBIQ | TBTBIQ | 2712/Q | 12SBIQ | 12SB/Q | P12POQ |
|---|---|---|---|---|---|---|---|---|---|---|---|
| .248 | .000 | -.00100 | .99750 | .99770 | .00090 | .00000 | .00000 | .82850 | .18110 | .18110 | .18210 |
| .248 | .000 | .00020 | .99830 | .99850 | .00150 | .00000 | .00000 | .82850 | .18060 | .18050 | .18200 |
| .248 | .000 | .00050 | .99920 | .99940 | .00080 | .00000 | .00000 | .82850 | .18130 | .18120 | .18200 |
| .248 | .000 | .00000 | .99840 | .99850 | .00110 | .00000 | .00000 | .82850 | .18100 | .18090 | .18200 |
| | GRADIENT | .00000 | .00000 | .00000 | .00000 | .00000 | .00000 | .00000 | .00000 | .00000 | .00000 |

RUN NO. 2134/ 0 RN/L = 1.78 GRADIENT INTERVAL = -5.00/ 5.00

| MACH | ALPHA | TBTO/Q | QBI/QO | QB/QO | SBPO/Q | SBSBIQ | TBTBIQ | 2712/Q | 12SBIQ | 12SB/Q | P12POQ |
|---|---|---|---|---|---|---|---|---|---|---|---|
| .265 | .000 | .00150 | .99880 | .99870 | .00250 | .00000 | .00000 | .82860 | .18160 | .18150 | .18410 |
| .265 | .000 | -.00010 | .99830 | .99820 | .00120 | .00000 | .00000 | .82860 | .18290 | .18280 | .18410 |
| .265 | .000 | .00040 | .99690 | .99700 | .00310 | .00000 | .00000 | .82860 | .18100 | .18100 | .18410 |
| .265 | .000 | .00060 | .99800 | .99800 | .00230 | .00000 | .00000 | .82860 | .18180 | .18180 | .18410 |
| | GRADIENT | .00000 | .00000 | .00000 | .00000 | .00000 | .00000 | .00000 | .00000 | .00000 | .00000 |

OA236 (NAAL 759) CONFIGURATION 13 DATA SELECT 2 (SFM214) ( 28 JUN 79 )

REFERENCE DATA

SREF = .0000 SQ.FT. XMRP = .0000 IN. XT
LREF = .0000 INCHES YMRP = .0000 IN. YT
BREF = .0000 INCHES ZMRP = .0000 IN. ZT
SCALE = 1.0000

PARAMETRIC DATA

ALPHA = .000 BETA = .000

RUN NO. 2141/ 0 RN/L = 1.27 GRADIENT INTERVAL = -5.00/ 5.00

| MACH | ALPHA | TBTO/Q | QBI/QO | QB/QO | SBPO/Q | SBSBIQ | TBTBIQ | 2712/Q | 12SBIQ | 12SB/Q | P12POQ |
|---|---|---|---|---|---|---|---|---|---|---|---|
| .189 | .000 | .00000 | .99460 | .99510 | .00450 | .00000 | .00000 | .82590 | .17420 | .17350 | .17810 |
| .188 | .000 | .00100 | .99570 | .99600 | .00460 | .00000 | .00000 | .82580 | .17410 | .17340 | .17810 |
| .188 | .000 | .00040 | .99500 | .99510 | .00490 | .00000 | .00000 | .82580 | .17380 | .17310 | .17810 |
| .188 | .000 | .00050 | .99510 | .99540 | .00470 | .00000 | .00000 | .82580 | .17400 | .17340 | .17810 |
| | GRADIENT | .00000 | .00000 | .00000 | .00000 | .00000 | .00000 | .00000 | .00000 | .00000 | .00000 |

RUN NO. 2142/ 0 RN/L = 1.55 GRADIENT INTERVAL = -5.00/ 5.00

| MACH | ALPHA | TBTO/Q | QBI/QO | QB/QO | SBPO/Q | SBSBIQ | TBTBIQ | 2712/Q | 12SBIQ | 12SB/Q | P12POQ |
|---|---|---|---|---|---|---|---|---|---|---|---|
| .230 | .000 | -.00100 | .99360 | .99370 | .00500 | .00000 | .00000 | .82890 | .17490 | .17450 | .17950 |
| .230 | .000 | -.00120 | .99200 | .99230 | .00620 | .00000 | .00010 | .82890 | .17380 | .17330 | .17950 |
| .230 | .000 | .00010 | .99640 | .99640 | .00340 | .00000 | .00000 | .82890 | .17660 | .17600 | .17950 |
| .230 | .000 | -.00070 | .99400 | .99410 | .00490 | .00000 | .00000 | .82890 | .17510 | .17460 | .17950 |
| | GRADIENT | .00000 | .00000 | .00000 | .00000 | .00000 | .00000 | .00000 | .00000 | .00000 | .00000 |

RUN NO. 2143/ 0 RN/L = 1.68 GRADIENT INTERVAL = -5.00/ 5.00

| MACH | ALPHA | TBTO/Q | QBI/QO | QB/QO | SBPO/Q | SBSBIQ | TBTBIQ | 2712/Q | 12SBIQ | 12SB/Q | P12POQ |
|---|---|---|---|---|---|---|---|---|---|---|---|
| .248 | .000 | -.00060 | .99250 | .99260 | .00640 | .00000 | .00000 | .82850 | .17610 | .17560 | .18210 |
| .248 | .000 | .00000 | .99310 | .99320 | .00650 | .00000 | .00000 | .82850 | .17600 | .17560 | .18210 |
| .248 | .000 | -.00100 | .99170 | .99180 | .00690 | .00000 | .00010 | .82850 | .17560 | .17520 | .18210 |
| .248 | .000 | -.00060 | .99240 | .99250 | .00660 | .00000 | .00000 | .82850 | .17590 | .17550 | .18210 |
| | GRADIENT | .00000 | .00000 | .00000 | .00000 | .00000 | .00000 | .00000 | .00000 | .00000 | .00000 |

RUN NO. 2144/ 0 RN/L = 1.79 GRADIENT INTERVAL = -5.00/ 5.00

| MACH | ALPHA | TBTO/Q | QBI/QO | QB/QO | SBPO/Q | SBSBIQ | TBTBIQ | 2712/Q | 12SBIQ | 12SB/Q | P12POQ |
|---|---|---|---|---|---|---|---|---|---|---|---|
| .265 | .000 | .00000 | .99270 | .99250 | .00720 | .00000 | .00000 | .82860 | .17740 | .17690 | .18420 |
| .265 | .000 | -.00060 | .99170 | .99160 | .00750 | .00000 | .00000 | .82860 | .17710 | .17660 | .18420 |
| .265 | .000 | -.00050 | .99200 | .99190 | .00730 | .00000 | .00000 | .82860 | .17730 | .17690 | .18420 |
| .265 | .000 | -.00040 | .99210 | .99200 | .00730 | .00000 | .00000 | .82860 | .17730 | .17680 | .18420 |
| | GRADIENT | .00000 | .00000 | .00000 | .00000 | .00000 | .00000 | .00000 | .00000 | .00000 | .00000 |

OA236 (NAAL 759) CONFIGURATION 1 DATA SELECT 2 (SFM215) ( 28 JUN 79 )

REFERENCE DATA

SREF = .0000 SQ.FT. XMRP = .0000 IN. XT
LREF = .0000 INCHES YMRP = .0000 IN. YT
BREF = .0000 INCHES ZMRP = .0000 IN. ZT
SCALE = 1.0000

PARAMETRIC DATA

ALPHA = .000 BETA = .000

RUN NO. 2151/ 0 RN/L = 1.27 GRADIENT INTERVAL = -5.00/ 5.00

| MACH | ALPHA | TBTO/Q | QBI/QO | QB/QO | SBPO/Q | SBSBIQ | TBTBIQ | 2712/Q | 12SBIQ | 12SB/Q | P12POQ |
|---|---|---|---|---|---|---|---|---|---|---|---|
| .188 | .000 | .00000 | .99930 | .99930 | .00030 | .00000 | -.00010 | .82580 | .17900 | .17780 | .17810 |
| .188 | .000 | .00010 | .99890 | .99950 | .00020 | .00000 | .00000 | .82580 | .17910 | .17790 | .17810 |
| .188 | .000 | -.00050 | .99870 | .99900 | .00000 | .00000 | -.00010 | .82580 | .17910 | .17800 | .17810 |
| .188 | .000 | -.00010 | .99900 | .99930 | .00010 | .00000 | -.00010 | .82580 | .17900 | .17790 | .17810 |
| | GRADIENT | .00000 | .00000 | .00000 | .00000 | .00000 | .00000 | .00000 | .00000 | .00000 | .00000 |

RUN NO. 2152/ 0 RN/L = 1.55 GRADIENT INTERVAL = -5.00/ 5.00

| MACH | ALPHA | TBTO/Q | QBI/QO | QB/QO | SBPO/Q | SBSBIQ | TBTBIQ | 2712/Q | 12SBIQ | 12SB/Q | P12POQ |
|---|---|---|---|---|---|---|---|---|---|---|---|
| .230 | .000 | .00060 | 1.00300 | 1.00330 | -.00300 | .00000 | .00020 | .82890 | .18360 | .18250 | .17950 |
| .230 | .000 | .00000 | 1.00240 | 1.00240 | -.00260 | .00010 | .00000 | .82890 | .18340 | .18210 | .17950 |
| .230 | .000 | .00080 | 1.00270 | 1.00300 | -.00250 | .00000 | .00010 | .82890 | .18310 | .18200 | .17950 |
| .230 | .000 | .00050 | 1.00270 | 1.00290 | -.00270 | .00000 | .00010 | .82890 | .18340 | .18220 | .17950 |
| | GRADIENT | .00000 | .00000 | .00000 | .00000 | .00000 | .00000 | .00000 | .00000 | .00000 | .00000 |

RUN NO. 2153/ 0 RN/L = 1.67 GRADIENT INTERVAL = -5.00/ 5.00

| MACH | ALPHA | TBTO/Q | QBI/QO | QB/QO | SBPO/Q | SBSBIQ | TBTBIQ | 2712/Q | 12SBIQ | 12SB/Q | P12POQ |
|---|---|---|---|---|---|---|---|---|---|---|---|
| .248 | .000 | .00010 | 1.00190 | 1.00180 | -.00190 | .00000 | .00000 | .82850 | .18520 | .18410 | .18210 |
| .248 | .000 | .00020 | 1.00160 | 1.00150 | -.00160 | .00010 | .00000 | .82850 | .18490 | .18370 | .18210 |
| .248 | .000 | .00050 | 1.00220 | 1.00210 | -.00190 | .00000 | .00000 | .82850 | .18510 | .18400 | .18210 |
| .248 | .000 | .00030 | 1.00190 | 1.00180 | -.00180 | .00000 | .00000 | .82850 | .18510 | .18390 | .18210 |
| | GRADIENT | .00000 | .00000 | .00000 | .00000 | .00000 | .00000 | .00000 | .00000 | .00000 | .00000 |

RUN NO. 2154/ 0 RN/L = 1.78 GRADIENT INTERVAL = -5.00/ 5.00

| MACH | ALPHA | TBTO/Q | QBI/QO | QB/QO | SBPO/Q | SBSBIQ | TBTBIQ | 2712/Q | 12SBIQ | 12SB/Q | P12POQ |
|---|---|---|---|---|---|---|---|---|---|---|---|
| .265 | .000 | .00040 | 1.00180 | 1.00150 | -.00130 | .00010 | .00000 | .82860 | .18680 | .18550 | .18420 |
| .265 | .000 | .00010 | 1.00200 | 1.00170 | -.00190 | .00000 | .00000 | .82860 | .18710 | .18610 | .18410 |
| .265 | .000 | .00010 | 1.00160 | 1.00140 | -.00150 | .00010 | .00000 | .82860 | .18690 | .18570 | .18410 |
| .265 | .000 | .00020 | 1.00180 | 1.00150 | -.00160 | .00000 | .00000 | .82860 | .18690 | .18580 | .18410 |
| | GRADIENT | .00000 | .00000 | .00000 | .00000 | .00000 | .00000 | .00000 | .00000 | .00000 | .00000 |

OA236 (NAAL 759) CONFIGURATION 3 DATA SELECT 2 (SFM216) ( 28 JUN 79 )

REFERENCE DATA

SREF = .0000 SQ.FT. XMRP = .0000 IN. XT
LREF = .0000 INCHES YMRP = .0000 IN. YT
BREF = .0000 INCHES ZMRP = .0000 IN. ZT
SCALE = 1.0000

PARAMETRIC DATA

ALPHA = .000 BETA = .000

RUN NO. 2161/ 0 RN/L = 1.26 GRADIENT INTERVAL = -5.00/ 5.00

| MACH | ALPHA | TBTO/Q | QBI/QO | QB/QO | SBPO/Q | SBSBIQ | TBTBIQ | 2712/Q | 12SBIQ | 12SB/Q | P12POQ |
|---|---|---|---|---|---|---|---|---|---|---|---|
| .188 | .000 | .00020 | 1.01190 | 1.01240 | -.01260 | .00010 | .00010 | .82580 | .19230 | .19080 | .17810 |
| .188 | .000 | .00000 | 1.01190 | 1.01210 | -.01260 | .00010 | .00000 | .82580 | .19240 | .19080 | .17810 |
| .188 | .000 | .00000 | 1.01210 | 1.01210 | -.01270 | .00000 | .00000 | .82580 | .19240 | .19080 | .17810 |
| .188 | .000 | .00000 | 1.01200 | 1.01220 | -.01270 | .00010 | .00000 | .82580 | .19240 | .19080 | .17810 |
| | GRADIENT | .00000 | .00000 | .00000 | .00000 | .00000 | .00000 | .00000 | .00000 | .00000 | .00000 |

RUN NO. 2162/ 0 RN/L = 1.54 GRADIENT INTERVAL = -5.00/ 5.00

| MACH | ALPHA | TBTO/Q | QBI/QO | QB/QO | SBPO/Q | SBSBIQ | TBTBIQ | 2712/Q | 12SBIQ | 12SB/Q | P12POQ |
|---|---|---|---|---|---|---|---|---|---|---|---|
| .229 | .000 | .00020 | 1.01510 | 1.01530 | -.01540 | .00000 | .00000 | .82890 | .19640 | .19500 | .17950 |
| .230 | .000 | -.00010 | 1.01480 | 1.01500 | -.01560 | .00000 | .00010 | .82890 | .19650 | .19520 | .17950 |
| .230 | .000 | -.00020 | 1.01490 | 1.01470 | -.01540 | .00000 | .00000 | .82890 | .19640 | .19500 | .17950 |
| .230 | .000 | .00000 | 1.01490 | 1.01500 | -.01550 | .00000 | .00000 | .82890 | .19650 | .19510 | .17950 |
| | GRADIENT | .00000 | .00000 | .00000 | .00000 | .00000 | .00000 | .00000 | .00000 | .00000 | .00000 |

RUN NO. 2163/ 0 RN/L = 1.66 GRADIENT INTERVAL = -5.00/ 5.00

| MACH | ALPHA | TBTO/Q | QBI/QO | QB/QO | SBPO/Q | SBSBIQ | TBTBIQ | 2712/Q | 12SBIQ | 12SB/Q | P12POQ |
|---|---|---|---|---|---|---|---|---|---|---|---|
| .248 | .000 | .00020 | 1.01400 | 1.01380 | -.01400 | .00010 | .00000 | .82850 | .19760 | .19620 | .18210 |
| .248 | .000 | .00000 | 1.01380 | 1.01380 | -.01440 | .00000 | .00000 | .82850 | .19780 | .19650 | .18210 |
| .248 | .000 | -.00030 | 1.01370 | 1.01340 | -.01430 | .00000 | .00000 | .82850 | .19780 | .19640 | .18210 |
| .248 | .000 | .00000 | 1.01380 | 1.01370 | -.01420 | .00000 | .00000 | .82850 | .19780 | .19640 | .18210 |
| | GRADIENT | .00000 | .00000 | .00000 | .00000 | .00000 | .00000 | .00000 | .00000 | .00000 | .00000 |

RUN NO. 2164/ 0 RN/L = 1.77 GRADIENT INTERVAL = -5.00/ 5.00

| MACH | ALPHA | TBTO/Q | QBI/QO | QB/QO | SBPO/Q | SBSBIQ | TBTBIQ | 2712/Q | 12SBIQ | 12SB/Q | P12POQ |
|---|---|---|---|---|---|---|---|---|---|---|---|
| .265 | .000 | -.00030 | 1.01310 | 1.01310 | -.01400 | -.00010 | .00000 | .82860 | .19940 | .19820 | .18420 |
| .265 | .000 | -.00050 | 1.01280 | 1.01240 | -.01340 | .00010 | .00000 | .82860 | .19900 | .19750 | .18410 |
| .265 | .000 | -.00010 | 1.01330 | 1.01300 | -.01360 | .00010 | .00000 | .82860 | .19920 | .19780 | .18420 |
| .265 | .000 | -.00030 | 1.01310 | 1.01280 | -.01360 | .00000 | .00000 | .82860 | .19920 | .19780 | .18420 |
| | GRADIENT | .00000 | .00000 | .00000 | .00000 | .00000 | .00000 | .00000 | .00000 | .00000 | .00000 |

OA236 (NAAL 759) CONFIGURATION 14 DATA SELECT 2 (SFM217) ( 28 JUN 79 )

REFERENCE DATA

SREF = .0000 SQ.FT. XMRP = .0000 IN. XT
LREF = .0000 INCHES YMRP = .0000 IN. YT
BREF = .0000 INCHES ZMRP = .0000 IN. ZT
SCALE = 1.0000

PARAMETRIC DATA

ALPHA = .000 BETA = .000

RUN NO. 2171/ 0 RN/L = 1.28 GRADIENT INTERVAL = -5.00/ 5.00

| MACH | ALPHA | TBTO/Q | QBI/QO | QB/QO | SBPO/Q | SBSBIQ | TBTBIQ | 2712/Q | 12SBIQ | 12SB/Q | P12POQ |
|---|---|---|---|---|---|---|---|---|---|---|---|
| .188 | .000 | .00100 | 1.01340 | 1.01380 | -.01320 | .00010 | .00000 | .82580 | .19600 | .19140 | .17810 |
| .188 | .000 | .00090 | 1.01330 | 1.01390 | -.01350 | .00000 | .00010 | .82580 | .19600 | .19160 | .17810 |
| .188 | .000 | .00090 | 1.01300 | 1.01370 | -.01320 | .00000 | .00000 | .82580 | .19590 | .19140 | .17810 |
| .188 | .000 | .00100 | 1.01320 | 1.01380 | -.01330 | .00000 | .00000 | .82580 | .19600 | .19150 | .17810 |
| | GRADIENT | .00000 | .00000 | .00000 | .00000 | .00000 | .00000 | .00000 | .00000 | .00000 | .00000 |

RUN NO. 2172/ 0 RN/L = 1.57 GRADIENT INTERVAL = -5.00/ 5.00

| MACH | ALPHA | TBTO/Q | QBI/QO | QB/QO | SBPO/Q | SBSBIQ | TBTBIQ | 2712/Q | 12SBIQ | 12SB/Q | P12POQ |
|---|---|---|---|---|---|---|---|---|---|---|---|
| .229 | .000 | .00050 | 1.01460 | 1.01450 | -.01440 | .00010 | .00000 | .82890 | .19810 | .19390 | .17950 |
| .229 | .000 | .00040 | 1.01440 | 1.01470 | -.01460 | .00000 | .00010 | .82890 | .19820 | .19420 | .17950 |
| .230 | .000 | .00030 | 1.01450 | 1.01460 | -.01470 | .00000 | .00000 | .82890 | .19830 | .19420 | .17950 |
| .229 | .000 | .00040 | 1.01450 | 1.01460 | -.01460 | .00000 | .00000 | .82890 | .19820 | .19410 | .17950 |
| | GRADIENT | .00000 | .00000 | .00000 | .00000 | .00000 | .00000 | .00000 | .00000 | .00000 | .00000 |

RUN NO. 2173/ 0 RN/L = 1.69 GRADIENT INTERVAL = -5.00/ 5.00

| MACH | ALPHA | TBTO/Q | QBI/QO | QB/QO | SBPO/Q | SBSBIQ | TBTBIQ | 2712/Q | 12SBIQ | 12SB/Q | P12POQ |
|---|---|---|---|---|---|---|---|---|---|---|---|
| .248 | .000 | .00040 | 1.01250 | 1.01250 | -.01240 | .00000 | -.00010 | .82850 | .19850 | .19460 | .18210 |
| .248 | .000 | .00000 | 1.01250 | 1.01240 | -.01300 | .00000 | -.00010 | .82850 | .19890 | .19510 | .18210 |
| .248 | .000 | .00020 | 1.01260 | 1.01250 | -.01260 | .00000 | .00000 | .82850 | .19860 | .19480 | .18210 |
| .248 | .000 | .00020 | 1.01250 | 1.01250 | -.01270 | .00000 | .00000 | .82850 | .19870 | .19480 | .18210 |
| | GRADIENT | .00000 | .00000 | .00000 | .00000 | .00000 | .00000 | .00000 | .00000 | .00000 | .00000 |

RUN NO. 2174/ 0 RN/L = 1.80 GRADIENT INTERVAL = -5.00/ 5.00

| MACH | ALPHA | TBTO/Q | QBI/QO | QB/QO | SBPO/Q | SBSBIQ | TBTBIQ | 2712/Q | 12SBIQ | 12SB/Q | P12POQ |
|---|---|---|---|---|---|---|---|---|---|---|---|
| .265 | .000 | .00010 | 1.01070 | 1.01040 | -.01080 | .00000 | -.00010 | .82860 | .19890 | .19490 | .18410 |
| .265 | .000 | .00070 | 1.01130 | 1.01180 | -.01150 | .00000 | .00010 | .82860 | .19950 | .19570 | .18420 |
| .265 | .000 | .00040 | 1.01120 | 1.01140 | -.01140 | -.00010 | .00010 | .82860 | .19930 | .19560 | .18420 |
| .265 | .000 | .00040 | 1.01110 | 1.01120 | -.01120 | .00000 | .00000 | .82860 | .19920 | .19540 | .18410 |
| | GRADIENT | .00000 | .00000 | .00000 | .00000 | .00000 | .00000 | .00000 | .00000 | .00000 | .00000 |

OA236 (NAAL 759) CONFIGURATION 1 DATA SELECT 2 (TFM201) ( 28 JUN 79 )

REFERENCE DATA

SREF = .0000 SQ.FT. XMRP = .0000 IN. XT
LREF = .0000 INCHES YMRP = .0000 IN. YT
BREF = .0000 INCHES ZMRP = .0000 IN. ZT
SCALE = 1.0000

PARAMETRIC DATA

ALPHA = .000 BETA = .000

RUN NO. 2011/ 0 RN/L = 1.29 GRADIENT INTERVAL = -5.00/ 5.00

| MACH | ALPHA | TTO | QO | QBI | QB | PAC |
|---|---|---|---|---|---|---|
| .188 | .000 | 533.14100 | 52.68930 | 52.57100 | 52.59790 | 2104.10999 |
| .188 | .000 | 533.05400 | 52.62940 | 52.52310 | 52.53820 | 2104.10999 |
| .188 | .000 | 533.18400 | 52.65930 | 52.57130 | 52.61010 | 2104.10999 |
| .188 | .000 | 533.12600 | 52.65930 | 52.55510 | 52.58210 | 2104.10999 |
| | GRADIENT | .00000 | .00000 | .00000 | .00000 | .00000 |

RUN NO. 2012/ 0 RN/L = 1.58 GRADIENT INTERVAL = -5.00/ 5.00

| MACH | ALPHA | TTO | QO | QBI | QB | PAC |
|---|---|---|---|---|---|---|
| .229 | .000 | 535.91700 | 78.68990 | 78.83090 | 78.83920 | 2104.10999 |
| .230 | .000 | 536.09000 | 78.76520 | 78.86610 | 78.87420 | 2104.10999 |
| .229 | .000 | 536.09000 | 78.68990 | 78.79480 | 78.80330 | 2104.10999 |
| .230 | .000 | 536.03200 | 78.71500 | 78.83060 | 78.83890 | 2104.10999 |
| | GRADIENT | .00000 | .00000 | .00000 | .00000 | .00000 |

RUN NO. 2013/ 0 RN/L = 1.70 GRADIENT INTERVAL = -5.00/ 5.00

| MACH | ALPHA | TTO | QO | QBI | QB | PAC |
|---|---|---|---|---|---|---|
| .248 | .000 | 537.86500 | 91.87790 | 91.97650 | 91.96300 | 2104.10999 |
| .248 | .000 | 537.90800 | 91.96840 | 92.02330 | 92.00950 | 2104.10999 |
| .248 | .000 | 538.16700 | 91.90800 | 92.01210 | 92.02230 | 2104.10999 |
| .248 | .000 | 537.98000 | 91.91810 | 92.00390 | 91.99820 | 2104.10999 |
| | GRADIENT | .00000 | .00000 | .00000 | .00000 | .00000 |

RUN NO. 2014/ 0 RN/L = 1.81 GRADIENT INTERVAL = -5.00/ 5.00

| MACH | ALPHA | TTO | QO | QBI | QB | PAC |
|---|---|---|---|---|---|---|
| .265 | .000 | 540.15500 | 105.03900 | 105.11400 | 105.07800 | 2104.10999 |
| .265 | .000 | 540.19800 | 105.09900 | 105.22100 | 105.20900 | 2104.10999 |
| .265 | .000 | 540.02500 | 105.20400 | 105.29100 | 105.29000 | 2104.10999 |
| .265 | .000 | 540.12600 | 105.11400 | 105.20900 | 105.19200 | 2104.10999 |
| | GRADIENT | .00000 | .00000 | .00000 | .00000 | .00000 |

OA236 (NAAL 759) CONFIGURATION 2 DATA SELECT 2 (TFM202) ( 28 JUN 79 )

REFERENCE DATA

SREF = .0000 SQ.FT. XMRP = .0000 IN. XT
LREF = .0000 INCHES YMRP = .0000 IN. YT
BREF = .0000 INCHES ZMRP = .0000 IN. ZT
SCALE = 1.0000

PARAMETRIC DATA

ALPHA = .000 BETA = .000

RUN NO. 2021/ 0 RN/L = 1.28 GRADIENT INTERVAL = -5.00/ 5.00

| MACH | ALPHA | TTO | QO | QBI | QB | PAC |
|---|---|---|---|---|---|---|
| .188 | .000 | 535.05000 | 52.36020 | 51.78770 | 51.80730 | 2104.10999 |
| .188 | .000 | 535.13700 | 52.31530 | 51.70330 | 51.73550 | 2104.10999 |
| .187 | .000 | 535.26700 | 52.25550 | 51.65550 | 51.68800 | 2104.10999 |
| .188 | .000 | 535.15100 | 52.31030 | 51.71550 | 51.74360 | 2104.10999 |
| | GRADIENT | .00000 | .00000 | .00000 | .00000 | .00000 |

RUN NO. 2022/ 0 RN/L = 1.57 GRADIENT INTERVAL = -5.00/ 5.00

| MACH | ALPHA | TTO | QO | QBI | QB | PAC |
|---|---|---|---|---|---|---|
| .229 | .000 | 537.17300 | 78.64470 | 77.98880 | 78.00220 | 2104.10999 |
| .229 | .000 | 537.90800 | 78.61450 | 77.67590 | 77.70320 | 2104.10999 |
| .229 | .000 | 537.69200 | 78.58440 | 77.79670 | 77.82330 | 2104.10999 |
| .229 | .000 | 537.59100 | 78.61450 | 77.82050 | 77.84290 | 2104.10999 |
| | GRADIENT | .00000 | .00000 | .00000 | .00000 | .00000 |

RUN NO. 2023/ 0 RN/L = 1.69 GRADIENT INTERVAL = -5.00/ 5.00

| MACH | ALPHA | TTO | QO | QBI | QB | PAC |
|---|---|---|---|---|---|---|
| .248 | .000 | 538.81600 | 91.86280 | 90.83540 | 90.84080 | 2104.10999 |
| .248 | .000 | 539.37800 | 91.72690 | 90.81350 | 90.81910 | 2104.10999 |
| .248 | .000 | 539.33400 | 91.84770 | 90.59520 | 90.61410 | 2104.10999 |
| .248 | .000 | 539.17600 | 91.81250 | 90.74800 | 90.75800 | 2104.10999 |
| | GRADIENT | .00000 | .00000 | .00000 | .00000 | .00000 |

RUN NO. 2024/ 0 RN/L = 1.80 GRADIENT INTERVAL = -5.00/ 5.00

| MACH | ALPHA | TTO | QO | QBI | QB | PAC |
|---|---|---|---|---|---|---|
| .264 | .000 | 541.79500 | 104.91900 | 103.69000 | 103.68700 | 2104.10999 |
| .264 | .000 | 541.70800 | 104.94900 | 103.74900 | 103.74600 | 2104.10999 |
| .264 | .000 | 541.49300 | 104.91900 | 103.66600 | 103.67500 | 2104.10999 |
| .264 | .000 | 541.66500 | 104.92900 | 103.70100 | 103.70200 | 2104.10999 |
| | GRADIENT | .00000 | .00000 | .00000 | .00000 | .00000 |

OA236 (NAAL 759) CONFIGURATION 3 DATA SELECT 2 (TFM203) ( 28 JUN 79 )

REFERENCE DATA

SREF = .0000 SQ.FT. XMRP = .0000 IN. XT
LREF = .0000 INCHES YMRP = .0000 IN. YT
BREF = .0000 INCHES ZMRP = .0000 IN. ZT
SCALE = 1.0000

PARAMETRIC DATA

ALPHA = .000 BETA = .000

RUN NO. 2031/ 0 RN/L = 1.29 GRADIENT INTERVAL = -5.00/ 5.00

| MACH | ALPHA | TTO | QO | QBI | QB | PAC |
|---|---|---|---|---|---|---|
| .188 | .000 | 535.61400 | 52.70420 | 53.33300 | 53.35520 | 2104.10999 |
| .188 | .000 | 535.52700 | 52.64440 | 53.27300 | 53.29560 | 2104.10999 |
| .188 | .000 | 535.70000 | 52.62940 | 53.26100 | 53.28370 | 2104.10999 |
| .188 | .000 | 535.61400 | 52.65930 | 53.28900 | 53.31150 | 2104.10999 |
| | GRADIENT | .00000 | .00000 | .00000 | .00000 | .00000 |

RUN NO. 2032/ 0 RN/L = 1.56 GRADIENT INTERVAL = -5.00/ 5.00

| MACH | ALPHA | TTO | QO | QBI | QB | PAC |
|---|---|---|---|---|---|---|
| .230 | .000 | 538.77300 | 78.73510 | 79.91440 | 79.91610 | 2104.10999 |
| .230 | .000 | 539.20500 | 78.90090 | 80.09280 | 80.10530 | 2104.10999 |
| .229 | .000 | 539.29100 | 78.64470 | 79.81930 | 79.79760 | 2104.10999 |
| .230 | .000 | 539.09000 | 78.76020 | 79.94220 | 79.93970 | 2104.10999 |
| | GRADIENT | .00000 | .00000 | .00000 | .00000 | .00000 |

RUN NO. 2033/ 0 RN/L = 1.68 GRADIENT INTERVAL = -5.00/ 5.00

| MACH | ALPHA | TTO | QO | QBI | QB | PAC |
|---|---|---|---|---|---|---|
| .248 | .000 | 540.45700 | 92.05890 | 93.33200 | 93.33410 | 2104.10999 |
| .248 | .000 | 541.14800 | 91.72690 | 92.97650 | 92.96890 | 2104.10999 |
| .248 | .000 | 541.10400 | 91.89300 | 93.16620 | 93.15740 | 2104.10999 |
| .248 | .000 | 540.90300 | 91.89290 | 93.15820 | 93.15340 | 2104.10999 |
| | GRADIENT | .00000 | .00000 | .00000 | .00000 | .00000 |

RUN NO. 2034/ 0 RN/L = 1.79 GRADIENT INTERVAL = -5.00/ 5.00

| MACH | ALPHA | TTO | QO | QBI | QB | PAC |
|---|---|---|---|---|---|---|
| .265 | .000 | 542.91600 | 105.15900 | 106.56300 | 106.59000 | 2104.10999 |
| .264 | .000 | 543.08800 | 104.96400 | 106.36300 | 106.35500 | 2104.10999 |
| .264 | .000 | 543.21800 | 104.93400 | 106.36300 | 106.33200 | 2104.10999 |
| .265 | .000 | 543.07300 | 105.01900 | 106.43000 | 106.42600 | 2104.10999 |
| | GRADIENT | .00000 | .00000 | .00000 | .00000 | .00000 |

OA236 (NAAL 759) CONFIGURATION 4 DATA SELECT 2 (TFM204) ( 28 JUN 79 )

REFERENCE DATA

SREF = .0000 SQ.FT. XMRP = .0000 IN. XT
LREF = .0000 INCHES YMRP = .0000 IN. YT
BREF = .0000 INCHES ZMRP = .0000 IN. ZT
SCALE = 1.0000

PARAMETRIC DATA

ALPHA = .000 BETA = .000

RUN NO. 2041/ 0 RN/L = 1.28 GRADIENT INTERVAL = -5.00/ 5.00

| MACH | ALPHA | TTO | QO | QBI | QB | PAC |
|---|---|---|---|---|---|---|
| .188 | .000 | 538.29700 | 52.71920 | 52.84880 | 52.84990 | 2103.39999 |
| .188 | .000 | 538.38400 | 52.59950 | 52.75310 | 52.77890 | 2103.39999 |
| .188 | .000 | 538.38400 | 52.65930 | 52.82520 | 52.85050 | 2103.39999 |
| .188 | .000 | 538.35400 | 52.65930 | 52.80900 | 52.82640 | 2103.39999 |
| | GRADIENT | .00000 | .00000 | .00000 | .00000 | .00000 |

RUN NO. 2042/ 0 RN/L = 1.56 GRADIENT INTERVAL = -5.00/ 5.00

| MACH | ALPHA | TTO | QO | QBI | QB | PAC |
|---|---|---|---|---|---|---|
| .230 | .000 | 540.32800 | 78.76520 | 79.19120 | 79.17330 | 2103.39999 |
| .230 | .000 | 540.71600 | 78.81050 | 79.29890 | 79.31630 | 2103.39999 |
| .230 | .000 | 540.50000 | 78.75020 | 79.17930 | 79.17350 | 2103.39999 |
| .230 | .000 | 540.80200 | 78.78030 | 79.22710 | 79.20900 | 2103.39999 |
| .230 | .000 | 540.58600 | 78.77650 | 79.22410 | 79.21800 | 2103.39999 |
| | GRADIENT | .00000 | .00000 | .00000 | .00000 | .00000 |

RUN NO. 2043/ 0 RN/L = 1.68 GRADIENT INTERVAL = -5.00/ 5.00

| MACH | ALPHA | TTO | QO | QBI | QB | PAC |
|---|---|---|---|---|---|---|
| .248 | .000 | 542.01000 | 91.96840 | 92.46770 | 92.46310 | 2103.39999 |
| .248 | .000 | 542.31200 | 91.87790 | 92.33700 | 92.32120 | 2103.39999 |
| .248 | .000 | 542.35500 | 91.90800 | 92.43260 | 92.41630 | 2103.39999 |
| .248 | .000 | 542.22600 | 91.91810 | 92.41240 | 92.40020 | 2103.39999 |
| | GRADIENT | .00000 | .00000 | .00000 | .00000 | .00000 |

RUN NO. 2044/ 0 RN/L = 1.79 GRADIENT INTERVAL = -5.00/ 5.00

| MACH | ALPHA | TTO | QO | QBI | QB | PAC |
|---|---|---|---|---|---|---|
| .265 | .000 | 543.34700 | 105.02400 | 105.59400 | 105.56700 | 2103.39999 |
| .265 | .000 | 543.95000 | 105.03900 | 105.59300 | 105.55500 | 2103.39999 |
| .265 | .000 | 544.25100 | 105.12900 | 105.64000 | 105.61300 | 2103.39999 |
| .265 | .000 | 543.84900 | 105.06400 | 105.60900 | 105.57800 | 2103.39999 |
| | GRADIENT | .00000 | .00000 | .00000 | .00000 | .00000 |

OA236 (NAAL 759) CONFIGURATION 5 DATA SELECT 2 (TFM205) ( 28 JUN 79 )

REFERENCE DATA

SREF = .0000 SQ.FT. XMRP = .0000 IN. XT
LREF = .0000 INCHES YMRP = .0000 IN. YT
BREF = .0000 INCHES ZMRP = .0000 IN. ZT
SCALE = 1.0000

PARAMETRIC DATA

ALPHA = .000 BETA = .000

RUN NO. 2051/ 0 RN/L = 1.29 GRADIENT INTERVAL = -5.00/ 5.00

| MACH | ALPHA | TTO | QO | QBI | QB | PAC |
|---|---|---|---|---|---|---|
| .188 | .000 | 533.31400 | 52.49480 | 52.62070 | 52.55110 | 2101.98999 |
| .188 | .000 | 533.31400 | 52.53970 | 52.69290 | 52.56270 | 2101.98999 |
| .188 | .000 | 533.35800 | 52.55460 | 52.72900 | 52.57460 | 2101.98999 |
| .188 | .000 | 533.32900 | 52.52970 | 52.68080 | 52.56270 | 2101.98999 |
| | GRADIENT | .00000 | .00000 | .00000 | .00000 | .00000 |

RUN NO. 2052/ 0 RN/L = 1.58 GRADIENT INTERVAL = -5.00/ 5.00

| MACH | ALPHA | TTO | QO | QBI | QB | PAC |
|---|---|---|---|---|---|---|
| .229 | .000 | 535.48400 | 78.59950 | 79.07220 | 78.85160 | 2101.98999 |
| .229 | .000 | 535.39700 | 78.58440 | 79.04830 | 78.82780 | 2101.98999 |
| .229 | .000 | 535.57000 | 78.62960 | 79.16810 | 78.88700 | 2101.98999 |
| .229 | .000 | 535.48300 | 78.60450 | 79.09620 | 78.85540 | 2101.98999 |
| | GRADIENT | .00000 | .00000 | .00000 | .00000 | .00000 |

RUN NO. 2053/ 0 RN/L = 1.70 GRADIENT INTERVAL = -5.00/ 5.00

| MACH | ALPHA | TTO | QO | QBI | QB | PAC |
|---|---|---|---|---|---|---|
| .248 | .000 | 537.38900 | 91.81750 | 92.28890 | 91.97480 | 2101.98999 |
| .248 | .000 | 537.77800 | 91.75710 | 92.27770 | 91.88010 | 2101.98999 |
| .248 | .000 | 537.73500 | 91.83260 | 92.31280 | 92.08220 | 2101.98999 |
| .248 | .000 | 537.63400 | 91.80240 | 92.29310 | 91.97900 | 2101.98999 |
| | GRADIENT | .00000 | .00000 | .00000 | .00000 | .00000 |

RUN NO. 2054/ 0 RN/L = 1.81 GRADIENT INTERVAL = -5.00/ 5.00

| MACH | ALPHA | TTO | QO | QBI | QB | PAC |
|---|---|---|---|---|---|---|
| .265 | .000 | 538.94600 | 105.00900 | 105.53300 | 105.13700 | 2101.98999 |
| .264 | .000 | 539.63700 | 104.90400 | 105.46300 | 105.18700 | 2101.98999 |
| .265 | .000 | 539.63700 | 104.99400 | 105.55700 | 105.12500 | 2101.98999 |
| .265 | .000 | 539.85300 | 105.00900 | 105.55700 | 105.24500 | 2101.98999 |
| .265 | .000 | 539.51800 | 104.97900 | 105.52700 | 105.17300 | 2101.98999 |
| | GRADIENT | .00000 | .00000 | .00000 | .00000 | .00000 |

OA236 (NAAL 759) CONFIGURATION 6 DATA SELECT 2 (TFM206) ( 28 JUN 79 )

REFERENCE DATA

SREF = .0000 SQ.FT. XMRP = .0000 IN. XT
LREF = .0000 INCHES YMRP = .0000 IN. YT
BREF = .0000 INCHES ZMRP = .0000 IN. ZT
SCALE = 1.0000

PARAMETRIC DATA

ALPHA = .000 BETA = .000

RUN NO. 2061/ 0 RN/L = 1.29 GRADIENT INTERVAL = -5.00/ 5.00

| MACH | ALPHA | TTO | QO | QBI | QB | PAC |
|---|---|---|---|---|---|---|
| .188 | .000 | 533.83500 | 52.34520 | 52.47680 | 52.14360 | 2101.98999 |
| .188 | .000 | 533.79200 | 52.49480 | 52.62060 | 52.22640 | 2101.98999 |
| .188 | .000 | 533.74900 | 52.44990 | 52.58480 | 52.31100 | 2101.98999 |
| .188 | .000 | 533.79200 | 52.43000 | 52.56070 | 52.22700 | 2101.98999 |
| | GRADIENT | .00000 | .00000 | .00000 | .00000 | .00000 |

RUN NO. 2062/ 0 RN/L = 1.57 GRADIENT INTERVAL = -5.00/ 5.00

| MACH | ALPHA | TTO | QO | QBI | QB | PAC |
|---|---|---|---|---|---|---|
| .229 | .000 | 535.78700 | 78.50950 | 79.00100 | 78.37390 | 2101.98999 |
| .229 | .000 | 536.22000 | 78.49400 | 78.95310 | 78.29030 | 2101.98999 |
| .229 | .000 | 536.04700 | 78.58440 | 79.06030 | 78.39680 | 2101.98999 |
| .229 | .000 | 536.01800 | 78.52930 | 79.00480 | 78.35360 | 2101.98999 |
| | GRADIENT | .00000 | .00000 | .00000 | .00000 | .00000 |

RUN NO. 2063/ 0 RN/L = 1.70 GRADIENT INTERVAL = -5.00/ 5.00

| MACH | ALPHA | TTO | QO | QBI | QB | PAC |
|---|---|---|---|---|---|---|
| .248 | .000 | 537.08600 | 91.71180 | 92.19440 | 91.68980 | 2101.98999 |
| .248 | .000 | 537.56200 | 91.63640 | 92.07530 | 91.44010 | 2101.98999 |
| .248 | .000 | 537.82200 | 91.75710 | 92.16960 | 91.50990 | 2101.98999 |
| .248 | .000 | 537.49000 | 91.70180 | 92.14640 | 91.54660 | 2101.98999 |
| | GRADIENT | .00000 | .00000 | .00000 | .00000 | .00000 |

RUN NO. 2064/ 0 RN/L = 1.81 GRADIENT INTERVAL = -5.00/ 5.00

| MACH | ALPHA | TTO | QO | QBI | QB | PAC |
|---|---|---|---|---|---|---|
| .264 | .000 | 539.16200 | 104.87300 | 105.39100 | 104.54400 | 2101.98999 |
| .264 | .000 | 539.59300 | 104.79800 | 105.27300 | 104.59300 | 2101.98999 |
| .265 | .000 | 539.50700 | 104.93400 | 105.48600 | 104.62600 | 2101.98999 |
| .264 | .000 | 539.42100 | 104.86800 | 105.38300 | 104.58700 | 2101.98999 |
| | GRADIENT | .00000 | .00000 | .00000 | .00000 | .00000 |

OA236 (NAAL 759) CONFIGURATION 7 DATA SELECT 2 (TFM207) ( 28 JUN 79 )

REFERENCE DATA

SREF = .0000 SQ.FT. XMRP = .0000 IN. XT
LREF = .0000 INCHES YMRP = .0000 IN. YT
BREF = .0000 INCHES ZMRP = .0000 IN. ZT
SCALE = 1.0000

PARAMETRIC DATA

ALPHA = .000 BETA = .000

RUN NO. 2071/ 0 RN/L = 1.28 GRADIENT INTERVAL = -5.00/ 5.00

| MACH | ALPHA | TTO | QO | QBI | QB | PAC |
|---|---|---|---|---|---|---|
| .188 | .000 | 537.77800 | 52.68930 | 52.86090 | 52.52530 | 2101.98999 |
| .188 | .000 | 537.47600 | 52.64440 | 52.80080 | 52.71810 | 2101.98999 |
| .188 | .000 | 537.82200 | 52.62940 | 52.76460 | 52.61000 | 2101.98999 |
| .188 | .000 | 537.69200 | 52.65440 | 52.80880 | 52.61780 | 2101.98999 |
| | GRADIENT | .00000 | .00000 | .00000 | .00000 | .00000 |

RUN NO. 2072/ 0 RN/L = 1.56 GRADIENT INTERVAL = -5.00/ 5.00

| MACH | ALPHA | TTO | QO | QBI | QB | PAC |
|---|---|---|---|---|---|---|
| .229 | .000 | 539.24800 | 78.62960 | 79.10790 | 78.46810 | 2101.98999 |
| .229 | .000 | 539.29100 | 78.61450 | 79.04790 | 78.57600 | 2101.98999 |
| .229 | .000 | 539.72300 | 78.55440 | 78.97640 | 78.48110 | 2101.98999 |
| .229 | .000 | 539.42100 | 78.59950 | 79.04400 | 78.50840 | 2101.98999 |
| | GRADIENT | .00000 | .00000 | .00000 | .00000 | .00000 |

RUN NO. 2073/ 0 RN/L = 1.68 GRADIENT INTERVAL = -5.00/ 5.00

| MACH | ALPHA | TTO | QO | QBI | QB | PAC |
|---|---|---|---|---|---|---|
| .248 | .000 | 541.23400 | 91.72690 | 92.18220 | 91.67770 | 2101.98999 |
| .248 | .000 | 541.27700 | 91.71180 | 92.17040 | 91.61820 | 2101.98999 |
| .248 | .000 | 541.10400 | 91.69680 | 92.13450 | 91.60640 | 2101.98999 |
| .248 | .000 | 541.20500 | 91.71180 | 92.16240 | 91.63410 | 2101.98999 |
| | GRADIENT | .00000 | .00000 | .00000 | .00000 | .00000 |

RUN NO. 2074/ 0 RN/L = 1.79 GRADIENT INTERVAL = -5.00/ 5.00

| MACH | ALPHA | TTO | QO | QBI | QB | PAC |
|---|---|---|---|---|---|---|
| .264 | .000 | 542.83000 | 104.90400 | 105.39100 | 104.61500 | 2101.98999 |
| .264 | .000 | 543.04500 | 104.90400 | 105.45100 | 104.66200 | 2101.98999 |
| .264 | .000 | 542.83000 | 104.84300 | 105.33200 | 104.66300 | 2101.98999 |
| .264 | .000 | 542.90100 | 104.88300 | 105.39100 | 104.64700 | 2101.98999 |
| | GRADIENT | .00000 | .00000 | .00000 | .00000 | .00000 |

OA236 (NAAL 759) CONFIGURATION 8 DATA SELECT 2 (TFM208) ( 28 JUN 79 )

REFERENCE DATA

SREF = .0000 SQ.FT. XMRP = .0000 IN. XT
LREF = .0000 INCHES YMRP = .0000 IN. YT
BREF = .0000 INCHES ZMRP = .0000 IN. ZT
SCALE = 1.0000

PARAMETRIC DATA

ALPHA = .000 BETA = .000

RUN NO. 2081/ 0 RN/L = 1.28 GRADIENT INTERVAL = -5.00/ 5.00

| MACH | ALPHA | TTO | QO | QBI | QB | PAC |
|---|---|---|---|---|---|---|
| .188 | .000 | 538.34000 | 52.34520 | 52.52510 | 52.46810 | 2101.28000 |
| .188 | .000 | 538.38400 | 52.46490 | 52.64500 | 52.50310 | 2101.28000 |
| .188 | .000 | 538.47000 | 52.56960 | 52.74080 | 52.63440 | 2101.28000 |
| .188 | .000 | 538.39800 | 52.45990 | 52.63700 | 52.53520 | 2101.28000 |
| | GRADIENT | .00000 | .00000 | .00000 | .00000 | .00000 |

RUN NO. 2082/ 0 RN/L = 1.56 GRADIENT INTERVAL = -5.00/ 5.00

| MACH | ALPHA | TTO | QO | QBI | QB | PAC |
|---|---|---|---|---|---|---|
| .229 | .000 | 540.19800 | 78.61450 | 79.16800 | 78.95880 | 2101.28000 |
| .230 | .000 | 540.28400 | 78.67480 | 79.19140 | 79.05380 | 2101.28000 |
| .229 | .000 | 540.58700 | 78.56940 | 79.03620 | 78.99540 | 2101.28000 |
| .229 | .000 | 540.35600 | 78.61960 | 79.13190 | 79.00260 | 2101.28000 |
| | GRADIENT | .00000 | .00000 | .00000 | .00000 | .00000 |

RUN NO. 2083/ 0 RN/L = 1.68 GRADIENT INTERVAL = -5.00/ 5.00

| MACH | ALPHA | TTO | QO | QBI | QB | PAC |
|---|---|---|---|---|---|---|
| .248 | .000 | 541.62200 | 91.63640 | 92.12300 | 91.95340 | 2101.28000 |
| .248 | .000 | 541.79500 | 91.72690 | 92.30180 | 91.98770 | 2101.28000 |
| .248 | .000 | 541.53600 | 91.77220 | 92.32520 | 92.07060 | 2101.28000 |
| .248 | .000 | 541.65100 | 91.71180 | 92.25000 | 92.00390 | 2101.28000 |
| | GRADIENT | .00000 | .00000 | .00000 | .00000 | .00000 |

RUN NO. 2084/ 0 RN/L = 1.79 GRADIENT INTERVAL = -5.00/ 5.00

| MACH | ALPHA | TTO | QO | QBI | QB | PAC |
|---|---|---|---|---|---|---|
| .265 | .000 | 543.00200 | 104.88800 | 105.49900 | 105.25800 | 2101.28000 |
| .265 | .000 | 543.34700 | 104.93400 | 105.54600 | 105.24500 | 2101.28000 |
| .265 | .000 | 543.60500 | 104.93400 | 105.55800 | 105.24500 | 2101.28000 |
| .265 | .000 | 543.31800 | 104.91900 | 105.53400 | 105.25000 | 2101.28000 |
| | GRADIENT | .00000 | .00000 | .00000 | .00000 | .00000 |

OA236 (NAAL 759) CONFIGURATION 9 DATA SELECT 2 (TFM209) ( 28 JUN 79 )

REFERENCE DATA

SREF = .0000 SQ.FT. XMRP = .0000 IN. XT
LREF = .0000 INCHES YMRP = .0000 IN. YT
BREF = .0000 INCHES ZMRP = .0000 IN. ZT
SCALE = 1.0000

PARAMETRIC DATA

ALPHA = .000 BETA = .000

RUN NO. 2091/ 0 RN/L = 1.27 GRADIENT INTERVAL = -5.00/ 5.00

| MACH | ALPHA | TTO | QO | QBI | QB | PAC |
|---|---|---|---|---|---|---|
| .188 | .000 | 540.97500 | 52.62940 | 52.82480 | 52.69380 | 2100.57999 |
| .188 | .000 | 540.97500 | 52.61450 | 52.77660 | 52.70600 | 2100.57999 |
| .188 | .000 | 541.23400 | 52.64440 | 52.82470 | 52.69370 | 2100.57999 |
| .188 | .000 | 541.06100 | 52.62940 | 52.80870 | 52.69780 | 2100.57999 |
| | GRADIENT | .00000 | .00000 | .00000 | .00000 | .00000 |

RUN NO. 2092/ 0 RN/L = 1.55 GRADIENT INTERVAL = -5.00/ 5.00

| MACH | ALPHA | TTO | QO | QBI | QB | PAC |
|---|---|---|---|---|---|---|
| .229 | .000 | 542.44200 | 78.53910 | 79.03620 | 78.83970 | 2100.57999 |
| .230 | .000 | 542.35500 | 78.62960 | 79.15550 | 78.95830 | 2100.57999 |
| .229 | .000 | 542.44200 | 78.56940 | 79.06000 | 79.00700 | 2100.57999 |
| .229 | .000 | 542.41300 | 78.57940 | 79.08390 | 78.93500 | 2100.57999 |
| | GRADIENT | .00000 | .00000 | .00000 | .00000 | .00000 |

RUN NO. 2093/ 0 RN/L = 1.67 GRADIENT INTERVAL = -5.00/ 5.00

| MACH | ALPHA | TTO | QO | QBI | QB | PAC |
|---|---|---|---|---|---|---|
| .248 | .000 | 543.77800 | 91.84770 | 92.41980 | 92.23630 | 2100.57999 |
| .248 | .000 | 543.30400 | 91.66660 | 92.14620 | 92.13170 | 2100.57999 |
| .248 | .000 | 543.86400 | 91.74200 | 92.30120 | 92.04670 | 2100.57999 |
| .248 | .000 | 543.64800 | 91.75210 | 92.28900 | 92.13820 | 2100.57999 |
| | GRADIENT | .00000 | .00000 | .00000 | .00000 | .00000 |

RUN NO. 2094/ 0 RN/L = 1.78 GRADIENT INTERVAL = -5.00/ 5.00

| MACH | ALPHA | TTO | QO | QBI | QB | PAC |
|---|---|---|---|---|---|---|
| .265 | .000 | 545.07000 | 105.00900 | 105.56800 | 105.45800 | 2100.57999 |
| .265 | .000 | 544.85400 | 105.08400 | 105.61500 | 105.42100 | 2100.57999 |
| .265 | .000 | 544.98300 | 104.96400 | 105.53300 | 105.35200 | 2100.57999 |
| .265 | .000 | 544.96900 | 105.01900 | 105.57200 | 105.41000 | 2100.57999 |
| | GRADIENT | .00000 | .00000 | .00000 | .00000 | .00000 |

OA236 (NAAL 759) CONFIGURATION 10 DATA SELECT 2 (TFM210) ( 28 JUN 79 )

REFERENCE DATA

SREF = .0000 SQ.FT. XMRP = .0000 IN. XT
LREF = .0000 INCHES YMRP = .0000 IN. YT
BREF = .0000 INCHES ZMRP = .0000 IN. ZT
SCALE = 1.0000

PARAMETRIC DATA

ALPHA = .000 BETA = .000

RUN NO. 2101/ 0 RN/L = 1.29 GRADIENT INTERVAL = -5.00/ 5.00

| MACH | ALPHA | TTO | QO | QBI | QB | PAC |
|---|---|---|---|---|---|---|
| .188 | .000 | 533.22800 | 52.37510 | 52.54870 | 52.62380 | 2099.87000 |
| .188 | .000 | 533.22800 | 52.33030 | 52.46440 | 52.63620 | 2099.87000 |
| .188 | .000 | 533.27100 | 52.27040 | 52.40450 | 52.61270 | 2099.87000 |
| .188 | .000 | 533.24200 | 52.32530 | 52.47250 | 52.62420 | 2099.87000 |
| | GRADIENT | .00000 | .00000 | .00000 | .00000 | .00000 |

RUN NO. 2102/ 0 RN/L = 1.57 GRADIENT INTERVAL = -5.00/ 5.00

| MACH | ALPHA | TTO | QO | QBI | QB | PAC |
|---|---|---|---|---|---|---|
| .229 | .000 | 535.52700 | 78.43470 | 78.90480 | 78.98440 | 2099.87000 |
| .229 | .000 | 535.39700 | 78.55440 | 79.01160 | 79.10260 | 2099.87000 |
| .229 | .000 | 535.39700 | 78.44970 | 78.85640 | 79.10400 | 2099.87000 |
| .229 | .000 | 535.44000 | 78.47960 | 78.92430 | 79.06370 | 2099.87000 |
| | GRADIENT | .00000 | .00000 | .00000 | .00000 | .00000 |

RUN NO. 2103/ 0 RN/L = 1.69 GRADIENT INTERVAL = -5.00/ 5.00

| MACH | ALPHA | TTO | QO | QBI | QB | PAC |
|---|---|---|---|---|---|---|
| .248 | .000 | 537.00000 | 91.59110 | 92.05070 | 92.22780 | 2099.87000 |
| .247 | .000 | 537.04300 | 91.37980 | 91.86170 | 92.21920 | 2099.87000 |
| .248 | .000 | 537.21600 | 91.56090 | 92.02710 | 92.12080 | 2099.87000 |
| .248 | .000 | 537.08600 | 91.51060 | 91.97980 | 92.18930 | 2099.87000 |
| | GRADIENT | .00000 | .00000 | .00000 | .00000 | .00000 |

RUN NO. 2104/ 0 RN/L = 1.81 GRADIENT INTERVAL = -5.00/ 5.00

| MACH | ALPHA | TTO | QO | QBI | QB | PAC |
|---|---|---|---|---|---|---|
| .264 | .000 | 538.68600 | 104.76800 | 105.35600 | 105.54500 | 2099.87000 |
| .264 | .000 | 538.60000 | 104.72300 | 105.22400 | 105.52200 | 2099.87000 |
| .264 | .000 | 538.94600 | 104.72300 | 105.26000 | 105.41500 | 2099.87000 |
| .264 | .000 | 538.74400 | 104.73800 | 105.28000 | 105.49400 | 2099.87000 |
| | GRADIENT | .00000 | .00000 | .00000 | .00000 | .00000 |

OA236 (NAAL 759) CONFIGURATION 5 DATA SELECT 2 (TFM211) ( 28 JUN 79 )

REFERENCE DATA

SREF = .0000 SQ.FT. XMRP = .0000 IN. XT
LREF = .0000 INCHES YMRP = .0000 IN. YT
BREF = .0000 INCHES ZMRP = .0000 IN. ZT
SCALE = 1.0000

PARAMETRIC DATA

ALPHA = .000 BETA = .000

RUN NO. 2111/ 0 RN/L = 1.28 GRADIENT INTERVAL = -5.00/ 5.00

| MACH | ALPHA | TTO | QO | QBI | QB | PAC |
|---|---|---|---|---|---|---|
| .188 | .000 | 535.57000 | 52.64440 | 52.81240 | 52.76570 | 2099.87000 |
| .188 | .000 | 535.87400 | 52.64440 | 52.78830 | 52.82580 | 2099.87000 |
| .188 | .000 | 535.96000 | 52.65930 | 52.83650 | 52.71740 | 2099.87000 |
| .188 | .000 | 535.80100 | 52.64930 | 52.81240 | 52.76960 | 2099.87000 |
| | GRADIENT | .00000 | .00000 | .00000 | .00000 | .00000 |

RUN NO. 2112/ 0 RN/L = 1.57 GRADIENT INTERVAL = -5.00/ 5.00

| MACH | ALPHA | TTO | QO | QBI | QB | PAC |
|---|---|---|---|---|---|---|
| .229 | .000 | 537.69200 | 78.47960 | 78.98850 | 78.73250 | 2099.87000 |
| .230 | .000 | 537.82200 | 78.61450 | 79.14320 | 78.80240 | 2099.87000 |
| .230 | .000 | 537.99400 | 78.65970 | 79.23900 | 78.94550 | 2099.87000 |
| .230 | .000 | 537.83600 | 78.58460 | 79.12350 | 78.82680 | 2099.87000 |
| | GRADIENT | .00000 | .00000 | .00000 | .00000 | .00000 |

RUN NO. 2113/ 0 RN/L = 1.69 GRADIENT INTERVAL = -5.00/ 5.00

| MACH | ALPHA | TTO | QO | QBI | QB | PAC |
|---|---|---|---|---|---|---|
| .248 | .000 | 539.16200 | 91.72690 | 92.24080 | 91.91510 | 2099.87000 |
| .248 | .000 | 539.20500 | 91.71180 | 92.25310 | 91.91540 | 2099.87000 |
| .248 | .000 | 539.16200 | 91.72690 | 92.27690 | 91.95090 | 2099.87000 |
| .248 | .000 | 539.17600 | 91.72190 | 92.25690 | 91.92710 | 2099.87000 |
| | GRADIENT | .00000 | .00000 | .00000 | .00000 | .00000 |

RUN NO. 2114/ 0 RN/L = 1.80 GRADIENT INTERVAL = -5.00/ 5.00

| MACH | ALPHA | TTO | QO | QBI | QB | PAC |
|---|---|---|---|---|---|---|
| .265 | .000 | 540.45700 | 104.90400 | 105.49700 | 105.13700 | 2099.87000 |
| .265 | .000 | 540.45700 | 104.96400 | 105.56800 | 105.08900 | 2099.87000 |
| .265 | .000 | 540.41400 | 104.99400 | 105.61500 | 105.20700 | 2099.87000 |
| .265 | .000 | 540.44300 | 104.95400 | 105.56000 | 105.14400 | 2099.87000 |
| | GRADIENT | .00000 | .00000 | .00000 | .00000 | .00000 |

OA236 (NAAL 759) CONFIGURATION 11 DATA SELECT 2 (TFM212) ( 28 JUN 79 )

REFERENCE DATA

SREF = .0000 SQ.FT. XMRP = .0000 IN. XT
LREF = .0000 INCHES YMRP = .0000 IN. YT
BREF = .0000 INCHES ZMRP = .0000 IN. ZT
SCALE = 1.0000

PARAMETRIC DATA

ALPHA = .000 BETA = .000

RUN NO. 2121/ 0 RN/L = 1.28 GRADIENT INTERVAL = -5.00/ 5.00

| MACH | ALPHA | TTO | QO | QBI | QB | PAC |
|---|---|---|---|---|---|---|
| .188 | .000 | 537.86500 | 52.50980 | -.13300 | -.13220 | 2100.57999 |
| .188 | .000 | 537.82200 | 52.39010 | -.13300 | -.13220 | 2100.57999 |
| .188 | .000 | 537.86500 | 52.42000 | -.13300 | -.13220 | 2100.57999 |
| .188 | .000 | 537.85000 | 52.43990 | -.13300 | -.13220 | 2100.57999 |
| | GRADIENT | .00000 | .00000 | .00000 | .00000 | .00000 |

RUN NO. 2122/ 0 RN/L = 1.56 GRADIENT INTERVAL = -5.00/ 5.00

| MACH | ALPHA | TTO | QO | QBI | QB | PAC |
|---|---|---|---|---|---|---|
| .230 | .000 | 539.50700 | 78.59950 | -.04810 | -.04780 | 2100.57999 |
| .229 | .000 | 539.72300 | 78.49400 | -.04810 | -.04780 | 2100.57999 |
| .230 | .000 | 539.93900 | 78.65970 | -.04810 | -.04780 | 2100.57999 |
| .229 | .000 | 539.72300 | 78.58440 | -.04810 | -.04780 | 2100.57999 |
| | GRADIENT | .00000 | .00000 | .00000 | .00000 | .00000 |

RUN NO. 2123/ 0 RN/L = 1.68 GRADIENT INTERVAL = -5.00/ 5.00

| MACH | ALPHA | TTO | QO | QBI | QB | PAC |
|---|---|---|---|---|---|---|
| .248 | .000 | 541.32000 | 91.77220 | .10810 | .10750 | 2100.57999 |
| .248 | .000 | 541.06200 | 91.71180 | .06000 | .05970 | 2100.57999 |
| .248 | .000 | 541.19100 | 91.77220 | .07210 | .05970 | 2100.57999 |
| .248 | .000 | 541.19100 | 91.75210 | .08010 | .07560 | 2100.57999 |
| | GRADIENT | .00000 | .00000 | .00000 | .00000 | .00000 |

RUN NO. 2124/ 0 RN/L = 1.79 GRADIENT INTERVAL = -5.00/ 5.00

| MACH | ALPHA | TTO | QO | QBI | QB | PAC |
|---|---|---|---|---|---|---|
| .264 | .000 | 542.44200 | 104.84300 | .08390 | .08340 | 2100.57999 |
| .264 | .000 | 542.61400 | 104.82800 | .09590 | .09530 | 2100.57999 |
| .265 | .000 | 542.74300 | 104.84300 | .07190 | .07150 | 2100.57999 |
| .264 | .000 | 542.59900 | 104.83800 | .08390 | .08340 | 2100.57999 |
| | GRADIENT | .00000 | .00000 | .00000 | .00000 | .00000 |

OA236 (NAAL 759) CONFIGURATION 12 DATA SELECT 2 (TFM213) ( 28 JUN 79 )

REFERENCE DATA

SREF = .0000 SQ.FT. XMRP = .0000 IN. XT
LREF = .0000 INCHES YMRP = .0000 IN. YT
BREF = .0000 INCHES ZMRP = .0000 IN. ZT
SCALE = 1.0000

PARAMETRIC DATA

ALPHA = .000 BETA = .000

RUN NO. 2131/ 0 RN/L = 1.27 GRADIENT INTERVAL = -5.00/ 5.00

| MACH | ALPHA | TTO | QO | QBI | QB | PAC |
|---|---|---|---|---|---|---|
| .188 | .000 | 538.08100 | 52.30030 | 52.46470 | 52.50420 | 2099.87000 |
| .188 | .000 | 537.99400 | 52.37510 | 52.40350 | 52.43140 | 2099.87000 |
| .188 | .000 | 538.08100 | 52.34520 | 52.24650 | 52.28740 | 2099.87000 |
| .188 | .000 | 538.05200 | 52.34020 | 52.37150 | 52.40770 | 2099.87000 |
| | GRADIENT | .00000 | .00000 | .00000 | .00000 | .00000 |

RUN NO. 2132/ 0 RN/L = 1.56 GRADIENT INTERVAL = -5.00/ 5.00

| MACH | ALPHA | TTO | QO | QBI | QB | PAC |
|---|---|---|---|---|---|---|
| .229 | .000 | 539.81000 | 78.31510 | 78.35220 | 78.37540 | 2099.87000 |
| .229 | .000 | 540.06900 | 78.34500 | 78.36390 | 78.38700 | 2099.87000 |
| .229 | .000 | 540.41400 | 78.46400 | 78.27790 | 78.30160 | 2099.87000 |
| .229 | .000 | 540.09700 | 78.37470 | 78.33130 | 78.35470 | 2099.87000 |
| | GRADIENT | .00000 | .00000 | .00000 | .00000 | .00000 |

RUN NO. 2133/ 0 RN/L = 1.68 GRADIENT INTERVAL = -5.00/ 5.00

| MACH | ALPHA | TTO | QO | QBI | QB | PAC |
|---|---|---|---|---|---|---|
| .248 | .000 | 541.75200 | 91.62130 | 91.40100 | 91.41490 | 2099.87000 |
| .248 | .000 | 541.88100 | 91.57600 | 91.42580 | 91.43950 | 2099.87000 |
| .248 | .000 | 542.44200 | 91.57600 | 91.50990 | 91.52320 | 2099.87000 |
| .248 | .000 | 542.02500 | 91.59110 | 91.44560 | 91.45920 | 2099.87000 |
| | GRADIENT | .00000 | .00000 | .00000 | .00000 | .00000 |

RUN NO. 2134/ 0 RN/L = 1.78 GRADIENT INTERVAL = -5.00/ 5.00

| MACH | ALPHA | TTO | QO | QBI | QB | PAC |
|---|---|---|---|---|---|---|
| .265 | .000 | 544.25100 | 104.82800 | 104.70700 | 104.69800 | 2099.87000 |
| .265 | .000 | 544.68200 | 104.82800 | 104.65900 | 104.65000 | 2099.87000 |
| .265 | .000 | 544.76800 | 104.93400 | 104.60900 | 104.62400 | 2099.87000 |
| .265 | .000 | 544.56700 | 104.86300 | 104.65800 | 104.65700 | 2099.87000 |
| | GRADIENT | .00000 | .00000 | .00000 | .00000 | .00000 |

OA236 (NAAL 759) CONFIGURATION 13 DATA SELECT 2 (TFM214) ( 28 JUN 79 )

REFERENCE DATA

SREF = .0000 SQ.FT. XMRP = .0000 IN. XT
LREF = .0000 INCHES YMRP = .0000 IN. YT
BREF = .0000 INCHES ZMRP = .0000 IN. ZT
SCALE = 1.0000

PARAMETRIC DATA

ALPHA = .000 BETA = .000

RUN NO. 2141/ 0 RN/L = 1.27 GRADIENT INTERVAL = -5.00/ 5.00

| MACH | ALPHA | TTO | QO | QBI | QB | PAC |
|---|---|---|---|---|---|---|
| .189 | .000 | 539.29100 | 52.71920 | 52.43630 | 52.46400 | 2097.75000 |
| .188 | .000 | 539.29100 | 52.55460 | 52.32890 | 52.34520 | 2097.75000 |
| .188 | .000 | 539.29100 | 52.47980 | 52.22070 | 52.22570 | 2097.75000 |
| .188 | .000 | 539.29100 | 52.58450 | 52.32860 | 52.34500 | 2097.75000 |
| | GRADIENT | .00000 | .00000 | .00000 | .00000 | .00000 |

RUN NO. 2142/ 0 RN/L = 1.55 GRADIENT INTERVAL = -5.00/ 5.00

| MACH | ALPHA | TTO | QO | QBI | QB | PAC |
|---|---|---|---|---|---|---|
| .230 | .000 | 540.93200 | 78.64470 | 78.14200 | 78.15450 | 2097.75000 |
| .230 | .000 | 541.49300 | 78.79030 | 78.15230 | 78.17660 | 2097.75000 |
| .230 | .000 | 541.45000 | 78.65970 | 78.38280 | 78.38180 | 2097.75000 |
| .230 | .000 | 541.29100 | 78.69490 | 78.22570 | 78.23760 | 2097.75000 |
| | GRADIENT | .00000 | .00000 | .00000 | .00000 | .00000 |

RUN NO. 2143/ 0 RN/L = 1.68 GRADIENT INTERVAL = -5.00/ 5.00

| MACH | ALPHA | TTO | QO | QBI | QB | PAC |
|---|---|---|---|---|---|---|
| .248 | .000 | 542.35500 | 91.87790 | 91.19130 | 91.20640 | 2097.75000 |
| .248 | .000 | 542.52800 | 91.81750 | 91.19220 | 91.19540 | 2097.75000 |
| .248 | .000 | 542.78600 | 91.92310 | 91.16660 | 91.16990 | 2097.75000 |
| .248 | .000 | 542.55600 | 91.87280 | 91.18330 | 91.19060 | 2097.75000 |
| | GRADIENT | .00000 | .00000 | .00000 | .00000 | .00000 |

RUN NO. 2144/ 0 RN/L = 1.79 GRADIENT INTERVAL = -5.00/ 5.00

| MACH | ALPHA | TTO | QO | QBI | QB | PAC |
|---|---|---|---|---|---|---|
| .265 | .000 | 543.99300 | 104.96400 | 104.19900 | 104.18100 | 2097.75000 |
| .265 | .000 | 544.46700 | 105.09900 | 104.23200 | 104.22600 | 2097.75000 |
| .265 | .000 | 544.63900 | 105.08400 | 104.24400 | 104.23800 | 2097.75000 |
| .265 | .000 | 544.36600 | 105.04900 | 104.22500 | 104.21500 | 2097.75000 |
| | GRADIENT | .00000 | .00000 | .00000 | .00000 | .00000 |

OA236 (NAAL 759) CONFIGURATION 1 DATA SELECT 2 (TFM215) ( 28 JUN 79 )

REFERENCE DATA

SREF = .0000 SQ.FT. XMRP = .0000 IN. XT
LREF = .0000 INCHES YMRP = .0000 IN. YT
BREF = .0000 INCHES ZMRP = .0000 IN. ZT
SCALE = 1.0000

PARAMETRIC DATA

ALPHA = .000 BETA = .000

RUN NO. 2151/ 0 RN/L = 1.27 GRADIENT INTERVAL = -5.00/ 5.00

| MACH | ALPHA | TTO | QO | QBI | QB | PAC |
|---|---|---|---|---|---|---|
| .188 | .000 | 541.19100 | 52.56960 | 52.53440 | 52.53750 | 2097.75000 |
| .188 | .000 | 541.36400 | 52.53970 | 52.48630 | 52.51370 | 2097.75000 |
| .188 | .000 | 541.40600 | 52.30030 | 52.23440 | 52.25130 | 2097.75000 |
| .188 | .000 | 541.32000 | 52.46990 | 52.41830 | 52.43410 | 2097.75000 |
| | GRADIENT | .00000 | .00000 | .00000 | .00000 | .00000 |

RUN NO. 2152/ 0 RN/L = 1.55 GRADIENT INTERVAL = -5.00/ 5.00

| MACH | ALPHA | TTO | QO | QBI | QB | PAC |
|---|---|---|---|---|---|---|
| .230 | .000 | 543.00200 | 78.70500 | 78.94820 | 78.96770 | 2097.75000 |
| .230 | .000 | 542.83000 | 78.65970 | 78.85250 | 78.84870 | 2097.75000 |
| .230 | .000 | 543.04500 | 78.64470 | 78.86470 | 78.88470 | 2097.75000 |
| .230 | .000 | 542.95900 | 78.66980 | 78.88840 | 78.90040 | 2097.75000 |
| | GRADIENT | .00000 | .00000 | .00000 | .00000 | .00000 |

RUN NO. 2153/ 0 RN/L = 1.67 GRADIENT INTERVAL = -5.00/ 5.00

| MACH | ALPHA | TTO | QO | QBI | QB | PAC |
|---|---|---|---|---|---|---|
| .248 | .000 | 544.29400 | 91.75710 | 91.93840 | 91.92510 | 2097.75000 |
| .248 | .000 | 544.20800 | 91.71180 | 91.86700 | 91.85420 | 2097.75000 |
| .248 | .000 | 544.25100 | 91.77220 | 91.97430 | 91.97270 | 2097.75000 |
| .248 | .000 | 544.25100 | 91.74710 | 91.92650 | 91.91730 | 2097.75000 |
| | GRADIENT | .00000 | .00000 | .00000 | .00000 | .00000 |

RUN NO. 2154/ 0 RN/L = 1.78 GRADIENT INTERVAL = -5.00/ 5.00

| MACH | ALPHA | TTO | QO | QBI | QB | PAC |
|---|---|---|---|---|---|---|
| .265 | .000 | 545.58600 | 105.00900 | 105.20500 | 105.16900 | 2097.75000 |
| .265 | .000 | 546.18900 | 104.88800 | 105.10000 | 105.07600 | 2097.75000 |
| .265 | .000 | 545.93000 | 104.90400 | 105.07500 | 105.05200 | 2097.75000 |
| .265 | .000 | 545.90100 | 104.93400 | 105.12700 | 105.09900 | 2097.75000 |
| | GRADIENT | .00000 | .00000 | .00000 | .00000 | .00000 |

OA236 (NAAL 759) CONFIGURATION 3 DATA SELECT 2 (TFM216) ( 28 JUN 79 )

REFERENCE DATA

SREF = .0000 SQ.FT. XMRP = .0000 IN. XT
LREF = .0000 INCHES YMRP = .0000 IN. YT
BREF = .0000 INCHES ZMRP = .0000 IN. ZT
SCALE = 1.0000

PARAMETRIC DATA

ALPHA = .000 BETA = .000

RUN NO. 2161/ 0 RN/L = 1.26 GRADIENT INTERVAL = -5.00/ 5.00

| MACH | ALPHA | TTO | QO | QBI | QB | PAC |
|---|---|---|---|---|---|---|
| .188 | .000 | 542.83000 | 52.56960 | 53.19970 | 53.22270 | 2097.75000 |
| .188 | .000 | 543.00200 | 52.56960 | 53.19970 | 53.21070 | 2097.75000 |
| .188 | .000 | 543.00200 | 52.47980 | 53.11580 | 53.11530 | 2097.75000 |
| .188 | .000 | 542.94400 | 52.53970 | 53.17170 | 53.18290 | 2097.75000 |
| | GRADIENT | .00000 | .00000 | .00000 | .00000 | .00000 |

RUN NO. 2162/ 0 RN/L = 1.54 GRADIENT INTERVAL = -5.00/ 5.00

| MACH | ALPHA | TTO | QO | QBI | QB | PAC |
|---|---|---|---|---|---|---|
| .229 | .000 | 544.29400 | 78.46400 | 79.65000 | 79.66530 | 2097.75000 |
| .230 | .000 | 544.55300 | 78.65970 | 79.82800 | 79.84210 | 2097.75000 |
| .230 | .000 | 544.46700 | 78.68990 | 79.86380 | 79.85380 | 2097.75000 |
| .230 | .000 | 544.43800 | 78.60450 | 79.78060 | 79.78710 | 2097.75000 |
| | GRADIENT | .00000 | .00000 | .00000 | .00000 | .00000 |

RUN NO. 2163/ 0 RN/L = 1.66 GRADIENT INTERVAL = -5.00/ 5.00

| MACH | ALPHA | TTO | QO | QBI | QB | PAC |
|---|---|---|---|---|---|---|
| .248 | .000 | 545.28500 | 91.80240 | 93.09150 | 93.07110 | 2097.75000 |
| .248 | .000 | 545.50000 | 91.78730 | 93.05560 | 93.05940 | 2097.75000 |
| .248 | .000 | 545.67200 | 91.72690 | 92.98460 | 92.96490 | 2097.75000 |
| .248 | .000 | 545.48600 | 91.77220 | 93.04390 | 93.03180 | 2097.75000 |
| | GRADIENT | .00000 | .00000 | .00000 | .00000 | .00000 |

RUN NO. 2164/ 0 RN/L = 1.77 GRADIENT INTERVAL = -5.00/ 5.00

| MACH | ALPHA | TTO | QO | QBI | QB | PAC |
|---|---|---|---|---|---|---|
| .265 | .000 | 546.87700 | 105.15900 | 106.54600 | 106.53700 | 2097.75000 |
| .265 | .000 | 547.47900 | 104.81300 | 106.15600 | 106.11400 | 2097.75000 |
| .265 | .000 | 547.30700 | 104.94900 | 106.34600 | 106.31500 | 2097.75000 |
| .265 | .000 | 547.22100 | 104.97400 | 106.34900 | 106.32200 | 2097.75000 |
| | GRADIENT | .00000 | .00000 | .00000 | .00000 | .00000 |

OA236 (NAAL 759) CONFIGURATION 14 DATA SELECT 2 (TFM217) ( 28 JUN 79 )

REFERENCE DATA

SREF = .0000 SQ.FT. XMRP = .0000 IN. XT
LREF = .0000 INCHES YMRP = .0000 IN. YT
BREF = .0000 INCHES ZMRP = .0000 IN. ZT
SCALE = 1.0000

PARAMETRIC DATA

ALPHA = .000 BETA = .000

RUN NO. 2171/ 0 RN/L = 1.28 GRADIENT INTERVAL = -5.00/ 5.00

| MACH | ALPHA | TTO | QO | QBI | QB | PAC |
|---|---|---|---|---|---|---|
| .188 | .000 | 535.57000 | 52.55460 | 53.26090 | 53.28350 | 2100.57999 |
| .188 | .000 | 535.57000 | 52.52470 | 53.22480 | 53.25970 | 2100.57999 |
| .188 | .000 | 535.61400 | 52.58460 | 53.27270 | 53.30730 | 2100.57999 |
| .188 | .000 | 535.58500 | 52.55460 | 53.25280 | 53.28350 | 2100.57999 |
| | GRADIENT | .00000 | .00000 | .00000 | .00000 | .00000 |

RUN NO. 2172/ 0 RN/L = 1.57 GRADIENT INTERVAL = -5.00/ 5.00

| MACH | ALPHA | TTO | QO | QBI | QB | PAC |
|---|---|---|---|---|---|---|
| .229 | .000 | 537.82200 | 78.56940 | 79.72220 | 79.71310 | 2100.57999 |
| .229 | .000 | 537.95100 | 78.55440 | 79.68630 | 79.71320 | 2100.57999 |
| .230 | .000 | 538.03800 | 78.59950 | 79.74590 | 79.74860 | 2100.57999 |
| .229 | .000 | 537.93700 | 78.57440 | 79.71810 | 79.72500 | 2100.57999 |
| | GRADIENT | .00000 | .00000 | .00000 | .00000 | .00000 |

RUN NO. 2173/ 0 RN/L = 1.69 GRADIENT INTERVAL = -5.00/ 5.00

| MACH | ALPHA | TTO | QO | QBI | QB | PAC |
|---|---|---|---|---|---|---|
| .248 | .000 | 539.07500 | 91.71180 | 92.86630 | 92.85930 | 2100.57999 |
| .248 | .000 | 539.76600 | 91.77220 | 92.92550 | 92.91810 | 2100.57999 |
| .248 | .000 | 539.85300 | 91.65150 | 92.80720 | 92.80050 | 2100.57999 |
| .248 | .000 | 539.56400 | 91.71180 | 92.86630 | 92.85930 | 2100.57999 |
| | GRADIENT | .00000 | .00000 | .00000 | .00000 | .00000 |

RUN NO. 2174/ 0 RN/L = 1.80 GRADIENT INTERVAL = -5.00/ 5.00

| MACH | ALPHA | TTO | QO | QBI | QB | PAC |
|---|---|---|---|---|---|---|
| .265 | .000 | 541.19100 | 104.87300 | 106.00200 | 105.97300 | 2100.57999 |
| .265 | .000 | 541.66500 | 104.97900 | 106.16700 | 106.22100 | 2100.57999 |
| .265 | .000 | 541.49300 | 104.94900 | 106.13200 | 106.15000 | 2100.57999 |
| .265 | .000 | 541.44900 | 104.93400 | 106.10000 | 106.11400 | 2100.57999 |
| | GRADIENT | .00000 | .00000 | .00000 | .00000 | .00000 |

OA236 (NAAL 759) CONFIGURATION 1 DATA SELECT 3 (RFM301) ( 28 JUN 79 )

REFERENCE DATA

SREF = .0000 SQ.FT. XMRP = .0000 IN. XT
LREF = .0000 INCHES YMRP = .0000 IN. YT
BREF = .0000 INCHES ZMRP = .0000 IN. ZT
SCALE = 1.0000

PARAMETRIC DATA

ALPHA = .000 BETA = .000

RUN NO. 3011/ 0 RN/L = 1.29 GRADIENT INTERVAL = -5.00/ 5.00

| MACH | ALPHA | 27-12 | 12-ATM | 27-ATM | TBISBI | TB-SB | TB-TBI | SB-SBI | 12-PO | 12-SB |
|---|---|---|---|---|---|---|---|---|---|---|
| .188 | .000 | 43.51840 | 9.90390 | 53.43920 | 53.04520 | 53.04840 | -.00880 | .00000 | 9.38740 | 9.29740 |
| .188 | .000 | 43.46300 | 9.91380 | 53.39590 | 52.99060 | 52.99310 | -.00400 | .00000 | 9.37540 | 9.28620 |
| .188 | .000 | 43.48760 | 9.84490 | 53.37430 | 53.03920 | 53.06070 | -.00240 | -.01100 | 9.38080 | 9.32510 |
| .188 | .000 | 43.48970 | 9.88750 | 53.40310 | 53.02500 | 53.03400 | -.00500 | -.00360 | 9.38120 | 9.30290 |
| | GRADIENT | .00000 | .00000 | .00000 | .00000 | .00000 | .00000 | .00000 | .00000 | .00000 |

RUN NO. 3012/ 0 RN/L = 1.58 GRADIENT INTERVAL = -5.00/ 5.00

| MACH | ALPHA | 27-12 | 12-ATM | 27-ATM | TBISBI | TB-SB | TB-TBI | SB-SBI | 12-PO | 12-SB |
|---|---|---|---|---|---|---|---|---|---|---|
| .229 | .000 | 65.23140 | 14.99660 | 80.26420 | 79.87460 | 79.87740 | -.00160 | .00470 | 14.13130 | 14.24190 |
| .230 | .000 | 65.29300 | 14.99270 | 80.33850 | 79.91110 | 79.91430 | -.00240 | .01260 | 14.14580 | 14.21960 |
| .229 | .000 | 65.23140 | 14.90810 | 80.22090 | 79.83820 | 79.84670 | .00480 | .00000 | 14.13130 | 14.24740 |
| .230 | .000 | 65.25190 | 14.96580 | 80.27450 | 79.87460 | 79.87950 | .00020 | .00570 | 14.13610 | 14.23630 |
| | GRADIENT | .00000 | .00000 | .00000 | .00000 | .00000 | .00000 | .00000 | .00000 | .00000 |

RUN NO. 3013/ 0 RN/L = 1.70 GRADIENT INTERVAL = -5.00/ 5.00

| MACH | ALPHA | 27-12 | 12-ATM | 27-ATM | TBISBI | TB-SB | TB-TBI | SB-SBI | 12-PO | 12-SB |
|---|---|---|---|---|---|---|---|---|---|---|
| .248 | .000 | 76.12790 | 17.58430 | 93.80020 | 93.38960 | 93.38110 | -.00640 | .00310 | 16.73580 | 16.81410 |
| .248 | .000 | 76.20190 | 17.67870 | 93.93940 | 93.43820 | 93.43030 | -.00800 | .00150 | 16.75350 | 16.82530 |
| .248 | .000 | 76.15260 | 17.57640 | 93.80970 | 93.42610 | 93.44260 | .01520 | .00150 | 16.74170 | 16.80860 |
| .248 | .000 | 76.16080 | 17.61310 | 93.84980 | 93.41790 | 93.41800 | .00020 | .00210 | 16.74370 | 16.81600 |
| | GRADIENT | .00000 | .00000 | .00000 | .00000 | .00000 | .00000 | .00000 | .00000 | .00000 |

RUN NO. 3014/ 0 RN/L = 1.81 GRADIENT INTERVAL = -5.00/ 5.00

| MACH | ALPHA | 27-12 | 12-ATM | 27-ATM | TBISBI | TB-SB | TB-TBI | SB-SBI | 12-PO | 12-SB |
|---|---|---|---|---|---|---|---|---|---|---|
| .265 | .000 | 87.04910 | 20.40020 | 107.53700 | 106.95900 | 106.94000 | .00070 | .01730 | 19.35040 | 19.36980 |
| .265 | .000 | 87.09850 | 20.32940 | 107.53700 | 107.06200 | 107.07500 | .00800 | -.00470 | 19.36230 | 19.44190 |
| .265 | .000 | 87.18470 | 20.26250 | 107.54700 | 107.14700 | 107.15500 | .00320 | -.00860 | 19.38290 | 19.48640 |
| .265 | .000 | 87.11080 | 20.33070 | 107.54000 | 107.05600 | 107.05700 | .00400 | .00130 | 19.36520 | 19.43270 |
| | GRADIENT | .00000 | .00000 | .00000 | .00000 | .00000 | .00000 | .00000 | .00000 | .00000 |

OA236 (NAAL 759) CONFIGURATION 2 DATA SELECT 3 (RFM302) ( 28 JUN 79 )

REFERENCE DATA

SREF = .0000 SQ.FT. XMRP = .0000 IN. XT
LREF = .0000 INCHES YMRP = .0000 IN. YT
BREF = .0000 INCHES ZMRP = .0000 IN. ZT
SCALE = 1.0000

PARAMETRIC DATA

ALPHA = .000 BETA = .000

RUN NO. 3021/ 0 RN/L = 1.28 GRADIENT INTERVAL = -5.00/ 5.00

| MACH | ALPHA | 27-12 | 12-ATM | 27-ATM | TBISBI | TB-SB | TB-TBI | SB-SBI | 12-PO | 12-SB |
|---|---|---|---|---|---|---|---|---|---|---|
| .188 | .000 | 43.24110 | 10.23650 | 53.49450 | 52.24950 | 52.24860 | .00000 | .00070 | 9.32710 | 8.78890 |
| .188 | .000 | 43.20410 | 10.19910 | 53.44180 | 52.16450 | 52.17480 | .00000 | .00000 | 9.31910 | 8.75000 |
| .187 | .000 | 43.14870 | 10.22660 | 53.39860 | 52.11590 | 52.12550 | .00320 | .00070 | 9.30710 | 8.76950 |
| .188 | .000 | 43.19790 | 10.22070 | 53.44500 | 52.17660 | 52.18300 | .00100 | .00040 | 9.31780 | 8.76950 |
| | GRADIENT | .00000 | .00000 | .00000 | .00000 | .00000 | .00000 | .00000 | .00000 | .00000 |

RUN NO. 3022/ 0 RN/L = 1.57 GRADIENT INTERVAL = -5.00/ 5.00

| MACH | ALPHA | 27-12 | 12-ATM | 27-ATM | TBISBI | TB-SB | TB-TBI | SB-SBI | 12-PO | 12-SB |
|---|---|---|---|---|---|---|---|---|---|---|
| .229 | .000 | 65.18830 | 15.69910 | 80.93820 | 79.02430 | 79.02220 | -.00320 | .00230 | 14.12120 | 13.46400 |
| .229 | .000 | 65.16970 | 15.47680 | 80.70320 | 78.70840 | 78.72080 | .00400 | -.00310 | 14.11690 | 13.30010 |
| .229 | .000 | 65.14510 | 15.55550 | 80.75590 | 78.82990 | 78.83760 | .00070 | -.00080 | 14.11110 | 13.38070 |
| .229 | .000 | 65.16770 | 15.57710 | 80.79910 | 78.85420 | 78.86010 | .00050 | -.00050 | 14.11640 | 13.38160 |
| | GRADIENT | .00000 | .00000 | .00000 | .00000 | .00000 | .00000 | .00000 | .00000 | .00000 |

RUN NO. 3023/ 0 RN/L = 1.69 GRADIENT INTERVAL = -5.00/ 5.00

| MACH | ALPHA | 27-12 | 12-ATM | 27-ATM | TBISBI | TB-SB | TB-TBI | SB-SBI | 12-PO | 12-SB |
|---|---|---|---|---|---|---|---|---|---|---|
| .248 | .000 | 76.10950 | 18.26510 | 94.47430 | 92.23550 | 92.23680 | .00160 | .00000 | 16.73140 | 15.75850 |
| .248 | .000 | 75.99860 | 18.34970 | 94.33520 | 92.21120 | 92.21210 | -.00400 | .00000 | 16.70480 | 15.78070 |
| .248 | .000 | 76.09720 | 18.18440 | 94.35680 | 91.99250 | 92.00290 | .00560 | -.00240 | 16.72840 | 15.64740 |
| .248 | .000 | 76.06840 | 18.26640 | 94.38870 | 92.14640 | 92.15060 | .00100 | -.00080 | 16.72150 | 15.72880 |
| | GRADIENT | .00000 | .00000 | .00000 | .00000 | .00000 | .00000 | .00000 | .00000 | .00000 |

RUN NO. 3024/ 0 RN/L = 1.80 GRADIENT INTERVAL = -5.00/ 5.00

| MACH | ALPHA | 27-12 | 12-ATM | 27-ATM | TBISBI | TB-SB | TB-TBI | SB-SBI | 12-PO | 12-SB |
|---|---|---|---|---|---|---|---|---|---|---|
| .264 | .000 | 86.93840 | 21.16370 | 108.15900 | 105.51300 | 105.51200 | .00240 | .00000 | 19.32390 | 18.17240 |
| .264 | .000 | 86.96300 | 21.17550 | 108.19000 | 105.57400 | 105.57400 | .00160 | .00080 | 19.32980 | 18.14460 |
| .264 | .000 | 86.94440 | 21.15580 | 108.15900 | 105.48900 | 105.49400 | .00080 | -.00220 | 19.32540 | 18.10850 |
| .264 | .000 | 86.94860 | 21.16500 | 108.16900 | 105.52500 | 105.52700 | .00160 | -.00040 | 19.32640 | 18.14180 |
| | GRADIENT | .00000 | .00000 | .00000 | .00000 | .00000 | .00000 | .00000 | .00000 | .00000 |

OA236 (NAAL 759) CONFIGURATION 3 DATA SELECT 3 (RFM303) ( 28 JUN 79 )

REFERENCE DATA

SREF = .0000 SQ.FT. XMRP = .0000 IN. XT
LREF = .0000 INCHES YMRP = .0000 IN. YT
BREF = .0000 INCHES ZMRP = .0000 IN. ZT
SCALE = 1.0000

PARAMETRIC DATA

ALPHA = .000 BETA = .000

RUN NO. 3031/ 0 RN/L = 1.29 GRADIENT INTERVAL = -5.00/ 5.00

| MACH | ALPHA | 27-12 | 12-ATM | 27-ATM | TBISBI | TB-SB | TB-TBI | SB-SBI | 12-PO | 12-SB |
|---|---|---|---|---|---|---|---|---|---|---|
| .188 | .000 | 43.52460 | 10.03970 | 53.59040 | 53.81060 | 53.81740 | -.00480 | -.00630 | 9.38880 | 10.07240 |
| .188 | .000 | 43.47530 | 10.04760 | 53.54720 | 53.74980 | 53.75590 | -.00640 | .00550 | 9.37810 | 10.03630 |
| .188 | .000 | 43.45690 | 9.96690 | 53.47290 | 53.73160 | 53.74980 | .00160 | -.00150 | 9.37410 | 10.03900 |
| .188 | .000 | 43.48560 | 10.01810 | 53.53680 | 53.76400 | 53.77440 | -.00320 | -.00070 | 9.38030 | 10.04920 |
| | GRADIENT | .00000 | .00000 | .00000 | .00000 | .00000 | .00000 | .00000 | .00000 | .00000 |

RUN NO. 3032/ 0 RN/L = 1.56 GRADIENT INTERVAL = -5.00/ 5.00

| MACH | ALPHA | 27-12 | 12-ATM | 27-ATM | TBISBI | TB-SB | TB-TBI | SB-SBI | 12-PO | 12-SB |
|---|---|---|---|---|---|---|---|---|---|---|
| .230 | .000 | 65.26230 | 15.16780 | 80.50190 | 80.96800 | 80.97250 | -.00070 | .00000 | 14.13860 | 15.38080 |
| .230 | .000 | 65.39790 | 15.05570 | 80.53290 | 81.15630 | 81.16940 | .00480 | -.00470 | 14.17060 | 15.42250 |
| .229 | .000 | 65.18220 | 15.32130 | 80.51130 | 80.87690 | 80.85570 | -.01280 | .00710 | 14.11980 | 15.35860 |
| .230 | .000 | 65.28080 | 15.18160 | 80.51540 | 81.00040 | 80.99920 | -.00290 | .00080 | 14.14300 | 15.38730 |
| | GRADIENT | .00000 | .00000 | .00000 | .00000 | .00000 | .00000 | .00000 | .00000 | .00000 |

RUN NO. 3033/ 0 RN/L = 1.68 GRADIENT INTERVAL = -5.00/ 5.00

| MACH | ALPHA | 27-12 | 12-ATM | 27-ATM | TBISBI | TB-SB | TB-TBI | SB-SBI | 12-PO | 12-SB |
|---|---|---|---|---|---|---|---|---|---|---|
| .248 | .000 | 76.26980 | 17.92270 | 94.26080 | 94.77450 | 94.78390 | .00640 | -.00310 | 16.76980 | 18.08640 |
| .248 | .000 | 75.99860 | 17.89120 | 93.94200 | 94.41000 | 94.41480 | .00480 | .00470 | 16.70480 | 18.02250 |
| .248 | .000 | 76.13420 | 17.79880 | 93.97310 | 94.59840 | 94.60550 | .00720 | .00310 | 16.73730 | 18.06140 |
| .248 | .000 | 76.13420 | 17.87090 | 94.05870 | 94.59430 | 94.60140 | .00610 | .00150 | 16.73730 | 18.05680 |
| | GRADIENT | .00000 | .00000 | .00000 | .00000 | .00000 | .00000 | .00000 | .00000 | .00000 |

RUN NO. 3034/ 0 RN/L = 1.79 GRADIENT INTERVAL = -5.00/ 5.00

| MACH | ALPHA | 27-12 | 12-ATM | 27-ATM | TBISBI | TB-SB | TB-TBI | SB-SBI | 12-PO | 12-SB |
|---|---|---|---|---|---|---|---|---|---|---|
| .265 | .000 | 87.14170 | 20.42380 | 107.69100 | 108.43500 | 108.48400 | .03130 | -.01570 | 19.37260 | 20.83370 |
| .264 | .000 | 86.97530 | 20.56750 | 107.63600 | 108.22800 | 108.24400 | .00880 | -.00550 | 19.33280 | 20.78920 |
| .264 | .000 | 86.95680 | 20.67370 | 107.70100 | 108.22800 | 108.21900 | .00320 | .00710 | 19.32830 | 20.77810 |
| .265 | .000 | 87.02460 | 20.55500 | 107.67600 | 108.29700 | 108.31600 | .01440 | -.00470 | 19.34460 | 20.80030 |
| | GRADIENT | .00000 | .00000 | .00000 | .00000 | .00000 | .00000 | .00000 | .00000 | .00000 |

OA236 (NAAL 759) CONFIGURATION 4 DATA SELECT 3 (RFM304) ( 28 JUN 79 )

REFERENCE DATA

SREF = .0000 SQ.FT. XMRP = .0000 IN. XT
LREF = .0000 INCHES YMRP = .0000 IN. YT
BREF = .0000 INCHES ZMRP = .0000 IN. ZT
SCALE = 1.0000

PARAMETRIC DATA

ALPHA = .000 BETA = .000

RUN NO. 3041/ 0 RN/L = 1.28 GRADIENT INTERVAL = -5.00/ 5.00

| MACH | ALPHA | 27-12 | 12-ATM | 27-ATM | TBISBI | TB-SB | TB-TBI | SB-SBI | 12-PO | 12-SB |
|---|---|---|---|---|---|---|---|---|---|---|
| .188 | .000 | 43.53700 | 10.12040 | 53.67690 | 53.32460 | 53.31300 | -.00320 | .01180 | 9.39150 | 9.44730 |
| .188 | .000 | 43.43830 | 10.06730 | 53.53770 | 53.23350 | 53.23300 | .00240 | .00470 | 9.37000 | 9.43900 |
| .188 | .000 | 43.48760 | 10.00820 | 53.54720 | 53.30030 | 53.31300 | .00800 | .00470 | 9.38080 | 9.44460 |
| .188 | .000 | 43.48760 | 10.06530 | 53.58720 | 53.28610 | 53.28630 | .00240 | .00710 | 9.38080 | 9.44360 |
| | GRADIENT | .00000 | .00000 | .00000 | .00000 | .00000 | .00000 | .00000 | .00000 | .00000 |

RUN NO. 3042/ 0 RN/L = 1.56 GRADIENT INTERVAL = -5.00/ 5.00

| MACH | ALPHA | 27-12 | 12-ATM | 27-ATM | TBISBI | TB-SB | TB-TBI | SB-SBI | 12-PO | 12-SB |
|---|---|---|---|---|---|---|---|---|---|---|
| .230 | .000 | 65.28700 | 15.45120 | 80.73690 | 80.24510 | 80.22200 | -.01360 | .00550 | 14.14440 | 14.47250 |
| .230 | .000 | 65.32390 | 15.24850 | 80.60720 | 80.35450 | 80.36340 | .00480 | -.00780 | 14.15310 | 14.51410 |
| .230 | .000 | 65.27460 | 15.47280 | 80.76800 | 80.23300 | 80.22200 | -.00480 | .00790 | 14.14150 | 14.45850 |
| .230 | .000 | 65.29930 | 15.38430 | 80.71530 | 80.27550 | 80.25890 | .00800 | .02450 | 14.14730 | 14.42240 |
| .230 | .000 | 65.29620 | 15.38920 | 80.70680 | 80.27700 | 80.26650 | -.00140 | .00750 | 14.14650 | 14.46690 |
| | GRADIENT | .00000 | .00000 | .00000 | .00000 | .00000 | .00000 | .00000 | .00000 | .00000 |

RUN NO. 3043/ 0 RN/L = 1.68 GRADIENT INTERVAL = -5.00/ 5.00

| MACH | ALPHA | 27-12 | 12-ATM | 27-ATM | TBISBI | TB-SB | TB-TBI | SB-SBI | 12-PO | 12-SB |
|---|---|---|---|---|---|---|---|---|---|---|
| .248 | .000 | 76.19580 | 17.92270 | 94.16490 | 93.89980 | 93.89800 | .00560 | .00790 | 16.75200 | 17.06690 |
| .248 | .000 | 76.11580 | 18.06440 | 94.21760 | 93.76010 | 93.75030 | .00720 | .01500 | 16.73290 | 17.03630 |
| .248 | .000 | 76.14650 | 18.04470 | 94.20820 | 93.85730 | 93.84870 | -.01200 | -.00460 | 16.74020 | 17.09470 |
| .248 | .000 | 76.15270 | 18.01060 | 94.19690 | 93.83900 | 93.83230 | .00020 | .00610 | 16.74170 | 17.06590 |
| | GRADIENT | .00000 | .00000 | .00000 | .00000 | .00000 | .00000 | .00000 | .00000 | .00000 |

RUN NO. 3044/ 0 RN/L = 1.79 GRADIENT INTERVAL = -5.00/ 5.00

| MACH | ALPHA | 27-12 | 12-ATM | 27-ATM | TBISBI | TB-SB | TB-TBI | SB-SBI | 12-PO | 12-SB |
|---|---|---|---|---|---|---|---|---|---|---|
| .265 | .000 | 87.03070 | 20.90790 | 107.98800 | 107.45700 | 107.43800 | .00640 | .00950 | 19.34600 | 19.70860 |
| .265 | .000 | 87.04310 | 20.78590 | 107.89200 | 107.45100 | 107.42600 | .00640 | .01970 | 19.34900 | 19.65580 |
| .265 | .000 | 87.11090 | 20.96500 | 108.11500 | 107.50500 | 107.48700 | -.00960 | -.00230 | 19.36520 | 19.74750 |
| .265 | .000 | 87.06150 | 20.88630 | 107.99900 | 107.47100 | 107.45000 | .00100 | .00890 | 19.35340 | 19.70400 |
| | GRADIENT | .00000 | .00000 | .00000 | .00000 | .00000 | .00000 | .00000 | .00000 | .00000 |

OA236 (NAAL 759) CONFIGURATION 5 DATA SELECT 3 (RFM305) ( 28 JUN 79 )

REFERENCE DATA

SREF = .0000 SQ.FT. XMRP = .0000 IN. XT
LREF = .0000 INCHES YMRP = .0000 IN. YT
BREF = .0000 INCHES ZMRP = .0000 IN. ZT
SCALE = 1.0000

PARAMETRIC DATA

ALPHA = .000 BETA = .000

RUN NO. 3051/ 0 RN/L = 1.29 GRADIENT INTERVAL = -5.00/ 5.00

| MACH | ALPHA | 27-12 | 12-ATM | 27-ATM | TBISBI | TB-SB | TB-TBI | SB-SBI | 12-PO | 12-SB |
|---|---|---|---|---|---|---|---|---|---|---|
| .188 | .000 | 43.36420 | 10.14200 | 53.53770 | 53.08780 | 52.99910 | -.00240 | .11390 | 9.35390 | 9.27790 |
| .188 | .000 | 43.40120 | 10.07320 | 53.52830 | 53.16670 | 53.01770 | .00400 | .19420 | 9.36200 | 9.22780 |
| .188 | .000 | 43.41350 | 10.06330 | 53.53770 | 53.19710 | 53.02380 | .00320 | .20760 | 9.36460 | 9.22510 |
| .188 | .000 | 43.39290 | 10.09280 | 53.53450 | 53.15050 | 53.01350 | .00160 | .17190 | 9.36020 | 9.24360 |
| | GRADIENT | .00000 | .00000 | .00000 | .00000 | .00000 | .00000 | .00000 | .00000 | .00000 |

RUN NO. 3052/ 0 RN/L = 1.58 GRADIENT INTERVAL = -5.00/ 5.00

| MACH | ALPHA | 27-12 | 12-ATM | 27-ATM | TBISBI | TB-SB | TB-TBI | SB-SBI | 12-PO | 12-SB |
|---|---|---|---|---|---|---|---|---|---|---|
| .229 | .000 | 65.16960 | 15.34300 | 80.54510 | 80.11760 | 79.88970 | .00240 | .25510 | 14.11680 | 14.17520 |
| .229 | .000 | 65.15730 | 15.36850 | 80.58830 | 80.09330 | 79.85880 | -.00080 | .25040 | 14.11400 | 14.16960 |
| .230 | .000 | 65.19430 | 15.33900 | 80.61940 | 80.21480 | 79.92660 | .02330 | .34180 | 14.12260 | 14.13910 |
| .229 | .000 | 65.17370 | 15.35020 | 80.58420 | 80.14190 | 79.89170 | .00830 | .28240 | 14.11780 | 14.16130 |
| | GRADIENT | .00000 | .00000 | .00000 | .00000 | .00000 | .00000 | .00000 | .00000 | .00000 |

RUN NO. 3053/ 0 RN/L = 1.70 GRADIENT INTERVAL = -5.00/ 5 00

| MACH | ALPHA | 27-12 | 12-ATM | 27-ATM | TBISBI | TB-SB | TB-TBI | SB-SBI | 12-PO | 12-SB |
|---|---|---|---|---|---|---|---|---|---|---|
| .248 | .000 | 76.09080 | 18.17260 | 94.28250 | 93.71150 | 93.39960 | -.00160 | .32440 | 16.72690 | 16.67520 |
| .248 | .000 | 76.04150 | 17.99360 | 94.13390 | 93.69940 | 93.29490 | .01120 | .43260 | 16.71510 | 16.59740 |
| .248 | .000 | 76.10310 | 18.16480 | 94.34730 | 93.73580 | 93.50410 | .00640 | .24900 | 16.72980 | 16.75300 |
| .248 | .000 | 76.07840 | 18.11030 | 94.25450 | 93.71560 | 93.39960 | .00530 | .33530 | 16.72390 | 16.67520 |
| | GRADIENT | .00000 | .00000 | .00000 | .00000 | .00000 | .00000 | .00000 | .00000 | .00000 |

RUN NO. 3054/ 0 RN/L = 1.81 GRADIENT INTERVAL = -5.00/ 5.00

| MACH | ALPHA | 27-12 | 12-ATM | 27-ATM | TBISBI | TB-SB | TB-TBI | SB-SBI | 12-PO | 12-SB |
|---|---|---|---|---|---|---|---|---|---|---|
| .265 | .000 | 87.03660 | 20.77610 | 107.86100 | 107.39000 | 106.99500 | -.00240 | .40030 | 19.34750 | 19.25310 |
| .265 | .000 | 86.95640 | 20.91380 | 107.95700 | 107.31700 | 107.04400 | .01440 | .29860 | 19.32820 | 19.34470 |
| .265 | .000 | 87.03040 | 20.81940 | 107.91400 | 107.41400 | 106.98900 | -.00160 | .43640 | 19.34600 | 19.23360 |
| .265 | .000 | 87.04270 | 20.96690 | 108.06300 | 107.41400 | 107.10600 | .00070 | .31360 | 19.34890 | 19.33920 |
| .265 | .000 | 87.01650 | 20.86900 | 107.94900 | 107.38400 | 107.03400 | .00280 | .36220 | 19.34260 | 19.29260 |
| | GRADIENT | .00000 | .00000 | .00000 | .00000 | .00000 | .00000 | .00000 | .00000 | .00000 |

OA236 (NAAL 759) CONFIGURATION 6 DATA SELECT 3 (RFM306) ( 28 JUN 79 )

REFERENCE DATA

SREF = .0000 SQ.FT. XMRP = .0000 IN. XT
LREF = .0000 INCHES YMRP = .0000 IN. YT
BREF = .0000 INCHES ZMRP = .0000 IN. ZT
SCALE = 1.0000

PARAMETRIC DATA

ALPHA = .000 BETA = .000

RUN NO. 3061/ 0 RN/L = 1.29 GRADIENT INTERVAL = -5.00/ 5.00

| MACH | ALPHA | 27-12 | 12-ATM | 27-ATM | TBISBI | TB-SB | TB-TBI | SB-SBI | 12-PO | 12-SB |
|---|---|---|---|---|---|---|---|---|---|---|
| .188 | .000 | 43.24090 | 10.08100 | 53.36750 | 52.94800 | 52.59320 | -.14410 | .23310 | 9.32710 | 9.11680 |
| .188 | .000 | 43.36420 | 10.03380 | 53.44180 | 53.09380 | 52.67930 | -.15460 | .27870 | 9.35390 | 9.10010 |
| .188 | .000 | 43.32110 | 10.12830 | 53.46340 | 53.05740 | 52.76550 | -.10710 | .20940 | 9.34460 | 9.18070 |
| .188 | .000 | 43.30870 | 10.08100 | 53.42420 | 53.03310 | 52.67930 | -.13530 | .24040 | 9.34190 | 9.13250 |
| | GRADIENT | .00000 | .00000 | .00000 | .00000 | .00000 | .00000 | .00000 | .00000 | .00000 |

RUN NO. 3062/ 0 RN/L = 1.57 GRADIENT INTERVAL = -5.00/ 5.00

| MACH | ALPHA | 27-12 | 12-ATM | 27-ATM | TBISBI | TB-SB | TB-TBI | SB-SBI | 12-PO | 12-SB |
|---|---|---|---|---|---|---|---|---|---|---|
| .229 | .000 | 65.08950 | 15.35480 | 80.50190 | 80.04470 | 79.40990 | -.23840 | .42290 | 14.09830 | 13.96970 |
| .229 | .000 | 65.08330 | 15.31540 | 80.44920 | 80.00220 | 79.31750 | -.20620 | .50330 | 14.09680 | 13.90020 |
| .229 | .000 | 65.15120 | 15.34490 | 80.54510 | 80.10550 | 79.42830 | -.24560 | .45600 | 14.11260 | 13.95850 |
| .229 | .000 | 65.10800 | 15.33840 | 80.49870 | 80.05080 | 79.38520 | -.23010 | .46070 | 14.10250 | 13.94280 |
| | GRADIENT | .00000 | .00000 | .00000 | .00000 | .00000 | .00000 | .00000 | .00000 | .00000 |

RUN NO. 3063/ 0 RN/L = 1.70 GRADIENT INTERVAL = -5.00/ 5.00

| MACH | ALPHA | 27-12 | 12-ATM | 27-ATM | TBISBI | TB-SB | TB-TBI | SB-SBI | 12-PO | 12-SB |
|---|---|---|---|---|---|---|---|---|---|---|
| .248 | .000 | 76.00450 | 18.16480 | 94.19870 | 93.62040 | 93.10430 | -.23600 | .30010 | 16.70620 | 16.65310 |
| .248 | .000 | 75.94280 | 18.07820 | 94.05960 | 93.49280 | 92.85210 | -.18120 | .47650 | 16.69150 | 16.46410 |
| .248 | .000 | 76.04150 | 18.10770 | 94.16490 | 93.59610 | 92.91970 | -.23680 | .45760 | 16.71510 | 16.49190 |
| .248 | .000 | 75.99620 | 18.11690 | 94.14100 | 93.56970 | 92.95870 | -.21800 | .41140 | 16.70420 | 16.53640 |
| | GRADIENT | .00000 | .00000 | .00000 | .00000 | .00000 | .00000 | .00000 | .00000 | .00000 |

RUN NO. 3064/ 0 RN/L = 1.81 GRADIENT INTERVAL = -5.00/ 5.00

| MACH | ALPHA | 27-12 | 12-ATM | 27-ATM | TBISBI | TB-SB | TB-TBI | SB-SBI | 12-PO | 12-SB |
|---|---|---|---|---|---|---|---|---|---|---|
| .264 | .000 | 86.92570 | 20.90200 | 107.88300 | 107.24400 | 106.39200 | -.19570 | .66870 | 19.32090 | 18.96970 |
| .264 | .000 | 86.86400 | 21.00240 | 107.88300 | 107.12300 | 106.43500 | -.21580 | .48520 | 19.30610 | 19.05870 |
| .265 | .000 | 86.97500 | 20.89220 | 107.90500 | 107.34700 | 106.47800 | -.28590 | .59620 | 19.33270 | 19.00590 |
| .264 | .000 | 86.92160 | 20.93220 | 107.89000 | 107.23800 | 106.43500 | -.23250 | .58340 | 19.31990 | 19.01140 |
| | GRADIENT | .00000 | .00000 | .00000 | .00000 | .00000 | .00000 | .00000 | .00000 | .00000 |

OA236 (NAAL 759) CONFIGURATION 7 DATA SELECT 3 (RFM307) ( 28 JUN 79 )

REFERENCE DATA

SREF = .0000 SQ.FT. XMRP = .0000 IN. XT
LREF = .0000 INCHES YMRP = .0000 IN. YT
BREF = .0000 INCHES ZMRP = .0000 IN. ZT
SCALE = 1.0000

PARAMETRIC DATA

ALPHA = .000 BETA = .000

RUN NO. 3071/ 0 RN/L = 1.28 GRADIENT INTERVAL = -5.00/ 5.00

| MACH | ALPHA | 27-12 | 12-ATM | 27-ATM | TBISBI | TB-SB | TB-TBI | SB-SBI | 12-PO | 12-SB |
|---|---|---|---|---|---|---|---|---|---|---|
| .188 | .000 | 43.52450 | 10.07320 | 53.67420 | 53.33070 | 52.98700 | -.20140 | .16290 | 9.38880 | 9.28070 |
| .188 | .000 | 43.48750 | 10.23450 | 53.73900 | 53.27600 | 53.18390 | -.09580 | .02040 | 9.38070 | 9.41680 |
| .188 | .000 | 43.47510 | 10.17350 | 53.67420 | 53.23960 | 53.07320 | -.12000 | .06680 | 9.37800 | 9.34450 |
| .188 | .000 | 43.49570 | 10.16040 | 53.69580 | 53.28210 | 53.08140 | -.13910 | .08340 | 9.38250 | 9.34730 |
| | GRADIENT | .00000 | .00000 | .00000 | .00000 | .00000 | .00000 | .00000 | .00000 | .00000 |

RUN NO. 3072/ 0 RN/L = 1.56 GRADIENT INTERVAL = -5.00/ 5.00

| MACH | ALPHA | 27-12 | 12-ATM | 27-ATM | TBISBI | TB-SB | TB-TBI | SB-SBI | 12-PO | 12-SB |
|---|---|---|---|---|---|---|---|---|---|---|
| .230 | .000 | 65.19430 | 15.31930 | 80.55450 | 80.15410 | 79.50840 | -.28990 | .37170 | 14.12260 | 14.05580 |
| .229 | .000 | 65.17580 | 15.43740 | 80.65050 | 80.09330 | 79.61910 | -.23600 | .25980 | 14.11830 | 14.15580 |
| .229 | .000 | 65.12650 | 15.42360 | 80.59780 | 80.02040 | 79.52690 | -.20460 | .30470 | 14.10680 | 14.09470 |
| .229 | .000 | 65.16550 | 15.39350 | 80.60090 | 80.08930 | 79.55150 | -.24350 | .31210 | 14.11590 | 14.10210 |
| | GRADIENT | .00000 | .00000 | .00000 | .00000 | .00000 | .00000 | .00000 | .00000 | .00000 |

RUN NO. 3073/ 0 RN/L = 1.68 GRADIENT INTERVAL = -5.00/ 5.00

| MACH | ALPHA | 27-12 | 12-ATM | 27-ATM | TBISBI | TB-SB | TB-TBI | SB-SBI | 12-PO | 12-SB |
|---|---|---|---|---|---|---|---|---|---|---|
| .248 | .000 | 76.01680 | 18.29070 | 94.36890 | 93.60220 | 93.09820 | -.19810 | .33070 | 16.70920 | 16.67810 |
| .248 | .000 | 76.00450 | 18.25330 | 94.29460 | 93.59000 | 93.04290 | -.18360 | .37400 | 16.70620 | 16.61690 |
| .248 | .000 | 75.99220 | 18.26320 | 94.30410 | 93.55360 | 93.02440 | -.19970 | .34490 | 16.70330 | 16.62530 |
| .248 | .000 | 76.00450 | 18.26910 | 94.32250 | 93.58190 | 93.05510 | -.19380 | .34990 | 16.70620 | 16.64010 |
| | GRADIENT | .00000 | .00000 | .00000 | .00000 | .00000 | .00000 | .00000 | .00000 | .00000 |

RUN NO. 3074/ 0 RN/L = 1.79 GRADIENT INTERVAL = -5.00/ 5.00

| MACH | ALPHA | 27-12 | 12-ATM | 27-ATM | TBISBI | TB-SB | TB-TBI | SB-SBI | 12-PO | 12-SB |
|---|---|---|---|---|---|---|---|---|---|---|
| .265 | .000 | 86.94430 | 20.94130 | 107.93600 | 107.24400 | 106.47200 | -.30610 | .46710 | 19.32530 | 19.11700 |
| .265 | .000 | 86.95030 | 20.95120 | 107.96700 | 107.30500 | 106.52200 | -.26820 | .52530 | 19.32680 | 19.11700 |
| .264 | .000 | 86.89490 | 21.01420 | 107.95700 | 107.17700 | 106.52200 | -.22230 | .44890 | 19.31350 | 19.16140 |
| .264 | .000 | 86.92980 | 20.96890 | 107.95300 | 107.24200 | 106.50500 | -.26550 | .48040 | 19.32190 | 19.13180 |
| | GRADIENT | .00000 | .00000 | .00000 | .00000 | .00000 | .00000 | .00000 | .00000 | .00000 |

OA236 (NAAL 759) CONFIGURATION 8 DATA SELECT 3 (RFM308) ( 28 JUN 79 )

REFERENCE DATA

SREF = .0000 SQ.FT. XMRP = .0000 IN. XT
LREF = .0000 INCHES YMRP = .0000 IN. YT
BREF = .0000 INCHES ZMRP = .0000 IN. ZT
SCALE = 1.0000

PARAMETRIC DATA

ALPHA = .000 BETA = .000

RUN NO. 3081/ 0 RN/L = 1.28 GRADIENT INTERVAL = -5.00/ 5.00

| MACH | ALPHA | 27-12 | 12-ATM | 27-ATM | TBISBI | TB-SB | TB-TBI | SB-SBI | 12-PO | 12-SB |
|---|---|---|---|---|---|---|---|---|---|---|
| .188 | .000 | 43.23480 | 10.24240 | 53.51610 | 52.99060 | 52.93170 | .00000 | .06680 | 9.32580 | 9.34740 |
| .188 | .000 | 43.33340 | 10.13420 | 53.52830 | 53.11210 | 52.96240 | .00000 | .16130 | 9.34720 | 9.26680 |
| .188 | .000 | 43.41970 | 10.13610 | 53.60260 | 53.21530 | 53.09780 | .00800 | .13610 | 9.36600 | 9.31130 |
| .188 | .000 | 43.32930 | 10.17090 | 53.54890 | 53.10600 | 52.99730 | .00260 | .12140 | 9.34630 | 9.30850 |
| | GRADIENT | .00000 | .00000 | .00000 | .00000 | .00000 | .00000 | .00000 | .00000 | .00000 |

RUN NO. 3082/ 0 RN/L = 1.56 GRADIENT INTERVAL = -5.00/ 5.00

| MACH | ALPHA | 27-12 | 12-ATM | 27-ATM | TBISBI | TB-SB | TB-TBI | SB-SBI | 12-PO | 12-SB |
|---|---|---|---|---|---|---|---|---|---|---|
| .230 | .000 | 65.17580 | 15.43540 | 80.65050 | 80.22090 | 80.00670 | .00560 | .22990 | 14.11830 | 14.26690 |
| .230 | .000 | 65.23120 | 15.50230 | 80.78010 | 80.24510 | 80.10510 | .01040 | .16290 | 14.13130 | 14.35030 |
| .229 | .000 | 65.14490 | 15.63420 | 80.78010 | 80.08120 | 80.04360 | -.01280 | .04000 | 14.11110 | 14.41420 |
| .230 | .000 | 65.18400 | 15.52400 | 80.73690 | 80.18240 | 80.05180 | .00100 | .14430 | 14.12020 | 14.34380 |
| | GRADIENT | .00000 | .00000 | .00000 | .00000 | .00000 | .00000 | .00000 | .00000 | .00000 |

RUN NO. 3083/ 0 RN/L = 1.68 GRADIENT INTERVAL = -5.00/ 5.00

| MACH | ALPHA | 27-12 | 12-ATM | 27-ATM | TBISBI | TB-SB | TB-TBI | SB-SBI | 12-PO | 12-SB |
|---|---|---|---|---|---|---|---|---|---|---|
| .248 | .000 | 75.94280 | 18.25920 | 94.22030 | 93.54140 | 93.38130 | -.00400 | .15110 | 16.69150 | 16.85860 |
| .248 | .000 | 76.01680 | 18.12740 | 94.22030 | 93.72970 | 93.41190 | .01520 | .33380 | 16.70920 | 16.74190 |
| .248 | .000 | 76.05380 | 18.19230 | 94.32570 | 93.74800 | 93.49810 | .00880 | .25670 | 16.71800 | 16.82250 |
| .248 | .000 | 76.00450 | 18.19300 | 94.25540 | 93.67300 | 93.43040 | .00660 | .24720 | 16.70620 | 16.80770 |
| | GRADIENT | .00000 | .00000 | .00000 | .00000 | .00000 | .00000 | .00000 | .00000 | .00000 |

RUN NO. 3084/ 0 RN/L = 1.79 GRADIENT INTERVAL = -5.00/ 5.00

| MACH | ALPHA | 27-12 | 12-ATM | 27-ATM | TBISBI | TB-SB | TB-TBI | SB-SBI | 12-PO | 12-SB |
|---|---|---|---|---|---|---|---|---|---|---|
| .265 | .000 | 86.93800 | 21.05550 | 108.05300 | 107.35400 | 107.12400 | .00160 | .22520 | 19.32380 | 19.47810 |
| .265 | .000 | 86.97500 | 21.04370 | 108.10600 | 107.40200 | 107.11800 | .01840 | .30160 | 19.33270 | 19.43090 |
| .265 | .000 | 86.97500 | 21.11060 | 108.12700 | 107.42000 | 107.11800 | -.00240 | .29760 | 19.33270 | 19.44200 |
| .265 | .000 | 86.96270 | 21.06990 | 108.09500 | 107.39200 | 107.12000 | .00580 | .27480 | 19.32970 | 19.45030 |
| | GRADIENT | .00000 | .00000 | .00000 | .00000 | .00000 | .00000 | .00000 | .00000 | .00000 |

OA236 (NAAL 759) CONFIGURATION 9 DATA SELECT 3 (RFM309) ( 28 JUN 79 )

REFERENCE DATA

SREF = .0000 SQ.FT. XMRP = .0000 IN. XT
LREF = .0000 INCHES YMRP = .0000 IN. YT
BREF = .0000 INCHES ZMRP = .0000 IN. ZT
SCALE = 1.0000

PARAMETRIC DATA

ALPHA = .000 BETA = .000

RUN NO. 3091/ 0 RN/L = 1.27 GRADIENT INTERVAL = -5.00/ 5.00

| MACH | ALPHA | 27-12 | 12-ATM | 27-ATM | TBISBI | TB-SB | TB-TBI | SB-SBI | 12-PO | 12-SB |
|---|---|---|---|---|---|---|---|---|---|---|
| .188 | .000 | 43.47510 | 10.14790 | 53.65530 | 53.29430 | 53.15310 | -.00480 | .14090 | 9.37800 | 9.32790 |
| .188 | .000 | 43.46280 | 10.19520 | 53.68630 | 53.24570 | 53.16540 | .00240 | .08180 | 9.37540 | 9.36120 |
| .188 | .000 | 43.48750 | 10.15190 | 53.68630 | 53.29430 | 53.15310 | .00400 | .14560 | 9.38070 | 9.30850 |
| .188 | .000 | 43.47510 | 10.16500 | 53.67600 | 53.27810 | 53.15710 | .00050 | .12270 | 9.37800 | 9.33250 |
| | GRADIENT | .00000 | .00000 | .00000 | .00000 | .00000 | .00000 | .00000 | .00000 | .00000 |

RUN NO. 3092/ 0 RN/L = 1.55 GRADIENT INTERVAL = -5.00/ 5.00

| MACH | ALPHA | 27-12 | 12-ATM | 27-ATM | TBISBI | TB-SB | TB-TBI | SB-SBI | 12-PO | 12-SB |
|---|---|---|---|---|---|---|---|---|---|---|
| .229 | .000 | 65.11420 | 15.52000 | 80.67210 | 80.07510 | 79.88360 | -.00640 | .18260 | 14.10400 | 14.27800 |
| .230 | .000 | 65.19430 | 15.47480 | 80.69370 | 80.20260 | 80.00050 | .00720 | .21880 | 14.12260 | 14.26410 |
| .229 | .000 | 65.13890 | 15.64400 | 80.78960 | 80.09940 | 80.04970 | -.01450 | .03850 | 14.10970 | 14.41130 |
| .229 | .000 | 65.14910 | 15.54630 | 80.71840 | 80.12570 | 79.97790 | -.00450 | .14660 | 14.11210 | 14.31780 |
| | GRADIENT | .00000 | .00000 | .00000 | .00000 | .00000 | .00000 | .00000 | .00000 | .00000 |

RUN NO. 3093/ 0 RN/L = 1.67 GRADIENT INTERVAL = -5.00/ 5.00

| MACH | ALPHA | 27-12 | 12-ATM | 27-ATM | TBISBI | TB-SB | TB-TBI | SB-SBI | 12-PO | 12-SB |
|---|---|---|---|---|---|---|---|---|---|---|
| .248 | .000 | 76.11540 | 18.28090 | 94.47430 | 93.83910 | 93.66410 | .01680 | .19050 | 16.73280 | 16.90310 |
| .248 | .000 | 75.96750 | 18.45800 | 94.42160 | 93.55970 | 93.55340 | -.01770 | -.01650 | 16.69740 | 17.00030 |
| .248 | .000 | 76.02910 | 18.20810 | 94.29190 | 93.71760 | 93.47350 | .00640 | .24960 | 16.71210 | 16.80300 |
| .248 | .000 | 76.03730 | 18.31560 | 94.39590 | 93.70540 | 93.56360 | .00180 | .14120 | 16.71410 | 16.90210 |
| | GRADIENT | .00000 | .00000 | .00000 | .00000 | .00000 | .00000 | .00000 | .00000 | .00000 |

RUN NO. 3094/ 0 RN/L = 1.78 GRADIENT INTERVAL = -5.00/ 5.00

| MACH | ALPHA | 27-12 | 12-ATM | 27-ATM | TBISBI | TB-SB | TB-TBI | SB-SBI | 12-PO | 12-SB |
|---|---|---|---|---|---|---|---|---|---|---|
| .265 | .000 | 87.03660 | 21.24050 | 108.32900 | 107.42600 | 107.32700 | -.00160 | .08970 | 19.34750 | 19.62260 |
| .265 | .000 | 87.09220 | 21.19520 | 108.30700 | 107.47500 | 107.29000 | -.00240 | .17160 | 19.36080 | 19.54480 |
| .265 | .000 | 86.99970 | 21.24830 | 108.28600 | 107.39000 | 107.22300 | -.01370 | .14490 | 19.33860 | 19.55860 |
| .265 | .000 | 87.04280 | 21.22800 | 108.30700 | 107.43000 | 107.28000 | -.00590 | .13540 | 19.34890 | 19.57530 |
| | GRADIENT | .00000 | .00000 | .00000 | .00000 | .00000 | .00000 | .00000 | .00000 | .00000 |

OA236 (NAAL 759) CONFIGURATION 10 DATA SELECT 3 (RFM310) ( 28 JUN 79 )

REFERENCE DATA

SREF = .0000 SQ.FT. XMRP = .0000 IN. XT
LREF = .0000 INCHES YMRP = .0000 IN. YT
BREF = .0000 INCHES ZMRP = .0000 IN. ZT
SCALE = 1.0000

PARAMETRIC DATA

ALPHA = .000 BETA = .000

RUN NO. 3101/ 0 RN/L = 1.29 GRADIENT INTERVAL = -5.00/ 5.00

| MACH | ALPHA | 27-12 | 12-ATM | 27-ATM | TBISBI | TB-SB | TB-TBI | SB-SBI | 12-PO | 12-SB |
|---|---|---|---|---|---|---|---|---|---|---|
| .188 | .000 | 43.25950 | 10.14010 | 53.46340 | 53.02700 | 53.06670 | -.14980 | -.17600 | 9.33110 | 9.59450 |
| .188 | .000 | 43.21640 | 10.18730 | 53.43230 | 52.93590 | 53.07910 | -.09740 | -.22340 | 9.32180 | 9.62510 |
| .188 | .000 | 43.16710 | 10.20700 | 53.42020 | 52.88120 | 53.05440 | -.09020 | -.24390 | 9.31110 | 9.63060 |
| .188 | .000 | 43.21430 | 10.17810 | 53.43860 | 52.94800 | 53.06670 | -.11250 | -.21450 | 9.32130 | 9.61670 |
| | GRADIENT | .00000 | .00000 | .00000 | .00000 | .00000 | .00000 | .00000 | .00000 | .00000 |

RUN NO. 3102/ 0 RN/L = 1.57 GRADIENT INTERVAL = -5.00/ 5.00

| MACH | ALPHA | 27-12 | 12-ATM | 27-ATM | TBISBI | TB-SB | TB-TBI | SB-SBI | 12-PO | 12-SB |
|---|---|---|---|---|---|---|---|---|---|---|
| .229 | .000 | 65.02790 | 15.47480 | 80.53560 | 79.95960 | 80.01880 | -.17390 | -.21710 | 14.08400 | 14.66960 |
| .229 | .000 | 65.12040 | 15.48660 | 80.68420 | 80.06900 | 80.12940 | -.19090 | -.22500 | 14.10540 | 14.69460 |
| .229 | .000 | 65.03410 | 15.59290 | 80.68420 | 79.91100 | 80.13560 | -.14490 | -.35360 | 14.08550 | 14.77240 |
| .229 | .000 | 65.06080 | 15.51810 | 80.63470 | 79.97990 | 80.09460 | -.16990 | -.26520 | 14.09160 | 14.71220 |
| | GRADIENT | .00000 | .00000 | .00000 | .00000 | .00000 | .00000 | .00000 | .00000 | .00000 |

RUN NO. 3103/ 0 RN/L = 1.69 GRADIENT INTERVAL = -5.00/ 5.00

| MACH | ALPHA | 27-12 | 12-ATM | 27-ATM | TBISBI | TB-SB | TB-TBI | SB-SBI | 12-PO | 12-SB |
|---|---|---|---|---|---|---|---|---|---|---|
| .248 | .000 | 75.89370 | 18.26320 | 94.20820 | 93.47460 | 93.63930 | -.14820 | -.30240 | 16.67970 | 17.34740 |
| .247 | .000 | 75.72110 | 18.40490 | 94.15550 | 93.28020 | 93.62700 | -.13370 | -.46170 | 16.63840 | 17.44460 |
| .248 | .000 | 75.87510 | 18.24350 | 94.19870 | 93.45630 | 93.52860 | -.20860 | -.26920 | 16.67530 | 17.30290 |
| .248 | .000 | 75.83000 | 18.30380 | 94.18740 | 93.40370 | 93.59830 | -.16350 | -.34440 | 16.66450 | 17.36490 |
| | GRADIENT | .00000 | .00000 | .00000 | .00000 | .00000 | .00000 | .00000 | .00000 | .00000 |

RUN NO. 3104/ 0 RN/L = 1.81 GRADIENT INTERVAL = -5.00/ 5.00

| MACH | ALPHA | 27-12 | 12-ATM | 27-ATM | TBISBI | TB-SB | TB-TBI | SB-SBI | 12-PO | 12-SB |
|---|---|---|---|---|---|---|---|---|---|---|
| .264 | .000 | 86.82110 | 21.12830 | 108.03200 | 107.22000 | 107.38900 | -.15060 | -.30390 | 19.29590 | 20.06690 |
| .264 | .000 | 86.79020 | 21.17160 | 108.02200 | 107.08600 | 107.37000 | -.16830 | -.43650 | 19.28850 | 20.08630 |
| .264 | .000 | 86.79020 | 21.08500 | 107.94500 | 107.12300 | 107.25900 | -.20290 | -.33550 | 19.28850 | 20.01960 |
| .264 | .000 | 86.80050 | 21.12830 | 108.00000 | 107.14300 | 107.33900 | -.17390 | -.35860 | 19.29090 | 20.05760 |
| | GRADIENT | .00000 | .00000 | .00000 | .00000 | .00000 | .00000 | .00000 | .00000 | .00000 |

OA236 (NAAL 759) CONFIGURATION 5 DATA SELECT 3 (RFM311) ( 28 JUN 79 )

REFERENCE DATA

SREF = .0000 SQ.FT. XMRP = .0000 IN. XT
LREF = .0000 INCHES YMRP = .0000 IN. YT
BREF = .0000 INCHES ZMRP = .0000 IN. ZT
SCALE = 1.0000

PARAMETRIC DATA

ALPHA = .000 BETA = .000

RUN NO. 3111/ 0 RN/L = 1.28 GRADIENT INTERVAL = -5.00/ 5.00

| MACH | ALPHA | 27-12 | 12-ATM | 27-ATM | TBISBI | TB-SB | TB-TBI | SB-SBI | 12-PO | 12-SB |
|---|---|---|---|---|---|---|---|---|---|---|
| .188 | .000 | 43.48140 | 10.16560 | 53.66470 | 53.28820 | 53.22070 | -.00240 | .08970 | 9.37940 | 9.38340 |
| .188 | .000 | 43.48140 | 10.29550 | 53.78230 | 53.26990 | 53.26220 | -.01290 | -.00160 | 9.37940 | 9.47230 |
| .188 | .000 | 43.49370 | 10.14790 | 53.68630 | 53.31850 | 53.17140 | .00070 | .17080 | 9.38210 | 9.32500 |
| .188 | .000 | 43.48550 | 10.20300 | 53.71110 | 53.29220 | 53.22470 | -.00480 | .08630 | 9.38030 | 9.39360 |
| | GRADIENT | .00000 | .00000 | .00000 | .00000 | .00000 | .00000 | .00000 | .00000 | .00000 |

RUN NO. 3112/ 0 RN/L = 1.57 GRADIENT INTERVAL = -5.00/ 5.00

| MACH | ALPHA | 27-12 | 12-ATM | 27-ATM | TBISBI | TB-SB | TB-TBI | SB-SBI | 12-PO | 12-SB |
|---|---|---|---|---|---|---|---|---|---|---|
| .229 | .000 | 65.06490 | 15.49840 | 80.56670 | 80.03860 | 79.77910 | -.00400 | .27880 | 14.09260 | 14.21130 |
| .230 | .000 | 65.17580 | 15.35470 | 80.58830 | 80.19660 | 79.83420 | .01360 | .40160 | 14.11830 | 14.11120 |
| .230 | .000 | 65.21280 | 15.41580 | 80.70320 | 80.29370 | 79.98190 | .01200 | .35520 | 14.12700 | 14.18900 |
| .230 | .000 | 65.15120 | 15.42300 | 80.61940 | 80.17630 | 79.86510 | .00720 | .34520 | 14.11260 | 14.17050 |
| | GRADIENT | .00000 | .00000 | .00000 | .00000 | .00000 | .00000 | .00000 | .00000 | .00000 |

RUN NO. 3113/ 0 RN/L = 1.69 GRADIENT INTERVAL = -5.00/ 5.00

| MACH | ALPHA | 27-12 | 12-ATM | 27-ATM | TBISBI | TB-SB | TB-TBI | SB-SBI | 12-PO | 12-SB |
|---|---|---|---|---|---|---|---|---|---|---|
| .248 | .000 | 76.01070 | 18.12540 | 94.19870 | 93.67500 | 93.32560 | -.00810 | .35680 | 16.70770 | 16.72510 |
| .248 | .000 | 75.99840 | 18.14900 | 94.22980 | 93.68110 | 93.33190 | -.00490 | .37410 | 16.70480 | 16.74180 |
| .248 | .000 | 76.01070 | 18.13920 | 94.18650 | 93.71150 | 93.36250 | .00230 | .37570 | 16.70770 | 16.71960 |
| .248 | .000 | 76.00660 | 18.13790 | 94.20500 | 93.68920 | 93.34000 | -.00350 | .36890 | 16.70670 | 16.72880 |
| | GRADIENT | .00000 | .00000 | .00000 | .00000 | .00000 | .00000 | .00000 | .00000 | .00000 |

RUN NO. 3114/ 0 RN/L = 1.80 GRADIENT INTERVAL = -5.00/ 5.00

| MACH | ALPHA | 27-12 | 12-ATM | 27-ATM | TBISBI | TB-SB | TB-TBI | SB-SBI | 12-PO | 12-SB |
|---|---|---|---|---|---|---|---|---|---|---|
| .265 | .000 | 86.93820 | 20.99840 | 107.98800 | 107.36000 | 106.98900 | -.00320 | .39540 | 19.32390 | 19.33350 |
| .265 | .000 | 86.99360 | 20.94330 | 108.01000 | 107.43200 | 106.94600 | -.01050 | .50330 | 19.33710 | 19.29190 |
| .265 | .000 | 87.01220 | 20.97870 | 108.08400 | 107.48700 | 107.06300 | .00150 | .46160 | 19.34160 | 19.33350 |
| .265 | .000 | 86.98130 | 20.97350 | 108.02700 | 107.42600 | 106.99900 | -.00410 | .45340 | 19.33420 | 19.31960 |
| | GRADIENT | .00000 | .00000 | .00000 | .00000 | .00000 | .00000 | .00000 | .00000 | .00000 |

OA236 (NAAL 759) CONFIGURATION 11 DATA SELECT 3 (RFM312) ( 28 JUN 79 )

REFERENCE DATA

SREF = .0000 SQ.FT. XMRP = .0000 IN. XT
LREF = .0000 INCHES YMRP = .0000 IN. YT
BREF = .0000 INCHES ZMRP = .0000 IN. ZT
SCALE = 1.0000

PARAMETRIC DATA

ALPHA = .000 BETA = .000

RUN NO. 3121/ 0 RN/L = 1.28 GRADIENT INTERVAL = -5.00/ 5.00

| MACH | ALPHA | 27-12 | 12-ATM | 27-ATM | TBISBI | TB-SB | TB-TBI | SB-SBI | 12-PO | 12-SB |
|---|---|---|---|---|---|---|---|---|---|---|
| .188 | .000 | 43.36430 | 10.08500 | 53.47290 | -.13360 | -.13530 | .00240 | .00150 | 9.35400 | 9.38620 |
| .188 | .000 | 43.26570 | 10.05550 | 53.36750 | -.12750 | -.13530 | .00080 | -.00150 | 9.33250 | 9.31950 |
| .188 | .000 | 43.29040 | 10.06530 | 53.37700 | -.13360 | -.13530 | .00080 | .00000 | 9.33790 | 9.33620 |
| .188 | .000 | 43.30680 | 10.06860 | 53.40580 | -.13160 | -.13530 | .00130 | .00000 | 9.34140 | 9.34730 |
| | GRADIENT | .00000 | .00000 | .00000 | .00000 | .00000 | .00000 | .00000 | .00000 | .00000 |

RUN NO. 3122/ 0 RN/L = 1.56 GRADIENT INTERVAL = -5.00/ 5.00

| MACH | ALPHA | 27-12 | 12-ATM | 27-ATM | TBISBI | TB-SB | TB-TBI | SB-SBI | 12-PO | 12-SB |
|---|---|---|---|---|---|---|---|---|---|---|
| .230 | .000 | 65.15130 | 15.41770 | 80.59780 | -.04250 | -.04920 | .00240 | .00080 | 14.11260 | 14.20570 |
| .229 | .000 | 65.06500 | 15.34300 | 80.45860 | -.04250 | -.04920 | .00000 | -.00150 | 14.09260 | 14.09740 |
| .230 | .000 | 65.20670 | 15.26820 | 80.56670 | -.04250 | -.04920 | -.00160 | -.00310 | 14.12550 | 14.04740 |
| .229 | .000 | 65.14100 | 15.34300 | 80.54100 | -.04250 | -.04920 | .00020 | -.00130 | 14.11020 | 14.11680 |
| | GRADIENT | .00000 | .00000 | .00000 | .00000 | .00000 | .00000 | .00000 | .00000 | .00000 |

RUN NO. 3123/ 0 RN/L = 1.68 GRADIENT INTERVAL = -5.00/ 5.00

| MACH | ALPHA | 27-12 | 12-ATM | 27-ATM | TBISBI | TB-SB | TB-TBI | SB-SBI | 12-PO | 12-SB |
|---|---|---|---|---|---|---|---|---|---|---|
| .248 | .000 | 76.04160 | 18.13330 | 94.23920 | .11530 | .11070 | .00240 | .00150 | 16.71510 | 16.81410 |
| .248 | .000 | 75.99230 | 18.01520 | 94.11230 | .06070 | .06150 | -.00160 | -.00230 | 16.70330 | 16.60010 |
| .248 | .000 | 76.04160 | 18.16480 | 94.26080 | .07280 | .06150 | .00160 | .00150 | 16.71510 | 16.73070 |
| .248 | .000 | 76.02520 | 18.10440 | 94.20410 | .08300 | .07790 | .00080 | .00020 | 16.71120 | 16.71490 |
| | GRADIENT | .00000 | .00000 | .00000 | .00000 | .00000 | .00000 | .00000 | .00000 | .00000 |

RUN NO. 3124/ 0 RN/L = 1.79 GRADIENT INTERVAL = -5.00/ 5.00

| MACH | ALPHA | 27-12 | 12-ATM | 27-ATM | TBISBI | TB-SB | TB-TBI | SB-SBI | 12-PO | 12-SB |
|---|---|---|---|---|---|---|---|---|---|---|
| .265 | .000 | 86.88890 | 21.05160 | 107.96700 | .09100 | .08610 | .00240 | .00310 | 19.31210 | 19.40570 |
| .264 | .000 | 86.87650 | 20.99060 | 107.92300 | .09710 | .09220 | .00160 | .00150 | 19.30910 | 19.31680 |
| .265 | .000 | 86.88280 | 20.88230 | 107.81800 | .07890 | .07380 | -.00160 | -.00150 | 19.31060 | 19.20850 |
| .264 | .000 | 86.88270 | 20.97480 | 107.90300 | .08900 | .08400 | .00080 | .00100 | 19.31060 | 19.31030 |
| | GRADIENT | .00000 | .00000 | .00000 | .00000 | .00000 | .00000 | .00000 | .00000 | .00000 |

OA236 (NAAL 759) CONFIGURATION 12 DATA SELECT 3 (RFM313) ( 28 JUN 79 )

REFERENCE DATA

SREF = .0000 SQ.FT. XMRP = .0000 IN. XT
LREF = .0000 INCHES YMRP = .0000 IN. YT
BREF = .0000 INCHES ZMRP = .0000 IN. ZT
SCALE = 1.0000

PARAMETRIC DATA

ALPHA = .000 BETA = .000

RUN NO. 3131/ 0 RN/L = 1.27 GRADIENT INTERVAL = -5.00/ 5.00

| MACH | ALPHA | 27-12 | 12-ATM | 27-ATM | TBISBI | TB-SB | TB-TBI | SB-SBI | 12-PO | 12-SB |
|---|---|---|---|---|---|---|---|---|---|---|
| .188 | .000 | 43.19780 | 10.15390 | 53.37700 | 52.93590 | 52.94990 | -.00160 | .00150 | 9.31770 | 9.43620 |
| .188 | .000 | 43.25950 | 10.04960 | 53.35540 | 52.87510 | 52.88230 | -.00160 | .00000 | 9.33110 | 9.31950 |
| .188 | .000 | 43.23480 | 10.01810 | 53.31220 | 52.71720 | 52.73460 | .00000 | -.00150 | 9.32580 | 9.26120 |
| .188 | .000 | 43.23070 | 10.07380 | 53.34820 | 52.84270 | 52.85560 | -.00100 | .00000 | 9.32490 | 9.33900 |
| | GRADIENT | .00000 | .00000 | .00000 | .00000 | .00000 | .00000 | .00000 | .00000 | .00000 |

RUN NO. 3132/ 0 RN/L = 1.56 GRADIENT INTERVAL = -5.00/ 5.00

| MACH | ALPHA | 27-12 | 12-ATM | 27-ATM | TBISBI | TB-SB | TB-TBI | SB-SBI | 12-PO | 12-SB |
|---|---|---|---|---|---|---|---|---|---|---|
| .229 | .000 | 64.92930 | 15.38430 | 80.34110 | 79.38870 | 79.40370 | .00160 | .00150 | 14.06140 | 14.13070 |
| .229 | .000 | 64.94780 | 15.36660 | 80.36270 | 79.40690 | 79.41600 | .00080 | .00150 | 14.06560 | 14.11960 |
| .229 | .000 | 65.05250 | 15.27010 | 80.37220 | 79.31580 | 79.32980 | .00400 | .00000 | 14.08970 | 14.01130 |
| .229 | .000 | 64.97650 | 15.34030 | 80.35870 | 79.37050 | 79.38320 | .00210 | .00100 | 14.07220 | 14.08720 |
| | GRADIENT | .00000 | .00000 | .00000 | .00000 | .00000 | .00000 | .00000 | .00000 | .00000 |

RUN NO. 3133/ 0 RN/L = 1.68 GRADIENT INTERVAL = -5.00/ 5.00

| MACH | ALPHA | 27-12 | 12-ATM | 27-ATM | TBISBI | TB-SB | TB-TBI | SB-SBI | 12-PO | 12-SB |
|---|---|---|---|---|---|---|---|---|---|---|
| .248 | .000 | 75.92440 | 17.98770 | 93.99470 | 92.81250 | 92.82120 | .00640 | .00150 | 16.68710 | 16.59470 |
| .248 | .000 | 75.88140 | 18.04280 | 94.00420 | 92.83680 | 92.84580 | .00240 | .00070 | 16.67680 | 16.54180 |
| .248 | .000 | 75.88740 | 18.12540 | 94.04740 | 92.92190 | 92.92570 | .00080 | .00070 | 16.67820 | 16.60300 |
| .248 | .000 | 75.89770 | 18.05200 | 94.01540 | 92.85710 | 92.86420 | .00320 | .00100 | 16.68070 | 16.57980 |
| | GRADIENT | .00000 | .00000 | .00000 | .00000 | .00000 | .00000 | .00000 | .00000 | .00000 |

RUN NO. 3134/ 0 RN/L = 1.78 GRADIENT INTERVAL = -5.00/ 5.00

| MACH | ALPHA | 27-12 | 12-ATM | 27-ATM | TBISBI | TB-SB | TB-TBI | SB-SBI | 12-PO | 12-SB |
|---|---|---|---|---|---|---|---|---|---|---|
| .265 | .000 | 86.87650 | 20.91970 | 107.84700 | 106.55200 | 106.55200 | -.00240 | .00000 | 19.30910 | 19.04190 |
| .265 | .000 | 86.87650 | 20.99650 | 107.88000 | 106.50300 | 106.50300 | .00320 | .00390 | 19.30910 | 19.17800 |
| .265 | .000 | 86.96890 | 20.81350 | 107.85900 | 106.46100 | 106.47200 | .00240 | -.00150 | 19.33120 | 19.00030 |
| .265 | .000 | 86.90730 | 20.90990 | 107.86200 | 106.50500 | 106.50900 | .00100 | .00070 | 19.31650 | 19.07340 |
| | GRADIENT | .00000 | .00000 | .00000 | .00000 | .00000 | .00000 | .00000 | .00000 | .00000 |

OA236 (NAAL 759) CONFIGURATION 13 DATA SELECT 3 (RFM314) ( 28 JUN 79 )

REFERENCE DATA

SREF = .0000 SQ.FT. XMRP = .0000 IN. XT
LREF = .0000 INCHES YMRP = .0000 IN. YT
BREF = .0000 INCHES ZMRP = .0000 IN. ZT
SCALE = 1.0000

PARAMETRIC DATA

ALPHA = .000 BETA = .000

RUN NO. 3141/ 0 RN/L = 1.27 GRADIENT INTERVAL = -5.00/ 5.00

| MACH | ALPHA | 27-12 | 12-ATM | 27-ATM | TBISBI | TB-SB | TB-TBI | SB-SBI | 12-PO | 12-SB |
|---|---|---|---|---|---|---|---|---|---|---|
| .189 | .000 | 43.54300 | 10.09480 | 53.67690 | 52.91160 | 52.91920 | .00080 | .00310 | 9.39280 | 9.15560 |
| .188 | .000 | 43.40740 | 10.10660 | 53.53770 | 52.79620 | 52.80240 | -.00320 | .00310 | 9.36330 | 9.12230 |
| .188 | .000 | 43.34580 | 10.08300 | 53.45400 | 52.68690 | 52.68560 | -.00160 | .00150 | 9.34990 | 9.09450 |
| .188 | .000 | 43.43210 | 10.09480 | 53.55620 | 52.79820 | 52.80240 | -.00130 | .00260 | 9.36870 | 9.12410 |
| | GRADIENT | .00000 | .00000 | .00000 | .00000 | .00000 | .00000 | .00000 | .00000 | .00000 |

RUN NO. 3142/ 0 RN/L = 1.55 GRADIENT INTERVAL = -5.00/ 5.00

| MACH | ALPHA | 27-12 | 12-ATM | 27-ATM | TBISBI | TB-SB | TB-TBI | SB-SBI | 12-PO | 12-SB |
|---|---|---|---|---|---|---|---|---|---|---|
| .230 | .000 | 65.20050 | 15.11860 | 80.37490 | 79.17610 | 79.18840 | .00480 | -.00070 | 14.12410 | 13.73070 |
| .230 | .000 | 65.31150 | 15.02810 | 80.41810 | 79.18830 | 79.21300 | .01120 | -.00390 | 14.15010 | 13.66670 |
| .230 | .000 | 65.21280 | 15.27610 | 80.51400 | 79.42520 | 79.42220 | -.00160 | .00470 | 14.12700 | 13.85570 |
| .230 | .000 | 65.24160 | 15.14090 | 80.43560 | 79.26320 | 79.27450 | .00480 | .00000 | 14.13370 | 13.75100 |
| | GRADIENT | .00000 | .00000 | .00000 | .00000 | .00000 | .00000 | .00000 | .00000 | .00000 |

RUN NO. 3143/ 0 RN/L = 1.68 GRADIENT INTERVAL = -5.00/ 5.00

| MACH | ALPHA | 27-12 | 12-ATM | 27-ATM | TBISBI | TB-SB | TB-TBI | SB-SBI | 12-PO | 12-SB |
|---|---|---|---|---|---|---|---|---|---|---|
| .248 | .000 | 76.13400 | 17.78110 | 94.00690 | 92.60600 | 92.61830 | .00720 | -.00150 | 16.73720 | 16.14740 |
| .248 | .000 | 76.08470 | 17.80070 | 93.92040 | 92.60000 | 92.60600 | .00160 | -.00150 | 16.72540 | 16.13070 |
| .248 | .000 | 76.17100 | 17.74560 | 94.00690 | 92.57560 | 92.58760 | .01200 | -.00150 | 16.74610 | 16.11400 |
| .248 | .000 | 76.12990 | 17.77580 | 93.97800 | 92.59390 | 92.60390 | .00690 | -.00150 | 16.73620 | 16.13070 |
| | GRADIENT | .00000 | .00000 | .00000 | .00000 | .00000 | .00000 | .00000 | .00000 | .00000 |

RUN NO. 3144/ 0 RN/L = 1.79 GRADIENT INTERVAL = -5.00/ 5.00

| MACH | ALPHA | 27-12 | 12-ATM | 27-ATM | TBISBI | TB-SB | TB-TBI | SB-SBI | 12-PO | 12-SB |
|---|---|---|---|---|---|---|---|---|---|---|
| .265 | .000 | 86.99360 | 20.66390 | 107.72200 | 106.03500 | 106.02900 | -.00070 | .00000 | 19.33710 | 18.57800 |
| .265 | .000 | 87.10450 | 20.51630 | 107.72200 | 106.06600 | 106.07900 | .01040 | -.00150 | 19.36370 | 18.57520 |
| .265 | .000 | 87.09220 | 20.54190 | 107.71300 | 106.08400 | 106.09100 | .00720 | -.00150 | 19.36080 | 18.59740 |
| .265 | .000 | 87.06340 | 20.57400 | 107.71900 | 106.06200 | 106.06600 | .00560 | -.00100 | 19.35390 | 18.58350 |
| | GRADIENT | .00000 | .00000 | .00000 | .00000 | .00000 | .00000 | .00000 | .00000 | .00000 |

OA236 (NAAL 759) CONFIGURATION 1 DATA SELECT 3 (RFM315) ( 28 JUN 79 )

REFERENCE DATA

SREF = .0000 SQ.FT. XMRP = .0000 IN. XT
LREF = .0000 INCHES YMRP = .0000 IN. YT
BREF = .0000 INCHES ZMRP = .0000 IN. ZT
SCALE = 1.0000

PARAMETRIC DATA

ALPHA = .000 BETA = .000

RUN NO. 3151/ 0 RN/L = 1.27 GRADIENT INTERVAL = -5.00/ 5.00

| MACH | ALPHA | 27-12 | 12-ATM | 27-ATM | TBISBI | TB-SB | TB-TBI | SB-SBI | 12-PO | 12-SB |
|---|---|---|---|---|---|---|---|---|---|---|
| .188 | .000 | 43.41970 | 10.13810 | 53.56880 | 53.00270 | 52.99930 | -.00720 | .00080 | 9.36600 | 9.35280 |
| .188 | .000 | 43.39510 | 10.12040 | 53.51610 | 52.96020 | 52.96850 | -.00560 | -.00070 | 9.36060 | 9.35280 |
| .188 | .000 | 43.19180 | 10.14790 | 53.36750 | 52.70510 | 52.70400 | -.01040 | -.00150 | 9.31640 | 9.31950 |
| .188 | .000 | 43.33550 | 10.13550 | 53.48410 | 52.88930 | 52.89060 | -.00770 | -.00050 | 9.34770 | 9.34170 |
| | GRADIENT | .00000 | .00000 | .00000 | .00000 | .00000 | .00000 | .00000 | .00000 | .00000 |

RUN NO. 3152/ 0 RN/L = 1.55 GRADIENT INTERVAL = -5.00/ 5.00

| MACH | ALPHA | 27-12 | 12-ATM | 27-ATM | TBISBI | TB-SB | TB-TBI | SB-SBI | 12-PO | 12-SB |
|---|---|---|---|---|---|---|---|---|---|---|
| .230 | .000 | 65.24980 | 15.23870 | 80.57620 | 79.99610 | 80.01900 | .01520 | -.00230 | 14.13560 | 14.37520 |
| .230 | .000 | 65.21280 | 15.35480 | 80.61940 | 79.89890 | 79.89590 | -.00400 | .00710 | 14.12700 | 14.33630 |
| .230 | .000 | 65.20050 | 15.27020 | 80.56670 | 79.91110 | 79.93290 | .01440 | .00080 | 14.12410 | 14.32510 |
| .230 | .000 | 65.22100 | 15.28790 | 80.58740 | 79.93540 | 79.94930 | .00850 | .00180 | 14.12890 | 14.34550 |
| | GRADIENT | .00000 | .00000 | .00000 | .00000 | .00000 | .00000 | .00000 | .00000 | .00000 |

RUN NO. 3153/ 0 RN/L = 1.67 GRADIENT INTERVAL = -5.00/ 5.00

| MACH | ALPHA | 27-12 | 12-ATM | 27-ATM | TBISBI | TB-SB | TB-TBI | SB-SBI | 12-PO | 12-SB |
|---|---|---|---|---|---|---|---|---|---|---|
| .248 | .000 | 76.03540 | 17.96410 | 94.04740 | 93.35920 | 93.35040 | -.00240 | .00550 | 16.71360 | 16.90010 |
| .248 | .000 | 75.99840 | 18.05070 | 94.09060 | 93.28630 | 93.28280 | -.00080 | .00950 | 16.70480 | 16.85850 |
| .248 | .000 | 76.04160 | 17.99560 | 94.08120 | 93.38960 | 93.39960 | .00800 | .00240 | 16.71510 | 16.89740 |
| .248 | .000 | 76.02510 | 18.00340 | 94.07310 | 93.34500 | 93.34430 | .00160 | .00580 | 16.71120 | 16.88530 |
| | GRADIENT | .00000 | .00000 | .00000 | .00000 | .00000 | .00000 | .00000 | .00000 | .00000 |

RUN NO. 3154/ 0 RN/L = 1.78 GRADIENT INTERVAL = -5.00/ 5.00

| MACH | ALPHA | 27-12 | 12-ATM | 27-ATM | TBISBI | TB-SB | TB-TBI | SB-SBI | 12-PO | 12-SB |
|---|---|---|---|---|---|---|---|---|---|---|
| .265 | .000 | 87.02450 | 21.01220 | 108.08400 | 107.06200 | 107.03800 | -.00880 | .01730 | 19.34450 | 19.50010 |
| .265 | .000 | 86.93190 | 20.85870 | 107.84900 | 106.94700 | 106.94000 | -.00880 | -.00150 | 19.32240 | 19.52800 |
| .265 | .000 | 86.93820 | 20.86660 | 107.84900 | 106.92800 | 106.91500 | -.00400 | .00950 | 19.32390 | 19.49470 |
| .265 | .000 | 86.96490 | 20.91250 | 107.92800 | 106.97900 | 106.96400 | -.00720 | .00840 | 19.33030 | 19.50760 |
| | GRADIENT | .00000 | .00000 | .00000 | .00000 | .00000 | .00000 | .00000 | .00000 | .00000 |

OA236 (NAAL 759) CONFIGURATION 3 DATA SELECT 3 (RFM316) ( 28 JUN 79 )

REFERENCE DATA

SREF = .0000 SQ.FT. XMRP = .0000 IN. XT
LREF = .0000 INCHES YMRP = .0000 IN. YT
BREF = .0000 INCHES ZMRP = .0000 IN. ZT
SCALE = 1.0000

PARAMETRIC DATA

ALPHA = .000 BETA = .000

RUN NO. 3161/ 0 RN/L = 1.26 GRADIENT INTERVAL = -5.00/ 5.00

| MACH | ALPHA | 27-12 | 12-ATM | 27-ATM | TBISBI | TB-SB | TB-TBI | SB-SBI | 12-PO | 12-SB |
|---|---|---|---|---|---|---|---|---|---|---|
| .188 | .000 | 43.42580 | 9.97280 | 53.44180 | 53.67690 | 53.68830 | .00640 | .00480 | 9.36730 | 10.03620 |
| .188 | .000 | 43.41970 | 10.05150 | 53.47290 | 53.67690 | 53.68220 | .00480 | .00550 | 9.36600 | 10.03890 |
| .188 | .000 | 43.34580 | 10.07320 | 53.42970 | 53.58590 | 53.58380 | -.00480 | .00240 | 9.34990 | 10.02230 |
| .188 | .000 | 43.39710 | 10.03250 | 53.44810 | 53.64660 | 53.65140 | .00210 | .00420 | 9.36110 | 10.03250 |
| | GRADIENT | .00000 | .00000 | .00000 | .00000 | .00000 | .00000 | .00000 | .00000 | .00000 |

RUN NO. 3162/ 0 RN/L = 1.54 GRADIENT INTERVAL = -5.00/ 5.00

| MACH | ALPHA | 27-12 | 12-ATM | 27-ATM | TBISBI | TB-SB | TB-TBI | SB-SBI | 12-PO | 12-SB |
|---|---|---|---|---|---|---|---|---|---|---|
| .229 | .000 | 65.04650 | 15.34100 | 80.42760 | 80.70680 | 80.72030 | .00400 | .00160 | 14.08830 | 15.31120 |
| .230 | .000 | 65.21280 | 15.25640 | 80.52350 | 80.88900 | 80.90490 | .00960 | -.00390 | 14.12700 | 15.36120 |
| .230 | .000 | 65.23140 | 15.41180 | 80.68150 | 80.91940 | 80.91720 | .00070 | .00390 | 14.13130 | 15.35570 |
| .230 | .000 | 65.16360 | 15.33640 | 80.54420 | 80.83840 | 80.84750 | .00480 | .00050 | 14.11550 | 15.34270 |
| | GRADIENT | .00000 | .00000 | .00000 | .00000 | .00000 | .00000 | .00000 | .00000 | .00000 |

RUN NO. 3163/ 0 RN/L = 1.66 GRADIENT INTERVAL = -5.00/ 5.00

| MACH | ALPHA | 27-12 | 12-ATM | 27-ATM | TBISBI | TB-SB | TB-TBI | SB-SBI | 12-PO | 12-SB |
|---|---|---|---|---|---|---|---|---|---|---|
| .248 | .000 | 76.07240 | 18.08210 | 94.20820 | 94.53150 | 94.51930 | .00320 | .01340 | 16.72250 | 18.01690 |
| .248 | .000 | 76.06010 | 18.01130 | 94.14330 | 94.48900 | 94.50080 | .00800 | -.00230 | 16.71950 | 18.04740 |
| .248 | .000 | 76.01070 | 18.13720 | 94.17710 | 94.41610 | 94.41480 | -.00480 | .00080 | 16.70770 | 18.02800 |
| .248 | .000 | 76.04770 | 18.07690 | 94.17620 | 94.47890 | 94.47830 | .00210 | .00390 | 16.71660 | 18.03080 |
| | GRADIENT | .00000 | .00000 | .00000 | .00000 | .00000 | .00000 | .00000 | .00000 | .00000 |

RUN NO. 3164/ 0 RN/L = 1.77 GRADIENT INTERVAL = -5.00/ 5.00

| MACH | ALPHA | 27-12 | 12-ATM | 27-ATM | TBISBI | TB-SB | TB-TBI | SB-SBI | 12-PO | 12-SB |
|---|---|---|---|---|---|---|---|---|---|---|
| .265 | .000 | 87.15390 | 20.90790 | 108.16800 | 108.42900 | 108.43500 | -.00480 | -.01650 | 19.37550 | 20.85300 |
| .265 | .000 | 86.86420 | 20.94530 | 107.81800 | 108.02200 | 108.00400 | -.00800 | .01340 | 19.30620 | 20.71690 |
| .265 | .000 | 86.97520 | 20.93350 | 107.96700 | 108.21600 | 108.20700 | .00880 | .01500 | 19.33270 | 20.76690 |
| .265 | .000 | 86.99770 | 20.92890 | 107.98400 | 108.22200 | 108.21500 | -.00130 | .00390 | 19.33810 | 20.77890 |
| | GRADIENT | .00000 | .00000 | .00000 | .00000 | .00000 | .00000 | .00000 | .00000 | .00000 |

OA236 (NAAL 759) CONFIGURATION 14 DATA SELECT 3 (RFM317) ( 28 JUN 79 )

REFERENCE DATA

SREF = .0000 SQ.FT. XMRP = .0000 IN. XT
LREF = .0000 INCHES YMRP = .0000 IN. YT
BREF = .0000 INCHES ZMRP = .0000 IN. ZT
SCALE = 1.0000

PARAMETRIC DATA

ALPHA = .000 BETA = .000

RUN NO. 3171/ 0 RN/L = 1.28 GRADIENT INTERVAL = -5.00/ 5.00

| MACH | ALPHA | 27-12 | 12-ATM | 27-ATM | TBISBI | TB-SB | TB-TBI | SB-SBI | 12-PO | 12-SB |
|---|---|---|---|---|---|---|---|---|---|---|
| .188 | .000 | 43.41350 | 9.99250 | 53.44180 | 53.73770 | 53.74360 | .00000 | .00870 | 9.36460 | 10.06940 |
| .188 | .000 | 43.38880 | 9.92360 | 53.36750 | 53.69520 | 53.71900 | .00560 | -.00070 | 9.35930 | 10.07230 |
| .188 | .000 | 43.43210 | 9.94920 | 53.42020 | 53.74980 | 53.76820 | .00160 | .00470 | 9.36870 | 10.07230 |
| .188 | .000 | 43.41140 | 9.95510 | 53.40980 | 53.72760 | 53.74360 | .00240 | .00420 | 9.36420 | 10.07130 |
| | GRADIENT | .00000 | .00000 | .00000 | .00000 | .00000 | .00000 | 00000 | .00000 | .00000 |

RUN NO. 3172/ 0 RN/L = 1.57 GRADIENT INTERVAL = -5.00/ 5.00

| MACH | ALPHA | 27-12 | 12-ATM | 27-ATM | TBISBI | TB-SB | TB-TBI | SB-SBI | 12-PO | 12-SB |
|---|---|---|---|---|---|---|---|---|---|---|
| .230 | .000 | 65.14490 | 15.29570 | 80.45860 | 80.77360 | 80.76330 | -.00560 | .01100 | 14.11110 | 15.24740 |
| .229 | .000 | 65.13260 | 15.10880 | 80.31000 | 80.74320 | 80.76950 | .00880 | -.00310 | 14.10820 | 15.26680 |
| .230 | .000 | 65.16960 | 15.20910 | 80.40590 | 80.79790 | 80.80020 | -.00640 | .00470 | 14.11680 | 15.27520 |
| .230 | .000 | 65.14900 | 15.20460 | 80.39150 | 80.77160 | 80.77770 | -.00100 | .00420 | 14.11210 | 15.26310 |
| | GRADIENT | .00000 | .00000 | .00000 | .00000 | .00000 | .00000 | .00000 | .00000 | .00000 |

RUN NO. 3173/ 0 RN/L = 1.69 GRADIENT INTERVAL = -5.00/ 5.00

| MACH | ALPHA | 27-12 | 12-ATM | 27-ATM | TBISBI | TB-SB | TB-TBI | SB-SBI | 12-PO | 12-SB |
|---|---|---|---|---|---|---|---|---|---|---|
| .248 | .000 | 76.00450 | 17.90110 | 93.95150 | 94.29460 | 94.29160 | -.00960 | .00550 | 16.70620 | 17.85570 |
| .248 | .000 | 76.05380 | 18.02900 | 94.13390 | 94.35540 | 94.35940 | -.01200 | -.00550 | 16.71800 | 17.91690 |
| .248 | .000 | 75.95520 | 17.97000 | 93.98260 | 94.23390 | 94.23630 | -.00480 | .00240 | 16.69440 | 17.86130 |
| .248 | .000 | 76.00450 | 17.96670 | 94.02260 | 94.29460 | 94.29570 | -.00880 | .00080 | 16.70620 | 17.87790 |
| | GRADIENT | .00000 | .00000 | .00000 | .00000 | .00000 | .00000 | .00000 | .00000 | .00000 |

RUN NO. 3174/ 0 RN/L = 1.80 GRADIENT INTERVAL = -5.00/ 5.00

| MACH | ALPHA | 27-12 | 12-ATM | 27-ATM | TBISBI | TB-SB | TB-TBI | SB-SBI | 12-PO | 12-SB |
|---|---|---|---|---|---|---|---|---|---|---|
| .265 | .000 | 86.91960 | 20.73280 | 107.71000 | 107.86400 | 107.85000 | -.01200 | .00550 | 19.31940 | 20.45850 |
| .265 | .000 | 87.01200 | 20.46120 | 107.59300 | 108.04000 | 108.09000 | .01930 | -.00700 | 19.34150 | 20.55570 |
| .265 | .000 | 86.98120 | 20.54390 | 107.62600 | 107.99700 | 108.02900 | .01530 | -.01180 | 19.33420 | 20.53630 |
| .265 | .000 | 86.97090 | 20.57930 | 107.64300 | 107.96700 | 107.99000 | .00750 | -.00440 | 19.33170 | 20.51690 |
| | GRADIENT | .00000 | .00000 | .00000 | .00000 | .00000 | .00000 | .00000 | .00000 | .00000 |

OA236 (NAAL 759) CONFIGURATION 1 DATA SELECT 3 (SFM301) ( 28 JUN 79 )

REFERENCE DATA

SREF = .0000 SQ.FT. XMRP = .0000 IN. XT
LREF = .0000 INCHES YMRP = .0000 IN. YT
BREF = .0000 INCHES ZMRP = .0000 IN. ZT
SCALE = 1.0000

PARAMETRIC DATA

ALPHA = .000 BETA = .000

RUN NO. 3011/ 0 RN/L = 1.29 GRADIENT INTERVAL = -5.00/ 5.00

| MACH | ALPHA | TBTO/Q | QBI/QO | QB/QO | SBPO/Q | SBSBIQ | TBTBIQ | 2712/Q | 12SBIQ | 12SB/Q | P12POQ |
|---|---|---|---|---|---|---|---|---|---|---|---|
| .188 | .000 | .00000 | .99780 | .99780 | .00170 | .00000 | -.00010 | .82590 | .17640 | .17640 | .17810 |
| .188 | .000 | .00010 | .99800 | .99810 | .00160 | .00000 | .00000 | .82580 | .17650 | .17640 | .17810 |
| .188 | .000 | .00020 | .99840 | .99880 | .00100 | -.00020 | .00000 | .82590 | .17690 | .17710 | .17810 |
| .188 | .000 | .00010 | .99810 | .99820 | .00140 | .00000 | .00000 | .82590 | .17660 | .17660 | .17810 |
| | GRADIENT | .00000 | .00000 | .00000 | .00000 | .00000 | .00000 | .00000 | .00000 | .00000 | .00000 |

RUN NO. 3012/ 0 RN/L = 1.58 GRADIENT INTERVAL = -5.00/ 5.00

| MACH | ALPHA | TBTO/Q | QBI/QO | QB/QO | SBPO/Q | SBSBIQ | TBTBIQ | 2712/Q | 12SBIQ | 12SB/Q | P12POQ |
|---|---|---|---|---|---|---|---|---|---|---|---|
| .229 | .000 | .00060 | 1.00170 | 1.00180 | -.00140 | .00000 | .00000 | .82890 | .18130 | .18090 | .17950 |
| .230 | .000 | .00060 | 1.00120 | 1.00130 | -.00090 | .00010 | .00000 | .82890 | .18100 | .18050 | .17950 |
| .229 | .000 | .00010 | 1.00130 | 1.00140 | -.00140 | .00000 | .00000 | .82890 | .18140 | .18100 | .17950 |
| .230 | .000 | .00040 | 1.00140 | 1.00150 | -.00120 | .00000 | .00000 | .82890 | .18120 | .18080 | .17950 |
| | GRADIENT | .00000 | .00000 | .00000 | .00000 | .00000 | .00000 | .00000 | .00000 | .00000 | .00000 |

RUN NO. 3013/ 0 RN/L = 1.70 GRADIENT INTERVAL = -5.00/ 5.00

| MACH | ALPHA | TBTO/Q | QBI/QO | QB/QO | SBPO/Q | SBSBIQ | TBTBIQ | 2712/Q | 12SBIQ | 12SB/Q | P12POQ |
|---|---|---|---|---|---|---|---|---|---|---|---|
| .248 | .000 | .00020 | 1.00090 | 1.00080 | -.00080 | .00000 | .00000 | .82850 | .18310 | .18300 | .18210 |
| .248 | .000 | -.00010 | 1.00040 | 1.00040 | -.00070 | .00000 | .00000 | .82850 | .18300 | .18290 | .18210 |
| .248 | .000 | .00070 | 1.00100 | 1.00120 | -.00070 | .00000 | .00010 | .82850 | .18300 | .18280 | .18210 |
| .248 | .000 | .00030 | 1.00080 | 1.00080 | -.00070 | .00000 | .00000 | .82850 | .18300 | .18290 | .18210 |
| | GRADIENT | .00000 | .00000 | .00000 | .00000 | .00000 | .00000 | .00000 | .00000 | .00000 | .00000 |

RUN NO. 3014/ 0 RN/L = 1.81 GRADIENT INTERVAL = -5.00/ 5.00

| MACH | ALPHA | TBTO/Q | QBI/QO | QB/QO | SBPO/Q | SBSBIQ | TBTBIQ | 2712/Q | 12SBIQ | 12SB/Q | P12POQ |
|---|---|---|---|---|---|---|---|---|---|---|---|
| .265 | .000 | .00040 | 1.00050 | 1.00040 | -.00010 | .00010 | .00000 | .82860 | .18440 | .18430 | .18420 |
| .265 | .000 | .00050 | 1.00090 | 1.00110 | -.00070 | .00000 | .00000 | .82860 | .18480 | .18490 | .18420 |
| .265 | .000 | .00010 | 1.00070 | 1.00080 | -.00090 | .00000 | .00000 | .82860 | .18500 | .18520 | .18420 |
| .265 | .000 | .00030 | 1.00070 | 1.00070 | -.00060 | .00000 | .00000 | .82860 | .18480 | .18480 | .18420 |
| | GRADIENT | .00000 | .00000 | .00000 | .00000 | .00000 | .00000 | .00000 | .00000 | .00000 | .00000 |

OA236 (NAAL 759) CONFIGURATION 2 DATA SELECT 3 (SFM302) ( 28 JUN 79 )

REFERENCE DATA

SREF = .0000 SQ.FT. XMRP = .0000 IN. XT
LREF = .0000 INCHES YMRP = .0000 IN. YT
BREF = .0000 INCHES ZMRP = .0000 IN. ZT
SCALE = 1.0000

PARAMETRIC DATA

ALPHA = .000 BETA = .000

RUN NO. 3021/ 0 RN/L = 1.28 GRADIENT INTERVAL = -5.00/ 5.00

| MACH | ALPHA | TBTO/Q | QBI/QO | QB/QO | SBPO/Q | SBSBIQ | TBTBIQ | 2712/Q | 12SBIQ | 12SB/Q | P12POQ |
|---|---|---|---|---|---|---|---|---|---|---|---|
| .188 | .000 | -.00020 | .98910 | .98910 | .01020 | .00000 | .00000 | .82580 | .16820 | .16780 | .17810 |
| .188 | .000 | -.00020 | .98830 | .98850 | .01080 | .00000 | .00000 | .82580 | .16760 | .16720 | .17810 |
| .187 | .000 | -.00050 | .98870 | .98890 | .01020 | .00000 | .00000 | .82580 | .16820 | .16780 | .17810 |
| .188 | .000 | -.00030 | .98870 | .99880 | .01040 | .00000 | .00000 | .82580 | .16800 | .16760 | .17810 |
| | GRADIENT | .00000 | .00000 | .00000 | .00000 | .00000 | .00000 | .00000 | .00000 | .00000 | .00000 |

RUN NO. 3022/ 0 RN/L = 1.57 GRADIENT INTERVAL = -5.00/ 5.00

| MACH | ALPHA | TBTO/Q | QBI/QO | QB/QO | SBPO/Q | SBSBIQ | TBTBIQ | 2712/Q | 12SBIQ | 12SB/Q | P12POQ |
|---|---|---|---|---|---|---|---|---|---|---|---|
| .229 | .000 | .00020 | .99170 | .99170 | .00830 | .00000 | .00000 | .82890 | .17140 | .17120 | .17950 |
| .229 | .000 | -.00130 | .98810 | .98820 | .01030 | .00000 | .00000 | .82890 | .16940 | .16910 | .17950 |
| .229 | .000 | -.00050 | .99000 | .99010 | .00920 | .00000 | .00000 | .82890 | .17050 | .17020 | .17950 |
| .229 | .000 | -.00050 | .98990 | .99000 | .00930 | .00000 | .00000 | .82890 | .17040 | .17020 | .17950 |
| | GRADIENT | .00000 | .00000 | .00000 | .00000 | .00000 | .00000 | .00000 | .00000 | .00000 | .00000 |

RUN NO. 3023/ 0 RN/L = 1.69 GRADIENT INTERVAL = -5.00/ 5.00

| MACH | ALPHA | TBTO/Q | QBI/QO | QB/QO | SBPO/Q | SBSBIQ | TBTBIQ | 2712/Q | 12SBIQ | 12SB/Q | P12POQ |
|---|---|---|---|---|---|---|---|---|---|---|---|
| .248 | .000 | -.00040 | .98890 | .98880 | .01050 | .00000 | .00000 | .82850 | .17170 | .17150 | .18210 |
| .248 | .000 | .00020 | .99000 | .99000 | .01000 | .00000 | .00000 | .82850 | .17220 | .17200 | .18210 |
| .248 | .000 | -.00160 | .98640 | .98650 | .01170 | .00000 | .00000 | .82850 | .17050 | .17030 | .18210 |
| .248 | .000 | -.00060 | .98840 | .98840 | .01080 | .00000 | .00000 | .82850 | .17150 | .17130 | .18210 |
| | GRADIENT | .00000 | .00000 | .00000 | .00000 | .00000 | .00000 | .00000 | .00000 | .00000 | .00000 |

RUN NO. 3024/ 0 RN/L = 1.80 GRADIENT INTERVAL = -5.00/ 5.00

| MACH | ALPHA | TBTO/Q | QBI/QO | QB/QO | SBPO/Q | SBSBIQ | TBTBIQ | 2712/Q | 12SBIQ | 12SB/Q | P12POQ |
|---|---|---|---|---|---|---|---|---|---|---|---|
| .264 | .000 | -.00060 | .98830 | [illegible] | .01090 | .00000 | .00000 | .82860 | .17340 | .17320 | .18410 |
| .264 | .000 | .00000 | .98860 | .98860 | .01120 | .00000 | .00000 | .82860 | .17310 | .17290 | .18410 |
| .264 | .000 | -.00020 | .98800 | .98810 | .01150 | .00000 | .00000 | .82860 | .17280 | .17250 | .18410 |
| .264 | .000 | -.00030 | .98830 | .98830 | .01120 | .00000 | .00000 | .82860 | .17310 | .17290 | .18410 |
| | GRADIENT | .00000 | .00000 | .00000 | .00000 | .00000 | .00000 | .00000 | .00000 | .00000 | .00000 |

OA236 (NAAL 759) CONFIGURATION 3 DATA SELECT 3 (SFM303) ( 28 JUN 79 )

REFERENCE DATA

SREF = .0000 SQ.FT. XMRP = .0000 IN. XT
LREF = .0000 INCHES YMRP = .0000 IN. YT
BREF = .0000 INCHES ZMRP = .0000 IN. ZT
SCALE = 1.0000

PARAMETRIC DATA

ALPHA = .000 BETA = .000

RUN NO. 3031/ 0 RN/L = 1.29 GRADIENT INTERVAL = -5.00/ 5.00

| MACH | ALPHA | TBTO/Q | QBI/QO | QB/QO | SBPO/Q | SBSBIQ | TBTBIQ | 2712/Q | 12SBIQ | 12SB/Q | P12POQ |
|---|---|---|---|---|---|---|---|---|---|---|---|
| .188 | .000 | -.00020 | 1.01200 | 1.01220 | -.01290 | -.00010 | .00000 | .82590 | .19220 | .19110 | .17810 |
| .188 | .000 | .00010 | 1.01200 | 1.01220 | -.01250 | .00010 | -.00010 | .82590 | .19200 | .19060 | .17810 |
| .188 | .000 | .00030 | 1.01210 | 1.01250 | -.01260 | .00000 | .00000 | .82580 | .19190 | .19070 | .17810 |
| .188 | .000 | .00000 | 1.01210 | 1.01230 | -.01270 | .00000 | .00000 | .82590 | .19200 | .19080 | .17810 |
| | GRADIENT | .00000 | .00000 | .00000 | .00000 | .00000 | .00000 | .00000 | .00000 | .00000 | .00000 |

RUN NO. 3032/ 0 RN/L = 1.56 GRADIENT INTERVAL = -5.00/ 5.00

| MACH | ALPHA | TBTO/Q | QBI/QO | QB/QO | SBPO/Q | SBSBIQ | TBTBIQ | 2712/Q | 12SBIQ | 12SB/Q | P12POQ |
|---|---|---|---|---|---|---|---|---|---|---|---|
| .230 | .000 | -.00030 | 1.01500 | 1.01500 | -.01570 | .00000 | .00000 | .82890 | .19710 | .19530 | .17950 |
| .230 | .000 | .00000 | 1.01520 | 1.01530 | -.01580 | .00000 | .00000 | .82890 | .19720 | .19540 | .17960 |
| .229 | .000 | -.00040 | 1.01510 | 1.01480 | -.01570 | .00000 | -.00010 | .82890 | .19720 | .19530 | .17950 |
| .230 | .000 | -.00020 | 1.01510 | 1.01510 | -.01580 | .00000 | .00000 | .82890 | .19720 | .19530 | .17950 |
| | GRADIENT | .00000 | .00000 | .00000 | .00000 | .00000 | .00000 | .00000 | .00000 | .00000 | .00000 |

RUN NO. 3033/ 0 RN/L = 1.68 GRADIENT INTERVAL = -5.00/ 5.00

| MACH | ALPHA | TBTO/Q | QBI/QO | QB/QO | SBPO/Q | SBSBIQ | TBTBIQ | 2712/Q | 12SBIQ | 12SB/Q | P12POQ |
|---|---|---|---|---|---|---|---|---|---|---|---|
| .248 | .000 | .00010 | 1.01380 | 1.01390 | -.01430 | .00000 | .00000 | .82850 | .19830 | .19640 | .18210 |
| .248 | .000 | -.00020 | 1.01360 | 1.01370 | -.01430 | .00000 | .00000 | .82850 | .19840 | .19640 | .18210 |
| .248 | .000 | .00000 | 1.01380 | 1.01390 | -.01440 | .00000 | .00000 | .82850 | .19850 | .19650 | .18210 |
| .248 | .000 | .00000 | 1.01370 | 1.01380 | -.01430 | .00000 | .00000 | .82850 | .19840 | .19650 | .18210 |
| | GRADIENT | .00000 | .00000 | .00000 | .00000 | .00000 | .00000 | .00000 | .00000 | .00000 | .00000 |

RUN NO. 3034/ 0 RN/L = 1.79 GRADIENT INTERVAL = -5.00/ 5.00

| MACH | ALPHA | TBTO/Q | QBI/QO | QB/QO | SBPO/Q | SBSBIQ | TBTBIQ | 2712/Q | 12SBIQ | 12SB/Q | P12POQ |
|---|---|---|---|---|---|---|---|---|---|---|---|
| .265 | .000 | .00030 | 1.01330 | 1.01370 | -.01380 | -.00010 | .00020 | .82860 | .19980 | .19810 | .18420 |
| .264 | .000 | .00000 | 1.01330 | 1.01340 | -.01380 | .00000 | .00000 | .82860 | .19980 | .19800 | .18420 |
| .264 | .000 | .00010 | 1.01350 | 1.01340 | -.01380 | .00000 | .00000 | .82860 | .19990 | .19800 | .18410 |
| .265 | .000 | .00010 | 1.01340 | 1.01350 | -.01380 | .00000 | .00010 | .82860 | .19980 | .19800 | .18420 |
| | GRADIENT | .00000 | .00000 | .00000 | .00000 | .00000 | .00000 | .00000 | .00000 | .00000 | .00000 |

OA236 (NAAL 759) CONFIGURATION 4 DATA SELECT 3 (SFM304) ( 28 JUN 79 )

REFERENCE DATA

SREF = .0000 SQ.FT. XMRP = .0000 IN. XT
LREF = .0000 INCHES YMRP = .0000 IN. YT
BREF = .0000 INCHES ZMRP = .0000 IN. ZT
SCALE = 1.0000

PARAMETRIC DATA

ALPHA = .000 BETA = .000

RUN NO. 3041/ 0 RN/L = 1.28 GRADIENT INTERVAL = -5.00/ 5.00

| MACH | ALPHA | TBTO/Q | QBI/QO | QB/QO | SBPO/Q | SBSBIQ | TBTBIQ | 2712/Q | 12SBIQ | 12SB/Q | P12POQ |
|---|---|---|---|---|---|---|---|---|---|---|---|
| .188 | .000 | .00170 | 1.00260 | 1.00240 | -.00100 | .00020 | .00000 | .82590 | .17950 | .17920 | .17810 |
| .188 | .000 | .00220 | 1.00320 | 1.00320 | -.00130 | .00000 | .00000 | .82580 | .17960 | .17940 | .17810 |
| .188 | .000 | .00270 | 1.00330 | 1.00350 | -.00120 | .00000 | .00010 | .82590 | .17950 | .17930 | .17810 |
| .188 | .000 | .00220 | 1.00300 | 1.00300 | -.00110 | .00010 | .00000 | .82590 | .17950 | .17930 | .17810 |
| | GRADIENT | .00000 | .00000 | .00000 | .00000 | .00000 | .00000 | .00000 | .00000 | .00000 | .00000 |

RUN NO. 3042/ 0 RN/L = 1.56 GRADIENT INTERVAL = -5.00/ 5.00

| MACH | ALPHA | TBTO/Q | QBI/QO | QB/QO | SBPO/Q | SBSBIQ | TBTBIQ | 2712/Q | 12SBIQ | 12SB/Q | P12POQ |
|---|---|---|---|---|---|---|---|---|---|---|---|
| .230 | .000 | .00130 | 1.00550 | 1.00520 | -.00410 | .00000 | -.00010 | .82890 | .18390 | .18370 | .17950 |
| .230 | .000 | .00210 | 1.00630 | 1.00640 | -.00450 | .00000 | .00000 | .82890 | .18410 | .18410 | .17960 |
| .230 | .000 | .00170 | 1.00550 | 1.00540 | -.00400 | .00010 | .00000 | .82890 | .18370 | .18360 | .17950 |
| .230 | .000 | .00230 | 1.00570 | 1.00550 | -.00340 | .00030 | .00010 | .82890 | .18340 | .18300 | .17950 |
| .230 | .000 | .00180 | 1.00580 | 1.00560 | -.00400 | .00000 | .00000 | .82890 | .18380 | .18360 | .17950 |
| | GRADIENT | .00000 | .00000 | .00000 | .00000 | .00000 | .00000 | .00000 | .00000 | .00000 | .00000 |

RUN NO. 3043/ 0 RN/L = 1.68 GRADIENT INTERVAL = -5.00/ 5.00

| MACH | ALPHA | TBTO/Q | QBI/QO | QB/QO | SBPO/Q | SBSBIQ | TBTBIQ | 2712/Q | 12SBIQ | 12SB/Q | P12POQ |
|---|---|---|---|---|---|---|---|---|---|---|---|
| .248 | .000 | .00240 | 1.00550 | 1.00540 | -.00340 | .00000 | .00000 | .82850 | .18560 | .18550 | .18210 |
| .248 | .000 | .00200 | 1.00500 | 1.00490 | -.00330 | .00010 | .00000 | .82850 | .18560 | .18540 | .18210 |
| .248 | .000 | .00210 | 1.00570 | 1.00560 | -.00380 | .00000 | -.00010 | .82850 | .18590 | .18600 | .18210 |
| .248 | .000 | .00210 | 1.00540 | 1.00530 | -.00350 | .00000 | .00000 | .82850 | .18570 | .18560 | .18210 |
| | GRADIENT | .00000 | .00000 | .00000 | .00000 | .00000 | .00000 | .00000 | .00000 | .00000 | .00000 |

RUN NO. 3044/ 0 RN/L = 1.79 GRADIENT INTERVAL = -5.00/ 5.00

| MACH | ALPHA | TBTO/Q | QBI/QO | QB/QO | SBPO/Q | SBSBIQ | TBTBIQ | 2712/Q | 12SBIQ | 12SB/Q | P12POQ |
|---|---|---|---|---|---|---|---|---|---|---|---|
| .265 | .000 | .00210 | 1.00540 | 1.00520 | -.00340 | .00000 | .00000 | .82860 | .18780 | .18760 | .18420 |
| .265 | .000 | .00240 | 1.00520 | 1.00500 | -.00290 | .00010 | .00000 | .82860 | .18730 | .18710 | .18420 |
| .265 | .000 | .00140 | 1.00490 | 1.00480 | -.00360 | .00000 | .00000 | .82860 | .18780 | .18780 | .18420 |
| .265 | .000 | .00200 | 1.00520 | 1.00500 | -.00330 | .00000 | .00000 | .82860 | .18760 | .18750 | .18420 |
| | GRADIENT | .00000 | .00000 | .00000 | .00000 | .00000 | .00000 | .00000 | .00000 | .00000 | .00000 |

OA236 (NAAL 759) CONFIGURATION 5 DATA SELECT 3 (SFM305) ( 28 JUN 79 )

REFERENCE DATA

SREF = .0000 SQ.FT. XMRP = .0000 IN. XT
LREF = .0000 INCHES YMRP = .0000 IN. YT
BREF = .0000 INCHES ZMRP = .0000 IN. ZT
SCALE = 1.0000

PARAMETRIC DATA

ALPHA = .000 BETA = .000

RUN NO. 3051/ 0 RN/L = 1.29 GRADIENT INTERVAL = -5.00/ 5.00

| MACH | ALPHA | TBTO/Q | QBI/QO | QB/QO | SBPO/Q | SBSBIQ | TBTBIQ | 2712/Q | 12SBIQ | 12SB/Q | P12POQ |
|---|---|---|---|---|---|---|---|---|---|---|---|
| .188 | .000 | .00230 | 1.00210 | 1.00050 | .00140 | .00210 | .00000 | .82580 | .17500 | .17660 | .17810 |
| .188 | .000 | .00290 | 1.00280 | .99990 | .00250 | .00360 | .00000 | .82580 | .17530 | .17550 | .17810 |
| .188 | .000 | .00280 | 1.00300 | .99980 | .00260 | .00390 | .00000 | .82580 | .17550 | .17540 | .17810 |
| .188 | .000 | .00270 | 1.00260 | 1.00010 | .00220 | .00320 | .00000 | .82580 | .17530 | .17590 | .17810 |
| | GRADIENT | .00000 | .00000 | .00000 | .00000 | .00000 | .00000 | .00000 | .00000 | .00000 | .00000 |

RUN NO. 3052/ 0 RN/L = 1.58 GRADIENT INTERVAL = -5.00/ 5.00

| MACH | ALPHA | TBTO/Q | QBI/QO | QB/QO | SBPO/Q | SBSBIQ | TBTBIQ | 2712/Q | 12SBIQ | 12SB/Q | P12POQ |
|---|---|---|---|---|---|---|---|---|---|---|---|
| .229 | .000 | .00240 | 1.00570 | 1.00290 | -.00070 | .00320 | .00000 | .82890 | .17980 | .18030 | .17950 |
| .229 | .000 | .00220 | 1.00560 | 1.00270 | -.00070 | .00310 | .00000 | .82890 | .17970 | .18020 | .17950 |
| .230 | .000 | .00300 | 1.00660 | 1.00300 | -.00020 | .00430 | .00020 | .82890 | .18040 | .17970 | .17950 |
| .229 | .000 | .00250 | 1.00600 | 1.00280 | -.00050 | .00350 | .00010 | .82890 | .18000 | .18010 | .17950 |
| | GRADIENT | .00000 | .00000 | .00000 | .00000 | .00000 | .00000 | .00000 | .00000 | .00000 | .00000 |

RUN NO. 3053/ 0 RN/L = 1.70 GRADIENT INTERVAL = -5.00/ 5.00

| MACH | ALPHA | TBTO/Q | QBI/QO | QB/QO | SBPO/Q | SBSBIQ | TBTBIQ | 2712/Q | 12SBIQ | 12SB/Q | P12POQ |
|---|---|---|---|---|---|---|---|---|---|---|---|
| .243 | .000 | .00240 | 1.00490 | 1.00150 | .00050 | .00350 | .00000 | .82850 | .18140 | .18150 | .18210 |
| .248 | .000 | .00260 | 1.00540 | 1.00100 | .00120 | .00470 | .00010 | .82850 | .18200 | .18080 | .18210 |
| .248 | .000 | .00250 | 1.00490 | 1.00250 | -.00020 | .00270 | .00000 | .82850 | .18140 | .18230 | .18210 |
| .248 | .000 | .00250 | 1.00510 | 1.00170 | .00050 | .00360 | .00000 | .82850 | .18160 | .18160 | .18210 |
| | GRADIENT | .00000 | .00000 | .00000 | .00000 | .00000 | .00000 | .00000 | .00000 | .00000 | .00000 |

RUN NO. 3054/ 0 RN/L = 1.81 GRADIENT INTERVAL = -5.00/ 5.00

| MACH | ALPHA | TBTO/Q | QBI/QO | QB/QO | SBPO/Q | SBSBIQ | TBTBIQ | 2712/Q | 12SBIQ | 12SB/Q | P12POQ |
|---|---|---|---|---|---|---|---|---|---|---|---|
| .265 | .000 | .00220 | 1.00470 | 1.00100 | .00080 | .00380 | .00000 | .82860 | .18340 | .18330 | .18420 |
| .265 | .000 | .00250 | 1.00500 | 1.00240 | -.00010 | .00280 | .00010 | .82860 | .18350 | .18430 | .18410 |
| .265 | .000 | .00240 | 1.00500 | 1.00100 | .00100 | .00410 | .00000 | .82860 | .18360 | .18310 | .18420 |
| .265 | .000 | .00230 | 1.00490 | 1.00200 | .00000 | .00290 | .00000 | .82860 | .18340 | .18410 | .18420 |
| .265 | .000 | .00240 | 1.00490 | 1.00160 | .00040 | .00340 | .00000 | .82860 | .18350 | .18370 | .18420 |
| | GRADIENT | .00000 | .00000 | .00000 | .00000 | .00000 | .00000 | .00000 | .00000 | .00000 | .00000 |

OA236 (NAAL 759) CONFIGURATION 6 DATA SELECT 3 (SFM306) ( 28 JUN 79 )

REFERENCE DATA

SREF = .0000 SQ.FT. XMRP = .0000 IN. XT
LREF = .0000 INCHES YMRP = .0000 IN. YT
BREF = .0000 INCHES ZMRP = .0000 IN. ZT
SCALE = 1.0000

PARAMETRIC DATA

ALPHA = .000 BETA = .000

RUN NO. 3061/ 0 RN/L = 1.29 GRADIENT INTERVAL = -5.00/ 5.00

| MACH | ALPHA | TBTO/Q | QBI/QO | QB/QO | SBPO/Q | SBSBIQ | TBTBIQ | 2712/Q | 12SBIQ | 12SB/Q | P12POQ |
|---|---|---|---|---|---|---|---|---|---|---|---|
| .188 | .000 | .00000 | 1.00230 | .99560 | .00400 | .00440 | -.00270 | .82580 | .17510 | .17410 | .17810 |
| .188 | .000 | -.00030 | 1.00220 | .99440 | .00480 | .00530 | -.00290 | .82580 | .17530 | .17330 | .17810 |
| .188 | .000 | .00050 | 1.00250 | .99700 | .00310 | .00390 | -.00200 | .82580 | .17550 | .17500 | .17810 |
| .188 | .000 | .00000 | 1.00240 | .99570 | .00390 | .00450 | -.00250 | .82580 | .17530 | .17410 | .17810 |
| | GRADIENT | .00000 | .00000 | .00000 | .00000 | .00000 | .00000 | .00000 | .00000 | .00000 | .00000 |

RUN NO. 3062/ 0 RN/L = 1.57 GRADIENT INTERVAL = -5.00/ 5.00

| MACH | ALPHA | TETO/Q | QBI/QO | QB/QO | SBPO/Q | SBSBIQ | TBTBIQ | 2712/Q | 12SBIQ | 12SB/Q | P12POQ |
|---|---|---|---|---|---|---|---|---|---|---|---|
| .229 | .000 | .00000 | 1.00610 | .99810 | .00160 | .00530 | -.00300 | .82890 | .17980 | .17790 | .17950 |
| .229 | .000 | -.00020 | 1.00560 | .99700 | .00250 | .00640 | -.00260 | .82890 | .17990 | .17700 | .17950 |
| .229 | .000 | -.00040 | 1.00590 | .99740 | .00190 | .00580 | -.00310 | .82890 | .17990 | .17760 | .17950 |
| .229 | .000 | -.00020 | 1.00590 | .99750 | .00200 | .00580 | -.00290 | .82890 | .17990 | .17750 | .17950 |
| | GRADIENT | .00000 | .00000 | .00000 | .00000 | .00000 | .00000 | .00000 | .00000 | .00000 | .00000 |

RUN NO. 3063/ 0 RN/L = 1.70 GRADIENT INTERVAL = -5.00/ 5.00

| MACH | ALPHA | TBTO/Q | QBI/QO | QB/QO | SBPO/Q | SBSBIQ | TBTBIQ | 2712/Q | 12SBIQ | 12SB/Q | P12POQ |
|---|---|---|---|---|---|---|---|---|---|---|---|
| .248 | .000 | .00030 | 1.00500 | .99950 | .00050 | .00320 | -.00250 | .82850 | .18130 | .18150 | .18210 |
| .248 | .000 | .00030 | 1.00450 | .99760 | .00240 | .00510 | -.00190 | .82850 | .18130 | .17960 | .18210 |
| .248 | .000 | -.00020 | 1.00430 | .99700 | .00240 | .00490 | -.00250 | .82850 | .18120 | .17960 | .18210 |
| .248 | .000 | .00010 | 1.00460 | .99800 | .00180 | .00440 | -.00230 | .82850 | .18130 | .18020 | .18210 |
| | GRADIENT | .00000 | .00000 | .00000 | .00000 | .00000 | .00000 | .00000 | .00000 | .00000 | .00000 |

RUN NO. 3064/ 0 RN/L = 1.81 GRADIENT INTERVAL = -5.00/ 5.00

| MACH | ALPHA | TBTO/Q | QBI/QO | QB/QO | SBPO/Q | SBSBIQ | TBTBIQ | 2712/Q | 12SBIQ | 12SB/Q | P12POQ |
|---|---|---|---|---|---|---|---|---|---|---|---|
| .264 | .000 | .00020 | 1.00460 | .99670 | .00330 | .00630 | -.00180 | .82860 | .18370 | .18080 | .18410 |
| .264 | .000 | .00030 | 1.00420 | .99780 | .00230 | .00460 | -.00200 | .82860 | .18290 | .18180 | .18410 |
| .265 | .000 | .00020 | 1.00500 | .99690 | .00310 | .00560 | -.00270 | .82860 | .18320 | .18100 | .18420 |
| .264 | .000 | .00020 | 1.00460 | .99710 | .00290 | .00550 | -.00220 | .82860 | .18330 | .18120 | .18410 |
| | GRADIENT | .00000 | .00000 | .00000 | .00000 | .00000 | .00000 | .00000 | .00000 | .00000 | .00000 |

OA236 (NAAL 759) CONFIGURATION 7 DATA SELECT 3 (SFM307) ( 28 JUN 79 )

REFERENCE DATA

SREF = .0000 SQ.FT. XMRP = .0000 IN. XT
LREF = .0000 INCHES YMRP = .0000 IN. YT
BREF = .0000 INCHES ZMRP = .0000 IN. ZT
SCALE = 1.0000

PARAMETRIC DATA

ALPHA = .000 BETA = .000

RUN NO. 3071/ 0 RN/L = 1.28 GRADIENT INTERVAL = -5.00/ 5.00

| MACH | ALPHA | TBTO/Q | QBI/QO | QB/QO | SBPO/Q | SBSBIQ | TBTBIQ | 2712/Q | 12SBIQ | 12SB/Q | P12POQ |
|---|---|---|---|---|---|---|---|---|---|---|---|
| .188 | .000 | -.00100 | 1.00300 | .99650 | .00200 | .00300 | -.00380 | .82590 | .17680 | .17610 | .17810 |
| .188 | .000 | .00080 | 1.00280 | 1.00110 | -.00060 | .00030 | -.00180 | .82590 | .17690 | .17880 | .17810 |
| .188 | .000 | .00030 | 1.00240 | .99930 | .00060 | .00120 | -.00220 | .82590 | .17650 | .17750 | .17810 |
| .188 | .000 | .00000 | 1.00280 | .99900 | .00060 | .00150 | -.00260 | .82590 | .17670 | .17740 | .17810 |
| | GRADIENT | .00000 | .00000 | .00000 | .00000 | .00000 | .00000 | .00000 | .00000 | .00000 | .00000 |

RUN NO. 3072/ 0 RN/L = 1.56 GRADIENT INTERVAL = -5.00/ 5.00

| MACH | ALPHA | TBTO/Q | QBI/QO | QB/QO | SBPO/Q | SBSBIQ | TBTBIQ | 2712/Q | 12SBIQ | 12SB/Q | P12POQ |
|---|---|---|---|---|---|---|---|---|---|---|---|
| .230 | .000 | -.00120 | 1.00580 | .99770 | .00080 | .00470 | -.00360 | .82890 | .18120 | .17870 | .17950 |
| .229 | .000 | -.00080 | 1.00530 | .99940 | -.00040 | .00330 | -.00300 | .82890 | .18110 | .18000 | .17950 |
| .229 | .000 | -.00060 | 1.00520 | .99900 | .00010 | .00380 | -.00260 | .82890 | .18110 | .17940 | .17950 |
| .229 | .000 | -.00080 | 1.00540 | .99870 | .00010 | .00390 | -.00300 | .82890 | .18110 | .17930 | .17950 |
| | GRADIENT | .00000 | .00000 | .00000 | .00000 | .00000 | .00000 | .00000 | .00000 | .00000 | .00000 |

RUN NO. 3073/ 0 RN/L = 1.68 GRADIENT INTERVAL = -5.00/ 5.00

| MACH | ALPHA | TBTO/Q | QBI/QO | QB/QO | SBPO/Q | SBSBIQ | TBTBIQ | 2712/Q | 12SBIQ | 12SB/Q | P12POQ |
|---|---|---|---|---|---|---|---|---|---|---|---|
| .248 | .000 | -.00010 | 1.00470 | .99930 | .00030 | .00360 | -.00210 | .82850 | .18350 | .18170 | .18210 |
| .248 | .000 | .00000 | 1.00470 | .99880 | .00090 | .00400 | -.00200 | .82850 | .18340 | .18110 | .18210 |
| .248 | .000 | .00000 | 1.00450 | .99880 | .00080 | .00370 | -.00210 | .82850 | .18310 | .18120 | .18210 |
| .248 | .000 | .00000 | 1.00460 | .99900 | .00070 | .00380 | -.00210 | .82850 | .18330 | .18140 | .18210 |
| | GRADIENT | .00000 | .00000 | .00000 | .00000 | .00000 | .00000 | .00000 | .00000 | .00000 | .00000 |

RUN NO. 3074/ 0 RN/L = 1.79 GRADIENT INTERVAL = -5.00/ 5.00

| MACH | ALPHA | TBTO/Q | QBI/QO | QB/QO | SBPO/Q | SBSBIQ | TBTBIQ | 2712/Q | 12SBIQ | 12SB/Q | P12POQ |
|---|---|---|---|---|---|---|---|---|---|---|---|
| .265 | .000 | -.00050 | 1.00440 | .99720 | .00190 | .00440 | -.00290 | .82860 | .18380 | .18220 | .18410 |
| .265 | .000 | -.00010 | 1.00490 | .99760 | .00190 | .00500 | -.00250 | .82860 | .18420 | .18210 | .18410 |
| .264 | .000 | .00000 | 1.00440 | .99820 | .00140 | .00420 | -.00210 | .82860 | .18400 | .18270 | .18410 |
| .264 | .000 | -.00020 | 1.00460 | .99770 | .00180 | .00450 | -.00250 | .82860 | .18400 | .18230 | .18410 |
| | GRADIENT | .00000 | .00000 | .00000 | .00000 | .00000 | .00000 | .00000 | .00000 | .00000 | .00000 |

OA236 (NAAL 759) CONFIGURATION 8 DATA SELECT 3 (SFM308) ( 28 JUN 79 )

REFERENCE DATA

SREF = .0000 SQ.FT. XMRP = .0000 IN. XT
LREF = .0000 INCHES YMRP = .0000 IN. YT
BREF = .0000 INCHES ZMRP = .0000 IN. ZT
SCALE = 1.0000

PARAMETRIC DATA

ALPHA = .000 BETA = .000

RUN NO. 3081/ 0 RN/L = 1.28 GRADIENT INTERVAL = -5.00/ 5.00

| MACH | ALPHA | TBTO/Q | QBI/QO | QB/QO | SBPO/Q | SBSBIQ | TBTBIQ | 2712/Q | 12SBIQ | 12SB/Q | P12POQ |
|---|---|---|---|---|---|---|---|---|---|---|---|
| .188 | .000 | .00220 | 1.00330 | 1.00220 | -.00040 | .00120 | .00000 | .82580 | .17810 | .17850 | .17810 |
| .188 | .000 | .00240 | 1.00330 | 1.00050 | .00150 | .00300 | .00000 | .82580 | .17790 | .17660 | .17810 |
| .188 | .000 | .00250 | 1.00320 | 1.00100 | .00100 | .00250 | .00010 | .82580 | .17780 | .17710 | .17810 |
| .188 | .000 | .00230 | 1.00330 | 1.00120 | .00070 | .00230 | .00000 | .82580 | .17790 | .17740 | .17810 |
| | GRADIENT | .00000 | .00000 | .00000 | .00000 | .00000 | .00000 | .00000 | .00000 | .00000 | .00000 |

RUN NO. 3082/ 0 RN/L = 1.56 GRADIENT INTERVAL = -5.00/ 5.00

| MACH | ALPHA | TBTO/Q | QBI/QO | QB/QO | SBPO/Q | SBSBIQ | TBTBIQ | 2712/Q | 12SBIQ | 12SB/Q | P12POQ |
|---|---|---|---|---|---|---|---|---|---|---|---|
| .230 | .000 | .00260 | 1.00690 | 1.00420 | -.00180 | .00290 | .00000 | .82890 | .18240 | .18140 | .17950 |
| .230 | .000 | .00210 | 1.00640 | 1.00460 | -.00270 | .00200 | .00010 | .82890 | .18250 | .18230 | .17950 |
| .229 | .000 | .00160 | 1.00570 | 1.00520 | -.00380 | .00050 | -.00010 | .82890 | .18200 | .18340 | .17950 |
| .230 | .000 | .00210 | 1.00630 | 1.00470 | -.00280 | .00180 | .00000 | .82890 | .18230 | .18240 | .17950 |
| | GRADIENT | .00000 | .00000 | .00000 | .00000 | .00000 | .00000 | .00000 | .00000 | .00000 | .00000 |

RUN NO. 3083/ 0 RN/L = 1.68 GRADIENT INTERVAL = -5.00/ 5.00

| MACH | ALPHA | TBTO/Q | QBI/QO | QB/QO | SBPO/Q | SBSBIQ | TBTBIQ | 2712/Q | 12SBIQ | 12SB/Q | P12POQ |
|---|---|---|---|---|---|---|---|---|---|---|---|
| .248 | .000 | .00180 | 1.00500 | 1.00330 | -.00180 | .00160 | .00000 | .82850 | .18370 | .18390 | .18210 |
| .248 | .000 | .00260 | 1.00600 | 1.00260 | -.00030 | .00360 | .00010 | .82850 | .18420 | .18240 | .18210 |
| .248 | .000 | .00220 | 1.00570 | 1.00310 | -.00110 | .00270 | .00000 | .82850 | .18410 | .18320 | .18210 |
| .248 | .000 | .00220 | 1.00560 | 1.00300 | -.00110 | .00260 | .00000 | .82850 | .18400 | .18320 | .18210 |
| | GRADIENT | .00000 | .00000 | .00000 | .00000 | .00000 | .00000 | .00000 | .00000 | .00000 | .00000 |

RUN NO. 3084/ 0 RN/L = 1.79 GRADIENT INTERVAL = -5.00/ 5.00

| MACH | ALPHA | TBTO/Q | QBI/QO | QB/QO | SBPO/Q | SBSBIQ | TBTBIQ | 2712/Q | 12SBIQ | 12SB/Q | P12POQ |
|---|---|---|---|---|---|---|---|---|---|---|---|
| .265 | .000 | .00220 | 1.00550 | 1.00340 | -.00140 | .00210 | .00000 | .82860 | .18590 | .18560 | .18410 |
| .265 | .000 | .00220 | 1.00550 | 1.00290 | -.00090 | .00280 | .00010 | .82860 | .18610 | .18510 | .18420 |
| .265 | .000 | .00210 | 1.00570 | 1.00290 | -.00100 | .00280 | .00000 | .82860 | .18610 | .18520 | .18420 |
| .265 | 000 | .00220 | 1.00560 | 1.00300 | -.00110 | .00260 | .00000 | .82860 | .18600 | .18530 | .18410 |
| | GRADIENT | .00000 | .00000 | .00000 | .00000 | .00000 | .00000 | .00000 | .00000 | .00000 | .00000 |

OA236 (NAAL 759) CONFIGURATION 9 DATA SELECT 3 (SFM309) ( 28 JUN 79 )

REFERENCE DATA

SREF = .0000 SQ.FT. XMRP = .0000 IN. XT
LREF = .0000 INCHES YMRP = .0000 IN. YT
BREF = .0000 INCHES ZMRP = .0000 IN. ZT
SCALE = 1.0000

PARAMETRIC DATA

ALPHA = .000 BETA = .000

RUN NO. 3091/ 0 RN/L = 1.27 GRADIENT INTERVAL = -5.00/ 5.00

| MACH | ALPHA | TBTO/Q | QBI/QO | QB/QO | SBPO/Q | SBSBIQ | TBTBIQ | 2712/Q | 12SBIQ | 12SB/Q | P12POQ |
|---|---|---|---|---|---|---|---|---|---|---|---|
| .188 | .000 | .00210 | 1.00350 | 1.00080 | .00090 | .00260 | .00000 | .82590 | .17790 | .17720 | .17810 |
| .188 | .000 | .00200 | 1.00280 | 1.00130 | .00020 | .00150 | .00000 | .82580 | .17750 | .17780 | .17810 |
| .188 | .000 | .00230 | 1.00320 | 1.00050 | .00130 | .00270 | .00000 | .82590 | .17760 | .17670 | .17810 |
| .188 | .000 | .00210 | 1.00310 | 1.00090 | .00080 | .00230 | .00000 | .82590 | .17770 | .17720 | .17810 |
| | GRADIENT | .00000 | .00000 | .00000 | .00000 | .00000 | .00000 | .00000 | .00000 | .00000 | .00000 |

RUN NO. 3092/ 0 RN/L = 1.55 GRADIENT INTERVAL = -5.00/ 5.00

| MACH | ALPHA | TBTO/Q | QBI/QO | QB/QO | SBPO/Q | SBSBIQ | TBTBIQ | 2712/Q | 12SBIQ | 12SB/Q | P12POQ |
|---|---|---|---|---|---|---|---|---|---|---|---|
| .229 | .000 | .00170 | 1.00610 | 1.00360 | -.00220 | .00230 | .00000 | .82890 | .18220 | .18170 | .17950 |
| .230 | .000 | .00230 | 1.00640 | 1.00390 | -.00170 | .00270 | .00000 | .82890 | .18230 | .18130 | .17950 |
| .229 | .000 | .00180 | 1.00600 | 1.00540 | -.00380 | .00040 | -.00010 | .82890 | .18200 | .18340 | .17950 |
| .229 | .000 | .00200 | 1.00610 | 1.00430 | -.00260 | .00180 | .00000 | .82890 | .18210 | .18210 | .17950 |
| | GRADIENT | .00000 | .00000 | .00000 | .00000 | .00000 | .00000 | .00000 | .00000 | .00000 | .00000 |

RUN NO. 3093/ 0 RN/L = 1.67 GRADIENT INTERVAL = -5.00/ 5.00

| MACH | ALPHA | TBTO/Q | QBI/QO | QB/QO | SBPO/Q | SBSBIQ | TBTBIQ | 2712/Q | 12SBIQ | 12SB/Q | P12POQ |
|---|---|---|---|---|---|---|---|---|---|---|---|
| .248 | .000 | .00250 | 1.00590 | 1.00400 | -.00180 | .00200 | .00010 | .82850 | .18410 | .18390 | .18210 |
| .248 | .000 | .00180 | 1.00490 | 1.00480 | -.00330 | -.00010 | -.00010 | .82850 | .18330 | .18540 | .18210 |
| .248 | .000 | .00240 | 1.00570 | 1.00310 | -.00090 | .00270 | .00000 | .82850 | .18390 | .18310 | .18210 |
| .248 | .000 | .00230 | 1.00550 | 1.00400 | -.00200 | .00150 | .00000 | .82850 | .18380 | .18410 | .18210 |
| | GRADIENT | .00000 | .00000 | .00000 | .00000 | .00000 | .00000 | .00000 | .00000 | .00000 | .00000 |

RUN NO. 3094/ 0 RN/L = 1.78 GRADIENT INTERVAL = -5.00/ 5.00

| MACH | ALPHA | TBTO/Q | QBI/QO | QB/QO | SBPO/Q | SBSBIQ | TBTBIQ | 2712/Q | 12SBIQ | 12SB/Q | P12POQ |
|---|---|---|---|---|---|---|---|---|---|---|---|
| .265 | .000 | .00180 | 1.00500 | 1.00410 | -.00260 | .00080 | .00000 | .82860 | .18570 | .18680 | .18420 |
| .265 | .000 | .00170 | 1.00480 | 1.00310 | -.00170 | .00160 | .00000 | .82860 | .18570 | .18590 | .18420 |
| .265 | .000 | .00180 | 1.00510 | 1.00360 | -.00200 | .00130 | -.00010 | .82860 | .18570 | .18630 | .18420 |
| .265 | .000 | .00180 | 1.00500 | 1.00360 | -.00210 | .00120 | .00000 | .82860 | .18570 | .18630 | .18420 |
| | GRADIENT | .00000 | .00000 | .00000 | .00000 | .00000 | .00000 | .00000 | .00000 | .00000 | .00000 |

OA236 (NAAL 759) CONFIGURATION 10 DATA SELECT 3 (SFM310) ( 28 JUN 79 )

REFERENCE DATA

SREF = .0000 SQ.FT. XMRP = .0000 IN. XT
LREF = .0000 INCHES YMRP = .0000 IN. YT
BREF = .0000 INCHES ZMRP = .0000 IN. ZT
SCALE = 1.0000

PARAMETRIC DATA

ALPHA = .000 BETA = .000

RUN NO. 3101/ 0 RN/L = 1.29 GRADIENT INTERVAL = -5.00/ 5.00

| MACH | ALPHA | TBTO/Q | QBI/QO | QB/QO | SBPO/Q | SBSBIQ | TBTBIQ | 2712/Q | 12SBIQ | 12SB/Q | P12POQ |
|---|---|---|---|---|---|---|---|---|---|---|---|
| .188 | .000 | -.00040 | 1.00340 | 1.00410 | -.00500 | -.00330 | -.00280 | .82580 | .17930 | .18310 | .17810 |
| .188 | .000 | .00000 | 1.00270 | 1.00540 | -.00570 | -.00420 | -.00180 | .82580 | .17920 | .18390 | .17810 |
| .188 | .000 | .00040 | 1.00280 | 1.00600 | -.00610 | -.00460 | -.00170 | .82580 | .17910 | .18420 | .17810 |
| .188 | .000 | .00000 | 1.00290 | 1.00520 | -.00560 | -.00400 | -.00210 | .82580 | .17920 | .18370 | .17810 |
| | GRADIENT | .00000 | .00000 | .00000 | .00000 | .00000 | .00000 | .00000 | .00000 | .00000 | .00000 |

RUN NO. 3102/ 0 RN/L = 1.57 GRADIENT INTERVAL = -5.00/ 5.00

| MACH | ALPHA | TBTO/Q | QBI/QO | QB/QO | SBPO/Q | SBSBIQ | TBTBIQ | 2712/Q | 12SBIQ | 12SB/Q | P12POQ |
|---|---|---|---|---|---|---|---|---|---|---|---|
| .229 | .000 | -.00040 | 1.00590 | 1.00670 | -.00740 | -.00270 | -.00220 | .82890 | .18380 | .18700 | .17950 |
| .229 | .000 | -.00040 | 1.00590 | 1.00660 | -.00740 | -.00280 | -.00240 | .82890 | .18370 | .18700 | .17950 |
| .229 | .000 | -.00030 | 1.00520 | 1.00810 | -.00870 | -.00450 | -.00180 | .82890 | .18330 | .18820 | .17950 |
| .229 | .000 | -.00040 | 1.00570 | 1.00710 | -.00790 | -.00330 | -.00210 | .82890 | .18360 | .18740 | .17950 |
| | GRADIENT | .00000 | .00000 | .00000 | .00000 | .00000 | .00000 | .00000 | .00000 | .00000 | .00000 |

RUN NO. 3103/ 0 RN/L = 1.69 GRADIENT INTERVAL = -5.00/ 5.00

| MACH | ALPHA | TBTO/Q | QBI/QO | QB/QO | SBPO/Q | SBSBIQ | TBTBIQ | 2712/Q | 12SBIQ | 12SB/Q | P12POQ |
|---|---|---|---|---|---|---|---|---|---|---|---|
| .248 | .000 | -.00010 | 1.00490 | 1.00670 | -.00720 | -.00330 | -.00160 | .82850 | .18560 | .18930 | .18200 |
| .247 | .000 | .00050 | 1.00520 | 1.00890 | -.00880 | -.00500 | -.00140 | .82850 | .18530 | .19080 | .18200 |
| .248 | .000 | -.00060 | 1.00500 | 1.00580 | -.00680 | -.00290 | -.00220 | .82850 | .18550 | .18890 | .18200 |
| .248 | .000 | .00000 | 1.00500 | 1.00710 | -.00760 | -.00370 | -.00170 | .82850 | .18550 | .18970 | .18200 |
| | GRADIENT | .00000 | .00000 | .00000 | .00000 | .00000 | .00000 | .00000 | .00000 | .00000 | .00000 |

RUN NO. 3104/ 0 RN/L = 1.81 GRADIENT INTERVAL = -5.00/ 5.00

| MACH | ALPHA | TBTO/Q | QBI/QO | QB/QO | SBPO/Q | SBSBIQ | TBTBIQ | 2712/Q | 12SBIQ | 12SB/Q | P12POQ |
|---|---|---|---|---|---|---|---|---|---|---|---|
| .264 | .000 | .00020 | 1.00560 | 1.00720 | -.00730 | -.00290 | -.00140 | .82860 | .18820 | .19150 | .18410 |
| .264 | .000 | .00020 | 1.00470 | 1.00740 | -.00760 | -.00410 | -.00160 | .82860 | .18720 | .19170 | .18410 |
| .264 | .000 | -.00020 | 1.00510 | 1.00640 | -.00690 | -.00320 | -.00190 | .82860 | .18750 | .19110 | .18410 |
| .264 | .000 | .00000 | 1.00510 | 1.00700 | -.00730 | -.00340 | -.00160 | .82860 | .18760 | .19140 | .18410 |
| | GRADIENT | .00000 | .00000 | .00000 | .00000 | .00000 | .00000 | .00000 | .00000 | .00000 | .00000 |

OA236 (NAAL 759) CONFIGURATION 5 DATA SELECT 3 (SFM311) ( 28 JUN 79 )

REFERENCE DATA

SREF = .0000 SQ.FT. XMRP = .0000 IN. XT
LREF = .0000 INCHES YMRP = .0000 IN. YT
BREF = .0000 INCHES ZMRP = .0000 IN. ZT
SCALE = 1.0000

PARAMETRIC DATA

ALPHA = .000 BETA = .000

RUN NO. 3111/ 0 RN/L = 1.28 GRADIENT INTERVAL = -5.00/ 5.00

| MACH | ALPHA | TBTO/Q | QBI/QO | QB/QO | SBPO/Q | SBSBIQ | TBTBIQ | 2712/Q | 12SBIQ | 12SB/Q | P12POQ |
|---|---|---|---|---|---|---|---|---|---|---|---|
| .188 | .000 | .00220 | 1.00320 | 1.00190 | .00000 | .00170 | .00000 | .82590 | .17930 | .17820 | .17810 |
| .188 | .000 | .00170 | 1.00280 | 1.00310 | -.00170 | .00000 | -.00020 | .82590 | .17920 | .17990 | .17810 |
| .188 | .000 | .00220 | 1.00350 | 1.00070 | .00100 | .00320 | .00000 | .82590 | .17970 | .17700 | .17810 |
| .188 | .000 | .00200 | 1.00320 | 1.00190 | -.00020 | .00160 | .00000 | .82590 | .17940 | .17840 | .17810 |
| | GRADIENT | .00000 | .00000 | .00000 | .00000 | .00000 | .00000 | .00000 | .00000 | .00000 | .00000 |

RUN NO. 3112/ 0 RN/L = 1.57 GRADIENT INTERVAL = -5.00/ 5.00

| MACH | ALPHA | TBTO/Q | QBI/QO | QB/QO | SBPO/Q | SBSBIQ | TBTBIQ | 2712/Q | 12SBIQ | 12SB/Q | P12POQ |
|---|---|---|---|---|---|---|---|---|---|---|---|
| .229 | .000 | .00190 | 1.00640 | 1.00310 | -.00150 | .00350 | .00000 | .82890 | .18400 | .18100 | .17950 |
| .230 | .000 | .00240 | 1.00660 | 1.00210 | .00000 | .00510 | .00010 | .82890 | .18400 | .17940 | .17950 |
| .230 | .000 | .00280 | 1.00730 | 1.00330 | -.00070 | .00450 | .00010 | .82890 | .18430 | .18030 | .17950 |
| .230 | .000 | .00240 | 1.00670 | 1.00280 | -.00070 | .00430 | .00000 | .82890 | .18410 | .18030 | .17950 |
| | GRADIENT | .00000 | .00000 | .00000 | .00000 | .00000 | .00000 | .00000 | .00000 | .00000 | .00000 |

RUN NO. 3113/ 0 RN/L = 1.69 GRADIENT INTERVAL = -5.00/ 5.00

| MACH | ALPHA | TBTO/Q | QBI/QO | QB/QO | SBPO/Q | SBSBIQ | TBTBIQ | 2712/Q | 12SBIQ | 12SB/Q | P12POQ |
|---|---|---|---|---|---|---|---|---|---|---|---|
| .248 | .000 | .00190 | 1.00550 | 1.00180 | -.00010 | .00380 | .00000 | .82850 | .18560 | .18230 | .18210 |
| .248 | .000 | .00190 | 1.00580 | 1.00200 | -.00040 | .00400 | .00000 | .82850 | .18600 | .18250 | .18210 |
| .248 | .000 | .00230 | 1.00590 | 1.00220 | -.00010 | .00400 | .00000 | .82850 | .18580 | .18220 | .18210 |
| .248 | .000 | .00200 | 1.00570 | 1.00200 | -.00020 | .00400 | .00000 | .82850 | .18580 | .18230 | .18210 |
| | GRADIENT | .00000 | .00000 | .00000 | .00000 | .00000 | .00000 | .00000 | .00000 | .00000 | .00000 |

RUN NO. 3114/ 0 RN/L = 1.80 GRADIENT INTERVAL = -5.00/ 5.00

| MACH | ALPHA | TBTO/Q | QBI/QO | QB/QO | SBPO/Q | SBSBIQ | TBTBIQ | 2712/Q | 12SBIQ | 12SB/Q | P12POQ |
|---|---|---|---|---|---|---|---|---|---|---|---|
| .265 | .000 | .00230 | 1.00560 | 1.00210 | .00000 | .00370 | .00000 | .82860 | .18750 | .18420 | .18410 |
| .265 | .000 | .00170 | 1.00560 | 1.00100 | .00040 | .00470 | -.00010 | .82860 | .18800 | .18370 | .18420 |
| .265 | .000 | .00230 | 1.00590 | 1.00190 | .00000 | .00430 | .00000 | .82860 | .18800 | .18410 | .18420 |
| .265 | .000 | .00210 | 1.00570 | 1.00170 | .00010 | .00430 | .00000 | .82860 | .18780 | .18400 | .18420 |
| | GRADIENT | .00000 | .00000 | .00000 | .00000 | .00000 | .00000 | .00000 | .00000 | .00000 | .00000 |

OA236 (NAAL 759) CONFIGURATION 11 DATA SELECT 3 (SFM312) ( 28 JUN 79 )

REFERENCE DATA

SREF = .0000 SQ.FT. XMRP = .0000 IN. XT
LREF = .0000 INCHES YMRP = .0000 IN. YT
BREF = .0000 INCHES ZMRP = .0000 IN. ZT
SCALE = 1.0000

PARAMETRIC DATA

ALPHA = .000 BETA = .000

RUN NO. 3121/ 0 RN/L = 1.28 GRADIENT INTERVAL = -5.00/ 5.00

| MACH | ALPHA | TBTO/Q | QBI/QO | QB/QO | SBPO/Q | SBSBIQ | TBTBIQ | 2712/Q | 12SBIQ | 12SB/Q | P12POQ |
|---|---|---|---|---|---|---|---|---|---|---|---|
| .188 | .000 | -1.01160 | -.00250 | -.00250 | -.00060 | .00000 | .00000 | .82580 | .17890 | .17870 | .17810 |
| .188 | .000 | -1.01080 | -.00240 | -.00250 | .00020 | .00000 | .00000 | .82580 | .17800 | .17780 | .17810 |
| .188 | .000 | -1.01100 | -.00250 | -.00250 | .00000 | .00000 | .00000 | .82580 | .17820 | .17810 | .17810 |
| .188 | .000 | -1.01110 | -.00240 | -.00250 | -.00010 | .00000 | .00000 | .82580 | .17840 | .17820 | .17810 |
| | GRADIENT | .00000 | .00000 | .00000 | .00000 | .00000 | .00000 | .00000 | .00000 | .00000 | .00000 |

RUN NO. 3122/ 0 RN/L = 1.56 GRADIENT INTERVAL = -5.00/ 5.00

| MACH | ALPHA | TBTO/Q | QBI/QO | QB/QO | SBPO/Q | SBSBIQ | TBTBIQ | 2712/Q | 12SBIQ | 12SB/Q | P12POQ |
|---|---|---|---|---|---|---|---|---|---|---|---|
| .230 | .000 | -1.01480 | -.00050 | -.00060 | -.00110 | .00000 | .00000 | .82890 | .18080 | .18070 | .17950 |
| .229 | .000 | -1.01360 | -.00050 | -.00060 | .00000 | .00000 | .00000 | .82890 | .17960 | .17960 | .17950 |
| .230 | .000 | -1.01260 | -.00050 | -.00060 | .00090 | .00000 | .00000 | .82890 | .17850 | .17850 | .17950 |
| .229 | .000 | -1.01370 | -.00050 | -.00060 | .00000 | .00000 | .00000 | .82890 | .17960 | .17960 | .17950 |
| | GRADIENT | .00000 | .00000 | .00000 | .00000 | .00000 | .00000 | .00000 | .00000 | .00000 | .00000 |

RUN NO. 3123/ 0 RN/L = 1.68 GRADIENT INTERVAL = -5.00/ 5.00

| MACH | ALPHA | TBTO/Q | QBI/QO | QB/QO | SBPO/Q | SBSBIQ | TBTBIQ | 2712/Q | 12SBIQ | 12SB/Q | P12POQ |
|---|---|---|---|---|---|---|---|---|---|---|---|
| .248 | .000 | -1.01500 | .00120 | .00110 | -.00100 | .00000 | .00000 | .82850 | .18310 | .18320 | .18210 |
| .248 | .000 | -1.01330 | .00060 | .00060 | .00110 | .00000 | .00000 | .82850 | .18090 | .18090 | .18210 |
| .248 | .000 | -1.01460 | .00070 | .00060 | -.00010 | .00000 | .00000 | .82850 | .18220 | .18220 | .18210 |
| .248 | .000 | -1.01430 | .00080 | .00080 | .00000 | .00000 | .00000 | .82850 | .18210 | .18210 | .18210 |
| | GRADIENT | .00000 | .00000 | .00000 | .00000 | .00000 | .00000 | .00000 | .00000 | .00000 | .00000 |

RUN NO. 3124/ 0 RN/L = 1.79 GRADIENT INTERVAL = -5.00/ 5.00

| MACH | ALPHA | TBTO/Q | QBI/QO | QB/QO | SBPO/Q | SBSBIQ | TBTBIQ | 2712/Q | 12SBIQ | 12SB/Q | P12POQ |
|---|---|---|---|---|---|---|---|---|---|---|---|
| .265 | .000 | -1.01740 | .00080 | .00080 | -.00080 | .00000 | .00000 | .82860 | .18500 | .18500 | .18410 |
| .264 | .000 | -1.01650 | .00090 | .00080 | .00000 | .00000 | .00000 | .82860 | .18410 | .18420 | .18410 |
| .265 | .000 | -1.01560 | .00070 | .00060 | .00090 | .00000 | .00000 | .82860 | .18310 | .18320 | .18410 |
| .264 | .000 | -1.01650 | .00080 | .00070 | .00000 | .00000 | .00000 | .82860 | .18410 | .18410 | .18410 |
| | GRADIENT | .00000 | .00000 | .00000 | .00000 | .00000 | .00000 | .00000 | .00000 | .00000 | .00000 |

OA236 (NAAL 759) CONFIGURATION 12 DATA SELECT 3 (SFM313) ( 28 JUN 79 )

REFERENCE DATA

SREF = .0000 SQ.FT. XMRP = .0000 IN. XT
LREF = .0000 INCHES YMRP = .0000 IN. YT
BREF = .0000 INCHES ZMRP = .0000 IN. ZT
SCALE = 1.0000

PARAMETRIC DATA

ALPHA = .000 BETA = .000

RUN NO. 3131/ 0 RN/L = 1.27 GRADIENT INTERVAL = -5.00/ 5.00

| MACH | ALPHA | TBTO/Q | QBI/QO | QB/QO | SBPO/Q | SBSBIQ | TBTBIQ | 2712/Q | 12SBIQ | 12SB/Q | P12POQ |
|---|---|---|---|---|---|---|---|---|---|---|---|
| .188 | .000 | .00150 | 1.00310 | 1.00340 | -.00220 | .00000 | .00000 | .82580 | .18030 | .18030 | .17810 |
| .188 | .000 | .00130 | 1.00050 | 1.00060 | .00020 | .00000 | .00000 | .82580 | .17770 | .17790 | .17810 |
| .188 | .000 | .00000 | .99810 | .99840 | .00120 | .00000 | .00000 | .82580 | .17670 | .17690 | .17810 |
| .188 | .000 | .00090 | 1.00060 | 1.00080 | -.00020 | .00000 | .00000 | .82580 | .17820 | .17840 | .17810 |
| | GRADIENT | .00000 | .00000 | .00000 | .00000 | .00000 | .00000 | .00000 | .00000 | .00000 | .00000 |

RUN NO. 3132/ 0 RN/L = 1.56 GRADIENT INTERVAL = -5.00/ 5.00

| MACH | ALPHA | TBTO/Q | QBI/QO | QB/QO | SBPO/Q | SBSBIQ | TBTBIQ | 2712/Q | 12SBIQ | 12SB/Q | P12POQ |
|---|---|---|---|---|---|---|---|---|---|---|---|
| .229 | .000 | -.00010 | 1.00030 | 1.00050 | -.00080 | .00000 | .00000 | .82890 | .18030 | .18040 | .17950 |
| .229 | .000 | .00000 | 1.00020 | 1.00030 | -.00060 | .00000 | .00000 | .82890 | .18010 | .18020 | .17950 |
| .229 | .000 | -.00110 | .99750 | .99760 | .00090 | .00000 | .00000 | .82890 | .17840 | .17850 | .17950 |
| .229 | .000 | -.00040 | .99930 | .99950 | -.00010 | .00000 | .00000 | .82890 | .17960 | .17970 | .17950 |
| | GRADIENT | .00000 | .00000 | .00000 | .00000 | .00000 | .00000 | .00000 | .00000 | .00000 | .00000 |

RUN NO. 3133/ 0 RN/L = 1.68 GRADIENT INTERVAL = -5.00/ 5.00

| MACH | ALPHA | TBTO/Q | QBI/QO | QB/QO | SBPO/Q | SBSBIQ | TBTBIQ | 2712/Q | 12SBIQ | 12SB/Q | P12POQ |
|---|---|---|---|---|---|---|---|---|---|---|---|
| .248 | .000 | -.00120 | .99740 | .99750 | .00100 | .00000 | .00000 | .82850 | .18100 | .18100 | .18210 |
| .248 | .000 | .00010 | .99820 | .99830 | .00140 | .00000 | .00000 | .82850 | .18050 | .18060 | .18200 |
| .248 | .000 | .00020 | .99910 | .99910 | .00080 | .00000 | .00000 | .82850 | .18110 | .18120 | .18200 |
| .248 | .000 | -.00020 | .99820 | .99830 | .00110 | .00000 | .00000 | .82850 | .18080 | .18090 | .18200 |
| | GRADIENT | .00000 | .00000 | .00000 | .00000 | .00000 | .00000 | .00000 | .00000 | .00000 | .00000 |

RUN NO. 3134/ 0 RN/L = 1.78 GRADIENT INTERVAL = -5.00/ 5.00

| MACH | ALPHA | TBTO/Q | QBI/QO | QB/QO | SBPO/Q | SBSBIQ | TBTBIQ | 2712/Q | 12SBIQ | 12SB/Q | P12POQ |
|---|---|---|---|---|---|---|---|---|---|---|---|
| .265 | .000 | .00150 | .99870 | .99870 | .00250 | .00000 | .00000 | .82860 | .18150 | .18160 | .18410 |
| .265 | .000 | -.00020 | .99830 | .99830 | .00120 | .00000 | .00000 | .82860 | .18280 | .18290 | .18410 |
| .265 | .000 | .00020 | .99680 | .99690 | .00310 | .00000 | .00000 | .82860 | .18090 | .18100 | .18420 |
| .265 | .000 | .00050 | .99790 | .99800 | .00230 | .00000 | .00000 | .82860 | .18170 | .18180 | .18410 |
| | GRADIENT | .00000 | .00000 | .00000 | .00000 | .00000 | .00000 | .00000 | .00000 | .00000 | .00000 |

OA236 (NAAL 759) CONFIGURATION 13 DATA SELECT 3 (SFM314) ( 28 JUN 79 )

REFERENCE DATA

SREF = .0000 SQ.FT. XMRP = .0000 IN. XT
LREF = .0000 INCHES YMRP = .0000 IN. YT
BREF = .0000 INCHES ZMRP = .0000 IN. ZT
SCALE = 1.0000

PARAMETRIC DATA

ALPHA = .000 BETA = .000

RUN NO. 3141/ 0 RN/L = 1.27 GRADIENT INTERVAL = -5.00/ 5.00

| MACH | ALPHA | TBTO/Q | QBI/QO | QB/QO | SBPO/Q | SBSBIQ | TBTBIQ | 2712/Q | 12SBIQ | 12SB/Q | P12POQ |
|---|---|---|---|---|---|---|---|---|---|---|---|
| .189 | .000 | -.00020 | .99470 | .99480 | .00440 | .00000 | .00000 | .82590 | .17400 | .17360 | .17810 |
| .188 | .000 | .00070 | .99560 | .99570 | .00450 | .00000 | .00000 | .82580 | .17400 | .17350 | .17810 |
| .188 | .000 | .00020 | .99500 | .99490 | .00480 | .00000 | .00000 | .82580 | .17370 | .17320 | .17810 |
| .188 | .000 | .00020 | .99510 | .99520 | .00460 | .00000 | .00000 | .82580 | .17390 | .17350 | .17810 |
| | GRADIENT | .00000 | .00000 | .00000 | .00000 | .00000 | .00000 | .00000 | .00000 | .00000 | .00000 |

RUN NO. 3142/ 0 RN/L = 1.55 GRADIENT INTERVAL = -5.00/ 5.00

| MACH | ALPHA | TBTO/Q | QBI/QO | QB/QO | SBPO/Q | SBSBIQ | TBTBIQ | 2712/Q | 12SBIQ | 12SB/Q | P12POQ |
|---|---|---|---|---|---|---|---|---|---|---|---|
| .230 | .000 | -.00120 | .99340 | .99360 | .00500 | .00000 | .00000 | .82890 | .17480 | .17450 | .17950 |
| .230 | .000 | -.00150 | .99190 | .99220 | .00610 | .00000 | .00010 | .82890 | .17370 | .17340 | .17960 |
| .230 | .000 | .00000 | .99630 | .99630 | .00340 | .00000 | .00000 | .82890 | .17640 | .17610 | .17950 |
| .230 | .000 | -.00090 | .99390 | .99400 | .00480 | .00000 | .00000 | .82890 | .17500 | .17470 | .17950 |
| | GRADIENT | .00000 | .00000 | .00000 | .00000 | .00000 | .00000 | .00000 | .00000 | .00000 | .00000 |

RUN NO. 3143/ 0 RN/L = 1.68 GRADIENT INTERVAL = -5.00/ 5.00

| MACH | ALPHA | TBTO/Q | QBI/QO | QB/QO | SBPO/Q | SBSBIQ | TBTBIQ | 2712/Q | 12SBIQ | 12SB/Q | P12POQ |
|---|---|---|---|---|---|---|---|---|---|---|---|
| .248 | .000 | -.00080 | .99240 | .99250 | .00640 | .00000 | .00000 | .82850 | .17590 | .17570 | .18210 |
| .248 | .000 | -.00020 | .99300 | .99300 | .00640 | .00000 | .00000 | .82850 | .17590 | .17560 | .18210 |
| .248 | .000 | -.00120 | .99160 | .99170 | .00680 | .00000 | .00010 | .82850 | .17540 | .17520 | .18210 |
| .248 | .000 | -.00070 | .99230 | .99240 | .00650 | .00000 | .00000 | .82850 | .17570 | .17550 | .18210 |
| | GRADIENT | .00000 | .00000 | .00000 | .00000 | .00000 | .00000 | .00000 | .00000 | .00000 | .00000 |

RUN NO. 3144/ 0 RN/L = 1.79 GRADIENT INTERVAL = -5.00/ 5.00

| MACH | ALPHA | TBTO/Q | QBI/QO | QB/QO | SBPO/Q | SBSBIQ | TBTBIQ | 2712/Q | 12SBIQ | 12SB/Q | P12POQ |
|---|---|---|---|---|---|---|---|---|---|---|---|
| .265 | .000 | -.00010 | .99250 | .99240 | .00720 | .00000 | .00000 | .82860 | .17720 | .17690 | .18420 |
| .265 | .000 | -.00070 | .99150 | .99160 | .00750 | .00000 | .00000 | .82860 | .17690 | .17670 | .18420 |
| .265 | .000 | -.00060 | .99180 | .99190 | .00720 | .00000 | .00000 | .82860 | .17710 | .17690 | .18420 |
| .265 | .000 | -.00050 | .99190 | .99200 | .00730 | .00000 | .00000 | .82860 | .17710 | .17680 | .18420 |
| | GRADIENT | .00000 | .00000 | .00000 | .00000 | .00000 | .00000 | .00000 | .00000 | .00000 | .00000 |

OA236 (NAAL 759) CONFIGURATION 1 DATA SELECT 3 (SFM315) ( 28 JUN 79 )

REFERENCE DATA

SREF = .0000 SQ.FT. XMRP = .0000 IN. XT
LREF = .0000 INCHES YMRP = .0000 IN. YT
BREF = .0000 INCHES ZMRP = .0000 IN. ZT
SCALE = 1.0000

PARAMETRIC DATA

ALPHA = .000 BETA = .000

RUN NO. 3151/ 0 RN/L = 1.27 GRADIENT INTERVAL = -5.00/ 5.00

| MACH | ALPHA | TBTO/Q | QBI/QO | QB/QO | SBPO/Q | SBSBIQ | TBTBIQ | 2712/Q | 12SBIQ | 12SB/Q | P12POQ |
|---|---|---|---|---|---|---|---|---|---|---|---|
| .188 | .000 | -.00010 | .99920 | .99920 | .00020 | .00000 | -.00010 | .82580 | .17840 | .17790 | .17810 |
| .188 | .000 | -.00020 | .99900 | .99910 | .00010 | .00000 | -.00010 | .82580 | .17850 | .17800 | .17810 |
| .188 | .000 | -.00070 | .99880 | .99880 | .00000 | .00000 | -.00020 | .82580 | .17860 | .17810 | .17810 |
| .188 | .000 | -.00040 | .99900 | .99900 | .00010 | .00000 | -.00010 | .82580 | .17850 | .17800 | .17810 |
| | GRADIENT | .00000 | .00000 | .00000 | .00000 | .00000 | .00000 | .00000 | .00000 | .00000 | .00000 |

RUN NO. 3152/ 0 RN/L = 1.55 GRADIENT INTERVAL = -5.00/ 5.00

| MACH | ALPHA | TBTO/Q | QBI/QO | QB/QO | SBPO/Q | SBSBIQ | TBTBIQ | 2712/Q | 12SBIQ | 12SB/Q | P12POQ |
|---|---|---|---|---|---|---|---|---|---|---|---|
| .230 | .000 | .00050 | 1.00290 | 1.00320 | -.00300 | .00000 | .00010 | .82890 | .18310 | .18260 | .17950 |
| .230 | .000 | .00000 | 1.00230 | 1.00230 | -.00260 | .00000 | .00000 | .82890 | .18290 | .18220 | .17950 |
| .230 | .000 | .00060 | 1.00260 | 1.00290 | -.00250 | .00000 | .00010 | .82890 | .18270 | .18210 | .17950 |
| .230 | .000 | .00030 | 1.00260 | 1.00280 | -.00270 | .00000 | .00010 | .82890 | .18290 | .18230 | .17950 |
| | GRADIENT | .00000 | .00000 | .00000 | .00000 | .00000 | .00000 | .00000 | .00000 | .00000 | .00000 |

RUN NO. 3153/ 0 RN/L = 1.67 GRADIENT INTERVAL = -5.00/ 5.00

| MACH | ALPHA | TBTO/Q | QBI/QO | QB/QO | SBPO/Q | SBSBIQ | TBTBIQ | 2712/Q | 12SBIQ | 12SB/Q | P12POQ |
|---|---|---|---|---|---|---|---|---|---|---|---|
| .248 | .000 | .00000 | 1.00180 | 1.00170 | -.00200 | .00000 | .00000 | .82850 | .18470 | .18410 | .18210 |
| .248 | .000 | .00010 | 1.00150 | 1.00150 | -.00160 | .00010 | .00000 | .82850 | .18440 | .18370 | .18210 |
| .248 | .000 | .00050 | 1.00200 | 1.00210 | -.00190 | .00000 | .00000 | .82850 | .18470 | .18410 | .18210 |
| .248 | .000 | .00020 | 1.00180 | 1.00180 | -.00180 | .00000 | .00000 | .82850 | .18460 | .18400 | .18210 |
| | GRADIENT | .00000 | .00000 | .00000 | .00000 | .00000 | .00000 | .00000 | .00000 | .00000 | .00000 |

RUN NO. 3154/ 0 RN/L = 1.78 GRADIENT INTERVAL = -5.00/ 5.00

| MACH | ALPHA | TBTO/Q | QBI/QO | QB/QO | SBPO/Q | SBSBIQ | TBTBIQ | 2712/Q | 12SBIQ | 12SB/Q | P12POQ |
|---|---|---|---|---|---|---|---|---|---|---|---|
| .265 | .000 | .00030 | 1.00170 | 1.00150 | -.00140 | .00010 | .00000 | .82860 | .18630 | .18560 | .18420 |
| .265 | .000 | .00000 | 1.00170 | 1.00170 | -.00190 | .00000 | .00000 | .82860 | .18660 | .18610 | .18410 |
| .265 | .000 | .00010 | 1.00150 | 1.00140 | -.00160 | .00000 | .00000 | .82860 | .18640 | .18580 | .18410 |
| .265 | .000 | .00010 | 1.00170 | 1.00150 | -.00160 | .00000 | .00000 | .82860 | .18640 | .18580 | .18410 |
| | GRADIENT | .00000 | .00000 | .00000 | .00000 | .00000 | .00000 | .00000 | .00000 | .00000 | .00000 |

OA236 (NAAL 759) CONFIGURATION 3 DATA SELECT 3 (SFM316) ( 28 JUN 79 )

REFERENCE DATA

SREF = .0000 SQ.FT. XMRP = .0000 IN. XT
LREF = .0000 INCHES YMRP = .0000 IN. YT
BREF = .0000 INCHES ZMRP = .0000 IN. ZT
SCALE = 1.0000

PARAMETRIC DATA

ALPHA = .000 BETA = .000

RUN NO. 3161/ 0 RN/L = 1.26 GRADIENT INTERVAL = -5.00/ 5.00

| MACH | ALPHA | TBTO/Q | QBI/QO | QB/QO | SBPO/Q | SBSBIQ | TBTBIQ | 2712/Q | 12SBIQ | 12SB/Q | P12POQ |
|---|---|---|---|---|---|---|---|---|---|---|---|
| .188 | .000 | -.00010 | 1.01180 | 1.01200 | -.01270 | .00000 | .00010 | .82580 | .19160 | .19080 | .17810 |
| .188 | .000 | -.00020 | 1.01190 | 1.01200 | -.01270 | .00010 | .00000 | .82580 | .19180 | .19090 | .17810 |
| .188 | .000 | -.00030 | 1.01190 | 1.01190 | -.01280 | .00000 | .00000 | .82580 | .19170 | .19090 | .17810 |
| .188 | .000 | -.00020 | 1.01190 | 1.01200 | -.01270 | .00000 | .00000 | .82580 | .19170 | .19090 | .17810 |
| | GRADIENT | .00000 | .00000 | .00000 | .00000 | .00000 | .00000 | .00000 | .00000 | .00000 | .00000 |

RUN NO. 3162/ 0 RN/L = 1.54 GRADIENT INTERVAL = -5.00/ 5.00

| MACH | ALPHA | TBTO/Q | QBI/QO | QB/QO | SBPO/Q | SBSBIQ | TBTBIQ | 2712/Q | 12SBIQ | 12SB/Q | P12POQ |
|---|---|---|---|---|---|---|---|---|---|---|---|
| .229 | .000 | .00010 | 1.01500 | 1.01520 | -.01550 | .00000 | .00000 | .82890 | .19580 | .19510 | .17950 |
| .230 | .000 | -.00020 | 1.01470 | 1.01490 | -.01560 | .00000 | .00010 | .82890 | .19590 | .19520 | .17950 |
| .230 | .000 | -.00030 | 1.01480 | 1.01480 | -.01550 | .00000 | .00000 | .82890 | .19590 | .19510 | .17950 |
| .230 | .000 | -.00010 | 1.01480 | 1.01500 | -.01560 | .00000 | .00000 | .82890 | .19590 | .19510 | .17950 |
| | GRADIENT | .00000 | .00000 | .00000 | .00000 | .00000 | .00000 | .00000 | .00000 | .00000 | .00000 |

RUN NO. 3163/ 0 RN/L = 1.66 GRADIENT INTERVAL = -5.00/ 5.00

| MACH | ALPHA | TBTO/Q | QBI/QO | QB/QO | SBPO/Q | SBSBIQ | TBTBIQ | 2712/Q | 12SBIQ | 12SB/Q | P12POQ |
|---|---|---|---|---|---|---|---|---|---|---|---|
| .248 | .000 | .00010 | 1.01390 | 1.01370 | -.01400 | .00010 | .00000 | .82850 | .19700 | .19620 | .18210 |
| .248 | .000 | -.00020 | 1.01360 | 1.01370 | -.01440 | .00000 | .00000 | .82850 | .19720 | .19650 | .18210 |
| .248 | .000 | -.00030 | 1.01350 | 1.01340 | -.01430 | .00000 | .00000 | .82850 | .19710 | .19650 | .18210 |
| .248 | .000 | -.00010 | 1.01360 | 1.01360 | -.01430 | .00000 | .00000 | .82850 | .19710 | .19640 | .18210 |
| | GRADIENT | .00000 | .00000 | .00000 | .00000 | .00000 | .00000 | .00000 | .00000 | .00000 | .00000 |

RUN NO. 3164/ 0 RN/L = 1.77 GRADIENT INTERVAL = -5.00/ 5.00

| MACH | ALPHA | TBTO/Q | QBI/QO | QB/QO | SBPO/Q | SBSBIQ | TBTBIQ | 2712/Q | 12SBIQ | 12SB/Q | P12POQ |
|---|---|---|---|---|---|---|---|---|---|---|---|
| .265 | .000 | -.00040 | 1.01300 | 1.01310 | -.01400 | -.00010 | .00000 | .82860 | .19870 | .19820 | .18420 |
| .265 | .000 | -.00040 | 1.01260 | 1.01250 | -.01340 | .00010 | .00000 | .82860 | .19840 | .19760 | .18410 |
| .265 | .000 | .00000 | 1.01310 | 1.01300 | -.01360 | .00010 | .00000 | .82860 | .19860 | .19780 | .18420 |
| .265 | .000 | -.00030 | 1.01290 | 1.01290 | -.01370 | .00000 | .00000 | .82860 | .19860 | .19790 | .18420 |
| | GRADIENT | .00000 | .00000 | .00000 | .00000 | .00000 | .00000 | .00000 | .00000 | .00000 | .00000 |

OA236 (NAAL 759) CONFIGURATION 14 DATA SELECT 3 (SFM317) ( 28 JUN 79 )

REFERENCE DATA

SREF = .0000 SQ.FT. XMRP = .0000 IN. XT
LREF = .0000 INCHES YMRP = .0000 IN. YT
BREF = .0000 INCHES ZMRP = .0000 IN. ZT
SCALE = 1.0000

PARAMETRIC DATA

ALPHA = .000 BETA = .000

RUN NO. 3171/ 0 RN/L = 1.28 GRADIENT INTERVAL = -5.00/ 5.00

| MACH | ALPHA | TBTO/Q | QBI/QO | QB/QO | SBPO/Q | SBSBIQ | TBTBIQ | 2712/Q | 12SBIQ | 12SB/Q | P12POQ |
|---|---|---|---|---|---|---|---|---|---|---|---|
| .188 | .000 | .00040 | 1.01320 | 1.01330 | -.01340 | .00010 | .00000 | .82580 | .19360 | .19150 | .17810 |
| .188 | .000 | .00040 | 1.01300 | 1.01350 | -.01350 | .00000 | .00010 | .82580 | .19350 | .19170 | .17810 |
| .188 | .000 | .00050 | 1.01300 | 1.01340 | -.01330 | .00000 | .00000 | .82580 | .19350 | .19150 | .17810 |
| .188 | .000 | .00040 | 1.01310 | 1.01340 | -.01340 | .00000 | .00000 | .82580 | .19350 | .19160 | .17810 |
| | GRADIENT | .00000 | .00000 | .00000 | .00000 | .00000 | .00000 | .00000 | .00000 | .00000 | .00000 |

RUN NO. 3172/ 0 RN/L = 1.57 GRADIENT INTERVAL = -5.00/ 5.00

| MACH | ALPHA | TBTO/Q | QBI/QO | QB/QC | SBPO/Q | SBSBIQ | TBTBIQ | 2712/Q | 12SBIQ | 12SB/Q | P12POQ |
|---|---|---|---|---|---|---|---|---|---|---|---|
| .230 | .000 | .00020 | 1.01430 | 1.01420 | -.01440 | .00010 | .00000 | .82890 | .19600 | .19400 | .17950 |
| .229 | .000 | .00020 | 1.01420 | 1.01450 | -.01470 | .00000 | .00010 | .82890 | .19600 | .19430 | .17950 |
| .230 | .000 | .00000 | 1.01430 | 1.01430 | -.01470 | .00000 | .00000 | .82890 | .19610 | .19430 | .17950 |
| .230 | .000 | .00010 | 1.01430 | 1.01430 | -.01460 | .00000 | .00000 | .82890 | .19610 | .19420 | .17950 |
| | GRADIENT | .00000 | .00000 | .00000 | .00000 | .00000 | .00000 | .00000 | .00000 | .00000 | .00000 |

RUN NO. 3173/ 0 RN/L = 1.69 GRADIENT INTERVAL = -5.00/ 5.00

| MACH | ALPHA | TBTO/Q | QBI/QO | QB/QO | SBPO/Q | SBSBIQ | TBTBIQ | 2712/Q | 12SBIQ | 12SB/Q | P12POQ |
|---|---|---|---|---|---|---|---|---|---|---|---|
| .248 | .000 | .00020 | 1.01230 | 1.01220 | -.01250 | .00000 | -.00010 | .82850 | .19640 | .19460 | .18210 |
| .248 | .000 | -.00020 | 1.01220 | 1.01230 | -.01300 | .00000 | -.00010 | .82850 | .19680 | .19510 | .18210 |
| .248 | .000 | .00000 | 1.01230 | 1.01230 | -.01270 | .00000 | .00000 | .82850 | .19650 | .19480 | .18210 |
| .248 | .000 | .00000 | 1.01230 | 1.01230 | -.01270 | .00000 | .00000 | .82850 | .19660 | .19480 | .18210 |
| | GRADIENT | .00000 | .00000 | .00000 | .00000 | .00000 | .00000 | .00000 | .00000 | .00000 | .00000 |

RUN NO. 3174/ 0 RN/L = 1.80 GRADIENT INTERVAL = -5.00/ 5.00

| MACH | ALPHA | TBTO/Q | QBI/QO | QB/QO | SBPO/Q | SBSBIQ | TBTBIQ | 2712/Q | 12SBIQ | 12SB/Q | P12POQ |
|---|---|---|---|---|---|---|---|---|---|---|---|
| .265 | .000 | .00000 | 1.01050 | 1.01040 | -.01080 | .00000 | -.00010 | .82860 | .19680 | .19500 | .18410 |
| .265 | .000 | .00040 | 1.01110 | 1.01150 | -.01150 | .00000 | .00010 | .82860 | .19740 | .19570 | .18420 |
| .265 | .000 | .00030 | 1.01100 | 1.01130 | -.01140 | -.00010 | .00010 | .82860 | .19730 | .19560 | .18420 |
| .265 | .000 | .00020 | 1.01090 | 1.01110 | -.01120 | .00000 | .00000 | .82860 | .19710 | .19540 | .18420 |
| | GRADIENT | .00000 | .00000 | .00000 | .00000 | .00000 | .00000 | .00000 | .00000 | .00000 | .00000 |

OA236 (NAAL 759) CONFIGURATION 1 DATA SELECT 3 (TFM301) ( 28 JUN 79 )

REFERENCE DATA

SREF = .0000 SQ.FT. XMRP = .0000 IN. XT
LREF = .0000 INCHES YMRP = .0000 IN. YT
BREF = .0000 INCHES ZMRP = .0000 IN. ZT
SCALE = 1.0000

PARAMETRIC DATA

ALPHA = .000 BETA = .000

RUN NO. 3011/ 0 RN/L = 1.29 GRADIENT INTERVAL = -5.00/ 5.00

| MACH | ALPHA | TTO | QO | QBI | QB | PAC |
|---|---|---|---|---|---|---|
| .188 | .000 | 533.14100 | 52.69150 | 52.57760 | 52.58070 | 2104.10999 |
| .188 | .000 | 533.05400 | 52.62510 | 52.52400 | 52.52650 | 2104.10999 |
| .188 | .000 | 533.18400 | 52.65470 | 52.57190 | 52.59330 | 2104.10999 |
| .188 | .000 | 533.12600 | 52.65710 | 52.55780 | 52.56680 | 2104.10999 |
| | GRADIENT | .00000 | .00000 | .00000 | .00000 | .00000 |

RUN NO. 3012/ 0 RN/L = 1.58 GRADIENT INTERVAL = -5.00/ 5.00

| MACH | ALPHA | TTO | QO | QBI | QB | PAC |
|---|---|---|---|---|---|---|
| .229 | .000 | 535.91700 | 78.69020 | 78.83050 | 78.83320 | 2104.10999 |
| .230 | .000 | 536.09000 | 78.76460 | 78.86550 | 78.86870 | 2104.10999 |
| .229 | .000 | 536.09000 | 78.69020 | 78.79450 | 78.80290 | 2104.10999 |
| .230 | .000 | 536.03200 | 78.71500 | 78.83010 | 78.83490 | 2104.10999 |
| | GRADIENT | .00000 | .00000 | .00000 | .00000 | .00000 |

RUN NO. 3013/ 0 RN/L = 1.70 GRADIENT INTERVAL = -5.00/ 5.00

| MACH | ALPHA | TTO | QO | QBI | QB | PAC |
|---|---|---|---|---|---|---|
| .248 | .000 | 537.86500 | 91.88040 | 91.96910 | 91.96070 | 2104.10999 |
| .248 | .000 | 537.90800 | 91.96970 | 92.01560 | 92.00790 | 2104.10999 |
| .248 | .000 | 538.16700 | 91.91020 | 92.00450 | 92.02080 | 2104.10999 |
| .248 | .000 | 537.98000 | 91.92010 | 91.99640 | 91.99640 | 2104.10999 |
| | GRADIENT | .00000 | .00000 | .00000 | .00000 | .00000 |

RUN NO. 3014/ 0 RN/L = 1.81 GRADIENT INTERVAL = -5.00/ 5.00

| MACH | ALPHA | TTO | QO | QBI | QB | PAC |
|---|---|---|---|---|---|---|
| .265 | .000 | 540.15500 | 105.04300 | 105.10500 | 105.08700 | 2104.10999 |
| .265 | .000 | 540.19800 | 105.10200 | 105.20600 | 105.21900 | 2104.10999 |
| .265 | .000 | 540.02500 | 105.20600 | 105.28700 | 105.29500 | 2104.10999 |
| .265 | .000 | 540.12600 | 105.11700 | 105.19900 | 105.20000 | 2104.10999 |
| | GRADIENT | .00000 | .00000 | .00000 | .00000 | .00000 |

OA236 (NAAL 759) CONFIGURATION 2 DATA SELECT 3 (TFM302) ( 28 JUN 79 )

REFERENCE DATA

SREF = .0000 SQ.FT. XMRP = .0000 IN. XT
LREF = .0000 INCHES YMRP = .0000 IN. YT
BREF = .0000 INCHES ZMRP = .0000 IN. ZT
SCALE = 1.0000

PARAMETRIC DATA

ALPHA = .000 BETA = .000

RUN NO. 3021/ 0 RN/L = 1.28 GRADIENT INTERVAL = -5.00/ 5.00

| MACH | ALPHA | TTO | QO | QBI | QB | PAC |
|---|---|---|---|---|---|---|
| .188 | .000 | 535.05000 | 52.35940 | 51.79190 | 51.79100 | 2104.10999 |
| .188 | .000 | 535.13700 | 52.31520 | 51.70790 | 51.71820 | 2104.10999 |
| .187 | .000 | 535.26700 | 52.24880 | 51.66040 | 51.66990 | 2104.10999 |
| .168 | .000 | 535.15100 | 52.30780 | 51.72000 | 51.72030 | 2104.10999 |
| | GRADIENT | .00000 | .00000 | .00000 | .00000 | .00000 |

RUN NO. 3022/ 0 RN/L = 1.57 GRADIENT INTERVAL = -5.00/ 5.00

| MACH | ALPHA | TTO | QO | QBI | QB | PAC |
|---|---|---|---|---|---|---|
| .229 | .000 | 537.17300 | 78.63830 | 77.99220 | 77.99020 | 2104.10999 |
| .229 | .000 | 537.90800 | 78.61590 | 77.68060 | 77.69290 | 2104.10999 |
| .229 | .000 | 537.69200 | 78.58610 | 77.80100 | 77.80860 | 2104.10999 |
| .229 | .000 | 537.59100 | 78.61340 | 77.82460 | 77.83050 | 2104.10999 |
| | GRADIENT | .00000 | .00000 | .00000 | .00000 | .00000 |

RUN NO. 3023/ 0 RN/L = 1.69 GRADIENT INTERVAL = -5.00/ 5.00

| MACH | ALPHA | TTO | QO | QBI | QB | PAC |
|---|---|---|---|---|---|---|
| .248 | .000 | 538.81600 | 91.85810 | 90.83330 | 90.83450 | 2104.10999 |
| .248 | .000 | 539.37800 | 91.72410 | 90.81140 | 90.81230 | 2104.10999 |
| .248 | .000 | 539.33400 | 91.84320 | 90.59420 | 90.60440 | 2104.10999 |
| .248 | .000 | 539.17600 | 91.80850 | 90.74630 | 90.75040 | 2104.10999 |
| | GRADIENT | .00000 | .00000 | .00000 | .00000 | .00000 |

RUN NO. 3024/ 0 RN/L = 1.80 GRADIENT INTERVAL = -5.00/ 5.00

| MACH | ALPHA | TTO | QO | QBI | QB | PAC |
|---|---|---|---|---|---|---|
| .264 | .000 | 541.79500 | 104.91000 | 103.68800 | 103.68700 | 2104.10999 |
| .264 | .000 | 541.70800 | 104.93900 | 103.74700 | 103.74700 | 2104.10999 |
| .264 | .000 | 541.49300 | 104.91700 | 103.66400 | 103.66900 | 2104.10999 |
| .264 | .000 | 541.66500 | 104.92200 | 103.69900 | 103.70100 | 2104.10999 |
| | GRADIENT | .00000 | .00000 | .00000 | .00000 | .00000 |

OA236 (NAAL 759) CONFIGURATION 3 DATA SELECT 3 (TFM303) ( 28 JUN 79 )

REFERENCE DATA

SREF = .0000 SQ.FT. XMRP = .0000 IN. XT
LREF = .0000 INCHES YMRP = .0000 IN. YT
BREF = .0000 INCHES ZMRP = .0000 IN. ZT
SCALE = 1.0000

PARAMETRIC DATA

ALPHA = .000 BETA = .000

RUN NO. 3031/ 0 RN/L = 1.29 GRADIENT INTERVAL = -5.00/ 5.00

| MACH | ALPHA | TTO | QO | QBI | QB | PAC |
|---|---|---|---|---|---|---|
| .188 | .000 | 535.61400 | 52.69900 | 53.33620 | 53.34300 | 2104.10999 |
| .188 | .000 | 535.52700 | 52.63990 | 53.27650 | 53.28250 | 2104.10999 |
| .188 | .000 | 535.70000 | 52.61790 | 53.25860 | 53.27670 | 2104.10999 |
| .188 | .000 | 535.61400 | 52.65220 | 53.29040 | 53.30070 | 2104.10999 |
| | GRADIENT | .00000 | .00000 | .00000 | .00000 | .00000 |

RUN NO. 3032/ 0 RN/L = 1.56 GRADIENT INTERVAL = -5.00/ 5.00

| MACH | ALPHA | TTO | QO | QBI | QB | PAC |
|---|---|---|---|---|---|---|
| .230 | .000 | 538.77300 | 78.72750 | 79.90920 | 79.91360 | 2104.10999 |
| .230 | .000 | 539.20500 | 78.89120 | 80.09270 | 80.10570 | 2104.10999 |
| .229 | .000 | 539.29100 | 78.63090 | 79.82060 | 79.79970 | 2104.10999 |
| .230 | .000 | 539.09000 | 78.74980 | 79.94080 | 79.93960 | 2104.10999 |
| | GRADIENT | .00000 | .00000 | .00000 | .00000 | .00000 |

RUN NO. 3033/ 0 RN/L = 1.68 GRADIENT INTERVAL = -5.00/ 5.00

| MACH | ALPHA | TTO | QO | QBI | QB | PAC |
|---|---|---|---|---|---|---|
| .248 | .000 | 540.45700 | 92.05170 | 93.33040 | 93.33970 | 2104.10999 |
| .248 | .000 | 541.14800 | 91.72410 | 92.97660 | 92.98130 | 2104.10999 |
| .248 | .000 | 541.10400 | 91.88790 | 93.15940 | 93.16650 | 2104.10999 |
| .248 | .000 | 540.90300 | 91.88790 | 93.15550 | 93.16250 | 2104.10999 |
| | GRADIENT | .00000 | .00000 | .00000 | .00000 | .00000 |

RUN NO. 3034/ 0 RN/L = 1.79 GRADIENT INTERVAL = -5.00/ 5.00

| MACH | ALPHA | TTO | QO | QBI | QB | PAC |
|---|---|---|---|---|---|---|
| .265 | .000 | 542.91600 | 105.15400 | 106.55400 | 106.60200 | 2104.10999 |
| .264 | .000 | 543.08800 | 104.95400 | 106.35400 | 106.37000 | 2104.10999 |
| .264 | .000 | 543.21800 | 104.93200 | 106.35500 | 106.34600 | 2104.10999 |
| .265 | .000 | 543.07300 | 105.01400 | 106.42100 | 106.44000 | 2104.10999 |
| | GRADIENT | .00000 | .00000 | .00000 | .00000 | .00000 |

OA23G (NAAL 759) CONFIGURATION 4 DATA SELECT 3 (TFM304) ( 28 JUN 79 )

REFERENCE DATA

SREF = .0000 SQ.FT. XMRP = .0000 IN. XT
LREF = .0000 INCHES YMRP = .0000 IN. YT
BREF = .0000 INCHES ZMRP = .0000 IN. ZT
SCALE = 1.0000

PARAMETRIC DATA

ALPHA = .000 BETA = .000

RUN NO. 3041/ 0 RN/L = 1.28 GRADIENT INTERVAL = -5.00/ 5.00

| MACH | ALPHA | TTO | QO | QBI | QB | PAC |
|---|---|---|---|---|---|---|
| .188 | .000 | 538.29700 | 52.71370 | 52.85420 | 52.84280 | 2103.39999 |
| .188 | .000 | 538.38400 | 52.59560 | 52.76490 | 52.76440 | 2103.39999 |
| .188 | .000 | 538.38400 | 52.65470 | 52.83070 | 52.84330 | 2103.39999 |
| .188 | .000 | 538.35400 | 52.65470 | 52.81660 | 52.81680 | 2103.39999 |
| | GRADIENT | .00000 | .00000 | .00000 | .00000 | .00000 |

RUN NO. 3042/ 0 RN/L = 1.56 GRADIENT INTERVAL = -5.00/ 5.00

| MACH | ALPHA | TTO | QO | QBI | QB | PAC |
|---|---|---|---|---|---|---|
| .230 | .000 | 540.32800 | 78.75730 | 79.19520 | 79.17230 | 2103.39999 |
| .230 | .000 | 540.71600 | 78.80190 | 79.30230 | 79.31110 | 2103.39999 |
| .230 | .000 | 540.50000 | 78.74240 | 79.18330 | 79.17240 | 2103.39999 |
| .230 | .000 | 540.80200 | 78.77220 | 79.22490 | 79.20850 | 2103.39999 |
| .230 | .000 | 540.58600 | 78.76840 | 79.22640 | 79.21610 | 2103.39999 |
| | GRADIENT | .00000 | .00000 | .00000 | .00000 | .00000 |

RUN NO. 3043/ 0 RN/L = 1.68 GRADIENT INTERVAL = -5.00/ 5.00

| MACH | ALPHA | TTO | QO | QBI | QB | PAC |
|---|---|---|---|---|---|---|
| .248 | .000 | 542.01000 | 91.96240 | 92.47000 | 92.46820 | 2103.39999 |
| .248 | .000 | 542.31200 | 91.86570 | 92.33400 | 92.32430 | 2103.39999 |
| .248 | .000 | 542.35500 | 91.90280 | 92.42910 | 92.42070 | 2103.39999 |
| .248 | .000 | 542.22600 | 91.91030 | 92.41100 | 92.40440 | 2103.39999 |
| | GRADIENT | .00000 | .00000 | .00000 | .00000 | .00000 |

RUN NO. 3044/ 0 RN/L = 1.79 GRADIENT INTERVAL = -5.00/ 5.00

| MACH | ALPHA | TTO | QO | QBI | QB | PAC |
|---|---|---|---|---|---|---|
| .265 | .000 | 543.34700 | 105.02100 | 105.59500 | 105.57700 | 2103.39999 |
| .265 | .000 | 543.95000 | 105.03600 | 105.58900 | 105.56400 | 2103.39999 |
| .265 | .000 | 544.25100 | 105.11700 | 105.64100 | 105.62300 | 2103.39999 |
| .265 | .000 | 543.84900 | 105.05800 | 105.60800 | 105.58800 | 2103.39999 |
| | GRADIENT | .00000 | .00000 | .00000 | .00000 | .00000 |

OA236 (NAAL 759) CONFIGURATION 5 DATA SELECT 3 (TFM305) ( 28 JUN 79 )

REFERENCE DATA

SREF = .0000 SQ.FT. XMRP = .0000 IN. XT
LREF = .0000 INCHES YMRP = .0000 IN. YT
BREF = .0000 INCHES ZMRP = .0000 IN. ZT
SCALE = 1.0000

PARAMETRIC DATA

ALPHA = .000 BETA = .000

RUN NO. 3051/ 0 RN/L = 1.29 GRADIENT INTERVAL = -5.00/ 5.00

| MACH | ALPHA | TTO | QO | QBI | QB | PAC |
|---|---|---|---|---|---|---|
| .188 | .000 | 533.31400 | 52.50680 | 52.62100 | 52.53320 | 2101.98999 |
| .188 | .000 | 533.31400 | 52.55110 | 52.69880 | 52.55110 | 2101.98999 |
| .188 | .000 | 533.35800 | 52.56590 | 52.72880 | 52.55700 | 2101.98999 |
| .188 | .000 | 533.32900 | 52.54130 | 52.68290 | 52.54710 | 2101.98999 |
| | GRADIENT | .00000 | .00000 | .00000 | .00000 | .00000 |

RUN NO. 3052/ 0 RN/L = 1.58 GRADIENT INTERVAL = -5.00/ 5.00

| MACH | ALPHA | TTO | QO | QBI | QB | PAC |
|---|---|---|---|---|---|---|
| .229 | .000 | 535.48400 | 78.61570 | 79.07040 | 78.84550 | 2101.98999 |
| .229 | .000 | 535.39700 | 78.60080 | 79.04660 | 78.81520 | 2101.98999 |
| .230 | .000 | 535.57000 | 78.64540 | 79.16590 | 78.88150 | 2101.98999 |
| .229 | .000 | 535.48300 | 78.62060 | 79.09430 | 78.84740 | 2101.98999 |
| | GRADIENT | .00000 | .00000 | .00000 | .00000 | .00000 |

RUN NO. 3053/ 0 RN/L = 1.70 GRADIENT INTERVAL = -5.00/ 5.00

| MACH | ALPHA | TTO | QO | QBI | QB | PAC |
|---|---|---|---|---|---|---|
| .248 | .000 | 537.38900 | 91.83550 | 92.28570 | 91.97860 | 2101.98999 |
| .248 | .000 | 537.77800 | 91.77590 | 92.27450 | 91.87630 | 2101.98999 |
| .248 | .000 | 537.73500 | 91.85040 | 92.30940 | 92.08130 | 2101.98999 |
| .248 | .000 | 537.63400 | 91.82060 | 92.28990 | 91.97870 | 2101.98999 |
| | GRADIENT | .00000 | .00000 | .00000 | .00000 | .00000 |

RUN NO. 3054/ 0 RN/L = 1.81 GRADIENT INTERVAL = -5.00/ 5.00

| MACH | ALPHA | TTO | QO | QBI | QB | PAC |
|---|---|---|---|---|---|---|
| .265 | .000 | 538.94600 | 105.02800 | 105.52800 | 105.14000 | 2101.98999 |
| .265 | .000 | 539.63700 | 104.93200 | 105.45800 | 105.19000 | 2101.98999 |
| .265 | .000 | 539.63700 | 105.02100 | 105.55200 | 105.13400 | 2101.98999 |
| .265 | .000 | 539.85300 | 105.03500 | 105.55200 | 105.24900 | 2101.98999 |
| .265 | .000 | 539.51800 | 105.00400 | 105.52200 | 105.17800 | 2101.98999 |
| | GRADIENT | .00000 | .00000 | .00000 | .00000 | .00000 |

OA236 (NAAL 759) CONFIGURATION 6 DATA SELECT 3 (TFM306) ( 28 JUN 79 )

REFERENCE DATA

SREF = .0000 SQ.FT. XMRP = .0000 IN. XT
LREF = .0000 INCHES YMRP = .0000 IN. YT
BREF = .0000 INCHES ZMRP = .0000 IN. ZT
SCALE = 1.0000

PARAMETRIC DATA

ALPHA = .000 BETA = .000

RUN NO. 3061/ 0 RN/L = 1.29 GRADIENT INTERVAL = -5.00/ 5.00

| MACH | ALPHA | TTO | QO | QBI | QB | PAC |
|---|---|---|---|---|---|---|
| .188 | .000 | 533.83500 | 52.35920 | 52.48380 | 52.13210 | 2101.98999 |
| .188 | .000 | 533.79200 | 52.50680 | 52.62690 | 52.21610 | 2101.98999 |
| .188 | .000 | 533.74900 | 52.45530 | 52.59130 | 52.30200 | 2101.98999 |
| .188 | .000 | 533.79200 | 52.44040 | 52.56730 | 52.21670 | 2101.98999 |
| | GRADIENT | .00000 | .00000 | .00000 | .00000 | .00000 |

RUN NO. 3062/ 0 RN/L = 1.57 GRADIENT INTERVAL = -5.00/ 5.00

| MACH | ALPHA | TTO | QO | QBI | QB | PAC |
|---|---|---|---|---|---|---|
| .229 | .000 | 535.78700 | 78.51960 | 78.99980 | 78.37320 | 2101.98999 |
| .229 | .000 | 536.22000 | 78.51160 | 78.95760 | 78.28210 | 2101.98999 |
| .229 | .000 | 536.04700 | 78.59350 | 79.05870 | 78.39040 | 2101.98999 |
| .229 | .000 | 536.01800 | 78.54150 | 79.00540 | 78.34860 | 2101.98999 |
| | GRADIENT | .00000 | .00000 | .00000 | .00000 | .00000 |

RUN NO. 3063/ 0 RN/L = 1.70 GRADIENT INTERVAL = -5.00/ 5.00

| MACH | ALPHA | TTO | QO | QBI | QB | PAC |
|---|---|---|---|---|---|---|
| .248 | .000 | 537.08600 | 91.73120 | 92.19750 | 91.68930 | 2101.98999 |
| .248 | .000 | 537.56200 | 91.65680 | 92.07310 | 91.44200 | 2101.98999 |
| .248 | .000 | 537.82200 | 91.77590 | 92.17290 | 91.50680 | 2101.98999 |
| .248 | .000 | 537.49000 | 91.72130 | 92.14780 | 91.54600 | 2101.98999 |
| | GRADIENT | .00000 | .00000 | .00000 | .00000 | .00000 |

RUN NO. 3064/ 0 RN/L = 1.81 GRADIENT INTERVAL = -5.00/ 5.00

| MACH | ALPHA | TTO | QO | QBI | QB | PAC |
|---|---|---|---|---|---|---|
| .264 | .000 | 539.16200 | 104.89500 | 105.38700 | 104.55000 | 2101.98999 |
| .264 | .000 | 539.59300 | 104.82000 | 105.26900 | 104.59300 | 2101.98999 |
| .265 | .000 | 539.50700 | 104.95400 | 105.48700 | 104.63300 | 2101.98999 |
| .264 | .000 | 539.42100 | 104.89000 | 105.38100 | 104.59200 | 2101.98999 |
| | GRADIENT | .00000 | .00000 | .00000 | .00000 | .00000 |

OA236 (NAAL 759) CONFIGURATION 7 DATA SELECT 3 (TFM307) ( 28 JUN 79 )

REFERENCE DATA

SREF = .0000 SQ.FT. XMRP = .0000 IN. XT
LREF = .0000 INCHES YMRP = .0000 IN. YT
BREF = .0000 INCHES ZMRP = .0000 IN. ZT
SCALE = 1.0000

PARAMETRIC DATA

ALPHA = .000 BETA = .000

RUN NO. 3071/ 0 RN/L = 1.28 GRADIENT INTERVAL = -5.00/ 5.00

| MACH | ALPHA | TTO | QO | QBI | QB | PAC |
|---|---|---|---|---|---|---|
| .188 | .000 | 537.77800 | 52.69880 | 52.86010 | 52.51940 | 2101.98999 |
| .188 | .000 | 537.47600 | 52.65450 | 52.80630 | 52.71500 | 2101.98999 |
| .188 | .000 | 537.82200 | 52.63970 | 52.77030 | 52.60530 | 2101.98999 |
| .188 | .000 | 537.69200 | 52.66430 | 52.81220 | 52.61320 | 2101.98999 |
| | GRADIENT | .00000 | .00000 | .00000 | .00000 | .00000 |

RUN NO. 3072/ 0 RN/L = 1.56 GRADIENT INTERVAL = -5.00/ 5.00

| MACH | ALPHA | TTO | QO | QBI | QB | PAC |
|---|---|---|---|---|---|---|
| .230 | .000 | 539.24800 | 78.64540 | 79.10600 | 78.46870 | 2101.98999 |
| .229 | .000 | 539.29100 | 78.62320 | 79.04640 | 78.57840 | 2101.98999 |
| .229 | .000 | 539.72300 | 78.56390 | 78.97520 | 78.48810 | 2101.98999 |
| .229 | .000 | 539.42100 | 78.61080 | 79.04250 | 78.51170 | 2101.98999 |
| | GRADIENT | .00000 | .00000 | .00000 | .00000 | .00000 |

RUN NO. 3073/ 0 RN/L = 1.68 GRADIENT INTERVAL = -5.00/ 5.00

| MACH | ALPHA | TTO | QO | QBI | QB | PAC |
|---|---|---|---|---|---|---|
| .248 | .000 | 541.23400 | 91.74610 | 92.17950 | 91.68320 | 2101.98999 |
| .248 | .000 | 541.27700 | 91.73120 | 92.16770 | 91.62890 | 2101.98999 |
| .248 | .000 | 541.10400 | 91.71640 | 92.13210 | 91.61090 | 2101.98999 |
| .248 | .000 | 541.20500 | 91.73120 | 92.15980 | 91.64100 | 2101.98999 |
| | GRADIENT | .00000 | .00000 | .00000 | .00000 | .00000 |

RUN NO. 3074/ 0 RN/L = 1.79 GRADIENT INTERVAL = -5.00/ 5.00

| MACH | ALPHA | TTO | QO | QBI | QB | PAC |
|---|---|---|---|---|---|---|
| .265 | .000 | 542.83000 | 104.91700 | 105.38700 | 104.62800 | 2101.98999 |
| .265 | .000 | 543.04500 | 104.92400 | 105.44600 | 104.67600 | 2101.98999 |
| .264 | .000 | 542.83000 | 104.85800 | 105.32200 | 104.67800 | 2101.98999 |
| .264 | .000 | 542.90100 | 104.90000 | 105.38500 | 104.66100 | 2101.98999 |
| | GRADIENT | .00000 | .00000 | .00000 | .00000 | .00000 |

OA236 (NAAL 759) CONFIGURATION 8 DATA SELECT 3 (TFM308) ( 28 JUN 79 )

REFERENCE DATA

SREF = .0000 SQ.FT. XMRP = .0000 IN. XT
LREF = .0000 INCHES YMRP = .0000 IN. YT
BREF = .0000 INCHES ZMRP = .0000 IN. ZT
SCALE = 1.0000

PARAMETRIC DATA

ALPHA = .000 BETA = .000

RUN NO. 3081/ 0 RN/L = 1.28 GRADIENT INTERVAL = -5.00/ 5.00

| MACH | ALPHA | TTO | QO | QBI | QB | PAC |
|---|---|---|---|---|---|---|
| .188 | .000 | 538.34000 | 52.35200 | 52.52590 | 52.46760 | 2101.28000 |
| .188 | .000 | 538.38400 | 52.47010 | 52.64520 | 52.49690 | 2101.28000 |
| .188 | .000 | 538.47000 | 52.57340 | 52.74670 | 52.63020 | 2101.28000 |
| .188 | .000 | 539.39800 | 52.46510 | 52.63920 | 52.53150 | 2101.28000 |
| | GRADIENT | .00000 | .00000 | .00000 | .00000 | .00000 |

RUN NO. 3082/ 0 RN/L = 1.56 GRADIENT INTERVAL = -5.00/ 5.00

| MACH | ALPHA | TTO | QO | QBI | QB | PAC |
|---|---|---|---|---|---|---|
| .230 | .000 | 540.19800 | 78.62320 | 79.17190 | 78.96050 | 2101.28000 |
| .230 | .000 | 540.28400 | 78.69000 | 79.19500 | 79.05690 | 2101.28000 |
| .229 | .000 | 540.58700 | 78.58590 | 79.03460 | 78.99750 | 2101.28000 |
| .230 | .000 | 540.35600 | 78.63310 | 79.13380 | 79.00490 | 2101.28000 |
| | GRADIENT | .00000 | .00000 | .00000 | .00000 | .00000 |

RUN NO. 3083/ 0 RN/L = 1.68 GRADIENT INTERVAL = -5.00/ 5.00

| MACH | ALPHA | TTO | QO | QBI | QB | PAC |
|---|---|---|---|---|---|---|
| .248 | .000 | 541.62200 | 91.65680 | 92.12060 | 91.96280 | 2101.28000 |
| .248 | .000 | 541.79500 | 91.74610 | 92.30450 | 91.99160 | 2101.28000 |
| .248 | .000 | 541.53600 | 91.79080 | 92.32190 | 92.07580 | 2101.28000 |
| .248 | .000 | 541.65100 | 91.73120 | 92.24900 | 92.01000 | 2101.28000 |
| | GRADIENT | .00000 | .00000 | .00000 | .00000 | .00000 |

RUN NO. 3084/ 0 RN/L = 1.79 GRADIENT INTERVAL = -5.00/ 5.00

| MACH | ALPHA | TTO | QO | QBI | QB | PAC |
|---|---|---|---|---|---|---|
| .265 | .000 | 543.00200 | 104.90900 | 105.49400 | 105.26900 | 2101.28000 |
| .265 | .000 | 543.34700 | 104.95400 | 105.54100 | 105.26200 | 2101.28000 |
| .265 | .000 | 543.60500 | 104.95400 | 105.55900 | 105.26200 | 2101.28000 |
| .265 | .000 | 543.31800 | 104.93900 | 105.53100 | 105.26400 | 2101.28000 |
| | GRADIENT | .00000 | .00000 | .00000 | .00000 | .00000 |

OA236 (NAAL 759) CONFIGURATION 9 DATA SELECT 3 (TFM309) ( 28 JUN 79 )

REFERENCE DATA

SREF = .0000 SQ.FT. XMRP = .0000 IN. XT
LREF = .0000 INCHES YMRP = .0000 IN. YT
BREF = .0000 INCHES ZMRP = .0000 IN. ZT
SCALE = 1.0000

PARAMETRIC DATA

ALPHA = .000 BETA = .000

RUN NO. 3091/ 0 RN/L = 1.27 GRADIENT INTERVAL = -5.00/ 5.00

| MACH | ALPHA | TTO | QO | QBI | QB | PAC |
|---|---|---|---|---|---|---|
| .188 | .000 | 540.97500 | 52.63970 | 52.82420 | 52.68420 | 2100.57999 |
| .188 | .000 | 540.97500 | 52.62500 | 52.77620 | 52.69660 | 2100.57999 |
| .188 | .000 | 541.23400 | 52.65450 | 52.82410 | 52.68410 | 2100.57999 |
| .188 | .000 | 541.06100 | 52.63970 | 52.80810 | 52.68830 | 2100.57999 |
| | GRADIENT | .00000 | .00000 | .00000 | .00000 | .00000 |

RUN NO. 3092/ 0 RN/L = 1.55 GRADIENT INTERVAL = -5.00/ 5.00

| MACH | ALPHA | TTO | QO | QBI | QB | PAC |
|---|---|---|---|---|---|---|
| .229 | .000 | 542.44200 | 78.54910 | 79.02870 | 78.83970 | 2100.57999 |
| .230 | .000 | 542.35500 | 78.64540 | 79.15330 | 78.95370 | 2100.57999 |
| .229 | .000 | 542.44200 | 78.57860 | 79.05240 | 79.00330 | 2100.57999 |
| .229 | .000 | 542.41300 | 78.59100 | 79.07810 | 78.93220 | 2100.57999 |
| | GRADIENT | .00000 | .00000 | .00000 | .00000 | .00000 |

RUN NO. 3093/ 0 RN/L = 1.67 GRADIENT INTERVAL = -5.00/ 5.00

| MACH | ALPHA | TTO | QO | QBI | QB | PAC |
|---|---|---|---|---|---|---|
| .248 | .000 | 543.77800 | 91.86530 | 92.41010 | 92.23780 | 2100.57999 |
| .248 | .000 | 543.30400 | 91.68660 | 92.13780 | 92.13160 | 2100.57999 |
| .248 | .000 | 543.86400 | 91.76100 | 92.29200 | 92.05160 | 2100.57999 |
| .248 | .000 | 543.64800 | 91.77090 | 92.27990 | 92.14030 | 2100.57999 |
| | GRADIENT | .00000 | .00000 | .00000 | .00000 | .00000 |

RUN NO. 3094/ 0 RN/L = 1.78 GRADIENT INTERVAL = -5.00/ 5.00

| MACH | ALPHA | TTO | QO | QBI | QB | PAC |
|---|---|---|---|---|---|---|
| .265 | .000 | 545.07000 | 105.02800 | 105.56300 | 105.46500 | 2100.57999 |
| .265 | .000 | 544.85400 | 105.09500 | 105.60900 | 105.42800 | 2100.57999 |
| .265 | .000 | 544.98300 | 104.98400 | 105.52800 | 105.36300 | 2100.57999 |
| .265 | .000 | 544.96900 | 105.03500 | 105.56700 | 105.41900 | 2100.57999 |
| | GRADIENT | .00000 | .00000 | .00000 | .00000 | .00000 |

OA236 (NAAL 759) CONFIGURATION 10 DATA SELECT 3 (TFM310) ( 28 JUN 79 )

REFERENCE DATA

SREF = .0000 SQ.FT. XMRP = .0000 IN. XT
LREF = .0000 INCHES YMRP = .0000 IN. YT
BREF = .0000 INCHES ZMRP = .0000 IN. ZT
SCALE = 1.0000

PARAMETRIC DATA

ALPHA = .000 BETA = .000

RUN NO. 3101/ 0 RN/L = 1.29 GRADIENT INTERVAL = -5.00/ 5.00

| MACH | ALPHA | TTO | QO | QBI | QB | PAC |
|---|---|---|---|---|---|---|
| .188 | .000 | 533.22800 | 52.38150 | 52.56140 | 52.60080 | 2099.87000 |
| .188 | .000 | 533.22800 | 52.32990 | 52.47150 | 52.61350 | 2099.87000 |
| .188 | .000 | 533.27100 | 52.27090 | 52.41790 | 52.58960 | 2099.87000 |
| .188 | .000 | 533.24200 | 52.32740 | 52.48360 | 52.60130 | 2099.87000 |
| | GRADIENT | .00000 | .00000 | .00000 | .00000 | .00000 |

RUN NO. 3102/ 0 RN/L = 1.57 GRADIENT INTERVAL = -5.00/ 5.00

| MACH | ALPHA | TTO | QO | QBI | QB | PAC |
|---|---|---|---|---|---|---|
| .229 | .000 | 535.52700 | 78.44580 | 78.91580 | 78.97420 | 2099.87000 |
| .229 | .000 | 535.39700 | 78.55660 | 79.02220 | 79.08180 | 2099.87000 |
| .229 | .000 | 535.39700 | 78.45320 | 78.86770 | 79.08940 | 2099.87000 |
| .229 | .000 | 535.44000 | 78.48520 | 78.93520 | 79.04850 | 2099.87000 |
| | GRADIENT | .00000 | .00000 | .00000 | .00000 | .00000 |

RUN NO. 3103/ 0 RN/L = 1.69 GRADIENT INTERVAL = -5.00/ 5.00

| MACH | ALPHA | TTO | QO | QBI | QB | PAC |
|---|---|---|---|---|---|---|
| .248 | .000 | 537.00000 | 91.59740 | 92.05470 | 92.21700 | 2099.87000 |
| .247 | .000 | 537.04300 | 91.38890 | 91.86660 | 92.20820 | 2099.87000 |
| .248 | .000 | 537.21600 | 91.57500 | 92.03700 | 92.10820 | 2099.87000 |
| .248 | .000 | 537.08600 | 91.52040 | 91.98610 | 92.17780 | 2099.87000 |
| | GRADIENT | .00000 | .00000 | .00000 | .00000 | .00000 |

RUN NO. 3104/ 0 RN/L = 1.81 GRADIENT INTERVAL = -5.00/ 5.00

| MACH | ALPHA | TTO | QO | QBI | QB | PAC |
|---|---|---|---|---|---|---|
| .264 | .000 | 538.68600 | 104.76900 | 105.36400 | 105.52900 | 2099.87000 |
| .264 | .000 | 538.60000 | 104.73200 | 105.23300 | 105.51200 | 2099.87000 |
| .264 | .000 | 538.94600 | 104.73200 | 105.26900 | 105.40300 | 2099.87000 |
| .264 | .000 | 538.74400 | 104.74400 | 105.28800 | 105.48100 | 2099.87000 |
| | GRADIENT | .00000 | .00000 | .00000 | .00000 | .00000 |

OA236 (NAAL 759) CONFIGURATION 5 DATA SELECT 3 (TFM311) ( 28 JUN 79 )

REFERENCE DATA

SREF = .0000 SQ.FT. XMRP = .0000 IN. XT
LREF = .0000 INCHES YMRP = .0000 IN. YT
BREF = .0000 INCHES ZMRP = .0000 IN. ZT
SCALE = 1.0000

PARAMETRIC DATA

ALPHA = .000 BETA = .000

RUN NO. 3111/ 0 RN/L = 1.28 GRADIENT INTERVAL = -5.00/ 5.00

| MACH | ALPHA | TTO | QO | QBI | QB | PAC |
|---|---|---|---|---|---|---|
| .188 | .000 | 535.57000 | 52.64720 | 52.81800 | 52.75100 | 2099.87000 |
| .188 | .000 | 535.87400 | 52.64720 | 52.79990 | 52.81200 | 2099.87000 |
| .188 | .000 | 535.96000 | 52.66190 | 52.84790 | 52.70210 | 2099.87000 |
| .188 | .000 | 535.80100 | 52.65210 | 52.82190 | 52.75500 | 2099.87000 |
| | GRADIENT | .00000 | .00000 | .00000 | .00000 | .00000 |

RUN NO. 3112/ 0 RN/L = 1.57 GRADIENT INTERVAL = -5.00/ 5.00

| MACH | ALPHA | TTO | QO | QBI | QB | PAC |
|---|---|---|---|---|---|---|
| .229 | .000 | 537.69200 | 78.49000 | 78.99310 | 78.73700 | 2099.87000 |
| .230 | .000 | 537.82200 | 78.62320 | 79.14710 | 78.78950 | 2099.87000 |
| .230 | .000 | 537.99400 | 78.66780 | 79.24250 | 78.93480 | 2099.87000 |
| .230 | .000 | 537.83600 | 78.59370 | 79.12760 | 78.82040 | 2099.87000 |
| | GRADIENT | .00000 | .00000 | .00000 | .00000 | .00000 |

RUN NO. 3113/ 0 RN/L = 1.69 GRADIENT INTERVAL = -5.00/ 5.00

| MACH | ALPHA | TTO | QO | QBI | QB | PAC |
|---|---|---|---|---|---|---|
| .248 | .000 | 539.16200 | 91.73870 | 92.24990 | 91.90580 | 2099.87000 |
| .248 | .000 | 539.20500 | 91.72390 | 92.25600 | 91.91210 | 2099.87000 |
| .248 | .000 | 539.16200 | 91.73870 | 92.28580 | 91.94210 | 2099.87000 |
| .248 | .000 | 539.17600 | 91.73380 | 92.26390 | 91.92000 | 2099.87000 |
| | GRADIENT | .00000 | .00000 | .00000 | .00000 | .00000 |

RUN NO. 3114/ 0 RN/L = 1.80 GRADIENT INTERVAL = -5.00/ 5.00

| MACH | ALPHA | TTO | QO | QBI | QB | PAC |
|---|---|---|---|---|---|---|
| .265 | .000 | 540.45700 | 104.91000 | 105.49800 | 105.13400 | 2099.87000 |
| .265 | .000 | 540.45700 | 104.97600 | 105.56900 | 105.09100 | 2099.87000 |
| .265 | .000 | 540.41400 | 104.99900 | 105.62200 | 105.20500 | 2099.87000 |
| .265 | .000 | 540.44300 | 104.96100 | 105.56300 | 105.14300 | 2099.87000 |
| | GRADIENT | .00000 | .00000 | .00000 | .00000 | .00000 |

OA236 (NAAL 759) CONFIGURATION 11 DATA SELECT 3 (TFM312) ( 28 JUN 79 )

REFERENCE DATA

SREF = .0000 SQ.FT. XMRP = .0000 IN. XT
LREF = .0000 INCHES YMRP = .0000 IN. YT
BREF = .0000 INCHES ZMRP = .0000 IN. ZT
SCALE = 1.0000

PARAMETRIC DATA

ALPHA = .000 BETA = .000

RUN NO. 3121/ 0 RN/L = 1.28 GRADIENT INTERVAL = -5.00/ 5.00

| MACH | ALPHA | TTO | QO | QBI | QB | PAC |
|---|---|---|---|---|---|---|
| .188 | .000 | 537.86500 | 52.50700 | -.13240 | -.13410 | 2100.57999 |
| .188 | .000 | 537.82200 | 52.38900 | -.12640 | -.13410 | 2100.57999 |
| .188 | .000 | 537.86500 | 52.41850 | -.13240 | -.13410 | 2100.57999 |
| .188 | .000 | 537.85000 | 52.43820 | -.13040 | -.13410 | 2100.57999 |
| | GRADIENT | .00000 | .00000 | .00000 | .00000 | .00000 |

RUN NO. 3122/ 0 RN/L = 1.56 GRADIENT INTERVAL = -5.00/ 5.00

| MACH | ALPHA | TTO | QO | QBI | QB | PAC |
|---|---|---|---|---|---|---|
| .230 | .000 | 539.50700 | 78.59370 | -.04190 | -.04850 | 2100.57999 |
| .229 | .000 | 539.72300 | 78.49020 | -.04190 | -.04850 | 2100.57999 |
| .230 | .000 | 539.93900 | 78.66050 | -.04190 | -.04850 | 2100.57999 |
| .229 | .000 | 539.72300 | 78.58140 | -.04190 | -.04850 | 2100.57999 |
| | GRADIENT | .00000 | .00000 | .00000 | .00000 | .00000 |

RUN NO. 3123/ 0 RN/L = 1.68 GRADIENT INTERVAL = -5.00/ 5.00

| MACH | ALPHA | TTO | QO | QBI | QB | PAC |
|---|---|---|---|---|---|---|
| .248 | .000 | 541.32000 | 91.77610 | .11360 | .10900 | 2100.57999 |
| .248 | .000 | 541.06200 | 91.71650 | .05980 | .06050 | 2100.57999 |
| .248 | .000 | 541.19100 | 91.77610 | .07170 | .06050 | 2100.57999 |
| .248 | .000 | 541.19100 | 91.75630 | .08170 | .07670 | 2100.57999 |
| | GRADIENT | .00000 | .00000 | .00000 | .00000 | .00000 |

RUN NO. 3124/ 0 RN/L = 1.79 GRADIENT INTERVAL = -5.00/ 5.00

| MACH | ALPHA | TTO | QO | QBI | QB | PAC |
|---|---|---|---|---|---|---|
| .265 | .000 | 542.44200 | 104.85000 | .08950 | .08460 | 2100.57999 |
| .264 | .000 | 542.61400 | 104.83500 | .09550 | .09060 | 2100.57999 |
| .265 | .000 | 542.74300 | 104.84300 | .07750 | .07250 | 2100.57999 |
| .264 | .000 | 542.59900 | 104.84300 | .08750 | .08260 | 2100.57999 |
| | GRADIENT | .00000 | .00000 | .00000 | .00000 | .00000 |

OA236 (NAAL 759) CONFIGURATION 12 DATA SELECT 3 (TFM313) ( 28 JUN 79 )

REFERENCE DATA

SREF = .0000 SQ.FT. XMRP = .0000 IN. XT
LREF = .0000 INCHES YMRP = .0000 IN. YT
BREF = .0000 INCHES ZMRP = .0000 IN. ZT
SCALE = 1.0000

PARAMETRIC DATA

ALPHA = .000 BETA = .000

RUN NO. 3131/ 0 RN/L = 1.27 GRADIENT INTERVAL = -5.00/ 5.00

| MACH | ALPHA | TTO | QO | QBI | QB | PAC |
|---|---|---|---|---|---|---|
| .188 | .000 | 538.08100 | 52.30770 | 52.47170 | 52.48570 | 2099.87000 |
| .188 | .000 | 537.99400 | 52.38150 | 52.41080 | 52.41800 | 2099.87000 |
| .188 | .000 | 538.08100 | 52.35200 | 52.25450 | 52.27180 | 2099.87000 |
| .188 | .000 | 538.05200 | 52.34700 | 52.37900 | 52.39180 | 2099.87000 |
| | GRADIENT | .00000 | .00000 | .00000 | .00000 | .00000 |

RUN NO. 3132/ 0 RN/L = 1.56 GRADIENT INTERVAL = -5.00/ 5.00

| MACH | ALPHA | TTO | QO | QBI | QB | PAC |
|---|---|---|---|---|---|---|
| .229 | .000 | 539.81000 | 78.32770 | 78.35380 | 78.36850 | 2099.87000 |
| .229 | .000 | 540.06900 | 78.34990 | 78.37140 | 78.38040 | 2099.87000 |
| .229 | .000 | 540.41400 | 78.47530 | 78.27980 | 78.29370 | 2099.87000 |
| .229 | .000 | 540.03700 | 78.38430 | 78.33500 | 78.34750 | 2099.87000 |
| | GRADIENT | .00000 | .00000 | .00000 | .00000 | .00000 |

RUN NO. 3133/ 0 RN/L = 1.68 GRADIENT INTERVAL = -5.00/ 5.00

| MACH | ALPHA | TTO | QO | QBI | QB | PAC |
|---|---|---|---|---|---|---|
| .248 | .000 | 541.75200 | 91.63450 | 91.40190 | 91.41050 | 2099.87000 |
| .248 | .000 | 541.88100 | 91.58250 | 91.42680 | 91.43560 | 2099.87000 |
| .248 | .000 | 542.44200 | 91.58990 | 91.51040 | 91.51420 | 2099.87000 |
| .248 | .000 | 542.02500 | 91.60230 | 91.44640 | 91.45350 | 2099.87000 |
| | GRADIENT | .00000 | .00000 | .00000 | .00000 | .00000 |

RUN NO. 3134/ 0 RN/L = 1.78 GRADIENT INTERVAL = -5.00/ 5.00

| MACH | ALPHA | TTO | QO | QBI | QB | PAC |
|---|---|---|---|---|---|---|
| .265 | .000 | 544.25100 | 104.83500 | 104.70600 | 104.70600 | 2099.87000 |
| .265 | .000 | 544.68200 | 104.83500 | 104.65800 | 104.65800 | 2099.87000 |
| .265 | .000 | 544.76800 | 104.94700 | 104.61400 | 104.62600 | 2099.87000 |
| .265 | .000 | 544.56700 | 104.87200 | 104.65900 | 104.66300 | 2099.87000 |
| | GRADIENT | .00000 | .00000 | .00000 | .00000 | .00000 |

OA236 (NAAL 759) CONFIGURATION 13 DATA SELECT 3 (TFM314) ( 28 JUN 79 )

REFERENCE DATA

SREF = .0000 SQ.FT. XMRP = .0000 IN. XT
LREF = .0000 INCHES YMRP = .0000 IN. YT
BREF = .0000 INCHES ZMRP = .0000 IN. ZT
SCALE = 1.0000

PARAMETRIC DATA

ALPHA = .000 BETA = .000

RUN NO. 3141/ 0 RN/L = 1.27 GRADIENT INTERVAL = -5.00/ 5.00

| MACH | ALPHA | TTO | QO | QBI | QB | PAC |
|---|---|---|---|---|---|---|
| .189 | .000 | 539.29100 | 52.72100 | 52.44350 | 52.45110 | 2097.75000 |
| .188 | .000 | 539.29100 | 52.55860 | 52.33060 | 52.33680 | 2097.75000 |
| .188 | .000 | 539.29100 | 52.48480 | 52.22290 | 52.22160 | 2097.75000 |
| .188 | .000 | 539.29100 | 52.58810 | 52.33230 | 52.33650 | 2097.75000 |
| | GRADIENT | .00000 | .00000 | .00000 | .00000 | .00000 |

RUN NO. 3142/ 0 RN/L = 1.55 GRADIENT INTERVAL = -5.00/ 5.00

| MACH | ALPHA | TTO | QO | QBI | QB | PAC |
|---|---|---|---|---|---|---|
| .230 | .000 | 540.93200 | 78.65290 | 78.13860 | 78.15070 | 2097.75000 |
| .230 | .000 | 541.49300 | 78.78680 | 78.14880 | 78.17320 | 2097.75000 |
| .230 | .000 | 541.45000 | 78.66780 | 78.38420 | 78.38130 | 2097.75000 |
| .230 | .000 | 541.29100 | 78.70250 | 78.22380 | 78.23500 | 2097.75000 |
| | GRADIENT | .00000 | .00000 | .00000 | .00000 | .00000 |

RUN NO. 3143/ 0 RN/L = 1.68 GRADIENT INTERVAL = -5.00/ 5.00

| MACH | ALPHA | TTO | QO | QBI | QB | PAC |
|---|---|---|---|---|---|---|
| .248 | .000 | 542.35500 | 91.88770 | 91.19320 | 91.20520 | 2097.75000 |
| .248 | .000 | 542.52800 | 91.82810 | 91.18820 | 91.19410 | 2097.75000 |
| .248 | .000 | 542.78600 | 91.93240 | 91.16260 | 91.17430 | 2097.75000 |
| .248 | .000 | 542.55600 | 91.88270 | 91.18130 | 91.19120 | 2097.75000 |
| | GRADIENT | .00000 | .00000 | .00000 | .00000 | .00000 |

RUN NO. 3144/ 0 RN/L = 1.79 GRADIENT INTERVAL = -5.00/ 5.00

| MACH | ALPHA | TTO | QO | QBI | QB | PAC |
|---|---|---|---|---|---|---|
| .265 | .000 | 543.99300 | 104.97600 | 104.19400 | 104.18800 | 2097.75000 |
| .265 | .000 | 544.46700 | 105.11000 | 104.22100 | 104.23400 | 2097.75000 |
| .265 | .000 | 544.63900 | 105.09500 | 104.24000 | 104.24600 | 2097.75000 |
| .265 | .000 | 544.36600 | 105.06000 | 104.21800 | 104.22300 | 2097.75000 |
| | GRADIENT | .00000 | .00000 | .00000 | .00000 | .00000 |

A-3

OA236 (NAAL 759) CONFIGURATION 1 DATA SELECT 3 (TFM315) ( 28 JUN 79 )

REFERENCE DATA

SREF = .0000 SQ.FT. XMRP = .0000 IN. XT
LREF = .0000 INCHES YMRP = .0000 IN. YT
BREF = .0000 INCHES ZMRP = .0000 IN. ZT
SCALE = 1.0000

PARAMETRIC DATA

ALPHA = .000 BETA = .000

RUN NO. 3151/ 0 RN/L = 1.27 GRADIENT INTERVAL = -5.00/ 5.00

| MACH | ALPHA | TTO | QO | QBI | QB | PAC |
|---|---|---|---|---|---|---|
| .188 | .000 | 541.19100 | 52.57340 | 52.53520 | 52.53180 | 2097.75000 |
| .188 | .000 | 541.36400 | 52.54390 | 52.49320 | 52.50150 | 2097.75000 |
| .188 | .000 | 541.40600 | 52.30040 | 52.24250 | 52.24150 | 2097.75000 |
| .188 | .000 | 541.32000 | 52.47250 | 52.42360 | 52.42490 | 2097.75000 |
| | GRADIENT | .00000 | .00000 | .00000 | .00000 | .00000 |

RUN NO. 3152/ 0 RN/L = 1.55 GRADIENT INTERVAL = -5.00/ 5.00

| MACH | ALPHA | TTO | QO | QBI | QB | PAC |
|---|---|---|---|---|---|---|
| .230 | .000 | 543.00200 | 78.71240 | 78.94710 | 78.96970 | 2097.75000 |
| .230 | .000 | 542.83000 | 78.66780 | 78.85180 | 78.84890 | 2097.75000 |
| .230 | .000 | 543.04500 | 78.65290 | 78.86400 | 78.88550 | 2097.75000 |
| .230 | .000 | 542.95900 | 78.67770 | 78.88760 | 78.90130 | 2097.75000 |
| | GRADIENT | .00000 | .00000 | .00000 | .00000 | .00000 |

RUN NO. 3153/ 0 RN/L = 1.67 GRADIENT INTERVAL = -5.00/ 5.00

| MACH | ALPHA | TTO | QO | QBI | QB | PAC |
|---|---|---|---|---|---|---|
| .248 | .000 | 544.29400 | 91.76860 | 91.93690 | 91.92820 | 2097.75000 |
| .248 | .000 | 544.20800 | 91.72390 | 91.86580 | 91.86230 | 2097.75000 |
| .248 | .000 | 544.25100 | 91.77610 | 91.96670 | 91.97660 | 2097.75000 |
| .248 | .000 | 544.25100 | 91.75620 | 91.92310 | 91.92240 | 2097.75000 |
| | GRADIENT | .00000 | .00000 | .00000 | .00000 | .00000 |

RUN NO. 3154/ 0 RN/L = 1.78 GRADIENT INTERVAL = -5.00/ 5.00

| MACH | ALPHA | TTO | QO | QBI | QB | PAC |
|---|---|---|---|---|---|---|
| .265 | .000 | 545.58600 | 105.01300 | 105.20200 | 105.17900 | 2097.75000 |
| .265 | .000 | 546.18900 | 104.90200 | 105.09100 | 105.08400 | 2097.75000 |
| .265 | .000 | 545.93000 | 104.91000 | 105.07300 | 105.06000 | 2097.75000 |
| .265 | .000 | 545.90100 | 104.94200 | 105.12200 | 105.10800 | 2097.75000 |
| | GRADIENT | .00000 | .00000 | .00000 | .00000 | .00000 |

OA236 (NAAL 759) CONFIGURATION 3 DATA SELECT 3 (TFM316) ( 28 JUN 79 )

REFERENCE DATA

SREF = .0000 SQ.FT. XMRP = .0000 IN. XT
LREF = .0000 INCHES YMRP = .0000 IN. YT
BREF = .0000 INCHES ZMRP = .0000 IN. ZT
SCALE = 1.0000

PARAMETRIC DATA

ALPHA = .000 BETA = .000

RUN NO. 3161/ 0 RN/L = 1.26 GRADIENT INTERVAL = -5.00/ 5.00

| MACH | ALPHA | TTO | QO | QBI | QB | PAC |
|---|---|---|---|---|---|---|
| .188 | .000 | 542.83000 | 52.58060 | 53.20330 | 53.21460 | 2097.75000 |
| .188 | .000 | 543.00200 | 52.57340 | 53.20340 | 53.20870 | 2097.75000 |
| .188 | .000 | 543.00200 | 52.48480 | 53.11400 | 53.11190 | 2097.75000 |
| .188 | .000 | 542.94400 | 52.54630 | 53.17350 | 53.17840 | 2097.75000 |
| | GRADIENT | .00000 | .00000 | .00000 | .00000 | .00000 |

RUN NO. 3162/ 0 RN/L = 1.54 GRADIENT INTERVAL = -5.00/ 5.00

| MACH | ALPHA | TTO | QO | QBI | QB | PAC |
|---|---|---|---|---|---|---|
| .229 | .000 | 544.29400 | 78.46730 | 79.65170 | 79.66510 | 2097.75000 |
| .230 | .000 | 544.55300 | 78.66780 | 79.82890 | 79.84460 | 2097.75000 |
| .230 | .000 | 544.46700 | 78.69020 | 79.85870 | 79.85650 | 2097.75000 |
| .230 | .000 | 544.43800 | 78.60840 | 79.77980 | 79.78870 | 2097.75000 |
| | GRADIENT | .00000 | .00000 | .00000 | .00000 | .00000 |

RUN NO. 3163/ 0 RN/L = 1.66 GRADIENT INTERVAL = -5.00/ 5.00

| MACH | ALPHA | TTO | QO | QBI | QB | PAC |
|---|---|---|---|---|---|---|
| .248 | .000 | 545.28500 | 91.81320 | 93.09070 | 93.07870 | 2097.75000 |
| .248 | .000 | 545.50000 | 91.79840 | 93.04900 | 93.06060 | 2097.75000 |
| .248 | .000 | 545.67200 | 91.73870 | 92.97830 | 92.97700 | 2097.75000 |
| .248 | .000 | 545.48600 | 91.78340 | 93.03930 | 93.03880 | 2097.75000 |
| | GRADIENT | .00000 | .00000 | .00000 | .00000 | .00000 |

RUN NO. 3164/ 0 RN/L = 1.77 GRADIENT INTERVAL = -5.00/ 5.00

| MACH | ALPHA | TTO | QO | QBI | QB | PAC |
|---|---|---|---|---|---|---|
| .265 | .000 | 546.87700 | 105.16900 | 106.54200 | 106.54800 | 2097.75000 |
| .265 | .000 | 547.47900 | 104.82100 | 106.14900 | 106.13200 | 2097.75000 |
| .265 | .000 | 547.30700 | 104.95400 | 106.33700 | 106.32900 | 2097.75000 |
| .265 | .000 | 547.22100 | 104.98100 | 106.34300 | 106.33600 | 2097.75000 |
| | GRADIENT | .00000 | .00000 | .00000 | .00000 | .00000 |

OA236 (NAAL 759) CONFIGURATION 14 DATA SELECT 3 (TFM317) ( 28 JUN 79 )

REFERENCE DATA

SREF = .0000 SQ.FT. XMRP = .0000 IN. XT
LREF = .0000 INCHES YMRP = .0000 IN. YT
BREF = .0000 INCHES ZMRP = .0000 IN. ZT
SCALE = 1.0000

PARAMETRIC DATA

ALPHA = .000 BETA = .000

RUN NO. 3171/ 0 RN/L = 1.28 GRADIENT INTERVAL = -5.00/ 5.00

| MACH | ALPHA | TTO | QO | QBI | QB | PAC |
|---|---|---|---|---|---|---|
| .188 | .000 | 535.57000 | 52.56590 | 53.26430 | 53.27020 | 2100.57999 |
| .188 | .000 | 535.57000 | 52.53640 | 53.22240 | 53.24600 | 2100.57999 |
| .188 | .000 | 535.61400 | 52.58810 | 53.27610 | 53.29440 | 2100.57999 |
| .188 | .000 | 535.58500 | 52.56340 | 53.25430 | 53.27020 | 2100.57999 |
| | GRADIENT | .00000 | .00000 | .00000 | .00000 | .00000 |

RUN NO. 3172/ 0 RN/L = 1.57 GRADIENT INTERVAL = -5.00/ 5.00

| MACH | ALPHA | TTO | QO | QBI | QB | PAC |
|---|---|---|---|---|---|---|
| .230 | .000 | 537.82200 | 78.58590 | 79.71750 | 79.70730 | 2100.57999 |
| .229 | .000 | 537.95100 | 78.57110 | 79.68760 | 79.71360 | 2100.57999 |
| .230 | .000 | 538.03800 | 78.61570 | 79.74110 | 79.74330 | 2100.57999 |
| .230 | .000 | 537.93700 | 78.59090 | 79.71540 | 79.72140 | 2100.57999 |
| | GRADIENT | .00000 | .00000 | .00000 | .00000 | .00000 |

RUN NO. 3173/ 0 RN/L = 1.69 GRADIENT INTERVAL = -5.00/ 5.00

| MACH | ALPHA | TTO | QO | QBI | QB | PAC |
|---|---|---|---|---|---|---|
| .248 | .000 | 539.07500 | 91.73120 | 92.86050 | 92.85750 | 2100.57999 |
| .248 | .000 | 539.76600 | 91.79080 | 92.91940 | 92.92340 | 2100.57999 |
| .248 | .000 | 539.85300 | 91.67170 | 92.80160 | 92.80400 | 2100.57999 |
| .248 | .000 | 539.56400 | 91.73120 | 92.86050 | 92.86160 | 2100.57999 |
| | GRADIENT | .00000 | .00000 | .00000 | .00000 | .00000 |

RUN NO. 3174/ 0 RN/L = 1.80 GRADIENT INTERVAL = -5.00/ 5.00

| MACH | ALPHA | TTO | QO | QBI | QB | PAC |
|---|---|---|---|---|---|---|
| .265 | .000 | 541.19100 | 104.88700 | 105.99500 | 105.98100 | 2100.57999 |
| .265 | .000 | 541.66500 | 104.99800 | 106.16500 | 106.21500 | 2100.57999 |
| .265 | .000 | 541.49300 | 104.96100 | 106.12400 | 106.15500 | 2100.57999 |
| .265 | .000 | 541.44900 | 104.94900 | 106.09500 | 106.11700 | 2100.57999 |
| | GRADIENT | .00000 | .00000 | .00000 | .00000 | .00000 |