(NASA-CR-162918) ADVANCED CONCEPT STUDIES FOR SUPERSONIC VEHICLES Final Oral Review (Boeing Commercial Airplane Co., Seattle) 311 p

N80-73143

Unclas
00/05 45517

BEST AVAILABLE COPY

BEST AVAILABLE COPY

RECEIVED
NASA STI FACILITY
ACCESS DEPT.

ADVANCED CONCEPT STUDIES FOR SUPERSONIC VEHICLES

FINAL ORAL REVIEW
CONTRACT NAS1-14623
NOVEMBER 18, 1977

NASA LANGLEY RESEARCH CENTER
HAMPTON, VIRGINIA

D6-46307

BOEING COMMERCIAL AIRPLANE COMPANY

N80-73143
308 p.

STUDY FUNDING

STUDY	NASA	BOEING
CONFIGURATION	●	●
STRUCTURES	●	●
AIRCRAFT SYSTEMS		●
AIRPLANE NOISE DATA	●	●
PROPULSION SYSTEM DEFINITION AND PERFORMANCE	●	●
INLET DESIGN	●	
FUEL SYSTEM AND THERMAL MANAGEMENT	●	
ADAPTIVE LANDING GEAR	●	
EFFECTS OF ENGINE OVERSIZING FOR LOW NOISE	●	
COMPOSITE MATERIAL EMPENNAGE	●	
AIRPLANE FLUTTER SENSITIVITIES	●	●
FATIGUE ANALYSIS OF BLENDED WING/ FUSELAGE STRUCTURE	●	●
SYSTEM COST AND WEIGHT COMPARISON	●	
WING PLANFORM	●	
LOW SPEED WING ANALYSIS		●
MECHANICAL LEADING EDGE FLAP DESIGN		●
HORIZONTAL TAIL ACTUATION SYSTEM		●
SUBSCALE RESEARCH AIRPLANE	●	●
SUPERSONIC WIND TUNNEL TESTING		●

1977 ACCOMPLISHMENTS – SST

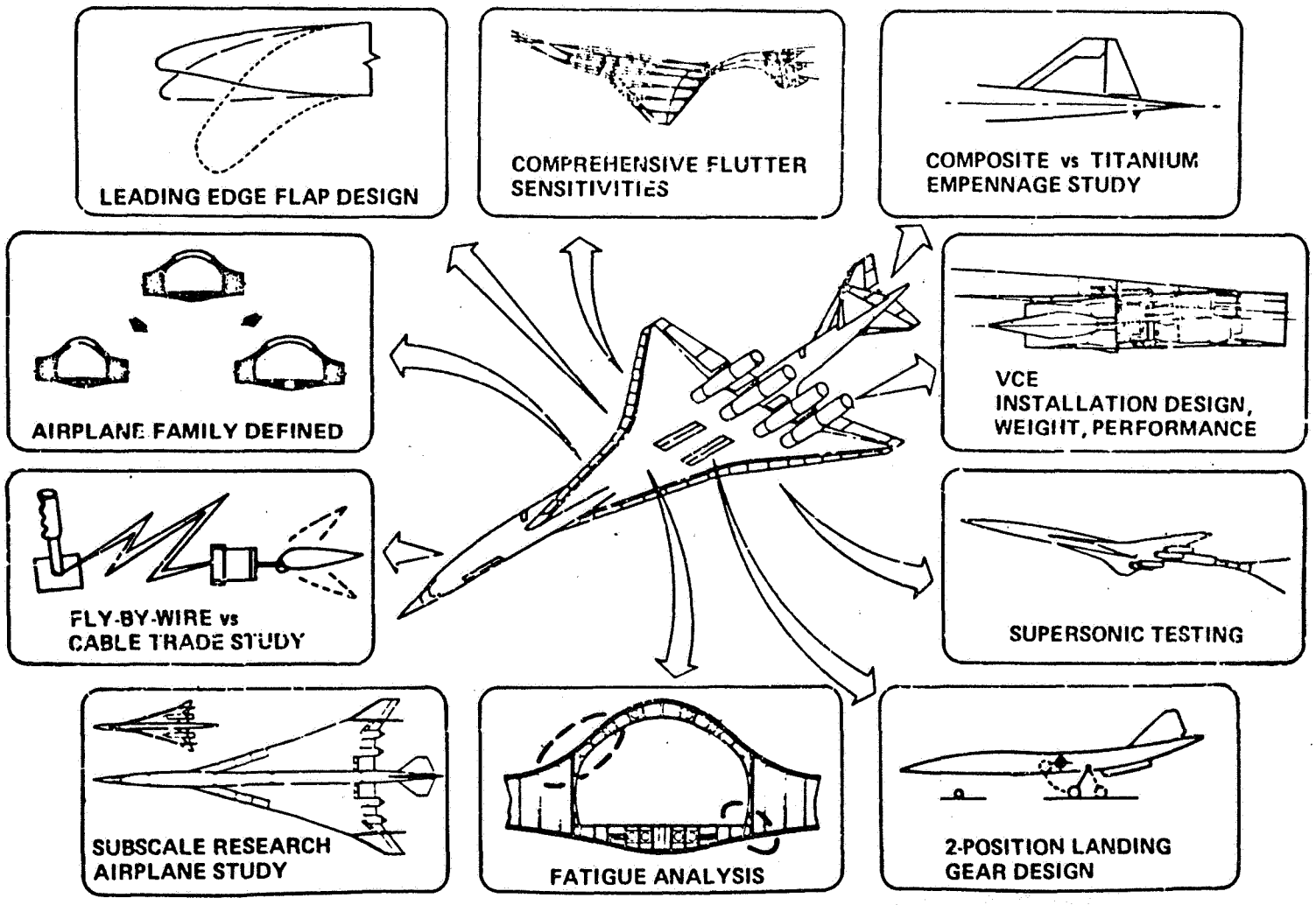

EFFECT OF NOISE SOURCES ON NOMINAL TAKEOFF COMMUNITY NOISE (BOEING METHOD)

- ENGINE CUTBACK, 50 PERCENT
- NOMINAL JET NOISE (EPNdB) = 106
- NOMINAL TOTAL NOISE (EPNdB) = 108

EFFECT OF NOISE CALCULATION METHOD ON NOMINAL AIRPLANE NOISE (△EPNdB)

MEASURING POINT	GE ENGINE BOEING ESTIMATE	P&WA ENGINE BOEING ESTIMATE
• COMMUNITY	+ 3.0	+ 4.0
• SIDELINE	+ 4.0	N/A
• APPROACH	+ 4.5	+ 3.0

EFFECT OF ENGINE OVERSIZE ON AIRPLANE NOISE CONSTANT PAYLOAD–RANGE

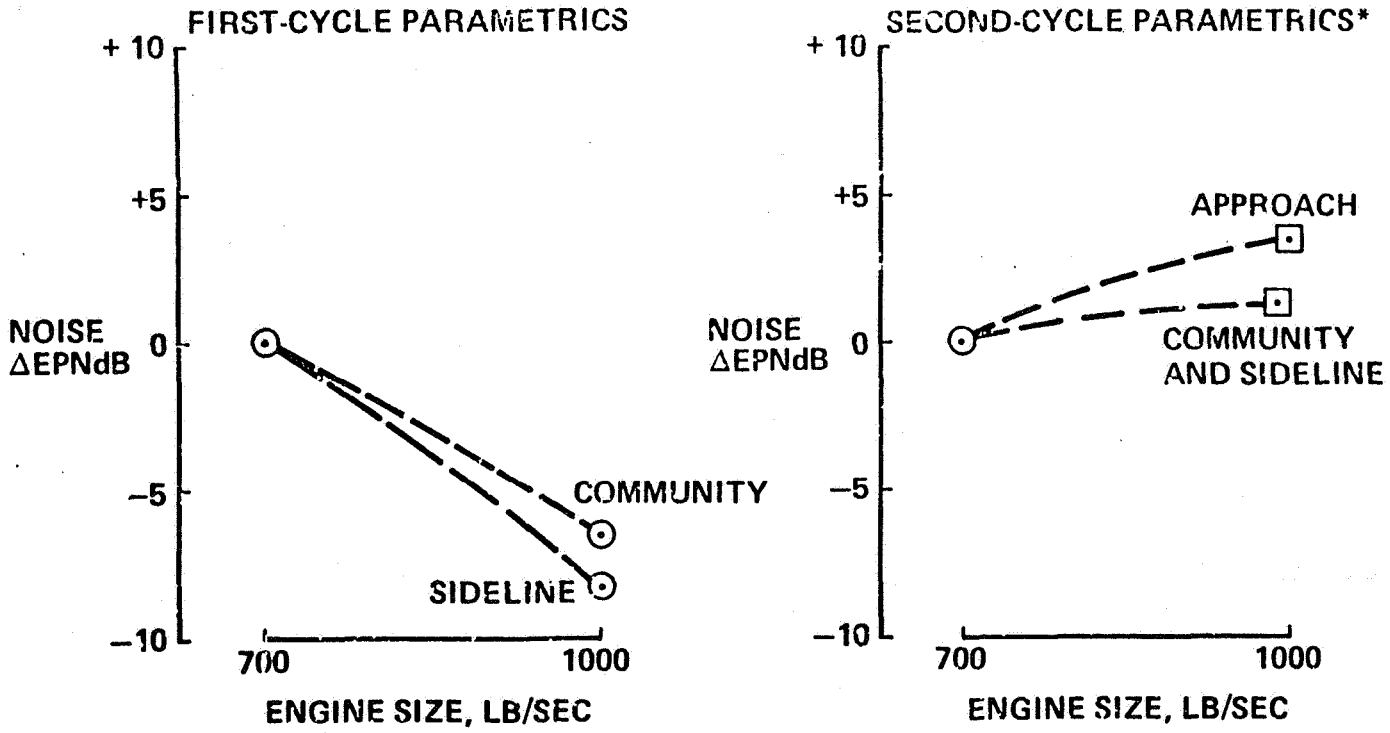

*INCLUDES AIRPLANE BALANCE, GEAR FLOTATION, FLUTTER, LIFT INTERFERENCE, CORE NOISE, INLET UNCHOKING, ETC.

HIGHLY SWEPT PLANFORM

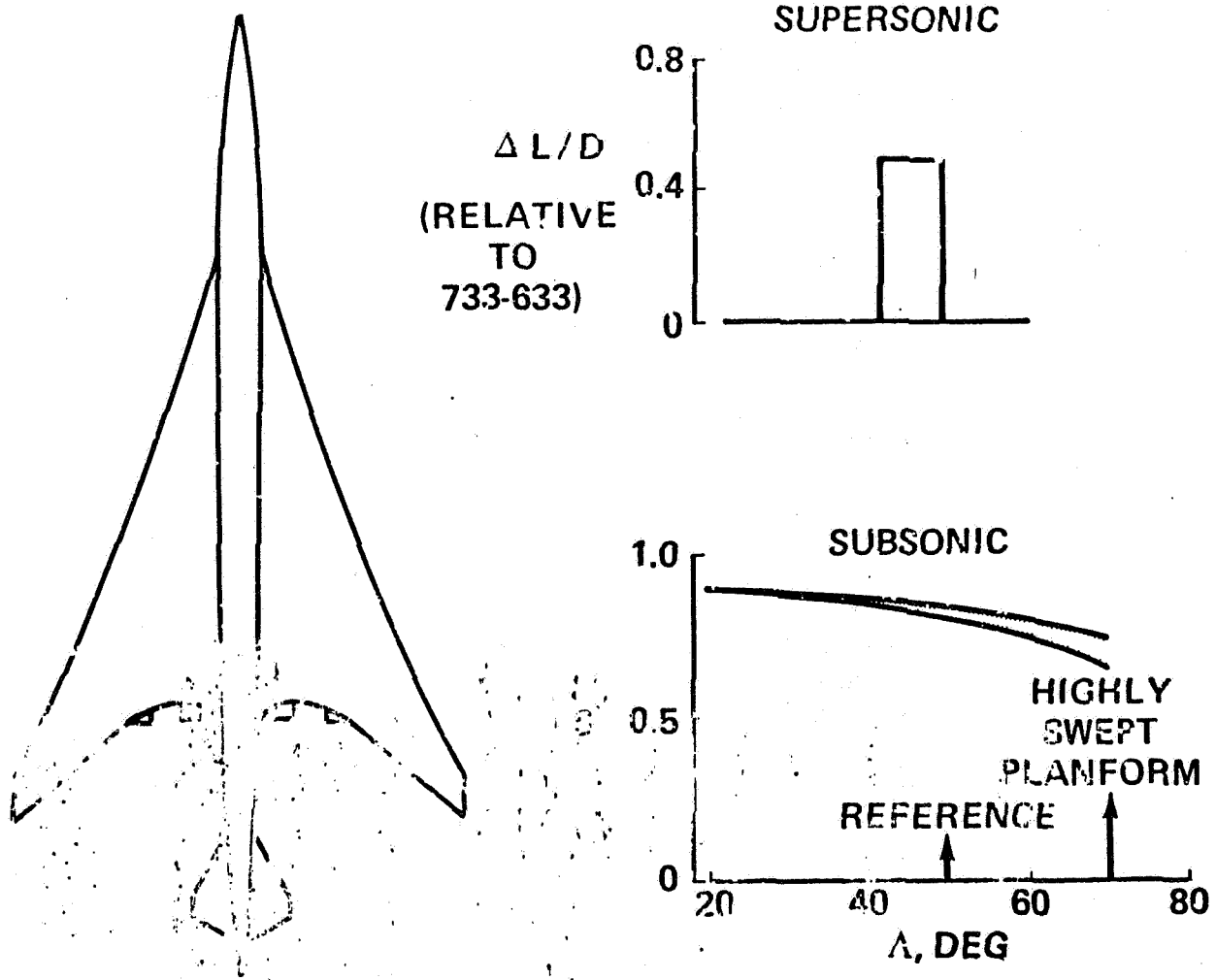

FINAL BRIEFING OUTLINE

SUMMARY	A. SIGALLA
AIRPLANE DESCRIPTION	
CONFIGURATION	F. NEUMANN
STRUCTURES	J. HOY
AIRCRAFT SYSTEMS	D. CLIFFORD
AIRPLANE NOISE DATA	J. O'KEEFE
PROPULSION SYSTEM DEFINITION AND PERFORMANCE	G. EVELYN
INLET DESIGN	
FUEL SYSTEM AND THERMAL MANAGEMENT	
GENERAL ELECTRIC–PROPULSION DATA	R. ALLEN
PRATT & WHITNEY AIRCRAFT–PROPULSION DATA	R. HOWLETT
DESIGN STUDIES	
ADAPTIVE LANDING GEAR STUDY	F. NEUMANN
EFFECTS OF ENGINE OVERSIZING	J. VACHAL
COMPOSITE MATERIAL EMPENNAGE	J. NISBET
AIRPLANE FLUTTER SENSITIVITIES	
FATIGUE ANALYSIS OF BLENDED WING/ FUSELAGE STRUCTURE	
SYSTEM COST AND WEIGHT COMPARISON	D. CLIFFORD
WING PLANFORM STUDY	W. MIDDLETON
CONCLUSIONS	A. SIGALLA

AIRPLANE DESCRIPTION

- CONFIGURATION
- STRUCTURE
- SYSTEMS
- NOISE
- FUEL SYSTEM AND THERMAL MANAGEMENT
- PROPULSION AND PERFORMANCE

CONFIGURATION

- CONCEPT EVOLVED FROM 1971 DATA BASE
- 750 000 LB GROSS WEIGHT
- 270 PASSENGERS AT TRANSPACIFIC RANGE
- VARIABLE CYCLE ENGINE (GE AND/OR P&WA)
- IMPROVED WING AND BLENDED WING-BODY
- ADVANCED STRUCTURAL CONCEPTS AND SYSTEMS
- HIGH DERIVATIVE AIRCRAFT POTENTIAL

GENERAL ARRANGEMENT

MODEL 733-633

- MTW = 750 000 LB
- WING AREA = 9287 FT^2
- WING SPAN = 141 FT 8 IN.
- LENGTH OVERALL = 293 FT 4 IN.
- ENGINE AIRFLOW = 700 LB/SEC

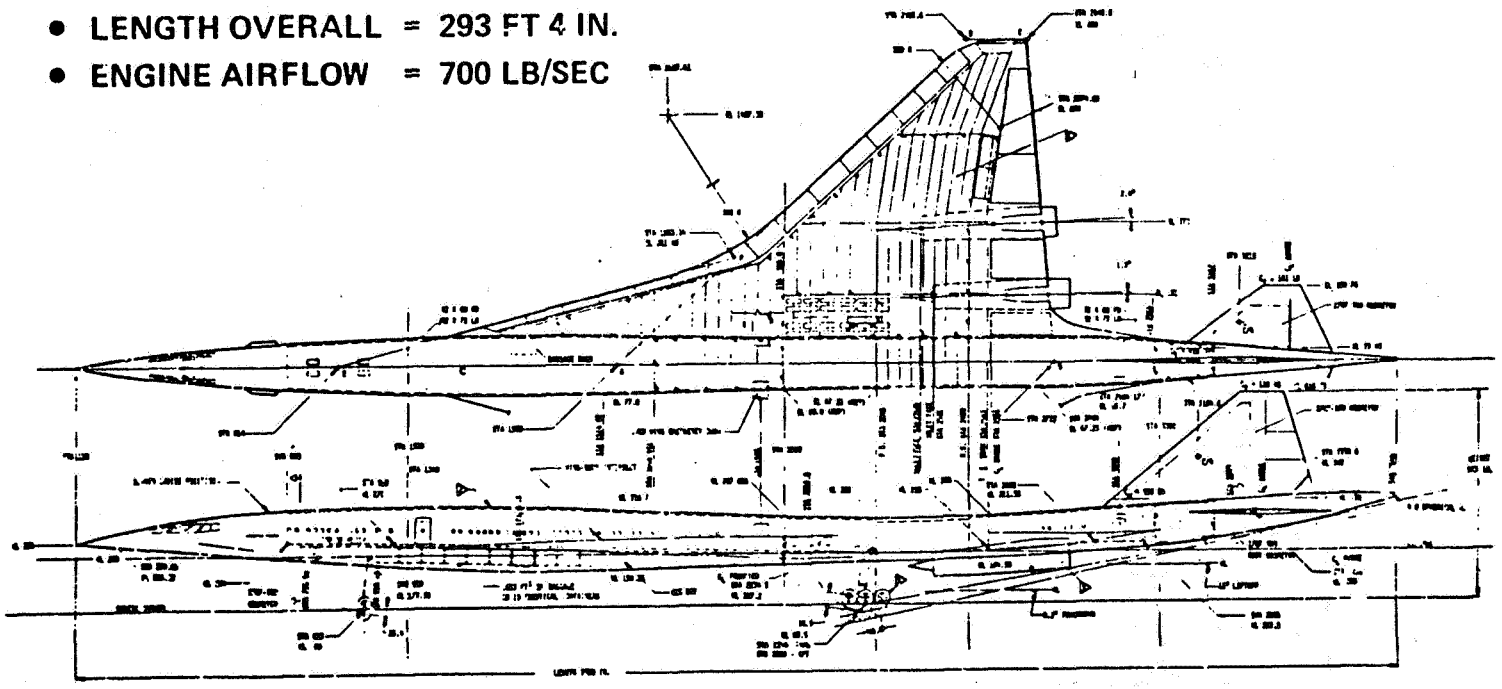

WING CHANGES

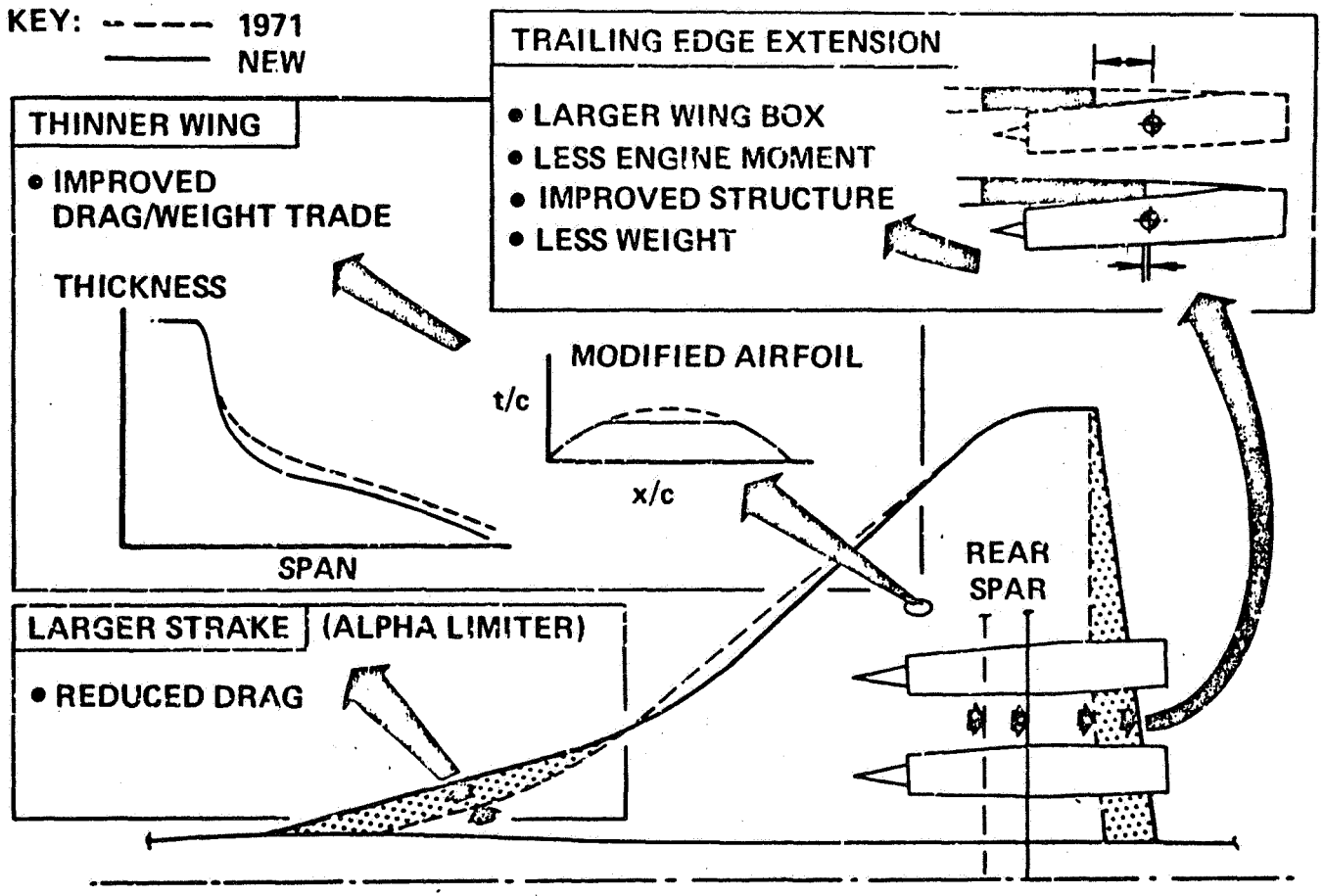

BLENDED WING– FUSELAGE

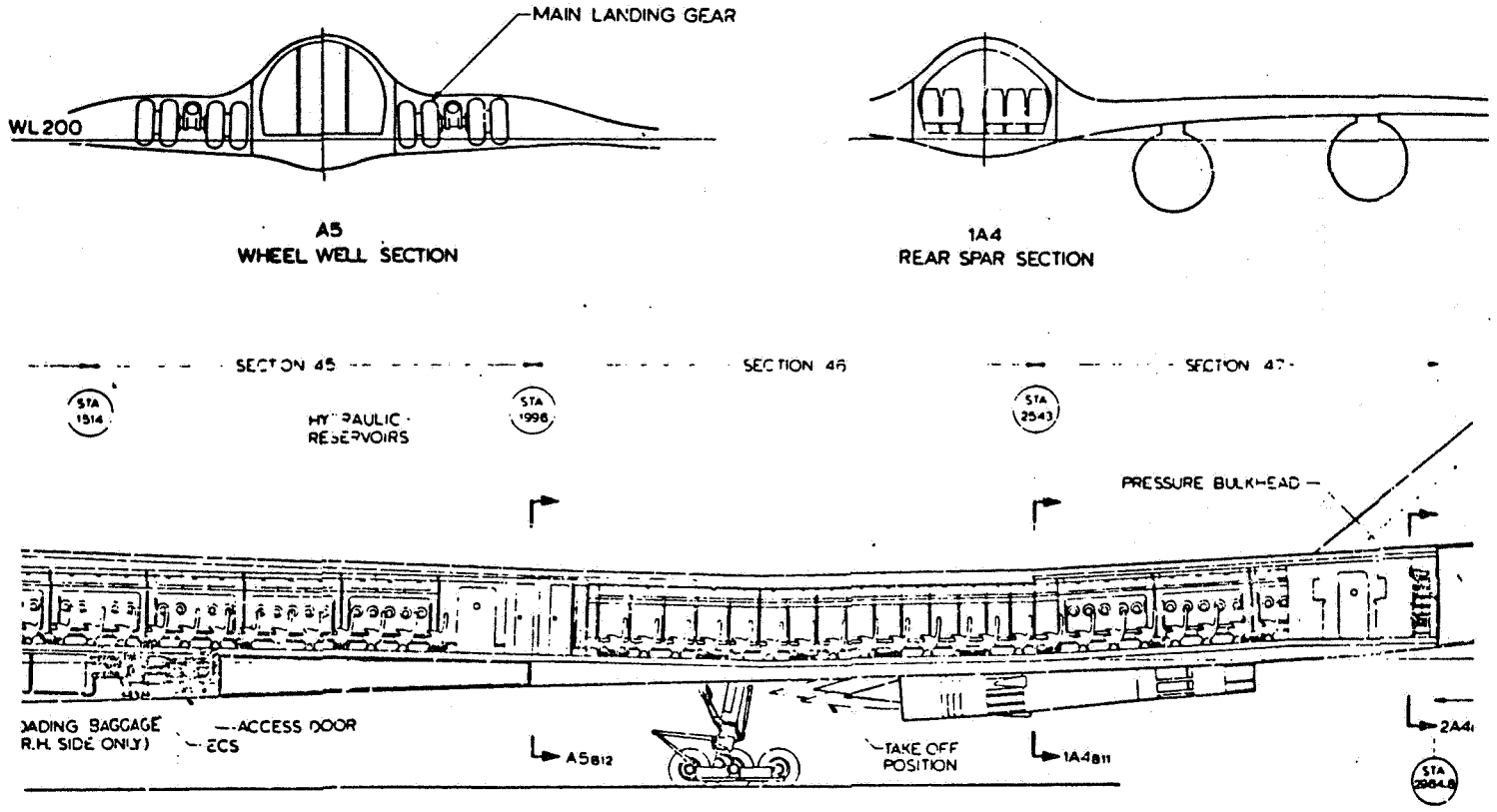

MOCKUP OF BLENDED CABIN SECTION

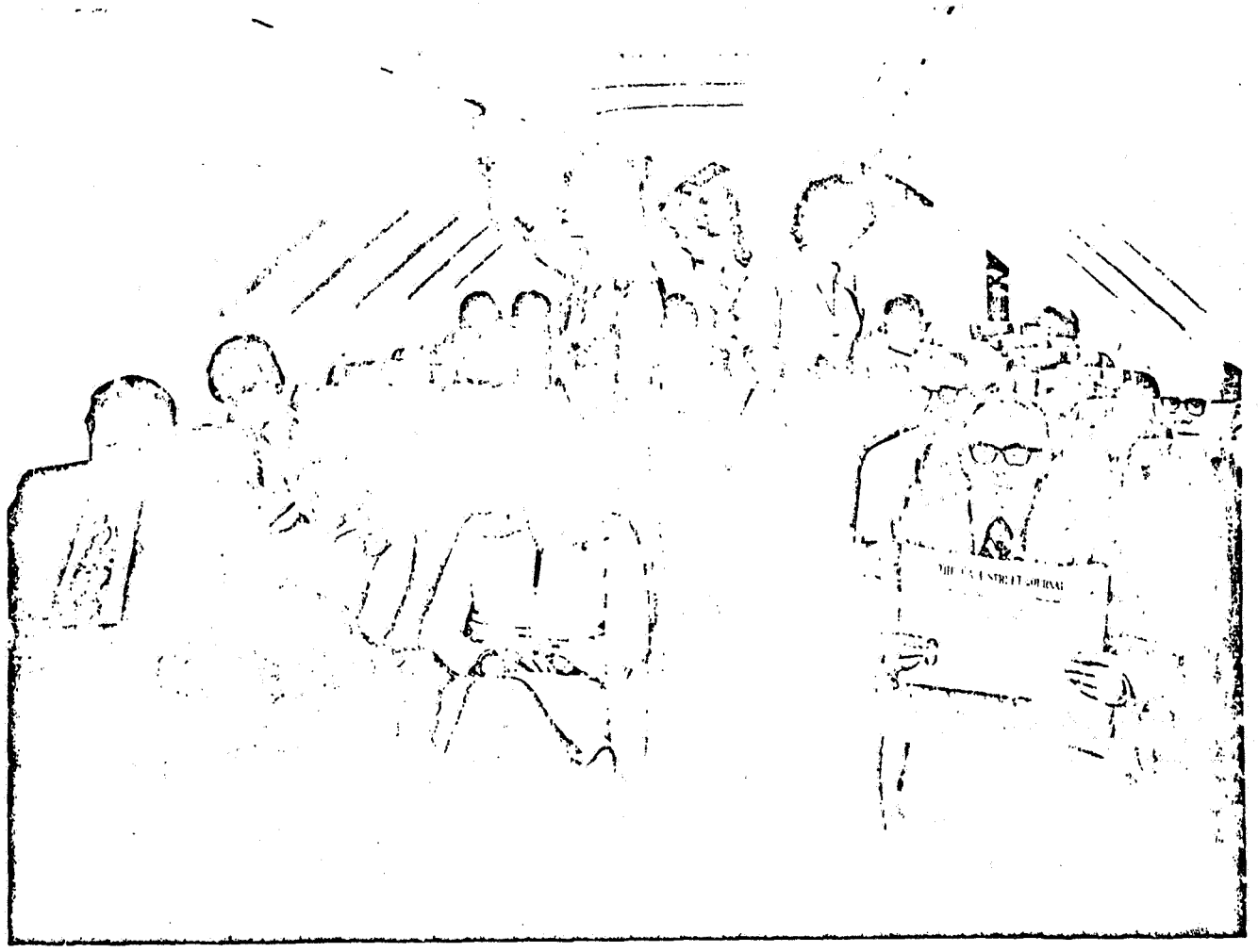

WIND TUNNEL TESTING–
BOEING SUPERSONIC WIND TUNNEL

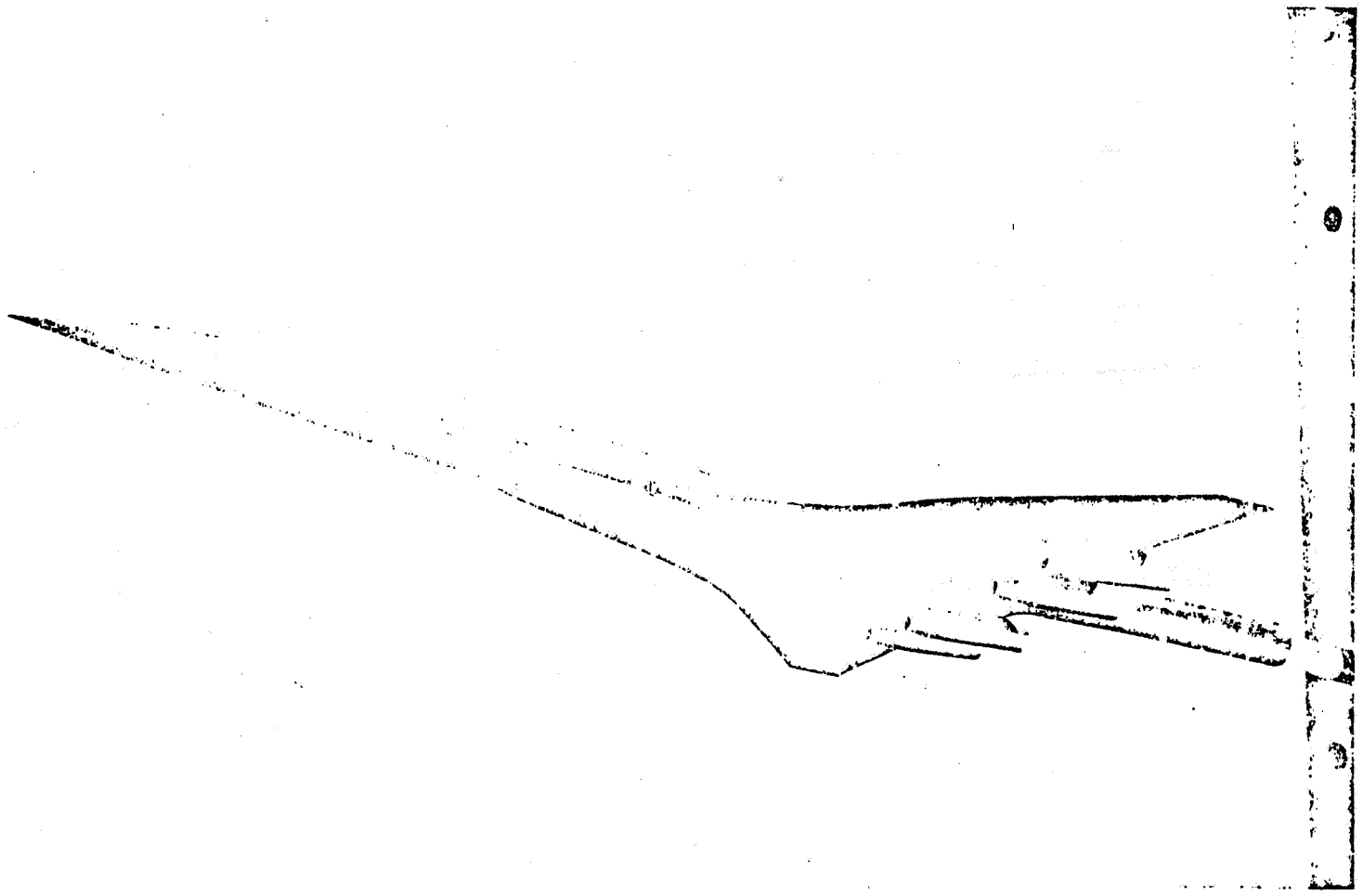

SUPERSONIC LIFT/DRAG

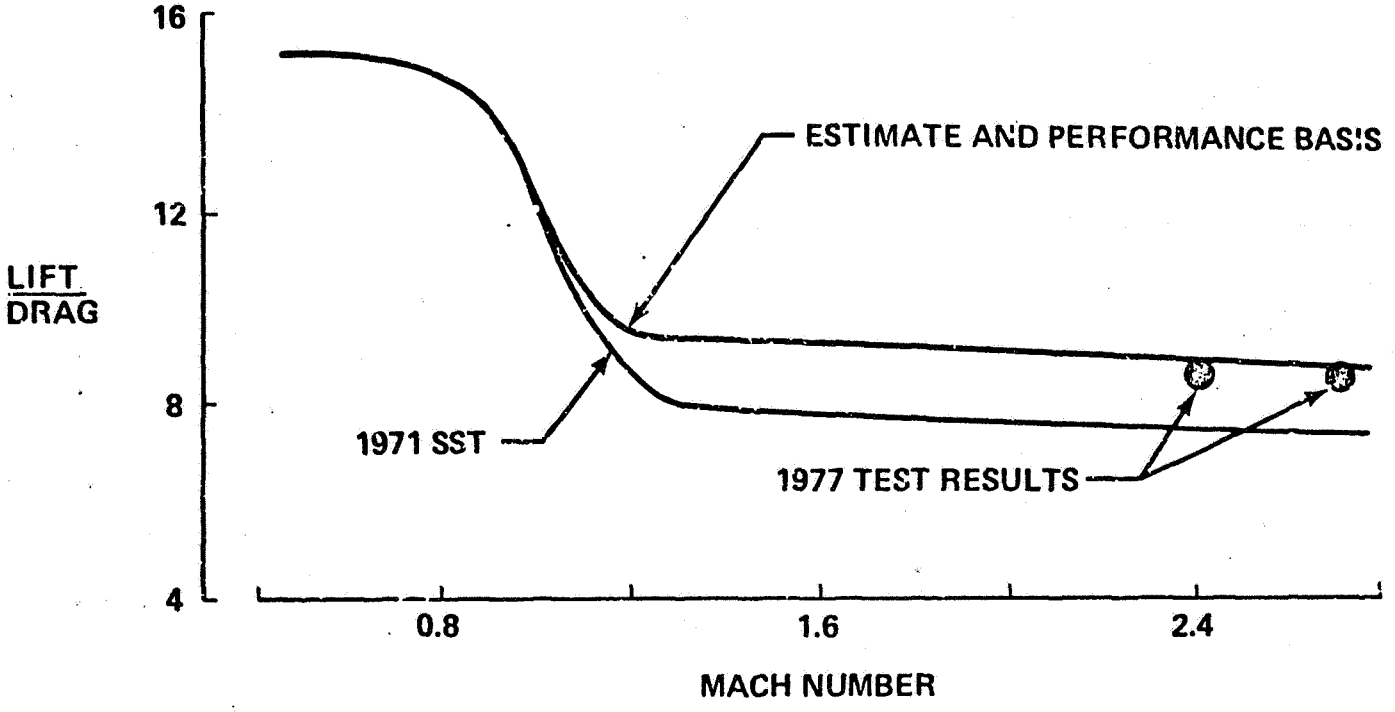

BLENDED CONFIGURATION DEVELOPMENT

1975	1976	1977
	STRUCTURAL EFFICIENCY ✓ • INNOVATIVE DESIGN • ADVANCED MANUFACTURING TECHNIQUES • STRUCTURE ANALYSIS • WEIGHT, FLUTTER	FATIGUE ✓ WIND TUNNEL TESTING FAMILY CONCEPT
	MANUFACTURING COST: ✓ • COMPLEXITY COMPARISON	
	PASSENGER EVACUATION: ✓ • DESIGN • FULL-SCALE MOCKUP • TESTS	
	PASSENGER ACCEPTANCE: ✓ • INTERIOR/SYSTEM DESIGN • FULL-SCALE MOCKUP • NO-WINDOW OPTIONS	
	GROUND SERVICING ✓	

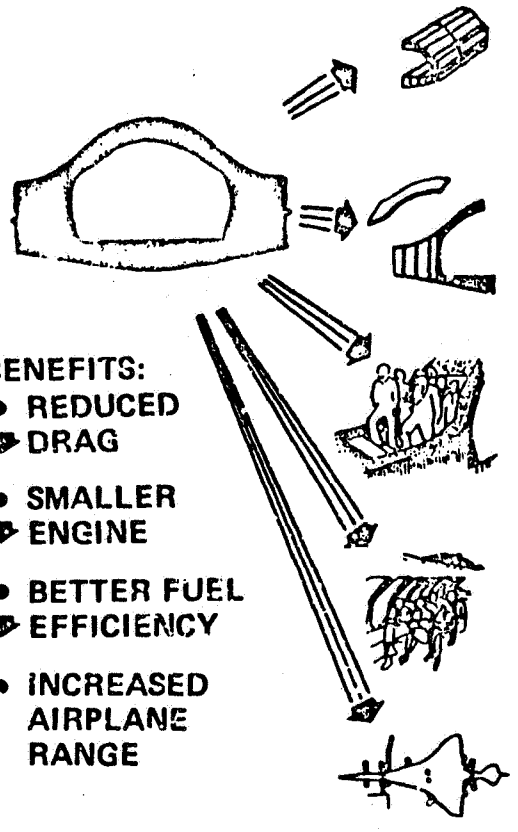

BENEFITS:
- REDUCED DRAG
- SMALLER ENGINE
- BETTER FUEL EFFICIENCY
- INCREASED AIRPLANE RANGE

DETAIL DEFINITION

- FULL SPAN FLAPS
- DIGITAL FLY-BY-WIRE CONTROLS
- TWO-POST LANDING GEAR (ADAPTIVE)

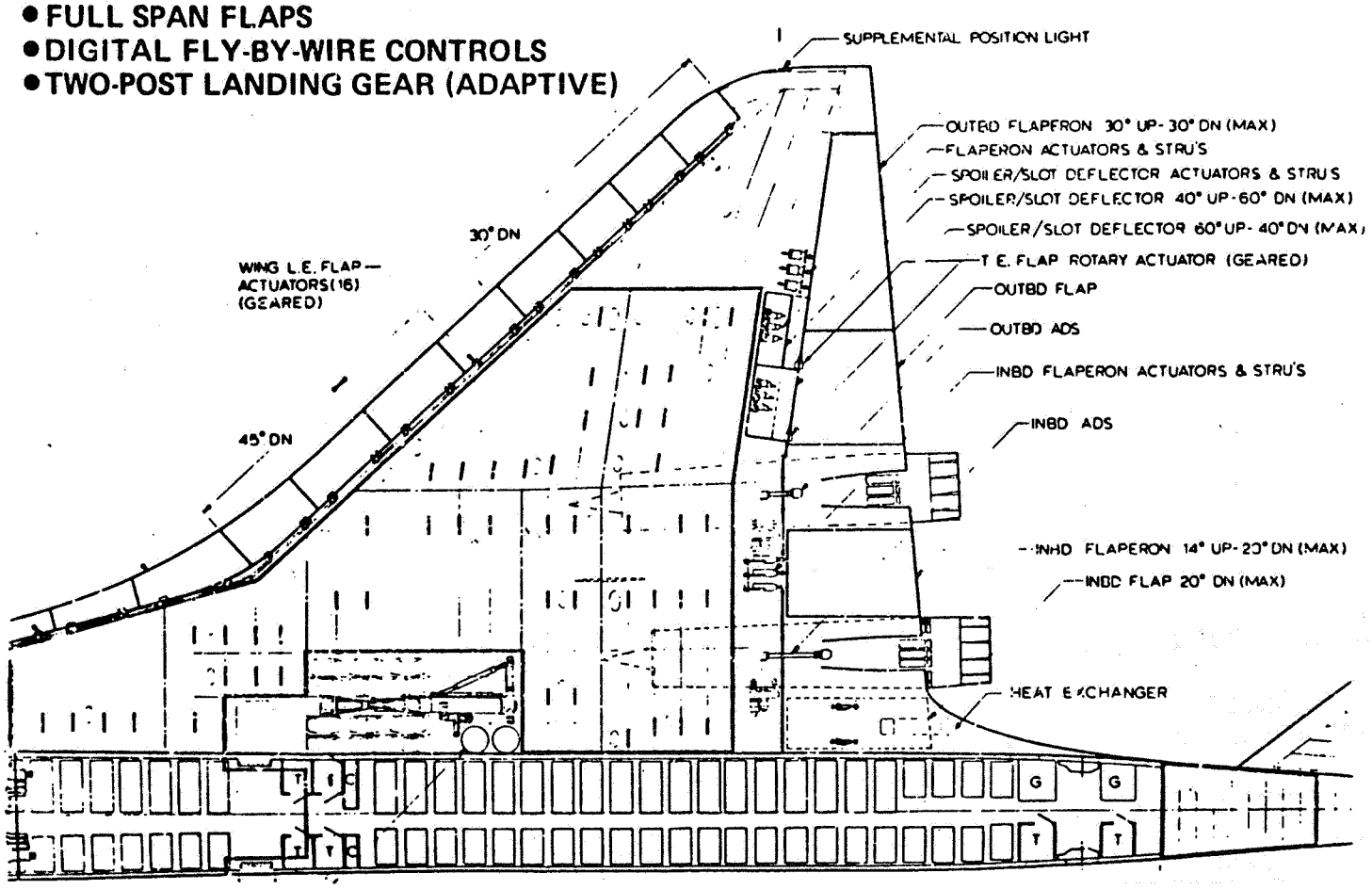

FUEL TANK DEFINITION

- TANK CAPACITY FOR TRANSPACIFIC RANGE (382 300 LB)
- LOW THERMAL CONDUCTIVITY Ti-SANDWICH
- FUEL TRANSFER FOR CG CONTROL

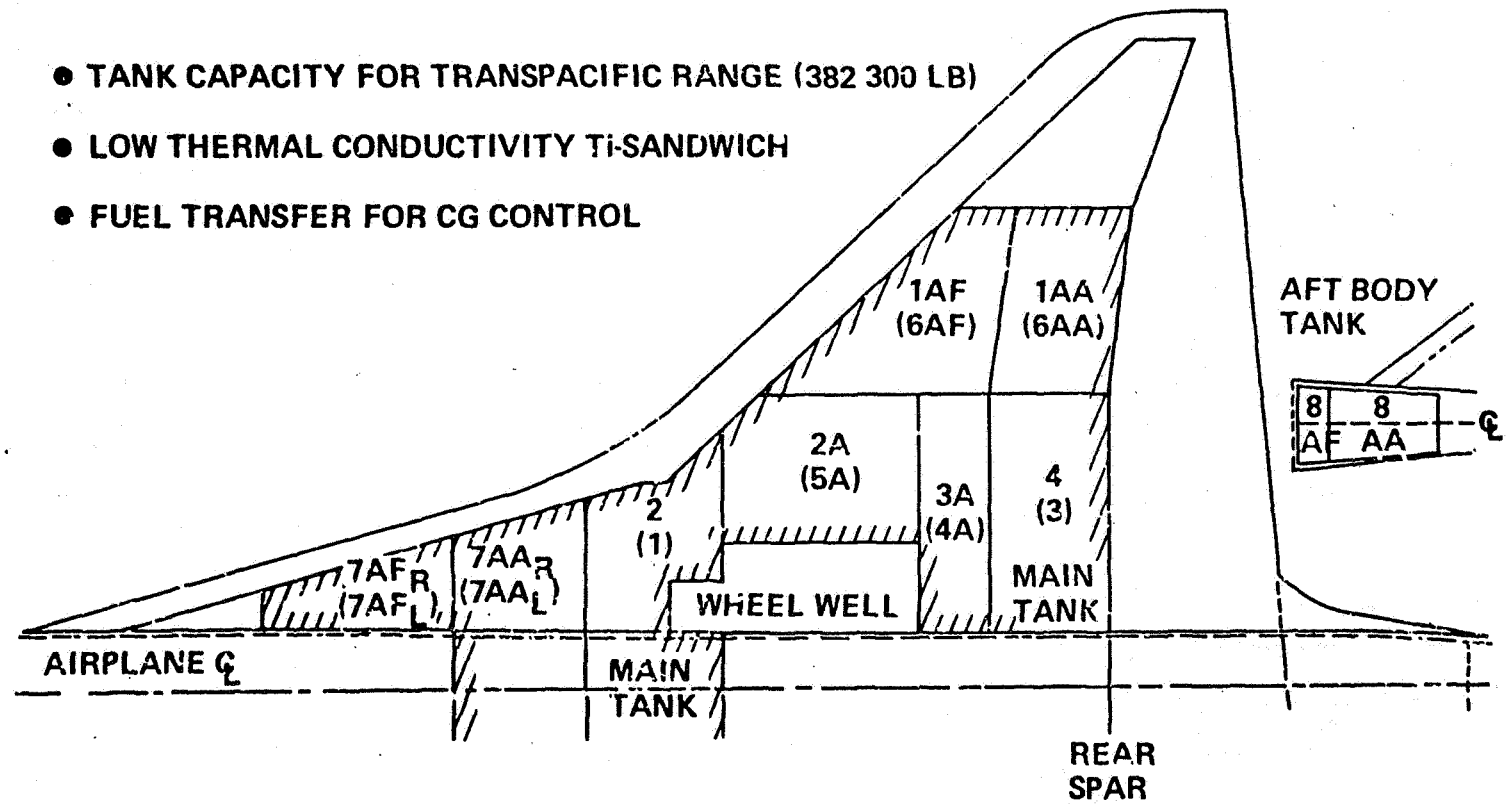

DETAIL DEFINITION

- NACELLES UNDERWING NEAR TRAILING EDGE
- OPTIMIZED FOR DRAG/BALANCE/FLUTTER, ETC.
- FAVORABLE INLET FLOW AND INTERFERENCE DRAG
- GE OR P&WA VCE ENGINES
- NACELLE INSTALLATION AND DESIGN

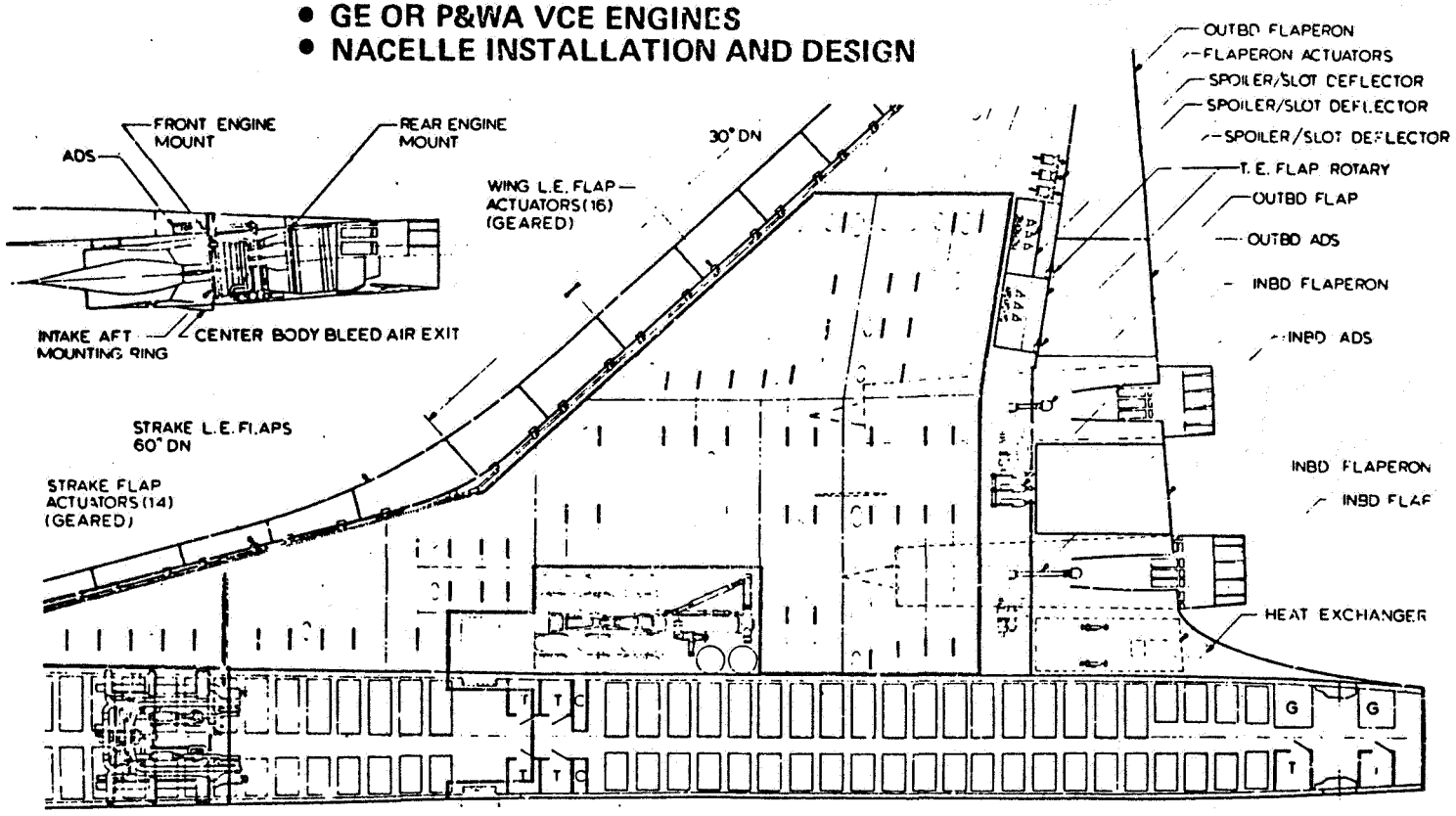

EFFECT OF OUTBOARD NACELLE LOCATION ON FLUTTER SPEED AND DRAG

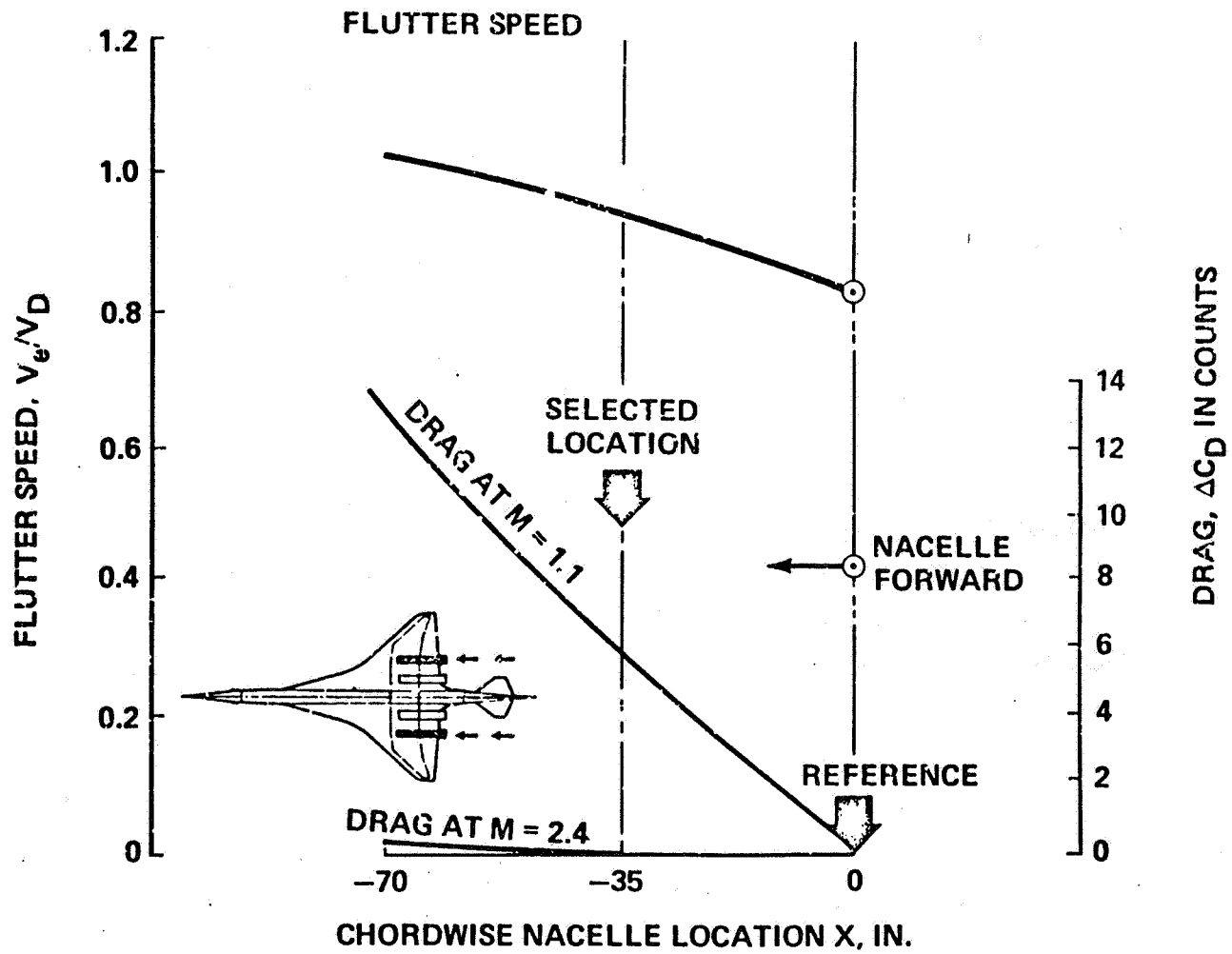

DETAIL DEFINITION

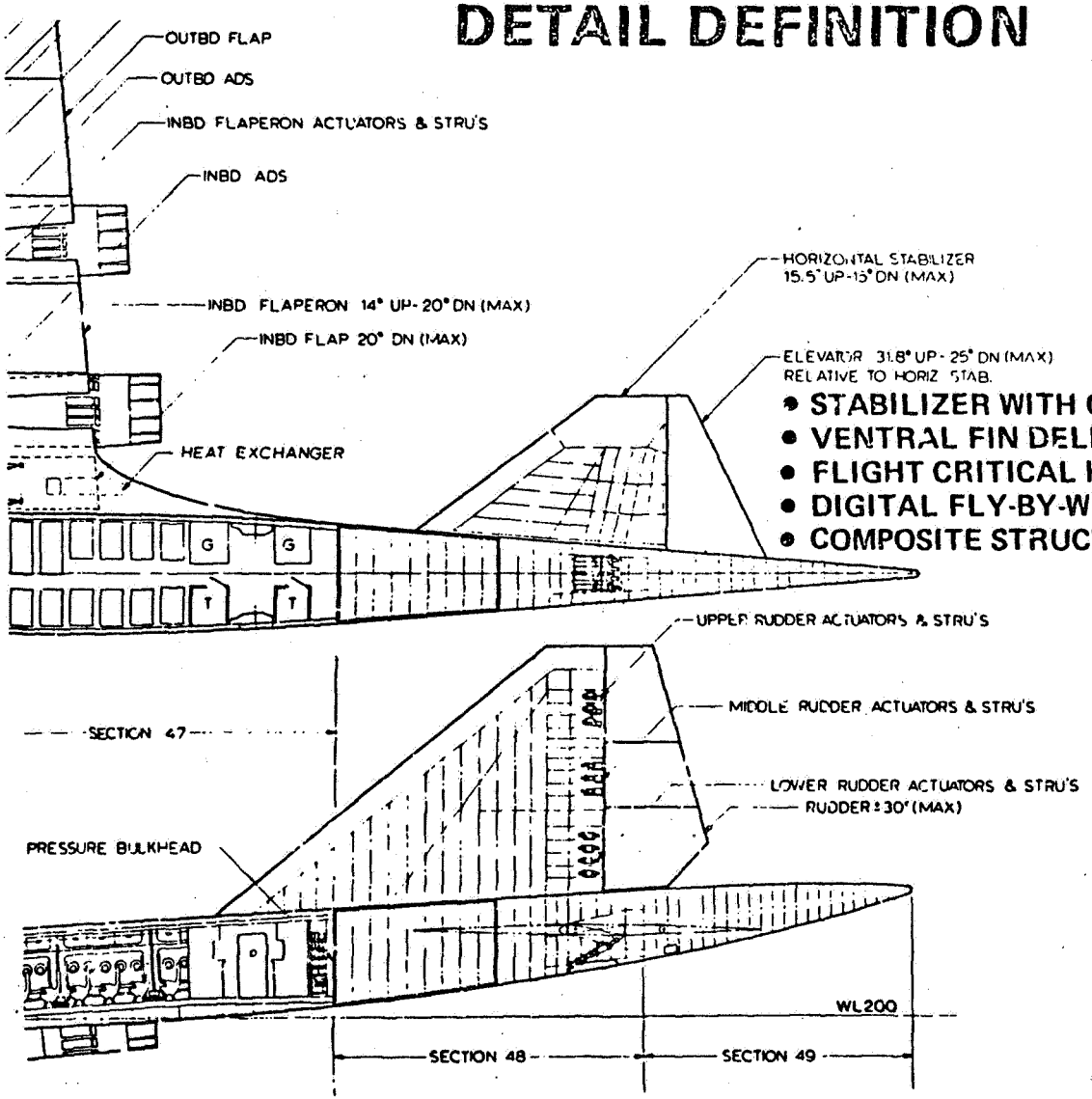

- STABILIZER WITH GEARED ELEVATOR
- VENTRAL FIN DELETED
- FLIGHT CRITICAL HSAS
- DIGITAL FLY-BY-WIRE CONTROL
- COMPOSITE STRUCTURE EMPENNAGE

ADAPTIVE LANDING GEAR—SELECTED CONCEPT

- IMPROVED TAKEOFF ROTATION, LESS NOISE
- NO ACCIDENTAL TIP-UP DURING LOADING

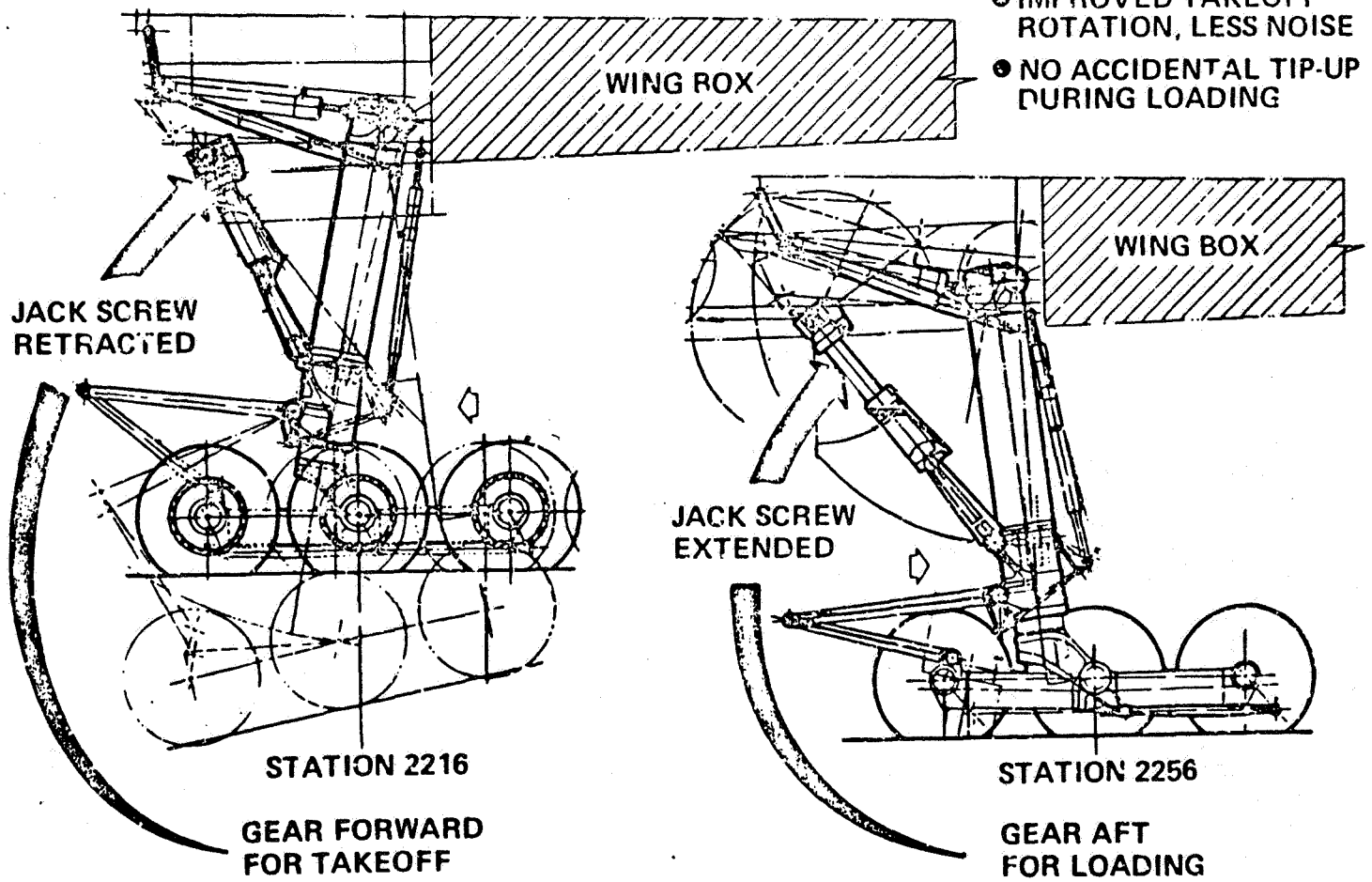

DETAIL DEFINITION

- 270 PASSENGERS, SINGLE CLASS
- SIX ABREAST SEATING IN FOREBODY
- COMPOSITE STRUCTURE SEATS
- UNDERFLOOR BAGGAGE, CONTAINERIZED
- WINDOWS
- ENVIRONMENTAL CONTROL SYSTEM (ECS)

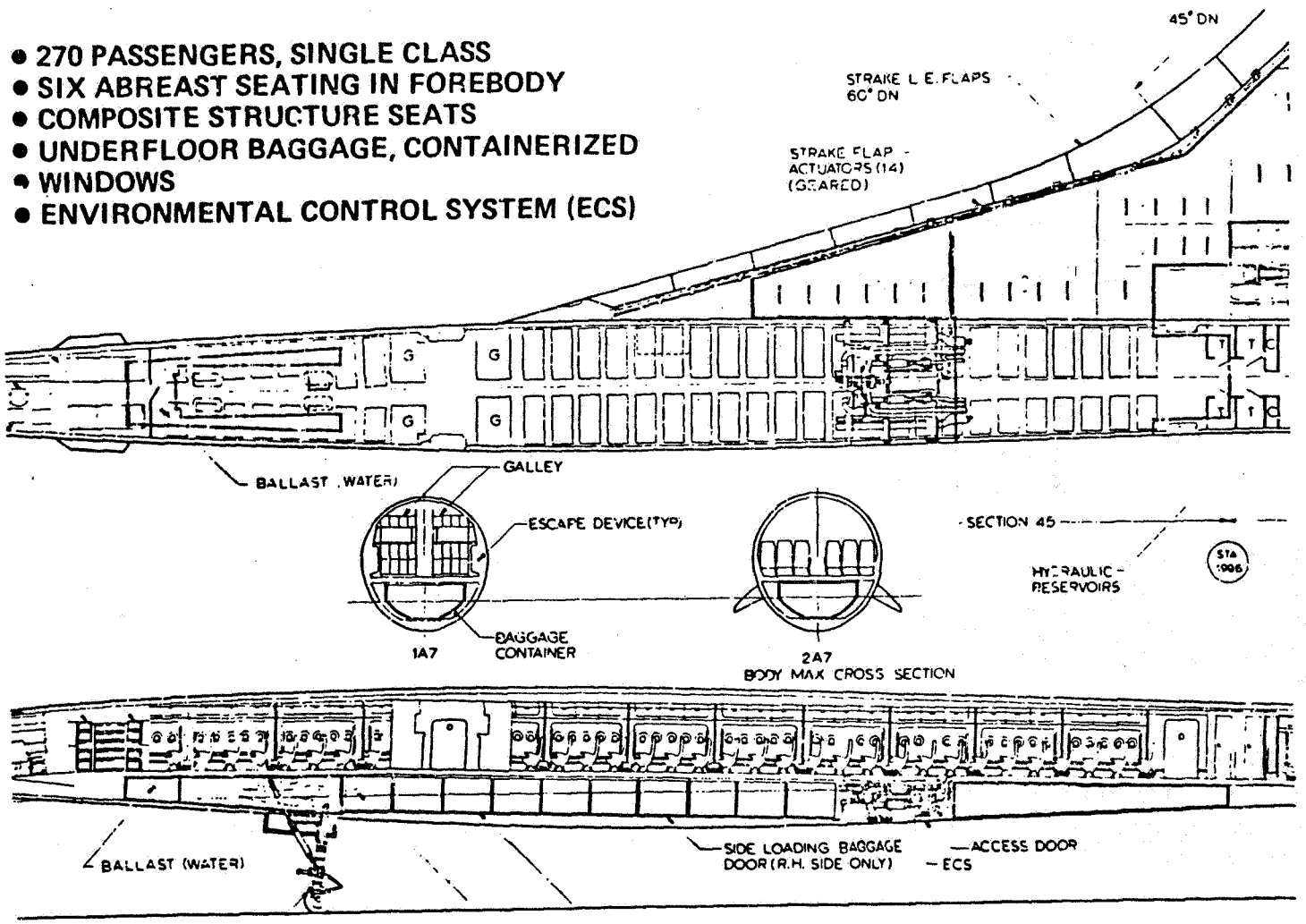

DETAIL DEFINITION

- DROOP SNOOT FOR DIRECT PILOT VISION
- AUTOMATIC FLIGHT MANAGEMENT SYSTEM
- INTEGRATED DIGITAL TECHNOLOGY
- TWO-POST GEAR—FLOTATION FOR TODAY'S RUNWAYS

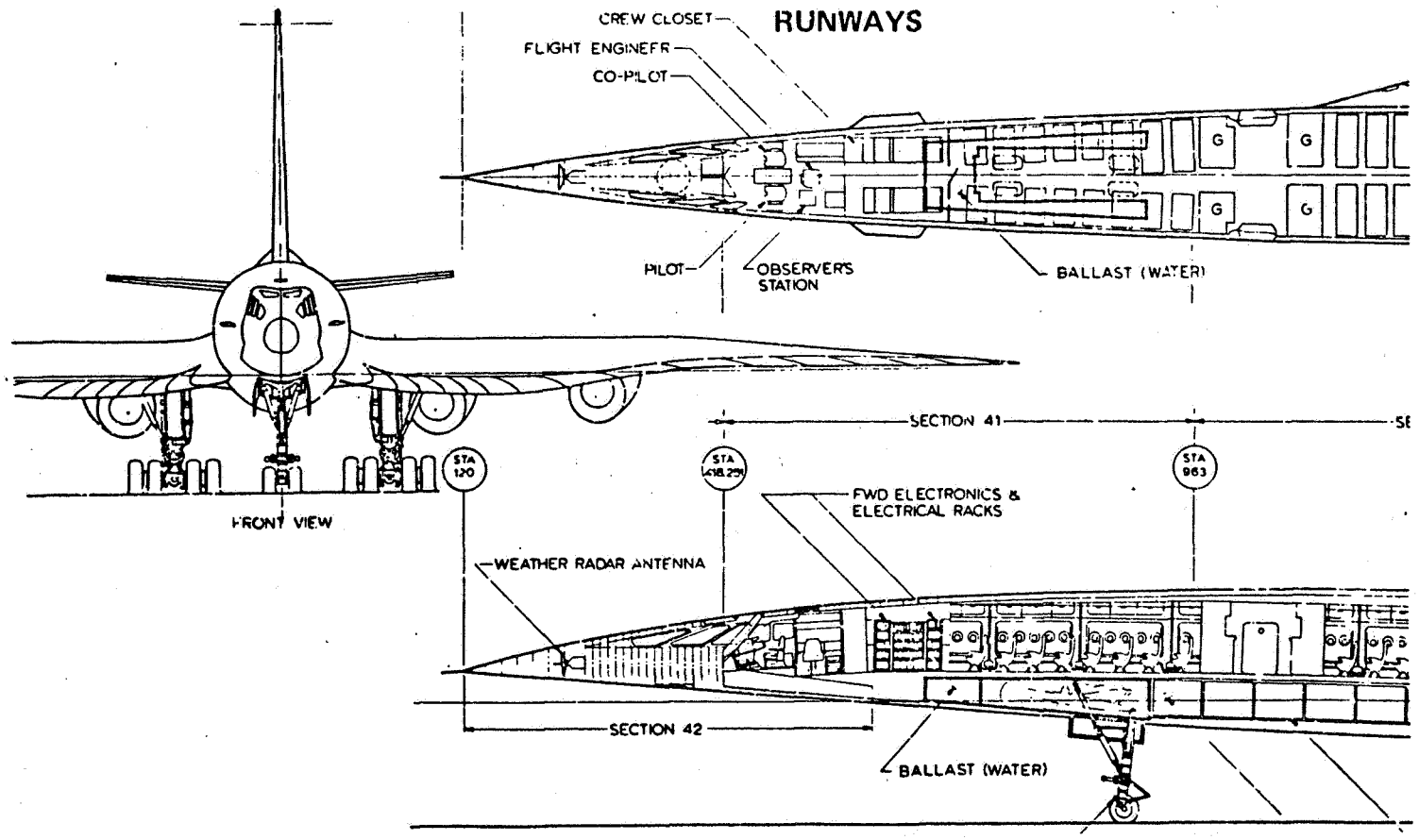

PAYLOAD DERIVATIVES

OBJECTIVES

- FIND UPPER AND LOWER PAYLOAD LIMITS FOR 733-633-TYPE CONFIGURATION DERIVATIVES
- DETERMINE CONFIGURATION IMPACT/ COMMONALITY POTENTIAL

TECHNICAL APPROACH

- "FAMILY" CONCEPT:
  - FUSELAGE CHANGE ONLY
  - COMMON WING, EMPENNAGE, PROPULSION, LANDING GEAR, ETC.

MARKET AREAS FOR NEXT SST

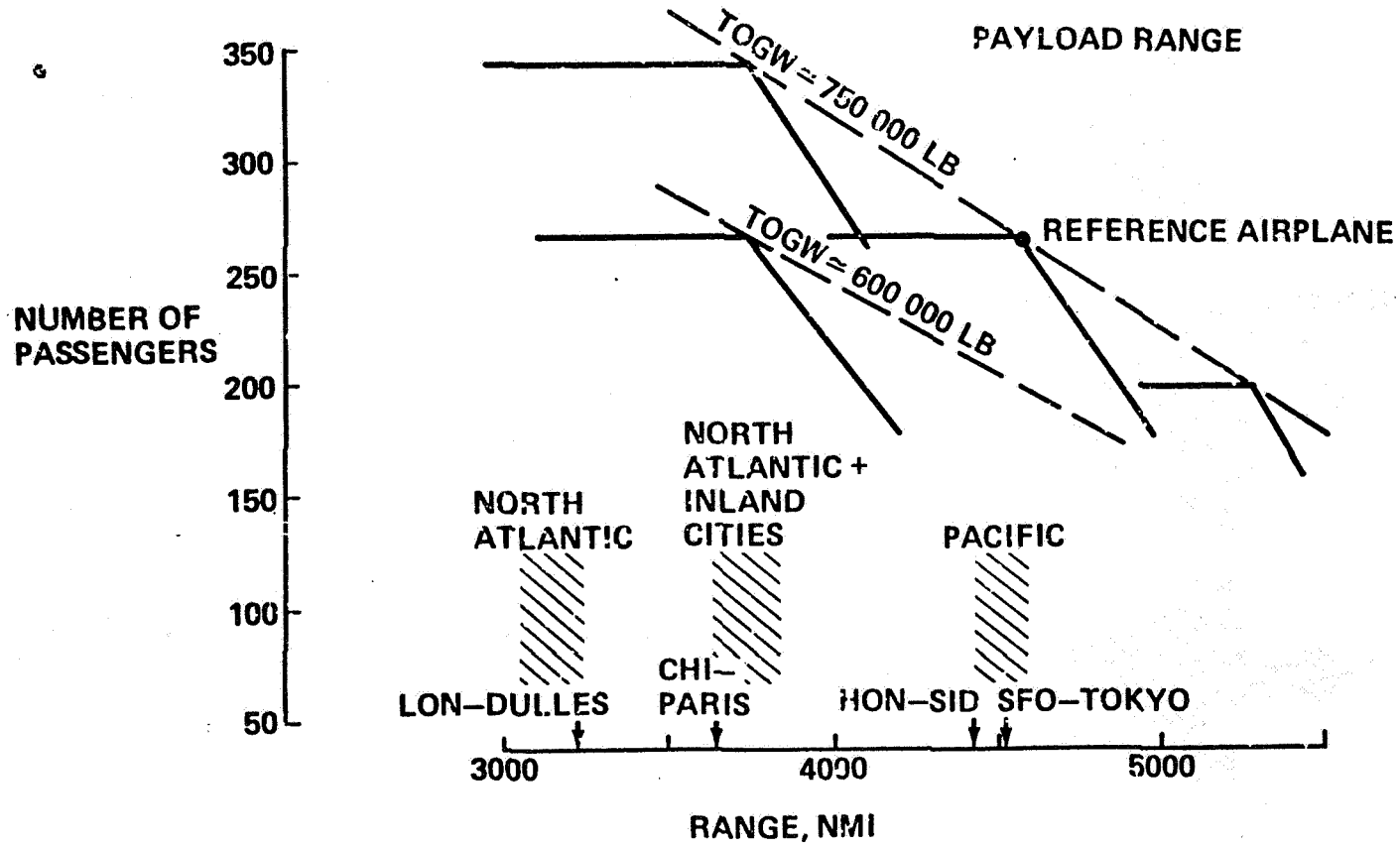

FUTURE SST "FAMILY"

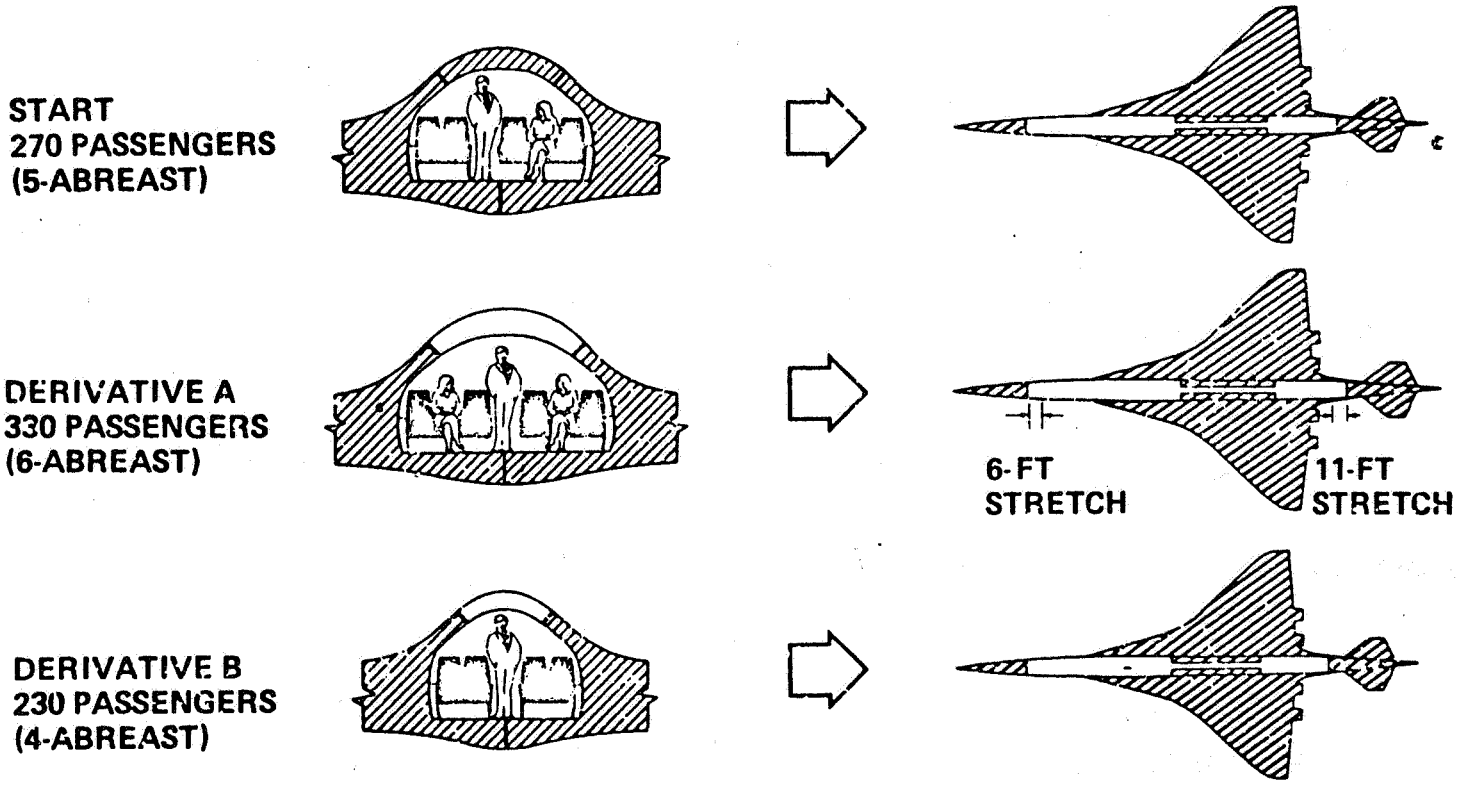

SHADED PARTS ARE COMMON TO ALL AIRPLANES OF FAMILY

DERIVATIVE AIRCRAFT PROPOSAL
LATERAL FUSELAGE MODIFICATION

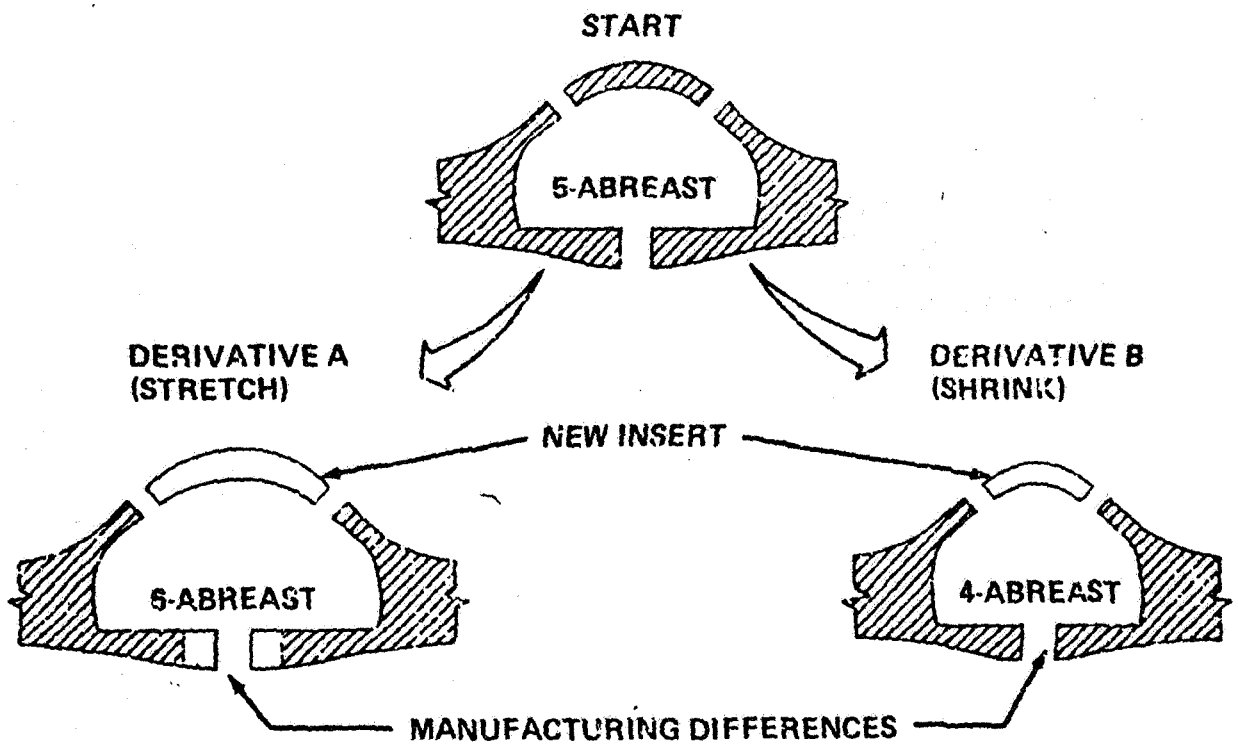

SUPERSONIC AREA RULING OF DERIVATIVE FUSELAGES

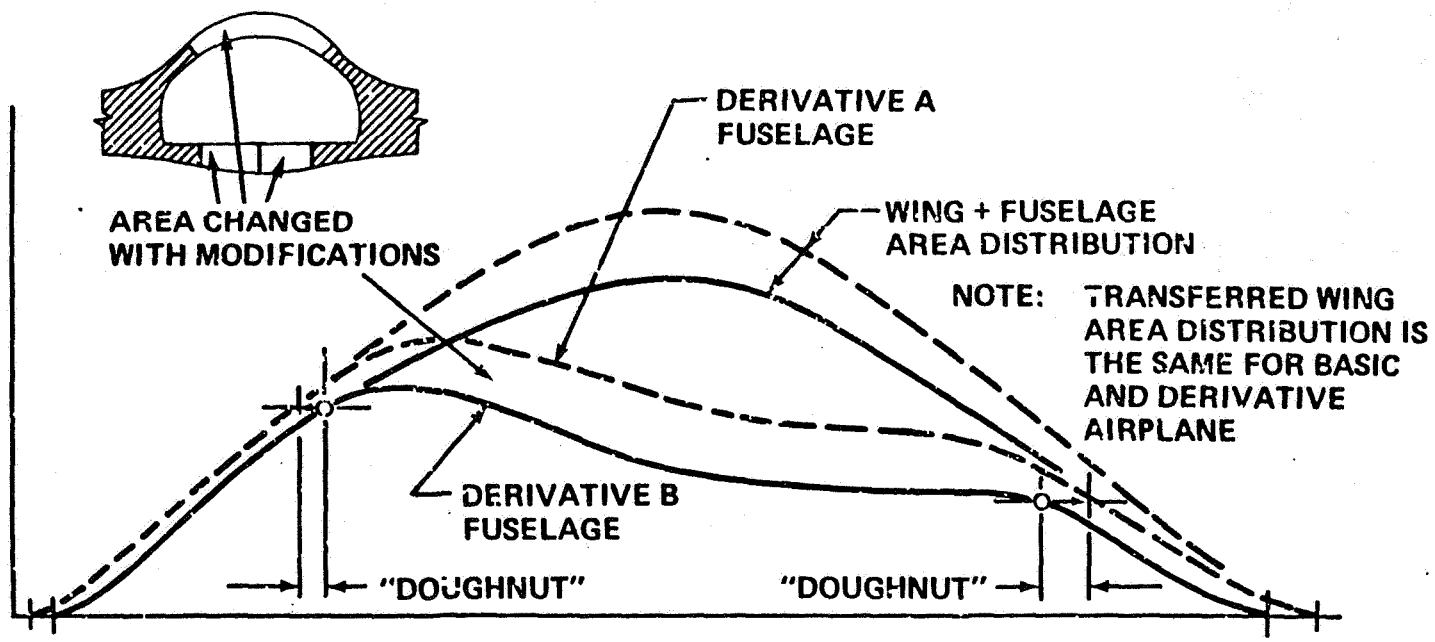

PAYLOAD–RANGE OF INTEREST

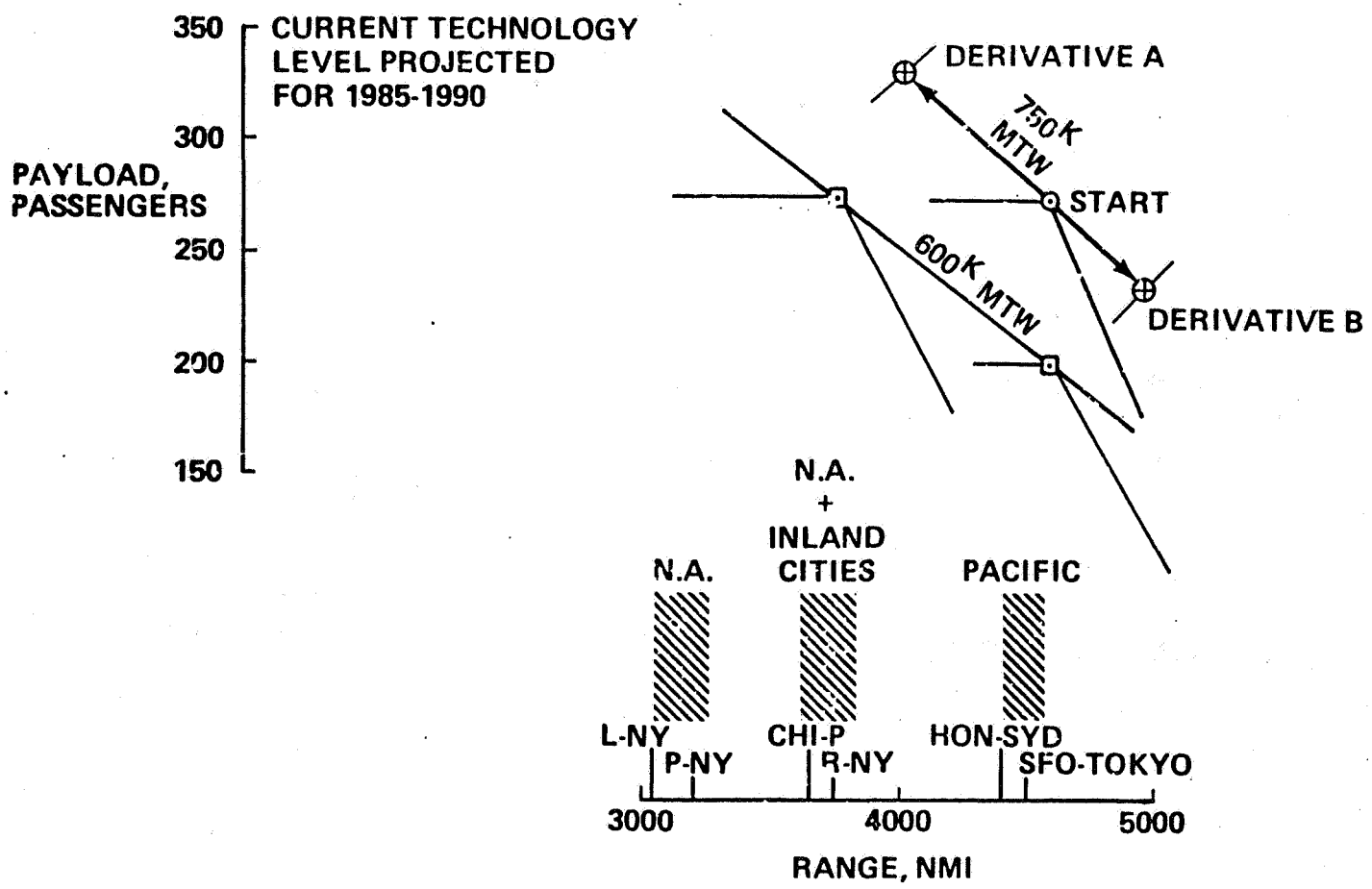

200 PASSENGER AIRPLANE (600 000 LB MTW)

- OBJECTIVES
  - INVESTIGATE CONFIGURATION FEASIBILITY WITH -633 CONCEPT
  - PACIFIC AIRPLANE ≈ 4500-NMi RANGE
- TECHNICAL APPROACH
  - APPROPRIATE SCALING OF 270 PASSENGER/750 000 LB MTW AIRPLANE (-633)
  - SAME WING LOADING AND THRUST LOADING AS -633
  - FOUR-ABREAST FUSELAGE CROSS SECTION
  - TRADES OF BEST FUEL VOLUME PLACEMENT

SIZE COMPARISON

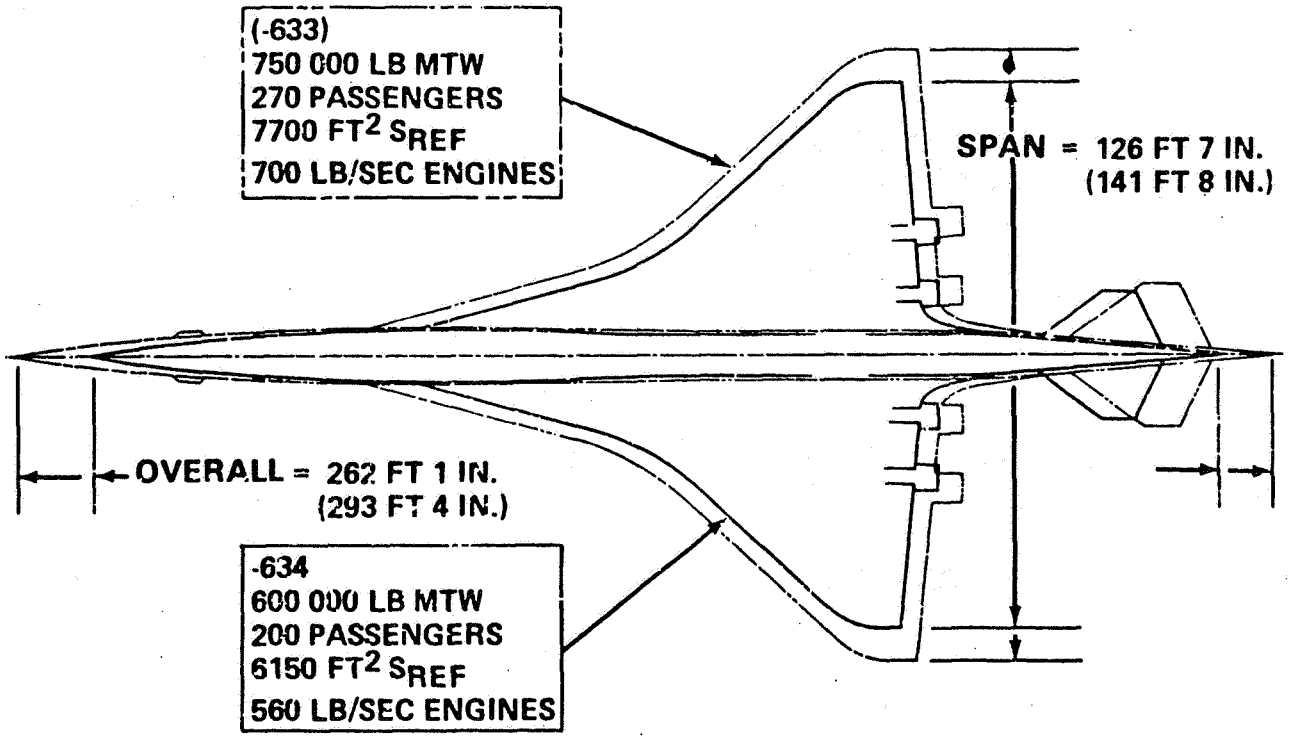

CONFIGURATION ASSESSMENT

- PRESENT CONCEPT CONTINUES TO LOOK PROMISING
- PRESENT CONCEPT ADAPTS TO DIFFERENT PAYLOADS (230-330 PASSENGERS)
  - LATERAL FUSELAGE STRETCH OFFERS DEVELOPMENT OF "SST FAMILY," DERIVED FROM BLENDED CONFIGURATION CONCEPT
  - THIS METHOD OFFERS GREATER PAYLOAD SPREAD THAN CONVENTIONAL LONGITUDINAL STRETCH
  - THIS METHOD OFFERS HIGH "FAMILY" COMMONALITY
- THE PRESENT CONFIGURATION CONCEPT, SCALED TO 600 000 LB MTW, NEEDS ADDITIONAL FUEL CAPACITY FOR TRANSPACIFIC RANGES (4500 NMI)

ADVANCED STRUCTURE TECHNOLOGY APPLICATIONS

NEW TECHNOLOGIES CONSIDERED

- GRAPHITE POLYIMIDE COMPOSITE
- POLYIMIDE BONDED TITANIUM
  - SKIN STRINGER
  - HONEYCOMB
- SUPERPLASTIC FORMED DIFFUSION-BONDED TITANIUM (SPF/DB)
- HIGH STRENGTH HEAT-TREATED TITANIUM
- LOW CONDUCTIVITY CORE ALUMINUM-BRAZED-TITANIUM SANDWICH

GRAPHITE POLYIMIDE COMPOSITE

- CURRENT EFFORTS ON GRAPHITE EPOXY MAJOR BENEFIT
  - DESIGN CONCEPTS
  - ANALYSIS METHODS AND ALLOWABLES
  - LIGHTNING STRIKE CONSIDERATIONS
  - MANUFACTURING TECHNIQUES
  - NDT TECHNIQUES
- POLYIMIDES BEING IMPROVED NOW
- MAJOR CONCERN IS LONG TERM EXPOSURE TO HIGH TEMPERATURE

POLYIMIDE BONDED TITANIUM

- CURRENT EFFORTS ON EPOXY BONDED ALUMINUM MAJOR BENEFIT
  - DESIGN CONCEPTS
  - ANALYSIS METHODS AND ALLOWABLES
  - MANUFACTURING AND NDT TECHNIQUES
  - LIGHTNING STRIKE CONSIDERATIONS
- SURFACE PREPARATION REQUIRED SIMILAR TO BAC 5555
- LONG TERM EXPOSURE TO HIGH TEMPERATURE OF LESS CONCERN

SUPERPLASTIC FORMED DIFFUSION-BONDED TITANIUM

- CONCEPT HAS POTENTIAL IN MANY APPLICATIONS
  - SPARS
  - RIBS
  - BULKHEADS
  - HEAVILY LOADED WING PANELS
- NOT WELL ENOUGH UNDERSTOOD TO EVALUATE AT THIS TIME

HIGH STRENGTH HEAT-TREATED TITANIUM

- Ti-17 NOW IN USE ON GENERAL ELECTRIC ENGINES
- FTU 16% HIGHER THAN 6 Al-4V ANNEALLED
- ADEQUATE FRACTURE TOUGHNESS
- GOOD HEAT-TREAT PENETRATION ON THICK SECTIONS
- BEST APPLICATIONS ARE IN FITTINGS
- OTHER HEAT TREATABLE ALLOYS ARE BEING DEVELOPED

10 V	2 Fe	3 Al	
10 Mo	8 V	7.5 Al	
15 V	3 Cr	3 Ak	3 Sn

- THE LAST ONE MAY APPLY TO SHEET AND PLATE

LOW CONDUCTIVITY CORE ALUMINUM-BRAZED-TITANIUM SANDWICH

- PRELIMINARY DEVELOPMENT WORK DONE ON DOT FOLLOW-ON CONTRACT
- REDUCED CONDUCTIVITY WELL PROVEN
- SOME ALLOWABLES LOWER THAN HONEYCOMB, THEREFORE, SOME WEIGHT PENALTY
- MANUFACTURABILITY NOT ESTABLISHED

ADVANCED STRUCTURES TECHNOLOGY APPLICATIONS

GRAPHITE POLYIMIDE CONTROL SURFACES AND SECONDARY STRUCTURES

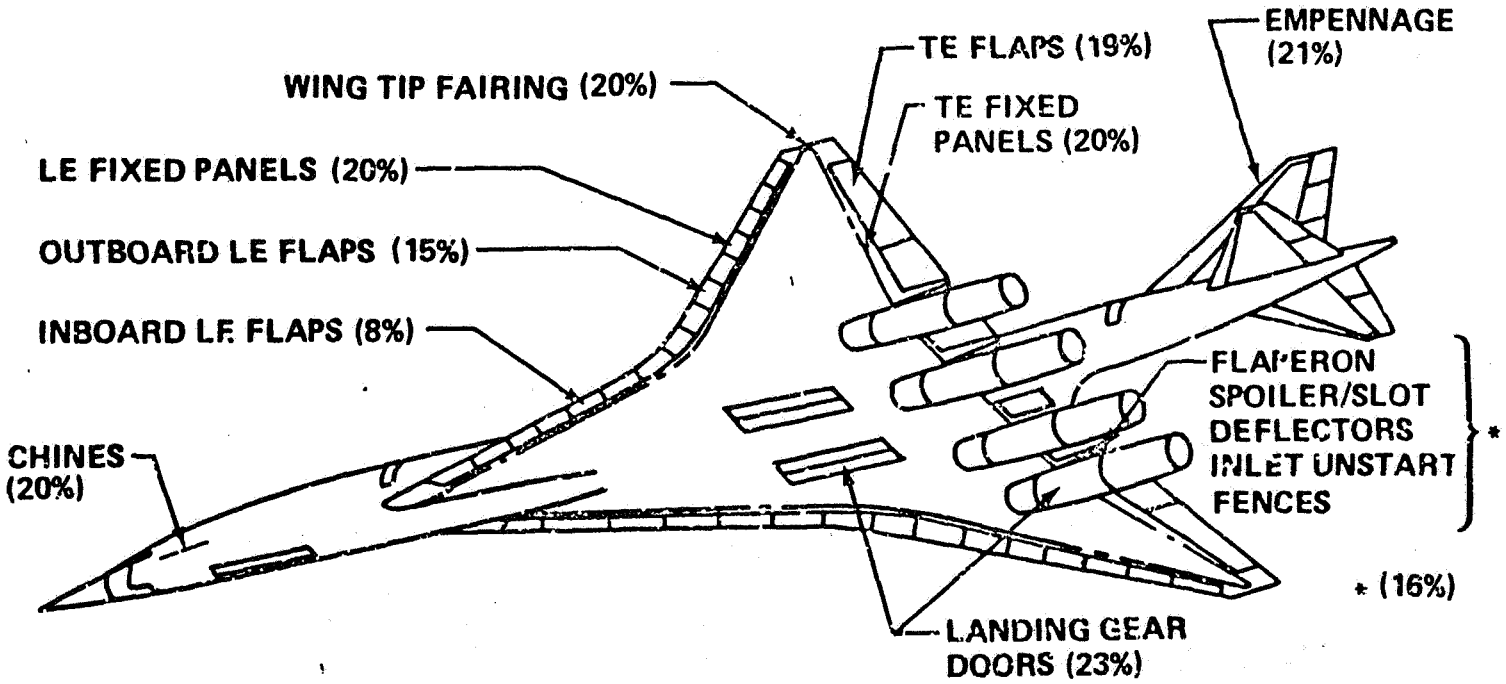

(%) WEIGHT SAVED FROM 1971 SST DESIGN CONCEPT

4900 POUNDS SAVED ON THESE APPLICATIONS

ADVANCED STRUCTURES TECHNOLOGY APPLICATIONS
FUSELAGE STRUCTURE

BLENDED WING/BODY

- POLYIMIDE-BONDED-TITANIUM HONEYCOME PANELS
- DIFFUSION-BONDED FRAMES

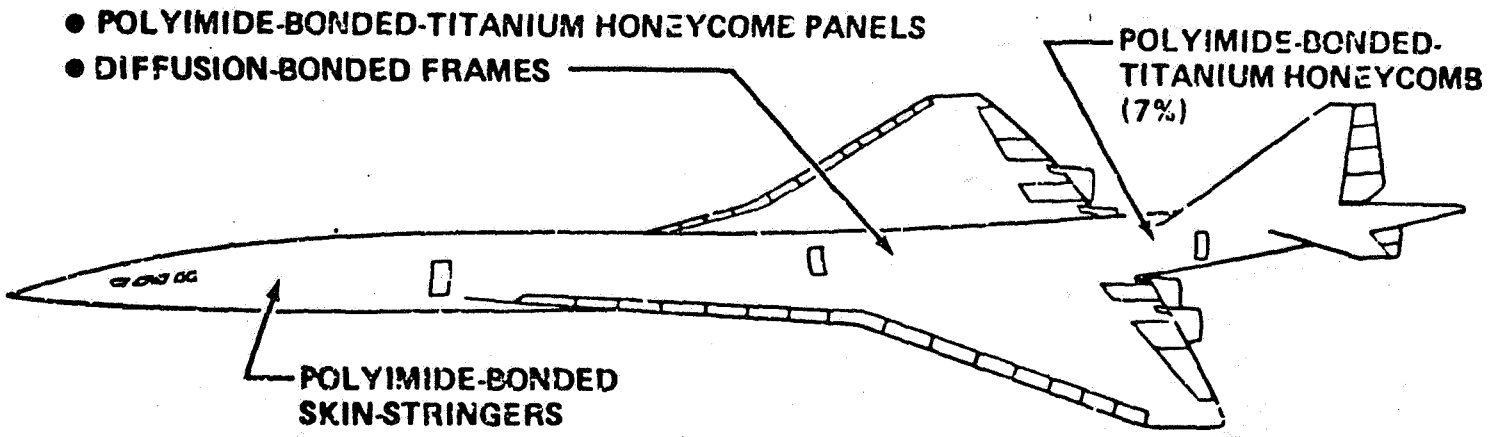

400 POUNDS SAVED ON THESE APPLICATIONS

ADVANCED STRUCTURES TECHNOLOGY APPLICATIONS

ADDITIONAL LOCATIONS

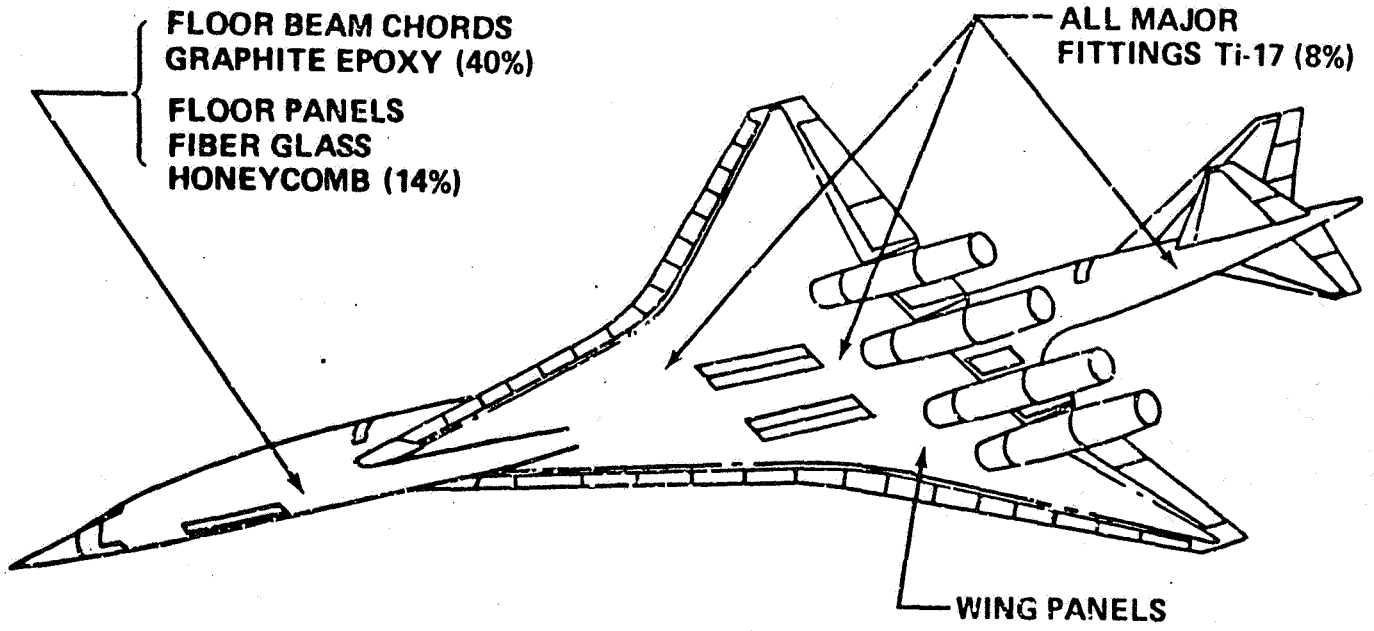

1300 POUNDS SAVED ON THESE APPLICATIONS

WING PANELS

STRUCTURAL CONCEPTS	BOEING ESTIMATE OF:				
	RELATIVE WEIGHT OF:			RELATIVE THERMAL CONDUCT-IVITY	RELATIVE COST
	LIGHTLY LOADED	HEAVY LOADED BIAXIAL	HEAVY LOADED UNIAXIAL		
ALUMINUM-BRAZED-TITANIUM SANDWICH					
HONEYCOMB	1.0			1.0	1.0
LOW CONDUCTIVITY	1.05			0.3	1.02
POLYIMIDE-BONDED					
HONEYCOMB	1.0			0.3	0.8
SPF/DB	1.0–1.2	0.90–1.05	0.8–0.9	0.3–0.5	?

CONCLUSIONS

- 6600 POUNDS SAVED WITH THIS STUDY
- POTENTIAL FOR SAVING MORE ON SPARS, RIBS, BULKHEADS, AND WING PANELS
- MUST CONTINUE EFFORT ON POLYIMIDE DEVELOPMENT AND SPF/DB

AIRCRAFT SYSTEMS

- AVIONICS
- ENVIRONMENTAL CONTROL
- HYDRAULIC
- ELECTRICAL POWER

1971 AVIONICS SYSTEM DEFINITION

COMMUNICATIONS:

- VHF
- HF
- SELECTIVE CALLING
- PASSENGER ADDRESS
- INTERPHONE

RECORDING SYSTEMS:

- COCKPIT VOICE RECORDER
- FLIGHT RECORDER

NAVIGATION SYSTEMS:

- VOR/ILS
- MARKER BEACON
- LOW RANGE RADIO ALTIMETER
- INERTIAL NAVIGATION SYSTEM
- WEATHER RADAR
- ATC TRANSPONDER
- DISTANCE MEASURING EQUIPMENT
- AUTOMATIC DIRECTION FINDER
- ALTITUDE ALERT
- MAGNETIC HEADING REFERENCE
- GROUND PROXIMITY WARNING
- TV SYSTEM

FLIGHT DECK INSTRUMENTS:

- EADI/HSI/STANDBY ADI

FLIGHT CONTROL ELECTRONICS:

- AFCS/ECSS/HSAS/ANGLE OF ATTACK
- OVERROTATION
- CENTRAL INSTRUMENT WARNING SYSTEM
- AIR DATA SYSTEM
- AIRCRAFT INTEGRATED DATA SYSTEM (AIDS)

AVIONICS/ELECTRONICS SYSTEMS UPDATE

STRAPDOWN INERTIAL NAVIGATION SYSTEM

CAUTION AND WARNING SYSTEM ADDED

FLIGHT MANAGEMENT SYSTEM

- ADVANCED NAVIGATION/GUIDANCE
- DIGITAL FLY-BY-WIRE FLIGHT CONTROLS
- THRUST MANAGEMENT

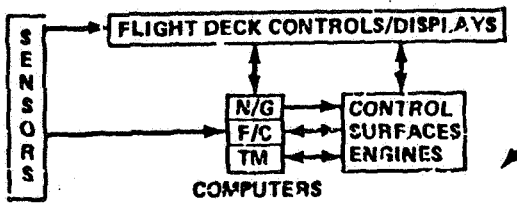

ALTITUDE ALERT AND GROUND PROXIMITY SYSTEM ADDED

ELECTRONIC DISPLAYS OPTIONAL

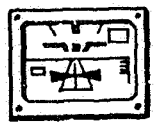

AIRCRAFT INTEGRATED DATA SYSTEM OPTIONAL

MOTIVATION FOR FLIGHT MANAGEMENT SYSTEMS

AVIONICS PROLIFERATION:

- NAVIGATION
  - INERTIAL, OMEGA, MLS, GPS
- GUIDANCE
  - 3D, 4D
- FLIGHT CONTROL
  - FAIL OPERATIONAL
- PERFORMANCE
  - ENERGY MANAGEMENT
- ADVISORY
  - GROUND PROXIMITY
  - ALTITUDE ALERT

⇨

- INCREASED COST OF OWNERSHIP TO:
  - BUY
  - MAINTAIN
  - POWER
  - COOL
- COCKPIT COMPLEXITY

DIGITAL SYSTEMS DEVELOPMENT

- NEW ELECTRONIC SYSTEMS ARE BEING DEVELOPED UNDER NAMES "DIGITAL" AND "INTEGRATED DIGITAL"

- THEY OFFER IMPROVED:
  - PERFORMANCE
  - FUNCTIONAL CAPABILITY
  - RELIABILITY
  - INITIAL COST
  - MAINTENANCE COST

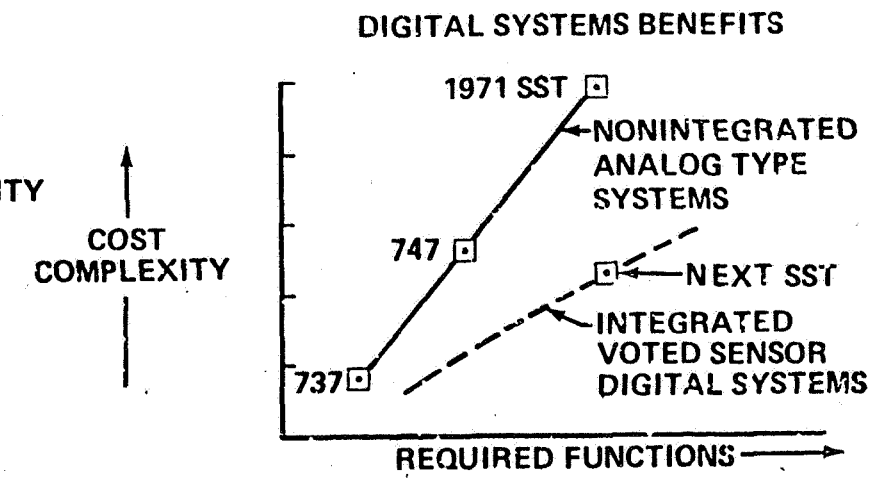

AUTOMATIC FLIGHT CONTROL SYSTEM ELECTRONICS

- TIME-SHARED DIGITAL ELECTRONICS PROVIDE DESIGN/MAINTENANCE SYSTEM BENEFITS, AS COMPARED TO CURRENT FAIL-OPERATIONAL SYSTEMS . . .

• WEIGHT	30% REDUCTION
• POWER REQUIREMENT	50% REDUCTION
• LINE REPLACEABLE UNIT COUNT	55% REDUCTION
• DIFFERENT CARD TYPES	33% REDUCTION

733-633 FLIGHT MANAGEMENT SYSTEM GENERAL ARRANGEMENT

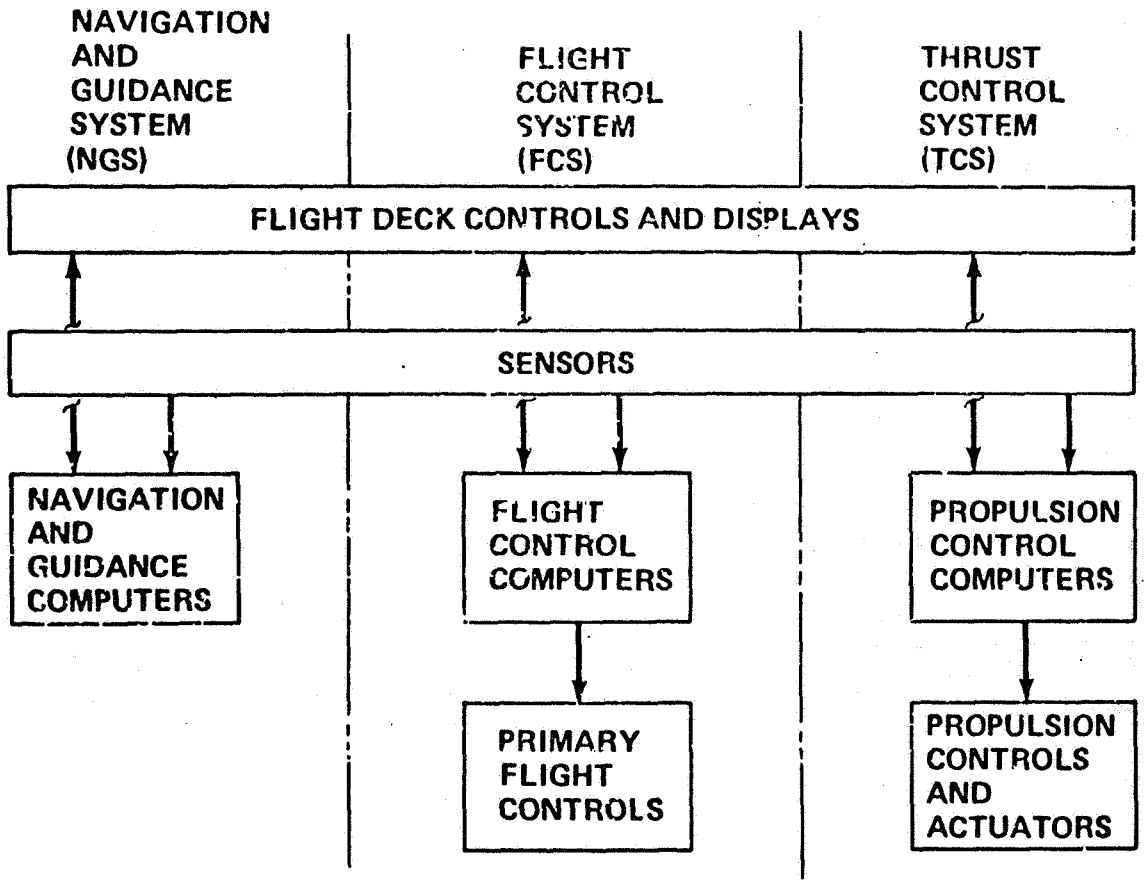

EXAMPLES OF 733-633 FLIGHT MANAGEMENT FUNCTIONS

FLIGHT CRUCIAL	FLIGHT CRITICAL	PILOT WORK RELIEF
STABILITY AUGMENTATION	AUTOLAND	CWS, FLIGHT PATH
	ROLL-OUT GUIDANCE	CWS, PITCH
		FLIGHT PATH SELECT
ALPHA LIMITER		VERTICAL NAVIGATION
		ALTITUDE SELECT
		ALTITUDE HOLD
		CAS SELECT
		CAS HOLD
		V_{GND} HOLD
		V_{MO} PROFILE
		V_{MO} HOLD
		MACH/TEMPERATURE HOLD
		CWS, ROLL
		CWS, HEADING
		HEADING SELECT
		HORIZONTAL NAVIGATION

FLIGHT MANAGEMENT SYSTEM

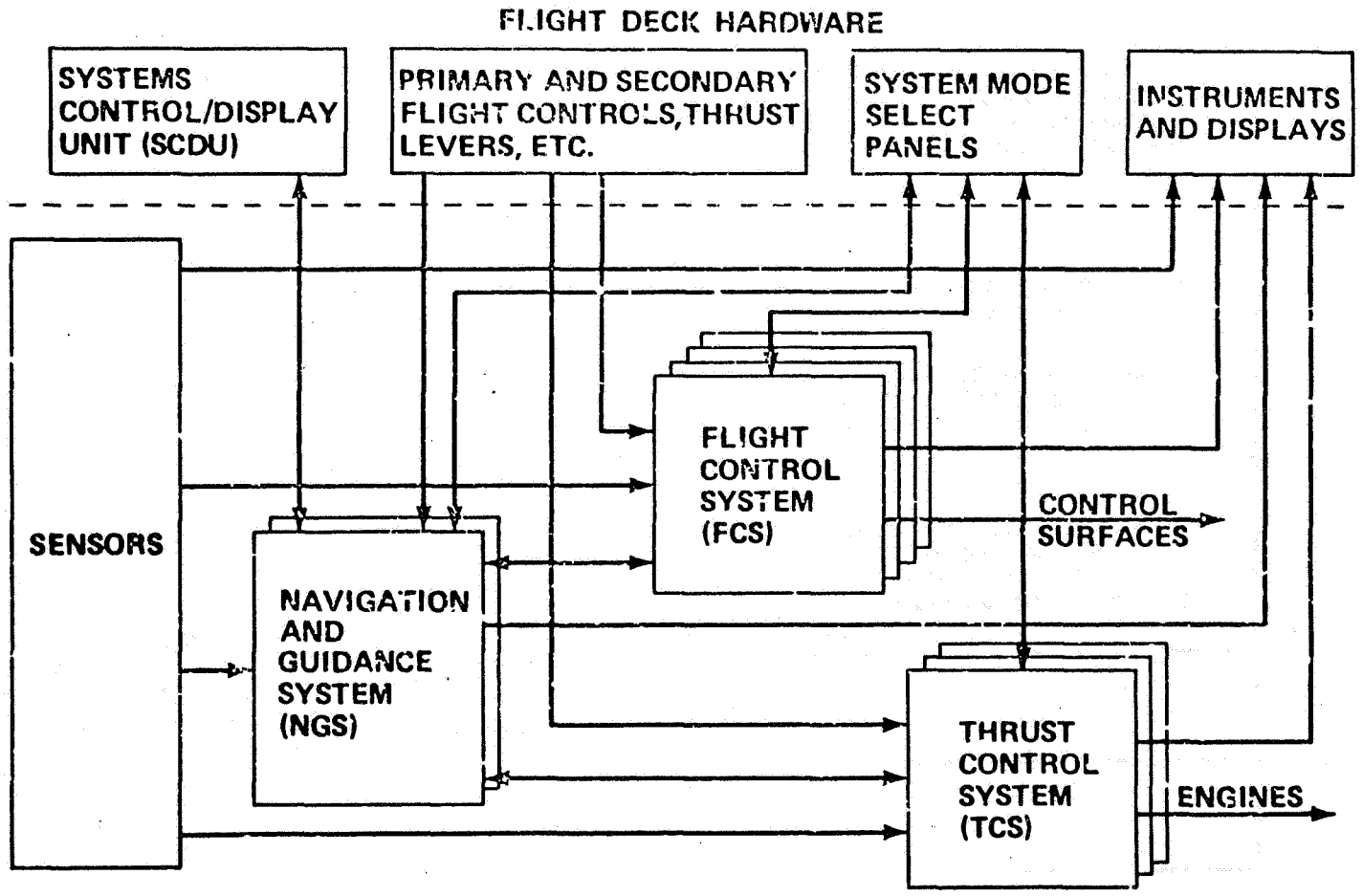

FMS FUNCTIONAL PARTITIONING

	THRUST CONTROL SYSTEM (TCS)	FLIGHT CONTROL SYSTEM (FCS)	NAVIGATION AND GUIDANCE SYSTEM (NGS)
FLIGHT CRUCIAL FUNCTIONS		• STABILITY AUGMENTATION LATERAL, VERTICAL • ALPHA LIMITER	
FLIGHT CRITICAL FUNCTIONS	• ENGINE PROTECTION • LIMIT COMPUTATION • AUTOTHROTTLE	• AUTOLAND—LATERAL/ VERTICAL/IAS CONTROL; PLUS ROLLOUT GUIDANCE	
NONFLIGHT CRITICAL FUNCTIONS	• RATING CONTROL	• CWS—PITCH ANGLE AND FLIGHT PATH ANGLE OPTIONS • CWS—ROLL ANGLE WITH HEADING HOLD FEATURE	NAVIGATION • DEAD RECKONING AND POSITION FIXING • COMBINED AUTONAVIGATION • AUTOTUNING OF RF SENSORS • AUTOTERRAIN ALERT GUIDANCE • PATH GUIDANCE— 2D (HORIZONTAL NAVIGATION) 3D (VERTICAL NAVIGATION) 4D (3D PATH PLUS THRUST/SPEED GUIDANCE) • ENERGY MANAGEMENT— CLIMB, CRUISE, DESCENT STEERING SIGNALS TO PITCH AXIS AND AUTO-THROTTLE • MANUAL GUIDANCE— HEADING/TRACK SELECT, VERTICAL SPEED SELECT, FLIGHT PATH ANGLE SELECT OPTION, IAS/MACH HOLD (PITCH AXIS), IAS/MACH SELECT (LEVEL FLIGHT THRUST CONTROL), ALTITUDE HOLD

AUTOMATIC NAVIGATION BLOCK DIAGRAM

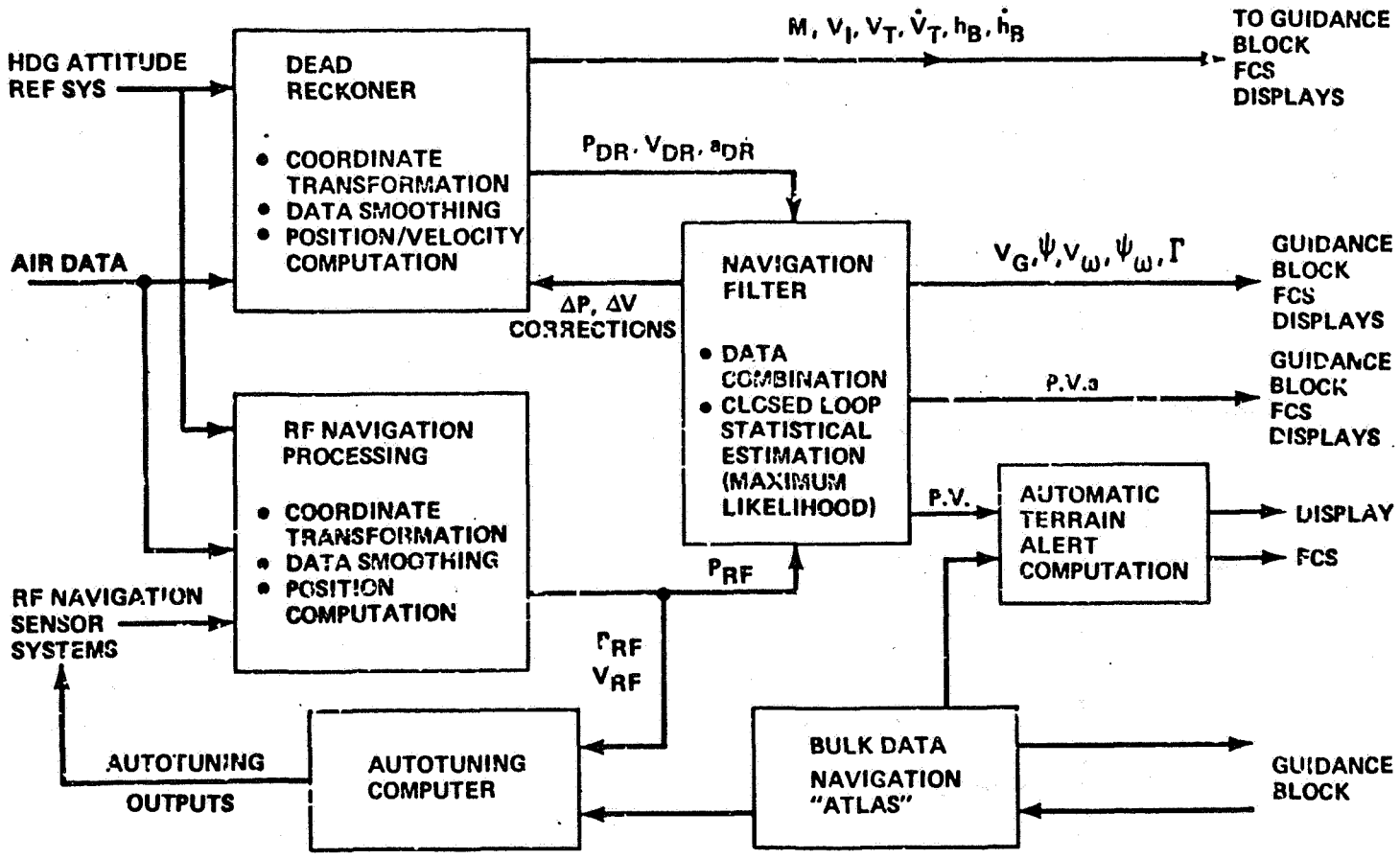

AUTOMATIC GUIDANCE BLOCK DIAGRAM

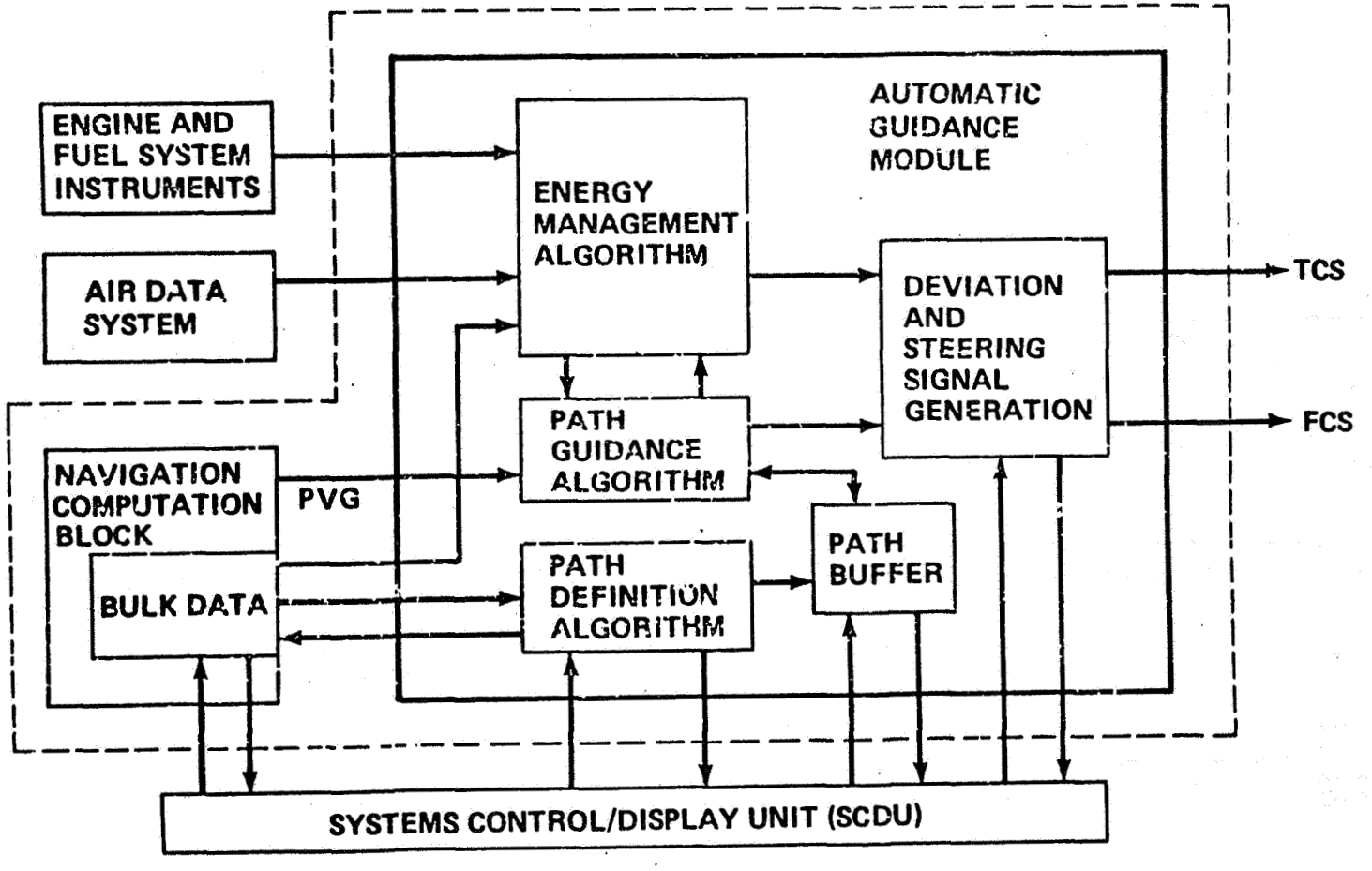

FLIGHT CONTROL SYSTEM

- DESIGN CRITERIA
- GENERAL ARRANGEMENT
- CONTROL LAWS
- REDUNDANCY MANAGEMENT

SUMMARY OF SAFETY OF FLIGHT CRITERIA

FLIGHT CRUCIAL FUNCTIONS	FLIGHT CRITICAL FUNCTIONS	AUTOLAND FUNCTIONS	GENERAL
PROBABILITY OF FLIGHT CRUCIAL FUNCTION FAILURE IS $< 1 \times 10^{-9}$	PROBABILITY OF LOSS OF FLIGHT CRITICAL FUNCTION AND PROBABILITY OF UNSUCCESSFUL DIVERSION TO RESTRICTED FLIGHT ENVELOPE IS $\leq 1 \times 10^{-9}$	PROBABILITY OF AUTOLAND FUNCTION FAILURE BELOW DECISION HEIGHT IS $\leq 1 \times 10^{-7}$	NO FIRST FAILURE SHALL REQUIRE A MISSION ALTERATION
PROBABILITY OF DIVERSION AND PROBABILITY OF FLIGHT CRUCIAL FUNCTION FAILURE AFTER DIVERSION IS $< 1 \times 10^{-9}$			COMBINATION OF FAILURES REQUIRING MISSION ALTERATION IS $\leq 1 \times 10^{-5}$ FOR MISSIONS OF LESS THAN 7 HOURS DURATION

SUMMARY OF MAINTENANCE CRITERIA

GROUND TEST CAPABILITY	INFLIGHT FAILURE IDENTIFICATION
PREFLIGHT TESTING IS REQUIRED TO ASSURE A FAULT-FREE FLIGHT CONTROL SYSTEM PRIOR TO DEPARTURE THE TEST PROCEDURE SHALL BE HIGHLY AUTOMATED AND REQUIRE ONLY MINIMUM INVOLVEMENT OF THE FLIGHT CREW NO GROUND SUPPORT EQUIPMENT SHALL BE NEEDED FUNCTIONAL TESTING FOLLOWING MAINTENANCE SHALL BE PERFORMED BY ONBOARD EQUIPMENT WITH THE EXCEPTION OF GROUND BASED ELECTRIC AND HYDRAULIC POWER SUPPLIES A MAXIMUM OF TWO MAINTENANCE PERSONNEL SHALL BE REQUIRED FOR FUNCTIONAL TESTING	FAILURES DETECTED IN FLIGHT SHALL BE IDENTIFIED TO THE LRU LEVEL THE IDENTITY OF THE FAILED LRU(S) SHALL BE RECORDED AND MADE READILY AVAILABLE UPON ARRIVAL

FLIGHT CONTROL SYSTEM— GENERAL ARRANGEMENT

733-633

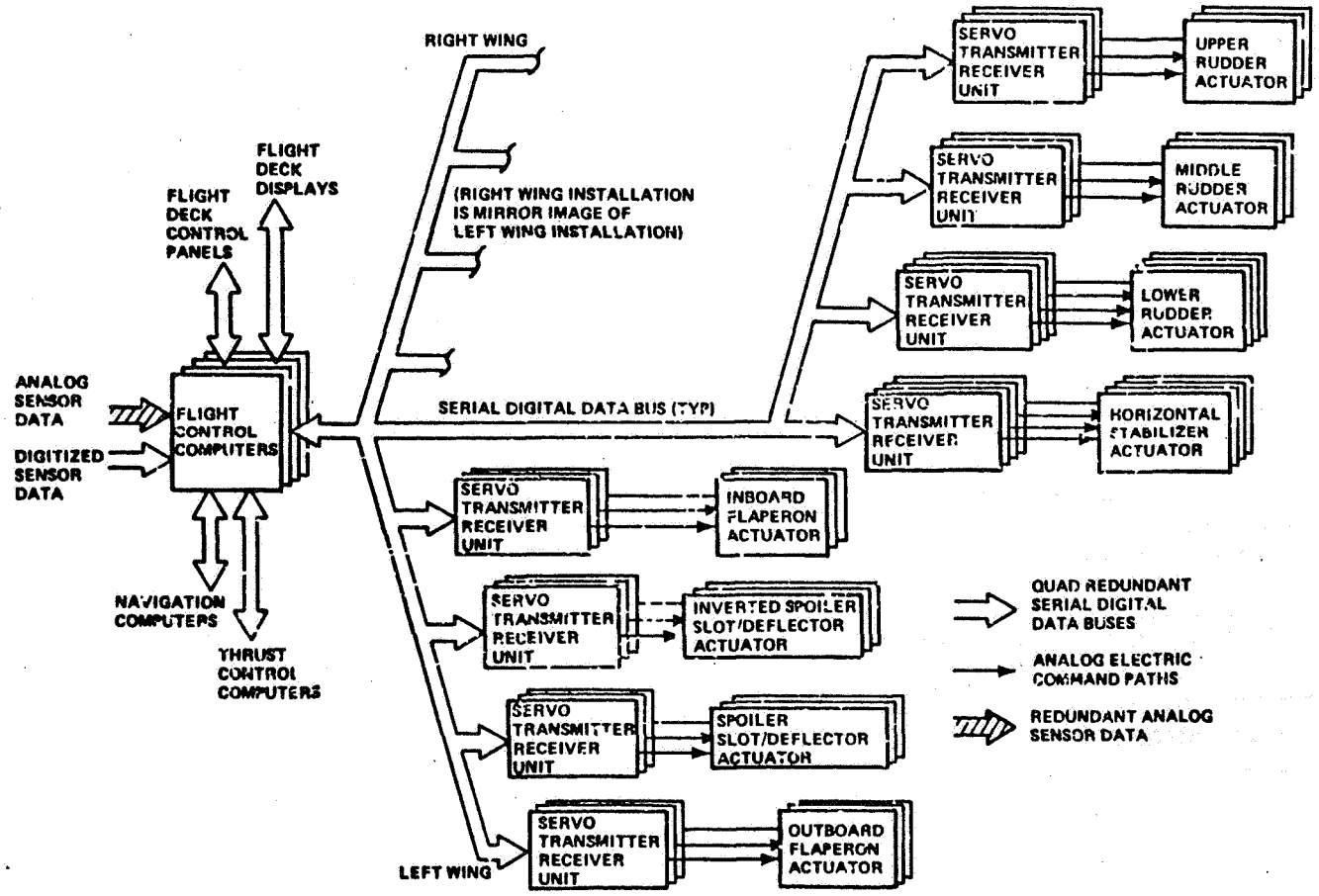

LOCATION OF MAJOR FLIGHT CONTROL SYSTEM COMPONENTS

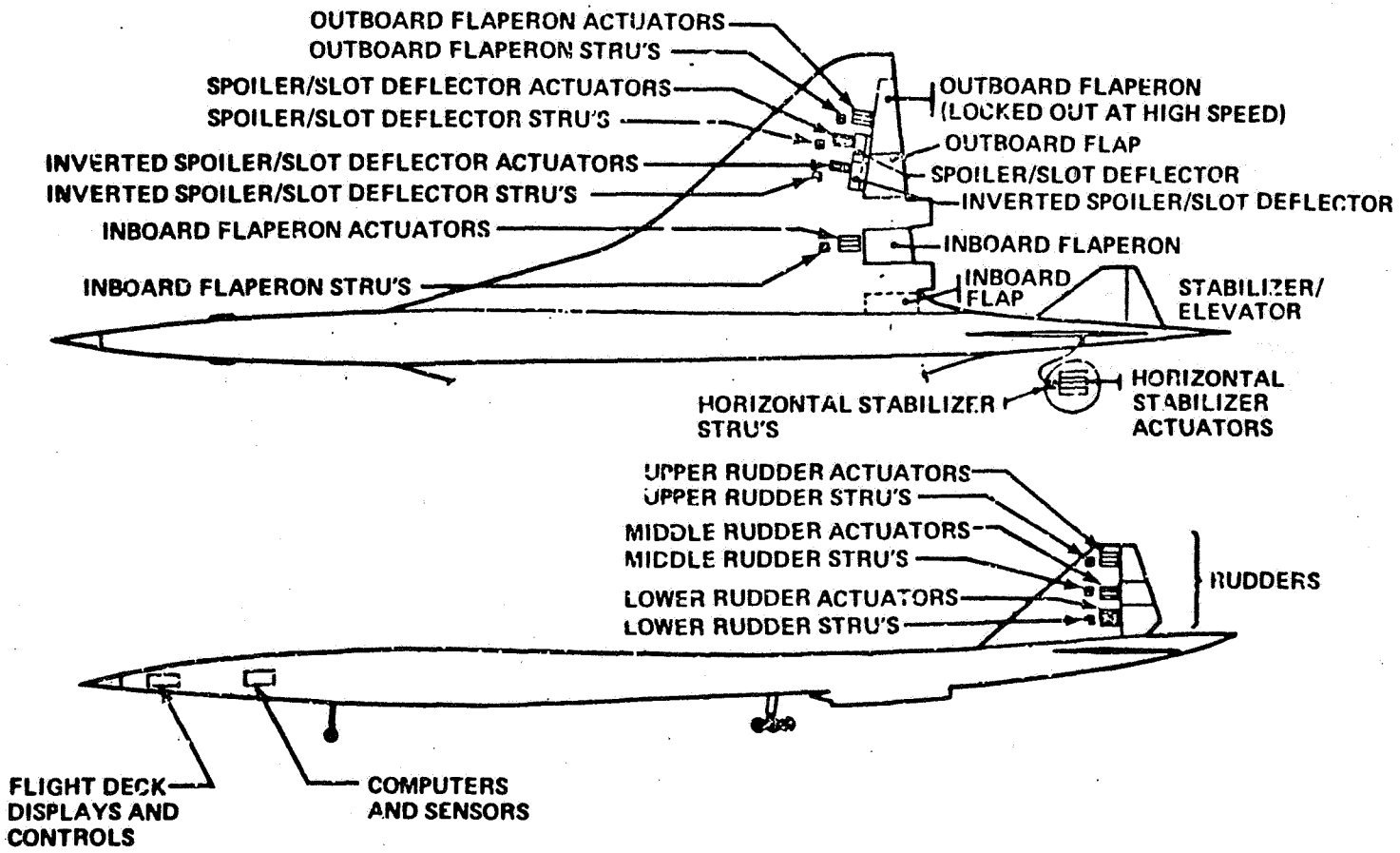

PITCH COMMAND AUGMENTATION CONTROL LAW

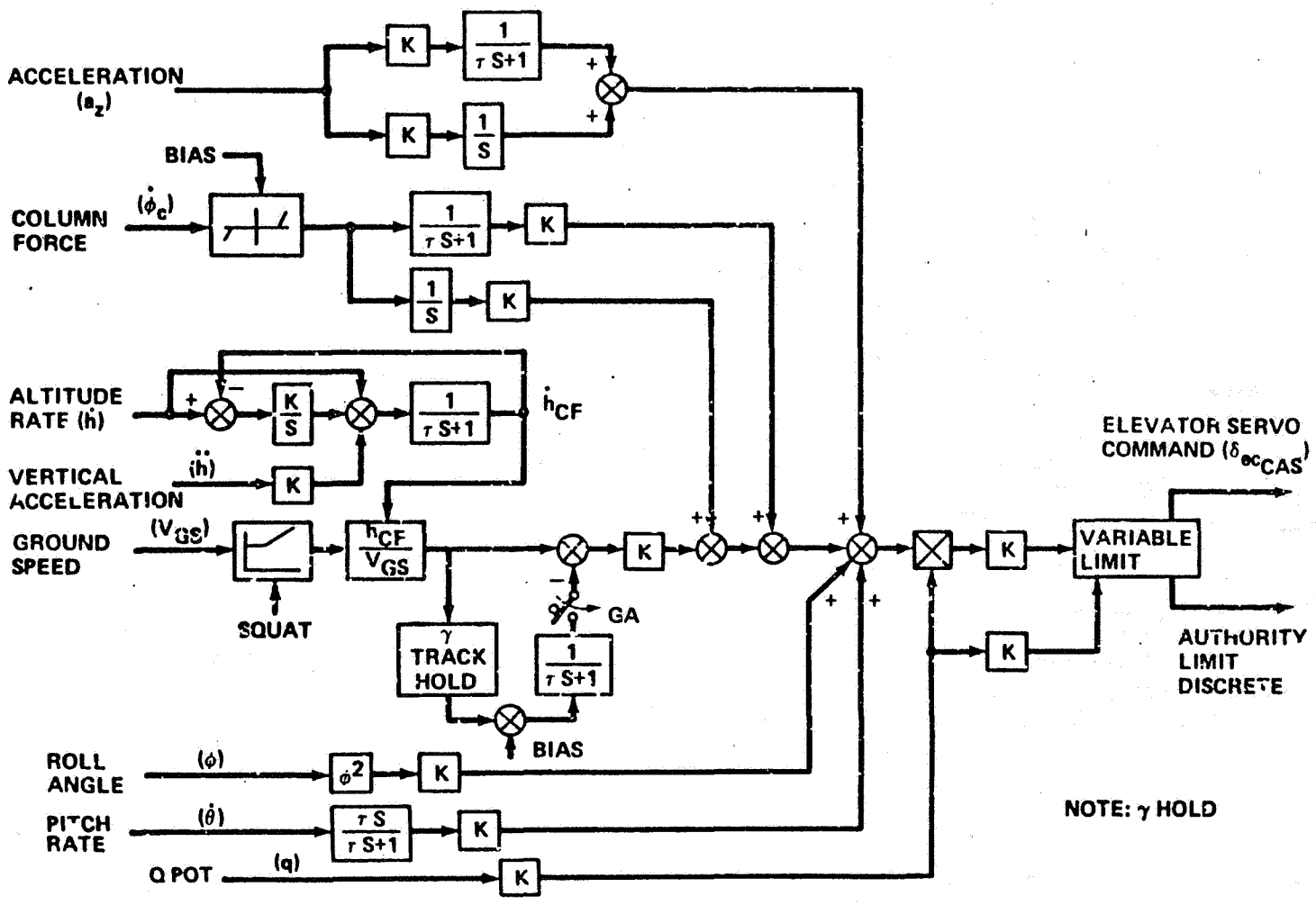

ROLL COMMAND AUGMENTATION CONTROL LAW

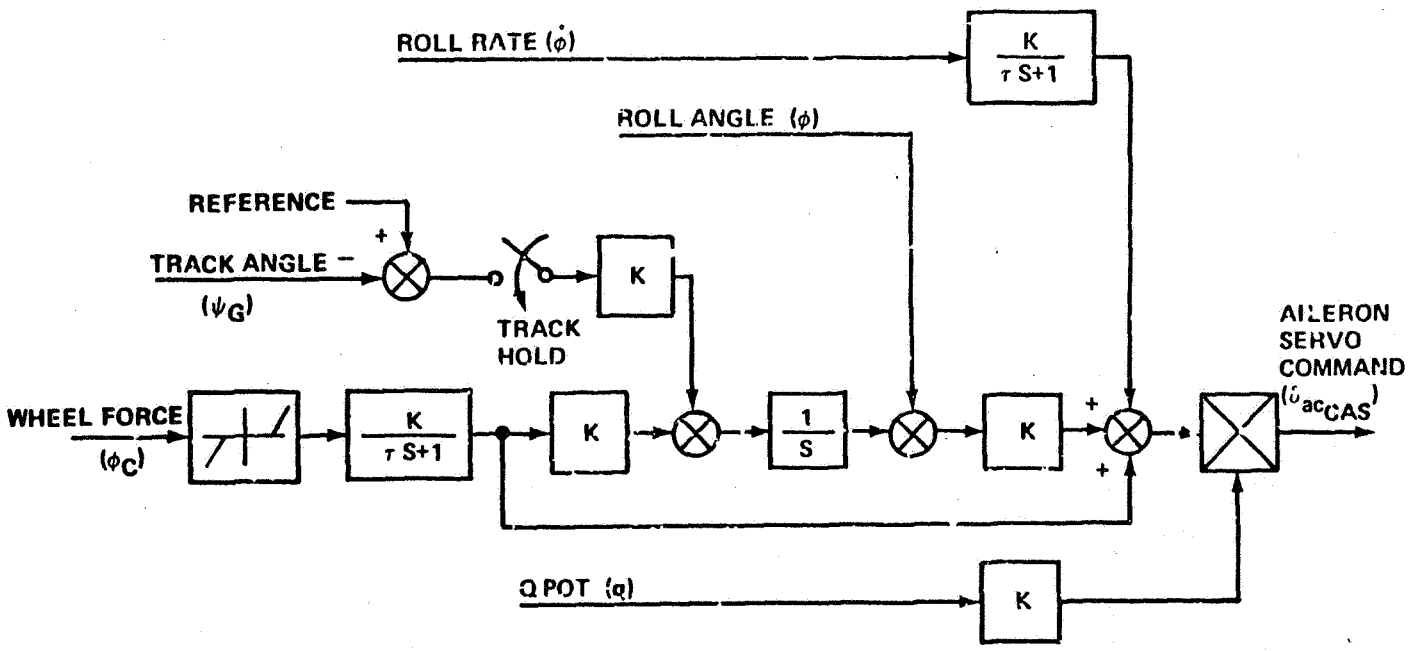

YAW COMMAND AUGMENTATION CONTROL LAW

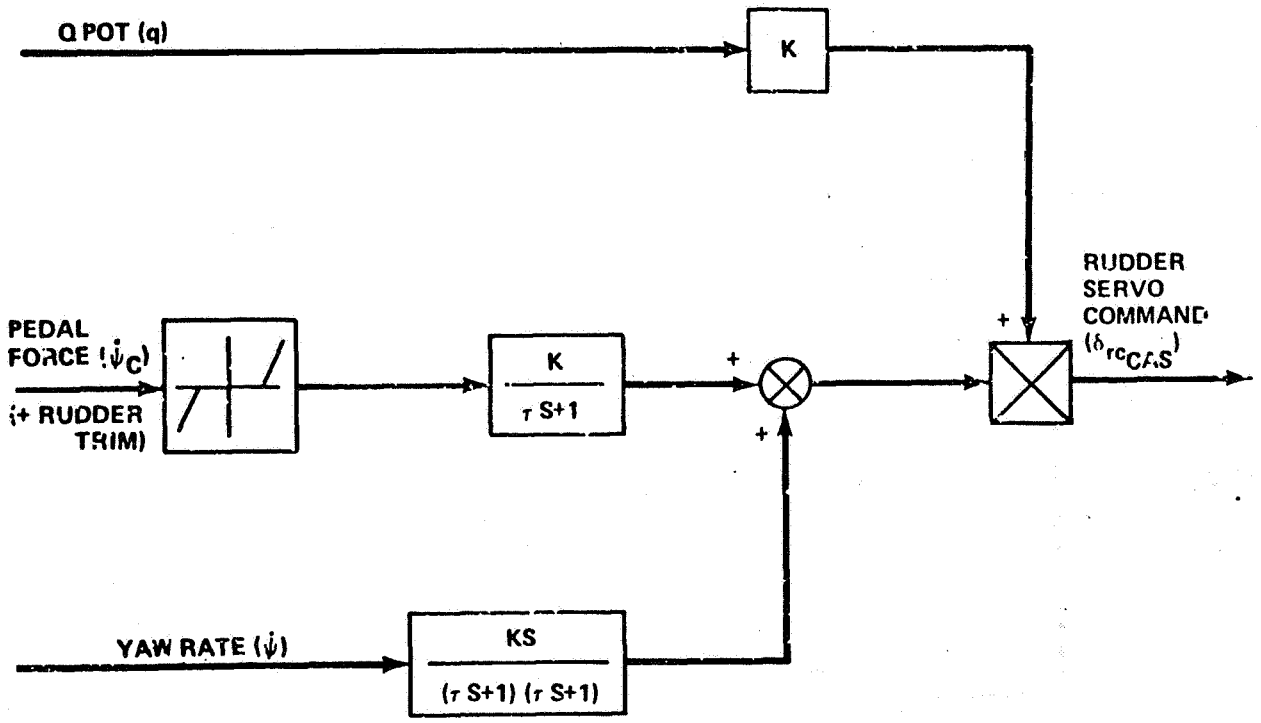

PITCH AUTOLAND CONTROL LAW

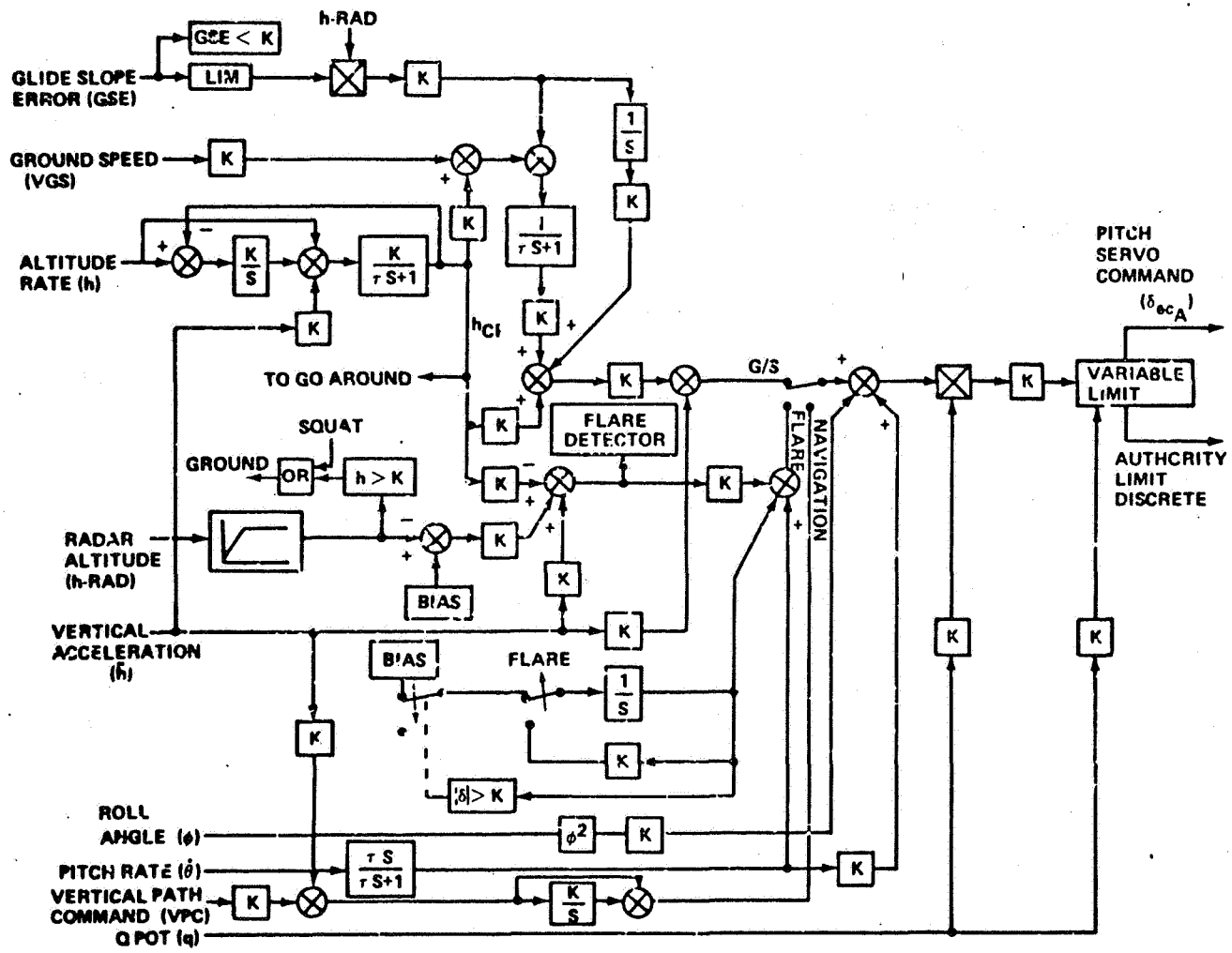

GO-AROUND CONTROL LAW

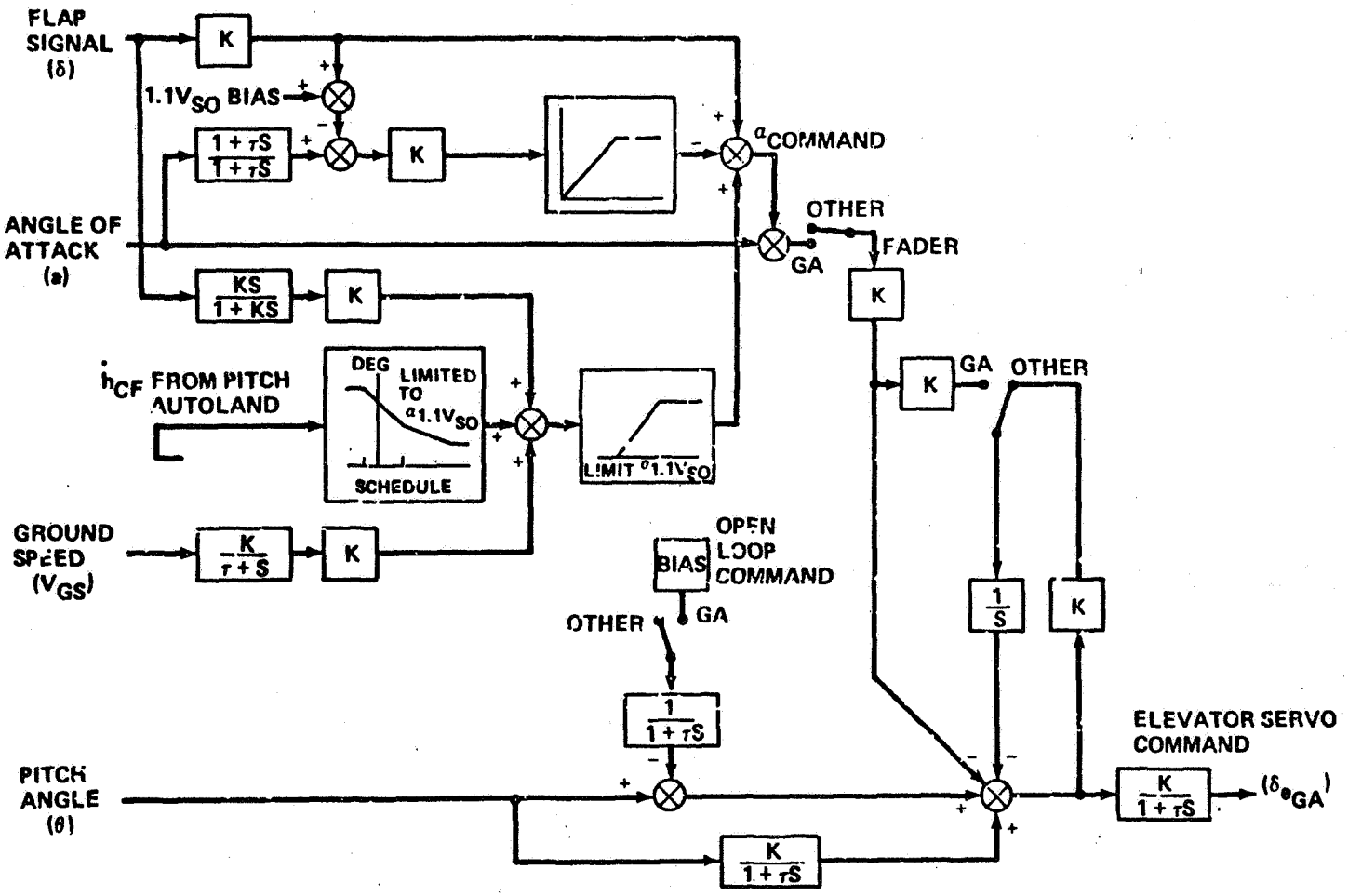

ROLL AUTOLAND CONTROL LAW

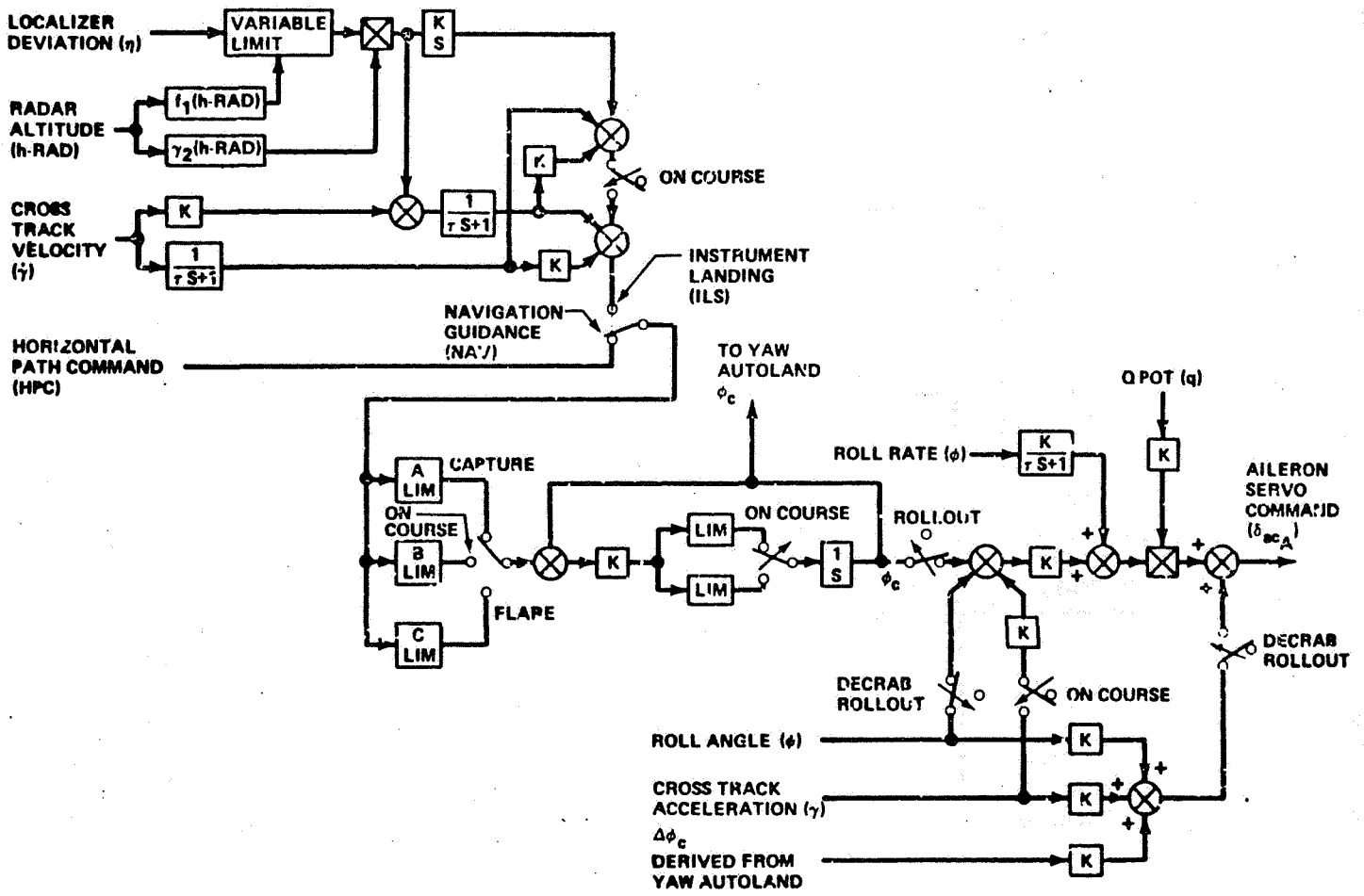

YAW AUTOLAND CONTROL LAW

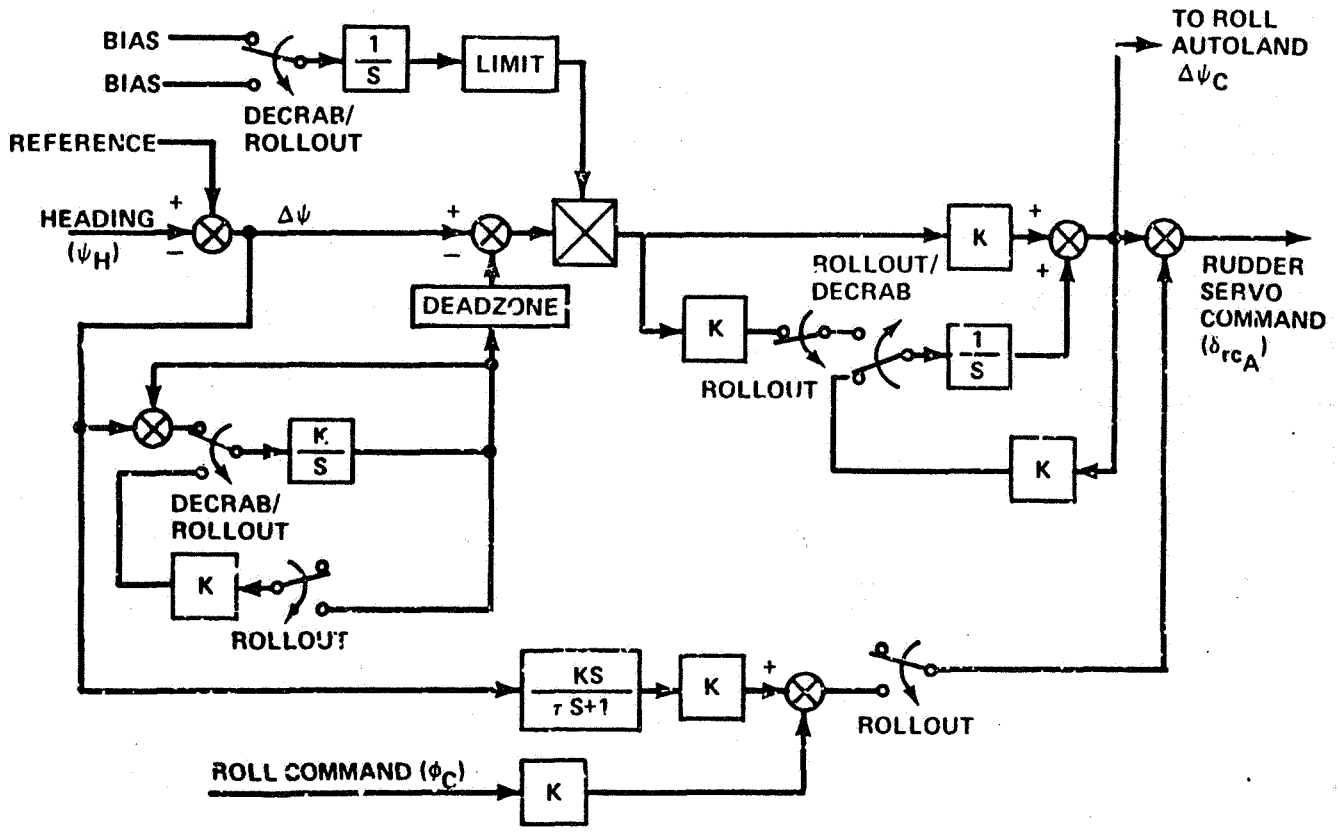

ALPHA LIMITER CONTROL LAW

CONTROL LAW

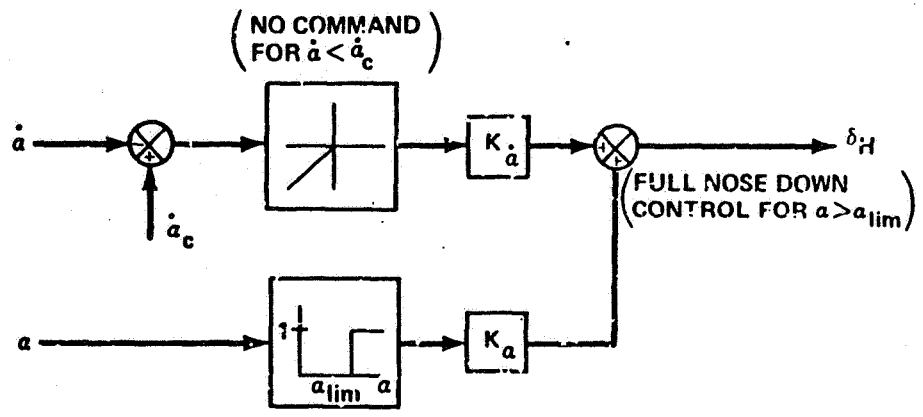

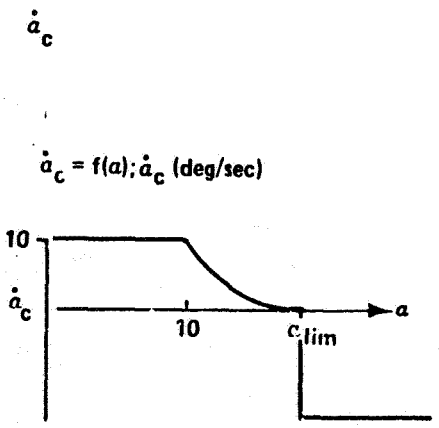

α = ANGLE OF ATTACK
$\dot{\alpha}$ = RATE OF CHANGE OF α
δ_h = ELEVATOR COMMAND

REDUNDANCY MANAGEMENT ARCHITECTURE

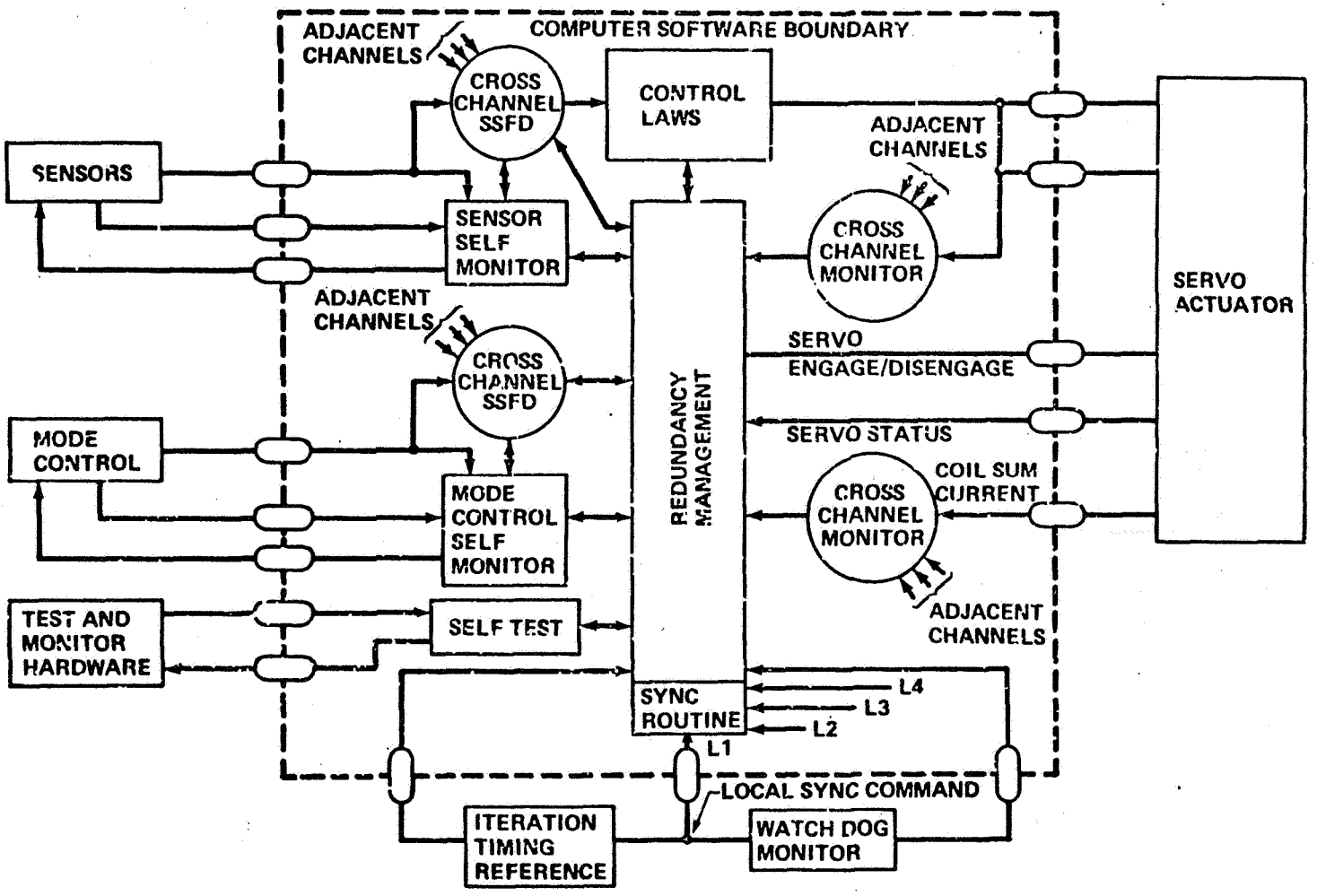

PROJECTED FLIGHT CONTROL SYSTEM FAILURE PROBABILITY

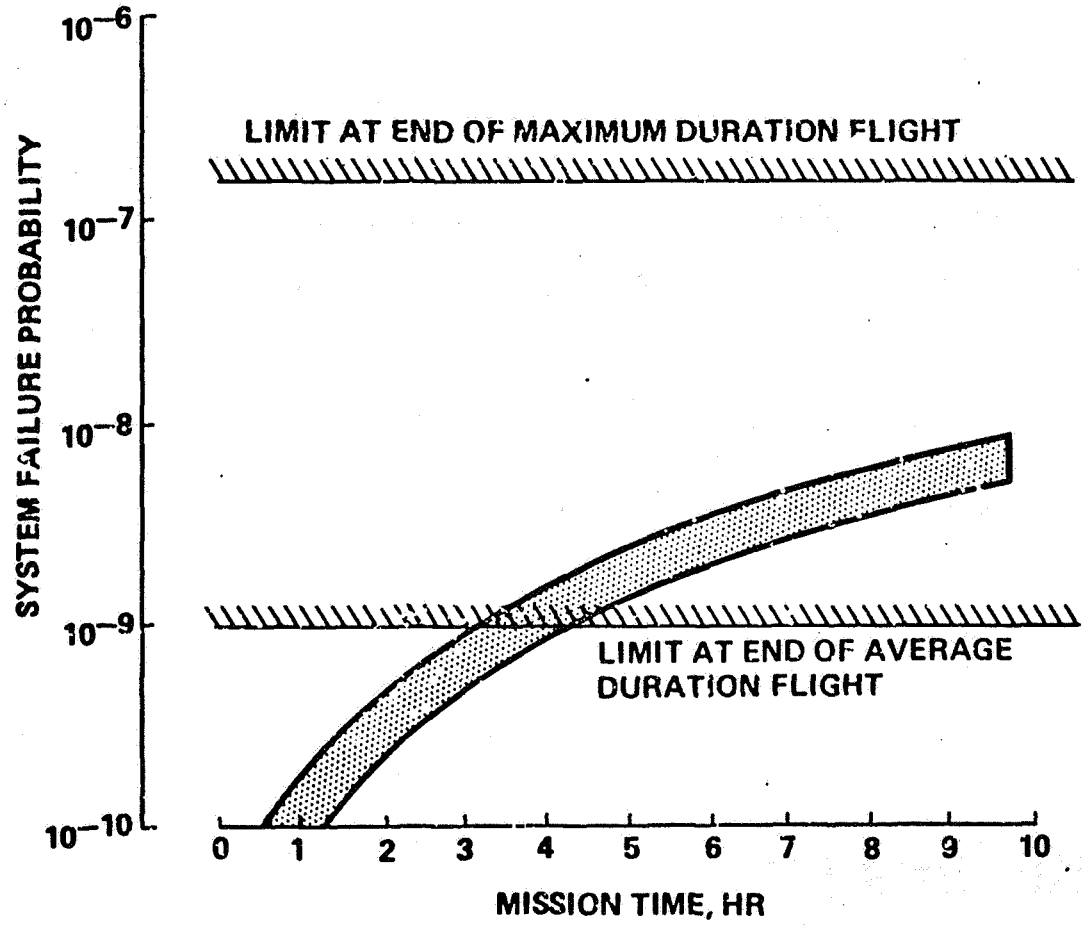

PROJECTED DIVERSION PROBABILITY DUE TO FLIGHT CONTROL SYSTEM FAILURES

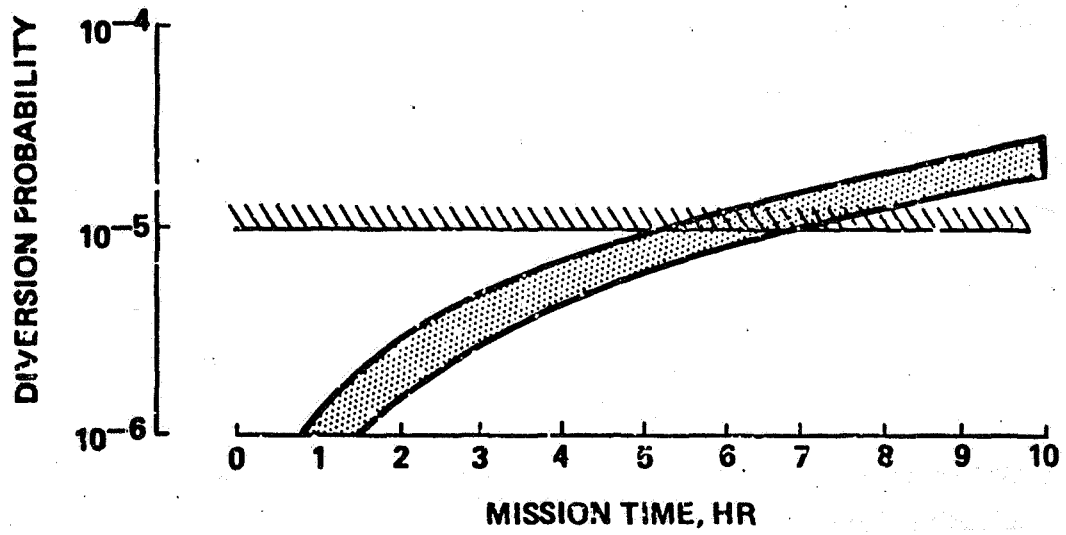

ELECTRONIC FUEL CONTROL SYSTEM

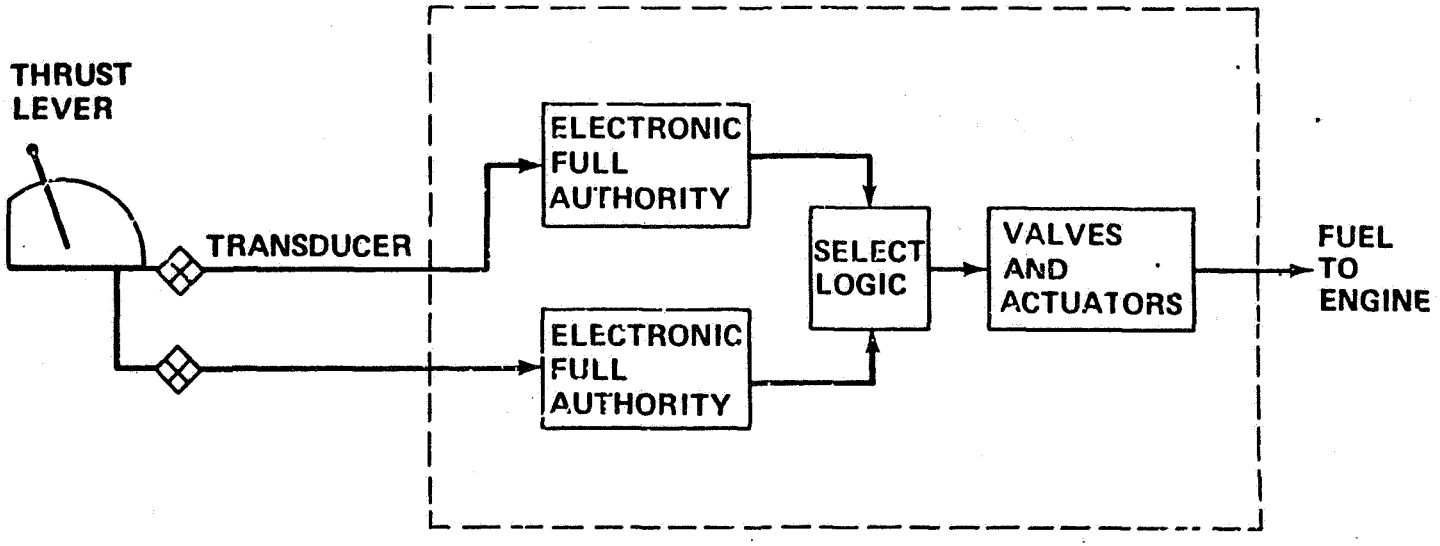

FULL AUTHORITY
ELECTRONIC FUEL CONTROL

- PRECISE SPEED GOVERNING AND FUEL METERING
- ENGINE TRANSIENTS CONTROL
- PROTECTION FOR N_1, N_2 AND BURNER PRESSURE LIMITS
- SURGE BLEED CONTROL
- STATOR VANE ANGLE CONTROL
- RATING COMPUTATION AND LIMITING
- OVER TEMPERATURE PROTECTION
- HOT START PROTECTION
- THRUST SCHEDULED AS FUNCTION OF BLEED RESETS
- N_1 LIMITED TO MAXIMUM T.O. RATING
- FULL THROTTLE = MAXIMUM T.O. THRUST
- ENGINE HEALTH MONITOR
- SENSOR VALIDITY AND SELF-TEST MONITOR
- THROTTLE STAGGER AND CONTROL SYSTEM HYSTERESIS ELIMINATED
- NO CHANGE IN PERFORMANCE AFTER FIRST FAILURE
- DIGITAL MECHANIZATION FOR INTERFACE SIMPLICITY

THRUST CONTROL SYSTEM

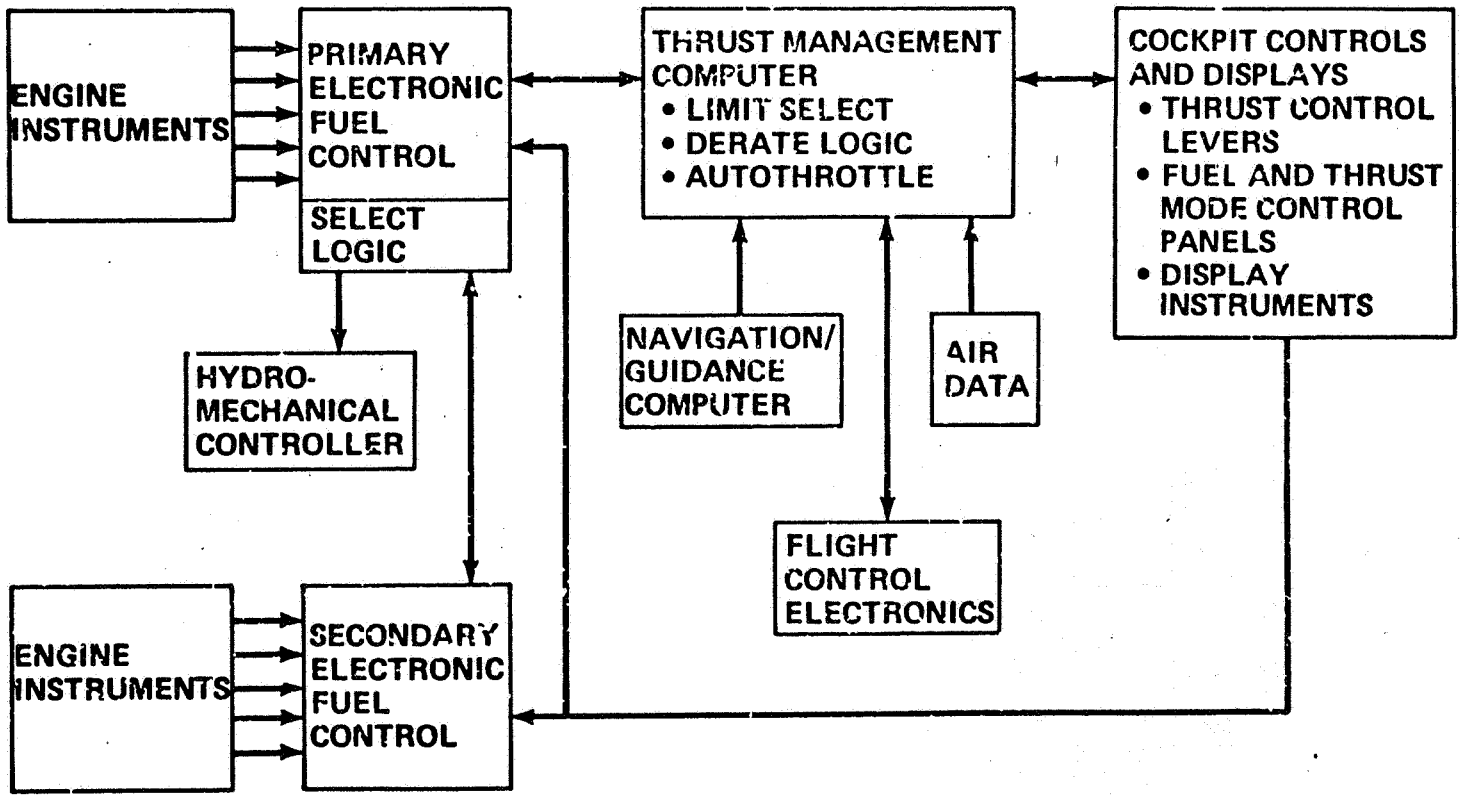

FLIGHT MANAGEMENT SYSTEM CONTROLS AND DISPLAYS

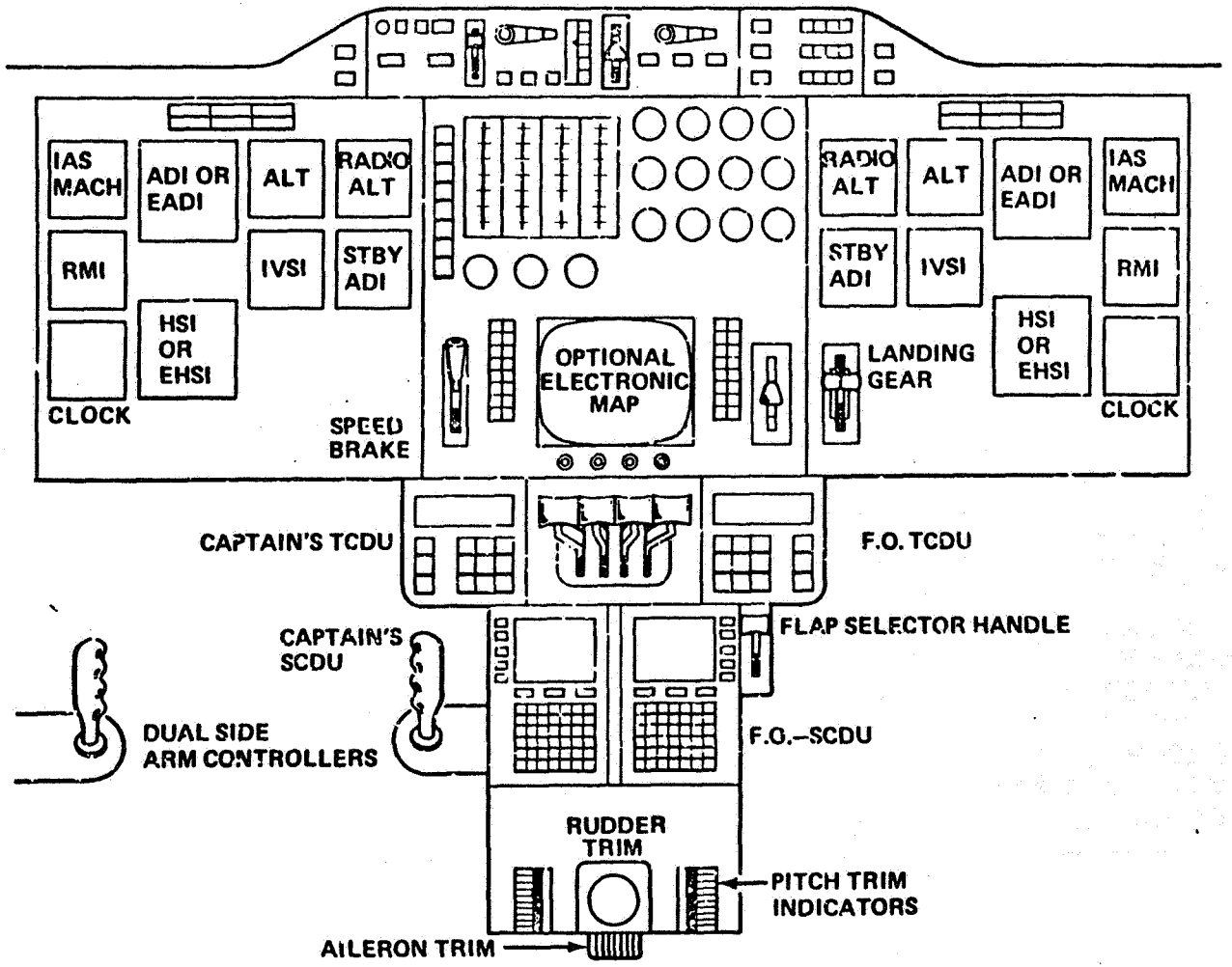

RECOMMENDED EXPANDED R&D EFFORT

- FLIGHT MANAGEMENT SYSTEMS
  - DETAILED DEFINITION OF FUNCTIONS, PERFORMANCE, AND ORGANIZATION
  - DEVELOPMENT OF COCKPIT DESIGN
  - PROTOTYPE HARDWARE DEVELOPMENT—MICROPROCESSOR ERA TECHNOLOGY
- ENERGY MANAGEMENT
  - FLIGHT EVALUATION OF CLOSED LOOP ALGORITHMS
- ELECTRONIC FUEL CONTROL
  - PROTOTYPE DEVELOPMENT AND TEST
- INDIRECT OPTICAL VIEWING
  - LABORATORY DEVELOPMENT—FLIGHT EVALUATION
- FIBER OPTICS
  - DATA BUS DEVELOPMENT

1971 ENVIRONMENTAL CONTROL SYSTEM DEFINITION

MAJOR ELEMENTS:

- PNEUMATIC SYSTEM (FOUR EACH)
  - ENGINE BLEED AIR SOURCES
  - SHAFT-DRIVEN COMPRESSOR AIR SOURCES
  - PRIMARY AIR-TO-AIR HEAT EXCHANGER
  - PRIMARY AIR-TO-FLUID HEAT EXCHANGER
  - AIR-TO-FLUID AFTERCOOLER EXCHANGER
- THERMAL MANAGEMENT SYSTEM (FOUR EACH)
  - TRANSPORT FLUID-TO-AIR HEAT EXCHANGER
  - TRANSPORT FLUID-TO-FUEL HEAT EXCHANGER
  - PUMP ASSEMBLY
- AIR CONDITIONING SYSTEM (FOUR EACH)
  - FLOW CONTROL
  - TRANSPORT FLUID-TO-AIR HEAT EXCHANGER
  - HIGH TEMPERATURE AIR/CYCLE MACHINE
  - REGENERATIVE AIR-TO-AIR HEAT EXCHANGER
  - WATER SEPARATOR
- DISTRIBUTION AND PRESSURE CONTROL SYSTEM
  - SUPPLY AIR DUCTING
  - CABIN AIR RECIRCULATION
  - PRESSURE CONTROLS
  - COMPRESSOR COOLING
  - CARGO COOLING
  - WHEEL WELL COOLING
  - ELECTRICAL/ELECTRONICS COOLING

ENVIRONMENTAL CONTROL UPDATE

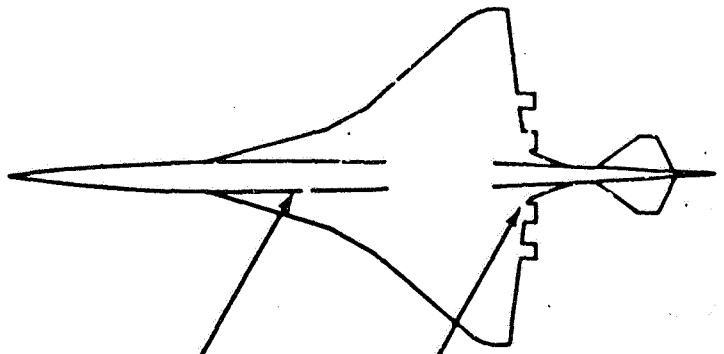

REDEFINED COOLING UNIT TO REDUCE FUEL HEAT SINK LOAD:

- HIGH TEMPERATURE AIR/CYCLE MACHINE
- CABIN EXHAUST AIR (REGENERATIVE) COOLING FOR SECONDARY HEAT EXCHANGER

RELOCATED LIQUID-TO-AIR AFTERCOOLERS FROM NACELLES TO WING/BODY FILLET TO REDUCE EFFECTS ON MULTICYCLE ENGINE INSTALLATION

REASONS FOR PNEUMATICS AND ECS REDEFINITION

- RELOCATION OF AFTERCOOLERS FROM NACELLE TO WING/BODY FILLET
  - SPACE NOT AVAILABLE IN NACELLE
  - RAM AIR REQUIRED DURING LOW SPEED OPERATION ONLY EXCEPT FOR TRANSONIC OPERATION DURING EMERGENCY DESCENT
  - ENGINE SECONDARY AIR NOT AVAILABLE
- HIGH TEMPERATURE AIR/CYCLE MACHINE (ACM)
  - FUEL HEAT SINK CAPABILITY NOT ADEQUATE FOR CONVENTIONAL COOLING UNIT
  - ALLOWS BETTER UTILIZATION OF CABIN EXHAUST AIR HEAT SINK

ECS SCHEMATIC DIAGRAM

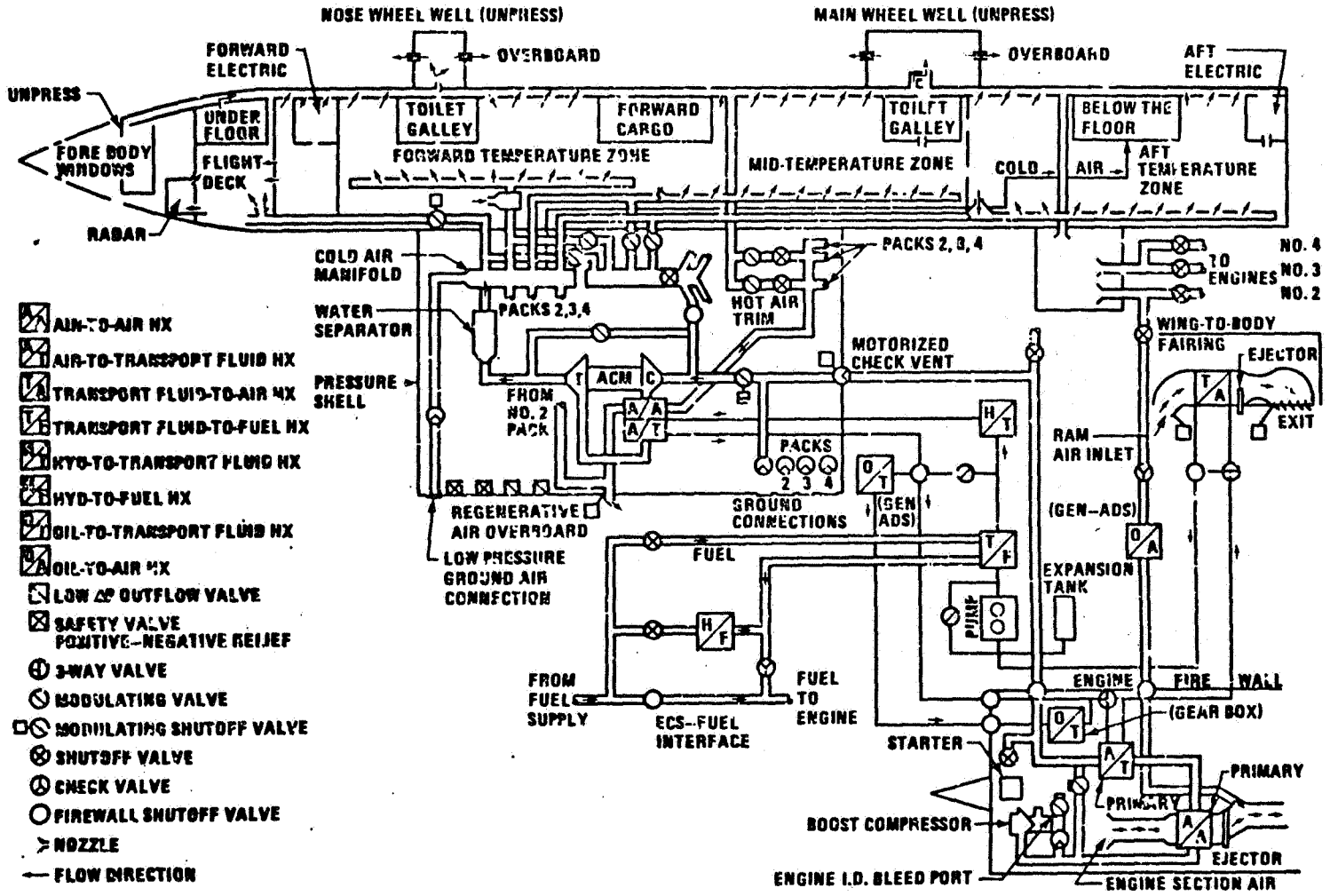

ENGINE POD ECS HEAT EXCHANGER INSTALLATION

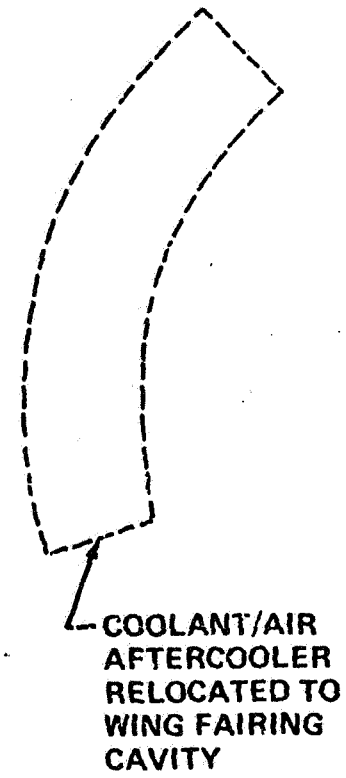

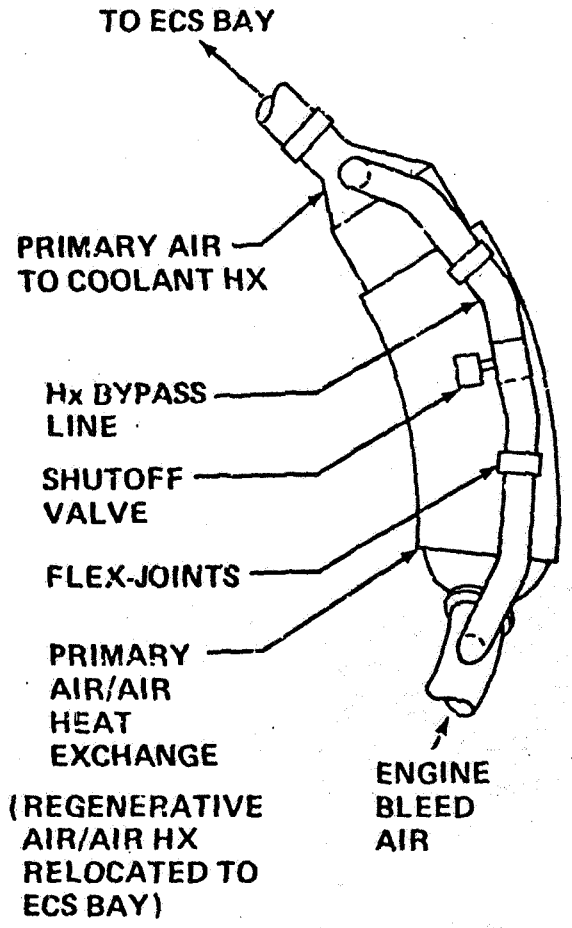

SYSTEMS HEAT REJECTION RATE

	2.4 MACH	
	2707-300 REFERENCE SYSTEM	HIGH TEMPERATURE ACM
FUEL:		
ECS	6 365	4 242
HYD	6 150	6 150
ADS/GEN	950	950
GEAR BOX	420	420
SUBTOTAL, BTU/MIN	13 885	11 762
REGENERATIVE AIR:		
ECS	1 070	2 961
WHEEL WELL	840	840
ADS BAY	240	240
SUBTOTAL, BTU/MIN	2 150	4 041
RAM AIR		
ECS	10 713	10 945
GRAND TOTAL, BTU/MIN	26 748	26 748

ECS SYSTEM DEFINITION

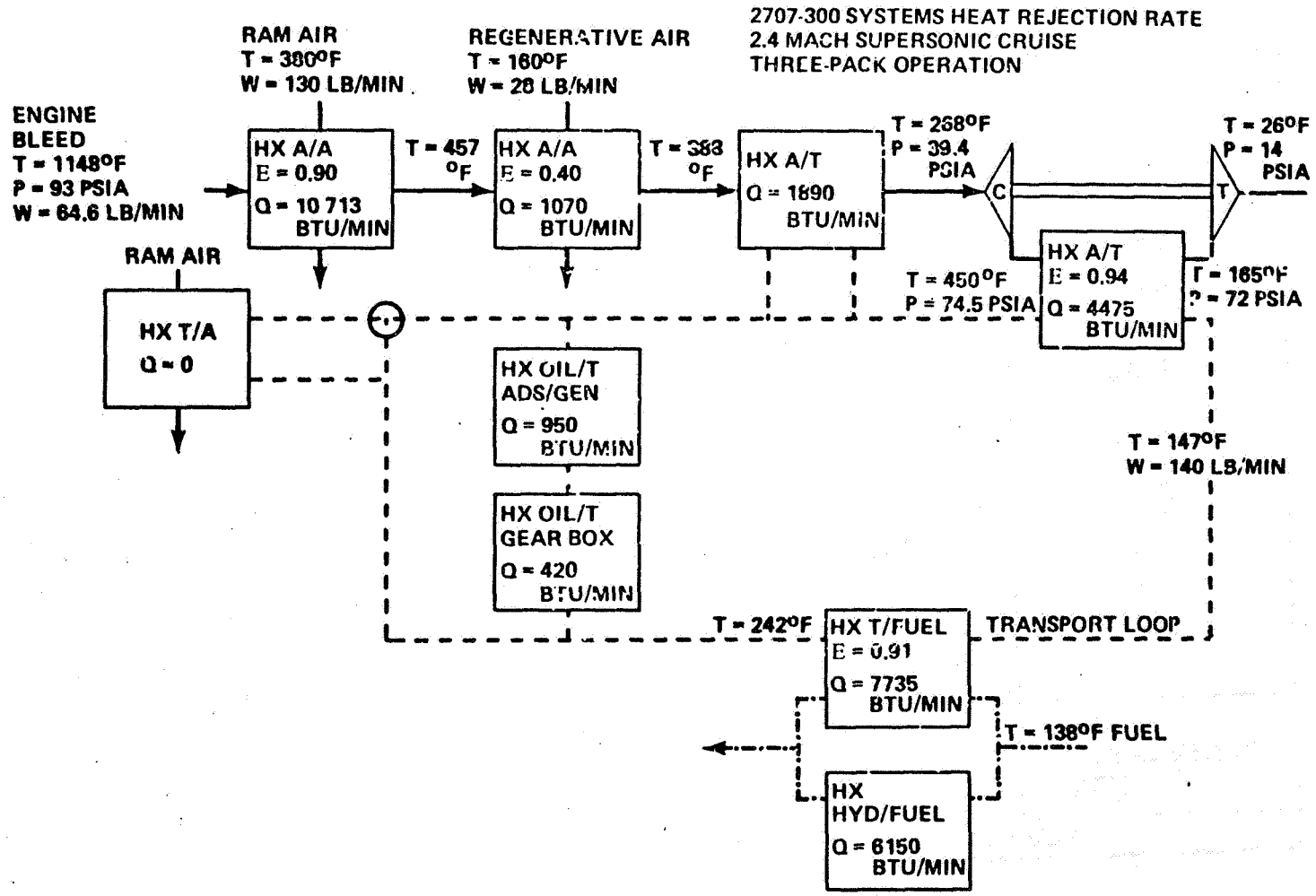

ECS SYSTEMS DEFINITION

SYSTEMS HEAT REJECTION RATE 2.4 MACH
SUPERSONIC CRUISE THREE-PACK OPERATION
(HIGH TEMPERATURE ACM)

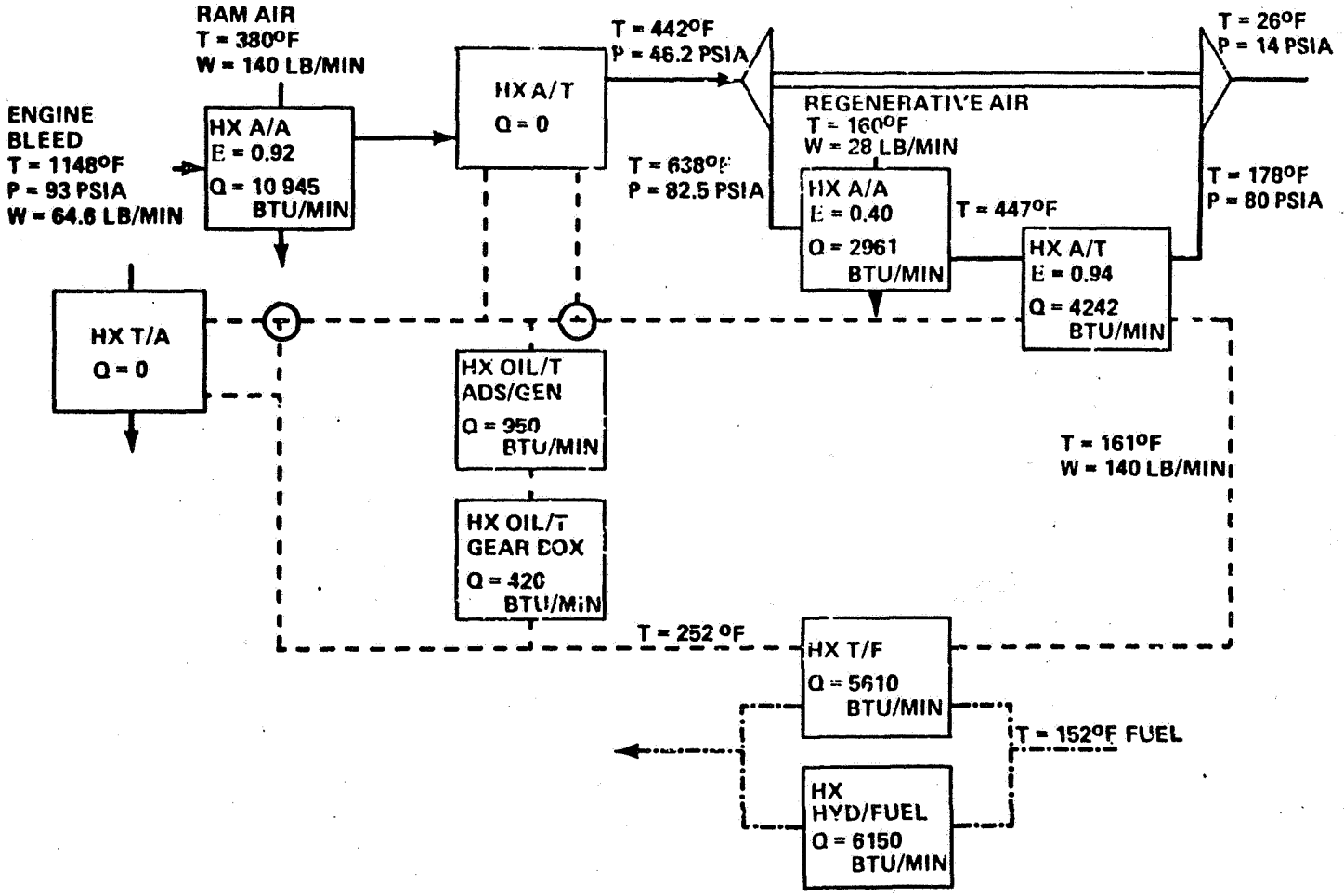

RECOMMENDED EXPANDED R&D EFFORT
ENVIRONMENTAL CONTROL

FURTHER STUDY AND ANALYSIS OF:

- CLOSED LOOP AND PARTIALLY CLOSED LOOP COOLING CYCLES
- THERMAL MANAGEMENT CONCEPTS
- CONTROLS
- EQUIPMENT COOLING

OBJECTIVE:

- TO CONSERVE FUEL HEAT SINK AND REDUCE OPERATIONAL PENALTIES

1971 HYDRAULIC SYSTEM DEFINITION

• NUMBER OF CIRCUITS	FOUR
• OPERATING PRESSURE	4000 PSI
• DESIGN TEMPERATURE	100°F TO 350°F NORMAL −50°F TO 450°F EXTREME
• CAPACITY	880 GPM
• FLOW POWER	2024 HP
• PUMPS	EIGHT-110 GPM 4250 RPM
• TUBING AND FITTINGS	TITANIUM

HYDRAULIC SYSTEMS

- NO TECHNOLOGY UPDATE REQUIRED
  - 4000 PSI SYSTEM VALIDATED BY CONCORDE AND B1
  - TITANIUM TUBING VALIDATED BY CONCORDE, F-14, -16, -17, -18 AND B1
- DISTRIBUTION SYSTEM MODIFIED TO PROVIDE POWER TO TWO-POSITION LANDING GEAR

RECOMMENDED EXPANDED R&D EFFORT
HYDRAULICS

FURTHER STUDY AND ANALYSIS:

- INTEGRATED POWER ACTUATORS
- DIRECT DIGITAL ACTUATION
- WORKING PRESSURE LEVELS
- NONFLAMMABLE SYSTEMS

OBJECTIVE:

TO OPTIMIZE WEIGHT, SAFETY, AND OPERATING EFFICIENCY

1971 ELECTRICAL SYSTEM DEFINITION

GENERATORS:

- FOUR 75 KVA OIL-COOLED ALTERNATORS
- 334-VOLT DC LINK-POWER TRANSMISSION
- CONVERTOR/FILTER/TRANSFORMER WITH 75 KVA, 3ϕ, 120/208-VOLT, 400/Hz AND 28-VOLT DC OUTPUT

FEEDERS:

- FOUR FOR EACH GENERATOR, 7-WIRE, SHIELDED AND COOLED

STANDBY POWER:

- TWO 34 AH Ni-CAD BATTERIES
- TWO STATIC INVERTERS

LOAD CENTERS:

- TWO CONVENTIONAL POWER SHIELDS

CONTROL/DISPLAY:

- ONE CONVENTIONAL MONITOR AND CONTROL

ELECTRIC POWER SYSTEM UPDATE

- CHANGE PRIMARY POWER GENERATION TO HYBRID AC/DC CONSTANT FREQUENCY GENERATOR SYSTEM
- MODIFY STANDBY SYSTEM TO PROVIDE QUAD REDUNDANT FLIGHT CONTROL POWER

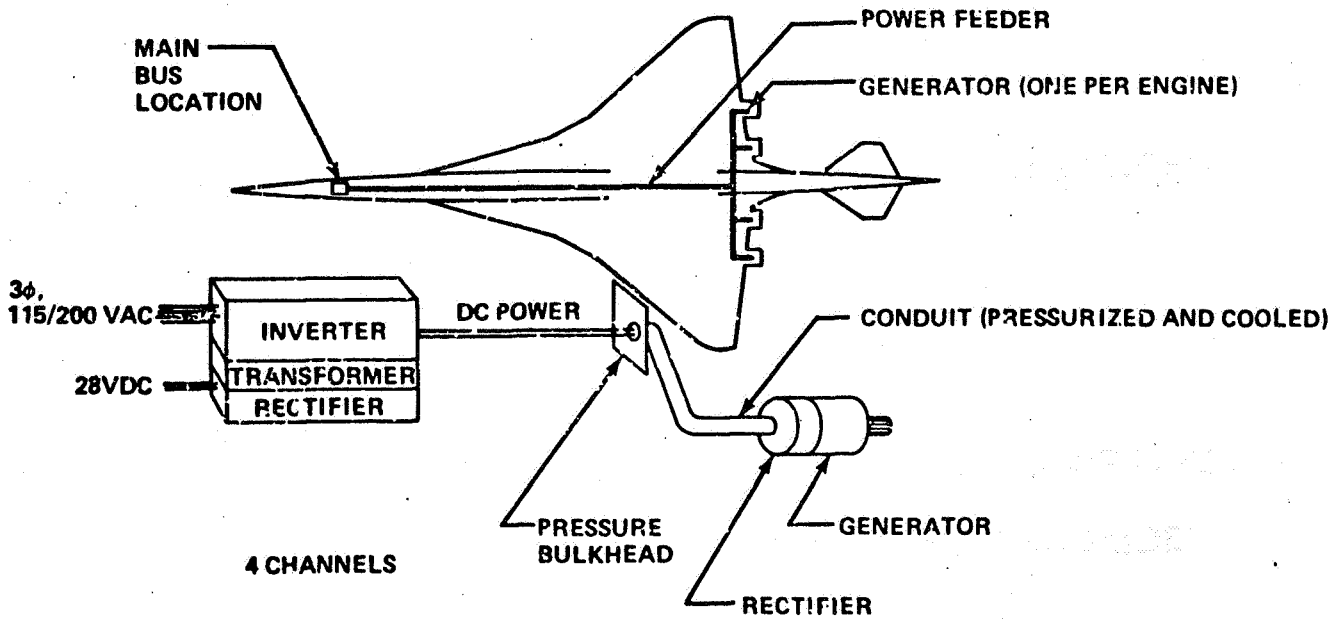

GAINS FROM ELECTRICAL POWER SYSTEM REDEFINITION

HYBRID CONSTANT FREQUENCY GENERATOR WILL PROVIDE:

- IMPROVED GENERATION EFFICIENCY AND CONSUME LESS FUEL
- ELIMINATE DC COMPONENT IN OUTPUT
- REDUCE SYSTEM NOISE
- ELIMINATE TRANSFORMER RECTIFIERS
- REDUCE SYSTEM WEIGHT

STANDBY POWER SYSTEM UPDATE IS NEEDED TO MEET ADDED FLIGHT CONTROLS REQUIREMENT

RECOMMENDED EXPANDED R&D EFFORT
ELECTRICAL

FURTHER STUDY AND ANALYSIS

- GENERATION SYSTEMS
- MICROPROCESSOR LOAD MANAGEMENT
- MULTIPLEXED DISTRIBUTION AND CONTROL
- HIGH VOLTAGE DISTRIBUTION

SYSTEMS WEIGHT COMPARISONS

	2707-300 LB	733-633 LB	ΔWT LB
AVIONICS—COMMUNICATION, NAVIGATION	3120	2710	–410
FLIGHT CONTROL AVIONICS	1460	1200	–260
FLIGHT CONTROLS SYSTEM	11 350	10 820	–530
ELECTRICAL POWER	4630	5080	+450
ENVIRONMENTAL CONTROL	8770	8880	+110
HYDRAULICS	6110	6140	+ 30
ENGINE SYSTEMS	1700	1775	+ 75
TOTAL			–535

COMMUNITY NOISE

- AIRPLANE CONFIGURATION
- NOISE COMPONENTS CONSIDERED
- NOISE ABATEMENT PROCEDURE
- PREDICTION UNCERTAINTY
- GE 21/J11-B9 PREDICTION AND COMPARISON
- P&WA VSCE-502B PREDICTION AND COMPARISON
- CONCLUSIONS
- RECOMMENDATIONS

AIRPLANE CONFIGURATION

- 750 000 LB, MTW
- M = 2.4
- FOUR-700 LB/SEC ENGINES
- 273 PASSENGERS
- 4200 NMI RANGE

ENGINES CONSIDERED
700 LB/SEC, M = 2.4

- P&WA — VSCE-502B
- GE — 21/J11-B9

NOISE COMPONENTS CONSIDERED

- JET
- CORE
- TURBINE
- FAN
  - INLET
  - AFT
- DUCT BURNER
- TOTAL

NOISE ABATEMENT PROCEDURES

- NOISE GOALS WILL BE MET WITH NOISE ABATEMENT PROCEDURES ONLY

NOISE ABATEMENT PROCEDURES

- PROCEDURES USED IN THIS STUDY MINIMIZED JET NOISE ONLY OVER THE COMMUNITY
- OTHER PROCEDURES WILL ADDRESS SIDELINE NOISE OR OTHER OBJECTIVES
- GE AND P&WA ENGINES WERE ASSESSED WITH NOISE ABATEMENT PROCEDURES

NOISE ABATEMENT PROCEDURES (TAKEOFF)

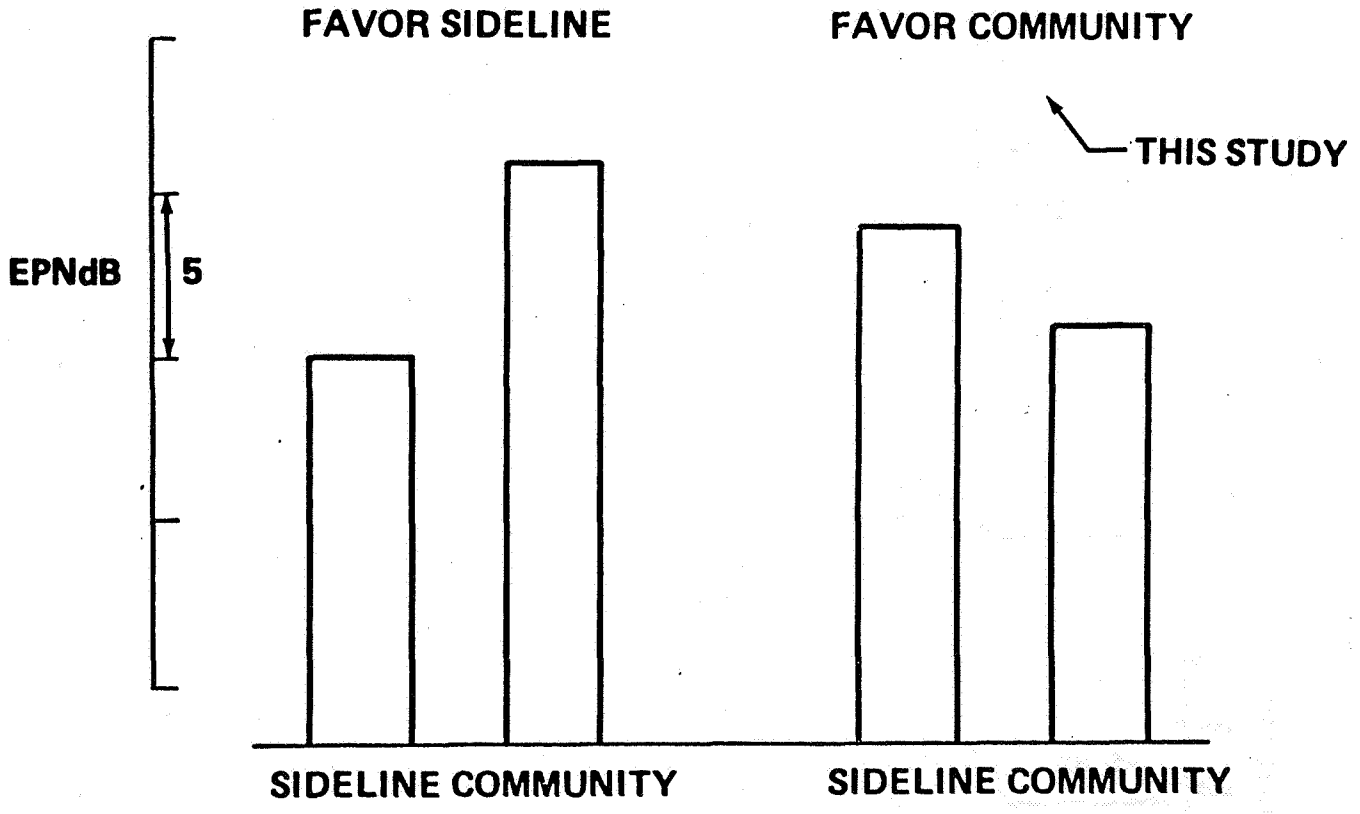

NOISE ABATEMENT PROCEDURES

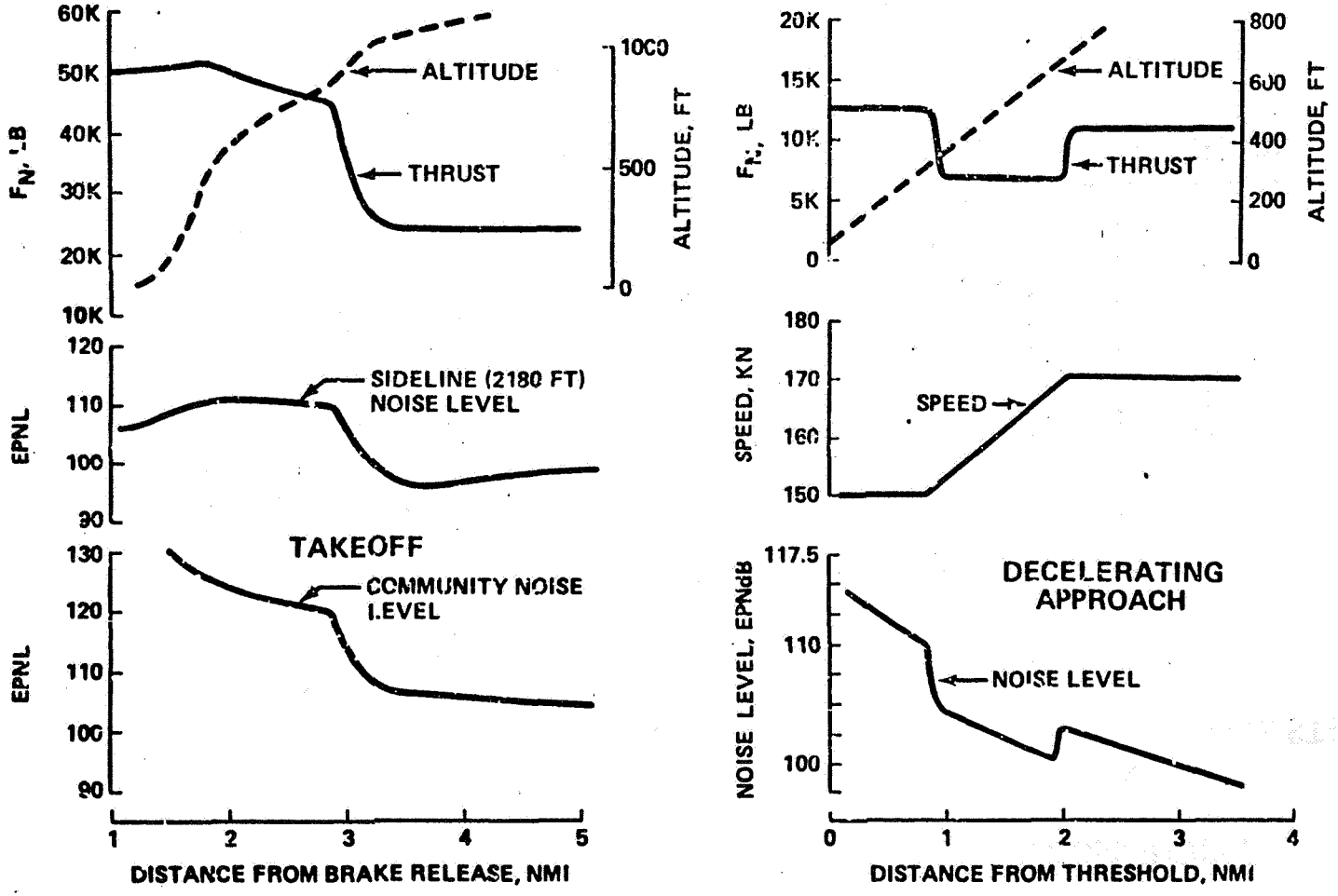

PREDICTION UNCERTAINTIES

- BOEING HAS ADDED 5 EPNdB TO THE NOMINAL (THEORETICAL) NOISE VALUES TO ENSURE REASONABLY HIGH CONFIDENCE OF DEMONSTRATING NOMINAL VALUES FOR CERTIFICATION

ELEMENTS OF UNCERTAINTY

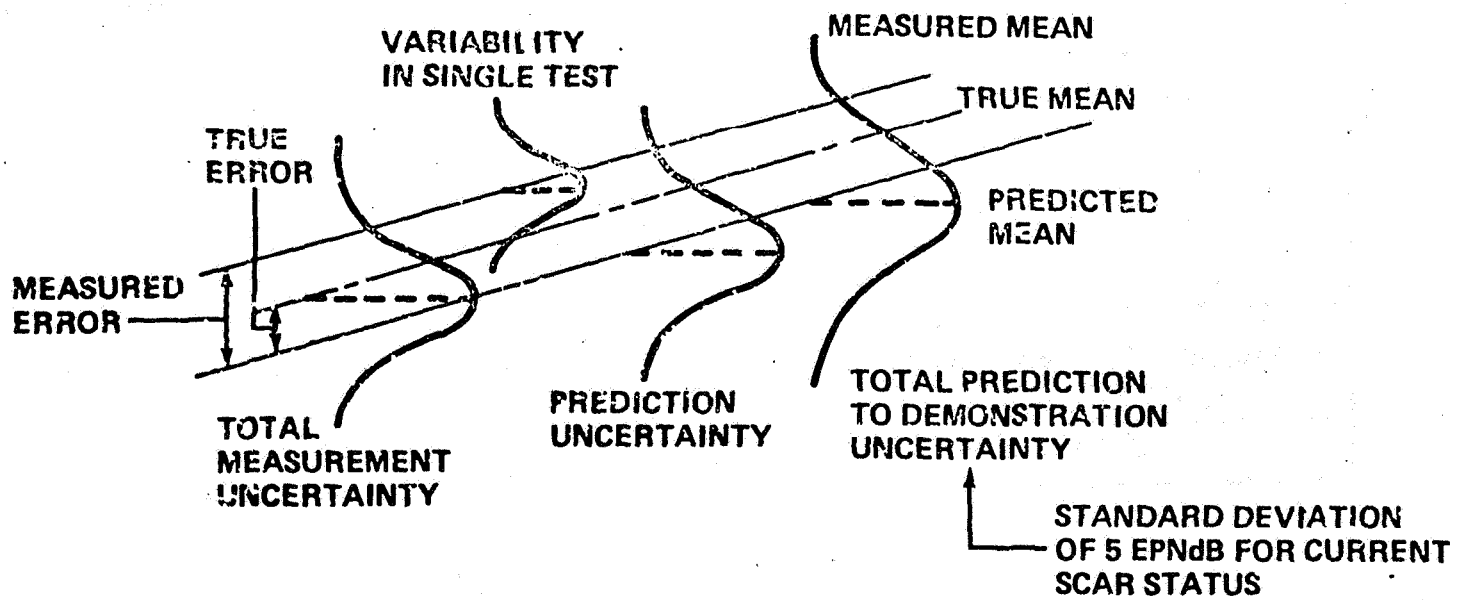

BOEING PREDICTION
GE21/J11-B9

MEASURING POINT	JET	FAN		TURBINE	CORE	TOTAL	
		INLET	AFT			NOMINAL	WITH UNCERTAINTY
COMMUNITY WITH SUPPRESSOR						109.7	115
SIDELINE WITH SUPPRESSOR						111.2	116
APPROACH (INLET CHOKED)*						104.2	109

* NOT ADJUSTED FOR RECOVERY LOSSES

BOEING PREDICTION
GE21/J11-B9

MEASURING POINT	JET	FAN		TURBINE	CORE	TOTAL	
		INLET	AFT			NOMINAL	WITH UNCERTAINTY
COMMUNITY WITH SUPPRESSOR	107.8	80.5	87.6	88.9	101.3	109.7	115
SIDELINE WITH SUPPRESSOR	109.6	61.9	74.1	59.6	99.1	111.2	116
APPROACH (INLET CHOKED)*	88.7	92.5	93.2	97.5	98.3	104.2	109

* NOT ADJUSTED FOR RECOVERY LOSSES

SUMMARY COMPARISON
BOEING—GE
NOMINAL VALUES
NOISE ABATEMENT PROCEDURES

	BOEING	GE
COMMUNITY		
• WITHOUT SUPPRESSOR	109.8	108.3
• WITH SUPPRESSOR	109.7	N/A
SIDELINE		
• WITHOUT SUPPRESSOR	112.4	110.1
• WITH SUPPRESSOR	111.2	N/A
APPROACH		
• DECELERATING	104.2	N/A
• CONVENTIONAL	108.9	104.3

PREDICTIONS COMPARED

NOISE ABATEMENT PROCEDURE GE21/J11- B9

MEASURING POINT	ITEM	FAN INLET	FAN AFT	TURBINE	CORE	JET	TOTAL (NOMINAL)
SIDELINE	GE	75.6	56.8	57.2	86.5	110.0	110.1
	BOEING	61.9	74.1	59.6	98.2	111.2	112.4
	DIFFERENCE	+13.7	−17.3	− 2.4	−11.7	− 1.2	− 2.3
COMMUNITY	GE	87.3	68.6	74.7	89.0	108.0	108.3
	BOEING	80.5	87.6	88.9	100.5	108.0	109.8
	DIFFERENCE	+6.8	−19.0	−14.2	−11.5	0	− 1.5
APPROACH DECELERATING	NO GE DATA						
	BOEING	92.5	93.2	97.5	98.3	88.7	104.2

CONVENTIONAL APPROACH

APPROACH CONVENTIONAL	GE	92.0	85.3	86.8	90.7	103.0	104.3
	BOEING	97.7	96.4	99.8	102.4	100.0	108.9
	DIFFERENCE	−0.7	−11.1	−13.0	−11.7	+3.0	− 4.6

GE JET SUPPRESSOR ASSESSMENT

- GE DATA SUPPLIED
  - 2 EPNdB COMMUNITY IN FLIGHT
  - 3 EPNdB SIDELINE IN FLIGHT
  - 0.92 THRUST FACTOR
  - 500 LB/ENGINE
- ANALYSIS
  - CORRECT FOR THRUST LOSS
  - TAKEOFF PERFORMANCE UNCHANGED
  - 2000-LB WEIGHT PENALTY TO PAYLOAD–RANGE
- RESULT (BOEING PREDICTIONS)

MEASURING POINT	JET NOISE	CORE NOISE	TOTAL NOISE
COMMUNITY	–0.2 EPNdB	+0.8 EPNdB	–0.1 EPNdB
SIDELINE	–1.6 EPNdB	+0.9 EPNdB	–1.2 EPNdB

BOEING PREDICTION
P&WA VSCE-502B

MEASURING POINT	JET	FAN		TURBINE	CORE	TOTAL	
		INLET	AFT			NOMINAL	WITH UNCERTAINTY
COMMUNITY						106.8	112
SIDELINE						110.4	115
APPROACH (INLET CHOKED)*						106.8	112

* NOT ADJUSTED FOR RECOVERY LOSSES

BOEING PREDICTION
P&WA VSCE-502B

MEASURING POINT	JET	FAN		TURBINE	CORE (WITH DUCT BURNER)	TOTAL	
		INLET	AFT			NOMINAL	WITH UNCERTAINTY
COMMUNITY	104.5	75.3	92.8	69.5	96.2	106.8	112
SIDELINE	109.7	55.9	78.8	48.1	97.8	110.4	115
APPROACH (INLET CHOKED)*	93.3	90.2	101.7	88.3	98.5	106.8	112

* NOT ADJUSTED FOR RECOVERY LOSSES

SUMMARY COMPARISON
BOEING - P&WA NOMINAL VALUES

	NOISE ABATEMENT PROCEDURE	
	BOEING	P&WA
COMMUNITY	106.8	NOT AVAILABLE
SIDELINE	110.4	
APPROACH	106.8	

SUMMARY COMPARISON
BOEING - P&WA NOMINAL VALUES

	FAR 36 PROCEDURE	
	BOEING	P&WA
COMMUNITY	112.2	107.9
SIDELINE	111.3	106.6
APPROACH	108.7	105.5

PREDICTIONS COMPARED

FAR-36 TYPE PROCEDURE P&WA VSCE - 502B

MEASURING POINT	ITEM	FAN	TURBINE	CORE (WITH DB)	JET	TOTAL (NOMINAL)
TAKEOFF (COMMUNITY)	P&WA	94.8	73.4	108.8	112.0	114.0
	BOEING	94.7	69.0	106.6	118.4	118.9
	DIFFERENCE	+0.1	+4.4	+2.2	– 6.4	– 4.9
CUTBACK (COMMUNITY)	P&WA	94.8	74.9	102.3	105.9	107.9
	BOEING	94.8	69.8	100.6	111.1	112.2
	DIFFERENCE	0	+5.1	+1.7	– 5.2	– 4.3
SIDELINE	[illegible]	[illegible]	[illegible]	[illegible]	[illegible]	[illegible]
	[illegible]	[illegible]	[illegible]	[illegible]	[illegible]	[illegible]
	DIFFERENCE	[illegible]	[illegible]	[illegible]	[illegible]	[illegible]
APPROACH	[illegible]	[illegible]	[illegible]	[illegible]	[illegible]	[illegible]
	[illegible]	[illegible]	[illegible]	[illegible]	[illegible]	[illegible]
	[illegible]	[illegible]	[illegible]	[illegible]	[illegible]	[illegible]

SONIC INLET NOISE SUPPRESSION

- NEEDED AT REDUCED POWER SETTINGS
- INITIAL FLOW SCHEDULES WILL NOT PRODUCE FULL EFFECT ON APPROACH
- BOTH GE AND P&WA CAN MODIFY SCHEDULE FOR CONVENTIONAL APPROACH
- ABILITY TO OBTAIN SUFFICIENT FLOW FOR DECELERATING APPROACH CASE NOT ESTABLISHED
- FLIGHT EFFECTS ON SONIC INLET SUPPRESSION AN UNKNOWN

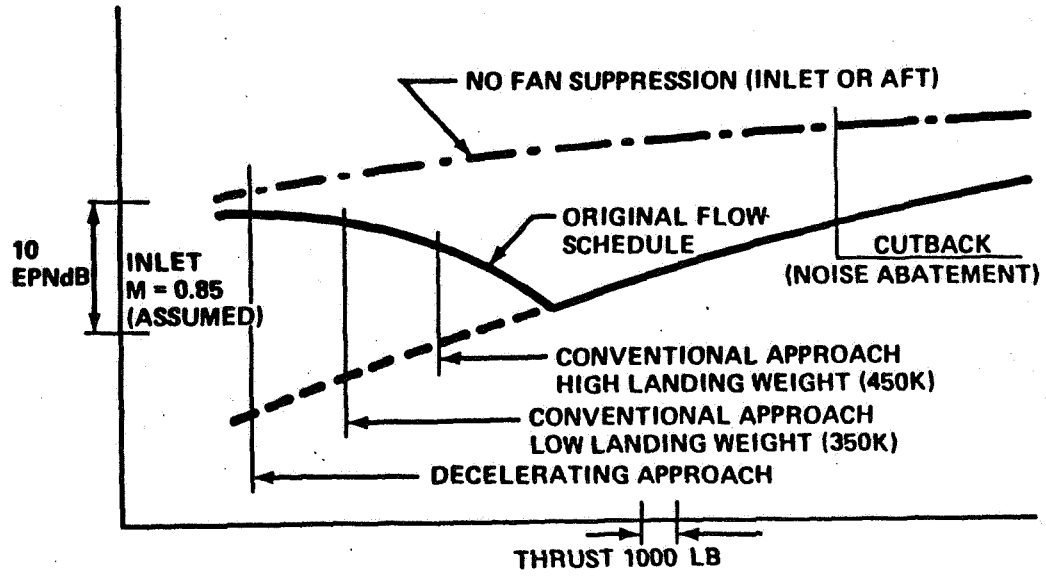

CONCLUSIONS I

- COMPONENT PREDICTIONS DIFFER
  - TECHNOLOGY BASE IS LACKING
- NOISE COMPONENTS OTHER THAN JET ARE IMPORTANT AT REDUCED POWER SETTINGS

CONCLUSIONS II

- THIS STUDY HAS SHOWN THAT, WITHOUT ADDITIONAL TECHNICAL PROGRESS, REASONABLE NOISE GOALS WILL NOT BE MET BY AN ADVANCED SST
- CURRENTLY AVAILABLE TECHNOLOGY WILL NOT SUPPORT SST RULE-MAKING PROCESS

RECOMMENDATIONS

- DEVELOP A COMPREHENSIVE PLAN INVOLVING JOINT ACTIONS BY ENGINE AND AIRPLANE MANUFACTURERS TO DEVELOP A QUIET SUPERSONIC AIRPLANE
- NEEDED FOR EARLY DATE
  - TEST CO-ANNULAR MODELS AT CONDITIONS THAT ARE NEARER TO THOSE OF THE CANDIDATE ENGINES
  - ATTACK CORE AND FAN NOISE WITH DEVELOPMENT OF NACELLES THAT HAVE DEEP LININGS
  - DESIGN AND TEST SUPERSONIC INTAKES IN NOISE-ABATEMENT MODE

RECOMMENDATIONS FOR NOISE TECHNOLOGY IMPROVEMENT AND REDUCTION

- CO-ANNULAR JET NOISE
  - EXTEND MODEL DATA BASE RANGE
  - EXTEND FLIGHT EFFECTS DATA BASE
  - EXTEND SHOCK-CELL NOISE WORK, INCLUDING FLIGHT EFFECTS
  - EXTEND LARGE-SCALE ENGINE DATA BASE
- TURBINE AND CORE NOISE
  - EXTEND DATA BASE FOR NOISE CHARACTERISTICS OF TURBINES HAVING FEW STAGES
  - DEVELOP LINING TECHNOLOGY FOR SCAR ENGINES
- FAN NOISE
  - EXTEND MULTISTAGE FAN DATA BASE
  - IMPROVE ENGINE DUCT DEFINITION FOR LINING DESIGN
  - IMPROVE SONIC INLET PERFORMANCE DEFINITION AND TREATABILITY DEFINITION, TRADE-OFF PERFORMANCE, SUPPRESSION, AND TREATMENT
- AIRFRAME NOISE
  - DEVELOP PREDICTION TECHNOLOGY FOR SCAR AIRPLANES
  - DEVELOP REDUCTION TECHNOLOGY

SUMMARY OF RECOMMENDATIONS

- TECHNOLOGY EFFORTS TO ACHIEVE LOW NOISE SHOULD EMPHASIZE:
  - DESIGN OF QUIET PROPULSION PODS WITH PRIORITY ON PART-POWER CONDITIONS
  - IMPROVED TAKEOFF AND LANDING AERODYNAMICS
  - INNOVATIVE DESIGN; i.e., ADAPTIVE LANDING GEAR AND NOISE-ABATEMENT FLIGHT PROCEDURES

PROPULSION SYSTEM

- FUEL SYSTEM THERMAL MANAGEMENT
- INLET DESIGN
- INSTALLATION AND PERFORMANCE

PRINCIPAL RESULTS PRECEDING STUDIES

- TWO COMPETITIVE CYCLE TYPES EVOLVED
  - GE21/J11-B9
  - P&WA VSCE-502B
- SENSITIVITY FACTORS ESTABLISHED
- ENGINE/AIRPLANE OPERATING TECHNIQUES TO MINIMIZE JET NOISE
- STRUCTURAL NACELLE CONCEPT DEFINED AND ANALYZED (GE21)
- ALTERNATE NOZZLE CONCEPT (LONG FLAP) DEFINED AND ANALYZED

PRINCIPAL RESULTS
CURRENT STUDIES

- ENGINE TECHNOLOGY IMPACT (VSCE-502B vs -511)
- MACH NUMBER IMPACT (GE21/J11-B14 AND P&WA VSCE-516)
- APPLICATION OF STRUCTURAL NACELLE CONCEPT TO VSCE-502B
  - COMPATIBILITY WITH MAINTENANCE AND INSPECTION REQUIREMENTS ESTABLISHED
- INLET PERFORMANCE, WEIGHT, AND MASS-FLOW CHARACTERISTICS ESTABLISHED
  - ENGINE/INLET FLOW MATCH DEFINED (GE21/J11-B9 AND VSCE-502B)
  - INLET CHOKING CAPABILITY IMPROVED (ENGINE FLOW INCREASES)
- FUEL SYSTEM THERMAL EXPOSURES ANALYZED AND SENSITIVITIES ESTABLISHED
- PRELIMINARY TOTAL ENGINE/AIRPLANE NOISE CHARACTERISTICS DEFINED

FUEL SYSTEM THERMAL ANALYSIS

PURPOSE: ANALYZE FUEL THERMAL EXPOSURES AND ENGINE INTERFACE TEMPERATURES AS A FUNCTION OF DESIGN AND OPERATIONAL VARIABLES

OBJECTIVE: TO ESTABLISH FUEL HEAT SINK CAPACITY AVAILABLE, ON BLENDED WING CONFIGURATION, FOR AIRPLANE SYSTEMS DESIGN AND ANALYSIS

FUEL TANK DEFINITION

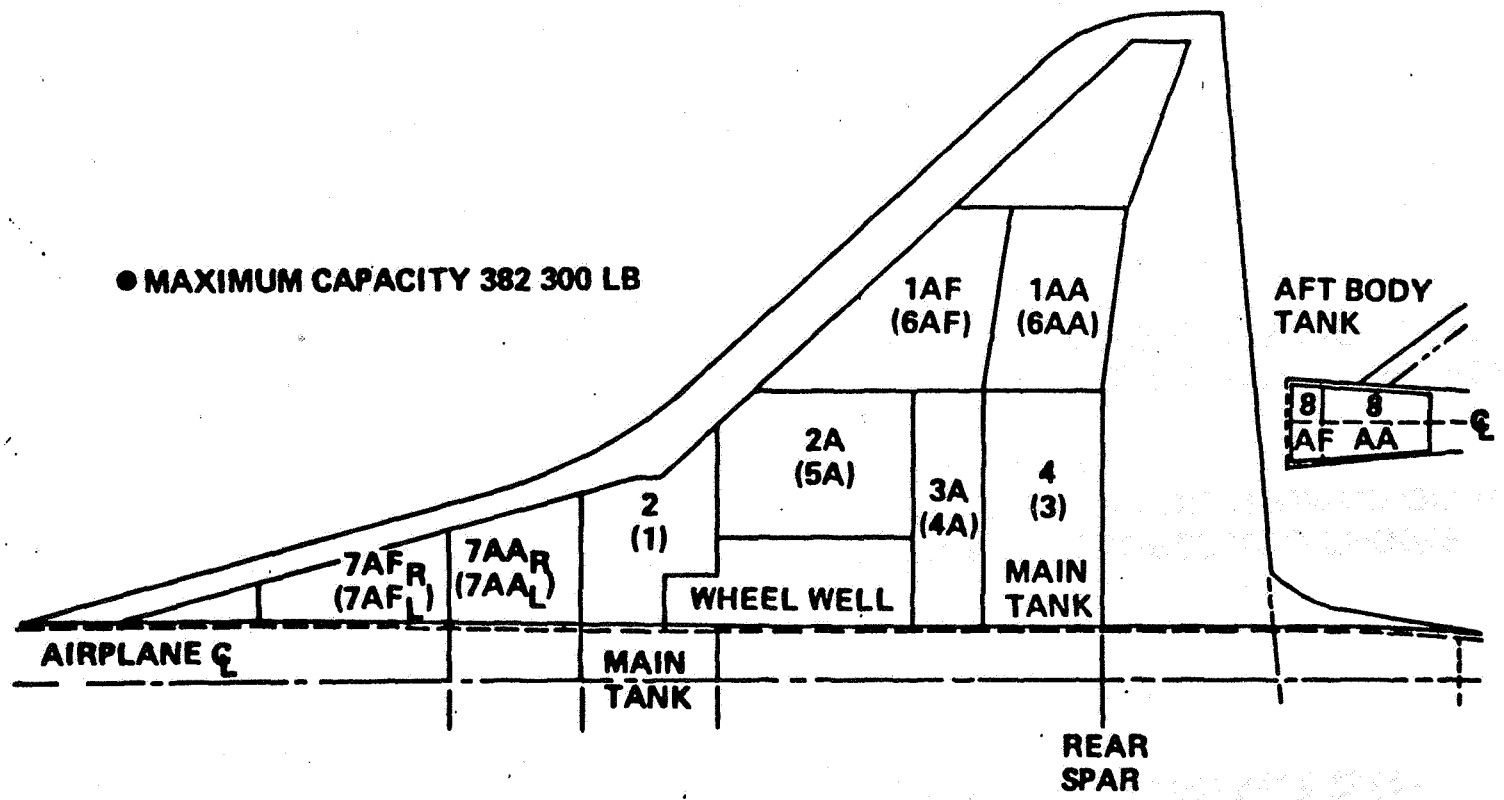

FUEL TANK THERMAL CONDUCTANCE

CONSTRUCTION	CONDUCTIVITY (BTU/HR/FT^2, ^{o}F)
• SKIN/STRINGER	30
• TITANIUM SANDWICH	
• ALUMINUM-BRAZED HONEYCOMB	9
• ALUMINUM-BRAZED SINE WAVE	5
POLYIMIDE BONDED HONEYCOMB	5

TANK AND ENGINE INTERFACE
FUEL TEMPERATURE SENSITIVITY STUDIES

- TANK OVERALL THERMAL CONDUCTANCE
- INITIAL FUEL TEMPERATURE
- FLIGHT LENGTH
- FUEL MANAGEMENT (AUXILIARY TANK SEQUENCING AND TIMING)
- FUEL RECIRCULATION
- SLOWING TO M = 2.0 LATE IN FLIGHT
- DEPRESSURIZING HALF THE A/C HYDRAULIC PUMPS
- ECS DESIGN VARIATIONS

FUEL TEMPERATURE vs TIME

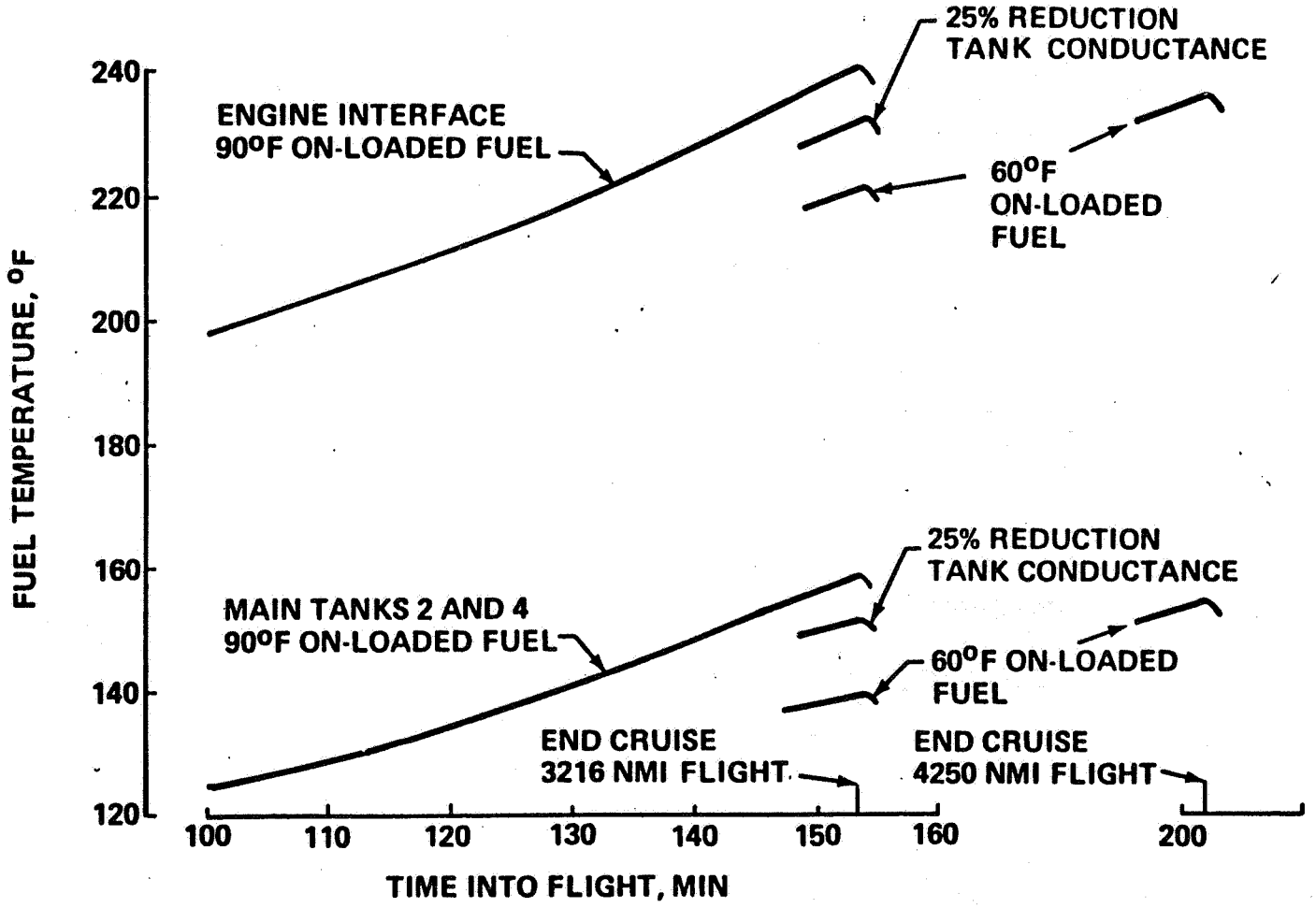

FUEL TEMPERATURE-REVISED MANAGEMENT

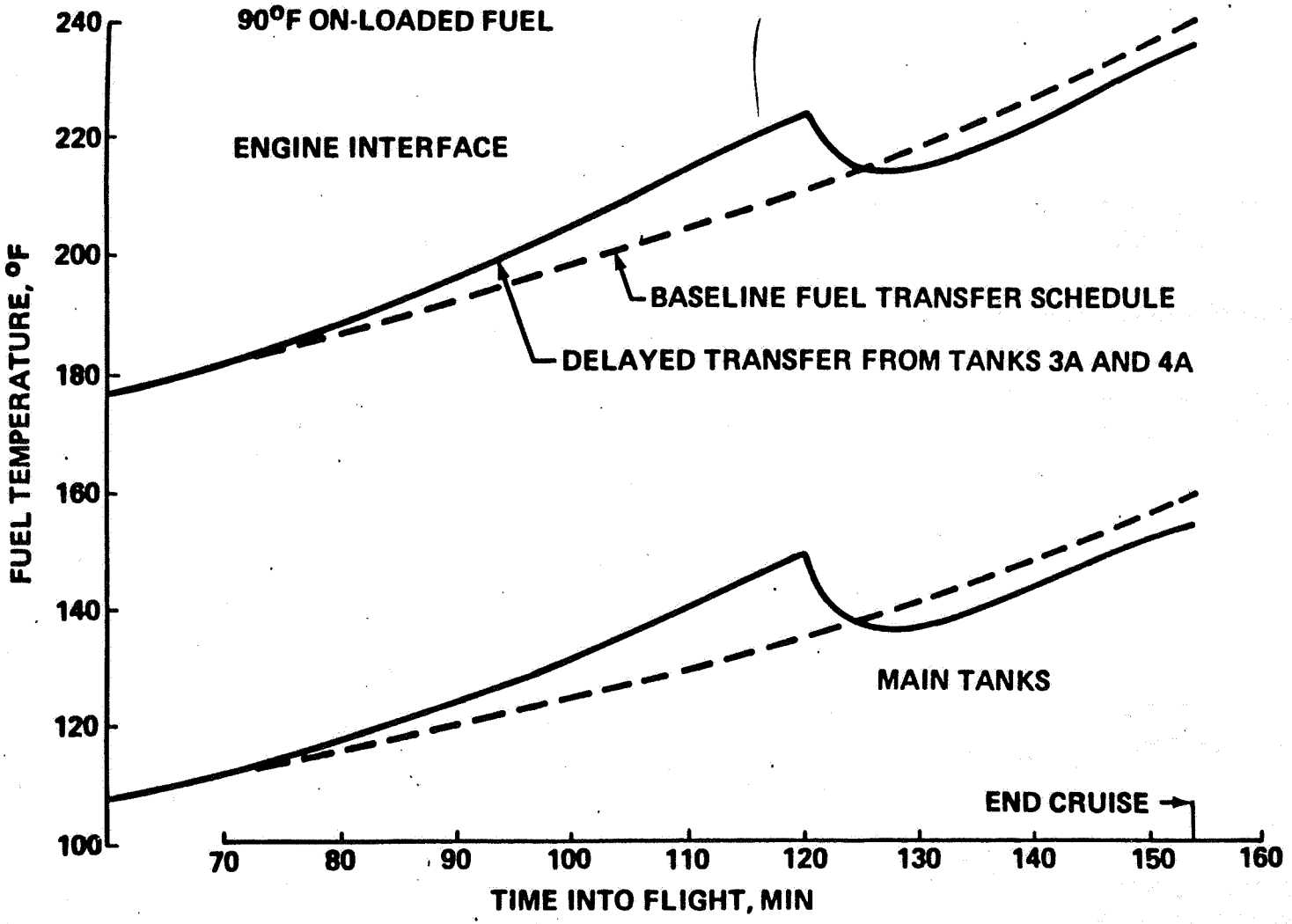

FUEL TEMPERATURE-RECIRCULATION

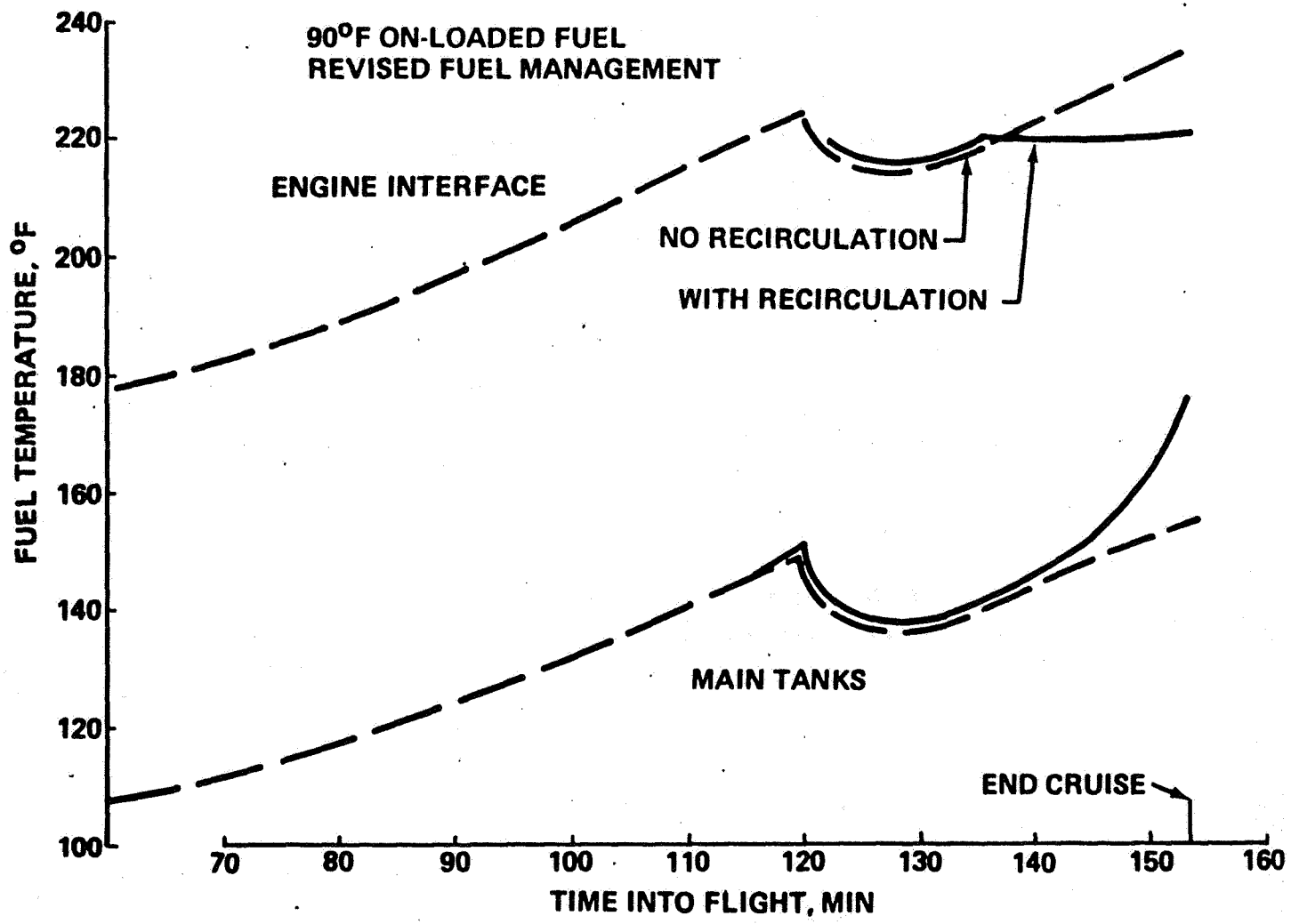

FUEL TEMPERATURE LIMITS

GE4/J5P FTS

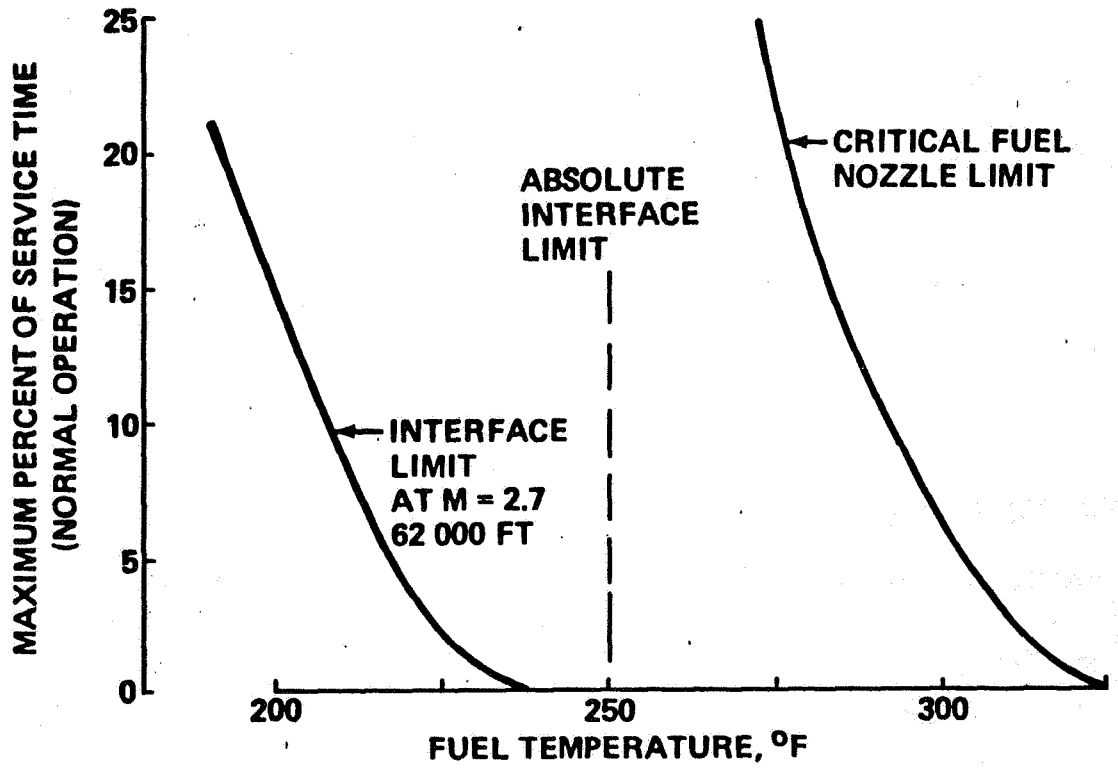

INTERFACE FUEL TEMPERATURE EXPOSURES

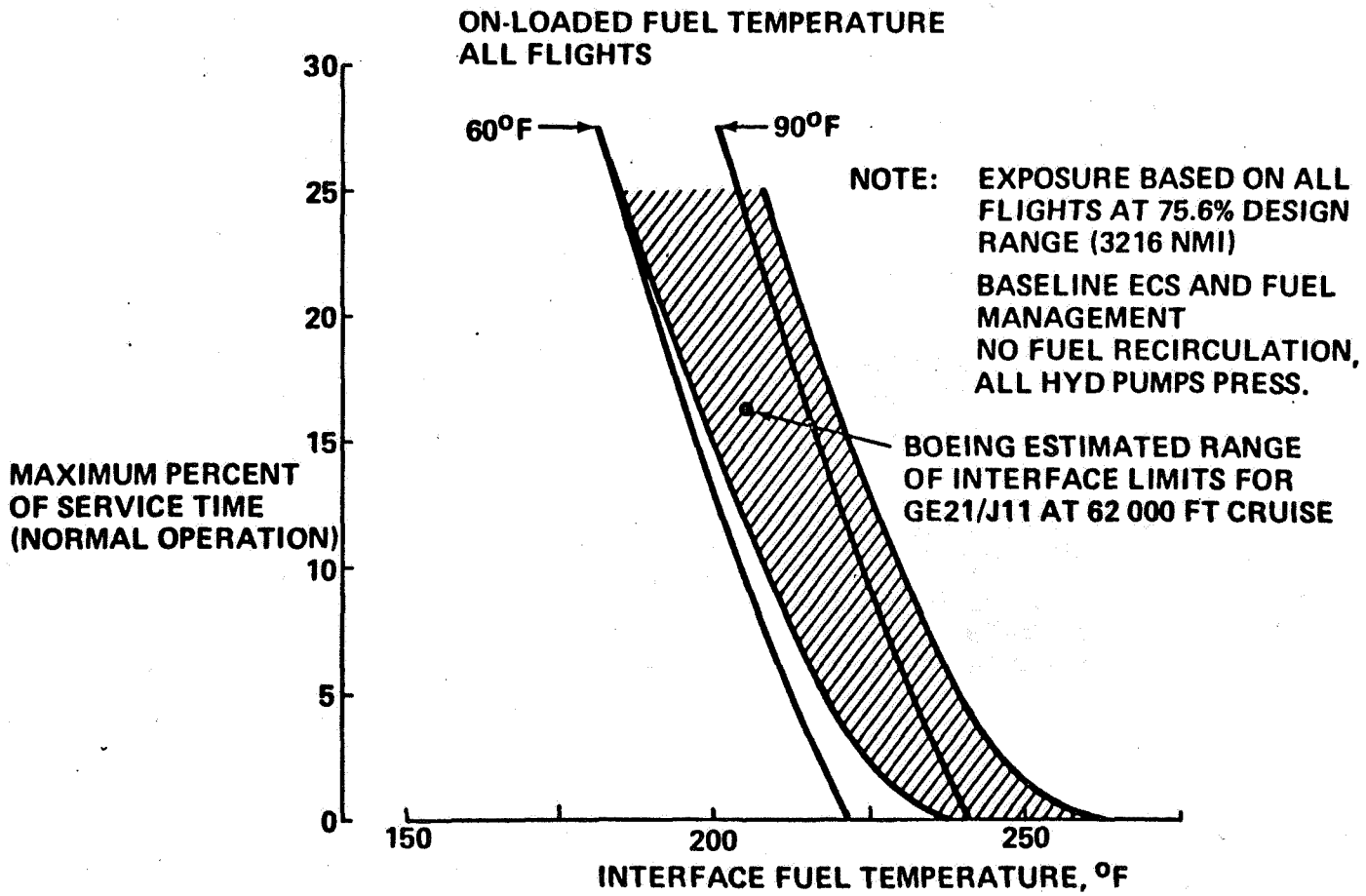

INTERFACE FUEL TEMPERATURE EXPOSURES – AGGREGATE

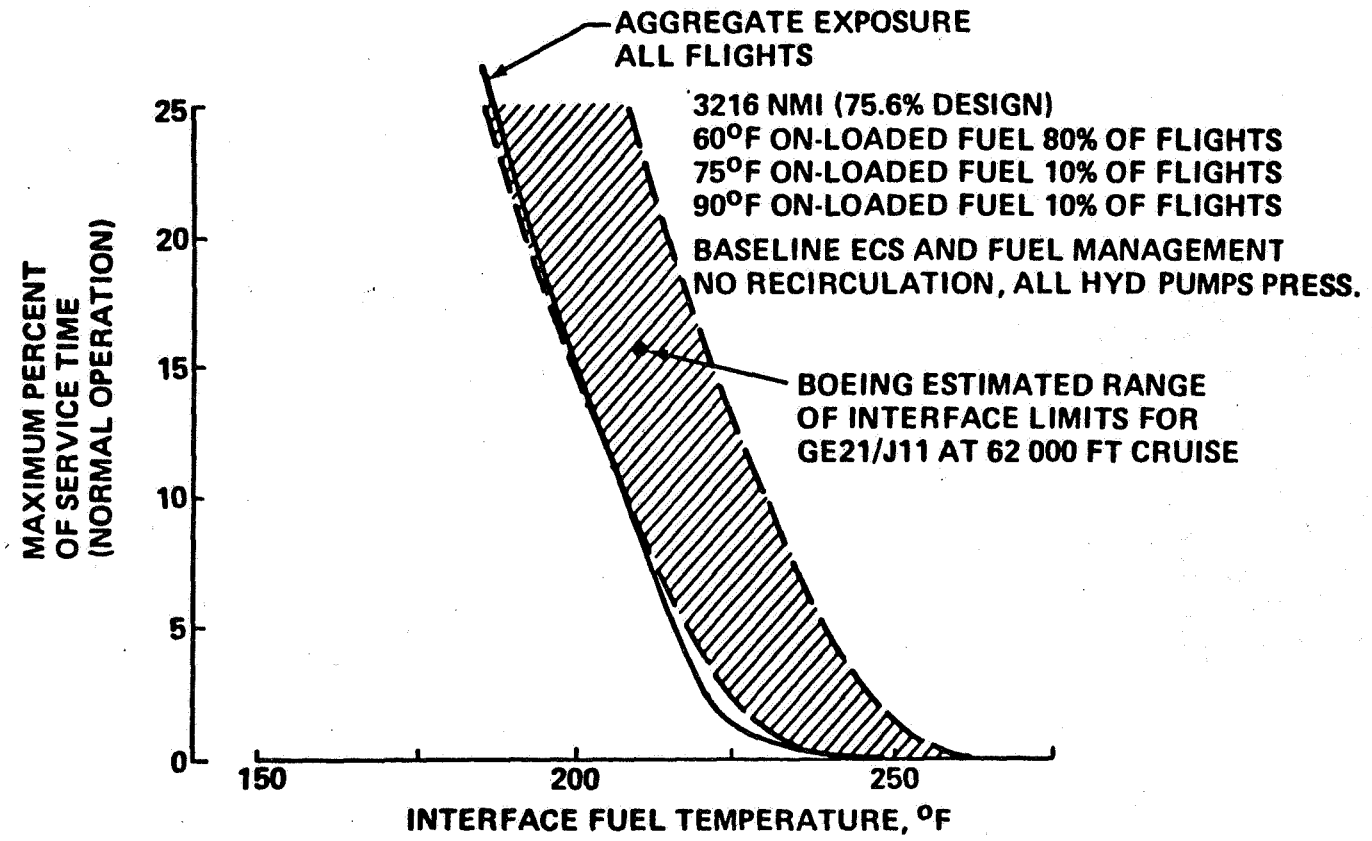

ALTERNATE SOLUTIONS

- RECIRCULATION (AND TANK PRESSURIZATION IF REQUIRED)
- ECS DESIGN CHANGE (ALL RAM AIR SINK)

CONCLUSIONS
FUEL THERMAL STUDY

- FUEL HEAT SINK AND TEMPERATURES APPEAR SATISFACTORY FOR BASELINE SYSTEMS AND MANAGEMENT–VALIDATION STUDIES REQUIRED
- INTERFACE EXPOSURE LIMITS NEED TO BE DEFINED, AND SPECIAL COMPONENT PROTECTION REQUIREMENTS IDENTIFIED
- NO NEED TO DEVELOP SPECIAL TANK PANEL INSULATION
- INDIVIDUAL TANK PANEL DESIGN OPTIMIZATION REQUIRED
- SPECIAL PROVISIONS AND PROCEDURES CAN BE EMPLOYED TO REDUCE PEAK EXPOSURES IF NECESSARY
- ALTERNATE ECS HEAT SINK (RAM AIR) COULD BE EMPLOYED

M = 2.4 AXISYMMETRIC INLET STUDY

PURPOSE:

- DEFINE WEIGHT AND GEOMETRY FOR SIMPLE TRANSLATING C/B TYPE AT M = 2.4
- VALIDATE AND REFINE PERFORMANCE CHARACTERISTICS
- ESTABLISH FLOW CHARACTERISTICS FOR ENGINE/INLET MATCHING STUDIES

OBJECTIVE:

- ACHIEVE MAXIMUM TRANSONIC FLOW CAPACITY WITHOUT AUXILIARY DEVICES
- MINIMIZE BOUNDARY LAYER BLEED PENALTIES
- PROVIDE FOR LOW DISTORTION CHARACTERISTICS

METHOD:

- APPLY REFINED ANALYTICAL TECHNIQUES TO DEFINE FLOW PATH GEOMETRIES AND BOUNDARY LAYER BLEED REQUIREMENTS—DESIGN AND OFF-DESIGN CONDITIONS
- ANALYZE DRAG OF DEFINED GEOMETRY
- UTILIZE 1971 SST DEVELOPMENT DATA TO SIZE AND DEFINE T.O. AND BYPASS DOOR SYSTEMS
- LAYOUT DESIGN, SIZE MAJOR STRUCTURAL ELEMENTS, CONDUCT WEIGHT ANALYSIS

M = 2.4 AXISYMMETRIC TRANSLATING CENTERBODY INLET

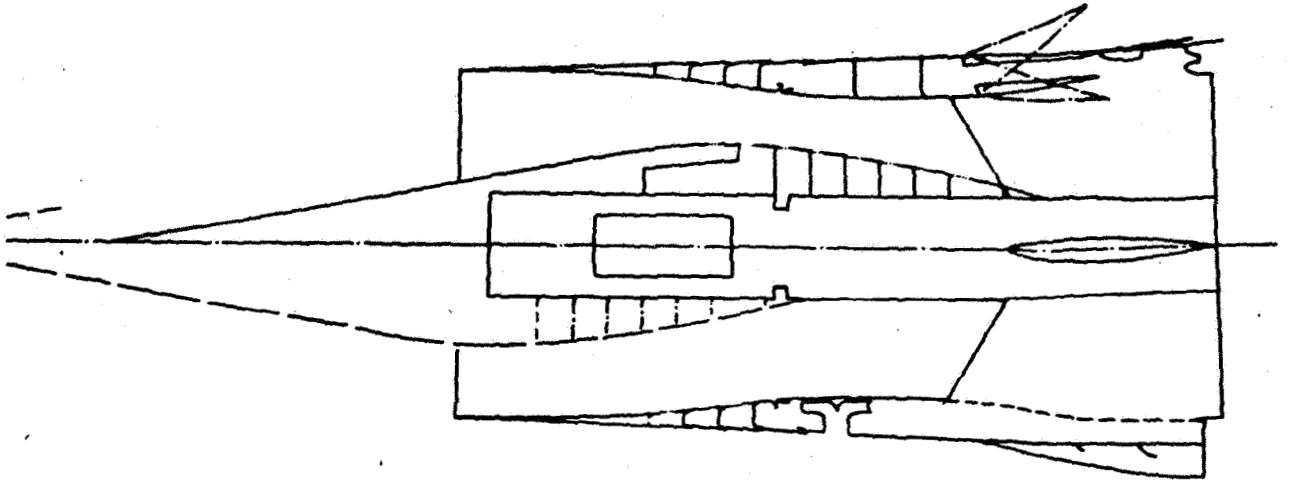

INLET WEIGHT = 3082 LB (SIZED FOR 700 LB/SEC GE21/J11-B9)

PREDICTED PERFORMANCE AND AIRFLOW CHARACTERISTICS

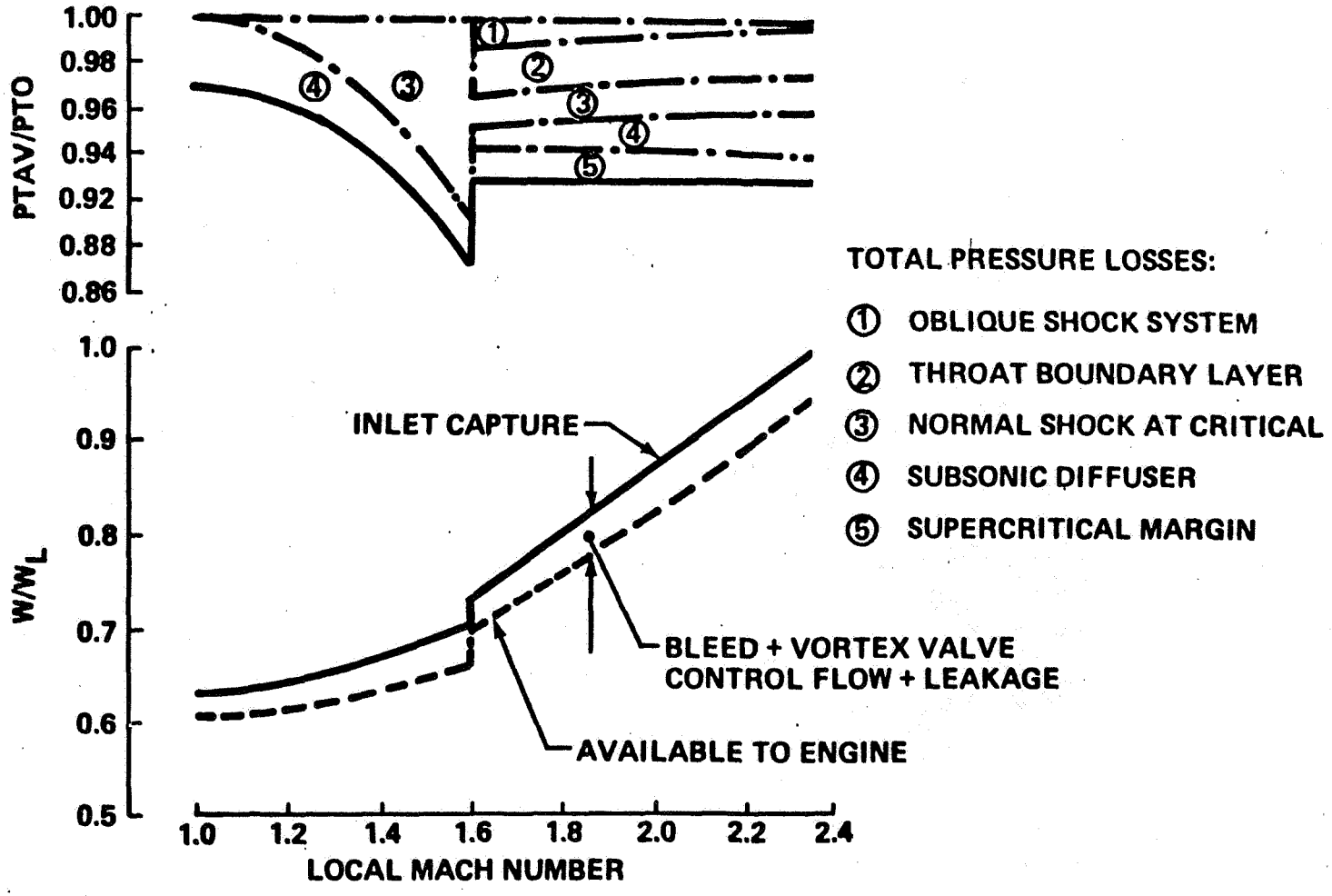

INLET DRAG

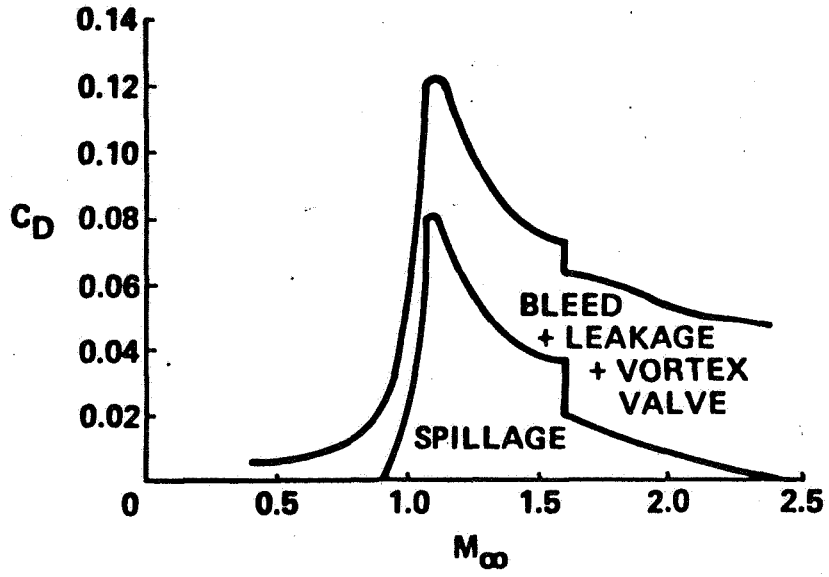
0.14
0.12
0.10
0.08
0.06
0.04
0.02
0
C_D
0.5
1.0
1.5
2.0
2.5
M_∞
BLEED
+ LEAKAGE
+ VORTEX
VALVE
SPILLAGE

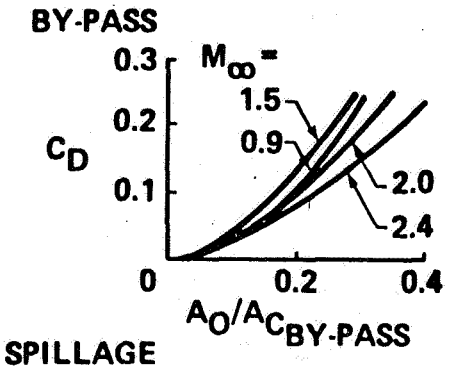
BY-PASS
0.3
0.2
0.1
0
C_D
M_∞ =
1.5
0.9
2.0
2.4
0.2
0.4
$A_O/A_{C_{BY\text{-}PASS}}$

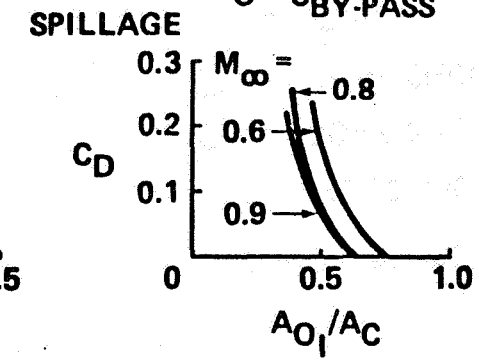
SPILLAGE
0.3
0.2
0.1
0
C_D
M_∞ =
0.8
0.6
0.9
0.5
1.0
A_{O_I}/A_C

INLET CHOKING-GE21/J11-B9
700 LB/SEC SIZE

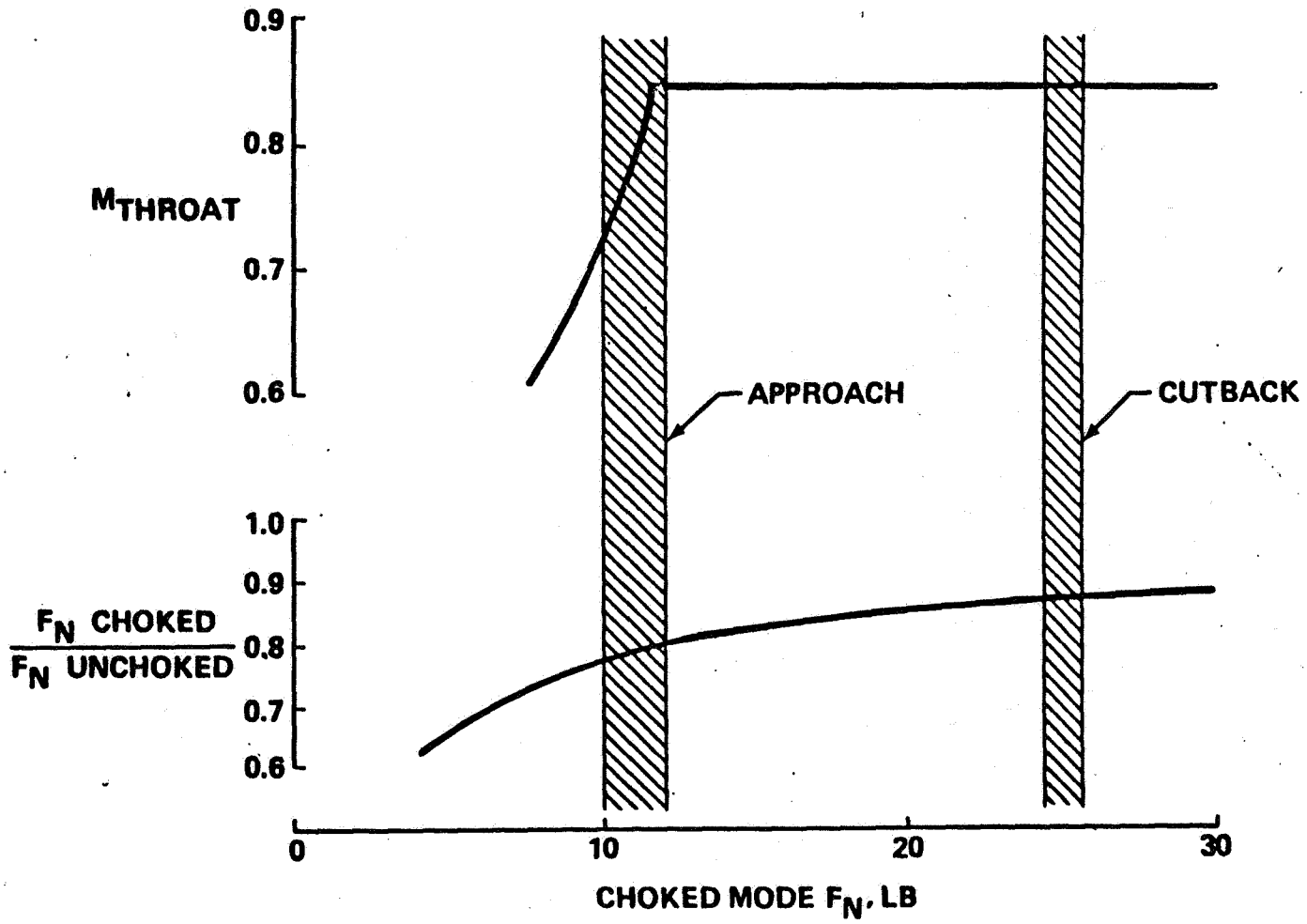

OUTBOARD INSTALLATION
700 LB/SEC SIZE ENGINES

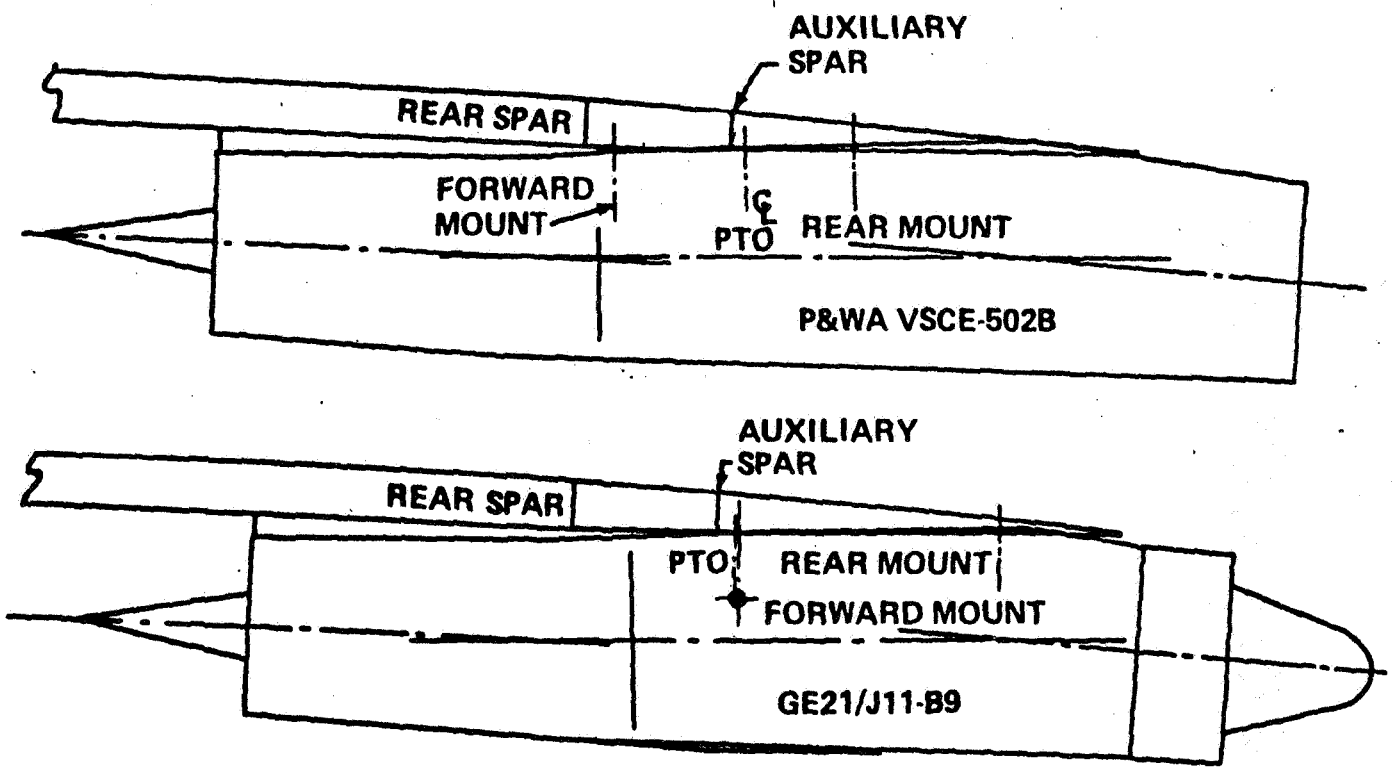

DRAG vs POD STATION ON WING

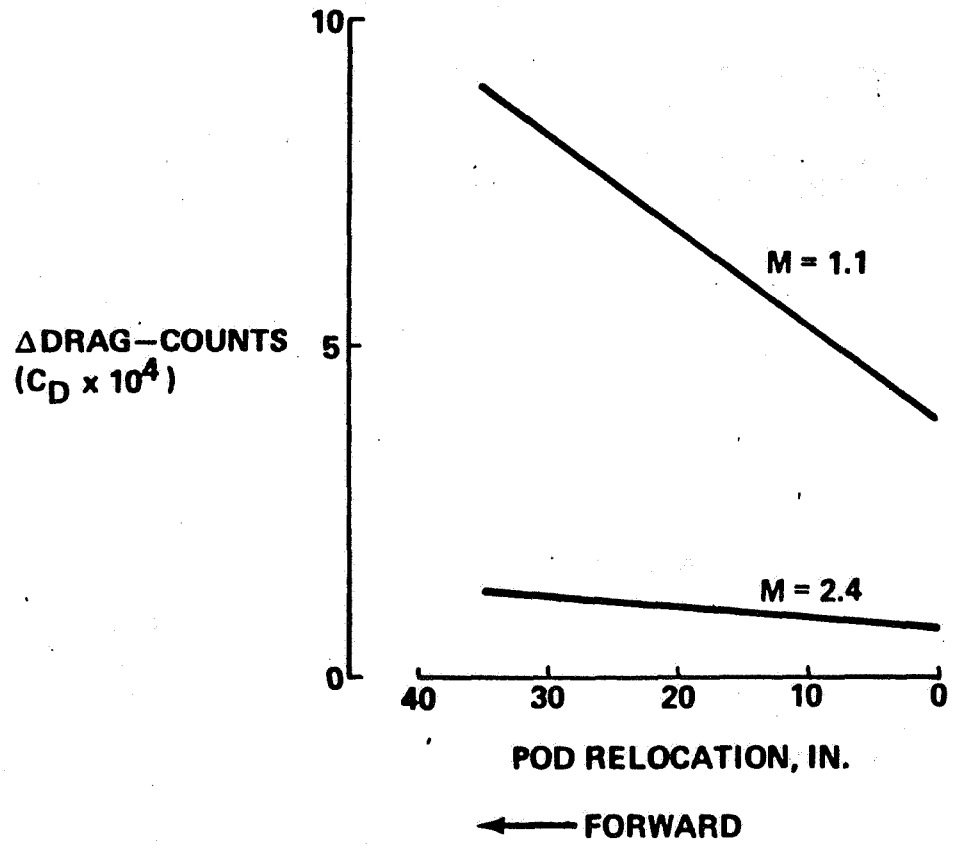

INSTALLED NOZZLE PERFORMANCE AT TRANSONIC MACH

EXHAUST NOZZLES—F-106 TESTS

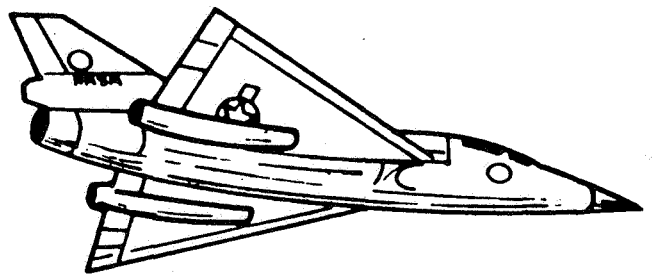

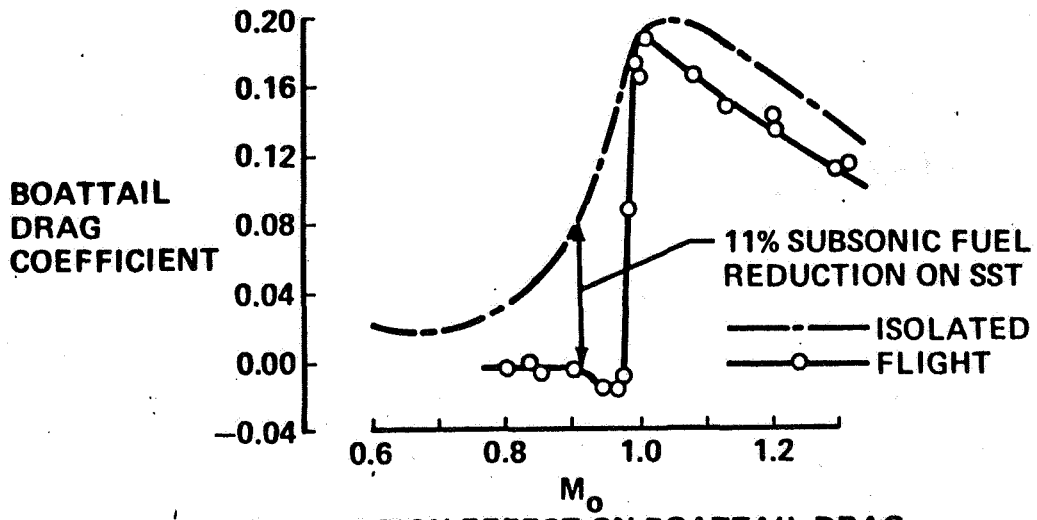

INSTALLATION EFFECT ON BOATTAIL DRAG

A/P DRAG vs NOZZLE SHROUD DIAMETER

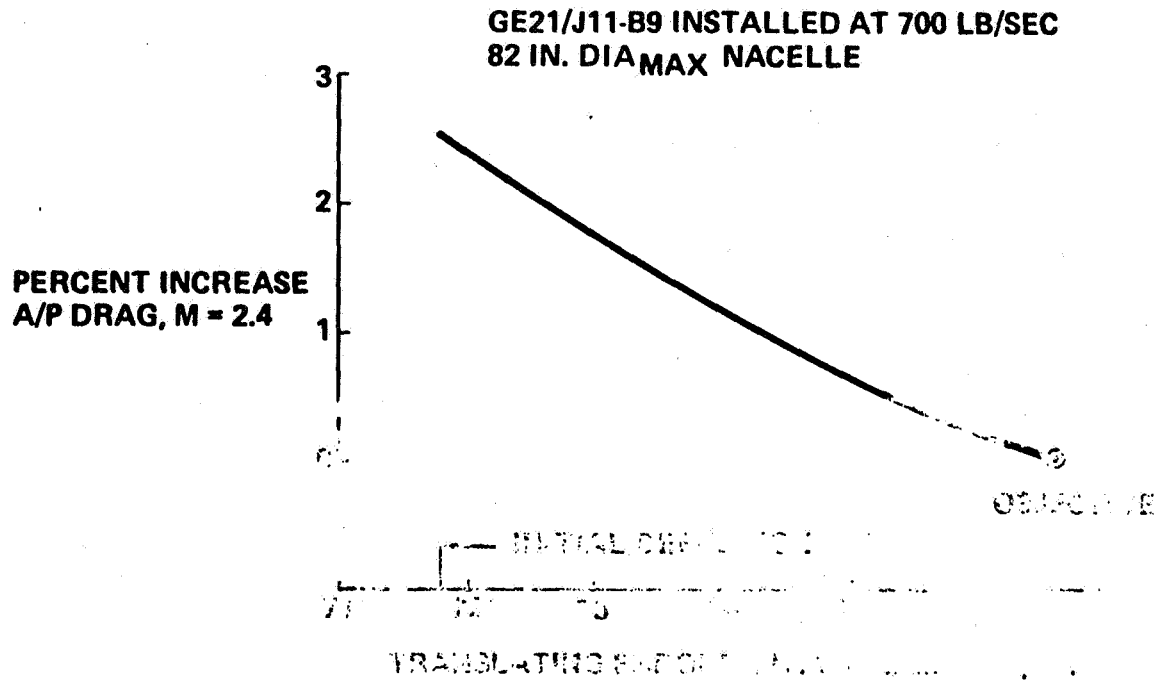

ENGINE TECHOLOGY IMPACT ON RANGE
(FIRST CYCLE PARAMETRIC TRENDS)

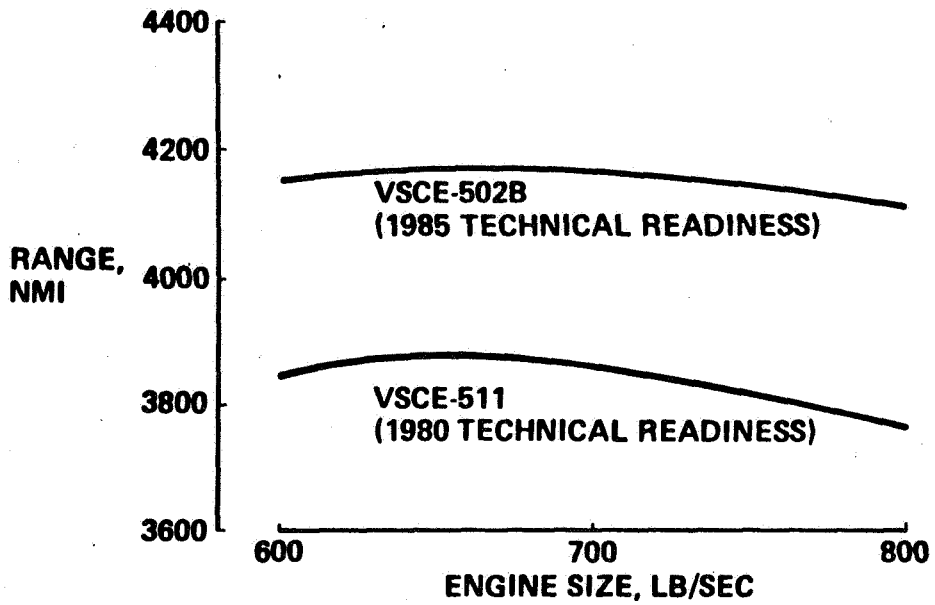

GE21/J11-B9 RANGE vs AIRFLOW
(FIRST CYCLE PARAMETRIC TREND)

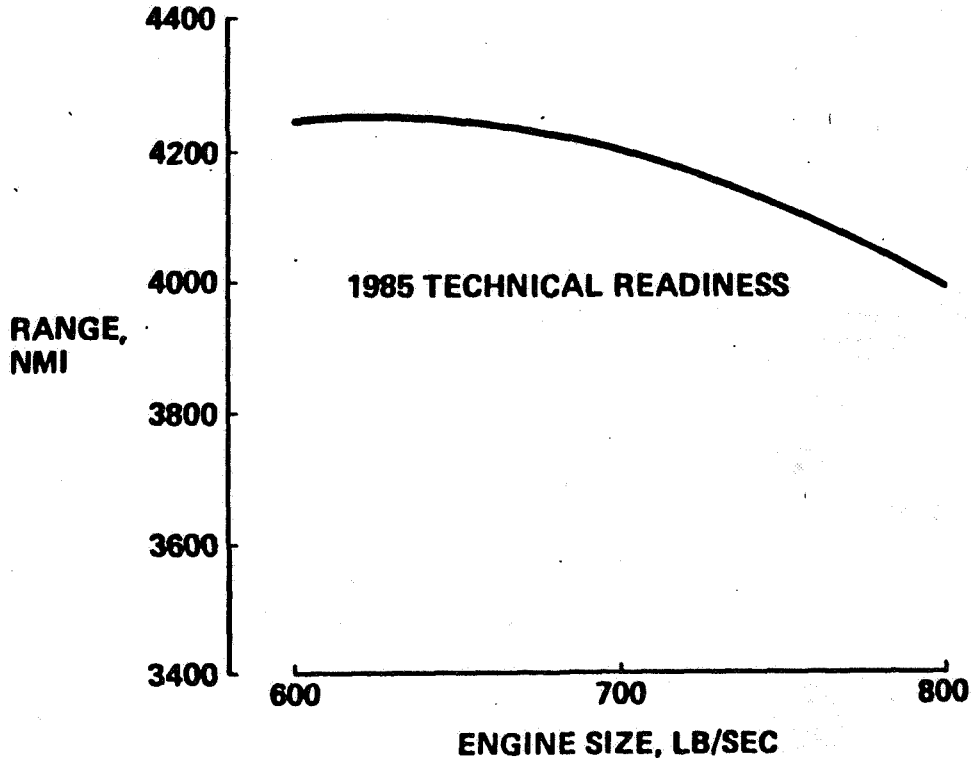

AST ENGINE EVALUATION CRITERIA
GE21/J11-B9 ENGINE

TECHNOLOGY READINESS	1985
ENGINE CERTIFICATION	EARLY 1990s

NEW (ADVANCED) TECHNOLOGY—COMMERCIAL ENGINES

• MAXIMUM ROTOR INLET TEMPERATURE—CLIMB/ CRUISE (°F)	2800/2700
• TURBINE COOLING FLOW (%)	13.5
• MAXIMUM COOLING AIR TEMPERATURE (°F)	1150
• ENGINE WEIGHT TECHNOLOGY (e.g. BORON-ALUMINUM COMPOSITE FAN BLADES)	12 600 LB AT 700 LB/SEC
• SPLIT ROTOR FAN AND DOUBLE VABI	
• LOW EMISSIONS BURNERS (PRIMARY AND AUGMENTOR)	
• NOISE TREATMENT AND JET SUPPRESSION	
• VARIABLE GEOMETRY CO-ANNULAR NOZZLE	
• FULL AUTHORITY DIGITAL ELECTRONIC CONTROLS	

AST ENGINE EVALUATION CRITERIA
P&WA VSCE-502B

TECHNOLOGY READINESS	1988
ENGINE CERTIFICATION	MID-1990s

NEW (ADVANCED) TECHNOLOGY—COMMERCIAL ENGINES

• MAXIMUM COMBUSTOR EXIT TEMPERATURE—CLIMB AND CRUISE (°F)	2700
• TURBINE COOLING FLOW (%)	11
• MAXIMUM COOLING AIR TEMPERATURE (°F)	1300
• ENGINE WEIGHT TECHNOLOGY (e.g. BORON-ALUMINUM COMPOSITE FAN BLADES)	10 210 LB AT 700 LB/SEC
• DUCT HEATER	
• LOW EMISSIONS (PRIMARY AND D/H)	
• NOISE TREATMENT	
• VARIABLE GEOMETRY CO-ANNULAR NOZZLE	
• FULL AUTHORITY DIGITAL ELECTRONIC CONTROLS	

AST ENGINE EVALUATION CRITERIA

GE21/J11 - B9 AND P&WA VSCE-502B

- ENGINE PERFORMANCE, WEIGHT, AND GEOMETRY
- ENGINE DYNAMICS
- ENGINE OPERATING LIMITS
- AIRPLANE PERFORMANCE
  - DESIGN MISSION RANGE
  - OFF-DESIGN MISSIONS
  - TRANSIENTS
  - EMERGENCY OPERATIONS
- ENGINE AND AIRPLANE NOISE
- EMISSIONS
- ECONOMIC DATA

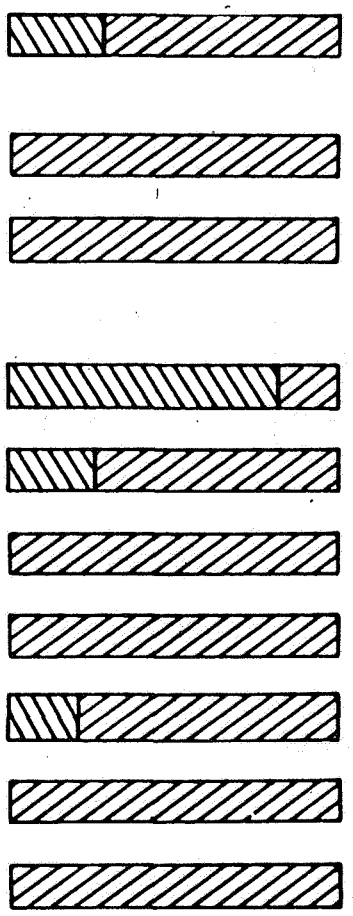

AST ENGINE EVALUATION CRITERIA (CONTINUED)
GE21/J11-B9 AND P&WA VSCE-502B

- GROWTH POTENTIAL
- INLET/ENGINE COMPATIBILITY
- CONTROLS AND CONTROL INTEGRATION
- INSTALLED NOZZLE PERFORMANCE
- FUEL SYSTEM COMPATIBILITY
- ECS INTEGRATION
- MAINTAINABILITY
- RELIABILITY
- SAFETY
- PROGRAM DEFINITION

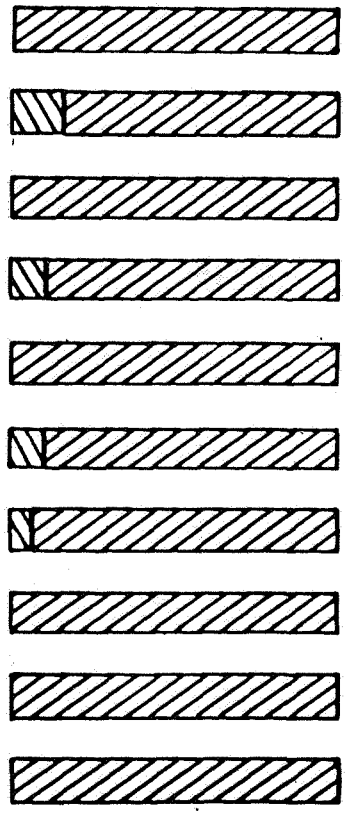

[illegible]

[illegible]

- PERFORMANCE — GE21/J11-B9 AND [illegible]-502B EQUIVALENT
- NOISE — BOTH ENGINES EQUIVALENT WITHIN TOLERANCE OF LIMITED DATA BASE
- TIMING — ENGINE COMPANY [illegible] (P&WA) IDENTIFIES LATER TECHNICAL READINESS DATE *
- TECHNICAL RISK — GE STATE $[illegible] x 10^6 [illegible] TO ACHIEVE [illegible]
  P&WA STATE $380 x 10^6 } TECHNICAL READINESS

* PER NASA REPORT TO HOUSE OF REPRESENTATIVES

CONCLUSIONS

ADVANCED TECHNOLOGY ENGINES

- PERFORMANCE
- INSTALLATION COMPATIBILITY
- NOISE

} EQUIVALENT WITHIN ACCURACY OF AVAILABLE DATA BASE

- TIMING AND FUNDING — LARGE DIFFERENCES

DATA BASE REQUIRES ACCELERATED ENLARGEMENT TO SELECT CYCLE, CONCENTRATE TECHNOLOGY DEVELOPMENT AND REDUCE COST TO TIMELY READINESS DATE

BOEING/P&WA
ADVANCED SUPERSONIC PROPULSION STUDIES

November 18, 1977

PRATT & WHITNEY AIRCRAFT GROUP
Commercial Products Division

UNITED TECHNOLOGIES

J18115-1
770211

REQUIREMENTS

Expand VSCE definitions

- Performance
- Noise and emissions
- Installation characteristics

Analyze new engine concepts

J18115-2
770211

EXPANDED VSCE DEFINITION

- Optimized VSCE-511
- Choked inlet (high flow) for approach
- Windmilling/locked rotor engine out airflow characteristics
- Mach 2.7 version of VSCE-502B (data pack)
- Environmental control system data
- Detailed engine data for VSCE noise calculations

J18115-3
770211

VSCE-511 REFINED FOR OPTIMUM SUPERSONIC PERFORMANCE

- Early 1980's technology readiness
- Fixed CET and TCA
- Vary FPR, BPR, and OPR
- Evaluate TSFC, weight, range trends
- Generate performance data for Boeing

J18115 4
770211

VSCE PARAMETRIC STUDIES

Early 1980's technology readiness

X = VSCE-511

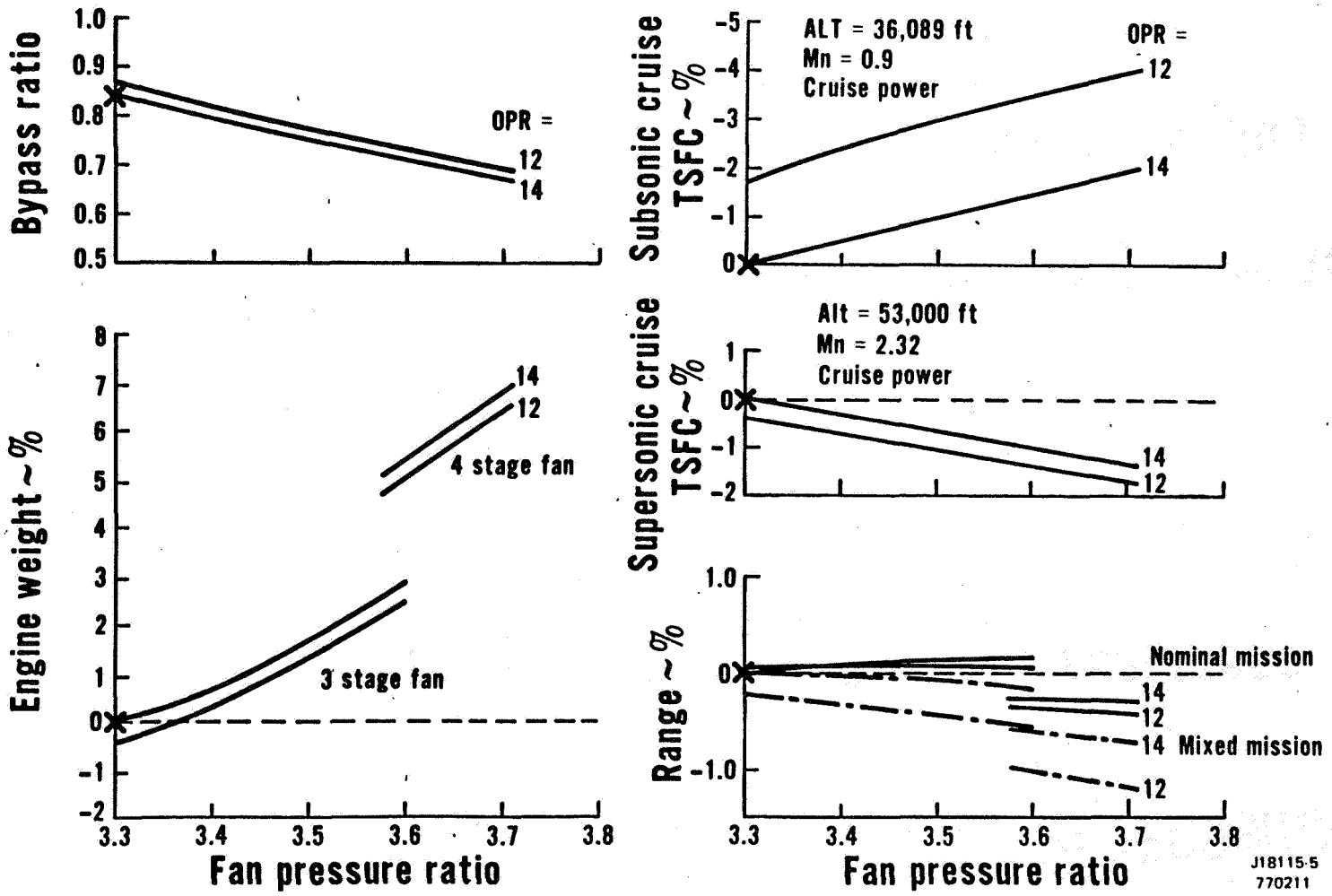

VSCE-502B HIGH FLOW AT APPROACH

Choked inlet study

370 ft/0.23 Mn

900 lb/sec

○ Base areas

* Highflow, +15% AJE, +60% AJD

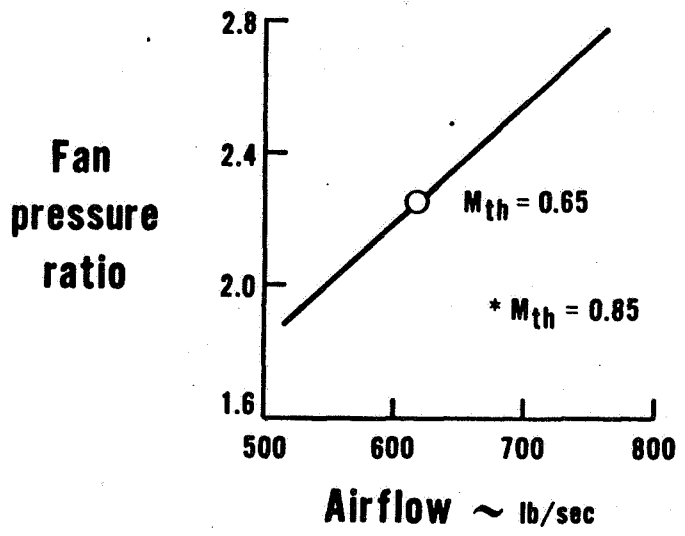

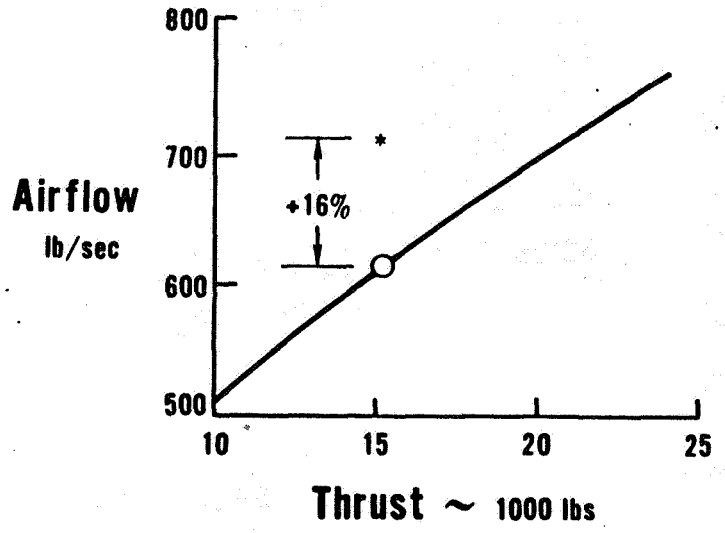

J18115-6
770211

NOISE REDUCTION POTENTIAL WITH HIGH FLOW AT APPROACH

Core and turbine noise is unchanged

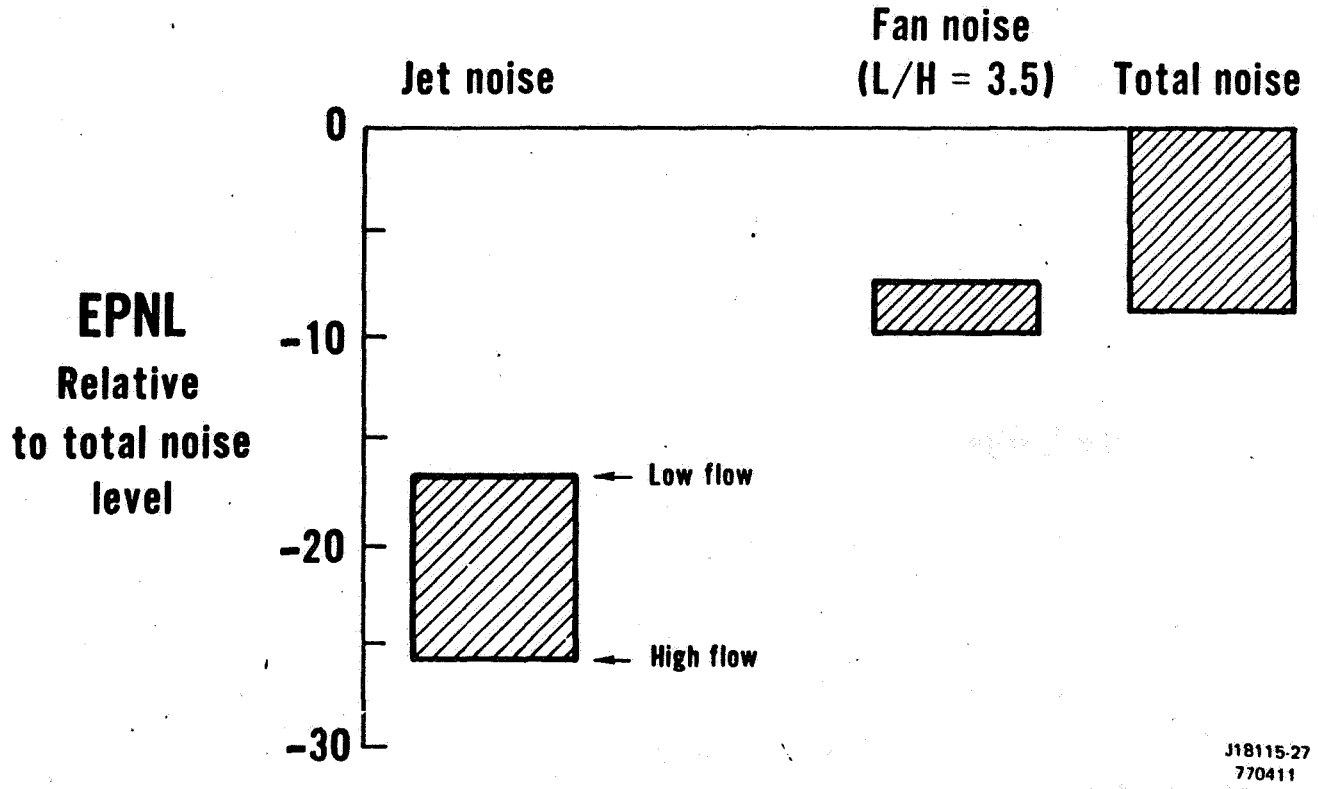

ESTIMATED VSCE-502B WINDMILLING AIRFLOW

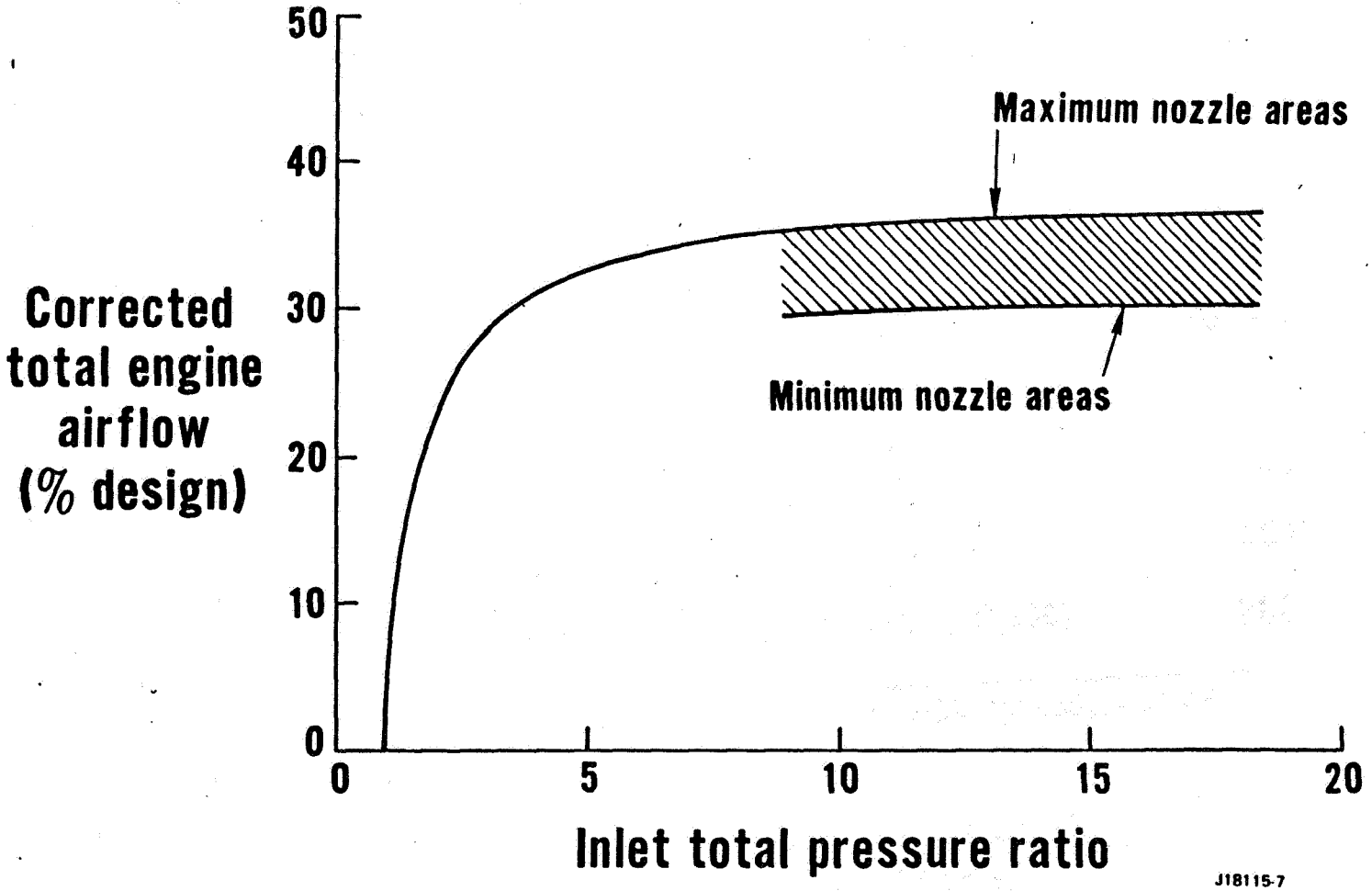

J18115-7
770211

MACH 2.7 VSCE DEFENITION

VSCE-516 Late 1980's technology readiness

Cycle	
BPR	1.3
OPR	16.0
FPR	3.3
Max temp	
Main burner	2700
Duct burner	2600

Installation characteristics	
Airflow size (lb/sec)	900
Length (in.)	261
Max dia. (in.)	88
[illegible]	
Bare engine	10,700
Engine + N/R	10,[illegible]

- VSCE-516 data pack generated for Boeing [illegible]

VSCE INTEGRATION STUDIES

- Inlet design review
- Nacelle secondary airflow requirements
- Inspection and maintenance
- Ejector nozzle versus long flap nozzle review
- Fuel system temperature limits

J18115-10
770211

PRELIMINARY INLET DESIGN REVIEW

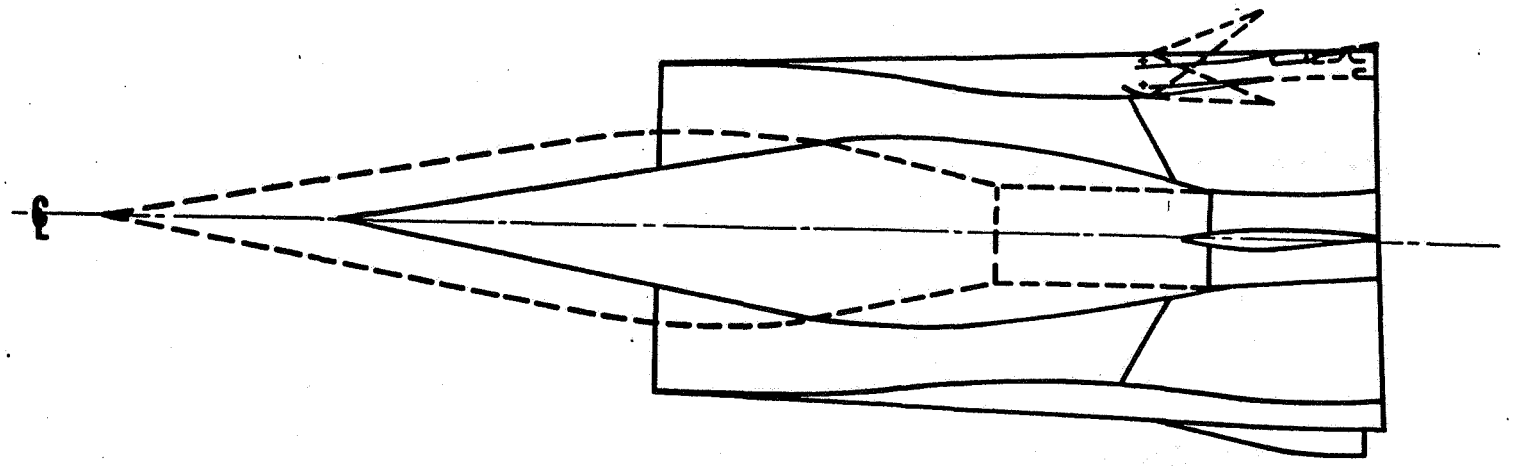

Strut design and location

- Small and aerodynamically clean
- Placed far upstream of fan
- Stagger between fan IGV's
- Boundary layer control at strut centerbody support interface

General

- Inlet length beneficial
- Avoid creating flow disturbances near fan
- Optimize bypass door location

J18115-11
770211

NACELLE VENTILATION/SECONDARY FLOW

Previous level (Parametric Studies)

- 2% flow-nozzle requirement

Revised level (Phase V)

- 1/4% flow-nacelle ventilation
  - Fire safety
  - 20 air changes/minute
- ?% flow for nozzle
  - Examine for possible use of inlet boundary layer bleed flows
  - Model tests are required

J18115-12
770211

VSCE INSPECTION AND MAINTENANCE

- Provide on wing access to:

Control packages	Fan	Nozzle actuation
Accessories	High pressure compressor	Reverser
Oil tank	Combustors	Ejector panels
	Ignitors	
	Fuel manifolds	
	Fuel nozzles	
	Turbines	
	Variable geometry	

- VSCE maintenance procedure refined

J18115-13
770211

TURBINE INSPECTION

VSCE-502B

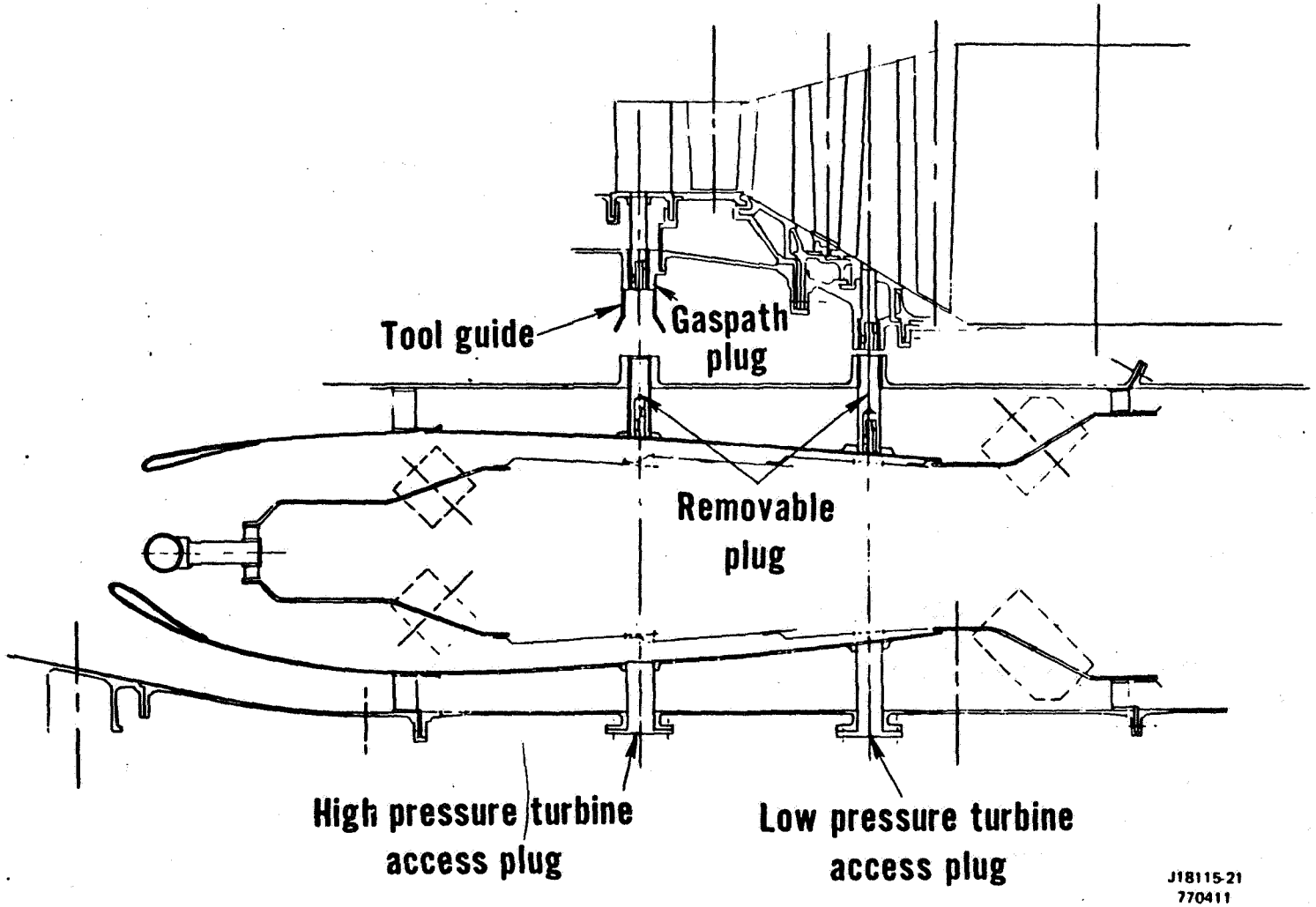

J18115-21
770411

VSCE DISASSEMBLY

Step 1

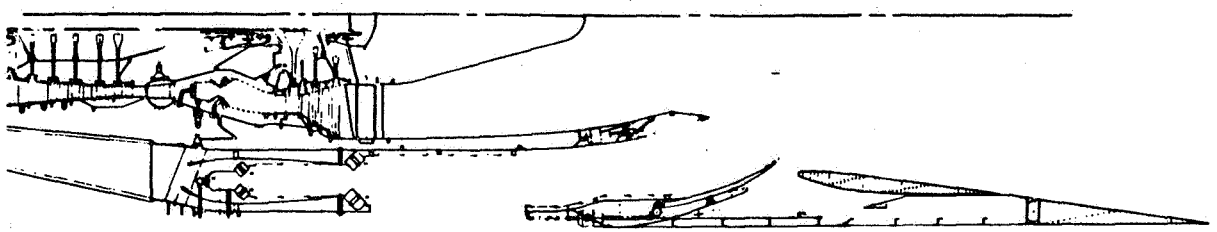

Withdraw fan nozzle, reverser and tailfeather section

Step 2

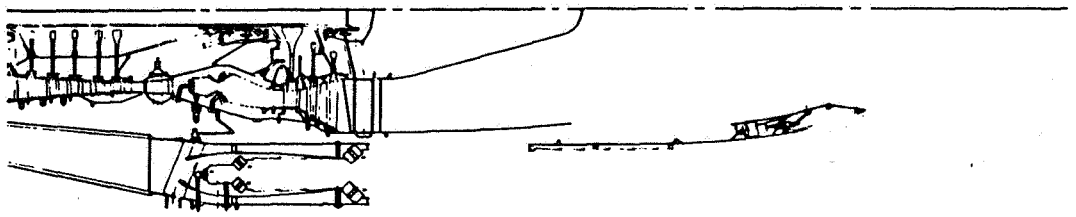

Disconnect primary nozzle and move aft

Step 3

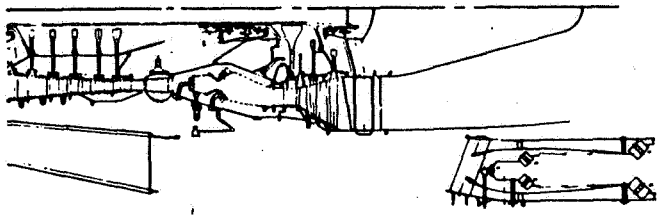

Support core engine and withdraw duct burner section

J18115-22
770411

NEW ENGINE STUDY

Low Bypass Engine with flow inverter (LBE-600)

- Reconfigured LBE to achieve coannular noise benefit
- Flow inverter downstream of low turbine to provide inverted jet velocity profile

J18115-14
770211

LBE-600 CONCEPT

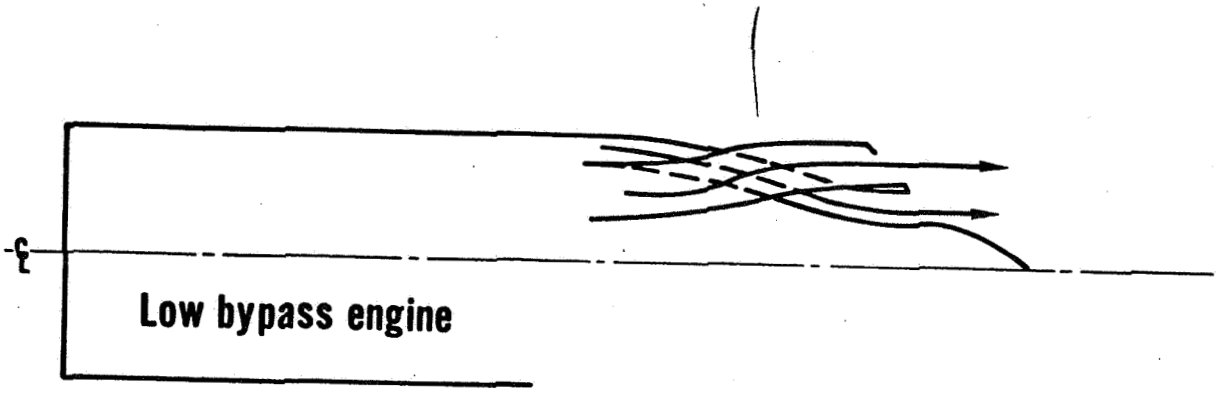

$$\frac{V_{outer}}{V_{inner}} = 1.7$$

Study groundrules

- Late 1980's technology readiness
- Take-off thrust of 61,000 lbs (W_{AT2} = 900 lbs/sec)
- Mach 2.4 design
- Seperate stream coannular nozzle with jet velocity ratio of 1.7 and flow ratio of 1.5 to 2.0

J18115-25
770411

LBE - 600 DEFINITION

Cycle

BPR	0.5
OPR	19.6
FPR	3.5
CET_{max} ~ °F	2800
$V_{j\ outer}/V_{j\ inner}$	1.72

Installation characteristics

Airflow size ~ lbs/sec	750
Length ~ in.	259
Max diameter ~ in.	76.7
Weight ~ lbs	
Bare engine	9200
Engine + nozzle/ reverser	11,550

J18115-15
770211

LBE-600 PERFORMANCE

900 lb/sec takeoff airflow

Uninstalled

36089 ft/0.9 Mn

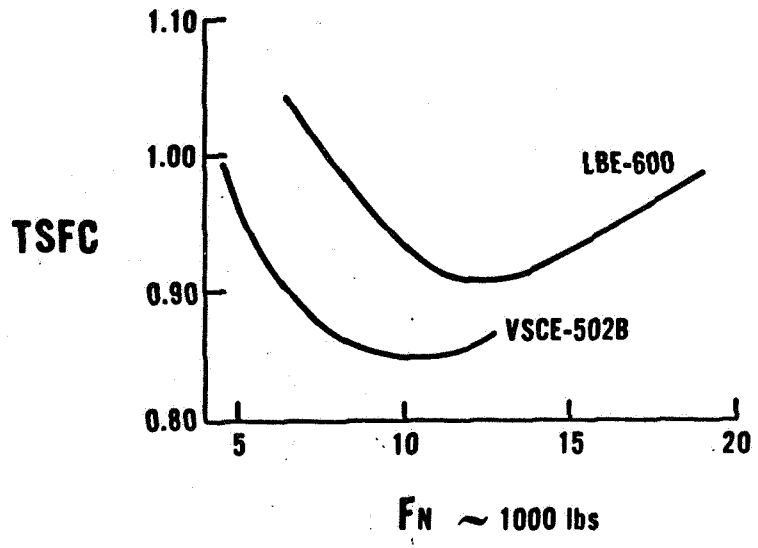

53,000 ft/2.32 Mn

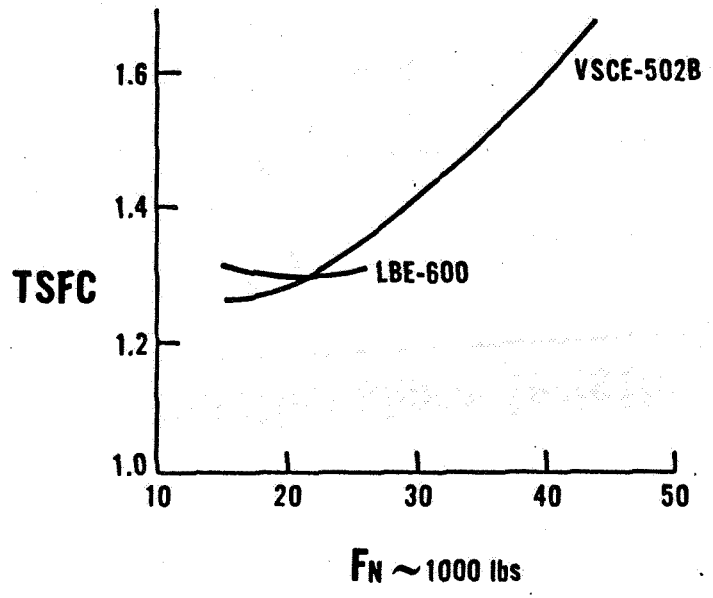

J18115-16
770211

NEW ENGINE STUDY

VCE-700

- Boeing Multicycle Engine concept
- Late 1980's technology readiness
- Twin spool turbojet
- Unique features
  - Variable HPC bl[illegible] to [illegible]timize off-desig[illegible]
    [illegible]erform[illegible]
  - [illegible] sta[illegible]
    [illegible]mula[illegible]

VCE-700 FEATURES

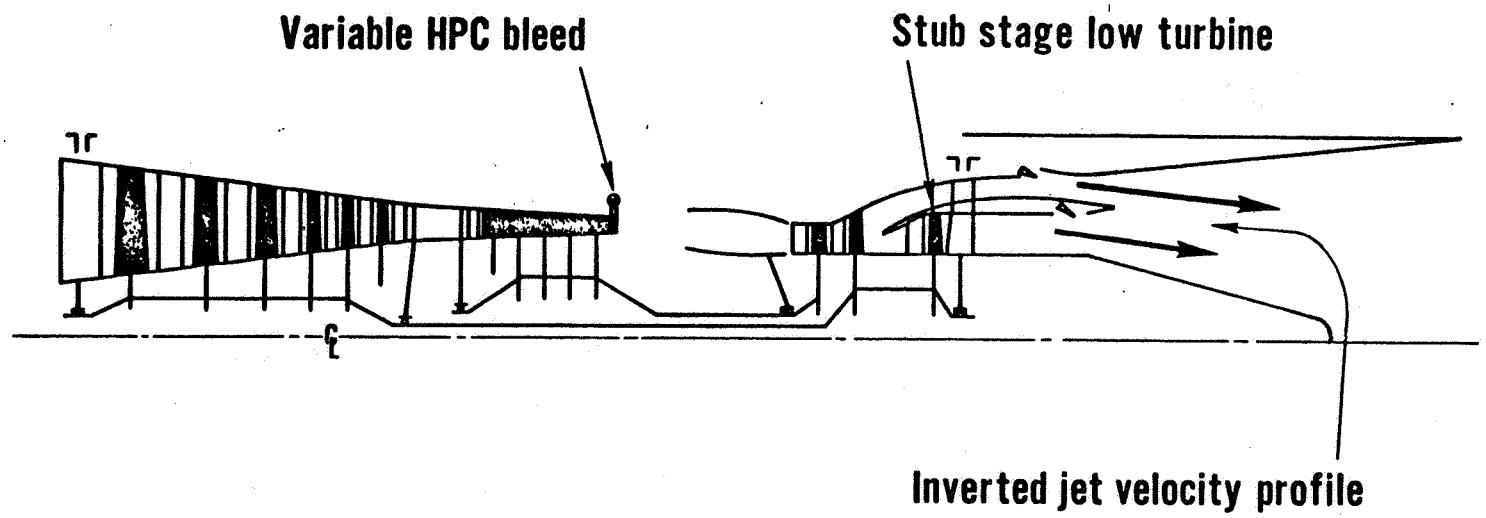

J18115-26
770411

PRELIMINARY VCE-700 CYCLE

Sea level static
Takeoff

	VCE-700	VSCE-502B
Total flow	900	900
BPR	-	1.3
OPR	17	20
FPR	5.6 (LPC)	3.3
CET ~ °F	2800	2700
Duct burner T_{max} ~ °F	-	2600
Nozzle flow ratio	1.6	1.6
Nozzle velocity ratio	1.7	1.7

J18115-18
770211

SUMMARY

Boeing/P&WA Integration Study

VSCE is compatible with Boeing airplane

- Installed performance
- Dimensions
- Accessory arrangement
- Variable throttle schedules for noise abatement
- Inlet/engine integration
- Inspection/maintenance provisions

New engines

- LBE-600 and VCE-700 studies still in progress

J18115-19
770211

RECOMMENDATIONS

Boeing/P&WA Integration Study

Continue integration studies of VSCE's

- Develop field deck
- Inlet/engine conceptual design
- Thermal management studies

Complete evaluation of new engines

- LBE-600
- VCE-700

J18115-20
770211

ADAPTIVE MAIN LANDING GEAR

OBJECTIVE: IMPROVE TAKEOFF ROTATION CAPABILITY

APPROACH: FORE-AFT ADJUSTABLE GEAR, ADAPTIVE TO AIRPLANE CENTER OF GRAVITY EXCURSIONS

- GEAR FORWARD FOR TAKEOFF (CG WITHIN FLIGHT LIMITS)
- GEAR AFT FOR LOADING (CG AFT OF FLIGHT LIMITS)

CENTER OF GRAVITY EXCURSIONS

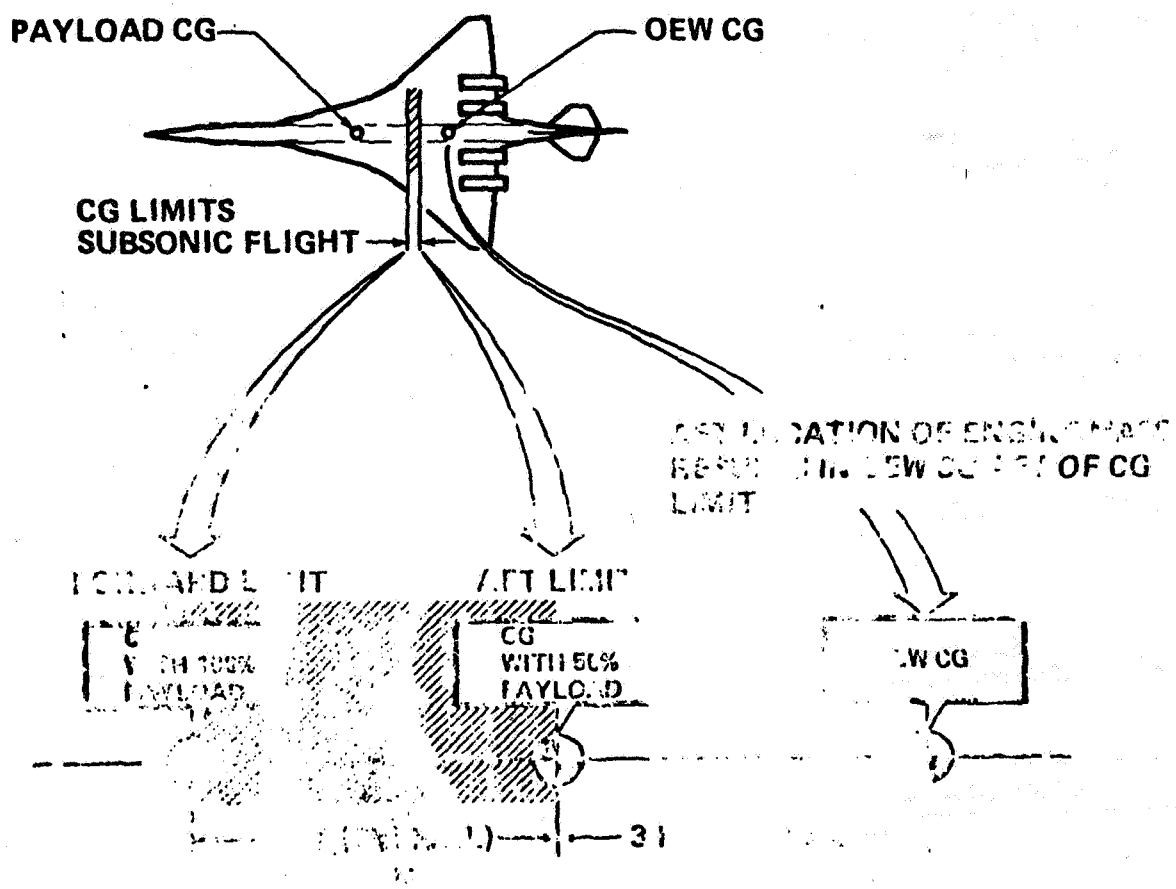

SELECTION OF MAIN GEAR LOCATION

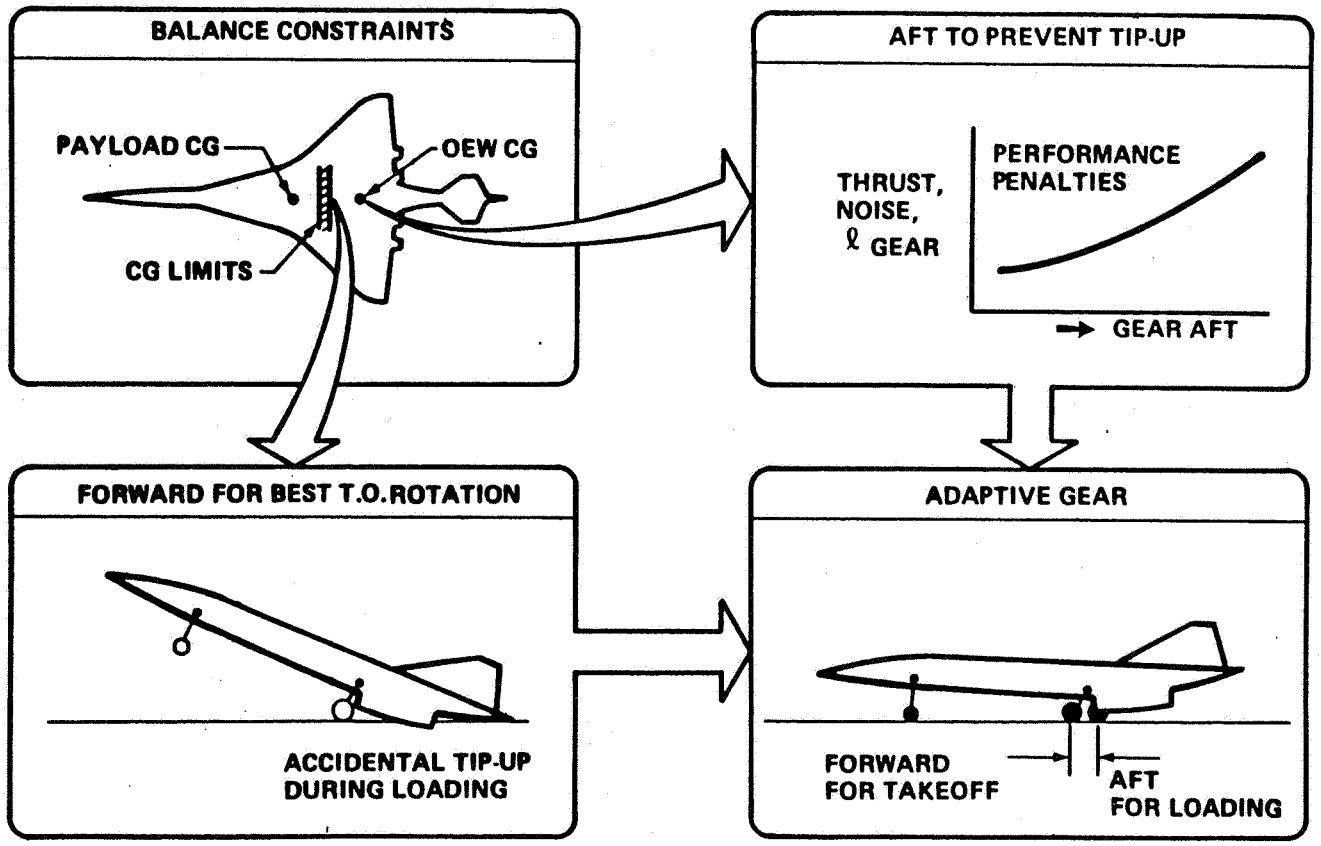

GEAR POSITION, FLAP ANGLE AND ROTATION ANGLE

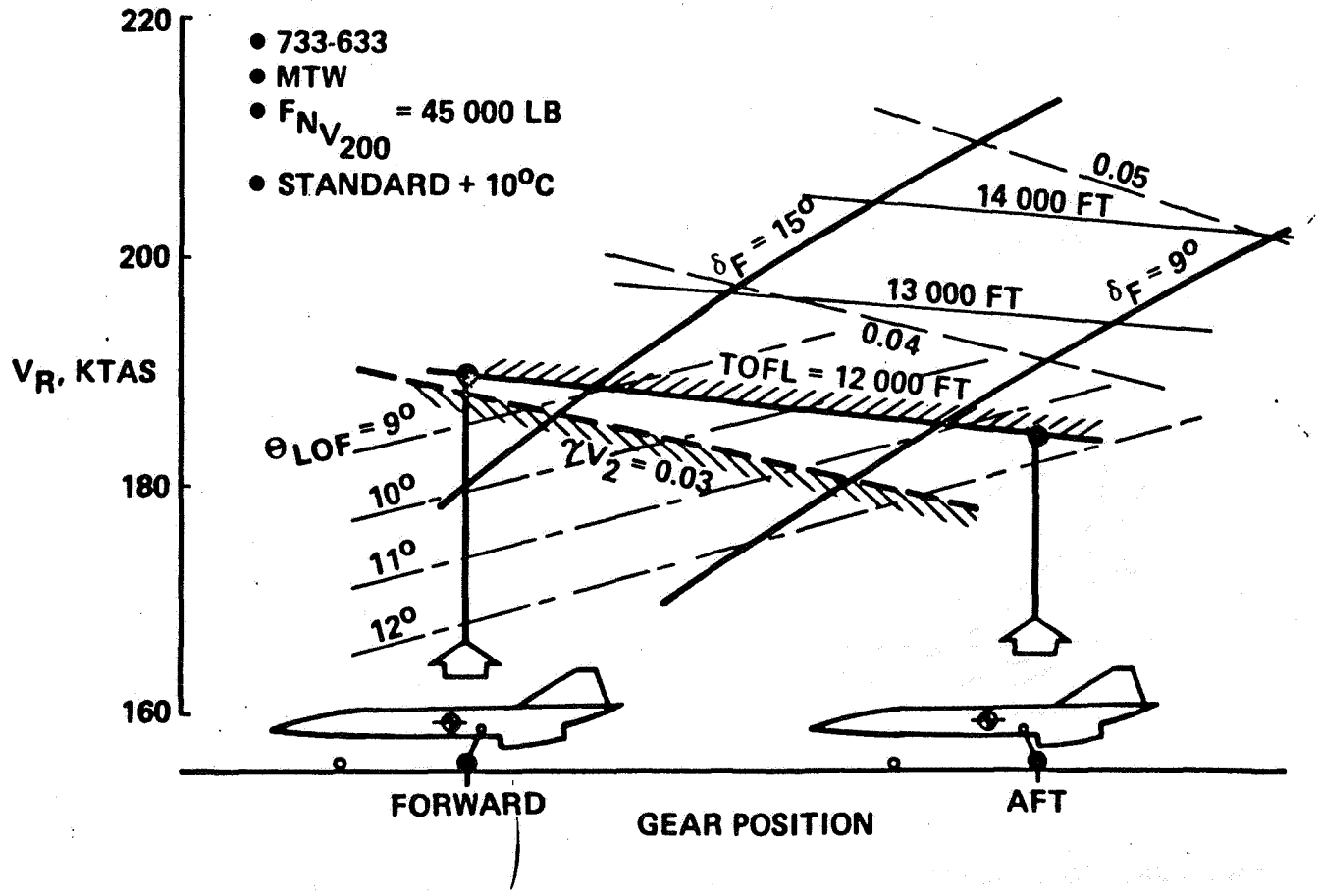

PAYOFF FOR TAKEOFF WITH GEAR FORWARD

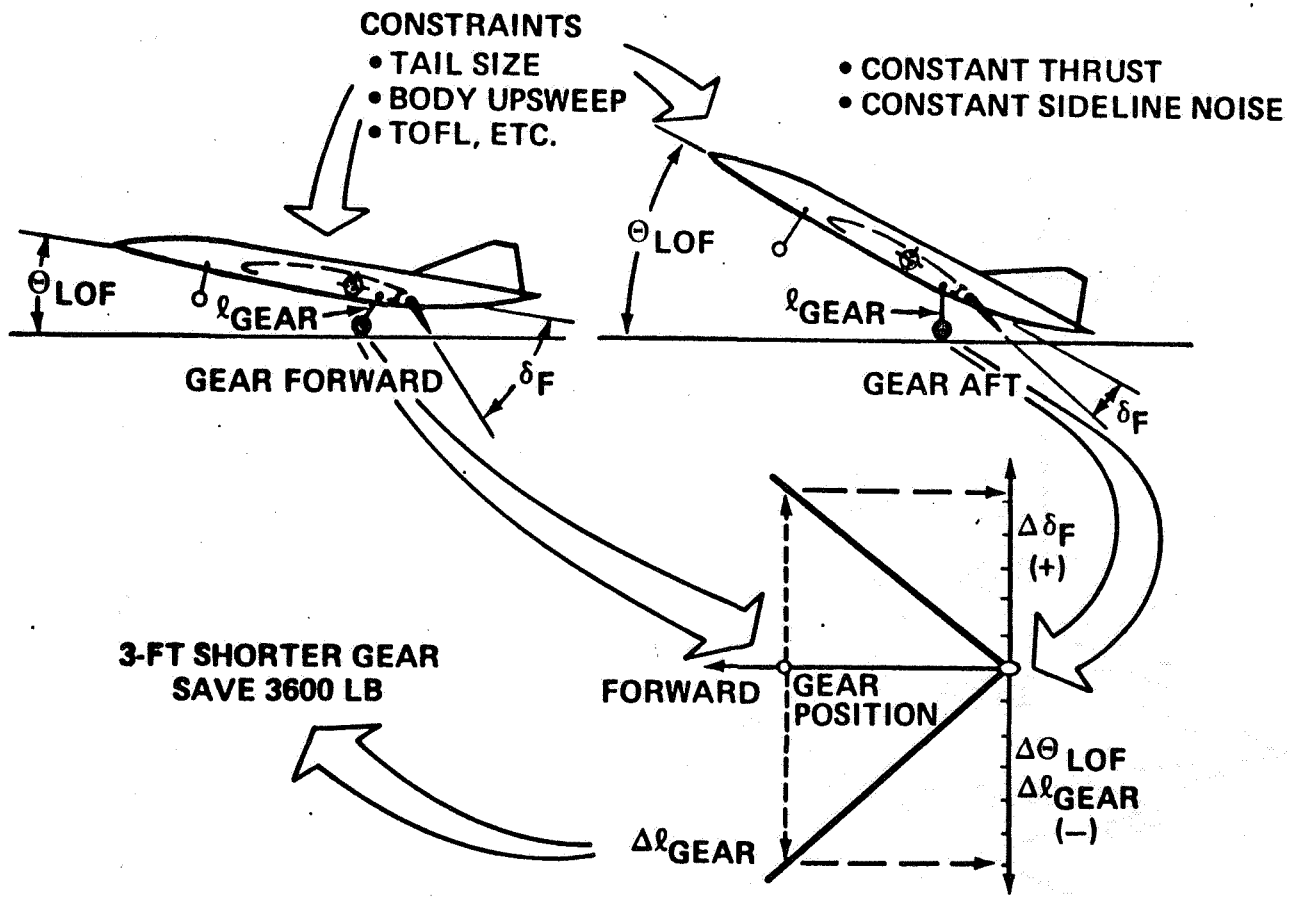

ADAPTIVE GEAR–EARLY CONCEPT

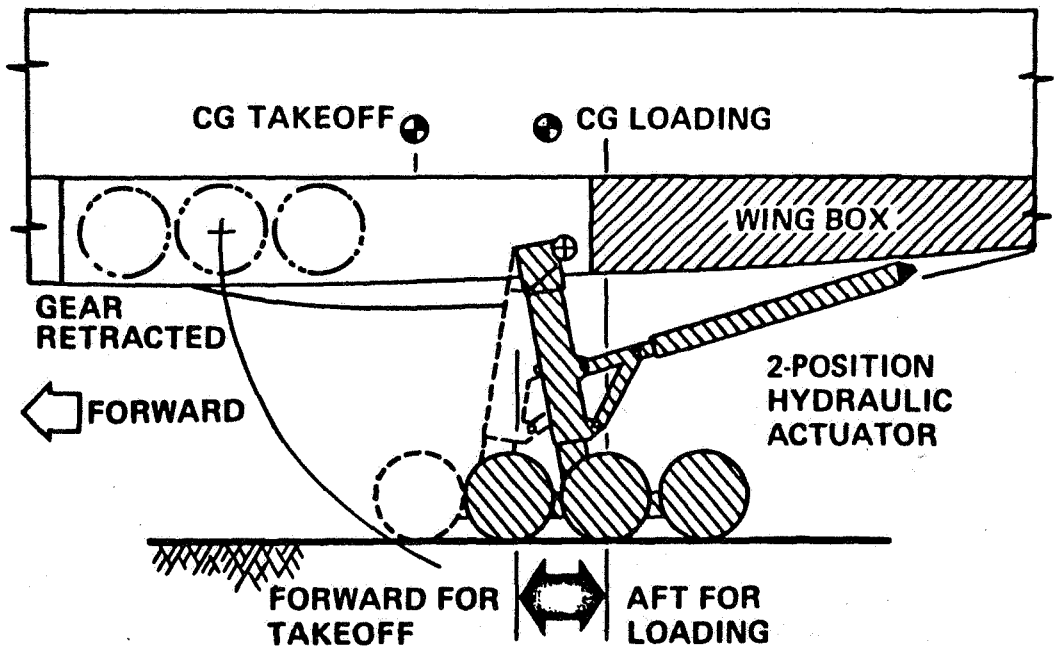

STEPS IN DESIGN STUDY

- CONVENTIONAL GEAR–REFERENCE
- ADAPTIVE GEAR CONCEPTS
- LOADS
- ACTUATION SYSTEM DESIGN AND SIZING
- STRUCTURAL SIZING
- SAFE OPERATION
- UNIQUE EQUIPMENT
- WEIGHT AND COST COMPARISON

CONVENTIONAL GEAR–REFERENCE

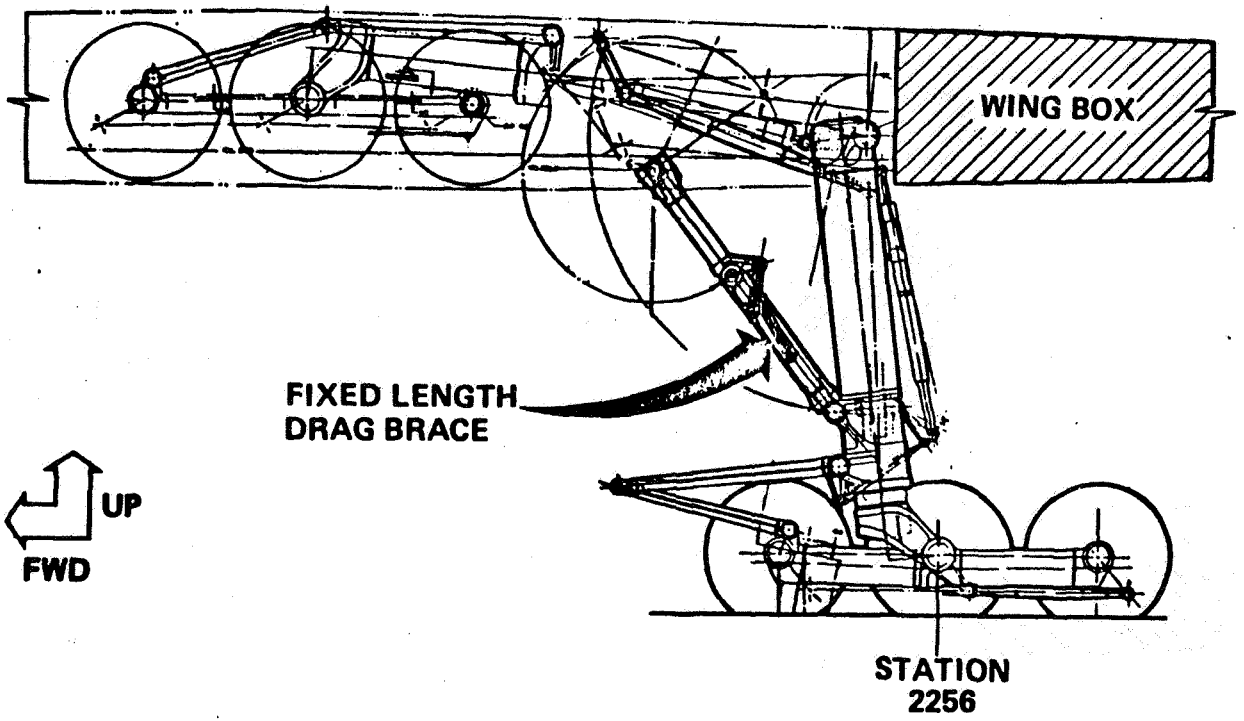

ADAPTIVE GEAR–SELECTED CONCEPT

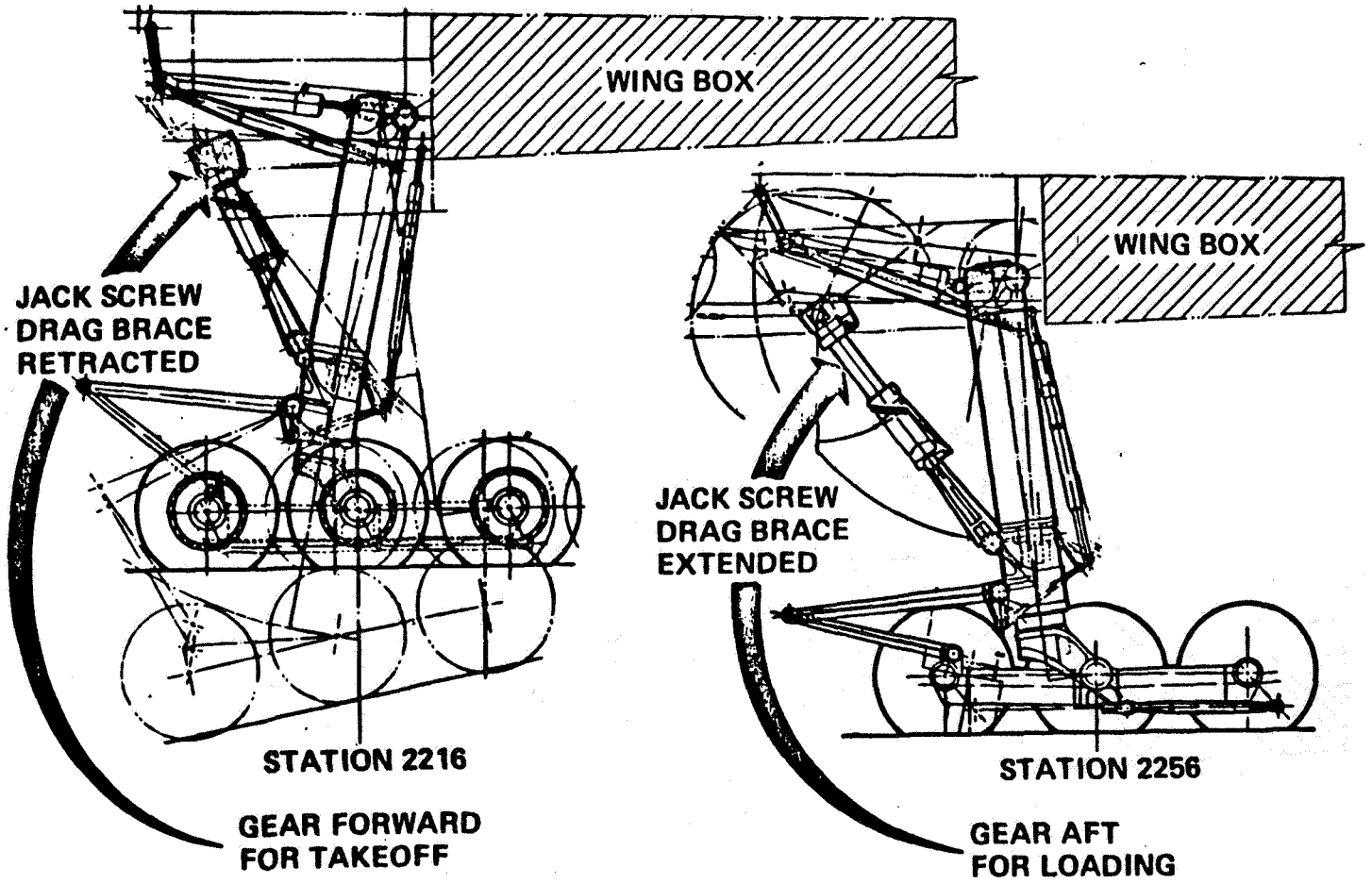

DRAG BRACE COMPARISON

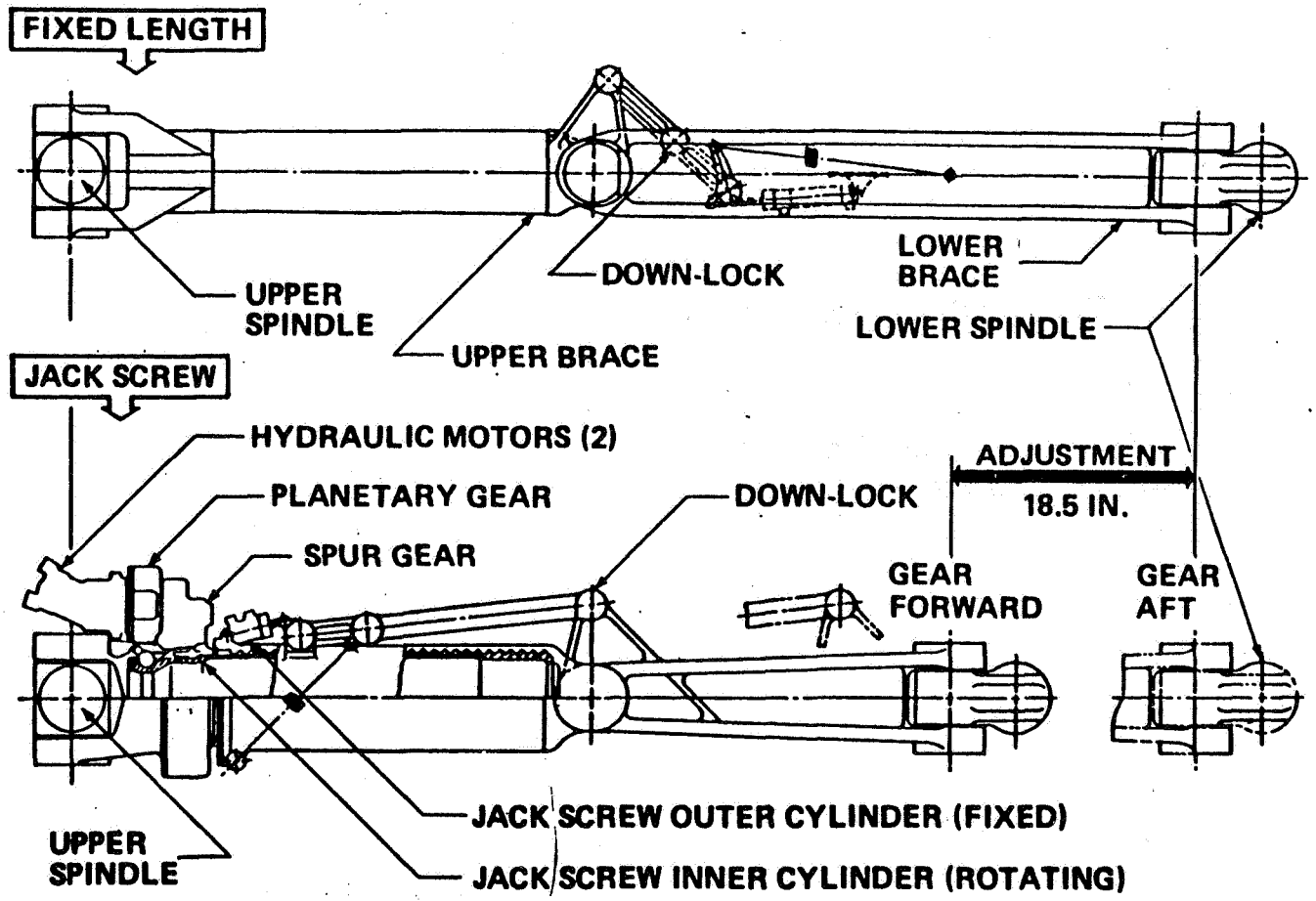

DESIGN REQUIREMENTS AND CRITERIA

GEAR FORWARD:

- TAXI, TAKEOFF, LANDING, RETRACTION

GEAR AFT:

- AIRPLANE LOADING
- CG AFT OF SUBSONIC FLIGHT LIMITS

ADJUSTMENT:

- ONE MINUTE OR LESS, AIRPLANE STATIONARY OR LOW SPEED, ONE HYDRAULIC SYSTEM FAILED

ACTUATION SYSTEM:

- SIZED TO ADJUST GEAR AT MTW, UNFAVORABLE CG, AIRPLANE STATIONARY

GEAR LOADS:

- PER 1971 SST STRUCTURES DESIGN CRITERIA

ACTUATION SYSTEM LOADS AND SIZING

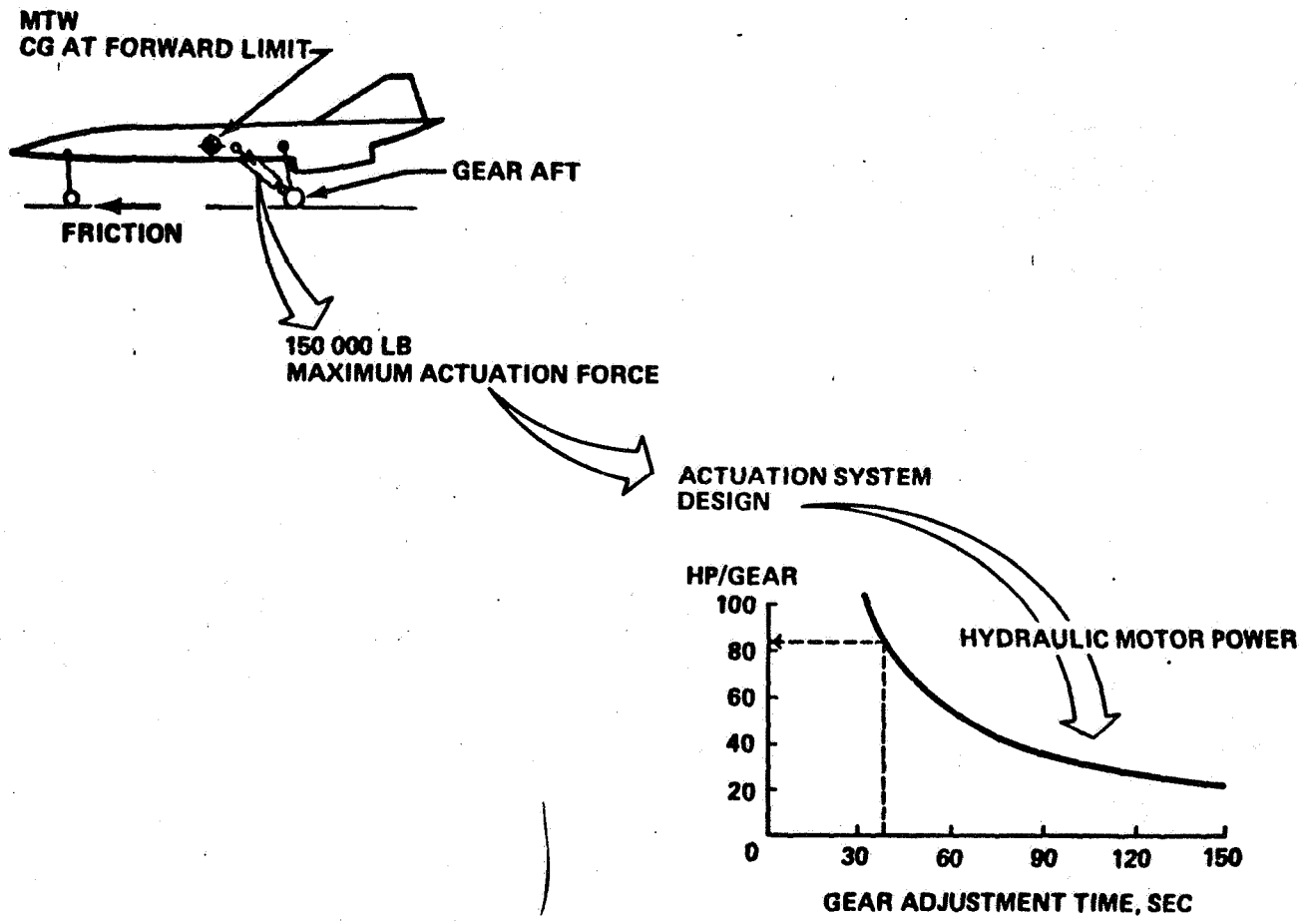

ADAPTIVE GEAR SYSTEM SCHEMATIC

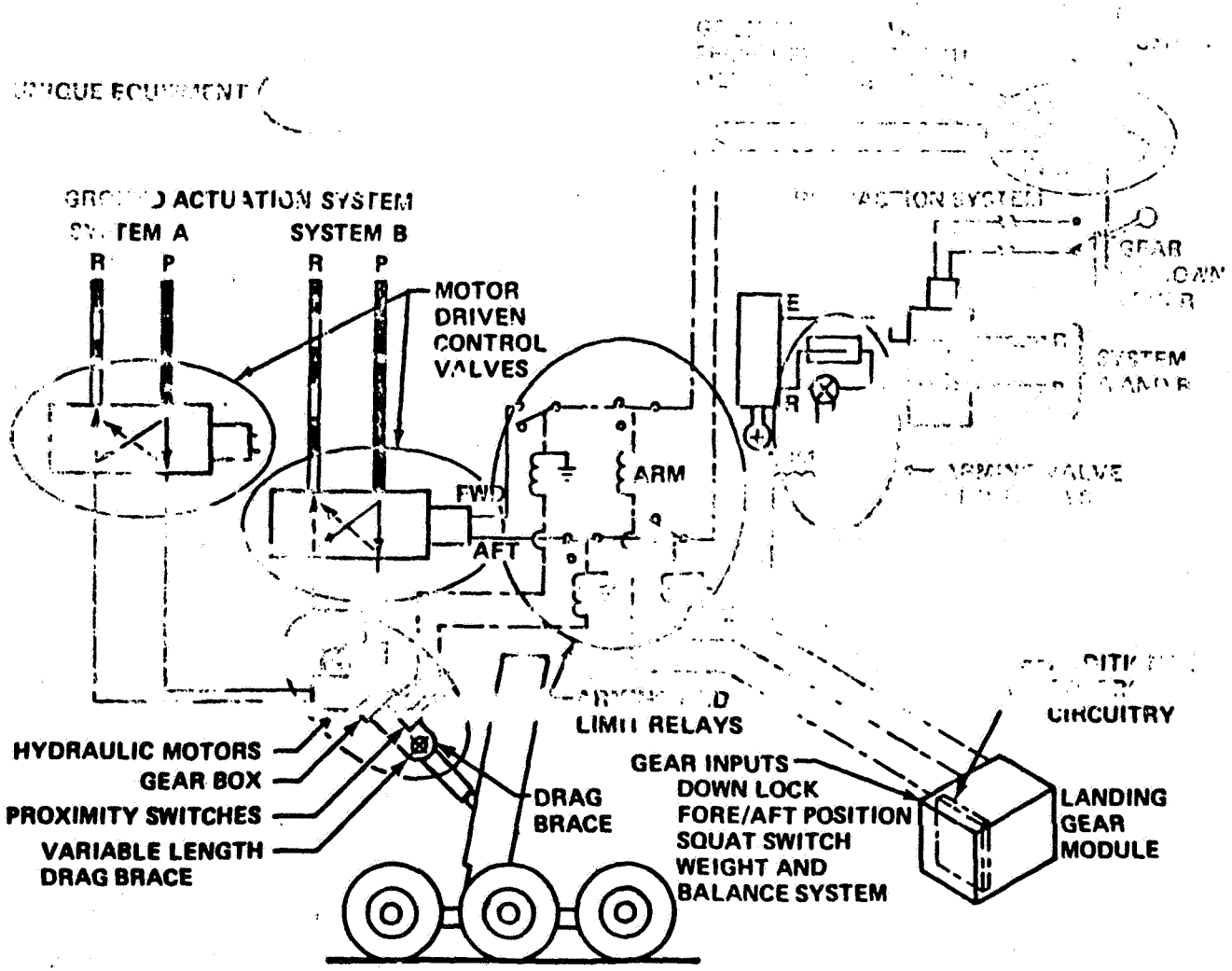

UNIQUE EQUIPMENT

ITEM	QUALIFYING FEATURES	NUMBER PER AIRPLANE
MOTOR DRIVEN VALVE	4000 PSI, 20 GPM/VALVE	4
HYDRAULIC MOTOR	42 HP/MOTOR	4
GEAR BOX	87:1, 2 INPUTS	2
JACK SCREW DRAG BRACE	18.5 IN. LENGTH ADJUSTMENT	2
PROXIMITY SWITCH		4
CONTROL CIRCUIT CARD	ARMING LOGIC	2
ARMING VALVE	4000 PSI, 20 GPM	2
GUARDED SWITCH, GROUND POSITION SELECT		1
POSITION INDICATION	LIGHTS, ARM, FORE, AFT	2
HYDRAULIC PLUMBING	FROM VALVES IN WHEEL WELL TO DRAG BRACE	
ELECTRICAL WIRING	FROM COCKPIT TO ELECTRONICS BAY TO LANDING GEAR	

LOADS FOR STRUCTURAL SIZING

CONDITION/PART	ULTIMATE LOAD, 1000 LB	
	ADAPTIVE GEAR–FORWARD	CONVENTIONAL GEAR–AFT
TAXI*/MAIN GEAR	1098	1066
TAXI**/NOSE GEAR	115	178
2-POINT BRAKED ROLL*/BRACE	679 TENSION	1116 TENSION
REVERSE BRAKING*/BRACE	837 COMPRESSION	510 COMPRESSION
	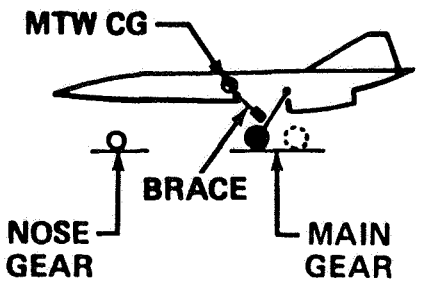	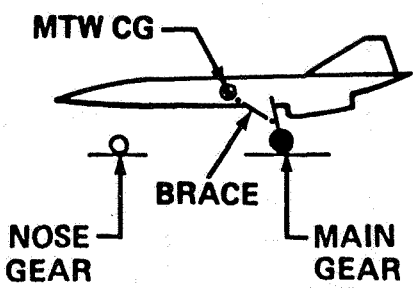

* CG AT AFT LIMIT
** CG AT FORWARD LIMIT

WEIGHT SUMMARY-ADAPTIVE GEAR

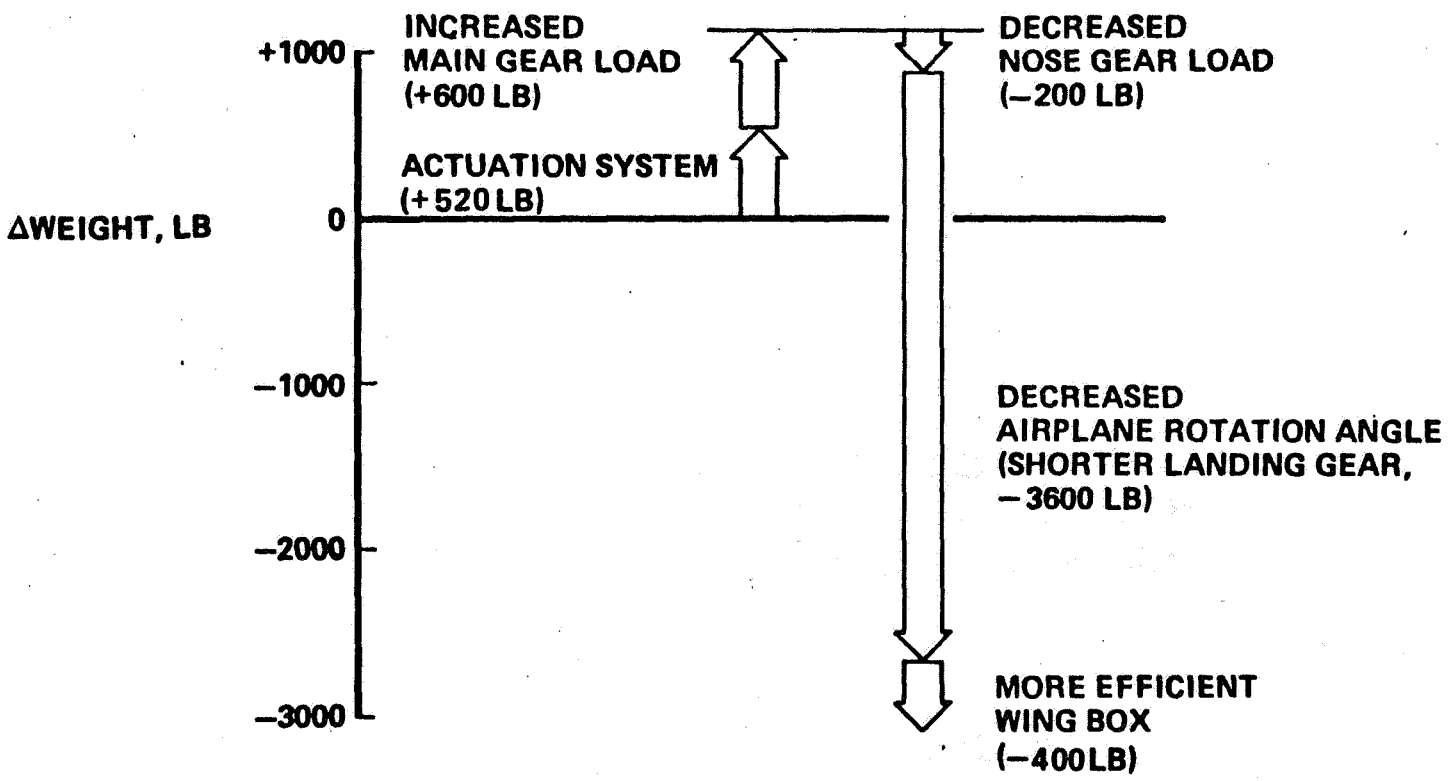

SUMMARY

- ADAPTIVE GEAR CONCEPT IS PRACTICAL AND BENEFICIAL

- TAKEOFF WITH ADAPTIVE GEAR IN FORWARD POSITION IS WORTH ABOUT 2.5 EPNdB SIDELINE JET NOISE, AT CONSTANT FIELD LENGTH AND GEAR LENGTH

NOISE SENSITIVITY STUDIES

- THE FAA WISHES TO ESTABLISH NOISE RULES FOR SECOND GENERATION SSTs
- NASA LANGLEY IS CONDUCTING A STUDY TO SUPPORT THE FAA

NOISE SENSITIVITY STUDIES

- IMPROVED LEADING EDGE DESIGN
- WING SPAN ADDITIONS
- CENTER OF GRAVITY MANAGEMENT
- NOISE ABATEMENT SYSTEMS AND PROCEDURES
- ADAPTIVE LANDING GEAR
- EFFECTS OF ENGINE OVERSIZING
- DESIGN MACH NUMBER

EFFECTS OF ENGINE OVERSIZING FOR LOW NOISE

- OBJECTIVES
- GROUND RULES
- "FIRST CYCLE" PARAMETRIC STUDY
- BALANCE REQUIREMENTS
- WEIGHT EFFECTS
- AERODYNAMIC EFFECTS
- OTHER NOISE SOURCES
- "SECOND CYCLE" PARAMETRIC STUDY
- CONCLUSIONS
- RECOMMENDATIONS

OBJECTIVES

- EARLY PARAMETRIC STUDIES SHOW THAT OVERSIZING ENGINES CAN ACHIEVE LARGE NOISE REDUCTIONS WITH SOME LOSS IN AIRPLANE PRODUCTIVITY AND FUEL EFFICIENCY

- THE OBJECTIVE OF THIS STUDY WAS TO CONDUCT A MORE IN-DEPTH ANALYSIS TO VALIDATE THESE TRENDS

GROUND RULES

BASELINE CONFIGURATION

- 733-633
- TOGW = 750 000 LB
  - PAYLOAD = 273 PASS
  - RANGE = TRANS-PACIFIC
- WING AREA = 7700 FT^2
- P&WA VSCE 502B-1
- ENGINE SIZE = 700 LB/SEC
- TOF[illegible] [illegible] 0°C)
- [illegible] 44 5[illegible]
  [illegible], STD + 10 [illegible])
- [illegible] TO [illegible] LABLE L[illegible]
- [illegible] FLOTA[illegible]
  [illegible]TS

MATCHED FOR BEST:

- RANGE
- PRODUCTIVITY
- [illegible]
- [illegible] FFICI[illegible]

MAINTAIN DESIGN RANGE WHEN OVERSIZING ENGINES BY EITHER DECREASING PAYLOAD [illegible] INCREASI[illegible]

FIRST CYCLE PARAMETRIC STUDY

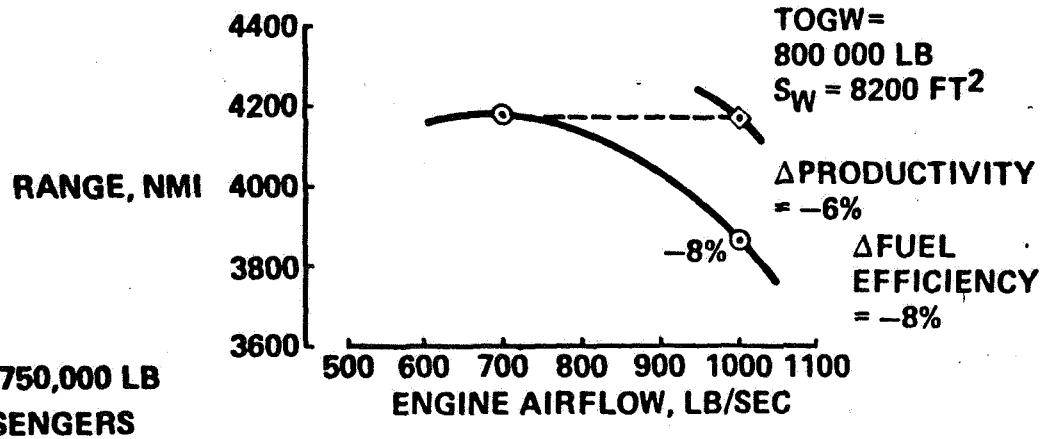

- TOGW = 750,000 LB
- 273 PASSENGERS

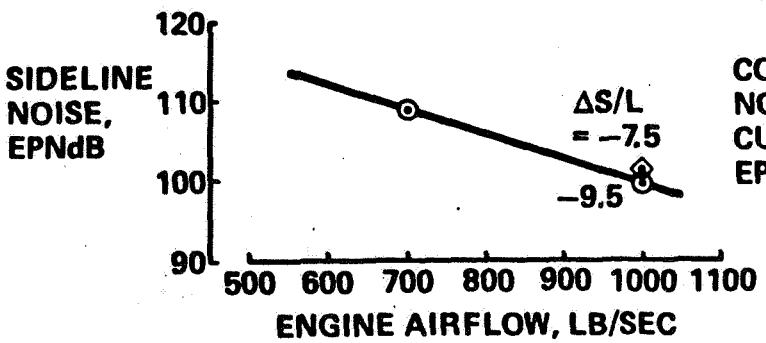

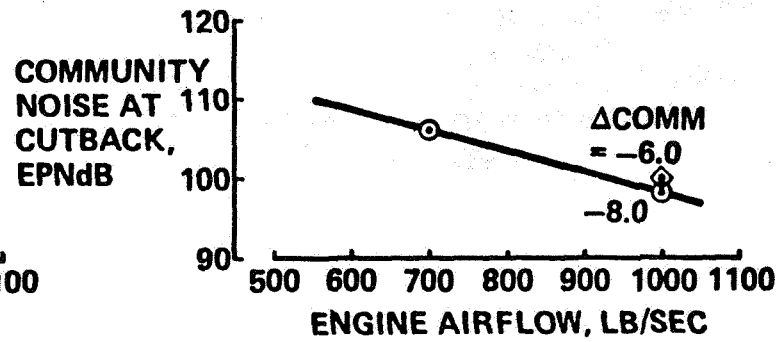

FIRST-CYCLE PARAMETRIC STUDY

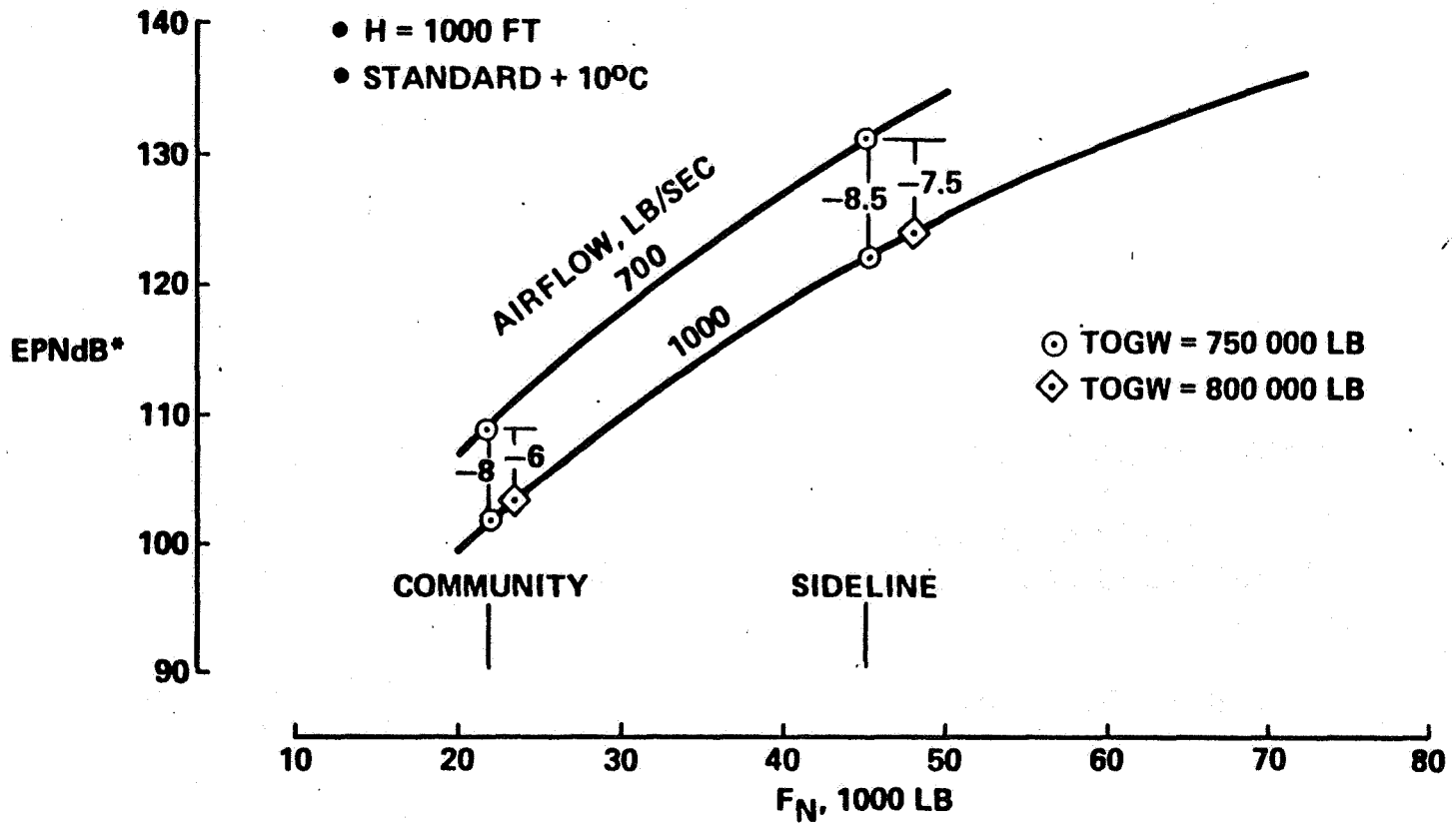

*SAE JET COMPONENT NOISE

THE DILEMMA OF THE "TAIL-HEAVY" AIRPLANE

- THE FOREBODY WEIGHT IS A MAJOR FACTOR IN BALANCING THE AIRPLANE
- LARGE FOREBODIES ARE AERODYNAMICALLY DESTABILIZING AND NEED LARGER EMPENNAGE VOLUME COEFFICIENTS
- INCREASING EMPENNAGE SIZE MAKES AIRPLANE TAIL HEAVIER

AIRPLANE BALANCE

- CENTER OF GRAVITY MUST BE INSIDE THE DESIGN LIMITS
- DESIGN LIMITS ARE RELATED TO EMPENNAGE VOLUME COEFFICIENTS
- THE OBJECTIVE OF THE DESIGNER IS TO BALANCE THE AIRPLANE WITH SMALL TAIL SURFACES

ENGINE LOCATION AND BALANCE
SST CONFIGURATION

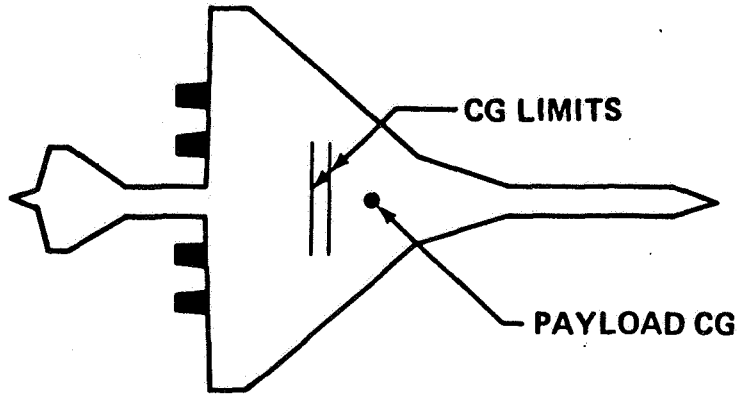

CONFIGURATION FEATURES
(SIMILAR TO SUBSONIC AFT ENGINE TYPES)

- ENGINES AFT OF CG RANGE
- WING AFT ON BODY
- PAYLOAD FORWARD OF CG RANGE

BALANCE REQUIREMENTS WITH INCREASED ENGINE SIZE

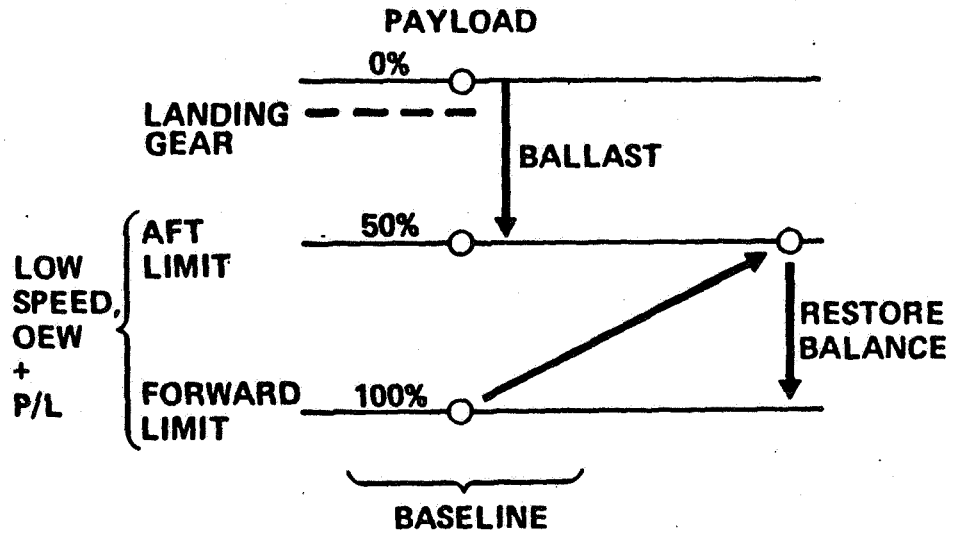

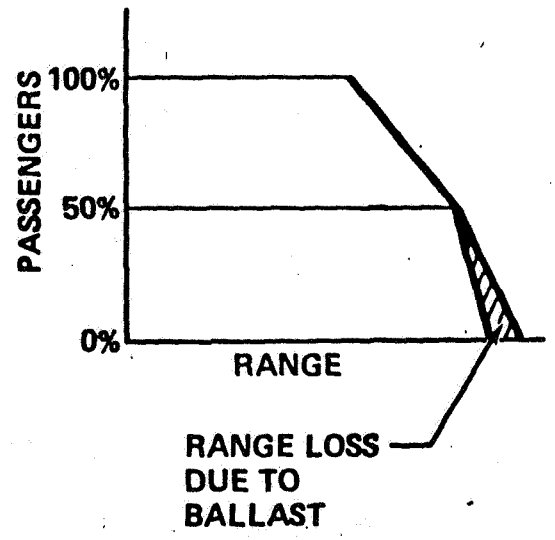

ENGINE SIZE	700 LB/SEC	1000 LB/SEC
PAYLOAD	273 PASSENGERS	→

RESTORING BALANCE WITH LARGER ENGINES

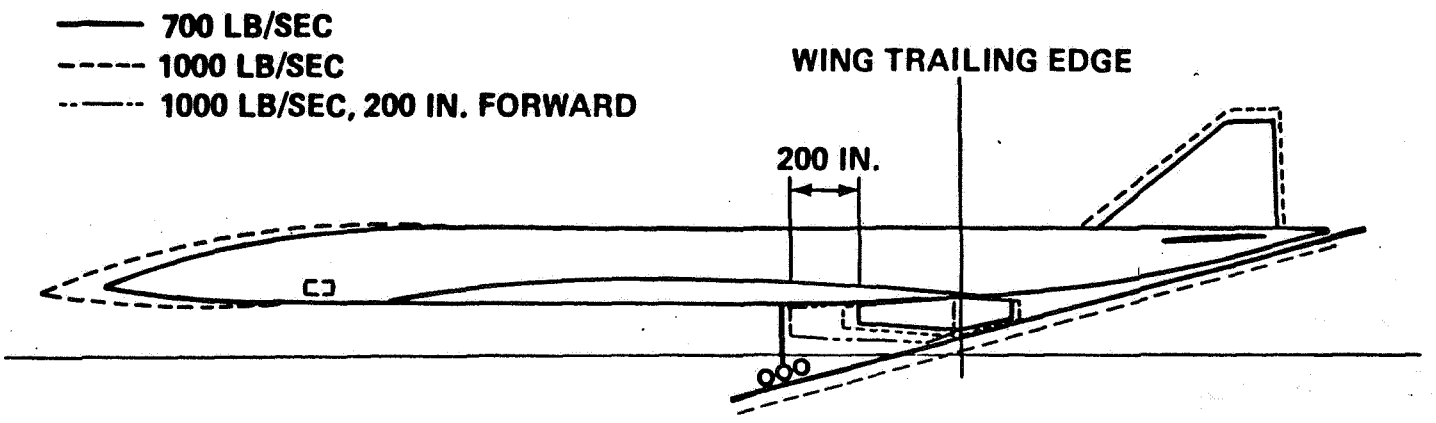

OPTIONS TO RESTORE BALANCE	CONCERNS
BALLAST IN NOSE	MOMENT OF INERTIA TAKEOFF CLEARANCE
MOVE NACELLE FORWARD	DRAG, INLET FLOW FIELD GEAR LOCATION
LENGTHEN FOREBODY	MOMENT OF INERTIA DESTABILIZING TAKEOFF CLEARANCE

RUNWAY FLOTATION REQUIREMENTS

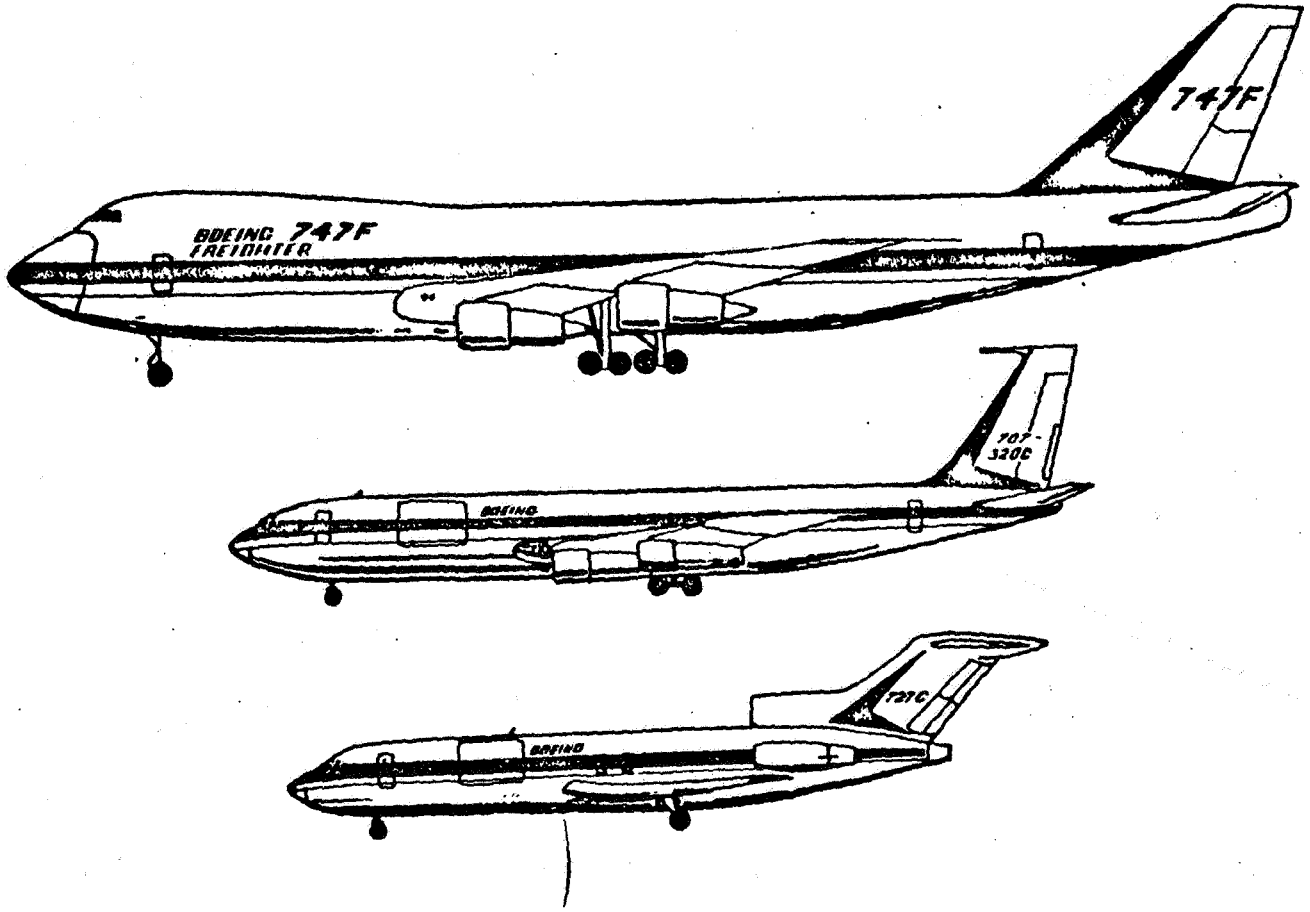

ENGINE SIZE EFFECT ON POD WEIGHT

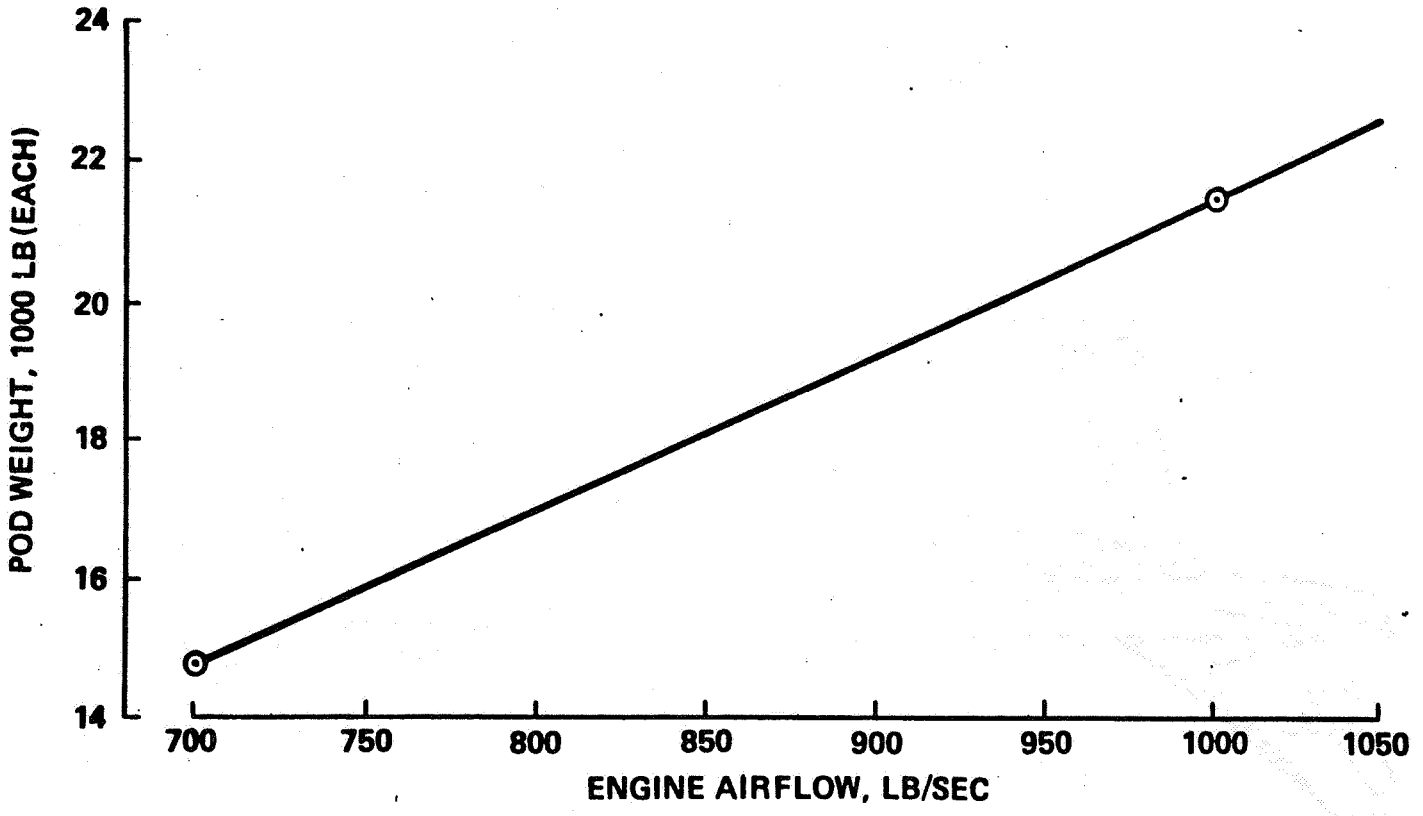

ENGINE SIZE EFFECT ON POD LOCATION FOR MASS BALANCE

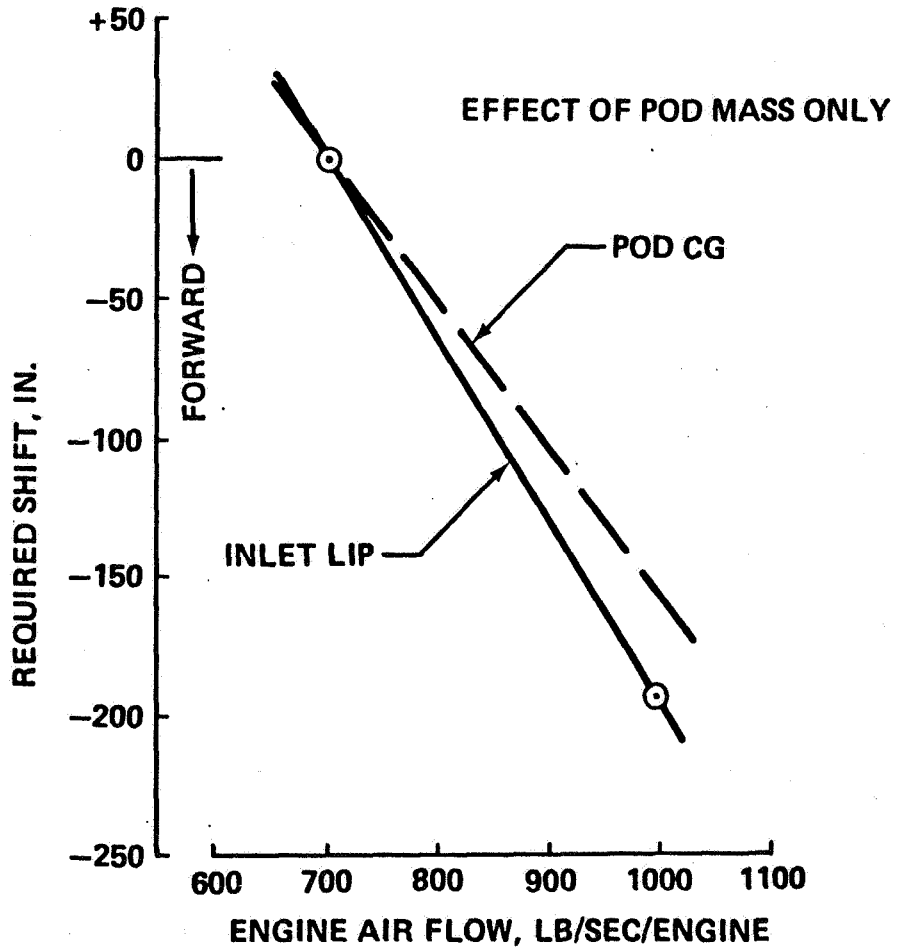

ENGINE SIZE EFFECTS ON DRAG

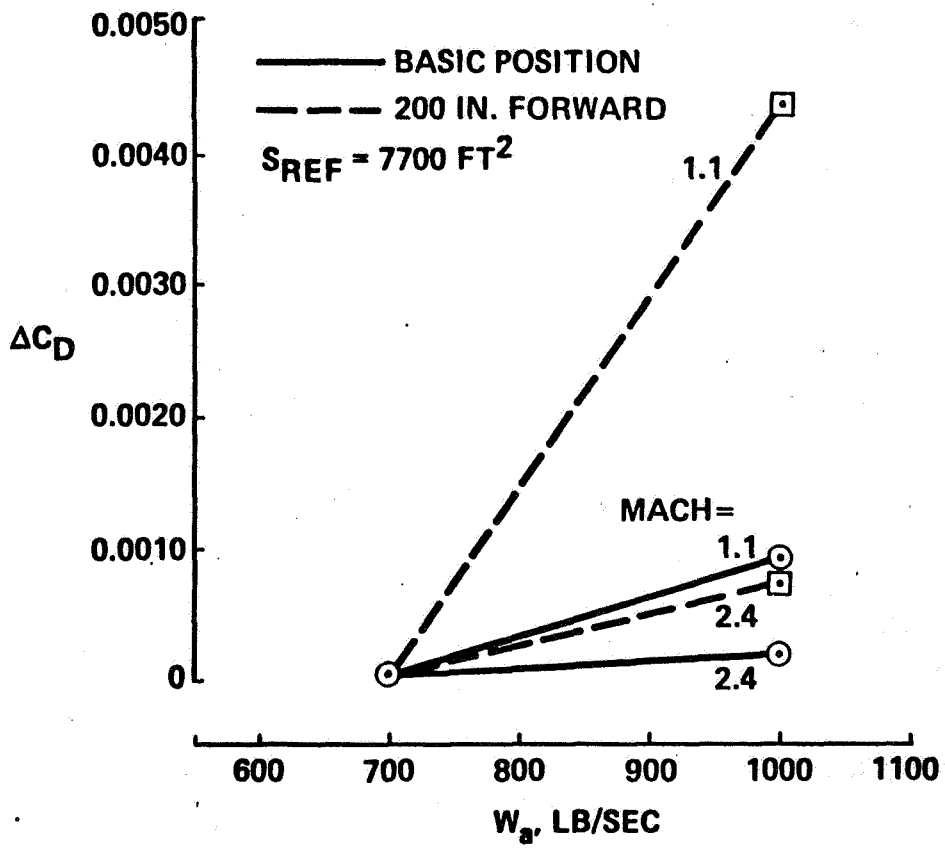

NOISE UPDATE, JET NOISE ONLY TO TOTAL NOISE

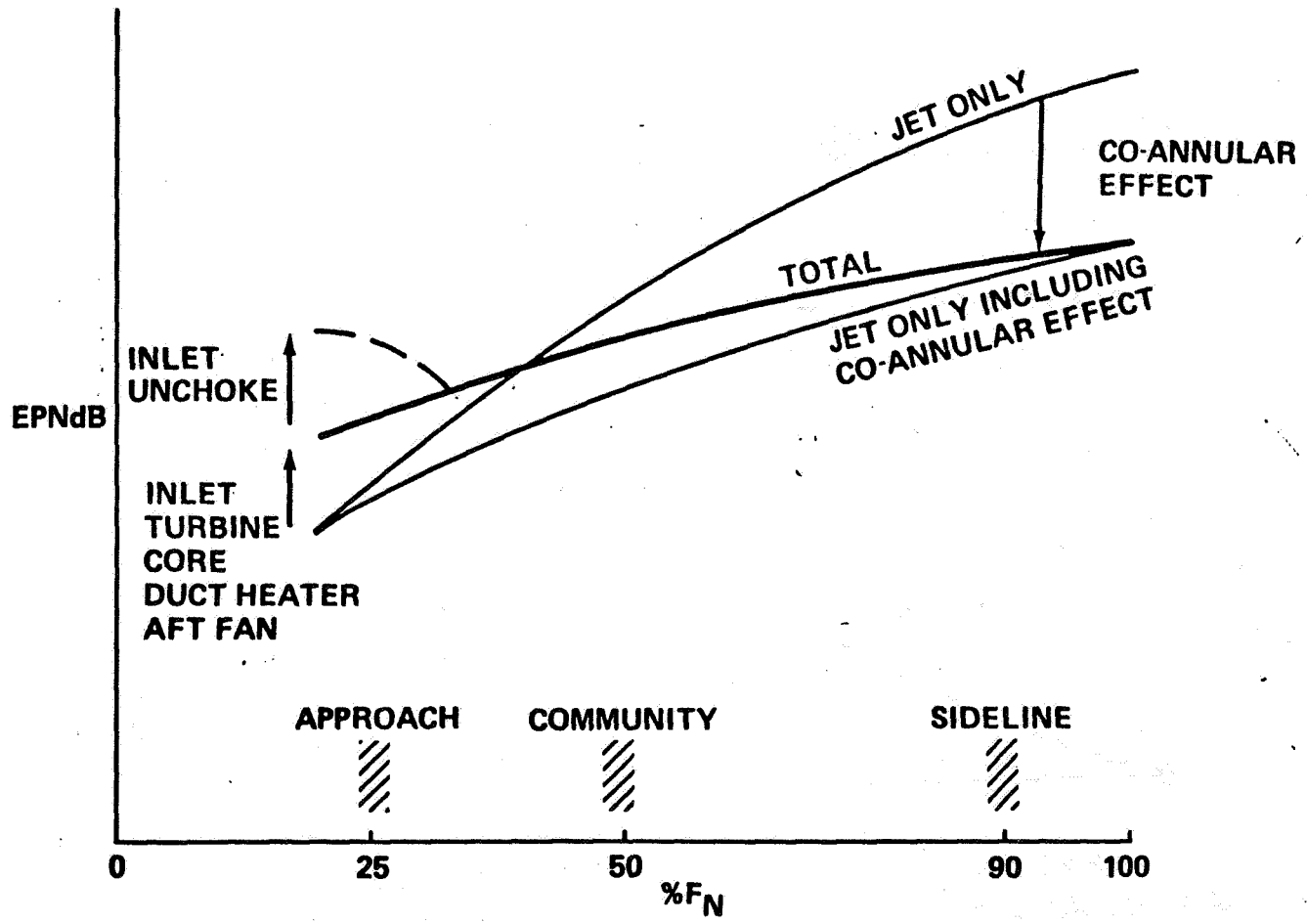

SECOND CYCLE PARAMETRIC STUDY

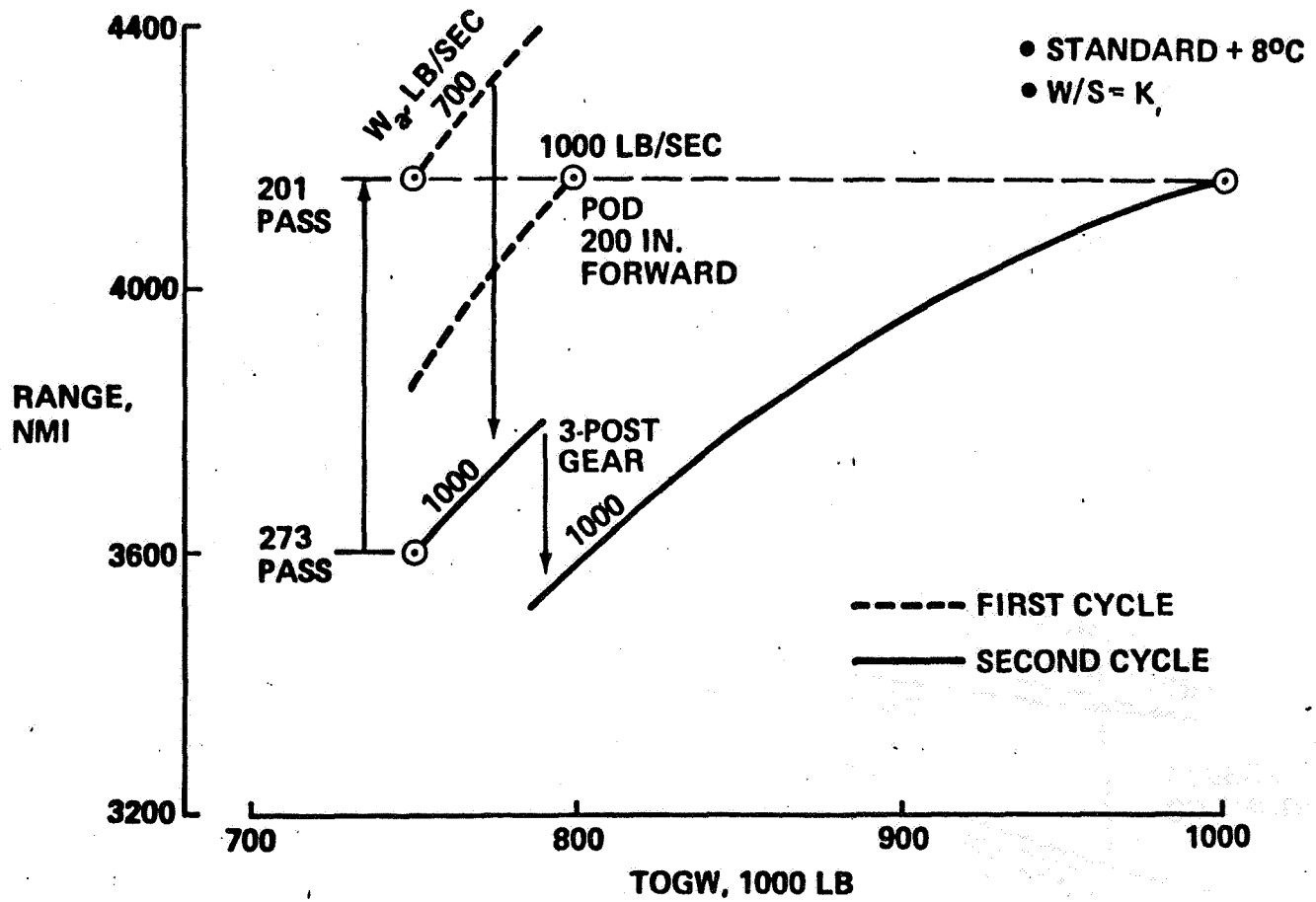

JET ONLY vs TOTAL NOISE, TAKEOFF CONDITIONS

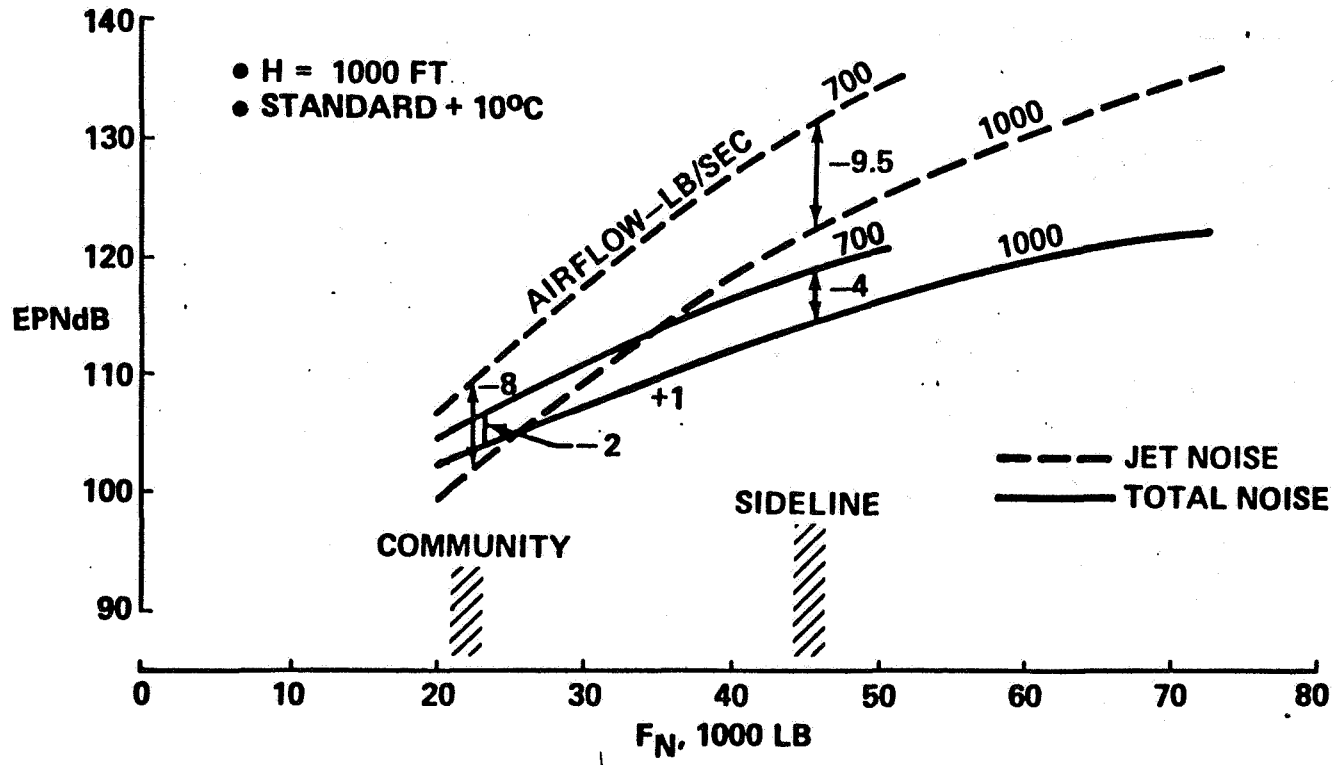

TOTAL NOISE TAKEOFF AND APPROACH CONDITIONS

- H = 1000 FT
- STANDARD + 10°C

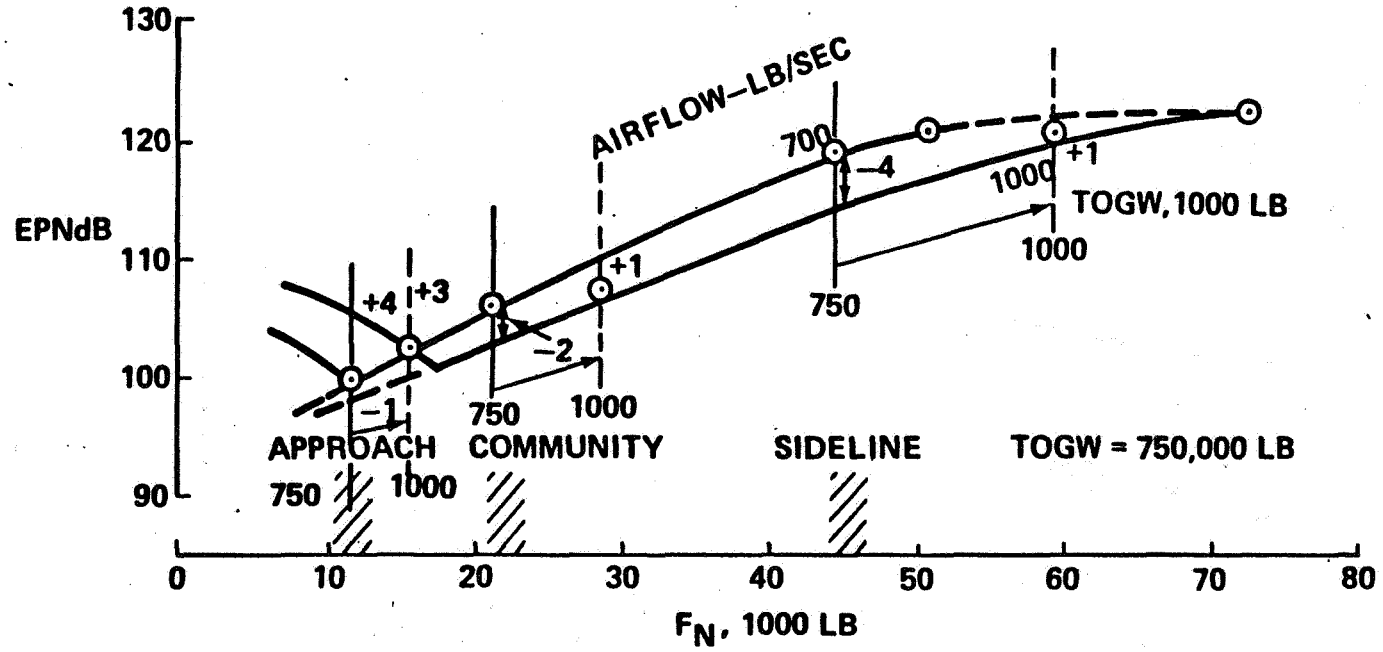

EFFECTS OF ENGINE OVERSIZING FOR LOW NOISE

R = CONSTANT

	FIRST CYCLE PARAMETRIC STUDY		SECOND CYCLE PARAMETRIC STUDY INCLUDING REBALANCE, RUNWAY FLOTATION, OTHER NOISE SOURCES		THIRD CYCLE PARAMETRIC
TOGW, LB	750 000	800 000	750 000	1 000 000	?
PASSENGERS	273	273	201	273	
W_a, LB/SEC	700	1000	1000	1000	
ΔPRODUCTIVITY, %	0	–6	–26	–33	
ΔFUEL EFFICIENCY, %	0	–8	–48	–36	
ΔNOISE, EPNdB S/L	0	–7.5	–4	+1	
T.O.	0	–6.0	–2	+1	
APP	0	N/A	+4	+3	

EFFECTS OF ENGINE OVERSIZING FOR LOW NOISE

CONCLUSIONS:

- FIRST CYCLE PARAMETRICS SHOWED
  - NOISE REDUCTIONS WITH PRODUCTIVITY AND FUEL USAGE PENALTIES
- SECOND CYCLE PARAMETRIC WITH ACCOUNTING FOR:
  - AIRPLANE BALANCE REQUIREMENTS
  - RUNWAY FLOTATION REQUIREMENTS
  - TOTAL NOISE CHARACTERISTICS
  - SHOWED ESSENTIALLY NO CHANGE IN NOISE WITH EVEN LARGER PENALTIES IN PRODUCTIVITY AND FUEL USAGE
- ENGINE OVERSIZING IS NOT A PRACTICAL WAY TO ACHIEVE LOW NOISE WITH CURRENT CONFIGURATION CONCEPTS

EFFECTS OF ENGINE OVERSIZING FOR LOW NOISE

RECOMMENDATIONS:

- TECHNOLOGY EFFORTS TO ACHIEVE LOW NOISE SHOULD EMPHASIZE:
  - THE DESIGN OF QUIET PROPULSION PODS WITH PRIORITY ON PART-POWER CONDITIONS
  - IMPROVED TAKEOFF AND LANDING AERODYNAMICS
  - INNOVATIVE DESIGN; i.e., ADAPTIVE LANDING GEAR AND NOISE ABATEMENT FLIGHT PROCEDURES

- ADVANCED COMPOSITE EMPENNAGE TRADE STUDY
- AIRPLANE FLUTTER SENSITIVITIES
- FATIGUE ASSESSMENT BLENDED WING-BODY DETAILS

ADVANCED COMPOSITE EMPENNAGE TRADE STUDY

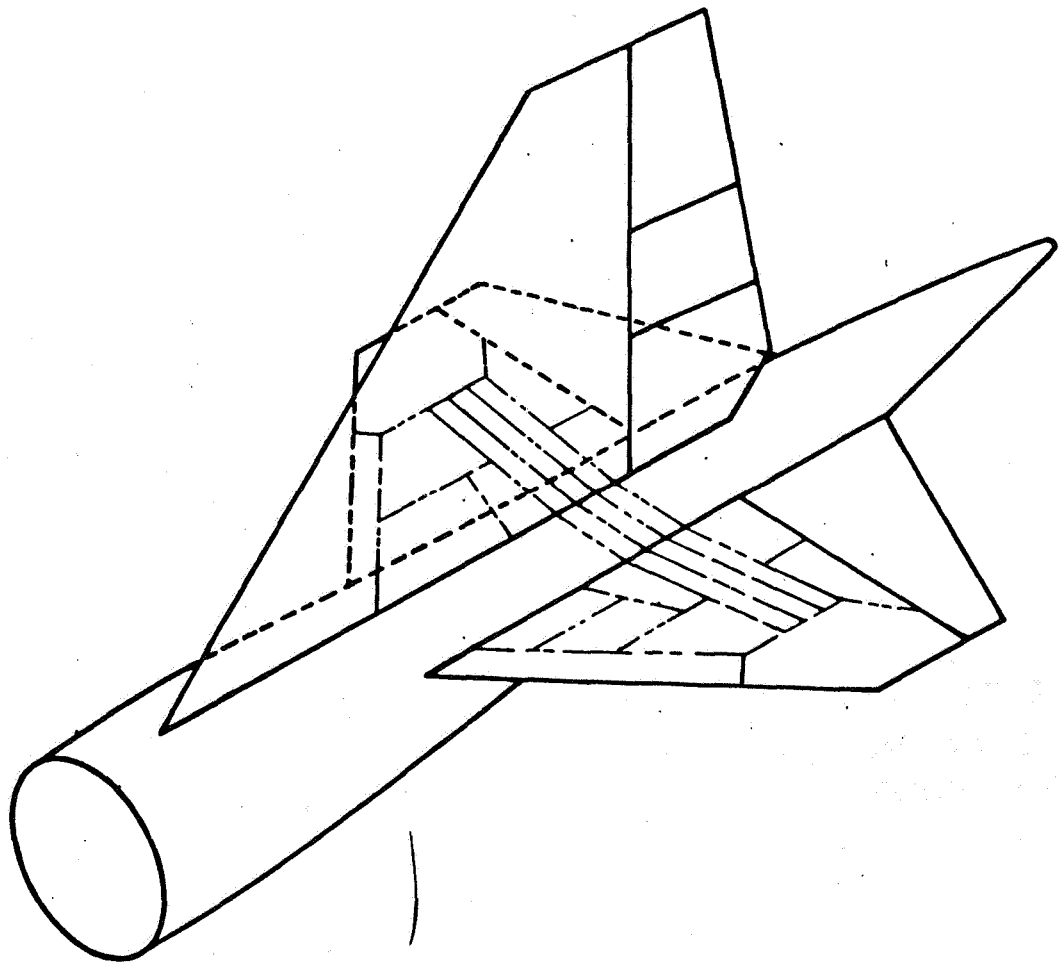

SELECTION CRITERIA
ADVANCED COMPOSITE SYSTEM

- GOOD RETENTION OF PROPERTIES TO 350°F
- SAME TOOLING, BAGGING MATERIALS, AND CURE EQUIPMENT AS CURRENTLY USED FOR 350°F CURE GRAPHITE/EPOXY SYSTEMS
- LOW VOID CONTENT LAMINATES CONSISTENTLY PRODUCED WITH NO EVOLVED REACTION PRODUCTS DURING CURE
- GOOD TACK AND DRAPE PROPERTIES FOR PREPREG
- AVAILABLE MATERIAL PROPERTY DATA BASE
- PRODUCTION-READY BY MID-1980s
- UNIFORM MATERIAL PROPERTIES

ADVANCED COMPOSITE SELECTION

	CONTINUOUS USAGE TEMPERATURE (°F)	STATE OF DEVELOPMENT	REMARKS
FIBER			
BORON	GREATER THAN 350		LARGE FILAMENTS LIMIT PRODUCIBILITY
GRAPHITE T-300 T-90		PRODUCTION EXPERIMENTAL	MEETS SELECTION CRITERIA PROPERTIES NOT VERIFIED
MATRIX			
EPOXY	LESS THAN 300	PRODUCTION	TEMPERATURE CAPABILITY INADEQUATE
METAL	GREATER THAN 350	EXPERIMENTAL	EXPERIMENTAL PROGRAMS NOT ENCOURAGING
POLYIMIDE CONDENSATION REACTION ADDITION REACTION		PRODUCTION DEVELOPMENT	HIGH VOID CONTENT MEETS SELECTION CRITERIA

DESIGN DATA
HONEYCOMB SKIN PANELS

DATA ITEMS	TITANIUM	GRAPHITE/POLYIMIDE (0/± 45/90)
MINIMUM GAGE, IN.		
• UPPER SURFACE		
• OUTER FACE SHEET	0.015	0.020
• INNER FACE SHEET	0.010	0.020
• LOWER SURFACE		
• OUTER FACE SHEET	0.020	0.020
• INNER FACE SHEET	0.010	0.020
ALLOWABLE TENSILE STRAIN		
• ROOM TEMPERATURE	0.0074	0.0060
• 350°F	0.0066	0.0057
DENSITY, LB/IN^3	0.16	0.057

DESIGN SOLUTION TO ELIMINATE HORIZONTAL TAIL, HIGH-TEMPERATURE ENVIRONMENT

- ELIMINATE JET WAKE IMPINGEMENT EFFECTS BY:
  - TILTING ENGINE NOZZLE DOWN TO 5° FROM ENGINE CENTERLINE
  - ADDING 5° DIHEDRAL TO HORIZONTAL TAIL
  - INCORPORATING ALPHA LIMITER, $\alpha < 7.5^{o}$ ($M \geqslant 2.0$)

TITANIUM HORIZONTAL TAIL

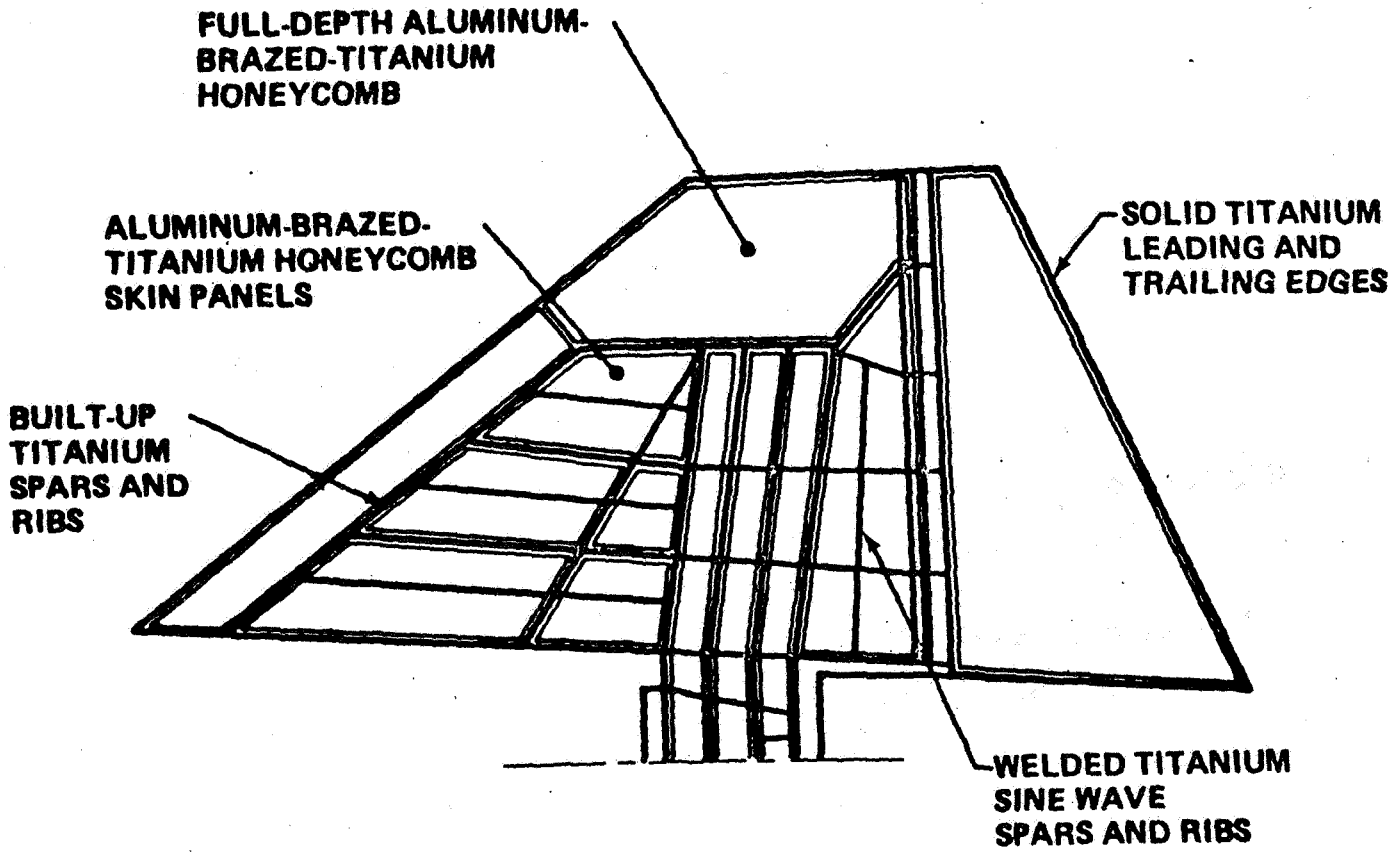

ADVANCED COMPOSITE ELEVATOR DESIGNS

SKIN AND RIB

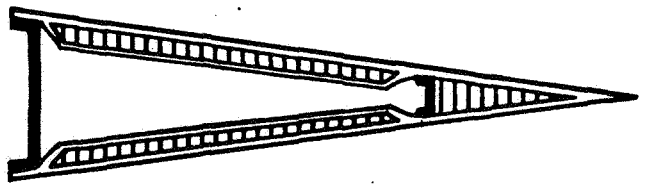

FULL-DEPTH HONEYCOMB

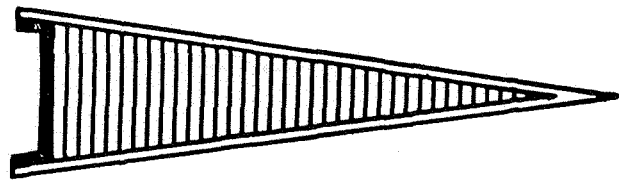

PRELIMINARY EVALUATION SHOWED:

- WEIGHT ABOUT THE SAME
- SKIN AND RIB MORE COSTLY

GRAPHITE/POLYIMIDE HORIZONTAL TAIL

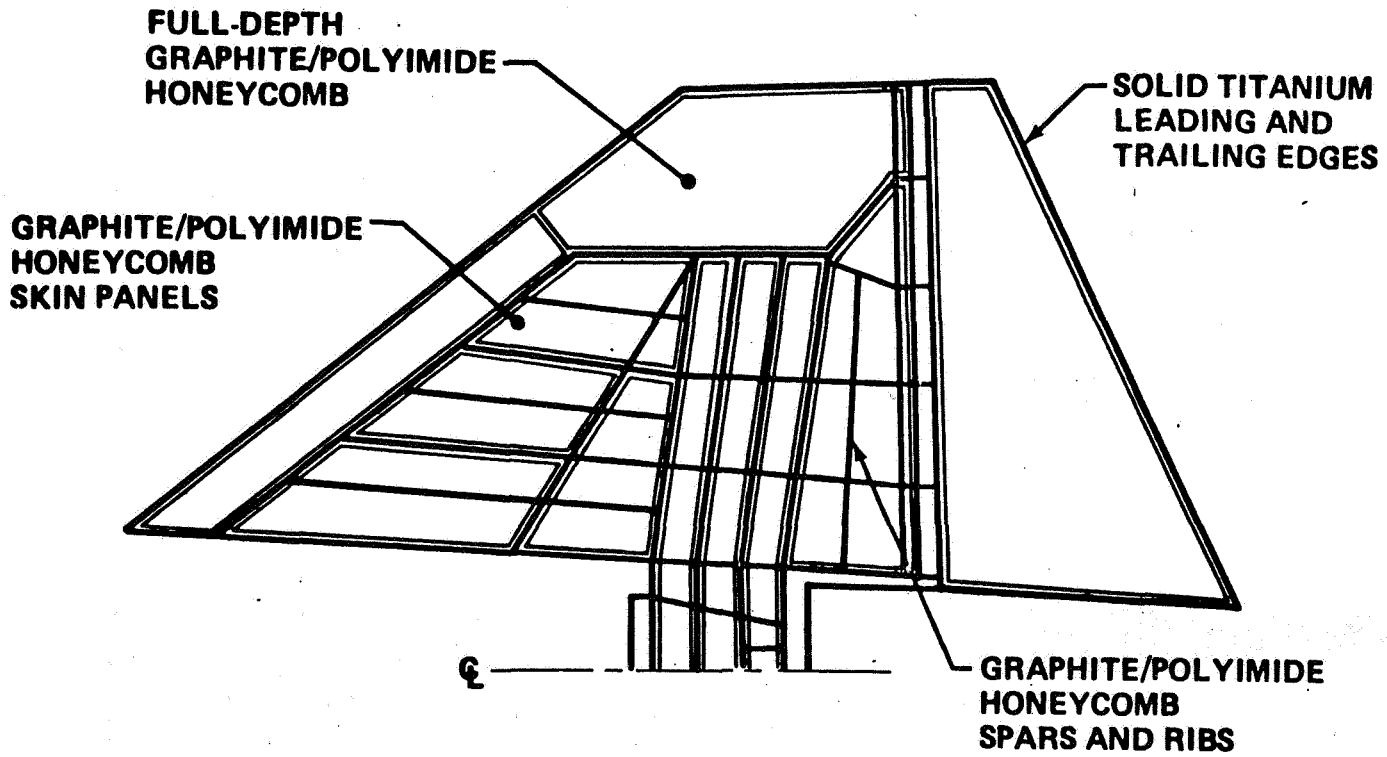

HORIZONTAL TAIL FINITE ELEMENT MODEL GRID

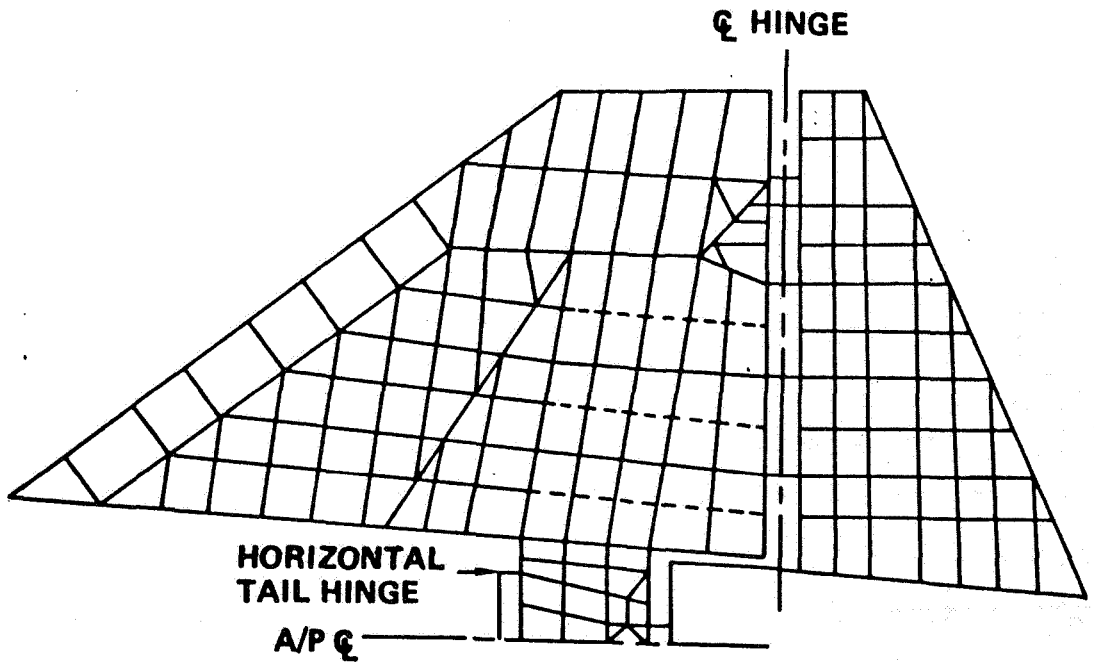

APPLICABLE FOR BOTH TITANIUM AND COMPOSITE HORIZONTAL STABILIZER AND ELEVATOR

HORIZONTAL TAIL PRESSURE DISTRIBUTION
RIGID STRUCTURE

- M = 0.95
- Δ_{STAB} = −10°
- Δ_{ELEV} = −17.5°

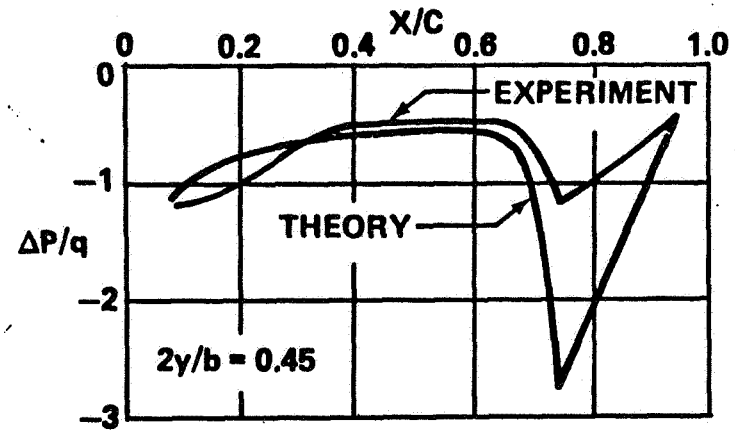

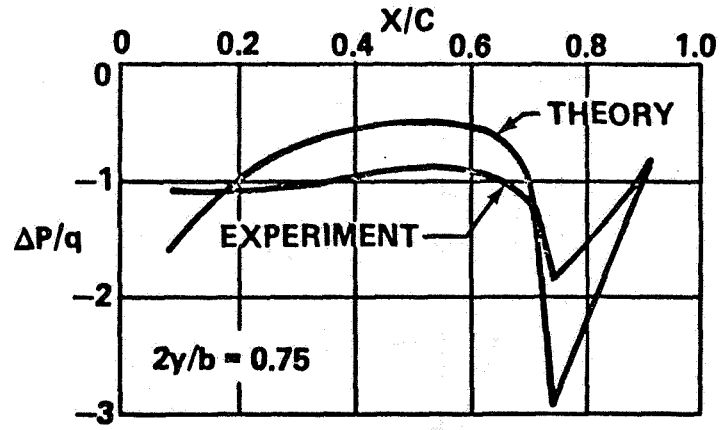

HORIZONTAL TAIL PRESSURE DISTRIBUTION

FLEXIBLE STRUCTURE

- AEROELASTIC INCREMENT COMBINED WITH RIGID EXPERIMENTAL DATA
- M = 0.95
- $\Delta_{STAB} = -10^{o}$
- $\Delta_{ELEV} = -17.5^{o}$

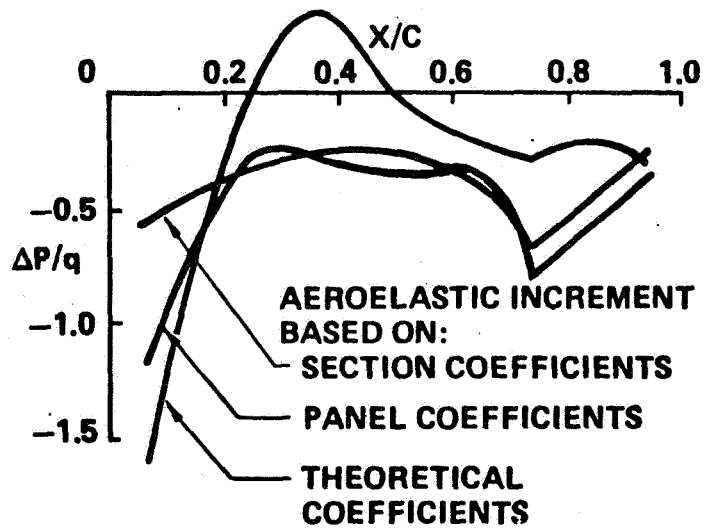

2y/b = 0.45

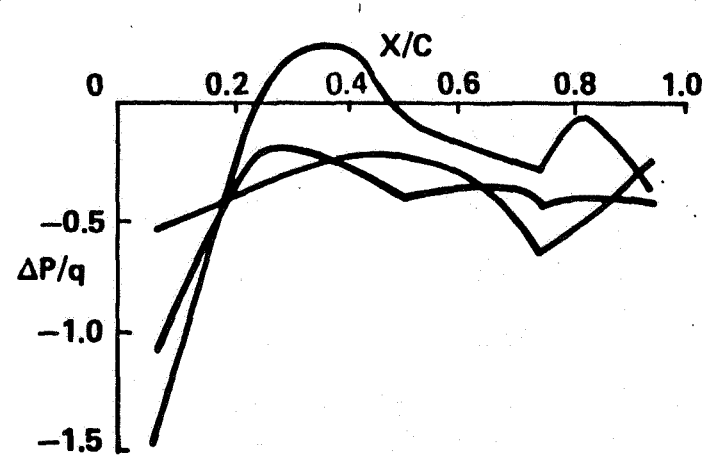

2y/b = 0.75

HORIZONTAL TAIL DESIGN LOADS

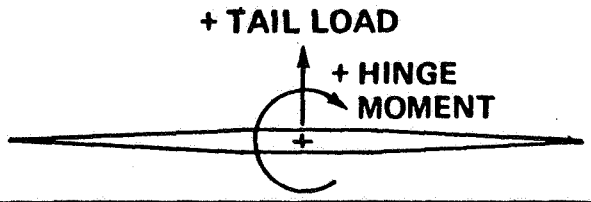

CONDITION	ALTITUDE, FT	MACH NUMBER	TAIL LOAD 10^3 LB ULTIMATE	HINGE MOMENT 10^6 IN.-LB ULTIMATE
CHECKED MANEUVER FROM 2.5 g	54 300	2.7	302	–8.79
	35 700	1.6	212	–6.71
	30 700	1.3	169	–5.92
ABRUPT PITCH MANEUVER DOWN TAIL LOAD	20 600	0.95	–262	7.65
	25 300	1.05	–202	7.93
	30 700	1.3	–190	8.51
ABRUPT PITCH MANEUVER UP-TAIL LOAD	20 600	0.95	218	–6.37
	25 300	1.05	168	–6.61
	30 700	1.3	158	–7.09

DETAILED DESIGNS

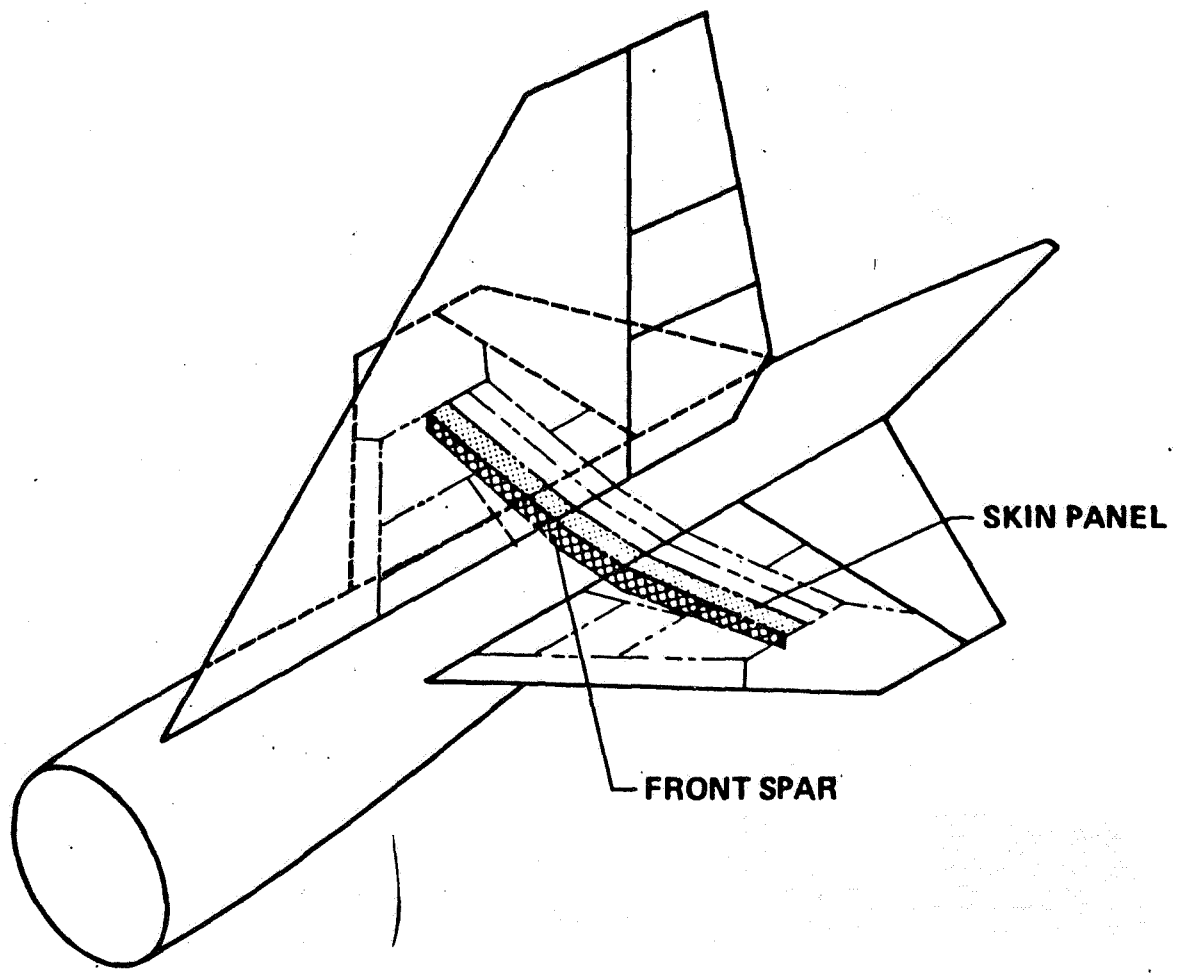

TITANIUM FRONT SPAR AND SKIN PANEL

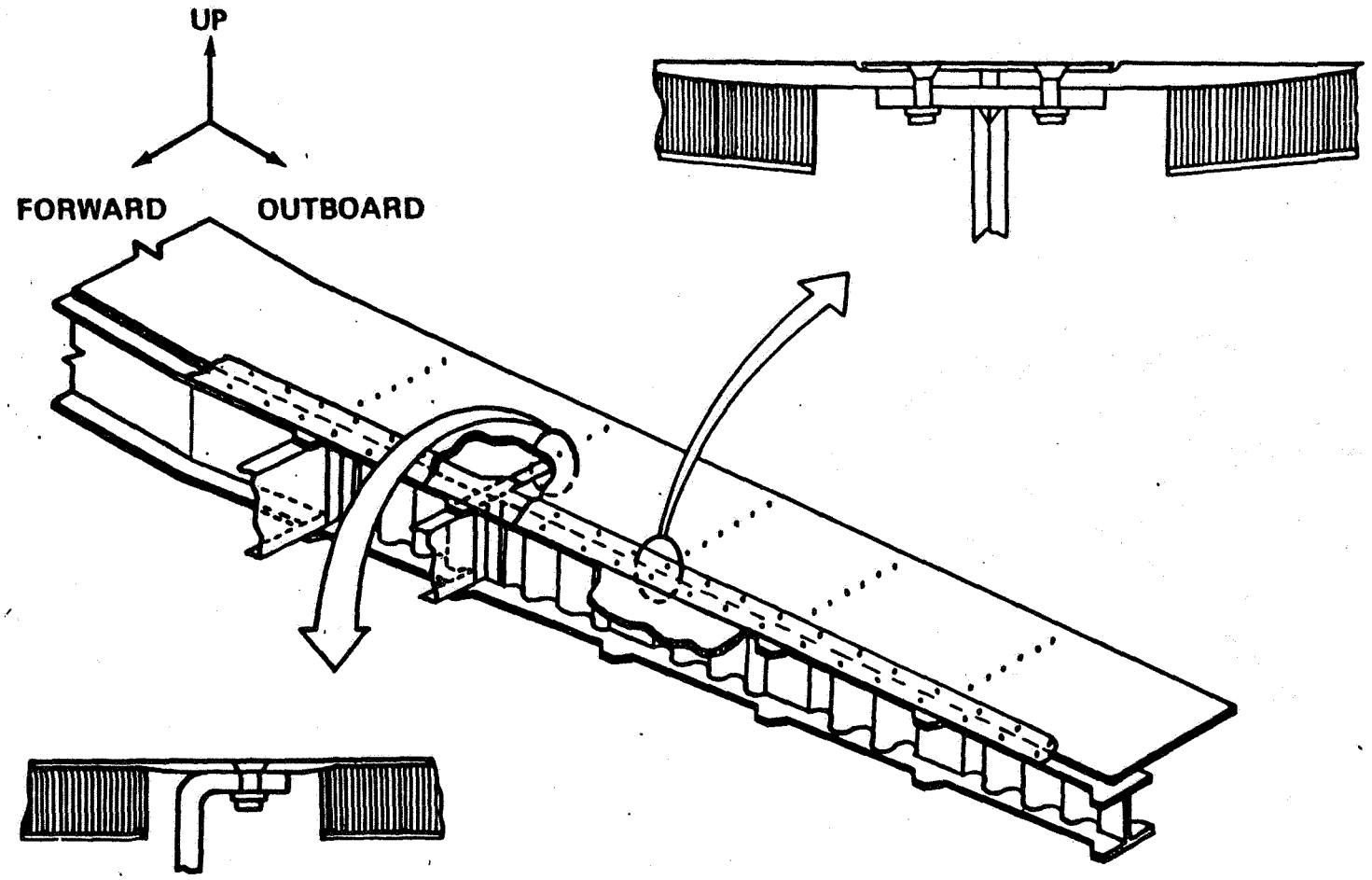

ADVANCED COMPOSITE FRONT SPAR AND SKIN PANEL

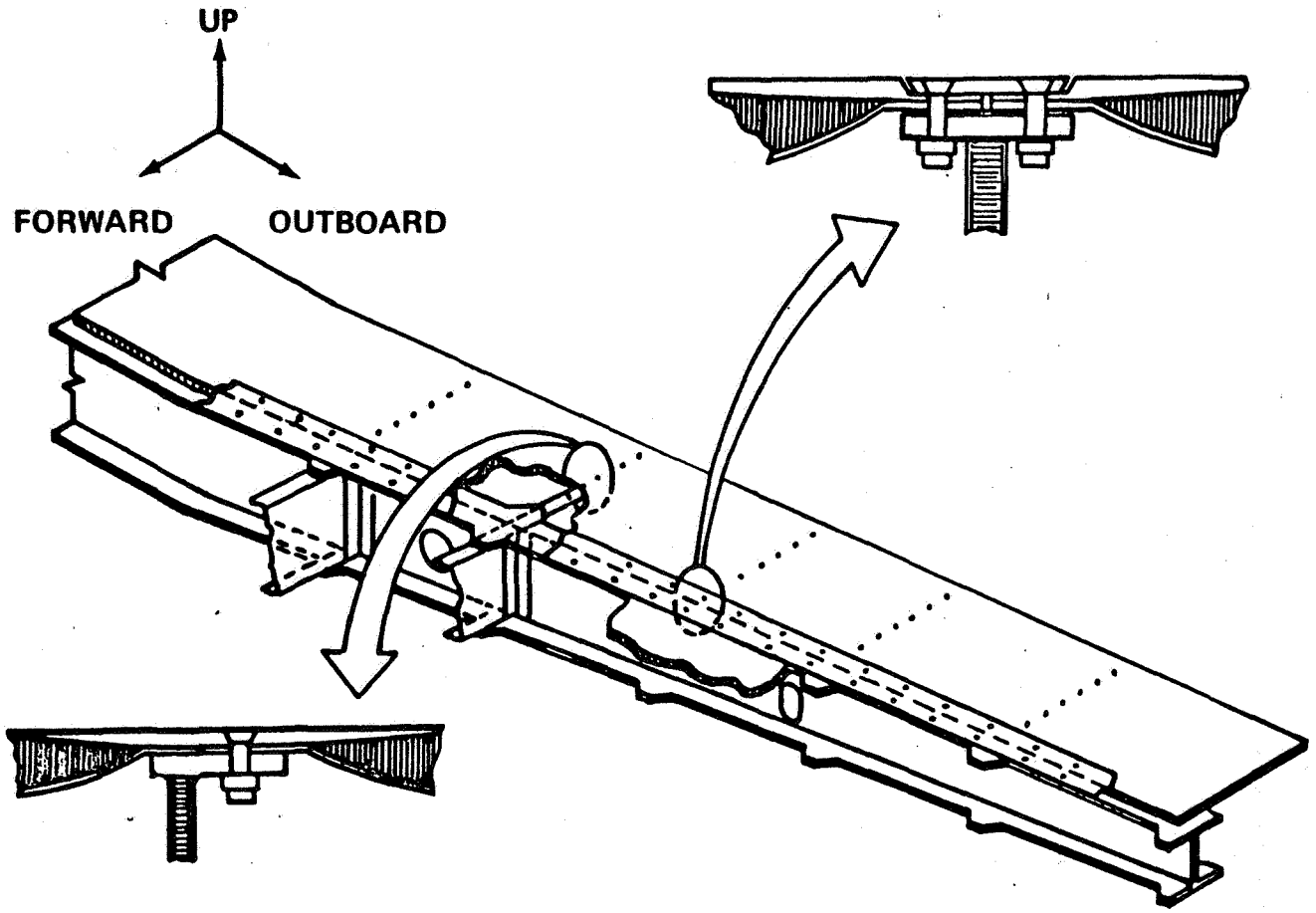

TITANIUM–GRAPHITE/POLYIMIDE COMPARISON

	TITANIUM	GRAPHITE/POLYIMIDE
SKIN PANEL WEIGHTS		
THEORETICAL, LB		
CORE, LB		
NON-OPTIMUM STRUCTURE, LB		
TOTAL, LB		
FRONT SPAR WEIGHTS		
THEORETICAL CAP, LB		
THEORETICAL WEB, LB		
NON-OPTIMUM STRUCTURE, LB		
TOTAL, LB		

TITANIUM FIN

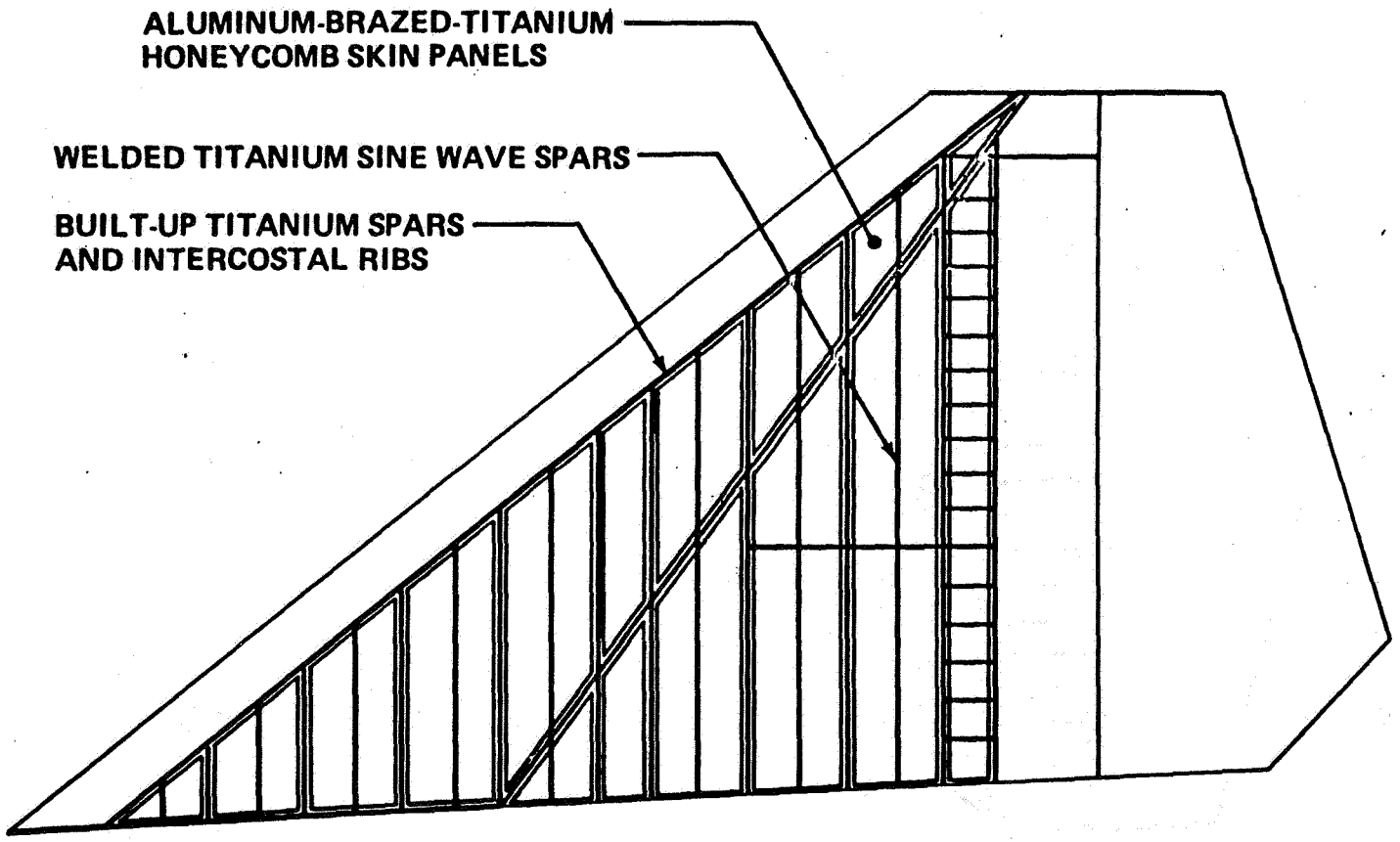

GRAPHITE-POLYIMIDE FIN

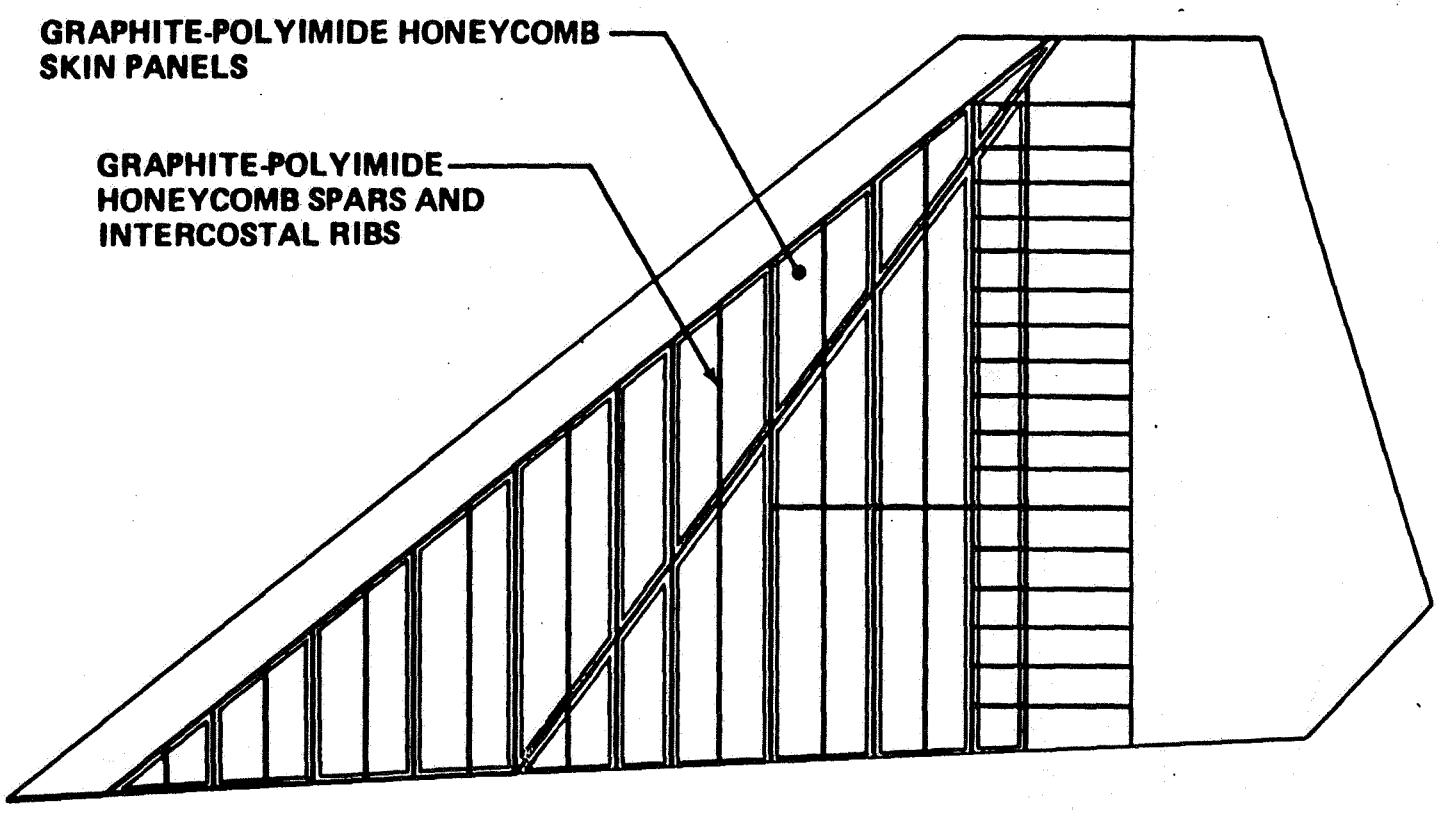

EMPENNAGE WEIGHT COMPARISON

	1971 U.S. SST REFERENCE, LB	TITANIUM, LB	GRAPHITE/ POLYMIDE, LB	% REDUCTION
HORIZONTAL STABILIZER	5290	5020	3930	26
VERTICAL STABILIZER	4110	4110	3530	14

CONCLUSIONS

- GRAPHITE/POLYIMIDE RESULTS IN A
  - % AIRPLANE WEIGHT REDUCTION
  - % FORWARD SHIFT IN AIRPLANE CG
- LONG-TERM HIGH TEMPERATURE DURABILITY OF POLYIMIDE NEEDS VERIFICATION
- AEROELASTIC ANALYSIS TECHNIQUES FOR LOW-ASPECT RATIO SURFACES NEED DEVELOPMENT

AIRPLANE FLUTTER SENSITIVITIES

FLUTTER ANALYSIS PARAMETERS

EVALUATED EFFECT OF:

- WING PLANFORM REPRESENTATION
- HORIZONTAL TAIL AIRFORCES
- HORIZONTAL TAIL SIZE
- FOREBODY AIRFORCES
- FUEL WEIGHT
- FUEL DISTRIBUTION
- NACELLE REMOVAL
- NACELLE SUPPORT BEAM STIFFNESS
- NACELLE CHORDWISE LOCATION
- WING STIFFNESS
- BODY STIFFNESS
- MACH NUMBER
- ACTIVE FLUTTER SUPPRESSION

WING STIFFNESS VARIATIONS

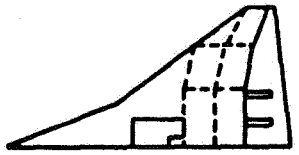

FACTOR	ΔW, LB
1.0	0

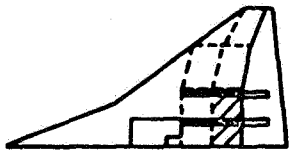

FACTOR	ΔW, LB
2.0	3500
2.0 + RIBS	5000
3.0	7000

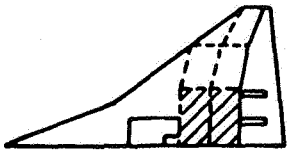

FACTOR	ΔW, LB
1.5	3400

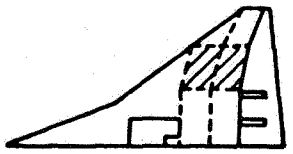

FACTOR	ΔW, LB
1.5	2300
2.0	4700

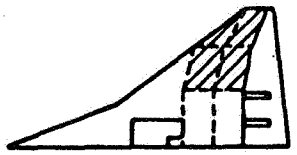

FACTOR	ΔW, LB
2.0	5800

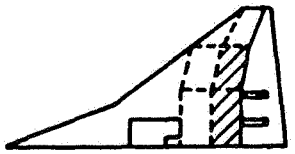

FACTOR	ΔW, LB
1.5	3000

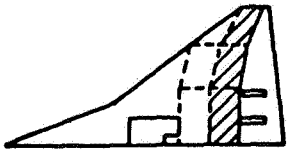

FACTOR	ΔW, LB
1.5	3350
2.0	6200

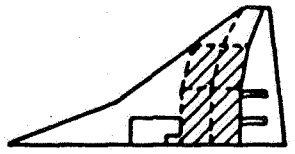

FACTOR	ΔW, LB
1.25	2800
1.5	5700

EFFECT OF FUEL WEIGHT

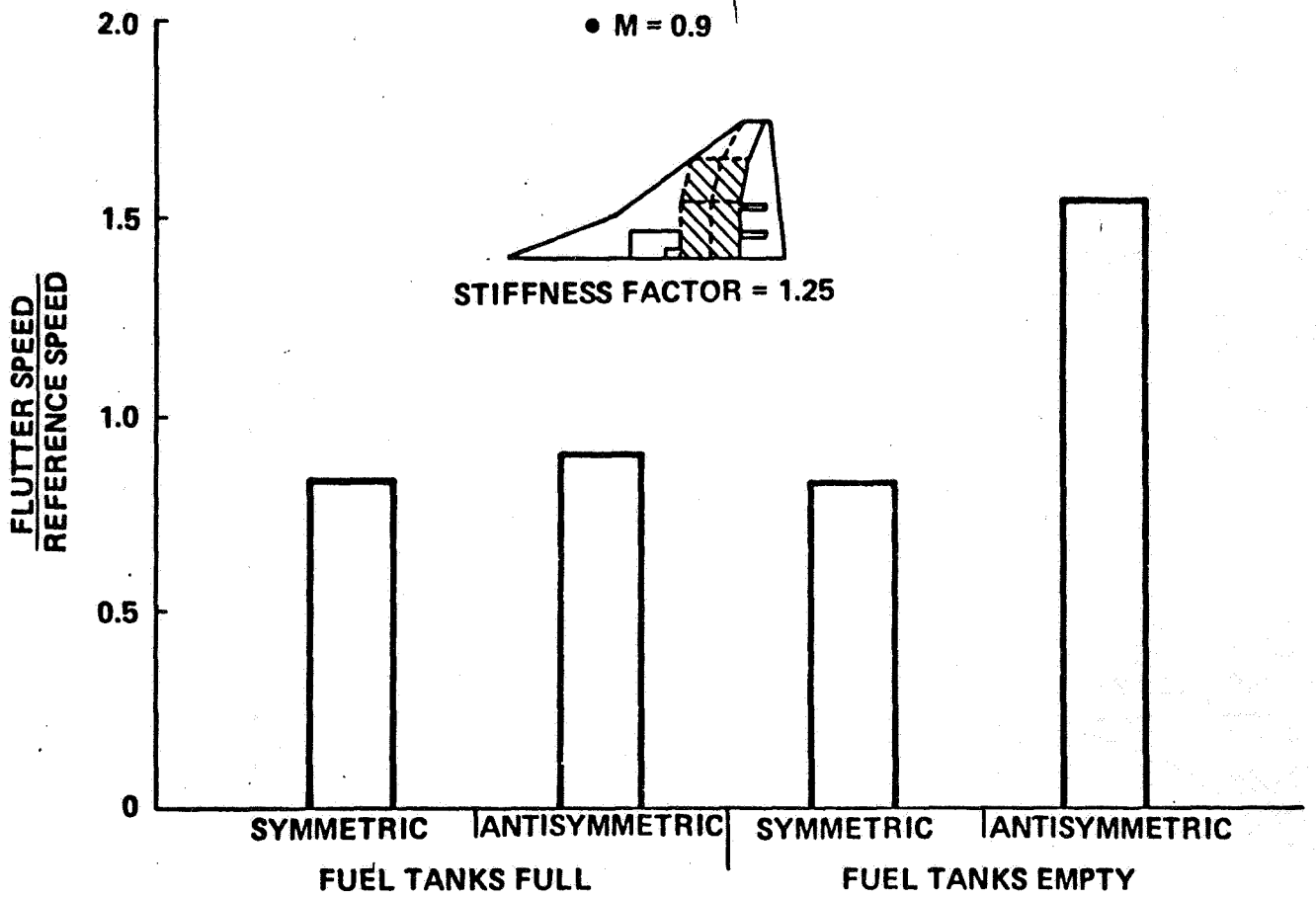

EFFECT OF NACELLE SUPPORT BEAM STIFFNESS

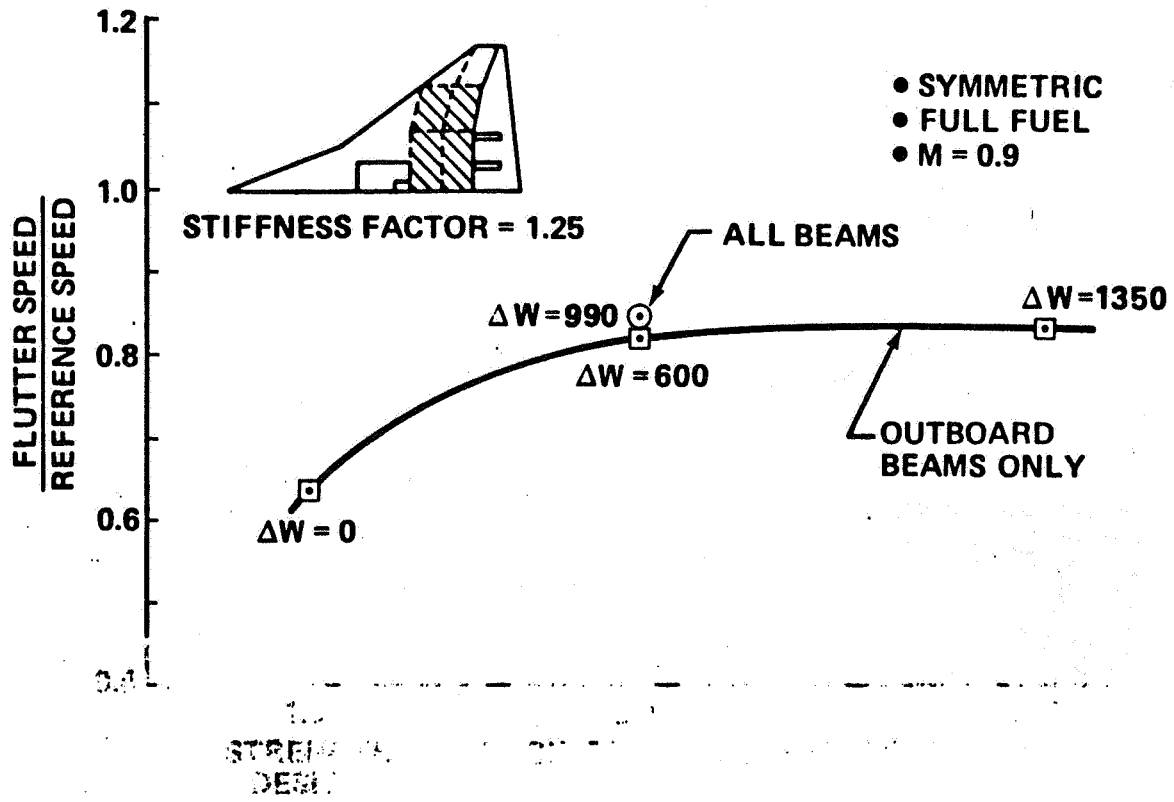

EFFECT OF NACELLE CHORDWISE LOCATION

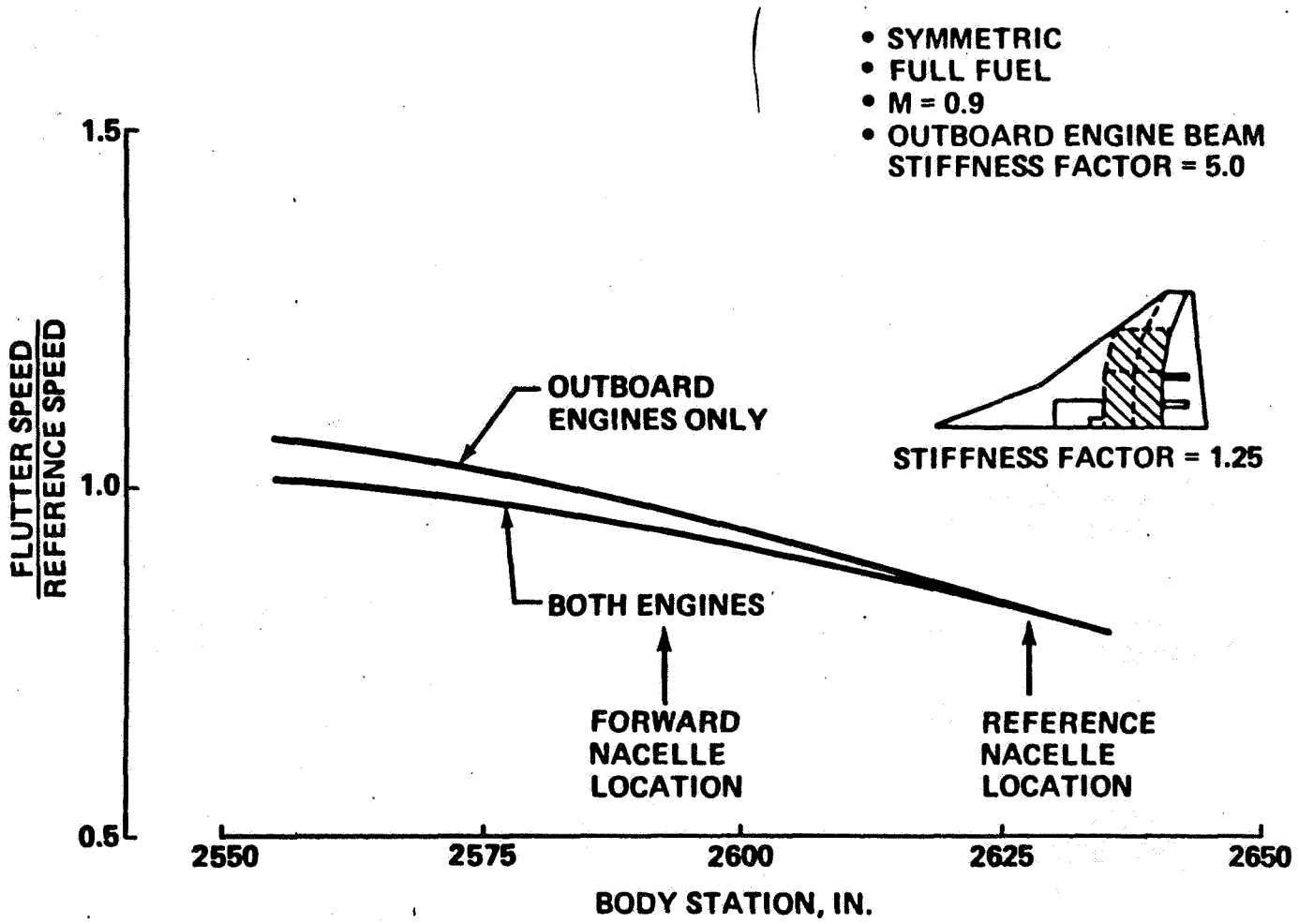

EFFECT OF WING STIFFNESS

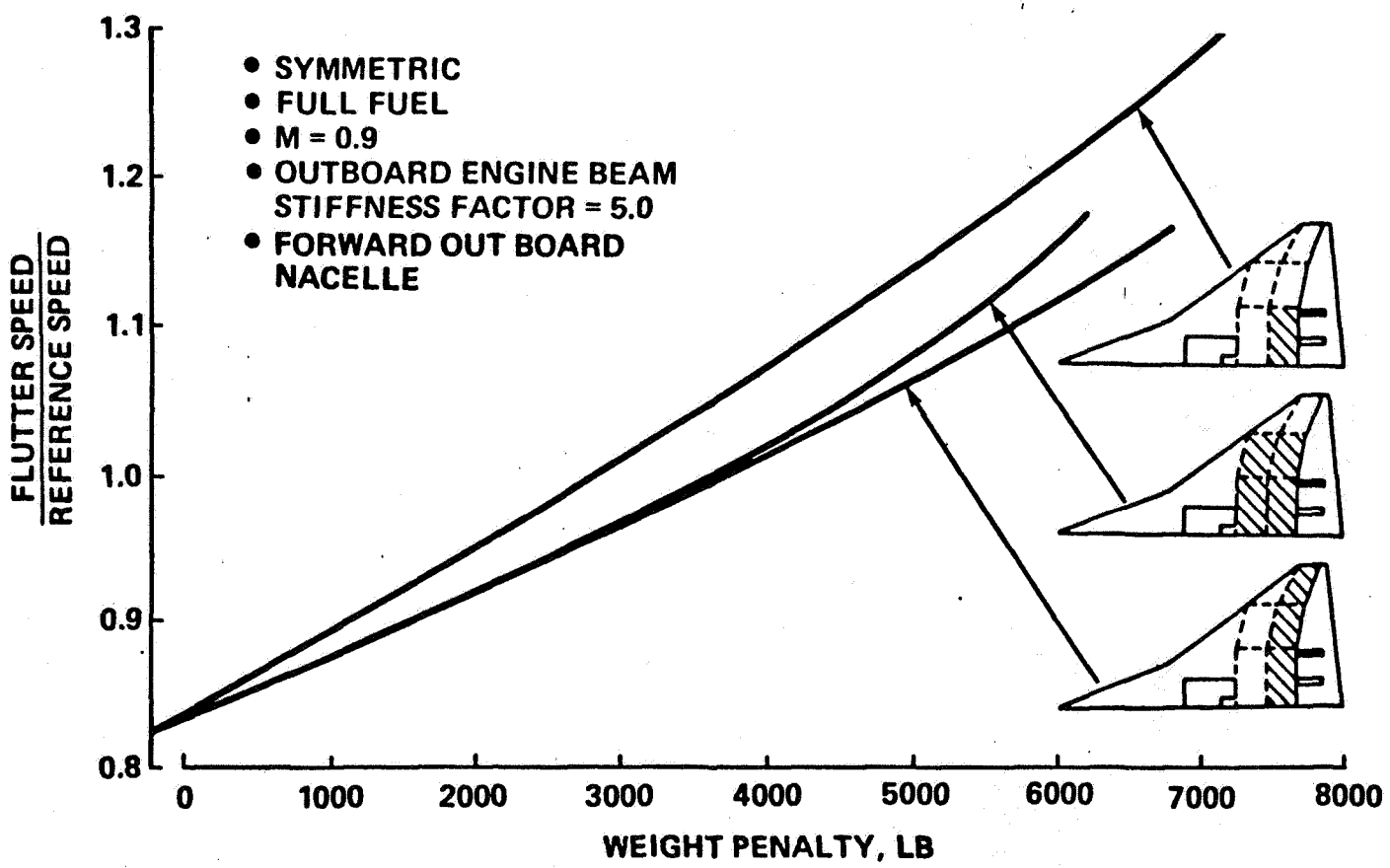

EFFECT OF NACELLE CHORDWISE LOCATION FOR OUTBOARD NACELLE

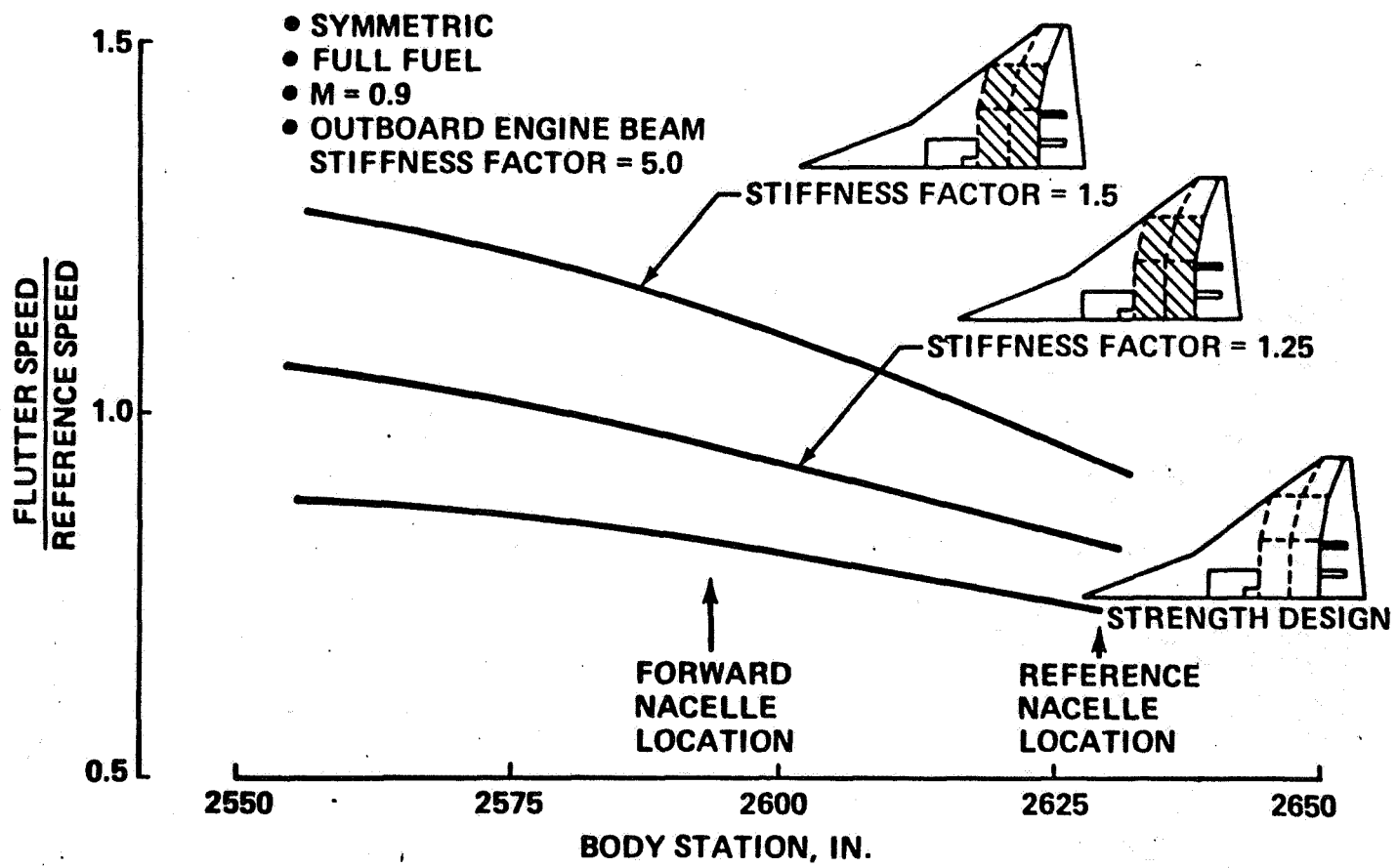

EFFECT OF MACH NUMBER

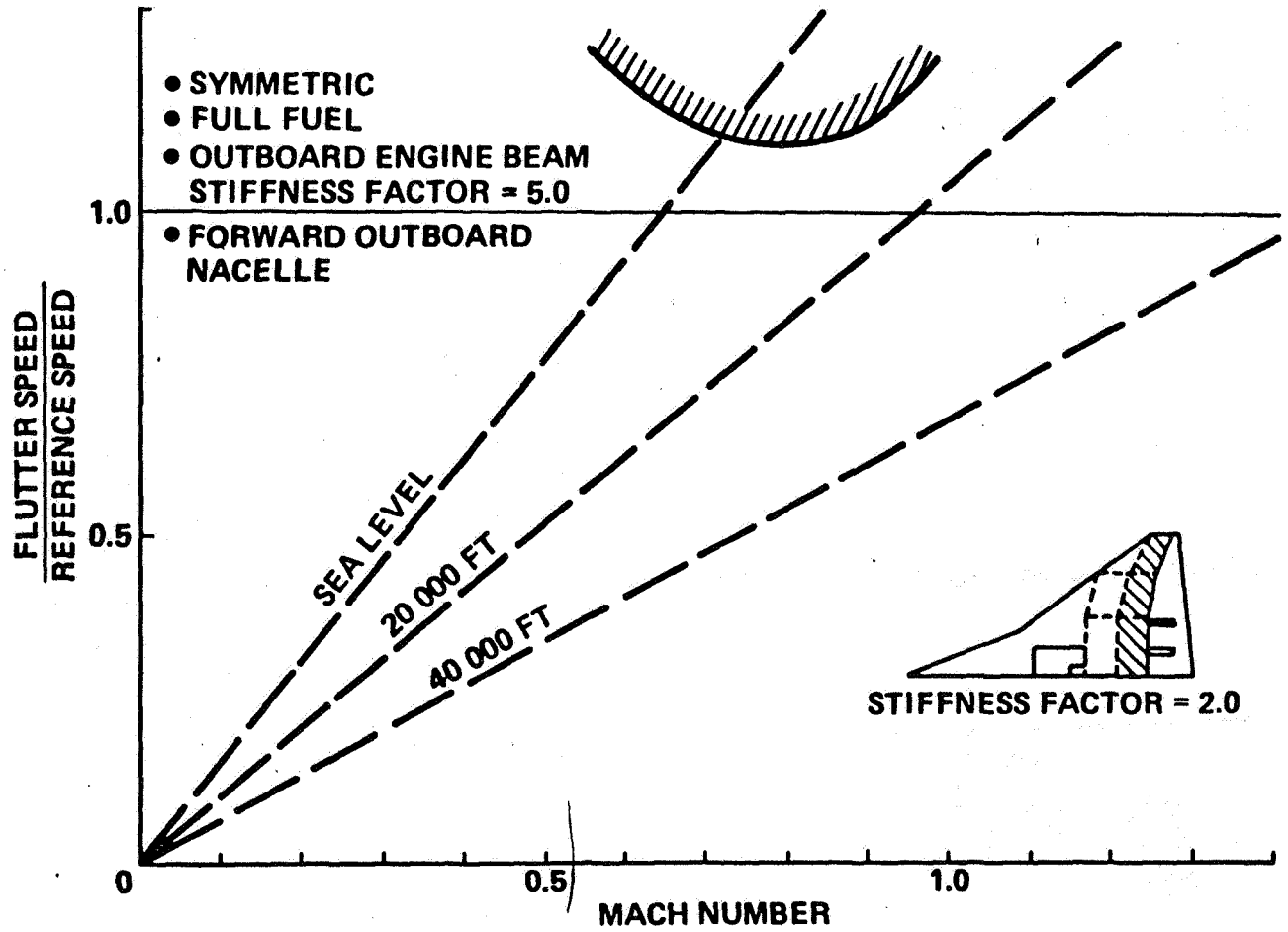

DESIGN FOR MINIMUM FLUTTER PENALTY

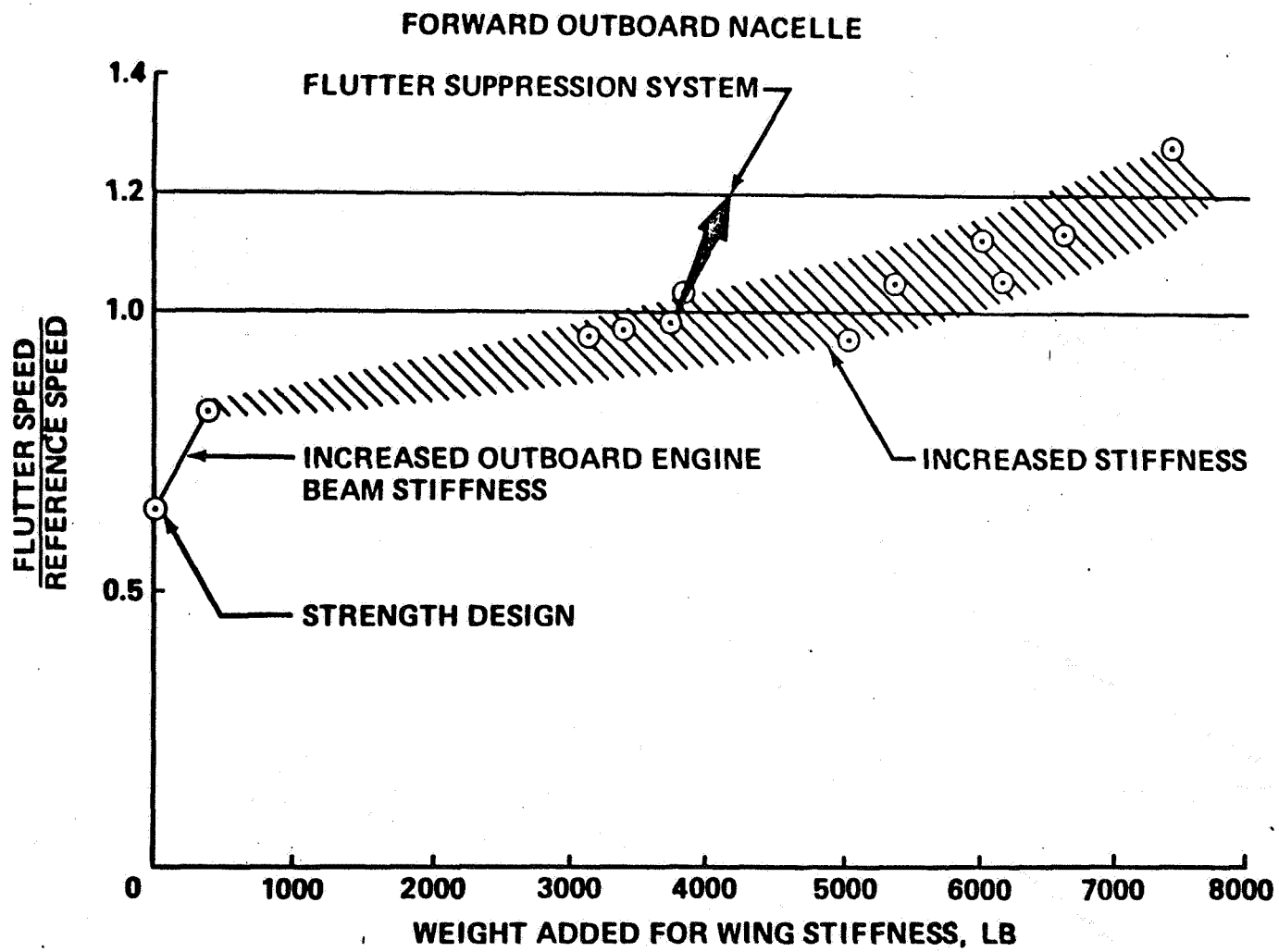

FATIGUE ASSESSMENT
BLENDED WING-BODY DETAILS

BOEING DURABILITY-FATIGUE DESIGN METHOD

- ESTABLISH LIFE GOAL FLIGHTS
- OBTAIN FATIGUE RELIABILITY FACTOR
- CALCULATE GROUND-AIR-GROUND (G-A-G) DAMAGE RATIO
- DETERMINE G-A-G STRESS CYCLE
- CALCULATE EQUIVALENT G-A-G CYCLES REQUIRED
- DETERMINE DETAILED FATIGUE RATING FOR DETAIL
- DETERMINE ALLOWABLE MAXIMUM G-A-G STRESS
- CALCULATE FATIGUE MARGIN OF SAFETY

AIRPLANE USAGE

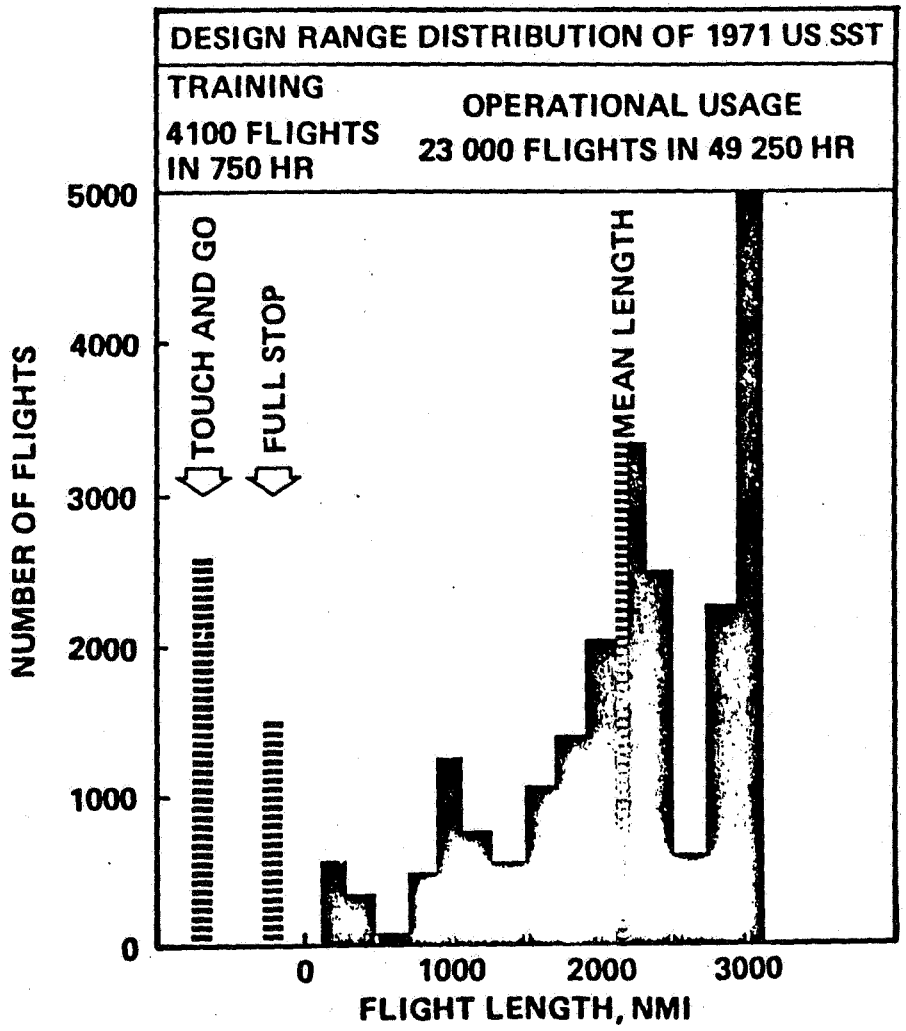

FATIGUE CRITERIA

- LIFE GOAL = 23 500 FLIGHTS
- GROUND-AIR-GROUND DAMAGE RATIO = 0.7
- MAXIMUM STRESS = 1.3 (MAXIMUM POSITIVE 1g MECHANICAL STRESS) + (THERMAL GRADIENT STRESS)
- MINIMUM STRESS = 1.3 (MAXIMUM NEGATIVE 1g MECHANICAL STRESS)

  OR = 0.7 (MINIMUM POSITIVE 1g MECHANICAL STRESS) + (THERMAL GRADIENT STRESS)

FATIGUE DETAIL LOCATIONS

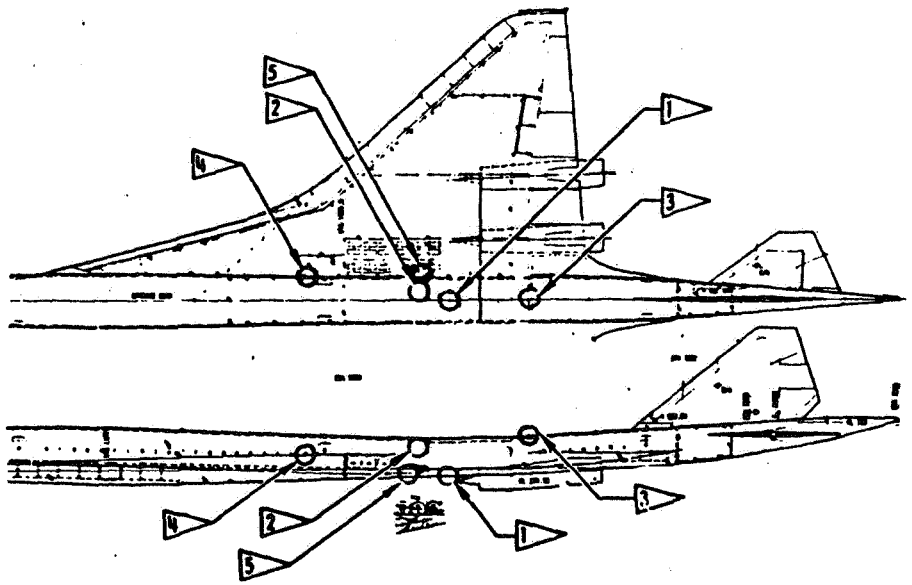

1. HONEYCOMB PANEL SPLICE
2. LONGERON, FRAME AND PANEL SPLICE
3. HONEYCOMB PANEL TO SKIN-STRINGER SPLICE
4. STRAKE SPAR TO FRAME SPLICE
5. PRESSURE WALL/WHEEL WELL INTERSECTION

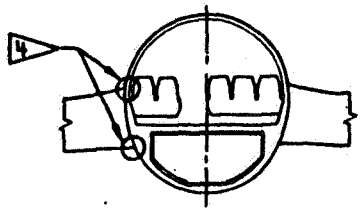

STA 1875

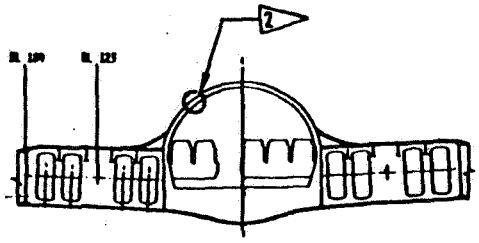

STA 2230

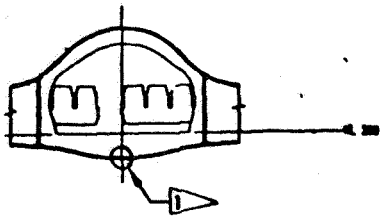

STA 2318

STRAKE SPAR TO FRAME SPLICE

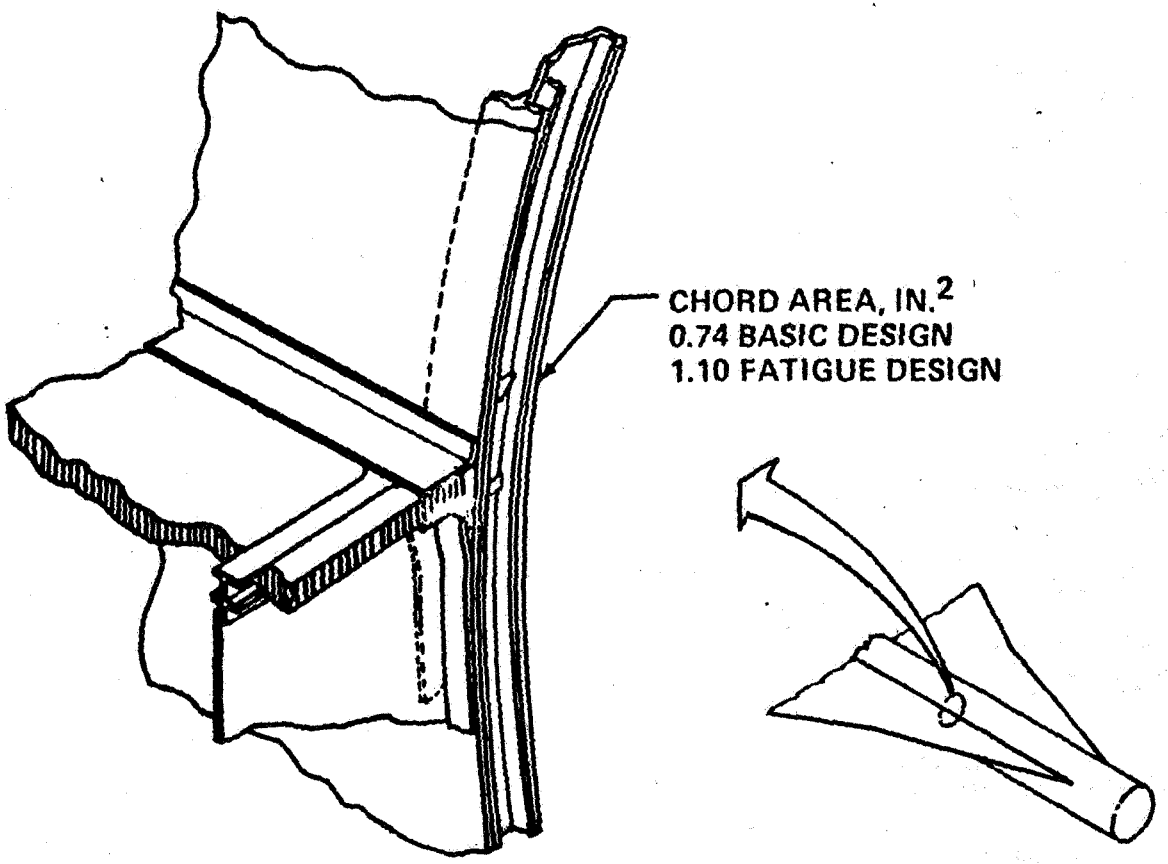

FRAME INNER CHORD 1g STRESS
BASIC DESIGN

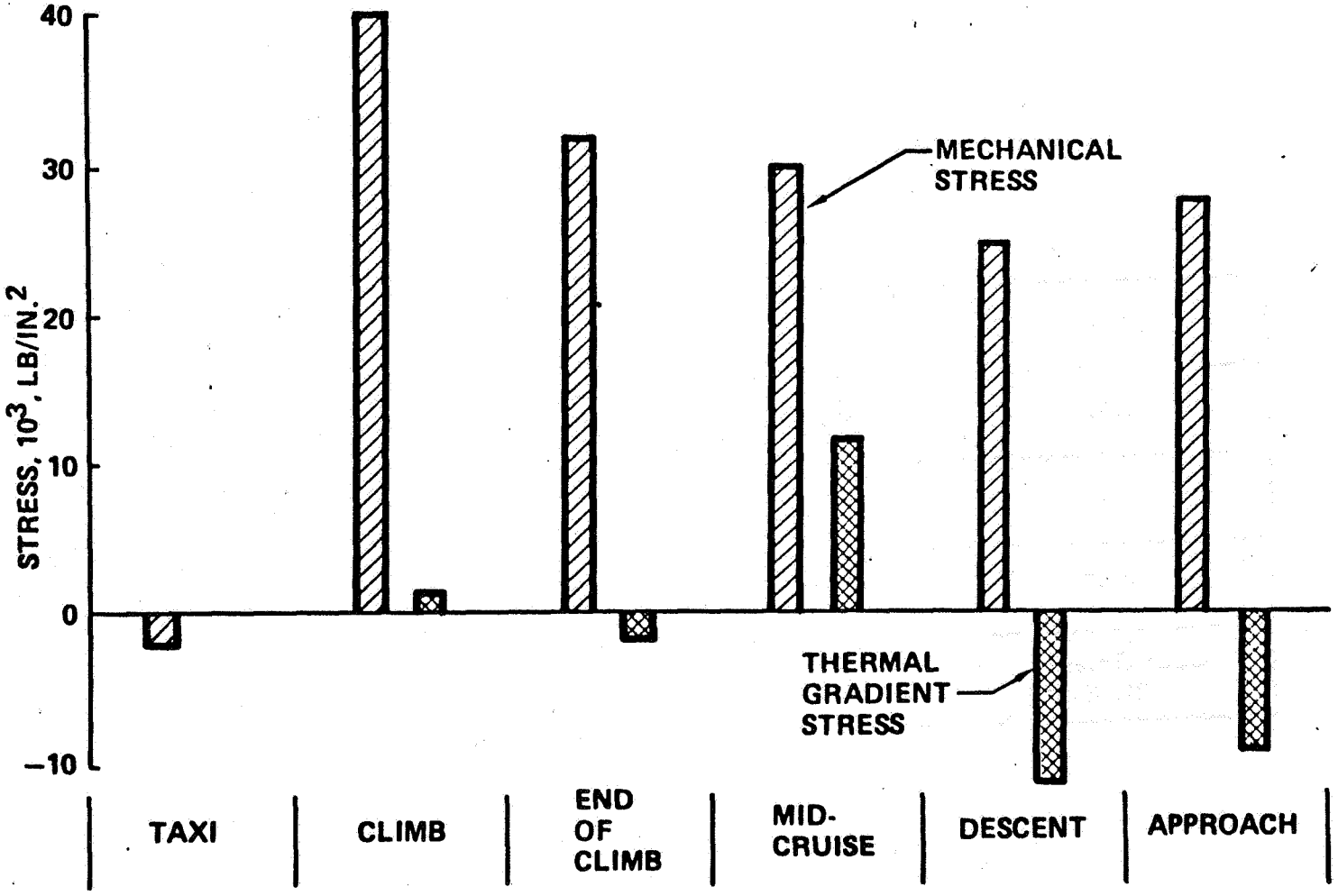

FATIGUE CHECK FRAME INNER CHORD

		BASIC DESIGN	FATIGUE REINFORCED
G–A–G STRESSES	MINIMUM STRESS (TAXI), 10^3 LB/IN.^{2}	–2.9	–2.0
	MAXIMUM STRESS (CLIMB), 10^3 LB/IN.^{2}	52.7	35.7
ALLOWABLE MAXIMUM STRESS, 10^3 LB/IN.^{2}		36.0	36.5
FATIGUE MARGIN		–0.32	0.02

CONCLUSIONS

- DESIGN CONCEPTS ACCEPTABLE
- GENERAL GAGE INCREASES NOT REQUIRED

SYSTEMS AUDIT

TASK:

- COMPARE 1971 SST, B-747 AND CONCORDE SYSTEMS WITH RESPECT TO WEIGHT AND COMPLEXITY

PURPOSE:

- PROVIDE THE BASIS FOR UPDATING THE SYSTEMS TO 1977 TECHNOLOGY

SYSTEMS AUDIT

APPROACH:

- REVIEW 1971 SST AND B-747 WEIGHT STATEMENTS TO IDENTITY SYSTEMS COMPONENTS, INSTALLED WEIGHTS, AND TOTAL SYSTEM WEIGHTS
- IDENTIFY AREAS OF SIGNIFICANT DIFFERENCES AND THE REASONS
- REVIEW TECHNOLOGY TO ESTABLISH 1977 VALIDITY

APPROACH
SYSTEMS AUDIT

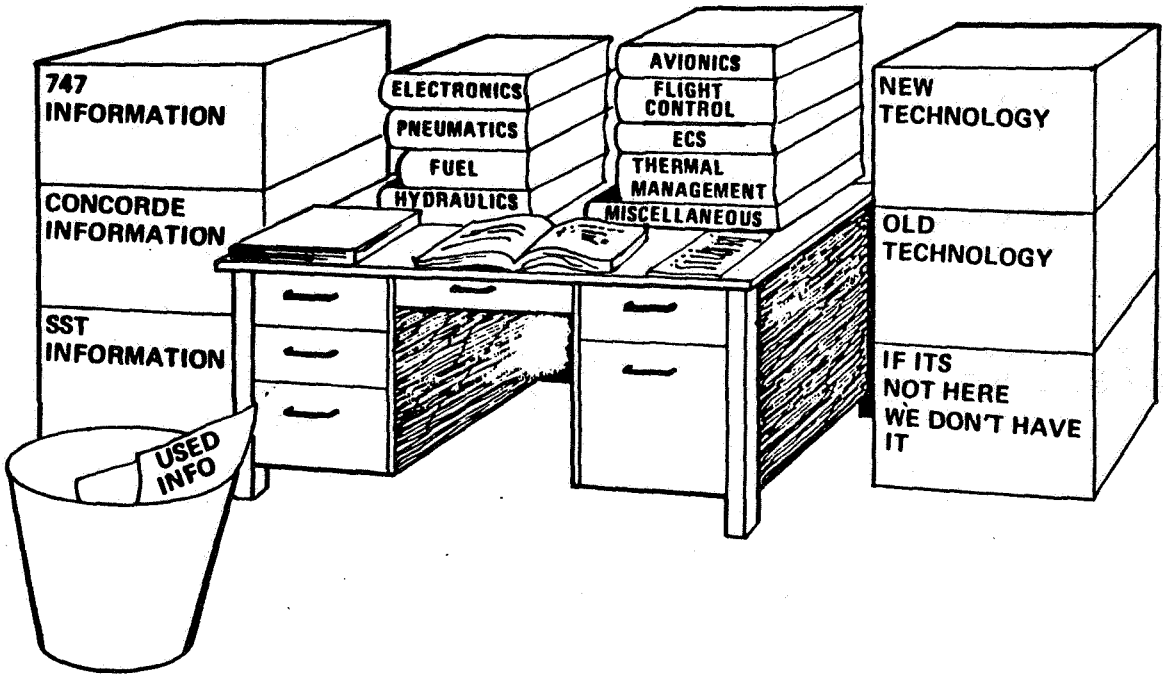

SYSTEMS AUDITED

- ENVIRONMENTAL CONTROL
  - PNEUMATIC
  - THERMAL MANAGEMENT
  - AIR CONDITIONING
  - DISTRIBUTION AND PRESSURE CONTROL
- HYDRAULIC
  - POWER SUPPLY
  - ACTUATION
- ELECTRICAL POWER
- AVIONICS

ENVIRONMENTAL CONTROL
SYSTEMS AUDIT

INFLUENCING FACTORS:

- MACH NUMBER—HEAT LOADS AND HEAT SINKS
- PAYLOAD—AIRFLOW DEMAND
- CONFIGURATION—EQUIPMENT INSTALLATION AND LOCATION

INFLUENCING FACTOR
SYSTEMS AUDIT

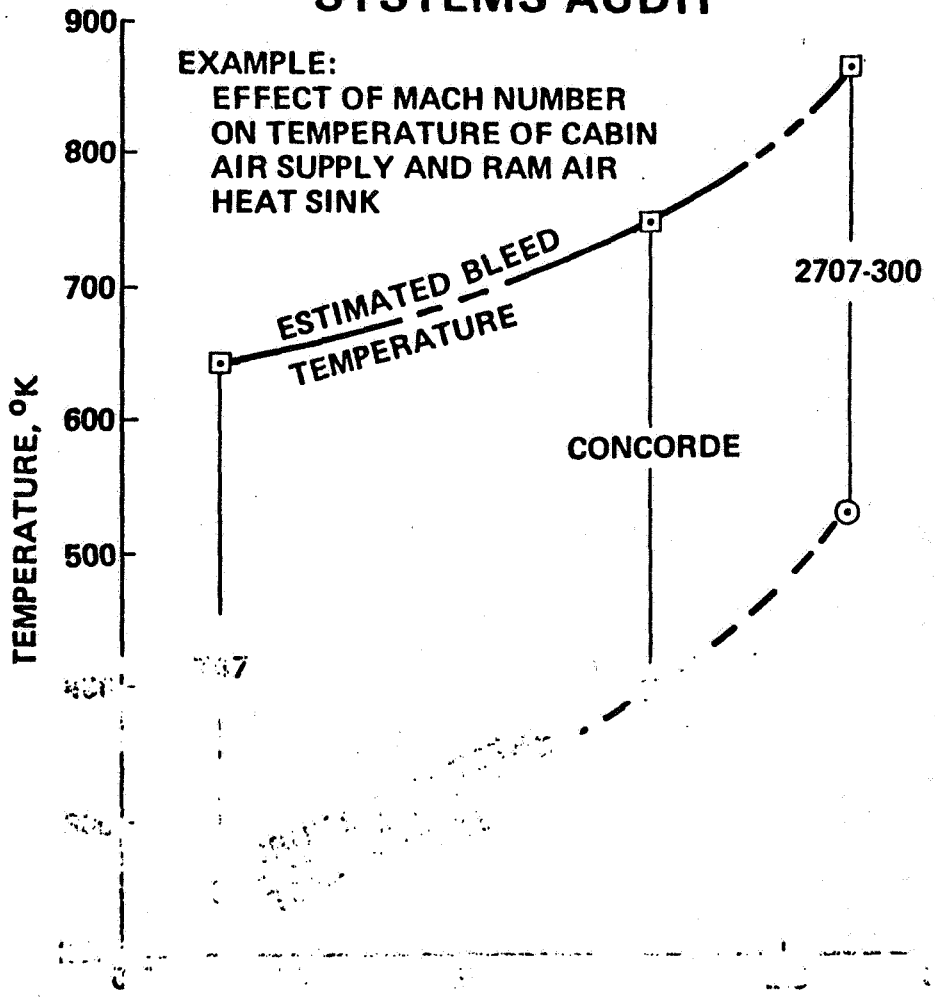

ENVIRONMENTAL CONTROL COMPARISON

SYSTEMS AUDIT

ITEM	2707-300	CONCORDE	747
NUMBER OF COOLING UNITS	4	4	3
COMPRESSORS	4	0	0
COMPONENTS	200	80	29
HEAT SINKS	FUEL * RAM AIR	FUEL RAM AIR	RAM AIR
CRUISE MACH NUMBER	2.7	2.2	SUBSONIC
RELATIVE PASSENGER LOAD	0.48	0.27	1.0
SYSTEMS INTERFACES	16	11	11

- HEAT SINK AND HEAT LOAD MANAGEMENT WAS REQUIRED FOR TOTAL AIRPLANE DUE TO HIGH RAM AIR TEMPERATURE (500°F)

ECS SUBSYSTEM WEIGHT SUMMARY

SYSTEMS AUDIT

SUBSYSTEM	2707-300		CONCORDE		747	
	TOTAL WEIGHT, LB	WEIGHT/ PASSENGER, LB	TOTAL WEIGHT, LB	WEIGHT/ PASSENGER, LB	TOTAL WEIGHT, LB	WEIGHT/ PASSENGER, LB
PNEUMATIC	2607	11.14	NA	NA	1770	3.61
THERMAL MANAGEMENT	2076	8.81	NA	NA	0.0*	0.0*
AIR CONDITIONING	1067	4.56	NA	NA	1181	2.41
DISTRIBUTION AND PRESSURE CONTROL	3016	12.89	NA	NA	2767	5.65
TOTALS	8766	37.46	3950	30.15	5718	11.67

* RAM CIRCUIT WEIGHT IS INCLUDED IN THE PNEUMATIC AND A/C VALVES

ECS HEAT LOAD AND WEIGHT COMPARISONS

SYSTEMS AUDIT

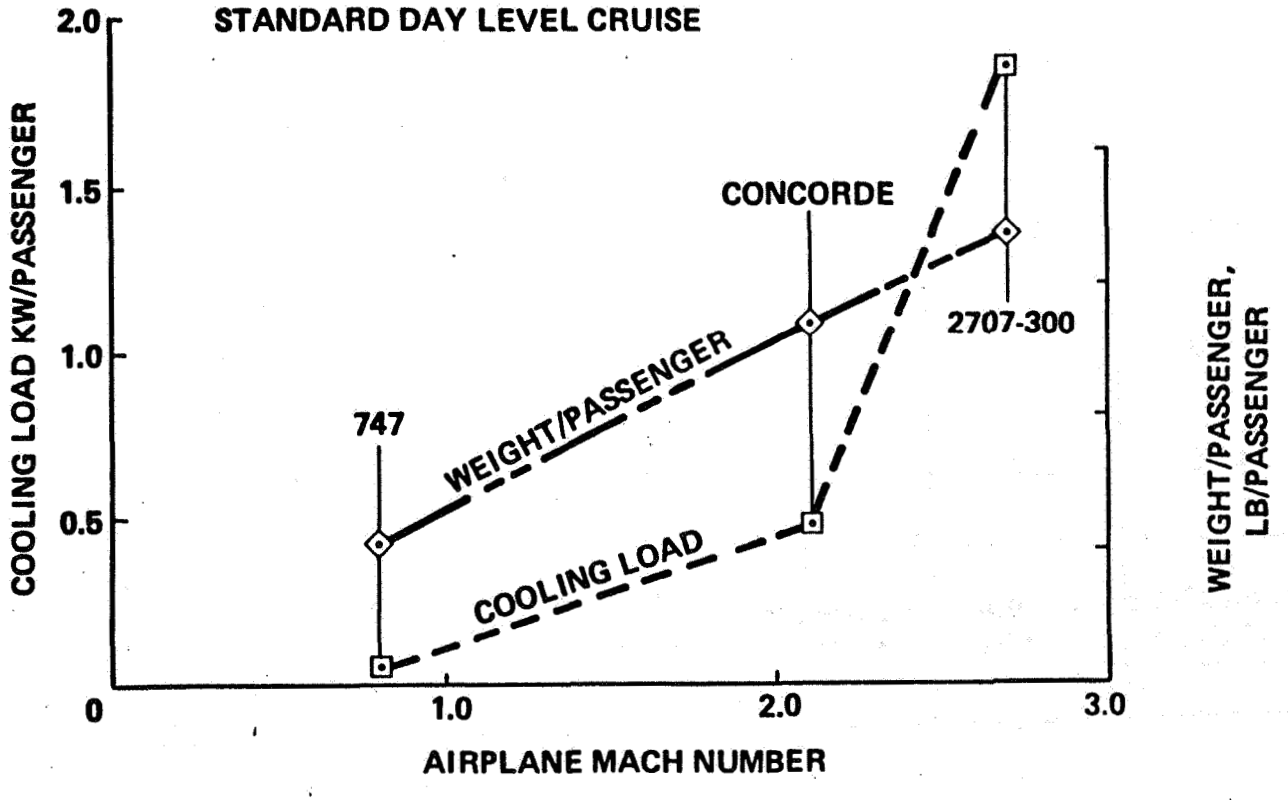

HYDRAULICS

SYSTEMS AUDIT

INFLUENCING FACTORS:

- AIRPLANE SIZE
- CONFIGURATION
- FLIGHT CONTROL SURFACE SIZE
- SURFACE ACTUATION
- AIRSPEED
- NUMBER OF CIRCUITS

HYDRAULIC SYSTEMS COMPARISONS

SYSTEMS AUDIT

	2707-300	CONCORDE	747
NUMBER OF CIRCUITS	4 + AUX	2 + 1 STANDBY	4
OPERATING PRESSURE	4000 LB/IN.^{2}	4000 LB/IN.^{2}	3000 LB/IN.^{2}
DESIGN TEMPERATURE RANGE	100°F TO 350°F NORMAL –50°F TO +450°F EXTREME	–40°F TO +250°F NORMAL	–60°F TO +150°F
TOTAL INSTALLED CAPACITY	880 GAL/MIN	171 GAL/MIN	278 GAL/MIN
INSTALLED FLOW POWER	2024 HP	394 HP	460 HP
PUMPS	EIGHT 110 GAL/MIN/ 4000 LB/IN.^{2} 4250 RPM	FOUR 34.35 GAL/MIN/ 4000 LB/IN.^{2} 3920 RPM TWO 17.17 GAL/MIN/ 4000 LB/IN.^{2} 3920 RPM	FOUR 37.5 GAL/MIN/ 2850 LB/IN.^{2} 3750 RPM FOUR 32 GAL/MIN/ 2850 LB/IN.^{2} 3700 RPM
TUBING	TITANIUM/TITANIUM FITTINGS–ALL	HIGH PRESSURE– TITANIUM/TITANIUM FITTINGS ENGINE AREA– STAINLESS STEEL LOW PRESSURE– ALUMINUM ALLOY	21-6-9 TUBING, HIGH PRESSURE STEEL FITTINGS–TITANIUM LOW PRESSURE– ALUMINUM ALLOY

HYDRAULIC SYSTEMS WEIGHT COMPARISON

SYSTEMS AUDIT

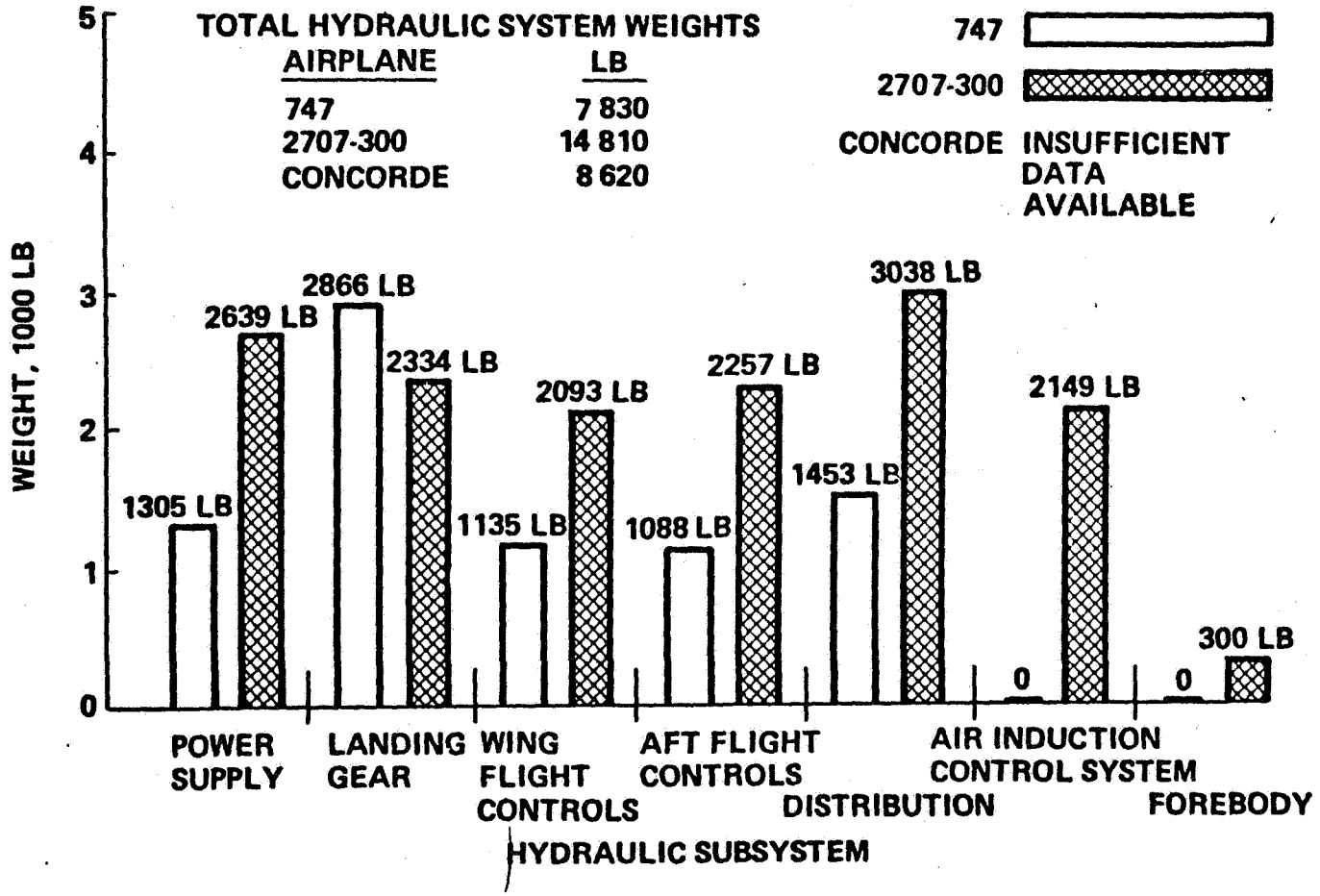

ELECTRICAL POWER
SYSTEMS AUDIT

INFLUENCING FACTORS:

- POWER GENERATION SYSTEM SELECTION
- AMBIENT AIR PRESSURES AND TEMPERATURES
- OPERATIONAL REQUIREMENTS

ELECTRICAL EQUIPMENT COMPARISON
SYSTEMS AUDIT

COMPONENT	2707-300		CONCORDE		747	
	QUANTITY	DESCRIPTION	QUANTITY	DESCRIPTION	QUANTITY	DESCRIPTION
GENERATORS, PRIMARY AC	4	75 KVA, 334/668 VOLT 6-PHASE, VARIABLE 1200-2400 Hz ALTERNATOR	4	60 KVA, 120/208 VOLT 400 Hz, OIL-COOLED BRUSHLESS ALTERNATOR	4	60 KVA, 120/208V 400 Hz, AIR-COOLED BRUSHLESS ALTERNATOR
GENERATOR DRIVE	4	DIRECTLY DRIVEN OFF THE ENGINE AT VARIABLE SPEED (10 000 TO 20 000 RPM)	4	AXIAL DIFFERENTIAL CONSTANT SPEED DRIVES (HYDRO-MECHANICAL)	4	HYDRO-MECHANICAL TRANSMISSION. CSD WITH SHAFT THROUGH GEAR BOX TO ALTERNATOR ON OPPOSITE SIDE.
CONVERTER	4	SOLID STATE VSCF ELECTRONIC CONVERTER	—	—	—	—
GENERATOR FEEDERS	4 x 7	4 EACH, 6-PHASE, 7-WIRE, HEAVILY SHIELDED AND COOLED	4	CONVENTIONAL 3-PHASE, 4-WIRE "Y"	4	CONVENTIONAL 3-PHASE, 4-WIRE "Y"
APU AND/OR EMERGENCY POWER	1	34 AH BATTERIES AND STATIC INVERTER NO PROVISION FOR SELF-CONTAINED GROUND POWER	1	30 KVA GENERATOR DRIVEN BY HYDRAULIC MOTOR. NO PROVISION FOR SELF-CONTAINED GROUND POWER.	2	2-90 KVA APU GENERATORS FOR GROUND POWER ONLY. EMERGENCY POWER SUPPLIED BY 34 AH BATTERY AND 500 VA STATIC INVERTER
TRANSFORMER/ RECTIFIER	4	150 A, 28 VDC	4	150 A, 28 VDC	5	4 EACH 75 A, 28 VDC 1 EACH 20 A, 28 VDC
STATIC INVERTERS	2	2.5 KVA, 115V, 1 PHASE	2	1800 Hz SINGLE PHASE FOR INSTRUMENTS	1	500 VA, 115 V, 1 PHASE
BATTERIES	2	34 AH NiCAD	2	25 AH LEAD-ACID	2	34 AH NiCAD, WITH A "VOLTAGE BOOSTER" UNIT
LOAD CENTERS	2	CONVENTIONAL POWER SHIELD	2	CONVENTIONAL POWER SHIELD	2	CONVENTIONAL POWER SHIELD
CONTROL/DISPLAY PANELS	1	CONVENTIONAL MONITOR AND CONTROL	1	CONVENTIONAL MONITOR AND CONTROL	1 4	FLIGHT ENGINEERING CONTROL/DISPLAY PANELS

ELECTRICAL SYSTEM WEIGHT COMPARISON
SYSTEMS AUDIT

COMPONENT	2707-300 WEIGHT, LB	CONCORDE WEIGHT, LB	747 WEIGHT, LB
GENERATORS	364	N/A	322
STEP-DOWN TRANSFORMER	120		–
CONVERTER	233		–
CONSTANT SPEED DRIVE	–		320
GENERATOR CONTROL UNIT	40		33
GENERATOR FEEDERS	1232		421
EMERGENCY GENERATOR OR AUXILIARY POWER UNIT	–		600
TRANSFORMER/RECTIFIER UNIT	124		60
STATIC INVERTER	100		18
BATTERY	408		136
DC VOLTAGE BOOSTER	–		4
BATTERY CHARGER	31		26
CHANNEL AND BUS LOAD CONTROL UNIT	14		19
BUS POWER CONTROL OR STANDBY CONTROL UNIT	20		12
LOAD CENTER	377		383
FLIGHT ENGINEER PANEL CONTROL/DISPLAY PANEL	39		158
LIGHTING	650		833
DISTRIBUTION BREAKERS	102		120
DISTRIBUTION WIRING AND INSTALLATION	918		1212
SYSTEM TOTALS	4875	N/A	4677

AVIONICS

SYSTEMS AUDIT

INFLUENCING FACTORS:

- OPERATIONAL REQUIREMENTS
  - NAVIGATION/GUIDANCE
  - FLIGHT CONTROL
  - FUEL CONSERVATION
- GOVERNMENT REGULATIONS

AVIONICS WEIGHT COMPARISONS

SYSTEMS AUDIT

	2707-300 WEIGHT, LB	747 WEIGHT, LB
COMMUNICATIONS		
• VHF COMMUNICATIONS	97	101
• HF COMMUNICATIONS	—	253
• SATELLITE COMMUNICATIONS	214	—
• SELECTIVE CALLING SYSTEM	1	19
• PASSENGER ADDRESS	134	216
• INTERPHONE SYSTEM	28	212
• PASSENGER ENTERTAINMENT SYSTEM	—	1177
RECORDING SYSTEMS		
• COCKPIT VOICE RECORDER	41	39
• FLIGHT RECORDER	57	37
NAVIGATION SYSTEMS		
• VOR/ILS SYSTEM	254	212
• MARKER BEACON	14	11
• LOW RANGE RADIO ALTIMETER	85	69
• INERTIAL NAVIGATION SYSTEM	358	256
• WEATHER RADAR	451	329
• ATC TRANSPONDER	45	42
• DISTANCE MEASURING EQUIPMENT	57	61
• AUTOMATIC DIRECTION FINDER	104	68
• ALTITUDE ALERT SYSTEM	—	26
• MAGNETIC HEADING REFERENCE	—	83
• GROUND PROXIMITY WARNING SYSTEM	—	9
• TV SYSTEM	72	—

AVIONICS WEIGHT COMPARISONS (CONTINUED)

SYSTEMS AUDIT

	2707-300 WEIGHT, LB	747 WEIGHT, LB
FLIGHT DECK INSTRUMENTS		
• EADI SYSTEM	168	20
• HSI	17	9
• STANDBY ADI	4	1
FLIGHT CONTROL ELECTRONICS		
• AUTOMATIC FLIGHT CONTROL SYSTEM	503	504
• ELECTRONIC COMMAND STABILITY SYSTEM	272	—
• HARD STABILITY AUGMENTATION SYSTEM	586	—
• ANGLE-OF-ATTACH WARNING SYSTEM	100	11
• OVER-ROTATION SYSTEM	—	18
• CENTRAL INSTRUMENT WARNING SYSTEM	6	48
• AIR DATA SYSTEM	254	270
• AIRCRAFT INTEGRATED DATA SYSTEM	741	—
EQUIPMENT RACKS AND AIR CONDITIONING	737	746
TOTALS	5399	4846

SIGNIFICANT AVIONICS DIFFERENCES

SYSTEMS AUDIT

	2707-300	CONCORDE	747	RECOMMENDED FOR 733-633
HF COMMUNICATIONS	NO	YES	YES	REQUIRED THROUGH MID-1980s
SATELLITE COMMUNICATIONS (SATCOM)	YES	?	PROVISIONS	PROVISIONS
SELECTIVE CALLING (SELCAL)	NO	?	YES	YES
PASSENGER ENTERTAINMENT	NO	?	YES	CUSTOMER OPTION
ALTITUDE ALERT AND GROUND PROXIMITY	NO	YES	YES	YES (FARs 91.51 AND 121.360)
MAGNETIC HEADING REFERENCE	NO	?	YES	INCLUDED IN INERTIAL SYSTEM
ELECTRONIC ATTITUDE DIRECTOR INDICATOR (EADI) AND TV	CATHODE RAY TUBE (CRT) DISPLAY	CONVENTIONAL ADI	CONVENTIONAL ADI	CONVENTIONAL ADI
AUTOMATIC FLIGHT CONTROL SYSTEM	FAIL OPERATIVE[2], HARD STABILIZED AUGMENTED, ELECTRICAL COMMAND AND STABILITY	FAIL OPERATIVE ANALOG	FAIL OPERATIVE ANALOG	FAIL OPERATIVE[2] DIGITAL FLY-BY-WIRE
OVER ROTATION	NO	YES	YES	INCLUDED IN INERTIAL SYSTEM
AIRCRAFT INTEGRATED DATA SYSTEM (AIDS)	YES	?	CUSTOMER OPTION	CUSTOMER OPTION
WIRE WEIGHT*	INCLUDES AIDS	?	DOES NOT INCLUDE AIDS	CUSTOMER OPTION

*SIMILAR AIDS PROVISIONS WOULD PRACTICALLY EQUALIZE OVERALL WEIGHT DIFFERENCES

AVIONICS
SYSTEMS AUDIT

CONCLUSIONS:

- NO SIGNIFICANT WEIGHT DIFFERENCES
- SOME SUBSYSTEM ADDITIONS AND DELETIONS REQUIRED
- REDEFINITION OF FLIGHT CONTROL AND NAVIGATION/GUIDANCE SYSTEMS IS REQUIRED. AS NOW DEFINED, THEY DO NOT SATISFY 733-633 DESIGN CRITERIA OR REQUIREMENTS FOR A MODERN FLIGHT CONTROL AND GUIDANCE SYSTEM

RECOMMENDATIONS:

- DELETE SATCOM (RETAIN PROVISIONS)
- ADD SELCAL
- SUBSTITUTE STRAPDOWN INTERIAL SYSTEM FOR GIMBALLED INS
- ADD ALTITUDE ALERT AND GROUND PROXIMITY WARNING
- DELETE ELECTRONIC ADI AND TV (REPLACE WITH ADI)
- ADD CAUTION AND WARNING SYSTEM
- DELETE AIRCRAFT INTEGRATED DATA SYSTEM
- REDEFINE AUTOMATIC FLIGHT CONTROL SYSTEM (QUAD REDUNDANT DIGITAL FLY-BY-WIRE)
  - CONDUCT A DETAILED STUDY AND ANALYSIS TO DEFINE ADVANCED SST OPERATIONAL REQUIREMENTS AND OPERATING ENVIRONMENT
  - DETERMINE FLIGHT MANAGEMENT SYSTEMS FUNCTIONS, PERFORMANCE, AND ORGANIZATION
  - ESTABLISH CREW ROLES AND PROCEDURES AND COCKPIT CONTROLS AND DISPLAYS CONFIGURATION
- DEVELOP PROTOTYPE FLIGHT MANAGEMENT SYSTEM HARDWARE (AVIONICS AND FLIGHT DECK)
- DEVELOP AND EVALUATE AN INDIRECT OPTICAL VIEWING SYSTEM

SYSTEMS AUDIT

SYSTEMS COST COMPARISONS

- 1977 DOLLAR VALUE
- RELATIVE TO 747

SYSTEM	RELATIVE TOTAL COST
ENVIRONMENTAL CONTROL	2.8
HYDRAULIC POWER	3.7
ELECTRICAL POWER	0.9
AVIONICS	1.6 (1971 TECHNOLOGY) 0.6 (MID-1980s TECHNOLOGY)

CONCLUSIONS
SYSTEMS AUDIT

- REDEFINE SYSTEMS TO REFLECT 1977 TECHNOLOGY
- TWO PROBLEM AREAS—MORE STUDY REQUIRED
  - ENVIRONMENTAL CONTROL SIMPLIFICATION
  - HYDRAULIC POWER REQUIREMENTS

WING PLANFORM STUDIES

- SUPERSONIC WIND TUNNEL TESTS OF BASELINE CONFIGURATION
- EVOLUTION OF ALTERNATE PLANFORMS FOR HIGHER SUPERSONIC CRUISE L/D
- CORRELATION OF WIND TUNNEL DATA FOR PREDICTION OF LOW SPEED CHARACTERISTICS
- DESIGN OF LEADING EDGE FLAPS FOR NASA AST CONFIGURATION

BLENDED FUSELAGE WIND TUNNEL DATA

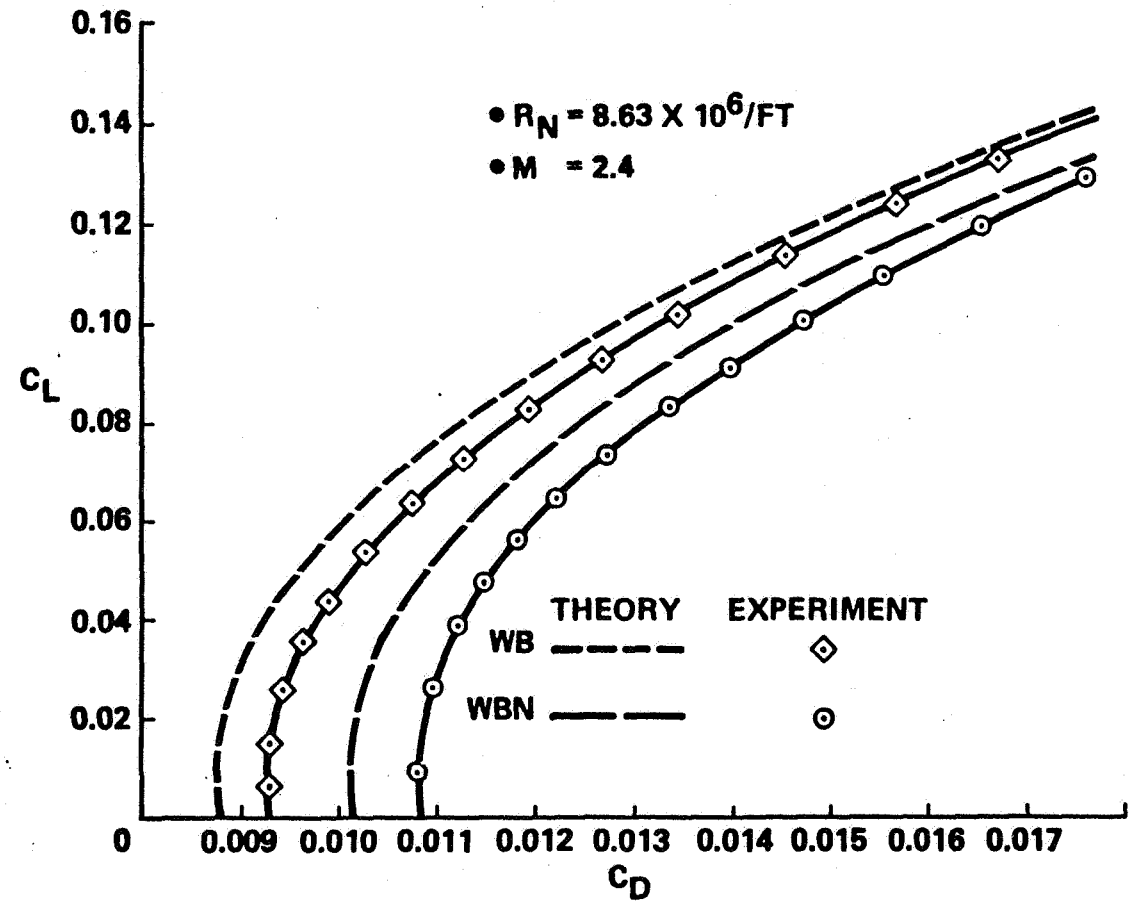

BLENDED FUSELAGE WIND TUNNEL DATA

- M = 2.4
- $R_N = 8.63 \times 10^6$/FT

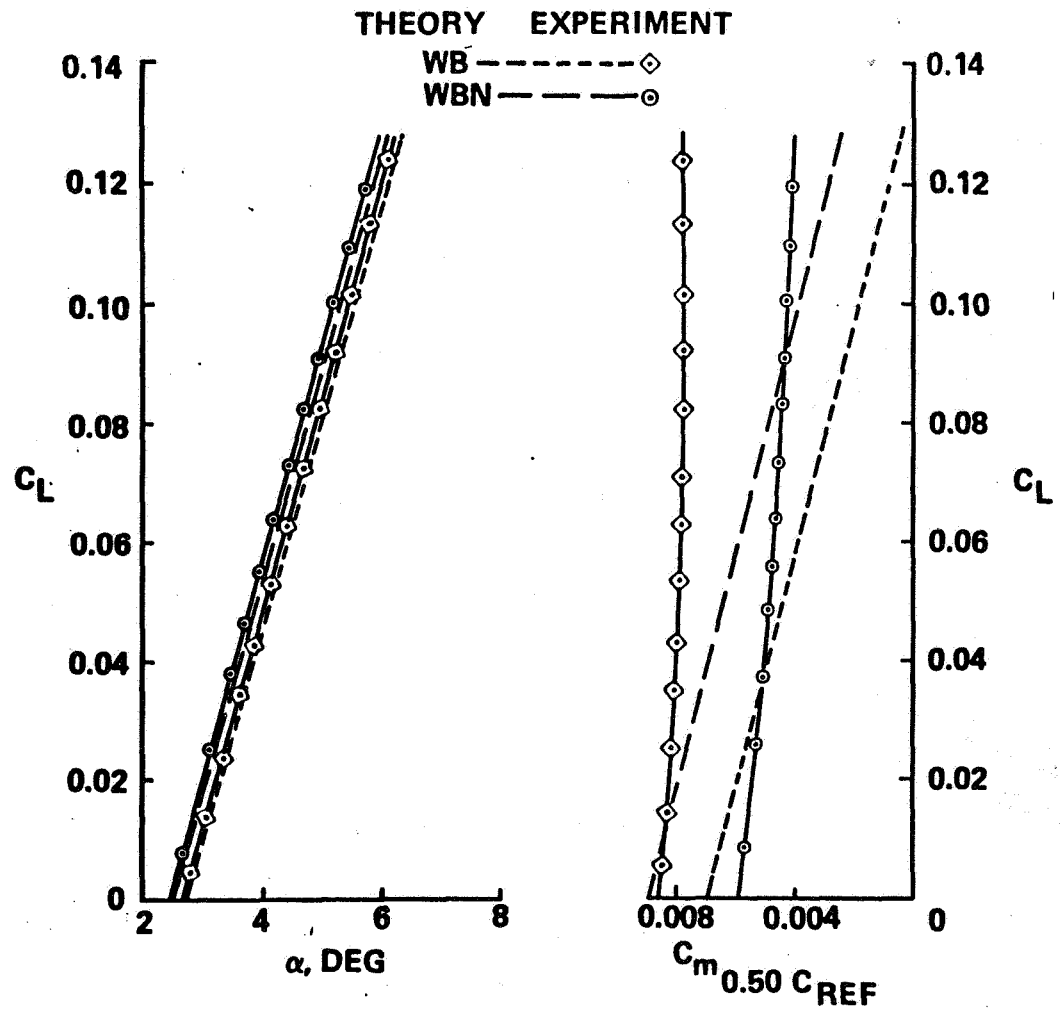

ALTERNATE PLANFORM EVOLUTION

- SPAN HELD CONSTANT TO APPROXIMATELY MAINTAIN LOW SPEED L/D
- CURVED, SUBSONIC LEADING EDGE FOR MODERATE UPWASH ALONG SPAN AT SUPERSONIC CRUISE CONDITION
- MAXIMUM TRAILING EDGE NOTCH FOR LOW DRAG-DUE-TO-LIFT AND SHORT FLAP/ENGINE MASS MOMENT ARM

PLANFORM COMPARISON

PLANFORMS POSITIONED FOR SAME PITCHING MOMENT ABOUT FORWARD CG LIMIT AT V_{MIN}

BLENDED ARROW PLANFORMS

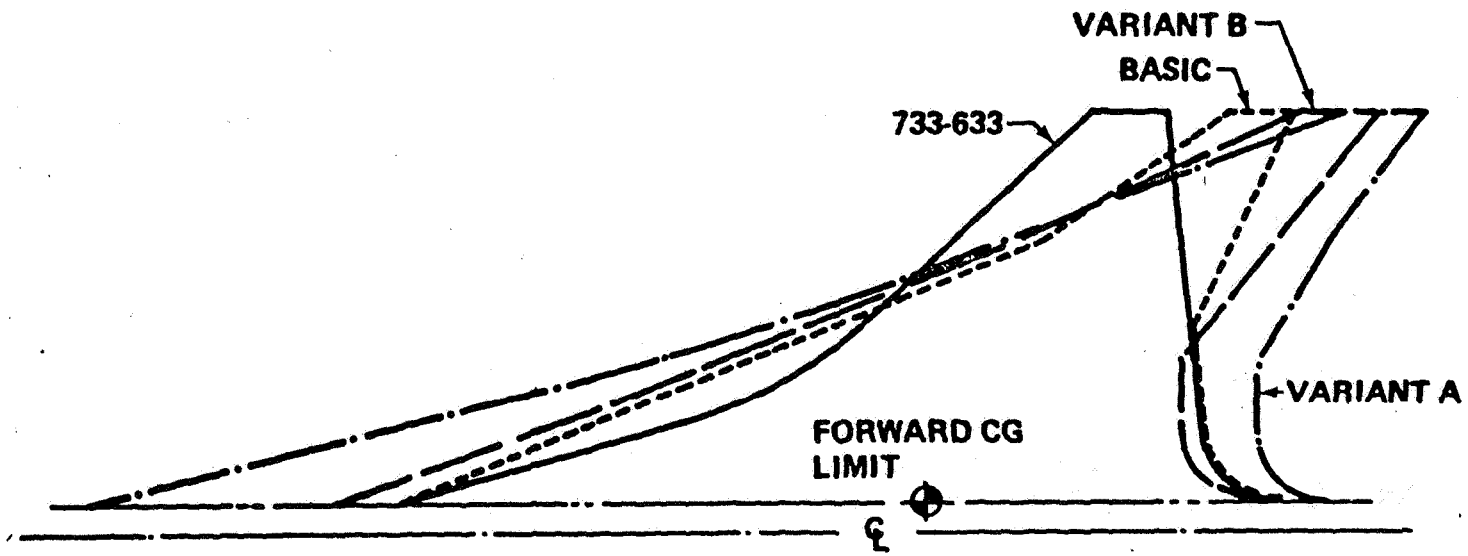

PLANFORM EFFECT ON THEORETICAL LEADING EDGE SUCTION

- FLAT WING REFERENCE
- $M = 2.4$, $C_L = 0.10$

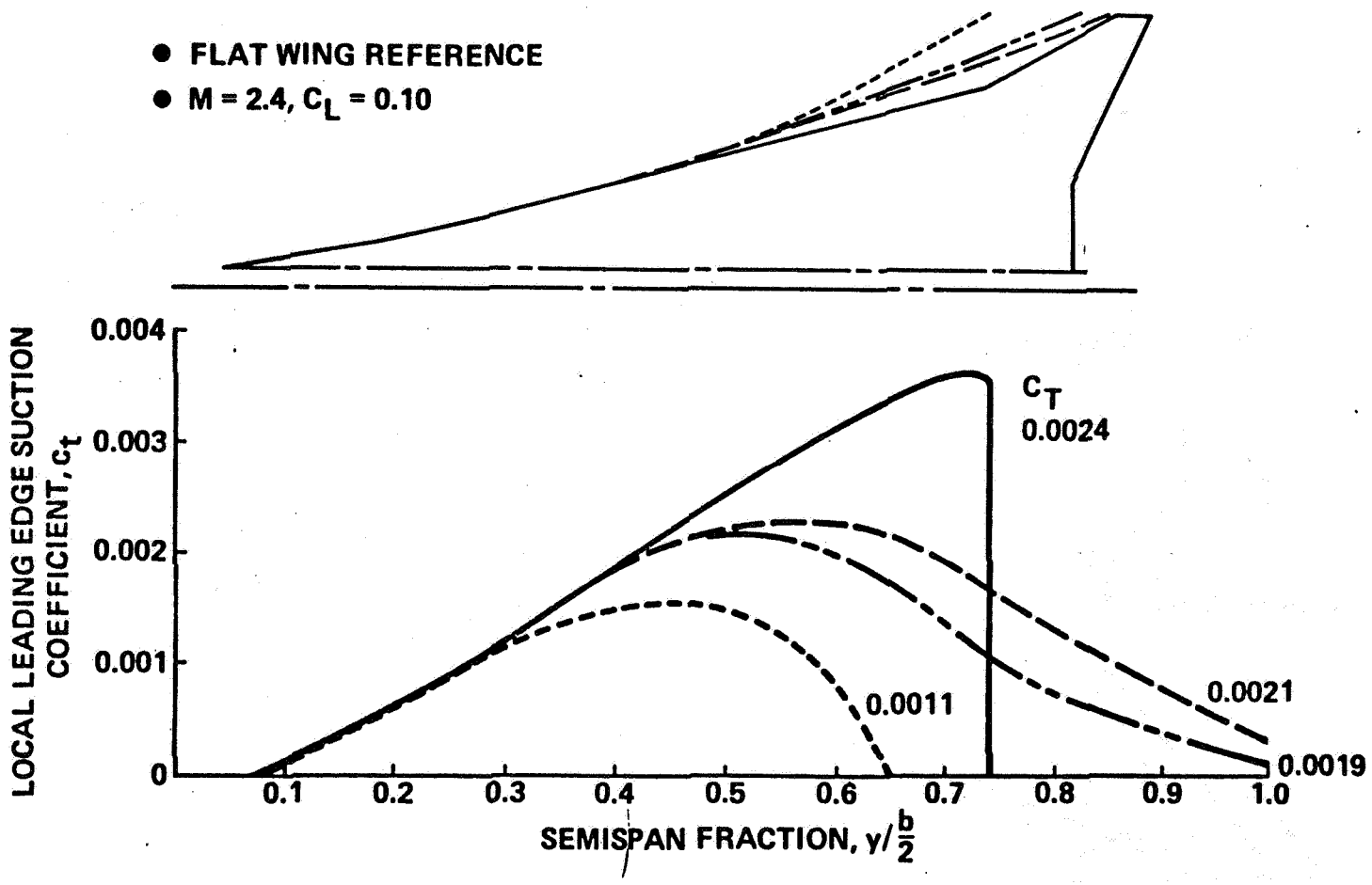

L/D INCREASE WITH BLENDED ARROW PLANFORMS

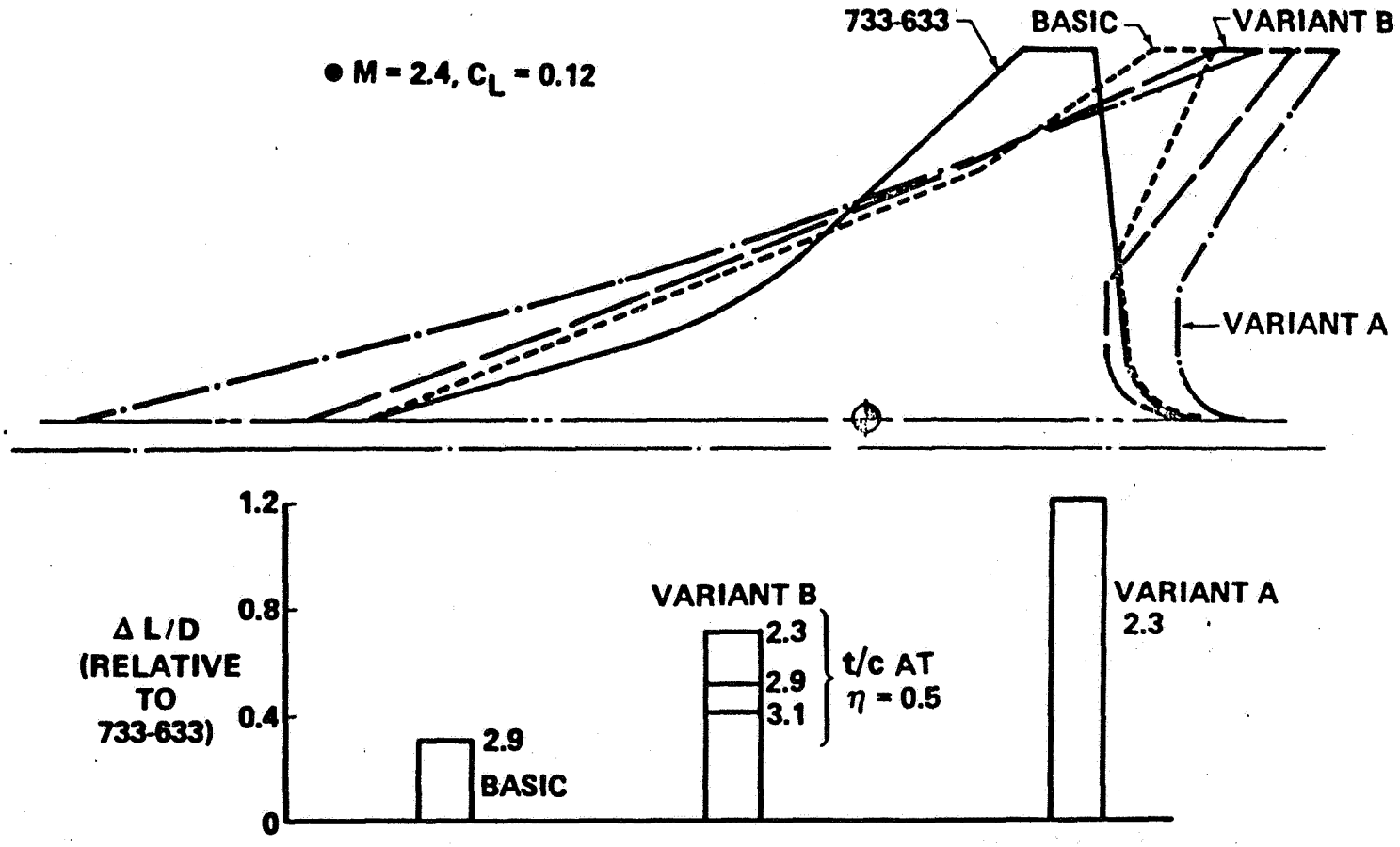

ESTIMATED LOW SPEED CHARACTERISTICS OF HIGHLY SWEPT PLANFORMS

- LOCAL LEADING EDGE ANGLES OF ATTACK STRONG FUNCTION OF SWEEPBACK
- LEADING EDGE SUCTION IS PRINCIPALLY RELATED TO LOCAL ANGLE OF ATTACK (FOR ATTACHED FLOW SITUATION)

LEADING EDGE SUCTION FACTOR

$$S \equiv \frac{C_{D_{SYM}} + C_L \tan(\alpha - \alpha_{OL}) - C_{D_{EXP}}}{C_L \tan(\alpha - \alpha_{OL}) - C_L^2/\pi A} = \frac{A}{A+B}$$

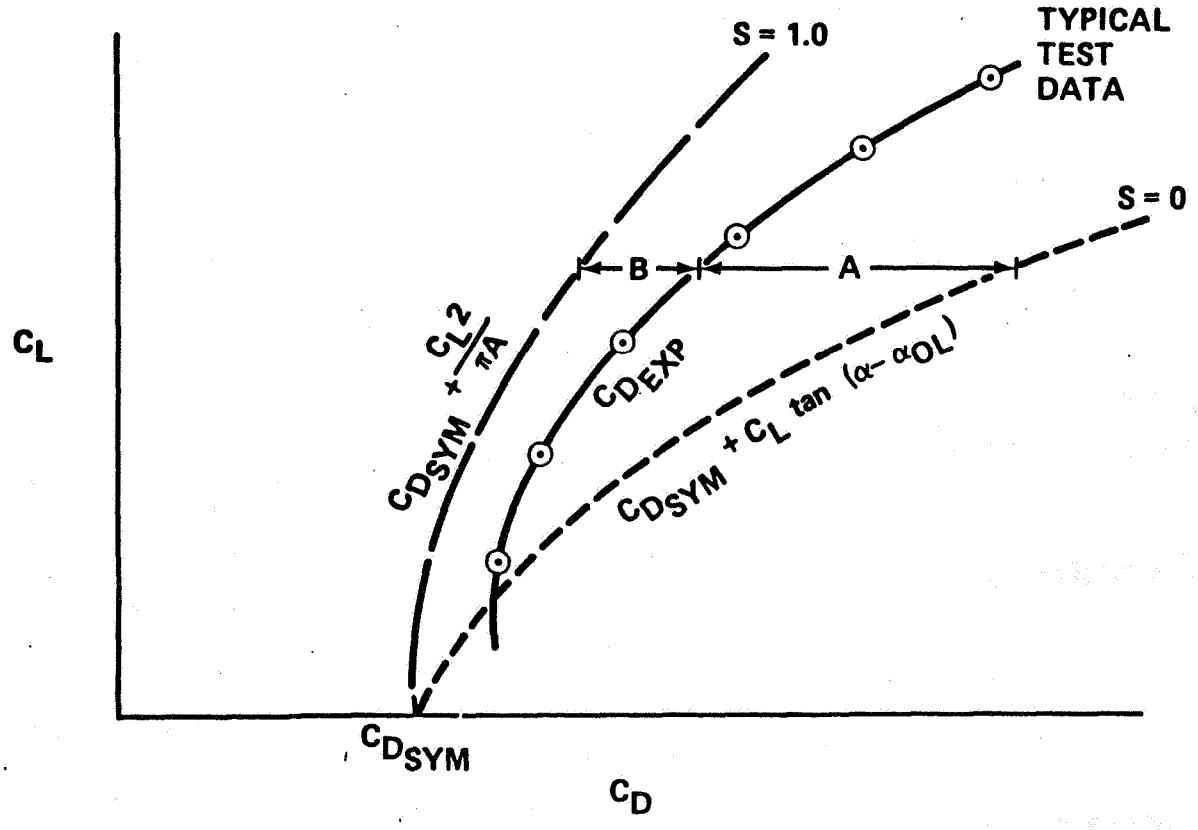

SUCTION FACTOR COMPARISON

- CLIMB FLAP SETTING
- WIND-TUNNEL BASIS EXCEPT AS NOTED
- TAIL OFF

X = TYPICAL OPERATING POINT

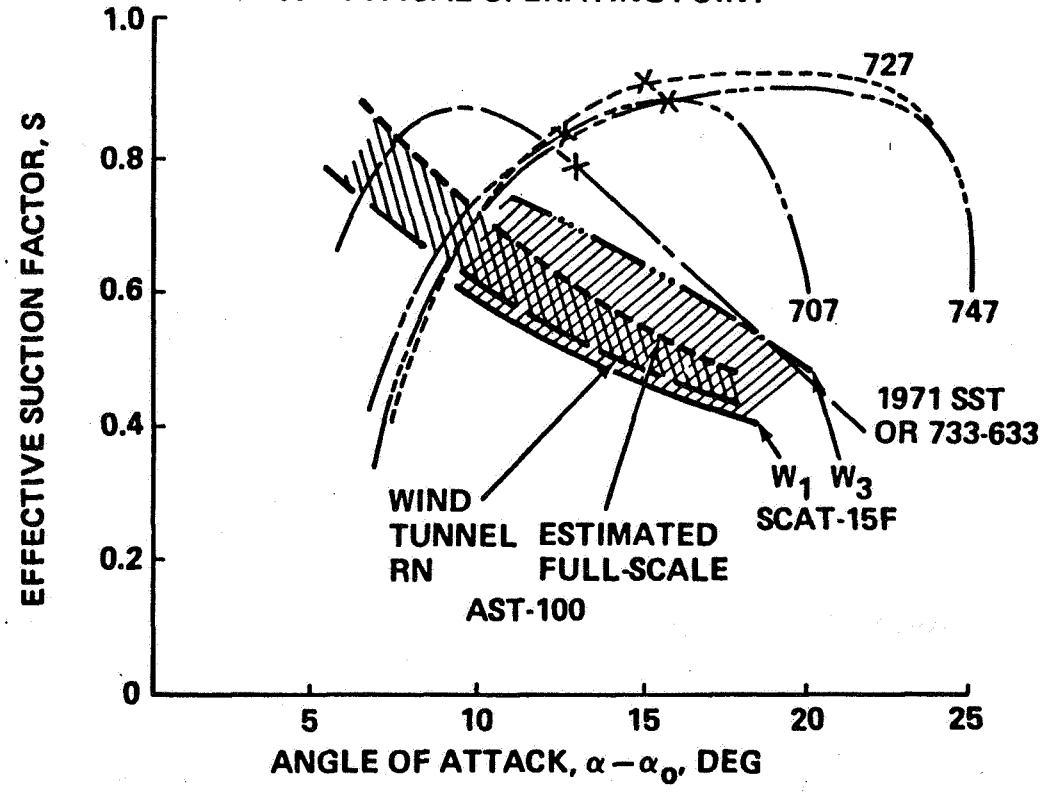

PLANFORM EFFECT ON LEADING EDGE SUCTION

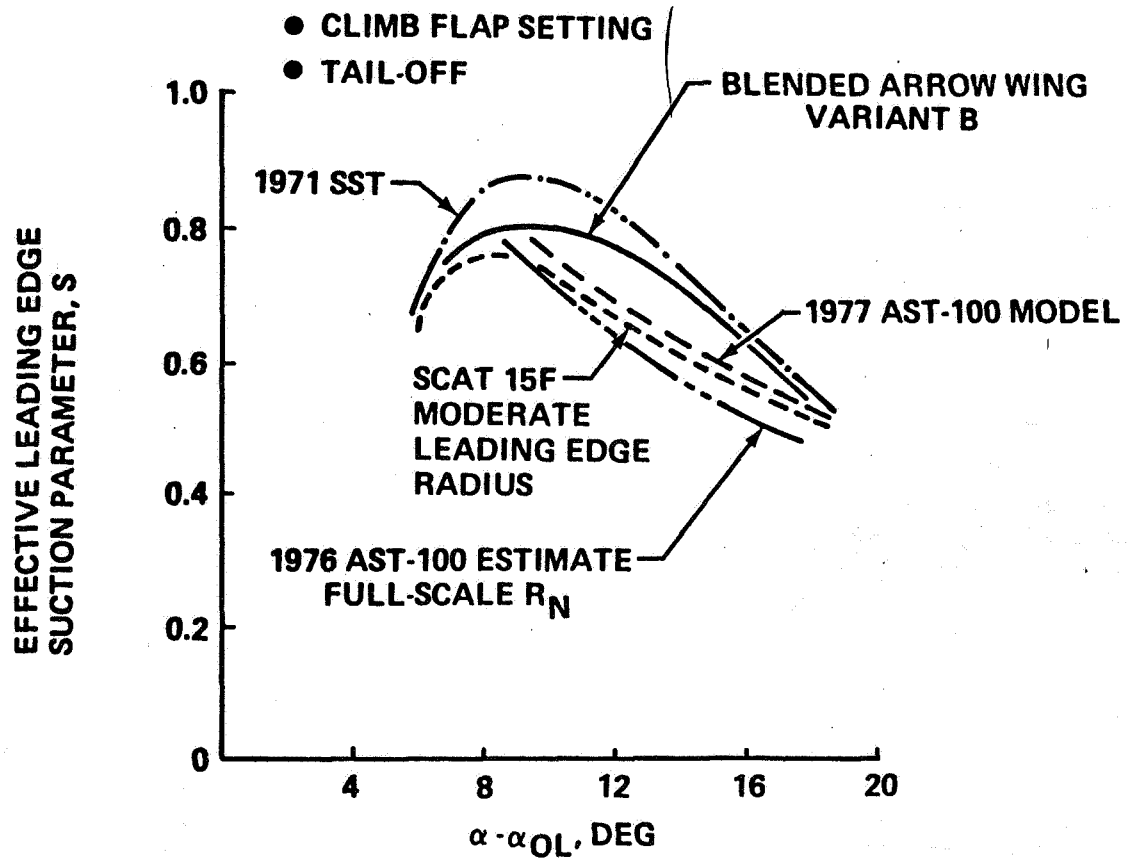

EFFECT OF SWEEPBACK ON LEADING EDGE SUCTION

- LOW SPEED
- TYPICAL OPERATING CONDITIONS

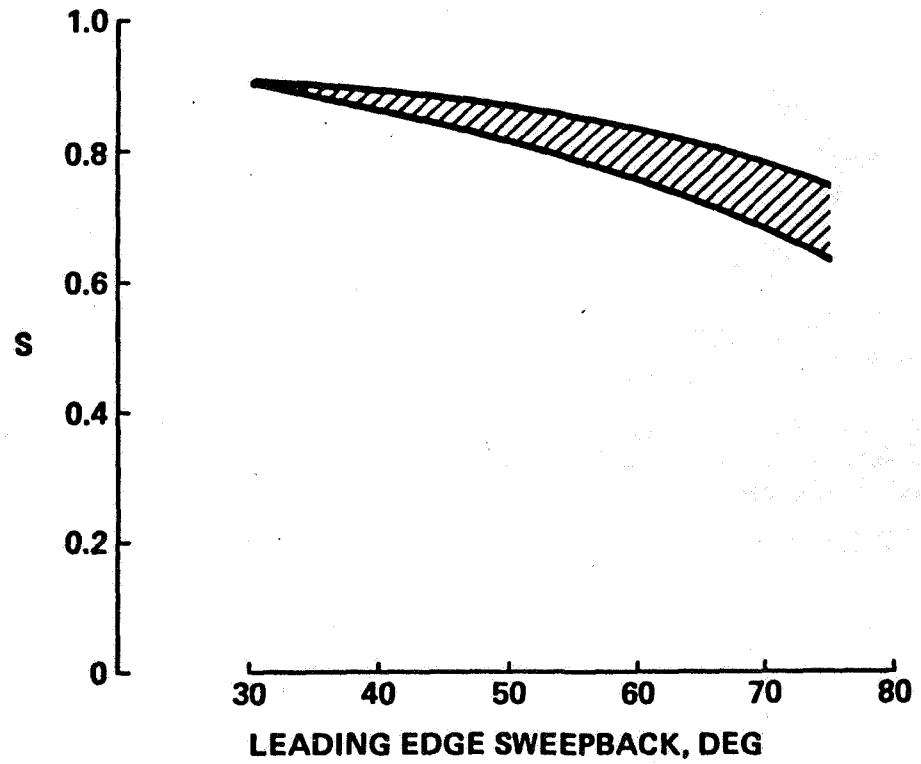

BLENDED ARROW L/D DURING CLIMB

- CG AT FORWARD LIMIT
- NO THRUST EFFECTS
- GEAR UP, VISOR NOSE DROOPED
- FREE AIR
- CLIMB FLAPS
- WING REFERENCE AREA = 7700 FT^2

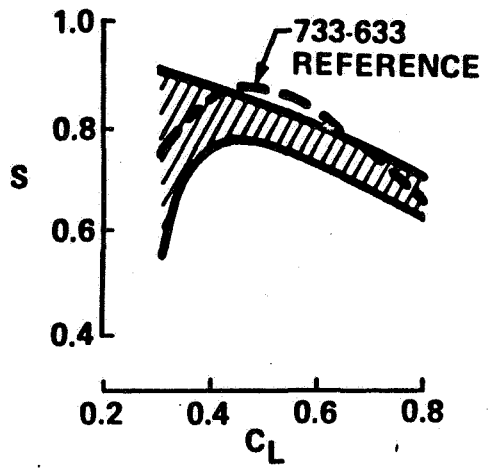

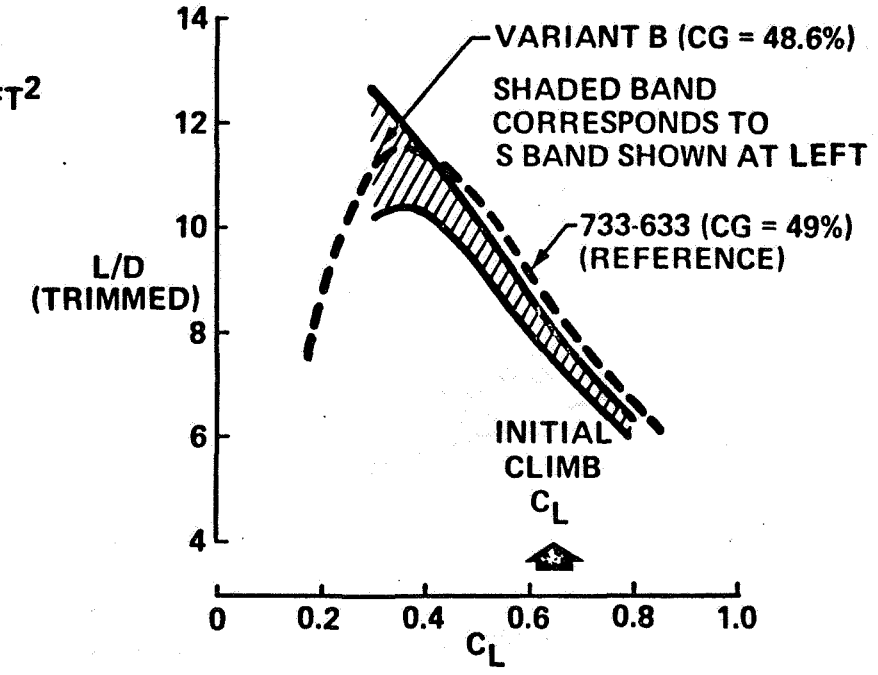

LOW SPEED LIFT AND PITCHING MOMENT ESTIMATION

- LOW ANGLE OF ATTACK CHARACTERISTICS FROM THEORETICAL SOLUTION
- NONLINEAR EFFECTS AND FLAP INCREMENTS FROM EMPIRICAL CORRELATIONS

LIFT AND PITCHING MOMENT SYNTHESIS

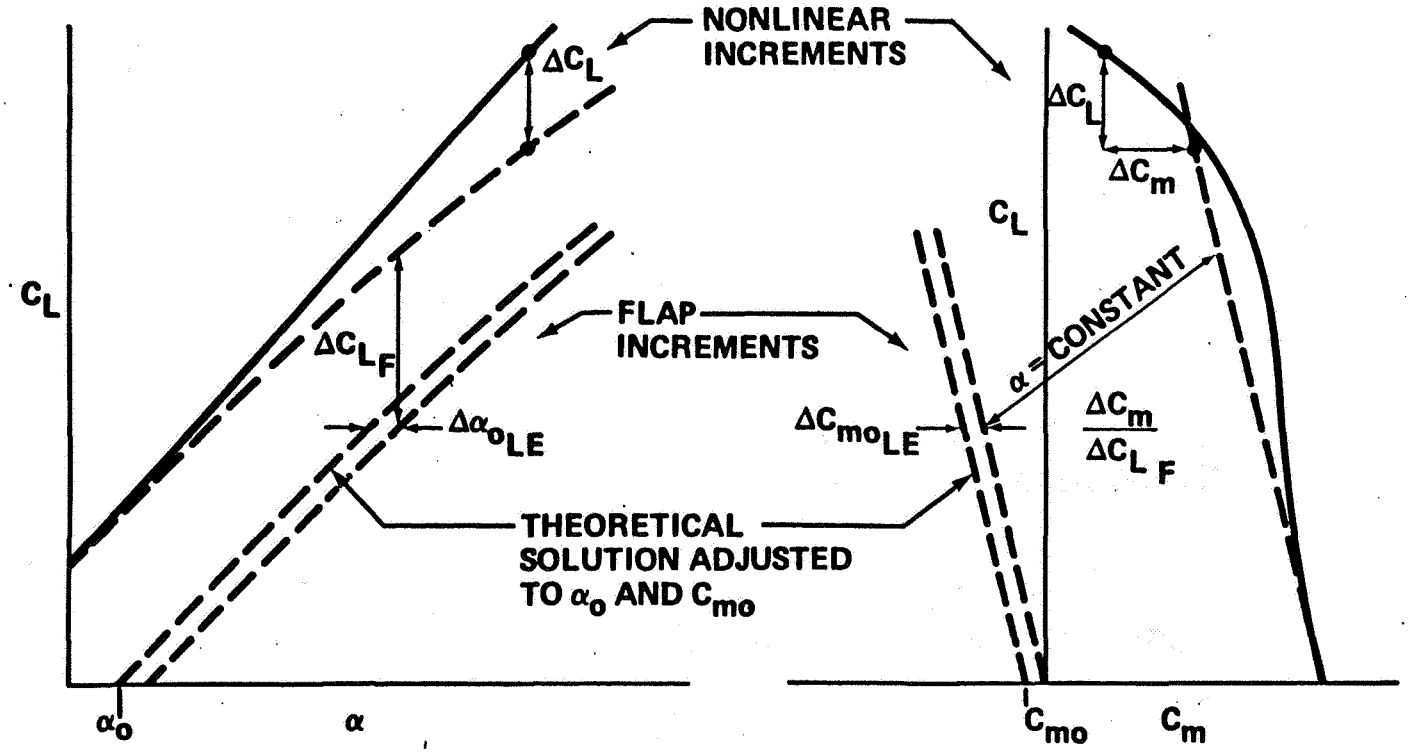

COMPARISON OF PITCH-UP CHARACTERISTICS

SYMBOL	CONFIGURATION	LEADING EDGE	TRAILING EDGE	TAIL
⊙	1971 SST	√	20°	OFF
♦	SA1093T $W_{122.3}$	√	–	ON
△	D3230-2.2E			OFF
⊡	SCAT 15F 2		20°	OFF
▽	733-290 1	√	–	OFF

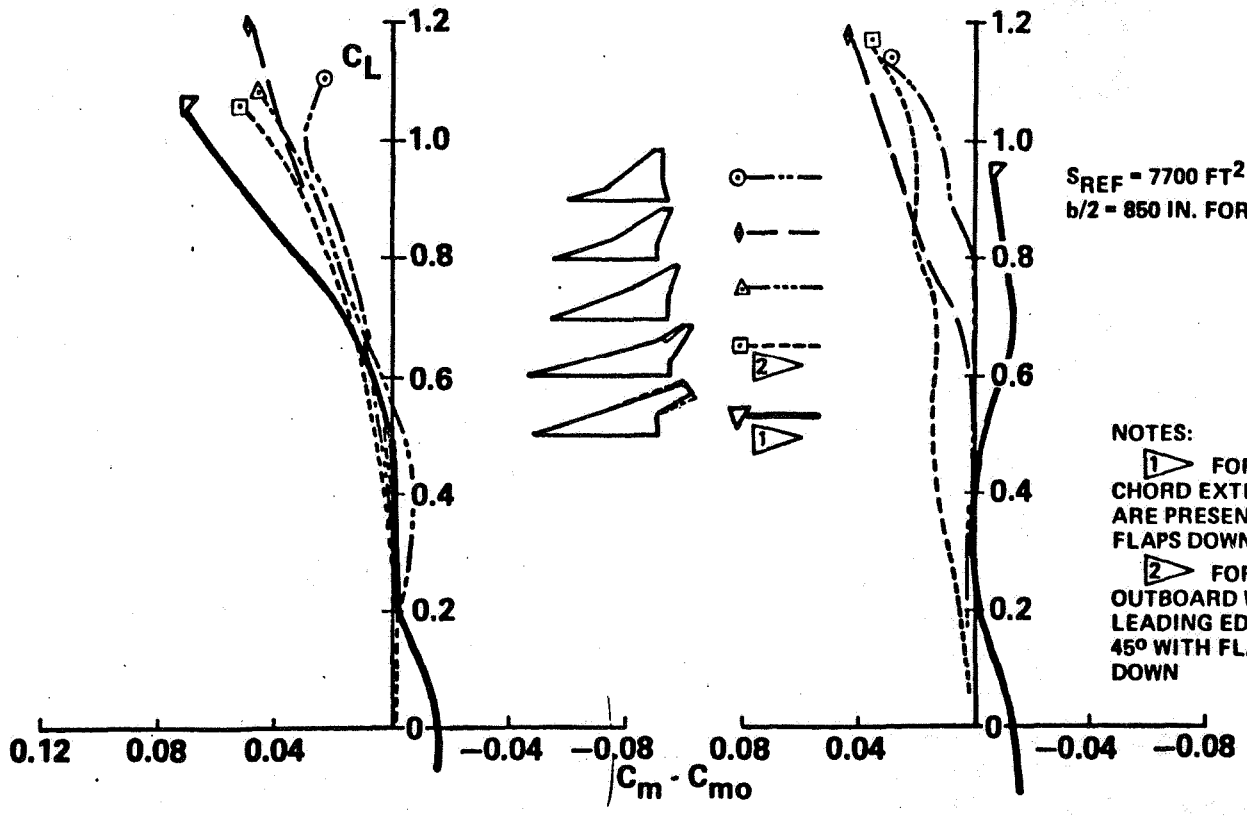

S_{REF} = 7700 FT^2 C_{REF} = 1210 IN.
b/2 = 850 IN. FOR ALL PLANFORMS

NOTES:

1 FOR 733-290, CHORD EXTENSIONS ARE PRESENT FOR FLAPS DOWN CASE

2 FOR SCAT 15F, OUTBOARD WING, PANEL LEADING EDGE DEFLECTED 45° WITH FLAPS UP AND DOWN

MOMENT REFERENCE IS AC AT α = o, FLAPS UP

PLANFORM EFFECTS–NONLINEAR INCREMENTS

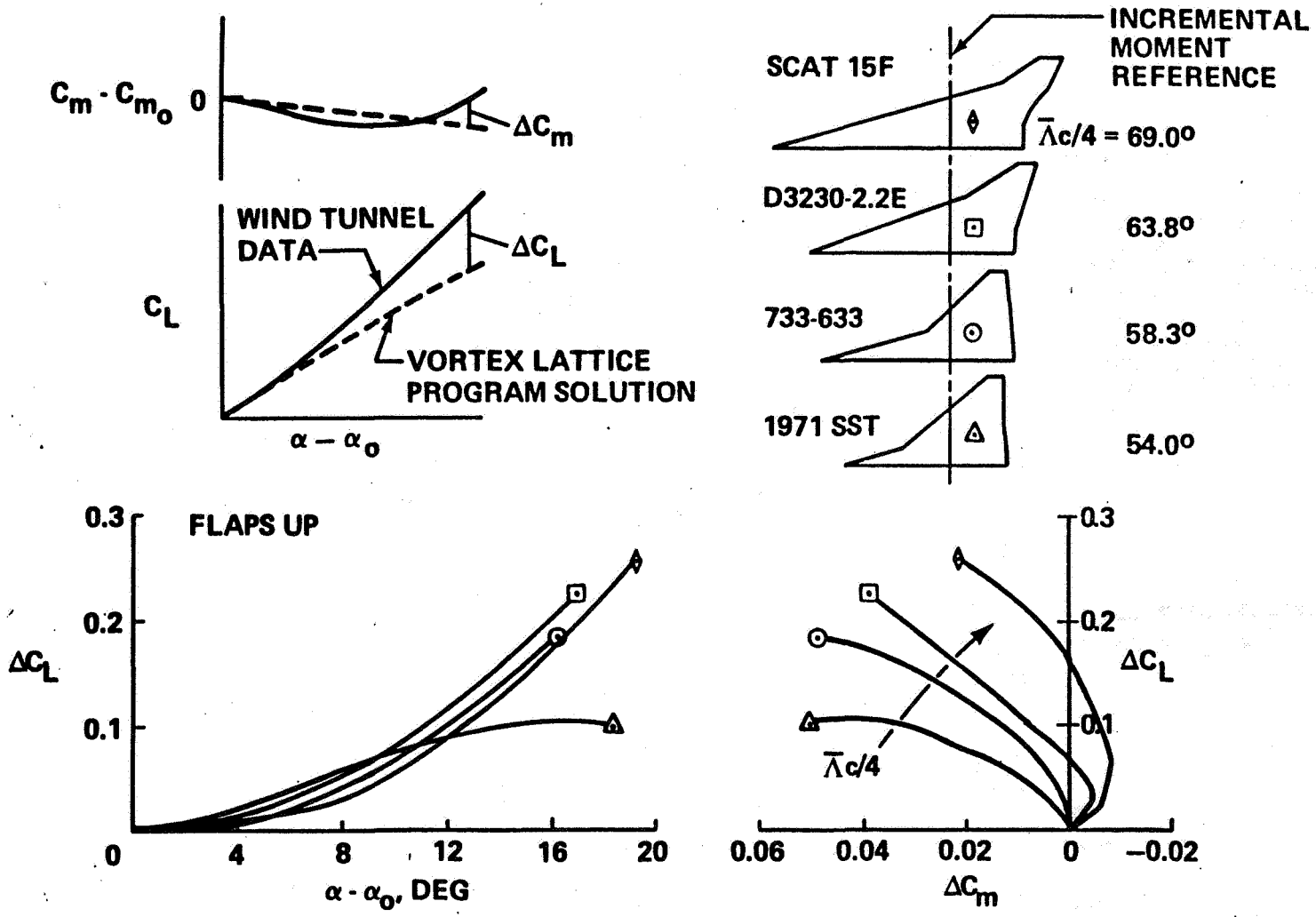

NOTE: COEFFICIENTS BASED ON $S_{PLANFORM}$ AND $\bar{c}$

CHARACTERISTICS OF SELECTED PLANFORMS

		$\bar{\Lambda}$ c/4 EFF (DEG)	$S_{PLANFORM}$ (FT^2)	δ_F (DEG)	SYMBOL
	733-633	58.3	8750	20/20/20/10	— — —
BLENDED ARROW WINGS	BASIC	61.3	9400	20/20/20/10	———
	VARIANT B	64.7	10200	20/20/20/0	—·—·
	VARIANT A	72.2	12700	20/20/20/0	—··—··

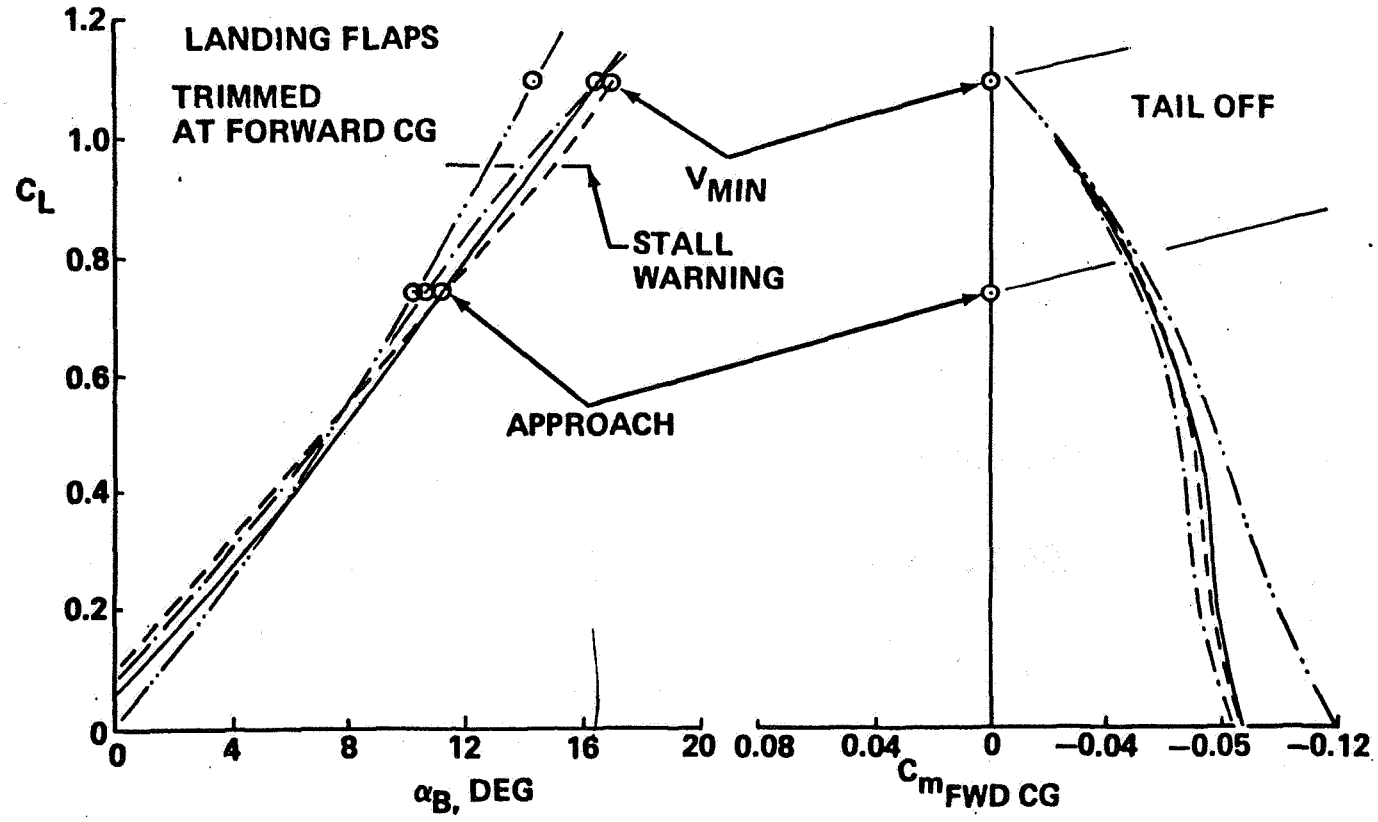

NASA AST MODEL
LEADING EDGE FLAP DESIGN

- FLAP DESIGNS DEVELOPED FOR C_L = 0.26 AND 0.35
- BASIC CRITERION = ATTACHED FLOW AT FLAP NOSE

ARROW WING LEADING EDGE SUCTION DATA (LOW SPEED)

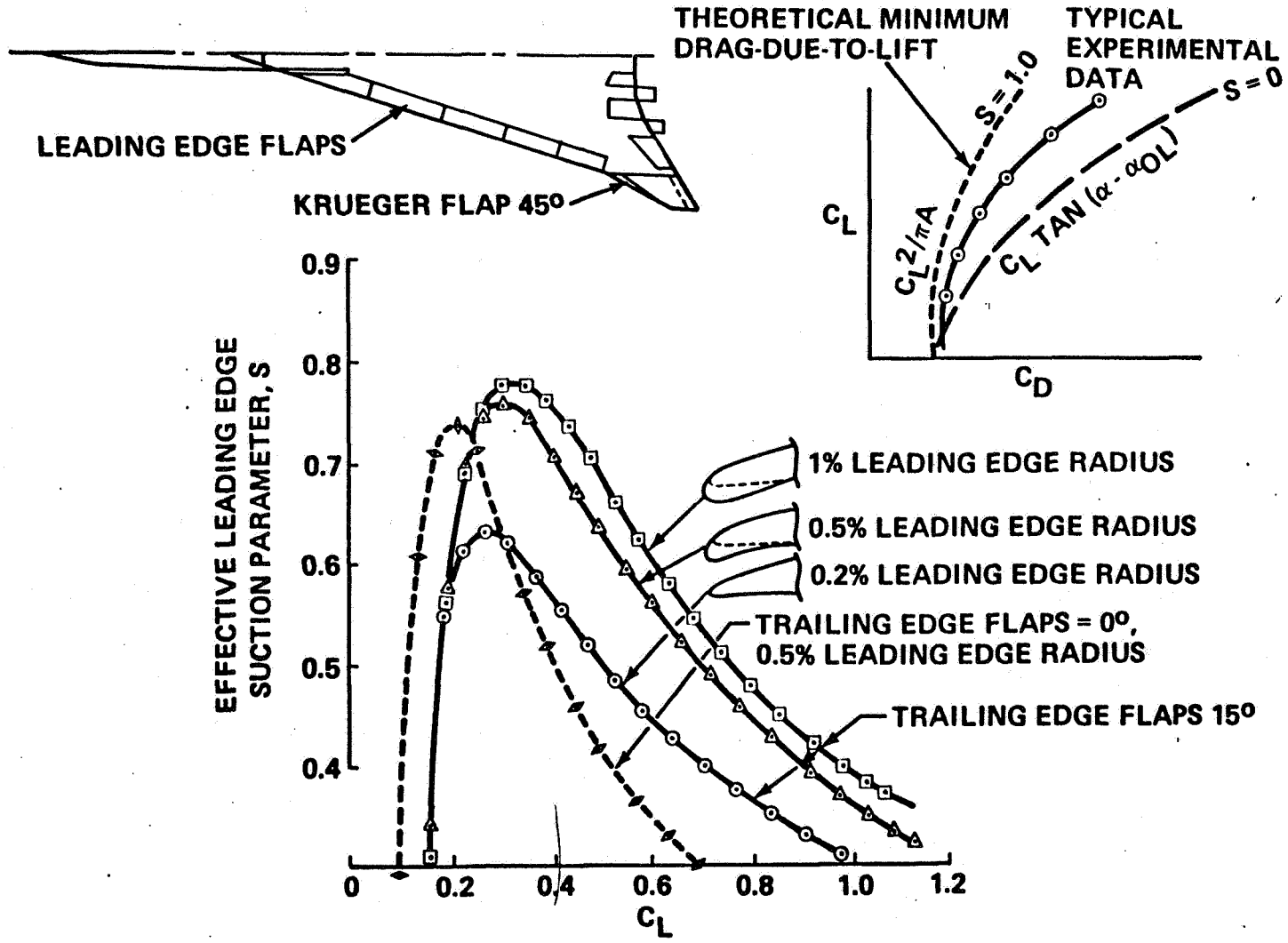

AST WIND TUNNEL MODEL

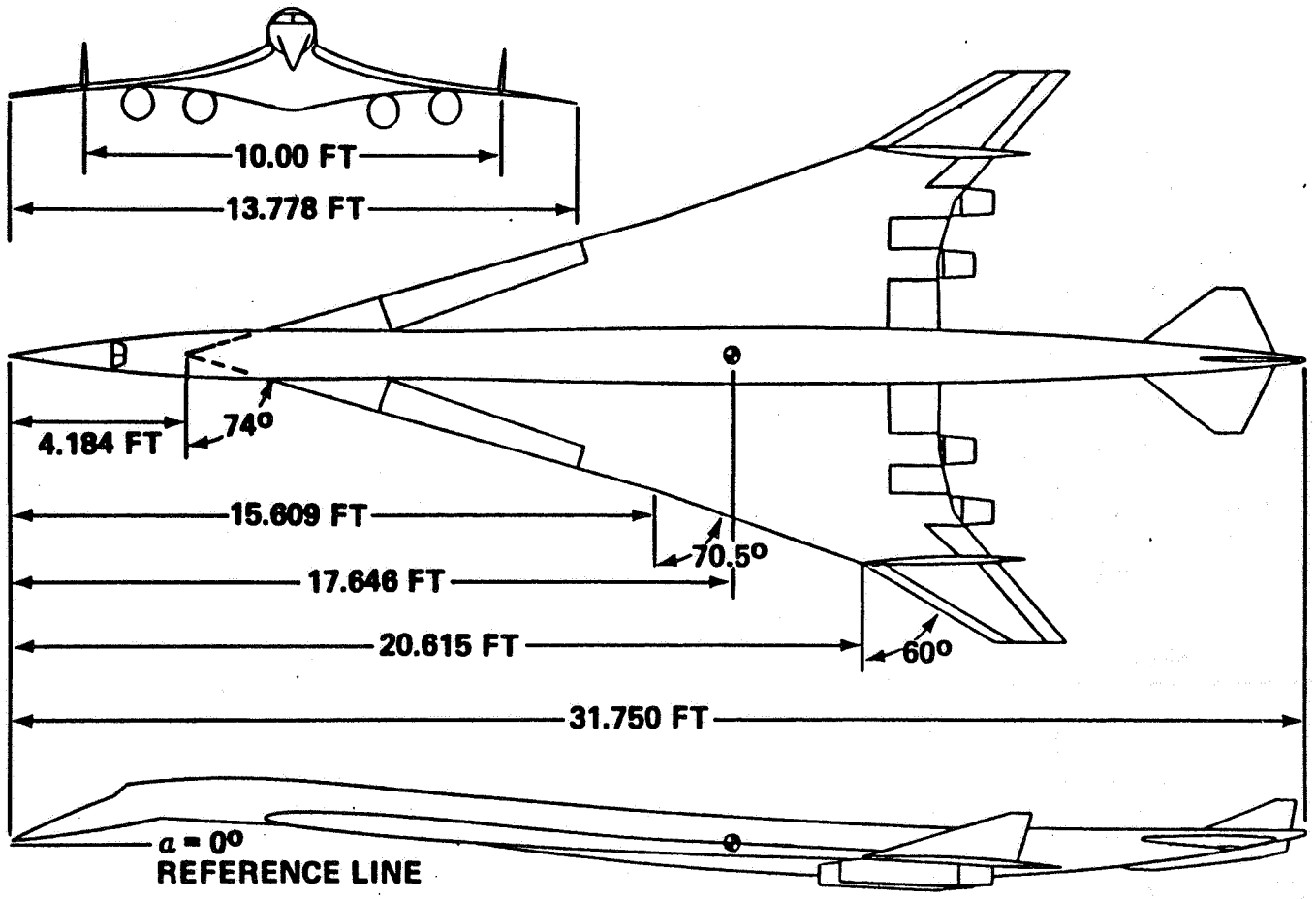

PANELING SCHEME FOR POTENTIAL FLOW ANALYSIS

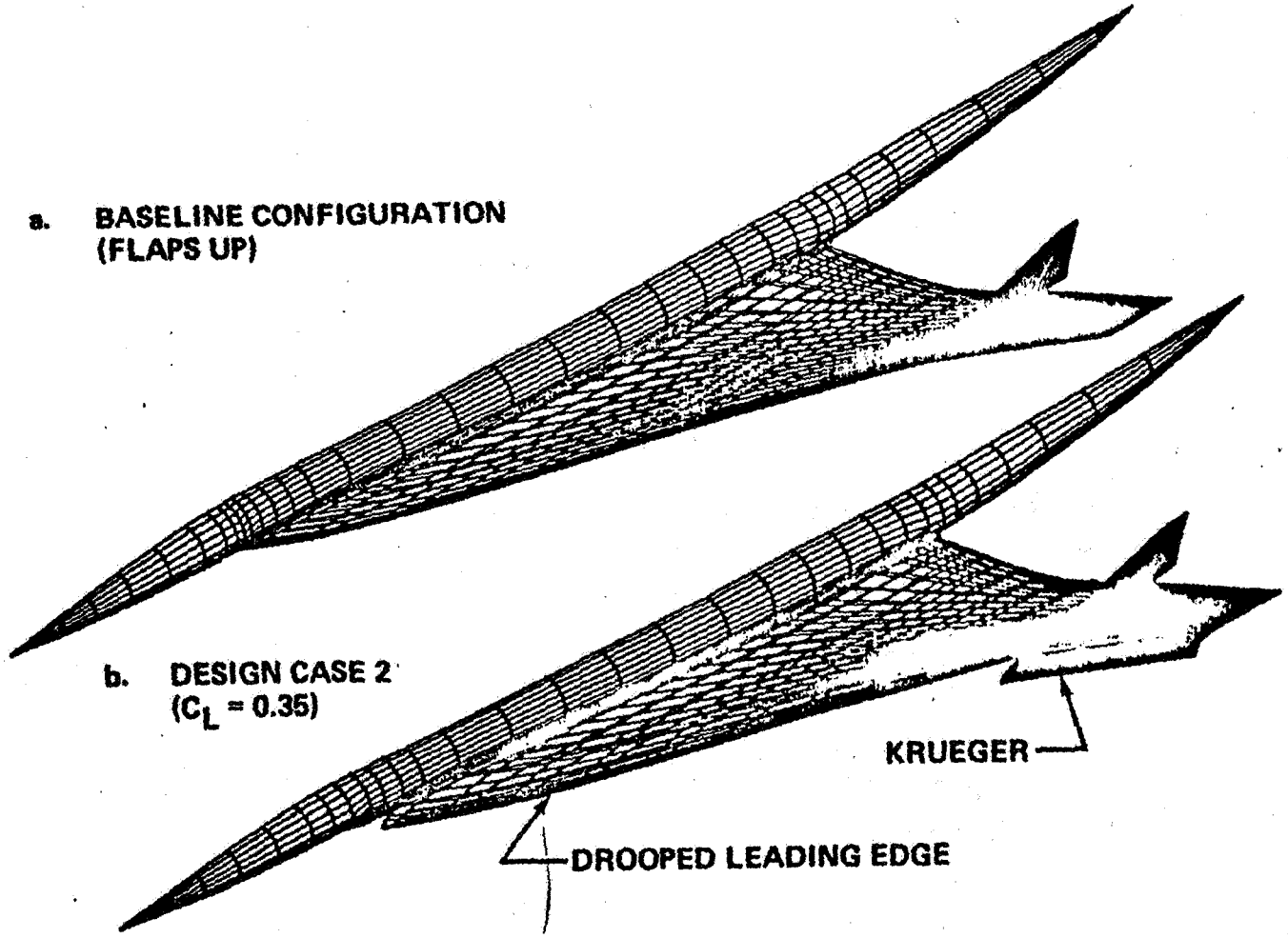

LEADING EDGE DEFLECTIONS

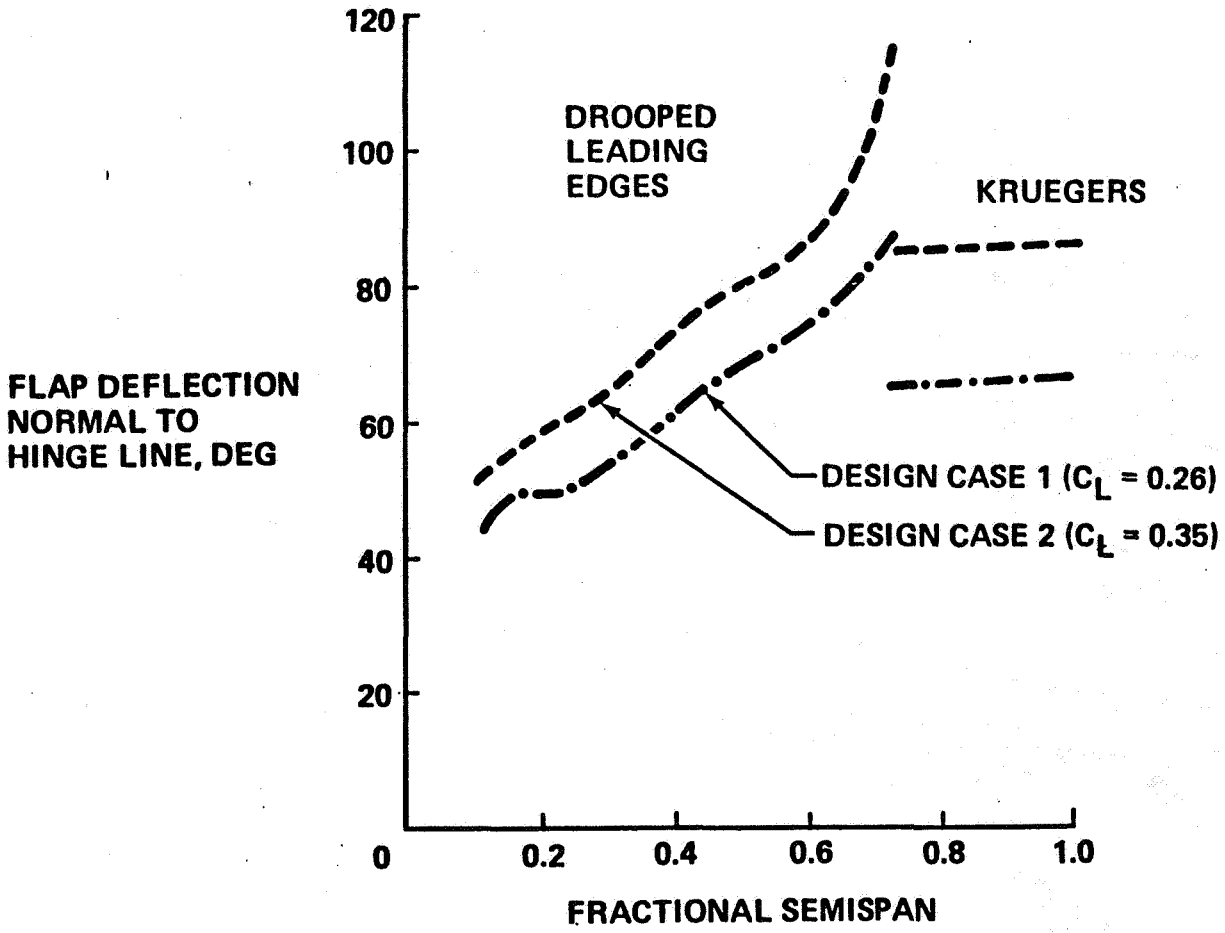

VELOCITY VECTOR DIAGRAM

- DESIGN CASE 1 LESS FIN
- UPPER SURFACE, $\alpha = 8^{o}$

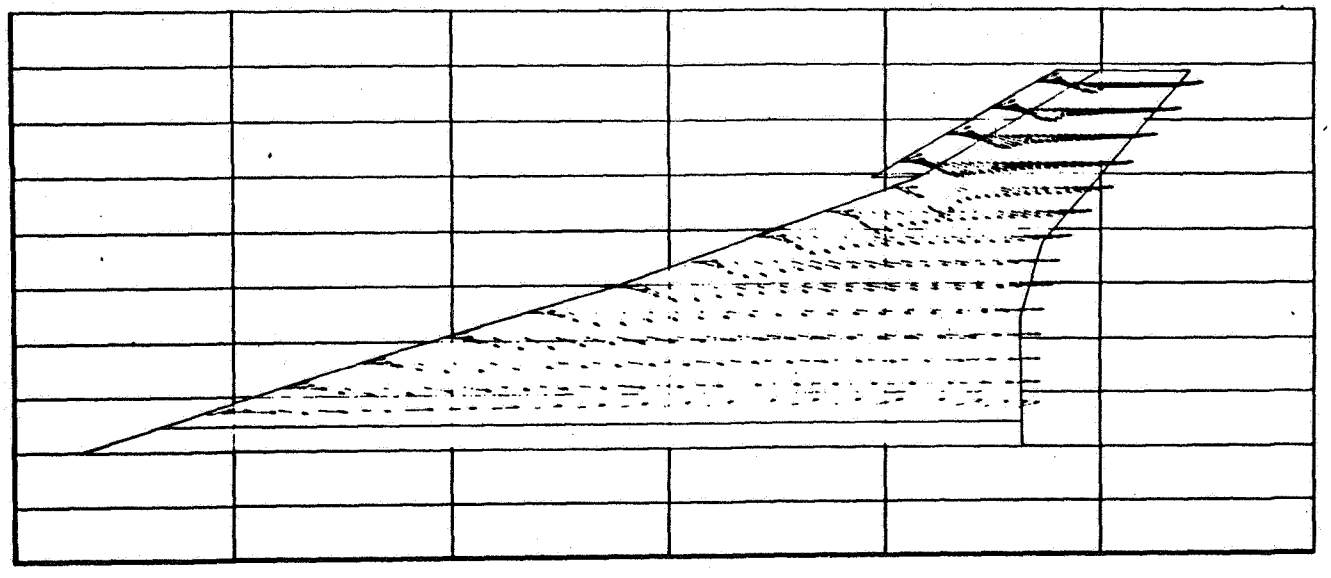

SIDEWASH ANGLE ALONG FIN LEADING EDGE

- DESIGN CASE 1 LESS FIN

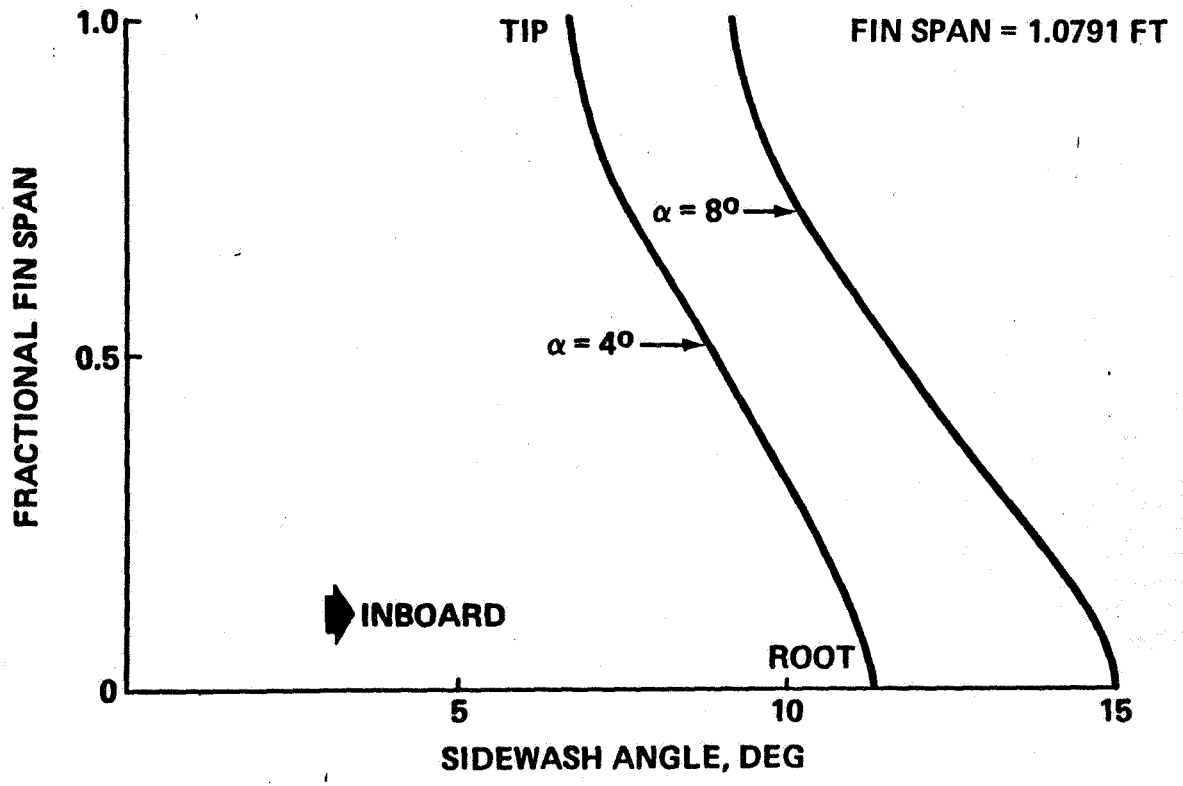

EFFECT OF WING-MOUNTED VERTICAL TAILS ON PITCH-UP

- REFERENCE LWP-1101

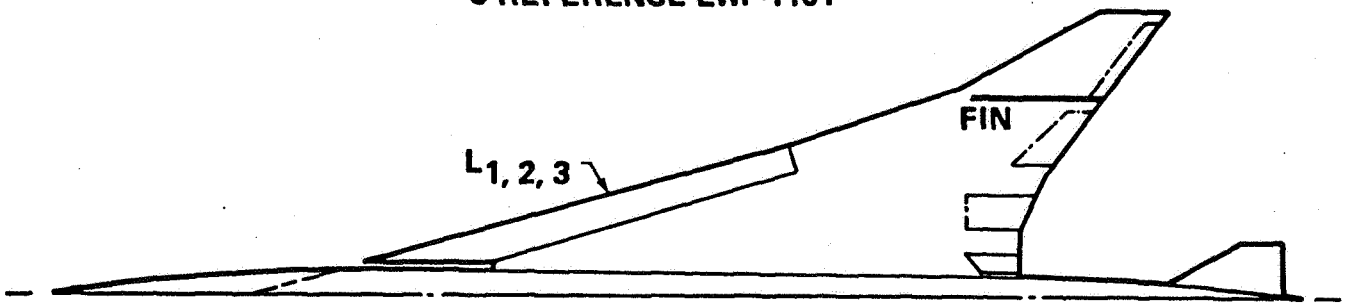

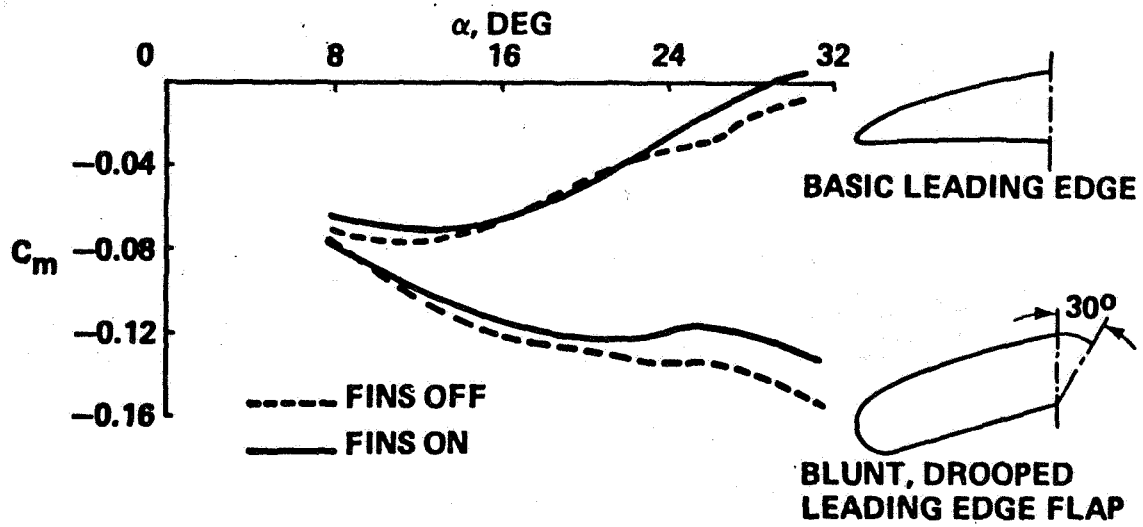

CONCLUSIONS

- HIGHER L/D PLANFORM HAS BEEN IDENTIFIED FOR FURTHER DEVELOPMENT
- LOW SPEED CHARACTERISTICS ARE MORE DIFFICULT TO OPTIMIZE THAN PRESENT BASELINE CONFIGURATION. WIND TUNNEL TESTING WILL BE REQUIRED
- LEADING EDGE GEOMETRY TO IMPROVE CLIMB L/D FOR HIGHLY SWEPT PLANFORM HAS BEEN DESIGNED. FURTHER DESIGN STUDY, PARTICULARLY WING-MOUNTED FIN GEOMETRY, IS NEEDED

CONCLUSIONS

- CHOSEN CONFIGURATION CONCEPT IS VALID FOR TRANSPORT AIRPLANES OF WIDELY DIFFERENT SIZES AND LENDS ITSELF TO DEVELOPMENT OF A FAMILY OF SSTs
- BOTH GE AND P&WA VARIABLE-CYCLE ENGINES ARE EQUIVALENT AS FAR AS AIRPLANE NOISE AND PERFORMANCE ARE CONCERNED
- AIRPLANE NOISE VALUES CANNOT BE ESTABLISHED WITH CERTAINTY WITHOUT ADDITIONAL DATA
- ENGINE OVERSIZING DOES NOT LEAD TO LOWER NOISE LEVELS
- ENVIRONMENTAL CONTROL SYSTEMS HAVE BEEN DEFINED FOR LARGE MACH 2.4 TRANSPACIFIC AIRPLANES

CONCLUSIONS (CONTINUED)

- ADAPTIVE GEAR HAS BEEN VALIDATED
- WEIGHT SAVINGS ASSOCIATED WITH ADVANCED-STRUCTURES TECHNOLOGY HAVE BEEN DEFINED
- FURTHER ADVANCES IN SUPERSONIC LIFT/DRAG RATIO WILL DEPEND UPON ADVANCES IN TAKEOFF AND LANDING AERODYNAMICS FOR HIGHLY SWEPT WINGS
- TAKING COMPLETE ADVANTAGE OF FLY-BY-WIRE TECHNOLOGY WILL DEPEND UPON OTHER ADVANCES SUCH AS FIBER OPTICS
- FLUTTER SENSITIVITY OF CHOSEN CONCEPT TO A LARGE NUMBER OF CONFIGURATION VARIATIONS HAS BEEN ESTABLISHED