JSC-14024

JUN 3 1980

Space Transportation System and SPAS-01

Payload Integration Plan

(JSC-14024-Rev-A) PAYLOAD INTEGRATION PLAN PROGRAM FOR STS, REVISION A (NASA) 34 p

N80-74321

Unclas

00/16 22924

Revision A
May 20, 1980

National Aeronautics and
Space Administration

Lyndon B. Johnson Space Center
Houston, Texas

JUN 1980
RECEIVED
NASA STI FACILITY
ACCESS DEPT.

DESCRIPTION OF CHANGES TO

PAYLOAD INTEGRATION PLAN

SPACE TRANSPORTATION SYSTEM

AND

SPAS - 01

CHANGE NO.	DESCRIPTION/AUTHORITY	DATE	PAGES AFFECTED
--	Baseline Issue/P14024-1	08/10/79	
REV A	Provide mating connectors and Word One Reformat/P14024-2;-3	05/20/80	All

JSC 14024

PAYLOAD INTEGRATION PLAN

SPACE TRANSPORTATION SYSTEM

AND

SPAS - 01

MAY 20, 1980

APPROVED:

Signed by L.G. Williams for
SPIDPC, dated 08/03/79
NASA JSC SPIDPO

Signed by SPAS-01 Project
Manager, dated 08/03/79
SPAS-01 PROJECT MANAGER
MESSERSCHMITT-BOLKOW-BLOHM GMBH

PREFACE

This Payload Integration Plan (PIP) represents the Messerschmitt-Bolkow-Blohm GMBH Space Division (MBB) to Space Transportation System (STS) agreement on the responsibilities and tasks which directly relate to the integration of the payload into the STS and includes definitions of tasks which the STS considers as standard and optional services.

Signature of this document constitutes agreement on the scope of the work to be performed including the optional services, but it does not commit the payload to the reimbursement price and schedule of payment or the STS to the funding and implementation of the optional services. Upon completion of negotiations and signature of the launch Services Agreement, or provision of required funding, the optional services identified will be implemented by the STS. The official commitment for the launch is reflected in the Launch Services Agreement. The launch date shown in this PIP is for planning purposes only.

Further understanding of the STS operations and the associated payload-unique requirements may indicate the need for additions to or deletions from the optional services. This can be accommodated by amendment of the PIP and the Launch Services Agreement.

CONTENTS

Section		Page
1.0	INTRODUCTION	1
2.0	MANAGEMENT RESPONSIBILITIES	1
2.1	Joint Responsibilities	1
2.1.1	Documentation	2
2.1.2	Reviews	2
2.2	STS Responsibilities	2
2.3	MBB Responsibilities	2
3.0	PAYLOAD DESCRIPTION	3
4.0	MISSION OPERATIONS	3
4.1	Preliminary Mission Scenario	3
4.2	Orbital Requirements and Payload Control Parameters	5
4.3	Operational Requirements and Constraints	5
4.3.1	Prelaunch	5
4.3.2	Ascent	5
4.3.3	On-Orbit	5
5.0	SPAS-01-TO-STS INTERFACES	9
5.1	Structural/Mechanical Interfaces	9
5.2	Cable Interfaces	10
5.3	Display and Control Interfaces	10
5.4	Electrical Power Interfaces	10
5.5	Command Interfaces	11
5.6	Telemetry and Data Interfaces	11

Section		Page
5.7	Fluid Interfaces	12
5.8	Orbiter GPC Software Services	12
6.0	ENVIRONMENTAL ANALYSES AND INTERFACES	12
6.1	Structural Loads and Deflections	12
6.2	Thermal Environments and Interfaces	13
6.3	Electromagnetic Interference/Electromagnetic Compatibility	13
6.4	Contamination	14
6.5	Shock, Vibration, and Acoustic Environments	14
6.6	Ground Environmental Requirements	14
7.0	INTEGRATION HARDWARE	14
7.1	STS-Provided Hardware	14
7.2	SPAS-01 Related Unique STS Hardware	15
8.0	FLIGHT OPERATIONS	15
8.1	Flight Design	15
8.2	Flight Activity Planning	15
8.2.1	Crew Activity Plan	15
8.2.2	Payload Operating Procedures	15
8.3	Training	15
8.4	Flight Operations Control	16
9.0	LAUNCH AND LANDING SITE SUPPORT	16
9.1	Payload Processing Facility	16
9.2	Hazardous Processing Facility	17
9.3	Vertical Processing Facility	17
9.4	Pad Operations	17

Section		Page
9.5	Postflight Processing	18
9.6	Aborted Flight	18
10.0	SAFETY	18
11.0	INTERFACE VERIFICATION	19
12.0	POSTFLIGHT DATA REQUIREMENTS	19
13.0	OPTIONAL SERVICES	19
14.0	PIP ANNEXES	20
15.0	SCHEDULE	20
16.0	APPLICABLE DOCUMENTS	21
APPENDIX A - TO BE RESOLVED ITEMS		A-1

1.0 INTRODUCTION

The National Aeronautics and Space Administration (NASA), and Messerschmitt-Bolkow-Blohm GMBH Space Division (MBB) plan to launch, operate, deploy, and retrieve a SPAS-01 payload using the Space Transportation System (STS).

For purposes of this Payload Integration Plan (PIP), the STS shall be represented by the NASA Johnson Space Center (JSC) and the NASA Kennedy Space Center (KSC). The SPAS-01 payload shall be represented by the Messerschmitt-Bolkow-Blohm GMBH Space Division.

This PIP and its subsequent revisions shall not provide a right or impose an obligation on MBB or NASA until the relevant Launch Services Agreement (LSA) and amendments are signed by an authorized representative of MBB and by NASA. This PIP is the document, identified in TBD section of the LSA, between NASA and MBB, dated TBD.

This plan provides the management roles and responsibilities, and a definition of the technical activities, interfaces, and schedule requirements to accomplish the integration, launch, and deployment of the SPAS-01 with the STS. This PIP is applicable to the first SPAS-01/STS flight only. Subsequent flights of this payload will be subject of additional negotiations. All services to be furnished by NASA to MBB under this PIP shall be furnished by NASA using its best efforts.

2.0 MANAGEMENT RESPONSIBILITIES

The responsibility for assuring the definition, control, implementation, and accomplishment of the activities identified in this document for the STS is vested with the Shuttle Payload Integration and Development Program Office (SPIDPO) at NASA JSC and for SPAS-01 with the MBB.

2.1 Joint Responsibilities

The STS and MBB will support the necessary integration activities, both analytical and physical, identified in this plan and according to the schedules contained in Section 15. The STS and MBB will staff the interface working groups with the technical personnel responsible for the accomplishment of the integration tasks. The interface working groups include management, structural/mechanical, avionics, thermal, flight planning, flight operations, and ground operations.

2.1.1 Documentation.- The primary documentation to ensure proper integration of the payload will consist of the PIP, the PIP annexes, and appropriate Interface Control Documents (ICD's). These documents and associated changes will be jointly approved by STS and MBB. Configuration control will be initiated upon signature approval. NASA JSC will maintain configuration control of the above documentation in accordance with Change Control Requirements and Procedures Manual JSC 13995, with the exception of the Launch Site Support Plan Annex which will be maintained by KSC in accordance with (TBD) plan.

2.1.2 Reviews.- The following reviews will be implemented to assess the cargo implementation process as described in the Shuttle Payload Integration Activities Plan, JSC 14363:

a. Cargo Integration Review (CIR)

b. Integration Hardware/Software Review (IH/SR)

c. Flight Operations Review (FOR)

d. Ground Operation Review (GOR)

e. Flight Readiness Review (FRR)

2.2 STS Responsibilities

NASA JSC is responsible for integration of the SPAS-01 into the STS, including analytical integration, integrated flight design, integrated flight operations before deployment, SPAS-01 flight design and flight operations during the deployed phase, and compatibility with other cargo elements which share the same flight.

NASA KSC is responsible for the STS launch and landing support, for agreed-upon facilities and services required for integration checkout, and for ground integration of the SPAS-01 and STS.

2.3 MBB Responsibilities

MBB is responsible for the design, development, test, performance and safety of the SPAS-01 flight spacecraft and airborne and Ground Support Equipment (GSE), as well as providing support to the STS analytical and physical integration activities.

3.0 PAYLOAD DESCRIPTION

The SPAS-01 payload configuration is shown in Figure 3-1. Configuration drawings and data will be provided by MBB as part of the Payload Data Package Annex.

The purpose of the SPAS-01 payload is twofold. The payload consists of a basic platform structure with a complement of experiments to be operated in the attached mode to demonstrate the utilization of the MBB platform and systems as a carrier for science experiments. The payload is deployable to serve as a test article for deployment with the Remote Manipulator System (RMS) and to provide proximity operations, retrieval, and reberthing by the RMS. The payload has a cold-gas stabilization and control system for operation in the deployed mode.

4.0 MISSION OPERATIONS

The flight operations summary requirements and constraints by flight phase are as delineated in subsequent paragraphs of this section.

4.1 Preliminary Mission Scenario

The SPAS-01 payload will be delivered to KSC for payload processing. Upon completion of the off-line checkout, the payload will be transferred to the Vertical Processing Facility (VPF) for cargo interface verification. Once installed in the STS cargo bay, the electrical and mechanical connections will be made and verified along with limited functional operation of the payload. Launch will be from the Kennedy Space Center (KSC), Florida. After reaching orbital altitude, the cargo bay doors will be opened and payload operations will begin at a time specified by the STS. The payload will be operated in the attached mode for a minimum of 24 hours on-orbit for the SPAS-01 experiments. Subsequent to the attached operation mode, the SPAS-01 payload will be deployed by STS as an active test article for proximity operations and plume impingement testing. The payload will be reberthed and returned for landing at KSC.

NASA-S-79-2774 B

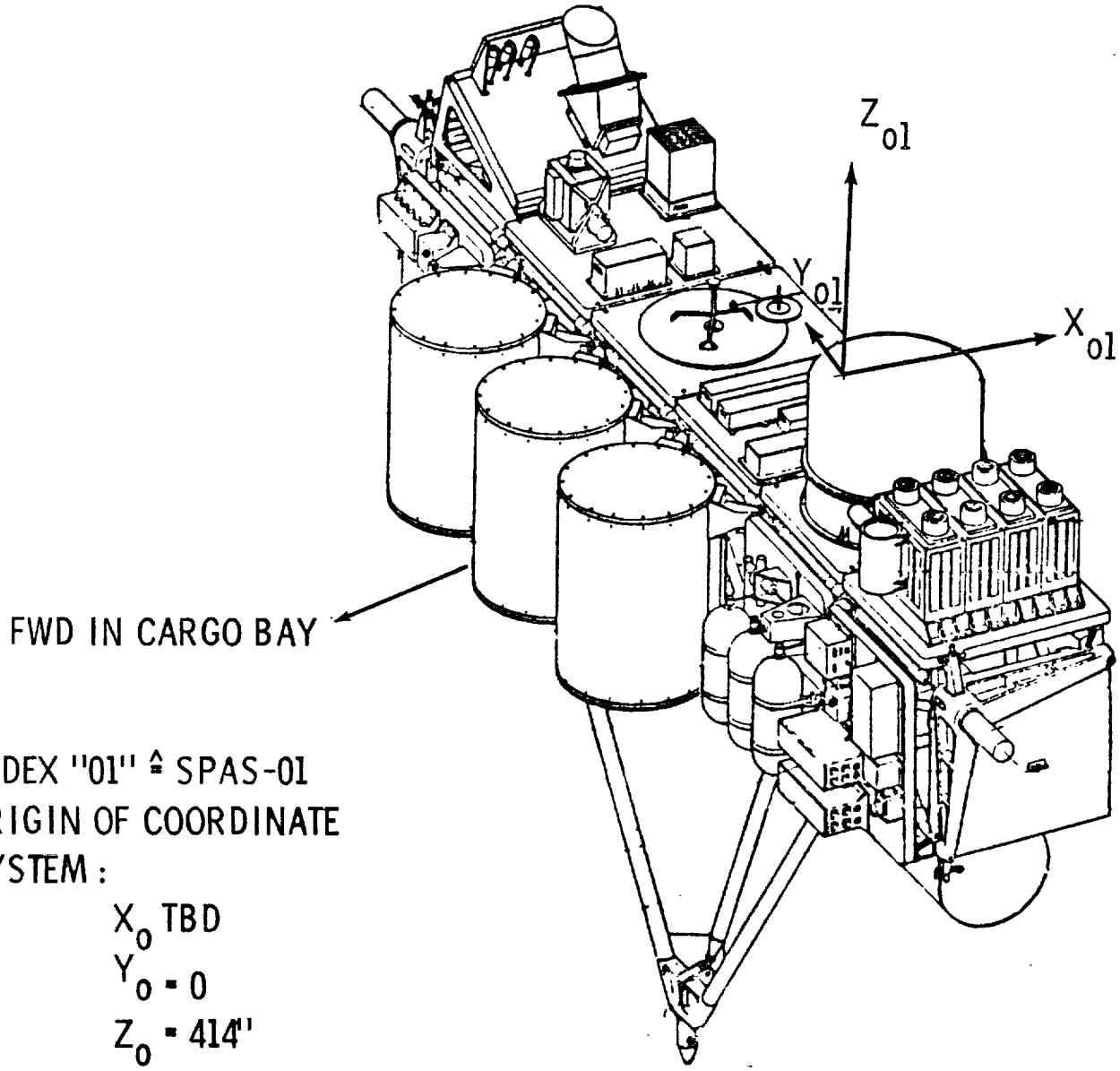

INDEX "01" ≙ SPAS-01
ORIGIN OF COORDINATE
SYSTEM :

X_0 TBD
$Y_0 = 0$
$Z_0 = 414''$

(Z_{01} & Y_{01} AXIS = CENTER LINES OF STRUCTURAL TUBES/NODES)
SPAS-01 AXIS ARE PARALLEL TO ORBITER COORDINATE SYSTEM

Figure 3-1.- SPAS-01 Payload Configuration.

4.2 Orbital Requirements and Payload Control Parameters

Orbital altitude: 160 n. mi. plus or minus 5 n. mi.

Inclination: 28.5 deg

SPAS-01 control weight (without payload chargeable items of STS hardware)	3960 lb	(1800 kg)
Maximum payload control length in Orbiter X direction (including dynamic clearance)	61 in	(1550 mm)

Additional clearances will be required for operational and STS required hardware.

The terms "control weight" and "control length," as used in this PIP, are the maximum weight and length which the payload may not exceed without STS concurrence.

SPAS-01 sequenced mass properties and configuration drawings will be provided by MBB as part of the Payload Data Package Annex.

4.3 Operational Requirements and Constraints

The following SPAS-01 operational requirements and constraints will be used in the flight planning and implementation of the STS and SPAS-01 flight.

4.3.1 Prelaunch.- Before cargo bay door closure on the pad, all payload RF transmitters will be turned off. The cargo bay door closure begins at no later than T-20 hours.

4.3.1.1 Launch Readiness: The SPAS-01 will be in its launch configuration when the cargo bay doors are closed. At this time, the MBB will provide the STS with launch readiness confirmation for the SPAS-01.

4.3.2 Ascent.- Not applicable

4.3.3 On-Orbit.- The cargo bay doors should be assumed to be opened no sooner than 1 hour after launch and no later than 3 hours after launch. If the doors are not opened by 3 hours after launch, the Orbiter will return and landing will be completed by launch plus 6.5 hours. For abort descent and landing, the payload shall be designed so that the resulting thermal conditions present no hazard to the Orbiter or crew. For flight

contingency landing sites, no ground purge capability of the payload bay will exist.

4.3.3.1 Thermal Environment: The SPAS-01 design shall be compatible with the following attitude conditions and flight objectives prior to the dedicated 24-hour attached phase of the SPAS-01 operations. The STS will normally be oriented with the cargo bay facing Earth (+ZLV) with multiple allowable excursions of solar viewing (+Z Solar), deep space viewing (+Z Space), and Earth viewing (+ZLV) as shown in Table 4-1. Also specified are the payload recovery times for these excursions which allow repeat of the required attitudes.

Table 4-1.- BETA ANGLE LESS THAN 60 DEG ATTITUDE REQUIREMENT

Attitude	Allowable time	Payload recovery time at +ZLV
+ZLV, -XVV	Continuous	N/A
+Z Solar	30 min	30 min
+Z Space	90 min	90 min
Payload worst solar angle	TBD	TBD

In the event of failure that terminates operations due to a SPAS-01 problem, the STS attitudes will be constrained only by SPAS-01 safety constraints. These constraints will be defined by MBB in terms of maximum solar and deep space exposure times in the mission rules section of the Flight Operations Support Annex. Thermal attitude constraints for the attached phase of SPAS-01 operation are TBD.

4.3.3.2 Ground Communication: Twenty-four hours of continuous data coverage are required for the attached phase of SPAS-01 operations. This requirement is accomplished using record and dump over existing ground stations or via TDRS.

4.3.3.3 STS/SPAS-01 Pointing: During on-orbit attached operations, the SPAS-01 will be provided pointing (TBD).

4.3.3.4 STS/SPAS-01 Deployed Operations: During deployed on-orbit operations, the SPAS-01 payload will provide the capability of an active test article for the Shuttle Transportation System test program. As an active test article, the SPAS-01 will be used by NASA to fulfill the objectives of two Flight Test Requirements (FTR's):

a. Proximity Operations

b. Plume Impingement on Payloads

To provide the capability needed for the active test article, the SPAS-01 will meet the following basic performance and/or constraints requirements.

a. Provide RF command and TM over a minimum range of 1 n. mi. with TBD operational constraints.

b. Manual command capabilities

1. Auto control mode initialization command

(a) Orb rate hold: Selected single axis (X, Y, or Z) with preloaded orbital rotation rate and TBD Orbiter General Purpose Computer (GPC) initiated delta rate update capability

(b) Inertial attitude hold

(c) Free drift (RCS jets inhibited, rest of system operating)

2. Initialize attitude reference system

(a) Inertial

(b) Rotating (orb rate)

3. Initiate and terminate individual body fixed axis preloaded rotation rates (plus or minus roll, plus or minus pitch, plus or minus yaw) with TBD GPC-initiated rate overwrite capability

4. Total system to standby (minimum power) and startup

5. Orientation lights on/off

6. TM transponder to "Power Saving" mode

7. TBD gyro compensation updates (STS-supplied)

8. Safing commands, as required

c. Attitude control requirements

1. Single axis rotational maneuvers around body fixed axis with minimal translation and off-axis rotational effects

2. Provide inertial and orbital rate hold with plus or minus 1 deg attitude deadband in all axes (disregarding the gyro drift)

3. Control authority sufficient to stabilize within TBD minutes following direct RCS plume impingement for one second at 35 feet. The instantaneously applied torque, under these conditions is approximately: Mx = 62.8 ft-lb (85.2 N.M.), My = 57.7 ft-lb (78.2 N.M.) and Mz = 82.7 ft-lb (112.1 N.M.)

4. Provide stabilization propellant for TBD ft-lb-sec angular impulse

d. After "battery on" command, there is a capability of all-up active power lifetime of 8 hours and additional standby free-flying lifetime of 30 hours operations in a minimum power mode.

e. Within the above specified limits, provide the capability for berthing/powerdown and startup/redeploy as required for the test.

f. Data Transmission Requirements are as follows (sampling rates are TBD; transmission delays are TBD):

1. Attitude relative to the established reference frame (inertial or rotating) to within plus or minus 1 deg accuracy, disregarding the gyro drift

2. Attitude rate to within plus or minus 0.005 deg/sec accuracy

3. Linear acceleration to within plus or minus 0.01 ft/sec2 accuracy

4. Propellant remaining status (pressure/temperature indication)

5. Control mode status (orb rate hold, inertial attitude hold, or free drift)

6. Electrical power status (voltage level)

g. Mount an STS-supplied GFE standard grapple fixture compatible with grapple clearance envelope (Ref. ICD 2-06001)

h. Provide steady state orientation lights, and mount STS-provided radar enhancement devices as jointly agreed to with STS. Locations and characteristics of lights and radar devices are defined in STS/SPAS-01 ICD A-14024.

i. Provide markings for approach, stationkeeping, and berthing as jointly agreed to with STS, as shown in ICD A-14024.

j. Geometry of the test article should be sensitive to RCS plume effects. Webbing should be used to provide surface area within the truss structure.

k. Operation of the Orbiter Ku-band communication system shall be limited by a maximum Ku-band RF level of TBD V/meter at the SPAS-01 payload.

l. Operation of the SPAS-01 S-band transponder will be constrained until after deployment and separation distance of approximately 100 miles of other payloads and may use the same frequency as other deployable payloads.

5.0 SPAS-01-TO-STS INTERFACES

The STS mechanical, electrical, avionics, and environmental interfaces are defined in ICD 2-19001 with which the SPAS-01 payload must be compatible. Unique interfaces, in addition to those specified in the above ICD, will be defined in the STS/SPAS-01 ICD A-14024. The cargo bay electrical interfaces, except for the RF interface, are physically located at the STS/SPAS-01 interface plane above the Orbiter Z-axis 400 station, at or near the trunnion interface.

5.1 Structural/Mechanical Interfaces

The structural/mechanical interface between the SPAS-01 and the STS consists of two flight longeron trunnions and one keel trunnion that will attach to the STS-provided longeron and keel attach fittings and attachment of a JSC-provided grapple fixture and radar enhancement device. The mechanical interface between the Shuttle Orbiter and the SPAS-01 for these interfaces will be specified in STS/SPAS-01 ICD A-14024. A third trunnion (GSE or flight) is required to provide handling capability in the VPF and during installation in the cargo bay.

5.2 Cable Interfaces

The SPAS-01 will use one section of the standard AFD and payload harnesses in accordance with the mixed user allocations section of JSC 07700, Volume XIV.

Specific wiring pin function assignments will be defined in the STS/SPAS-01 ICD A-14024. The SPAS-01 cable separation device will be located on the payload side of the interface. A cable retention mechanism on port and starboard sides are a NASA responsibility (TBR No. 1) as a no charge optional service.

5.3 Display and Control Interfaces

Display and control functions are accomplished using one section of the standard switch panel.

Assignment of functions and nomenclature for the switch panel are to be defined in the Orbiter Crew Compartment Annex to this PIP.

Display and control functions accomplished using the Orbiter general purpose computer/keyboard/CRT combination are to be defined by MBB in the Command and Data Annex to this PIP.

5.4 Electrical Power Interfaces

During the STS/SPAS-01 ground and flight-mated operations, power will be supplied by the STS as defined in the following paragraphs.

The SPAS-01 shall provide means for its power activation/deactivation via crew control and for fusing and or circuit breaker protection of its input power circuits from the Orbiter.

Electrical power interfaces are as follows.

Power source	Prelaunch	Launch	On-orbit Attached	On-orbit Deployed
Orbiter bus	400 W	0 W	1750 W	N/A

The specific SPAS-01 power profile will be defined by MBB in the Flight Planning Annex.

5.5 Command Interfaces

The command interfaces are as follows.

Command interface/route	Prelaunch	Launch	On-orbit Attached	On-orbit Deployed
a. Hardwire from standard switch panel	X	N/A	X	N/A
b. Payload signal processor	X	N/A	X	N/A
c. Payload interrogator (RF)	X (500 bps)	N/A	X (500 bps)	X (500 bps)

STS will recommend command formats for the STS/SPAS-01 ICD A-14024. MBB will define the command formats within the scope of the ICD 2-19001.

5.6 Telemetry and Data Interfaces

Data and telemetry interfaces are as follows.

Data interface/route	Prelaunch	Launch	On-orbit Attached	On-orbit Deployed
a. Hardwire to payload data interleaver	8 (kbps) Checkout	N/A	8 (kbps)	N/A
b. PI/PSP (PF) to payload data interleaver	8 (kbps)		8 (kbps)	8 (kbps)
c. Hardwire to standard switch panel	X	N/A	X	N/A

STS will recommend telemetry formats for the STS/SPAS-01 ICD A-14024. MBB will define the telemetry formats within the scope of the ICD 2-19001.

The phased sequence of operational usage of the data systems will be specified in the Flight Operations Support Annex.

5.7 Fluid Interfaces - Not applicable

5.8 Orbiter GPC Software Services

Orbiter GPC software services will consist of standard processing (limit sensing, onboard display, conversion to engineering units, etc.) for data acquired as defined in Section 5.6. Standard PSP commands will be provided using the interface defined in Section 5.5. Orbiter Guidance, Navigation, and Control (GN&C) data transfer requirements are (TBD). Up to 40 commands and 40 data parameters will be processed by the Orbiter GPC as a standard service.

6.0 ENVIRONMENTAL ANALYSES AND INTERFACES

Standard Shuttle/payload natural and induced environmental interfaces including structural loads, thermal, contamination, shock, vibration, and acoustics are contained in the Shuttle Orbiter/Cargo Standard Interfaces, ICD 2-19001.

Environmental interface analyses will be conducted to determine physical and functional interface compatibility of the SPAS-01 and STS. The specific analyses are described in the following paragraphs.

6.1 Structural Loads and Deflections

Preliminary design guidelines for the payload are provided in ICD 2-19001. These guidelines correspond to the Shuttle loading environments and are recommended as minimum conditions to which the payload should develop its preliminary design. MBB is responsible for assuring that the payload is designed to be compatible with the Shuttle environments and the payload design must accommodate any adequate cargo bay location compatible with the RMS reach envelope and forward of Orbiter X-axis station 1191. MBB is also responsible for assuring that the interface forces and deflections (including thermal effects) do not exceed the allowables in ICD 2-19001.

The schedule for anticipated Shuttle model and forcing function updates will be provided to the payload. MBB is responsible for applying appropriate conservatism to the loads to account for anticipated model and forcing function updates. The STS will advise MBB regarding the status of Shuttle activities which could effect payload loads; however, the responsibility for payload compatibility with the final flight loads remains with the payload.

MBB will provide design support loads information to the STS. This information will be discussed by the joint working group to assure understanding and agreement. The STS will subsequently perform a verification loads cycle analysis for the final manifest as a standard service, using a final, verified payload model provided by MBB. The model deliveries, analyses, and reports will be TBD, as jointly agreed.

The results of the verification loads cycle will be used by the STS to assure that the interface load conditions are within the Orbiter capability. MBB is responsible for verifying the payload compatibility with these loads and for verifying that the dynamic envelope (including thermal effects) does not exceed the allowable limit as specified in ICD 2-19001.

6.2 Thermal Environments and Interfaces

MBB is responsible for the design and analysis of the payload to assure compliance with the thermal and attitude constraints defined in Section 4.0. The STS will furnish Orbiter thermal models to the SPAS-01 program. Results of supporting design analyses accomplished by MBB will be documented in an SPAS-01/STS thermal report and provided to the STS. This report will be discussed by the joint working groups to assure understanding and agreement. Thermal models, including critical nodes and temperature limits for these nodes, shall be furnished by MBB to STS to support the CIR and verification analysis. A second integrated thermal analysis will be performed as part of the flight verification cycle. The schedule for furnishing the various SPAS-01 thermal models and results of the integrated analyses are contained in Section 15. Verification models, analyses, and reports will be TBD as jointly agreed. The results of the verification thermal analysis will be used by the STS to assure that the resulting thermal environment is compatible with the Orbiter and other cargo elements. MBB is responsible for verifying the compatibility of the payload with this environment. For the deployed mode, STS will provide an attitude profile of SPAS-01, and MBB will perform a thermal analysis of deployed phase and furnish results to STS.

6.3 Electromagnetic Interference/Electromagnetic Compatibility

MBB is responsible for assuring that the SPAS-01 interfaces meet the induced Electromagnetic Interference (EMI) environment and the entire SPAS-01 complies with the radiated requirements defined in ICD 2-19001. The specific characteristics of the payload radiation sources will be defined in the Payload Data Package Annex according to the schedule defined in Section 15.

The STS will perform an intentional-radiator RF interference assessment for mutual compatibility as a standard service. However, the payload retains the responsibility for assuring that the payload operates properly in the specified environment. Payload-intentional transmitter-radiated levels outside the payload envelope incident on other cargo elements within the cargo bay shall be limited to those levels specified in Figure 10.7.3.2-3 ICD 2-19001 for frequencies below S-band. At S-band and above, the limit is 20 volts/meter.

6.4 Contamination

The MBB is responsible for assuring that the SPAS-01 payload is compatible with the induced contamination environment and complies with the outgassing requirements as defined in ICD 2-19001.

6.5 Shock, Vibration, and Acoustic Environments

MBB is responsible for compatibility with the STS-induced shock, vibration, and acoustic environments defined in ICD 2-19001.

6.6 Ground Environmental Requirements

Load factors for ground handling and transportation hardware for the SPAS-01 shall not exceed those specified in the Launch Site Accommodations Handbook, K-STSM-14.1.

After cargo bay closure until launch, conditioned air/GN2 will be provided for cargo bay purge at 60 deg - 70 deg F and a humidity of 29 grains or less of moisture per pound of air and up to 1 grain per pound of nitrogen. (Time of switchover from air to GN2 is prior to cryogenic loading). For landing at KSC or Edwards AFB, conditioned air will be provided under the same conditions as above.

7.0 INTEGRATION HARDWARE

The responsibilities for the integration hardware are defined in the following paragraphs.

7.1 STS-Provided Hardware

The following unique hardware will be provided by the STS for integration into the SPAS-01.

- Grapple fixture
- Radar enhancement devices

7.2 SPAS-01 Related Unique STS Hardware

- Cable retention mechanisms

8.0 FLIGHT OPERATIONS

This section defines the flight design, flight activity planning, flight crew and flight controller training, and flight operations support activities required for SPAS-01/STS integration.

8.1 Flight Design

The STS will be responsible for performing integrated flight design from lift-off through landing. The constraints for flight design are defined in Section 4.0. MBB will provide information to support the analysis in the Flight Planning Annex. MBB will be responsible for attached SPAS-01 orbital mission requirements. STS will be responsible for deployed SPAS-01 orbital flight requirements.

8.2 Flight Activity Planning

8.2.1 Crew Activity Plan.- The STS will be responsible for all crew activity plans and will develop an integrated summary STS/SPAS-01 crew activity plan to support the flight. Included in the plan will be the MBB-supplied payload sequence of events for the attached phase. MBB will provide this sequence of events as part of the Flight Planning Annex.

8.2.2 Payload Operating Procedures.- For deployed operations, the STS is responsible for the development and verification of payload operating procedures. The payload operating procedures are provided by MBB and transmitted to the STS via the Flight Operations Support Annex of the PIP. These procedures will be used by the STS to generate the integrated STS/ payload procedures.

8.3 Training

MBB is responsible for providing payload discipline training, including briefings on experiment objectives, science background and SPAS-01 systems to the crew and STS flight controller

personnel. STS will be responsible for providing all other crew and flight controller training.

STS will determine the requirements and conduct MCC/POCC facility familiarization training, integrated simulations, and POCC personnel verification based upon an assessment of operational requirements and inputs from the payload. The payload training requirements and training schedule inputs will be provided by MBB in the Training Annex.

8.4 Flight Operations Control

STS is responsible for the conduct of on-orbit payload operations. SPAS-01 flight control operations will be conducted from onboard the Orbiter by the flight crew supported by the NASA JSC Mission Control Center (MCC) when ground coverage is available using the Spaceflight Tracking and Data Network (STDN). The STS flight control operations will be conducted from the MCC. All payload activities will be coordinated with and supported by the STS in negotiated periods of time and within the capabilities and constraints of the Orbiter. MBB will provide a representative at the JSC POCC during SPAS-01 flight operations. Display of parameters required for SPAS systems operations monitoring will be designated by NASA Flight Control and MBB, and intercom to Payload Officer will be available as a standard service. The basic plan, timelines, and agreements for the attached operations, including necessary procedures, will be identified in the Flight Operations Support Annex.

9.0 LAUNCH AND LANDING SITE SUPPORT

The Launch Site Support Manager, as the single point of contact, receives/coordinates the SPAS-01 launch and landing requirements and documents a formal KSC response in the KSC Launch Site Support Plan (PIP Annex No. 8).

MBB will retain prime responsibility for test, checkout, servicing operations, etc., while undergoing payload processing. All integrated activities will be the responsibility of STS.

9.1 Payload Processing Facility

Building TBD has been tentatively scheduled as the Payload Processing Facility (PPF) for receiving, inspection, assembly, test, and checkout. The following is a representative checklist of operations which may be performed in the PPF.

a. Receiving/inspection

b. Initial pressure system tests

c. Propellant system leak tests

d. Functional/performance verification tests

e. Communications (KSC, JSC, POCC, etc.)

f. Battery checks

g. Postflight operations

9.2 Hazardous Processing Facility - Not applicable

9.3 Vertical Processing Facility

After the transporter/SPAS enters the Vertical Processing Facility (VPF) airlock, cleaning is performed prior to entry into the high bay workstand area. The SPAS-01 is then hoisted into the appropriate position in the workstand according to its cargo manifest position. Systems testing and interface verification testing are then conducted, as required. The Cargo Integration Test Equipment (CITE) will be used in a mandatory test to assure compatibility of the SPAS-01 with the Orbiter and with other payload elements. The following is representative of the operations that may be performed in the facility.

a. Interface verification

b. Mission sequence testing

c. End-to-end testing

SPAS-01 Electrical Ground Support Equipment (EGSE) may be connected to the CITE interface to allow troubleshooting of anomalies.

Following completion of all functional and interface verification testing, the total integrated cargo is placed in the KSC payload canister (vertically) for transporting to the pad.

9.4 Pad Operations

Upon arrival at the pad, the Rotating Service Structure (RSS) crane will hoist the canister into position and the full

manifested cargo will be extracted from the canister by the Payload Ground Handling Mechanism (PGHM) and retracted into the RSS. RSS time in the rollback position may be made available for systems testing but will be charged as an optional service unless done in parallel with standard NASA operations on a non-interference basis. After the Mobile Launcher Platform (carrying the Orbiter) is hard-down on the pad, the RSS will rotate into position and the total cargo will be inserted by the PGHM into the Orbiter cargo bay. Prior to the cargo bay door closing, the total cargo-to-Orbiter interface verification tests, payload unique tests, and closeout procedures will be accomplished. A charge will be made for time required over and above the NASA standard processing time. Orbiter cargo bay door closing will be the last time that SPAS-01 may be accessed prior to lift-off.

9.5 Postflight Processing

After landing at the Shuttle Landing Facility (SLF), the Orbiter is towed to the Orbiter Processing Facility (OPF) for deservicing/safing operations. Following deservicing/safing operations, the SPAS-01 will be removed from the Orbiter cargo bay and returned to MBB.

9.6 Aborted Flight

If an aborted flight lands at the KSC Orbiter Landing Facility (OLF), the payload will be removed and returned to MBB.

In the event that an aborted flight lands at the secondary or contingency landing site, MBB should be prepared to accept the payload at the landing site after removal from the cargo bay due to the limited ferry capability of the Shuttle Carrier Aircraft. If the cargo is within the ferry capability and associated safety requirements and is compatible with associated environments, it will be returned to KSC in the Orbiter cargo bay.

10.0 SAFETY

MBB is responsible for assuring that the SPAS-01, its ASE, and its Ground Support Equipment (GSE) are safe. The SPAS-01 and GSE shall be designed to comply with the requirements of NASA Office of Space Flight document, "Safety Policy and Requirements for Payloads Using the Space Transportation System." To assess compliance with the safety requirements, a maximum of four safety reviews for the payload, GSE, and ground operations safety will be conducted by the STS in accordance with JSC 13830, "Implementation Procedure for STS Payload Safety Requirements."

The GSE and ground operations safety reviews will be coordinated/scheduled by the KSC Launch Site Support Manager (LSSM) and may be held in conjunction with the flight safety reviews or ground operations meetings.

The safety documentation required to support each safety review will be provided to the appropriate NASA organization (ground operations-KSC/LSSM, flight operations-JSC) by MBB 15 days prior to the scheduled safety review. The results of the safety reviews and assessments will be the safety certification of the SPAS-01 and GSE by MBB prior to delivery, start of processing, and installation in the Orbiter cargo bay. MBB will submit a flight readiness statement for the SPAS-01 at the flight readiness review.

11.0 INTERFACE VERIFICATION

The payload is responsible for verifying compatibility with the interfaces and environments specified in this PIP and applicable ICD's. The non-safety associated interface verification requirements and planning will be negotiated and concurred in by the STS and MBB. It is anticipated that this interface verification will be accomplished within the scope of normal test, checkout, and integration flow of the SPAS-01 payload. Included within the flow at VPF is a Cargo Integration Test to verify preinstallation electrical compatibility with the STS. The interface verification requirements are specified in Payload Interface Verification Requirements, JSC 14046. MBB will supply their interface verification summary in the Verification Requirements Annex.

12.0 POSTFLIGHT DATA REQUIREMENTS

STS will strip out recorded data, reconstruct, and send to MBB as Postflight data tape.

13.0 OPTIONAL SERVICES

Planning and budget estimates of reimbursements for the payload transportation requirements and the previously cited optional services are displayed in the STS Preliminary Price Summary, Figure 13-1. These estimates are intended to provide preliminary information on the assumed level of cost to be borne by MBB and will change through more detailed definition and joint negotiations. The estimates are stated in current year dollars and the use of these estimates for planning purposes should be adjusted for inflation.

The final estimates for Standard Shuttle Services and Optional Flight System Services will be jointly negotiated between NASA Headquarters and MBB in the Launch Services Agreement. Immediately prior to the initiation of the individual optional service, the performing NASA organization and MBB will jointly define the following tasks and negotiate the final firm price on a firm price sheet according to the Section 15 schedule for the optional service.

1. KSC Support Services including 50 Cycle Power supply and GN2 service cart usage

2. Cable retraction and retention mechanism - (NASA required) No charge - TBR No. 1

3. Provide two sets of mating interface connectors for SPAS-01 to Orbiter payload bay SMCH cables (including pins, etc.).

14.0 PIP ANNEXES

As identified in other sections of the document, the following annexes are required:

Annex 1 - Payload Data Package

Annex 2 - Flight Planning

Annex 3 - Flight Operations Support

Annex 4 - Orbiter Command and Data

Annex 5 - Payload Operations Control Center

Annex 6 - Orbiter Crew Compartment

Annex 7 - Training

Annex 8 - Launch Site Support Plan

Annex 9 - Payload Interface Verification Summary

15.0 SCHEDULE

The attached schedule, Figure 15-1, provides a summary of the various technical areas requiring data exchange and/or products in support of the (payload)/STS integration activities.

16.0 APPLICABLE DOCUMENTS

a. NASA OSF "Safety Policy and Requirements for Payloads Using the Space Transportation System," NHB 1700.7, current issue.

b. Implementation Procedure for STS Payload Safety Requirements, JSC 13830, dated May 1979.

c. STS/SPAS-01 Interface Control Document, ICD A-14024.

d. Shuttle Orbiter/Cargo Standard Interfaces, ICD 2-19001, Revision F, with change no. 28, dated March 23, 1979.

e. KSC Launch Site Accommodation Handbook, K-STSM-14.1, current issue.

f. SPIDPO Change Control Requirements and Procedures Manual, JSC 13995A, dated April 27, 1979.

g. Shuttle/Payload Integration Activities Plan, JSC 14363.

h. Space Shuttle System Payload Accommodations, JSC 07700, Volume XIV, Pevision F, with change no. 28, dated March 23, 1979.

i. RMS/Payload, ICD 2-06001, dated March 14, 1979.

j. Payload Interface Verification Requirements, JSC 14046, unreleased.

STS PRELIMINARY PRICE SUMMARY
PRICE PER LAUNCH -- CURRENT YEAR DOLLAR ESTIMATES*

DATE PREPARED: 08/03/79

PAYLOAD IDENTIFICATION: SPAS-01

	ESTIMATE*	USE FEE
STANDARD SHUTTLE PRICE ($M):	0.907*	0.391
OPTIONAL FLIGHT SYSTEM PRICE ($M):	N/A	N/A
OPTIONAL SERVICE PRICE ($M):	N/A	N/A
TOTAL ESTIMATED PRICE ($M):	0.907+TBD	0.391+TBD

STANDARD SHUTTLE CHARGE INFORMATION

PAYLOAD CHARGEABLE WEIGHT (LBS): 3960 , LENGTH (IN.): 49**

INCLINATION: 28.5 deg , CHARGE FACTOR: 0.091

EARNEST MONEY DATE: , LAUNCH DATE: 6/82

NUMBER OF FLIGHTS IN SERIES: 1

B.L.S. INDEX FACTOR*: 1.458 AS OF: 06/01/79

STANDARD: $18.271 (75$M) PLUS USE FEES $4.298

OPTIONAL FLIGHT SYSTEM INFORMATION

*Standard Shuttle price (2.424) is less a credit of 1.517 for use as PDRS Test article (2.424 minus 1.517 equal 0.907)
**59 inches + 6 inches static clearance, less 16 inches for PDRS addition equals 49 inches

---

*ESTIMATES SUBJECT TO ESCALATION ACCORDING TO THE BUREAU OF LABOR STATICS (B.L.S.) INDEX AS DEFINED IN THE NASA REIMBURSEMENT POLICIES NMI 8610.8 AND NMI 8610.9; USE FEES ARE NOT SUBJECT TO ESCALATION.
!!!NOTICE!!! THESE ESTIMATES ARE IN CURRENT YEAR DOLLARS. THE BILLINGS WILL BE IN FUTURE VALUE DOLLARS!!

Figure 13-1

PAYLOAD RELATED OPTIONAL SERVICE INFORMATION

OPTION DESCRIPTION	ESTIMATE ($M)
1. KSC Support Services	TBD
2. Cable Retraction and Retention Mechanism	TBD
3. SMCH Interface Connectors (two sets)	3.2K
OPTIONAL SERVICE SUBTOTAL	

Figure 13-1 (Concluded)

P.E. P. JASCHKE PHONE NO. 2905
PIP NO. JSC-14024
SPIDPO SIGNED

□ STS
▽ P/L
○ JOINT

SPAS-01 PAYLOAD INTEGRATION SCHEDULE

1

6 AUGUST 1979

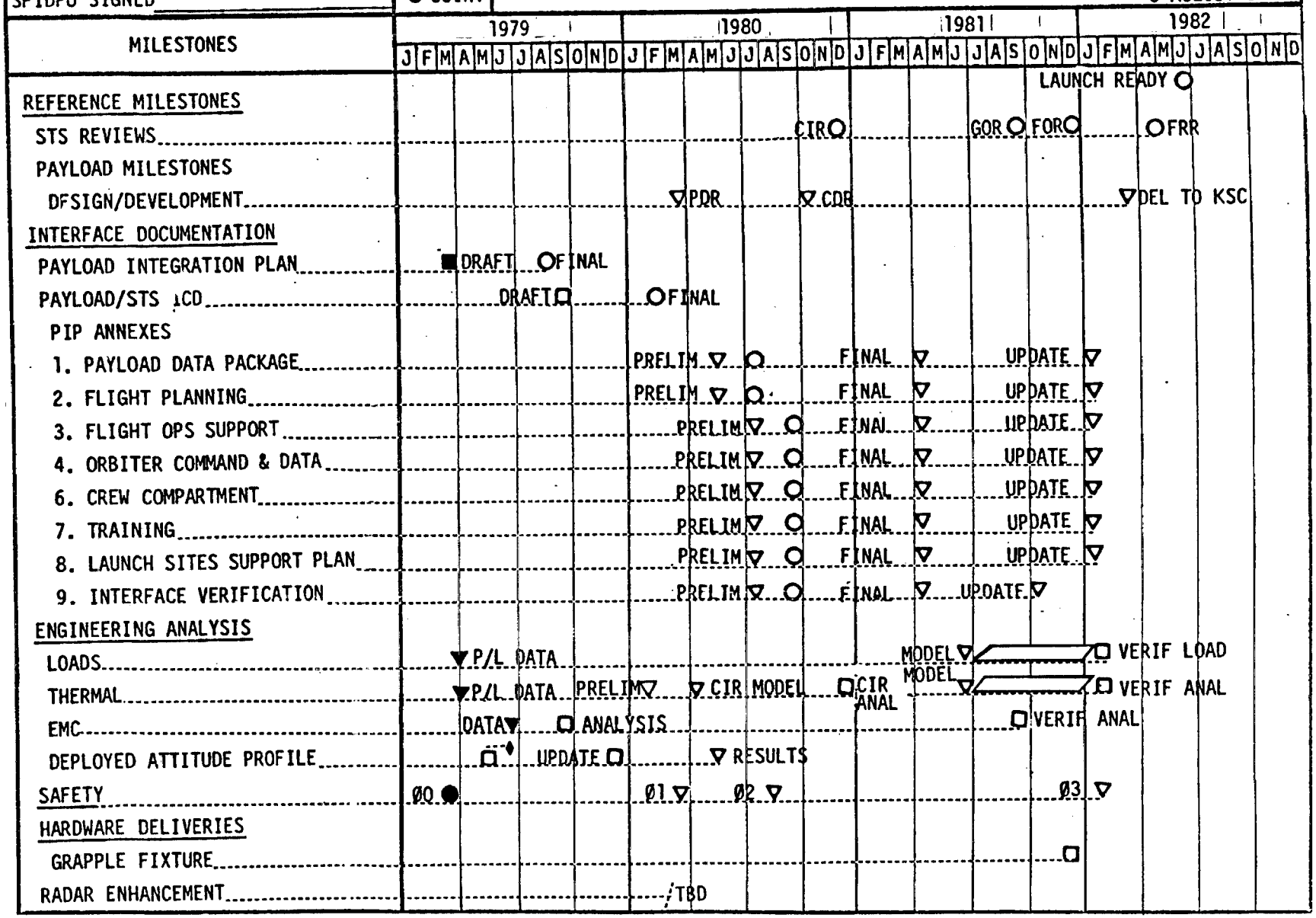

Figure 15-1.- SPAS-01 Payload Integration Schedule.

P.E. P. JASCHKE PHONE NO. 2950

PIP NO. JSC-14024

SPIDPO SIGNED

□ STS
▽ P/L
○ JOINT

SPAS-01 PAYLOAD INTEGRATION SCHEDULE (CONT)

2

6 AUGUST 1979

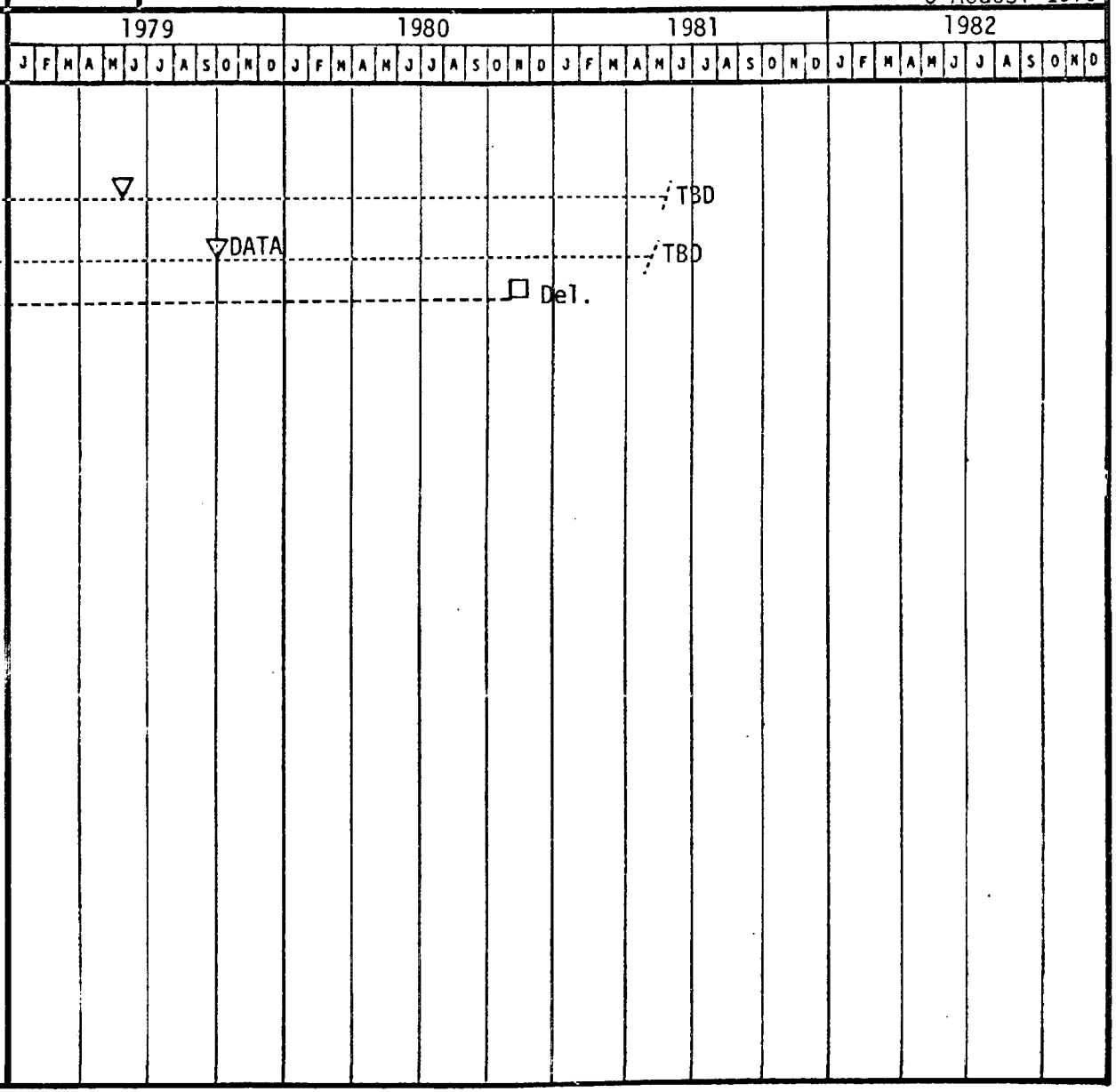

Figure 15-1.- SPAS-01 Payload Integration Schedule (Concluded).

APPENDIX A

TO BE RESOLVED ITEMS

TBR No. 1 Subject: Cable Interfaces (Reference Paragraph 5.2)

MBB's position and understanding of the verbally agreed ground rules is that there are two STS-required separation and equipment parts:

a. Separation mechanism and

b. Cable retraction and retention mechanism

Both parties are bearing the cost for the hardware that is physically on their system. As MBB has already taken item a. into its share, item b. is the responsibility of STS and should accordingly be treated as a "no cost" optional service.

It is the NASA position that the standard services cabling interface is a static interface and that the dynamic interface (retention mechanism) is an optional service. It is understood that this dynamic interface is required to support a NASA requested flight test objective. Funding for this optional service will be resolved before the launch services agreement is signed.