N81-30180

ORBIT TRANSFER VEHICLE (OTV) ADVANCED EXPANDER CYCLE ENGINE POINT DESIGN STUDY VOLUME 3. ENGINE DATA SUMMARY (FINAL REPORT)

Pratt, et al

Mar 81

N81-30180

FR-14615
VOLUME III
15 MARCH 1981

ORBIT TRANSFER VEHICLE (OTV) ADVANCED EXPANDER CYCLE ENGINE POINT DESIGN STUDY

ENGINE DATA SUMMARY

Contract NAS8-33567

Prepared for
National Aeronautics and Space Administration
George C. Marshall Space Flight Center
Marshall Space Flight Center, Alabama 35812

THIS DOCUMENT CONTAINS INFORMATION ON CARBON/CARBON MATERIALS AND TECHNOLOGY, WHICH IS SUBJECT TO EXPORT CONTROL REQUIREMENTS OF THE DEPARTMENT OF STATE INTERNATIONAL TRAFFIC AND ARMS REGULATIONS. ADDITIONAL INFORMATION IS GIVEN IN THE DEPARTMENT OF STATE MUNITIONS CONTROL NEWSLETTER, NO. 35, APRIL 1977.

UNITED TECHNOLOGIES
PRATT&WHITNEY
AIRCRAFT

REPRODUCED BY
NATIONAL TECHNICAL
INFORMATION SERVICE
U.S. DEPARTMENT OF COMMERCE
SPRINGFIELD, VA. 22161

Printed in the United States of America

49

FOREWORD

This report summarizes the characteristics of the engine defined during the Orbit Transfer Vehicle (OTV) Advanced Expander Cycle Engine Point Design Study. The study was conducted by the Pratt & Whitney Aircaft Group, Government Products Division of the United Technologies Corporation for the National Aeronautics and Space Administration's George C. Marshall Space Flight Center under contract NAS8-33567.

The results of the study are contained in the following three volumes which are submitted in accordance with the data requirements of Contract NAS8-33567.

Volume I — Executive Summary
Volume II — Final Technical Report
Volume III — Engine Data Summary

This study was initiated in December 1979 with the technical effort completed in 11 mo. The study effort was conducted under the direction of the George C. Marshall Space Flight Center's Science and Engineering Organization with Mr. Dale H. Blount as Contracting Officer's Representative. The effort at P&WA/GPD was carried out under the direction of James R. Brown, Program Manager.

CONTENTS

Section		*Page*
1	INTRODUCTION	1
2	ENGINE OPERATING CHARACTERISTICS	4
	2.1 Definitions and Requirements	4
	2.2 Steady-State Cycle	4
	2.3 Steady-State Inlet Pressure Effects	15
	2.4 Steady-State Tank Pressurization Effects	15
	2.5 Steady-State Specific Impulse	15
	2.6 Engine Life	28
	2.7 Engine Weight	28
3	ENGINE HARDWARE	30
	3.1 Propellant Flow Schematic and Operating Sequence	30
	3.2 Engine Hardware Drawings	30

ILLUSTRATIONS

Figure		*Page*
1-1	Study Flow Diagram	4
2-1	Advanced Expander Engine Propellant Flow Schematic at Full Thrust (MR=6.0)	5
2-2	Advanced Expander Engine Propellant Flow Schematic at Full Thrust (MR=7.0)	5
2-3	Advanced Expander Engine Propellant Flow Schematic at Pumped Idle (MR=6.0)	6
2-4	Advanced Expander Engine Propellant Flow Schematic at Tank Head Idle (MR=4.0)	6
2-5	Estimated Effect of Inlet Mixture Ratio on Vacuum Thrust at Full Thrust Setting	15
2-6	Estimated Effect of Engine Fuel Inlet Pressure on Full Thrust Operation	16
2-7	Estimated Effect of Engine Oxidizer Inlet Pressure on Full Thrust Operation	17
2-8	Estimated Effect of Engine Fuel Inlet Pressure on Pumped Idle Thrust Operation	18
2-9	Estimated Effect of Engine Oxidizer Inlet Pressure on Pumped Idle Thrust Operation	19
2-10	Effect of GH_2 Pressurization Flowrate on Engine Performance at Full Thrust	20
2-11	Effect of GO_2 Pressurization Flow on Engine Performance at Full Thrust	21
2-12	Effect of GH_2 Pressurization Flow on Engine Performance at Pumped Idle Thrust	22
2-13	Effect of GO_2 Pressurization Flow on Engine Performance at Pumped Idle Thrust	23
2-14	Effect of Varying GH_2 Pressurization Flow on Pressurant Temperature at Full Thrust	24
2-15	Effect of Varying GO_2 Pressurization Flow on Pressurant Temperature at Full Thrust	25
2-16	Effect of Varying GH_2 Pressurization Flow on Pressurant Temperature at Pumped Idle Thrust	26
2-17	Effect of Varying GO_2 Pressurization Flowrate on Pressurant Temperature at Pump Idle Thrust	27

ILLUSTRATIONS (Continued)

Figure		*Page*
2-18	Estimated Effect of Inlet Mixture Ratio on Vacuum Specific Impulse at Full Thrust	28
3-1	Engine Propellant Flow Schematic	31
3-2	Valve Sequence for a Typical Firing	32
3-3	Advanced Expander Cycle Engine Installation (Side View)	33
3-4	Advanced Expander Cycle Engine Installation (Top View)	34
3-5	Turbopump Assembly	35
3-6	Injector, Igniter and Thrust Check Assembly	36
3-7	Hydrogen Regenerator	37
3-8	O_2 Vortex Prevaporizer	38
3-9	GOX Heat Exchanger	39
3-10	Solenoid Valves	40
3-11	Propellant Inlet Shut-Off Valves	40
3-12	Main Fuel Shut-Off Valve	41
3-13	Propellant Tank Pressurization Valves	41
3-14	Oxidizer Flow Control Valve	42
3-15	Gaseous Oxidizer Control Valve	42
3-16	Main Fuel Control Valve	43

TABLES

Table		*Page*
2-1	Advanced Expander Cycle Engine Steady-State, 15K Design Point (O/F = 6:1)	7
2-2	Advanced Expander Cycle Engine Steady-State, Full Thrust (O/F = 7:1)	9
2-3	Advanced Expander Cycle Engine Steady-State, Pumped Idle	11
2-4	Advanced Expander Cycle Engine Steady-State, Tank Head Idle	13
2-5	Advanced Expander Cycle Engine Specific Impulse Estimates	28
2-6	Estimated Advanced Expander Cycle Engine Life	29
2-7	Estimated Advanced Expander Cycle Engine Weight	29

SECTION I
INTRODUCTION

The objective of the Orbit Transfer Vehicle (OTV) Advanced Expander Cycle Point Design Study was to generate the system design of a performance-optimized, advanced LOX/hydrogen expander cycle space engine. This engine is intended to be used in an Orbital Transfer Vehicle with an IOC date in the late 1980's.

The engine requirements that are emphasized by the OTV application include: high specific impulse within a restricted installed length constraint, long life, multiple starts, different thrust levels and man-rated reliability. Development and operational experience with the expander cycle RL10 engine, combined with our experimental work on high-pressure staged combustion rocket engines, led us to the conclusion that for upper stage engine applications, selection of the expander power cycle would result in an engine that would be significantly cheaper to develop. Design studies on advanced engines for Shuttle upper stage applications, that we carried out in the early 1970's, showed that the potential difference in specific impulse between advanced expander and staged combustion cycle space engines was less than 1%. This potential difference was too low, in our opinion, to justify the much greater development cost and risk of the staged combustion engine in this size.

In 1973, under NAS8-28989, "Design Study of RL10 Derivatives," we designed the RL10 Category IV engine, a "clean sheet" update of the RL10 design concept, using the same expander cycle, but optimized specifically for the Space Tug. The engine requirements for the Full Capability Space Tug, and those for the Orbital Transfer Vehicle, as specified in Section 2.0 of the Scope of Work (Engine Requirements), are very similar and are compared in the following:

2.0	*OTV Engine Requirements (from SOW)*	RL10 Category IV
2.1	Expander Cycle, with LH_2 and LO_2	Same
2.2	Engine Thrust 15K lb at MR 6.0:1	Same
2.3	Installed Length (two-position nozzle retracted) $\leq$60 in.	57 in.
2.4	1980 State-of-the-art	1973 State-of-the-art
2.5	MR Range of 6:1 to 7:1	MR Range of 5.5 to 6.5:1
2.6	Fuel NPSH 15 ft Oxygen NPSH 2 ft	Fuel NPSH 0 ft Oxygen NPSH 0 ft
2.7	Life $\geq$300 firings/10 hr	Same
2.8	Chamber pressure spikes $< \pm 5\%$	Not specified
2.9	2-position contoured bell nozzle	Same
2.10	Gimbal range +15 deg pitch −6 deg pitch $\pm$6 deg yaw	$\pm$4 deg pitch $\pm$4 deg yaw
2.11	Engine provides H_2 and O_2 autogeneous pressurization	Same

2.12	Man-rated, provides abort return	Not specified
2.13	Meet Orbiter Safety Requirements	Same
2.14	Low Thrust Operation at ≈ 1Klb	Maneuver thrust at 3.75K lb

The impact of the differences in engine requirements, such as different inlet conditions, gimbal angles, mixture ratio range and low thrust level is comparatively minor. An issue that will have to be addressed in conjunction with the Vehicle System Contractors is how the engine can assist in providing abort return of the vehicle.

The study objective calls for a performance-optimized engine system design. For a typical OTV mission, engine specific impulse has a far greater performance impact than engine weight (+1 sec Isp would justify >40-lb increase in engine inert weight), so the emphasis was on maximizing specific impulse. Since engine cycle, propellants, nozzle concept, installed length, and mixture ratio are all specified, this is done primarily through increasing chamber pressure and hence nozzle area ratio.

A 15,000-lb thrust Advanced Expander Cycle Engine, that has been optimized to meet the study objective, is compared with the RL10 Category IV (1973) engine as follows:

	RL10 Category IV (1973)	*Advanced Expander Cycle Engine*
Thrust	15,000 lb	15,000 lb
Installed Length	57 in.	60 in.
Chamber Pressure	915 psia	1500 psia
Area Ratio	401:1	640:1
Isp at 6.0 MR	470 sec	482 sec
Weight	424 lb	427 lb
Life	300 firings/10 hr	300 firings/10 hr
Operation		
Full Thrust	Saturated Propellants	Low NPSH (2 ft O_2, 15 ft H_2)
Low Thrust Conditioning	Saturated Propellants Tank Head Idle	Saturated Propellants Tank Head Idle
Technology	1973	1980

The most significant difference between these two engines is that the specific impulse of the Advanced Expander Cycle Engine has been increased to 482 sec. This 12-sec increase in specific impulse over the RL10 Category IV engine is due to a combination of factors which include: increased installation length (57 to 60 in.), updated performance prediction, use of the "preheat" expander power cycle, improved technology turbopumps with higher efficiencies, and reduced power margin.

Increasing the installed length of the 57-in. RL10 Category IV engine to 60 in. allows area ratio to be raised to approximately 433:1, increasing specific impulse by 1 sec.

Testing carried out subsequent to 1973 on engines with very high-area-ratio nozzles (i.e., RL10 with ϵ = 205, ASE with ϵ = 175 and 400) showed that the achieved performance was higher than that predicted by the current JANNAF methods by as much as 1.3%.

The chamber pressure of a power-limited expander cycle engine may be increased by preheating the chamber coolant with the turbine discharge flow, thereby raising turbine inlet temperature, and hence, increasing turbine power. This "preheat" expander power cycle was investigated on an improved version of the RL10 Category IV, the "RL10 Category IV*." Chamber pressure is increased by more than 30% to approximately 1200 psia, giving an increase in specific impulse of approximately 1%.

Further increases in chamber pressure have been obtained by increasing turbopump efficiency through increasing speeds and by reducing turbine bypass flow. These higher speeds may require a considerable effort in the design of the fuel turbopump to prevent its operation at or below critical speed. Reducing turbine bypass flow from 5.7 to 3% reduces performance degradation margin, which may be undesirable on a long life engine. The effect of these changes is to allow chamber pressure to be increased by slightly less than 30% to 1,500 psia, giving an increase in specific impulse of aproximately ½%.

Once the chamber pressure of an OTV engine is increased over 1,200 psia, the rate of increase in specific impulse with further increases in chamber pressure is quite low (approximately 1.3 sec/100 psia), and is decreasing, whereas the difficulty resulting from obtaining these further increases is high, and is increasing. It was not the purpose of this study to optimize performance gain vs development risk; rather, by maximizing performance in a point design of adequate depth, the key performance "driver" elements in an advanced expander cycle engine may be identified, thereby enabling the new technology requirements to be defined.

SECTION 2
ENGINE OPERATING CHARACTERISTICS

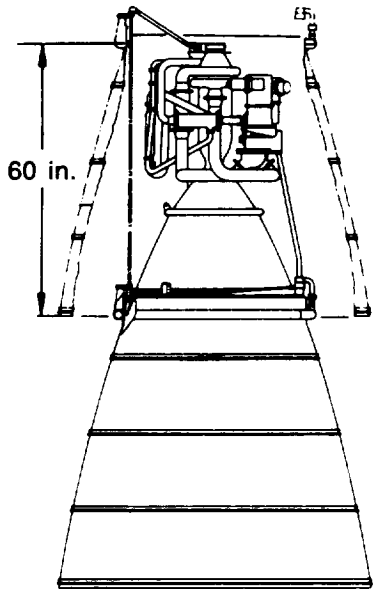

Thrust	: 15,000 lb
Mixture Ratio	: 6.0:1 to 7.0:1
Chamber Pressure	: 1505 psia
Area Ratio	: 640
I_{sp}	: 482.0 sec at 6.0 MR
Operation	: Full Thrust (Low NPSH)
	: Pumped Idle (15000 lb Thrust) (Saturated Propellants)
Conditioning	: Tank Head Idle
Weight	: 427 lb
Life (Design TBO)	: 300 Firings/10 hr

FD 219109

2.1 DEFINITIONS AND REQUIREMENTS

The Advanced Expander cycle engine is a "clean sheet" advanced-technology engine, incorporating improved pump and turbine designs and a hydrogen regenerator. Basically, it is a "1980 state-of-the-art" design optimized specifically for use in the man-rated OTV. The baseline Advanced Expander engine has the following requirements:

1. Interface requirements: not yet defined.
2. Operating modes

   (1) Tank head idle
   (2) Pumped idle
   (3) Low NPSH pumping capability at full thrust

3. Design life: 300 firings and 10 hr
4. Thrust level: 15,000 lb at 6.0 mixture ratio
5. Performance: optimized

2.2 STEADY-STATE CYCLE

The steady-state cycle parameters of the Advanced Expander engine are presented in Figures 2-1 through 2-4 and Tables 2-1 through 2-4 for the operating points of full thrust (O/F = 6:1), full thrust (O/F = 7:1), pumped idle and tank head idle.

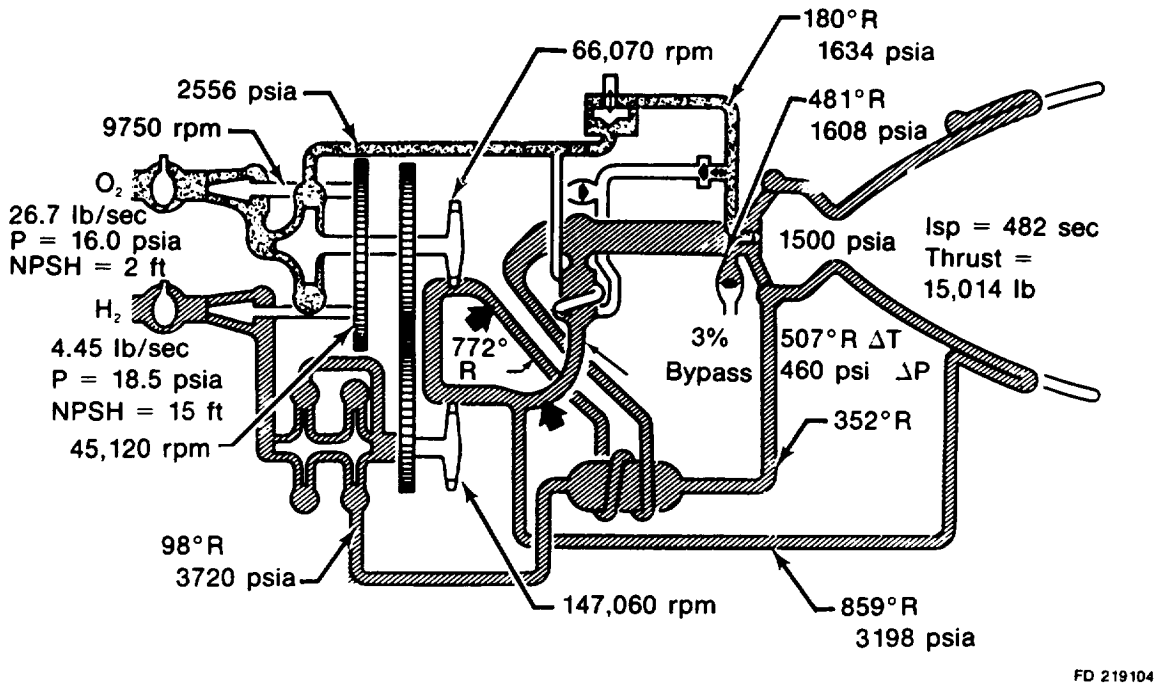

Figure 2-1. Advanced Expander Engine Propellant Flow Schematic at Full Thrust (MR=6.0)

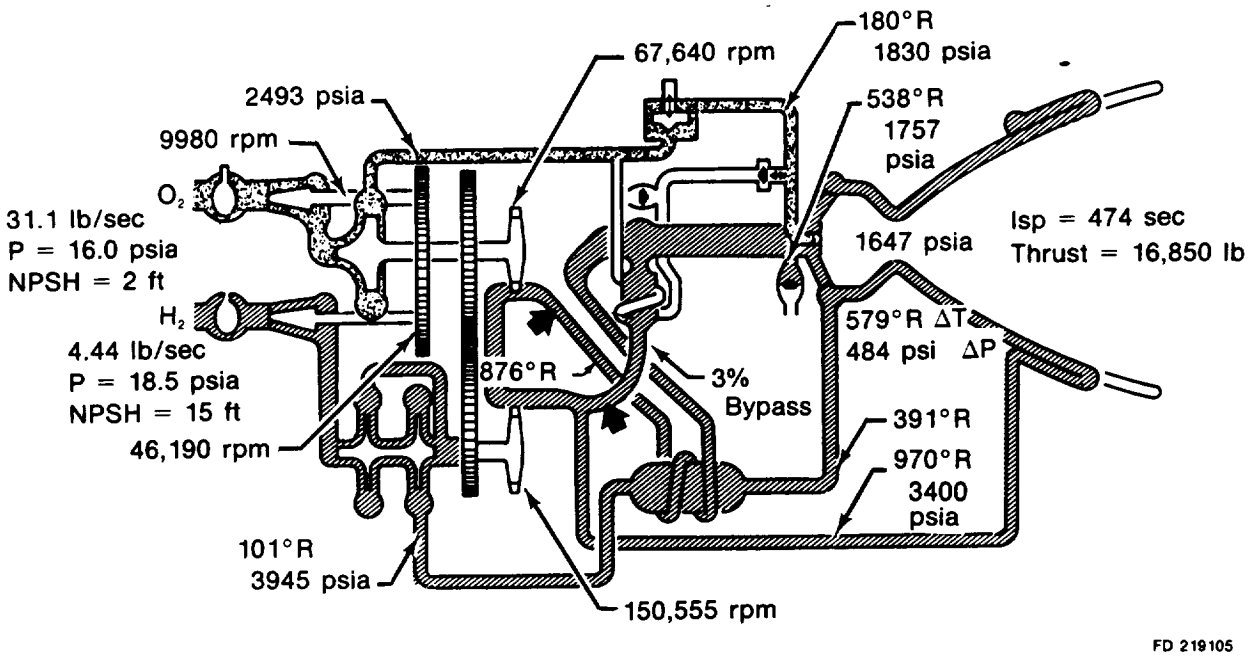

Figure 2-2. Advanced Expander Engine Propellant Flow Schematic at Full Thrust (MR=7.0)

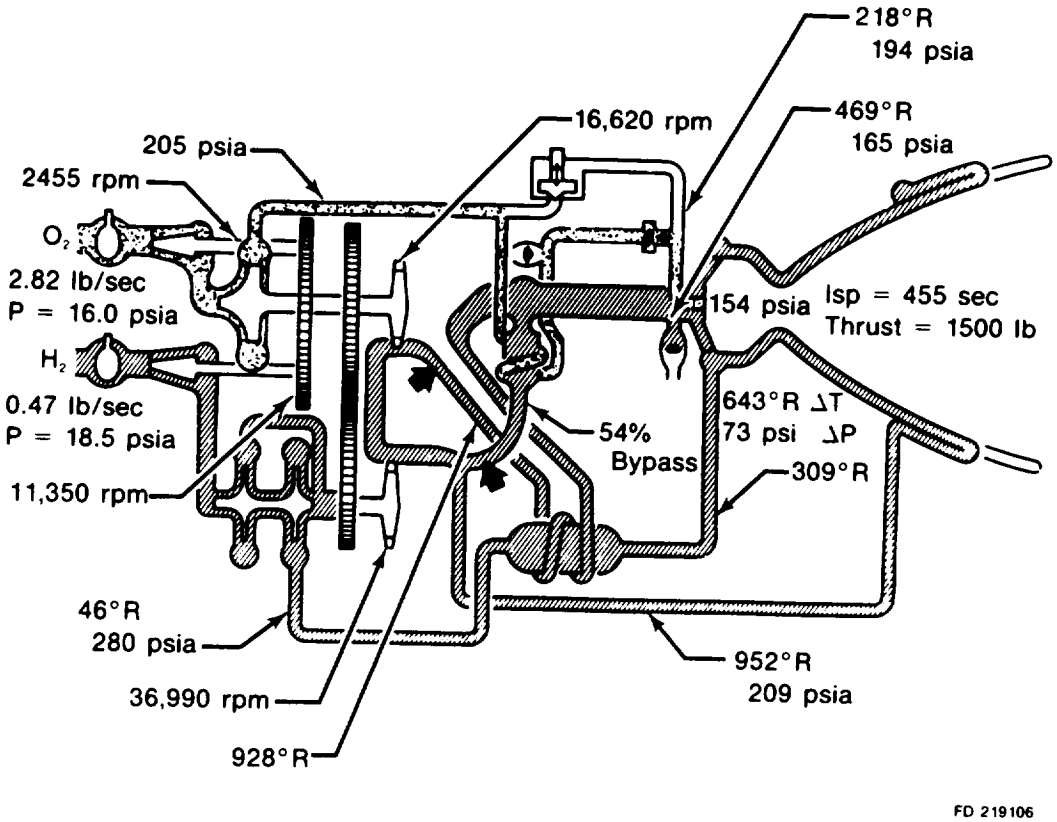

Figure 2-3. Advanced Expander Engine Propellant Flow Schematic at Pumped Idle (MR=6.0)

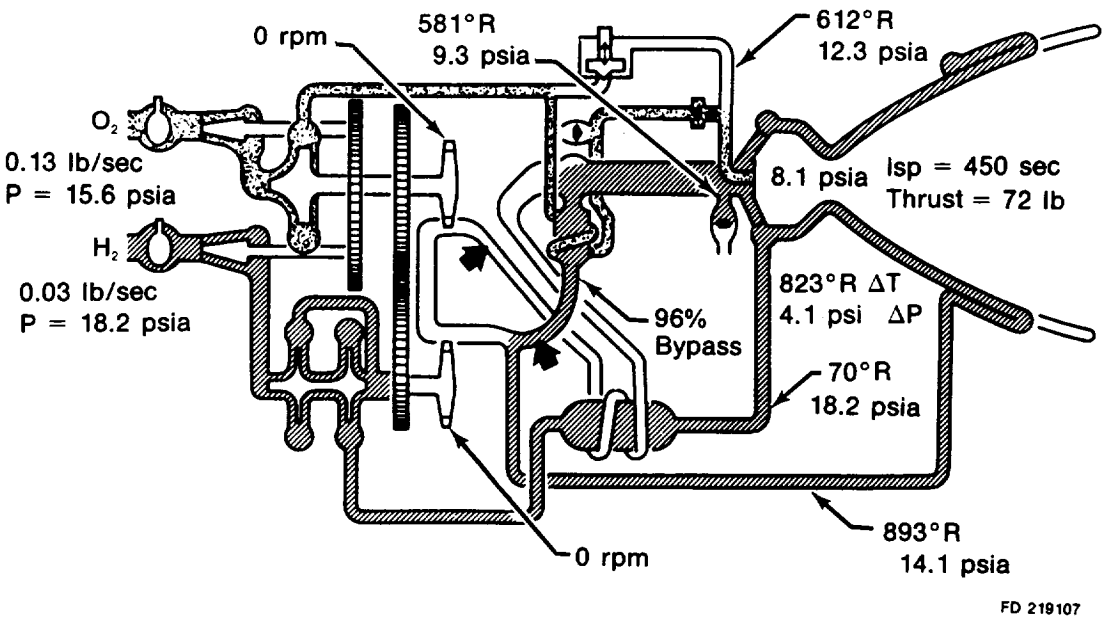

Figure 2-4. Advanced Expander Engine Propellant Flow Schematic at Tank Head Idle (MR=4.0)

Table 2-1. Advanced Expander Cycle Engine Steady-State, 15K Design Point (O/F=6:1)

INLET CONDITIONS

FUEL		LOX	
PRESSURE	18.47	PRESSURE	15.98
TEMP	37.7	TEMP	162.7
NPSP	0.46	NPSP	0.98
FLOW	4.45	FLOW	26.69

FUEL LSI		LOX LSI		FUEL PUMP (MAIN)		LOX PUMP (MAIN)	
SPEED	45119.	SPEED	9751.	SPEED	147062.	SPEED	66071.
SS SPEED	125604.	SS SPEED	75693.	SS SPEED	9312.	SS SPEED	20421.
FLOW	4.45	FLOW	26.69	FLOW	4.448	FLOW	26.690
POWER	24.1	POWER	9.5	INLET GPM	453.6	POWER	360.10
EFF	0.7464	EFF	0.7477	NPSP	66.70	EFF	0.6737
DISCH P	86.27	DISCH P	88.51			INLET P	87.31
RHO IN	4.378	RHO IN	71.094	* 1ST STAGE *		INLET T	163.0
				POWER	787.05	DISCH P	2555.85
				EFF	0.6183	DISCH T	176.7
FUEL TURBINE		LOX TURBINE		INLET P	85.33	RHO IN	71.106
FLOW	4.203	FLOW	4.203	DISCH P	1900.22	RHO OUT	71.118
POWER	1628.34	POWER	359.54	DISCH T	67.688	INLET GPM	168.5
EFF	0.7122	EFF	0.7571	RHO IN	4.402	NPSP	72.08
INLET P	3144.41	INLET P	1955.18	RHO OUT	4.322		
INLET T	859.4	INLET T	788.2	* 2ND STAGE *			
DIS P(S)	2009.51	DIS P(S)	1772.09	POWER	807.64		
DELH ACT	273.8	DELH ACT	60.5	EFF	0.6582		
M. VEL R	0.449	M. VEL R	0.542	INLET P	1879.86		
ACD	0.299	ACD	0.739	DISCH P	3720.14		
PCT HP	100.59	PCT HP	97.27	DISCH T	98.0		
HP TRANS	-33.7	P/P	1.103	RHO OUT	4.290		
P/P	1.565						

FUEL INJECTOR		LOX INJECTOR		*		
DELTA P	107.98	DELTA P	134.22	*	MIXTURE RATIO	6.000 *
INLET P	1607.65	INLET P	1633.89	*	THRUST	15014. *
INLET T	480.8	INLET T	180.2	*	IMPULSE	482.16 *
ACD	0.820	ACD	0.402	*	CHAMBER PRESSURE	1499.67 *
MV	36.690	RHO	69.684	*		*
		MV	24.105	*		*

JACKET		LEAKAGE & BLEED		RM CONTROL VLV		TURBIN BYPASS CV	
FLOW	4.35	WLEAK	0.100	DELTA P	921.96	ACD	0.0097
INLET P	3658.68	WT/P-F	0.0	ACD	0.1518	WTBY/WF	3.336
INLET T	352.0	WT/P-L	0.0	K FACTOR	97.1019	WTBY	0.145
DELTA PJ	459.896	TOXP	484.011			P/P	1.990
DELTA TJ	507.046	POXP	2555.842				
		PFP	1607.648				
		TFP	480.810				

Table 2-1. Advanced Expander Cycle Engine Steady-State, 15K Design Point (O/F=6:1) (Continued)

SYSTEM PRESSURE LOSSES		CHAMBER	
CO/P DIS LINE	1.202	PC (INJ FACE)	1499.673
FB/P DIS LINE	0.944	IMPULSE (CHAMBER)	482.330
PUMP INTR STG	20.360	IMPULSE (DELIVERED)	482.162
PUMP DIS LINE	40.351	MIXTURE RATIO(INLET)	6.000
JAC IN LINE	20.013	MIXTURE RATIO(CHAMBER)	6.138
JAC DIS LINE	22.143	MIXTURE RATIO(IGNITER)	4.621
FUEL TURB IN	32.227		
FUEL TURB DIS	19.080		
FUEL INTR LINE	12.189		
OX TURB IN	23.066		
OX TURB DIS	10.009		
FUEL INJ IN LINE	11.169		
OX INJ IN LINE	26.049		

ENGINE STATION CONDITIONS

STATION	PRESSURE	TEMP	FLOW	ENTHALPY	DENSITY
FUEL SYSTEM CONDITIONS					
B P INLET	18.47	37.65	4.448	-109.16	4.378
B P EXIT	86.27	37.95	4.448	-105.33	4.402
PUMP IN. 1ST	85.33	37.97	4.448	-105.33	4.402
PUMP EX. 1ST	1900.22	67.69	4.448	19.72	4.322
PUMP IN. 2ND	1879.86	70.52	4.705	26.72	4.231
PUMP EX. 2ND	3720.14	97.97	4.705	148.05	4.290
REGN COLD IN	3679.79	98.30	4.348	148.05	4.271
JACKET INLET	3658.68	352.02	4.348	1139.46	1.604
JACKET EXIT	3193.78	859.07	4.348	2983.22	0.638
F TURB INLET	3144.41	859.40	4.203	2983.22	0.628
F TURB EXIT	2009.51	787.90	4.203	2709.41	0.450
O TURB INLET	1955.18	788.21	4.203	2709.41	0.438
O TURB EXIT	1772.09	771.97	4.203	2648.95	0.408
REGN HOT IN	1661.67	772.58	4.051	2648.95	0.383
GOX HX INLET	1607.66	685.95	0.145	2344.44	0.416
GOX HX EXIT	1607.65	685.96	0.145	2344.44	0.416
INJECT INLET	1607.65	480.81	4.196	1611.26	0.585
IGNITER	1772.09	771.97	0.152	2648.95	0.408
OXIDIZER SYSTEM CONDITIONS					
B P INLET	15.98	162.67	26.690	60.93	71.094
B P EXIT	88.51	163.00	26.690	61.18	71.106
PUMP INLET	87.31	163.00	26.690	61.18	71.106
PUMP EXIT	2555.85	176.69	26.690	70.72	71.118
INJECT INLET	1633.89	180.21	25.986	70.72	69.684
IGNITER	2555.84	484.01	0.704	202.27	17.468

ENGINE DESIGN PARAMETERS

AREA RATIO	642.0	ENGINE LENGTH	120.0
DES. AREA RATIO	1434.	CHAMBER LENGTH	15.0
SURFACE AREA	12985.	NOZZLE LENGTH	94.0
THROAT AREA	4.927	THROAT DIAMETER	2.505
FRI. SURF. AREA	2592.	ENGINE WEIGHT	391.0

Table 2-2. Advanced Expander Cycle Engine Steady-State, Full Thrust (O/F=7:1)

INLET CONDITIONS

FUEL		LOX	
PRESSURE	18.47	PRESSURE	15.98
TEMP	37.7	TEMP	162.7
NPSP	0.46	NPSP	0.98
FLOW	4.44	FLOW	31.11

FUEL LSI		LOX LSI		FUEL PUMP (MAIN)		LOX PUMP (MAIN)	
SPEED	46191.	SPEED	9983.	SPEED	150555.	SPEED	67641.
SS SPEED	128534.	SS SPEED	83665.	SS SPEED	9457.	SS SPEED	25935.
FLOW	4.44	FLOW	31.11	FLOW	4.445	FLOW	31.113
POWER	26.0	POWER	10.0	INLET GPM	453.1	POWER	422.11
EFF	0.7497	EFF	0.6937	NPSP	72.25	EFF	0.6572
DISCH P	91.96	DISCH P	76.71			INLET P	75.08
RHO IN	4.378	RHO IN	71.094	* 1ST STAGE *		INLET T	163.0
				POWER	830.66	DISCH P	2493.38
				EFF	0.6199	DISCH T	177.0
FUEL TURBINE		LOX TURBINE		INLET P	91.02	RHO IN	71.018
				DISCH P	2012.06	RHO OUT	71.014
FLOW	4.184	FLOW	4.184	DISCH T	69.545	INLET GPM	196.6
POWER	1758.25	POWER	383.71	RHO IN	4.403	NPSP	59.87
EFF	0.7102	EFF	0.7556	RHO OUT	4.319		
INLET P	3342.81	INLET P	2115.33				
INLET T	970.5	INLET T	893.1	* 2ND STAGE *			
DIS P(S)	2171.70	DIS P(S)	1927.01	POWER	853.30		
DELH ACT	297.0	DELH ACT	64.8	EFF	0.6597		
M. VEL R	0.441	M. VEL R	0.535	INLET P	1991.72		
ACD	0.299	ACD	0.741	DISCH P	3944.74		
PCT HP	102.83	PCT HP	88.79	DISCH T	101.2		
HP TRANS	-74.3	P/P	1.097	RHO OUT	4.298		
P/P	1.539						

FUEL INJECTOR		LOX INJECTOR			
DELTA P	110.37	DELTA P	184.00	* MIXTURE RATIO	7.000 *
INLET P	1757.45	INLET P	1831.09	* THRUST	16850. *
INLET T	538.5	INLET T	179.5	* IMPULSE	473.90 *
ACD	0.818	ACD	0.402	* CHAMBER PRESSURE	1647.09 *
MV	37.411	RHO	69.990	*	*
		MV	33.046		

JACKET		LEAKAGE & BLEED		RM CONTROL VLV		TURBIN BYPASS CV	
FLOW	4.33	WLEAK	0.110	DELTA P	662.29	ACD	0.0101
INLET P	3883.76	WT/P-F	0.0	ACD	0.2104	WTBY/WF	3.476
INLET T	391.2	WT/P-L	0.0	K FACTOR	50.5836	WTBY	0.151
DELTA PJ	483.841	TOXP	589.382			P/P	1.935
DELTA TJ	573.927	POXP	2493.369				
		TFP	538.503				

Table 2-2. Advanced Expander Cycle Engine Steady-State, Full Thrust (O/F=7:1) (Continued)

SYSTEM PRESSURE LOSSES	
OB/P DIS LINE	1.634
FB/P DIS LINE	0.942
PUMP INTR STG	20.342
PUMP DIS LINE	40.027
JAC IN LINE	19.852
JAC DIS LINE	23.299
FUEL TURB IN	33.811
FUEL TURB DIS	19.797
FUEL INTR LINE	12.647
OX TURB IN	23.932
OX TURB DIS	10.341
FUEL INJ IN LINE	11.369
OX INJ IN LINE	35.712

CHAMBER	
PC (INJ FACE)	1647.087
IMPULSE (CHAMBER)	474.034
IMPULSE (DELIVERED)	473.898
MIXTURE RATIO(INLET)	7.000
MIXTURE RATIO(CHAMBER)	7.177
MIXTURE RATIO(IGNITER)	3.984

ENGINE STATION CONDITIONS

STATION	PRESSURE	TEMP	FLOW	ENTHALPY	DENSITY
FUEL SYSTEM CONDITIONS					
B P INLET	18.47	37.65	4.445	-109.16	4.378
B P EXIT	91.96	38.00	4.445	-105.03	4.404
PUMP IN. 1ST	91.02	38.02	4.445	-105.04	4.403
PUMP EX. 1ST	2012.06	69.54	4.445	27.05	4.319
PUMP IN. 2ND	1991.72	72.26	4.701	34.24	4.233
PUMP EX. 2ND	3944.74	101.25	4.701	162.54	4.298
REGN COLD IN	3904.71	101.57	4.335	162.54	4.280
JACKET INLET	3883.76	391.22	4.335	1300.71	1.533
JACKET EXIT	3399.92	970.15	4.335	3376.52	0.602
F TURB INLET	3342.81	970.51	4.184	3376.52	0.593
F TURB EXIT	2171.70	892.78	4.184	3079.52	0.430
O TURB INLET	2115.33	893.12	4.184	3079.52	0.419
O TURB EXIT	1927.01	875.69	4.184	3014.70	0.391
REGN HOT IN	1813.16	876.36	4.029	3014.70	0.369
GOX HX INLET	1757.47	788.94	0.151	2708.08	0.396
GOX HX EXIT	1757.45	788.97	0.151	2708.08	0.395
INJECT INLET	1757.45	538.50	4.179	1823.23	0.570
IGNITER	1927.01	875.69	0.156	3014.70	0.391
OXIDIZER SYSTEM CONDITIONS					
B P INLET	15.98	162.67	31.113	60.93	71.094
B P EXIT	76.71	162.98	31.113	61.16	71.018
PUMP INLET	75.08	162.98	31.113	61.15	71.018
PUMP EXIT	2493.38	177.00	31.113	70.74	71.014
INJECT INLET	1831.09	179.54	30.492	70.74	69.990
IGNITER	2493.37	589.38	0.620	233.16	12.831

ENGINE DESIGN PARAMETERS

AREA RATIO	642.0	ENGINE LENGTH	120.0
DES. AREA RATIO	1434.	CHAMBER LENGTH	15.0
SURFACE AREA	12985.	NOZZLE LENGTH	94.0
THROAT AREA	4.927	THROAT DIAMETER	2.505
PRI. SURF. AREA	2592	ENGINE WEIGHT	427.0

Table 2-3. Advanced Expander Cycle Engine Steady-State, Pumped Idle

INLET CONDITIONS

FUEL		LOX	
PRESSURE	18.47	PRESSURE	15.98
TEMP	37.7	TEMP	162.7
NPSP	0.46	NPSP	0.98
FLOW	0.47	FLOW	2.82

FUEL LSI		LOX LSI		FUEL PUMP (MAIN)		LOX PUMP (MAIN)	
SPEED	11348.	SPEED	2453.	SPEED	36988.	SPEED	16618.
SS SPEED	10277.	SS SPEED	6193.	SS SPEED	3810.	SS SPEED	8464.
FLOW	0.47	FLOW	2.82	FLOW	0.471	FLOW	2.825
POWER	0.5	POWER	0.2	INLET GPM	48.1	POWER	3.99
EFF	0.4153	EFF	0.3925	NPSP	8.35	EFF	0.4754
DISCH P	25.29	DISCH P	23.30			INLET P	23.29
RHO IN	4.378	RHO IN	71.094	* 1ST STAGE *		INLET T	162.8
				POWER	9.83	DISCH P	205.45
				EFF	0.3711	DISCH T	164.5
FUEL TURBINE		LOX TURBINE		INLET P	25.28	RHO IN	70.967
FLOW	0.210	FLOW	0.210	DISCH P	153.27	RHO OUT	70.967
POWER	20.64	POWER	3.84	DISCH T	41.658	INLET GPM	17.9
EFF	0.4980	EFF	0.5691	RHO IN	4.390	NPSP	8.28
INLET P	203.90	INLET P	173.60	RHO OUT	4.288		
INLET T	951.8	INLET T	932.0	* 2ND STAGE *			
DIS P(S)	175.35	DIS P(S)	169.38	POWER	10.01		
DELH ACT	69.3	DELH ACT	12.9	EFF	0.3981		
M. VEL R	0.188	M. VEL R	0.256	INLET P	153.04		
ACD	0.320	ACD	0.835	DISCH P	282.37		
PCT HP	101.63	PCT HP	91.58	DISCH T	45.8		
HP TRANS	-0.8	P/P	1.025	RHO OUT	4.191		
P/P	1.162						

FUEL INJECTOR		LOX INJECTOR			
DELTA P	11.00	DELTA P	39.91	MIXTURE RATIO	6.000
INLET P	164.71	INLET P	193.62	THRUST	1501.
INLET T	468.5	INLET T	217.6	IMPULSE	455.35
ACD	0.820	ACD	0.402	CHAMBER PRESSURE	153.71
MV	3.723	RHO	2.689		
		MV	7.168		

JACKET		LEAKAGE & BLEED		RM CONTROL VLV		TURBIN BYPASS CV	
FLOW	0.46	WLEAK	0.010	DELTA P	10.50	ACD	0.3176
INLET P	281.66	WT/P-F	0.0	ACD	0.0417	WTBY/WF	54.310
INLET T	308.8	WT/P-L	0.0	K FACTOR	96.2051	WTBY	0.250
DELTA PJ	72.639	TOXP	909.615			P/P	1.263
DELTA TJ	642.834	POXP	205.453				
		PFP	164.710				
		TFP	468.517				

Table 2-3. Advanced Expander Cycle Engine Steady-State, Pumped Idle (Continued)

SYSTEM PRESSURE LOSSES	
OB/P DIS LINE	0.013
FB/P DIS LINE	0.011
PUMP INTR STG	0.230
PUMP DIS LINE	0.463
JAC IN LINE	0.230
JAC DIS LINE	3.864
FUEL TURB IN	1.256
FUEL TURB DIS	0.612
FUEL INTR LINE	0.391
OX TURB IN	0.740
OX TURB DIS	0.301
FUEL INJ IN LINE	1.133
OX INJ IN LINE	7.746

CHAMBER	
PC (INJ FACE)	153.710
IMPULSE (CHAMBER)	455.693
IMPULSE (DELIVERED)	455.355
MIXTURE RATIO(INLET)	6.000
MIXTURE RATIO(CHAMBER)	6.133
MIXTURE RATIO(IGNITER)	3.123

ENGINE STATION CONDITIONS

STATION	PRESSURE	TEMP	FLOW	ENTHALPY	DENSITY
FUEL SYSTEM CONDITIONS					
B P INLET	18.47	37.65	0.471	-109.16	4.378
B P EXIT	25.29	37.35	0.471	-108.46	4.390
PUMP IN. 1ST	25.28	37.35	0.471	-108.47	4.390
PUMP EX. 1ST	153.27	41.66	0.471	-93.71	4.288
PUMP IN. 2ND	153.04	41.91	0.498	-92.95	4.275
PUMP EX. 2ND	282.37	45.81	0.498	-78.73	4.191
REGN COLD IN	281.90	45.76	0.461	-78.73	4.192
JACKET INLET	281.66	308.84	0.461	944.10	0.169
JACKET EXIT	209.02	951.73	0.461	3244.08	0.041
F TURB INLET	203.90	951.76	0.210	3244.07	0.040
F TURB EXIT	175.35	931.95	0.210	3174.75	0.035
O TURB INLET	173.60	931.96	0.210	3174.75	0.035
O TURB EXIT	169.38	928.27	0.210	3161.87	0.034
REGN HOT IN	166.24	928.29	0.197	3161.87	0.033
GOX HX INLET	165.06	939.65	0.250	3201.28	0.033
GOX HX EXIT	164.71	641.33	0.250	2163.90	0.048
INJECT INLET	164.71	468.52	0.447	1550.96	0.066
IGNITER	169.38	928.27	0.013	3161.87	0.034
OXIDIZER SYSTEM CONDITIONS					
B P INLET	15.98	162.67	2.825	60.93	71.094
B P EXIT	23.30	162.76	2.825	60.98	70.967
PUMP INLET	23.29	162.76	2.825	60.98	70.967
PUMP EXIT	205.45	164.45	2.825	61.98	70.967
GOX HX INLET	205.45	164.45	2.783	61.98	70.967
GOX HX EXIT	204.12	217.64	2.783	155.20	60.181
INJECT INLET	193.62	217.64	2.783	155.20	2.689
IGNITER	205.45	909.61	0.041	319.93	0.671

ENGINE DESIGN PARAMETERS

AREA RATIO	642.0	ENGINE LENGTH	120.0
DES. AREA RATIO	1434.	CHAMBER LENGTH	15.0
SURFACE AREA	12985.	NOZZLE LENGTH	94.0
THROAT AREA	4.927	THROAT DIAMETER	2.505
PRI. SURF. AREA	2592.	ENGINE WEIGHT	391.0

Table 2-4. Advanced Expander Cycle Engine Steady-State, Tank Head Idle

INLET CONDITIONS

FUEL		LOX	
PRESSURE	18.23	PRESSURE	15.60
TEMP	37.6	TEMP	162.2
NPSP	0.46	NPSP	0.98
FLOW	0.03	FLOW	0.13

FUEL INJECTOR		LOX INJECTOR			
DELTA P	1.16	DELTA P	4.22	MIXTURE RATIO	4.000
INLET P	9.26	INLET P	12.32	THRUST	72.
INLET T	581.1	INLET T	611.8	IMPULSE	449.75
ACD	0.839	ACD	0.461	CHAMBER PRESSURE	8.10
MV	0.377	RHO	0.060		
		MV	0.550		

ENGINE STATION CONDITIONS

STATION	PRESSURE	TEMP	FLOW	ENTHALPY	DENSITY
FUEL SYSTEM CONDITIONS					
INLET	18.23	37.56	0.032	-109.37	4.382
REGN COLD IN	18.21	37.56	0.032	-109.38	4.382
JACKET INLET	18.21	70.00	0.032	168.80	0.050
JACKET EXIT	14.13	893.39	0.032	3037.80	0.003
HEX INLET	9.46	882.09	0.028	2998.50	0.002
HEX EXIT	9.39	636.85	0.028	2145.97	0.003
REGN HOT IN	9.39	893.39	0.003	3037.80	0.003
INJECT INLET	9.26	581.10	0.031	1950.60	0.003
IGNITER	14.13	893.39	0.001	3037.80	0.003
OXIDIZER SYSTEM CONDITIONS					
INLET	15.60	162.24	0.128	60.75	71.169
HEX INLET	15.60	162.24	0.128	60.75	71.169
HEX EXIT	15.53	611.81	0.128	251.22	0.060
INJECT INLET	12.32	611.81	0.123	251.22	0.060
IGNITER	15.60	893.39	0.004	316.32	0.052

ENGINE DESIGN PARAMETERS

AREA RATIO	642.0	ENGINE LENGTH	120.0
DES. AREA RATIO	1434.	CHAMBER LENGTH	15.0
SURFACE AREA	12985.	NOZZLE LENGTH	94.0
THROAT AREA	4.927	THROAT DIAMETER	2.505
PRI. SURF. AREA	2592.	ENGINE WEIGHT	391.0

JACKET		LEAKAGE & BLEED		RM CONTROL VLV		TURBIN BYPASS CV	
FLOW	0.03	WLEAK	0.0	DELTA P	3.21	ACD	0.4355
INLET P	18.21	WT/P-F	0.0	ACD	0.4550	WTBY/WF	96.061
INLET T	70.0	WT/P-L	0.0	K FACTOR	12.6802	WTBY	0.028
DELTA PJ	4.076	TOXP	893.394			P/P	1.494
DELTA TJ	823.394	POXP	15.602				
		PFP	9.262				
		TFP	581.100				

Table 2-4. Advanced Expander Cycle Engine Steady-State, Tank Head Idle (Continued)

SYSTEM PRESSURE LOSSES		CHAMBER	
OB/P DIS LINE	0.000	PC (INJ FACE)	8.100
FB/P DIS LINE	0.000	IMPULSE (CHAMBER)	449.751
PUMP INTR STG	0.001	IMPULSE (DELIVERED)	449.751
PUMP DIS LINE	0.002	MIXTURE RATIO(INLET)	4.000
JAC IN LINE	0.001	MIXTURE RATIO(CHAMBER)	4.000
JAC DIS LINE	0.256	MIXTURE RATIO(IGNITER)	3.750
FUEL TURB IN	1.256		
FUEL TURB DIS	0.612		
FUEL INTR LINE	0.391		
OX TURB IN	0.740		
OX TURB DIS	0.000		
FUEL INJ IN LINE	0.118		
OX INJ IN LINE	0.681		

Figure 2-5 presents engine thrust as a function of off-design mixture ratio at the full thrust setting.

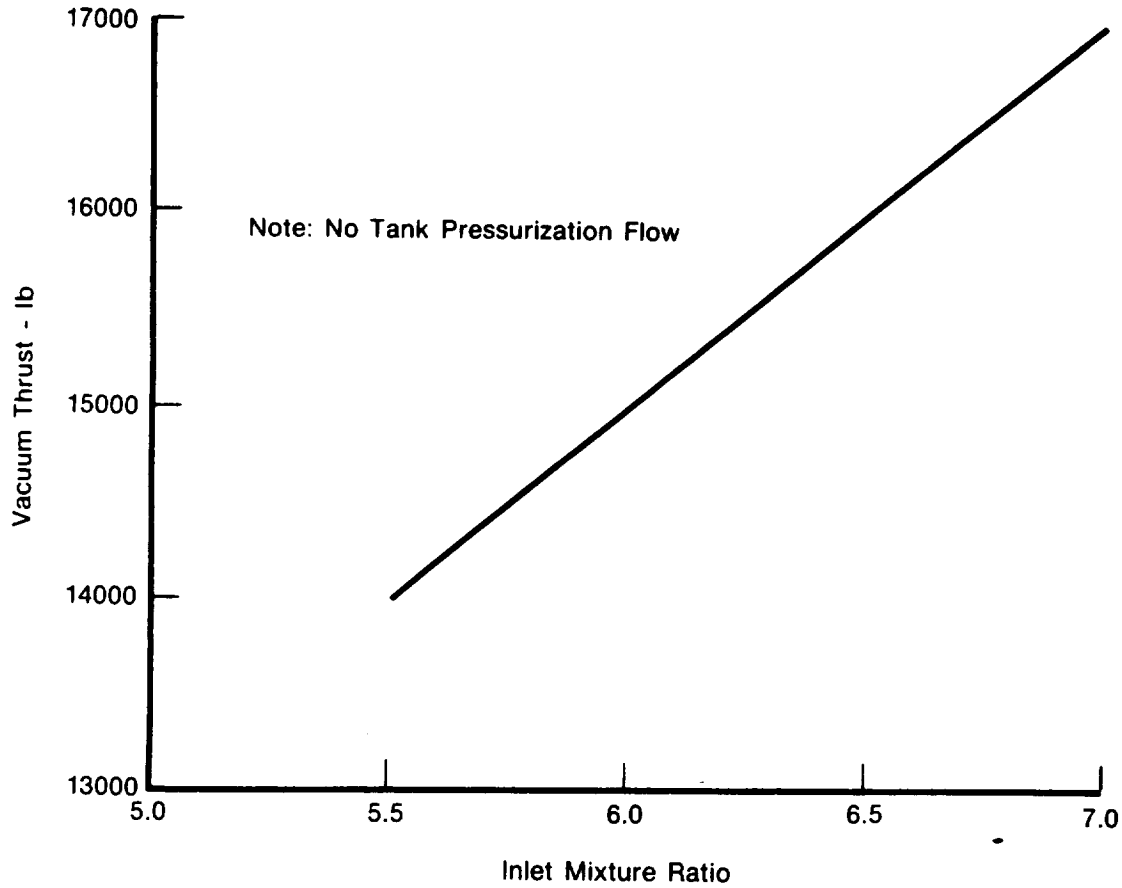

FD 212853

Figure 2-5. Estimated Effect of Inlet Mixture Ratio on Vacuum Thrust at Full Thrust Setting

2.3 STEADY-STATE INLET PRESSURE EFFECTS

The effects of varying fuel and oxidizer engine inlet pressure on engine performance is shown in Figures 2-6 and 2-7 (full thrust) and Figures 2-8 and 2-9 (pumped idle).

2.4 STEADY-STATE TANK PRESSURIZATION EFFECTS

The effects of varying fuel and oxidizer tank pressurization flowrate on engine performance is shown in Figure 2-10 and 2-11 (full thrust) and Figures 2-12 and 2-13 (pumped idle).

The effects of varying fuel and oxidizer tank pressurization flow rate on pressurization gas temperature is shown in Figures 2-14 and 2-15 (full thrust) and Figures 2-16 and 2-17 (pumped idle).

2.5 STEADY-STATE SPECIFIC IMPULSE

The estimated specific impulse breakdown for the steady state operating points is shown in Table 2-5. Full thrust off-design specific impulse as a function of mixture ratio is shown in Figure 2-18.

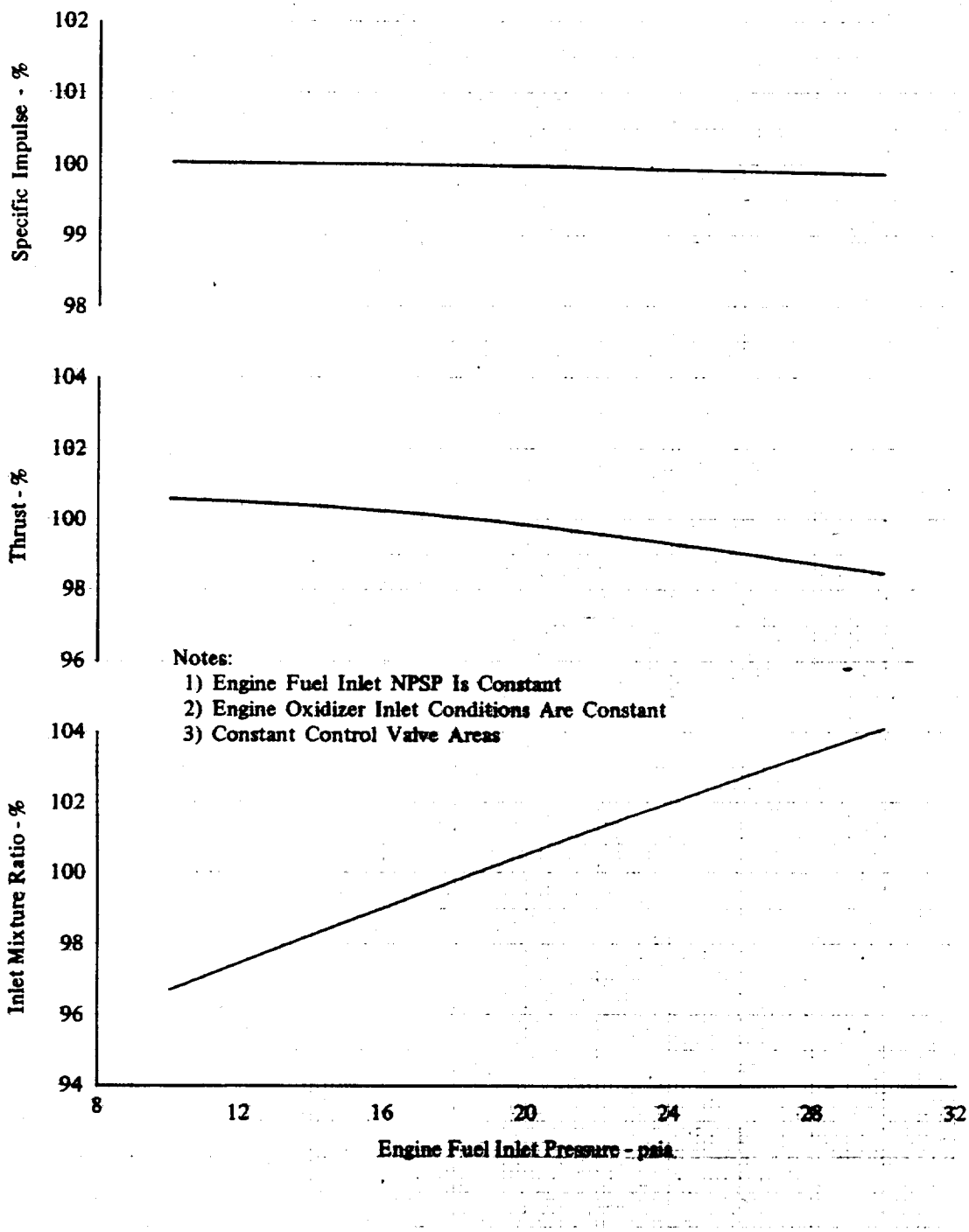

DF 107986
810607

Figure 2-6. Estimated Effect of Engine Fuel Inlet Pressure on Full Thrust Operation

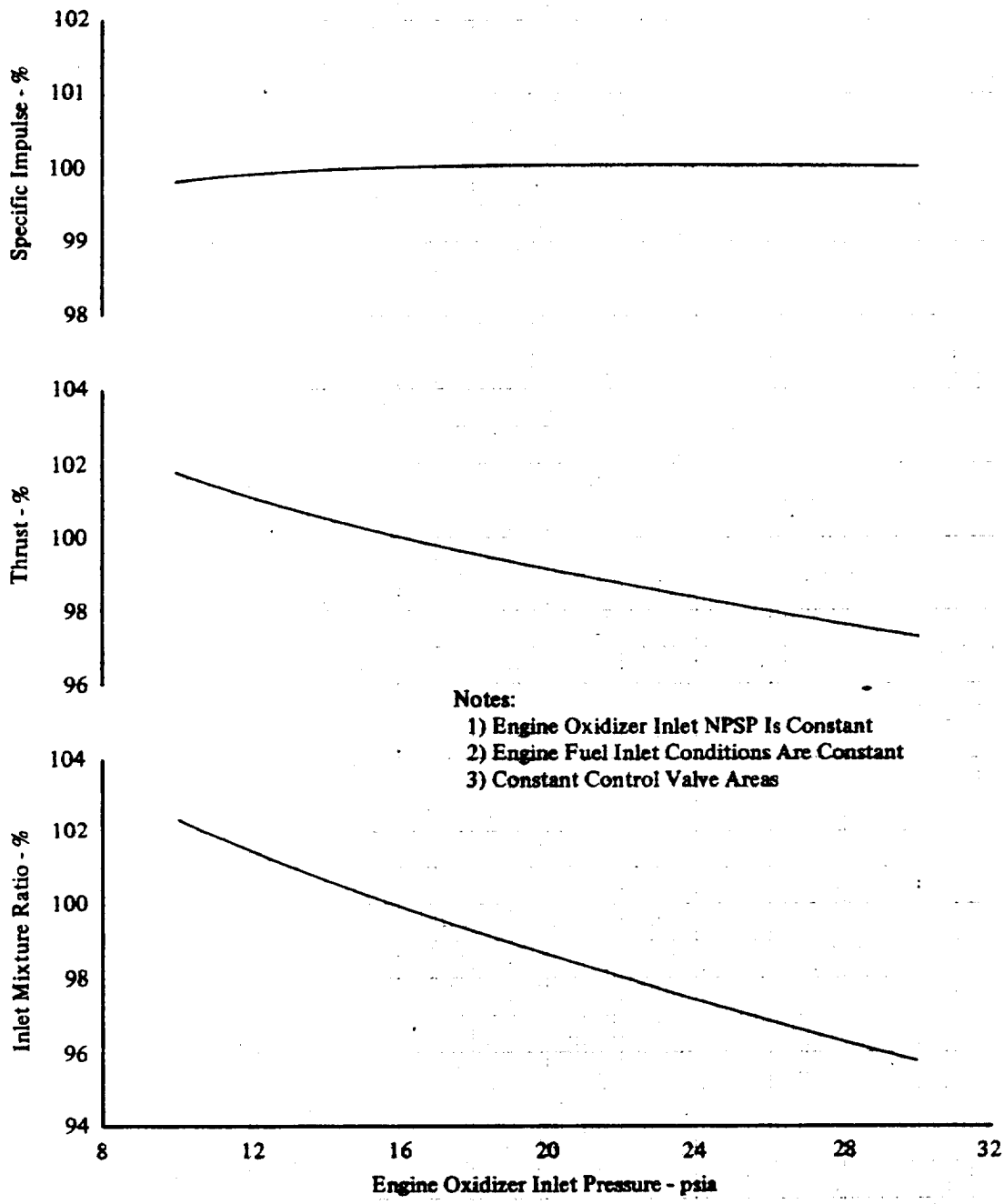

DF 107987
810607

Figure 2-7. Estimated Effect of Engine Oxidizer Inlet Pressure on Full Thrust Operation

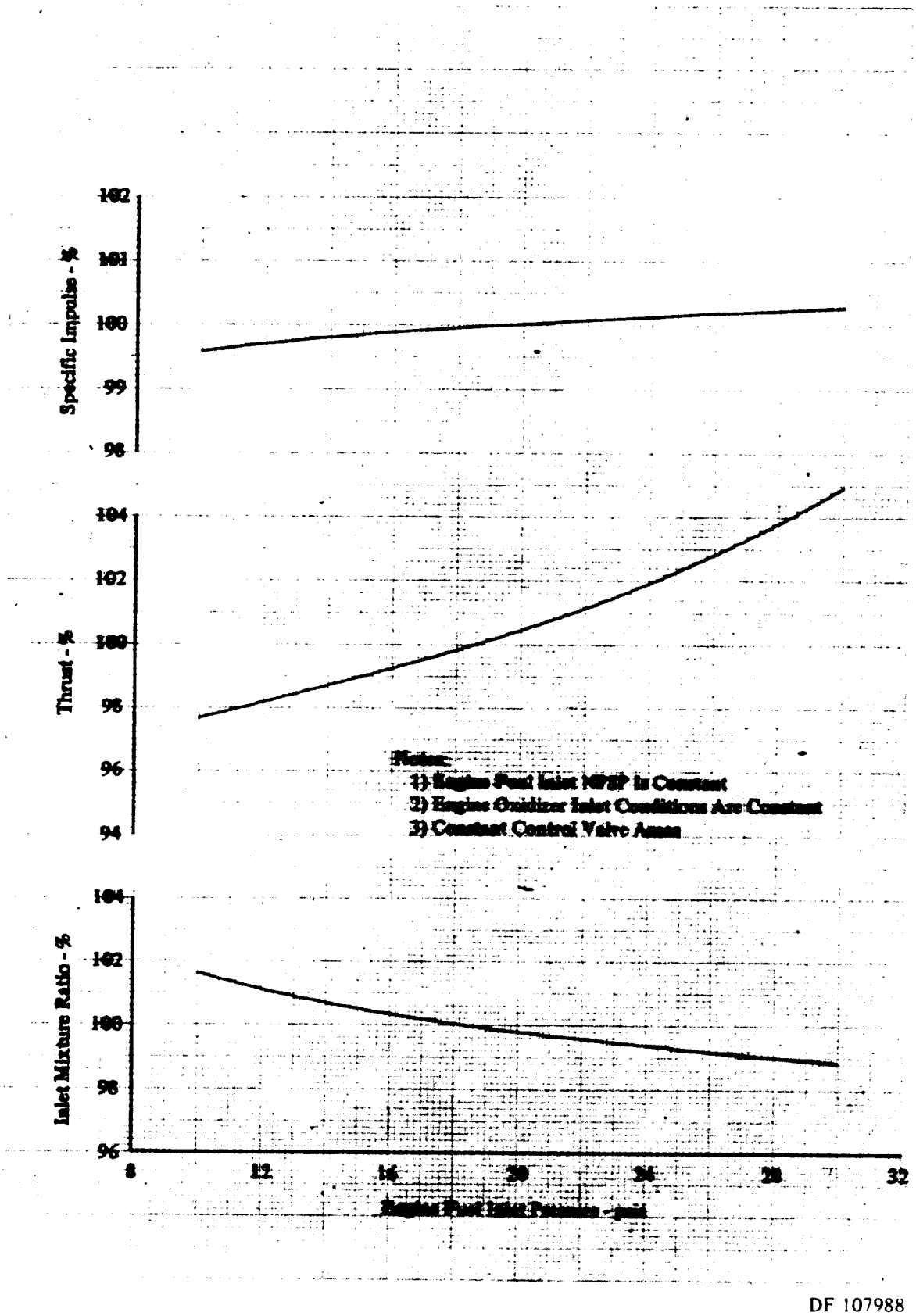

DF 107988

Figure 2-8. Estimated Effect of Engine Fuel Inlet Pressure on Pumped Idle Thrust Operation

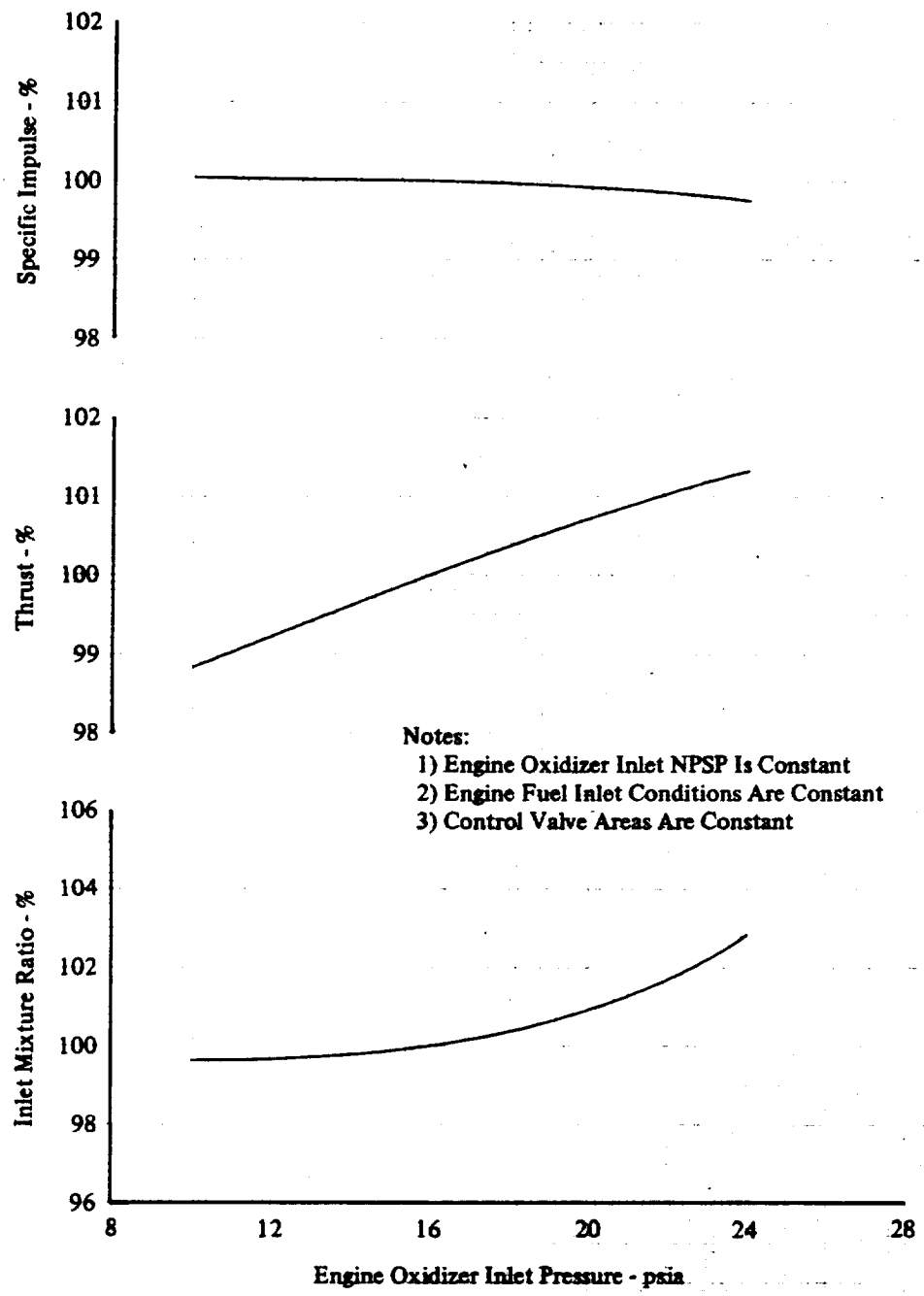

DF 107989
810607

Figure 2-9. Estimated Effect of Engine Oxidizer Inlet Pressure on Pumped Idle Thrust Operation

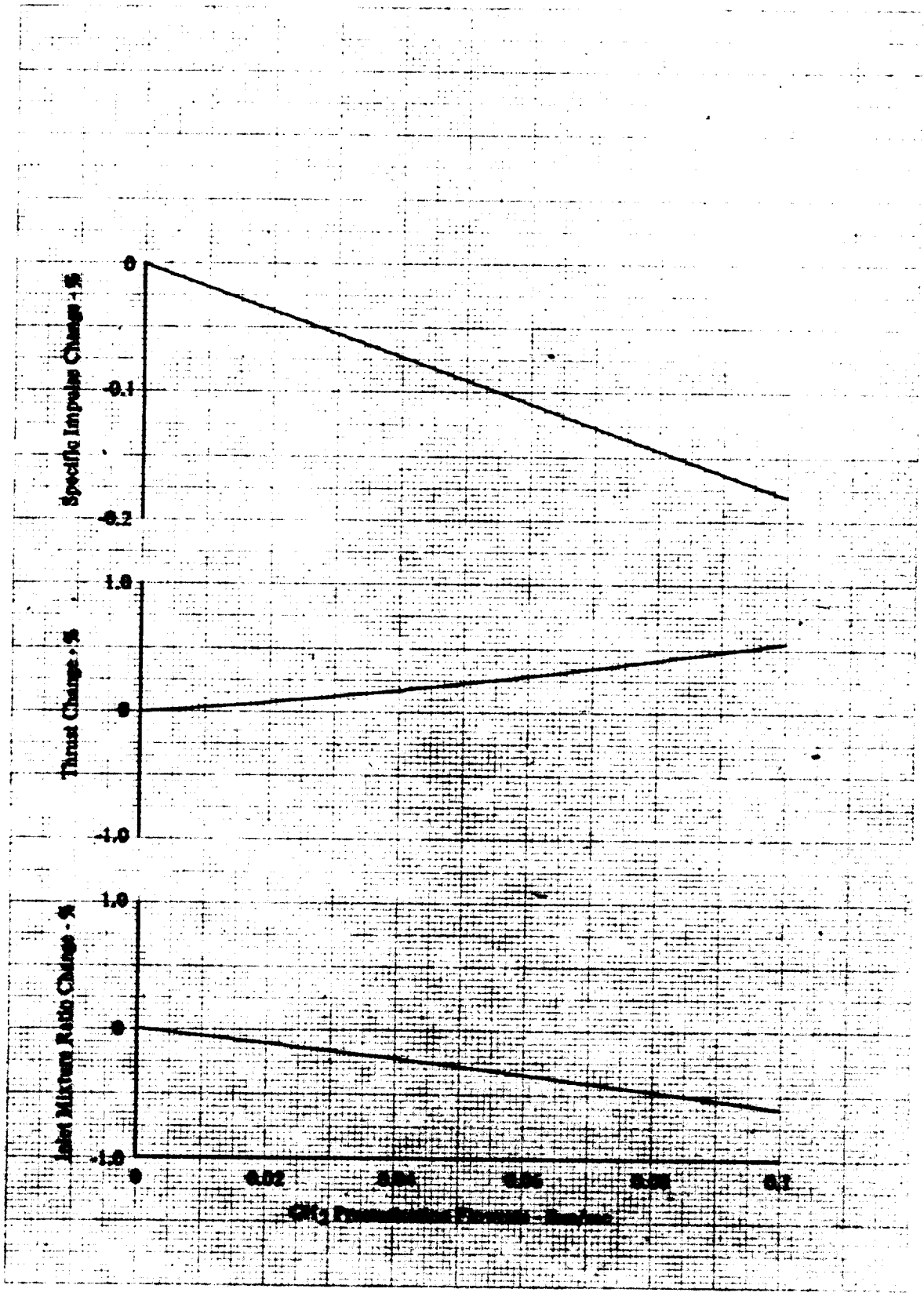

DF 107990

Figure 2-10. Effect of GH_2 Pressurization Flowrate on Engine Performance at Full Thrust

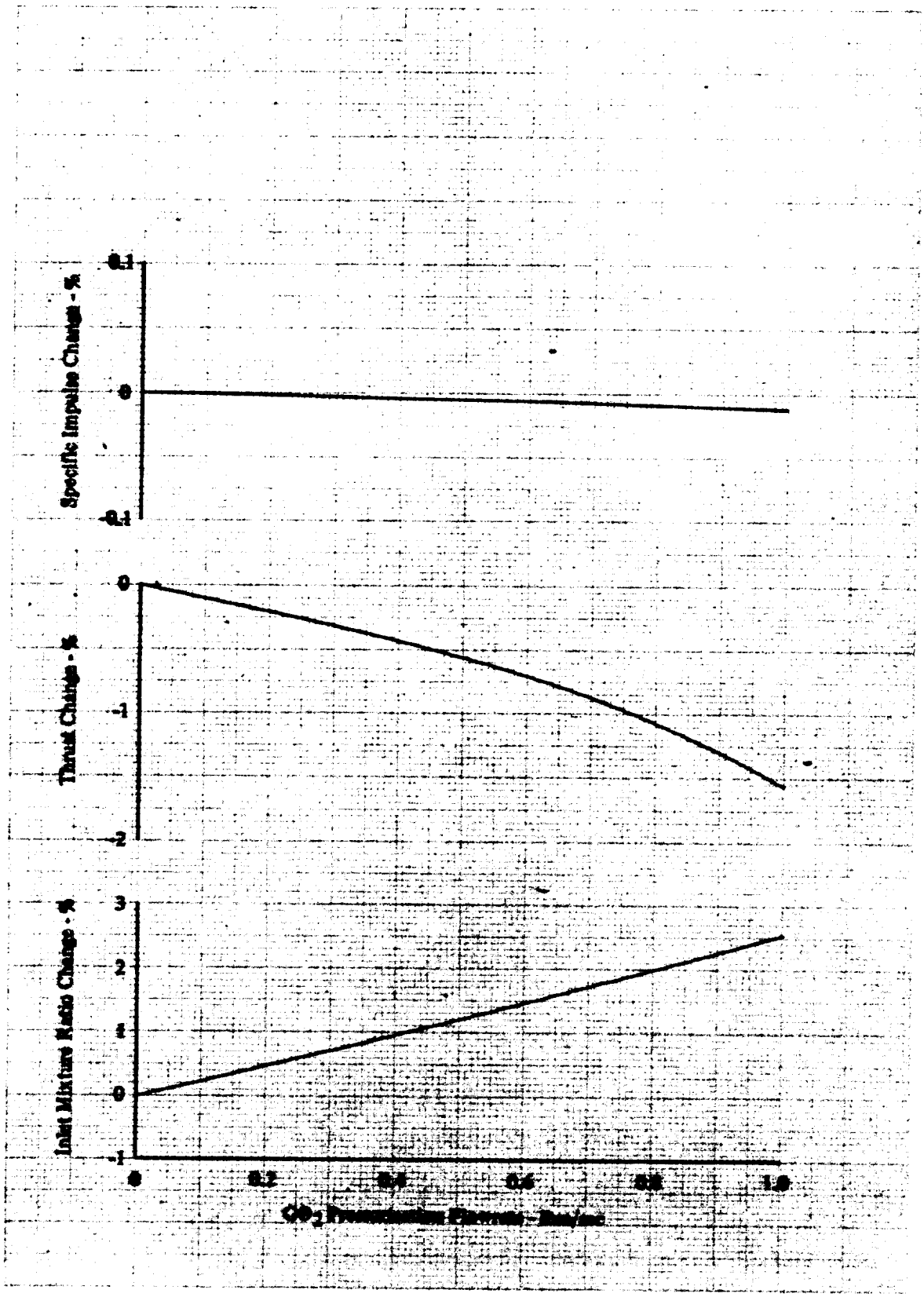

DF 107991

Figure 2-11. Effect of GO_2 Pressurization Flow on Engine Performance at Full Thrust

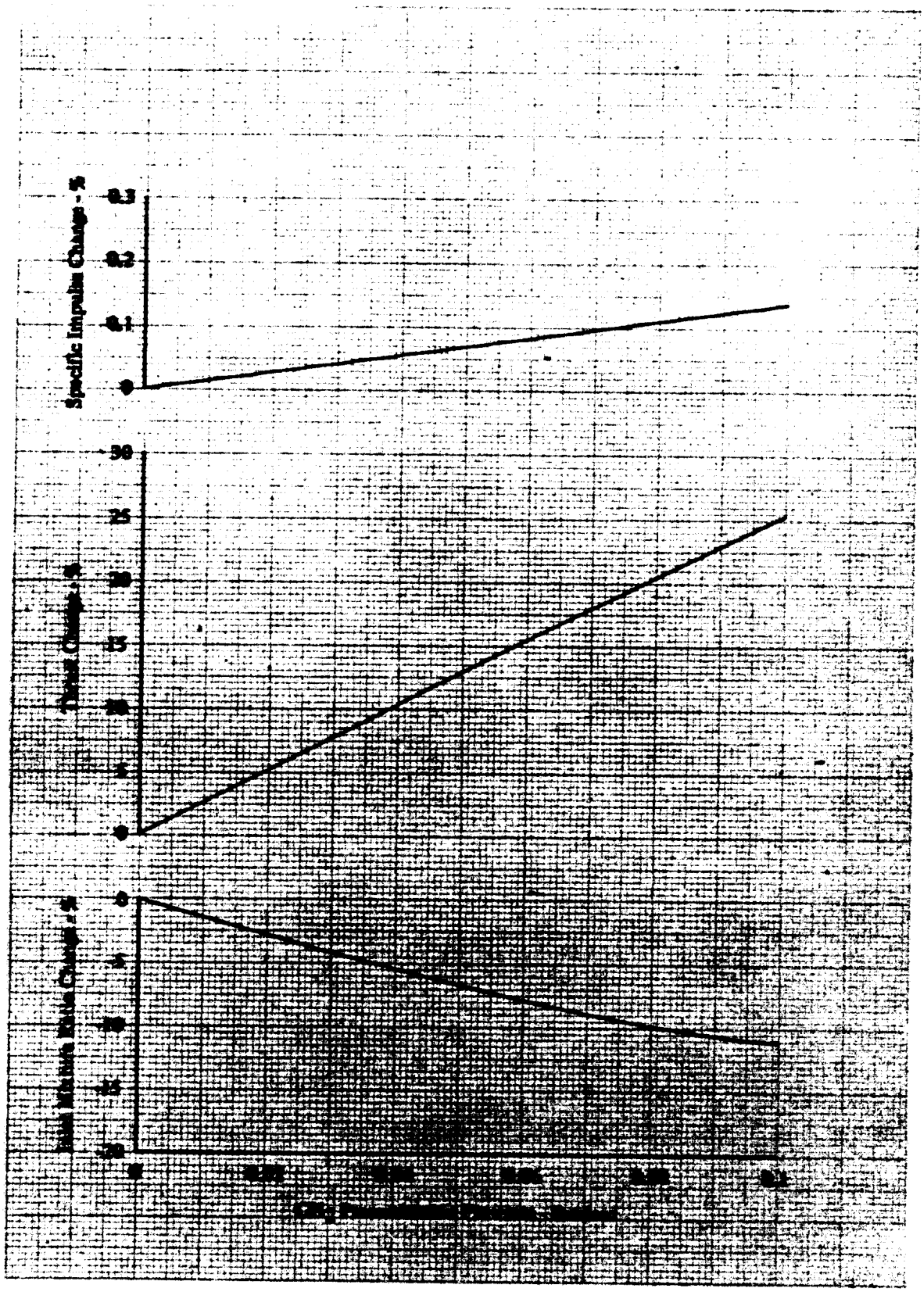

DF 107992

Figure 2-12. Effect of GH_2 Pressurization Flow on Engine Performance at Pumped Idle Thrust

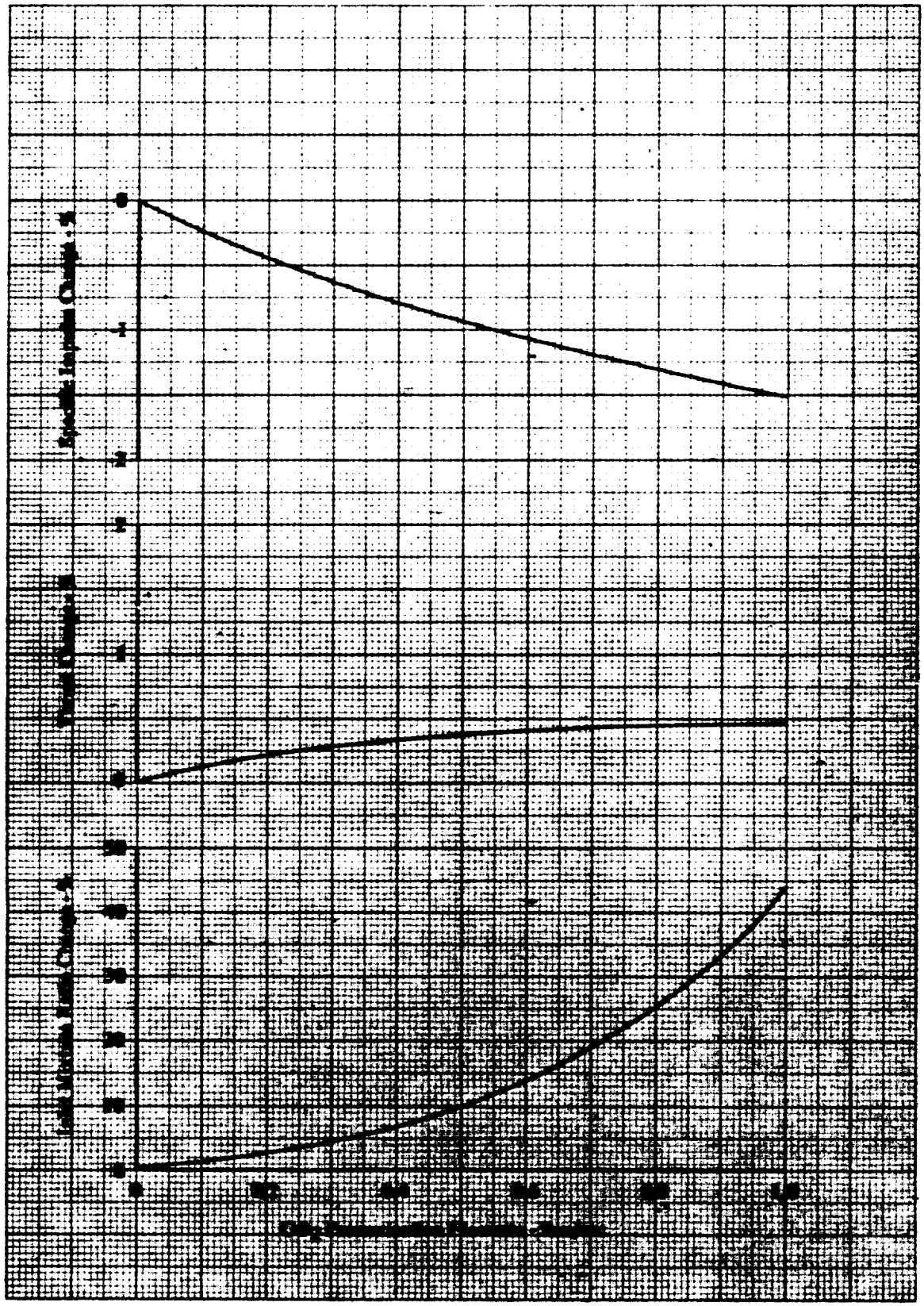

DF 107993

Figure 2-13. Effect of GO_2 Pressurization Flow on Engine Performance at Pumped Idle Thrust

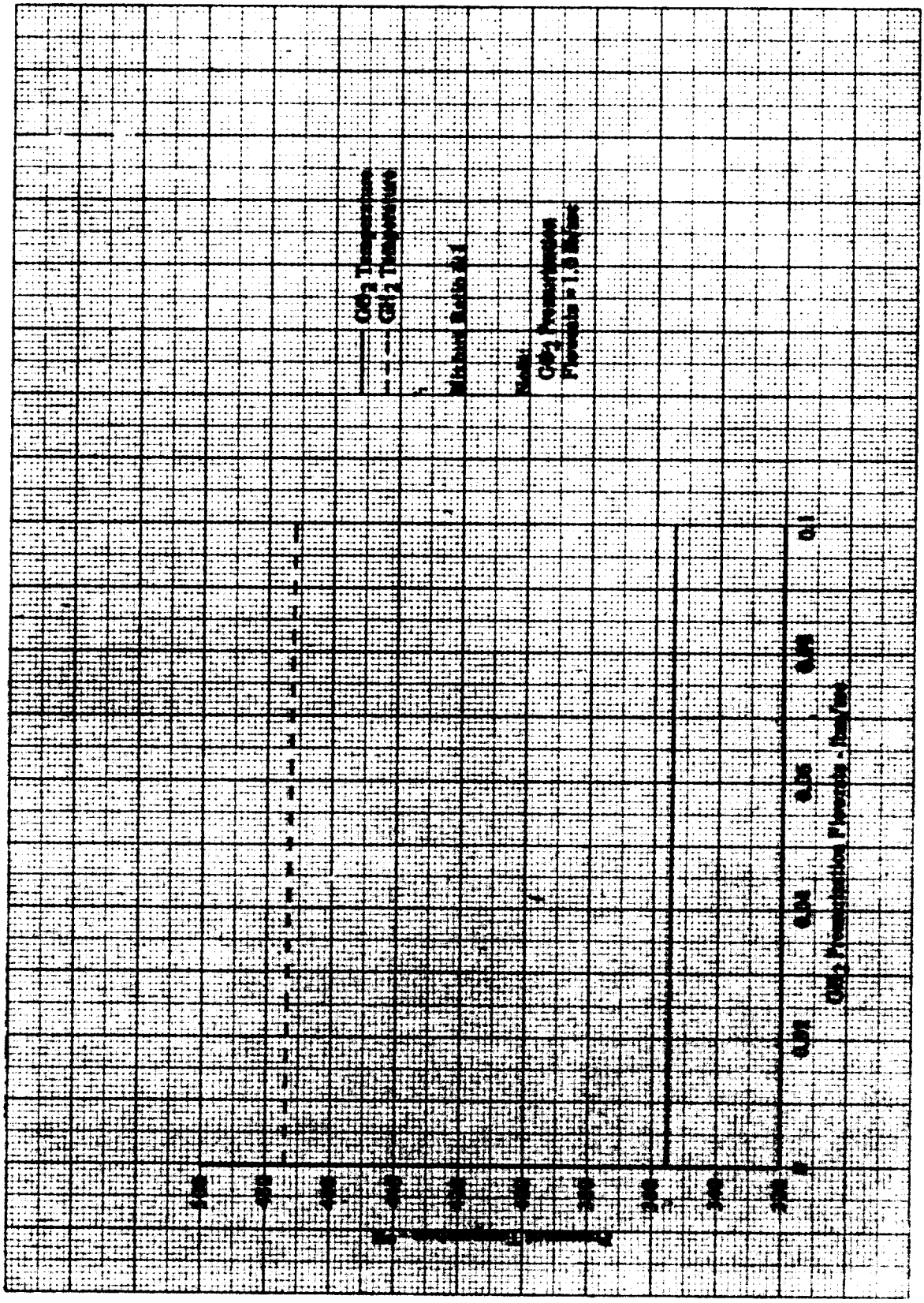

DF 107994

Figure 2-14. Effect of Varying GH_2 Pressurization Flow on Pressurant Temperature at Full Thrust

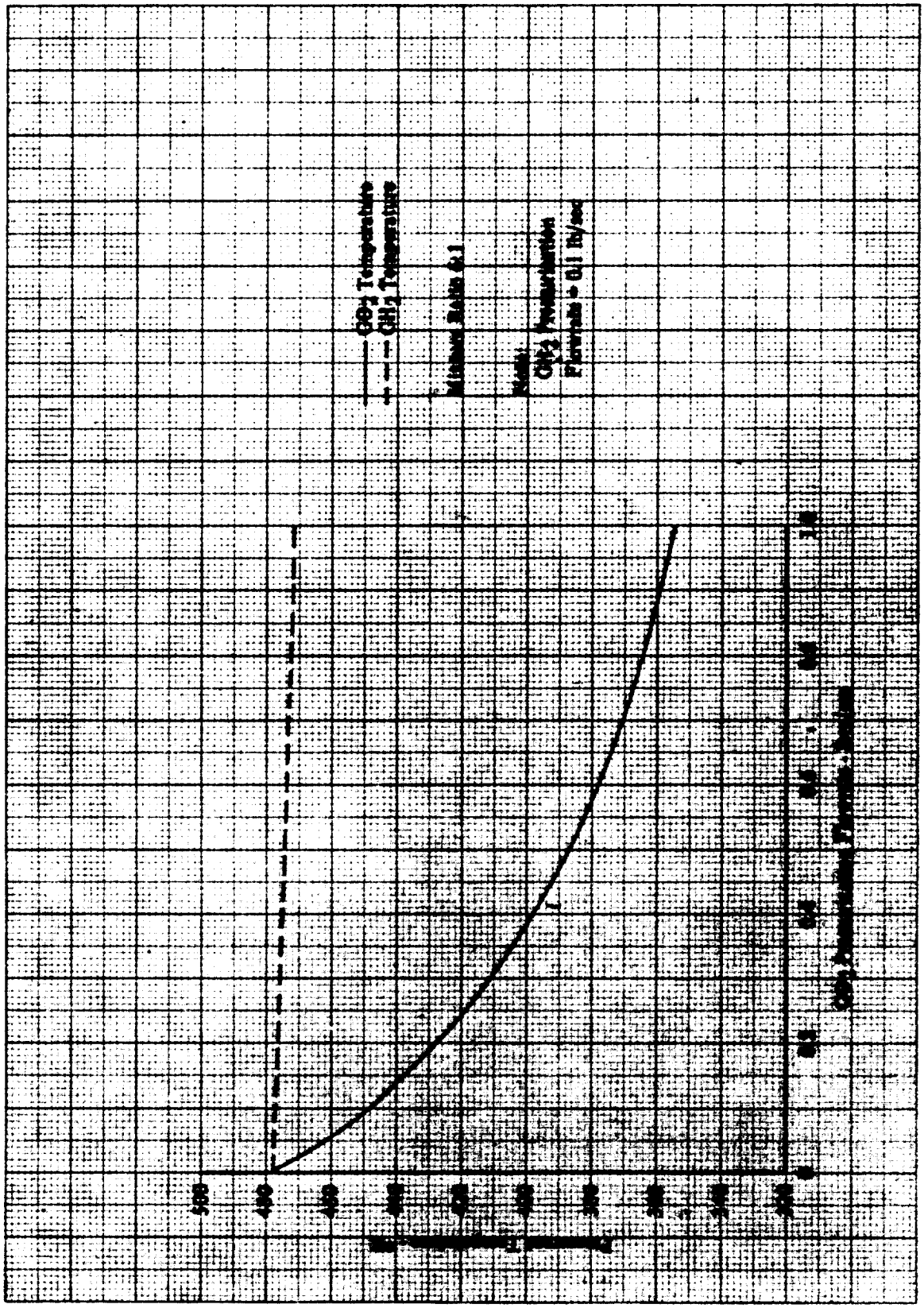

DF 107995

Figure 2-15. Effect of Varying GO_2 Pressurization Flow on Pressurant Temperature at Full Thrust

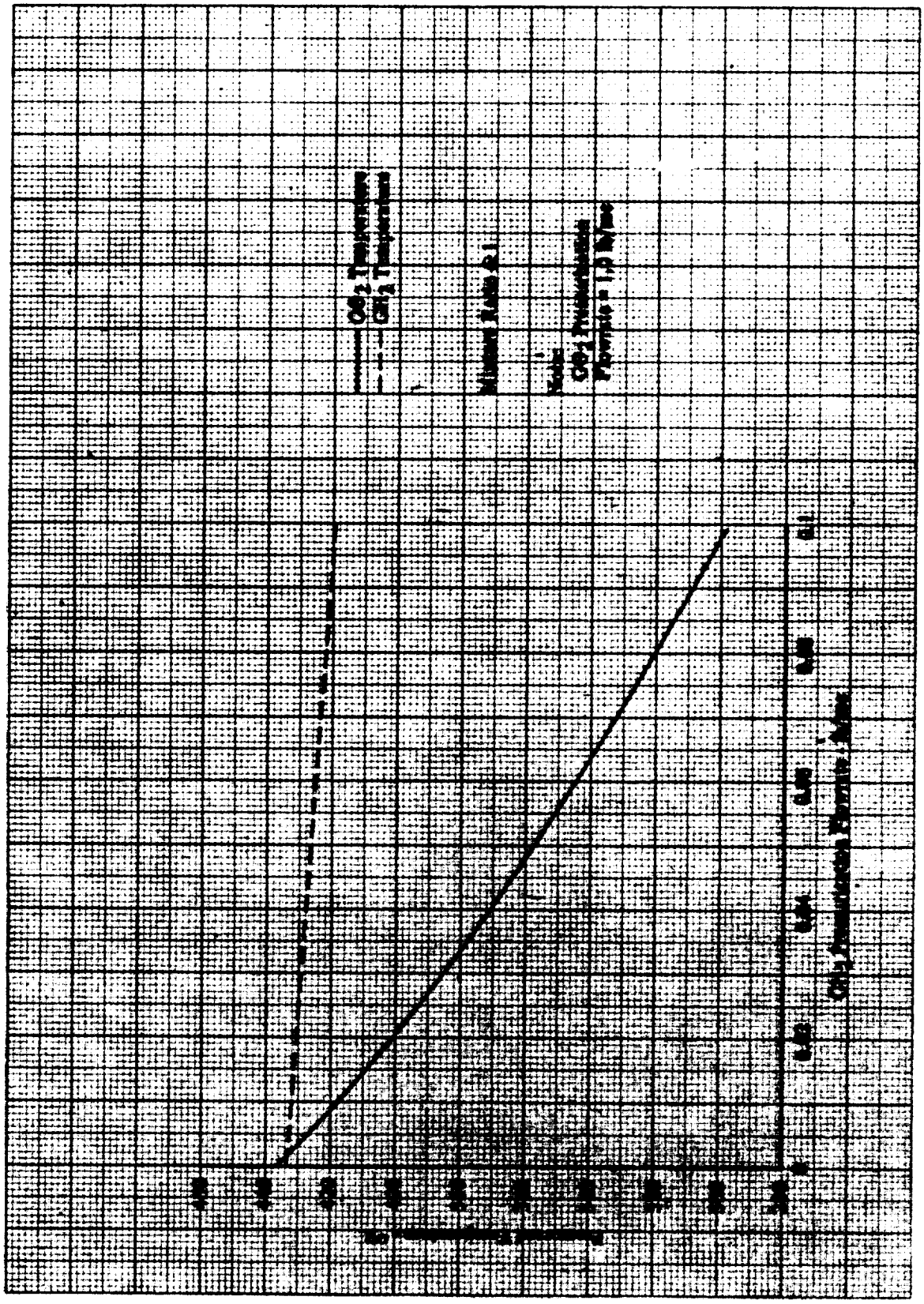

DF 107996

Figure 2-16. Effect of Varying GH_2 Pressurization Flow on Pressurant Temperature at Pumped Idle Thrust

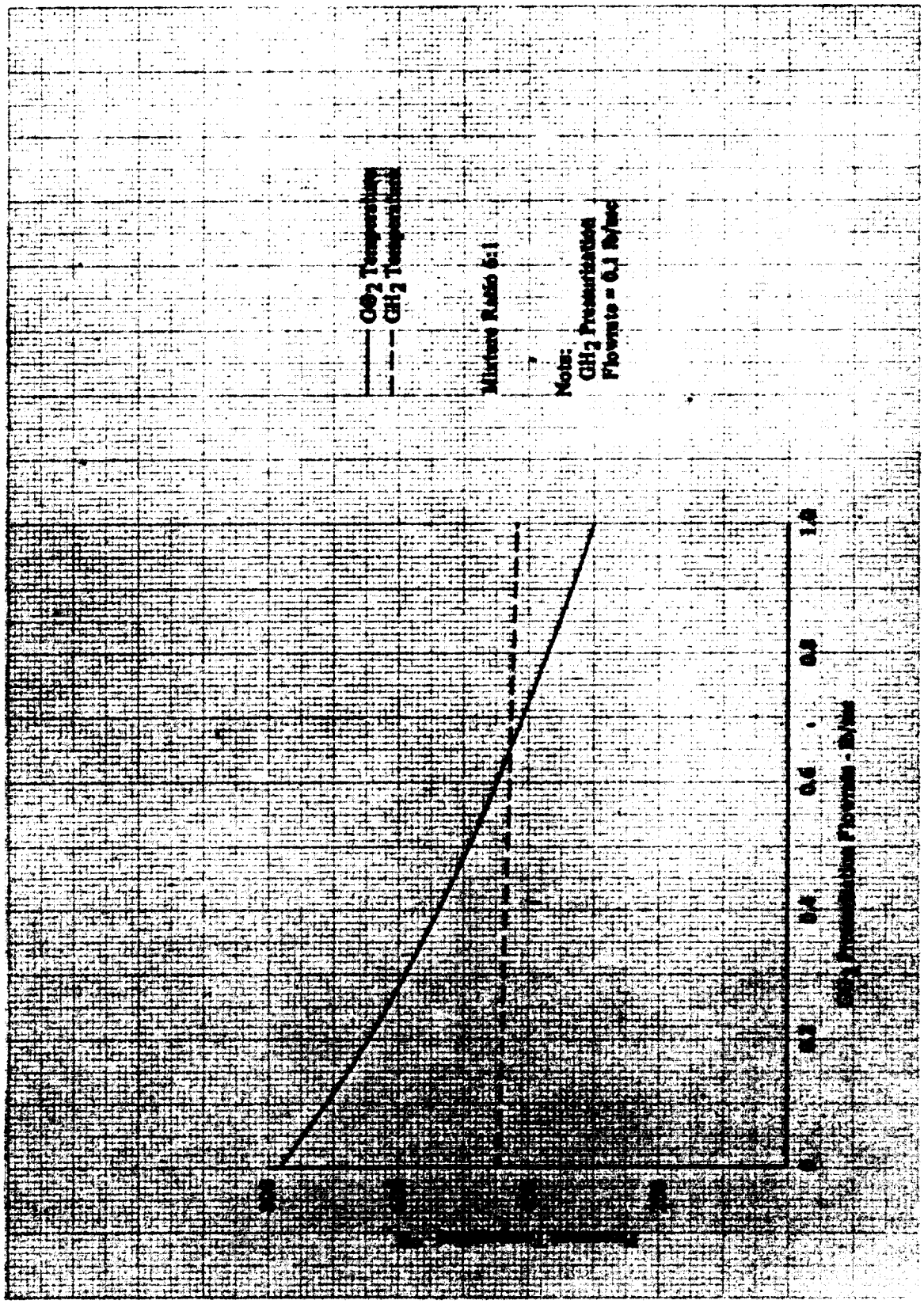

DF 107997

Figure 2-17. Effect of Varying GO_2 Pressurization Flowrate on Pressurant Temperature at Pump Idle Thrust

Table 2-5. Advanced Expander Cycle Engine Specific Impulse Estimates

Thrust, lb	15,000	16,850	1,501	72
Mixture Ratio, Inlet	6.0	7.0	6.0	4.0
I_{sp} at Inlet Conditions, sec	489.8	488.9	488.5	480.2
Δh, Btu/lbm	1647	1866	1596	1984
I_{sp} at Injector Conditions, sec	500.3	497.6	501.0	505.4
ΔI_{sp} Kinetics, sec	−2.4	−5.3	−23.2	−38.4
ΔI_{sp} Divergence, sec	−5.0	−4.8	−5.2	−6.0
ΔI_{sp} Boundary Layer, sec	−9.2	−10.1	−9.2	−11.3
ΔI_{sp} Energy Release Efficiency, sec	−1.5	−3.5	−8.0	<0.1
I_{sp} Delivered, sec	482.2	473.9	455.4	449.7

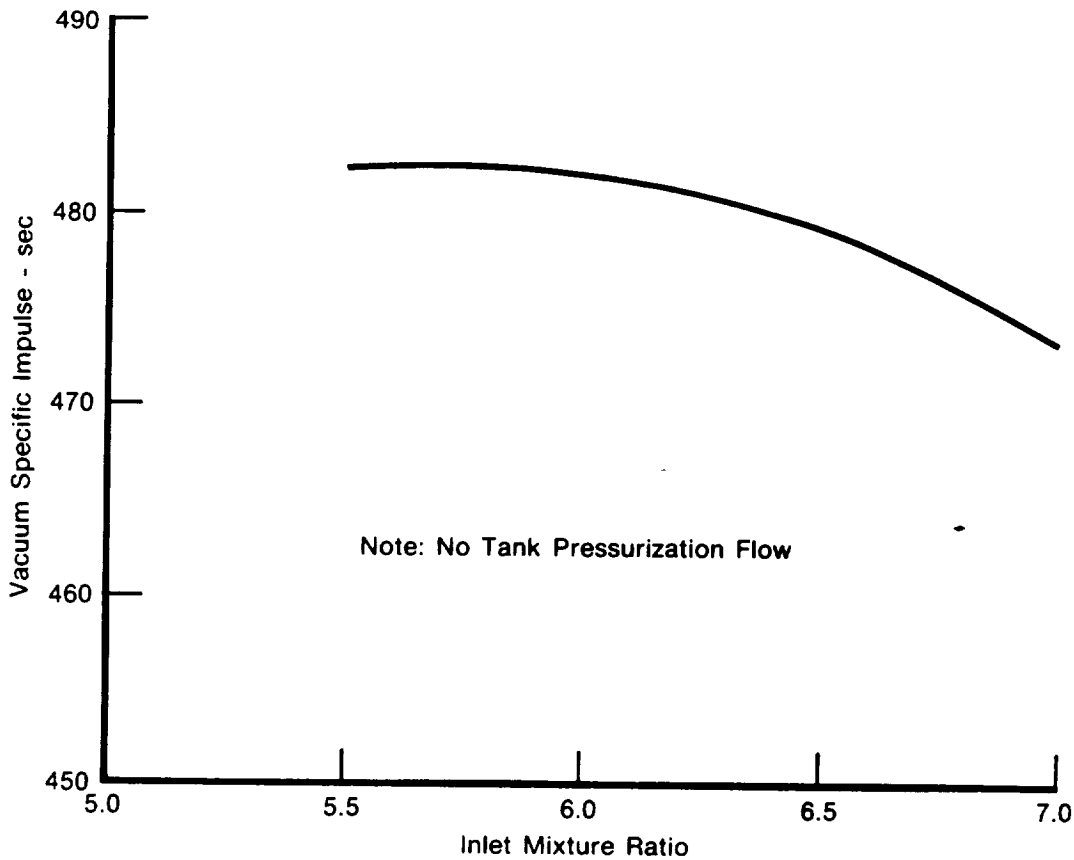

FD 212852

Figure 2-18. Estimated Effect of Inlet Mixture Ratio on Vacuum Specific Impulse at Full Thrust

2.6 ENGINE LIFE

The estimated life of the engine at the various operating points is shown in Table 2-6.

2.7 ENGINE WEIGHT

The estimated weight of the engine and its various components is given in Table 2-7.

Table 2-6. Estimated Advanced Expander Cycle Engine Life

Operating Point	Time Between Major Overhauls[1] (Cycles[2])	Time Between Major Overhauls[1] (hr)
Full Thrust (O/F=6:1)	1500	10
Full Thrust (O/F=7:1)	650	10
Pumped Idle	>2000	>30
Tank Head Idle	>2000	(Not Applicable)
Design Goal	300	10

Notes:
(1) Operation without major component changes (e.g. thrust chamber/primary nozzle, turbopump)
(2) A cycle is defined as an engine thermal cycle up to the indicated thrust level (e.g. tank head idle to pumped idle to full thrust (O/F=6:1) to pumped idle to shutdown would be one full thrust (O/F=6:1) cycle).

Table 2-7. Estimated Advanced Expander Cycle Engine Weight

Item	Material	Weight, lb
Primary Nozzle Assy		
Cooling Tubes	347 SST	31.0
Thrust Chamber/Injector	347 SST, N-155 Rigimesh, Amzirc	58.1
Primary to Secondary Seal	347 SST	12.0
Secondary Nozzle Assy		
Nozzle Shell	Uncoated Carbon/Carbon	60.2
Nozzle Supports	Uncoated Carbon/Carbon	8.8
Screw Jacks and Actuation		
Screw Jacks	Uncoated Carbon/Carbon	7.7
Bearings and Housings	347 SST	6.9
Gear Drive and Drive Motor	347 SST	5.9
Gimbal Mount	Aluminum Alloy	4.0
Turbo Pump Assy	Al Alloy, 347 SST, 17-7 PH, A-286, Titanium	60.7
Heat Exchangers		
H_2 Regenerator	Aluminum Alloy	32.8
Vortex Prevaporizer	Aluminum Alloy	5.2
GOX Heat Exchanger	Aluminum Alloy	16.3
Control Valves	Al Alloy, 347 SST, 17-7 PH, A-286	54.0
Miscellaneous (Plumbing, Solenoids, Instrumentation, etc)		63.0
Total		426.6

SECTION 3
ENGINE HARDWARE

3.1 PROPELLANT FLOW SCHEMATIC AND OPERATING SEQUENCE

Figure 3-1 presents the advanced expander cycle propellant flow schematic illustrating the location of each engine valve. Figure 3-2 presents the engine valve sequencing for a typical engine operating cycle.

3.2 ENGINE HARDWARE DRAWINGS

The advanced expander cycle engine installation is shown in Figures 3-3 and 3-4. Engine components are shown in the following figures:

Figure 3-5 — Turbopump assembly
Figure 3-6 — Injector, Igniter and Thrust Chamber Assembly
Figure 3-7 — Hydrogen Regenerator
Figure 3-8 — O_2 Vortex Prevaporizer
Figure 3-9 — GOX Heat Exchanger
Figure 3-10 — Solenoid Valves
Figure 3-11 — Propellant Inlet Shut-Off Valves
Figure 3-12 — Main Fuel Shut-Off Valve
Figure 3-13 — Propellant Tank Pressurization Valves
Figure 3-14 — Oxidizer Flow Control Valve
Figure 3-15 — Gaseous Oxidizer Control Valve
Figure 3-16 — Main Fuel Control Valve

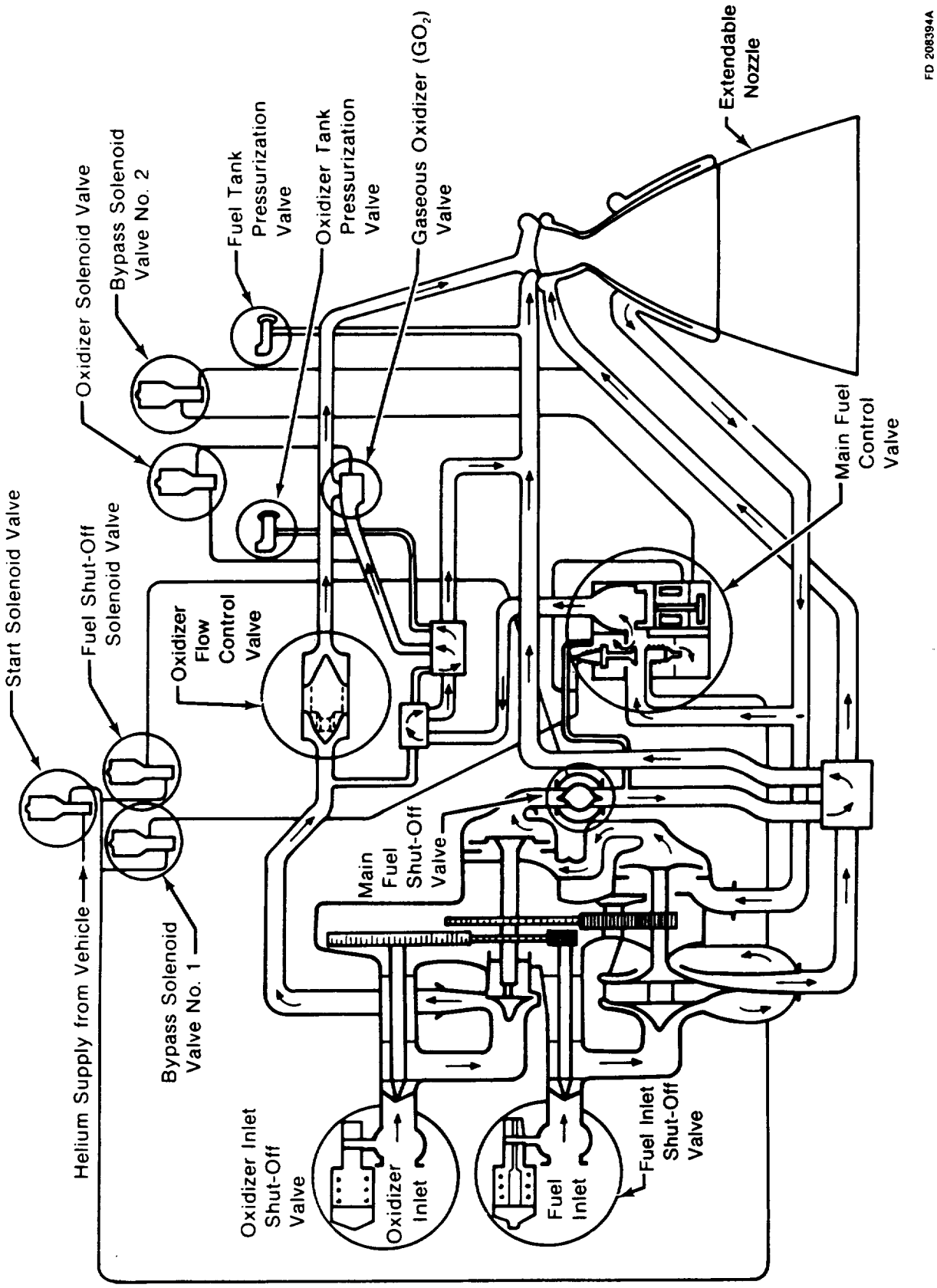

Figure 3-1. Engine Propellant Flow Schematic

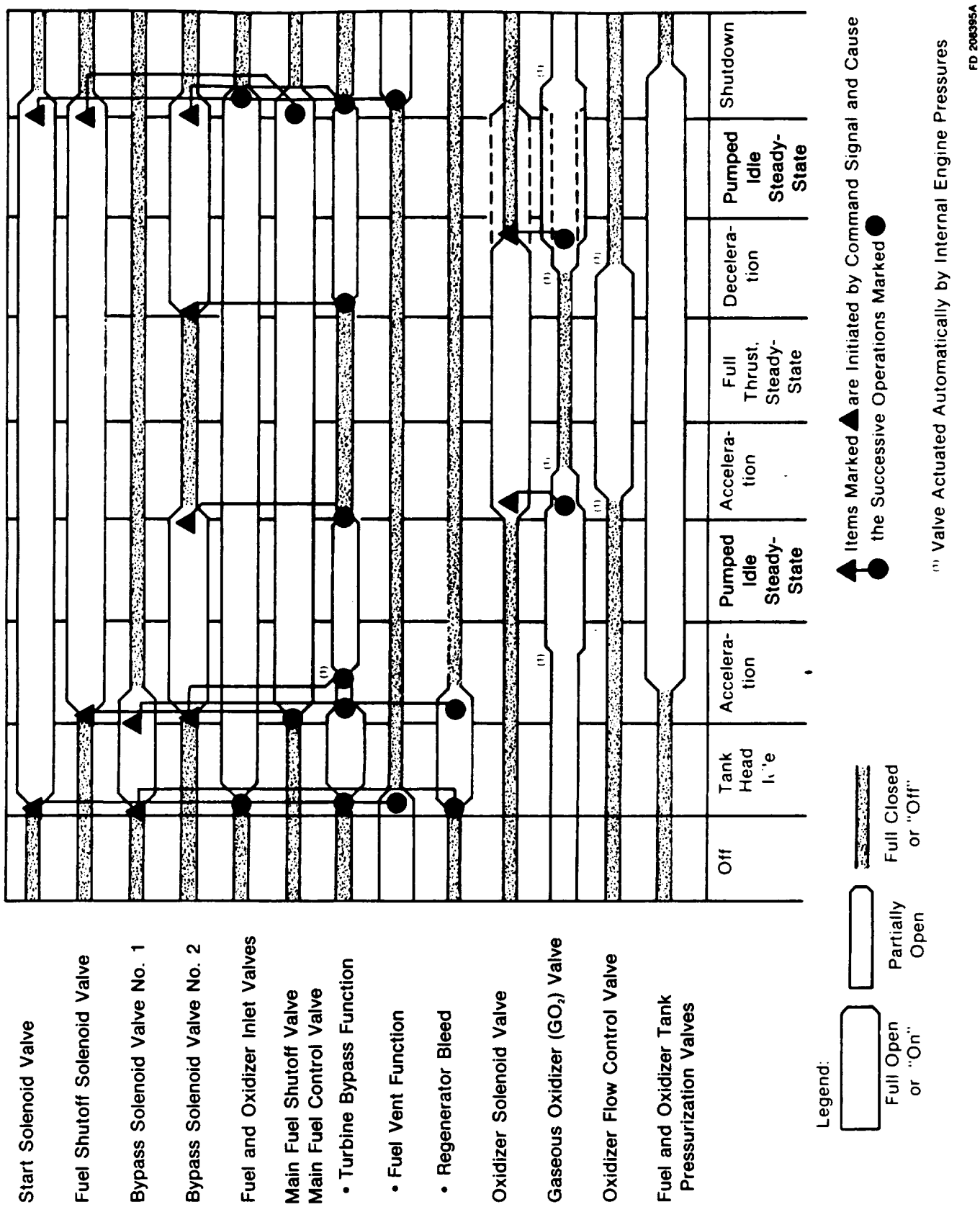

Figure 3-2. Valve Sequence for a Typical Firing

FD 213614A

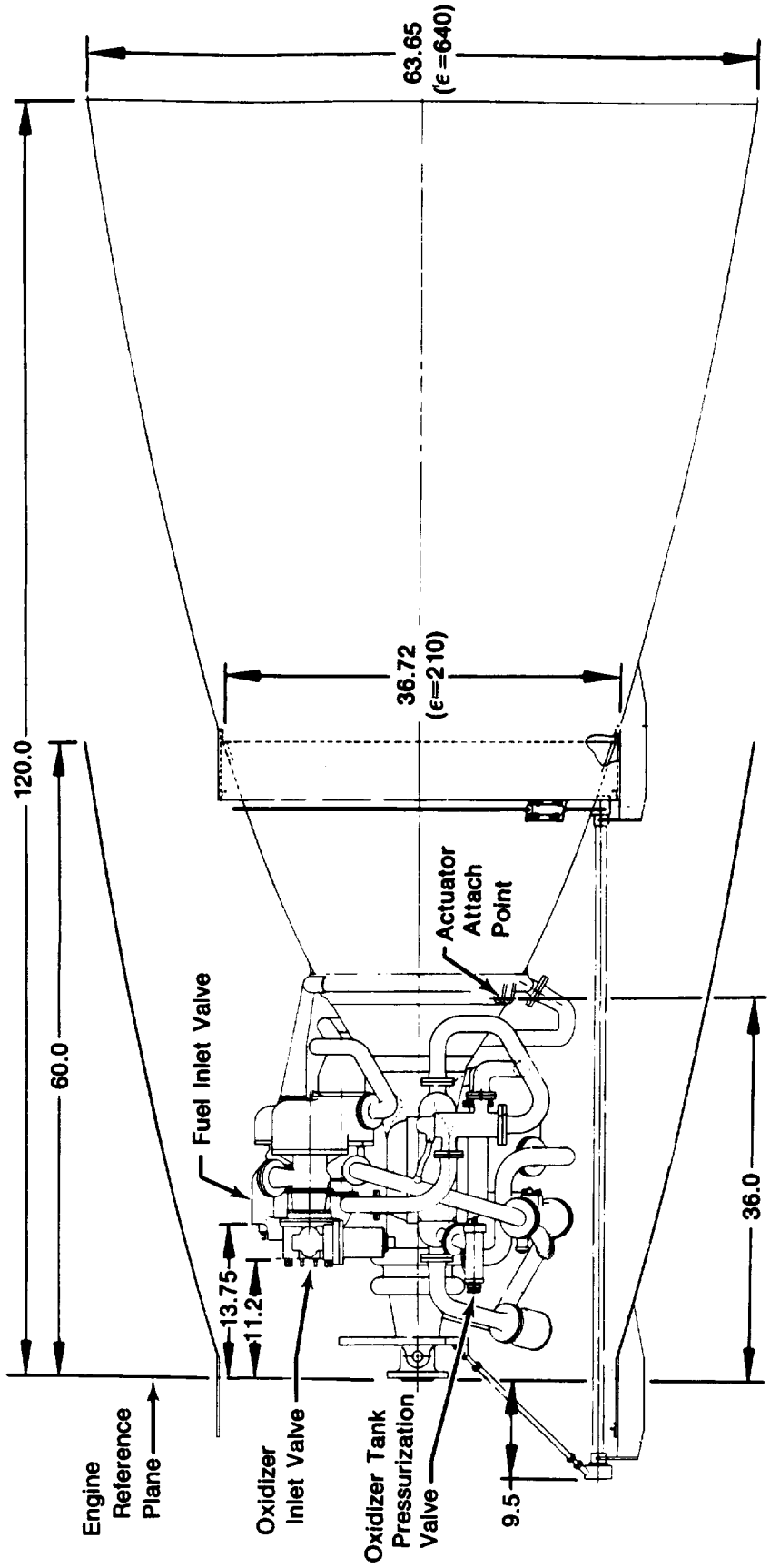

Figure 3-3. Advanced Expander Cycle Engine Installation (Side View)

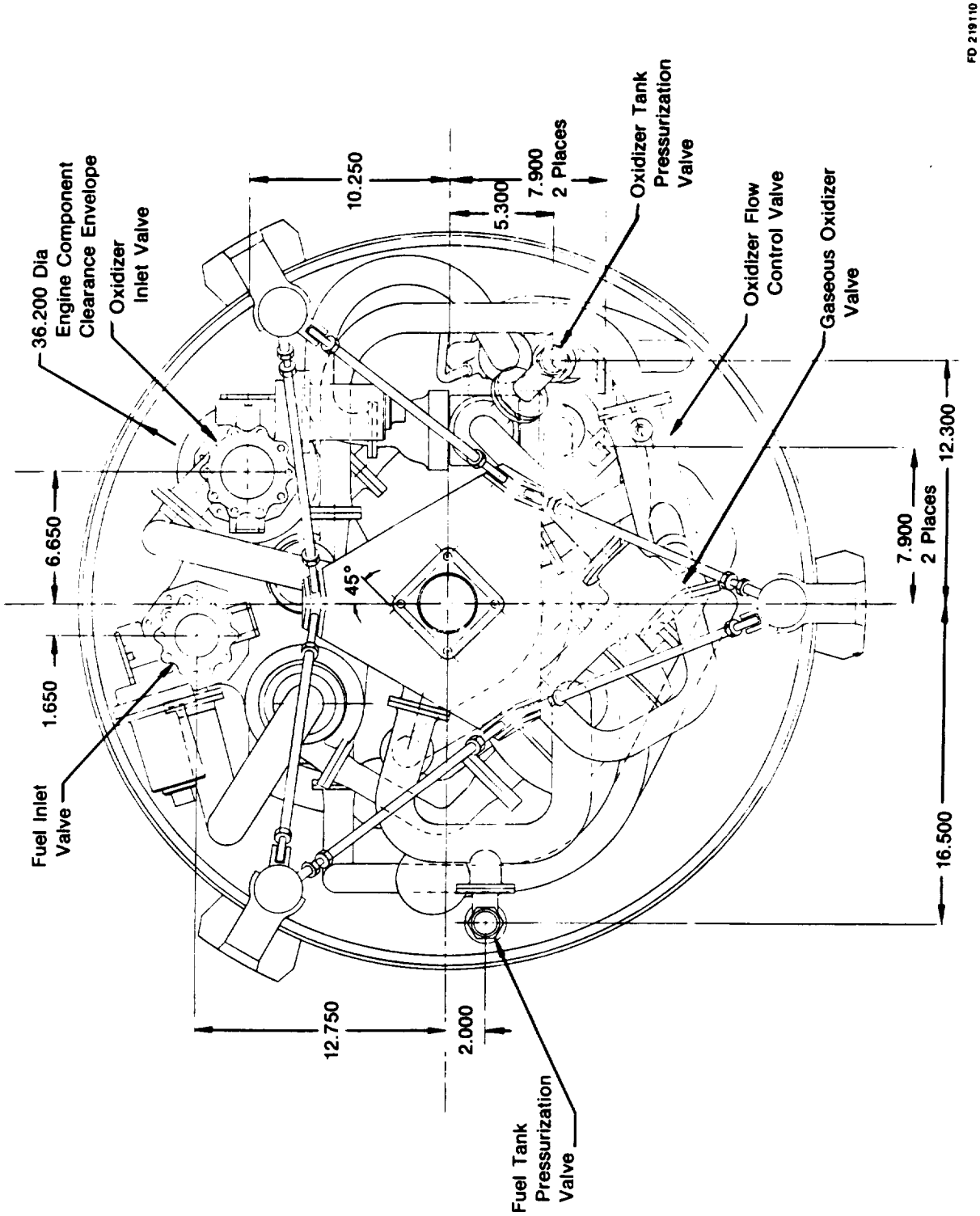

Figure 3-4. Advanced Expander Cycle Engine Installation (Top View)

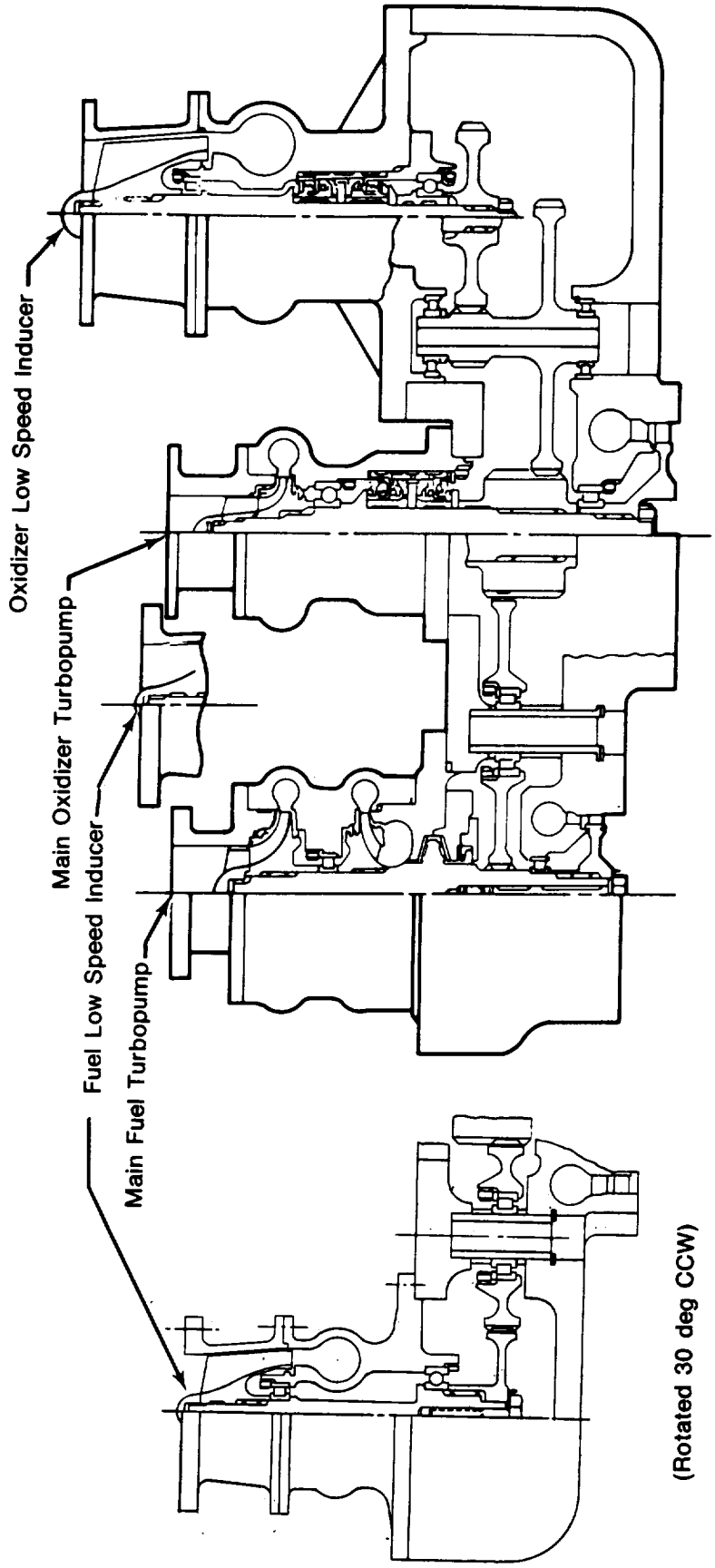

FD 219111

Figure 3-5. Turbopump Assembly

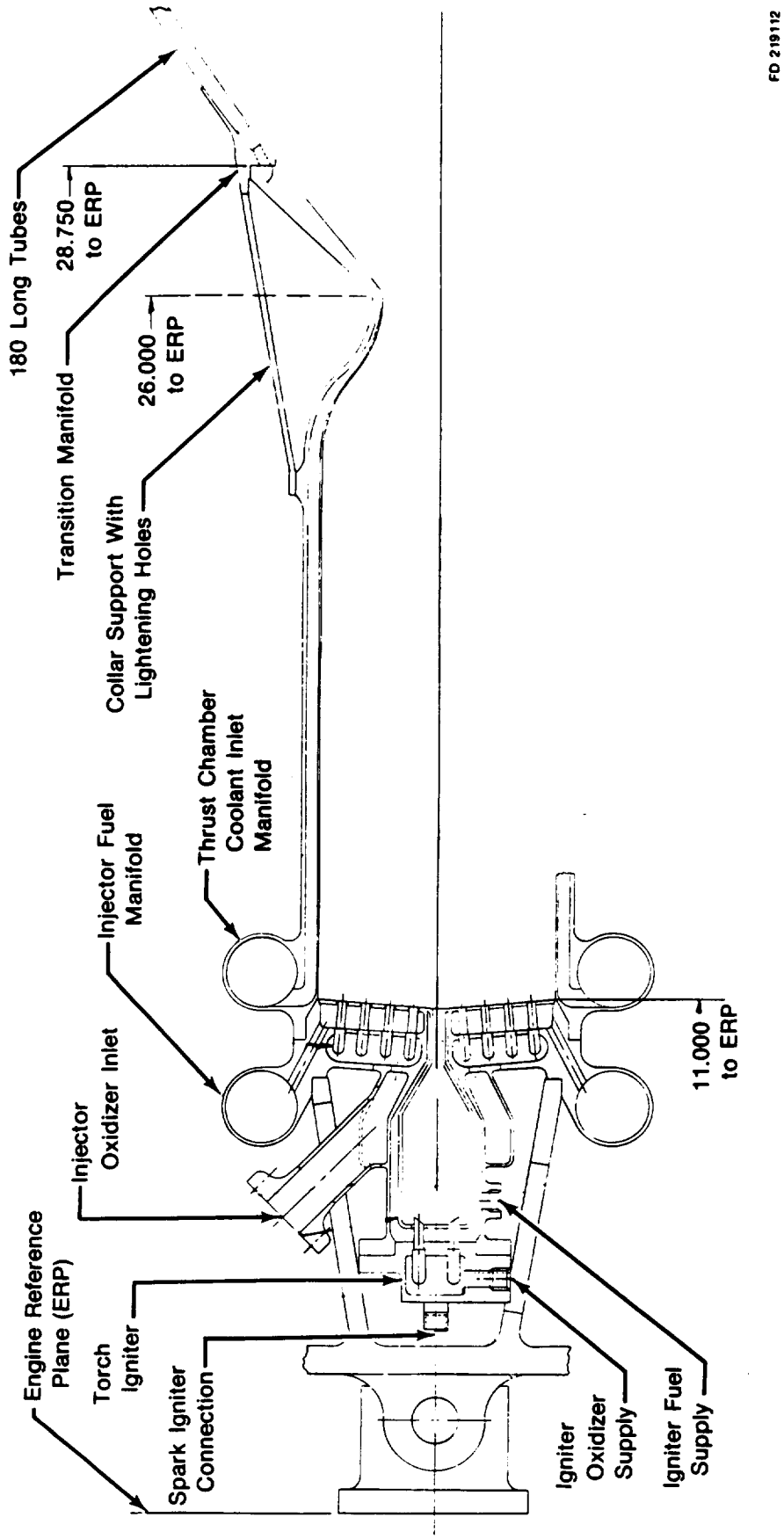

Figure 3-6. Injector, Igniter and Thrust Chamber Assembly

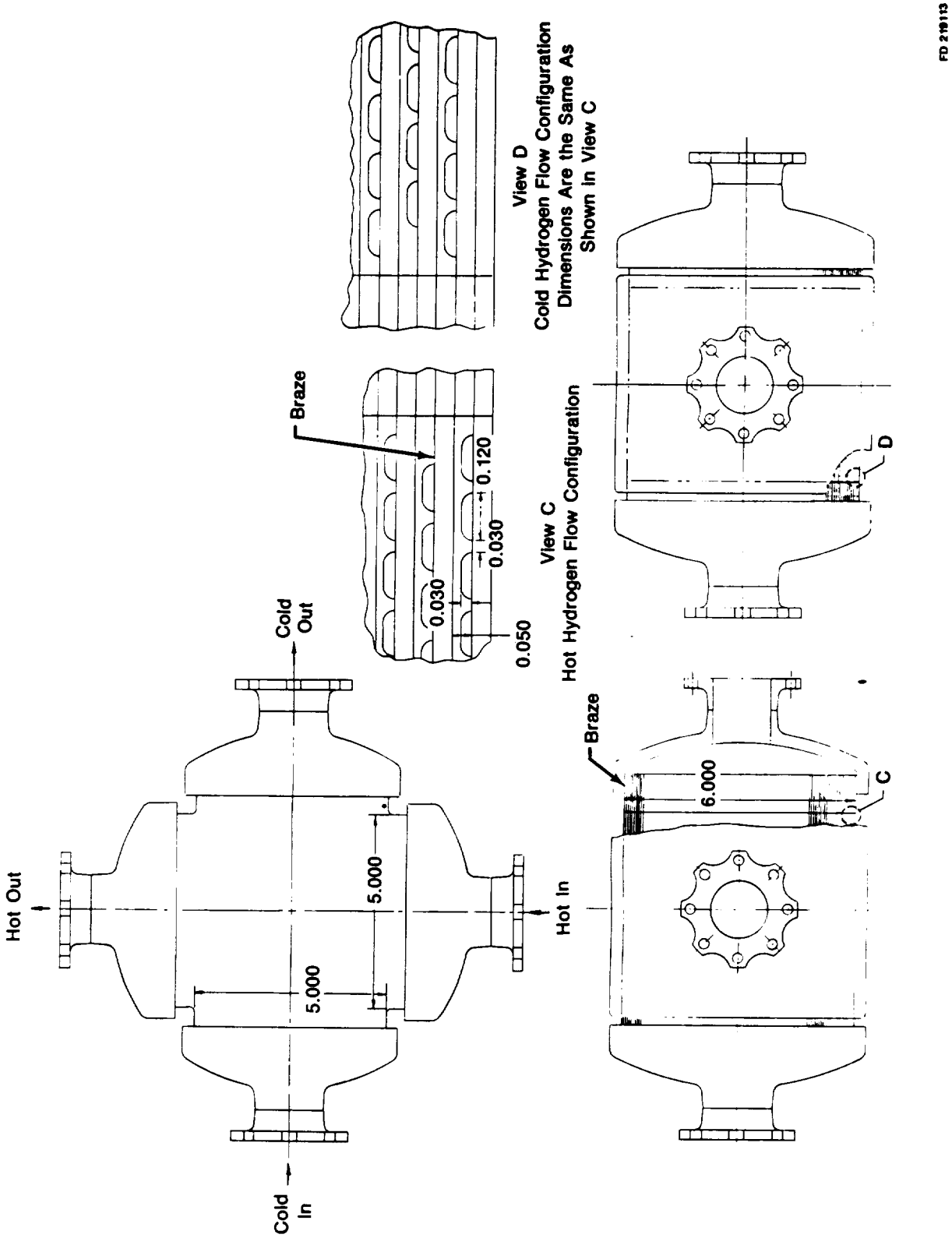

Figure 3-7. Hydrogen Regenerator

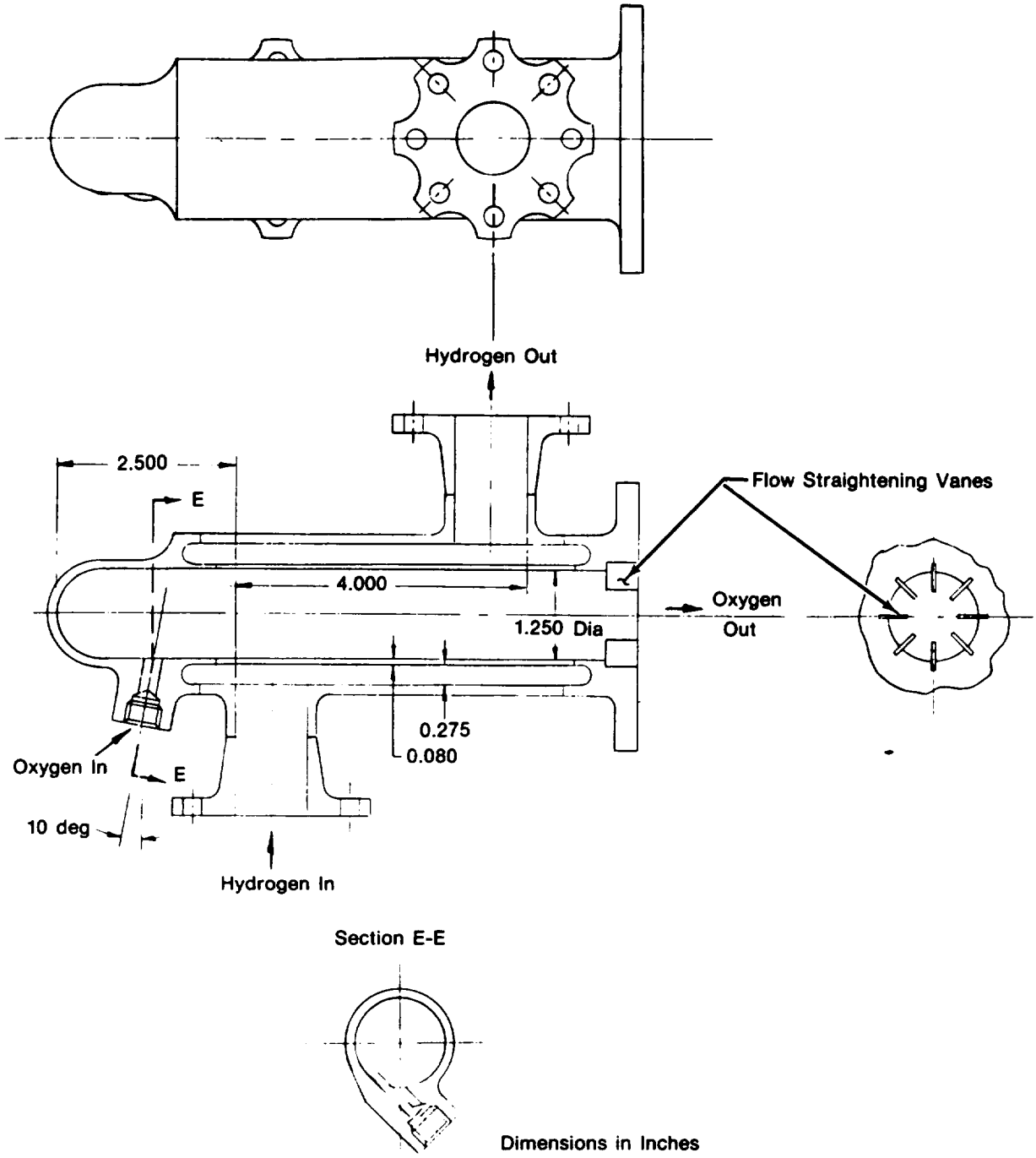

Figure 3-8. O_2 Vortex Prevaporizer

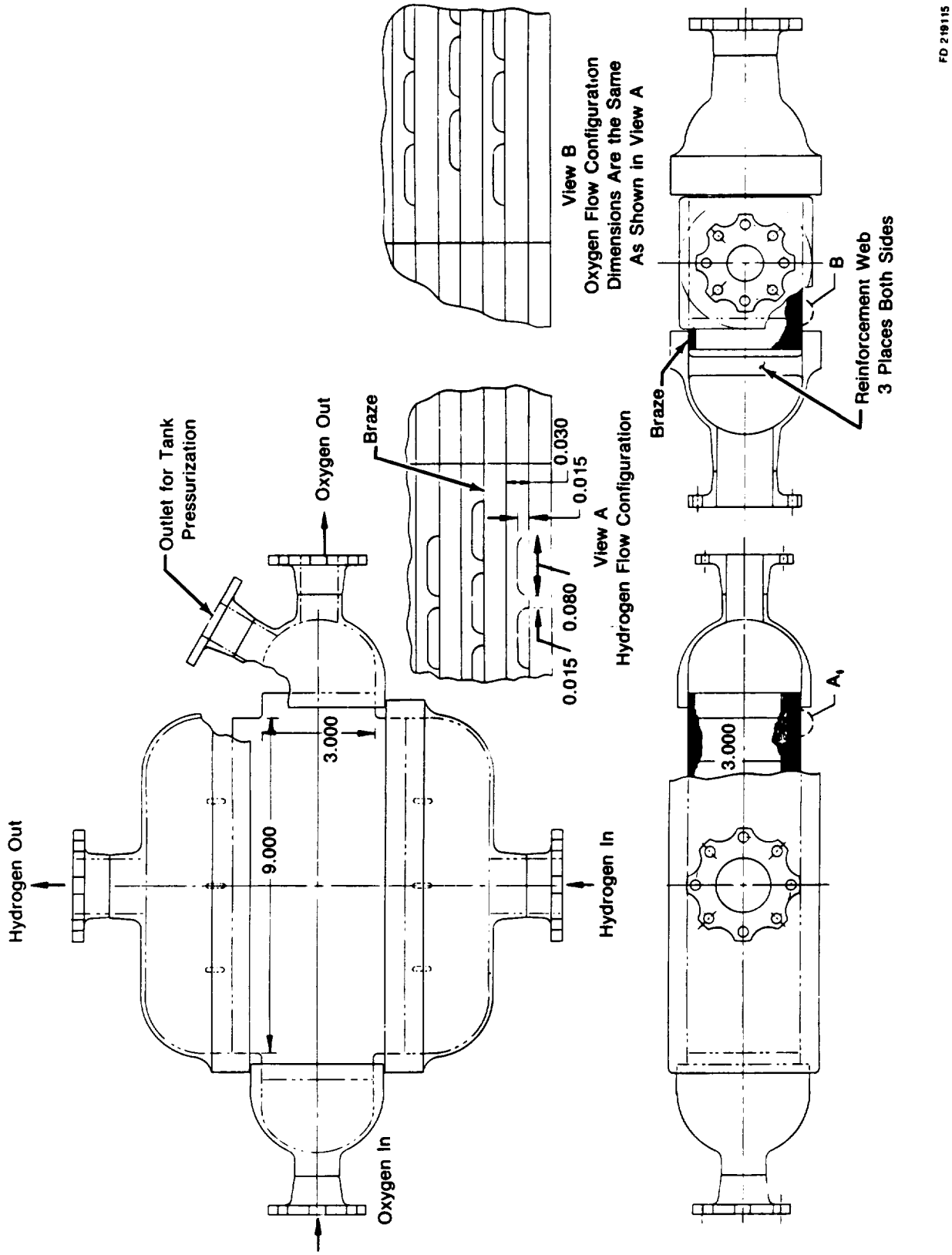

Figure 3-9. GOX Heat Exchanger

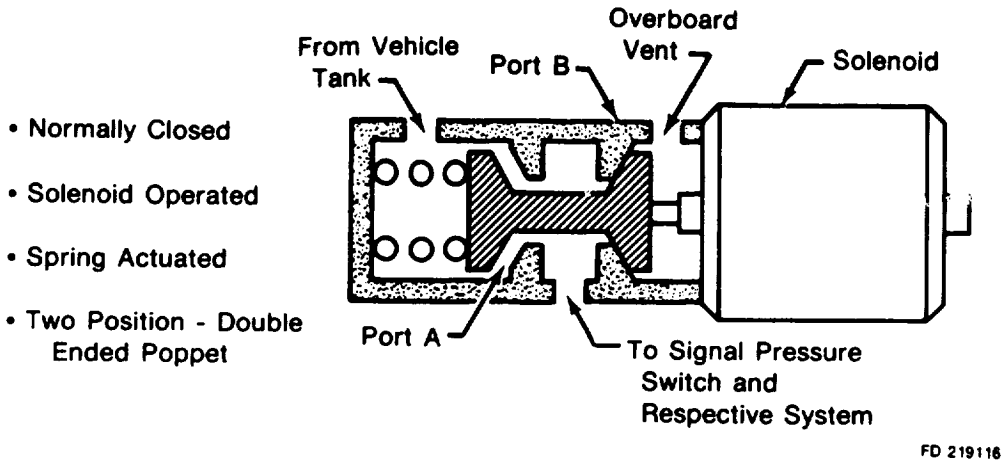

Figure 3-10. Solenoid Valves

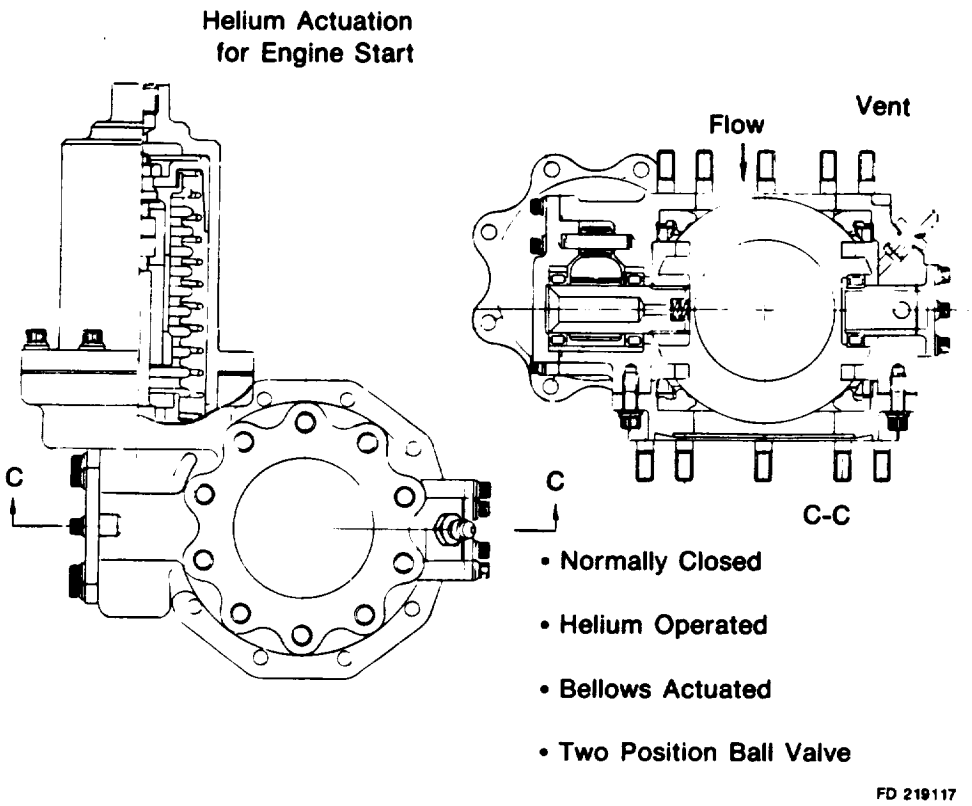

Figure 3-11. Propellant Inlet Shut-Off Valves

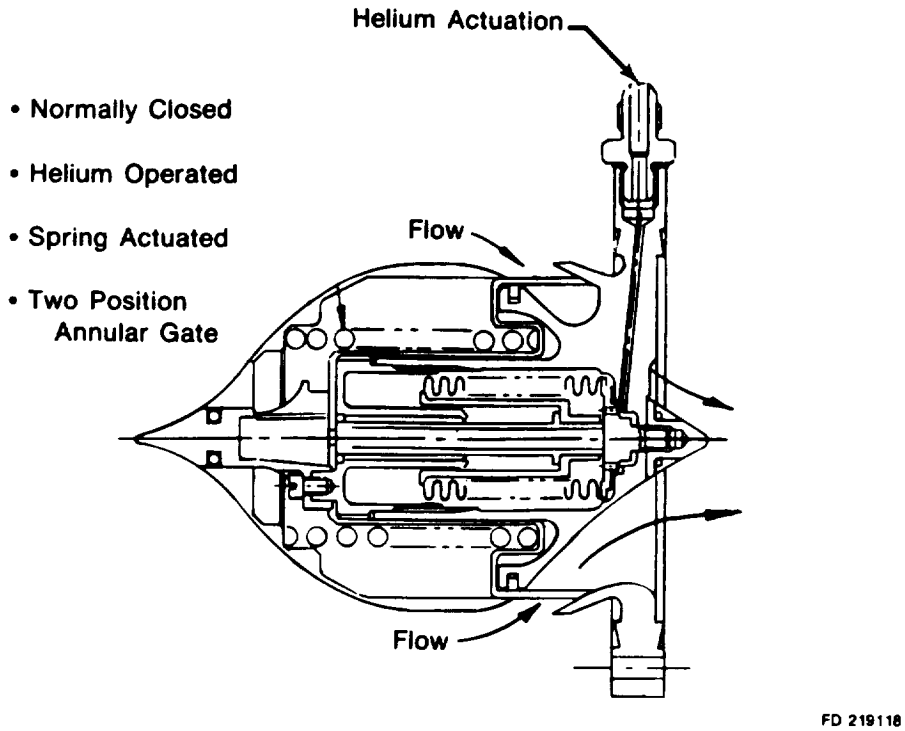

Figure 3-12. Main Fuel Shut-Off Valve

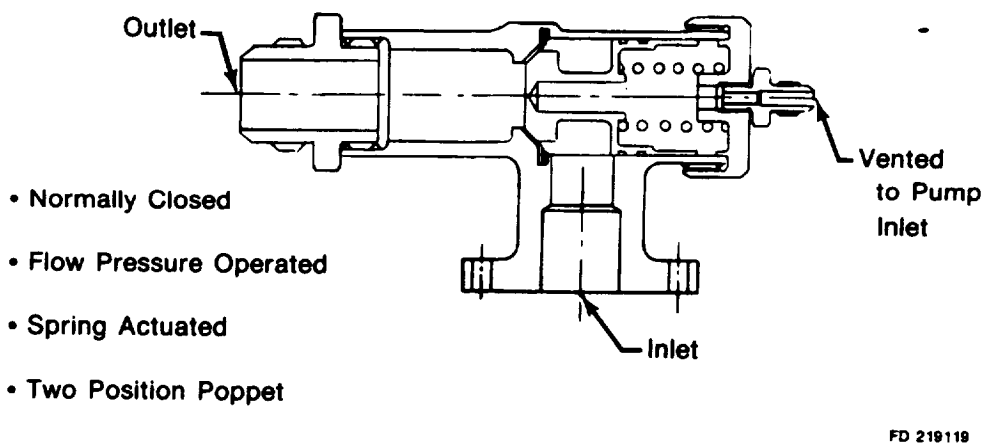

Figure 3-13. Propellant Tank Pressurization Valves

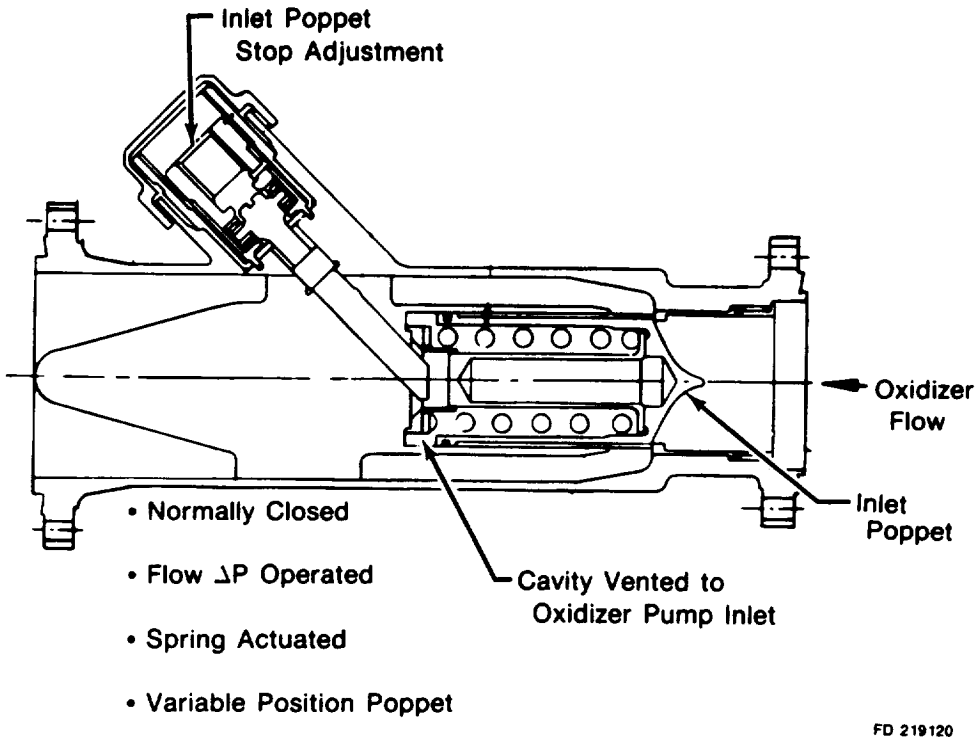

Figure 3-14. Oxidizer Flow Control Valve

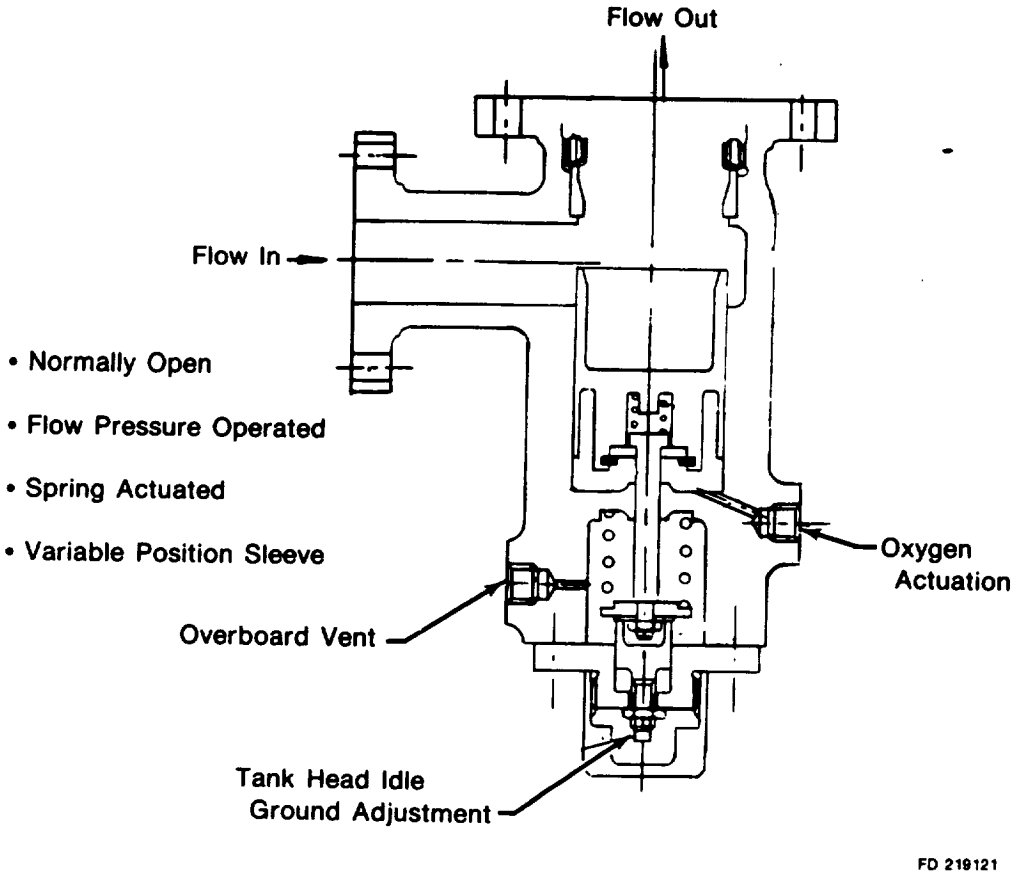

Figure 3-15. Gaseous Oxidizer Control Valve

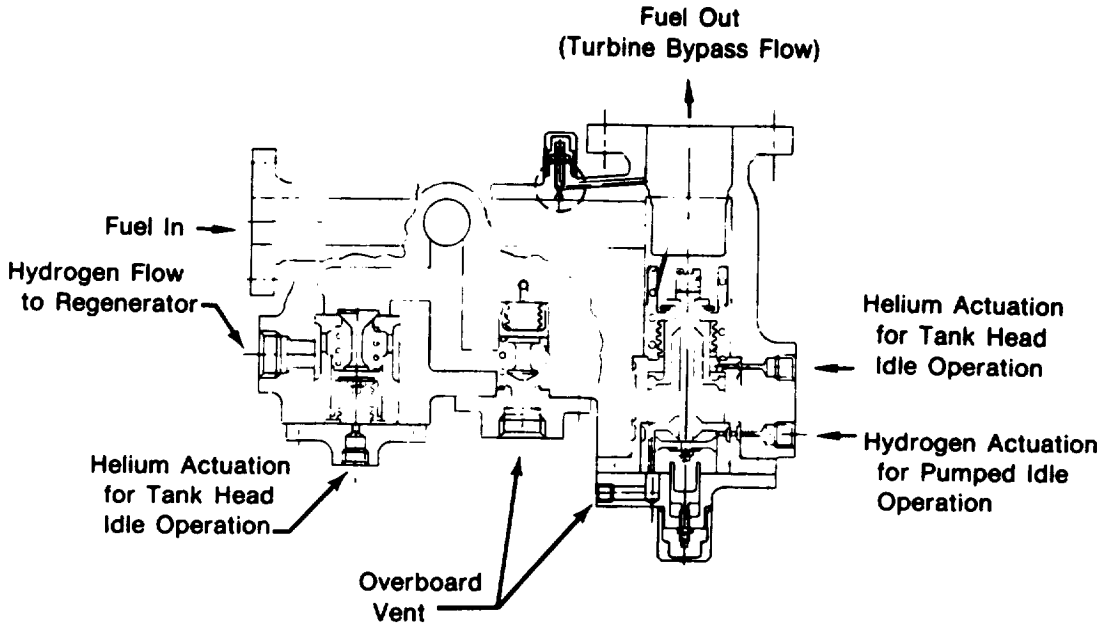

A. By-Pass Flow
- Normally Closed
- Helium Operated to Tank Head Idle
- Flow Pressure Actuated to Pumped Idle
- Spring Actuated to Full Thrust
- Variable Position Sleeve

B. Regenerator Flow
- Normally Closed
- Helium Operated
- Spring Actuated
- Two Position Poppet

C. Shutdown Vent
- Normally Open
- Helium Operated
- Spring Actuated
- Two Position Poppet

FD 219122

Figure 3-16. Main Fuel Control Valve