August 1980

(NASA-CR-160513) RESULTS OF TESTS USING A 0.020-SCALE MODEL (88-OTS) OF THE SPACE SHUTTLE INTEGRATED VEHICLE JET-PLUME IN THE NASA/ARC UPWT 11 X 11-FOOT LEG (TEST IA119), VOLUME 4 (Chrysler Corp.) 125 p

N81-70334

Unclas

00/16 36573

DMS-DR-2404
NASA-CR-160,513

VOLUME 4 OF 4

RESULTS OF TESTS USING A 0.020-SCALE MODEL (88-OTS) OF THE SPACE SHUTTLE INTEGRATED VEHICLE JET-PLUME IN THE NASA/ARC UPWT 11 X 11-FOOT LEG (TEST IA119)

by

T. J. Dziubala and J. Marroquin
Shuttle Aerosciences
Rockwell International, Space Division

Prepared under NASA Contract Number NAS9-13247

by

Data Management Services
Chrysler Huntsville Electronics Division
Slidell Engineering Office
New Orleans, Louisiana - 70189

for

Engineering Analysis Division

Johnson Space Center
National Aeronautics and Space Administration
Houston, Texas

REPRODUCED BY
NATIONAL TECHNICAL
INFORMATION SERVICE
U.S. DEPARTMENT OF COMMERCE
SPRINGFIELD, VA. 22161

125

WIND TUNNEL TEST SPECIFICS:

Test Number:	11-275
NASA Series Number:	IA119
Model Number:	88-OTS
Test Date:	October 7, 1977 through November 4, 1977
Occupancy Hours:	285

FACILITY COORDINATOR:

J. J. Brownson
Mail Stop 227-5
Ames Research Center
Moffett Field, CA. 94035

Phone: (415) 965-5647

PROJECT ENGINEERS:

T. J. Dziubala
J. Marroquin
Mail Code AD38
Rockwell International
Space Division
12214 Lakewood Boulevard
Downey, CA 90241

Phone: (213) 922-3785

AERODYNAMICS ANALYSIS ENGINEER:

J. Stone
Mail Code AC07
Rockwell International
Space Division
12214 Lakewood Boulevard
Downey, CA 90241

Phone: (213) 922-3226

DATA MANAGEMENT SERVICES:

Prepared by: Liaison--D. W. Hersey
Operations--B. F. Burst

Reviewed by: G. W. Klug

Approved: J. L. Glynn, Manager
Data Operations

Concurrence: N. D. Kemp, Manager
Data Management Services

Chrysler Huntsville Electronics Division/Slidell Engineering Office assumes no responsibility for the data presented other than display characteristics

NOTICE

THIS DOCUMENT HAS BEEN REPRODUCED FROM THE BEST COPY FURNISHED US BY THE SPONSORING AGENCY. ALTHOUGH IT IS RECOGNIZED THAT CERTAIN PORTIONS ARE ILLEGIBLE, IT IS BEING RELEASED IN THE INTEREST OF MAKING AVAILABLE AS MUCH INFORMATION AS POSSIBLE.

TABLE OF CONTENTS

	Page
ABSTRACT	iii
INDEX OF MODEL FIGURES	3
INDEX OF DATA FIGURES	5
INDEX OF TABULATED SOURCE DATA	10
INTRODUCTION	11
NOMENCLATURE	12
REMARKS	21
CONFIGURATIONS INVESTIGATED	22
TEST FACILITY DESCRIPTION	26
DATA REDUCTION	27
TABLES	
I. TEST CONDITIONS	31
II. DATA SET/RUN NUMBER COLLATION SUMMARY	32
III. MODEL DIMENSIONAL DATA	50
IV. NOZZLE GIMBAL SETTINGS	82
V. ORBITER PRESSURE TAP NUMBERS AND LOCATIONS	
a. OMS POD	83
b. BASE REGION	84
c. SSME NOZZLE	85
d. BODY FLAP	86
e. VERTICAL TAIL	87
f. RIGHT HAND WING	88

TABLE OF CONTENTS (Concluded)

	Page
TABLES (Continued)	
VI. EXTERNAL TANK PRESSURE TAP LOCATIONS	
a. AFT CYLINDER	89
b. BASE REGION	90
c. LH_2 FEEDLINE	91
VII. SRB PRESSURE INSTRUMENTATION	
a. LEFT HAND PRESSURE TAP LOCATIONS	92
b. BASE AND AFT TAP LOCATIONS	93
VIII. ACOUSTIC MEASUREMENT LOCATIONS	94
IX. BAD PRESSURE DATA LIST	95
FIGURES	
MODEL	101
DATA - FORCE ----- SEE VOLUME 1	122
PRESSURE -- SEE VOLUME 2	
APPENDIX	
TABULATED SOURCE DATA	
FORCE ----- SEE VOLUME 3	
PRESSURE -- SEE VOLUME 4	
(MICROFICHE ONLY)	

INDEX OF MODEL FIGURES

Figure	Title	Page
1.	Axis systems.	
	a. Shuttle Vehicle	101
	b. Control Surface Deflection	102
	c. Definition of Nozzle Gimbal Angles	103
2.	Model sketches.	
	a. Orbiter (0) Components	104
	b. Integrated Space Shuttle Vehicle Configuration	105
	c. External Tank (T_{28}) Protrusions	106
	d. SRB (S_{22}) Protrusions	107
	e. SRB Aft Separation Motors	108
	f. ARC UPWT 11 x 11 Model Installation	109
	g. Pressure Tap Array - Fuselage	110
	h. Orbiter Base Pressure Instrumentation Locations	111
	i. Orbiter SSME Nozzle Pressure Tap Locations	112
	j. Orbiter Body Flap Pressure Instrumentation	113
	k. Orbiter Pressure Instrumentation - Vertical Tail	114
	l. Orbiter Wing Pressure Tap Locations	115
	m. External Tank Pressure Instrumentation	116
	n. External Tank Base Pressure Tap Locations	117
	o. External Tank LH_2 Feedline Instrumentation	118
	p. SRB Pressure Tap Locations	119
	q. SRB Pressure Instrumentation Base and Aft	120

INDEX OF MODEL FIGURES (Concluded)

Figure	Title	Page
2.	Model sketches. (Continued)	
	r. External Tank Base Calorimeter Locations	121
3.	Model photographs. (No model photographs provided)	

INDEX OF DATA FIGURES
(a) Force

FIGURE NUMBER	TITLE	COEFFICIENT SCHEDULE	CONDITIONS VARYING	PAGES
4	EFFECT OF ENGINE PLUME SIZE ON WING LOADS (SHEAR, BENDING, TORSION)	A	MACH,SSMEPR,SRBPR	1-27
5	EFFECT OF ENGINE PLUME SIZE ON ELEVON HINGE MOMENTS (INBOARD, OUTBOARD)	B	MACH,SSMEPR,SRBPR	28-45
6	EFFECT OF ENGINE PLUME SIZE ON ORBITER MEAN BASE PRESSURES	C	MACH,SSMEPR,SRBPR	46-54
7	EFFECT OF ENGINE PLUME SIZE ON BASE PRESSURES (ET, LSRB, RSRB)	D	MACH,SSMEPR,SRBPR	55-81
8	PLUME EFFECTS ON WING IN PITCH (SHEAR, BENDING, TORSION) BETA = -6, 0, 6 DEGREES, ELEV = 10/9	E	MACH,BETA,SSMEPR SRBPR	82-108
9	PLUME EFFECTS ON WING IN PITCH (SHEAR, BENDING, TORSION) BETA = -6, 0, 6 DEGREES, ELEV = 10/5	E	MACH,BETA,SSMEPR SRBPR	109-135
10	PLUME EFFECTS ON WING IN PITCH (SHEAR, BENDING, TORSION) BETA = -4, 0, 4 DEGREES, ELEV = 10/11	E	MACH,BETA,SSMEPR SRBPR	136-153
11	PLUME EFFECTS ON WING IN PITCH (SHEAR, BENDING, TORSION) BETA = -4, 0, 4 DEGREES, ELEV = 12/9	E	MACH,BETA,SSMEPR SRBPR	154-180
12	PLUME EFFECTS ON WING IN PITCH (SHEAR, BENDING, TORSION) BETA = -4, 0, 4 DEGREES, ELEV = 12/-2	E	MACH,BETA,SSMEPR SRBPR	181-189
13	PLUME EFFECTS ON WING IN PITCH (SHEAR, BENDING, TORSION) BETA = -4, 0, 4 DEGREES, ELEV = 10/-2	E	MACH,BETA,SSMEPR SRBPR	190-198

INDEX OF DATA FIGURES
(a) Force (Continued)

FIGURE NUMBER	TITLE	COEFFICIENT SCHEDULE	CONDITIONS VARYING	PAGES
14	PLUME EFFECTS ON WING IN PITCH (SHEAR, BENDING, TORSION) BETA = -4, 0, 4 DEGREES, ELEV = 10/-5	E	MACH,BETA,SSMEPR SRBPR	199-207
15	PLUME EFFECTS ON WING IN PITCH (SHEAR, BENDING, TORSION) BETA = -4, 0, 4 DEGREES, ELEV = 8/9	E	MACH,BETA,SSMEPR SRBPR	208-234
16	PLUME EFFECTS ON ELEVON HINGE MOMENT IN PITCH BETA = -6, 0, 6 DEGREES, ELEV = 10/9	F	MACH,BETA,SSMEPR SRBPR	235-252
17	PLUME EFFECTS ON ELEVON HINGE MOMENT IN PITCH BETA = -6, 0, 6 DEGREES, ELEV = 10/5	F	MACH,BETA,SSMEPR SRBPR	253-270
18	PLUME EFFECTS ON ELEVON HINGE MOMENT IN PITCH BETA = -4, 0, 4 DEGREES, ELEV = 10/11	F	MACH,BETA,SSMEPR, SRBPR	271-282
19	PLUME EFFECTS ON ELEVON HINGE MOMENT IN PITCH BETA = -4, 0, 4 DEGREES, ELEV = 12/9	F	MACH,BETA,SSMEPR, SRBPR	283-300
20	PLUME EFFECTS ON ELEVON HINGE MOMENT IN PITCH BETA = -4, 0, 4 DEGREES, ELEV = 12/-2	F	MACH,BETA,SSMEPR, SRBPR	301-306
21	PLUME EFFECTS ON ELEVON HINGE MOMENT IN PITCH BETA = -4, 0, 4 DEGREES, ELEV = 10/-2	F	MACH,BETA,SSMEPR, SRBPR	307-312
22	PLUME EFFECTS ON ELEVON HINGE MOMENT IN PITCH BETA = -4, 0, 4 DEGREES, ELEV = 10/-5	F	MACH,BETA,SSMEPR, SRBPR	313-318
23	PLUME EFFECTS ON ELEVON HINGE MOMENT IN PITCH BETA = -4, 0, 4 DEGREES, ELEV = 8/9	F	MACH,BETA,SSMEPR, SRBPR	319-336

INDEX OF DATA FIGURES
(a) Force (Continued)

FIGURE NUMBER	TITLE	COEFFICIENT SCHEDULE	CONDITIONS VARYING	PAGES
24	EFFECT OF ENGINE GIMBALLING ON POWER-ON BASE PRESSURES (ORBITER, ET, LSRB, RSRB) ALPHA = BETA = 0 DEGREES	G	SRBPR, SSMEPR, GIMBAL	337-340
25	SUMMARY OF POWER-ON WING AND ELEVON INCREMENTAL COEFFICIENTS (SHEAR, BENDING, TORSION)	H	MACH, ALPHA, BETA, ELV-IB, ELV-OB	341-412
26	SUMMARY OF POWER-ON HINGE MOMENT INCREMENTS (INBOARD, OUTBOARD)	I	MACH, ALPHA, BETA, ELV-IB, ELV-OB	413-460

INDEX OF DATA FIGURES
(b) Pressure

FIGURE NUMBER	TITLE	COEFFICIENT SCHEDULE	CONDITIONS VARYING	PAGES
4	ORBITER FUSELAGE FOREBODY PRESSURES	J	MACH, CPR4, XO/LO	1-20
5	VERTICAL TAIL PRESSURES	K	MACH, CPR4, ETA	21-40
6	ORBITER BODYFLAP PRESSURES	L	MACH, CPR4, ETA	41-60
7	WING PRESSURES	M	MACH, CPR4, ETA	61-100
8	EXTERNAL TANK FOREBODY PRESSURES	J	MACH, CPR4, XT FS	101-120
9	HYDROGEN FEED LINE PRESSURES	J	MACH, CPR4	121-130
10	SRB FOREBODY PRESSURES	J	MACH, CPR4, XS FS	131-140
11	ORBITER BASE PRESSURES	N	MACH, CPR4, ZO	141-170
12	EXTERNAL TANK BASE PRESSURES	J	MACH, CPR4, XT FS	171-180
13	SRB BASE PRESSURES	J	MACH, CPR4	181-200
14	NO.1 SSME EXTERNAL NOZZLE PRESSURES	J	MACH, CPR4, X/D	201-210
15	NO.3 SSME EXTERNAL NOZZLE PRESSURES	J	MACH, CPR4, X/D	211-220
16	NO.4 SRB EXTERNAL NOZZLE PRESSURES	J	MACH, CPR4, X/D	221-230

COEFFICIENT SCHEDULE:

(A) C_{N_W}, C_{B_W}, C_{T_W} versus $C_{P_{R4}}$; C_{N_W}, C_{B_W}, C_{T_W} versus $C_{P_{R1}}$

(B) C_{HE_I}, C_{HE_O} versus $C_{P_{R4}}$; C_{HE_I}, C_{HE_O} versus $C_{P_{R1}}$

(C) $C_{P_{b_{orb}}}$ versus $C_{P_{R4}}$; $C_{P_{b_{orb}}}$ versus $C_{P_{R1}}$

(D) $C_{P_{b_{et}}}$, $C_{P_{b_{s\ell}}}$, $C_{P_{b_{sr}}}$ versus $C_{P_{R4}}$; $C_{P_{b_{et}}}$, $C_{P_{b_{s\ell}}}$, $C_{P_{b_{sr}}}$ versus $C_{P_{R1}}$

COEFFICIENT SCHEDULE: (Concluded)

(E) C_{N_W}, C_{B_W}, C_{T_W} versus α

(F) $C_{H_{E_I}}$, $C_{H_{E_O}}$ versus α

(G) $C_{p_{b_{orb}}}$, $C_{p_{b_{et}}}$, $C_{p_{b_{s\ell}}}$, $C_{p_{b_{sr}}}$ versus M

(H) ΔC_{N_W}, ΔC_{B_W}, ΔC_{T_W} versus M

(I) $\Delta C_{H_{E_I}}$, $\Delta C_{H_{E_O}}$ versus M

(J) C_p versus $\emptyset$

(K) C_p versus X_v/C_v

(L) C_p versus X_o/C_{bf}

(M) C_p versus X_w/C_w

(N) C_p versus Y_o

INDEX OF TABULATED SOURCE DATA

(a) Force

DATASET ID	DEPENDENT VARIABLE SCHEDULE	VOLUME 3 PAGES
R2R$$$	CNW, CBW, CTW, CHEI, CHEO, CHET, CPBORB, CPBET, CPBSL, CPBSR	1-183
A2R$$$	CPR1*, CPR2, CPR3, CPR4*, CPR5, EPR1, EPR2, EPR3, EPR4, EPR5	183-366
B2R$$$	PT, P, Q, TT, T, CONFIG, GIMBAL, ALPHA*, BETA*	366-549
C2R$$$	ELVLI, ELVLO, TTMPS, TTSRB, XCPW, YCPW, THETAW, PHIW	549-732
D2R$$$	PR96, PR97, PR98, PR99, PR100, Q1, Q2, Q3	732-915
E2R$$$	ERI, ERO, ELI, DI, ELO, DO	915-1098
U2R$$$	RMSDI, where I = 1-10	1099-1102
V2R$$$	RMSDI, where I = 11-20	1102-1105
W2R$$$	RMSDI, where I = 21-29	1105-1108
X2R$$$	GI, where I = 1-10	1109-1112
Y2R$$$	GI, where I = 11-20	1112-1115
Z2R$$$	GI, where I = 21-29	1115-1118

(b) Pressure

DATASET ID	COMPONENT	MICROFICHE PAGES	VOLUME 4 PAGES
Z2RA$$	NO. 1 SSME, UPPER	1-11	1-688
Z2RB$$	No. 3 SSME, LOWER RIGHT	12-20	689-1255
R2RC$$	ORBITER +OMS PODS	21-37	1256-2315
R2RD$$	ORBITER BASE	37-65	2316-4050
R2RG$$	ORBITER BODY FLAP - TOP	65-76	4051-4738
R2RH$$	ORBITER BODY FLAP - BOTTOM	76-87	4739-5426
R2RI$$	VERTICAL TAIL - RIGHT SIDE	88-98	5427-6163
Z2RJ$$	EXTERNAL TANK	99-110	6164-6900
R2RK$$	EXTERNAL TANK - BASE	110-130	6901-8119
Z2RL$$	LH_2 FEEDLINE, FL 10	130-139	8120-8672
Z2RM$$	LEFT SRB	139-149	8673-9360
Z2RN$$	LEFT SRB NOZZLE	149-160	9361-10048
Z2RP$$	LEFT SRB BASE	160-169	10049-10601
Z2RQ$$	RIGHT SRB BASE	169-178	10602-11154
R2RS$$	WING - TOP RIGHT	179-226	11155-14111
R2RT$$	WING - BOTTOM RIGHT	226-273	14112-17068

* INDEPENDENT VARIABLE IN SOME DATASETS

ORIGINAL PAGE IS
OF POOR QUALITY

INTRODUCTION

Model 88-OTS, a 0.02-scale replica of the integrated space shuttle vehicle, was tested in the ARC Unitary Plan Wind Tunnel. The test was conducted in the 11 x 11-foot transonic test section between October 7 and November 4, 1977 in a total of 285 occupancy hours. The shuttle program test designation was IA119 and the facility test number was 275-11.

Cold air flow through the main propulsion system (MPS) and solid rocket booster (SRB) nozzles was used to simulate the rocket plumes. The air was supplied through two independent systems, routed through the blade strut which supported the model at the external tank (ET) lower centerline. An interconnecting strut carried the air from the ET to the orbiter.

Test variables included Mach number ($0.6 \leq M \leq 1.4$), angle-of-attack ($-8^{\circ} \leq \alpha \leq 4^{\circ}$), sideslip angle ($-6^{\circ} \leq \beta \leq 6^{\circ}$), MPS and SRB nozzle pressure ratios and gimbal angles, and elevon deflections.

Data gathered in the test included noise levels and steady-state pressure distributions on the aft portions of the orbiter, ET and left hand SRB, aspiration-induced cooling rates at three points on the base of the ET, left wing bending and torsion moments and left wing inboard and outboard elevon hinge moments.

NOMENCLATURE
General

PLOT SYMBOL	MNEMONIC	DEFINITION
RN/L	RN/L	unit Reynolds number; per m, per ft
α	ALPHA	angle of attack, degrees
β	BETA	angle of sideslip, degrees
ψ	PSI	nozzle gimbal angle (yaw), degrees
		Reference & C.G. Definitions
$\bar{c}$		aerodynamic chord; m, ft
	MRP	moment reference point
	XMRP	moment reference point on X axis
	YMRP	moment reference point on Y axis
	ZMRP	moment reference point on Z axis
℄		component centerline
H℄, H.L.		component hinge line
		Body-Axis System
C_N	CN	normal-force coefficient; $\frac{\text{normal force}}{qS}$
C_A	CA	axial-force coefficient; $\frac{\text{axial force}}{qS}$
C_Y	CY	side-force coefficient; $\frac{\text{side force}}{qS}$

NOMENCLATURE (Continued)

PLOT SYMBOL	MNEMONIC	DEFINITION
C_{A_b}	CAB	base-force coefficient; $\frac{\text{base force}}{qS}$ $-A_b(p_b - p_\infty)/qS$
C_{A_f}	CAF	forebody axial force coefficient, $C_A - C_{A_b}$
C_m	CLM	pitching-moment coefficient; $\frac{\text{pitching moment}}{qS\ell_{REF}}$
C_n	CYN	yawing-moment coefficient; $\frac{\text{yawing moment}}{qSb}$
C_ℓ	CBL	rolling-moment coefficient; $\frac{\text{rolling moment}}{qSb}$
		Stability-Axis System
C_L	CL	lift coefficient; $\frac{\text{lift}}{qS}$
C_D	CD	drag coefficient; $\frac{\text{drag}}{qS}$
C_{D_b}	CDB	base-drag coefficient; $\frac{\text{base drag}}{qS}$
C_{D_f}	CDF	forebody drag coefficient; $C_D - C_{D_b}$
C_Y	CY	side-force coefficient; $\frac{\text{side force}}{qS}$
C_m	CLM	pitching-moment coefficient; $\frac{\text{pitching moment}}{qS\ell_{REF}}$
C_n	CLN	yawing-moment coefficient; $\frac{\text{yawing moment}}{qSb}$
C_ℓ	CSL	rolling-moment coefficient; $\frac{\text{rolling moment}}{qSb}$
L/D	L/D	lift-to-drag ratio; C_L/C_D
L/D_f	L/DF	lift to forebody drag ratio; C_L/C_{D_f}

NOMENCLATURE (Continued)

Additions to Standard List

PLOT SYMBOL	MNEMONIC	DEFINITION
$A_{B(Element)}$		base area for element: ORB,ET,SRBL,SRBR; in^2.
A_i		base area for tap i, in^2.
B.L.		butt line, in.
BM_W		wing-root bending moment (about wing reference center), in-lb.
BM_{W_I}		wing-root bending moment at inboard gauge, in-lb.
BM_{W_O}		wing-root bending moment at outboard gauge, in-lb.
b_W	BREF	span of wing, in.
C_{BF}		body flap chord length, in.
C_{B_W}	CBW	wing-root bending-moment coefficient
c_E		MAC of total elevon panel, in.
C_{EL}		elevon chord length, in.
$C_{H_{E_I}}$	CHEI	hinge-moment coefficient for inboard elevon
$C_{H_{E_O}}$	CHEO	hinge-moment coefficient for outboard elevon
$C_{H_{E_T}}$	CHET	total elevon hinge-moment coefficient
C_{N_W}	CNW	wing normal-force coefficient
	CONFIG	= 1.0 for 0° model roll angle 2.0 for 90° model roll angle
$C_{P_{b_{orb}}}$	CPBORB	ORB base pressure coefficient
$C_{P_{b_{et}}}$	CPBET	ET base pressure coefficient
$C_{P_{b_{sl}}}$	CPBSL	left SRB base pressure coefficient
$C_{P_{b_{sr}}}$	CPBSR	right SRB base pressure coefficient

NOMENCLATURE (Continued)

Additions to Standard List

PLOT SYMBOL	MNEMONIC	DEFINITION
C_{P_i}	CP	pressure coefficient for model surface tap i, i = 162-2240
C_{PR_j}	CPRJ	chamber pressure ratio for nozzle j
C_{PRMSl}	RMSDL	Kulite unsteady pressure transducer RMS pressure coefficient, l = 1 to 29
C_{T_W}	CTW	wing-root twisting-moment coefficient
c_W		MAC of wing, in.
EPR_j	EPRJ	exit base pressure ratio for nozzle j
ET		external tank
η, η_W	ETA	spanwise location on wing, fraction of semi-span (2Y/BW)
F.S.		full scale
G_i	GI	Kulite gain for transducer i
GIMBAL	GIMBAL	gimbal deflection schedule, deg. (See Table IV)
HM_{E_I}		hinge moment of inboard elevon, in-lb.
HM_{E_O}		hinge moment of outboard elevon, in-lb.
IPR_j	PRJ	nozzle exit internal pressure ratio for nozzle j, j = 96-100
$K_{\Delta_{M_1}}$		left hand wing panel roll deflection rate due to inboard bending moment, deg/in-lb.
$K_{\Delta_{M_2}}$		left hand wing panel roll deflection rate due to outboard bending moment, deg/in-lb.
$K_{\Delta_{W_T}}$		left hand wing panel deflection rate in pitch plane due to torsion moment, deg/in-lb.
l_B, l_O	LREF	reference body length, in.

NOMENCLATURE (Continued)

Additions to Standard List

PLOT SYMBOL	MNEMONIC	DEFINITION
L.E.		leading edge
M	MACH	freestream Mach number
MPS	MPS	main propulsion system
M.S.		model scale
OTS-1		basic configuration launch vehicle
P_{C_j}		chamber pressure (absolute) for nozzle j, psia
$P_{C_{MPS}}$		MPS supply total pressure, psia (as set)
$P_{C_{SRB}}$		SRB supply total pressure, psia (as set)
$P_{e_{B_j}}$		exit base pressure (absolute) for nozzle j, psia
P_{e_i}		exit pressure (absolute) for nozzle i, psia
P_i		pressure (absolute) at model surface tap i, psia
PR_j	PRJ	nozzle exit pressure ratio for nozzle j
P_T	PT	freestream total pressure, psia
P_∞	P	freestream static pressure, psia
q	Q	freestream dynamic pressure, p.s.f.
Q_k	QK	heat transfer flux measured by Gardon gauge, btu/ft^2sec. k = 1, 2, 3
R_i		radius of nozzle i, in.
S_E	SREF	reference elevon area, ft^2.
S_W	SREF	reference wing area, ft^2.
SRB		solid rocket booster
SRBPR	SRBPR	SRB nozzle pressure ratio, $P_{C_{SRB}}/P_\infty$, as set

NOMENCLATURE (Continued)

Additions to Standard List

PLOT SYMBOL	MNEMONIC	DEFINITION
SSME	SSME	space shuttle main engine
SSMEPR	SSMEPR	SSME nozzle pressure ratio, $P_{C_{SSME}}/P_\infty$, as set
T	T	freestream static temperature, ^oR
T.E.		trailing edge
T_K		Gardon gauge temperature, ^oF; K = 1, 2, 3
TM_W		wing-root twisting moment (about wing reference center), in-lb.
TM_{W_G}		wing-root twisting moment at gauge, in-lb.
T_{strut}		temperature at strut-terminal strip where calorimeter thermocouple lead ends, ^oF
TT	TT	freestream total temperature, ^oR
TT_{MPS}	TTMPS	MPS supply total temperature, ^oR
TT_{SRB}	TTSRB	SRB supply total temperature, ^oR
W.L.		water line
$(X/C)_{bf}$, X_o/C_{bf}	XO/CBF	longitudinal location, fraction of body flap length
$(X/C)_w, X_w/C_w$	XW/CW	longitudinal location, fraction of chord length
$(X/C)_v, X_v/C_v$	XV/CV	longitudinal location, fraction of vertical tail
X_{CP_W}	XCPW	wing center-of-pressure, longitudinal location, in.
X/D		longitudinal location, fraction of diameter
X_{EL}		longitudinal elevon distance, in.
X/L		longitudinal location, fraction of body length
X/LS		longitudinal location, fraction of SRB length

NOMENCLATURE (Continued)

Additions to Standard List

PLOT SYMBOL	MNEMONIC	DEFINITION
X/LT		longitudinal location, fraction of ET length
X_N		orbiter nose station, in.
X_o	XO	orbiter longitudinal location, in.
X_s, X_B		SRB longitudinal distance, in.
X_T		longitudinal ET distance, in.
X_{WRC}		longitudinal (station) location of wing reference center, in.
$X_{TM_{W_G}}$		longitudinal location of wing-root twisting gauge, in.
$Y_{BM_{W_I}}$		lateral location of inboard wing-root bending gauge, in.
$Y_{BM_{W_O}}$		lateral location of outboard wing-root bending gauge, in.
Y_{CP_W}	YCPW	wing center of pressure, lateral location, in.
Y_o	YO	orbiter lateral location, in.
Y_s		SRB lateral distance, in.
Y_T		lateral ET distance, in.
Y_{WRC}		lateral (buttplane) location of wing reference center, in.
Z_o	ZO	orbiter vertical location, in.
Z_s		SRB vertical distance, in.
Z_T		vertical ET distance, in.
α_{N_j}		pitch-angle of nozzle j axis in a plane parallel to the orbiter plane-of-symmetry, deg.

NOMENCLATURE (Continued)

Additions to Standard List

PLOT SYMBOL	MNEMONIC	DEFINITION
$\delta_{E_{\ell_I}}$	ELV-LI	left inboard elevon setting, corrected for load deflection, deg.
$\delta_{E_{\ell_I}}$	ELI	left inboard elevon static setting, deg.
$\delta_{E_{\ell_O}}$	ELV-LO	left outboard elevon setting, corrected for load deflection, deg.
$\delta_{E_{\ell_O}}$	ELO	left outboard elevon static setting, deg.
$\delta_{E_{r_I}}$	ERI	right inboard elevon static setting, deg.
$\delta_{E_{r_O}}$	ERO	right outboard elevon static setting, deg.
δ_{W_P}		left wing panel deflection in pitch due to load, deg.
δ_{W_R}		left wing panel deflection in roll due to load, deg.
ΔC_{B_W}		incremental (power on-power off) wing-root bending moment coefficient
$\Delta C_{H_{E_I}}$		incremental (power on-power off) hinge-moment coefficient for inboard elevon
$\Delta C_{H_{E_O}}$		incremental (power on-power off) hinge-moment coefficient for outboard elevon
ΔC_{N_W}		incremental (power on-power off) wing normal-force coefficient
ΔC_{T_W}		incremental (power on-power off) wing-root twisting moment coefficient
$\Delta_{E_{\ell_I}}$	DI	left inboard elevon deflection due to load, deg.
$\Delta_{E_{\ell_O}}$	DO	left outboard elevon deflection due to load, deg.
ϵ		expansion nozzle ratio
ϕ	PHI	model roll angle or radial location measured clockwise from bottom centerline (looking forward),deg.

NOMENCLATURE (Concluded)

Additions to Standard List

PLOT SYMBOL	MNEMONIC	DEFINITION
ϕ_W	PHIW	deflection of left hand wing panel in roll due to bending moment, deg. (positive tip upward)
θ_W	THETAW	deflection of left hand wing panel due to torsion moment, deg. (positive LE up)

SUBSCRIPTS

B	base, body, bending
C	chamber
e	exit
E	elevon
G	gauge
i	surface pressure tap number
I	inboard
j	nozzle number j = 1, MPS nozzle j = 2, L.H. MPS nozzle j = 3, R.H. MPS nozzle j = 4, L.H. SRB nozzle j = 5, R.H. SRB nozzle
l	left
N	nozzle, nose (orbiter)
O	outboard, orbiter
r	right
S	solid rocket booster
T	external tank, total, twisting
W	wing
∞	static freestream

REMARKS

The No. 2 MPS nozzle (lower left hand) was blown out of its socket prior to the first data run due to improperly seated retaining screws. Although the nozzle itself was undamaged, the tubes from nozzle exit plane taps 95 and 97 at $\phi = 60^{\circ}$ and 300°, respectively, were lost.

SRB base pressure taps 2201 - 2224 were cut from the model prior to run 487 to allow the G5 and G6 gimbal settings to be attained.

A check of the calorimeter operating temperatures, made in the NAAL instrument lab after the test, revealed that the temperatures set during tunnel runs 576 and higher were 408, 400 and 400°F for calorimeters Number 1, 2 and 3, respectively. The calorimeters were unheated during the prior runs.

The sensitivity of the calorimeters to heat transfer rates (millivolts/BTU/ft^{2}sec) was calibrated by the manufacturer before the units were installed in the model. The units were calibrated by radiating heat onto them from a known black body. Since they were used in the test to measure heat flux from themselves, the manufacturer speculated that the calibrations could be off by $\pm 20\%$ under those conditions.

Kulite high-frequency transducer numbers 15, 19, 25, 26 and 29 were not in proper working order during the test. The RMS data obtained therefrom are consequently unusable.

CONFIGURATIONS INVESTIGATED

The model tested was a 0.020-scale representation of the drawing VL72-000002 (Modified) mated space shuttle vehicle. The 88-OTS model had the capability of simulating the jet plumes generated from the SRB and MPS systems by directing unheated high-pressure air through pre-calibrated flow-through nozzles.

The orbiter fuselage was constructed of aluminum and Armco steel to OML specifications. The orbiter was rigidly attached to the External Tank by fore and aft attach hardware and by the strut used for supplying high-pressure air to the MPS nozzles. A three view drawing of the vehicle configuration is shown in Figure 2b.

The orbiter was instrumented with 403 surface static-pressure taps and 14 acoustic sensors which were distributed over the fuselage, fuselage base, body flap, MPS nozzles, wing and vertical tail.

The three orbiter flow-through MPS nozzles were constructed of Armco steel and could be set at various gimbal-angle positions, the limits of which were ±11 degrees in pitch and ±9 degrees in yaw from null position. Each nozzle had a chamber total-pressure probe and base tap. The lower contoured nozzles each had three internal exit taps.

The orbiter wing, its deflectable elevons, and the vertical tail were constructed of Armco steel.

The inboard and outboard elevons on the left wing were separately strain-gauged for hinge moments.

The left wing was strain-gauge instrumented for normal force and

root flexion and torsion moments.

The external tank was constructed of Armco steel and aluminum and was rigidly attached to the main blade air-supply strut. The ET had 138 static pressure taps, 8 acoustic sensors and three calorimeters.

The solid rocket boosters are constructed of aluminum and Armco steel. The left SRB was instrumented with 85 external static pressure taps and 2 acoustic sensors while pressures were read at 4 locations on the base of the right SRB.

The flow-through SRB nozzles were constructed of Armco steel and could be set at various gimbal positions, the limits of which were ±8 degrees in yaw. Each nozzle was instrumented with a chamber total-pressure probe and an exit static-pressure tap.

The orbiter configurations were denoted as follows:

$$O = B_{62}\ C_{12}\ E_{52}\ F_{10}\ M_{16}\ R_5\ N_{104}\ N_{89}\ V_{28}\ W_{127}$$

Where the individual orbiter components were defined as:

Component	Definition
B_{62}	fuselage
C_{12}	canopy
E_{52}	elevon
F_{10}	body flap
M_{16}	OMS/RCS pods
R_5	rudder/speedbrake

Component	Definition
N_{104}	MPS nozzles, contoured
N_{89}	OMS nozzles
V_{28}	vertical tail with SILTS pod simulated
W_{127}	wing

The external tank configurations were denoted as follows:

$T = T_{28}\ FR_{10}\ AT_{28}\ AT_{31}\ AT_{32}\ PT_{22}\ PT_{23}\ PT_{24}\ PT_{25}\ PT_{26}\ PT_{27}\ FL_{10} FL_{11}$

Component	Definition
FR_{10}	aft attach crossbeam
T_{28}	external tank
AT_{28}	attach structure
AT_{31}	attach structure
AT_{32}	attach structure
PT_{22}	ET protuberances
PT_{23}	ET protuberances
PT_{24}	ET protuberances
PT_{25}	ET protuberances
PT_{26}	ET protuberances
PT_{27}	ET protuberances
FL_{10}	feedline
FL_{11}	feedline

The SRB nomenclature is as follows:

$S = S_{22}\ FL_{10}\ FL_{11}\ N_{88}\ PS_{11}\ PS_{12}\ PS_{13}\ PS_{14}\ PS_{17}\ PS_{18}\ PS_{20}$

CONFIGURATIONS INVESTIGATED (Concluded)

Components

S_{22}	solid rocket boosters
N_{88}	SRB nozzles
PS_{11}	SRB protuberances
PS_{12}	SRB protuberances
PS_{13}	SRB protuberances
PS_{14}	SRB protuberances
PS_{17}	SRB protuberances
PS_{18}	SRB protuberances
PS_{20}	SRB protuberances

Detailed model component dimensional data are given in Table III.

TEST FACILITY DESCRIPTION

The NASA Ames 11-Foot Transonic Wind Tunnel is the transonic leg of the Ames Unitary facility. It is a closed circuit, single return, continuous flow, variable-density tunnel. The 11 x 11 x 22-foot test section is slotted to permit transonic testing. The nozzle has adjustable sidewalls. The tunnel air is driven by a 3-stage axial flow compressor powered by four wound-rotor induction motors. The speed of the motors is varied as necessary to provide the desired Mach number. The motors have a combined output of 180,000 horsepower for continuous operation or 216,000 horsepower for one hour. Tunnel temperature is controlled by aftercoolers and a cooling tower. Four 30,000 cubic-foot storage tanks provide dry air for tunnel pressurization.

The tunnel can be operated at nominal Mach numbers of .5 to 1.4, Reynold's number per foot x 10^{-6} of 1.7 to 9.4, dynamic pressure (PSF) of 150 to 2,000 and a total temperature (^{o}R) of 540 to 610 respectively.

This tunnel is used for force and moment, pressure. internal air flow-inlet, and dynamic stability tests.

DATA REDUCTION

The data reduction procedures for Test IA119 involve calculation of: Operating nozzle chamber-total, exit-static pressures and pressure ratios for the SRB and MPS nozzles, elevon (inboard and outboard) panel hinge moments and hinge moment coefficients. Wing normal-force coefficient, wing-root bending moment coefficient, wing-root twisting moment coefficient, wing center-of-pressure, angular deflection, and pressure coefficients for the 630 static taps on the orbiter, external tank, and solid rocket booster.

Equations used for reduction of data were as follows:

a. Wing Normal-Force Coefficient

$$C_{N_W} = \frac{BM_{W_I} - BM_{W_O}}{(Y_{BM_{W_O}} - Y_{BM_{W_I}})} \times S_W \, q$$

b. Wing-Root Bending Moment Coefficient (about $Y_o 105$)

$$C_{B_W} = \frac{BM_{W_O}}{S_W \, q \, b_W} + \frac{C_{N_W} \, (Y_{BM_{W_O}} - Y_{WRC})}{b_W}$$

or:

$$= \frac{BM_{W_I}}{S_W \, q \, b_W} + \frac{C_{N_W} \, (Y_{BM_{W_I}} - Y_{WRC})}{b_W}$$

c. Wing Torsional Moment (about $X_o 1307$)

$$C_{T_W} = \frac{TM_{W_G}}{q \, S_W \, c_W} - \frac{C_{N_W} \, (X_{TM_{W_G}} - X_{WRC})}{c_W}$$

d. Elevon Hinge Moments

$$C_{H_{E_I}} = \frac{HM_{E_I}}{S_E \, q \, c_E}$$

d. Elevon Hinge Moments (Continued)

$$C_{H_{EO}} = \frac{HM_{EO}}{S_E \; q \; c_E}$$

$$C_{H_{ET}} = C_{H_{EI}} + C_{H_{EO}}$$

e. Nozzle Exit Base Pressure Ratios

$$CPR_j = \frac{Pc_j}{P_\infty} \qquad (j = 1 \text{ to } 5)$$

$$EPR_j = \frac{P_{eB_j}}{P_\infty} \qquad (j = 1 \text{ to } 5)$$

f. Nozzle Exit Internal Pressure Ratios

$$IPR_j = \frac{Pe_i}{P_\infty} \qquad \begin{matrix} (i = 95 - 97, \; i = Pc_2) \\ (i = 98 - 100, \; i = Pc_3) \end{matrix}$$

$$PR_j = \frac{Pe_i}{Pc_j} \qquad (j = 1 \text{ to } 5)$$

g. Element Average Base Pressures

$$C_{P_{B_{Element}}} = \sum C_{P_{B_i \text{ Element}}} \times \frac{A_{i_{Element}}}{A_{B_{Element}}}$$

where:

$$\sum A_{i_{Element}} = A_{B_{Element}}$$

$\frac{A_{i_{Element}}}{A_{B_{Element}}}$ values are given below:

DATA REDUCTION (Continued)

Element Nondimensional Base Areas

ORBITER BASE

TAP NO.	$A_i/A_{B_{ORB}}$
328	0.08920
332	↓
333	↓
323	0.06110
324	↓
302	0.02104
304	↓
305	↓
306	↓
307	↓
312	↓
313	↓
315	↓
316	↓
318	↓
325	↓
326	↓
327	↓
329	↓
330	↓
331	↓
334-346	↓

ET BASE

TAP NO.	$A_i/A_{B_{ET}}$	TAP NO.	$A_i/A_{B_{ET}}$
1574	0.054789	1519	0.006767
1563	0.12473	1520	↓
1571	↓	1521	↓
1546	0.039946	1522	↓
1549	↓	1523	↓
1551	↓	1524	↓
1553	↓	1525	↓
1555	↓	1526	↓
1557	↓	1527	↓
1530	0.017387	1528	↓
1531	↓	1502	0.01018
1533	↓	1503	↓
1534	↓	1501	↓
1577	↓	1504	↓
1535	↓	1575	↓
1536	↓	1505	↓
1537	↓	1506	↓
1539	↓	1507	↓
1541	↓	1508	↓
1543	↓	1509	↓
1544	↓	1510	↓
1516	0.006767	1511	↓
1517	↓	1512	↓
1518	↓	1513	↓
1576	↓	1514	↓

SRB BASE

TAP NO.	$A_i/A_{B_{SRB}}$
2201-2205	0.125
2221	↓
2208	↓
2222	↓
2211	0.125
2223	↓
2214	↓
2224	↓
2217-2220	↓

Elements are: ORB, ET, SRBL, SRBR

ORIGINAL PAGE IS
OF POOR QUALITY

h. Model Pressure Coefficients:

$$C_{p_i} = \frac{P_i - P_\infty}{q}$$

i	=	31	- 94	orbiter SSME
i	=	152	- 237	orbiter
i	=	301	- 346	orbiter base
i	=	401	- 440	orbiter body flap
i	=	505	- 571	orbiter vertical tail R/H side
i	=	630	- 923	orbiter R/H wing
i	=	1335	- 1431	external tank
i	=	1501	- 1577	external tank base
i	=	1850	- 1853	external tank LH_2 feedline
i	=	2112	- 2179	SRB basic
i	=	2201	- 2224	SRB base
i	=	2401	- 2440	SRB aft

Reference Dimensions and Constants

Symbol	Full Scale	Model Scale
$A_{B_{ET}}$	597.6 ft.^{2}	0.2390 ft^2
$A_{B_{ORB}}$	301.0 ft.^{2}	0.1204 ft^2
$A_{B_{SRB}}$	235.0 ft.^{2}	0.0940 ft^2
S_W	2690.0 ft.^{2}	1.0760 ft.^{2}
b_W	936.68 in.	18.734 in.
l_B	1290.3 in.	25.806 in.
X_{WRC}	1307.0 in.	26.140 in.
Y_{WRC}	105.0 in.	2.100 in.
X_{TMW_G}	--	24.640 in.
Y_{BMW_I}	--	2.308 in.
Y_{BMW_O}	--	3.786 in.
S_E	210.00 ft.^{2}	0.08400 ft.^{2}
c_E	90.7 in.	1.814 in.
c_W	474.81 in.	9.496 in.

TABLE I.

TEST : IA119 | DATE :

TEST CONDITIONS

MACH NUMBER	REYNOLDS NUMBER (per unit length) $\times 10^{-6}$	DYNAMIC PRESSURE (pounds/sq. inch)	STAGNATION TEMPERATURE (degrees Fahrenheit)
0.6	3.5	2.9	80
0.8	4.2	4.3	80
0.9	4.4	4.9	80
0.95	4.4	5.2	80
1.05	4.6	5.6	80
1.10	4.6	5.8	80
1.15	4.6	6.0	80
1.25	4.7	6.2	80
1.40	4.6	6.3	80

BALANCE UTILIZED: NONE

	CAPACITY:	ACCURACY:	COEFFICIENT TOLERANCE:
NF			
SF			
AF			
PM			
RM			
YM			

COMMENTS: Tunnel conditions are based on P_t = 1 Atmosphere.

ORIGINAL PAGE IS
OF POOR QUALITY

TABLE II

TEST: IA119 (ARC 275-1-1) — DATA SET/RUN NUMBER COLLATION SUMMARY — DATE: 1/17/78

DATA SET IDENTIFIER	CONFIGURATION	SCHD. β	SCHD. α	PARAMETERS/VALUES δ_{oI}	δ_{ep}	SRB	SSME	GIMBAL	MACH NUMBERS (OR ALTERNATE INDEPENDENT VARIABLE) 0.6	0.8	0.9	0.95	1.05	1.10	1.15	1.25	1.40	TEST RUN NUMBERS
R2R*01	ØTS	0	0	10	9	0	0	NOM	53	52	51	44	50	56				
02						VARY	N1		9	23	35	31	49	61				
03							N2		16	22	34	30	48	60				
04							N3		15	21	33	29	47	59				
05							N4		14	20	25	28	46	58				
06							N5		10	19	24	27	45	57				
07							N6			NO	DATA							
08						0	0								70	71	77	
09						N1	VARY								69	76	81	
10						N2									68	75	80	
11						N3									67	74	79	
12						N4									66	73	78	
13						N5									65	84	85	

TYPE OF DATA α OR β SCHEDULES: * SEE FOLLOWING DESCRIPTION SHEET

COEFFICIENT SCHEDULES

IDVAR (1) IDVAR (2) NDV

SRB - VARY - CHAMBER PRESSURE ON SRB ENGINES (VARYING AT EACH MACH NUMBER)

SSME (N) - CHAMBER PRESSURE ON SPACE SHUTTLE MAIN ENGINES (SCHEDULE - UNIQUE FOR EACH MACH NUMBER)

NASA-MSFC-MAF

TABLE II. (Continued)

TEST: IA119 (ARC 275-1-1) DATA SET/RUN NUMBER COLLATION SUMMARY DATE: 1/17/78

DATA SET IDENTIFIER	CONFIGURATION	SCHD. β	SCHD. α	PARAMETERS/VALUES δ_{oI}	PARAMETERS/VALUES δ_{eo}	PARAMETERS/VALUES SRB	PARAMETERS/VALUES BSME	PARAMETERS/VALUES GIN-BAL	MACH NUMBERS (OR ALTERNATE INDEPENDENT VARIABLE) 0.6	0.8	0.9	0.95	1.05	1.10	1.15	1.25	1.40	TEST RUN NUMBERS
R2R*14	ØTS	0	0	10	9	0	0	NOM	←	86	→							
15						N5	N5		←	88	→							
16						NOM	NOM		←	90	→							
17						N1	N5		←	92	→							
18						N5	N1		←	94	→							
19						0	0					←		87			→	
20						N5	N5					←		89			→	
21						NOM	NOM					←		91			→	
22						N1	N5					←		93			→	
23						N5	N1					←		95			→	

TYPE OF DATA

α OR β SCHEDULES

COEFFICIENT SCHEDULES

IDVAR (1) IDVAR (2) NDV

NASA-MSFC-MAF

ORIGINAL PAGE IS OF POOR QUALITY

TABLE II. (Continued)

TEST: IA119 (ARC 275-1-1) DATA SET/RUN NUMBER COLLATION SUMMARY DATE: 1/17/78

DATA SET IDENTIFIER	CONFIGURATION	SCHD. β	SCHD. α	PARAMETERS/VALUES δ_{oI}	$\delta_{e\phi}$	SRB	BSME	GIM-BAL	MACH NUMBERS (OR ALTERNATE INDEPENDENT VARIABLE) 0.6	0.8	0.9	0.95	1.05	1.10	1.15	1.25	1.40	TEST RUN NUMBERS
R2R*24	ØTS	0	0	10	9	N1	VARY	NOM							100			
25						N3									99			
26						N5									98			
27		0	4			N1									123			
28						N3									122			
29						N5									121			
30		0	-4			N1									126			
31						N3									125			
32						N5									124			

TYPE OF DATA
α OR β SCHEDULES

COEFFICIENT SCHEDULES

IDVAR (1) IDVAR (2) NDV

NASA-MSFC-MAF

DS 033

TABLE II. (Continued)

TEST: IA119 (ARC 275-1-11)

DATA SET/RUN NUMBER COLLATION SUMMARY

DATE: 1/17/78

DATA SET IDENTIFIER	CONFIGURATION	SCHD. α	SCHD. β	PARAMETERS/VALUES MACH	S_{eI}	S_{eo}	SRB	SSME	GIMBAL		β (OR ALTERNATE INDEPENDENT VARIABLE) -6	-4	0	4	6				TEST RUN NUMBERS
R2R* 33	ØTS	A		.6	10	9	NOM	NOM	NOM		155		154		153				
34				.8							150		151		152				
35				.9							143		142		141				
36				.95							138		137		136				
37				1.05							129		128		127				
38				1.10							109		108		107				
39				1.15							103		102		101				
40				1.25							115		114		113				
41				.6			OFF	OFF			156		157		158				
42				.8							149		148		147				
43				.9							144		145		146				
44				.95							135		134		133				
45				1.05							130		131		132				
46				1.10							110		111		112				
47				1.15							104		105		106				
48				1.25							116		117		120				

TYPE OF DATA α OR β SCHEDULES: α(A) = -8, -4, 0, 4°

COEFFICIENT SCHEDULES

IDVAR (1) IDVAR (2) NDV

NASA-MSFC-MAF

TABLE II. (Continued)

TEST: IA119 (ARC 275-1-11)

DATA SET/RUN NUMBER COLLATION SUMMARY

DATE: 1/17/78

DATA SET IDENTIFIER	CONFIGURATION	SCHD. α	SCHD. β	PARAMETERS/VALUES MACH	S_{eI}	$S_{e\phi}$	SRB	SSME	GIMBAL	θ (OR ALTERNATE INDEPENDENT VARIABLE) -6	-4	0	4	6			
R2R*49	ØTS	A		.6	10	5	NOM	NOM	NOM	166		167		168			
50				.8						171		170		169			
51				.9						183		184		185			
52				.95						188		187		186			
53				1.05						194		193		192			
54				1.10						202		201		200			
55				1.15						210		209		208			
56				1.25						216		215		214			
57				1.40						224		223		222			

TEST RUN NUMBERS

TYPE OF DATA

α OR β SCHEDULES

COEFFICIENT SCHEDULES

IDVAR (1) IDVAR (2) NDV

NASA-MSFC-MAF

TABLE II. (Continued)

TEST: IA119 (ARC 275-1-11) — DATA SET/RUN NUMBER COLLATION SUMMARY — DATE: 1/17/78

DATA SET IDENTIFIER	CONFIGURATION	SCHD. α	SCHD. β	MACH	S_{eI}	$S_{e\phi}$	SRB	SSME	GIMBAL	θ (OR ALTERNATE INDEPENDENT VARIABLE) -6	-4	0	4	6			
R2R*58	ØTS	A		.6	10	5	OFF	OFF	NOM	165	164**	163	162**	161			
59				.8						172		173		174			
60				.9						182	178**	177Δ	176**	175			
61				.95						189		190		191			
62				1.05						195		196		197			
63				1.10						203	204**	205	206**	207			
64				1.15						211		212		213			
65				1.25						217	218**	219	220**	221			
66				1.40						225	226**	227	228**	229			
67				.6	10	11	NOM	NOM			274	273	272				
68				.8							268	267	266				
69				.9							257	256	255				
70				.95							249	248	247				
71				1.05							240	239	238				
72				1.10							234	233	232				

TEST RUN NUMBERS

TYPE OF DATA α OR β SCHEDULES

** α = 0° ONLY

Δ NOT ON TUNNEL TAPE

COEFFICIENT SCHEDULES

IDVAR (1) IDVAR (2) NDV

ORIGINAL PAGE IS OF POOR QUALITY

NASA-MSFC-MAI

TABLE II. (Continued)

TEST: IA119 (ARC 275-1-11) | DATA SET/RUN NUMBER COLLATION SUMMARY | DATE: 1/17/78

DATA SET IDENTIFIER	CONFIGURATION	SCHD. α	SCHD. β	PARAMETERS/VALUES MACH	δ_{eI}	$\delta_{e\phi}$	SRB	SSME	GIMBAL	β (OR ALTERNATE INDEPENDENT VARIABLE) -6	-4	-2	0	2	4	6	TEST RUN NUMBERS
R2R 73	ØTS	A		.6	10	11	OFF	OFF	NOM		275		276		277		
74				.8							269		270		271		
75				.9							258		259		260		
76				.95							250		251		252		
77				1.05							244		245		246		
78				1.10							235		236		237		
79		O		.9						264		263		262		261	
80		O	B	.9						SEE SCHEDULE B - 265							
81		A		.6	12	9	NOM	NOM			282		280		281		
82				.8							288		286		287		
83				.9							294		293		292		
84				.95							301		299		298		
85				1.05							310		309		308		
86				1.10							316		315		314		
87				1.15							328		327		326		
88				1.25							322		321		320		

TYPE OF DATA α OR β SCHEDULES: β(B) = -6, -4, 0, 4, 6°

COEFFICIENT SCHEDULES

IDVAR (1) IDVAR (2) NDV

NASA-MSFC-MAI

DIS 033

TABLE II. (Continued)

TEST: IA119 (ARC 275-1-11)

DATA SET/RUN NUMBER COLLATION SUMMARY

DATE: 1/17/78

DATA SET IDENTIFIER	CONFIGURATION	SCHD. α	SCHD. β	MACH	S_{eI}	S_{eE}	SRB	SSME	GIMBAL	θ (OR ALTERNATE INDEPENDENT VARIABLE) -6	-4	0	4	6
R2R*89	ØTS	A		.6	12	9	OFF	OFF	NOM		283	284	285	
90				.8							289	290	291	
91				.9							295	296	297	
92				.95							302	303	304	
93				1.05							311	312	313	
94				1.10							317	318	319	
95				1.15							329	330	331	
96				1.25							323	324	325	
97				1.15	12	-2	NOM	NOM			336	335	334	
98				1.25							342	341	340	
99				1.40							348	347	346	
A1				1.15			OFF	OFF			337	338	339	
A2				1.25							343	344	345	
A3				1.40							349	350	351	
A4				1.15	10	-2	NOM	NOM			356	355	354	
A5				1.25							362	361	360	
A6				1.40							368	367	366	

TEST RUN NUMBERS

IDVAR (1) IDVAR (2) NDV

COEFFICIENT SCHEDULES

TYPE OF DATA

α OR β SCHEDULES

NASA-MSFC-MA

ORIGINAL PAGE IS OF POOR QUALITY

TABLE II. (Continued)

TEST: IA119 (ARC 275-1-11)

DATA SET/RUN NUMBER COLLATION SUMMARY

DATE: 1/17/78

DATA SET IDENTIFIER	CONFIGURATION	SCHD. α	SCHD. β	PARAMETERS/VALUES MACH	S_{eI}	$S_{e\phi}$	SRB	SSME	GIMBAL	θ (OR ALTERNATE INDEPENDENT VARIABLE) -6	-4	0	4	6				TEST RUN NUMBERS
R2R*A7	ØTS	A		1.15	10	-2	OFF	OFF	NOM		357	358	359					
A8				1.25							363	364	365					
A9				1.40							369	370	371					
B1				1.25	10	-5	NOM	NOM			384	383	382					
B2				1.40							376	375	374					
B3				1.25			OFF	OFF			386	385	381					
B4				1.40							378	379	380					
B5				.6	8	9	NOM	NOM			626	625	624					
B6				.8							620	619	618					
B7				.9							614	613	612					
B8				.95							608	607	606					
B9				1.05							578	577	576					
C1				1.10							590	589	588					
C2				1.15							602	601	600					
C3				1.25							596	595	594					
C4				1.40							584	583	582					

TYPE OF DATA

α OR β SCHEDULES

COEFFICIENT SCHEDULES

IDVAR (1) IDVAR (2) NDV

NASA-MSFC-MAF

DIS 033

TABLE II. (Continued)

TEST: IA119 (ARC #75-1-11)

DATA SET/RUN NUMBER COLLATION SUMMARY

DATE: 1/17/78

DATA SET IDENTIFIER	CONFIGURATION	SCHD. α	SCHD. β	PARAMETERS/VALUES MACH	δ_{eI}	$\delta_{e\phi}$	SRB	SSME	GIMBAL			⊖ (OR ALTERNATE INDEPENDENT VARIABLE) -6	-4	0	4	6				TEST RUN NUMBERS
R2R*C5	ØTS	A		.6	8	9	OFF	OFF	NOM				627	628	629					
C6				.8									621	622	623					
C7				.9									615	616	617					
C8				.95									609	610	611					
C9				1.05									579	580	581					
D1				1.10									591	592	593					
D2				1.15									603	604	605					
D3				1.25									597	598	599					
D4				1.40									585	586	587					

TYPE OF DATA

α OR β SCHEDULES

COEFFICIENT SCHEDULES

IDVAR (1) IDVAR (2) NDV

NASA-MSFC-MAF

TABLE II. (Continued)

TEST: IA119 (ARC 275-1-11)

DATA SET/RUN NUMBER COLLATION SUMMARY

DATE: 1/17/78

DATA SET IDENTIFIER	CONFIGURATION	SCHD. α	SCHD. β	PARAMETERS/VALUES Jets/Jets	SRB	SSME	GIMBAL	φ	MACH NUMBERS (OR ALTERNATE INDEPENDENT VARIABLE) .6	.8	.9	.95	1.05	1.10	1.15	1.25	1.40
R2R* D5	ØTS	0	B	10/5	NOM	NOM	NOM	90	649								
D6										647							
D7											643						
D8												645					
D9													633				
E1														635			
E2															639		
E3																641	
E4																	637
E5		0	B	10/5	OFF	OFF	NOM		650								
E6										648							
E7											644						
E8												646					
E9													634				
F1														636			
F2															640		
F3																642	
F4																	638

TEST RUN NUMBERS

TYPE OF DATA α OR β SCHEDULES: $\beta = -6^\circ$ TO $+6^\circ$

COEFFICIENT SCHEDULES

IDVAR (1) IDVAR (2) NDV

NASA-MSFC-MAF

DIS 033

TABLE II. (Continued)

TEST: IA119 (ARC 275-1-11)

DATA SET/RUN NUMBER COLLATION SUMMARY

DATE: 1/17/78

DATA SET IDENTIFIER	CONFIGURATION	SCHD. α	SCHD. β	PARAMETERS/VALUES MACH	δ_{e_I}	δ_{e_ϕ}	SRB	SSME	GIMBAL	β (OR ALTERNATE INDEPENDENT VARIABLE) -6	-4	0	4	6					TEST RUN NUMBERS
R2R* F5	ØTS	A		.6	10	9	NOM	NOM	G1		429	430	431						
F6				.8							416	415	414						
F7				.9							390	389	388						
F8				1.05							394	395	396						
F9				1.10							403	402	401						
G1				1.25							409	408	407						
G2				1.40							422	421	420						

TYPE OF DATA

α OR β SCHEDULES

COEFFICIENT SCHEDULES

IDVAR (1) IDVAR (2) NDV

ORIGINAL PAGE IS OF POOR QUALITY

NASA-MSFC-MAF

TABLE II. (Continued)

TEST: IA119 (ARC 275-1-11)

DATA SET/RUN NUMBER COLLATION SUMMARY

DATE: 1/17/78

DATA SET IDENTIFIER	CONFIGURATION	SCHD. α	SCHD. β	MACH	δ_{e_I}	δ_{e_ϕ}	SRB	SSME	GIMBAL			-6	-4	0	4	6				TEST RUN NUMBERS
				PARAMETERS/VALUES								θ (OR ALTERNATE INDEPENDENT VARIABLE)								
R2R*G3	ØTS	A		.6	10	9	OFF	OFF	G1				428	427	426					
G4				.8									417	418	419					
G5				.9									391	392	400					
G6				1.05										398	399					
G7				1.10									404	405	406					
G8				1.25									410	411	412					
G9				1.40									423	424	425					
H1				.6	10	9	NOM	NOM	G2					482						
H2				.8									439	438	437					
H3				.9									466	465	464					
H4				.95									478	477	476					
H5				1.05									444	443	442					
H6				1.10									450	449	448					
H7				1.15									472	471	470					
H8				1.25									460	459	458					
H9				1.40									435	434	433					

TYPE OF DATA α OR β SCHEDULES

COEFFICIENT SCHEDULES

IDVAR (1) IDVAR (2) NDV

NASA-MSFC-MAF

TABLE II. (Continued)

TEST: IA119 (ARC 275-1-11) | DATA SET/RUN NUMBER COLLATION SUMMARY | DATE: 1/17/78

DATA SET IDENTIFIER	CONFIGURATION	SCHD. α	SCHD. β	PARAMETERS/VALUES MACH	δ_{eI}	$\delta_{e\phi}$	SRB	SSME	GIMBAL	θ (OR ALTERNATE INDEPENDENT VARIABLE) -6	-4	0	4	6				TEST RUN NUMBERS
R2R*I1	ØTS	A		.6	10	9	OFF	OFF	G2			483						
I2				.8							457	456	455					
I3				.9							467	468	469					
I4				.95							479	480	481					
I5				1.05							445	446	447					
I6				1.10							451	452	454					
I7				1.15							473	474	475					
I8				1.25							461	462	463					
I9				1.40							436	440	441					
J1		C		.6	10	9	NOM	NOM	G5		489	488**	487					
J2				.8							495	494**	493					
J3				.9							501	500**	499					
J4				1.05							507	506**	505					
J5				1.10							513	512**	511					
J6				1.25							519	518**	517					
J7				1.40							525	524**	523					

TYPE OF DATA α OR β SCHEDULES: α(c) = −8, 4°

** α = 0° ONLY

COEFFICIENT SCHEDULES

IDVAR (1) IDVAR (2) NDV

NASA-MSFC-MAF

TABLE II. (Continued)

TEST: IA119 (ARC 275-1-11)

DATA SET/RUN NUMBER COLLATION SUMMARY

DATE: 1/17/78

DATA SET IDENTIFIER	CONFIGURATION	SCHD. α	SCHD. β	PARAMETERS/VALUES MACH	S_{eI}	S_{eo}	SRB	SSME	GIMBAL	Θ (OR ALTERNATE INDEPENDENT VARIABLE) -6	-4	0	4	6				TEST RUN NUMBERS
R2R*J8	ØTS	C		.6	10	9	OFF	OFF	Θ5		490	491**	492					
J9				.8							496	497**	498					
K1				.9							502	503**	504					
K2				1.05							508	509**	510					
K3				1.10							514	515**	516					
K4				1.25							520	521**	522					
K5				1.40							526	527**	528					
K6		C		.6	10	9	NOM	NOM	Θ6		569	568**	567					
K7				.8							563	562**	561					
K8				.9							557	556**	555					
K9				1.05							533	532**	531					
L1				1.10							551	550**	549					
L2				1.25							545	544**	543					
L3				1.40							539	538**	537					

TYPE OF DATA α OR β SCHEDULES

COEFFICIENT SCHEDULES

IDVAR (1) IDVAR (2) NDV

** α = 0° ONLY

NASA-MSFC-MAI

DIS 033

TABLE II. (Continued)

TEST: IA119 (ARC 275-1-11) — DATA SET/RUN NUMBER COLLATION SUMMARY — DATE: 1/17/78

DATA SET IDENTIFIER	CONFIGURATION	SCHD. α	SCHD. β	PARAMETERS/VALUES MACH	S_{eI}	S_{eo}	SRB	SSME	GIMBAL	θ (OR ALTERNATE INDEPENDENT VARIABLE) -6	-4	0	4	6			
R2R*L4	ØTS	C		.6	10	9	OFF	OFF	G6		570	571**	572				
L5				.8							564	565**	566				
L6				.9							558	559**	560				
L7				1.05							534	535**	536				
L8				1.10							552	553**	554				
L9				1.25							546	547**	548				
M1				1.40							540	541**	542				
M2		4	0	.9	10	9	OFF	OFF	NOM			181					
M3		D	0	.95	10	11	OFF	OFF	NOM			254					
M4		E	4	.95	12	9	NOM	NOM	NOM				300				
M5		E	4	1.40	10	9	NOM	NOM	G1				413				
M6		A	-4	.9	10	9	OFF	OFF	G1		393						
M7		A	-4	1.10	10	9	OFF	OFF	G2		453						
M8		A	+4	1.05	10	9	OFF	OFF	G1				397				

REPEAT RUNS

TEST RUN NUMBERS

TYPE OF DATA α OR β SCHEDULES: $\alpha(D) = 0, 4^\circ$ $\alpha(E) = -8, -4^\circ$ COEFFICIENT SCHEDULES

** $\alpha = 0^\circ$ ONLY

IDVAR (1) IDVAR (2) NDV

NASA-MSFC-MA

DMS 033

ORIGINAL PAGE IS OF POOR QUALITY

TABLE II. (Continued)

REPEAT RUNS

TEST: IA119 (ARC 275-1-1) | DATA SET/RUN NUMBER COLLATION SUMMARY | DATE: 1/17/78

DATA SET IDENTIFIER	CONFIGURATION	SCHD. β	SCHD. α	PARAMETERS/VALUES δ_{oI}	PARAMETERS/VALUES $\delta_{o\phi}$	PARAMETERS/VALUES SRB	PARAMETERS/VALUES SSME	PARAMETERS/VALUES GIMBAL	MACH NUMBERS (OR ALTERNATE INDEPENDENT VARIABLE) 0.6	0.8	0.9	0.95	1.05	1.10	1.15	1.25	1.40	TEST RUN NUMBERS
R2R*M9	ØTS	0	0	10	9	VARY	N1	NOM	17									
N1							N4				32							
N2							N5		13				40					
N3							N5						63					
N4							N5							64				
N5						N5	VARY									72		
N6						VARY	N6					43						

TYPE OF DATA α OR β SCHEDULES | COEFFICIENT SCHEDULES | IDVAR (1) | IDVAR (2) | NDV

NASA-MSFC-MAF

TABLE II. (Concluded)

DESCRIPTION OF IA119 COMPONENTS

DATA SET 4th CHARACTER	DESCRIPTION
O	FORCE DATA
A	NO. 1 SSME UPPER
B	NO. 3 SSME LOWER - RIGHT
C	ORBITER + OMS PODS
D	ORBITER BASE
G	ORBITER BODY FLAP - TOP
H	ORBITER BODY FLAP - BOTTOM
I	VERTICAL TAIL - RIGHT HALF SIDE
J	EXTERNAL TANK
K	EXTERNAL TANK BASE
L	LH_2 FEEDLINE FL10
M	LEFT SRB
N	LEFT SRB NOZZLE
P	LEFT SRB BASE
Q	RIGHT SRB BASE
S	WING - TOP RIGHT
T	WING - BOTTOM RIGHT

TABLE III. MODEL DIMENSIONAL DATA

MODEL COMPONENT: ATTACH STRUCTURE - AT_{28}

GENERAL DESCRIPTION: Rear orbiter to ET attach structure (left and right hand) 2 members

MODEL SCALE: 0.020

DRAWING NUMBER: VL78-000063, -000062B

DIMENSIONS:

MEMBER		FULL SCALE	MODEL SCALE
#1	X_o	1317.00	26.34
	Y_o	- 96.50 (LH)	- 1.930
		96.50 (RH)	1.930
	Z_o	267.50	5.350
	X_T	2058.00	41.16
	Y_T	- 125.68 (LH)	- 2.514
		125.68 (RH)	2.514
	Z_T	515.5	10.310
#2	X_o	1317.00	26.34
	Y_o	- 96.50 (LH)	- 1.930
		96.50 (RH)	1.930
	Z_o	267.50	5.350
	X_T	1872.0	37.44
	Y_T	- 125.68 (LH)	- 2.514
		125.68 (RH)	2.514
	Z_T	504.5	10.090
Diameter, In. #1		11.5	0.230
#2		15.5	0.310

TABLE III. MODEL DIMENSIONAL DATA (Continued)

MODEL COMPONENT: **ATTACH STRUCTURE - AT_{31}**

GENERAL DESCRIPTION: **Rear ET to SRB attach structure (LH and RH)**

(3 members)

MODEL SCALE: 0.020

DRAWING NUMBER: VL78-000063, -000062B, -000066

DIMENSIONS:

MEMBER		FULL SCALE	MODEL SCALE
#1	X_T	2058.00	41.16
	Y_T	- 171.50 (LH)	- 3.430
		171.50 (RH)	3.430
	Z_T	457.00	9.140
	X_S	1511.00	30.22
	Y_S	53.24	1.064
	Z_S	57.00	1.140
#2	X_T	2058.00	41.16
	Y_T	- 163.85	- 3.277
	Z_T	449.81	8.996
	X_S	1511.00	30.22
	Y_S	76.56	1.531
	Z_S	15.73	0.315
#3	X_T	2058.00	41.16
	Y_T	- 161.72	3.234
	Z_T	343.00	6.860
	X_S	1511.0	30.22
	Y_S	53.24	1.06
	Z_S	- 57.00	-1.140

TABLE III. MODEL DIMENSIONAL DATA (Continued)

MODEL COMPONENT: **ATTACH STRUCTURE - AT_{32}**

GENERAL DESCRIPTION: **Forward orbiter/ET attach structure (2 member structure)**

MODEL SCALE: 0.020

DRAWING NUMBER: **VL78-000062B, Martin Marietta 8260020914**

DIMENSIONS:	MEMBER		FULL SCALE	MODEL SCALE
	#1	X_O	388.15	7.763
		Y_O	0.0	0.0
Attach point on orbiter Z_T = 614		Z_O	LWR ML	LWR ML
		X_T	1129.9	22.598
		Y_T	46.50	0.930
Attach point on tank		Z_T	562.58	11.252
	#2	X_O	388.15	7.763
		Y_O	0.0	0.0
		Z_O	LWR ML	LWR ML
		X_T	1129.9	22.598
		Y_T	- 46.50	- 0.930
		Z_T	562.58	11.252
Diameter, In.	#1		6.0	0.120
	#2		6.0	0.120

TABLE III. MODEL DIMENSIONAL DATA (Continued)

MODEL COMPONENT: BODY - B_{62}

GENERAL DESCRIPTION: Configuration 140C orbiter fuselage, MCR 200-R4. Similar to 140A/B fuselage except aft body revised and improved midbody-wing-boot fairing, X_o = 940 to X_o = 1040.

MODEL SCALE: 0.020

DRAWING NUMBER: VL70-000140C, -000202C, -000205A, VL70-000200B,-000203

DIMENSIONS:	FULL SCALE	MODEL SCALE
Length (IML: Fwd Sta X_o = 238), In.	1290.3	25.806
Length (OML: Fwd Sta X_o = 235), In.	1293.3	25.866
Max. Width (At X_o = 1528.3), In.	264.0	5.280
Max. Depth (At X_o = 1464), In.	250.00	5.00
Fineness Ratio (OML Length/Max. Width)	4.899	4.899
Area - Ft^2		
Max. Cross-Sectional	340.885	0.136

TABLE III. MODEL DIMENSIONAL DATA (Continued)

MODEL COMPONENT: **CANOPY - C_{12}**

GENERAL DESCRIPTION: **Configuration 140C orbiter canopy, vehicle cabin updated to MCR 200-R4. Used with fuselage B_{62}.**

MODEL SCALE: 0.020

DRAWING NUMBER: **VL70-000140C, -000202B, -000204**

DIMENSIONS:	FULL SCALE	MODEL SCALE
Length (X_o = 434.645-578), In.	143.357	2.867
Max. Width (At X_o = 513.127), In.	152.412	3.048
Max. Depth (At Z_o = 501 to 499.39), In.	51.61	1.032

TABLE III. MODEL DIMENSIONAL DATA (Continued)

MODEL COMPONENT: ELEVON - E_{52}

GENERAL DESCRIPTION: Elevon for configuration 140C. Hingeline at X_o = 1387, elevon split line X_o = 312.5, 6.0" gaps, beveled edges, and centerbodies.

MODEL SCALE: 0.020

DRAWING NUMBER: VL70-000140C, -006089, -006092, SS-A01260

DIMENSIONS:	FULL SCALE	MODEL SCALE
Area, Ft^2	210.0	0.084
Span (equivalent), In.	349.2	6.984
Inb'd equivalent chord, In.	118.0	2.360
Outb'd equivalent chord, In.	55.19	1.104
Ratio movable surface chord/ total surface chord		
At Inb'd equiv. chord	0.2096	0.2096
At Outb'd equiv. chord	0.4004	0.4004
Sweep Back Angles, degrees		
Leading Edge	0.0	0.0
Trailing Edge	- 10.056	- 10.056
Hingeline	0.0	0.0
Area Moment (Product of area & $\bar{c}$), Ft^3	1587.25	0.0127
Mean Aerodynamic Chord, In.	90.7	1.814
Hingeline dihedral (origin at Z_o = 261.3509), deg.	5.229	5.229

TABLE III. MODEL DIMENSIONAL DATA (Continued)

MODEL COMPONENT: **BODY FLAP - F_{10}**

GENERAL DESCRIPTION: **Configuration 140C body flap. Hingeline located at X_o = 1532, Z_o = 287.**

MODEL SCALE: 0.020

DRAWING NUMBER: VL70-000140C, -355114

DIMENSIONS:	FULL SCALE	MODEL SCALE
Length (X_o = 1525.5 to X_o = 1613), In.	87.50	1.750
Max. Width (At L.E., X_o = 1525.5), In.	256.00	5.12
Max. Depth (X_o = 1532), In.	19.798	.396
Area - Ft^2		
Max. Cross-Sectional (At H.L.)	35.196	0.0140
Planform	135.00	0.0540
Base (X_o = 1613)	4.89	.00196

TABLE III. MODEL DIMENSIONAL DATA (Continued)

MODEL COMPONENT: FEEDLINE - FL_{10}

GENERAL DESCRIPTION: LH_2 feedline on upper left hand side of T_{28}

MODEL SCALE: 0.020

DRAWING NUMBER: VL78-000063, -000062B

DIMENSIONS:		FULL SCALE	MODEL SCALE
Leading edge at:	X_T	2071.5	41.430
	Y_T	- 70.0	- 1.40
	Z_T	573.934	11.479
Trailing edge at:	X_T	2081.8	41.636
	Y_T	- 70.00	- 1.40
	Z_T	584.059	11.682
Line diameter (17.0 I.D.)		18.160	0.363

TABLE III. MODEL DIMENSIONAL DATA (Continued)

MODEL COMPONENT: FEEDLINE - FL_{11}

GENERAL DESCRIPTION: LOX feedline on upper right hand of T_{28}.

MODEL SCALE: 0.020

DRAWING NUMBER: VL78-000063, -000062B

DIMENSIONS:		FULL SCALE	MODEL SCALE
Leading edge at:	X_T	1000.667	20.013
	Y_T	70.00	1.40
	Z_T	150.519	3.010
Trailing edge at:	X_T	2071.5	41.430
	Y_T	70.00	1.400
	Z_T	573.934	11.479
Line diameter (17. - I.D.)		(O.D.) 18.16	0.363

TABLE III. MODEL DIMENSIONAL DATA (Continued)

MODEL COMPONENT: FAIRING - FR_{10}

GENERAL DESCRIPTION: Umbilical door fairing between aft ET/orbiter attach structure.

MODEL SCALE: 0.020

DRAWING NUMBER: VL78-000063, -000062B, Martin Marietta 82600207000

DIMENSIONS:	FULL SCALE	MODEL SCALE
Leading edge at X_T	2052.0	41.040
Length	193.00	3.860
Width	15.00	0.300

TABLE III. MODEL DIMENSIONAL DATA (Continued)

MODEL COMPONENT: OMS POD - M_{16}

GENERAL DESCRIPTION: Configuration 140C orbiter OMS pod - short pod.

MODEL SCALE: 0.020

DRAWING NUMBER: VL70-008401, -008410

DIMENSIONS:	FULL SCALE	MODEL SCALE
Length (OMS Fwd Sta X_o = 1310.5) In.	258.50	5.170
Max. Width (At X_o = 1511), In.	136.8	2.736
Max. Depth (At X_o = 1511), In.	74.70	1.494
Fineness Ratio	2.484	2.484
Area - Ft^2	58.864	0.024

TABLE III. MODEL DIMENSIONAL DATA (Continued)

MODEL COMPONENT: SRB NOZZLES - N88

GENERAL DESCRIPTION: Flow-through SRB nozzle simulator < = 7.0 prototype.

MODEL SCALE: 0.020

DRAWING NUMBER: SS-A01281

DIMENSIONS:	FULL SCALE	MODEL SCALE
MACH NO. 0.6 to 1.4		
Length O In.		
Gimbal Point to Exit Plane	86.8	1.736
Throat to Exit Plane	112.135	2.243
Diameter - In.		
Exit	144.290	2.886
Throat	64.53	1.291
Inlet		
Area - Ft^2		
Exit	356.738	.1427
Throat	22.712	0.009
Null Position - Deg.		
Upper Nozzle		
Pitch 1	1902.6	38.052
Yaw	± 250.5	± 5.010
Lower Nozzle		
Pitch	0	0
Yaw	0	0

TABLE III. MODEL DIMENSIONAL DATA (Continued)

MODEL COMPONENT: OMS NOZZLE - N_{89}

GENERAL DESCRIPTION: OMS nozzle in stowed position which is outboard 8 deg. and down 7 deg. from null position. Use with M_{16}.

MODEL SCALE: 0.020

DRAWING NUMBER: SS-A01279

DIMENSIONS:	FULL SCALE	MODEL SCALE
MACH NO.		
Length - In.		
Gimbal Point to Exit Plane	56.0	1.12
Throat to Exit Plane		
Diameter - In.		
Exit	50.0	1.00
Gimbal Point (Station), In.		
X_o	1518.00	30.360
Y_o	88.00	1.76
Z_o	492.0	9.840
Null Position - Deg.		
Pitch	15°49'	15°49'
Yaw	6°30'	6°30'

TABLE III. MODEL DIMENSIONAL DATA (Continued)

MODEL COMPONENT: MPS NOZZLES - N_{104}

GENERAL DESCRIPTION: Flow-through MPS nozzles.

MODEL SCALE: 0.020

DRAWING NUMBER: SS-A01261

DIMENSIONS:	FULL SCALE	MODEL SCALE
MACH NO. .6, .8, .9, .95		
Length - In.		
Gimbal Point to Exit Plane	157.0	3.140
Throat to Exit Plane	119.69	2.3938
Diameter - In.		
Exit	90.435	1.808
Throat	30.145	0.603
Area - Ft^2		
Exit	44.607	0.0178
Throat	4.956	0.0020
Gimbal Point (Station), In.		
Upper Nozzle		
X_o	1445.00	28.90
Y_o	0.0	0.0
Z_o	443.00	8.860
Lower Nozzle		
X_o	1468.17	29.363
Y_o	± 53.0	± 1.06
Z_o	342.64	6.853
Null Position - Deg.		
Upper Nozzle		
Pitch	16	16
Yaw	0	0
Lower Nozzle		
Pitch	10	10
Yaw	0	0

ORIGINAL PAGE IS
OF POOR QUALITY

TABLE III. MODEL DIMENSIONAL DATA (Continued)

MODEL COMPONENT: ELECTRICAL TUNNEL - PS_{11}

GENERAL DESCRIPTION: Tunnel running longitudinally on the SRB for electrical wires.

MODEL SCALE: 0.020

DRAWING NUMBER: VC77-000002

DIMENSIONS:	FULL SCALE	MODEL SCALE
Width, In.	5.70	0.114
Radius, In.	5.70	0.114
Height, In.	4.70	0.094
Leading edge at Sta.	494.70	9.894
L.E. sweepback angle, deg.	30.00	30.0

TABLE III. MODEL DIMENSIONAL DATA (Continued)

MODEL COMPONENT: CIRCUMFERENTIAL STIFFENER - PS_{12}

GENERAL DESCRIPTION: Four ring stiffeners located at the aft end of the solid rocket boosters. The stiffener is a curved I-beam.

MODEL SCALE: 0.020

DRAWING NUMBER: VC77-000002

DIMENSIONS:		FULL SCALE	MODEL SCALE
Height, In.		2.5	0.5
Length, In.		2.0	0.04
Locations:	X_B=	1602.00	32.04
		1644.00	32.88
		1729.00	34.58
		1771.00	35.42

TABLE III. MODEL DIMENSIONAL DATA (Continued)

MODEL COMPONENT: CIRCUMFERENTIAL STIFFENER - PS_{13}

GENERAL DESCRIPTION: Ring stiffener located at the point where the skirt flares. The stiffener is I-beam.

MODEL SCALE: 0.020

DRAWING NUMBER: VC77-000002

DIMENSIONS:		FULL SCALE	MODEL SCALE
Height, In.		6.50	0.130
Length, In.		4.00	0.080
Location centerline	X_B	1833.70	36.674

TABLE III. MODEL DIMENSIONAL DATA (Continued)

MODEL COMPONENT: SOLID ROCKET BOOSTER, EXTERNAL TANK ATTACH-PS_{14}

GENERAL DESCRIPTION: Two-ring stiffeners located at aft end of solid rocket boosters. The stiffener is curved I-beam.

MODEL SCALE: 0.020

DRAWING NUMBER: VC77-000002

DIMENSIONS:		FULL SCALE	MODEL SCALE
Height, In.		8.00	0.160
Length, In.		3.00	0.060
Location centerline	X_B	1511.00	30.22

ORIGINAL PAGE IS
OF POOR QUALITY

TABLE III. MODEL DIMENSIONAL DATA (Continued)

MODEL COMPONENT: SRB PROTUBERANCE - PS_{17}

GENERAL DESCRIPTION: Electrical connecting box mounted on top of PS_{14}.

MODEL SCALE: 0.020

DRAWING NUMBER: None

DIMENSIONS:	FULL SCALE	MODEL SCALE
Width, In.	60.0	1.20
Depth, In.	17.5	0.35

Centerline of box located 15° inboard from vertical plane of symmetry

TABLE III. MODEL DIMENSIONAL DATA (Continued)

MODEL COMPONENT: SRB PROTUBERANCE - PS_{18}

GENERAL DESCRIPTION: Tie-down fixtures mounted on the aft skirt. Total of four mounted 30° on both sides of vertical plane of symmetry.

MODEL SCALE: 0.020

DRAWING NUMBER: None

DIMENSIONS:	FULL SCALE	MODEL SCALE
Sta. of L.E. (X_B)	1861.2	37.224
Sta. of T.E. (X_B)	1925.2	38.504
Max. Width, Inc.	14.2	0.284
Height, In.	8.3	0.166

TABLE III. MODEL DIMENSIONAL DATA (Continued)

MODEL COMPONENT: PS_{20} - SRB PROTUBERANCES

GENERAL DESCRIPTION:

MODEL SCALE:

DRAWING NUMBER:

DIMENSIONS: FULL SCALE MODEL SCALE

INFORMATION FOR THIS COMPONENT NOT PROVIDED

TABLE III. MODEL DIMENSIONAL DATA (Continued)

MODEL COMPONENT: ET PROTUBERANCE - PT_{22}

GENERAL DESCRIPTION: Left-hand electrical conduit line on T_{28}.

MODEL SCALE: 0.020

DRAWING NUMBER: VL78-000063, VL78-000062B

DIMENSIONS:		FULL SCALE	MODEL SCALE
Leading edge at:	X_T	1084.333	21.687
	Y_T	- 99.591	- 1.992
	Z_T	- 139.620	- 2.792
Trailing edge at:	X_T	2058.00	41.160
	Y_T	- 99.591	- 1.992
	Z_T	- 139.620	- 2.792
Line diameter		2.0 x 6.0	0.04 x 0.12

Centerline of line located radially at $\phi = 35.5^{\circ}$

TABLE III. MODEL DIMENSIONAL DATA (Continued)

MODEL COMPONENT: ET PROTUBERANCE - PT_{23}

GENERAL DESCRIPTION: LOX recirculation line on right hand upper side of T_{28}.

MODEL SCALE: 0.020

DRAWING NUMBER: VL78-000063, -000062B, Martin Marietta 82600207000

DIMENSIONS:		FULL SCALE	MODEL SCALE
Leading edge at:	X_T	1040.667	20.813
	Y_T	94.169	1.883
	Z_T	540.934	10.819
Trailing edge at:	X_T	2062.920	41.258
	Y_T	70.000	1.400
	Z_T	573.934	11.479
Line diameter		4.0	0.080

Centerline of line located radially at $\phi = 35^{\circ}45'$

TABLE III. MODEL DIMENSIONAL DATA (Continued)

MODEL COMPONENT: ET PROTUBERANCE - PT_{24}

GENERAL DESCRIPTION: LH_2 recirculation line on T_{28}.

MODEL SCALE: 0.020

DRAWING NUMBER: VL78-000063, -000062B, Martin Marietta 82600207000

DIMENSIONS:		FULL SCALE	MODEL SCALE
Leading edge at:	X_T	1040.667	20.813
	Y_T	- 94.169	- 1.883
	Z_T	540.934	10.819
Trailing edge at:	X_T	2062.920	41.258
	Y_T	- 70.000	- 1.400
	Z_T	573.934	11.479
Line diameter		4.0	0.080

Centerline of line located radially at $\phi = 33^{\circ}45'$

TABLE III. MODEL DIMENSIONAL DATA (Continued)

MODEL COMPONENT: ET PROTUBERANCE - PT_{25}

GENERAL DESCRIPTION: Right hand aft electrical conduit line on T_{28} with LH_2 pressure sensor line and LOX vent valve actuator line.

MODEL SCALE: 0.020

DRAWING NUMBER: VL78-000063, -000062B, Martin Marietta 82600207000

DIMENSIONS:		FULL SCALE	MODEL SCALE
Leading edge at:	X_T	1084.333	21.687
	Y_T	99.591	1.992
	Z_T	139.620	2.792
Trailing edge at:	X_T	2058.000	41.160
	Y_T	99.591	1.992
	Z_T	139.620	2.792
Line diameter		2.0 x 6.0	0.04 x 0.12

Centerline of line located radially at $\phi = 35.5^{\circ}$

TABLE III. MODEL DIMENSIONAL DATA (Continued)

MODEL COMPONENT: ET PROTUBERANCES - PT_{26}

GENERAL DESCRIPTION: LOX pressure line on the T_{28}

MODEL SCALE: 0.020

DRAWING NUMBER: VL78-000063, -000062B, Martin Marietta 82600207000

DIMENSIONS:		FULL SCALE	MODEL SCALE
Leading edge at:	X_T	360.733	7.215
	Y_T	15.145	0.303
	Z_T	407.718	8.154
Trailing edge at:	X_T	2083.5	41.670
	Y_T	63.25	1.265
	Z_T	609.00	12.18
Line diameter		2.0	0.040

Centerline of line located radially at $\phi = 27^{\circ}$

TABLE III. MODEL DIMENSIONAL DATA (Continued)

MODEL COMPONENT: ET PROTUBERANCE - PT_{27}

GENERAL DESCRIPTION: Electrical conduit on the right hand forward section of T_{28}.

MODEL SCALE: 0.020

DRAWING NUMBER: VL78-000062B

DIMENSIONS:

		FULL SCALE	MODEL SCALE
Leading edge at:	X_T	360.733	7.215
	Y_T	11.549	0.231
	Z_T	412.474	8.249
Trailing edge at:	X_T	876.273	17.525
	Y_T	226.114	4.522
	Z_T	646.774	12.935

Line diameter

Centerline of line located radially at $\phi = 47.5^{\circ}$

TABLE III. MODEL DIMENSIONAL DATA (Continued)

MODEL COMPONENT: RUDDER - R_5

GENERAL DESCRIPTION: Configuration 140C orbiter rudder (identical to configuration 140A/B rudder)

MODEL SCALE: 0.020

DRAWING NUMBER: VL70-000146B, -000095

DIMENSIONS:	FULL SCALE	MODEL SCALE
Area, Ft^2	100.15	0.0040
Span (equivalent), In.	201.00	4.02
Inb'd equivalent chord, In.	91.585	1.832
Outb'd equivalent chord, In.	50.833	1.017
Ratio movable surface chord/ total surface chord		
At Inb'd equiv. chord	0.400	0.400
At Outb'd equiv. chord	0.400	0.400
Sweep Back Angles, degrees		
Leading Edge	34.83	34.83
Trailing Edge	26.25	26.25
Hingeline	34.83	34.83
Area Moment (Product of area and $\bar{c}$), Ft^3	610.92	0.0049
Mean Aerodynamic Chord, In.	73.2	1.464

TABLE III. MODEL DIMENSIONAL DATA (Continued)

MODEL COMPONENT: BOOSTER SOLID ROCKET MOTOR - S_{22}

GENERAL DESCRIPTION: The BSRM is an external propulsion system which is jettisoned and recoverable after burnout. The BSRM's can be refurbished and reused after recovery.

MODEL SCALE: 0.020

DRAWING NUMBER: VC77-000002C, VC70-000002A, VC72-000002C

DIMENSIONS:	FULL SCALE	MODEL SCALE
Length, In.	1789.60	35.792
Max. Width (Tank Dia.,) In.	146.00	2.92
Max. Depth (Aft shroud dia.), In.	208.20	4.164
Fineness Ratio	8.596	8.596
Area - Ft^2	236.423	0.094
WP of BSRM Centerline (Z_T)	400.0	8.0
FS of BSRM nose (X_T)	743.0	14.860
BP of BSRM centerline (Y_T)	250.5	5.010

TABLE III. MODEL DIMENSIONAL DATA (Continued)

MODEL COMPONENT: EXTERNAL TANK - T_{28}

GENERAL DESCRIPTION:

MODEL SCALE: 0.020

DRAWING NUMBER: VL72-000143D, VL78-000063
(Dimensions are to tank structural OML, TPS not included)

DIMENSIONS:	FULL SCALE	MODEL SCALE
Length, In.	1844.275	36.886
Max. Width (Dia.), In.	331.00	6.62
Fineness Ratio	5.687	5.687
Area - Ft^2		
Max. Cross-Sectional	594.678	0.2379

TABLE III. MODEL DIMENSIONAL DATA (Continued)

MODEL COMPONENT: V_{28} - VERTICAL TAIL WITH SILTS POD SIMULATED

GENERAL DESCRIPTION:

MODEL SCALE:

DRAWING NUMBER:

DIMENSIONS:	FULL SCALE	MODEL SCALE

INFORMATION FOR THIS COMPONENT NOT PROVIDED

TABLE III. MODEL DIMENSIONAL DATA (Concluded)

MODEL COMPONENT: WING - W_{127}

GENERAL DESCRIPTION: Configuration 140C orbiter wing, MCR 200.R4: similar to 140A/B wing W_{116}, but with refinements. Improved wing-boot-midbody fairing (X_o=940 to X_o=1040): elevon split line relocated from Y_o=281 to Y_o=312.5.

MODEL SCALE: DRAWING NO.: VL70-000140C, VL70-000200B

DIMENSIONS:	FULL SCALE	MODEL SCALE
TOTAL DATA		
Area (Theo.), ft^2		
Planform	2690.00	1.076
Span (Theo.), in.	936.68	18.734
Aspect Ratio	2.265	2.265
Rate of Taper	1.177	1.177
Taper Ratio	0.200	0.200
Dihedral Angle, degrees	3.500	3.500
Incidence Angle, degrees	0.500	0.500
Aerodynamic Twist, degrees	3.000	3.000
Sweep Back Angles, degrees		
Leading Edge	45.000	45.000
Trailing Edge	- 10.056	- 10.056
0.25 Element Line	35.209	35.209
Chords:		
Root (Theo.) B.P.0.0.	689.24	13.785
Tip, (Theo.) B.P.	137.85	2.757
MAC	474.81	9.496
Fus. Sta. of .25 MAC	1136.83	22.737
W.P. of .25 MAC	290.58	5.812
B.L. of .25 MAC	182.13	3.643
EXPOSED DATA		
Area (Theo.), ft^2	1751.50	0.7006
Span, (Theo.), in. BP108	720.68	14.414
Aspect Ratio	2.059	2.059
Taper Ratio	0.245	0.245
Chords		
Root BP108	562.09	11.242
Tip 1.00 b/2	137.85	2.757
MAC	392.83	7.857
Fus. Sta. of .25 MAC	1185.98	23.720
W.P. of .25 MAC	294.30	5.886
B.L. of .25 MAC	251.77	5.035
Airfoil Section (Rockwell Mod NASA) XXXX-64		
Root b/2 =	0.113	0.113
Tip b/2 =	0.120	0.120
Data for (1) of (2) Sides		
Leading Edge Cuff		
Planform Area, ft^2	113.18	0.0453
Leading Edge Intersects Fus M.L. @ Sta	500.00	10.00
Leading Edge Intersects Wing @ Sta	1024.00	20.480

ORIGINAL PAGE IS OF POOR QUALITY

TABLE IV. NOZZLE GIMBAL SETTINGS

GIMBAL ANGLES	ATTITUDE COMMAND G1 +PITCH	G2 -PITCH	G3 PITCH/+YAW	G4 PITCH/-YAW	G5 +ROLL	G6 -ROLL
P1	-4.0	4.0	-4.0	-4.0	0	0
P2	-4.0	4.0	-4.0	-4.0	4.0	-4.0
P3	-4.0	4.0	-4.0	-4.0	-4.0	4.0
P4	-2.64	+2.64	-2.64	-2.64	5.656	-5.656
P5	-2.64	+2.64	-2.64	-2.64	-5.656	5.656
Y1	0	0	4.0	-4.0	3.0	-3.0
Y2	0	0	4.0	-4.0	0	0
Y3	0	0	4.0	-4.0	0	0
Y4	0	0	4.05	-4.05	0	0
Y5	0	0	4.05	-4.05	0	0

ENGINE NUMBERING

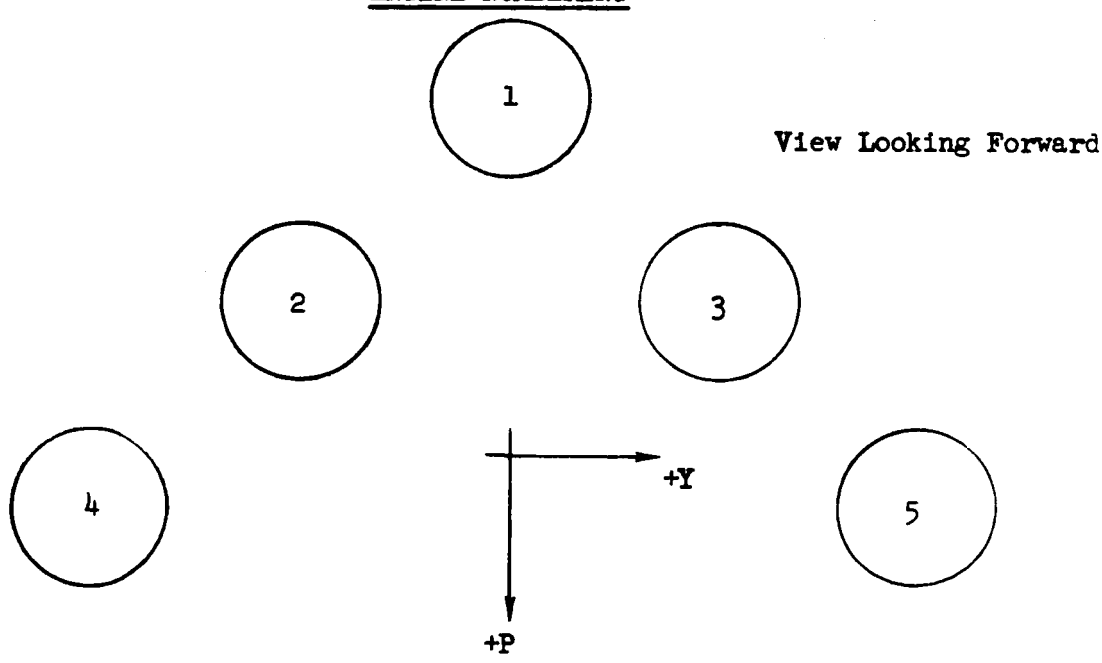

TABLE V. ORBITER PRESSURE TAP NUMBERS AND LOCATIONS

a. OMS POD

ORB. STA.	L_{o_1} = 1328	ϕ - RADIAL LOCATION - DEGREES											
X_{o_1}	X_o/L_o	0	20	40	70	90	105	110	120	135	150	165	180
21.400	.6288	---	---	---	---	155	219	---	156	220	157	158	159
22.580	.6732	---	---	---	---	225	226	---	227	228	229	230	231
24.300	.7379	---	---	---	---	165	166	---	167	168	169	170	171
26.000	.8019	---	---	---	175	176	177	---	178	179	180	234	181
27.500	.8584	---	---	---	185	186	187	---	188	189	190	191	---
28.600	.8998	---	---	---	196	197	198	---	199	200	201	202	---
29.600	.9375	---	---	---	206	207	208	---	209	210	211	212	---
30.600 a	.9751	---	---	---	---	---	---	214	215	---	---	---	---
30.600 b	.9751	---	---	---	---	---	---	216	217	---	---	---	---

NOTE: $\frac{X_{o_1} - 235}{L_{o_1}} = \frac{X_o}{L_o}$

TABLE V. ORBITER PRESSURE TAP NUMBERS AND LOCATIONS (Continued)

b. BASE REGION

W.L	B.L					$-Y_o$						℄	B.L					$+Y_o$		
Z_o	2.60	2.16	2.14	2.06	1.76	1.56	1.26	1.16	1.08	.76	.56	0	.56	.76	1.16	1.26	1.56	1.76	2.06	2.16
6.040				318	331						325	307	335					342	343	
6.800		334										306								346
7.520		316										305								344
8.000												304								
8.100										326				336						
8.200						313											340			
8.300				315															345	
8.440								329							338					
8.780			323			312											341			
9.260							330									339				
9.300	324																			
9.400					332															
9.760										327				337						
10.100												302								
10.280									328											
10.440					333															
10.640												301								

TABLE V. ORBITER PRESSURE TAP NUMBERS AND LOCATIONS (Continued)

c. SSME NOZZLE

X/D / DEG.	NO. 1 SSME UPPER				NO. 3 LOWER RIGHT			
	.058	.320	.580	.840	.058	.320	.580	.840
0	31	43	55	67	--	--	--	--
30	32	44	56	--	71	79	87	--
60	33	45	57	--	--	--	--	--
90	34	46	58	68	72	80	88	
120	35	47	59	--	--	--	--	--
150	36	48	60	--	73	81	89	--
180	37	49	61	69	--	--	--	--
210	38	50	62	--	74	82	90	--
240	39	51	63	--	75	83	91	--
270	40	52	64	70	76	84	92	--
300	41	53	65	--	77	85	93	--
330	42	54	66	--	78	86	94	--

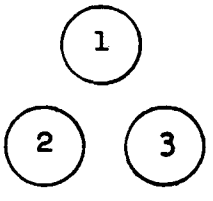

LOOKING FORWARD

SSME #1	40 TAPS
SSME #3	24 TAPS
TOTAL	64 TAPS

NOTE: EXIT DIAMETER = 1.809"

TABLE V. ORBITER PRESSURE TAP NUMBERS AND LOCATIONS (Continued)

d. BODY FLAP

	X_o/C_{BF}						
η	-.10	.20	.22	.47	.60	.95	
.10	405 401	406 402	---	---	407 403	408 404	TOP BOT
.15	---	---	---	*	---	---	BOT
.20	---	---	---	---	---	---	
.35	---	---	---	---	---	---	
.50	413 409	414 410	*	*	415 411	416 412	TOP BOT
.65	---	422 418	---	---	---	424 420	TOP BOT
.80	---	430 426	---	---	---	432 428	TOP BOT
.90	437 433	438 434	---	---	439 435	440 436	TOP BOT

*ACOUSTIC MEASUREMENT LOCATION - (3)

C_{BF} = 81" F.S.

TABLE V. ORBITER PRESSURE TAP NUMBERS AND LOCATIONS (Continued)

e. VERTICAL TAIL

W.L.		L.E	Distance from L.E. - %					T.E	CHORD LENGTH
Z_o F.S	η	X_o	.15	.30	.52	.68	.83	1.0	$\bar{C}$
530	1.679			505	506	507			5.083
570	1.805			513	514	515	516	517	4.679
600	1.900			522	523		525	526	4.376
640	2.027			531	532	533	534	535	3.973
680	2.154			540	541	542	543	544	3.569
720	2.280			549	550	551		553	3.165
755	2.391			558	559	560	561	562	2.812
790	2.502		566	567	568	569	570	571	2.459
TIP	2.584								2.199

*ACOUSTIC MEASUREMENT LOCATION					
X_o F.S	X_o M.S	Y_o	Z_o F.S	Z_o M.S	* NO.
1490	29.8	R/H SIDE	560	11.2	
1620	32.4	R/H SIDE	790	15.8	

ORIGINAL PAGE IS
OF POOR QUALITY

TABLE V. ORBITER PRESSURE TAP NUMBERS AND LOCATIONS (Concluded)

f. RIGHT HAND WING

	η	Y_o	X_W/C_W										X_o	X_{EL}/C_{EL}							
		L.E	0	.02	.08	.15	.25	.40	.55	.625	.70	.75	1360	-.10	0	.20	.40	.60	.80	1.0	
TOP	.235	110													HL						
BOT																					
TOP	.299	140							630	914	631	915	632	633	--	635	636	637	638	639	
BOT									647	916	648	917	649	650	--	652	653		655		
TOP	.342	160								918	665		666	667	--	669		671	672	673	
BOT									681	920	682	921	683	684	--	686		688	689		
TOP	.427	200	690				696	697	698	922			699	700	--	702		704	705	706	
BOT							712	713		923			715	716	--	718		720	721		
TOP	.534	250	722			727	728	729	730				731	732	--	734		736	737	738	
BOT						743	744	745	746				747	748	--	750		752	753		
TOP	.619	290	754			759	760	761	762				763	764	--	766	767	768	769	770	
BOT						775	776	777	778				779	780	--	782	783	784	785		
TOP	.726	340	786			791	792	793					795	796	--	798			801	802	
BOT						807	808	809						812	--	814			817		
TOP	.811	380	818			823	824	825					826	827	--	829			832	833	
BOT						838	839	840					841		--	844			847		
TOP	.897	420	848			853	854	855						857	--	859				863	
BOT						868	869	870					871	872	--	874			877		
TOP	.961	450	878			883							885	886	--	888				892	
BOT						897							899	900	--	902					
	1.00	TIP				906		913					908	909	--		910		911		

INBOARD ELEVONS

OUTBOARD ELEVONS

.: PRESSURE TAP NUMBERS UNDERLINED NOT DUPLICATED ON MODEL 47-OTS

TABLE VI. EXTERNAL TANK PRESSURE TAP LOCATIONS

a. AFT CYLINDER

TANK DIAMETER 331 F.S			X_T1500	X_T1700	X_T1780	X_T1860	X_T1920	X_T1980	X_T2048.9
ϕ	Z_T M.S	Y_T M.S	X_T30.0	X_T34.0	X_T35.6	X_T37.2	X_T38.4	X_T39.6	X_T40.978
0	3.310	0	OMIT	OMIT	1361	1374	1387	1400	1413
30	2.867	1.655	--	1349	1362	1375	1388	1401	1414
60	1.655	2.867	--	1350	1363	1376	1389	1402	1415
90	0	3.310	1338	1351	1364	1377	1390	1403	1416
112.5	-1.267	3.058	--	1352	1365	1378	1391	1404	1417
135.0	-2.341	2.341	1340	1353	1366	1379	1392	1405	1418
157.5	-3.058	1.267	--	1354	1367	1380	1393	1406	1419
180.0	-3.310	0	1342						1420
202.5	-3.058	-1.266	--	1426	1427	1428	1429	1430	1431
225	-2.341	-2.341	1343	1356	1369	1382	1395	1408	1421
247.5	-1.267	-3.058	--	1357	1370	1383	1396	1409	1422
270	0	-3.310	1345	1358	1371	1384	1397	1410	1423
300	1.655	-2.867	--	1359	1372	1385	1398	1411	1424
330	2.867	-1.655	--	1360	1373	1386	1399	1412	1425

TABLE VI. EXTERNAL TANK PRESSURE TAP LOCATIONS (Continued)

b. BASE REGION

RADIAL LOCATION Φ - DEG.	RAD.-IN.	X_T 3.310	R_1 3.1312	R_2 2.9624	R_3 2.7804	R_4 2.1018	R_5 1.5496	BASE 0
	STA. X_T-M.S.	40.978	41.7827	42.085	42.3247	42.8954	43.1712	43.4600
0			1502	1516	1530	1546		
15					1531			
30			1503	1517				
45			1501		1533			
60			1504	1518	1534			
67.5			1575	1576	1577			
90			1505	1519	1535	1549	1563	
112.5			1506	1520	1536			
135.0			1507	1521	1537	1551		
157.5			1508	1522				
180.0			1509	1523	1539	1553		
202.5			1510	1524				
225.0			1511	1525	1541	1555		
247.5			1512	1526				
270.0			1513	1527	1543	1557	1571	
300.0			1514	1528	1544			
ET ℄								1574

TABLE VI. EXTERNAL TANK PRESSURE TAP LOCATIONS (Concluded)

c. LH_2 FEEDLINE

FL10	0°	90°	180°	270°	REMARKS
TAP #	1850	1851	1852	1853	

NOTE: * VIEW LOOKING DOWN 0° FORWARD

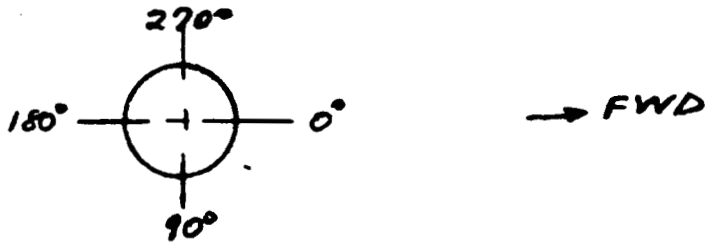

TABLE VII. SRB PRESSURE INSTRUMENTATION

a. LEFT HAND PRESSURE TAP LOCATIONS

BASIC

SRB STA. X_s F.S	ϕ - RADIAL LOCATION - DEGREES												REMARKS
	0	45	90	105	135	180	200	225	247.5	270	292.5	315	
1500						*							*Ahead of aft attach ring
1650		2112			2115			2117				2119	
1800		2128			2131			2133				2135	
1825										*			*Ahead of skirt attach ring
1860	2150	2151	2152		2153	2154		2155	2156	2157	2158	2159	
1867							*						*Nozzle skirt under separation motor
1882				*									*On nozzle skirt
1890	2160	2161	2162		2163	2164		2165	2166	2167	2168	2169	
1900			*										*On aft heat shield
1925	2170	2171	2172		2173	2174		2175	2176	2177	2178	2179	

NOTE: *ACOUSTIC MEASUREMENTS

RECTILINEAR

SRB STA. X_s F.S	X_s MS	Y_s MS	Z_s MS	ϕ-DEGREES	REMARKS
1500	30.0	0	TOP	180	*Ahead of aft attach ring
1825	36.5	SIDE	8.00	270	*Ahead of skirt attach ring
1867	37.34	+.60	9.54	200	*Nozzle skirt under separation motor
1882	37.64	-1.70	8.50	105	*On nozzle skirt
1900	38.00	-1.54	8.00	90	*On aft heat shield

NOTE: *ACOUSTIC MEASUREMENTS

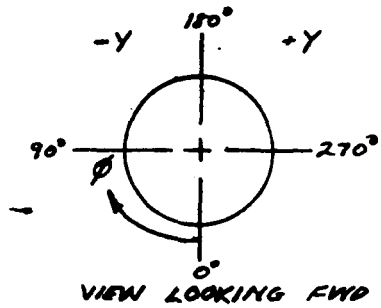

TABLE VII. SRB PRESSURE INSTRUMENTATION
(Concluded)
b. BASE AND AFT TAP LOCATIONS

RADIAL LOCATION ϕ - DEGREES	X/D				BASE TAP	
	0.378	0.256	0.135	0.015	LEFT HAND	RIGHT HAND
0	2401	2405	2417	2429	2201	2211
30	--	2406	2418	2430	--	--
45	--	--	--	--	2202	2223
60	--	2407	2419	2431	--	--
90	2402	2408	2420	2432	2203	--
120	--	2409	2421	2433	--	--
135	--	--	--	--	2204	--
150	--	2410	2422	2434	--	--
180	2403	2411	2423	2435	2205	2217
210	--	2412	2424	2436	--	--
225	--	--	--	--	2221	
240	--	2413	2425	2437	--	--
270	2404	2414	2426		2208	2219
300	--	2415	2427	2439	--	--
315	--	--	--	--	2222	
330	--	2416	2428	2440	--	--

NOTE: EXIT DIAMETER = 151" F.S - 3.02" M.S.

C-2

ORIGINAL PAGE IS
OF POOR QUALITY

TABLE VIII. ACOUSTIC MEASUREMENT LOCATIONS

	X F.S	X M.S	Y M.S	Z	KULITE NO.	LOCATION
ORBITER	X_O	X_O	Y_O	Z_O		
	1370	27.4	-5.0	BOT	1	Wing
	1450	29.0	-4.4	BOT	2	Inboard Elevon
	1490	29.8	L/H SIDE	6.0	3	Aft Fuselage
	1490	29.8	R/H SIDE	11.2	4	Tail
	1510	30.2	-2.4	6.2	5	Aft Heat Shield
	1510	30.2	0	6.4	6	Aft Heat Shield
	1510	30.2	-2.3	7.6	7	Aft Heat Shield
	1510	30.2	-1.0	9.6	8	Aft Heat Shield
	1540	30.8	L/H SIDE	9.36	9	Aft RCS
	1550	31.0	0	TOP	10	Body Flap
	1560	31.2	-2.46	9.92	11	Side of OMS Nozzle
	1570	31.4	0	BOT	12	Body Flap
	1570	31.4	-1.80	BOT	13	Body Flap
	1570	31.4	-2.60	9.2	14	Base of Aft RCS
TANK	X_T	X_T	Y_T	Z_T		
	2070	41.4	-3.30	8.0	16	Aft Ring $\phi = 90^\circ$
	2070	41.4	-1.24	11.0	17	Aft Ring $\phi = 157.5^\circ$
	2100	42.0	0	5.0	18	Aft Dome $\phi = 10^\circ$
	2100	42.0	-1.10	10.8	20	Aft Dome $\phi = 157.5^\circ$
	2100	42.0	0	11.0	21	Aft Dome $\phi = 180^\circ$
	2150	43.0	0	6.0	22	Aft Dome $\phi = 0^\circ$
	2150	43.0	0	10.0	23	Aft Dome $\phi = 180^\circ$
	2173	43.46	0	8.4	24	Aft Dome ℄
SRB	X_S	X_S	Y_S	Z_S		
	1825	36.5	0	9.54	27	Ahead of Nozzle Skirt Ring, $\phi = 180^\circ$
	1875	37.54	-1.70	8.50	28	Aft Face of Sep. Motors

TABLE IX. BAD PRESSURE DATA LIST
(IA 119)

COMPONENT	DATASET	IDV(1)	IDV(2)	GEOMETRY 1	GEOMETRY 2	PRESSURE TAPS
ELEVON, TOP RIGHT		MACH	CPR4	η_w	$(X/C)_w$	
	R2RS03	.95	99.971	.897	.742	859
					1.000	863
				.961	.558	886
					.682	888
					1.000	892
				1.000	.550	909
					.655	910
					.925	911
	R2RSN2	1.05	ALL	.299	.836	633
					.881	635
					.911	636
					.941	637
					.971	638
					1.000	639
				.342	.809	667
					.861	669
					.930	671
					.964	672
					1.000	673
				.427	.758	700
					.824	702
					.912	704
					.956	705
					1.000	706
ELEVON, BOTTOM RIGHT		MACH	CPR4	η_w	$(X/C)_w$	
	R2RT03	.95	102.06	.897	.642	872
					.742	874
					.942	877
					1.000	863
				.961	.558	900
					.682	902
					.932	905*
					1.000	892

*NO DATA RECORDED

ORIGINAL PAGE IS
OF POOR QUALITY

TABLE IX. (Continued)

COMPONENT	DATASET	IDV(1)	IDV(2)	GEOMETRY 1	GEOMETRY 2	PRESSURE TAPS
ELEVON, BOTTOM RIGHT		MACH	CPR4	η_w	$(X/C)_w$	
	R2RT03	.95	102.06	1.000	.550	909
					.655	910
					.925	911
	R2RTN2	1.05	ALL	.299	.836	650
					.881	652
					.911	653
					.941	654*
					.971	655
				.342	.809	684
					.861	686
					.930	688
					.964	689
				.427	.758	716
					.824	718
					.912	720
					.956	721
WING, TOP RIGHT		MACH	CPR4	η_w	$(X/C)_w$	
	R2RS03	.95	99.971	.961	0.000	878
					.150	883
					.411	885
				1.000	.150	906
					.390	913
					.400	908
	R2RSN2	1.05	ALL	.299	.550	630
					.625	914
					.700	631
					.750	915
					.816	632

TABLE IX. (Continued)

COMPONENT	DATASET	IDV(1)	IDV(2)	GEOMETRY 1	GEOMETRY 2	PRESSURE TAPS
WING, TOP RIGHT		MACH	CPR4	η_w	$(X/C)_w$	
	R2RSN2	1.05	ALL	.342	.550	664*
					.625	918
					.700	665
					.784	666
				.427	.250	696
					.400	697
					.550	698
					.625	922
					.723	699
WING, TOP RIGHT		BETA	ALPHA	η_w	$(X/C)_w$	
	R2RSI1	-.086	4.017	.811	.250	824
WING, BOTTOM RIGHT		MACH	CPR4	η_w	$(X/C)_w$	
	R2RTO2	.95	74.787	.897	.250	869
	R2RTO3	.95	102.06	.897	0.000	848
					.150	868
					.250	869
					.400	870
					.536	871
				.961	0.000	878
					.150	897
					.411	899
				1.000	.150	906
					.390	913
					.400	908
	R2RTN2	1.05	ALL	.299	.550	647
					.625	916
					.700	648
					.750	917
					.816	649

ORIGINAL PAGE IS OF POOR QUALITY

TABLE IX. (Continued)

COMPONENT	DATASET	IDV(1)	IDV(2)	GEOMETRY 1	GEOMETRY 2	PRESSURE TAPS
WING, BOTTOM RIGHT		MACH	CPR4	η_w	$(X/C)_w$	
	R2RTN2	1.05	ALL	.342	.550	681
					.625	920
					.700	682
					.750	921
					.784	683
				.427	.250	712
					.400	713
					.550	714*
					.625	923
					.723	715
SRB #4 NOZZLE		MACH	CPR4	X/D	PHI	
	R2RN$$	ALL	ALL	0.135	60	2419
VERTICAL TAIL		MACH	CPR4	η_v	X/C_v	
	R2RI01	ALL	ALL	.9185	.52	568
	R2RI02	0.95	ALL	.5701	.83	543
	R2RI03-I05	.8,.9,.95	ALL	.5701	.83	543
	R2RI08-I48	ALL	ALL	.697	.30	549
	R2RIB7-IF6	ALL	ALL	.9185	.83	570
	R2RIJ3-IK5	ALL	ALL	.9185	.83	570
	R2RIK8-IM2	ALL	ALL	.9185	.83	570
	R2RIN2	1.05	ALL	.4434	.3,.52,.68,.83, 1.	531-535
				.5701	.3,.52,.68,.83, 1.	540-544
				.6968	.3,.52,.68,1.*	549-551,553
				.8077	.3,.52,.68,1.	558,559,560,562
				.9185	.15,.3,.52,.68, .83,1.	566-571
	R2RI$$	ALL	ALL	.4434	.68	533
		ALL	ALL	.808	1.0	562

*NO DATA RECORDED

TABLE IX. (Continued)

COMPONENT	DATASET	IDV(1)	IDV(2)	GEOMETRY 1	GEOMETRY 2	PRESSURE TAPS
		MACH	CPR4	XT FS	PHI	
ET FOREBODY	R2RJ$$	ALL	ALL	2048.9	180.	1420
ET BASE	R2RKB9	ALL	ALL	2089.14	300.	1514
	R2RKD9	ALL	ALL	2089.14	300.	1514
		BETA	ALPHA	XS FS	PHI	
LEFT SRB BASE	R2RP76	3.954	4.063	ALL	ALL	2201-2205, 2221, 2208, 2222
	R2RPB5-PF4	ALL	ALL	ALL	0	2201
	R2RPK6-PM1	ALL	ALL	ALL	0	2201
RIGHT SRB BASE	R2RQ76	3.954	4.063	ALL	ALL	2211,2223,2214*, 2224*,2217-2220
ORBITER BASE		BETA	ALPHA	YO	ZO	
	R2RDF5-DI9	ALL	ALL	2.06	8.3	315
	R2RDM5-DM8	ALL	ALL	2.06	8.3	315
SSME #1		BETA	ALPHA	X/D	PHI	
	R2RA$$	ALL	ALL	0.058	0	31
	R2RA37	5.988	ALL	0.320	210	50
	R2RA44	-.102, 5.986	ALL	0.320	90	46
	R2RA47	5.969	ALL	0.320	210	50
	R2RA53	5.989	ALL	0.320	210	50
	R2RA67	-.113, 3.959	ALL	0.320	90	46
	R2RA72	3.985	ALL	0.320	90	46
	R2RA73	-4.140	ALL	0.320	90	46
	R2RA78	3.957	ALL	0.320	210	50
	R2RA80	ALL	.069,.093	0.320	90	46
	R2RA85	3.963	ALL	0.320	90	46
	R2RA86	3.983	ALL	0.320	210	50

ORIGINAL PAGE IS OF POOR QUALITY

TABLE IX. (Concluded)

COMPONENT	DATASET	IDV(1)	IDV(2)	GEOMETRY 1	GEOMETRY 2	PRESSURE TAPS
SSME #1		BETA	ALPHA	X/D	PHI	
	R2RA87	3.956	-7.837	0.580	210	62
	R2RA89	-4.148	ALL	0.580	210	62
	R2RA94	3.965	ALL	0.320	210	50
	R2RA95	3.978	ALL	0.320	210	50
	R2RAA1	3.959	ALL	0.320	210	50
	R2RAA4	3.993	ALL	0.320	210	50
	R2RAA7	3.971	ALL	0.320	210	50
	R2RAB9	3.936	ALL	0.320	210	50
	R2RAC1,AC2	ALL	ALL	0.320	210	50
	R2RAC9	3.942	ALL	0.320	210	50
	R2RAD1	-4.137, 3.952	ALL	0.320	210	50
	R2RAD2	3.980	ALL	0.320	210	50
	R2RAG8	-.111	-8.	0.580	210	62
		3.949	ALL	0.580	210	62
	R2RAG9	-.095, 3.980	ALL	0.580	210	62
	R2RAH1	-.098	-8.	0.580	210	62
	R2RAH2	-.108, 3.963	ALL	0.580	210	62
	R2RAH3, AH7-AH9	ALL	ALL	0.580	210	62
	R2RAI1	-.086	-8.	0.580	210	62
	R2RAI2	-.109, 3.953	ALL	0.580	210	62
	R2RAI3	-4.134, -.111	ALL	0.580	210	62
	R2RAI9	ALL	ALL	0.580	210	62
	R2RAJ2	ALL	ALL	0.580	210	62
	R2RAJ9	-4.139	ALL	0.580	210	62

Notes:

1. Positive directions of force coefficients, moment coefficients, and angles are indicated by arrows
2. For clarity, origins of wind and stability axes have been displaced from the center of gravity

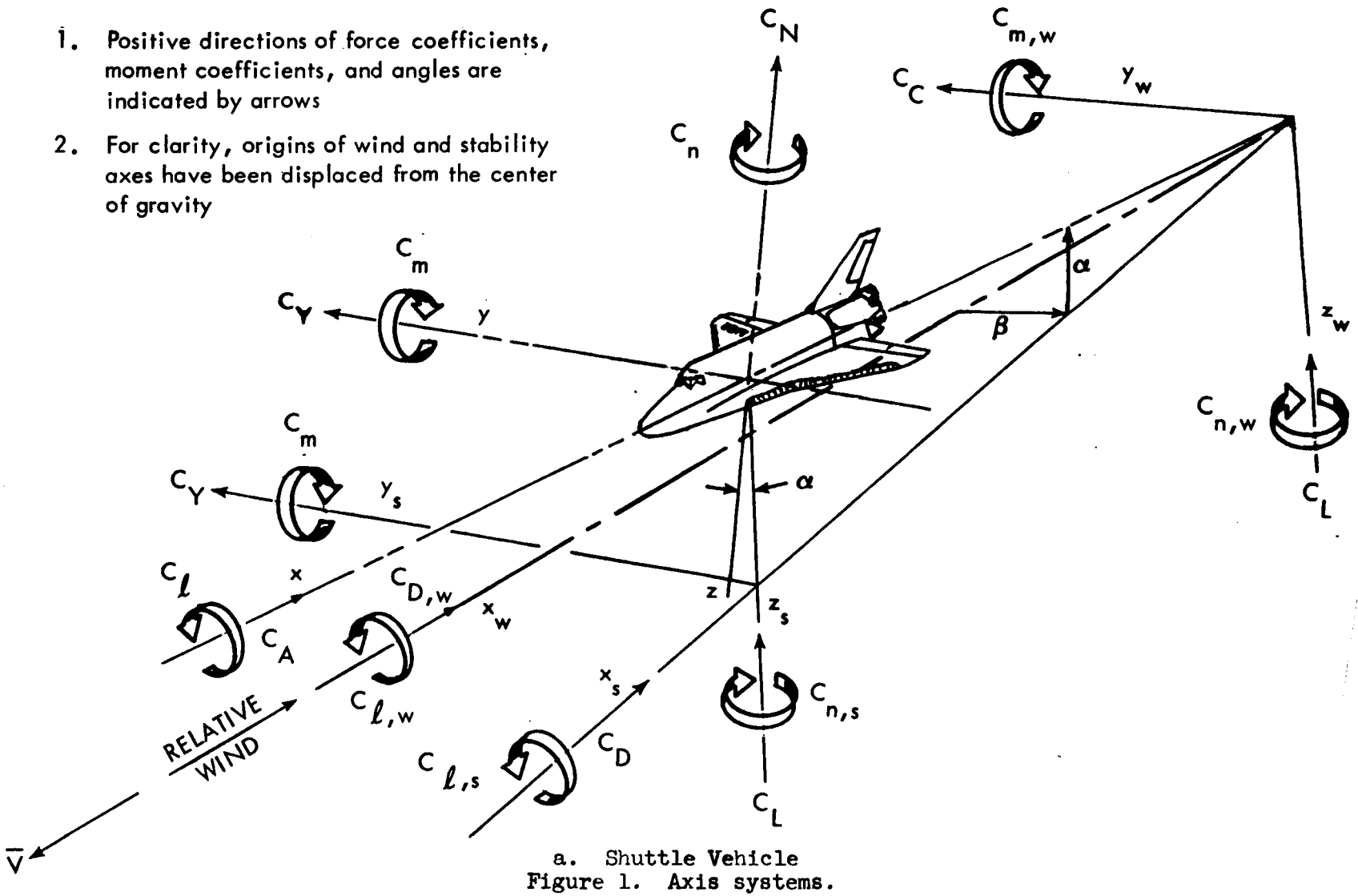

a. Shuttle Vehicle
Figure 1. Axis systems.

ORIGINAL PAGE IS OF POOR QUALITY

$$\delta_{e_L} = \frac{\delta_{e_{L_O}} + \delta_{e_{L_I}}}{2}$$

$$\delta_{e_R} = \frac{\delta_{e_{R_O}} + \delta_{e_{R_I}}}{2}$$

$$\delta_e = \frac{\delta_{e_L} + \delta_{e_R}}{2}$$

$$\delta_a = \frac{\delta_{e_L} - \delta_{e_R}}{2}$$

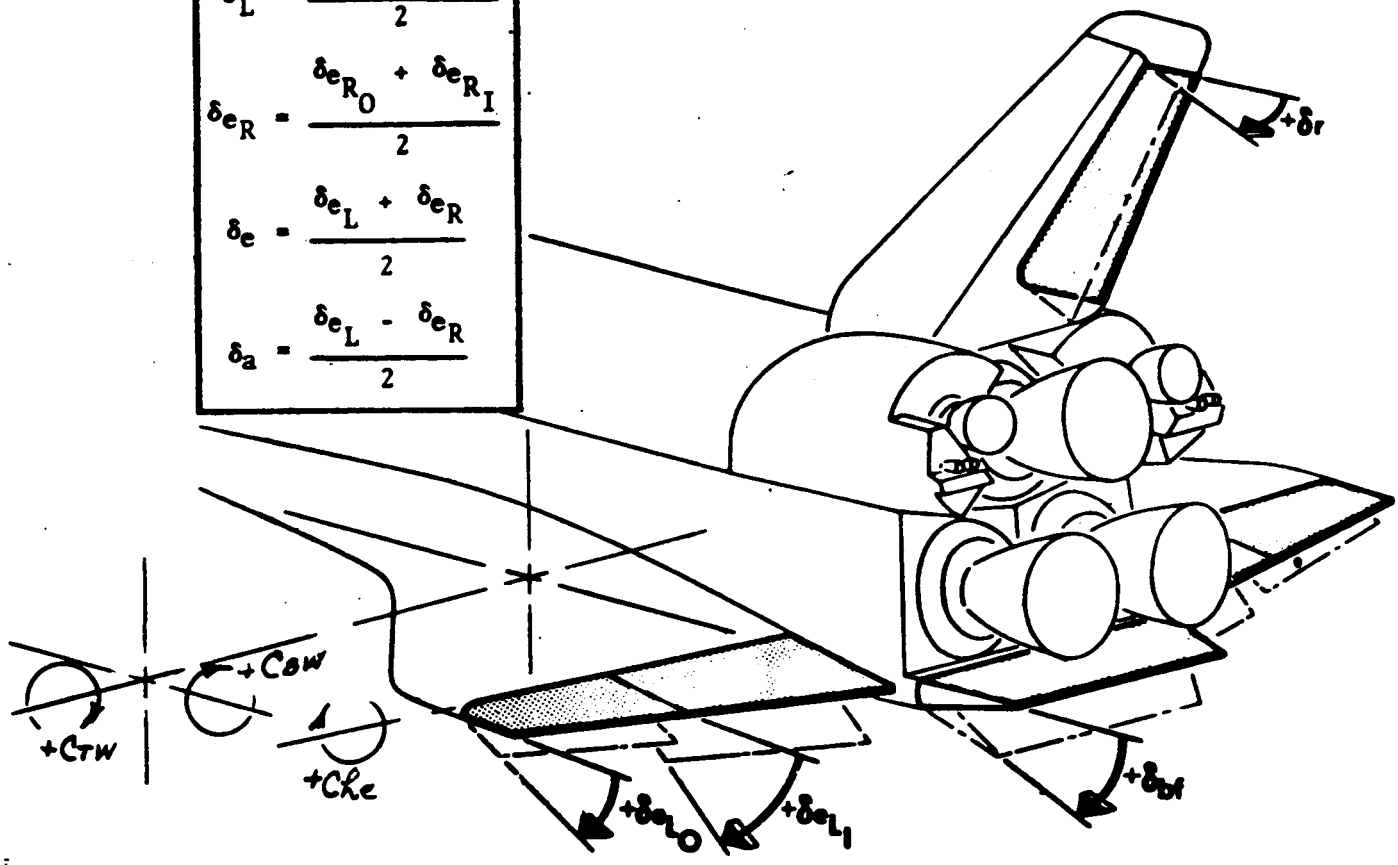

b. Control Surface Deflection
Figure 1. Continued.

ORIGINAL PAGE IS
OF POOR QUALITY

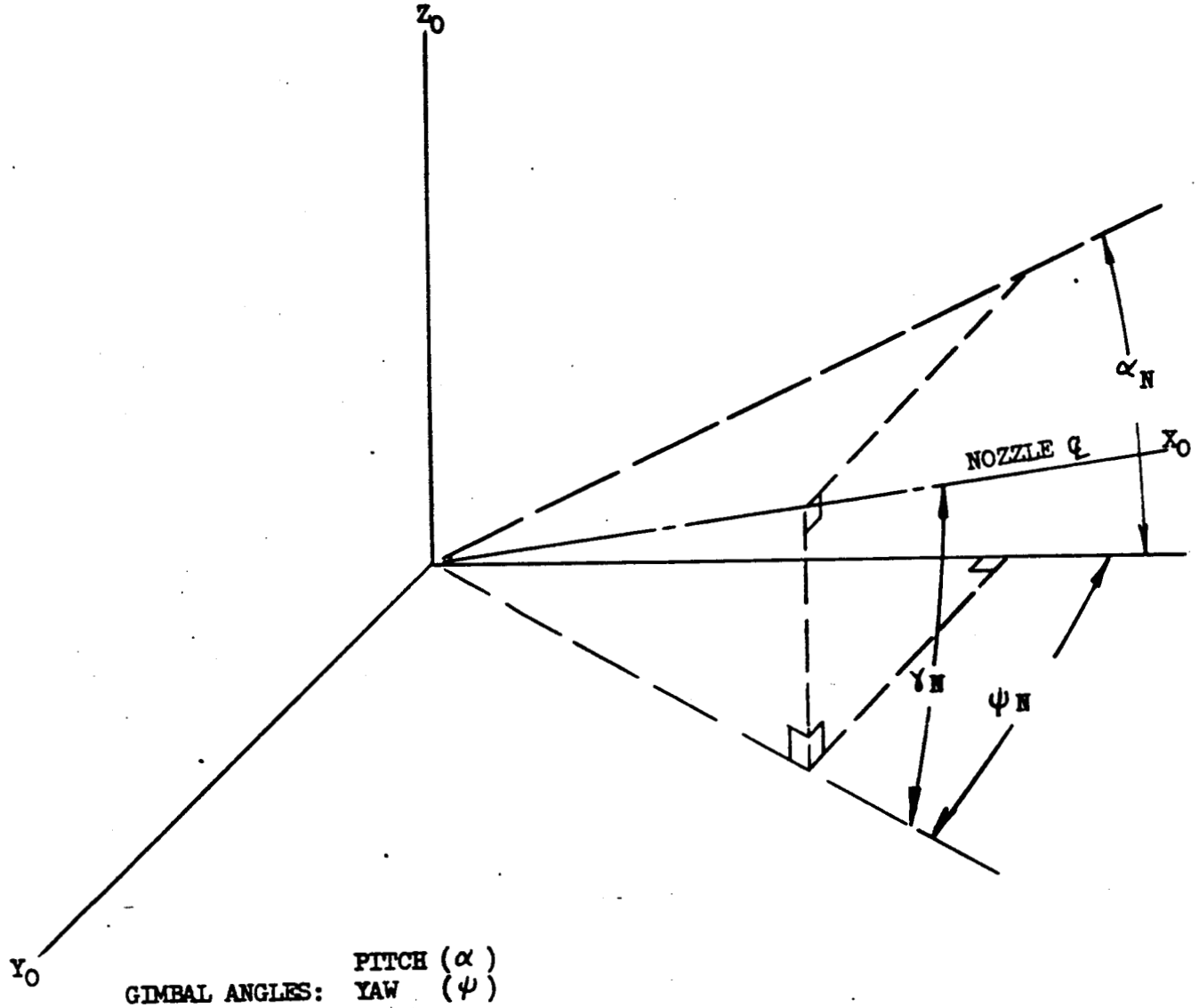

GIMBAL ANGLES: PITCH (α)
YAW (ψ)

GIVEN: α, ψ ;

$$\gamma = \tan^{-1}\left[\tan\alpha\cos\psi\right], \quad -90^\circ < \alpha, \psi < +90^\circ$$

c. Definition of Nozzle Gimbal Angles
Figure 1. Concluded.

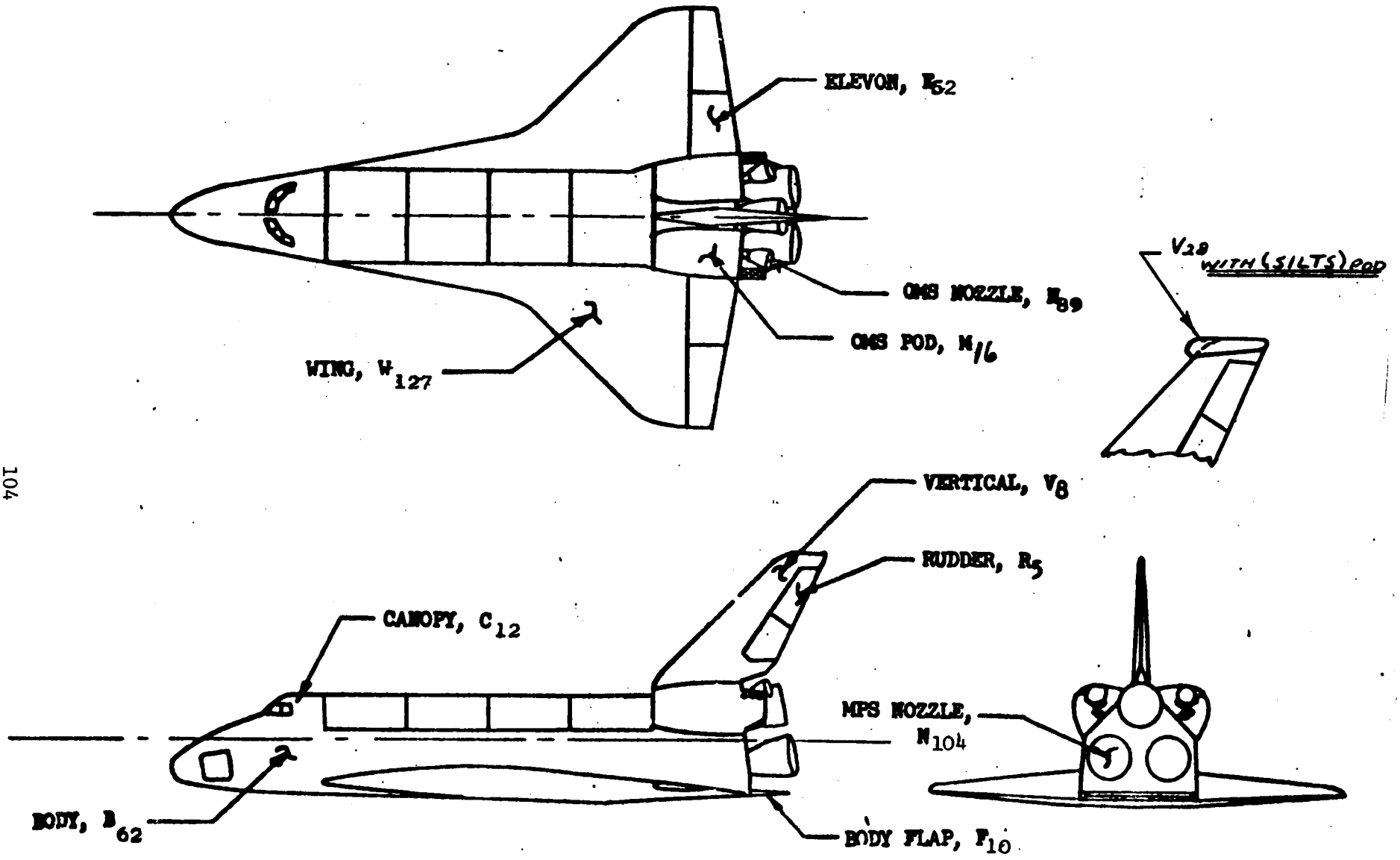

a. Orbiter (O) Components
Figure 2. Model sketches.

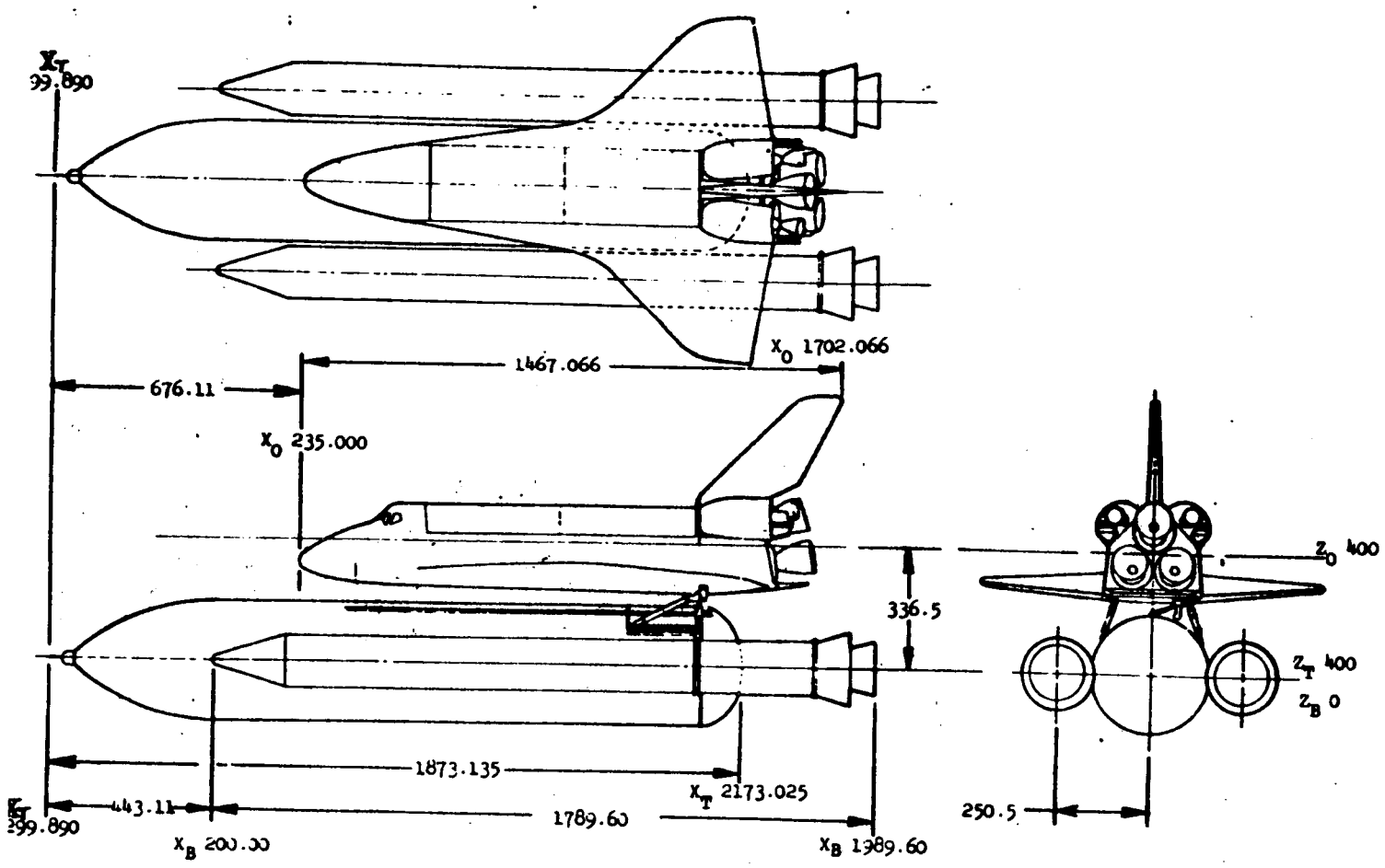

b. Integrated Space Shuttle Vehicle Configuration
Figure 2. Continued.

ORIGINAL PAGE IS
OF POOR QUALITY

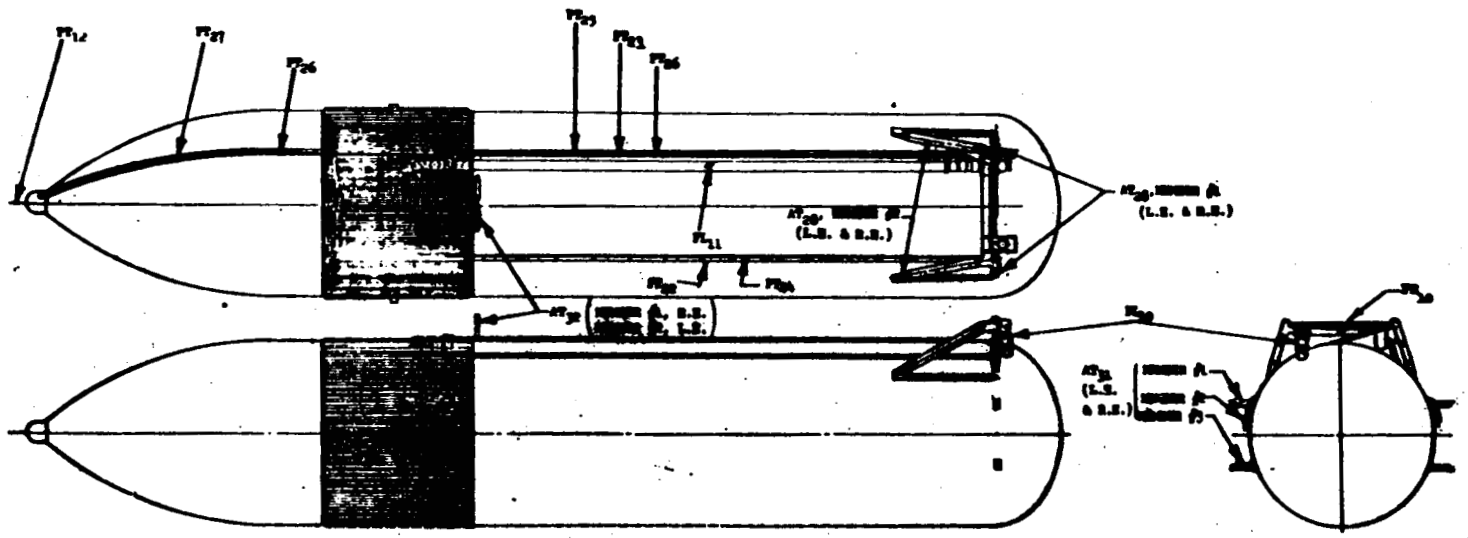

c. External Tank (T_{28}) Protrusions
Figure 2. Continued.

ORIGINAL PAGE IS
OF POOR QUALITY

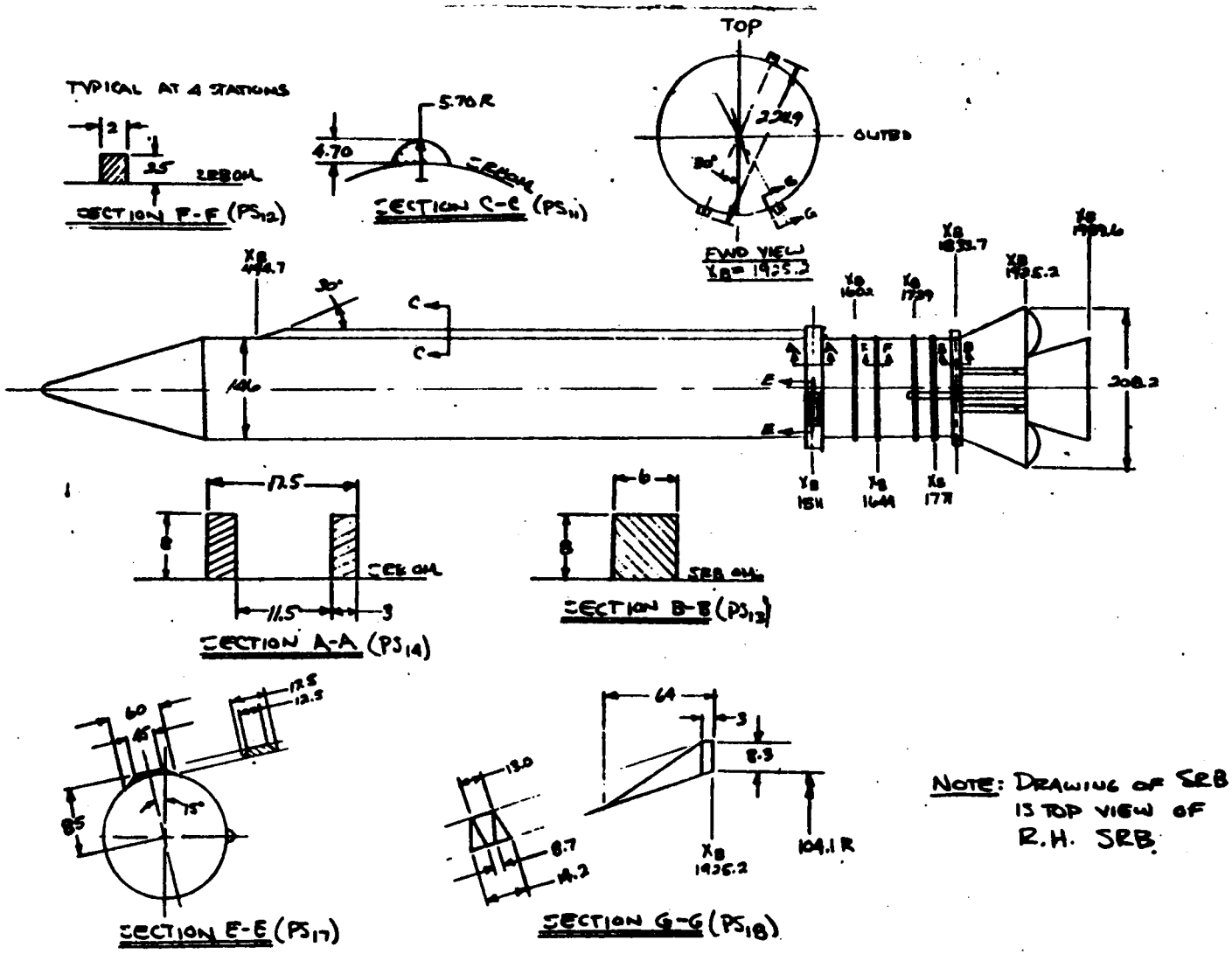

d. SRB (S_{22}) Protrusions
Figure 2. Continued.

ORIGINAL PAGE IS OF POOR QUALITY

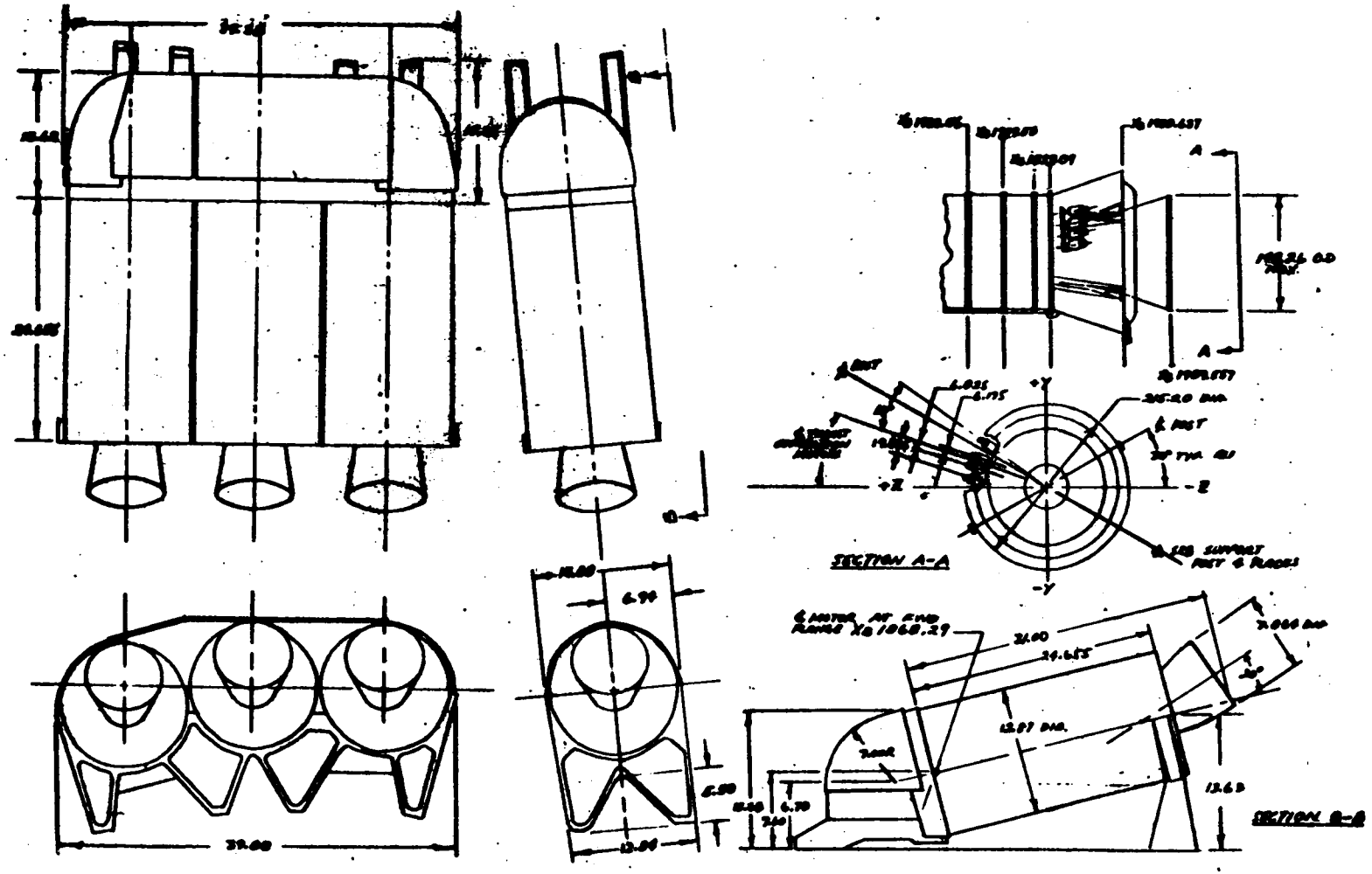

e. SRB Aft Separation Motors
Figure 2. Continued.

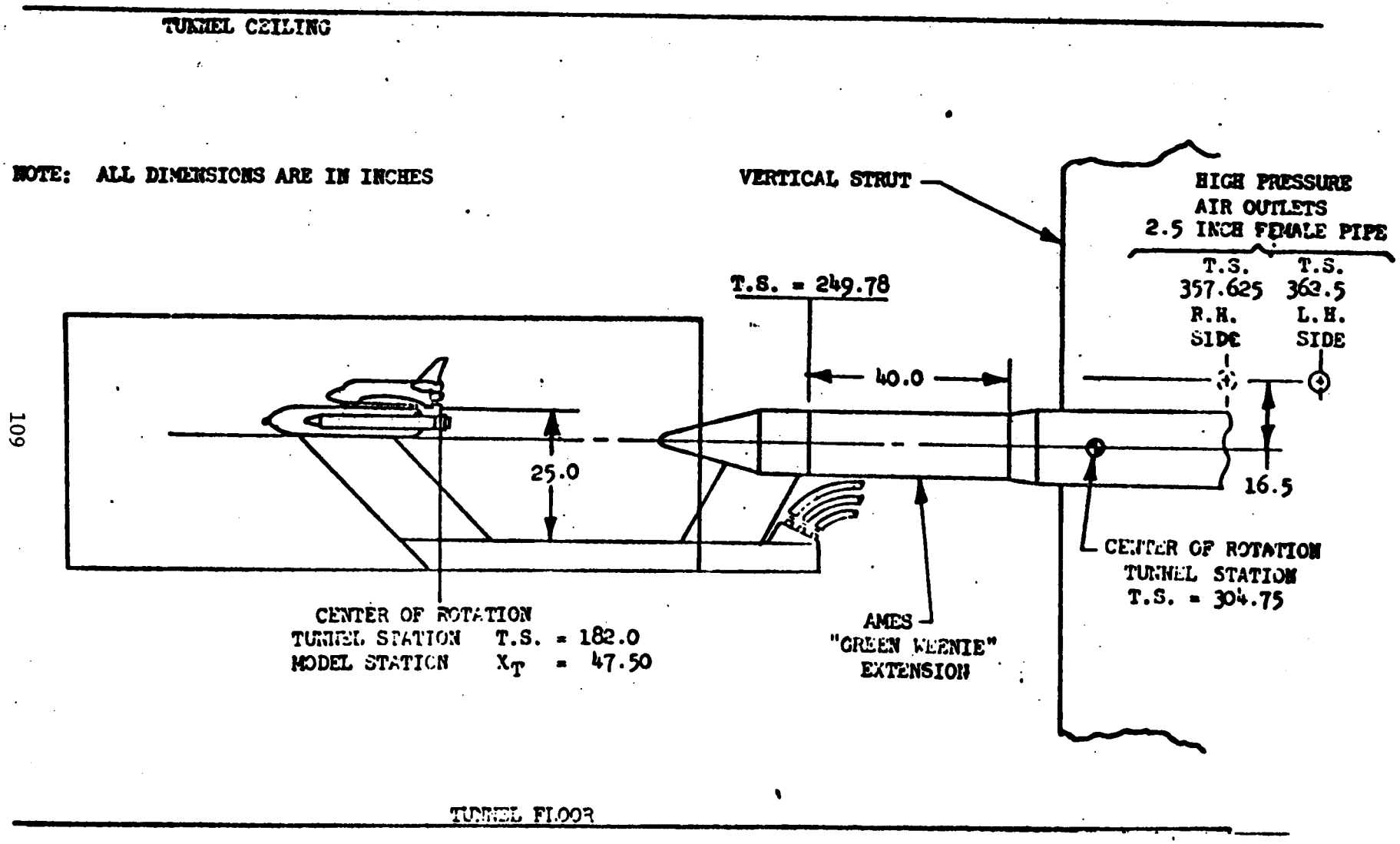

f. ARC UPWT 11 x 11 Model Installation
Figure 2. Continued.

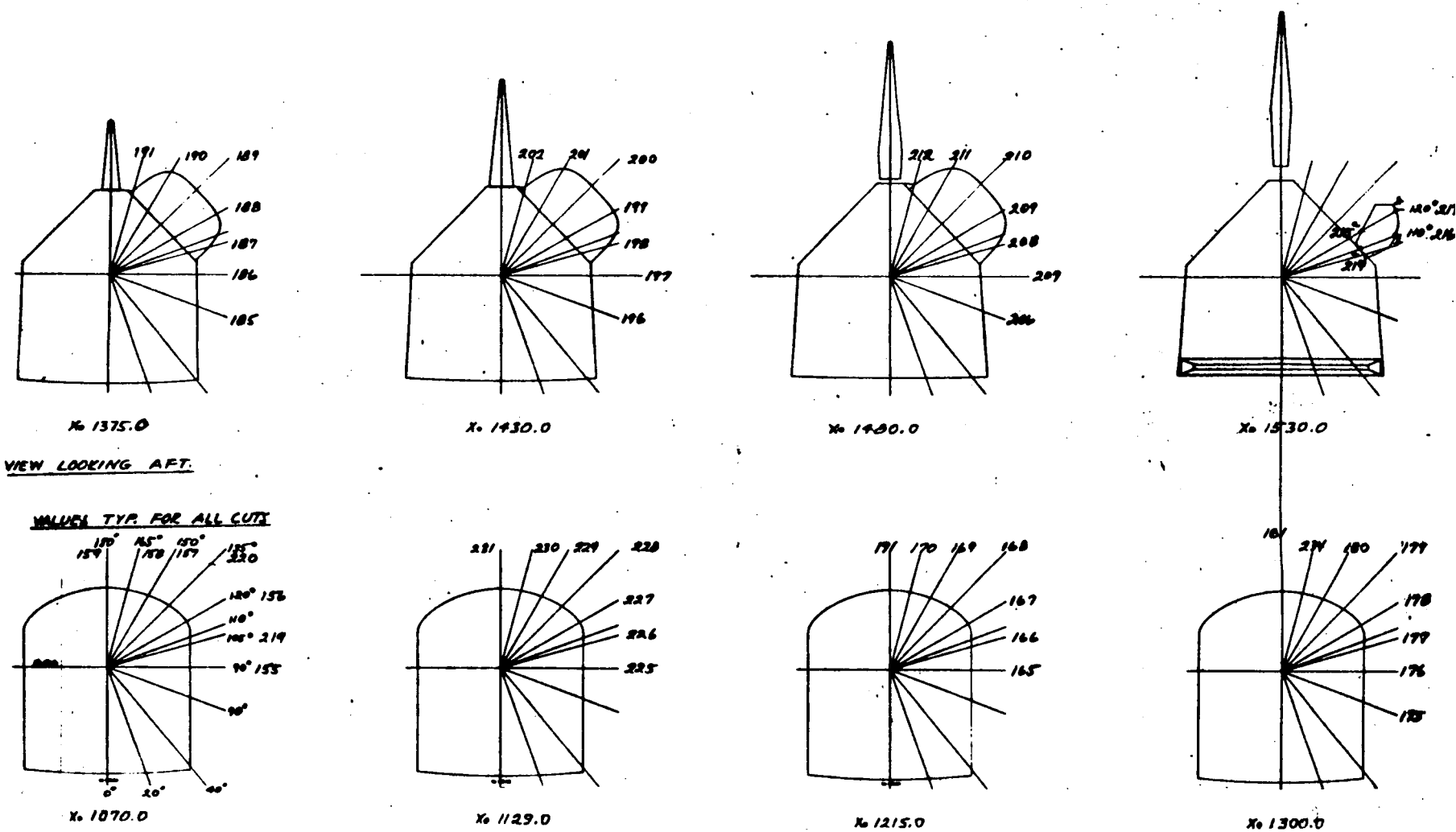

g. Pressure Tap Array - Fuselage
Figure 2. Continued.

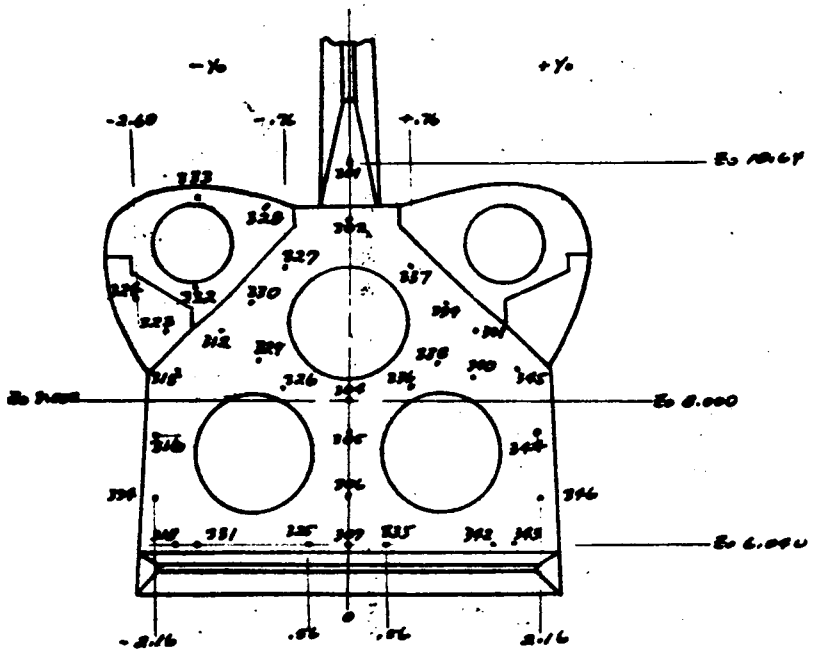

h. Orbiter Base Pressure Instrumentation Locations
Figure 2. Continued.

ORIGINAL PAGE IS OF POOR QUALITY

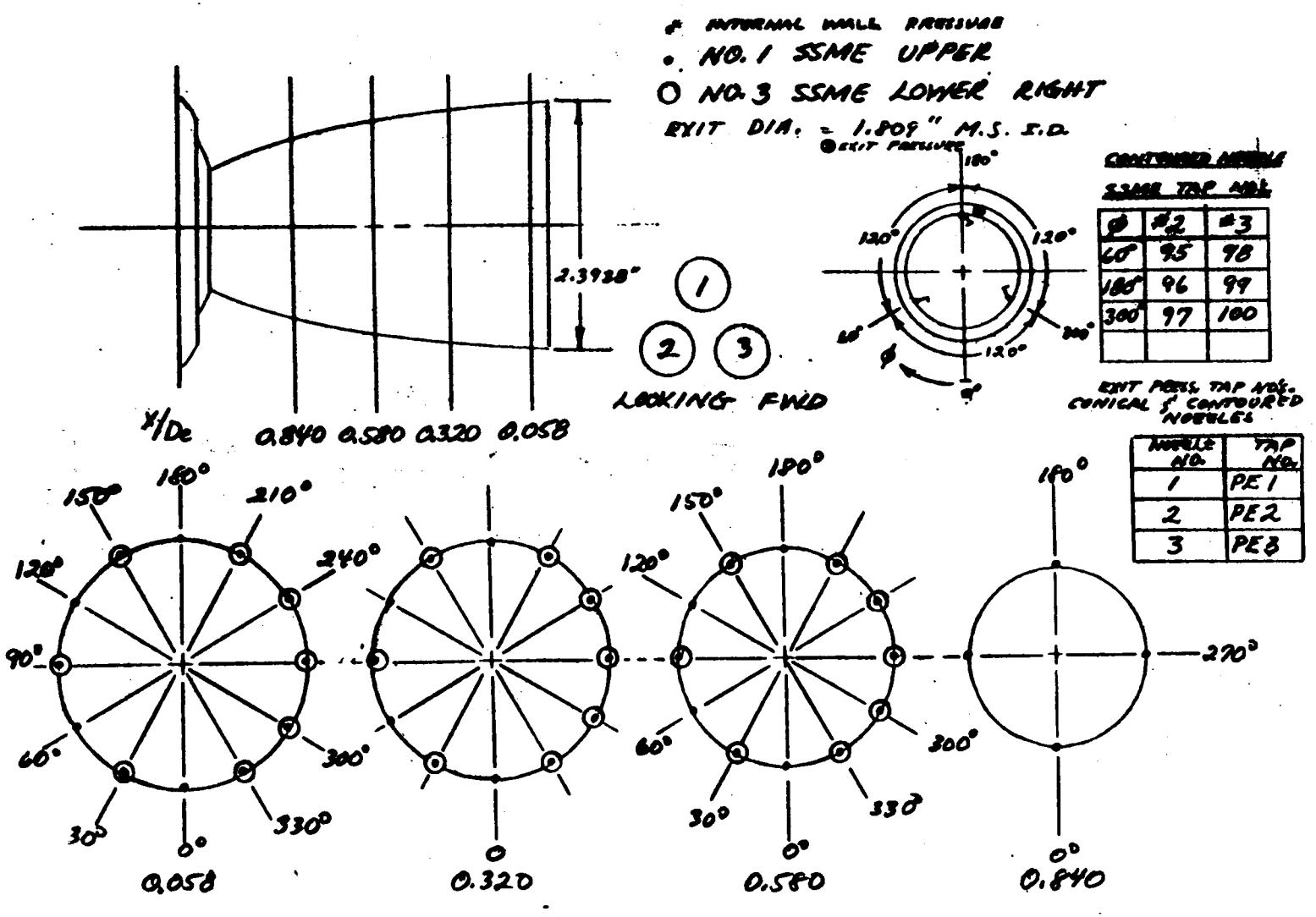

φ	#2	#3
60°	95	98
180°	96	99
300°	97	100

NOZZLE NO.	TAP NO.
1	PE 1
2	PE 2
3	PE 3

i. Orbiter SSME Nozzle Pressure Tap Locations
Figure 2. Continued.

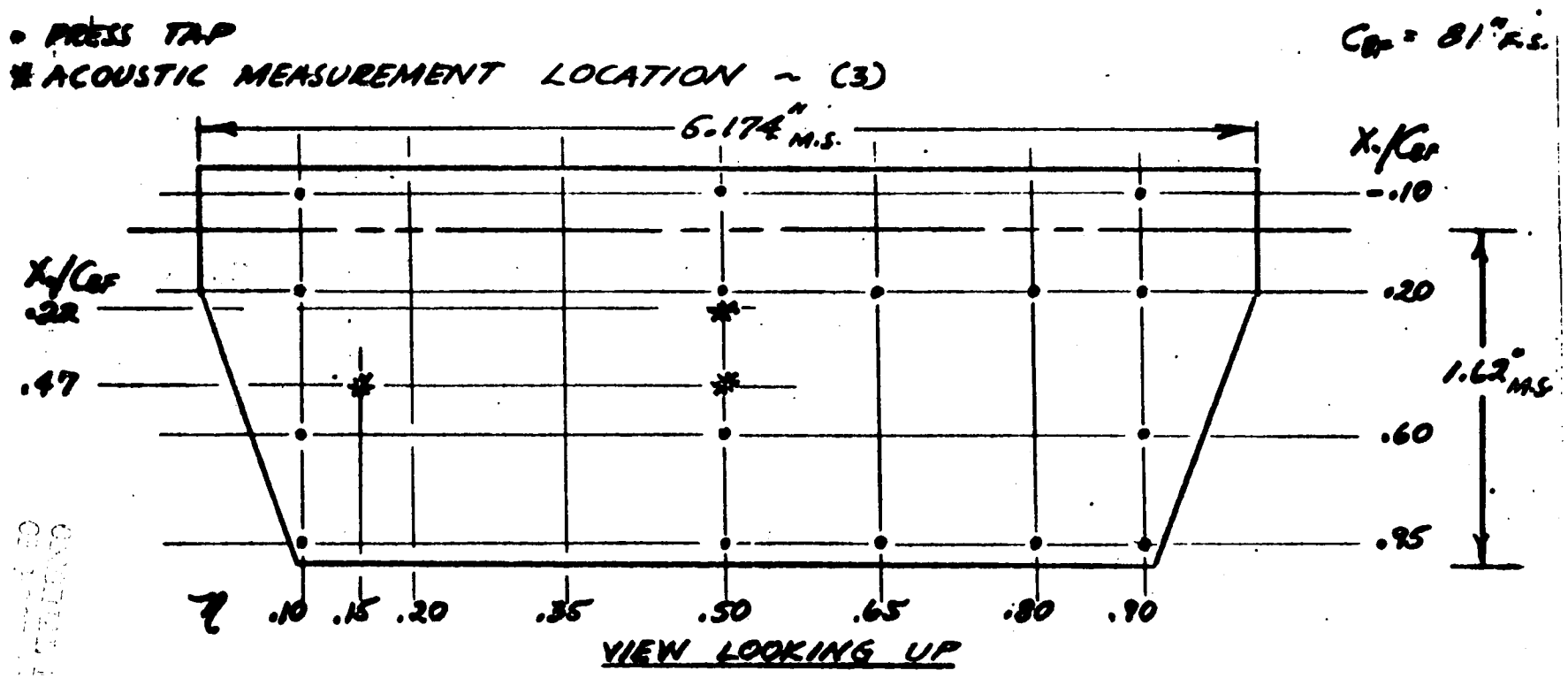

j. Orbiter Body Flap Pressure Instrumentation
Figure 2. Continued.

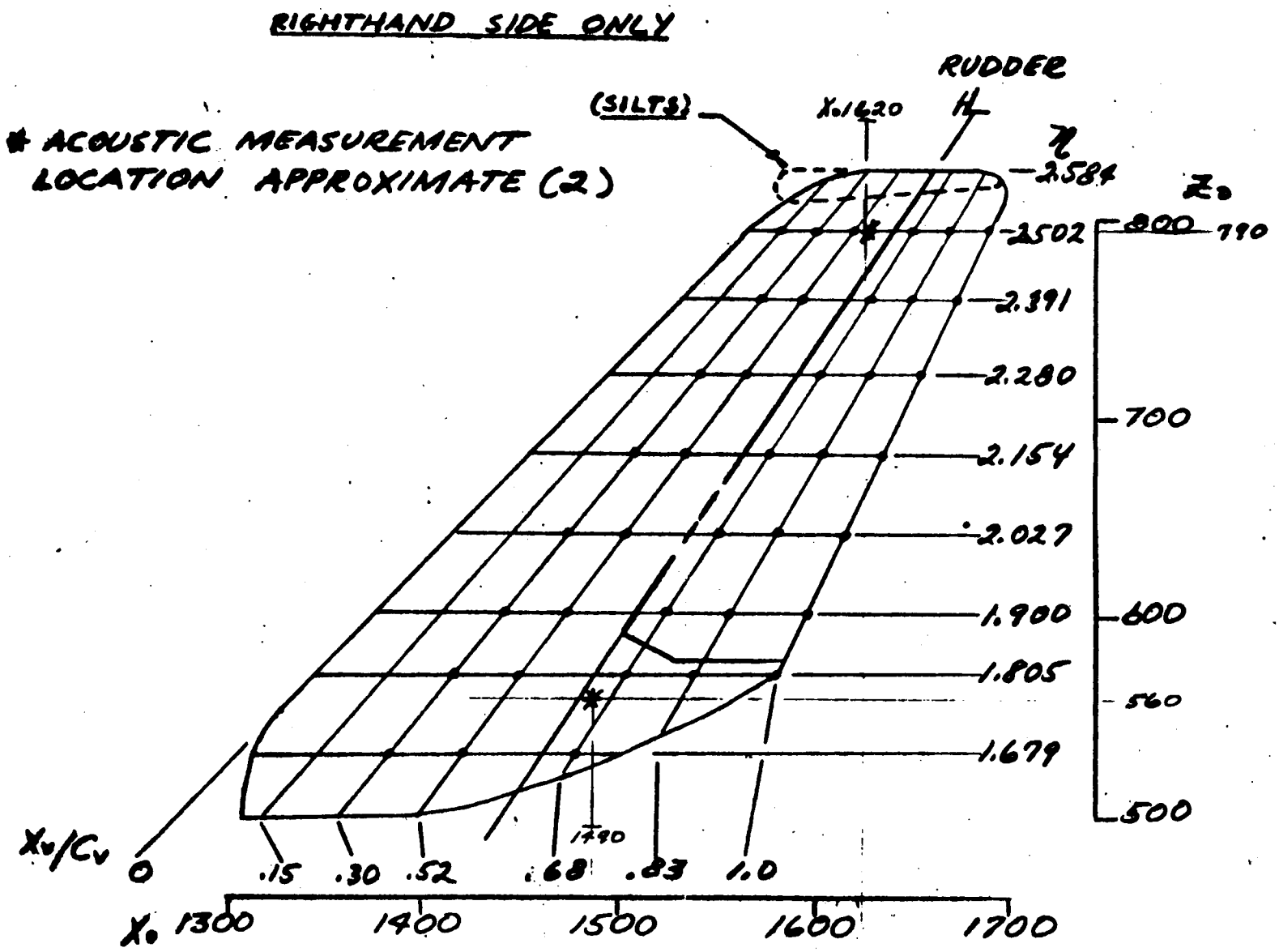

k. Orbiter Pressure Instrumentation - Vertical Tail
Figure 2. Continued.

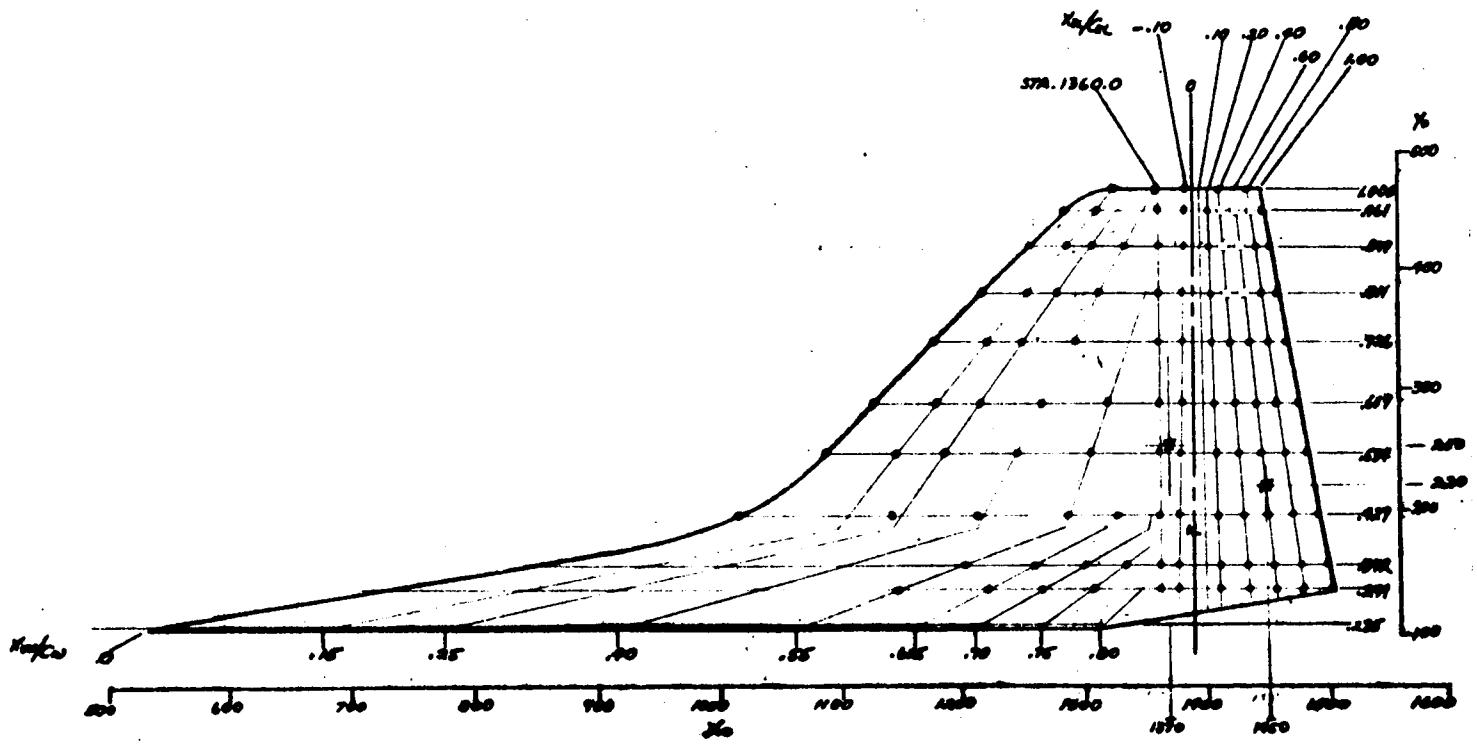

*ACOUSTIC MEASUREMENT LOCATION - BOTTOM (2)

1. Orbiter Wing Pressure Tap Locations
Figure 2. Continued.

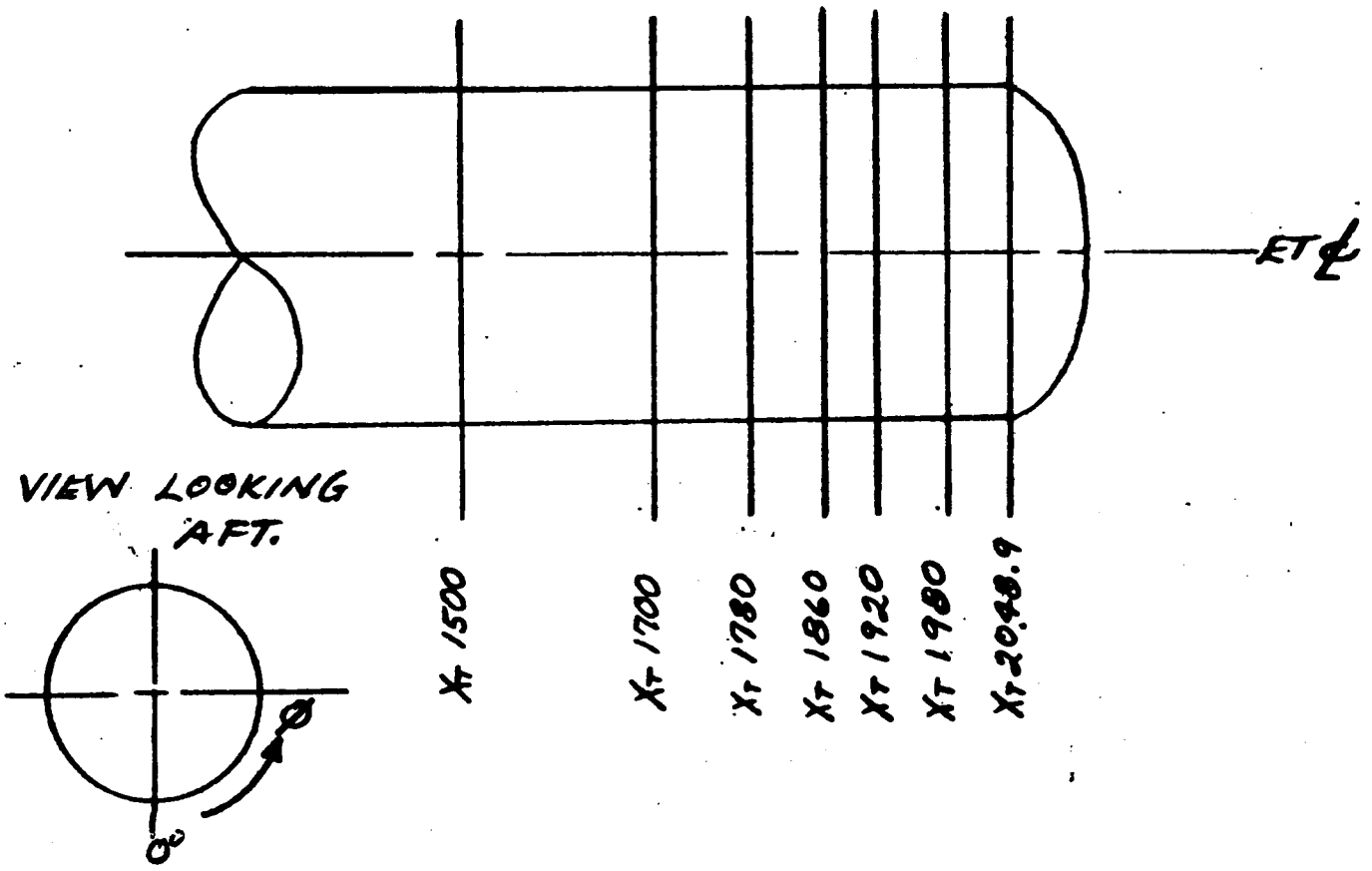

m. External Tank Pressure Instrumentation
Figure 2. Continued.

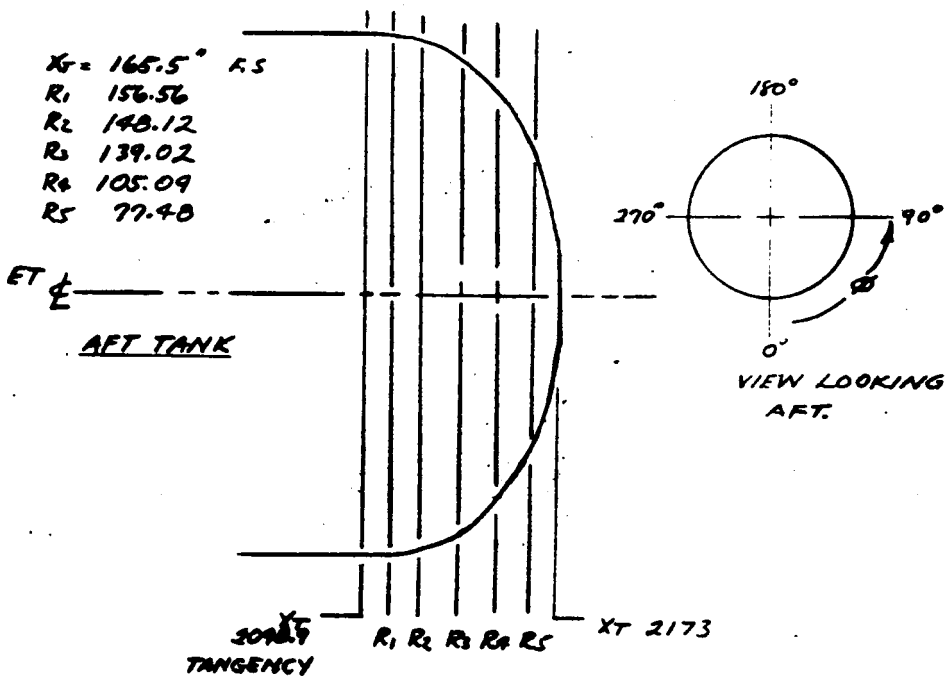

n. External Tank Base Pressure Tap Locations
Figure 2. Continued.

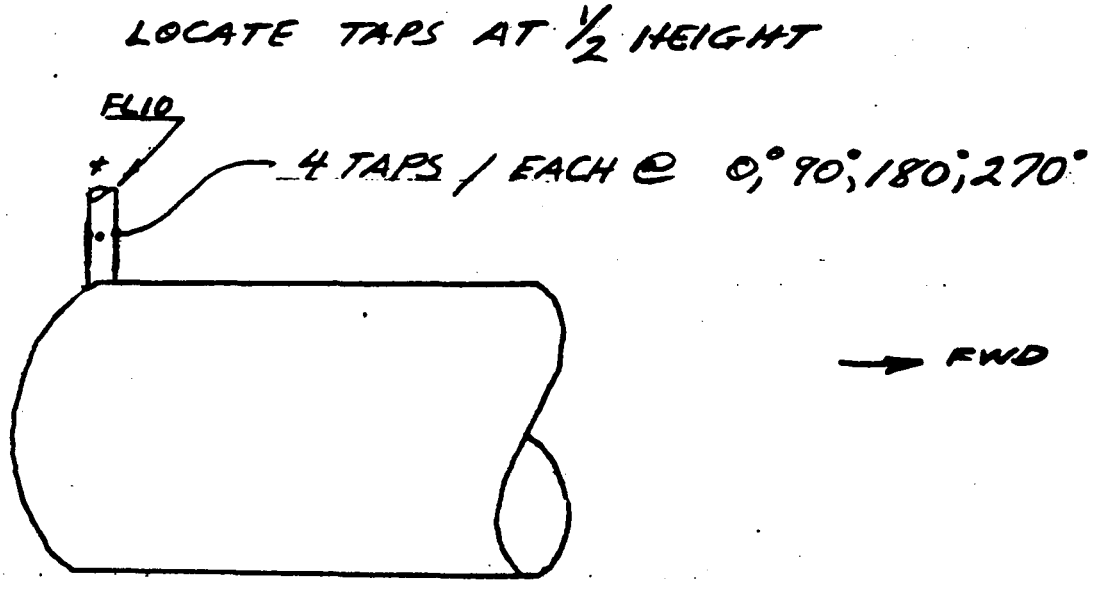

o. External Tank LH_2 Feedline Instrumentation
Figure 2. Continued.

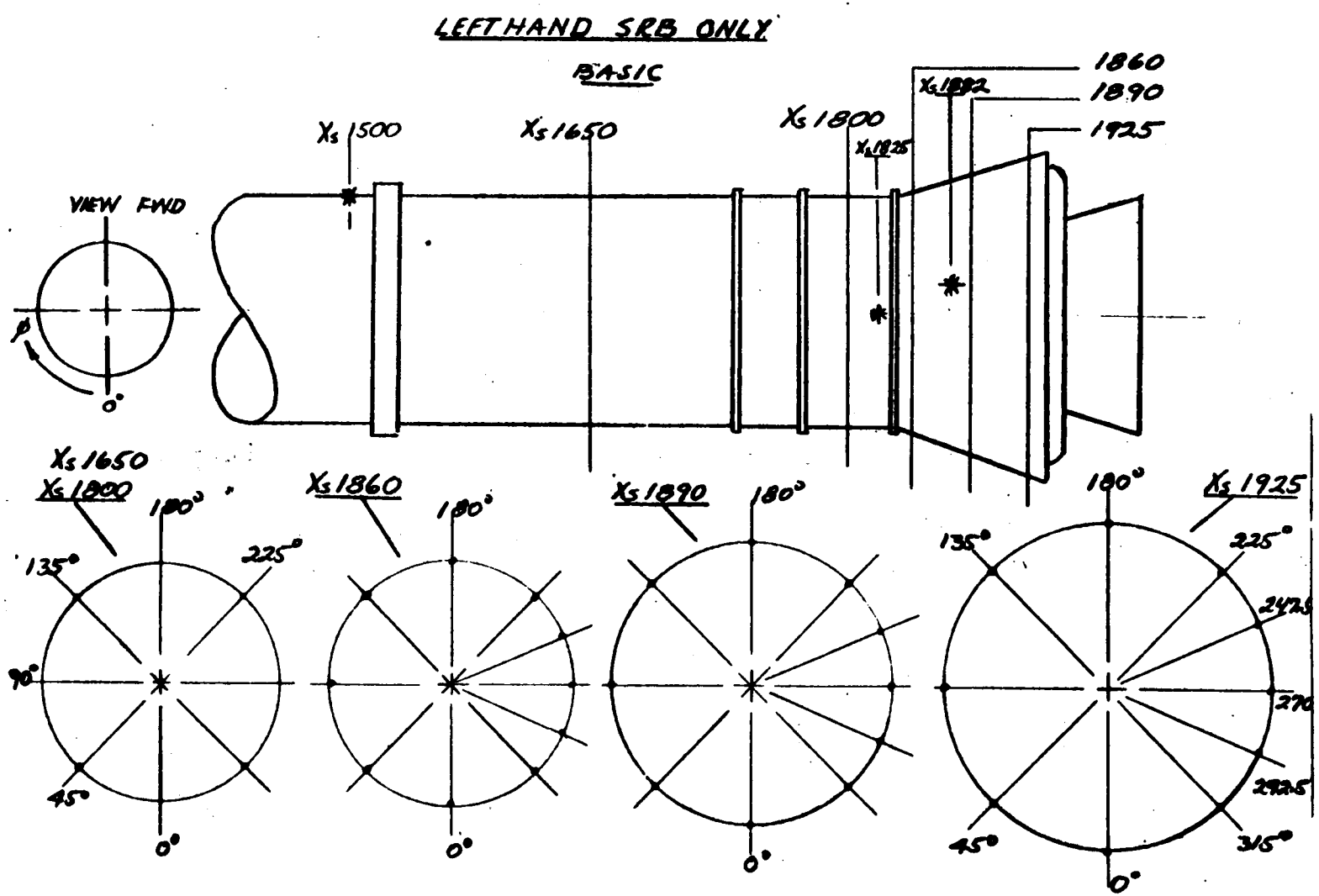

p. SRB Pressure Tap Locations
Figure 2. Continued.

ORIGINAL PAGE IS
OF POOR QUALITY

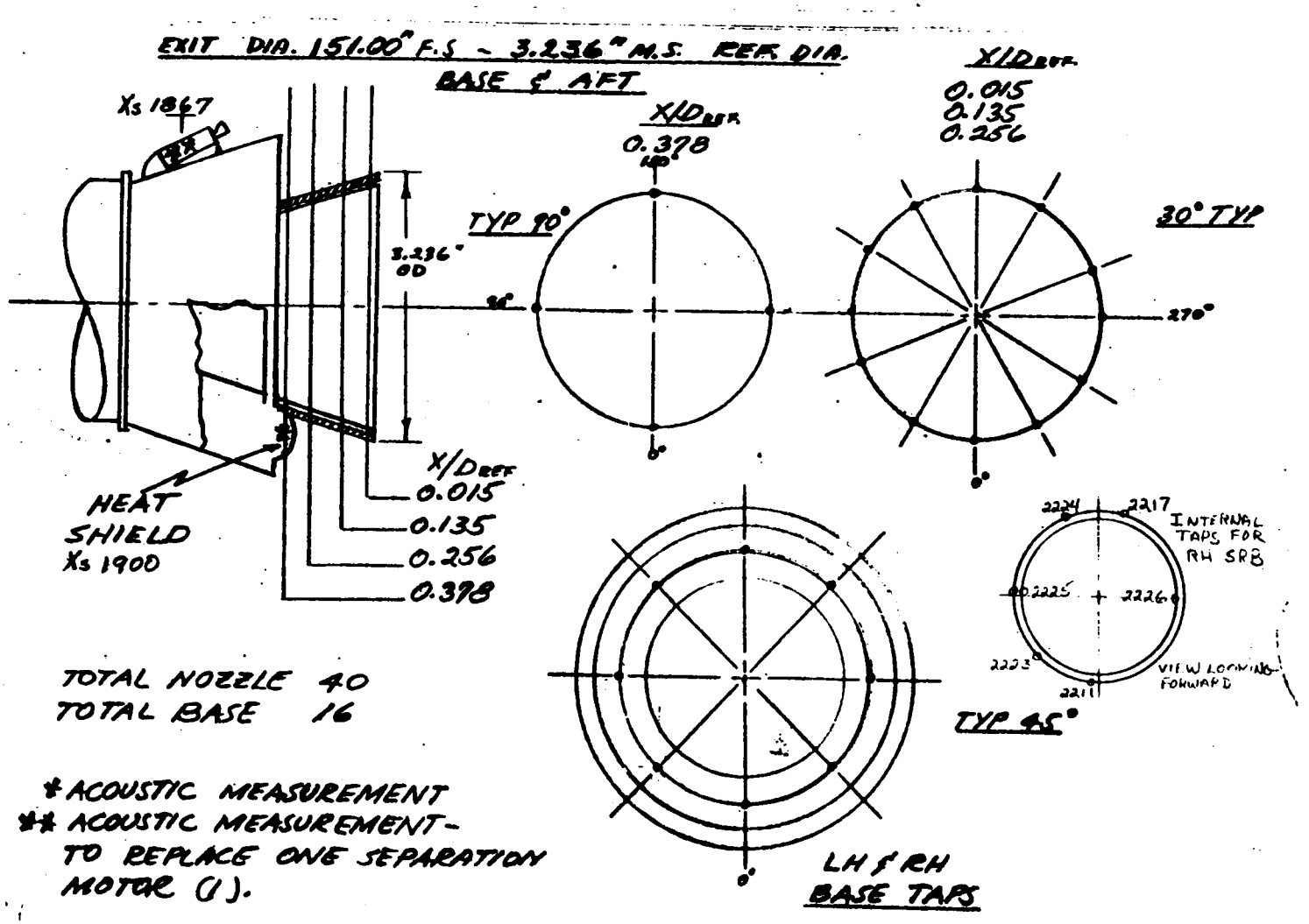

q. SRB Pressure Instrumentation Base and Aft
Figure 2. Continued.

ORIGINAL PAGE IS
OF POOR QUALITY

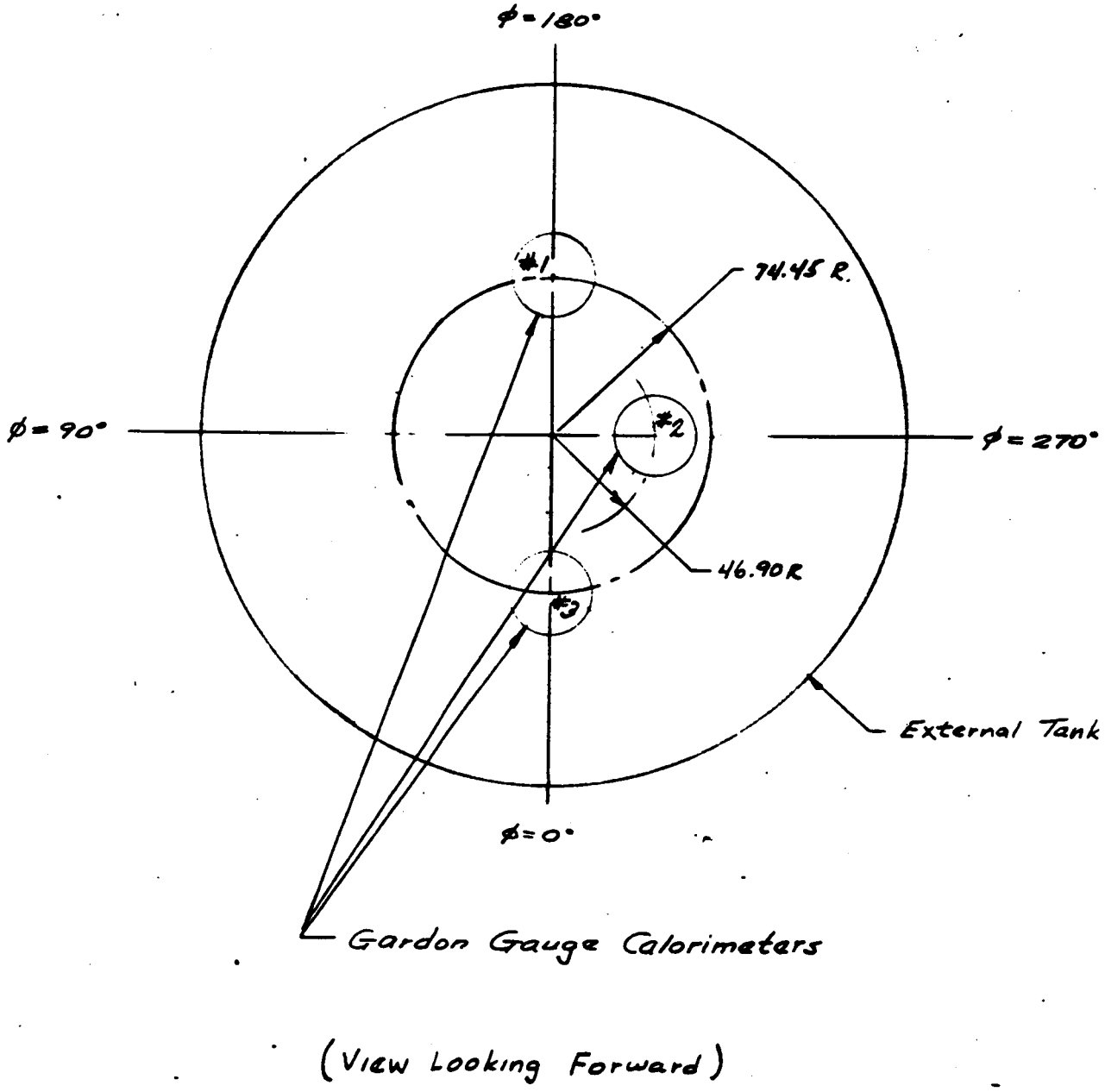

r. External Tank Base Calorimeter Locations
Figure 2. Concluded.

APPENDIX

TABULATED SOURCE DATA