National Aeronautics and
Space Administration

Lyndon B. Johnson Space Center

(NASA-CR-151806) RESULTS OF AN INVESTIGATION TO VERIFY SHUTTLE ORBITER VEHICLE 102 AERO CHARACTERISTICS UTILIZING AN .05 SCALE HI-FIDELITY REMOTE CONTROL MODEL (39-0) IN THE AMES RESEARCH CENTER

N81-71522

Unclas

00/16 39975

SPACE SHUTTLE AEROTHERMODYNAMIC DATA REPORT

DEC 1980
RECEIVED
NASA STI FACILITY
ACCESS DEPT.

Data Management Services

HUNTSVILLE ELECTRONICS DIVISION CHRYSLER CORPORATION

September 1980

DMS-DR-2380
NASA-CR-151,806

VOLUME 6 OF 6

RESULTS OF AN INVESTIGATION TO VERIFY SHUTTLE ORBITER VEHICLE 102 AERO CHARACTERISTICS UTILIZING AN .05-SCALE HI-FIDELITY REMOTE CONTROL MODEL (39-0) IN THE AMES RESEARCH CENTER UNITARY WIND TUNNEL (OA145A)

by

R. H. Mulfinger
Rockwell International Space Division

Prepared under NASA Contract Number NAS9-13247

by

Data Management Services
Chrysler Huntsville Electronics Division
Slidell Engineering Office
New Orleans, Louisiana 70189

for

Engineering Analysis Division

Johnson Space Center
National Aeronautics and Space Administration
Houston, Texas

WIND TUNNEL TEST SPECIFICS:

Test Number:	118-1-11, -97, -87
NASA Series Number:	OA145A, B, C
Model Number:	39-0
Test Dates:	March 7, 1977 through May 4, 1977
Occupancy Hours:	OA145A 480
	OA145B 348
	OA145C 100

FACILITY COORDINATOR:

Jack J. Brownson
Ames Research Center
Mail Stop 227-5
Moffett Field, CA 94035

Phone: (415) 965-6262

AERODYNAMIC ANALYSIS ENGINEERS:

D. C. Schlosser
F. F. Fitzgerald
Rockwell International
Space Division
Mail Code AC07
12214 Lakewood Boulevard
Downey, CA 90241

Phone: (213) 922-4738

PROJECT ENGINEERS:

R. H. Mulfinger
R. H. Spangler
Rockwell International
Space Division
Mail Code AD38
12214 Lakewood Boulevard
Downey, CA 90241

Phone: (213) 922-4994

R. Guist
J. J. Brownson
Ames Research Center
Mail Stop 227-5
Moffet Field, CA 94035

Phone: (415) 965-6262

DATA MANAGEMENT SERVICES:

Prepared by: Liaison-- D. W. Hersey
Operations--M. M. Mann
H. C. Zimmerle

Approved: J. L. Glynn, Manager
Data Operations

Concurrence: N. D. Kemp, Manager
Data Management Services

Chrysler Huntsville Electronics Division/Slidell Engineering Office assumes no responsibility for the data presented other than display characteristics.

RESULTS OF AN INVESTIGATION TO VERIFY SHUTTLE ORBITER VEHICLE 102 AERO CHARACTERISTICS UTILIZING AN .05-SCALE HI-FIDELITY REMOTE CONTROL MODEL (39-0) IN THE AMES RESEARCH CENTER UNITARY WIND TUNNEL (OA145A)

by

R. H. Mulfinger, Rockwell International Space Division

ABSTRACT

This report documents the data obtained in wind tunnel test ØA145A, part of a transonic verification test program (ØA145A, B, C) conducted in the Ames unitary plan tunnel. Data from tests ØA145B and C are documented in DMS-DR-2364 and DMS-DR-2389, respectively. The objective of this test series was to verify orbiter vehicle 102 aerodynamic characteristics with regard to:

1. Basic stability and control over the structural design envelope
2. Fine cut stability and control characteristics along a nominal entry trajectory
3. Control surface hinge moments
4. Reynolds number effects on stability and control, control surface effectiveness and hinge moments
5. Certain hysteresis and control surface interactions observed on other smaller scale model tests
6. Proposed inboard/outboard elevon interaction math model

Testing was conducted over a Mach number range 0.4 to 3.5 with Reynolds number variations between 3.0×10^6 and 9×10^6 per foot for subsonic/transonic tests and 1.0×10^6 to 4.5×10^6 per foot for supersonic tests. The

ABSTRACT (Concluded)

test program included investigations to evaluate model blockage, reflected shock and flow angularity effects in the 11 ft. and 9 x 7 tunnels. Mach ramps were run in the 11 ft. tunnel to help establish data validity near Mach 1.0. Control surface hinge moments were obtained from the integration of measured pressure data on all control surfaces.

TABLE OF CONTENTS

	Page
ABSTRACT	iii
INDEX OF MODEL FIGURES	3
INDEX OF DATA FIGURES	4
INTRODUCTION	20
NOMENCLATURE	22
REMARKS	27
CONFIGURATIONS INVESTIGATED	33
INSTRUMENTATION	35
TEST FACILITY DESCRIPTION	38
DATA REDUCTION	39
REFERENCES	45
TABLES	
I. TEST CONDITIONS	46
II. DATA SET/RUN COLLATION SUMMARY	47
III. WING AND ELEVON PRESSURE TAP LOCATIONS	62
IV. FLIPPER DOOR PRESSURE TAP LOCATIONS	63
V. BODY FLAP PRESSURE TAP LOCATIONS	64
VI. SPEED BRAKE PRESSURE TAP LOCATIONS	65
VII. AIR DATA PROBE AND STING PRESSURE TAP LOCATIONS	66
VIII. COEFFICIENT TOLERANCES FOR THE 4-INCH TASK MKIVA BALANCE	67
FIGURES	
MODEL	68

TABLE OF CONTENTS (Concluded)

	Page
DATA	83
FORCE - VOLUME 1 - Figures 4 thru 40, pages 1 thru 1061	
PRESSURE - VOLUME 2 - Figures 41 thru 116, pages 1062 thru 1994	
VOLUME 3 - Figures 117 thru 168, pages 1995 thru 2937	
APPENDICES - SOURCE DATA	
VOLUME 4 (FORCE DATA - TABULATION)	
VOLUME 5 (FORCE DATA - TABULATION)	
VOLUME 6 (PRESSURE DATA - MICROFICHE)	

NOTE: Distribution of Volume 6 was limited due to the volume of microfiche. Requests for pressure data tabulations should be directed to Chrysler Data Management Services.

INDEX OF MODEL FIGURES

Figure	Title	Page
1.	Axes systems and sign convention.	
	a. Axes Systems Definition	68
	b. Control Surface Deflections	69
	c. Orbiter Reference Dimensions	70
	d. Rudder/Speed Brake Deflections	71
	e. Elevon and Body Flap Deflections	72
2.	Model sketches.	
	a. Orbiter Configuration	73
	b. Protuberances and Penetrations	74
	c. Elevon and Wing Pressure Tap Locations	75
	d. Flipper Door and Elevon Cavity Pressure Tap Locations	76
	e. Body Flap Pressure Tap Locations	77
	f. Rudder/Speed Brake Surface Pressure Tap Locations	78
	g. Air Data Probe Pressure Tap Locations	79
	h. Base Pressure Tap Locations	80
3.	Model installation photographs.	
	a. Model Installed in 11 x 11 Foot Test Section (OA145A)	81
	b. Model Installed in 9 x 7 Foot Test Section with Base Detail (OA145B)	82

INDEX OF DATA FIGURES

FIGURE NUMBER	TITLE	COEFFICIENT SCHEDULE	CONDITIONS VARYING	PAGES
VOLUME 1 - FORCE DATA				
4	FLOW ANGULARITY EVALUATION - LONGITUDINAL AXIS	A	MACH	1-54
5	REYNOLDS NUMBER EFFECT ON LONGITUDINAL DATA	A	MACH	55-78
6	LONGITUDINAL STABILITY	A	MACH	79-90
7	LATERAL-DIRECTIONAL STABILITY, SPEEDBRAKE 25 DEGREES	B	ALPHA,MACH	91-111
8	REYNOLDS NUMBER EFFECT ON LATERAL-DIRECTIONAL DATA	B	ALPHA,MACH	112-123
9A	ELEVON EFFECTIVENESS	A,C	ELEVON,MACH	124-222
9B	ELEVON EFFECTIVENESS	A,C	ELEVON,MACH	223-299
10	BODY FLAP LONGITUDINAL EFFECTIVENESS	A,D	BDFLAP,MACH	300-355
11A	EFFECT OF SPEEDBRAKE DEFLECTION ON LONGITUDINAL DATA	A,E	SPDBRK,MACH	356-418
11B	EFFECT OF SPEEDBRAKE DEFLECTION ON LONGITUDINAL DATA	A,E	SPDBRK,MACH	419-481
12	EFFECT OF SPEEDBRAKE DEFLECTION ON LATERAL-DIRECTIONAL DATA, ALPHA = 0 DEG	B,E	SPDBRK,MACH	482-509
13	EFFECT OF SPEEDBRAKE DEFLECTION ON LATERAL-DIRECTIONAL DATA, ALPHA = 5 DEG.	B,E	SPDBRK,MACH	510-541
14	EFFECT OF SPEEDBRAKE DEFLECTION ON LATERAL-DIRECTIONAL DATA, ALPHA = 10 DEG.	B,E	SPDBRK,MACH	542-569

INDEX OF DATA FIGURES

FIGURE NUMBER	TITLE	COEFFICIENT SCHEDULE	CONDITIONS VARYING	PAGES
15	EFFECT OF SPEEDBRAKE DEFLECTION ON LATERAL-DIRECTIONAL DATA, ALPHA = 15 DEG	B,E	SPDBRK,MACH	570-596
16	RUDDER EFFECTIVENESS, SPEEDBRAKE 55 DEGREES	F,G	ALPHA,MACH	597-624
17	RUDDER EFFECTIVENESS, SPEEDBRAKE 25 DEGREES	F,G	ALPHA,MACH	625-652
18	RUDDER EFFECTIVENESS, SPEEDBRAKE 0.0 DEGREES, BETA = 0.0 DEGREES	F,G	ALPHA,MACH	653-680
19	RUDDER EFFECTIVENESS, SPEEDBRAKE 87.2 DEGREES, BETA = 0.0 DEGREES	F,G	ALPHA,MACH	681-700
20	RUDDER EFFECTIVENESS, SPEEDBRAKE 15.0 DEGREES, BETA = 0.0 DEGREES	F,G	ALPHA,MACH	701-724
21	RUDDER EFFECTIVENESS, VARIOUS SPDBRK SETTINGS, ALPHA = 5.0 DEG., BETA = 0.0 DEG.	F,G	SPDBRK,MACH	725-752
22	INB'D/OUTB'D ELEV EFFECTS: INB'D MOVE, OUTB'D FIX, ALPHA = 5, BETA = 0, AILRON = 0	H	ELV-ØB,MACH	753-770
23	INB'D/OUTB'D ELEV EFFECTS: OUTB'D MOVE, INB'D FIX, ALPHA = 5, BETA = 0, AILRON = 0	I	ELEV-IB,MACH	771-788
24	INB'D/OUTB'D ELEV EFFECTS: INBOARD MOVING AS AILRON, ALPHA = 5 DEG, BETA = 0 DEG	J	ELEVON,MACH	789-812
25	INB'D/OUTB'D ELEV EFFECTS: OUTB'D MOVING AS AILERON, ALPHA = 5 DEG, BETA - 0 DEG	K	ELEVON, MACH	813-836
26	CONTROL SURF. INTERACTIONS: ELEV VARY, BDFLAP = -11.7, SPBRK = 25, RUD = 0, BETA = 0	L	ALPHA,MACH	837-842

INDEX OF DATA FIGURES

FIGURE NUMBER	TITLE	COEFFICIENT SCHEDULE	CONDITIONS VARYING	PAGES
27	CONTROL SURF. INTERACTIONS: ELEV VARY, BDFLAP = 16.3, SPBRK = 25, RUD = 0, BETA = 0	L	ALPHA,MACH	843-848
28	CONTROL SURF. INTERACTIONS: ELEV = 5, BDFLAP = -11.7, 16.3, RUDDER = 0 DEG.	A	BDFLP,MACH	849-860
29	CONTROL SURF. INTERACTIONS: ELEV = -5, BDFLAP -11.7, 16.3, RUDDER = 0 DEG.	A	BDFLAP,MACH	861-872
30	CONTROL SURF. INTERACTIONS: BDFLP SWEEP, ELEVON FIXED, ALPHA = 5, BETA = 0	M	ELEVON,MACH	873-878
31	CONTROL SURF. INTERACTIONS: RUDDER SWEEP, BDFLP FIX, ALPHA = 5, BETA = 0, ELEV = 0	F	BDFLAP,MACH	879-884
32	CONTROL SURF. INTERACTIONS: SIDESLIP SWEEP, VARY BFLAP, RUD = -5, ALPHA = 5, ELV = 0	B	BDFLAP,MACH	885-890
33	CONTROL SURF. INTERACTIONS: BDFLAP SWEEP, VARY SPDBRK, ALPHA = 5, BETA = 0, ELV = 0	M	SPDBRK,MACH	891-896
34	ELEVON IN SIDESLIP SWEEP: ALPHA = 0.0 DEG.	B	ELEVON,MACH	897-917
35	ELEVON IN SIDESLIP SWEEP: ALPHA = 5.0 DEG.	B, O	ELEVON,MACH	918-959
36	ELEVON IN SIDESLIP SWEEP: ALPHA - 10.0 DEG.	B	ELEVON,MACH	960-980
37	FULL-SPAN AILERON EFFECTS: PITCH SWEEP, ELEVON = 0.0 DEG.	N	AILRON,MACH	981-1004

INDEX OF DATA FIGURES

FIGURE NUMBER	TITLE	COEFFICIENT SCHEDULE	CONDITIONS VARYING	PAGES
38	FULL-SPAN AILERON EFFECTS: PITCH SWEEP, ELEVON = 10.0 DEG.	N	AILRON,MACH	1005-1022
39	FULL-SPAN AILERON EFFECTS: PITCH SWEEP, ELEVON = -10.0 DEG.	N	AILRON,MACH	1023-1040
40	FULL-SPAN AILERON EFFECTS: VARY ELEVON, ALPHA = 5.0 DEG, BETA = 0.0 DEG.	N	AILRON,MACH	1041-1061
VOLUME 2 - PRESSURE DATA				
41	OA145A ELEVON CP VS. XE/CE, INBOARD UPPER SURFACE, ALPHA EFFECT AT ELEVON = 0			1062-1077
42	OA145A ELEVON CP VS. XE/CE, INBOARD UPPER SURFACE, ELEVON EFFECT AT ALPHA = 5			1078-1089
43	OA145A ELEVON CP VS. XE/CE, INBOARD UPPER SURFACE, ALPHA EFFECT AT ELEVON = 10			1090-1101
44	OA145A ELEVON CP VS. XE/CE, INBOARD UPPER SURFACE, ALPHA EFFECT AT ELEVON = -10			1102-1117
45	OA145A ELEVON CP VS. XE/CE, INBOARD UPPER SURFACE, ALPHA EFFECT AT ELEVON = 20			1118-1129
46	OA145A ELEVON CP VS. XE/CE, INBOARD UPPER SURFACE, ALPHA EFFECT AT ELEVON = -20			1130-1141
47	OA145A ELEVON CP VS. XE/CE, INBOARD UPPER SURFACE, ALPHA EFFECT AT ELEVON = -30			1142-1153
48	OA145A ELEVON CP VS. XE/CE, OUTBOARD UPPER SURFACE, ALPHA EFFECT AT ELEVON = 0			1154-1169

INDEX OF DATA FIGURES

FIGURE NUMBER	TITLE	PAGES
49	OA145A ELEVON CP VS. XE/CE, OUTBOARD UPPER SURFACE, ELEVON EFFECT AT ALPHA = 5	1170-1181
50	OA145A ELEVON CP VS. XE/CE, OUTBOARD UPPER SURFACE, ALPHA EFFECT AT ELEVON = 10	1182-1193
51	OA145A ELEVON CP VS. XE/CE, OUTBOARD UPPER SURFACE, ALPHA EFFECT AT ELEVON = -10	1194-1209
52	OA145A ELEVON CP VS. XE/CE, OUTBOARD UPPER SURFACE, ALPHA EFFECT AT ELEVON = 20	1210-1221
53	OA145A ELEVON CP VS. XE/CE, OUTBOARD UPPER SURFACE, ALPHA EFFECT AT ELEVON = -20	1222-1233
54	OA145A ELEVON CP VS. XE/CE, OUTBOARD UPPER SURFACE, ALPHA EFFECT AT ELEVON = -30	1234-1245
55	OA145A ELEVON CP VS. XE/CE, INBOARD LOWER SURFACE, ALPHA EFFECT AT ELEVON = 0	1246-1261
56	OA145A ELEVON CP VS. XE/CE, INBOARD LOWER SURFACE, ELEVON EFFECT AT ALPHA = 5	1262-1273
57	OA145A ELEVON CP VS. XE/CE, INBOARD LOWER SURFACE, ALPHA EFFECT AT ELEVON = 10	1274-1285
58	OA145A ELEVON CP VS. XE/CE, INBOARD LOWER SURFACE, ALPHA EFFECT AT ELEVON = -10	1286-1301

INDEX OF DATA FIGURES

FIGURE NUMBER	TITLE	PAGES
59	OA145A ELEVON CP VS. XE/CE, INBOARD LOWER SURFACE, ALPHA EFFECT AT ELEVON = 20	1302-1313
60	OA145A ELEVON CP VS. XE/CE, INBOARD LOWER SURFACE, ALPHA EFFECT AT ELEVON = -20	1314-1325
61	OA145A ELEVON CP VS. XE/CE, INBOARD LOWER SURFACE, ALPHA EFFECT AT ELEVON = -30	1326-1337
62	OA145A ELEVON CP VS. XE/CE, OUTBOARD LOWER SURFACE, ALPHA EFFECT AT ELEVON = 0	1338-1353
63	OA145A ELEVON CP VS. XE/CE, OUTBOARD LOWER SURFACE, ELEVON EFFECT AT ALPHA = 5	1354-1365
64	OA145A ELEVON CP VS. XE/CE, OUTBOARD LOWER SURFACE, ALPHA EFFECT AT ELEVON = 10	1366-1377
65	OA145A ELEVON CP VS. XE/CE, OUTBOARD LOWER SURFACE, ALPHA EFFECT AT ELEVON = -10	1378-1393
66	OA145A ELEVON CP VS. XE/CE, OUTBOARD LOWER SURFACE, ALPHA EFFECT AT ELEVON = 20	1394-1405
67	OA145A ELEVON CP VS. XE/CE, OUTBOARD LOWER SURFACE, ALPHA EFFECT AT ELEVON = -20	1406-1417
68	OA145A ELEVON CP VS. XE/CE, OUTBOARD LOWER SURFACE, ALPHA EFFECT AT ELEVON = -30	1418-1429
69	OA145A ELEVON CP VS. 2Y/BW, UPPER SURFACE, ALPHA EFFECT AT ELEVON = 0	1430-1449

INDEX OF DATA FIGURES

FIGURE NUMBER	TITLE	PAGES
70	OA145A ELEVON CP VS. 2Y/BW, UPPER SURFACE, ELEVON EFFECT AT ALPHA = 5	1450-1464
71	OA145A ELEVON CP VS. 2Y/BW, UPPER SURFACE, ALPHA EFFECT AT ELEVON = 10	1465-1479
72	OA145A ELEVON CP VS. 2Y/BW, UPPER SURFACE, ALPHA EFFECT AT ELEVON = -10	1480-1499
73	OA145A ELEVON CP VS. 2Y/BW, UPPER SURFACE, ALPHA EFFECT AT ELEVON = 20	1500-1514
74	OA145A ELEVON CP VS. 2Y/BW, UPPER SURFACE, ALPHA EFFEDT AT ELEVON = -20	1515-1529
75	OA145A ELEVON CP VS. 2Y/BW, UPPER SURFACE, ALPHA EFFECT AT ELEVON = -30	1530-1544
76	OA145A ELEVON CP VS. 2Y/BW, LOWER SURFACE, ALPHA EFFECT AT ELEVON = 0	1545-1568
77	OA145A ELEVON CP VS. 2Y/BW, LOWER SURFACE, ELEVON EFFECT AT ALPHA = 5	1569-1586
78	OA145A ELEVON CP VS. 2Y/BW, LOWER SURFACE, ALPHA EFFECT AT ELEVON = 10	1587-1604
79	OA145A ELEVON CP VS. 2Y/BW, LOWER SURFACE, ALPHA EFFECT AT ELEVON = -10	1605-1628
80	OA145A ELEVON CP VS. 2Y/BW, LOWER SURFACE, ALPHA EFFECT AT ELEVON = 20	1629-1646
81	OA145A ELEVON CP VS. 2Y/BW, LOWER SURFACE, ALPHA EFFECT AT ELEVON = -20	1647-1664

INDEX OF DATA FIGURES

FIGURE NUMBER	TITLE	PAGES
82	OA145A ELEVON CP VS. 2Y/BW, LOWER SURFACE, ALPHA EFFECT AT ELEVON = -30	1665-1682
83	OA145A FLIPPER DOOR CP VS. XF/CF, INBD UPPER SURF, ALPHA EFFECT AT ELEVON = 0	1683-1690
84	OA145A FLIPPER DOOR CP VS. XF/CF, INBD UPPER SURF, ELEVON EFFECT AT ALPHA = 5	1691-1696
85	OA145A FLIPPER DOOR CP VS. XF/CF, INBD UPPER SURF, ALPHA EFFECT AT ELEVON = 10	1697-1702
86	OA145A FLIPPER DOOR CP VS. XF/CF, INBD UPPER SURF, ALPHA EFFECT AT ELEVON = -10	1703-1710
87	OA145A FLIPPER DOOR CP VS. XF/CF, INBD UPPER SURF, ALPHA EFFECT AT ELEVON = 20	1711-1716
88	OA145A FLIPPER DOOR CP VS. XF/CF, INBD UPPER SURF, ALPHA EFFECT AT ELEVON = -20	1717-1722
89	OA145A FLIPPER DOOR CP VS. XF/CF, INBD UPPER SURF, ALPHA EFFECT AT ELEVON = -30	1723-1728
90	OA145A FLIPPER DOOR CP VS. XF/CF, OUTBD UPPER SURF, ALPHA EFFECT AT ELEVON = 0	1729-1736
91	OA145A FLIPPER DOOR CP VS. XF/CF, OUTBD UPPER SURF, ELEVON EFFECT AT ALPHA = 5	1737-1742
92	OA145A FLIPPER DOOR CP VS. XF/CF, OUTBD UPPER SURF, ALPHA EFFECT AT ELEVON = 10	1743-1748

INDEX OF DATA FIGURES

FIGURE NUMBER	TITLE	PAGES
93	OA145A FLIPPER DOOR CP VS. XF/CF, OUTBD UPPER SURF., ALPHA EFFECT AT ELEVON = -10	1749-1756
94	OA145A FLIPPER DOOR CP VS. XF/CF, OUTBD UPPER SURF., ALPHA EFFECT AT ELEVON = 20	1757-1762
95	OA145A FLIPPER DOOR CP VS. XF/CF, OUTBD UPPER SURF., ALPHA EFFECT AT ELEVON = -20	1763-1768
96	OA145A FLIPPER DOOR CP VS. XF/CF., OUTBD UPPER SURF, ALPHA EFFECT AT ELEVON = -30	1769-1774
97	BODY FLAP CP VS. XBF/CB, UPPER SURFACE, ALPHA EFFECT AT BDFLAP = 0.0	1775-1778
98	BODY FLAP CP VS. XBF/CB, UPPER SURFACE, ALPHA EFFECT AT BDFLAP = -11.7	1779-1782
99	BODY FLAP CP VS. XBF/CB, UPPER SURFACE, ALPHA EFFECT AT BDFLAP = 16.3	1783-1786
100	BODY FLAP CP VS. XBF/CB, UPPER SURFACE, ALPHA EFFECT AT BDFLAP = 22.5	1787-1790
101	BODY FLAP CP VS. XBF/CB, UPPER SURFACE, BDFLAP EFFECT AT ALPHA = 5.0	1791-1794
102	BODY FLAP CP VS. XBF/CB, LOWER SURFACE, ALPHA EFFECT AT BDFLAP = 0.0	1795-1814
103	BODY FLAP CP VS. XBF/CB, LOWER SURFACE, ALPHA EFFECT AT BDFLAP = -11.7	1815-1834
104	BODY FLAP CP VS. XBF/CB, LOWER SURFACE, ALPHA EFFECT AT BDFLAP - 16.3	1835-1854

INDEX OF DATA FIGURES

FIGURE NUMBER	TITLE	PAGES
105	BODY FLAP CP VS. XBF/CB, LOWER SURFACE, ALPHA EFFECT AT BDFLAP = 22.5	1855-1874
106	BODY FLAP CP VS. XBF/CB, LOWER SURFACE, BDFLAP EFFECT AT ALPHA = 5.0	1875-1894
107	BODY FLAP CP VS. YBF/BB, UPPER SURFACE, ALPHA EFFECT AT BDFLAP = 0.0	1895-1898
108	BODY FLAP CP VS. YBF/BB, UPPER SURFACE, ALPHA EFFECT AT BDFLAP = -11.7	1899-1902
109	BODY FLAP CP VS. YBF/BB, UPPER SURFACE, ALPHA EFFECT AT BDFLAP = 16.3	1903-1906
110	BODY FLAP CP VS. YBF/BB, UPPER SURFACE, ALPHA EFFECT AT BDFLAP = 22.5	1907-1910
111	BODY FLAP CP VS. YBF/BB, UPPER SURFACE, BDFLAP EFFECT AT ALPHA = 5.0	1911-1914
112	BODY FLAP CP VS. YBF/BB, LOWER SURFACE, ALPHA EFFECT AT BDFLAP = 0.0	1915-1930
113	BODY FLAP CP VS. YBF/BB, LOWER SURFACE, ALPHA EFFECT AT BDFLAP = -11.7	1931-1946
114	BODY FLAP CP VS. YBF/BB, LOWER SURFACE, ALPHA EFFECT AT BDFLAP = 16.3	1947-1962
115	BODY FLAP CP VS. YBF/BB, LOWER SURFACE, ALPHA EFFECT AT BDFLAP = 22.5	1963-1978

INDEX OF DATA FIGURES

FIGURE NUMBER	TITLE	PAGES
116	BODY FLAP CP VS. YBF/BB, LOWER SURFACE, BDFLAP EFFECT AT ALPHA = 5.0	1979-1994
VOLUME 3 - PRESSURE DATA		
117	OA145A SPEED BRAKE CP VS. XR/CR, INNER SURFACE, ALPHA EFFECT AT SPDBRK = 25	1995-2006
118	OA145A SPEED BRAKE CP VS. XR/CR, INNER SURFACE, ALPHA EFFECT AT SPDBRK = 0	2007-2018
119	OA145A SPEED BRAKE CP VS. XR/CR, INNER SURFACE, ALPHA EFFECT AT SPDBRK = 55	2019-2030
120	OA145A SPEED BRAKE CP VS. XR/CR, INNER SURFACE, ALPHA EFFECT AT SPDBRK = 87.2	2031-2042
121	OA145A SPEED BRAKE CP VS. XR/CR, INNER SURFACE, BETA EFFECT AT SPDBRK = 25	2043-2051
122	OA145A SPEED BRAKE CP VS. XR/CR, INNER SURFACE, BETA EFFECT AT SPDBRK = 0	2052-2063
123	OA145A SPEED BRAKE CP VS. XR/CR, INNER SURFACE, BETA EFFECT AT SPDBRK = 55	2064-2075
124	OA145A SPEED BRAKE CP VS. XR/CR, INNER SURFACE, BETA EFFECT AT SPDBRK = 87.2	2076-2087
125	OA145A SPEED BRAKE CP VS. XR/CR, INNER SURFACE, RUDDER EFFECT AT SPDBRK = 25	2088-2099
126	OA145A SPEED BRAKE CP VS. XR/CR, INNER SURFACE, RUDDER EFFECT AT SPDBRK = 0	2100-2111
127	OA145A SPEED BRAKE CP VS. XR/CR, INNER SURFACE, RUDDER EFFECT AT SPDBRK = 55	2112-2120

INDEX OF DATA FIGURES (Continued)

FIGURE NUMBER	TITLE	PAGES
128	OA145A SPEED BRAKE CP VS. XR/CR, INNER SURFACE, RUDDER EFFECT AT SPDBRK = 87.2	2121-2129
129	OA145A SPEED BRAKE CP VS. XR/CR, INNER SURFACE, SPDBRK EFFECT AT ALPHA = 5	2130-2153
130	OA145A SPEED BRAKE CP VS. XR/CR, OUTER SURFACE, ALPHA EFFECT AT SPDBRK = 25	2154-2189
131	OA145A SPEED BRAKE CP VS. XR/CR, OUTER SURFACE, ALPHA EFFECT AT SPDBRK = 0	2190-2225
132	OA145A SPEED BRAKE CP VS. XR/CR, OUTER SURFACE, ALPHA EFFECT AT SPDBRK = 55	2226-2261
133	OA145A SPEED BRAKE CP VS. XR/CR, OUTER SURFACE, ALPHA EFFECT AT SPDBRK = 87.2	2262-2297
134	OA145A SPEED BRAKE CP VS. XR/CR, OUTER SURFACE, BETA EFFECT AT SPDBRK = 25	2298-2324
135	OA145A SPEED BRAKE CP VS. XR/CR, OUTER SURFACE, BETA EFFECT AT SPDBRK = 0	2325-2360
136	OA145A SPEED BRAKE CP VS. XR/CR, OUTER SURFACE, BETA EFFECT AT SPDBRK = 55	2361-2396
137	OA145A SPEED BRAKE CP VS. XR/CR, OUTER SURFACE, BETA EFFECT AT SPDBRK = 87.2	2397-2432
138	OA145A SPEED BRAKE CP VS. XR/CR, OUTER SURFACE, RUDDER EFFECT AT SPDBRK = 25	2433-2468
139	OA145A SPEED BRAKE CP VS. XR/CR, OUTER SURFACE, RUDDER EFFECT AT SPDBRK = 0	2469-2504

INDEX OF DATA FIGURES (Continued)

FIGURE NUMBER	TITLE	PAGES
140	OA145A SPEED BRAKE CP VS. XR/CR, OUTER SURFACE, RUDDER EFFECT AT SPDBRK = 55	2505-2531
141	OA145A SPEED BRAKE CP VS. XR/CR, OUTER SURFACE, RUDDER EFFECT AT SPDBRK = 87.2	2532-2558
142	OA145A SPEED BRAKE CP VS. XR/CR, OUTER SURFACE, SPDBRK EFFECT AT ALPHA = 5	2559-2594
143	OA145A SPEED BRAKE CP VS. ZR/BR, INNER SURFACE, ALPHA EFFECT AT SPDBRK = 25	2595-2606
144	OA145A SPEED BRAKE CP VS. ZR/BR, INNER SURFACE, ALPHA EFFECT AT SPDBRK = 0	2607-2618
145	OA145A SPEED BRAKE CP VS. ZR/BR, INNER SURFACE, ALPHA EFFECT AT SPDBRK = 55	2619-2630
146	OA145A SPEED BRAKE CP VS. ZR/BR, INNER SURFACE, ALPHA EFFECT AT SPDBRK = 87.2	2631-2642
147	OA145A SPEED BRAKE CP VS. ZR/BR, INNER SURFACE, BETA EFFECT AT SPDBRK = 25	2643-2651
148	OA145A SPEED BRAKE CP VS. ZR/BR, INNER SURFACE, BETA EFFECT AT SPDBRK = 0	2652-2663
149	OA145A SPEED BRAKE CP VS. ZR/BR, INNER SURFACE, BETA EFFECT AT SPDBRK = 55	2664-2675
150	OA145A SPEED BRAKE CP VS. ZR/BR, INNER SURFACE, BETA EFFECT AT SPDBRK = 87.2	2676-2687

INDEX OF DATA FIGURES (Continued)

FIGURE NUMBER	TITLE	PAGES
151	OA145A SPEED BRAKE CP VS. ZR/BR, INNER SURFACE, RUDDER EFFECT AT SPDBRK = 25	2688-2699
152	OA145A SPEED BRAKE CP VS. ZR/BR, INNER SURFACE, RUDDER EFFECT AT SPDBRK = 0	2700-2711
153	OA145A SPEED BRAKE CP VS. ZR/BR, INNER SURFACE, RUDDER EFFECT AT SPDBRK = 55	2712-2720
154	OA145A SPEED BRAKE CP BS. ZR/BR, INNER SURFACE, RUDDER EFFECT AT SPDBRK = 87.2	2721-2729
155	OA145A SPEED BRAKE CP VS. ZR/BR, INNER SURFACE, SPDBRK EFFECT AT ALPHA = 5	2730-2741
156	OA145A SPEED BRAKE CP VS. ZR/BR, OUTER SURFACE, ALPHA EFFECT AT SPDBRK = 25	2742-2757
157	OA145A SPEED BRAKE CP VS. ZR/BR, OUTER SURFACE, ALPHA EFFECT AT SPDBRK = 0	2758-2773
158	OA145A SPEED BRAKE CP VS. ZR/BR, OUTER SURFACE, ALPHA EFFECT AT SPDBRK = 55	2774-2789
159	OA145A SPEED BRAKE CP VS. ZR/BR. OUTER SURFACE, ALPHA EFFECT AT SPDBRK = 87.2	2790-2805
160	OA145A SPEED BRAKE CP VS. ZR/BR, OUTER SURFACE, BETA EFFECT AT SPDBRK = 25	2806-2817
161	OA145A SPEED BRAKE CP VS. ZR/BR, OUTER SURFACE, BETA EFFECT AT SPDBRK = 0	2818-2833

INDEX OF DATA FIGURES (Continued)

FIGURE NUMBER	TITLE	PAGES
162	OA145A SPEED BRAKE CP VS. ZR/BR, OUTER SURFACE, BETA EFFECT AT SPDBRK = 55	2834-2849
163	OA145A SPEED BRAKE CP VS. ZR/BR, OUTER SURFACE, BETA EFFECT AT SPDBRK = 87.2	2850-2865
164	OA145A SPEED BRAKE CP VS. ZR/BR, OUTER SURFACE, RUDDER EFFECT AT SPDBRK = 25	2866-2881
165	OA145A SPEED BRAKE CP VS. ZR/BR, OUTER SURFACE, RUDDER EFFECT AT SPDBRK = 0	2882-2897
166	OA145A SPEED BRAKE CP VS. ZR/BR, OUTER SURFACE, RUDDER EFFECT AT SPDBRK = 55	2898-2909
167	OA145A SPEED BRAKE CP VS. ZR/BR, OUTER SURFACE, RUDDER EFFECT AT SPDBRK = 87.2	2910-2921
168	OA145A SPEED BRAKE CP VS. ZR/BR, OUTER SURFACE, SPDBRK EFFECT AT ALPHA = 5	2922-2937

INDEX OF DATA FIGURES (Concluded)

PLOTTED COEFFICIENT SCHEDULE:

A) CL, CD, C_m, CA vs. α; CL vs. CD; CL vs. C_m

B) CY, Cn, C_ℓ vs. β

C) Che, $Che_\emptyset$, Che_I, $CH_{FD\emptyset}$, Ch_{FDI} vs. α

D) Ch_{bf} vs. α

E) CH_{sb} vs. β

F) CY, Cn, C_ℓ vs. δ_r

G) Ch_{sb} vs. δ_r

H) CL, CD, Cm vs. δe_{IB}

Che, Che_I, Ch_{FDI} vs. δe_{IB}

I) CL, CD, Cm vs. $\delta e_{\emptyset B}$

Che, Che_I, Ch_{FD} vs. $\delta e_{\emptyset B}$

J) CL, CD, Cm vs. δa_{IB}

CY, Cn, C_ℓ vs. δa_{IB}

Ch_{e_I}, $Che_\emptyset$ vs. δa_{IB}

K) CL, CD, Cm vs. $\delta a_{\emptyset B}$

CY, Cn, C_ℓ vs. $\delta a_{\emptyset B}$

Ch_{e_I}, $Che_\emptyset$ vs. $\delta a_{\emptyset B}$

L) CL, CD, Cm vs. δe

M) CL, CD, Cm vs. δ_{bf}

N) CY, Cn, C_ℓ vs. α

O) Che, Che_I, $Che_\emptyset$ vs β

INTRODUCTION

An experimental investigation was performed to determine aerodynamic stability and control characteristics and control surface hinge moments on the OV102 configuration. The test article was an 0.05-scale representation of the SSV orbiter configuration (model 39-0). Tests were performed in the NASA/ARC Unitary Plan Wind Tunnel. Nominal test conditions are given in Table I.

Six-component force data were measured on the complete model using the ARC 4-inch Task MKIVA balance sting mounted through the rear of the model. The model had a total of 280 pressure taps located as shown in Figures 2c through 2h. Control surface pressures were measured on the left hand elevon panels, the body flap and speed brake. These pressures were also integrated to obtain control surface hinge moments.

With the tunnel flowing, data were recorded through an angle-of-attack range from -10° to $+30^{\circ}$ and an angle of sideslip range from -10° to $+10^{\circ}$.

Control surfaces remotely actuated from the control room were: All four elevon panels, the body flap, and the rudder. Speed brake deflections were set manually using a pin indexing system on the rudder shaft.

The report consists of 6 volumes, 1 volume of plotted force data, 2 volumes of plotted pressure data, 2 volumes of tabulated force data, 1 volume of tabulated pressure data on microfiche. The volumes are arranged in the following manner:

INTRODUCTION (Concluded)

VOLUME NUMBER	CONTENTS	MICROFICHE PAGE NO.
1	OA145A PLOTTED FORCE DATA	
2	OA145A PLOTTED PRESSURE DATA	
3	OA145A PLOTTED PRESSURE DATA	
4	OA145A TABULATED FORCE DATA	
5	OA145A TABULATED FORCE DATA	
6	OA145A TABULATED PRESSURE DATA	
	INBOARD ELEVON LOWER SURFACE	1-29
	OUTBOARD ELEVON LOWER SURFACE	29-56
	INBOARD FLIPPER DOOR UPPER SURFACE	56-77
	OUTBOARD FLIPPER DOOR UPPER SURFACE	77-97
	INBOARD ELEVON UPPER SURFACE	98-159
	OUTBOARD ELEVON UPPER SURFACE	160-221
	BODY FLAP UPPER SURFACE	222-243
	BODY FLAP LOWER SURFACE	243-264
	RUDDER OUTER SURFACE	265-286
	RUDDER INNER SURFACE	286-307
	ORBITER BASE	308-315
	STING LOWER SURFACE	315-320
	STING UPPER SURFACE	320-324

NOMENCLATURE

PLOT SYMBOL	MNEMONIC	DEFINITION
a		speed of sound; m/sec,ft/sec
A_{BK}		fuselage base area assigned to pressure tap K, ft.^{2}
A_C		fuselage base sting cavity area, ft.^{2}
A_i		upper control surface area assigned to pressure tap i, in.^{2}
A_j		lower control surface area assigned to pressure tap j, in.^{2}
A_m		speed brake outer surface area assigned to pressure tap m, in.^{2}
A_n		speed brake inner surface area assigned to pressure tap n, in.^{2}
b_w		Wind reference span, in. Used to nondimensionalize yawing and rolling moments.
C_A	CA	axial-force coefficient; $\frac{\text{axial force}}{qS}$
C_{A_b}	CAB	base-force coefficient; $\frac{\text{base force}}{qS}$ $-A_b(p_b-p_\infty)/qS$
C_{AC}	CAC	Sting cavity axial force coefficient. Sting cavity pressure is adjusted to an average base pressure.
C_{A_f}	CAF	forebody axial force coefficient, $C_A - C_{A_b}$
C_{AU}		axial force coefficient, unadjusted
c_{BF}		body flap reference chord length, in.
C_D	CD	drag coefficient; $\frac{\text{drag}}{qS}$
C_{D_b}	CDB	base-drag coefficient; $\frac{\text{base drag}}{qS}$
C_{D_f}	CDF	forebody drag coefficient; $C_D - C_{D_b}$

NOMENCLATURE (Continued)

PLOT SYMBOL	MNEMONIC	DEFINITION
c_E		elevon reference chord length, in.
c_{FD}		flipper door reference chord length, in.
$C_{h_{BF}}$	CHBF	body flap hinge moment coefficient
$C_{h_{EI}}$	CHEI	inboard elevon hinge moment coefficient
$C_{h_{EO}}$	CHEO	outboard elevon hinge moment coefficient
$C_{h_{FDI}}$	CHFDI	inboard flipper door hinge moment coefficient
$C_{h_{FDO}}$	CHFDO	outboard flipper door hinge moment coefficient
$C_{h_{SB}}$	CHSB	speed brake hinge moment coefficient
C_L	CL	lift coefficient; $\frac{\text{lift}}{qS}$
C_ℓ	CBL	rolling-moment coefficient; $\frac{\text{rolling moment}}{qSb}$
C_m	CIM	pitching-moment coefficient; $\frac{\text{pitching moment}}{qS\ell_{REF}}$
C_n	CYN	yawing-moment coefficient; $\frac{\text{yawing moment}}{qSb}$
C_N	CN	normal-force coefficient; $\frac{\text{normal force}}{qS}$
C_p	CP	pressure coefficient; $(p_l - p_\infty)/q$
c_W		wing reference MAC, in.
C_Y	CY	side-force coefficient; $\frac{\text{side force}}{qS}$
δ_a	AILRON	Aileron deflection. Positive when L.H. elevon is more trailing edge down than R.H. elevon, degrees.
δ_{BF}, δ_{bf}	BDFLAP	Body flap deflection. Positive trailing edge down, degrees.

PLOT SYMBOL	MNEMONIC	DEFINITION
δe	ELEVON	Elevon deflection, average of the four individual panel deflections. Positive trailing edge down, degrees.
$\delta e_{LI,\emptyset}$	ELV-LI,Ø	inboard and outboard L.H. elevon deflections, degrees
DELL	DELL	differential elevon setting, left side, outboard-inboard, degrees
DELR	DELR	differential elevon setting, right side, outboard-inboard, degrees
$\delta e_{RI,\emptyset}$	ELV-RI,Ø	inboard and outboard R.H. elevon deflections, degrees
δr	RUDDER	Rudder deflection in a water plane. Positive trailing edge left, degrees.
DRHL	DRHL	Rudder deflection normal to the hinge line. Positive trailing edge left, degrees.
δSB	SPDBRK	Speed brake deflection. Angle between the inside faces of the left and right panels, always positive, degrees.
H_{mBF}		body flap hinge moment, in-lbs
H_{mEI}		inboard elevon hinge moment, in-lbs
H_{mEO}		outboard elevon hinge moment, in-lbs
H_{MFDI}		inboard flipper door hinge moment, in.lbs
H_{MFDO}		outboard flipper door hinge moment, in.lbs
H_{MSB}		speed brake hinge moment, in-lbs
lB		orbiter body reference length, in.
L/D	L/D	lift-to-drag ratio; C_L/C_D
L/D_f	L/DF	lift-to-forebody drag ratio; C_L/C_{D_f}
M	MACH	Mach number; V/a

NOMENCLATURE (Continued)

PLOT SYMBOL	MNEMONIC	DEFINITION
p		pressure; N/m^2, psf
$P_{i,j,m,n}$		control surface static pressure corresponding to tap i, j, m or n, psfa
P_o	P	freestream static pressure psfa
q	Q(PSF) Q	dynamic pressure; $1/2\rho V^2$, psf
RN/L	RN/L, RN	unit Reynold's number; per m, per ft
S_{BF}		body flap reference area, $in.^2$
S_E		elevon reference area, $in.^2$
S_{FD}		flipper door reference area, $in.^2$
S_{SB}		speed brake reference area, $in.^2$
S_w		wing reference area, $ft.^2$
V		velocity; m/sec, ft/sec
x_{BF}/C_B	XBF/CB	chordwise distance aft of body flap hinge line as a fraction of body flap chord
X_{CG}		distance from orbiter nose (IML) to model moment reference center, in.
X_{CP}	XCP/L	model center of pressure location in the normal force direction, relative to the model nose (IML), in.
x_e/C_e	XE/CE	chordwise distance aft of elevon hinge line as a fraction of local elevon chord
x_{FD}/C_{FD}	XF/CF	chordwise distance aft of flipper door hinge line as a fraction of local flipper door chord
$X_{i,j,m,n}$		transfer distance from static pressure tap i, j, m or n to the corresponding control surface hinge line, in.

NOMENCLATURE (Concluded)

PLOT SYMBOL	MNEMONIC	DEFINITION
x_R/C_R	XR/CR	chordwise distance aft of rudder hinge line as a fraction of local rudder chord
α	ALPHA	angle of attack, degrees
β	BETA	angle of sideslip, degrees
ψ	PSI	angle of yaw, degrees
ϕ	PHI	angle of roll, degrees
ρ		mass density; kg/m^3, $slugs/ft^3$
η_{BF}	YBF/BB	spanwise distance from body flap left edge as a fraction of body flap span at hinge line
η_R	ZR/BR	spanwise distance from rudder bottom edge as a fraction of rudder span on hinge line
η_W	2Y/BW	distance from plane of symmetry as a fraction of wing semi-span

REMARKS

After completion of the OA145 test program, pressure data for all three program phases were reviewed to determine what updating, corrections, or substitutions would be necessary. The following defines for each program phase those corrections that were deemed necessary and were made to the final data prior to preparation of the final data tape for Dataman. Updating and substitutions were applied only where known deficiencies existed that would have severely compromised the final data.

PRESSURE DATA UPDATING FOR 118-1-11 (OA145A)

Run 18 through 56:16

Deleted	SV	Port(s)
	1	3, 4, 5, 8 through 11, 17, 18
	3	18
	7	2, 6, 24
	9	19, 20

Applied				
	Tap 127	(SV3-Port 13)	Pressure to Tap 132	(SV3-Port 18)
	Tap 6	(SV6-Port 2)	Pressure to Tap 7	(SV7-Port 2)
	Tap 216	(SV7-Port 3)	Pressure to Tap 219	(SV7-Port 6)
	Tap 240	(SV8-Port 3)	Pressure to Tap 207	(SV7-Port 24)
	Tap 403	(SV9-Port 18)	Pressure to Tap 404	(SV9-Port 19)
	Tap 403	(SV9-Port 18)	Pressure to Tap 405	(SV9-Port 20)

Run 50:13 through 56:16

Replaced SV8 CAL with SV9 CAL.

Run 60:1 through 74:11

Deleted	SV	Port(s)
	1	3, 5, 8 through 11, 17
	4	2
	7	6, 24
	9	19, 20

Applied Tap 5 (SV5-Port 2) Pressure to Tap 4 (SV4-Port 2)
Tap 216 (SV7-Port 3) Pressure to Tap 219 (SV7-Port 6)
Tap 240 (SV8-Port 3) Pressure to Tap 237 (SV7-Port 24)
Tap 403 (SV9-Port 18) Pressure to Tap 404 (SV9-Port 17)
Tap 403 (SV9-Port 18) Pressure to Tap 405 (SV9-Port 19)

Run 76:1 through 272:9

Deleted	SV	Port(s)
	1	3, 8, through 11, 17
	7	6, 24
	9	19, 20, 24

Applied Tap 216 (SV7-Port 3) Pressure to Tap 219 (SV7-Port 6)
Tap 240 (SV8-Port 3) Pressure to Tap 237 (SV7-Port 24)
Tap 403 (SV9-Port 18) Pressure to Tap 404 (SV9-Port 19)
Tap 403 (SV9-Port 18) Pressure to Tap 405 (SV9-Port 20)
Tap 408 (SV9-Port 23) Pressure to Tap 409 (SV9-Port 24)

Run 67:1 through 341:10

Replaced SV8 CAL with SV9 CAL

Run 185:1 through 272:9

Deleted	SV	Port
	1	5

Applied Tap 35 (SV1-Port 11) Pressure to Tap 25 (SV1-Port 5)

Run 276:1 through 396:10

Deleted	SV	Port(s)
	7	6, 24
	9	19, 20, 24

Applied Tap 216 (SV7-Port 3) Pressure to Tap 219 (SV7-Port 6)
Tap 240 (SV8-Port 3) Pressure to Tap 237 (SV7-Port 24)
Tap 403 (SV9-Port 18) Pressure to Tap 404 (SV9-Port 19)
Tap 403 (SV9-Port 18) Pressure to Tap 405 (SV9-Port 20)
Tap 408 (SV9-Port 23) Pressure to Tap 409 (SV9-Port 24)

Run 370:1 through 384

Deleted SV6 Port 2

Applied Tap 5 (SV5-Port 2) Pressure to Tap 6 (SV6-Port 2)

Run 403 through 918:10

Deleted SV7 Ports 6 and 24

Applied Tap 216 (SV7-Port 2) Pressure to Tap 218 (SV7-Port 6)
Tap 240 (SV8-Port 3) Pressure to Tap 237 (SV7-Port 24)

Run 514 through 534:10

Deleted SV6 Port 2

Applied Taps (SV5-Port 2) Pressure to Tap 6 (SV6-Port 2)

Run 735 through 756:10

Deleted SV2 Port 7

Applied Tap 65 (SV1-Port 25) Pressure to Tap 75 (SV2-Port 7)

Run 874 through 895:8

Deleted SV2 Port 7

Applied Tap 65 (SV1-Port 25) Pressure to Tap 75 (SV2-Port 7)

PRESSURE DATA UPDATING FOR 118-1-97 (OA145B)

Run 156:7 through 337 (End of 5/4/77 running)

Deleted

SV	Port(s)
3	8
7	24

Applied Tap 117 (SV3-Port 3) Pressure to Tap 122 (SV3-Port 8)
Tap 240 (SV8-Port 3) Pressure to Tap 237 (SV7-Port 24)

Run 340 through 391 (End of test)

Deleted

SV	Port
7	24

Applied Tap 240 (SV8-Port 3) Pressure to Tap 237 (SV7-Port 24)

P_{BASE} for following runs is lost; substitute as follows:

For Run 228 Substitute P_B from Run 200 Seq. 6
For Run 229 Substitute P_B from Run 200 Seq. 18

PRESSURE DATA UPDATING FOR 118-1-87 (OA145C)

Run 13 through 97

Deleted	SV	Port(s)
	3	8
	7	24

Applied Tap 117 (SV3-Port 3) Pressure to Tap 122 (SV3-Port 8)
Tap 240 (SV8-Port 3) Pressure to Tap 237 (SV7-Port 24)

Run 82 through 96

Deleted SV8 Port 2

Applied Tap 7 (SV7-Port 2) Pressure to Tap 8 (SV8-Port 2)

Run 98 through 188

Deleted SV7 Port 24

Applied Tap 240 (SV8-Port 3) Pressure to Tap 237 (SV7-Port 24)

Run 100 through 188

Deleted SV3 Port 8

Applied Tap 117 (SV3-Port 3) Pressure to Tap 122 (SV3-Port 8)

It should be noted that for the OA145A program aerodynamic coefficient data presented between freestream Mach numbers of about 0.98 and 1.07 may be suspect. Measured aerodynamic characteristics are affected by tunnel wall blockage and/or reflected shock waves. Therefore, data in this Mach range should be used with caution for diagnostic

analysis only. Review of the base pressure data for the OA145C test program revealed significant differences in P_{BASE} between individual pressure taps and are a result of response time problems associated with Scanivalve stepping from the calibrate pressure Port #1 (high positive pressure) to the adjacent (low negative value) base pressure Port #2, on all Scanivalves. For base pressures measured on two adjacent ports, i.e., CP_{B10} and CP_{B11} on Scanivalve 11 the second pressure reads the correct value of P_{BASE}. It was therefore concluded that only Port #2 on each Scanivalve, the base pressure tap, is in error. This anomaly was not discovered until after release of the final data tape to Dataman.

Pressure data used for the DATAMAN integrations for control surface hinge moments (documented as special request SPRT9F) were edited further by DATAMAN to exclude taps designated by Rockwell as bad or suspect. The following is a list of the pressure taps deleted by DATAMAN in accordance with the integration request:

Tap No.	Component	Tap Location
132	Elevon Upper Surface	$\eta_W = 0.8$, $X_e/C_e = 0.2$
155	Elevon Lower Surface	$\eta_W = 0.34$, $X_e/C_e = 0.6$
209	Flipper Door Upper Surface	$\eta_W = 0.534$, $X_F/C_F = 0.9$
215	Flipper Door Upper Surface	$\eta_W = 0.715$, $X_F/C_F = 0.9$
219-221	Flipper Door Upper Surface	$\eta_W = 0.887$, all X_F/C_F
325	Body Flap Lower Surface	centerline @ T. E.

Hinge moment data presented in this report are the on line integration results from the test facility. Pressure data tabulated in volume 6 are also facility data.

CONFIGURATIONS INVESTIGATED

The test article (provided by Rockwell) was a 0.05-scale model 39-0 defined by the VC70-000002B configuration control drawing and fabricated to the March 15, 1976 trajectory 14414.1C/C Numerical Control Lines.

The model was constructed primarily of 6061-T6 aluminum alloy and Armco 17-4 stainless steel. The balance block, wing panels and elevons, vertical tail and speed brakes, and body flap are the principal steel components. The fuselage is all aluminum.

The model was tested in the above fixed configuration in all three facilities. No model boundary layer trips were employed for any testing. The only configuration variables were model orientation and control surface deflection. The following range of control surface deflections were tested and controlled remotely from the control room: Elevon deflections of -35° to $+20^{\circ}$, body flap deflections of -11.7 to 22.5 and -22.8 to +22.8 rudder deflection. Speed brake deflections of 0°, 7.5, 15°, 25°, 40°, 55°, 70° and 87.2° were set manually.

The following nomenclature was used to designate the model components:

Component	Definition
B_{75}	OV102 fuselage including T-zero umbilical panels, crew hatch, and cargo bay door gaps.
C_{16}	Canopy including recessed windshields and observation windows.
E_{64}	Elevons, including elevon/elevon and elevon/fuselage gaps.
F_{16}	Body flap.

CONFIGURATIONS INVESTIGATED(Concluded)

Component	Definition
FD_3	Flipper doors.
FR_{22}	Fairings for the forward cargo bay door hinges, 6 per side.
HG_1	Cargo bay door hinges, 13 per side.
M_{52}	OMS pods.
N_{108}	Forward RCS thruster nozzle ports.
N_{109}	Main propulsion system nozzles (inner surfaces cut away for sting clearance).
N_{110}	OMS nozzles.
N_{111}	Aft RCS thruster nozzles and ports.
R_{20}	Rudder, split into left and right speed brake panels.
V_{27}	Vertical tail.
VT_{10}	Cargo bay vents, 4 per side.
VT_{11}	wing/landing gear bay vents, 1 per side.
VT_{12}	Cabin vents, 1 per side.
VT_{13}	Forward RCS vents, 1 per side.
VT_{14}	Aft fuselage vents, 1 per side.
VT_{15}	OMS RCS vents, 1 per side.
VT_{16}	Flipper door vents.
VT_{17}	Miscellaneous vents, ports and penetrations.
W_{131}	OV102 wing.

The above nomenclature is depicted in Figures 2a and 2b.

INSTRUMENTATION

The test was conducted with the following model instrumentation:

1. 4.0-inch Task MKIVA, 6-component internal balance.
2. Eleven Scanco S-type, 48-port Scanivalves for model pressures. One Scanivalve for sting pressures.
3. 36 wing and 97 elevon static pressure taps.
4. 32 flipper door static pressures, 24 external, 8 internal
5. 5 aft fuselage and 23 body flap static pressure taps.
6. 9 vertical tail and 45 speed brake static pressure taps.
7. 9 fuselage base and 2 balance cavity static pressure taps.
8. 2 air data probe forward fuselage flush static pressure taps.
9. 20 sting static pressure taps.

Six model control surfaces were remotely actuated. Included were the following instrumentation:

1. Hydraulic actuation systems for the four elevon panels and the body flap.
2. Electric motor actuation system for the rudder.
3. Angular position pots for each of the control surfaces.
4. A model mounted hydraulic supply system, including pump, and servo-control valves.
5. A model control console housing the electrical components of the servo systems.

Force data for the orbiter was measured by a six-component balance, sting mounted through the rear of the model. The primary balance for this test was the ARC 4-inch Task MKIVA and the backup balance was the Task MK VI provided by Rockwell.

The model was instrumented with a total of 280 static pressure taps. These pressures were measured by eleven model mounted S-type Scanivalves provided by Rockwell International.

The sting was instrumented with 20 static pressure taps, 10 each top and bottom spaced every 2 inches aft of the base. These pressures were measured by a single S-type Scanivalve mounted in the tunnel strut BOR. The Scanivalve was provided by Rockwell International.

All pressure instrumentation electrical leads were supplied by Rockwell International. ARC provided reference, calibrate, and backing pressure tubes from their source to the aft end of the model. The routing of all instrumentation leads was internal to the sting, except for the sting static taps.

The locations and tap identification numbers of all orifices are shown in Tables III through VI and Figures 2c through 2h.

Tunnel wall static pressure, measured upstream of the test section, was used as the reference pressure for all Scanivalves.

The four elevon panels and the body flap were remotely controlled using a model mounted hydraulic servo control system. The hydraulic system consisted of 1 H.P. AC motor, pump and reservoir, Moog Type 30 servovalves, and Oildyne Style A hydraulic cylinders. The electrical components of the servo-system, the operational amplifiers and balancing pots, were contained in a model control console located in the control room.

The rudder panels were remotely controlled using a Globe planetary gear motor, Type 8L. An electrical servo system for the rudder, utilizing a Moog amplifier, was built into the model control console.

Control surface angular position was read by rotary pots located as closely as possible to each surface hingeline. The pots for the inboard elevon panels and the body flap were 7/8-inch Beckman Helipots, model 6173 single turn, dual element. The pots for the outboard elevons and rudder panels were 1/2-inch Markite Series BM05 pots, also single turn, dual element.

The dual outputs from each pot allowed one output to be utilized as the feedback element in the control servo loop, with the second output being used to set control position and compute surface positions in the data reduction program.

The model control console was operated manually. Unbalancing of the servo to set a given control deflection was accomplished by manually adjusting the Helipots on the control console. The position of each control surface was read by separate digital voltmeters mounted on the console.

TEST FACILITIES DESCRIPTION

Ames 11 x 11-Foot Transonic (ØA145A)

The Ames 11 x 11-Foot Transonic Wind Tunnel is a variable density, closed return, continuous flow type. This tunnel has an adjustable nozzle (two flexible walls) and a slotted test section to permit transonic testing over a Mach number range continuously variable from 0.4 to 1.4.

Ames 8 x 7-Foot Supersonic (ØA145C)

The Ames 8 x 7-Foot Supersonic Wind Tunnel is a closed-return, variable-density tunnel with a 8- by 7-foot rectangular test section. The nozzle has flexible side walls with fixed upper and lower surfaces. Mach number range is continuously variable from 2.45 to 3.5. Tunnel stagnation pressure can be varied from 0.3 to 2.0 atmospheres and Reynold's number per foot varies from 1.0×10^6 to 5.0×10^6.

Ames 9 x 7-Foot Supersonic (ØA145B)

The Ames 9 x 7-Foot Supersonic Wind Tunnel is a variable density, continuous flow type with an adjustable nozzle to permit supersonic testing over a Mach number range continuously variable from 1.5 to 2.5. The nozzle is of the asymmetric, sliding-block type in which the variation of the test section Mach number is achieved by translating, in the streamwise direction, the fixed-contour block that forms the floor of the nozzle.

DATA REDUCTION

Model force and moment data was reduced to coefficient form in both body and stability axes systems. Moment data was reduced about a moment reference center corresponding to 65% of the reference body length at W.L. 375. Model angle of attack and sideslip were corrected for support hardware deflections and tunnel flow angularity. Angle-of-attack flow angularity was determined from upright and inverted model runs at the beginning of the test. Standard facility corrections were applied as required. All model pressure data was reduced to the pressure coefficient form $(P-P_o)/q$.

Six-component body axes data was computed from balance outputs with axial force being adjusted for the differences between the average sting cavity pressure and an average base pressure.

$$C_A = C_{A_U} - C_{A_C}$$

where:

$$C_{A_C} = -\left(C_{P_{C_{avg.}}} - C_{P_{B_{avg.}}}\right) \frac{(A_c)}{S_w}$$

$$C_{P_{C_{avg.}}} = \frac{C_{P10} + C_{P11}}{2}$$

$$C_{P_{B_{avg.}}} = \frac{(C_{P1} + C_{P2} + C_{P5} + C_{P6} + C_{P7} + C_{P8})}{6}$$

Forebody axial force coefficients were computed by adjusting the base pressure to freestream.

$$C_{A_F} = C_A - C_{A_B}$$

where:

$$C_{A_B} = \frac{-1}{S_w}\left[\sum_{K=1}^{9} (C_{P_K} A_{B_K}) + (C_{P_{B_{avg.}}} A_C)\right]$$

Center-of-pressure location of the model normal force was computed as a ratio to the reference body length.

$$\frac{X_{CP}}{lB} = \frac{1}{lB}\left(X_{CG} - \frac{C_m}{C_N}\bar{c}\right)$$

Stability axes coefficients C_L and C_D were computed from body axes coefficients C_N and C_A. Model lift-to-drag ratio was then computed from C_L and C_D.

$$L/D = C_L/C_D$$

Model control surface positions from the run schedule were input to the controller manually, i.e., constant or variable values were input depending on the sweep variable for the given run. Table look up values of δ_e, δ_{BF}, and δ_A, based on calibration data, were stored in the data reduction program and employed to determine control surface position from the actual set values of controller voltages input to the ARC instrumentation system.

Model control surface hinge moments (on line data only) were computed by the facility from control surface pressures using an area-moment arm method as detailed below:

$$H_{MEI} = \sum_{I=101}^{124} \left[(P_i)(A_i)(x_i)\right] - \sum_{J=150}^{173} \left[(P_j)(A_j)(x_j)\right]$$

$$C_{HEI} = \frac{H_{MEI}}{qS_E C_E}$$

$$H_{MEO} = \sum_{i=125}^{149} \left[(P_i)\ (A_i)\ (x_i)\right] - \sum_{J=174}^{197} \left[(P_j)\ (A_j)\ (x_j)\right]$$

$$C_{HEO} = \frac{H_{MEO}}{qS_E C_E}$$

Inboard flipper door

$$H_{MFDI} = \sum_{i=201}^{212} \left[(P_i)\ (A_i)\ (x_i)\right] - \sum_{j=225}^{236} \left[(P_j)\ (A_j)\ (x_j)\right]$$

$$Ch_{FDI} = \frac{H_{MFDI}}{qS_{FD} C_{FD}}$$

Outboard flipper door

$$H_{MFDO} = \sum_{i=213}^{224} \left[(P_i)\ (A_i)\ (x_i)\right] - \sum_{j=237}^{248} \left[(P_j)\ (A_j)\ (x_j)\right]$$

$$Ch_{FDO} = \frac{H_{MFDO}}{qS_{FD} C_{FD}}$$

Body flap hinge moments

$$H_{MBF} = \sum_{i=301}^{307} \left[(P_i)\ (A_i)\ (x_i)\right] - \sum_{j=314}^{325} \left[(P_j)\ (A_j)\ (x_j)\right]$$

$$Ch_{BF} = \frac{H_{MBF}}{qS_{BF} C_{BF}}$$

where:

i = upper surface pressure tap numbers

j = lower surface pressure tap numbers

Speed brake hinge moments

$$H_{MSB} = \sum_{m=410}^{436} \left[(P_m)\ (A_m)\ (x_m)\right] - \sum_{n=437}^{454} \left[(P_n)\ (A_n)\ (x_n)\right]$$

$$C_{h_{SB}} = \frac{H_{MSB}}{qS_{SB}C_{SB}}$$

where:

m = outer surface pressure tap numbers

n = inner surface pressure tap numbers

Pressure coefficients judged to be incorrect were deleted and areas reassigned by manual input to the on-line computer program. Final hinge moment data were integrated by Dataman from plotted and smoothed pressure coefficient data.

The following flow angularity corrections were applied to the final data:

<u>OA145A</u> No flow angularity, blockage or wall corrections were applied to the data obtained in the 11 ft. transonic facility.

<u>OA145B</u> Flow angularity corrections based on comprehensive evaluations of "TACT" (Transonic Aircraft Technology) program test data were applied to the final data. These corrections represent large model values above and beyond standard facility corrections.

DATA REDUCTION (Continued)

OA145C Standard facility flow angularity corrections were applied to the data obtained in the 8 x 7 facility.

Reference dimensions and constants used were:

SYMBOL	DESCRIPTION	MODEL SCALE	FULL SCALE
S_W	Wing reference area, ft.^{2}	6.725	2690.
b_W	Wing reference span, in.	46.834	936.68
c_W	Wing reference MAC, in.	23.740	474.81
MRC	Moment Reference Center		
	X, in.	53.834	1076.68
	Y, in.	0.0	0.0
	Z, in.	18.75	375.0
X_{CG}	Length, nose IML to MRC, in.	41.934	838.68
lB	Body reference Length, in.	64.515	1290.3
S_E	Elevon reference area, in.^{2}	75.60	30240.
c_E	Elevon reference chord, in.	4.535	90.7
S_{FD}	Flipper door reference area, in.^{2}	75.60	30240.
c_{FD}	Flipper door reference chord, in	4.535	90.7
S_{BF}	Body flap reference area, in.^{2}	48.60	19440.
c_{BF}	Body flap reference chord, in.	4.050	81.0
S_{SB}	Speed brake reference area, in.^{2}	36.05	14421.6
c_{SB}	Speed brake reference chord, in.	3.660	73.2
A_C	Base sting cavity area, ft.^{2}	0.1963	
A_{B1}	Base area, Tap 1, ft.^{2}	0.0587	
A_{B2}	Base area, Tap 2, ft.^{2}	0.0824	

DATA REDUCTION (Concluded)

SYMBOL		MODEL SCALE	FULL SCALE
A_{B3}	Base area, Tap 3, ft.^{2}	0.0467	
A_{B4}	Base area, Tap 4, ft.^{2}	0.0553	
A_{B5}	Base area, Tap 5, ft.^{2}	0.0772	
A_{B6}	Base area, Tap 6, ft.^{2}	0.1146	
A_{B7}	Base area, Tap 7, ft.^{2}	0.1798	
A_{B8}	Base area, Tap 8, ft.^{2}	0.0860	
A_{B9}	Base area, Tap 9, ft.^{2}	0.1950	

REFERENCES

1. SD76-SH-0189 "Pretest Information for Tests OA145A, B, C of a .05-Scale Model (39-0) of the SSV Orbiter 102 in the NASA/ARC Unitary Plan Wind Tunnel," dated September 30, 1976.

2. Report NA76-662, "Structural Analysis for the 0.05-Scale SSV Orbiter Verification Model 39-0."

3. Rockwell Internal Letter SAS/AERO/77-038, "Model Readiness Review Model 39-0," dated December 20, 1976.

4. SPRT9F-1, "Elevon and Flipper Door Hinge Moments from Pressure Data of Test OA145A, B, C, and OA101", November 1978.

TABLE I.

TEST : OA145A, B, C

DATE :

TEST CONDITIONS

MACH NUMBER	REYNOLDS NUMBER (per unit length) x 10^6	DYNAMIC PRESSURE (pounds/sq. inch)	STAGNATION TEMPERATURE (degrees Fahrenheit)
0.6	5.0, 3.0, 9.0		
0.8			
0.9			
0.95			
1.05			
1.10			
1.20			
1.30			
1.40			
1.55	4.0		
2.0	1.5, 3.5, 4.5		
2.5	2.5, 3.25, 3.5, 4.0		
3.0	1.0, 2.5		
3.5	2.5		

BALANCE UTILIZED: 4 INCH TASK MKIVA

	CAPACITY:	ACCURACY:	COEFFICIENT TOLERANCE:
NF	6000/6000 LBS	0.5%	*
SF	3000/3000 LBS	"	
AF	2500 LBS	0.2%	
PM			
RM	16000 IN-LB	0.5%	
YM			

COMMENTS: Accuracy applies to maximum gage capacity.
*Coefficient tolerance based on root sum square of forward and aft gages, tolerance quoted for range of Mach number tested.
See Table VIII.

TABLE II. DATA SET/RUN COLLATION SUMMARY

TEST: ΦA145A(ARC 11 - 118)

DATA SET/RUN NUMBER COLLATION SUMMARY

DATE:

DATA SET IDENTIFIER	CONFIGURATION	α	β	δe	δa	δBF	δSB	δR	Re/FT	MACH 0.6	0.8	0.9	0.95	1.05	1.1	1.2	1.3	1.4	TEST RUN NUMBERS
R2F001	Φ1 INVERTED	A	0	0	0	0	25	0	5	9	10	11	12	16	15	14	13		
02	Φ1 ROLLED 90°	0	B							25	24	23	22	21	20	19•	18•		
03		5	B							26									
04	Φ1	A	0							43		35				29			
05		0	B							44		36				30			
06		5	0	A						45		37				31			
07		5	0	0	A					46		40				32			
08		5	0	0	0	FC				47		41				33			
09		5	0	0	0	0		B		48		42				34			
												MACH RANGE 1.4→.6							
10	MACH DIAGNOSTIC	5	0	0	0	0	25	0	5				50						
11		15	0										52						

1 7 13 19 25 31 37 43 49 55 61 67 75 76

FOR COEFFICIENT SCHEDULES SEE PAGE

COEFFICIENTS

α OR β SCHEDULES

α(A) = -9.5, -5.0, 0, 0.5, 3, 6, 8, 9.5, 11.5, 13.5, 16.5, 21

β(B) = -9.5, -7.5, -5.5, -1.5, -0.5, 0, 1.5, 2.5, 3.5, 4.5, 6.5, 8.5, 10.5, 13.5

δe(A) = -35, -30, -25, -15, -10, -5, 0, 5, 10, 15, 20

IDVAR (1) IDVAR (2) NDV

δa(A) = -5, -3, -2, 0, 2, 3, 5, 8, 10

δBF(FC) = -11.7, -8, -6, -4, -2, 0, 2, 4, 6, 8, 12, 16.3

δR(B) = -12, -8, -4, -2, 0, 2, 4, 8

NASA-MSFC-MAF

• DENOTES PRESSURE TAKEN

TABLE II. DATA SET/RUN COLLATION SUMMARY (Continued)

TEST: ΦA145A(ARC 11 - 118)

DATA SET/RUN NUMBER COLLATION SUMMARY

DATE:

DATA SET IDENTIFIER	CONFIGURATION	α	β	δe	δa	δBF	δSB	δR	Re/ft	MACH 0.6	0.8	0.9	0.95	1.05	1.1	1.2	1.3	1.4
R2F012	Φ, BASIC S&C	FC	0	0	0	0	25	0	5	60	112	89	62	171	122	81	78	145
13		C	0						3	269	272	280	276					
14		D	0						9	337	338	382	381					
15		FC	2						5	193	121	172	132			56	55	146
16		-5	A						3			278	277					
17		0	A						5	185•	113•	101	125•			162	133•	152•
18		5	A						5	186•	114•	97			432	163	134•	153•
19		5	FCH+						5			179	123					
20		5	FCH-						5			180	124					
21		5	A						3	270	271	279	281					
22		5	A						9	336	339	383	341					
23		10	A						5	187•	115•	173•	126•			164	135•	156•
24		15	A						5	188•	116•	174•	127•			165	137•	
25		13	A						5									157

TEST RUN NUMBERS

1 7 13 19 25 31 37 43 49 55 61 67 75 76

IDVAR (1) IDVAR (2) NDV

α OR β SCHEDULES

COEFFICIENTS

α(FC) = -10, -5, 0, 3, 5, 5.5, 6, 7, 8, 9, 10, 11, 12, 13, 15, 20

α(C) = -5, 0, 2.5, 5.0, 7, 8, 10, 12, 15

α(D) = 0, 2.5, 5, 6, 7, 8, 9, 10, 11, 12, 13, 15

β(A) = -6, -2, -4, 0, 0.5, 1, 2, 3, 4, 6

β(FCH+) = -6, -4, -3, -2, -1, 0, 0.5, 1, 2, 3, 4, 6

β(FCH-) = -6, -4, -3, -2, -1, 0, 0.5, 1, 2, 3, 4

NASA-MSFC-MAF

TABLE II. DATA SET/RUN COLLATION SUMMARY (Continued)

TEST: ØA145A(ARC 11 - 118)

DATA SET/RUN NUMBER COLLATION SUMMARY

DATE:

DATA SET IDENTIFIER	CONFIGURATION	α	β	δe	δa	δBF	δSB	δR	Re/FT	MACH 0.6	0.8	0.9	0.95	1.05	1.1	1.2	1.3	1.4
R2F026	ELEVØN EFFECTS	E	0	5	0	0	25	0	5	69	109	92	63	244	242	86	74	149
27		E	0	10						72°	108°	100	66°	247	243°	87°	73°	150°
28		C	0	20						404	408	393	394			428	427	416
29		E	0	-5						70	110	91	64	245	241	85	76	148
30		C	0	-10						71°	111°	90°	65°	246	240°	84°	77°	147°
31		C	0	-20						405	409	392	395			429	426	417
32		C	0	-30						406	410	391	396			430	425	424
33	FLY ELEVØN	5	0	B	0	0	25	0	5	261								
34		5	0	FC						68°	105°	104°	67°		437	88°	80°	151°
35		0	0	FC								443	440					
36		10	0	FC								442	441					
37		5	2	B						262	256	203	819°		438	236	226	305°
38	ELEVØN IN β	0	A	-5	0	0	25	0	5	785	778	777	770			766	765	758
39		0	A	5						784	779	776	771			767	764	759
40		5	A	10						192°	120°	178°	131°		436	169	141°	161°
41				5						191°	119°	177°	130°		435	168	140°	160°
42				-5						190°	118°	176°	129°		434	167	139°	159°
43				-10						189°	117°	175°	128°		433	166	138°	158°

TEST RUN NUMBERS

1 7 13 19 25 31 37 43 49 55 61 67 75 76

α OR β SCHEDULES

COEFFICIENTS

α(E) = -10, -5, 0, 3, 5.5, 8.5, 10.5, 12.5, 15.5, 20.5

δe(β) = -30, -20, -15, -10, -6, -4, -2, 0, 2, 4, 6, 10, 15

IDVAR (1) IDVAR (2) NDV

δe(FC) = -10, -8, -6, -4, -3, -2, -1, 0, 1, 2, 3, 4, 6, 8, 10

NASA-MSFC-MAF

TABLE II. DATA SET/RUN COLLATION SUMMARY (Continued)

TEST: ΦA145A(ARC 11 - 118)

DATA SET/RUN NUMBER COLLATION SUMMARY

DATE:

DATA SET IDENTIFIER	CONFIGURATION	α	β	δe	δa	δBF	δSB	δR	Re/FT	MACH 0.6	0.8	0.9	0.95	1.05	1.1	1.2	1.3	1.4
R2F044	ELEVΦN IN β	10	A	-5	0	0	25	0	5	782	781	774	773			769	762	761
45	↓	10	↓	5	↓					783	780	775	772			768	763	760
46	AILERΦN	C	0	0	3					264	250	197	194		431	229	220	211
47	↓	C			5					267	253	200				232	223	214
48	FLY δa	5			FCH+					258	257	204	195		439	237	227	218
49	↓	5		↓	FCH-					259		205				238		
50	ELEVΦN EFFECT ΦN δa	C		10	3					265	251	198				230	221	212
51	↓	C		↓	5					266	252	199				231	222	213
52	↓	C		-10	3					263	249	196				228	219	210
53	↓	C		↓	5					268	254	201				233	224	215
54	FLY δe @ δa	5	↓	B	↓					260	255	202	206			235	225	216
55	↓	5	2	B	↓													217
56	↓	-5	0	B	↓	↓										234		
57	BΦDY FLAP	FC	0	0	0	-11.7				297	291	288	282		315	314	306	301
58	↓	FC	↓	↓	↓	16.3				298	292	289	284		316	313	307	302
59	↓	FC	↓	↓	↓	22.5				299	293	290	285		317	311	308	303
60	↓	5	↓	↓	↓	FC	↓	↓	↓	296	294	287	286		318	310	309	304

TEST RUN NUMBERS

1 7 13 19 25 31 37 43 49 55 61 67 75 76

IDVAR (1) IDVAR (2) NDV

α OR β SCHEDULES

COEFFICIENTS

δa(FCH+) = -5, -4, -3, -2, -1, 0, 1, 2, 3, 4, 5

δa(FCH-) = -5, -4, -3, -2, -1, 0, 1, 2, 3, 4, 5

NASA-MSFC-MAF

TABLE II. DATA SET/RUN COLLATION SUMMARY (Continued)

TEST: ΦA145A(ARC 11 - 118)

DATA SET/RUN NUMBER COLLATION SUMMARY

DATE:

DATA SET IDENTIFIER	CONFIGURATION	α	β	δe	δa	δBF	δSB	δR	Re/FT	MACH 0.6	0.8	0.9	0.95	1.05	1.1	1.2	1.3	1.4
R2F061	RUDDER EFFECT	0	0	0	0	0	25	A	5	329	344	390	413					
62		5	0					FCH+		323	345	350	414		357	360	380	370
63		5	0					FCH-		324		351				361		
64		10	0					A		325	346	352	415			362	379	371
65		15	0					A		326						363	378	372
66		C	0					-5		330	347	384	411		358	364	377	373
67		5	A					-5		327	348	385	412		359	365	376	374
68		5	A					-22.8		328		389				366		375
69		0	5					A		322		349						
70	δSB = 0	C	0				0	0		644	659	632	623		622	609		600
71		G	2							882	883	884	885					
72		0	B							645		633	626			614		
73		5	B							646	660	634	627		621	613		604
74		10	B							647		635	628			615		605
75	δSB = 0 (RUDDER)	0	0					A		648		636	629			616		
76		5	0					A		649	661	637	630		620	617		606
77		10	0					A		650		638	631			618		607
78		15	0					A		651		639				619		608

TEST RUN NUMBERS

1 7 13 19 25 31 37 43 49 55 61 67 75 76

α OR β SCHEDULES

COEFFICIENTS

δR(A) = -15, -10, -5, -2.5, 0, 2.5, 5, 10, 15, 18, 22.8

δR(FCH+) = -15, -10, -5, -4, -3, -2, -1, 0, 1, 2, 3, 4, 5, 10, 15, 18, 22.8

IDVAR (1) IDVAR (2) NDV

δR(FCH-) = -22, -15, -10, -5, -3, -2, -1, 0, 1, 2, 3, 4, 5, 10, 15, 18, 22.8

NASA-MSFC-MAF

ORIGINAL PAGE IS

TABLE II. DATA SET/RUN COLLATION SUMMARY (Continued)

TEST: ΦA145A(ARC 11 - 118)

DATA SET/RUN NUMBER COLLATION SUMMARY

DATE:

DATA SET IDENTIFIER	CONFIGURATION	α	β	δe	δa	δBF	δSB	δR	Re/ft	MACH 0.6	0.8	0.9	0.95	1.05	1.1	1.2	1.3	1.4
R2F079	δSB=0 (RUDDER)	C	0	0	0	0	0	-5	5	652		640	624			610		601
80	δSB=0 (RUDDER IN β)	5	B	0	0	0	0	-5	5	653		641	625			611		602
81	↓	5	B	0	0	0	0	-22.8	5	654		642				612		603
82	COMPARE ~~Φ145~~	C	0	0	0	-11.7	0	0	5	0.4 662	0.6 657							
83	↓	19	B	0	0	-11.7	0	0	5	663	658							
84	δSB=7.5	G	0	0	0	0	7.5	0	5	906	904	901	899					
85	↓	9	2	↓	↓	↓	↓	0	↓	907	905	902	900					
86	↓	5	0	↓	↓	↓	↓	D	↓	908		903						
87	δSB=15	C	0	0	0	0	15	0	5	705	699	693	680			679		666
88	↓	5	B	↓	↓	↓	↓	0	↓	703	698	692	681			678		667
89	δSB=15 (RUDDER)	0	0	↓	↓	↓	↓	A	↓	700	694	688	685			673		670
90	↓	5	0	↓	↓	↓	↓	A	↓	702	696	690	684			676		669
91	↓	10	0	↓	↓	↓	↓	A	↓	701	695	687	686			674		671
92	↓	15	0	↓	↓	↓	↓	A	↓							675		672
93	δSB=15 (RUDDER IN β)	5	B	↓	↓	↓	↓	-5	↓	704	697	691	683			677		668

TEST RUN NUMBER

1 7 13 19 25 31 37 43 49 55 61 67 75 76

IDVAR (1) IDVAR (2) NOV

α OR β SCHEDULES

COEFFICIENTS

α(G) = -5, 0, 2.5, 5, 8, 10, 12, 15, 17, 19

δR(D) = -10, -5, -2.5, 0, 2.5, 5.0, 10

NASA-MSFC-MAF

TABLE II. DATA SET/RUN COLLATION SUMMARY (Continued)

TEST: ΦA145A(ARC 11 - 118)

DATA SET/RUN NUMBER COLLATION SUMMARY

DATE:

DATA SET IDENTIFIER	CONFIGURATION	α	β	δe	δa	δBF	δSB	δR	Re/Ft	MACH 0.6	0.8	0.9	0.95	1.05	1.1	1.2	1.3	1.4
R2F094	δSB = 40	C	0	0	0	0	40	0	5	731	726	725	717			713		710
95	↓	5	B	↓	↓	↓	↓	0	↓	728	727	724	718			714		708
96	δSB = 40 (RUDDER)	5	0	↓	↓	↓	↓	A	↓	730		721	720			712		711
97	δSB = 40 (RUDDER IN β)	5	B	↓	↓	↓	↓	-5	↓	729		723	719			715		709
98	δSB = 55	C	0	0	0	0	55	0	5	585	579	563	560		551	534	533	514
99	↓	C	2	↓	↓	↓	↓	↓	↓	872	871	870	869			868	867	866
A0	↓	0	A	↓	↓	↓	↓	↓	↓	590	575	572	553			542		
A1	↓	5	C	↓	↓	↓	↓	↓	↓	589	582	567	556		552	538	530	518
A2	↓	10	C	↓	↓	↓	↓	↓	↓	591	576	573	554			547	526	525
A3	↓	15	C	↓	↓	↓	↓	↓	↓	592		574	555			546	527	524
A4	δSB = 55 (RUDDER)	0	0	↓	↓	↓	↓	A	↓	593	577	571	558			543		
A5	↓	5	0	↓	↓	↓	↓	A	↓	584	583	568	562			541	529	520
A6	↓	10	0	↓	↓	↓	↓	A	↓	594	578	570	559			544	528	521
A7	↓	15	0	↓	↓	↓	↓	A	↓							545		522
A8	↓	C	0	↓	↓	↓	↓	-5	↓	586	580	564	561			548	532	515
A9	δSB = 55 (RUDDER IN β)	5	A	↓	↓	↓	↓	-5	↓	587	581	565	557			539	531	516
B0	↓	5	A	↓	↓	↓	↓	-22.8	↓	588		566				540		517

TEST RUN NUMBERS

1 7 13 19 25 31 37 43 49 55 61 67 75 76

COEFFICIENTS IDVAR (1) IDVAR (2) NDV

α OR β SCHEDULES

NASA-MSFC-MAF

TABLE II. DATA SET/RUN COLLATION SUMMARY (Continued)

TEST: ΦA145A(ARC 11 - 118)

DATA SET/RUN NUMBER COLLATION SUMMARY

DATE:

DATA SET IDENTIFIER	CONFIGURATION	α	β	δe	δa	δBF	δSB	δR	Re/FT	MACH 0.6	0.8	0.9	0.95	1.05	1.1	1.2	1.3	1.4
R2F0B1	δSB = 70	C	0	0	0	0	70	0	5	753	752	748	743			742		735
B2	↓	5	A					0		754	751	749	744			741		736
B3	δSB = 70 (RUDDER)	5	0					A		756		747	746			739		738
B4	δSB = 70 (RUDDER IN β)	5	A					-5		755		750	745			740		737
B5	δSB = 87.2	C	0	0	0	0	87.2	0	5	450	460	462	473		486	489		500
B6		9	2							880	879	878	877			876	875	874
B7		0	C							457	458	468	479			506		
B8		5	A							447	459	463	474		487	488		504
B9		10	C							455		469	480			507		496
C0		15	C							456		470				508		497
C1	δSB = 87.2 (RUDDER)	0	0					D		453		471	482			509		
C2		5	0					D		452		464	475			490		505
C3		10	0					D		454		472	481			510		499
C4		15	0					D								511		498
C5		C	0					-5		451		465	476			491		501
C6	δSB = 87.2 (RUDDER IN β)	5	A					-5		448		466	477			492		502
C7		5	A					-10*		449		467				493		503

TEST RUN NUMBER

1 7 13 19 25 31 37 43 49 55 61 67 75 76

COEFFICIENTS IDVAR (1) IDVAR (2) NDV

α OR β

SCHEDULES

* -10° δR MAX DUE TO TRAVEL LIMITATION

NASA-MSFC-MAF

ORIGINAL PAGE IS OF POOR QUALITY

TABLE II. DATA SET/RUN COLLATION SUMMARY (Continued)

TEST: ΦA145A(ARC 11 - 118)

DATA SET/RUN NUMBER COLLATION SUMMARY

DATE:

DATA SET IDENTIFIER	CONFIGURATION	α	β	δe	δa	δBF	δSB	δR	Re/FT	MACH 0.6	0.8	0.9	0.95	1.05	1.1	1.2	1.3	1.4
R2F068	CONTROL SURFACE	5	0	FC	0	-11.7	25	0	5	792		808						
C9	INTERACTIONS	5				16.3				795		811						
D0	δe AND δBF	0				-11.7				793		809						
D1		0				16.3				796		812						
D2		10				-11.7				794		810						
D3		10				16.3				797		813						
D4		F		5		-11.7				786		807						
D5				5		16.3				798		816						
D6				-5		-11.7				787		806						
D7				-5		16.3				799		817						
D8		5		5		FC				790		804						
D9		5		-5		FC				791		805						
E0	δR and δBF	5	0	0		-11.7		A		788		803						
E1			0			16.3		A		800		814						
E2			C			-11.7		-5		789		802						
E3			D			16.3		-5		801		815						
E4			0			FC	0	0		656		643						
E5			0			FC	55	0		0.4 597	0.6 595	0.9 569						

TEST RUN NUMBER

1 7 13 19 25 31 37 43 49 55 61 67 75 76

α OR β SCHEDULES

COEFFICIENTS

α(F) = -5, C, 2.5, 5, 6, 7, 8, 9, 10, 11, 12, 13, 15

β(C) = -6, -2, -1, 0, 0.5, 1, 2, 3, 4, 6, 8

IDVAR (1) IDVAR (2) NDV

β(D) = -6, -2, -1, 0, 0.5, 1, 2, 3, 4, 6, 8, 10

NASA-MSFC-MAF

TABLE II. DATA SET/RUN COLLATION SUMMARY (Continued)

TEST: ΦA145A(ARC 11 - 118)

DATA SET/RUN NUMBER COLLATION SUMMARY

DATE:

DATA SET IDENTIFIER	CONFIGURATION	α	β	*	δa	δBF	δSB	δR	Re/FT	MACH 0.6	0.8	0.9	0.95	1.05	1.1	1.2	1.3	1.4
R2F0E6	INB'D - ΦUTB'D	5	0	0/A	0	0	25	0	5	844		838				820		
E7	ELEVON INTERACTIONS			5/B						845		839				821		
E8	*δeΦ/δeI			-5/C						846		840				822		
E9				A/0						847		841				823		
F0				B/5						848		842				824		
F1				C/-5						849		843				825		
F2	*δe/δaI			0/B	B					850		832				826		
F3				5/B						851		833				827		
F4				-5/B						852		834				828		
F5	*δa0/δe			B/0						853		835				829		
F6				B/5						854		836				830		
F7				B/-5						855		837				831		

TEST RUN NUMBERS

1 7 13 19 25 31 37 43 49 55 61 67 75 76

IDVAR (1) IDVAR (2) NDV

α OR β SCHEDULES

$\delta e_I(A) = -4, -2, 0, 2, 4 = \delta e_\Phi(A)$ COEFFICIENTS

$\delta e_I(B) = 1, 3, 5, 7, 9 = \delta e_\Phi(B)$

$\delta e_I(C) = -9, -7, -5, -3, -1 = \delta e_\Phi(C)$

$\delta a_I(B) = -4, -2, 0, 2, 4$

$\delta a_\Phi(B) = -4, -2, 0, 2, 4$

NASA-MSFC-MAF

TABLE II. DATA SET/RUN COLLATION SUMMARY (Continued)

TEST: ΦA145A(ARC 11-118)

DATA SET/RUN NUMBER COLLATION SUMMARY

DATE:

DATA SET IDENTIFIER	CONFIGURATION	α	β	δe	δa	δBF	δSB	δR	Re/FT	MACH 0.4	0.6	0.8	0.95	1.05	1.1	1.2	1.3	1.4
R2F0 F8	POLHAMUS	18.7	E	0	0	0	25	0	3	320	321	319						
F9	EFFECT								5	334	403	407						
G0									9		335	340						
G1		G	2						3	858	859	860						
G2									5	863								
G3									6.9		862							
G4									7.9			861						
										0.6	0.8	0.9	0.95	1.05	1.1	1.2	1.3	1.4
G5	MPS NOZ's OFF	G	0	0	0	0	25	0	5	918		915				914		911
G6		5	A	0	0	0	25	0	5	917		916				913		912
G7	VERTICAL Z(A)	5	0	0	0	0	25	0	5						356	367		
G8	TRANS Z(B)						0	0					886	887		889	894	895
G9	RUDDER Z=-20							D								892		
H0	Z=+35							D								890		
H1	Z=-40							D								893		
H2	Z=0							D								891		

TEST RUN NUMBERS

1 7 13 19 25 31 37 43 49 55 61 67 75 76

COEFFICIENTS

IDVAR (1) IDVAR (2) NDV

α OR β SCHEDULES

β(E) = -4, -3, -2, -1, -0.5, 0, 0.5, 1, 2, 3, 4

Z(A) = -40, -20, 0, 20, 40

Z(B) = -40, -30, -20, -10, 0, 10, 20, 30, 35

NASA-MSFC-MAF

TABLE II. DATA SET/RUN COLLATION SUMMARY (Continued)

TEST: ΦA145A(ARC 11 - 118)

DATA SET/RUN NUMBER COLLATION SUMMARY

DATE:

DATA SET IDENTIFIER	CONFIGURATION	α	β	δe	δa	δBF	δSB	δR	Re/ft	MACH 0.6	0.8	0.9	0.95	1.05	1.1	1.2	1.3	1.4
R2FOH3		FC	2	0	0	0	25	0	5							170	142•	
H4		FC	0	0	0	0	25	0	5	418•		98						
H5		G	0	0	0	0	25	0	5			99						
H6		G	0	10	0	0	25	0	5			93						
H7		5	FCH	0	0	0	25	0	5			181						
H8		20	F	0	0	0	25	0	5	0.4 333								
H9		C	0	20	0	0	25	0	5									423
I0		2	C	0	0	0	87.2	0	5				478					
I1		H	0	0	0	0	87.2	0	5	483								
I2		5	A	0	0	0	55	0	5							537		
I3		5	0	0	0	0	55	E	5									519
I4		5	0	0	0	0	15	A	5			689						
I5		I	0	0	0	0	40	0	5									716
I6		5	2	B	0	0	25	0	5			818						
I7		J	0	0	0	0	7.5	0	5				898					
I8		FC	0	0	0	16.3	25	0	5				283					
I9		F	0	0	0	-11.7	25	0	5	0.4 444								
J0		0	A	0	0	0	25	0	5	419								

TEST RUN NUMBER

1 7 13 19 25 31 37 43 49 55 61 67 75 76

IDVAR (1) IDVAR (2) NDV

α OR β SCHEDULES

α(H) = -5, 0, 5, 10 α(I) = 5, 10, 15

α(J) = -5, 0, 2.5, 5, 8, 10, 12

COEFFICIENTS

δR(E) = -15, -10, -5, -2.5, 0

β(F) = -4, -3, -2, -1, 0

NASA-MSFC-MAF

TABLE II. DATA SET/RUN COLLATION SUMMARY (Continued)

TEST: ΦA145A(ARC 11 - 118)

DATA SET/RUN NUMBER COLLATION SUMMARY

DATE:

DATA SET IDENTIFIER	CONFIGURATION	α	β	δe	δa	δBF	δSB	δR	Re/Ft	0.6	0.8	0.9	0.95	1.05	1.1	1.2	1.3	1.4
R2FOJ1	ELEVON EFFECTS	C	0	-17.5	2.5	0	25	0	5							429	426	417

TEST RUN NUMBERS

1 7 13 19 25 31 37 43 49 55 61 67 75 76

COEFFICIENTS IDVAR (1) IDVAR (2) NDV

α OR β SCHEDULES

NASA-MSFC-MAF

TABLE II. DATA SET/RUN COLLATION SUMMARY (Continued)

COEFFICIENT SCHEDULES:

First character identified for Force Data

R	CN	CA	CL	CD	CLM	CY	CYN	CBL	ELEVØN	AILRØN	
A	CHEØ	CHEI	CHFDØ	CHFDI	CHBF	CHSB	AILRØN	ELEVØN			
B	CONF	RN	Q	CAB	CAC	CAF	L/D	XCP/L	P		
C	BETA/ALPHA		ELEVØN	AILRØN	BDFLAP	SPDBRK	RUDDER	ELV-IB	ELV-ØB	AIL-IB	AIL-ØB
D	ELV-LØ	ELV-LI	ELV-RØ	ELV-RI	DELL	DELR	DRHL				
E	CP225	CP228	CP231	CP234	CP237	CP240	CP243	CP246	CP12	CP13	

PRESSURE DATA COMPONENTS:

Fourth Character Identifier for Pressure Dataset

C Inboard Elevon Lower Surface

D Outboard Elevon Lower Surface

I Inboard Flipper Door Upper Surface

J Outboard Flipper Door Upper Surface

Q Inboard Elevon Upper Surface

R Outboard Elevon Upper Surface

S Body Flap Upper Surface

TABLE II. DATA SET/RUN COLLATION SUMMARY (Concluded)

T	Body Flap Lower Surface
W	Rudder Outer Surface
X	Rudder Inner Surface
6	Orbiter Base
8	Sting Lower Surface
9	Sting Upper Surface

Note: Eleven cove (flipper door lower surface) pressure coefficient data is presented in force format (schedule E above).

TABLE III. WING AND ELEVON PRESSURE TAP LOCATIONS

Spanwise Location - η	Upper Surface XW/c_W					Upper Surface XE/C_{EL}						
	0.150	0.250	0.400	0.550	X_o1359.6	-0.100	0.100	0.200	0.400	0.600	0.800	1.000
Inboard Edge									101		102	
0.340					15			103	104	105	106	107
0.427					25			108	109	110	111	112
0.534	31	32	33	34	35			113	114	115	116	117
0.615					45			118	119	120	121	122
Inboard Gap Edge									123		124	
Outboard Gap Edge									125		126	
0.715					55			127	128	129	130	131
0.800	61	62	63	64	65			132	133	134	135	136
0.887					75			137	138	139	140	141
0.960					85			142	143	144	145	146
Outboard Edge									147		148	149
	Lower Surface XW/CW					Lower Surface XE/C_{EL}						
Inboard Edge									150		151	
0.340						20	152	153	154	155	156	
0.427						30	157	158	159	160	161	
0.534	36	37	38	39		40	162	163	164	165	166	
0.615						50	167	168	169	170	171	
Inboard Gap Edge									172		173	
Outboard Gap Edge									174		175	
0.715						60	176	177	178	179	180	
0.800	66	67	68	69		70	181	182	183	184	185	
0.887						80	186	187	188	189	190	
0.960						90	191	192	193	194	195	
Outboard Edge									196		197	

TABLE IV. FLIPPER DOOR PRESSURE TAP LOCATIONS

SPANWISE LOCATION WING η	UPPER SURFACE X_{FD}/C_{FD}		
	0.10	0.50	0.90
0.340	201	202	203
0.427	204	205	206
0.534	207	208	209
0.615	210	211	212
0.715	213	214	215
0.800	216	217	218
0.887	219	220	221
0.960	222	223	224
INTERNAL CAVITY X_{FD}/C_{FD}			
	0.10	0.50	0.90
0.340		225	
0.427		228	
0.534		231	
0.615		234	
0.715		237	
0.800		240	
0.887		243	
0.960		246	

TABLE V. BODY FLAP PRESSURE TAP LOCATIONS

SPANWISE LOCATION	UPPER SURFACE X_{BF}/C_{BF}			
η = y/b at Hingeline	-0.20	0.20	0.60	1.00
0.10 (L.H. Side)		301	302	303
0.20			304	
0.35				
0.50 (Y_o = 0)		305	306	307
0.80 (R.H. Side)			308	
	LOWER SURFACE X_{BF}/C_{BF}			
0.10 (L.H. Side)	309	314	315	316
0.20	310	317	318	319
0.35	311	320	321	322
0.50 (Y_o = 0)	312	323	324	325
0.80 (R.H. Side)	313	326	327	328

TABLE VI. SPEED BRAKE PRESSURE TAP LOCATIONS

SPANWISE LOCATION $\eta = y/b$ at HINGELINE	OUTER SURFACE (L.H.) X_R/C_R				
	-0.20	0.20	0.60	0.80	1.00
0.10 (BOTTOM)	401	410	411		
0.20	402	412	413		414
0.30	403	415	416		417
0.40	404	418	419		420
0.50	405	421	422		423
0.60	406	424	425		426
0.70	407	427	428		429
0.80	408	430	431		432
0.90	409	433	434		435
1.03 (TOP)				436	
	INSIDE SURFACE (L.H.) X_R/C_R				
0.10 (BOTTOM)		437	438		
0.20		439	440		441
0.30					
0.40		442	443		444
0.50		445	446		447
0.60					
0.70		448	449		450
0.80					
0.90		451	452		453
1.03 (TOP)				454	

TABLE VII. AIR DATA PROBE AND STING PRESSURE TAP LOCATIONS

AIR DATA PROBE PRESSURES

L.H. SIDE AT X_o 291.67, Z_o 320.46	12
R.H. SIDE AT X_o 291.67, Z_o 320.46	13

STING PRESSURES

DISTANCE FROM MODEL BASE STATION - INCHES	UPPER STING	LOWER STING
0	501	511
2	502	512
4	503	513
6	504	514
8	505	515
10	506	516
12	507	517
14	508	518
16	509	519
18	510	520

TABLE VIII. COEFFICIENT TOLERANCES FOR THE 4-INCH TASK MKIVA BALANCE

COEFFICIENT	MACH NUMBER		
	.6	1.2	3.5
C_N	±0.009600	±0.006100	±0.017100
C_m	±0.002800	±0.001700	±0.005000
C_Y	±0.004800	±0.003000	±0.008500
C_n	±0.000580	±0.003700	±0.001050
C_A	±0.001100	±0.000700	±0.002000
C_ℓ	±0.000385	±0.000240	±0.000690

Notes:

1. Positive directions of force coefficients, moment coefficients, and angles are indicated by arrows
2. For clarity, origins of wind and stability axes have been displaced from the center of gravity

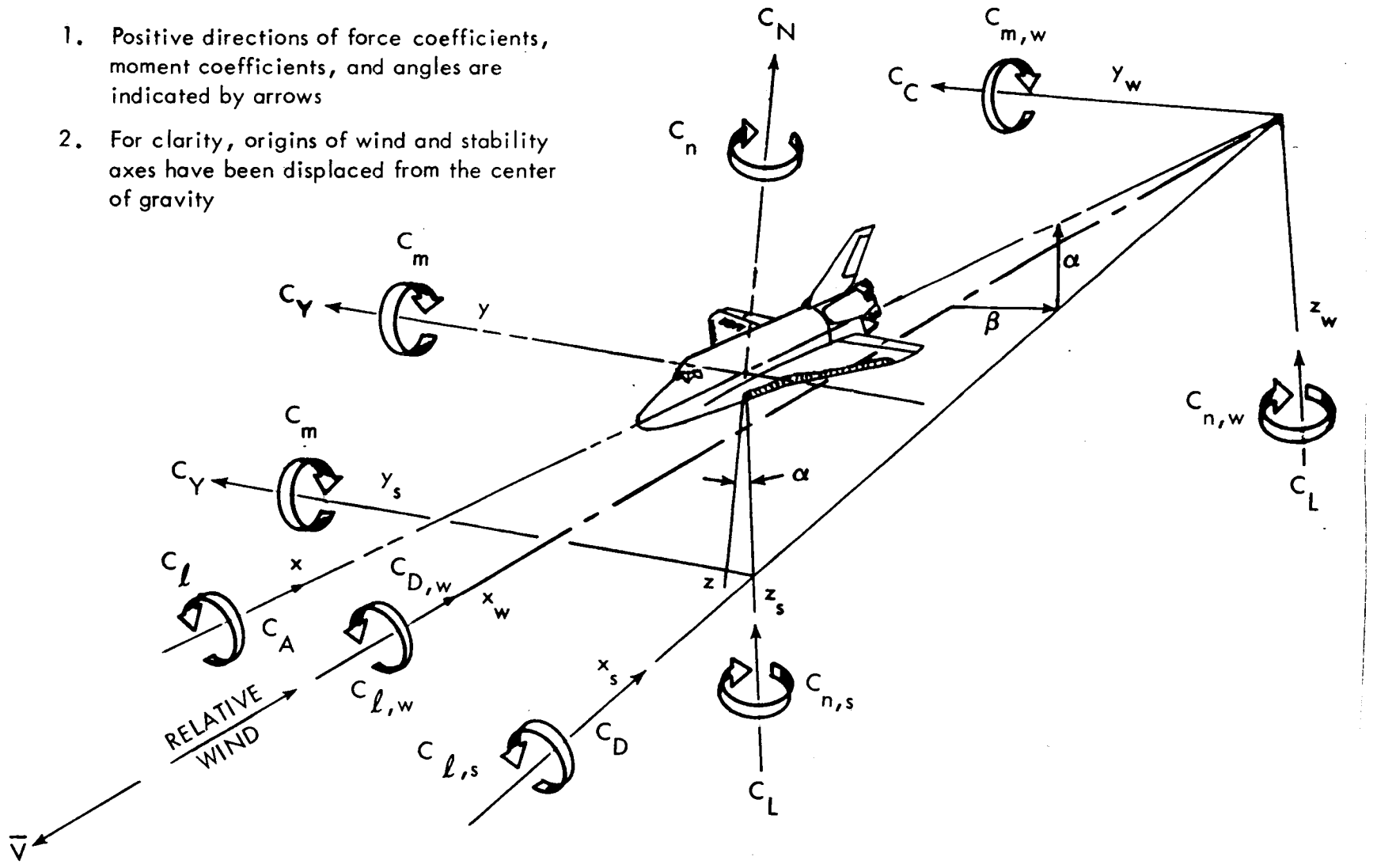

a. Axes Systems Definition

Figure 1. Axes systems and sign convention.

$$\delta e_L = \frac{\delta e_{L_O} + \delta e_{L_I}}{2}$$

$$\delta e_R = \frac{\delta e_{R_O} + \delta e_{R_I}}{2}$$

$$\delta e = \frac{\delta e_L + \delta e_R}{2}$$

$$\delta a = \frac{\delta e_L - \delta e_R}{2}$$

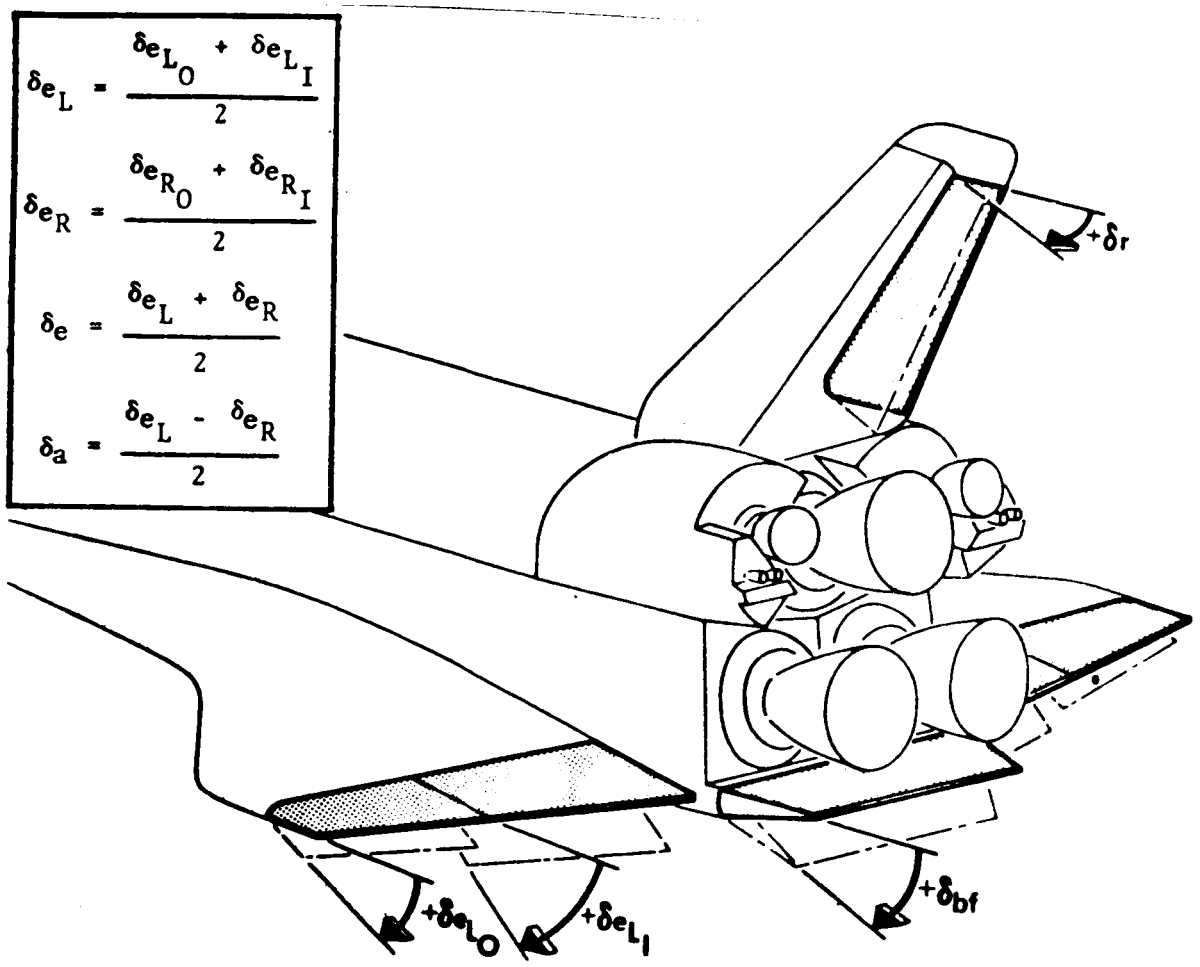

Positive Deflection of	Angle	Aero Forces and Moments	Hinge Moment
Rudder, δr	$+\beta$, $-\psi$	$+C_Y$, $-C_n$	$-C_{h_r}$
Elevon, δe	$-\alpha$, $-\theta$	$-C_m$	C_{h_e}
Right, δe_R	$-\phi$	$-C_\ell$	$-C_{h_{e_R}}$
Left, δe_L	$+\phi$	$+C_\ell$	$-C_{h_{e_L}}$
Aileron, δa	$+\phi$	$+C_\ell$	
Body Flap, δbf	$-\alpha$, $-\theta$	$-C_m$	$-C_{h_{bf}}$

b. Control Surface Deflections
Figure 1. Continued.

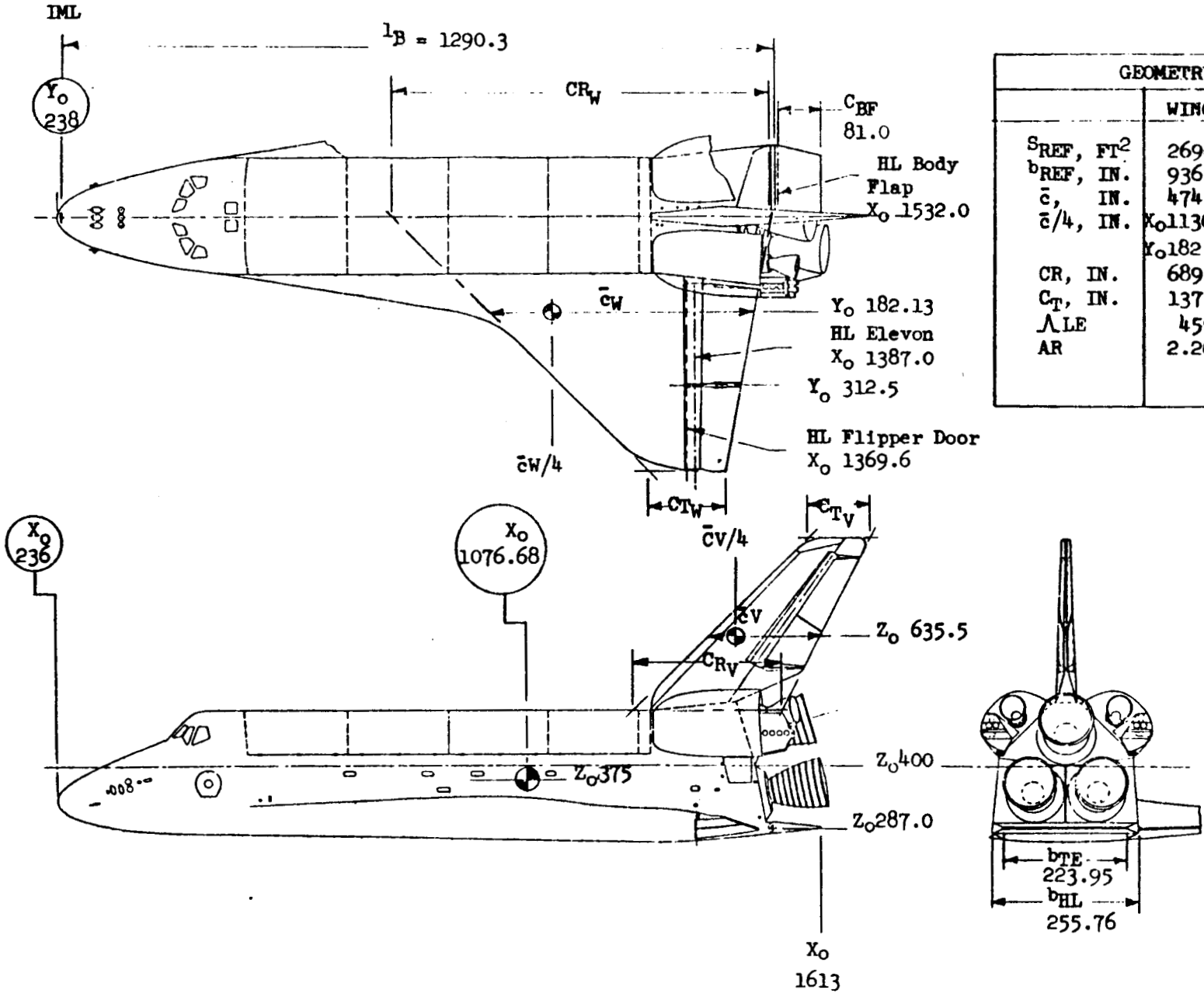

GEOMETRY		
	WING	VERTICAL
S_{REF}, FT^2	2690	413.25
b_{REF}, IN.	936.68	315.72
$\bar{c}$, IN.	474.81	199.81
$\bar{c}/4$, IN.	X_o1136.83	X_o1463.65
	Y_o182.13	Z_o635.5
CR, IN.	689.24	
C_T, IN.	137.85	
Λ_{LE}	45°	45°
AR	2.265	1.675

c. Orbiter Reference Dimensions
Figure 1. Continued.

ORIGINAL PAGE IS OF POOR QUALITY

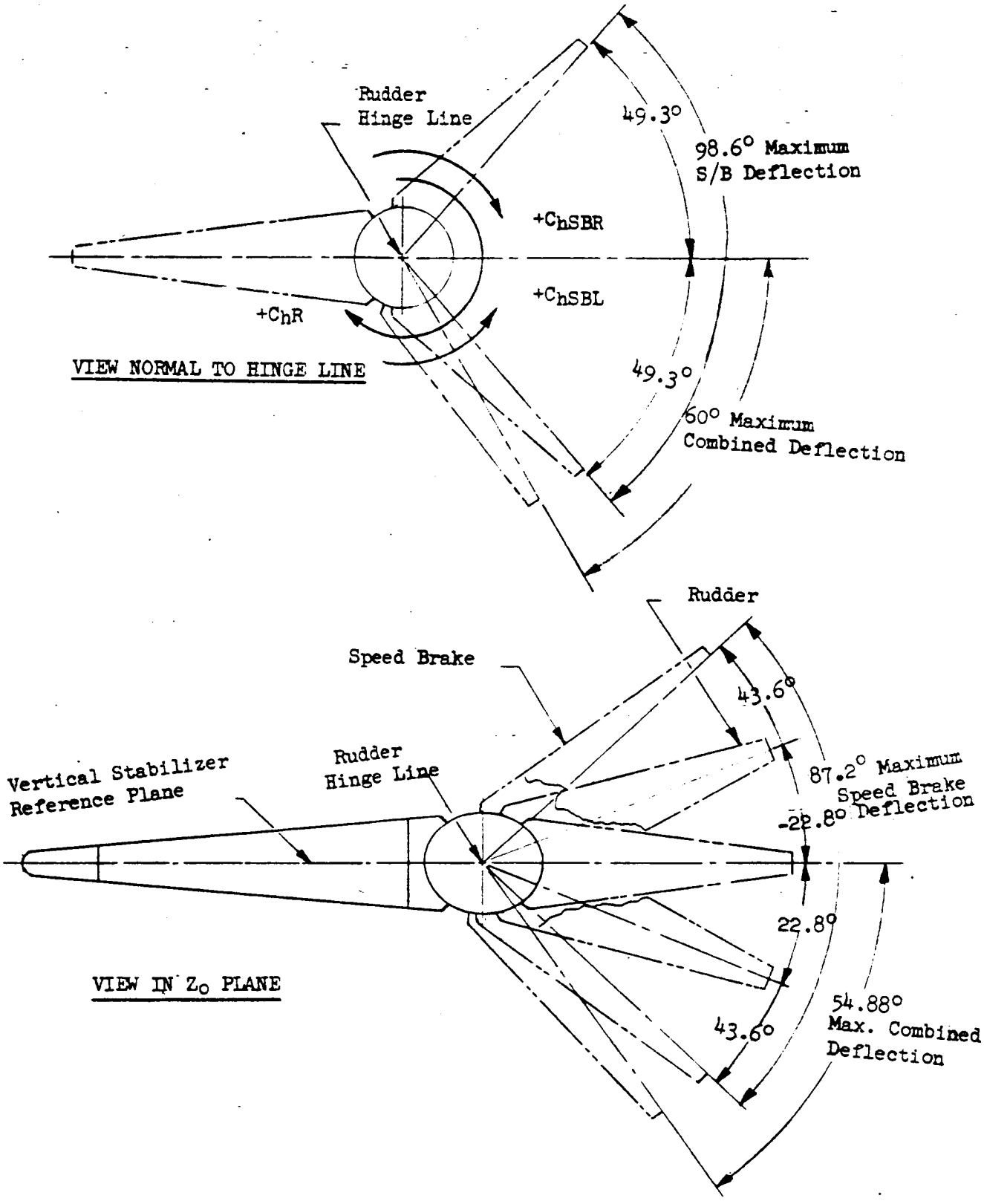

d. Rudder/Speed Brake Deflections
Figure 1. Continued.

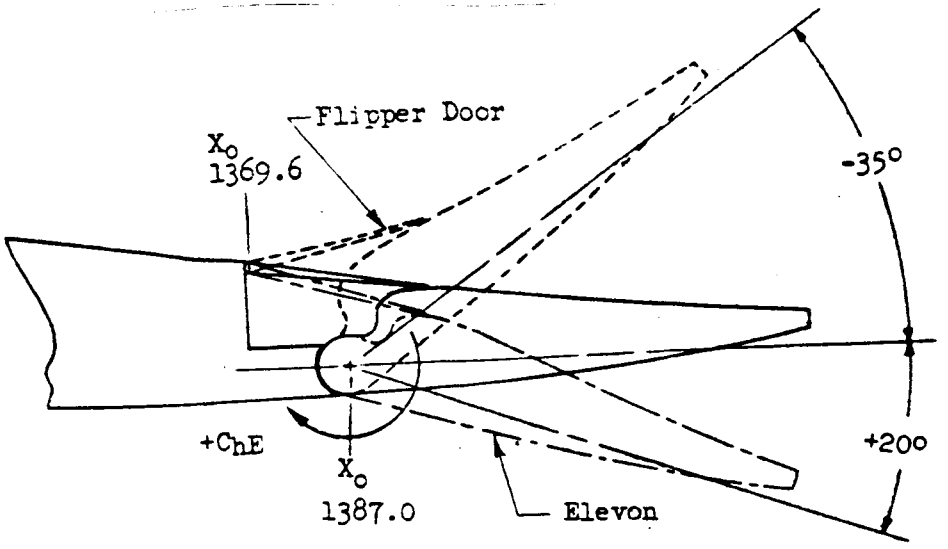

ELEVON DEFLECTIONS

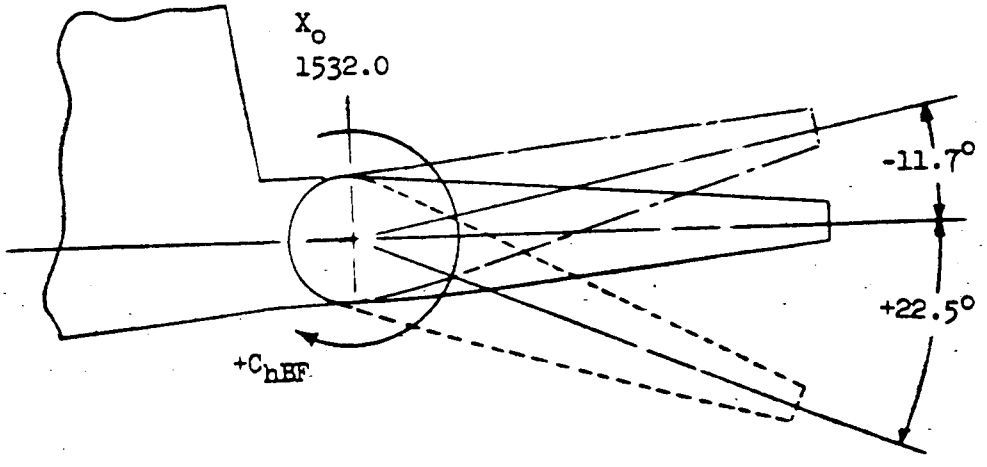

BODY FLAP DEFLECTIONS

e. Elevon and Body Flap Deflections
Figure 1. Concluded.

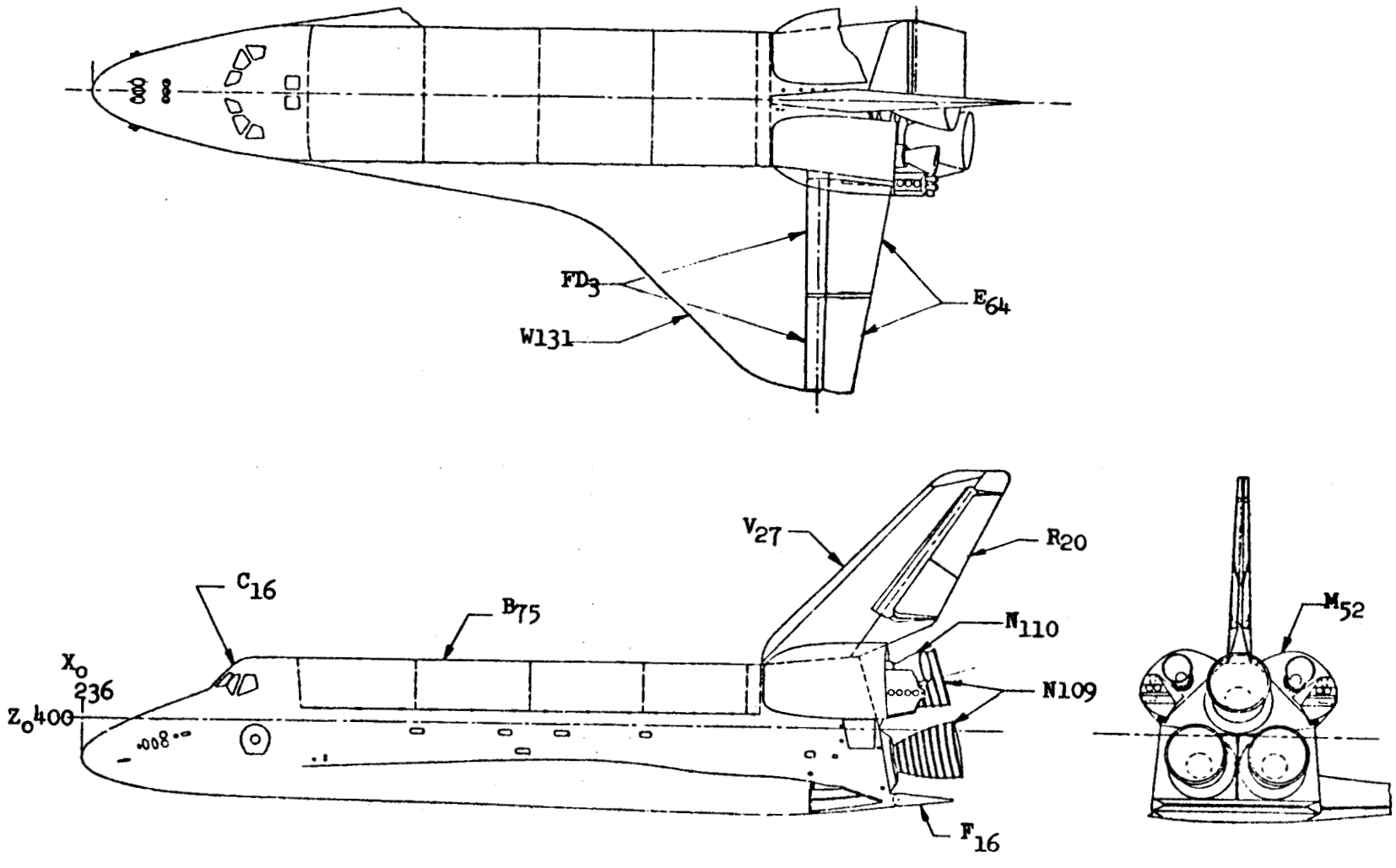

a. Orbiter Configuration
Figure 2. Model sketches.

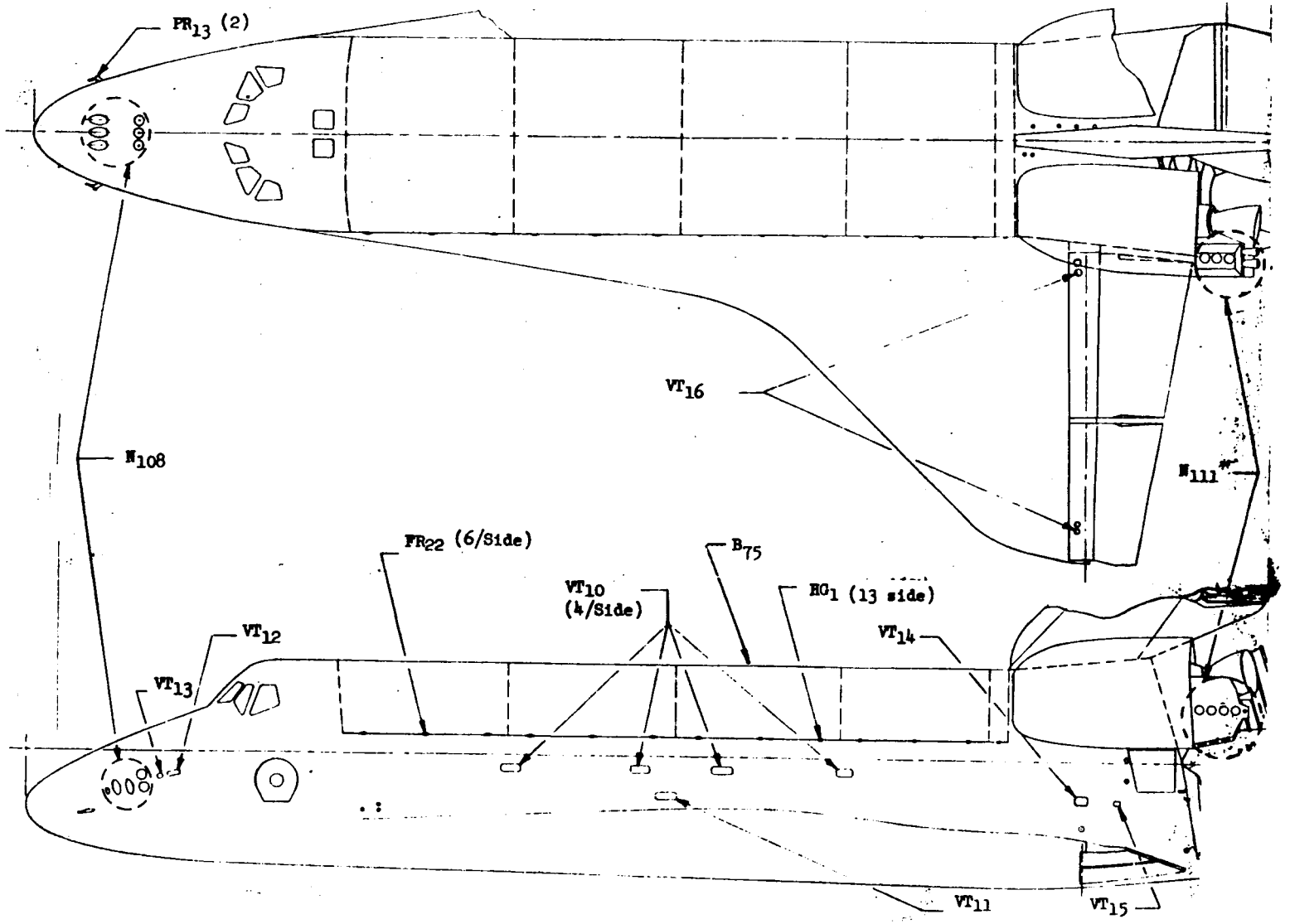

b. Protuberances and Penetrations
Figure 2. Continued.

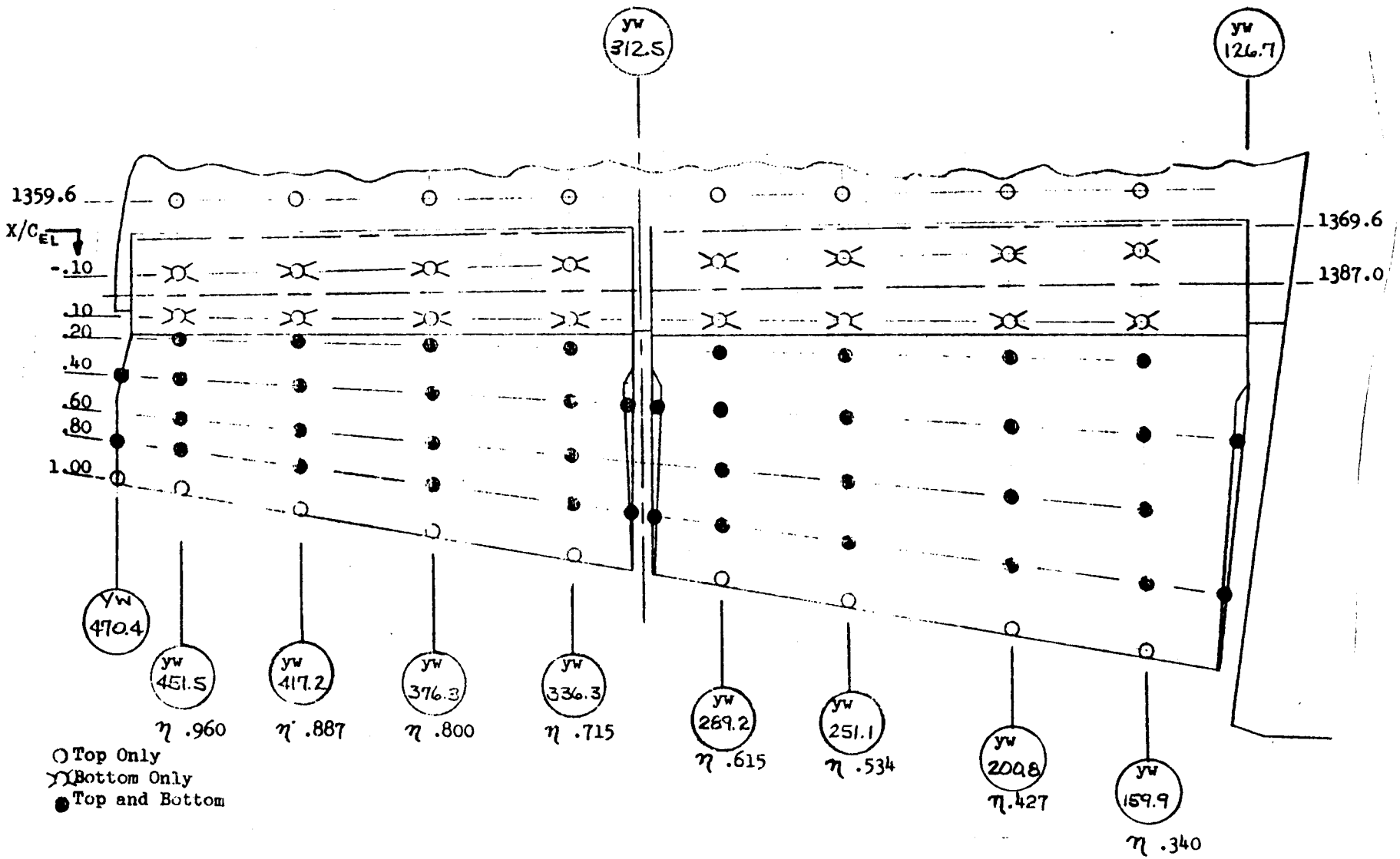

c. Elevon and Wing Pressure Tap Locations
Figure 2. Continued.

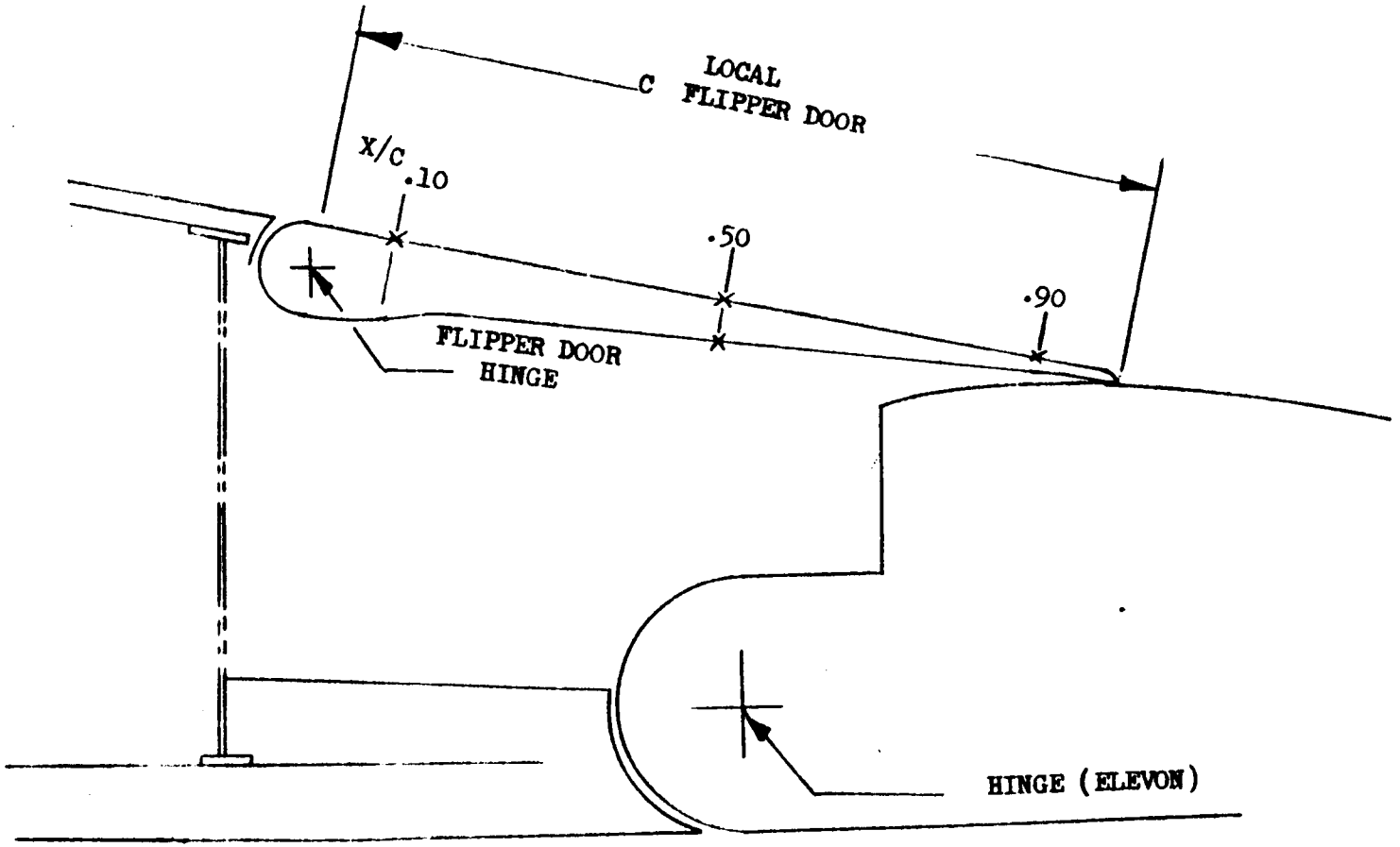

d. Flipper Door and Elevon Cavity Pressure Tap Locations
Figure 2. Continued.

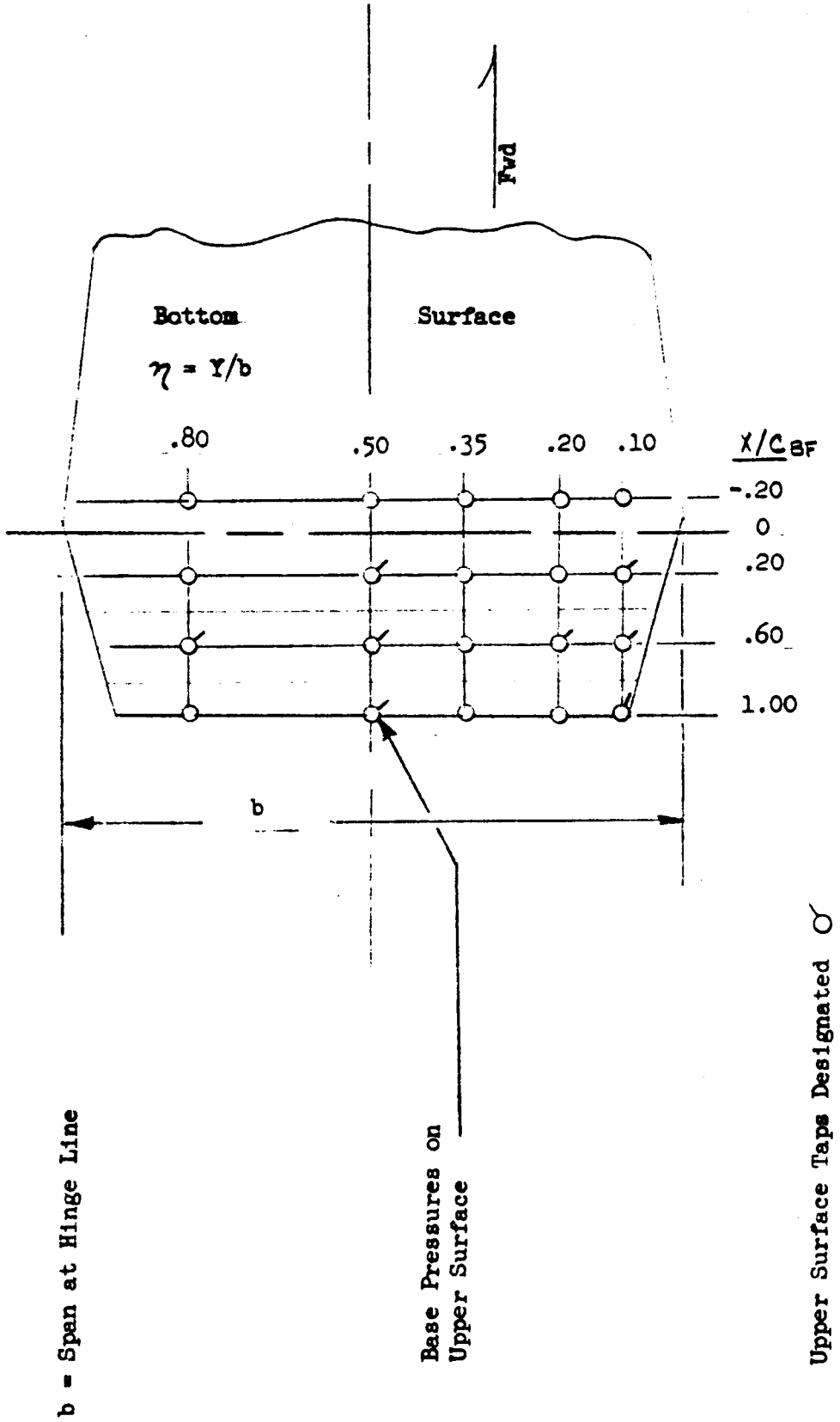

e. Body Flap Pressure Tap Locations
Figure 2. Continued.

- ALL MEASUREMENTS LEFT SIDE ONLY.
- TAPS AT T.E. LOCATED AS CLOSE TO T.E. AS POSSIBLE.
- SPEEDBRAKE BASE PRESSURES LOCATED ON INSIDE OF LEFT PANEL (18 LOCATIONS DESIGNATED σ)

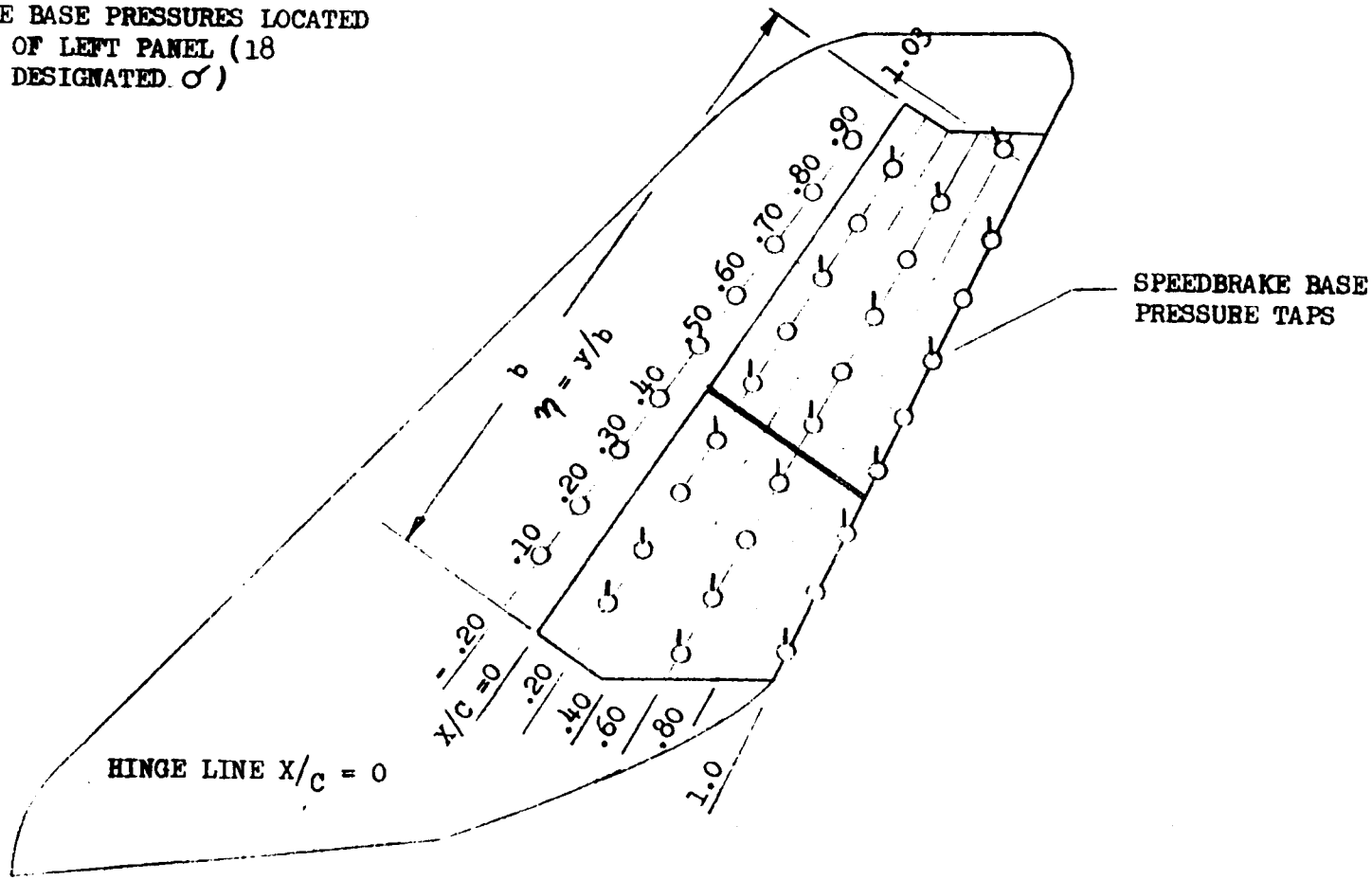

f. Rudder/Speed Brake Surface Pressure Tap Locations
Figure 2. Continued.

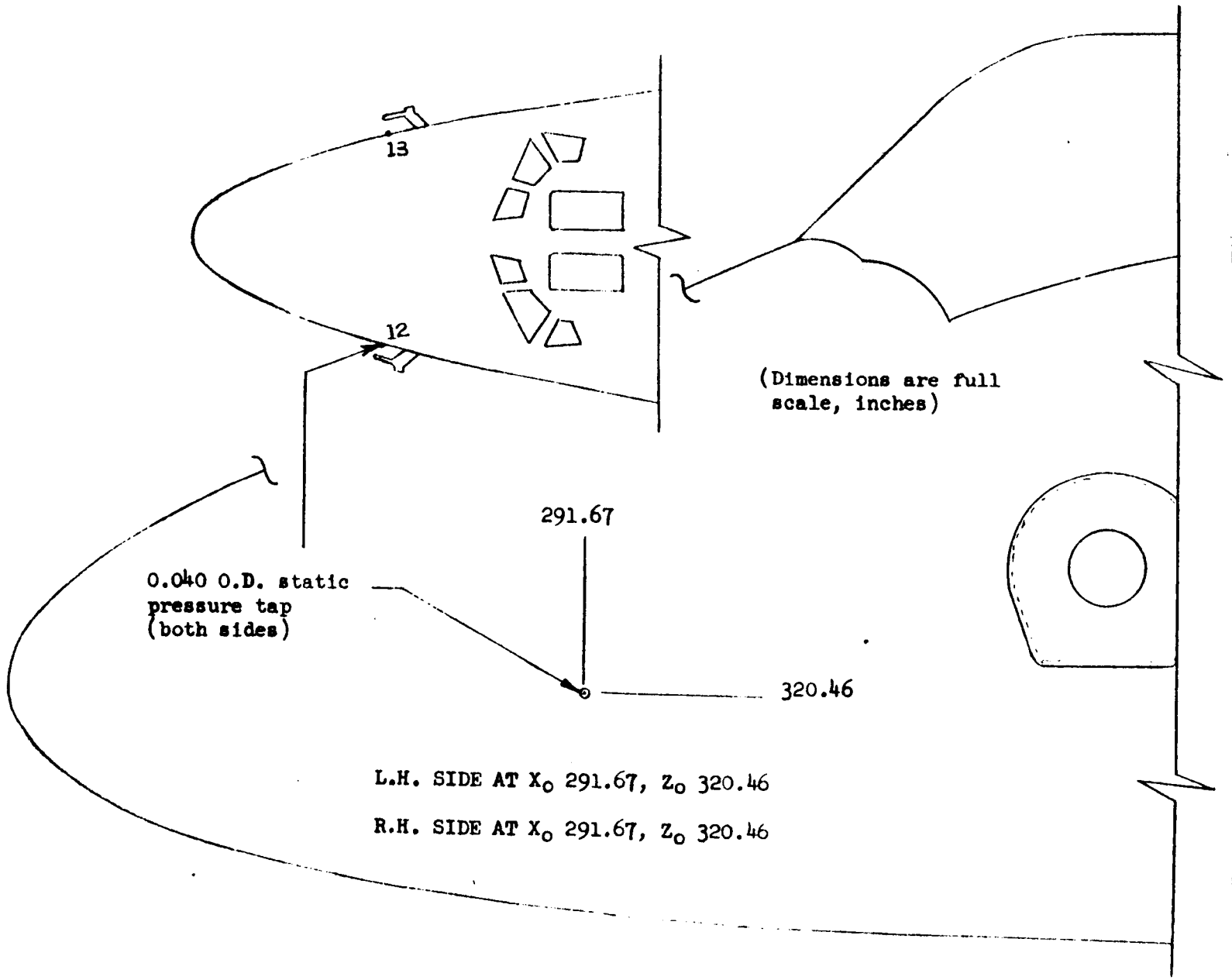

g. Air Data Probe Pressure Tap Locations
Figure 2. Continued.

Tap 1 is on the heat shield under the MPS nozzle.

Tap 3 is in the OMS nozzle.

TAP	W.P., in.	B.P. in.	Area, ft^2
1	489	0	23.48
2	469	49	32.96
3	505	90	18.68
4	439	111	22.12
5	428	99	30.88
6	386	108	45.84
7	305	114	71.92
8	303	0	34.40
9	471	130	78.00
10	390	60	78.52
11	390	-60	
			436.80

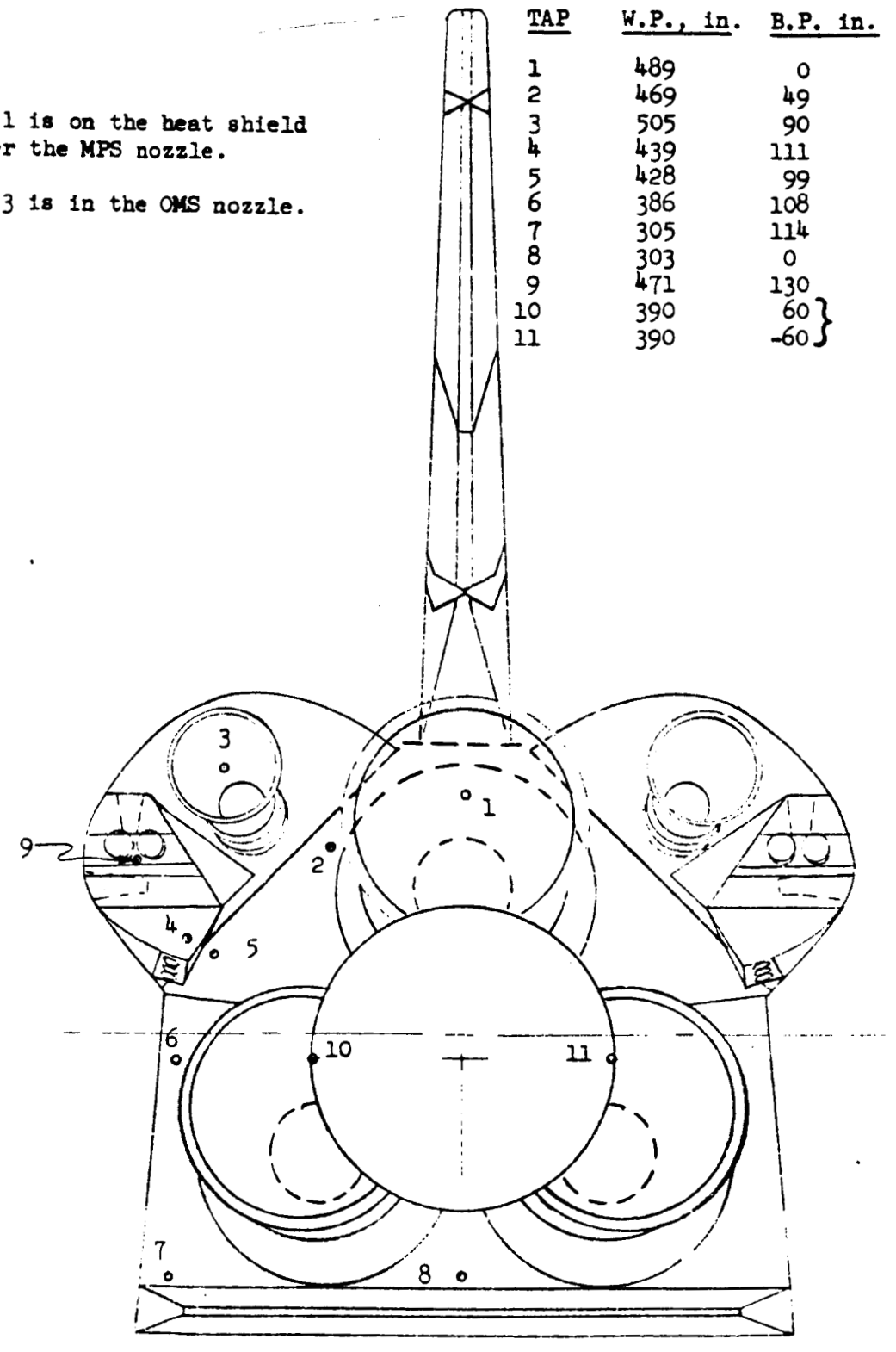

h. Base Pressure Tap Locations
Figure 2. Concluded.

a. Model Installed in 11 x 11 Foot Test Section (OA145A)
Figure 3. Model installation photographs.

ORIGINAL PAGE IS
OF POOR QUALITY

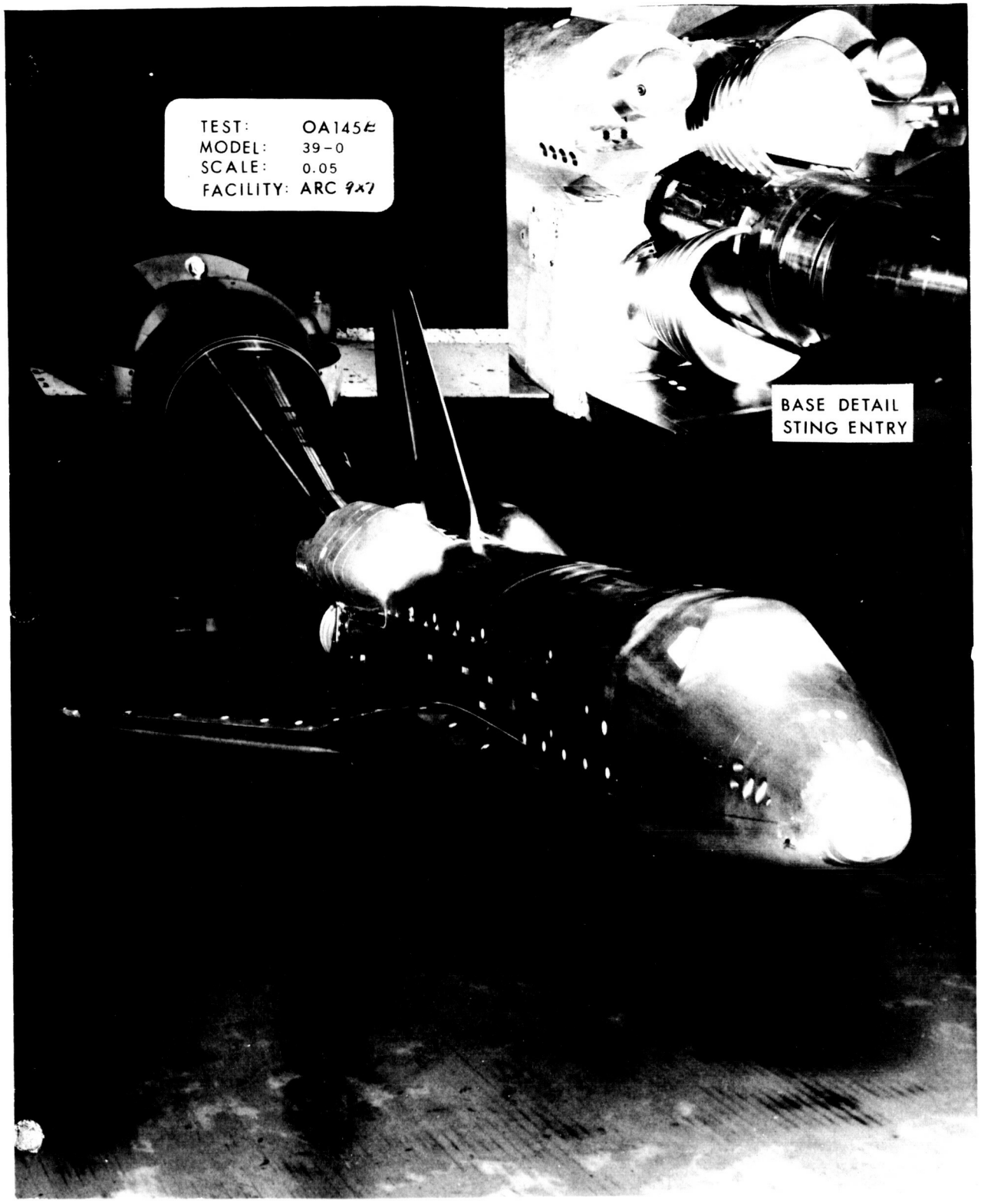

b. Model Installed in 9 x 7 Foot Test Section with Base Detail (OA145B)
Figure 3. Concluded.

APPENDIX

PRESSURE DATA - MICROFICHE

Due to the limited distribution of Volume 6 of this data report, tabulated pressure data are available on request from Data Management Services

(THIS PAGE INTENTIONALLY LEFT BLANK)