NASA
National Aeronautics and
Space Administration

Lyndon B. Johnson Space Center
Houston, Texas 77058

DMS-DR-2403
NASA-CR-160,515

VOLUME 1 of 3

RESULTS OF TESTS USING A 0.02-SCALE MODEL (89-OTS) OF THE SPACE SHUTTLE INTEGRATED VEHICLE IN THE AEDC 16-FOOT TRANSONIC PROPULSION WIND TUNNEL (IA156A)

SPACE SHUTTLE AEROTHERMODYNAMIC DATA REPORT

Data Management SERVICES

HUNTSVILLE ELECTRONICS DIVISION CHRYSLER CORPORATION

September 1980

DMS-DR-2403
NASA-CR-160,515

VOLUME 1 of 3

RESULTS OF TESTS USING A 0.02-SCALE MODEL (89-OTS) OF THE SPACE SHUTTLE INTEGRATED VEHICLE IN THE AEDC 16-FOOT TRANSONIC PROPULSION WIND TUNNEL (IA156A)

by

J. J. Daileda and J. Marroquin
Shuttle Aerosciences
Rockwell International, Space Systems Group

Prepared under NASA Contract Number NAS9-13247

by

Data Management Services
Chrysler Huntsville Electronics Division
Slidell Engineering Office
New Orleans, Louisiana 70189

for

Engineering Analysis Division

Johnson Space Center
National Aeronautics and Space Administration
Houston, Texas

WIND TUNNEL TEST SPECIFICS:

Test Number:	AEDC PWT16T 470
NASA Series Number:	IA156A
Model Number:	89-OTS
Test Date:	November 1, 1977 through November 10, 1977
Occupancy Hours:	124

FACILITY COORDINATOR:

T. Perkins, ARO, Inc.
AEDC, PWT-16P
Arnold AFS, TN 37389

Phone: (615) 455-2611, x7640, 7693

PROJECT ENGINEER:

J. J. Daileda
Mail Code AD38
Rockwell International
Space Systems Group
12214 Lakewood Boulevard
Downey, CA 90241

Phone: (213) 922-3785

AERODYNAMIC ANALYSIS ENGINEER:

T. Hamilton
Mail Code AC07
Rockwell International
Space Systems Group
12214 Lakewood Boulevard
Downey, CA 90241

Phone: (213) 922-1558

DATA MANAGEMENT SERVICES:

Prepared by: Liaison--D. W. Hersey
Operations--M. M. Mann

Approved: J. L. Glynn, Manager
Data Operations

Concurrence: N. D. Kemp, Manager
Data Management Services

Chrysler Huntsville Electronics Division/Slidell Engineering Office assumes no responsibility for the data presented other than display characteristics.

RESULTS OF TESTS USING A 0.02-SCALE MODEL (89-OTS) OF THE SPACE SHUTTLE INTEGRATED VEHICLE IN THE AEDC 16-FOOT TRANSONIC PROPULSION WIND TUNNEL (IA156A)

by

J. J. Daileda and J. Marroquin
Rockwell International, Space Systems Group

ABSTRACT

An experimental investigation (Test IA156A) was conducted in the Arnold Engineering Development Center 16-Foot Transonic Propulsion Wind Tunnel from November 1, 1977 through November 10, 1977.

The objective of the test was to obtain force and moment data on all vehicle elements (orbiter, external tank, and each solid rocket booster), wing and vertical tail load indicators, elevon and rudder hinge moments, and base and body flap pressure data.

Data were obtained in the Mach number range from 0.3 to 1.55 with Reynolds numbers per foot of 2.7×10^6 to 3.5×10^6. The test was conducted using angle-of-sideslip sweeps at fixed angles-of-attack. Angles-of-attack and sideslip were both within a range of plus and minus ten degrees, with the maximum angle being dependent upon the requirements at a particular Mach number.

Configuration variations consisted of a series of differential inboard/outboard elevon angle settings at zero aileron angle, with and without the Shuttle Infrared Leeside Temperature Sensing (SILTS) pod on the orbiter.

Force data presented in this report were provided by the facility on April 9, 1980 (Reference 3). Angles of attack and sideslip were corrected for flow angularities by the ARO personnel. Elevon deflection angles were corrected by Data Management Services (DMS) per RI Internal Letter SAS/AERO/78-221 (Reference 4) dated April 25, 1978. This data was initially released by DMS under special request project identification SPRT8N.

TABLE OF CONTENTS

	Page
ABSTRACT	iii
INDEX OF MODEL FIGURES	2
INTRODUCTION	4
NOMENCLATURE	6
REMARKS	15
CONFIGURATIONS INVESTIGATED	17
TEST FACILITY DESCRIPTION	25
TEST PROCEDURE	27
DATA REDUCTION	30
REFERENCES	38
TABLES	
I. TEST CONDITIONS	39
II. DATA SET/RUN NUMBER COLLATION SUMMARY	40
III. ELEVON DEFLECTION ANGLES	52
FIGURES	
MODEL	53
APPENDIX	
TABULATED SOURCE DATA	76
FORCE DATA (VOL. 1 AND 2)	
PRESSURE DATA (VOL. 3, MICROFICHE)	

INDEX OF MODEL FIGURES

Figure	Title	Page
1.	Model axis systems, sign conventions and reference dimensions.	
	a. Axis Systems	53
	b. Definition of Deflection Angles and Wing Coefficients	54
	c. Wing Moment Reference Center	55
	d. Vertical Stabilizer Moment Reference Center	56
	e. Definition of Vertical Stabilizer Coefficients	57
	f. Definition of Elevon and Rudder Hinge Moment Coefficients	58
2.	Model sketches.	
	a. Major Model Component Dimensions	59
	b. Orbiter Base Pressure Orifice Locations	60
	c. Orbiter Body Flap Top Surface Pressure Orifice Locations	61
	d. Orbiter Body Flap Bottom Surface Pressure Orifice Locations	62
	e. External Tank Base Pressure Orifice Locations	63
	f. Solid Rocket Boosters Base Pressure Tap Locations	64
	g. Sketch Showing Location of 0.02-Scale Model in the 16T Test Section	65
	h. Pitch Plane and Cross-Flow Plane Flow Angularity Corrections for Hi-Pitch System	66
	i. Orbiter Nomenclature	67

INDEX OF MODEL FIGURES (Concluded)

Figure	Title	Page
2.	Model sketches. (Continued)	
	j. Orbiter Protuberance and Penetration Configuration	68
	k. External Tank (T_{39})	69
	l. Solid Rocket Booster (S_{27})	70
3.	Model photographs.	
	a. Model 89-OTS in the 16T Test Section	71
	b. Right-Forward Side of Model 89-OTS	72
	c. Right-Rear View of Model 89-OTS, SILTS Pod Installed	73
	d. Right-Rear Side View of Model 89-OTS	74
	e. Rear View of Model 89-OTS	75

INTRODUCTION

The 0.02-scale model (Model 89-OTS) of the space shuttle integrated vehicle was tested in the Arnold Engineering Development Center 16-Foot Transonic Wind Tunnel between November 1, 1977, and November 10, 1977. This test, designated IA156A, used a total of 124 occupancy hours in the facility.

Data were obtained at fixed angles-of-attack between -10 and +10 degrees with angle-of-sideslip sweeps between -10 and +10 degrees over a Mach number range of 0.3 to 1.55. Four six-component balances were used to obtain vehicle element forces and moments. Three single-component balances were used to measure elevon (right wing only) and rudder hinge moments. Two three-component balances were used to measure wing (left side) and vertical tail normal force, bending moment, and torsion.

Model configuration variables were elevon deflection angle and Shuttle Infrared Leeside Temperature Sensing (SILTS) pod on or off. The orbiter was instrumented with 19 base pressure taps and 32 body flap taps. The external tank had 45 base pressure taps, and each SRB was instrumented with five base pressure taps.

This report provides a description of the test consisting of remarks on the conduct of the test, descriptions of the model and the test facility, details on test procedure, information on data reduction, and tabulated test results.

The flow angularity corrections for alpha and beta were revised after completion of this test. The force data presented in this text contains the final flow angularity corrected alpha and beta data (Reference 3). Elevon deflection angles were corrected for loads as specified in Reference 4.

This report consists of 2 volumes of force data and 1 volume of tabulated pressure data on microfiche. The volumes are arranged in the following manner:

VOLUME NUMBER	CONTENTS	MICROFICHE PAGE NUMBERS
1	IA156A FORCE DATA TABULATIONS	-
2	IA156A FORCE DATA TABULATIONS	-
3	IA156A TABULATED PRESSURE DATA ORBITER BASE (E) D/S 01→E9	1-17
3	IA156A TABULATED PRESSURE DATA, BODY FLAP (BOTTOM)(F) D/S 01→E9	17-30
3	IA156A TABULATED PRESSURE DATA, BODY FLAP (TOP)(G) D/S 01→E9	30-43
3	IA156A TABULATED PRESSURE DATA, LEFT SRB BASE (L) D/S 01→E9	43-54
3	IA156A TABULATED PRESSURE DATA, RIGHT SRB BASE (R) D/S 01→E9	54-65
3	IA156A TABULATED PRESSURE DATA, ET BASE (T) D/S 01→E9	65-89

NOMENCLATURE

SYMBOL	MNEMONIC	DEFINITION
	Tunnel Parameters	
Part, Point		run identification
Project, Test		ARO, Inc. test identification
M	MACH	freestream Mach number
PT	PT	freestream total pressure, psfa
P	P	freestream static pressure, psfa
Q	Q	freestream dynamic pressure, psf
$Rex10^{-6}$	RN/L	Reynolds number per foot
TT		freestream total temperature, ^{o}F
TTR		freestream total temperature, ^{o}R
	0.02-Scale Model Test Parameters	
AFA		flow angularity in the tunnel pitch plane, positive up, degrees
ALFAL		launch vehicle angle-of-attack, degrees
ALFALS	ALPHAL	left hand side solid rocket booster angle-of-attack, degrees
ALFARS	ALPHAR	right hand side solid rocket booster angle-of-attack, degrees
ALFAT	ALPHAT	external tank angle-of-attack, degrees
BETAL		launch vehicle sideslip angle, degrees
BETALS	BETALS	left hand side solid rocket booster sideslip angle, degrees
BETARS	BETARS	right hand side solid rocket booster sideslip angle, degrees

NOMENCLATURE (Continued)

SYMBOL	MNEMONIC	DEFINITION
	0.02-Scale Model Test Parameters (Continued)	
BETAT	BETAT	external tank sideslip angle, degrees
BFA		flow angularity in the tunnel cross flow plane, positive from right to left looking upstream, degrees
	0.02-Scale Left Hand Side SRB Coefficients (Left Side SRB Balance)	
CABLS	CABLS	base axial-force coefficient
CAFLS	CAFLS	forebody axial-force coefficient, CALS-CABLS
CALS	CALS	total axial-force coefficient
CBLLS	CBLLS	rolling moment coefficient
CIMFLS	CIMFLS	pitching moment coefficient
CNFLS	CNFLS	normal force coefficient
CYFLS	CYFLS	side force coefficient
CYNBLS	CYNBLS	base yawing moment coefficient
CYNFLS	CYNFLS	forebody yawing moment coefficient, CYNLS-CYNBLS
CYNLS	CYNLS	total yawing moment coefficient
	0.02-Scale Right Hand SRB Coefficients (Right Side SRB Balance)	
CABRS	CABRS	base axial force coefficient
CAFRS	CAFRS	forebody axial force coefficient, CARS-CABRS
CARS	CARS	total axial force coefficient
CBLRS	CBLRS	rolling moment coefficient

NOMENCLATURE (Continued)

SYMBOL	MNEMONIC	DEFINITION
	0.02-Scale Right Hand SRB Coefficients (Right Side SRB Balance) (Continued)	
CIMFRS	CIMFRS	pitching moment coefficient
CNFRS	CNFRS	normal force coefficient
CYFRS	CYFRS	side force coefficient
CYNBRS	CYNBRS	base yawing moment coefficient
CYNFRS	CYNFRS	forebody yawing moment coefficient CYNRS - CYNBRS
CYNRS	CYNRS	total yawing moment coefficient
	0.02-Scale External Tank + (SRB Right + SRB Left) Coefficients, (External Tank Balance)	
CABT	CABT	external tank base axial force coefficient
CAFTS	CAFTS	forebody axial force coefficient, CATS - (CABT + CABLS + CABRS)
CATS	CATS	total axial force coefficient
CBLFTS	CBLFTS	rolling moment coefficient
CIMTS	CIMFTS	pitching moment coefficient
CNFTS	CNFTS	normal force coefficient
CYFTS	CYFTS	side force coefficient
CYNFTS	CYNFTS	forebody yawing moment coefficient, CYNTS - (CYNBLS + CYNBRS)
CYNTS	CYNTS	total yawing moment coefficient
	0.02-Scale External Tank Forebody Coefficients	
CAFT	CAFT	forebody axial force coefficient, CAFTS - (CAFLS + CAFRS)

NOMENCLATURE (Continued)

SYMBOL	MNEMONIC	DEFINITION
	0.02-Scale External Tank Forebody Coefficients (Continued)	
CBLFT	CBLFT	forebody rolling moment coefficient, CBLFTS - (CBLLS + CBLRS)
CIMFT	CIMFT	forebody pitching moment coefficient, CIMFTS - (CIMFLS + CIMFRS)
CNFT	CNFT	forebody normal force coefficient, CNFTS - (CNFLS + CNFRS)
CYFT	CYFT	forebody side force coefficient, CYFTS - (CYFLS + CYFRS)
CYNFT	CYNFT	forebody yawing moment coefficient, CYNFTS - (CYNFLS + CYNFRS)
	0.02-Scale Launch Vehicle Coefficients (Orbiter Balance)	
CABO	CABO	orbiter base axial force coefficient
CAFL	CAFL	forebody axial force coefficient, CAL - (CABO + CABT + CABLS + CABRS)
CAL	CAL	total axial force coefficient
CBLFL	CBLFL	rolling moment coefficient
CIMBO	CIMBO	orbiter base pitching moment coefficient
CIMFL	CIMFL	forebody pitching moment coefficient, CIML - CIMBO
CIML	CIML	total pitching moment coefficient
CNBO	CNBO	orbiter base normal force coefficient
CNFL	CNFL	forebody normal force coefficient, CNL - CNBO
CNL	CNL	total normal force coefficient
CYFL	CYFL	forebody side force coefficient

NOMENCLATURE (Continued)

SYMBOL	MNEMONIC	DEFINITION
	0.02-Scale Launch Vehicle Coefficients (Orbiter Balance) (Continued)	
CYNFL	CYNFL	forebody yawing moment coefficient, CYNL - (CYNBLS + CYNBRS)
CYNL	CYNL	total yawing moment coefficient
	0.02-Scale Orbiter Forebody Coefficients	
CAFO	CAFO	axial force coefficient, CAFL - CAFTS
CBLFO	CBLFO	rolling moment coefficient, CBLFL - CBLFTS
CIMFO	CIMFO	pitching moment coefficient, CIMFL - CIMFTS
CNFO	CNFO	normal force coefficient, CNFL - CNFTS
CYFO	CYFO	side force coefficient, CYFL - CYFTS
CYNFO	CYNFO	yawing moment coefficient, CYNFL - CYNFTS
	0.02-Scale Vertical Tail Coefficients (See Figure 1e)	
CBVT	CBVT	bending moment coefficient
CSVT	CNVT	side force coefficient
CTVT	CTVT	torsional moment coefficient
	0.02-Scale Wing Coefficients (See Figure 1b)	
CBW	CBW	bending moment coefficient
CNW	CNW	normal force coefficient
CTW	CTW	torsional moment coefficient

NOMENCLATURE (Continued)

SYMBOL	MNEMONIC	DEFINITION
	0.02-Scale Elevon and Rudder Coefficients (See Figure 1f)	
CHEI	CHEI	inboard elevon hinge moment coefficient
CHEO	CHEO	outboard elevon hinge moment coefficient
CHR	CHR	rudder hinge moment coefficient
	Model Geometric Nomenclature	
CL		centerline
ET		external tank
HL		hinge line
MRC		moment reference center
SRB		solid rocket booster
X/C_{BF}		ratio of a station on the body flap to the body flap chord (See Figure 2c)
X_B		SRB station
X_O/L_O		ratio of a station on the orbiter to the orbiter length
X_T		body station on the external tank
Y_O		lateral station on the orbiter, positive to the right of the plane of symmetry (See Figure 2b)
Z_O		orbiter water line (Figures 2a and 2b)
α	ALPHAO	orbiter angle-of-attack, degrees
β	BETAO	orbiter sideslip angle, degrees
δ_{e_I}	IB-ELV	inboard elevon deflection angle, degrees (See Figure 1b)

SYMBOL	MNEMONIC	DEFINITION
	Model Geometric Nomenclature (Continued)	
δ_{e_o}	OB-ELV	outboard elevon deflection angle, degrees (See Figure 1b)
ϕ	PHIO	rotational angle on model component surface (See Figure 2e), degrees
η		ratio of spanwise station on orbiter body flap to total span of body flap, positive from left to right (See Figure 2b)
ALFAØU	ALFAØU	orbiter angle-of-attack, (uncorrected for flow angularity), degrees
ALPATU	ALPATU	external tank angle-of-attack (uncorrected for flow angularity), degrees
ALFLSU	ALFLSU	left SRB angle-of-attack (uncorrected for flow angularity), degrees
ALFRSU	ALFRSU	right SRB angle-of-attack (uncorrected for flow angularity), degrees
ALPHAI	ALPHAI	tunnel instrumentation indicated pitch attitude, degrees
BETAØU	BETAØU	orbiter sideslip angle (uncorrected for flow angularity), degrees
BETATU	BETATU	external tank sideslip angle (uncorrected for flow angularity), degrees
BETLSU	BETLSU	left SRB sideslip (uncorrected for flow angularity), degrees
BETRSU	BETRSU	right SRB sideslip (uncorrected for flow angularity), degrees
DEINLR	DEINLR	right inboard elevon deflection (no load), degrees
DEØNLR	DEØNLR	right outboard elevon deflection (no load), degrees

SYMBOL	MNEMONIC	DEFINITION
	Model Geometric Nomenclature (Continued)	
PHII	PHII	Tunnel Instrumentation indicated roll attitude, degrees
	Pressure Data	
CPBV	CPBV	vertical tail base pressure coefficient
CPTXXX	CPTXXX	pressure coefficient for tap XXX
CP1	CP1	See Data Reduction Section
CP2	CP2	See Data Reduction Section
CP3	CP3	See Data Reduction Section
CP4	CP4	See Data Reduction Section
CP5	CP5	See Data Reduction Section
CP6	CP6	See Data Reduction Section
CP7	CP7	See Data Reduction Section
CP8	CP8	See Data Reduction Section
CP9	CP9	See Data Reduction Section
CP10	CP10	See Data Reduction Section
	Terms Used in Data Reduction	
BW		wing bending moment about Y_o105, in-lbs.
NW		wing normal force, lbs.
TW		wing torsion moment about X_o1307, in-lbs.
BVT		vertical tail bending moment about Z_o503, in-lbs.
NVT		vertical tail normal force, lbs.

NOMENCLATURE (Concluded)

SYMBOL	MNEMONIC	DEFINITION
TVT		vertical tail torsion moment about X_o1414.3, in-lbs.
HEI		inboard elevon hinge moment, in-lbs.
HEO		outboard elevon hinge moment, in-lbs.

REMARKS

A preliminary calibration at the Los Angeles Division of Rockwell International of the three-component balance for the right wing indicated that the torsion gauge sensitivity was below the normally acceptable level for this type of balance. Therefore, prior to the AEDC calibration, the beam was regauged by AEDC to increase the torsion sensitivity. During the test large zero shifts were encountered. Check loads showed that there was fouling between the wing and the fuselage. Repeated attempts were made during the test to clear the fouling, but all sources of fouling were not identified until after the test. All wing data where zero shifts occurred were recomputed using post-run balance zeros. Because of the problems encountered during the test, extreme caution is recommended when using and interpreting wing coefficient data.

During the test various events occurred having a possible effect on the test results. These items are noted below.

1. On part numbers 801 through 889, there was tape over the elevon (inboard and outboard) beam/bracket joint line.

2. On part numbers 801 through 1121, a loose wire connection which could affect wing data was found on the wing torsion gauge.

3. On part number 1096, point 4 and part number 1097, point 1, the transducer constant for scanivalve number 5(KSV5) in the external tank was wrong. A value of 290 was substituted for these points.

4. On part numbers 1132 through 1188, 1201 through 1216, and 1224 through 1314, the transducer constant (KSV5) was intermittently out of tolerance (high by as much as 10 percent). The reason for this condition was never determined. CP7 data should be used with caution when KSV5 is out of tolerance.

5. On part numbers 1188 through 1200, base pressure instrumentation for the ET and SRB's was inoperative. Equivalent base correction terms (CP5, CP6, CP7, and CP9) from part numbers 1141 through 1153 were substituted.

6. On part numbers 1224 through 1233, there was tape across the vertical tail/rudder joint line.

7. On part numbers 1377 through 1396, the right hand inboard elevon deflection angle was set at 8 degrees rather than 10 degrees, as called for in the run schedule. These runs were repeated with the correct elevon angle (part numbers 1432 through 1451).

8. Data from several pressure taps were bad for various reasons at different times during the test. The data in question were eliminated from the average in the base pressure correction calculations. The part numbers, pressure tap numbers, and correction coefficients affected are given below.

Part Numbers	Pressure Tap Number	Term Affected
1042-1073	438	CP2
1042-1073	439	CP2
1042-1111	406	CP2
1042-1121	1521	CP7
1399-1419	311	CP1
1399-1419	312	CP1

CONFIGURATIONS INVESTIGATED

The model for the AEDC-PWT test period was an 0.02-scale replica of the Rockwell International first stage space shuttle vehicle consisting of orbiter, external oxygen/hydrogen tank (ET) and two solid boosters (SRB's). The vehicle is described by the VC70-000002 configuration control drawing. The integrated vehicle geometry is shown in Figure 2a. The model was mounted upright in the tunnel through the base of the orbiter using the AEDC 2.5-inch Task MK XXXI balance (AEDC 6-2.5-2.5-1.85-M-C balance). Photographs of the model in the tunnel and of model details are given in Figures 3a through 3e.

The external tank and boosters were supported from the orbiter/ET attach structure using the AEDC-PWT-6-1.50-1.80-1.12 M balance. Each SRB was supported from the ET/SRB attach structure using the AEDC-PWT-6-1.50-0.50-1.12 M-a and -b (one in each SRB) balances. The orbiter balance measured total vehicle loads; the external tank balance measured ET/SRB loads, exclusive of the attach structure between orbiter and external tank; each SRB balance measured only the forces and moments on the element in which it was mounted, exclusive of attach hardware.

The orbiter was fabricated to the OV102 Configuration Outer Mold Line Definition (March 15, 1976 OML configuration). Lines were derived from the design entry trajectory 14414.1, Revision C/C. The Thermal Protection System (TPS) for these lines is based on the useage of Silicon Reuseable Surface Insulation (SRSI). The orbiter model is of a blended wing/body design with a double delta planform ($81^{\circ}/45^{\circ}$ leading

edge) wing of 12 percent thickness and full span elevons with gaps between the outboard and inboard panels and between the inboard panel and the fuselage. A single centerline vertical tail with rudder/speed brake capability is mounted between the Orbital Maneuvering System (OMS) pods on the aft fuselage, and a body flap is fitted to the lower trailing edge of the fuselage. The Main Propulsion System (MPS) nozzles were simulated, but were trimmed to clear the sting support though the base. The OMS nozzles and all Reaction Control System (RCS) thruster ports in the forward fuselage and OMS pods were simulated.

Fuselage Outer Mold Line (OML) penetrations and protuberances which are simulated include:

- Recessed windshields, hatch, and observation windows
- Simulated forward and aft RCS nozzles
- Cargo bay door hinges
- T-zero umbilical panels
- Vents: cargo bay, wing, OMS RCS, and aft fuselage
- Spanwise steps: Vertical tail/rudder and body flap

The upper surface flipper door panels which blend the wing to the elevon at all deflections were not simulated. A smooth fairing between wing and elevon upper surfaces simulated the flipper door panel. The OV102 Shuttle Infrared Leeside Temperature Sensing (SILTS) pod was simulated on the vertical tail. The orbiter model was constructed primarily of Armco 17-4 stainless steel, with 7076-T6 aluminum used in

some non-load carrying components. The mid/aft upper fuselage is fabricated from a single block with a longitudinal bore into which balance adapters can be inserted. The OMS pods are an integral part of this block. The nose/forward fuselage was fabricated as a hollow shell and serves as a cover plate for model-mounted instrumentation.

The vertical tail was supported on the upper aft fuselage by means of a strain gauged beam (three-component balance). The rudder/speed brake, fixed at zero degrees deflection was mounted on a gauged beam to allow for measurement of hinge moments. A separate base plate/lower aft fuselage block incorporated the aft OMS/RCS pods, the simulated MPS and OMS nozzles, and the body flap bracket recesses. The base plate and MPS nozzles were cut out for sting clearance. The body flap was mounted at zero degrees deflection.

The right wing, right wing glove, and lower fuselage aft of station 520 was fabricated as a single piece. The left wing/wing-glove was cut off at butt plane 105 and was attached to the lower fuselage by a strain gauged beam (three-component balance). A labyrinth seal was used along the gap between the two parts to minimize leakage between upper and lower surfaces.

The elevons on both wings were mounted on individual beams to allow for measurement of hinge moments. Although the beams on the right and left wings were dimensionally similar, only those on the right wing were gauged. The elevon deflection angles were set by manually changing the

brackets to which the beams are attached. Measured deflection angles are given in Table III. Upper surface seal doors (flipper doors) were not simulated but a fairing was used between the wing and the elevon. A gap of from 0.005 to 0.020-inches was maintained between the fairing and the elevon.

The external tank was built in accordance with Rockwell International Interface Control Drawing ICD2-00001, Rev. C, plus Interface Revision Notices B and C. The external tank is of cylindrical cross-section with a nominal diameter of 333-inches and a maximum diameter of 336.2-inches. The forward portion of the external tank has a tangent ogive nose which terminates in a biconic nose cap over the LOX vent valve. The forward one-third of the external tank is filled with LOX, and the aft two-thirds with liquid hydrogen. Structural stiffeners between the two vessels result in an area with a slightly larger than nominal diameter. The aft end of the tank is basically an ellipsoid of revolution.

The entire external tank is covered with a spray-on foam insulation of varying thickness. Approximate thicknesses are 2.5-inches on the tangent ogive, 1.0-inch on the cylindrical sections, and 2.0-inches on the rear ellipsoid. Model dimensions included this insulation.

The external tank configuration included a number of protuberances consisting of electrical trays, fluid lines, and attach hardware. Electrical trays which run parallel to the external tank centerline were simulated; those which run up next to the aft orbiter/external tank

attach hardware were not. The LOX and LH_2 feed lines were simulated. The attach hardware that is considered as part of the external tank is the front and rear orbiter/external tank attach structure which remains with the external tank after separation.

The external tank model was constructed primarily of 6061-T651 aluminum alloy with the load carrying components made of Armco 17-4 stainless steel. The model was formed by three major pieces to which the external protuberances were mounted. The three major pieces consisted of the forward biconic nose, the central cylindrical shell and the aft closure. The external tank protuberances and simulated aft attach structures were fabricated from Armco 17-4 stainless steel and were secured to the tank by mounting buttons and silver solder.

The external tank was attached to the orbiter by the "wishbone" attach bracket on the forward end and the simulated LOX and LH_2 vertical feed lines on the aft end. These components were scaled to as great a degree as possible, but were sized for the anticipated loads. The orbiter/external tank attach structure was connected directly to the balance bridge inside the external tank. Instrumentation leads from the external tank to the orbiter were attached to the back of each feed line and were covered with a fairing. The external tank wall in the vicinity of the attach structure was cut away for clearance between the tank, and the structure and fairing. The resultant gap was filled with foam.

The Solid Rocket Boosters (SRB's) were built to the same Interface

Control Drawing (ICD2-00001, Rev. C) and Interface Revision Notices (B and C) as the external tank. The two SRB's are 146-inch diameter cylinders, each with an 18 degree semi-angle nose terminated by a 13.27-inch diameter sphere. An 18 degree flared skirt, 208.20-inches in diameter, protects the rocket nozzle. A flexible donut-shaped seal and thermal shield is provided between the skirt and the nozzle. SRB protuberances consist of a forward attach lug, front and rear separation motors, an aft attach ring, various stiffeners and a full-length electrical systems tunnel.

The Solid Rocket Boosters were made of Armco 17-4 PH stainless steel, except for the forward cylindrical shells which were made of 6061-T651 aluminum alloy. Each SRB was formed by five major pieces to which the external protuberances were mounted. The five major pieces were the nose, the forward and the center cylindrical shells, the aft cylindrical shell/skirt assembly and the nozzle. The center cylindrical shells were fabricated with a vertical split to facilitate assembly and disassembly of the SRB. The SRB protuberances were fabricated from aluminum alloy and stainless steel, and were secured to the SRB with screws or silver solder. Each SRB is attached to the ET at the full-scale attach points. Attach structure components were scaled to as great a degree as possible, but were sized for the anticipated loads. The SRB/ET attach structure was connected directly to the balance bridge inside the SRB. The SRB was supported on the balance mounted on this balance bridge.

Instrumentation leads from the SRB to the external tank were routed through a slot aft of the forward SRB/ET attach post. A fairing between the SRB and the ET protected the leads from the air flow. The SRB wall in the vicinity of the SRB/ET attach structure was relieved for clearance between the SRB, and the attach structure and fairing. The resultant gap was filled with foam.

The following nomenclature, illustrated in Figures 21 through 21, was used to designate model components:

Symbol	Description
B_{75}	OV102 fuselage including T-zero umbilical panels and crew hatch
C_{16}	Canopy including recessed windshields and observation windows
E_{64}	Elevons, including elevon/elevon and elevon/fuselage gaps
F_{16}	Body flap
FR_{22}	Fairings for the forward cargo bay door hinges, 6 per side
HG_1	Cargo bay door hinges, 13 per side
M_{52}	OMS pods
N_{108}	Forward RCS thruster nozzle ports
N_{109}	Main propulsion system nozzles (inner surfaces cut away for sting clearance)
N_{110}	OMS nozzles
N_{111}	Aft RCS thruster nozzles and ports
R_{20}	Rudder, split into left and right speed brake panels

CONFIGURATIONS INVESTIGATED (Concluded)

Symbol	Description
U_1	Umbilical doors
V_{27}	Vertical tail
V_{29}	Vertical Tail with OV102 SILTS pod
VT_{10}	Cargo bay vents, 4 per side
VT_{11}	Wing/landing gear bay vents, 1 per side
VT_{14}	Aft fuselage vents, 1 per side
VT_{17}	Miscellaneous vents, ports and penetrations
W_{131}	OV102 Wing
T_{39}	External tank, including all protuberances (See ICD2-00001, Rev. C)
S_{27}	Solid rocket booster, including all protuberances (See ICD2-00001, Rev. C)

TEST FACILITY DESCRIPTION

The AEDC PWT 16-Ft. Transonic Tunnel (Propulsion Wind Tunnel, Transonic 16T) is a continuous-flow closed-circuit tunnel capable of operation within a Mach number range of 0.20 to 1.60. The tunnel can be operated within a stagnation pressure range of 120 to 4000 psfa depending upon the Mach number. The stagnation temperature can be varied from an average minimum of about 80 to a maximum of 160°F as a function of cooling water temperature. Using a special cooling system of mineral spirits, liquid nitrogen, and liquid air, the stagnation temperature range can be varied from +30 to -30°F. Supersonic velocities are obtained by use of flexible-wall, Laval type nozzles.

The test section is 16-ft. square (in cross section) and 40-ft. long. The entire test section and supporting structure is constructed as a separate unit, called the test section cart, and is removable from the tunnel circuit. The test section carts may be moved to the model installation building where the test article and associated equipment are installed.

Two 40-ft. long test section carts are available for testing throughout the design temperature range. These carts are each 20-ft. long and are used in pairs to form the 40-ft. long test section. Each cart may be used in either the forward or aft position in the test section.

The test section is completely enclosed in a plenum chamber which can be evacuated, allowing part of the tunnel main flow to be removed

through the test section perforated walls, thereby unchoking the test section at near sonic speeds and alleviating wall interference effects.

TEST PROCEDURE

The Hi-Pitch model support system was used for the 0.02-scale force model test entry. This support system has the capability of pitch rates up to 8 deg/sec and roll rates exceeding 20 deg/sec. A pitch rate of approximately 1 deg/sec and a roll rate of 20 deg/sec was selected for this test. Sketches and photographs showing the 0.02-scale model supported on the Hi-Pitch system are shown in Figures 2g and 3a.

The Hi-Pitch support system was mounted into a dummy roll mechanism of the standard sting support system and utilized the vertical traverse feature of the latter system to maintain the model as close to tunnel centerline as possible within the physical constraints of ± 36 inches vertical traverse of the standard sting support system. This limitation placed the orbiter approximately 9 inches below tunnel centerline at sting pitch angles of 0 degrees or greater and 32 inches below tunnel centerline at a sting pitch angle of -10 degrees. Model angles-of-attack and sideslip were established by computer control utilizing the hydraulic motors of the Hi-Pitch system to position the sting at appropriate pitch and roll angles.

The test of the 0.02-scale launch vehicle was concerned primarily with force and moment measurements and the only pressures measured were those located on the bases of the model components. These pressure locations are shown in Figures 2b through 2f and are categorized as follows:

Major Model Component	Model Component	No. of Orifices
Orbiter	Base	19
Orbiter	Body Flap	32
External Tank	Base	45
Solid Rocket Boosters	Base	10
	Total	106

The types of balances utilized, and the model forces and moments calculated from their measurements are given below. The balances are described in detail in Reference 1.

Balance Location	Type	Model Forces and Moments Measured or Calculated
Orbiter	6-component	Launch vehicle normal force, side force, axial force, pitching moment, yawing moment, and rolling moment
External Tank	6-component	ET and SRB's normal force, side force, axial force, pitching moment, rolling moment, and yawing moment
Left Hand Solid Rocket Booster	6-component	Left hand SRB normal force, side force, axial force, pitching moment, rolling moment, and yawing moment
Right Hand Solid Rocket Booster	6-component	Right hand SRB normal force, side force, axial force, pitching moment, rolling moment, and yawing moment
(1) Wing	3-component	Wing normal force, bending moment, and torsional moment
Vertical Stabilizer	3-component	Vertical stabilizer side force, bending moment, and torsional moment

(1) Wing balance data judged unreliable because of the model-balance fouling.

Balance Location	Type	Model Forces and Moments Measured or Calculated
Rudder	1-component	Rudder hinge moment
Inboard Elevon	1-component	Inboard elevon hinge moment
Outboard Elevon	1-component	Outboard elevon hinge moment

Pitch and roll angles of the Hi-Pitch Support System sting were calculated from the outputs of potentiometers. Electrical signals from all position measuring devices, balances, and Scanivalve ® transducers were digitized for data reduction. All coefficient data were tabulated on-line.

The desired tunnel conditions, given in Table I, were set and angle-of-sideslip was varied at a nominal constant angle-of-attack. During the acquisition of pressure data, computer evaluation of the pressure rate-of-change was utilized and the transducer output was not acquired for computational purposes until either the rate of change was within acceptable limits or a maximum time delay was reached. Force and moment data were acquired following the acquisition of the pressure data.

Check loads were placed on the gaged elevons prior to, and following each change in elevon deflection angles, and data were obtained through the computer to verify the calculation of the applied loads. The nominal and measured elevon deflection angles that were tested are given in Table III and a sketch showing the direction of positive elevon deflection is presented in Figure 1b.

DATA REDUCTION

All measured pressures were converted into standard pressure coefficient form and were tabulated "on-line" at the test facility. Base pressure corrections were made to normal force, axial force, and pitching moment coefficients. In addition, axial force of the external tank and axial force and yawing moment from both solid rocket boosters were corrected for base pressure effects.

Force and moment coefficient data were computed in the body axis coordinate system (See Figure 1a) from the balances located in the orbiter, external tank, and both solid rocket boosters using the projection of the orbiter nose on the external tank longitudinal centerline as the moment reference point location. Forces and moments from the wing, vertical stabilizer, and elevons were computed about moment reference points unique to the individual model components. The location of the moment reference points and directions of positive forces and moments are shown in the sketches of Figures 1b through 1f.

Flow angularity corrections were applied to all test data. The magnitude of these corrections is shown in Figure 2h. These corrections were determined from the testing accomplished on the Hi-Pitch model support system and indicate its dependence on vertical location in the test section. The flow angularity investigation was conducted only at sting pitch angles of -6, 0, and 6 degrees, and although a large change in pitch-plane flow angularity was determined between 0 and -6 degrees, it was felt that extrapolation of AFA at the same rate of change beyond

-6 degrees was not warranted. The values of BFA depicted in Figure 2h were those determined during a previous flow angularity calibration at M = 0.90 for the portion of the test section occupied by the model at the various sting pitch angles. The corrections of Figure 2h were input to the calculations of model angles-of-attack and sideslip as functions of model roll orientation.

Pressure coefficients required for base pressure adjustments were computed as follows:

$$CP1 = (1/10)\,(CPT302 + CPT306 + CPT308 + CPT311 + CPT312 + CPT314 + CPT315 + CPT316 + CPT317 + CPT318)$$

$$CP2 = (1/16)\,(CPT405 + CPT406 + CPT407 + CPT408 + CPT413 + CPT414 + CPT415 + CPT416 + CPT422 + CPT424 + CPT430 + CPT432 + CPT437 + CPT438 + CPT439 + CPT440)$$

$$CP3 = (1/6)\,(CPT319 + CPT320 + CPT321 + CPT322 + CPT323 + CPT324)$$

$$CP4 = (1/2)\,(CPT325 + CPT326)$$

$$CP5 = (1/4)\,(CPT2202 + CPT2204 + CPT2221 + CPT2222)$$

$$CP6 = CPT2225$$

$$CP7 = (0.1629)\,(7/12) \sum_{i=1501}^{1507} CPT_i + (0.1629/12)\,(CPT1509) + (0.1629)\,(4/12) \sum_{i=1511}^{1514} CPT_i + (0.0936)\,(6/11) \sum_{i=1516}^{1521} CPT_i$$

$$+ (0.0936/11)\ (CPT1523) + (0.0936)\ (4/11) \sum_{i=1525}^{1528} CPT_i$$

$$+ (0.2058)\ (4/13)\ (CPT1530 + CPT1531 + CPT1543 + CPT1544)$$

$$+ (0.2058)\ (9/13) \sum_{i=1533}^{1541} CPT_i$$

$$+ (0.2371/6)\ (CPT1546 + CPT1549 + CPT1551 + CPT1553 + CPT1555 + CPT1557) + (0.2465/2)(CPT1563 + CPT1571) + (0.0541)\ (CPT1574)$$

$$CP9 = (1/4)\ (CPT2218 + CPT2220 + CPT2223 + CPT2224)$$

$$CP10 = CPT2226$$

where

CPT_i is the pressure coefficient for pressure tap i.

Base pressure adjustments to the force and moment coefficients were computed as follows from the pressure coefficients derived above.

For the Orbiter:

$$CNBO = (-1/SREF)\ [\tan 14.75^{\circ}(CP1)\ (A1) + (CP2)\ (A2)]$$

$$CLMBO = \{-1/[(SREF)\ (LREF)]\}\ [(-L1) \tan 14.75^{\circ}\ (CP1)\ (A1) - (L2)\ (CP2)\ (A2) + Z1\ \{(CP1)\ (A1-ACO) + (CP3)\ (A3) + (CP4)\ (ACO)\}]$$

$$CABO = (-1/SREF)\ [(CP1)\ (A1-ACO) + (CP3)\ (A3) + (CP4)\ (ACO)]$$

For the external tank:

$$CABT = (-1/SREF)\ (CP7)\ (A7)$$

For the left SRB:

$$CABLS = (-1/SREF)\ [(CP5)\ (A5) + (CP6)\ (A6)]$$

$$CYNBLS = -(YS/LREF)\ (CABLS)$$

For the right SRB:

$$CABRS = (-1/SREF)\ [(CP9)\ (A9) + (CP10)\ (A10)]$$

$$CYNBRS = (YS/LREF)\ (CABRS)$$

These adjustments were applied to the measured force and moment coefficients to give forebody coefficients.

For the launch vehicle (orbiter balance):

$$CNFL = CNL - CNBO$$

$$CLMFL = CLML - CLMBO$$

$$CYFL = CYL$$

$$CYNFL = CYNL - CYNBLS - CYNBRS$$

$$CAFL = CAL - CABO - CABT - CABLS - CABRS$$

$$CBLFL = CBLL$$

For the external tank and two SRB's (external tank balance):

$$CNFTS = CNTS$$

$$CLMFTS = CLMTS$$

$$CYFTS = CYTS$$

$$CYNFTS = CYNTS - CYNBLS - CYNBRS$$

$$CAFTS = CATS - CABT - CABLS - CABRS$$

$$CBLFTS = CBLTS$$

For the left SRB (left SRB balance):

CNFLS = CNLS

CIMFLS = CIMLS

CYFLS = CYLS

CYNFLS = CYNLS - CYNBLS

CAFLS = CALS - CABLS

CBLFLS = CBLLS

For the right SRB (right SRB balance):

CNFRS = CNRS

CIMFRS = CIMRS

CYFRS = CYRS

CYNFRS = CYNRS - CYNBRS

CAFRS = CARS - CABRS

CBLFRS = CBLRS

For orbiter alone forebody data:

CNFO = CNFL - CNFTS

CIMFO = CIMFL - CIMFTS

CYFO = CYFL - CYFTS

CYNFO = CYNFL - CYNFTS

CAFO = CAFL - CAFTS

CBLFO = CBLFL - CBLFTS

The external tank alone forebody coefficients were computed as:

CNFT = CNFTS - CNFLS - CNFRS

CLMFT = CLMFTS - CLMFLS - CLMFRS

CYFT = CYFTS - CYFLS - CYFRS

CYNFT = CYNFTS - CYNFLS - CYNFRS

CAFT = CAFTS - CAFLS - CAFRS

CBLFT = CBLFTS - CBLFLS - CBLFRS

The panel loads were reduced to force and moment coefficients in the following manner:

For wing bending and torsion:

CNW = NW/[(Q) (SREF)]

CBW = BW/[(Q) (SREF) (BREF)]

CTW = TW/[(Q) (SREF) (MAC)]

For vertical tail bending and torsion:

CNVT = NVT/[(Q) (SVT)]

CBVT = BVT/[(Q) (SVT) (CVT)]

CTVT = TVT/[(Q) (SVT) (CVT)]

For elevon hinge moments:

CHEI = HEI/[(Q) (SE) (CE)]

CHEO = HEO/[(Q) (SE) (CE)]

For rudder hinge moments:

CHR = HR/[(Q) (SR) (CR)]

Uncertainties (a statistical combination of systematic and random errors) of the tunnel freestream properties, aerodynamic coefficient uncertainties and pressure coefficient uncertainties are all presented in detail in Reference 2. A schedule of completed runs is given in Table II which is the Data Set/Run Number Collation Summary for the test.

Reference dimensions and constants used were:

Symbol	Value: Model Scale	Value: Full Scale	Description
A1	0.12576 ft.^{2}	--	Base area #1 (orbiter, including sting cavity area).
A2	0.0572 ft.^{2}	--	Base area #2 (projected body flap).
A3	0.049048 ft.^{2}	--	Base area #3 (OMS pods).
A5, A9	0.04661 ft.^{2}	--	SRB Skirt base areas, each.
A6, A10	0.04795 ft.^{2}	--	SRB Nozzle base area, each.
A7	0.24192 ft.^{2}	--	Base area of the external tank.
ACO	0.0377 ft.^{2}	--	Orbiter sting cavity area.
BREF	18.734 in.	936.7 in.	Wing bending reference length.
CE	1.814 in.	90.7 in.	Elevon reference chord length.
CR	1.464 in.	73.2 in.	Rudder reference chord length.
CVT	3.996 in.	199.8 in.	Vertical tail reference chord length.
L1	25.260 in.	1263.0 in.	Horizontal transfer distance between the orbiter base and the integrated vehicle moment reference center.

DATA REDUCTION (Concluded)

Symbol	Value: Model Scale	Value: Full Scale	Description
L2	26.594 in.	1329.7 in.	Horizontal transfer distance between the body flap and the integrated vehicle moment reference center.
LREF	25.806 in.	1290.3 in.	Reference length.
MAC	9.496 in.	474.8 in.	Mean aerodynamic chord.
SE	0.084 $ft.^2$	210. $ft.^2$	Elevon reference area.
SR	0.04006 $ft.^2$	100.15 $ft.^2$	Rudder reference area.
SREF	1.076 $ft.^2$	2690. $ft.^2$	Wing reference area.
SVT	0.1653 $ft.^2$	413.25 $ft.^2$	Vertical tail reference area.
YS	5.010 in.	250.5 in.	Lateral transfer distance between the SRB base and the integrated vehicle moment reference center.
Z1	6.730 in.	336.5 in.	Vertical transfer distance between the total orbiter base area and the integrated vehicle moment reference center.

REFERENCES

1. SD77-SH-0195, "Pretest Information for Test IA156A of the 0.02-Scale Model 89-OTS Space Shuttle Integrated Vehicle in the AEDC Propulsion Wind Tunnel (16T)," dated August 4, 1977.

2. AEDC-DR-78-25, "Documentation of Wind Tunnel Tests of the NASA Space Shuttle Launch Vehicle Models," dated March 16, 1978.

3. ARO, Inc. Letter of April 9, 1980 to D. E. Poucher from J. A. Black, subject, "Recomputed Space Shuttle Data from NASA/Rockwell Tests IA-105A, IA-156A, IA-105AR, IA-182, IA-183 (Project P43T-09)."

4. Rockwell International IL No. SAS/AERO/78-014, "Correction Requirements for IA105/156 Force and Moment Data," (April 25, 1978).

TABLE I. TEST CONDITIONS

Mach Number	Reynolds Number	Dynamic Pressure, psf	Stagnation Temperature, °F
0.3	2.7×10^6	180	100
0.6	3.5×10^6	440	
0.7		500	
0.8		550	
0.85		575	
0.90		600	
0.92		605	
0.94		615	
0.95		620	
0.96		622	
0.97		625	
0.98		630	
0.99		634	
1.1		643	
1.02		644	
1.03		647	
1.04		652	
1.05		655	
1.06		658	
1.08		662	
1.10		670	
1.15		684	
1.20		700	
1.25		710	
1.30		717	
1.40		735	
1.55	3.2×10^6	684	
1.40	3.0×10^6	630	
1.55	3.0×10^6	640	

TABLE II

TEST: IA156A

DATA SET/RUN NUMBER COLLATION SUMMARY

DATE:

DATA SET IDENTIFIER	CONFIGURATION		β	δ_{e_I}	δ_{e_O}	M	α -10	-8	-6	-4	0	4	6	8	10	MACH NUMBERS				TEST RUN NUMBERS
R 801	OTS	F1	A	10	5	0.6					801									
02						0.7					803									
03						0.8					804									
04						.85					805									
05						.90					806									
06						.92					807									
07						.94					808									
08			0			.95					816*									
09			A			.95					820									
10						.96					818									
11						.97					821									
12						.98					822									
13						.99					823									
14						1.01					824									
15						1.02					825									
16						1.03					826									
17						1.04					827									
18						1.05					828									

1 7 13 19 25 31 37 43 49 55 61 67 75 76

COEFFICIENTS IDVAR (1) IDVAR (2) NDV

α OR β SCHEDULES

A) $\beta = 0, \pm 6°$

B) $\beta = 0, \pm 6°, \pm 10°$

C) $\beta = 0, \pm 4°, \pm 6°, \pm 8°$

D) $\beta = 0, \pm 4°, \pm 6°$

E) $\beta = 0, \pm 6°, \pm 8°$

* $\alpha = -6°, -1°, 0°, 6°$

NASA-MSFC-MAF

TABLE II. (Continued)

TEST: IA156A

DATA SET/RUN NUMBER COLLATION SUMMARY

DATE:

DATA SET IDENTIFIER	CONFIGURATION		β	δ_{e_1}	δ_{e_2}	M	α -10	-8	-6	-4	0	4	6	8	10	Z				TEST RUN NUMBERS
R$$19	OTS	F1	A	10	5	1.06					829									
20						1.08					830									
21						1.10					831									
22						1.15					836									
23						1.20					837									
24						1.25					838									
25						1.30					839									
26						1.40					840									
27						1.55					841									
28		MODEL $\phi=+90°$	E			0.6					846									
29						0.9					845									
30						1.10					844									
31						1.55					842									
34			A			1.10					835					4.5				
35						1.10					834					5.5				
36						1.10					832					6.5				

1 7 13 19 25 31 37 43 49 55 61 67 75 76

COEFFICIENTS IDVAR (1) IDVAR (2) NDV

α OR β SCHEDULES

A) $\beta = 0, \pm 6°$

B) $\beta = 0, \pm 6°, \pm 10°$

C) $\beta = 0, \pm 4°, \pm 6°, \pm 8°$

D) $\beta = 0, \pm 4°, \pm 6°$

E) $\beta = 0, \pm 6°, \pm 8°$

NASA-MSFC-MAF

TABLE II. (Continued)

TEST: IA156A

DATA SET/RUN NUMBER COLLATION SUMMARY

DATE:

DATA SET IDENTIFIER	CONFIGURATION		β	δ_{e_I}	δ_{e_O}	M	-10	-8	-6	-4	0	4	6	8	10
R $ $37	OTS	F1	0	10	5	1.55					843				
40	OTS+SILTS	F2	B			0.3			862		863		865		
41			A			0.3	861								866
42			C			0.6		867	868	869	870	871	872	873	
43			D			0.8		874	875	876	877	878	879		
44						0.9		880	881	882	883	884			
45						.95		885	886	887	888	889			
46						1.05		892	893	894	895	896			
47						1.10		897	898	899	900	901			
48						1.15		902	903	904	905	906			
49						1.25		907	908	909	910	911			
50						1.40		912	913	914	915	916			
51						1.55		917	918	919	920	921			
52		F3	B	10	9	0.3			928		929		930		
53			E			0.3	927								931
54			C			0.6		932	933	934	935	936	937	938	

TEST RUN NUMBERS

1 7 13 19 25 31 37 43 49 55 61 67 75 76

COEFFICIENTS IDVAR (1) IDVAR (2) NDV

α OR β SCHEDULES

A) $\beta = 0, \pm 6°$

B) $\beta = 0, \pm 6°, \pm 10°$

C) $\beta = 0, \pm 4°, \pm 6°, \pm 8°$

D) $\beta = 0, \pm 4°, \pm 6°$

E) $\beta = 0, \pm 6°, \pm 8°$

NASA-MSFC-MAF

TABLE II. (Continued)

TEST: IA156A

DATA SET/RUN NUMBER COLLATION SUMMARY

DATE:

DATA SET IDENTIFIER	CONFIGURATION	β	δ_{e_t}	δ_{e_a}	M	α = -10	-8	-6	-4	0	4	6	8	10	MACH NUMBERS				TEST RUN NUMBERS
R ~~E~~ 55	OTS +SILTS F3	D	10	9	0.8		939	940	941	942	943	944							
56					0.9		952	953	954	955	956								
57					.95		957	959	958	960	961								
58					1.05		962	963	964	965	966								
59					1.10		967	968	969	970	971								
60					1.15		972	973	974	975	976								
61					1.25		977	978	979	980	981								
62	F4	B		11	0.3			985		986		987							
63		E			0.3	984								988					
64		C			0.6		989	990	991	992	993	994	995						
65		D			0.8		996	997	998	999	1000	1001							
66					0.9		1002	1003	1004	1005	1006								
67					.95		1007	1008	1009	1010	1011								
68					1.05		1012	1013	1014	1015	1016								
69					1.10		1017	1018	1019	1020	1021								
70					1.15		1022	1023	1024	1025	1026								
71	F5	C	12		0.6		1030	1031	1042	1043	1044	1045	1046						
72		D			0.8		1047	1048	1049	1050	1051	1052							

1 7 13 19 25 31 37 43 49 55 61 67 75 76

COEFFICIENTS IDVAR (1) IDVAR (2) NDV

α OR β SCHEDULES

A) $\beta = 0, \pm 6°$

B) $\beta = 0, \pm 6°, \pm 10°$

C) $\beta = 0, \pm 4°, \pm 6°, \pm 8°$

D) $\beta = 0, \pm 4°, \pm 6°$

E) $\beta = 0, \pm 6°, \pm 8°$

NASA-MSFC-MAF

TABLE II. (Continued)

TEST: IA156A

DATA SET/RUN NUMBER COLLATION SUMMARY

DATE:

DATA SET IDENTIFIER	CONFIGURATION		β	δ_{e_x}	δ_{e_0}	M	-10	-8	-6	-4	0	4	6	8	10	MACH NUMBERS			
R $73	OTS+SILTS	F5	D	12	11	0.9		1053	1054	1055	1056	1058							
74						.95		1059	1060	1061	1062	1063							
75						1.05		1064	1065	1066	1067	1068							
76						1.10		1069	1070	1071	1072	1073							
77		F6	C	8	11	0.6		1077	1078	1079	1080	1081	1082	1083					
78			D			0.8		1084	1085	1086	1087	1088	1089						
79						0.9		1090	1091	1092	1093	1094							
80						.95		1095	1096	1097	1098	1099							
81						1.05		1102	1103	1104	1105	1106							
82						1.10		1107	1108	1109	1110	1111							
83		F7	C		9	0.6		1114	1115	1117	1118	1119	1120	1121					
85			D			0.8		1132	1133	1134	1135	1136	1137						
86						0.9		1139	1140	1141	1142	1143							
87						.95		1144	1145	1146	1147	1148							
88						1.05		1149	1150	1151	1152	1153							
89						1.10		1154	1155	1156	1157	1158							
90						1.15		1159	1160	1161	1162	1163							

TEST RUN NUMBERS

1 7 13 19 25 31 37 43 49 55 61 67 75 76

COFFICIENTS IDVAR (1) IDVAR (2) NDV

α OR β SCHEDULES

A) $\beta = 0, \pm 6°$

B) $\beta = 0, \pm 6°, \pm 10°$

C) $\beta = 0, \pm 4°, \pm 6°, \pm 8°$

D) $\beta = 0, \pm 4°, \pm 6°$

E) $\beta = 0, \pm 6°, \pm 8°$

NASA-MSFC-MAF

TABLE II. (Continued)

TEST: IA156A

DATA SET/RUN NUMBER COLLATION SUMMARY

DATE:

DATA SET IDENTIFIER	CONFIGURATION		β	δ_{e_L}	δ_{e_R}	M	α -10	-8	-6	-4	0	4	6	8	10	MACH NUMBERS			
R ~~89~~ 91	OTS+SILTS	F7	D	8	9	1.25		1164	1165	1166	1167	1168							
92		F8	C		5	0.6		1173	1174	1175	1176	1177	1178	1179					
93			D			0.8		1180	1181	1182	1183	1184	1185						
94						0.9		1186	1187	1188	1189	1190							
95						.95		1191	1192	1193	1194	1195							
96						1.05		1196	1197	1198	1199	1200							
97						1.10		1201	1202	1203	1204	1205							
98						1.15		1206	1207	1208	1210	1211							
A0						1.25		1224	1225	1226	1227	1228							
A1						1.40		1229	1230	1231	1232	1233							
A2						1.55		1212	1213	1214	1215	1216							
A3		F9	C	12		0.6		1240	1241	1242	1243	1244	1245	1246					
A4			D			0.8		1247	1248	1249	1250	1251	1252						
A5						0.9		1253	1254	1255	1256	1257							
A6						.95		1258	1259	1260	1261	1262							
A7						1.05		1263	1264	1265	1266	1267							
A8						1.10		1268	1269	1270	1271	1272							

TEST RUN NUMBERS

1 7 13 19 25 31 37 43 49 55 61 67 75 76

COEFFICIENTS IDVAR (1) IDVAR (2) NDV

α OR β SCHEDULES

A) $\beta = 0, \pm 6°$

B) $\beta = 0, \pm 6°, \pm 10°$

C) $\beta = 0, \pm 4°, \pm 6°, \pm 8°$

D) $\beta = 0, \pm 4°, \pm 6°$

E) $\beta = 0, \pm 6°, \pm 8°$

NASA-MSFC-MAF

TABLE II. (Continued)

TEST: IA156A

DATA SET/RUN NUMBER COLLATION SUMMARY

DATE:

DATA SET IDENTIFIER	CONFIGURATION	β	δ_{e_i}	δ_{e_o}	M	α -10	-8	-6	-4	0	4	6	8	10	MACH NUMBERS			
R4 $A9	OTS+SILTS F9	D	12	5	1.15		1273	1274	1275	1276	1277							
B0					1.25		1278	1279	1280	1281	1282							
B1					1.40		1283	1284	1285	1286	1287							
B2					1.55		1288	1289	1290	1291	1292							
B3	F10	C		9	0.6		1295	1296	1297	1298	1299	1300	1301					
B4		D			0.8		1302	1303	1304	1306		1314						
B5					0.8					1313								
B6					0.9		1308	1309	1310	1311	1312							
B7	OTS F11				0.8						1324							
B8					.95		1325	1326	1327	1328	1329							
B9					1.05		1330	1331	1332	1333	1334							
C0					1.10		1335	1336	1337	1338	1339							
C1					1.15		1341	1342	1343	1344	1345							
C2					1.25		1346	1347	1348	1349	1350							
C3	F12			-2	1.15		1355	1356	1357	1358	1359							
C4					1.25		1360	1361	1362	1363	1364							
C5					1.40		1365	1366	1367	1368	1369							
C6					1.55		1370	1371	1372	1373	1374							

TEST RUN NUMBERS

1 7 13 19 25 31 37 43 49 55 61 67 75 76

COEFFICIENTS IDVAR (1) IDVAR (2) NDV

α OR β SCHEDULES

A) $\beta = 0, \pm 6°$

B) $\beta = 0, \pm 6°, \pm 10°$

C) $\beta = 0, \pm 4°, \pm 6°, \pm 8°$

D) $\beta = 0, \pm 4°, \pm 6°$

E) $\beta = 0, \pm 6°, \pm 8°$

NASA-MSFC-MAF

TABLE II. (Continued)

TEST: IA156A

DATA SET/RUN NUMBER COLLATION SUMMARY

DATE:

DATA SET IDENTIFIER	CONFIGURATION	β	δ_{e_f}	δ_{e_a}	M	-10	-8	-6	-4	0	4	6	8	10	MACH NUMBERS			
R $ $C7	OTS + SILTS F13	D	9	-2	1.15		1377	1378	1379	1380	1381							
C8					1.25		1382	1383	1384	1385	1386							
C9					1.40		1387	1388	1389	1390	1391							
D0					1.55		1392	1393	1394	1395	1396							
D1	F14		8		1.15		1399	1400	1401	1402	1403							
D2					1.25		1404	1405	1406	1407	1408							
D3					1.40		1409	1410	1411	1412	1413							
D4					1.55		1414	1415	1416	1417	1418							
D5					1.55		1419											
D6	F15		10		1.15		1432	1433	1434	1435	1436							
D7					1.25		1437	1438	1439	1440	1441							
D8					1.40		1442	1443	1444	1445	1446							
D9					1.55		1447	1448	1449	1450	1451							
E0	F16			-7	1.40		1456	1457	1458	1459	1460							
E1					1.55		1461	1462	1463	1464	1465							
E2	F17		12		1.40		1469	1470	1471	1472	1473							
E3					1.55		1474	1475	1476	1477	1478							
E4	F18		8		1.40		1482	1483	1484	1485	1486							

TEST RUN NUMBERS

1 7 13 19 25 31 37 43 49 55 61 67 75 76

COEFFICIENTS IDVAR (1) IDVAR (2) NDV

α OR β SCHEDULES

A) $\beta = 0, \pm 6°$

B) $\beta = 0, \pm 6°, \pm 10°$

C) $\beta = 0, \pm 4°, \pm 6°, \pm 8°$

D) $\beta = 0, \pm 4°, \pm 6°$

E) $\beta = 0, \pm 6°, \pm 8°$

NASA-MSFC-MAF

TABLE II. (Continued)

TEST: IA156A

DATA SET/RUN NUMBER COLLATION SUMMARY

DATE:

DATA SET IDENTIFIER	CONFIGURATION		β	δ_{e_I}	δ_{e_O}	M	α -10	-8	-6	-4	0	4	6	8	10	MACH NUMBERS			
R$$ $E5	OTS + SILTS	F18	D	8	-7	1.55		1487	1488	1489	1490	1491							
E6		F19		10	2	1.05		1494	1495	1496	1497	1498							
E7						1.10		1499	1500	1501	1502	1503							
E8						1.15		1504	1505	1506	1507	1508							
E9						1.15					1509								

TEST RUN NUMBERS

1 7 13 19 25 31 37 43 49 55 61 67 75 76

COEFFICIENTS

IDVAR (1) IDVAR (2) NDV

α OR β SCHEDULES

A) $\beta = 0, \pm 6°$

B) $\beta = 0, \pm 6°, \pm 10°$

C) $\beta = 0, \pm 4°, \pm 6°, \pm 8°$

D) $\beta = 0, \pm 4°, \pm 6°$

E) $\beta = 0, \pm 6°, \pm 8°$

NASA-MSFC-MAF

TABLE II. (Continued)

FORCE DATASETS

R8NV$$ - Launch Vehicle Aerodynamic Coefficients
R8NØ$$ - Orbiter Aerodynamic Coefficients
R8NW$$ - Wing Data Coefficients
R8NF$$ - Pressure Data and Vertical Tail Data
R8NM$$ - Miscellaneous
R8NT$$ - ET Alone Aerodynamic Coefficients
R8NS$$ - ET + Left and Right SRB (ET balance)
R8NL$$ - Left SRB Aerodynamic Coefficients
R8NR$$ - Right SRB Aerodynamic Coefficients
R8NN$$ - Left SRB
R8NP$$ - Right SRB

PRESSURE DATASETS

P4CE$$ - Orbiter Base Coefficient of Pressure Data
P4CF$$ - Body Flap (Bottom) Coefficient of Pressure Data
P4CG$$ - Body Flap (Top) Coefficient of Pressure Data
P4CL$$ - Left SRB Base Coefficient of Pressure Data
P4CR$$ - Right SRB Base Coefficient of Pressure Data
P4CT$$ - ET Base Coefficient of Pressure Data

FORCE DATA - COEFFICIENT SCHEDULES

LAUNCH VEHICLE

Datasets R8NV01 thru 32, 34 thru 37, 40 thru 98, AO thru E9

ALPHAØ BETAØ CNL CNFL CAL CAFL CLMFL CYFL CYNL CYNFL CBLFL

ORBITER

Datasets R8NØ01 thru 32, 34 thru 37, 40 thru 98, AO thru E9

ALPHAØ BETAØ CNFØ CAPØ CLMFØ CYFØ CYNFØ CBLFØ CNBØ CABØ CLMBØ

WING

Datasets R8NW01 thru 32, 34 thru 37, 40 thru 98, AO thru E9

ALPHAØ BETAØ CNW CBW CTW CHEI CHEØ IB-ELV ØB-ELV PHII ALPHAI MACH

TABLE II. (Continued)

FORCE DATA - COEFFICIENT SCHEDULES (Continued)

VERTICAL TAIL

Datasets R8NF01 thru 32, 34 thru 37, 40 thru 98, A0 thru E9

ALPHAØ BETAØ CP1 CP2 CP3 CP4 CPBV RUDDER CHR CNVT CBVT CTVT

MISCELLANEOUS

Datasets R8NM01 thru 32, 34 thru 37, 40 thru 98, Ao thru E9

ALPHAØ BETAØ ALFAØU BETAØU PT P Q TT AFA BFA DEINLR DEØNLR

EXTERNAL TANK

Datasets R8NT01 thru 32, 34 thru 37, 40 thru 98, A0 thru E9

ALPHAT BETAT CNFT CAFT CLMFT CYFT CYNFT CBLFT CABT CP7 ALPHAØ BETAØ

(2) SOLID ROCKET BOOSTERS + EXTERNAL TANK

Datasets R8NS01 thru 32, 34 thru 37, 40 thru 98, A0 thru E9

ALPHAT BETAT CNFTS CATS CAFTS CLMFTS CYFTS CYNTS CYNFTS CBLFTS ALFATU BETATU

LEFT SRB

Datasets R8NL01 thru 32, 34 thru 37, 40 thru 98, A0 thru E9

ALPHAL BETAL CNFLS CAFLS CLMFLS CYFLS CYNFLS CBLLS CABLS CYNBLS CP5 CP6

RIGHT SRB

Datasets R8NR01 thru 32, 34 thru 37, 40 thru 98, A0 thru E9

ALPHAR BETAR CNFRS CAFRS CLMFRS CYFRS CYNFRS CBLRS CABRS CYNBRS CP9 CP10

TABLE II. (Concluded)

FORCE DATA - COEFFICIENT SCHEDULES (Concluded)

LEFT SRB

Datasets R8NN01 thru 32, 34 thru 37, 40 thru 98, A0 thru E9

ALPHAL BETAL CALS CYNLS ALFLSU BETLSU

RIGHT SRB

Datasets R8NP01 thru 32, 34 thru 37, 40 thru 98, Ao thru E9

ALPHAR BETAR CARS CYNRS ALFRSU BETRSU

PRESSURE DATA - COMPONENTS

Datasets P4C$01 thru 32, 34 thru 37, 40 thru 98, A0 thru E9 contain CP for taps located in the following components:

$ = E ORBITER BASE

F BODY FLAP BOTTOM

G BODY FLAP TOP

L LEFT SRB BASE

R RIGHT SRB BASE

T ET BASE

TABLE III. ELEVON DEFLECTION ANGLES

δ_{e_I}, deg		
Nominal	Left Hand Measured	Right Hand Measured
12	11.88	12.12
10	9.90	10.02
8	7.82	8.10

δ_{e_O}, deg		
Nominal	Left Hand Measured	Right Hand Measured
-7	-6.95	-6.88
-2	-2.00	-2.30
2	2.00	1.88
5	5.00	5.00
9	9.00	8.92
11	11.07	11.25

Notes:

1. Positive directions of force coefficients, moment coefficients, and angles are indicated by arrows
2. For clarity, origins of wind and stability axes have been displaced from the center of gravity

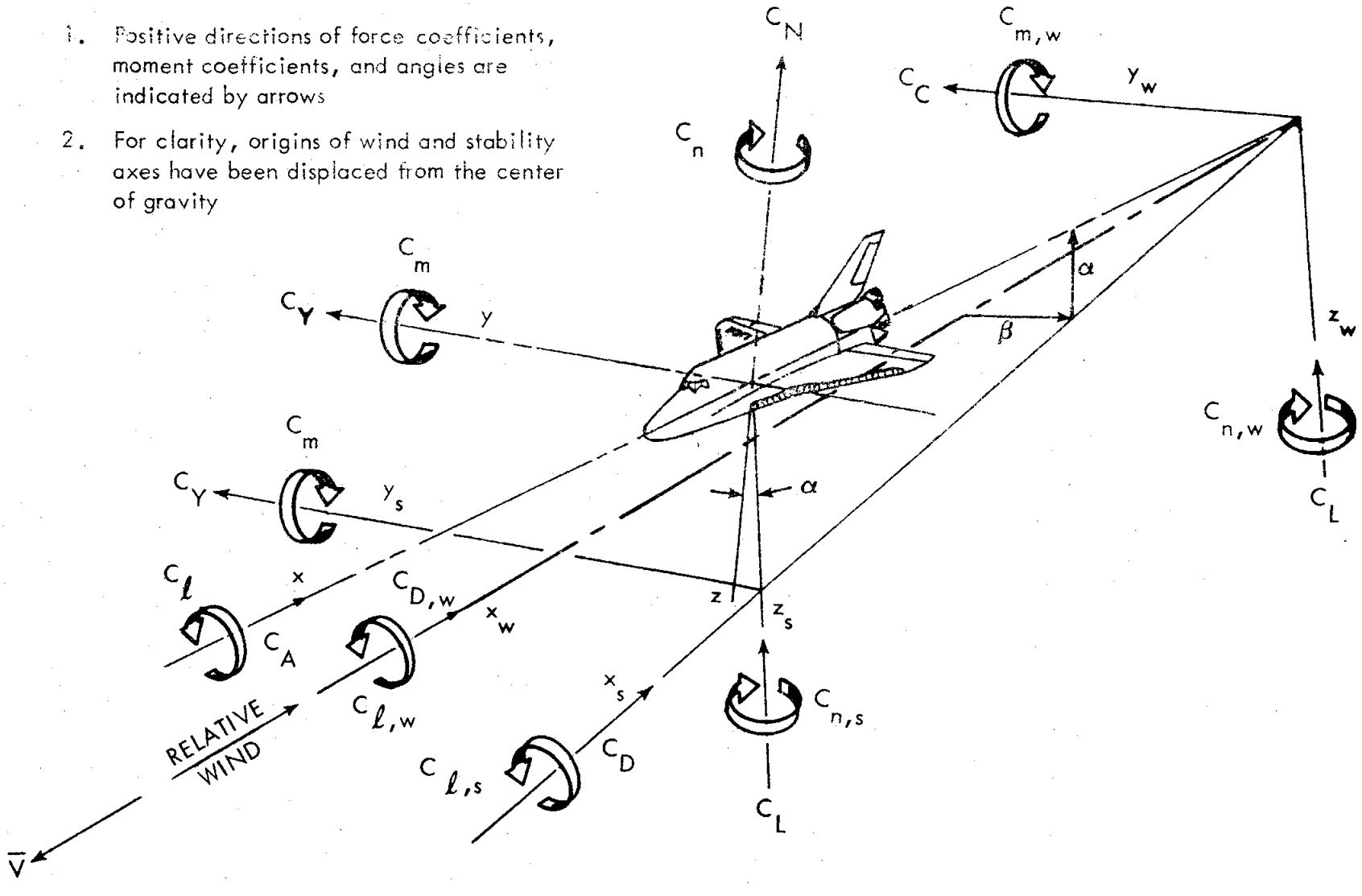

a. Axis Systems

Figure 1. Model axis systems, sign conventions and reference dimensions.

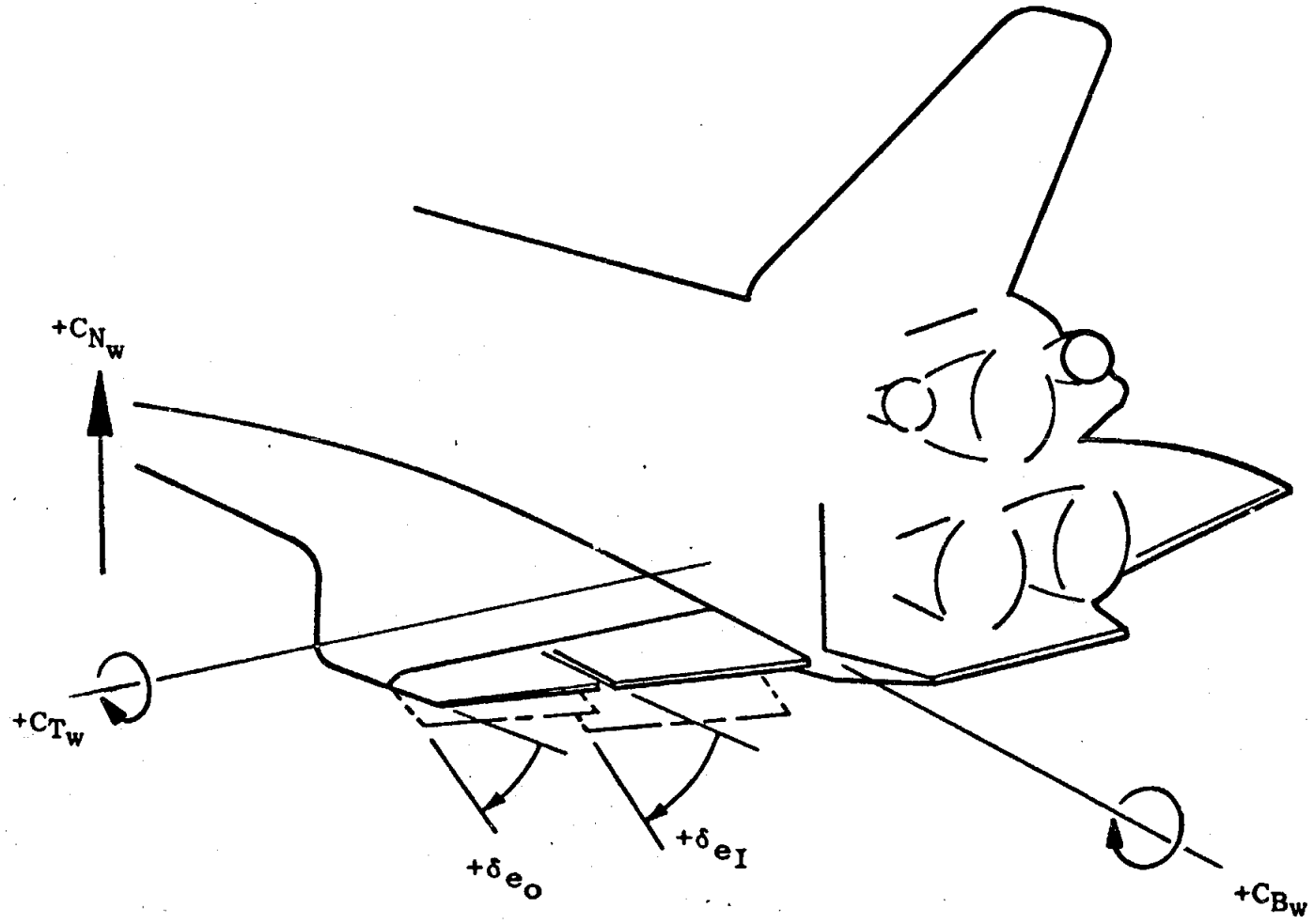

b. Definition of Deflection Angles and Wing Coefficients
Figure 1. Continued.

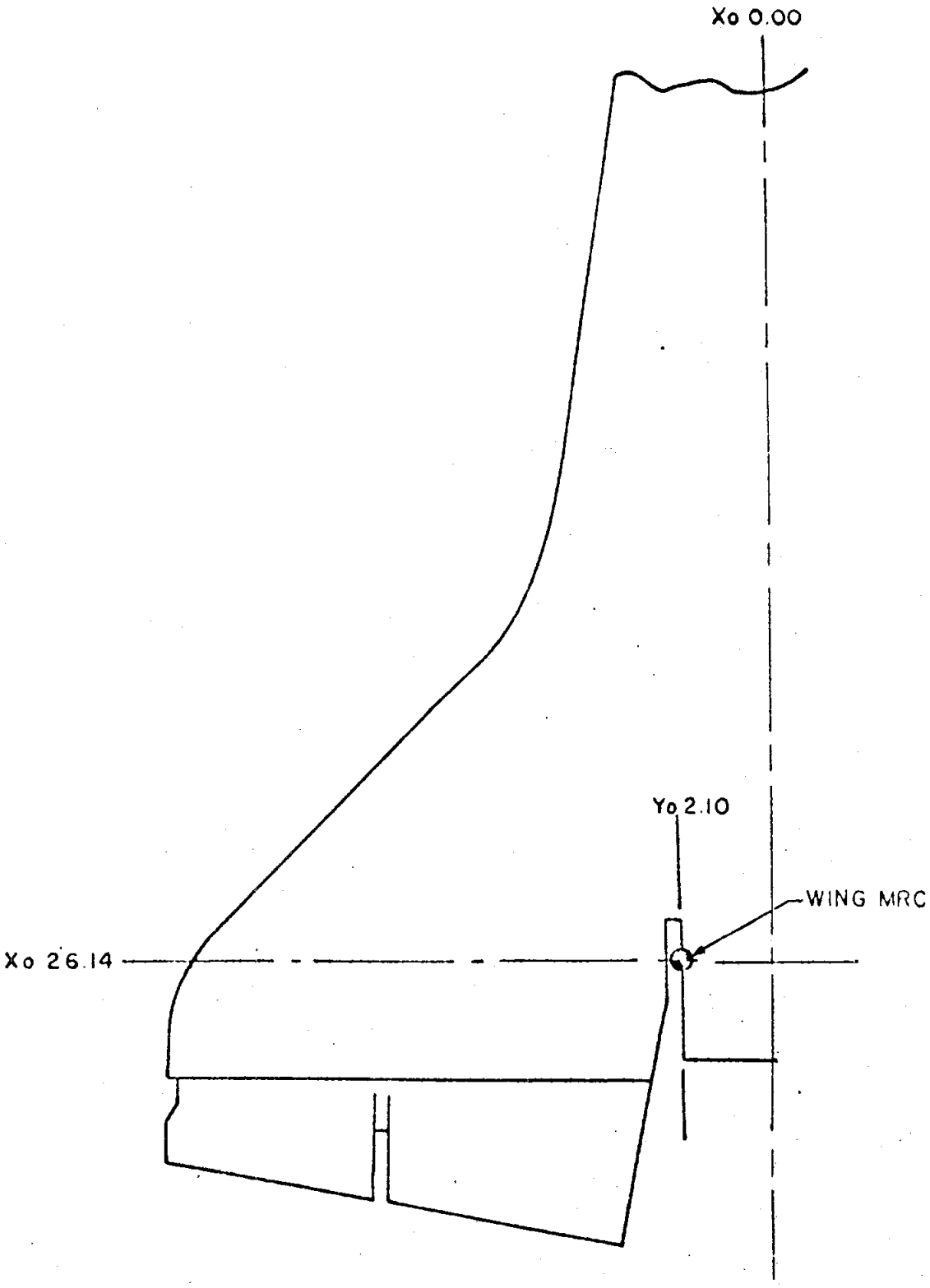

c. Wing Moment Reference Center
Figure 1. Continued.

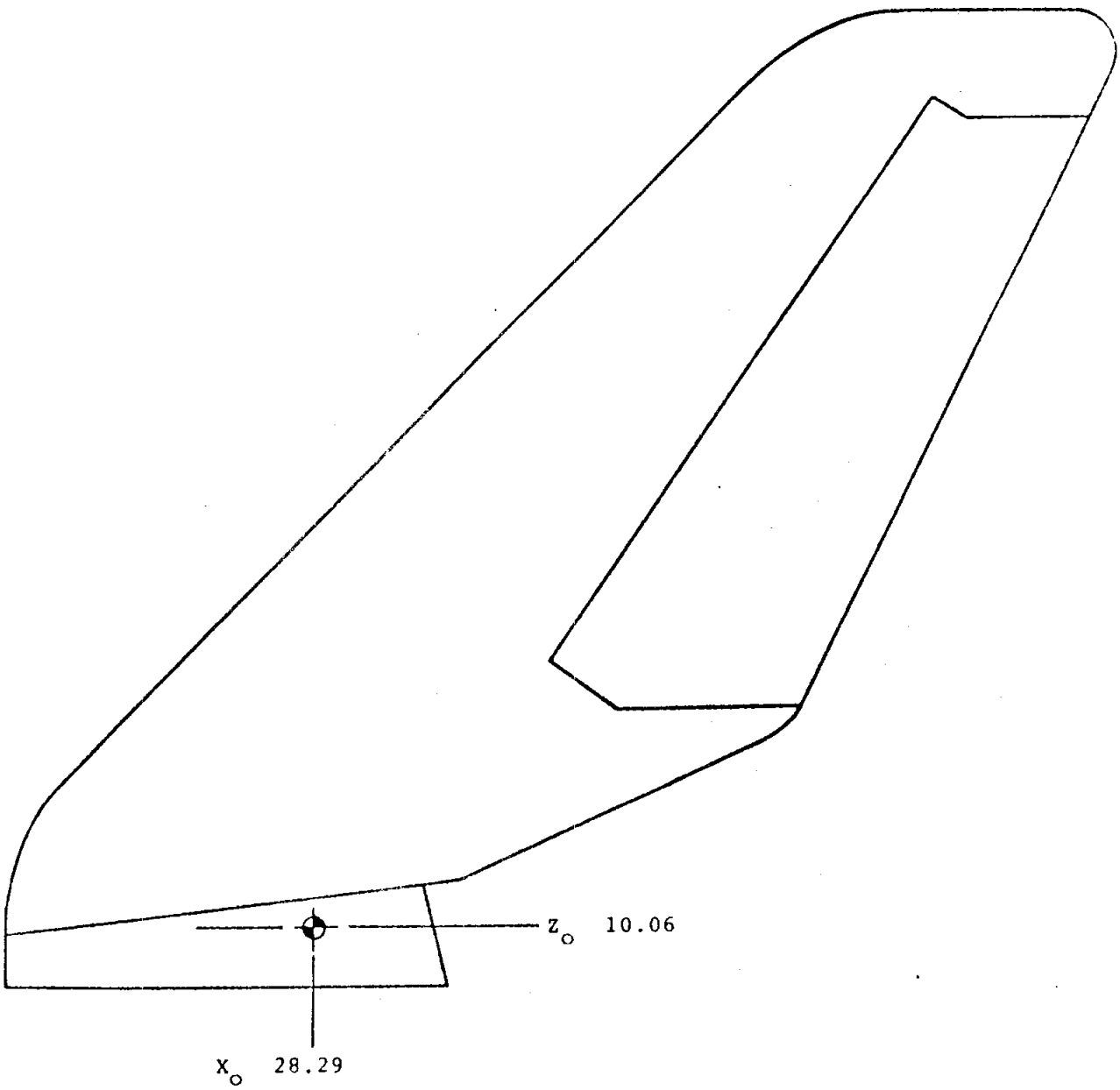

d. Vertical Stabilizer Moment Reference Center
Figure 1. Continued.

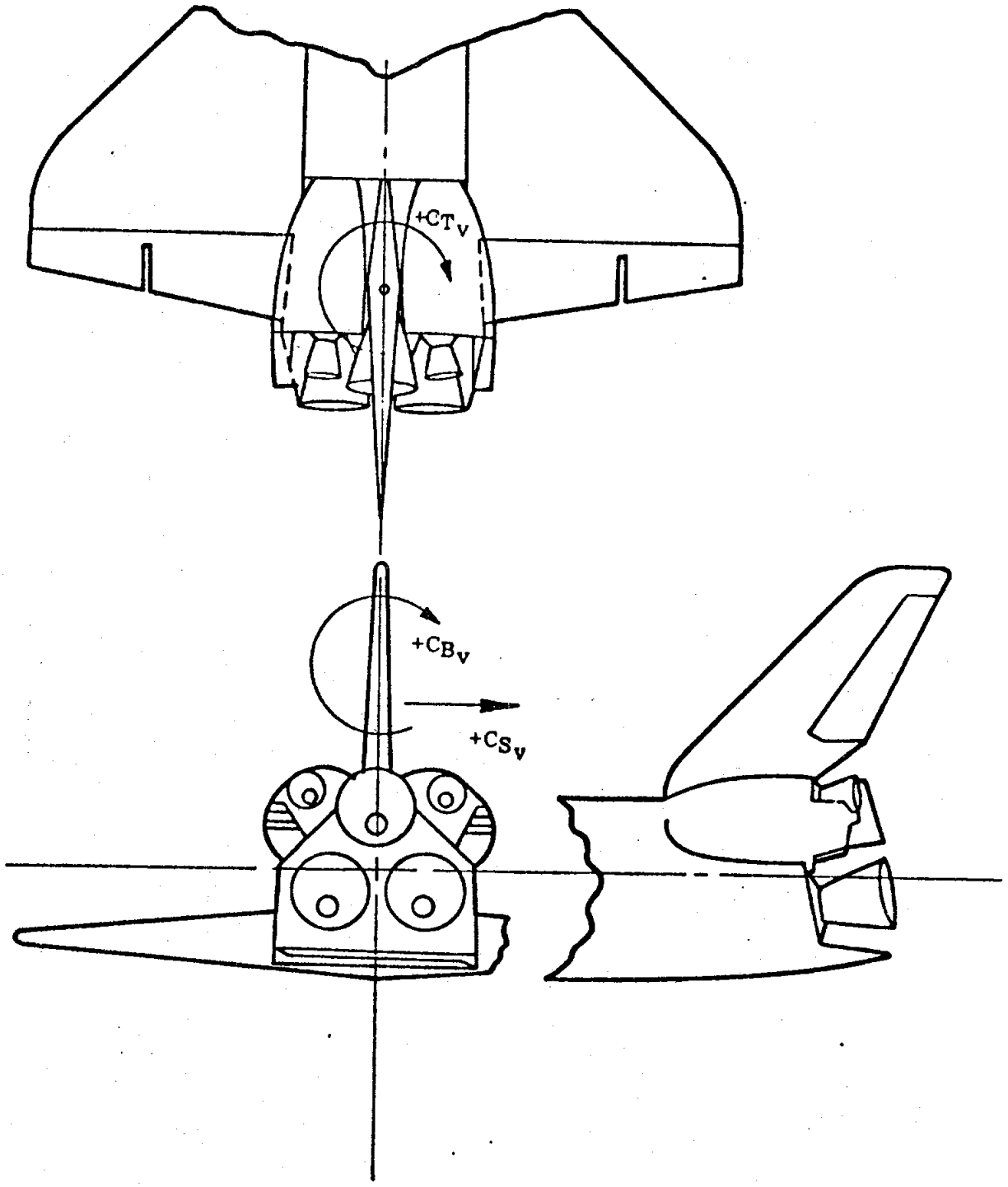

e. Definition of Vertical Stabilizer Coefficients
Figure 1. Continued.

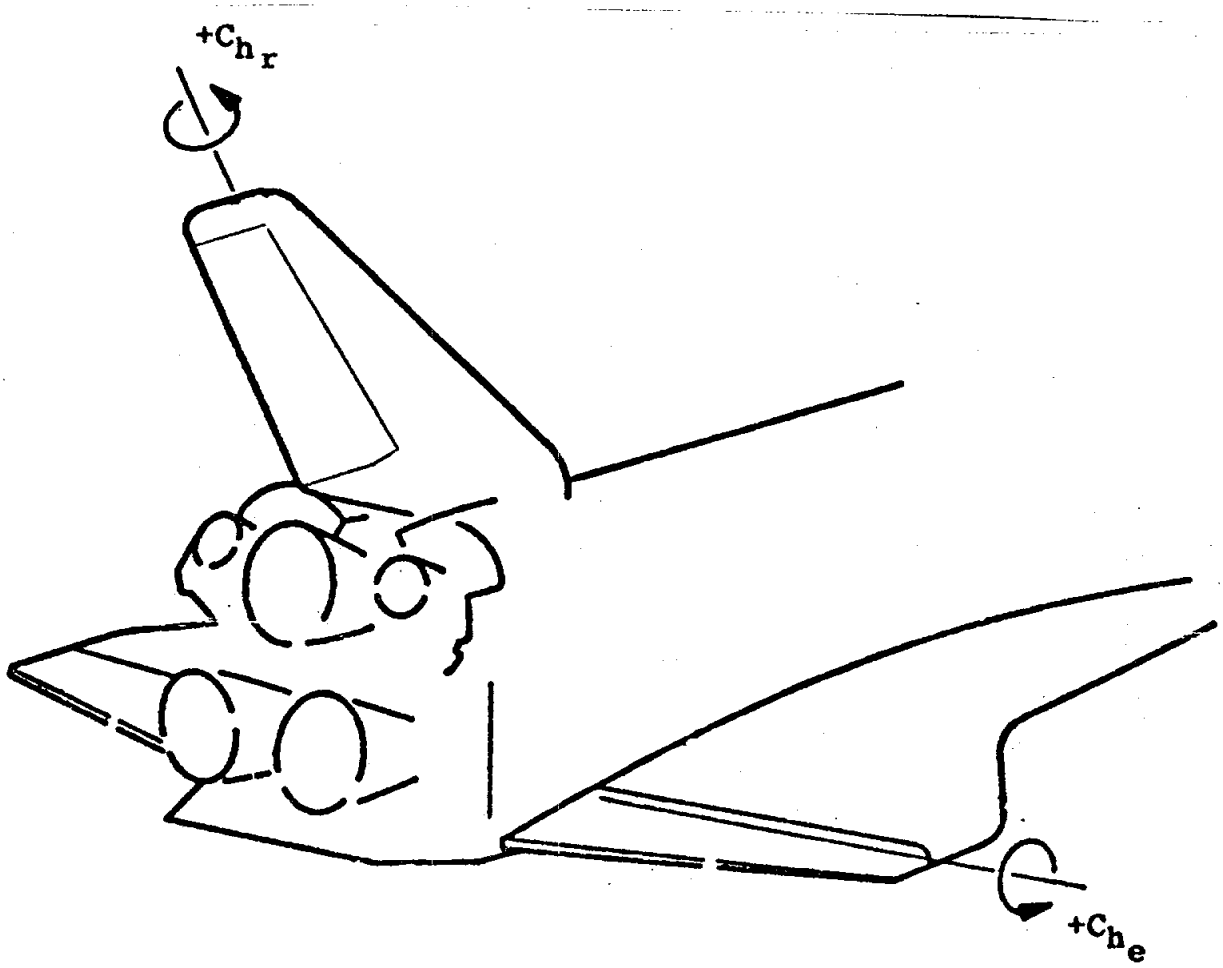

f. Definition of Elevon and Rudder Hinge Moment Coefficients
Figure 1. Concluded.

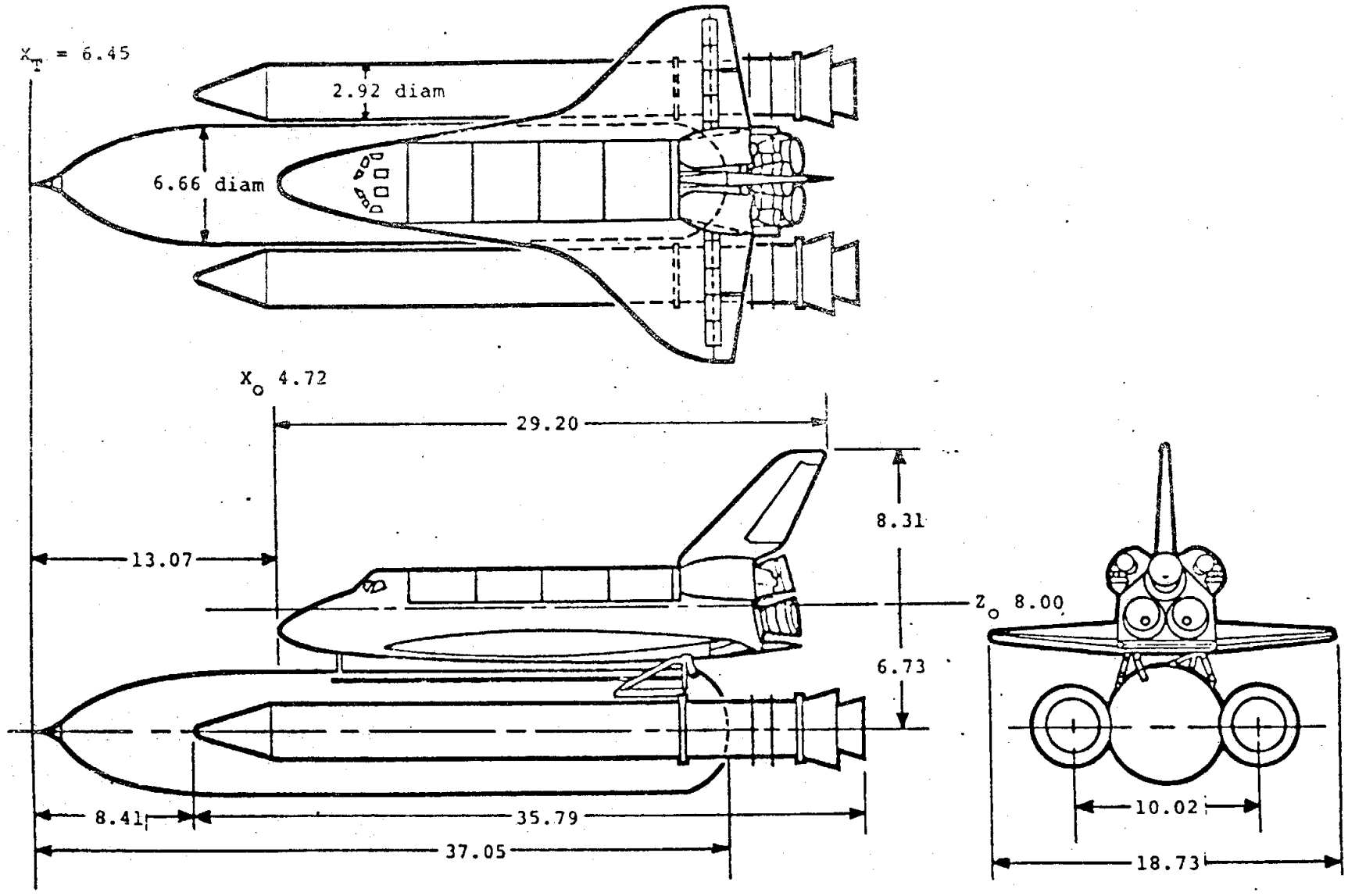

a. Major Model Component Dimensions
Figure 2. Model sketches.

Tap	Z_o	Y_o
301	10.64	0
302	10.1	0
306	6.04	0
308	9.56	-0.76
311	6.04	-0.76
312	8.78	-1.56
314	6.04	-1.56
315	8.28	-2.06
316	7.52	-2.06
317	6.8	-2.06

Tap	Z_o	Y_o
318	6.04	-2.06
319	10.28	-1.1
320	9.84	-1.76
321	10.44	-2.06
322	9.4	-1.92
323	8.78	-2.14
324	9.3	-2.6
325	CAV	0
326	CAV	0

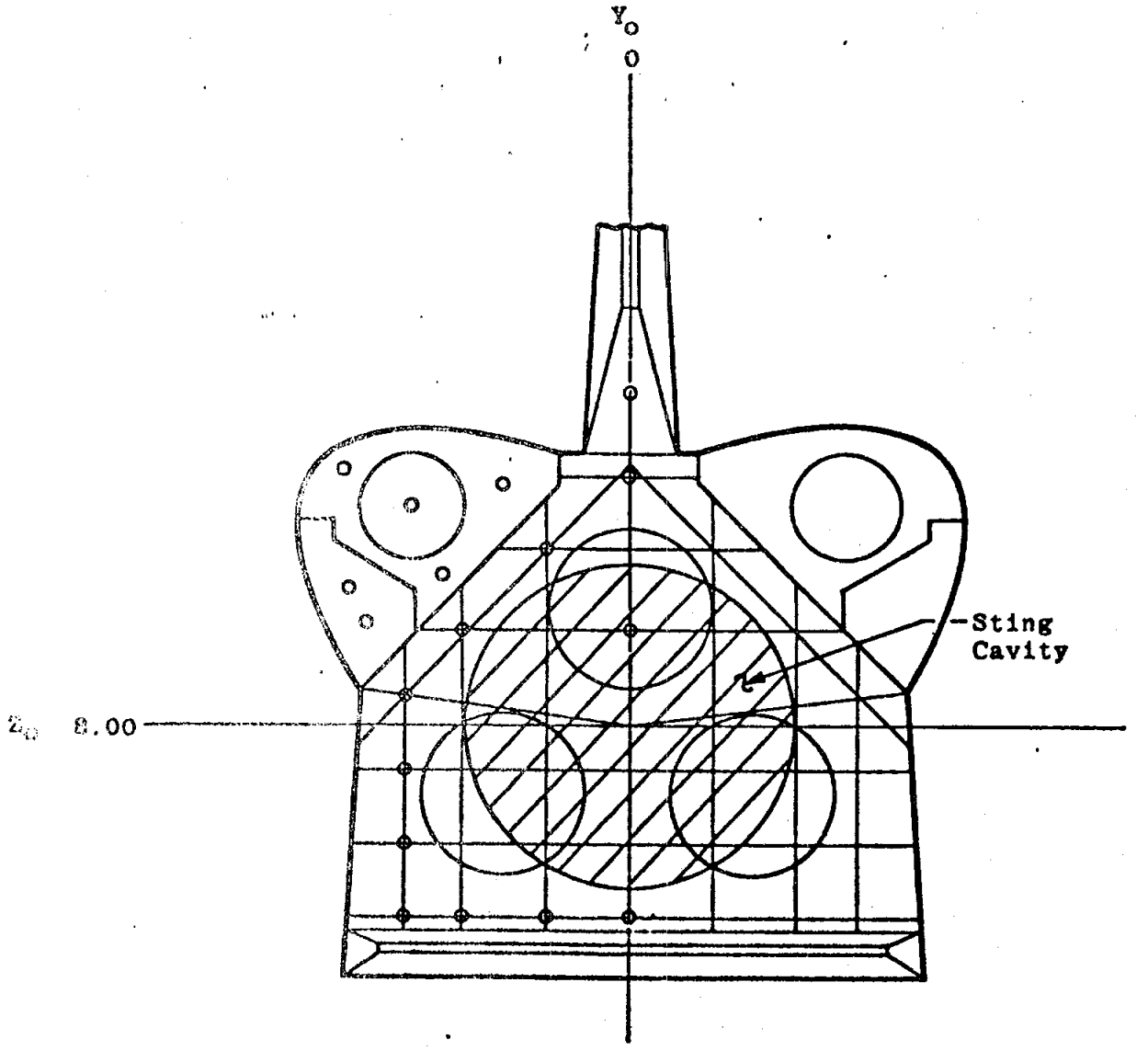

b. Orbiter Base Pressure Orifice Locations
Figure 2. Continued.

η	X/C_{BF}			
	-.10	.20	.60	.95
.10	405	406	407	408
.20				
.35				
.50	413	414	415	416
.65		422		424
.80		430		432
.90	437	438	439	440

C_{BF} = 1.62 Inches

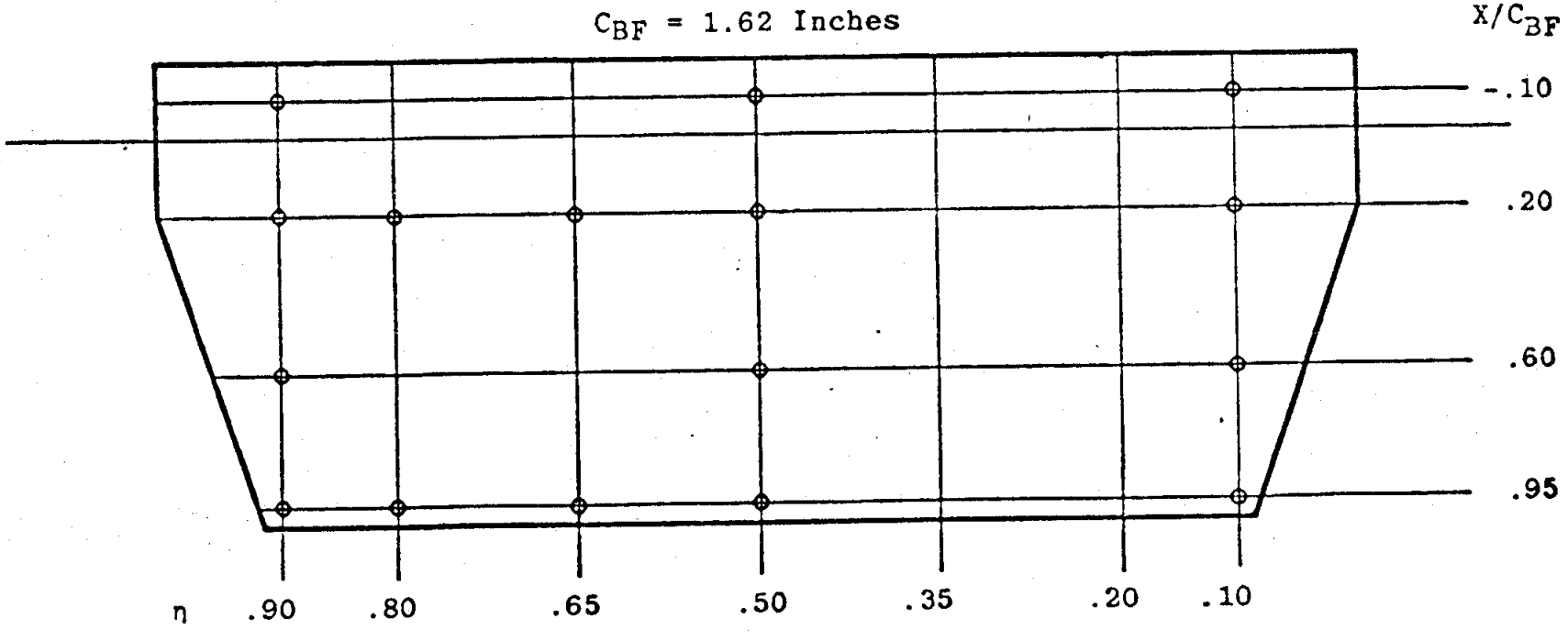

c. Orbiter Body Flap Top Surface Pressure Orifice Locations
Figure 2. Continued.

η	X/C_{BF}			
	-.10	.20	.60	.95
.10	401	402	403	404
.20				
.35				
.50	409	410	411	412
.65		418		420
.80		426		428
.90	433	434	435	436

C_{BF} = 1.62 Inches

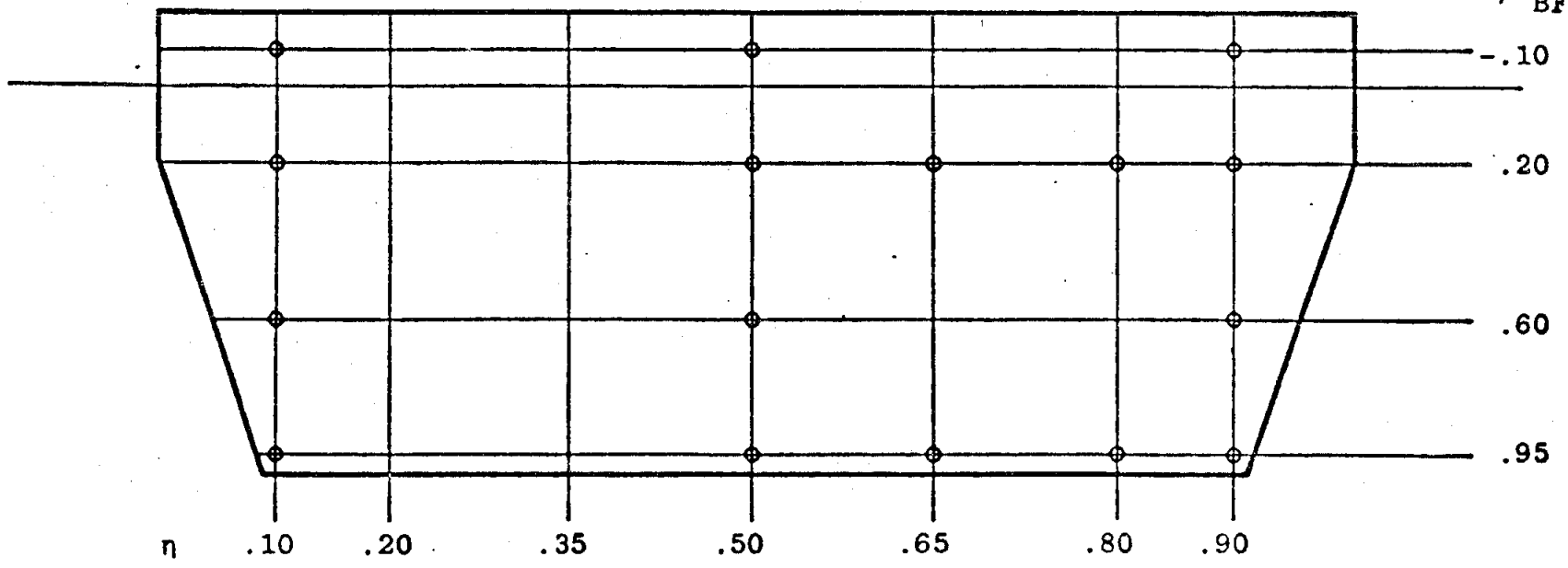

d. Orbiter Body Flap Bottom Surface Pressure Orifice Locations
Figure 2. Continued.

Radius (Model Scale)	φ, deg															
	0	15	30	45	60	90	1125	135	157.5	180	202.5	225	247.5	270	300	330
3.13	1502		1503	1501	1504	1505	1506	1507		1509		1511	1512	1513	1514	
2.96	1516		1517		1518	1519	1520	1521		1523		1525	1526	1527	1528	
2.78	1530	1531		1533	1534	1535	1536	1537	1538	1539	1540	1541		1543	1544	
2.10	1546					1549		1551		1553		1555		1557		
1.55						1563								1571		
0	1574															

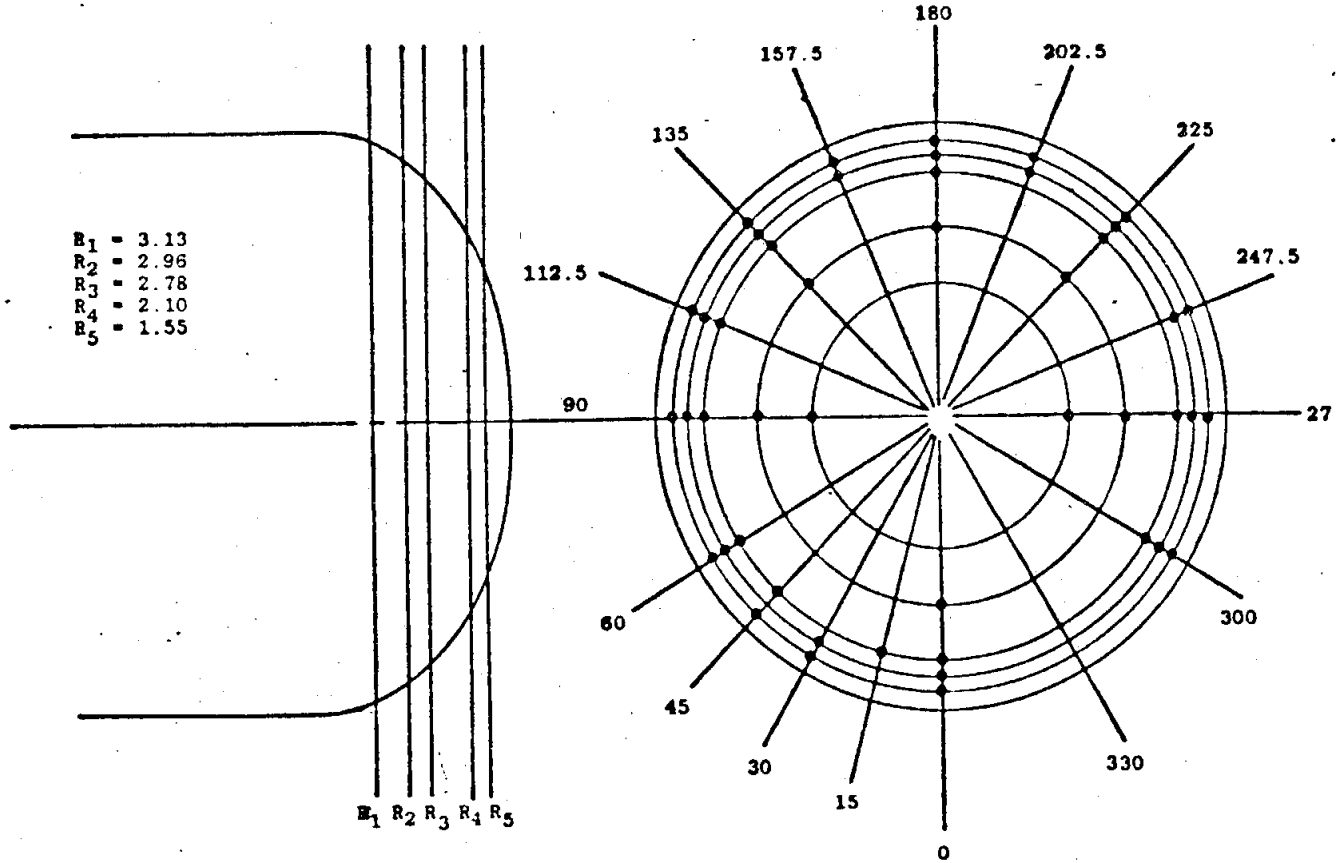

e. External Tank Base Pressure Orifice Locations
Figure 2. Continued.

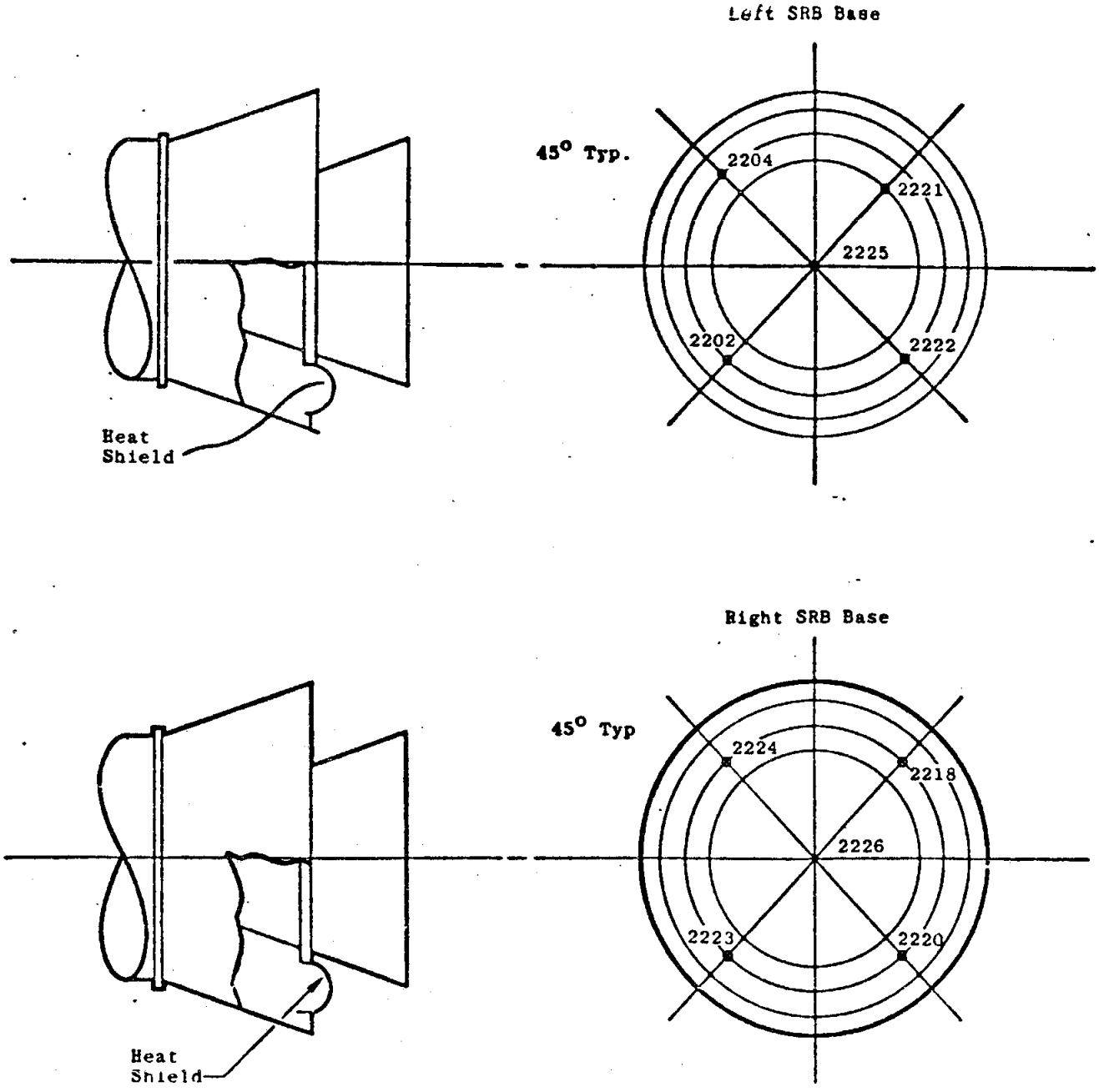

f. Solid Rocket Boosters Base Pressure Tap Locations
Figure 2. Continued.

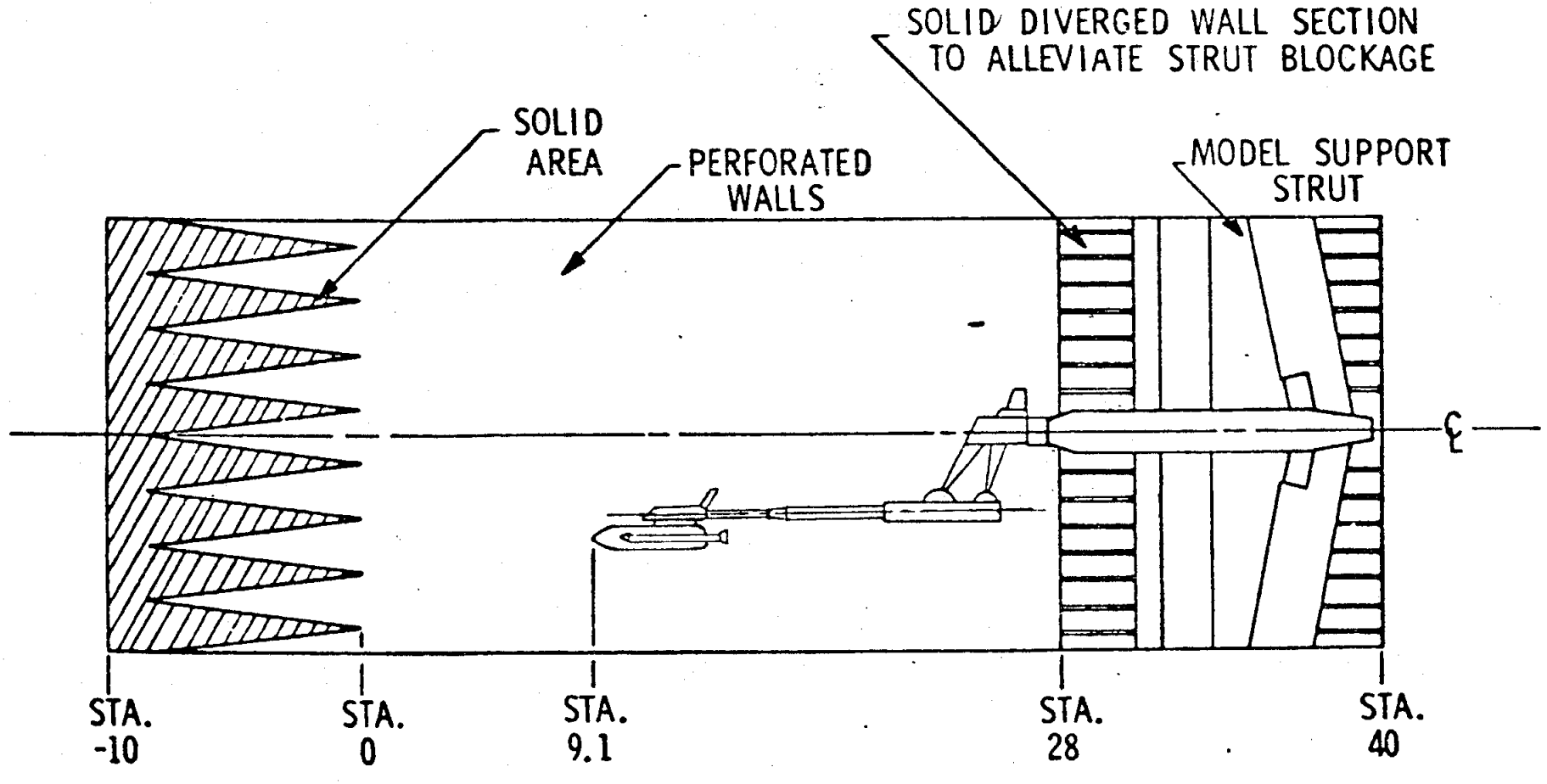

g. Sketch Showing Location of 0.02-Scale Model in the 16T Test Section
Figure 2. Continued.

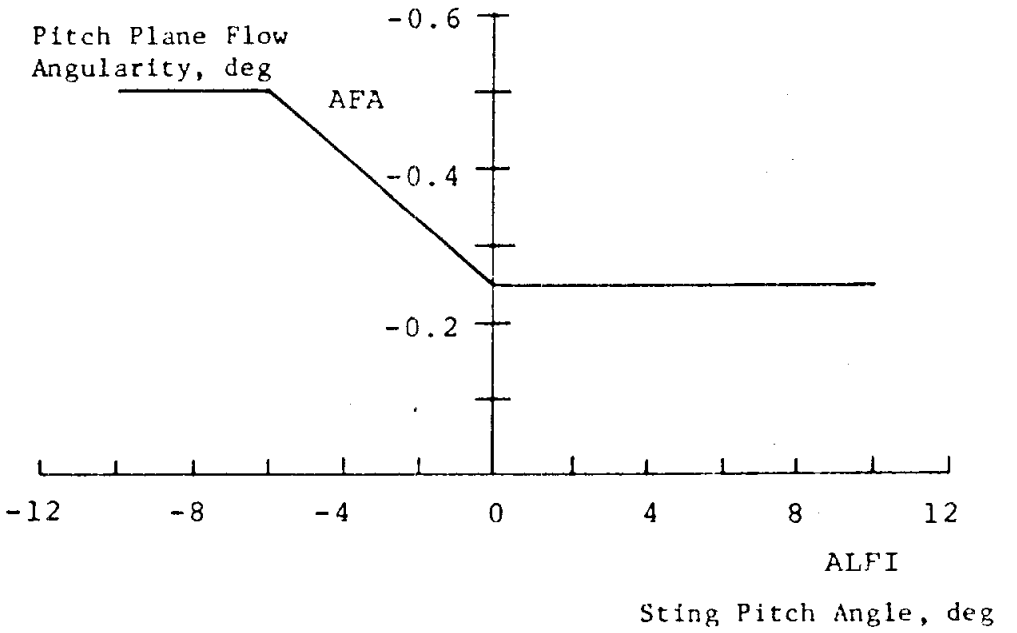

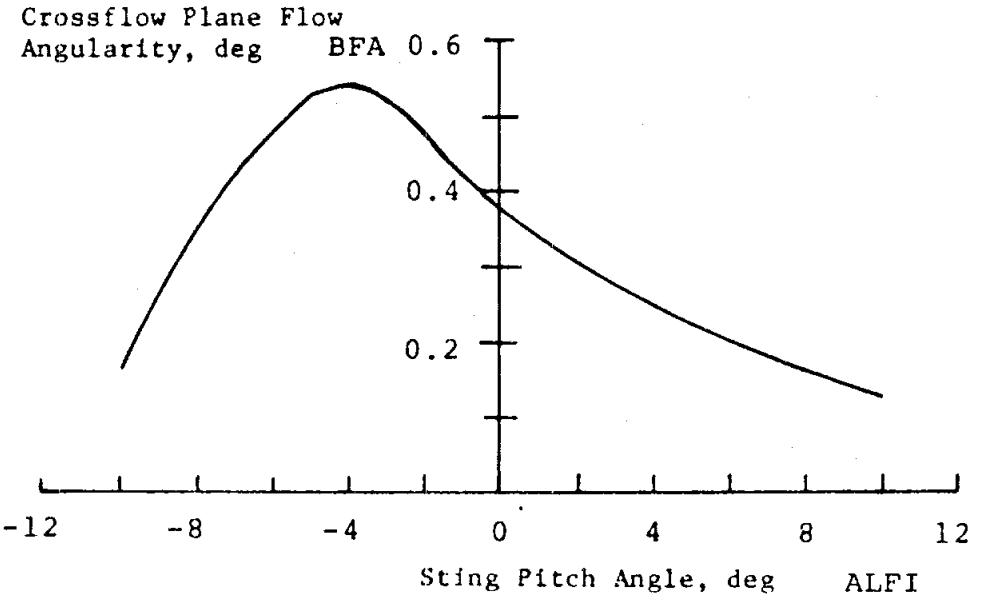

h. Pitch Plane and Cross-Flow Plane Flow Angularity Corrections for Hi-Pitch System
Figure 2. Continued.

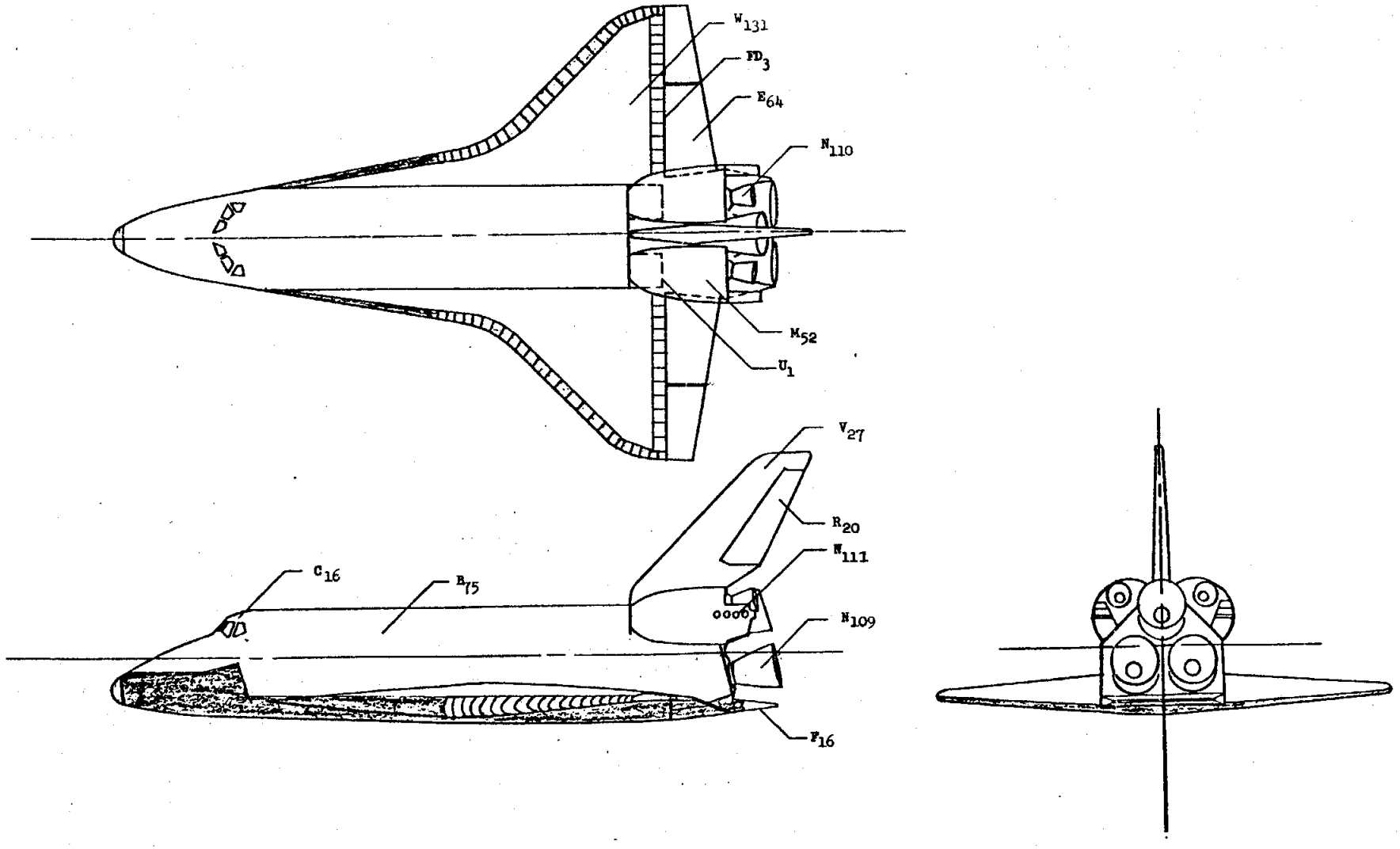

i. Orbiter Nomenclature
Figure 2. Continued.

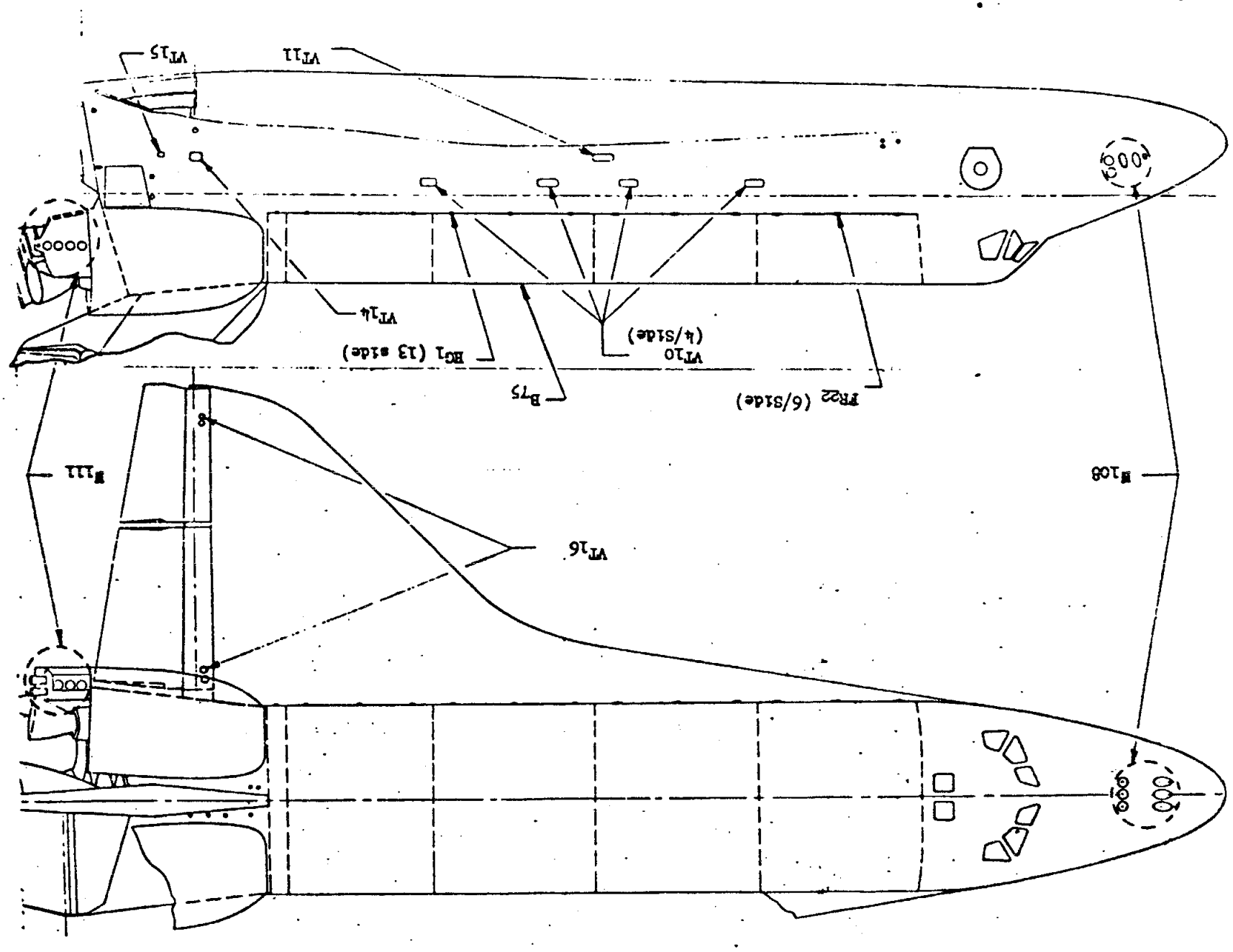

j. Orbiter Protuberance and Penetration Configuration
Figure 2. Continued.

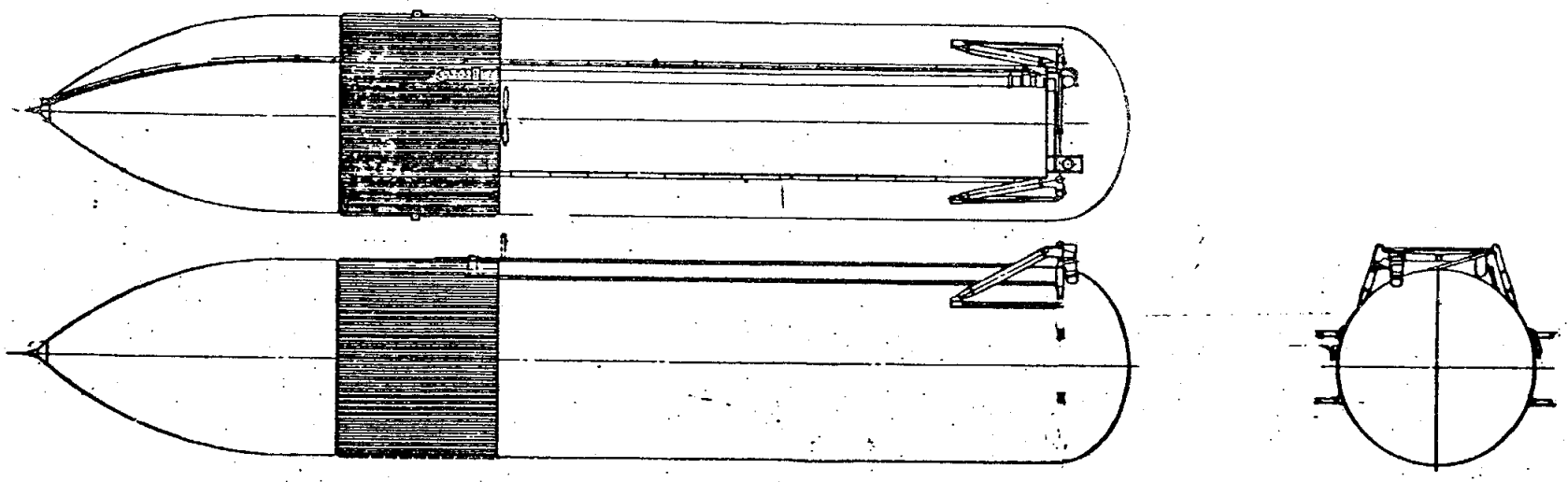

k. External Tank (T_{39})
Figure 2. Continued.

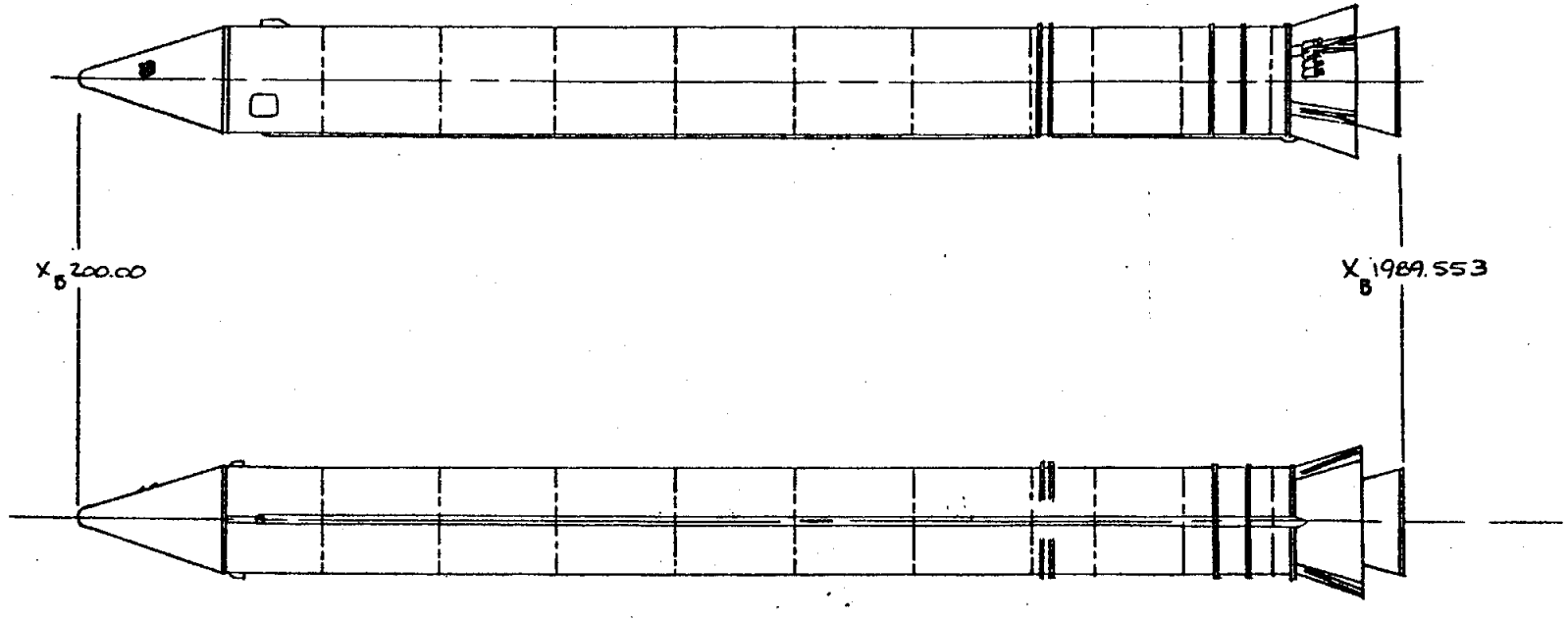

1. Solid Rocket Booster (S_{27})
Figure 2. Concluded.

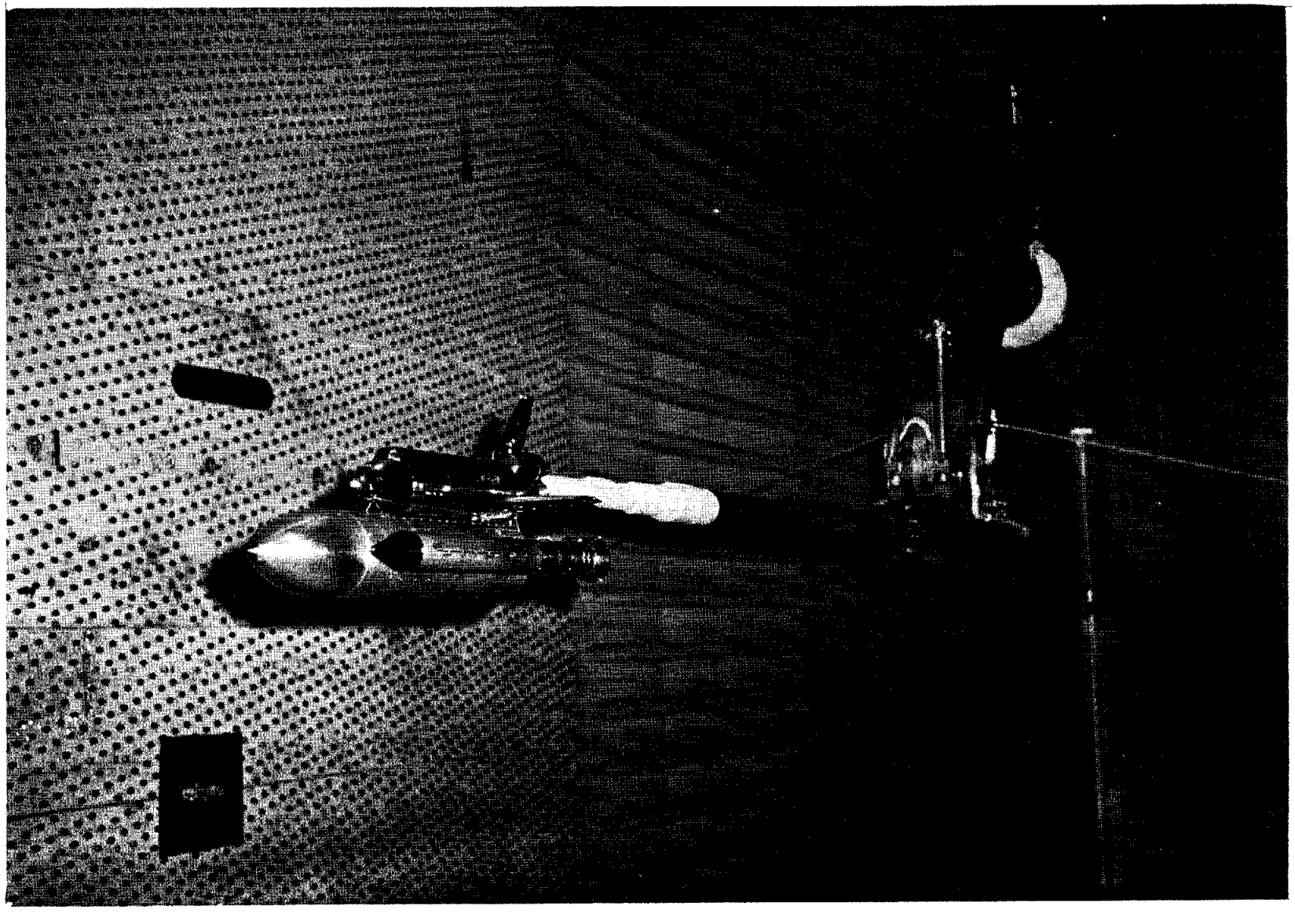

a. Model 89-OTS in the 16T Test Section
Figure 3. Model photographs.

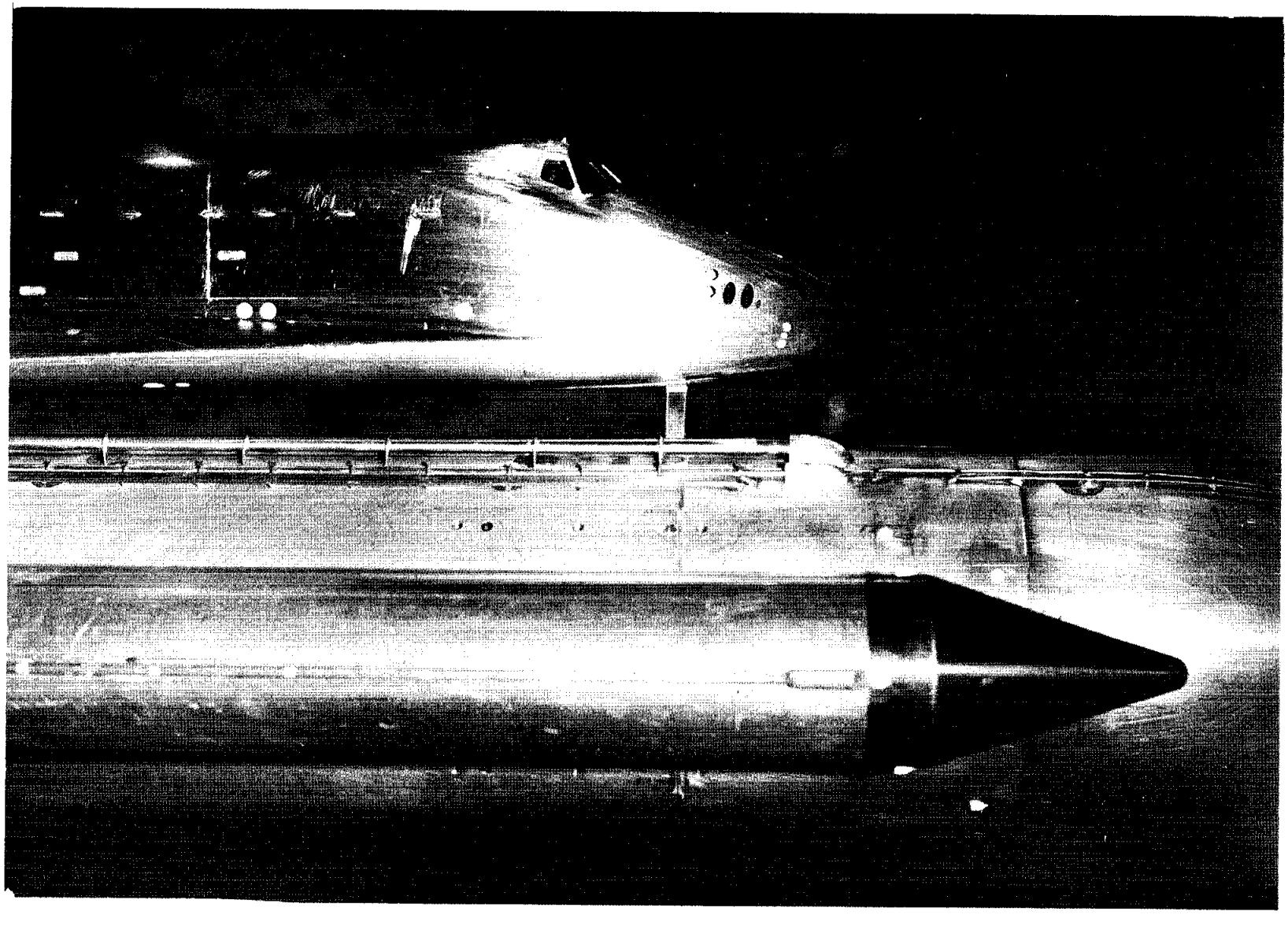

b. Right-Forward Side of Model 89-OTS. Note oversize Orbiter/External Tank
Figure 3. Continued.

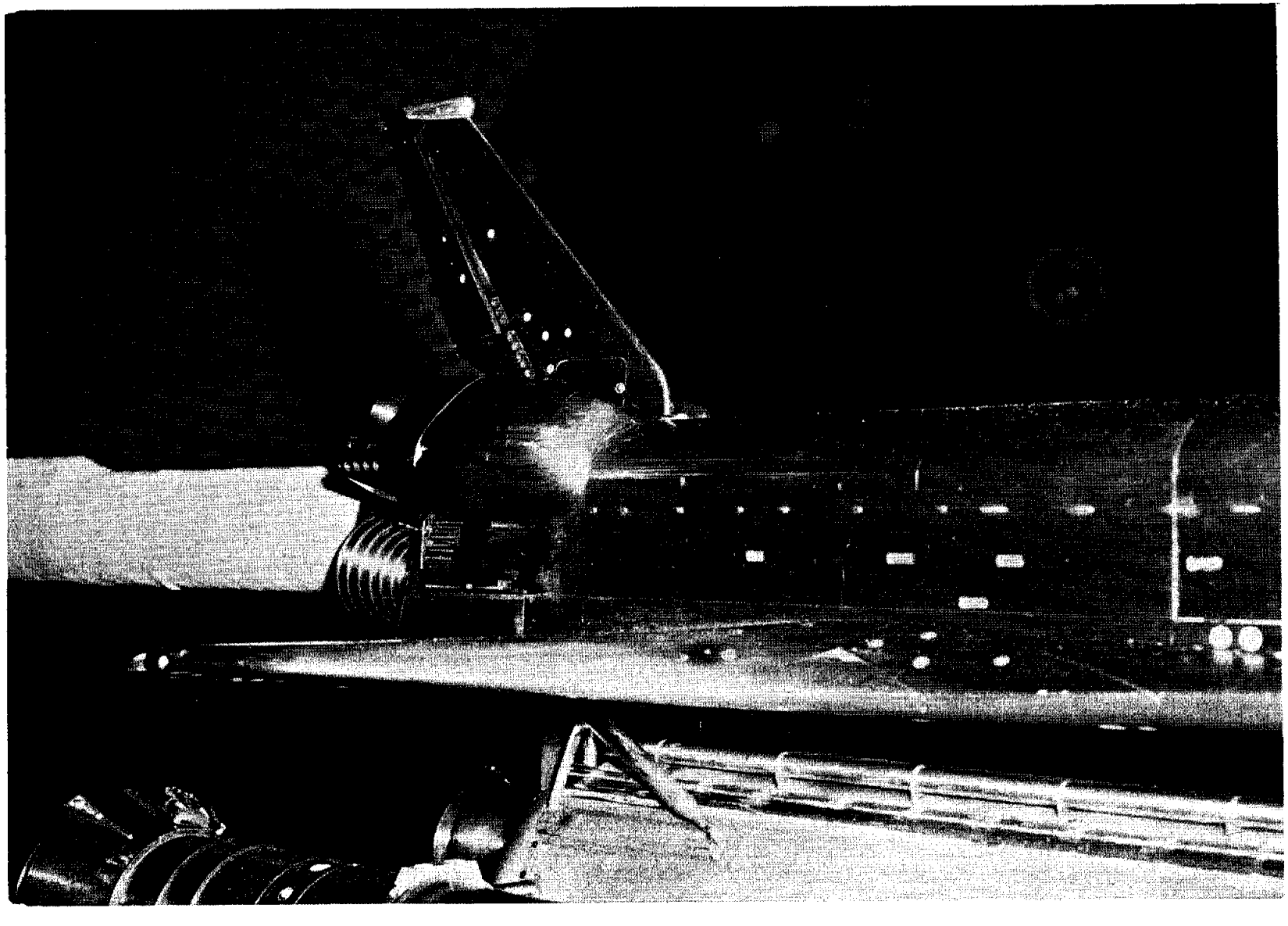

c. Right-Rear View of Model 89-OTS, SILTS Pod Installed
Figure 3. Continued.

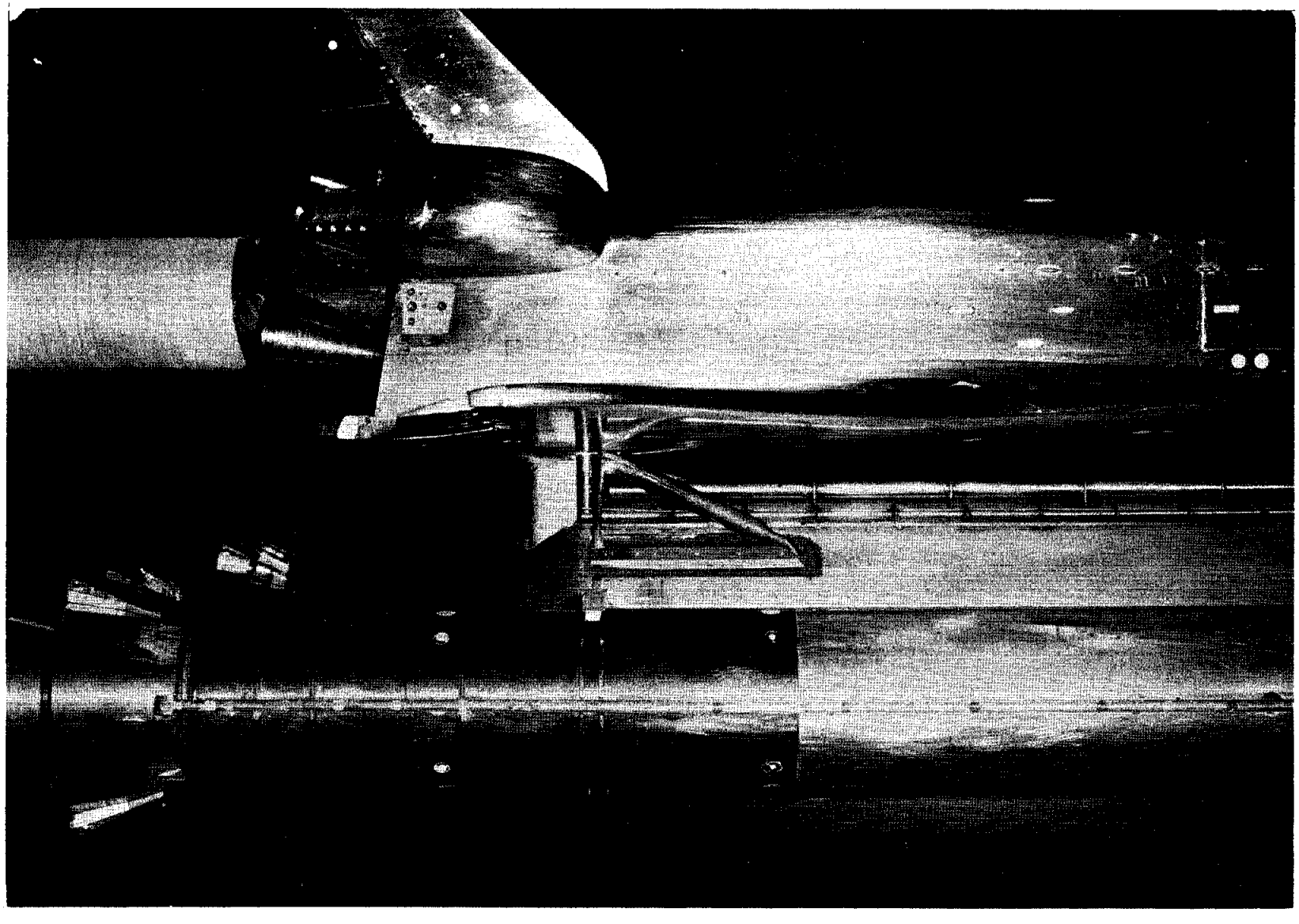

d. Right-Rear Side View of Model 89-OTS. Note Instrumentation Fairings Behind Vehicle Feed Lines and Foam under Attach Structure
Figure 3. Continued.

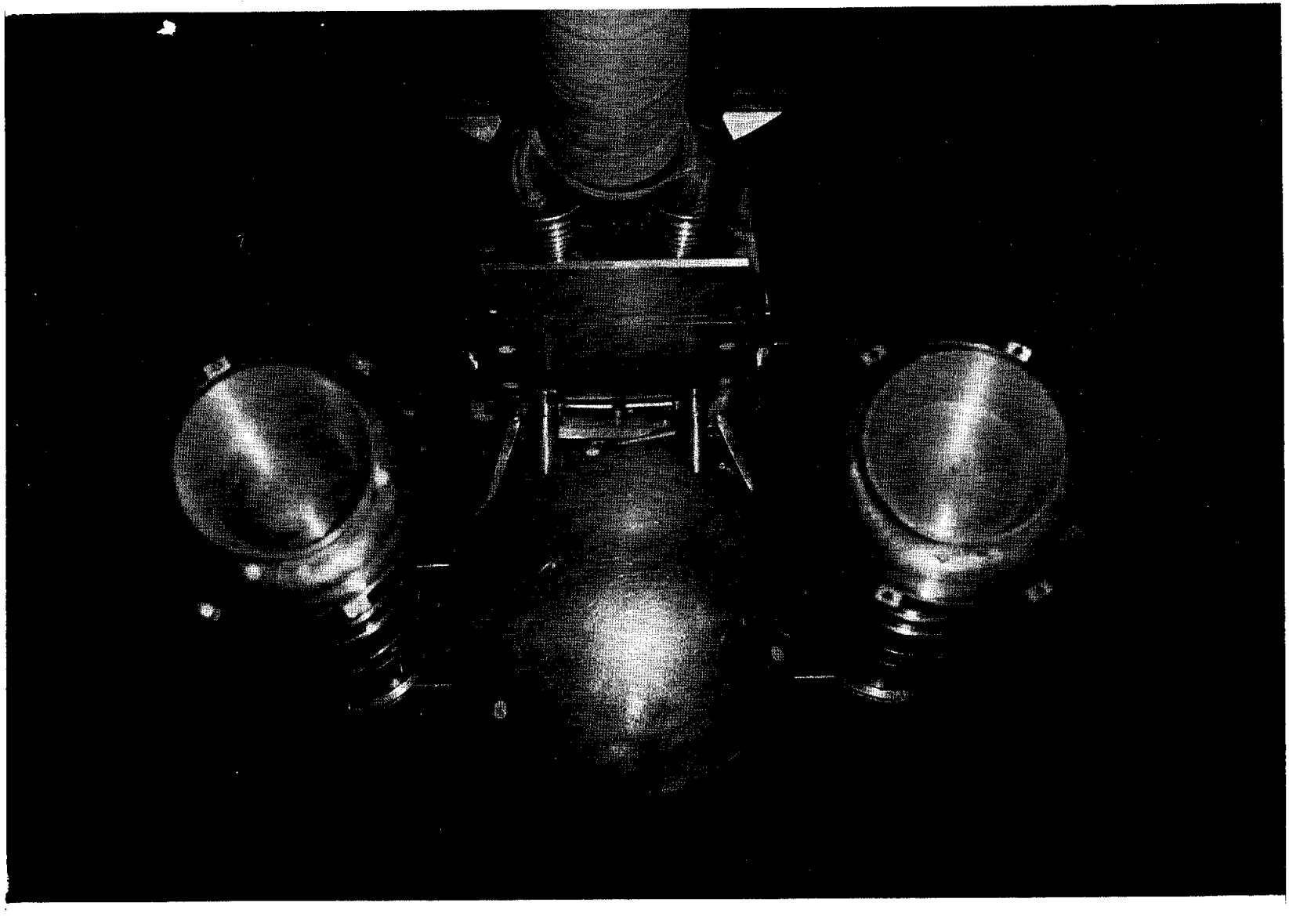

e. Rear View of Model 89-OTS
Figure 3. Concluded.

APPENDIX

TABULATED SOURCE DATA

IA156A, AEDC PWT 16T-470, O T S (R8NV01) (10 MAY 80)

REFERENCE DATA

SREF = 2690.0000 SQ.FT. XMRP = 976.0000 IN. XT
LREF = 1290.3000 INCHES YMRP = .0000 IN. YT
BREF = 1290.3000 INCHES ZMRP = 400.0000 IN. ZT
SCALE = .0200

PARAMETRIC DATA

IB-ELV = 10.000 OB-ELV = 5.000
BDFLAP = .000 SPDBRK = .000
RUDDER = .000 SILTS = .000
MACH = .600 RN/L = 3.500

RUN NO. 801/ 0 RN/L = 3.51 GRADIENT INTERVAL = -5.00/ 5.00

ALPHAO	BETAO	CNL	CNFL	CAL	CAFL	CLMFL	CYFL	CYNL	CYNFL	CBLFL
-.312	-6.620	.02980	.00880	.27880	.10200	-.03880	.28190	-.12390	-.12180	.04440
-.295	-.356	.00280	-.01640	.27840	.10710	-.01790	.02260	-.00910	-.00890	.00190
-.308	5.848	-.00460	-.02570	.28350	.10910	-.02430	-.21850	.09800	.09610	-.03510
	GRADIENT	.00000	.00000	.00000	.00000	.00000	.00000	.00000	.00000	.00000

IA156A, AEDC PWT 16T-470, O T S (R8NV02) (10 MAY 80)

REFERENCE DATA

SREF = 2690.0000 SQ.FT. XMRP = 976.0000 IN. XT
LREF = 1290.3000 INCHES YMRP = .0000 IN. YT
BREF = 1290.3000 INCHES ZMRP = 400.0000 IN. ZT
SCALE = .0200

PARAMETRIC DATA

IB-ELV = 10.000 OB-ELV = 5.000
BDFLAP = .000 SPDBRK = .000
RUDDER = .000 SILTS = .000
MACH = .700 RN/L = 3.500

RUN NO. 803/ 0 RN/L = 3.50 GRADIENT INTERVAL = -5.00/ 5.00

ALPHAO	BETAO	CNL	CNFL	CAL	CAFL	CLMFL	CYFL	CYNL	CYNFL	CBLFL
-.307	-6.786	.03930	.01780	.28740	.10760	-.04610	.29780	-.13220	-.13000	.04640
-.309	-.446	.01110	-.00820	.28290	.11410	-.02400	.02880	-.01310	-.01290	.00310
-.343	5.803	.00590	-.01560	.29140	.11360	-.03190	-.22200	.10000	.09810	-.03530
	GRADIENT	.00000	.00000	.00000	.00000	.00000	.00000	.00000	.00000	.00000

IA156A, AEDC PWT 16T-470, O T S (R8NV03) (10 MAY 80)

REFERENCE DATA

SREF = 2690.0000 SQ.FT. XMRP = 976.0000 IN. XT
LREF = 1290.3000 INCHES YMRP = .0000 IN. YT
BREF = 1290.3000 INCHES ZMRP = 400.0000 IN. ZT
SCALE = .0200

PARAMETRIC DATA

IB-ELV = 10.000 OB-ELV = 5.000
BDFLAP = .000 SPDBRK = .000
RUDDER = .000 SILTS = .000
MACH = .800 RN/L = 3.500

RUN NO. 804/ 0 RN/L = 3.50 GRADIENT INTERVAL = -5.00/ 5.00

ALPHAO	BETAO	CNL	CNFL	CAL	CAFL	CLMFL	CYFL	CYNL	CYNFL	CBLFL
-.315	-6.863	.05310	.03100	.30430	.12200	-.05790	.30840	-.13720	-.13510	.04730
-.322	-.508	.01910	-.00060	.29440	.12520	-.03440	.03380	-.01480	-.01450	.00350
-.361	5.804	.01390	-.00770	.30450	.12820	-.04070	-.23130	.10530	.10340	-.03610
	GRADIENT	.00000	.00000	.00000	.00000	.00000	.00000	.00000	.00000	.00000

IA156A, AEDC PWT 16T-470, O T S (R8NV04) (10 MAY 80)

REFERENCE DATA

SREF = 2690.0000 SQ.FT. XMRP = 976.0000 IN. XT
LREF = 1290.3000 INCHES YMRP = .0000 IN. YT
BREF = 1290.3000 INCHES ZMRP = 400.0000 IN. ZT
SCALE = .0200

PARAMETRIC DATA

IB-ELV = 10.000 OB-ELV = 5.000
BDFLAP = .000 SPDBRK = .000
RUDDER = .000 SILTS = .000
MACH = .850 RN/L = 3.500

RUN NO. 805/ 0 RN/L = 3.50 GRADIENT INTERVAL = -5.00/ 5.00

ALPHAO	BETAO	CNL	CNFL	CAL	CAFL	CLMFL	CYFL	CYNL	CYNFL	CBLFL
-.323	-6.768	.05620	.03290	.32380	.13510	-.06070	.31120	-.13830	-.13640	.04780
-.325	-.526	.02590	.00540	.30530	.13050	-.03980	.03390	-.01480	-.01450	.00340
-.372	5.679	.01260	-.00980	.31830	.13650	-.04020	-.22660	.10160	.09970	-.03460
	GRADIENT	.00000	.00000	.00000	.00000	.00000	.00000	.00000	.00000	.00000

IA156A, AEDC PWT 16T-470, O T S (R8NV05) (10 MAY 80)

REFERENCE DATA

SREF = 2690.0000 SQ.FT. XMRP = 976.0000 IN. XT
LREF = 1290.3000 INCHES YMRP = .0000 IN. YT
BREF = 1290.3000 INCHES ZMRP = 400.0000 IN. ZT
SCALE = .0200

PARAMETRIC DATA

IB-ELV = 10.000 OB-ELV = 5.000
BDFLAP = .000 SPDBRK = .000
RUDDER = .000 SILTS = .000
MACH = .900 RN/L = 3.500

RUN NO. 806/ 0 RN/L = 3.50 GRADIENT INTERVAL = -5.00/ 5.00

ALPHAO	BETAO	CNL	CNFL	CAL	CAFL	CLMFL	CYFL	CYNL	CYNFL	CBLFL
-.339	-6.784	.04510	.01740	.34770	.15150	-.04530	.31070	-.13800	-.13610	.04880
-.340	-.528	.01720	-.00380	.32830	.14790	-.03150	.03500	-.01500	-.01470	.00360
-.387	5.707	.00500	-.01830	.34360	.15410	-.03110	-.23120	.10260	.10080	-.03630
	GRADIENT	.00000	.00000	.00000	.00000	.00000	.00000	.00000	.00000	.00000

IA156A, AEDC PWT 16T-470, O T S (R8NV06) (10 MAY 80)

REFERENCE DATA

SREF = 2690.0000 SQ.FT. XMRP = 976.0000 IN. XT
LREF = 1290.3000 INCHES YMRP = .0000 IN. YT
BREF = 1290.3000 INCHES ZMRP = 400.0000 IN. ZT
SCALE = .0200

PARAMETRIC DATA

IB-ELV = 10.000 OB-ELV = 5.000
BDFLAP = .000 SPDBRK = .000
RUDDER = .000 SILTS = .000
MACH = .920 RN/L = 3.500

RUN NO. 807/ 0 RN/L = 3.50 GRADIENT INTERVAL = -5.00/ 5.00

ALPHAO	BETAO	CNL	CNFL	CAL	CAFL	CLMFL	CYFL	CYNL	CYNFL	CBLFL
-.348	-6.787	.03950	.01430	.36540	.16360	-.04190	.30890	-.13480	-.13290	.04820
-.343	-.555	.01590	-.00560	.34360	.15810	-.02610	.03510	-.01490	-.01460	.00390
-.389	5.691	.00460	-.01940	.36070	.16650	-.02670	-.23390	.10350	.10170	-.03680
	GRADIENT	.00000	.00000	.00000	.00000	.00000	.00000	.00000	.00000	.00000

IA156A, AEDC PWT 16T-470, O T S (R8NV07) (10 MAY 80)

REFERENCE DATA

SREF = 2690.0000 SQ.FT. XMRP = 976.0000 IN. XT
LREF = 1290.3000 INCHES YMRP = .0000 IN. YT
BREF = 1290.3000 INCHES ZMRP = 400.0000 IN. ZT
SCALE = .0200

PARAMETRIC DATA

IB-ELV = 10.000 OB-ELV = 5.000
BDFLAP = .000 SPDBRK = .000
RUDDER = .000 SILTS = .000
MACH = .940 RN/L = 3.500

RUN NO. 808/ 0 RN/L = 3.50 GRADIENT INTERVAL = -5.00/ 5.00

ALPHAO	BETAO	CNL	CNFL	CAL	CAFL	CLMFL	CYFL	CYNL	CYNFL	CBLFL
-.350	-6.771	.04040	.01410	.38460	.17570	-.03800	.30810	-.13330	-.13110	.04840
-.343	-.582	.01410	-.01360	.36680	.17140	-.01150	.03550	-.01550	-.01510	.00440
-.393	5.795	.00490	-.02060	.38260	.17840	-.02160	-.23920	.10510	.10300	-.03800
	GRADIENT	.00000	.00000	.00000	.00000	.00000	.00000	.00000	.00000	.00000

IA156A, AEDC PWT 16T-470, O T S (R8NV08) (10 MAY 80)

REFERENCE DATA

SREF = 2690.0000 SQ.FT. XMRP = 976.0000 IN. XT
LREF = 1290.3000 INCHES YMRP = .0000 IN. YT
BREF = 1290.3000 INCHES ZMRP = 400.0000 IN. ZT
SCALE = .0200

PARAMETRIC DATA

IB-ELV = 10.000 OB-ELV = 5.000
BDFLAP = .000 SPDBRK = .000
RUDDER = .000 SILTS = .000
MACH = .950 RN/L = 3.500

RUN NO. 816/ 0 RN/L = 3.50 GRADIENT INTERVAL = -5.00/ 5.00

BETAO	ALPHAO	CNL	CNFL	CAL	CAFL	CLMFL	CYFL	CYNL	CYNFL	CBLFL
.566	-5.898	-.36560	-.39100	.38890	.17160	.12910	-.02290	.00880	.00860	-.00100
.266	-1.055	-.04340	-.06720	.38560	.18930	.01600	-.00920	.00270	.00270	-.00050
.197	.029	.03170	.00720	.37480	.17220	-.01730	-.00460	.00080	.00080	.00000
-.170	5.745	.39950	.37550	.36470	.16420	-.17160	.01620	-.00840	-.00830	.00340
	GRADIENT	.06930	.06865	-.00997	-.01578	-.03073	.00424	-.00175	-.00175	.00046

IA156A, AEDC PWT 16T-470, O T S (R8NV09) (10 MAY 80)

REFERENCE DATA

SREF = 2690.0000 SQ.FT. XMRP = 976.0000 IN. XT
LREF = 1290.3000 INCHES YMRP = .0000 IN. YT
BREF = 1290.3000 INCHES ZMRP = 400.0000 IN. ZT
SCALE = .0200

PARAMETRIC DATA

IB-ELV = 10.000 OB-ELV = 5.000
BDFLAP = .000 SPDBRK = .000
RUDDER = .000 SILTS = .000
MACH = .950 RN/L = 3.500

RUN NO. 820/ 0 RN/L = 3.50 GRADIENT INTERVAL = -5.00/ 5.00

ALPHAO	BETAO	CNL	CNFL	CAL	CAFL	CLMFL	CYFL	CYNL	CYNFL	CBLFL
-.433	-6.912	.00670	-.02130	.39230	.17370	-.02070	.30060	-.12750	-.12500	.04610
-.362	-.195	-.00060	-.02470	.37650	.17320	-.00540	.00530	-.00170	-.00150	.00040
-.330	5.845	.02900	.00250	.39150	.18090	-.02710	-.24710	.11080	.10840	-.04000
	GRADIENT	.00000	.00000	.00000	.00000	.00000	.00000	.00000	.00000	.00000

IA156A, AEDC PWT 16T-470, O T S (R8NV10) (10 MAY 80)

REFERENCE DATA

SREF = 2690.0000 SQ.FT. XMRP = 976.0000 IN. XT
LREF = 1290.3000 INCHES YMRP = .0000 IN. YT
BREF = 1290.3000 INCHES ZMRP = 400.0000 IN. ZT
SCALE = .0200

PARAMETRIC DATA

IB-ELV = 10.000 OB-ELV = 5.000
BDFLAP = .000 SPDBRK = .000
RUDDER = .000 SILTS = .000
MACH = .960 RN/L = 3.500

RUN NO. 818/ 0 RN/L = 3.50 GRADIENT INTERVAL = -5.00/ 5.00

ALPHAO	BETAO	CNL	CNFL	CAL	CAFL	CLMFL	CYFL	CYNL	CYNFL	CBLFL
-.432	-6.901	.00220	-.02640	.40430	.18150	-.01500	.30070	-.12690	-.12430	.04660
-.372	-.535	-.00590	-.03010	.39060	.18080	-.00080	.02070	-.00890	-.00860	.00290
-.342	5.840	.02230	-.00520	.40500	.18590	-.01900	-.24640	.10990	.10740	-.04050
	GRADIENT	.00000	.00000	.00000	.00000	.00000	.00000	.00000	.00000	.00000

IA156A, AEDC PWT 16T-470, O T S (R8NV11) (10 MAY 80)

REFERENCE DATA

SREF = 2690.0000 SQ.FT. XMRP = 976.0000 IN. XT
LREF = 1290.3000 INCHES YMRP = .0000 IN. YT
BREF = 1290.3000 INCHES ZMRP = 400.0000 IN. ZT
SCALE = .0200

PARAMETRIC DATA

IB-ELV = 10.000 OB-ELV = 5.000
BDFLAP = .000 SPDBRK = .000
RUDDER = .000 SILTS = .000
MACH = .970 RN/L = 3.500

RUN NO. 821/ 0 RN/L = 3.50 GRADIENT INTERVAL = -5.00/ 5.00

ALPHAO	BETAO	CNL	CNFL	CAL	CAFL	CLMFL	CYFL	CYNL	CYNFL	CBLFL
-.443	-6.731	-.00240	-.03190	.41870	.18930	-.01000	.29310	-.12130	-.11870	.04610
-.377	-.325	-.00800	-.03250	.40060	.18950	.00190	.01100	-.00450	-.00440	.00160
-.342	5.959	.01970	-.00820	.40950	.18880	-.01560	-.25270	.11290	.11030	-.04210
	GRADIENT	.00000	.00000	.00000	.00000	.00000	.00000	.00000	.00000	.00000

IA156A, AEDC PWT 16T-470, O T S (R8NV12) (10 MAY 80)

REFERENCE DATA

SREF = 2690.0000 SQ.FT. XMRP = 976.0000 IN. XT
LREF = 1290.3000 INCHES YMRP = .0000 IN. YT
BREF = 1290.3000 INCHES ZMRP = 400.0000 IN. ZT
SCALE = .0200

PARAMETRIC DATA

IB-ELV = 10.000 OB-ELV = 5.000
BDFLAP = .000 SPDBRK = .000
RUDDER = .000 SILTS = .000
MACH = .980 RN/L = 3.500

RUN NO. 822/ 0 RN/L = 3.51 GRADIENT INTERVAL = -5.00/ 5.00

ALPHAO	BETAO	CNL	CNFL	CAL	CAFL	CLMFL	CYFL	CYNL	CYNFL	CBLFL
-.156	-6.192	.02310	-.00690	.42570	.19050	-.01820	.26550	-.10940	-.10700	.04280
-.374	.020	.00360	-.02350	.41530	.19220	-.00420	-.00140	.00200	.00180	-.00020
-.004	5.943	.04920	.02010	.42720	.19710	-.02610	-.25450	.11380	.11130	-.04370
	GRADIENT	.00000	.00000	.00000	.00000	.00000	.00000	.00000	.00000	.00000

IA156A, AEDC PWT 16T-470, O T S (R8NV13) (10 MAY 80)

REFERENCE DATA

SREF = 2690.0000 SQ.FT. XMRP = 976.0000 IN. XT
LREF = 1290.3000 INCHES YMRP = .0000 IN. YT
BREF = 1290.3000 INCHES ZMRP = 400.0000 IN. ZT
SCALE = .0200

PARAMETRIC DATA

IB-ELV = 10.000 OB-ELV = 5.000
BDFLAP = .000 SPDBRK = .000
RUDDER = .000 SILTS = .000
MACH = .990 RN/L = 3.500

RUN NO. 823/ 0 RN/L = 3.50 GRADIENT INTERVAL = -5.00/ 5.00

ALPHAO	BETAO	CNL	CNFL	CAL	CAFL	CLMFL	CYFL	CYNL	CYNFL	CBLFL
-.071	-6.202	.03500	.00470	.43630	.19910	-.02500	.26890	-.10900	-.10670	.04420
-.328	.120	.01200	-.01580	.42110	.19720	-.00750	-.00900	.00620	.00600	-.00120
-.058	5.687	.04860	.01970	.43430	.20270	-.02710	-.24170	.10690	.10450	-.04170
	GRADIENT	.00000	.00000	.00000	.00000	.00000	.00000	.00000	.00000	.00000

IA156A, AEDC PWT 16T-470, O T S (R8NV14) (10 MAY 80)

REFERENCE DATA

SREF = 2690.0000 SQ.FT. XMRP = 976.0000 IN. XT
LREF = 1290.3000 INCHES YMRP = .0000 IN. YT
BREF = 1290.3000 INCHES ZMRP = 400.0000 IN. ZT
SCALE = .0200

PARAMETRIC DATA

IB-ELV = 10.000 OB-ELV = 5.000
BDFLAP = .000 SPDBRK = .000
RUDDER = .000 SILTS = .000
MACH = 1.010 RN/L = 3.500

RUN NO. 824/ 0 RN/L = 3.51 GRADIENT INTERVAL = -5.00/ 5.00

ALPHAO	BETAO	CNL	CNFL	CAL	CAFL	CLMFL	CYFL	CYNL	CYNFL	CBLFL
.039	-6.145	.04180	.00910	.46230	.21580	-.02090	.26950	-.11090	-.10850	.04570
-.230	.302	.01370	-.01840	.44910	.19640	.00000	-.01320	.00820	.00790	-.00210
-.111	6.034	.04250	.01090	.46680	.21810	-.01850	-.26220	.11690	.11440	-.04630
	GRADIENT	.00000	.00000	.00000	.00000	.00000	.00000	.00000	.00000	.00000

IA156A, AEDC PWT 16T-470, O T S (R8NV15) (10 MAY 80)

REFERENCE DATA

SREF = 2690.0000 SQ.FT. XMRP = 976.0000 IN. XT
LREF = 1290.3000 INCHES YMRP = .0000 IN. YT
BREF = 1290.3000 INCHES ZMRP = 400.0000 IN. ZT
SCALE = .0200

PARAMETRIC DATA

IB-ELV = 10.000 OB-ELV = 5.000
BDFLAP = .000 SPDBRK = .000
RUDDER = .000 SILTS = .000
MACH = 1.020 RN/L = 3.500

RUN NO. 825/ 0 RN/L = 3.51 GRADIENT INTERVAL = -5.00/ 5.00

ALPHAO	BETAO	CNL	CNFL	CAL	CAFL	CLMFL	CYFL	CYNL	CYNFL	CBLFL
-.021	-6.211	.03750	.00400	.47470	.22270	-.01650	.27050	-.11140	-.10900	.04620
-.340	.134	.00260	-.03040	.47350	.21710	.00930	-.00760	.00540	.00520	-.00130
-.052	6.077	.04530	.01290	.48090	.22640	-.01670	-.26540	.11850	.11610	-.04730
	GRADIENT	.00000	.00000	.00000	.00000	.00000	.00000	.00000	.00000	.00000

IA156A, AEDC PWT 16T-470, O T S (R8NV16) (10 MAY 80)

REFERENCE DATA

SREF = 2690.0000 SQ.FT. XMRP = 976.0000 IN. XT
LREF = 1290.3000 INCHES YMRP = .0000 IN. YT
BREF = 1290.3000 INCHES ZMRP = 400.0000 IN. ZT
SCALE = .0200

PARAMETRIC DATA

IB-ELV = 10.000 OB-ELV = 5.000
BDFLAP = .000 SPDBRK = .000
RUDDER = .000 SILTS = .000
MACH = 1.030 RN/L = 3.500

RUN NO. 826/ 0 RN/L = 3.51 GRADIENT INTERVAL = -5.00/ 5.00

ALPHAO	BETAO	CNL	CNFL	CAL	CAFL	CLMFL	CYFL	CYNL	CYNFL	CBLFL
-.007	-6.500	.03750	.00230	.48960	.22920	-.01350	.28470	-.11700	-.11470	.04930
-.314	.180	.00570	-.02840	.48700	.22640	.01080	-.00720	.00570	.00540	-.00120
-.099	6.275	.04360	.00960	.49530	.23090	-.01390	-.27420	.12210	.11970	-.04920
	GRADIENT	.00000	.00000	.00000	.00000	.00000	.00000	.00000	.00000	.00000

IA156A, AEDC PWT 16T-470, O T S (R8NV17) (10 MAY 80)

REFERENCE DATA

SREF = 2690.0000 SQ.FT. XMRP = 976.0000 IN. XT
LREF = 1290.3000 INCHES YMRP = .0000 IN. YT
BREF = 1290.3000 INCHES ZMRP = 400.0000 IN. ZT
SCALE = .0200

PARAMETRIC DATA

IB-ELV = 10.000 OB-ELV = 5.000
BDFLAP = .000 SPDBRK = .000
RUDDER = .000 SILTS = .000
MACH = 1.040 RN/L = 3.500

RUN NO. 827/ 0 RN/L = 3.51 GRADIENT INTERVAL = -5.00/ 5.00

ALPHAO	BETAO	CNL	CNFL	CAL	CAFL	CLMFL	CYFL	CYNL	CYNFL	CBLFL
-.214	-6.395	.01420	-.02240	.50160	.23350	.00010	.28750	-.12130	-.11880	.04950
-.345	.160	-.00170	-.03760	.50330	.23090	.01990	-.00730	.00530	.00500	-.00140
-.040	6.152	.04570	.01090	.50960	.23970	-.01070	-.26630	.11970	.11740	-.04830
	GRADIENT	.00000	.00000	.00000	.00000	.00000	.00000	.00000	.00000	.00000

IA156A, AEDC PWT 16T-470, O T S (R8NV18) (10 MAY 80)

REFERENCE DATA

SREF = 2690.0000 SQ.FT. XMRP = 976.0000 IN. XT
LREF = 1290.3000 INCHES YMRP = .0000 IN. YT
BREF = 1290.3000 INCHES ZMRP = 400.0000 IN. ZT
SCALE = .0200

PARAMETRIC DATA

IB-ELV = 10.000 OB-ELV = 5.000
BDFLAP = .000 SPDBRK = .000
RUDDER = .000 SILTS = .000
MACH = 1.050 RN/L = 3.500

RUN NO. 828/ 0 RN/L = 3.51 GRADIENT INTERVAL = -5.00/ 5.00

ALPHAO	BETAO	CNL	CNFL	CAL	CAFL	CLMFL	CYFL	CYNL	CYNFL	CBLFL
-.128	-6.378	.02470	-.01250	.50360	.23190	-.00120	.28420	-.12180	-.11950	.04940
-.291	.263	-.00210	-.03750	.50760	.23970	.02340	-.00850	.00430	.00400	-.00180
-.145	6.216	.03060	-.00410	.51340	.24500	-.00080	-.26900	.12070	.11840	-.04850
	GRADIENT	.00000	.00000	.00000	.00000	.00000	.00000	.00000	.00000	.00000

IA156A, AEDC PWT 16T-470, O T S (R8NV19) (10 MAY 80)

REFERENCE DATA

SREF = 2690.0000 SQ.FT. XMRP = 976.0000 IN. XT
LREF = 1290.3000 INCHES YMRP = .0000 IN. YT
BREF = 1290.3000 INCHES ZMRP = 400.0000 IN. ZT
SCALE = .0200

PARAMETRIC DATA

IB-ELV = 10.000 OB-ELV = 5.000
BDFLAP = .000 SPDBRK = .000
RUDDER = .000 SILTS = .000
MACH = 1.060 RN/L = 3.500

RUN NO. 829/ 0 RN/L = 3.50 GRADIENT INTERVAL = -5.00/ 5.00

ALPHAO	BETAO	CNL	CNFL	CAL	CAFL	CLMFL	CYFL	CYNL	CYNFL	CBLFL
-.024	-6.353	.03530	-.00040	.50520	.24430	-.00820	.28390	-.12250	-.12030	.04940
-.275	.284	.00870	-.02530	.50260	.24360	.01420	-.01440	.00830	.00800	-.00290
-.170	6.205	.03440	.00130	.50640	.24820	-.00600	-.26720	.11970	.11740	-.04820
	GRADIENT	.00000	.00000	.00000	.00000	.00000	.00000	.00000	.00000	.00000

IA156A, AEDC PWT 16T-470, O T S (R8NV20) (10 MAY 80)

REFERENCE DATA

SREF = 2690.0000 SQ.FT. XMRP = 976.0000 IN. XT
LREF = 1290.3000 INCHES YMRP = .0000 IN. YT
BREF = 1290.3000 INCHES ZMRP = 400.0000 IN. ZT
SCALE = .0200

PARAMETRIC DATA

IB-ELV = 10.000 OB-ELV = 5.000
BDFLAP = .000 SPDBRK = .000
RUDDER = .000 SILTS = .000
MACH = 1.080 RN/L = 3.500

RUN NO. 830/ 0 RN/L = 3.48 GRADIENT INTERVAL = -5.00/ 5.00

ALPHAO	BETAO	CNL	CNFL	CAL	CAFL	CLMFL	CYFL	CYNL	CYNFL	CBLFL
-.161	-6.471	.02750	-.00510	.49680	.25620	-.00880	.27950	-.11710	-.11510	.04870
-.313	.183	.01330	-.01860	.48780	.24310	.00580	-.00980	.00590	.00550	-.00190
-.214	6.199	.03950	.00980	.48820	.25440	-.01450	-.26530	.11740	.11510	-.04820
	GRADIENT	.00000	.00000	.00000	.00000	.00000	.00000	.00000	.00000	.00000

IA156A, AEDC PWT 16T-470, O T S (R8NV21) (10 MAY 80)

REFERENCE DATA

SREF = 2690.0000 SQ.FT. XMRP = 976.0000 IN. XT
LREF = 1290.3000 INCHES YMRP = .0000 IN. YT
BREF = 1290.3000 INCHES ZMRP = 400.0000 IN. ZT
SCALE = .0200

PARAMETRIC DATA

IB-ELV = 10.000 OB-ELV = 5.000
BDFLAP = .000 SPDBRK = .000
RUDDER = .000 SILTS = .000
MACH = 1.100 RN/L = 3.500

RUN NO. 831/ 0 RN/L = 3.50 GRADIENT INTERVAL = -5.00/ 5.00

ALPHAO	BETAO	CNL	CNFL	CAL	CAFL	CLMFL	CYFL	CYNL	CYNFL	CBLFL
-.224	-6.217	.02060	-.01170	.49420	.25500	-.00690	.26440	-.10830	-.10640	.04710
[illegible]	.132	.00580	-.02420	.48490	.25360	.00740	-.00840	.00460	.00440	-.00180
[illegible]	6.090	.04570	.01670	.48830	.25860	-.01720	-.25910	.11430	.11210	-.04770
	GRADIENT	.00000	.00000	.00000	.00000	.00000	.00000	.00000	.00000	.00000

IA156A, AEDC PWT 16T-470, O T S (R8NV22) (10 MAY 80)

REFERENCE DATA

SREF = 2690.0000 SQ.FT. XMRP = 976.0000 IN. XT
LREF = 1290.3000 INCHES YMRP = .0000 IN. YT
BREF = 1290.3000 INCHES ZMRP = 400.0000 IN. ZT
SCALE = .0200

PARAMETRIC DATA

IB-ELV = 10.000 OB-ELV = 5.000
BDFLAP = .000 SPDBRK = .000
RUDDER = .000 SILTS = .000
MACH = 1.150 RN/L = 3.500

RUN NO. 836/ 0 RN/L = 3.50 GRADIENT INTERVAL = -5.00/ 5.00

ALPHAO	BETAO	CNL	CNFL	CAL	CAFL	CLMFL	CYFL	CYNL	CYNFL	CBLFL
.183	-5.955	.02470	-.00350	.49520	.27430	-.00290	.26590	-.11380	-.11200	.04930
-.344	.100	.03020	.00150	.49160	.27000	-.01090	-.00350	.00040	.00010	-.00080
-.189	5.963	.04940	.02120	.49710	.27720	-.02180	-.25780	.11310	.11100	-.04750
	GRADIENT	.00000	.00000	.00000	.00000	.00000	.00000	.00000	.00000	.00000

IA156A, AEDC PWT 16T-470, O T S (R8NV23) (10 MAY 80)

REFERENCE DATA

SREF = 2690.0000 SQ.FT. XMRP = 976.0000 IN. XT
LREF = 1290.3000 INCHES YMRP = .0000 IN. YT
BREF = 1290.3000 INCHES ZMRP = 400.0000 IN. ZT
SCALE = .0200

PARAMETRIC DATA

IB-ELV = 10.000 OB-ELV = 5.000
BDFLAP = .000 SPDBRK = .000
RUDDER = .000 SILTS = .000
MACH = 1.200 RN/L = 3.500

RUN NO. 837/ 0 RN/L = 3.51 GRADIENT INTERVAL = -5.00/ 5.00

ALPHAO	BETAO	CNL	CNFL	CAL	CAFL	CLMFL	CYFL	CYNL	CYNFL	CBLFL
.094	-5.933	.03960	.01330	.49360	.28780	-.01660	.26480	-.11340	-.11170	.04760
-.213	.260	.04080	.01370	.49000	.28060	-.01850	-.01190	.00500	.00460	-.00200
-.233	6.027	.04170	.01500	.49210	.28280	-.02100	-.25980	.11330	.11120	-.04630
	GRADIENT	.00000	.00000	.00000	.00000	.00000	.00000	.00000	.00000	.00000

IA156A, AEDC PWT 16T-470, O T S (R8NV24) (10 MAY 80)

REFERENCE DATA

SREF = 2690.0000 SQ.FT. XMRP = 976.0000 IN. XT
LREF = 1290.3000 INCHES YMRP = .0000 IN. YT
BREF = 1290.3000 INCHES ZMRP = 400.0000 IN. ZT
SCALE = .0200

PARAMETRIC DATA

IB-ELV = 10.000 OB-ELV = 5.000
BDFLAP = .000 SPDBRK = .000
RUDDER = .000 SILTS = .000
MACH = 1.250 RN/L = 3.500

RUN NO. 838/ 0 RN/L = 3.50 GRADIENT INTERVAL = -5.00/ 5.00

ALPHAO	BETAO	CNL	CNFL	CAL	CAFL	CLMFL	CYFL	CYNL	CYNFL	CBLFL
-.160	-6.422	.03870	.01040	.49280	.28250	-.01940	.27540	-.11430	-.11250	.04700
-.274	.269	.03850	.01250	.48850	.28800	-.01660	-.01390	.00700	.00660	-.00230
-.219	5.956	.04020	.01410	.49110	.28730	-.01890	-.25530	.11020	.10820	-.04470
	GRADIENT	.00000	.00000	.00000	.00000	.00000	.00000	.00000	.00000	.00000

IA156A, AEDC PWT 16T-470, O T S (R8NV25) (10 MAY 80)

REFERENCE DATA

SREF = 2690.0000 SQ.FT. XMRP = 976.0000 IN. XT
LREF = 1290.3000 INCHES YMRP = .0000 IN. YT
BREF = 1290.3000 INCHES ZMRP = 400.0000 IN. ZT
SCALE = .0200

PARAMETRIC DATA

IB-ELV = 10.000 OB-ELV = 5.000
BDFLAP = .000 SPDBRK = .000
RUDDER = .000 SILTS = .000
MACH = 1.300 RN/L = 3.500

RUN NO. 839/ 0 RN/L = 3.50 GRADIENT INTERVAL = -5.00/ 5.00

ALPHAO	BETAO	CNL	CNFL	CAL	CAFL	CLMFL	CYFL	CYNL	CYNFL	CBLFL
-.187	-6.415	.04030	.01320	.48800	.28870	-.02050	.27030	-.10950	-.10780	.04540
-.333	.162	.04260	.01740	.48220	.28830	-.01770	-.00860	.00460	.00440	-.00150
-.214	6.171	.04690	.02140	.48640	.29030	-.02030	-.26300	.11230	.11040	-.04520
	GRADIENT	.00000	.00000	.00000	.00000	.00000	.00000	.00000	.00000	.00000

IA156A, AEDC PWT 16T-470, O T S (R8NV26) (10 MAY 80)

REFERENCE DATA

SREF = 2690.0000 SQ.FT. XMRP = 976.0000 IN. XT
LREF = 1290.3000 INCHES YMRP = .0000 IN. YT
BREF = 1290.3000 INCHES ZMRP = 400.0000 IN. ZT
SCALE = .0200

PARAMETRIC DATA

IB-ELV = 10.000 OB-ELV = 5.000
BDFLAP = .000 SPDBRK = .000
RUDDER = .000 SILTS = .000
MACH = 1.400 RN/L = 3.500

RUN NO. 840/ 0 RN/L = 3.50 GRADIENT INTERVAL = -5.00/ 5.00

ALPHAO	BETAO	CNL	CNFL	CAL	CAFL	CLMFL	CYFL	CYNL	CYNFL	CBLFL
-.188	-6.466	.02900	.00330	.48390	.29690	-.01640	.27470	-.11100	-.10950	.04480
-.345	.249	.03370	.00960	.47830	.29750	-.01980	-.01410	.00800	.00780	-.00240
-.211	6.167	.03290	.00820	.48260	.29620	-.01650	-.26410	.11210	.11030	-.04350
	GRADIENT	.00000	.00000	.00000	.00000	.00000	.00000	.00000	.00000	.00000

IA156A, AEDC PWT 16T-470, O T S (R8NV27) (10 MAY 80)

REFERENCE DATA

SREF = 2690.0000 SQ.FT. XMRP = 976.0000 IN. XT
LREF = 1290.3000 INCHES YMRP = .0000 IN. YT
BREF = 1290.3000 INCHES ZMRP = 400.0000 IN. ZT
SCALE = .0200

PARAMETRIC DATA

IB-ELV = 10.000 OB-ELV = 5.000
BDFLAP = .000 SPDBRK = .000
RUDDER = .000 SILTS = .000
MACH = 1.550 RN/L = 3.200

RUN NO. 841/ 0 RN/L = 3.19 GRADIENT INTERVAL = -5.00/ 5.00

ALPHAO	BETAO	CNL	CNFL	CAL	CAFL	CLMFL	CYFL	CYNL	CYNFL	CBLFL
-.168	-6.478	.02440	.00050	.46220	.29000	-.01300	.27390	-.11400	-.11250	.04280
-.435	.244	.01520	-.00690	.45440	.29430	-.01050	-.01500	.00900	.00890	-.00270
-.301	6.109	.02230	-.00020	.46090	.29420	-.01820	-.26850	.11980	.11800	-.04160
	GRADIENT	.00000	.00000	.00000	.00000	.00000	.00000	.00000	.00000	.00000

IA156A, AEDC PWT 16T-470, O T S (R8NV28) (10 MAY 80)

REFERENCE DATA

SREF = 2690.0000 SQ.FT. XMRP = 976.0000 IN. XT
LREF = 1290.3000 INCHES YMRP = .0000 IN. YT
BREF = 1290.3000 INCHES ZMRP = 400.0000 IN. ZT
SCALE = .0200

PARAMETRIC DATA

IB-ELV = 10.000 OB-ELV = 5.000
BDFLAP = .000 SPDBRK = .000
RUDDER = .000 SILTS = .000
MACH = .600 RN/L = 3.500

RUN NO. 846/ 0 RN/L = 3.50 GRADIENT INTERVAL = -5.00/ 5.00

ALPHAO	BETAO	CNL	CNFL	CAL	CAFL	CLMFL	CYFL	CYNL	CYNFL	CBLFL
-.334	-6.579	.00300	-.01930	.27730	.09130	-.02840	.25910	-.11060	-.10840	.03940
.127	-5.884	.00890	-.01270	.28160	.10430	-.02280	.23550	-.10480	-.10280	.03720
.111	.087	.00790	-.01150	.27640	.10550	-.01270	.00260	-.00170	-.00170	.00060
-.270	5.876	.02570	.00360	.28310	.10090	-.03480	-.22740	.10490	.10300	-.03670
.110	6.556	.04470	.02340	.28040	.10360	-.03510	-.24060	.10940	.10740	-.04040
	GRADIENT	.00000	.00000	.00000	.00000	.00000	.00000	.00000	.00000	.00000

IA156A, AEDC PWT 16T-470, O T S (R8NV29) (10 MAY 80)

REFERENCE DATA

SREF = 2690.0000 SQ.FT. XMRP = 976.0000 IN. XT
LREF = 1290.3000 INCHES YMRP = .0000 IN. YT
BREF = 1290.3000 INCHES ZMRP = 400.0000 IN. ZT
SCALE = .0200

PARAMETRIC DATA

IB-ELV = 10.000 OB-ELV = 5.000
BDFLAP = .000 SPDBRK = .000
RUDDER = .000 SILTS = .000
MACH = .900 RN/L = 3.500

RUN NO. 845/ 0 RN/L = 3.51 GRADIENT INTERVAL = -5.00/ 5.00

ALPHAO	BETAO	CNL	CNFL	CAL	CAFL	CLMFL	CYFL	CYNL	CYNFL	CBLFL
-.394	-6.843	.01840	-.00680	.34690	.14640	-.03760	.29600	-.12890	-.12700	.04490
.079	-5.835	.02540	.00040	.34790	.14210	-.03670	.26540	-.11910	-.11730	.04170
-.355	-.269	.00730	-.01440	.32530	.14220	-.02740	.00380	.00010	.00020	-.00010
.065	.262	.01850	-.00240	.32440	.14590	-.02910	-.00010	-.00040	-.00040	-.00050
-.299	5.811	.03230	.00760	.34460	.14640	-.04130	-.24380	.10970	.10780	-.03800
.043	6.812	.04670	.02160	.34430	.14720	-.04190	-.27250	.12130	.11930	-.04360
	GRADIENT	.02108	.02259	-.00169	.00697	-.00320	-.00734	-.00094	-.00113	-.00075

IA156A, AEDC PWT 16T-470, O T S (R8NV30) (10 MAY 80)

REFERENCE DATA

SREF = 2690.0000 SQ.FT. XMRP = 976.0000 IN. XT
LREF = 1290.3000 INCHES YMRP = .0000 IN. YT
BREF = 1290.3000 INCHES ZMRP = 400.0000 IN. ZT
SCALE = .0200

PARAMETRIC DATA

IB-ELV = 10.000 OB-ELV = 5.000
BDFLAP = .000 SPDBRK = .000
RUDDER = .000 SILTS = .000
MACH = 1.100 RN/L = 3.500

RUN NO. 844/ 0 RN/L = 3.50 GRADIENT INTERVAL = -5.00/ 5.00

ALPHAO	BETAO	CNL	CNFL	CAL	CAFL	CLMFL	CYFL	CYNL	CYNFL	CBLFL
-.513	-6.849	.00160	-.03110	.49740	.25720	-.00230	.29550	-.12010	-.11810	.05200
.050	-5.864	.02970	-.00010	.49190	.25770	-.00850	.26200	-.11260	-.11070	.04830
-.403	-.197	-.00550	-.03550	.48800	.25510	.01300	.00800	-.00360	-.00370	.00100
.034	.184	.02360	-.00560	.48690	.25800	.00440	.00210	-.00230	-.00250	.00070
-.331	5.850	.02160	-.00770	.49120	.25970	-.00670	-.24930	.10990	.10770	-.04580
-.018	6.825	.04810	.01690	.49580	.25690	-.01360	-.28100	.11990	.11790	-.05130
	GRADIENT	.07634	.07844	-.00289	.00761	-.02256	-.01548	.00341	.00315	-.00079

IA156A, AEDC PWT 16T-470, O T S (R8NV31) (10 MAY 80)

REFERENCE DATA

SREF = 2690.0000 SQ.FT. XMRP = 976.0000 IN. XT
LREF = 1290.3000 INCHES YMRP = .0000 IN. YT
BREF = 1290.3000 INCHES ZMRP = 400.0000 IN. ZT
SCALE = .0200

PARAMETRIC DATA

IB-ELV = 10.000 OB-ELV = 5.000
BDFLAP = .000 SPDBRK = .000
RUDDER = .000 SILTS = .000
MACH = 1.550 RN/L = 3.200

RUN NO. 842/ 0 RN/L = 3.20 GRADIENT INTERVAL = -5.00/ 5.00

ALPHAO	BETAO	CNL	CNFL	CAL	CAFL	CLMFL	CYFL	CYNL	CYNFL	CBLFL
-.615	-6.815	-.01100	-.03470	.46190	.28910	.00000	.28890	-.12020	-.11860	.04460
.179	-6.058	.02460	.00110	.46630	.29610	-.00660	.27160	-.11820	-.11670	.04450
-.533	-.323	-.00230	-.02420	.45250	.29190	-.00050	.00570	.00010	.00010	.00060
.170	.324	.02700	.00490	.46130	.29750	-.00470	-.00280	-.00290	-.00290	.00040
-.475	5.830	.01190	-.01020	.45800	.29370	-.01390	-.25310	.11290	.11130	-.03900
-.489	6.059	.00730	-.01580	.46180	.29000	-.01190	-.26790	.11950	.11770	-.04120
.098	6.797	.02600	.00290	.46010	.28930	-.00760	-.28280	.12350	.12180	-.04390
	GRADIENT	.04528	.04497	.01360	.00865	-.00649	-.01314	-.00464	-.00464	-.00031

IA156A, AEDC PWT 16T-470, O T S (R8NV34) (10 MAY 80)

REFERENCE DATA

SREF = 2690.0000 SQ.FT. XMRP = 976.0000 IN. XT
LREF = 1290.3000 INCHES YMRP = .0000 IN. YT
BREF = 1290.3000 INCHES ZMRP = 400.0000 IN. ZT
SCALE = .0200

PARAMETRIC DATA

IB-ELV = 10.000 OB-ELV = 5.000
BDFLAP = .000 SPDBRK = .000
RUDDER = .000 SILTS = .000
MACH = 1.100 RN/L = 3.500
Z = 4.500

RUN NO. 835/ 0 RN/L = 3.51 GRADIENT INTERVAL = -5.00/ 5.00

ALPHAO	BETAO	CNL	CNFL	CAL	CAFL	CLMFL	CYFL	CYNL	CYNFL	CBLFL
.133	-5.950	.05790	.02850	.49190	.25970	-.01790	.26330	-.11290	-.11100	.04860
-.326	.162	.00770	-.02350	.49460	.25460	.01070	.00270	-.00160	-.00150	-.00120
-.142	6.104	.01580	-.01390	.49200	.25870	-.00480	-.26090	.11380	.11150	-.04780
	GRADIENT	.00000	.00000	.00000	.00000	.00000	.00000	.00000	.00000	.00000

IA156A, AEDC PWT 16T-470, O T S (R8NV35) (10 MAY 80)

REFERENCE DATA

SREF = 2690.0000 SQ.FT. XMRP = 976.0000 IN. XT
LREF = 1290.3000 INCHES YMRP = .0000 IN. YT
BREF = 1290.3000 INCHES ZMRP = 400.0000 IN. ZT
SCALE = .0200

PARAMETRIC DATA

IB-ELV = 10.000 OB-ELV = 5.000
BDFLAP = .000 SPDBRK = .000
RUDDER = .000 SILTS = .000
MACH = 1.100 RN/L = 3.500
Z = 5.500

RUN NO. 834/ 0 RN/L = 3.51 GRADIENT INTERVAL = -5.00/ 5.00

ALPHAO	BETAO	CNL	CNFL	CAL	CAFL	CLMFL	CYFL	CYNL	CYNFL	CBLFL
.202	-5.983	.04770	.01820	.48940	.25710	-.01550	.26250	-.11250	-.11070	.04870
-.218	.317	.00880	-.02140	.49020	.25740	.00600	-.01670	.00990	.00950	-.00370
-.235	5.993	.01890	-.01010	.48890	.25950	-.00620	-.25660	.11240	.11020	-.04680
	GRADIENT	.00000	.00000	.00000	.00000	.00000	.00000	.00000	.00000	.00000

IA156A, AEDC PWT 16T-470, O T S (R8NV36) (10 MAY 80)

REFERENCE DATA

SREF = 2690.0000 SQ.FT. XMRP = 976.0000 IN. XT
LREF = 1290.3000 INCHES YMRP = .0000 IN. YT
BREF = 1290.3000 INCHES ZMRP = 400.0000 IN. ZT
SCALE = .0200

PARAMETRIC DATA

IB-ELV = 10.000 OB-ELV = 5.000
BDFLAP = .000 SPDBRK = .000
RUDDER = .000 SILTS = .000
MACH = 1.100 RN/L = 3.500
Z = 6.500

RUN NO. 832/ 0 RN/L = 3.50 GRADIENT INTERVAL = -5.00/ 5.00

ALPHAO	BETAO	CNL	CNFL	CAL	CAFL	CLMFL	CYFL	CYNL	CYNFL	CBLFL
-.157	-6.418	.02640	-.00610	.49450	.25440	-.00950	.27630	-.11340	-.11160	.04920
-.303	.234	.00760	-.02250	.48600	.25440	.00650	-.01410	.00740	.00710	-.00280
-.097	6.205	.04500	.01600	.49050	.26000	-.01680	-.26280	.11570	.11350	-.04870
	GRADIENT	.00000	.00000	.00000	.00000	.00000	.00000	.00000	.00000	.00000

IA156A, AEDC PWT 16T-470, O T S (R8NV37) (10 MAY 80)

REFERENCE DATA

SREF = 2690.0000 SQ.FT. XMRP = 976.0000 IN. XT
LREF = 1290.3000 INCHES YMRP = .0000 IN. YT
BREF = 1290.3000 INCHES ZMRP = 400.0000 IN. ZT
SCALE = .0200

PARAMETRIC DATA

IB-ELV = 10.000 OB-ELV = 5.000
BDFLAP = .000 SPDBRK = .000
RUDDER = .000 SILTS = .000
MACH = 1.550 RN/L = 3.200

RUN NO. 843/ 0 RN/L = 3.19 GRADIENT INTERVAL = -5.00/ 5.00

ALPHAO	BETAO	CNL	CNFL	CAL	CAFL	CLMFL	CYFL	CYNL	CYNFL	CBLFL
.171	.281	.02620	.00420	.46000	.29640	-.00320	-.00040	-.00320	-.00330	.00060
-.533	-.269	-.00430	-.02610	.45600	.29580	-.00010	.00050	.00290	.00290	-.00040
-.536	-.291	-.00250	-.02450	.45620	.29460	-.00240	.01250	-.00510	-.00500	.00130
.186	.269	.03520	.01350	.45870	.29750	-.00600	-.00260	.00100	.00090	-.00020
.164	.278	.02300	.00150	.45900	.29740	-.00360	-.00810	.00580	.00570	-.00120
-.514	-.290	.01270	-.00930	.45880	.29670	-.00900	.01620	-.00770	-.00770	.00150
	GRADIENT	.04632	.04668	.00396	.00249	-.00057	-.02442	.00829	.00806	-.00196

IA156A, AEDC PWT 16T-470, O T S W/SILTS (R8NV40) (10 MAY 80)

REFERENCE DATA

SREF = 2690.0000 SQ.FT. XMRP = 976.0000 IN. XT
LREF = 1290.3000 INCHES YMRP = .0000 IN. YT
BREF = 1290.3000 INCHES ZMRP = 400.0000 IN. ZT
SCALE = .0200

PARAMETRIC DATA

IB-ELV = 10.000 OB-ELV = 5.000
BDFLAP = .000 SPDBRK = .000
RUDDER = .000 SILTS = 1.000
MACH = .300 RN/L = 3.500

RUN NO. 862/ 0 RN/L = 2.70 GRADIENT INTERVAL = -5.00/ 5.00

ALPHAO	BETAO	CNL	CNFL	CAL	CAFL	CLMFL	CYFL	CYNL	CYNFL	CBLFL
-5.920	-9.943	-.27970	-.30250	.26950	.06830	.07110	.38420	-.16170	-.15880	.05140
-6.155	-5.902	-.31470	-.33660	.27540	.08590	.08820	.21640	-.09120	-.08910	.02880
-6.275	.408	-.33240	-.35210	.27100	.08860	.10870	-.02400	.01040	.01030	-.00270
-5.806	6.205	-.31560	-.33610	.27860	.09620	.10410	-.21890	.09590	.09380	-.03080
-5.909	10.174	-.34270	-.36580	.27820	.07820	.11730	-.36050	.15430	.15150	-.04930
	GRADIENT	.00000	.00000	.00000	.00000	.00000	.00000	.00000	.00000	.00000

RUN NO. 863/ 0 RN/L = 2.68 GRADIENT INTERVAL = -5.00/ 5.00

ALPHAO	BETAO	CNL	CNFL	CAL	CAFL	CLMFL	CYFL	CYNL	CYNFL	CBLFL
-.323	-10.566	-.00290	-.02540	.27380	.08280	-.02320	.40890	-.17450	-.17230	.06150
-.295	-6.495	-.02730	-.04800	.27310	.09630	-.00730	.23160	-.09860	-.09660	.03560
-.254	-.400	-.03460	-.05330	.26930	.09740	.00290	.00140	.00050	.00040	.00030
-.216	5.676	-.01250	-.03180	.27290	.10390	-.01010	-.21010	.09420	.09230	-.03340
-.202	9.729	-.00080	-.02230	.27780	.09510	-.01810	-.36040	.15850	.15630	-.05700
	GRADIENT	.00000	.00000	.00000	.00000	.00000	.00000	.00000	.00000	.00000

IA156A, AEDC PWT 16T-470, O T S W/SILTS (R8NV40) (10 MAY 80)

REFERENCE DATA

SREF = 2690.0000 SQ.FT. XMRP = 976.0000 IN. XT
LREF = 1290.3000 INCHES YMRP = .0000 IN. YT
BREF = 1290.3000 INCHES ZMRP = 400.0000 IN. ZT
SCALE = .0200

PARAMETRIC DATA

IB-ELV = 10.000 OB-ELV = 5.000
BDFLAP = .000 SPDBRK = .000
RUDDER = .000 SILTS = 1.000
MACH = .300 RN/L = 3.500

RUN NO. 865/ 0 RN/L = 2.67 GRADIENT INTERVAL = -5.00/ 5.00

ALPHAO	BETAO	CNL	CNFL	CAL	CAFL	CLMFL	CYFL	CYNL	CYNFL	CBLFL
6.308	-9.980	.33200	.31050	.25360	.07550	-.13540	.40200	-.17910	-.17780	.07600
5.980	-5.655	.30440	.28410	.25230	.07970	-.11720	.22870	-.10490	-.10390	.04410
6.110	.063	.32650	.30880	.25020	.08810	-.12550	.01300	-.01100	-.01100	.00310
5.972	6.053	.33270	.31230	.25190	.07730	-.14210	-.21390	.09240	.09090	-.04020
5.788	10.128	.34810	.32700	.25560	.08000	-.15540	-.37100	.16090	.15940	-.06890
	GRADIENT	.00000	.00000	.00000	.00000	.00000	.00000	.00000	.00000	.00000

IA156A, AEDC PWT 16T-470, O T S W/SILTS (R8NV41) (10 MAY 80)

REFERENCE DATA

SREF = 2690.0000 SQ.FT. XMRP = 976.0000 IN. XT
LREF = 1290.3000 INCHES YMRP = .0000 IN. YT
BREF = 1290.3000 INCHES ZMRP = 400.0000 IN. ZT
SCALE = .0200

PARAMETRIC DATA

IB-ELV = 10.000 OB-ELV = 5.000
BDFLAP = .000 SPDBRK = .000
RUDDER = .000 SILTS = 1.000
MACH = .300 RN/L = 3.500

RUN NO. 861/ 0 RN/L = 2.74 GRADIENT INTERVAL = -5.00/ 5.00

ALPHAO	BETAO	CNL	CNFL	CAL	CAFL	CLMFL	CYFL	CYNL	CYNFL	CBLFL
-10.091	-6.034	-.52750	-.54900	.26540	.06960	.16240	.24700	-.10750	-.10520	.02850
-10.067	.359	-.57710	-.59960	.26880	.05310	.19960	-.01220	.00580	.00570	-.00030
-9.910	6.266	-.55210	-.57790	.27060	.03360	.18720	-.22430	.09850	.09600	-.02520
	GRADIENT	.00000	.00000	.00000	.00000	.00000	.00000	.00000	.00000	.00000

RUN NO. 866/ 0 RN/L = 2.66 GRADIENT INTERVAL = -5.00/ 5.00

ALPHAO	BETAO	CNL	CNFL	CAL	CAFL	CLMFL	CYFL	CYNL	CYNFL	CBLFL
10.042	-5.845	.55260	.53430	.23550	.07590	-.22000	.22760	-.10090	-.09970	.04860
9.871	.222	.53850	.52110	.23580	.07320	-.20870	.01190	-.01190	-.01200	.00310
10.015	6.282	.58130	.56200	.22850	.06090	-.23960	-.20030	.08070	.07950	-.04240
	GRADIENT	.00000	.00000	.00000	.00000	.00000	.00000	.00000	.00000	.00000

IA156A, AEDC PWT 16T-470, O T S W/SILTS (R8NV42) (10 MAY 80)

REFERENCE DATA

SREF = 2690.0000 SQ.FT. XMRP = 976.0000 IN. XT
LREF = 1290.3000 INCHES YMRP = .0000 IN. YT
BREF = 1290.3000 INCHES ZMRP = 400.0000 IN. ZT
SCALE = .0200

PARAMETRIC DATA

IB-ELV = 10.000 OB-ELV = 5.000
BDFLAP = .000 SPDBRK = .000
RUDDER = .000 SILTS = 1.000
MACH = .600 RN/L = 3.500

RUN NO. 867/ 0 RN/L = 3.50 GRADIENT INTERVAL = -5.00/ 5.00

ALPHAO	BETAO	CNL	CNFL	CAL	CAFL	CLMFL	CYFL	CYNL	CYNFL	CBLFL
-8.043	-7.716	-.43230	-.45930	.28670	.06510	.12320	.32510	-.13820	-.13490	.03920
-8.204	-5.827	-.43840	-.46140	.27980	.08790	.12610	.23910	-.10240	-.10010	.02750
-8.073	-3.782	-.43200	-.45510	.28550	.08960	.12760	.15530	-.06640	-.06500	.01710
-8.198	.321	-.46050	-.48180	.28400	.08810	.14800	-.01430	.00720	.00720	-.00160
-7.861	4.154	-.42780	-.44960	.28780	.09660	.12900	-.15660	.06880	.06760	-.01840
-7.808	6.039	-.41600	-.43870	.28540	.09180	.12200	-.23280	.10190	.09980	-.02830
-8.047	8.247	-.43570	-.45980	.28580	.08180	.13030	-.31810	.13790	.13500	-.03830
	GRADIENT	.00044	.00061	.00028	.00087	.00023	-.03933	.01705	.01672	-.00447

RUN NO. 868/ 0 RN/L = 3.50 GRADIENT INTERVAL = -5.00/ 5.00

ALPHAO	BETAO	CNL	CNFL	CAL	CAFL	CLMFL	CYFL	CYNL	CYNFL	CBLFL
-6.177	-7.939	-.30380	-.32750	.28410	.09020	07490	.32600	-.13820	-.13540	.04210
-6.117	-5.788	-.30790	-.33080	.28530	.09530	.08010	.23100	-.09870	-.09640	.02940
-5.974	-3.847	-.31040	-.33280	.28690	.09910	.08510	.14410	-.06150	-.06020	.01780
-6.102	.060	-.32790	-.34830	.28300	.09840	.09940	-.00670	.00270	.00270	-.00050
-6.078	4.270	-.31430	-.33600	.28750	.10070	.09060	-.15950	.06940	.06800	-.02050
-5.857	6.111	-.30130	-.32390	.28820	.09860	.08340	-.22910	.10020	.09810	-.03070
-5.838	8.303	-.29880	-.32210	.28770	.09370	.08240	-.31180	.13480	.13220	-.04130
	GRADIENT	-.00043	-.00035	.00009	.00020	.00064	-.03739	.01612	.01579	-.00472

RUN NO. 869/ 0 RN/L = 3.50 GRADIENT INTERVAL = -5.00/ 5.00

ALPHAO	BETAO	CNL	CNFL	CAL	CAFL	CLMFL	CYFL	CYNL	CYNFL	CBLFL
-4.175	-8.137	-.18960	-.21300	.28430	.09440	.03480	.32800	-.13900	-.13640	.04540
-4.259	-6.128	-.20490	-.22750	.28550	.10130	.04370	.23920	-.10150	-.09930	.03300
-4.224	-3.918	-.20690	-.22870	.28750	.10470	.04800	.14260	-.06040	-.05910	.01870
-3.977	.211	-.19280	-.21300	.28360	.10380	.05140	-.01340	.00610	.00580	-.00180
-3.796	4.128	-.17570	-.19680	.28920	.10770	.04440	-.15020	.06480	.06350	-.02170
-3.913	6.094	-.17710	-.19900	.28890	.10510	.04160	-.22730	.09900	.09700	-.03340
-3.786	8.019	-.17230	-.19470	.28900	.10380	.03830	-.30260	.13200	.12960	-.04390
	GRADIENT	.00387	.00396	.00020	.00037	-.00044	-.03640	.01556	.01524	-.00502

IA156A, AEDC PWT 16T-470, O T S W/SILTS (R8NV42) (10 MAY 80)

REFERENCE DATA

SREF = 2690.0000 SQ.FT. XMRP = 976.0000 IN. XT
LREF = 1290.3000 INCHES YMRP = .0000 IN. YT
BREF = 1290.3000 INCHES ZMRP = 400.0000 IN. ZT
SCALE = .0200

PARAMETRIC DATA

IB-ELV = 10.000 OB-ELV = 5.000
BDFLAP = .000 SPDBRK = .000
RUDDER = .000 SILTS = 1.000
MACH = .600 RN/L = 3.500

RUN NO. 870/ 0 RN/L = 3.50 GRADIENT INTERVAL = -5.00/ 5.00

ALPHAO	BETAO	CNL	CNFL	CAL	CAFL	CLMFL	CYFL	CYNL	CYNFL	CBLFL
-.372	-8.780	.01000	-.01270	.28240	.09570	-.03480	.35790	-.15480	-.15260	.05400
-.357	-6.657	-.00170	-.02350	.28250	.10150	-.02590	.26300	-.11430	-.11210	.04020
-.342	-4.603	-.00820	-.02910	.28380	.10840	-.02050	.17780	-.07830	-.07660	.02720
-.309	-.391	-.00960	-.02890	.28090	.10790	-.01350	.00810	-.00350	-.00350	.00070
-.271	3.723	.01680	-.00320	.28410	.11060	-.02730	-.13930	.06280	.06140	-.02230
-.265	5.794	.02200	.00090	.28440	.10790	-.03220	-.21760	.09790	.09600	-.03500
-.263	7.882	.02700	.00480	.28600	.10490	-.03640	-.29900	.13320	.13100	-.04770
	GRADIENT	.00299	.00310	.00003	.00026	-.00081	-.03809	.01695	.01658	-.00595

RUN NO. 871/ 0 RN/L = 3.50 GRADIENT INTERVAL = -5.00/ 5.00

ALPHAO	BETAO	CNL	CNFL	CAL	CAFL	CLMFL	CYFL	CYNL	CYNFL	CBLFL
4.130	-7.788	.24870	.22730	.27010	.09400	-.11750	.32530	-.14630	-.14470	.05840
4.227	-5.976	.25800	.23730	.26790	.09840	-.11870	.24240	-.11040	-.10890	.04430
3.952	-3.829	.23700	.21660	.26930	.09700	-.10680	.16080	-.07480	-.07380	.02890
4.097	-.000	.24860	.22960	.26490	.10000	-.10780	.01030	-.00830	-.00840	.00210
3.938	4.125	.26220	.24300	.26820	.10000	-.11930	-.14690	.06320	.06210	-.02660
3.808	6.166	.26770	.24700	.26840	.09710	-.12480	-.22760	.10120	.09960	-.04200
3.678	7.918	.25490	.23350	.27030	.09650	-.12160	-.29740	.13240	.13040	-.05350
	GRADIENT	.00317	.00332	-.00013	.00037	-.00159	-.03868	.01735	.01709	-.00698

RUN NO. 872/ 0 RN/L = 3.50 GRADIENT INTERVAL = -5.00/ 5.00

ALPHAO	BETAO	CNL	CNFL	CAL	CAFL	CLMFL	CYFL	CYNL	CYNFL	CBLFL
6.274	-8.006	.38100	.35980	.25900	.08550	-.17030	.32920	-.14810	-.14670	.06300
6.155	-5.963	.37150	.35060	.26060	.09010	-.16360	.24730	-.11240	-.11110	.04740
6.263	-3.868	.38350	.36340	.26010	.09130	-.16510	.15970	-.07350	-.07250	.03140
5.834	.202	.35360	.33460	.25990	.09250	-.14710	-.00270	-.00210	-.00210	-.00010
5.841	4.115	.36920	.35000	.25780	.09040	-.15950	-.14100	.05950	.05850	-.02720
5.930	6.270	.38600	.36540	.25880	.09010	-.17050	-.22890	.10090	.09950	-.04450
5.614	7.985	.37410	.35270	.26210	.08840	-.16860	-.29600	.13150	.12970	-.05680
	GRADIENT	-.00183	-.00171	-.00029	-.00011	.00073	-.03768	.01667	.01642	-.00734

IA156A, AEDC PWT 16T-470, O T S W/SILTS (R8NV42) (10 MAY 80)

REFERENCE DATA

SREF = 2690.0000 SQ.FT. XMRP = 976.0000 IN. XT
LREF = 1290.3000 INCHES YMRP = .0000 IN. YT
BREF = 1290.3000 INCHES ZMRP = 400.0000 IN. ZT
SCALE = .0200

PARAMETRIC DATA

IB-ELV = 10.000 OB-ELV = 5.000
BDFLAP = .000 SPDBRK = .000
RUDDER = .000 SILTS = 1.000
MACH = .600 RN/L = 3.500

RUN NO. 873/ 0 RN/L = 3.50 GRADIENT INTERVAL = -5.00/ 5.00

ALPHAO	BETAO	CNL	CNFL	CAL	CAFL	CLMFL	CYFL	CYNL	CYNFL	CBLFL
8.126	-7.971	.49530	.47350	.24850	.07140	-.21410	.32060	-.14160	-.14040	.06450
8.003	-5.692	.48970	.46930	.24900	.08250	-.20960	.22460	-.10000	-.09880	.04580
7.988	-3.728	.48580	.46600	.24990	.08350	-.20460	.14130	-.06240	-.06150	.02950
8.046	.165	.47980	.46070	.25100	.08240	-.19580	.00470	-.00510	-.00520	.00150
7.840	4.160	.49010	.47090	.24940	.08410	-.20650	-.13770	.05630	.05530	-.02770
7.965	6.229	.50730	.48670	.24890	.07870	-.21860	-.21210	.09030	.08890	-.04350
7.842	8.218	.49990	.47880	.24920	.07470	-.21870	-.29750	.12980	.12840	-.05980
	GRADIENT	.00055	.00063	-.00006	.00008	-.00025	-.03537	.01505	.01481	-.00725

IA156A, AEDC PWT 16T-470, O T S W/SILTS (R8NV43) (10 MAY 80)

REFERENCE DATA

SREF = 2690.0000 SQ.FT. XMRP = 976.0000 IN. XT
LREF = 1290.3000 INCHES YMRP = .0000 IN. YT
BREF = 1290.3000 INCHES ZMRP = 400.0000 IN. ZT
SCALE = .0200

PARAMETRIC DATA

IB-ELV = 10.000 OB-ELV = 5.000
BDFLAP = .000 SPDBRK = .000
RUDDER = .000 SILTS = 1.000
MACH = .800 RN/L = 3.500

RUN NO. 874/ 0 RN/L = 3.50 GRADIENT INTERVAL = -5.00/ 5.00

ALPHAO	BETAO	CNL	CNFL	CAL	CAFL	CLMFL	CYFL	CYNL	CYNFL	CBLFL
-8.320	-6.125	-.45880	-.48290	.30990	.11210	.13020	.27280	-.12000	-.11720	.03080
-8.413	-3.880	-.46830	-.49230	.31510	.11570	.13940	.17020	-.07510	-.07360	.01770
-8.113	.246	-.47350	-.49520	.30970	.11470	.15360	-.00200	.00070	.00080	.00050
-8.023	4.302	-.44010	-.46330	.31390	.11680	.12830	-.17320	.07700	.07570	-.01890
-7.956	6.209	-.43640	-.46040	.31170	.11490	.12330	-.25400	.11220	.11000	-.02960
	GRADIENT	.00343	.00353	-.00015	.00013	-.00134	-.04197	.01859	.01825	-.00447

RUN NO. 875/ 0 RN/L = 3.50 GRADIENT INTERVAL = -5.00/ 5.00

ALPHAO	BETAO	CNL	CNFL	CAL	CAFL	CLMFL	CYFL	CYNL	CYNFL	CBLFL
-6.193	-5.894	-.31600	-.33980	.31110	.11670	.07950	.25750	-.11330	-.11070	.03140
-6.103	-3.865	-.31550	-.33850	.31350	.12340	.08520	.15950	-.07070	-.06920	.01860
-6.214	.135	-.33760	-.35880	.30590	.11760	.10250	-.00520	.00110	.00130	.00020
-5.908	4.136	-.30110	-.32340	.31190	.12440	.08150	-.15890	.07000	.06870	-.01960
-5.930	6.364	-.30460	-.32850	.31230	.11850	.07800	-.25270	.11150	.10920	-.03280
	GRADIENT	.00180	.00189	-.00020	.00013	-.00046	-.03979	.01759	.01724	-.00477

IA156A, AEDC PWT 16T-470, O T S W/SILTS (R8NV43) (10 MAY 80)

REFERENCE DATA

SREF = 2690.0000 SQ.FT. XMRP = 976.0000 IN. XT
LREF = 1290.3000 INCHES YMRP = .0000 IN. YT
BREF = 1290.3000 INCHES ZMRP = 400.0000 IN. ZT
SCALE = .0200

PARAMETRIC DATA

IB-ELV = 10.000 OB-ELV = 5.000
BDFLAP = .000 SPDBRK = .000
RUDDER = .000 SILTS = 1.000
MACH = .800 RN/L = 3.500

RUN NO. 876/ 0 RN/L = 3.50 GRADIENT INTERVAL = -5.00/ 5.00

ALPHAO	BETAO	CNL	CNFL	CAL	CAFL	CLMFL	CYFL	CYNL	CYNFL	CBLFL
-4.122	-5.859	-.19270	-.21640	.31060	.12080	.03660	.24400	-.10730	-.10490	.03280
-4.174	-3.836	-.19670	-.21920	.31110	.12620	.04290	.15290	-.06810	-.06660	.01960
-4.296	.380	-.20840	-.22890	.30370	.12380	.05450	-.01620	.00620	.00600	-.00130
-3.794	4.109	-.16820	-.19010	.30960	.12570	.03640	-.15700	.06890	.06750	-.02160
-3.859	6.127	-.16680	-.18970	.31040	.12560	.03130	-.24120	.10650	.10440	-.03420
	GRADIENT	.00345	.00353	-.00022	-.00007	-.00074	-.03903	.01725	.01689	-.00518

RUN NO. 877/ 0 RN/L = 3.50 GRADIENT INTERVAL = -5.00/ 5.00

ALPHAO	BETAO	CNL	CNFL	CAL	CAFL	CLMFL	CYFL	CYNL	CYNFL	CBLFL
-.405	-6.884	.01990	-.00300	.30640	.12050	-.04250	.29120	-.12910	-.12690	.04380
-.384	-4.775	.01170	-.00980	.30450	.12720	-.03650	.19630	-.08950	-.08780	.02940
-.341	-.555	.00480	-.01520	.29450	.12280	-.02640	.01740	-.00920	-.00900	.00230
-.291	3.683	.03550	.01470	.30190	.12650	-.04400	-.14780	.06630	.06490	-.02250
-.283	5.775	.04380	.02230	.30600	.12900	-.05020	-.23770	.10780	.10580	-.03700
	GRADIENT	.00282	.00290	-.00031	-.00008	-.00089	-.04068	.01842	.01805	-.00614

RUN NO. 878/ 0 RN/L = 3.50 GRADIENT INTERVAL = -5.00/ 5.00

ALPHAO	BETAO	CNL	CNFL	CAL	CAFL	CLMFL	CYFL	CYNL	CYNFL	CBLFL
4.072	-5.795	.29160	.26980	.29190	.11620	-.14470	.25490	-.11560	-.11400	.04630
4.020	-3.904	.29090	.27040	.28990	.11810	-.14140	.17270	-.07980	-.07870	.03150
3.768	.170	.27710	.25690	.28260	.11530	-.12890	.00960	-.00750	-.00750	.00210
3.638	3.968	.28980	.26930	.28790	.11700	-.14190	-.14270	.06310	.06190	-.02560
3.833	6.171	.30450	.28270	.29110	.11490	-.15060	-.24130	.10990	.10790	-.04390
	GRADIENT	-.00018	-.00018	-.00027	-.00015	-.00003	-.04006	.01815	.01785	-.00725

RUN NO. 879/ 0 RN/L = 3.50 GRADIENT INTERVAL = -5.00/ 5.00

ALPHAO	BETAO	CNL	CNFL	CAL	CAFL	CLMFL	CYFL	CYNL	CYNFL	CBLFL
6.131	-5.815	.42090	.39880	.28730	.11000	-.19520	.25380	-.11620	-.11470	.04660
5.812	-3.671	.40720	.38640	.28500	.11250	-.18710	.15940	-.07420	-.07320	.02980
5.708	.237	.40530	.38540	.27870	.11300	-.18180	.00010	-.00310	-.00320	.00060
5.831	4.132	.42430	.40400	.28160	.11280	-.19380	-.14780	.06390	.06270	-.02670
5.719	5.964	.42010	.39880	.28540	.11280	-.19420	-.23180	.10500	.10350	-.04280
	GRADIENT	.00219	.00225	-.00044	.00004	-.00086	-.03937	.01770	.01742	-.00724

IA156A, AEDC PWT 16T-470, O T S W/SILTS (R8NV44) (10 MAY 80)

REFERENCE DATA

SREF = 2690.0000 SQ.FT. XMRP = 976.0000 IN. XT
LREF = 1290.3000 INCHES YMRP = .0000 IN. YT
BREF = 1290.3000 INCHES ZMRP = 400.0000 IN. ZT
SCALE = .0200

PARAMETRIC DATA

IB-ELV = 10.000 OB-ELV = 5.000
BDFLAP = .000 SPDBRK = .000
RUDDER = .000 SILTS = 1.000
MACH = .900 RN/L = 3.500

RUN NO. 880/ 0 RN/L = 3.50 GRADIENT INTERVAL = -5.00/ 5.00

ALPHAO	BETAO	CNL	CNFL	CAL	CAFL	CLMFL	CYFL	CYNL	CYNFL	CBLFL
-8.312	-6.090	-.49440	-.52060	.35560	.14350	.15580	.28180	-.12350	-.12110	.03130
-8.309	-3.820	-.50330	-.52900	.35810	.14550	.16530	.17410	-.07520	-.07400	.01760
-8.093	.296	-.51190	-.53530	.35250	.14430	.18080	-.00790	.00260	.00280	.00080
-7.993	4.299	-.48100	-.50570	.35530	.14830	.15760	-.18040	.07990	.07870	-.01870
-7.946	6.205	-.47920	-.50550	.35820	.14630	.15410	-.26480	.11660	.11460	-.02980
	GRADIENT	.00272	.00285	-.00035	.00034	-.00093	-.04366	.01910	.01881	-.00447

RUN NO. 881/ 0 RN/L = 3.50 GRADIENT INTERVAL = -5.00/ 5.00

ALPHAO	BETAO	CNL	CNFL	CAL	CAFL	CLMFL	CYFL	CYNL	CYNFL	CBLFL
-6.117	-5.816	-.33840	-.36490	.35630	.14720	.09770	.26920	-.11920	-.11700	.03270
-6.284	-3.992	-.35920	-.38410	.35490	.15340	.10990	.17820	-.07860	-.07740	.02040
-6.101	.042	-.36200	-.38480	.34680	.14670	12290	.00130	-.00250	-.00230	.00150
-6.038	4.340	-.34070	-.36500	.35280	.15360	.10720	-.17840	.07740	.07610	-.02090
-6.124	6.348	-.35170	-.37740	.35550	.15250	.10920	-.26490	.11510	.11290	-.03300
	GRADIENT	.00225	.00232	-.00023	.00004	-.00036	-.04279	.01872	.01842	-.00496

RUN NO. 882/ 0 RN/L = 3.50 GRADIENT INTERVAL = -5.00/ 5.00

ALPHAO	BETAO	CNL	CNFL	CAL	CAFL	CLMFL	CYFL	CYNL	CYNFL	CBLFL
-4.268	-6.189	-.21840	-.24450	.35620	.14970	.05420	.27590	-.12010	-.11780	.03630
-4.162	-3.882	-.21660	-.24120	.35180	.15350	.05830	.16610	-.07250	-.07140	.02070
-4.197	.246	-.22590	-.24810	.33950	.15000	.07080	-.00740	.00100	.00100	-.00010
-3.912	4.303	-.19310	-.21740	.34820	.15480	.05420	-.17420	.07410	.07280	-.02360
-3.796	6.101	-.18770	-.21290	.35110	.15440	.05010	-.25100	.10800	.10600	-.03540
	GRADIENT	.00286	.00289	-.00045	.00016	-.00049	-.04157	.01791	.01762	-.00541

RUN NO. 883/ 0 RN/L = 3.50 GRADIENT INTERVAL = -5.00/ 5.00

ALPHAO	BETAO	CNL	CNFL	CAL	CAFL	CLMFL	CYFL	CYNL	CYNFL	CBLFL
-.435	-6.931	.01170	-.01310	.35100	.15290	-.03350	.29910	-.13090	-.12910	.04530
-.406	-4.831	.00950	-.01400	.34630	.15530	-.03080	.20680	-.09310	-.09150	.03150
-.357	-.518	.00540	-.01540	.32790	.14810	-.02520	.01700	-.00810	-.00790	.00230
-.306	3.667	.03490	.01260	.33810	.15360	-.04170	-.15090	.06730	.06610	-.02340
-.306	5.770	.03420	.01060	.34390	.15480	-.04190	-.23990	.10690	.10520	-.03730
	GRADIENT	.00297	.00311	-.00098	-.00021	-.00127	-.04210	.01888	.01855	-.00646

IA156A, AEDC PWT 16T-470, O T S W/SILTS (R8NV45) (10 MAY 80)

REFERENCE DATA

SREF = 2690.0000 SQ.FT. XMRP = 976.0000 IN. XT
LREF = 1290.3000 INCHES YMRP = .0000 IN. YT
BREF = 1290.3000 INCHES ZMRP = 400.0000 IN. ZT
SCALE = .0200

PARAMETRIC DATA

IB-ELV = 10.000 OB-ELV = 5.000
BDFLAP = .000 SPDBRK = .000
RUDDER = .000 SILTS = 1.000
MACH = .950 RN/L = 3.500

RUN NO. 887/ 0 RN/L = 3.50 GRADIENT INTERVAL = -5.00/ 5.00

ALPHAO	BETAO	CNL	CNFL	CAL	CAFL	CLMFL	CYFL	CYNL	CYNFL	CBLFL
-4.317	-6.270	-.23490	-.26270	.39870	.18180	.06750	.28550	-.12360	-.12120	.03760
-4.292	-4.005	-.23700	-.26330	.39930	.18420	.07290	.17360	-.07430	-.07310	.02160
-4.154	.396	-.23350	-.25860	.39060	.17930	.08410	-.01550	.00470	.00460	-.00070
-3.888	4.287	-.20970	-.23630	.39750	.18320	.06940	-.18010	.07760	.07610	-.02420
-4.059	6.259	-.21680	-.24500	.40060	.18170	.06760	-.26830	.11670	.11430	-.03710
	GRADIENT	.00324	.00321	-.00026	-.00014	-.00036	-.04266	.01831	.01799	-.00551

RUN NO. 888/ 0 RN/L = 3.50 GRADIENT INTERVAL = -5.00/ 5.00

ALPHAO	BETAO	CNL	CNFL	CAL	CAFL	CLMFL	CYFL	CYNL	CYNFL	CBLFL
-.452	-6.978	.01090	-.01710	.39730	.17910	-.02320	.30330	-.12950	-.12700	.04660
-.422	-4.828	.00440	-.02190	.39320	.18070	-.01560	.20270	-.08790	-.08600	.03130
-.367	-.566	-.00080	-.02390	.38020	.17900	-.00550	.01880	-.00860	-.00830	.00250
-.314	3.685	.02880	.00380	.38870	.18190	-.02320	-.15420	.06930	.06770	-.02490
-.313	5.791	.03130	.00470	.39490	.18310	-.02670	-.24770	.11000	.10780	-.04040
	GRADIENT	.00286	.00302	-.00053	.00014	-.00089	-.04192	.01847	.01805	-.00660

RUN NO. 889/ 0 RN/L = 3.50 GRADIENT INTERVAL = -5.00/ 5.00

ALPHAO	BETAO	CNL	CNFL	CAL	CAFL	CLMFL	CYFL	CYNL	CYNFL	CBLFL
4.030	-5.635	.28570	.26080	.38430	.17470	-.13060	.25420	-.10970	-.10800	.04410
3.878	-3.794	.27860	.25500	.37850	.17480	-.12970	.17000	-.07330	-.07210	.02890
3.700	.220	.27580	.25120	.36930	.16840	-.13060	.00190	-.00120	-.00140	.00100
3.828	4.057	.30160	.27710	.37600	.17290	-.14030	-.15530	.06610	.06470	-.02550
3.780	6.076	.29580	.26960	.38320	.17460	-.13520	-.24880	.10670	.10450	-.04220
	GRADIENT	.00290	.00279	-.00033	-.00025	-.00134	-.04144	.01776	.01743	-.00693

IA156A, AEDC PWT 16T-470, O T S W/SILTS (R8NV44) (10 MAY 80)

REFERENCE DATA

SREF = 2690.0000 SQ.FT. XMRP = 976.0000 IN. XT
LREF = 1290.3000 INCHES YMRP = .0000 IN. YT
BREF = 1290.3000 INCHES ZMRP = 400.0000 IN. ZT
SCALE = .0200

PARAMETRIC DATA

IB-ELV = 10.000 OB-ELV = 5.000
BDFLAP = .000 SPDBRK = .000
RUDDER = .000 SILTS = 1.000
MACH = .900 RN/L = 3.500

RUN NO. 884/ 0 RN/L = 3.50 GRADIENT INTERVAL = -5.00/ 5.00

ALPHAO	BETAO	CNL	CNFL	CAL	CAFL	CLMFL	CYFL	CYNL	CYNFL	CBLFL
4.009	-5.714	.29100	.26750	.33860	.15040	-.14160	.25710	-.11380	-.11240	.04390
3.883	-3.867	.28970	.26760	.33460	.14810	-.14230	.17540	-.07980	-.07890	.02990
3.799	.163	.28670	.26580	.32250	.14360	-.14030	.00860	-.00590	-.00580	.00190
3.718	3.965	.29700	.27480	.33080	.14760	-.14660	-.15120	.06710	.06600	-.02520
3.633	5.901	.28830	.26430	.33760	.14790	-.14370	-.24150	.10720	.10540	-.04020
	GRADIENT	.00092	.00091	-.00051	-.00007	-.00054	-.04170	.01875	.01850	-.00704

IA156A, AEDC PWT 16T-470, O T S W/SILTS (R8NV45) (10 MAY 80)

REFERENCE DATA

SREF = 2690.0000 SQ.FT. XMRP = 976.0000 IN. XT
LREF = 1290.3000 INCHES YMRP = .0000 IN. YT
BREF = 1290.3000 INCHES ZMRP = 400.0000 IN. ZT
SCALE = .0200

PARAMETRIC DATA

IB-ELV = 10.000 OB-ELV = 5.000
BDFLAP = .000 SPDBRK = .000
RUDDER = .000 SILTS = 1.000
MACH = .950 RN/L = 3.500

RUN NO. 885/ 0 RN/L = 3.50 GRADIENT INTERVAL = -5.00/ 5.00

ALPHAO	BETAO	CNL	CNFL	CAL	CAFL	CLMFL	CYFL	CYNL	CYNFL	CBLFL
-8.385	-6.134	-.52490	-.55420	.40130	.17290	.17150	.30400	-.13510	-.13260	.03480
-8.374	-3.850	-.52960	-.55820	.40390	.17520	.17700	.18600	-.08040	-.07920	.01960
-8.059	.201	-.52660	-.55280	.39960	.17310	.18600	.00370	-.00260	-.00260	.00240
-7.981	4.275	-.50360	-.53170	.40200	.17500	.17100	-.18890	.08490	.08380	-.01980
-7.931	6.166	-.50420	-.53350	.40210	.17370	.16730	-.28220	.12780	.12570	-.03190
	GRADIENT	.00320	.00326	-.00023	-.00002	-.00074	-.04614	.02035	.02006	-.00485

RUN NO. 886/ 0 RN/L = 3.50 GRADIENT INTERVAL = -5.00/ 5.00

ALPHAO	BETAO	CNL	CNFL	CAL	CAFL	CLMFL	CYFL	CYNL	CYNFL	CBLFL
-6.186	-5.886	-.35430	-.38350	.39230	.16400	.10890	.27550	-.12150	-.11930	.03360
-6.104	-3.866	-.36180	-.38910	.40110	.18240	.11540	.17560	-.07620	-.07510	.02030
-6.229	.088	-.38360	-.40920	.39600	.17570	.13270	.00140	-.00230	-.00230	.00210
-5.890	4.177	-.34860	-.37600	.40090	.18050	.11620	-.18150	.08030	.07910	-.02150
-5.963	6.370	-.35640	-.38570	.40230	.17710	.11600	-.28100	.12500	.12270	-.03540
	GRADIENT	.00168	.00167	-.00002	-.00023	.00008	-.04440	.01946	.01918	-.00520

IA156A, AEDC PWT 16T-470, O T S W/SILTS (R8NV46) (10 MAY 80)

REFERENCE DATA

SREF = 2690.0000 SQ.FT. XMRP = 976.0000 IN. XT
LREF = 1290.3000 INCHES YMRP = .0000 IN. YT
BREF = 1290.3000 INCHES ZMRP = 400.0000 IN. ZT
SCALE = .0200

PARAMETRIC DATA

IB-ELV = 10.000 OB-ELV = 5.000
BDFLAP = .000 SPDBRK = .000
RUDDER = .000 SILTS = 1.000
MACH = 1.050 RN/L = 3.500

RUN NO. 892/ 0 RN/L = 3.50 GRADIENT INTERVAL = -5.00/ 5.00

ALPHAO	BETAO	CNL	CNFL	CAL	CAFL	CLMFL	CYFL	CYNL	CYNFL	CBLFL
-8.394	-6.044	-.58520	-.62150	.50210	.22370	.21970	.31100	-.13360	-.13080	.03620
-8.401	-3.919	-.59480	-.63100	.50860	.22810	.23100	.20500	-.08830	-.08670	.02210
-8.206	.356	-.58840	-.62270	.51120	.23150	.23460	-.00510	.00240	.00240	.00110
-8.110	4.340	-.57830	-.61300	.50760	.23310	.22920	-.19020	.08370	.08230	-.02050
-8.047	6.243	-.57120	-.60610	.50500	.22980	.22070	-.28210	.12230	.11980	-.03270
	GRADIENT	.00199	.00218	-.00011	.00061	-.00021	-.04787	.02083	.02047	-.00515

RUN NO. 893/ 0 RN/L = 3.50 GRADIENT INTERVAL = -5.00/ 5.00

ALPHAO	BETAO	CNL	CNFL	CAL	CAFL	CLMFL	CYFL	CYNL	CYNFL	CBLFL
-6.309	-6.106	-.41130	-.44810	.51000	.23150	.15720	.30140	-.12840	-.12580	.03930
-6.249	-3.982	-.41860	-.45470	.51130	.23540	.16700	.19260	-.08180	-.08030	.02450
-6.076	.168	-.42050	-.45490	.50900	.23480	17880	.00340	-.00300	-.00300	.00180
-6.134	4.331	-.41540	-.44940	.50750	.23620	.17060	-.18890	.08210	.08070	-.02400
-5.824	6.212	-.38970	-.42400	.50330	.23550	.15690	-.26940	.11620	.11380	-.03590
	GRADIENT	.00039	.00064	-.00046	.00010	.00043	-.04589	.01972	.01937	-.00583

RUN NO. 894/ 0 RN/L = 3.50 GRADIENT INTERVAL = -5.00/ 5.00

ALPHAO	BETAO	CNL	CNFL	CAL	CAFL	CLMFL	CYFL	CYNL	CYNFL	CBLFL
-4.192	-5.878	-.26180	-.29840	.50900	.23650	.10560	.27750	-.11760	-.11530	.04010
-4.435	-4.131	-.28550	-.32160	.51010	.24050	.12020	.19540	-.08510	-.08350	.02720
-4.347	.164	-.28910	-.32400	.51010	.23670	.13340	.00120	-.00250	-.00260	.00160
-4.040	4.363	-.25670	-.29080	.50920	.24020	.11540	-.18250	.07880	.07720	-.02640
-3.833	6.221	-.23450	-.26910	.50720	.24130	.10060	-.26760	.11480	.11250	-.04040
	GRADIENT	.00337	.00361	-.00011	-.00004	-.00055	-.04449	.01929	.01892	-.00631

RUN NO. 895/ 0 RN/L = 3.50 GRADIENT INTERVAL = -5.00/ 5.00

ALPHAO	BETAO	CNL	CNFL	CAL	CAFL	CLMFL	CYFL	CYNL	CYNFL	CBLFL
-.497	-6.991	-.00120	-.03840	.50820	.23870	.00620	.31940	-.13560	-.13330	.05480
-.464	-4.863	-.00930	-.04580	.50780	.24170	.01770	.22050	-.09790	-.09610	.03830
-.409	-.590	-.01460	-.04890	.50540	.23850	.02790	.03030	-.01640	-.01630	.00460
-.352	3.655	.00940	-.02450	.51270	.24590	.01460	-.15320	.06980	.06810	-.02800
-.344	5.795	.01600	-.01840	.51440	.24760	.00640	-.24680	.10890	.10670	-.04410
	GRADIENT	.00219	.00250	.00057	.00049	-.00036	-.04387	.01969	.01928	-.00778

IA156A, AEDC PWT 16T-470, O T S W/SILTS (R8NV46) (10 MAY 80)

REFERENCE DATA

SREF = 2690.0000 SQ.FT. XMRP = 976.0000 IN. XT
LREF = 1290.3000 INCHES YMRP = .0000 IN. YT
BREF = 1290.3000 INCHES ZMRP = 400.0000 IN. ZT
SCALE = .0200

PARAMETRIC DATA

IB-ELV = 10.000 OB-ELV = 5.000
BDFLAP = .000 SPDBRK = .000
RUDDER = .000 SILTS = 1.000
MACH = 1.050 RN/L = 3.500

RUN NO. 896/ 0 RN/L = 3.50 GRADIENT INTERVAL = -5.00/ 5.00

ALPHAO	BETAO	CNL	CNFL	CAL	CAFL	CLMFL	CYFL	CYNL	CYNFL	CBLFL
3.963	-5.872	.27390	.23900	.50270	.23800	-.10300	.27420	-.12050	-.11920	.05300
4.045	-3.828	.28090	.24590	.50090	.23730	-.10420	.18270	-.08190	-.08120	.03520
3.692	.160	.26460	.23080	.49400	.23660	-.09610	.01110	-.00710	-.00710	.00260
3.637	3.941	.28440	.25140	.49770	.24130	-.11100	-.15260	.06650	.06560	-.02860
3.867	6.115	.30080	.26640	.49870	.23590	-.11860	-.24880	.10530	.10380	-.04720
	GRADIENT	.00041	.00067	-.00042	.00051	-.00085	-.04316	.01910	.01889	-.00821

IA156A, AEDC PWT 16T-470, O T S W/SILTS (R8NV47) (10 MAY 80)

REFERENCE DATA

SREF = 2690.0000 SQ.FT. XMRP = 976.0000 IN. XT
LREF = 1290.3000 INCHES YMRP = .0000 IN. YT
BREF = 1290.3000 INCHES ZMRP = 400.0000 IN. ZT
SCALE = .0200

PARAMETRIC DATA

IB-ELV = 10.000 OB-ELV = 5.000
BDFLAP = .000 SPDBRK = .000
RUDDER = .000 SILTS = 1.000
MACH = 1.100 RN/L = 3.500

RUN NO. 897/ 0 RN/L = 3.49 GRADIENT INTERVAL = -5.00/ 5.00

ALPHAO	BETAO	CNL	CNFL	CAL	CAFL	CLMFL	CYFL	CYNL	CYNFL	CBLFL
-8.358	-6.136	-.57700	-.61140	.50910	.24490	.21130	.31050	-.13210	-.12940	.03600
-8.433	-3.920	-.58180	-.61530	.51040	.24930	.21880	.19450	-.08110	-.07950	.02070
-8.252	.215	-.57500	-.60640	.50810	.24920	.22240	-.00210	.00030	.00030	.00140
-8.165	4.341	-.56490	-.59700	.51060	.25350	.21800	-.18590	.07920	.07770	-.01980
-8.137	6.282	-.56440	-.59710	.50680	.24780	.21490	-.28230	.12080	.11840	-.03260
	GRADIENT	.00205	.00222	.00002	.00051	-.00010	-.04605	.01941	.01903	-.00490

RUN NO. 898/ 0 RN/L = 3.50 GRADIENT INTERVAL = -5.00/ 5.00

ALPHAO	BETAO	CNL	CNFL	CAL	CAFL	CLMFL	CYFL	CYNL	CYNFL	CBLFL
-6.235	-5.974	-.39810	-.43110	.50410	.25140	.14320	.27720	-.11500	-.11260	.03610
-6.460	-4.032	-.41880	-.45130	.50580	.25440	.15610	.18560	-.07750	-.07610	.02300
-6.219	.115	-.41280	-.44350	.50110	.25080	.16520	-.00120	-.00160	-.00160	.00130
-6.157	4.333	-.39030	-.42090	.50260	.25500	.15130	-.18230	.07510	.07370	-.02300
-5.878	6.244	-.37200	-.40400	.50260	.25130	.14020	-.26520	.11090	.10850	-.03590
	GRADIENT	.00341	.00364	-.00038	.00007	-.00058	-.04398	.01824	.01791	-.00550

IA156A, AEDC PWT 16T-470, O T S W/SILTS (R8NV47) (10 MAY 80)

REFERENCE DATA

SREF = 2690.0000 SQ.FT. XMRP = 976.0000 IN. XT
LREF = 1290.3000 INCHES YMRP = .0000 IN. YT
BREF = 1290.3000 INCHES ZMRP = 400.0000 IN. ZT
SCALE = .0200

PARAMETRIC DATA

IB-ELV = 10.000 OB-ELV = 5.000
BDFLAP = .000 SPDBRK = .000
RUDDER = .000 SILTS = 1.000
MACH = 1.100 RN/L = 3.500

RUN NO. 899/ 0 RN/L = 3.50 GRADIENT INTERVAL = -5.00/ 5.00

ALPHAO	BETAO	CNL	CNFL	CAL	CAFL	CLMFL	CYFL	CYNL	CYNFL	CBLFL
-4.135	-6.044	-.23820	-.27080	.50110	.25470	.08450	.26530	-.10850	-.10640	.03940
-4.267	-3.979	-.25450	-.28640	.49800	.25610	.09640	.17220	-.07140	-.07000	.02430
-4.129	.386	-.25180	-.28190	.49230	.25300	.10790	-.01090	.00160	.00130	-.00030
-3.853	4.244	-.21610	-.24580	.49740	.25900	.08780	-.16770	.06780	.06650	-.02560
-4.015	6.208	-.22280	-.25390	.50150	.25720	.08450	-.25540	.10520	.10310	-.03940
	GRADIENT	.00458	.00485	-.00010	.00033	-.00097	-.04135	.01692	.01659	-.00606

RUN NO. 900/ 0 RN/L = 3.50 GRADIENT INTERVAL = -5.00/ 5.00

ALPHAO	BETAO	CNL	CNFL	CAL	CAFL	CLMFL	CYFL	CYNL	CYNFL	CBLFL
-.383	-7.070	.00910	-.02390	.49780	.25580	-.00520	.30580	-.12560	-.12360	.05380
-.420	-4.981	.00250	-.02920	.49220	.25860	.00310	.21390	-.09080	-.08910	.03830
-.399	-.647	-.00290	-.03180	.48430	.25440	.01090	.02960	-.01470	-.01460	.00440
-.384	3.467	.01230	-.01640	.48930	.25770	.00270	-.14260	.06320	.06170	-.02650
-.348	5.975	.02160	-.00770	.49200	.25910	-.00700	-.25170	.10790	.10560	-.04560
	GRADIENT	.00114	.00150	-.00036	-.00011	-.00003	-.04221	.01822	.01785	-.00767

RUN NO. 901/ 0 RN/L = 3.50 GRADIENT INTERVAL = -5.00/ 5.00

ALPHAO	BETAO	CNL	CNFL	CAL	CAFL	CLMFL	CYFL	CYNL	CYNFL	CBLFL
4.196	-5.913	.30620	.27700	.47910	.25210	-.12450	.26740	-.11560	-.11440	.05160
3.868	-3.725	.28680	.25750	.47940	.25340	-.11350	.17130	-.07710	-.07640	.03290
3.661	.204	.27230	.24260	.47720	.25180	-.10340	.00420	-.00480	-.00480	.00150
3.820	4.039	.30070	.27250	.47660	.25210	-.12290	-.15670	.06570	.06470	-.02940
3.780	6.063	.29900	.27000	.47740	.25190	-.12560	-.24700	.10230	.10070	-.04670
	GRADIENT	.00177	.00191	-.00036	-.00017	-.00120	-.04225	.01839	.01818	-.00802

IA156A, AEDC PWT 16T-470, O T S W/SILTS (R8NV48) (10 MAY 80)

REFERENCE DATA

SREF = 2690.0000 SQ.FT. XMRP = 976.0000 IN. XT
LREF = 1290.3000 INCHES YMRP = .0000 IN. YT
BREF = 1290.3000 INCHES ZMRP = 400.0000 IN. ZT
SCALE = .0200

PARAMETRIC DATA

IB-ELV = 10.000 OB-ELV = 5.000
BDFLAP = .000 SPDBRK = .000
RUDDER = .000 SILTS = 1.000
MACH = 1.150 RN/L = 3.500

RUN NO. 902/ 0 RN/L = 3.50 GRADIENT INTERVAL = -5.00/ 5.00

ALPHAO	BETAO	CNL	CNFL	CAL	CAFL	CLMFL	CYFL	CYNL	CYNFL	CBLFL
-8.420	-6.010	-.57170	-.60370	.50720	.25890	.20620	.30390	-.12710	-.12490	.03570
-8.432	-3.894	-.57850	-.61100	.50920	.26360	.21520	.20060	-.08390	-.08240	.02170
-8.234	.369	-.58430	-.61310	.50790	.26640	.22530	.00110	-.00220	-.00230	.00190
-8.194	4.324	-.58360	-.61380	.50880	.26530	.22550	-.17810	.07330	.07190	-.01820
-8.136	6.243	-.57480	-.60530	.50530	.26360	.21670	-.26960	.11310	.11110	-.03130
	GRADIENT	-.00051	-.00034	-.00005	.00021	.00127	-.04609	.01913	.01878	-.00485

RUN NO. 903/ 0 RN/L = 3.49 GRADIENT INTERVAL = -5.00/ 5.00

ALPHAO	BETAO	CNL	CNFL	CAL	CAFL	CLMFL	CYFL	CYNL	CYNFL	CBLFL
-6.433	-6.108	-.40040	-.43190	.50500	.26390	.13970	.29140	-.12040	-.11800	.03930
-6.084	-3.837	-.38390	-.41420	.50280	.26840	.14120	.17700	-.07350	-.07220	.02330
-6.206	.121	-.41500	-.44380	.49890	.26200	16720	.00960	-.00840	-.00840	.00290
-6.150	4.334	-.40080	-.42980	.50370	.27100	.15450	-.17320	.06830	.06700	-.02230
-5.938	6.320	-.38260	-.41280	.50250	.26910	.14250	-.26270	.10770	.10540	-.03610
	GRADIENT	-.00201	-.00185	.00012	.00034	.00158	-.04286	.01736	.01704	-.00558

RUN NO. 904/ 0 RN/L = 3.50 GRADIENT INTERVAL = -5.00/ 5.00

ALPHAO	BETAO	CNL	CNFL	CAL	CAFL	CLMFL	CYFL	CYNL	CYNFL	CBLFL
-4.285	-6.227	-.23990	-.27130	.50200	.26690	.08050	.28080	-.11540	-.11330	.04300
-4.310	-3.932	-.24460	-.27460	.49810	.27130	.08790	.17520	-.07440	-.07310	.02620
-4.022	.234	-.23740	-.26600	.49410	.26610	.09970	.00240	-.00600	-.00610	.00120
-3.778	4.160	-.21690	-.24510	.49820	.27130	.08930	-.16110	.06410	.06280	-.02550
-3.957	6.115	-.22650	-.25610	.50140	.27190	.08810	-.24820	.10040	.09840	-.03910
	GRADIENT	.00341	.00363	.00000	-.00001	.00020	-.04156	.01711	.01679	-.00639

RUN NO. 905/ 0 RN/L = 3.50 GRADIENT INTERVAL = -5.00/ 5.00

ALPHAO	BETAO	CNL	CNFL	CAL	CAFL	CLMFL	CYFL	CYNL	CYNFL	CBLFL
-.374	-7.077	.02550	-.00590	.49910	.26970	-.01470	.31260	-.13100	-.12890	.05470
-.407	-4.717	.02250	-.00760	.49550	.27230	-.01130	.20370	-.08820	-.08670	.03630
-.387	-.679	.02300	-.00520	.49230	.27030	-.00840	.03010	-.01530	-.01520	.00470
-.358	3.482	.04030	.01270	.49670	.27550	-.01630	-.14310	.06360	.06210	-.02680
-.371	5.720	.03880	.01050	.49710	.27420	-.01700	-.24070	.10360	.10160	-.04440
	GRADIENT	.00218	.00249	.00015	.00039	-.00062	-.04229	.01852	.01815	-.00770

IA156A, AEDC PWT 16T-470, O T S W/SILTS (R8NV48) (10 MAY 80)

REFERENCE DATA

SREF = 2690.0000 SQ.FT. XMRP = 976.0000 IN. XT
LREF = 1290.3000 INCHES YMRP = .0000 IN. YT
BREF = 1290.3000 INCHES ZMRP = 400.0000 IN. ZT
SCALE = .0200

PARAMETRIC DATA

IB-ELV = 10.000 OB-ELV = 5.000
BDFLAP = .000 SPDBRK = .000
RUDDER = .000 SILTS = 1.000
MACH = 1.150 RN/L = 3.500

RUN NO. 906/ 0 RN/L = 3.50 GRADIENT INTERVAL = -5.00/ 5.00

ALPHAO	BETAO	CNL	CNFL	CAL	CAFL	CLMFL	CYFL	CYNL	CYNFL	CBLFL
4.100	-5.735	.29070	.26260	.48520	.26760	-.11560	.26700	-.11840	-.11710	.05110
3.871	-3.574	.27920	.25070	.48600	.26900	-.10770	.17620	-.08260	-.08180	.03340
3.762	.188	.28290	.25460	.48340	.26770	-.10890	.01450	-.01250	-.01250	.00300
3.918	4.194	.32080	.29380	.48340	.26990	-.13540	-.15730	.06500	.06400	-.02990
3.702	5.896	.30600	.27820	.48510	.26870	-.12990	-.23560	.09750	.09610	-.04500
	GRADIENT	.00540	.00559	-.00033	.00012	-.00360	-.04293	.01900	.01877	-.00815

IA156A, AEDC PWT 16T-470, O T S W/SILTS (R8NV49) (10 MAY 80)

REFERENCE DATA

SREF = 2690.0000 SQ.FT. XMRP = 976.0000 IN. XT
LREF = 1290.3000 INCHES YMRP = .0000 IN. YT
BREF = 1290.3000 INCHES ZMRP = 400.0000 IN. ZT
SCALE = .0200

PARAMETRIC DATA

IB-ELV = 10.000 OB-ELV = 5.000
BDFLAP = .000 SPDBRK = .000
RUDDER = .000 SILTS = 1.000
MACH = 1.250 RN/L = 3.500

RUN NO. 907/ 0 RN/L = 3.50 GRADIENT INTERVAL = -5.00/ 5.00

ALPHAO	BETAO	CNL	CNFL	CAL	CAFL	CLMFL	CYFL	CYNL	CYNFL	CBLFL
-8.169	-5.854	-.55250	-.58120	.50340	.27690	.19750	.28630	-.11750	-.11560	.03550
-8.464	-3.941	-.57650	-.60440	.50390	.28060	.21120	.19100	-.07570	-.07430	.02250
-8.271	.353	-.57150	-.59770	.50230	.28020	.21560	-.00580	.00400	.00400	.00120
-8.168	4.376	-.55810	-.58550	.50090	.28070	.20510	-.18750	.07970	.07850	-.02140
-8.104	6.294	-.55450	-.58280	.50100	.28010	.19950	-.27990	.11910	.11720	-.03420
	GRADIENT	.00220	.00226	-.00036	.00001	-.00071	-.04551	.01868	.01837	-.00527

RUN NO. 908/ 0 RN/L = 3.50 GRADIENT INTERVAL = -5.00/ 5.00

ALPHAO	BETAO	CNL	CNFL	CAL	CAFL	CLMFL	CYFL	CYNL	CYNFL	CBLFL
-6.224	-5.927	-.38680	-.41490	.49730	.27910	.13270	.27160	-.11030	-.10840	.03780
-6.462	-4.030	-.41180	-.43920	.49820	.28150	.14790	.18110	-.07190	-.07070	.02430
-6.215	.096	-.39630	-.42240	.49560	.27910	.15100	-.00160	.00070	.00070	.00140
-6.146	4.359	-.38120	-.40770	.49770	.28430	.13630	-.18210	.07620	.07500	-.02410
-5.860	6.264	-.36350	-.39160	.49750	.27960	.12620	-.26870	.11240	.11050	-.03710
	GRADIENT	.00365	.00375	-.00006	.00034	-.00139	-.04329	.01765	.01737	-.00577

IA156A, AEDC PWT 16T-470, O T S W/SILTS (R8NV49) (10 MAY 80)

REFERENCE DATA

SREF = 2690.0000 SQ.FT. XMRP = 976.0000 IN. XT
LREF = 1290.3000 INCHES YMRP = .0000 IN. YT
BREF = 1290.3000 INCHES ZMRP = 400.0000 IN. ZT
SCALE = .0200

PARAMETRIC DATA

IB-ELV = 10.000 OB-ELV = 5.000
BDFLAP = .000 SPDBRK = .000
RUDDER = .000 SILTS = 1.000
MACH = 1.250 RN/L = 3.500

RUN NO. 909/ 0 RN/L = 3.50 GRADIENT INTERVAL = -5.00/ 5.00

ALPHAO	BETAO	CNL	CNFL	CAL	CAFL	CLMFL	CYFL	CYNL	CYNFL	CBLFL
-4.383	-6.232	-.25360	-.28240	.49690	.27880	.08380	.27250	-.11060	-.10870	.04120
-4.297	-4.024	-.24390	-.27150	.49540	.28310	.08460	.16630	-.06720	-.06610	.02520
-4.171	.380	-.22810	-.25440	.49220	.28170	.08440	-.01290	.00500	.00500	-.00070
-3.910	4.253	-.20710	-.23310	.49610	.28720	.07210	-.16690	.06900	.06790	-.02490
-4.018	6.273	-.21930	-.24650	.49520	.28400	.07410	-.25790	.10690	.10510	-.03930
	GRADIENT	.00443	.00462	.00007	.00048	-.00148	-.04027	.01645	.01619	-.00605

RUN NO. 910/ 0 RN/L = 3.50 GRADIENT INTERVAL = -5.00/ 5.00

ALPHAO	BETAO	CNL	CNFL	CAL	CAFL	CLMFL	CYFL	CYNL	CYNFL	CBLFL
-.412	-7.127	.01750	-.01090	.49540	.28610	-.01320	.31100	-.12970	-.12780	.05250
-.440	-4.817	.01450	-.01260	.49200	.28800	-.00970	.20340	-.08670	-.08530	.03490
-.401	-.646	.02160	-.00440	.48910	.28590	-.00960	.02720	-.01310	-.01310	.00420
-.373	3.822	.03710	.01210	.49180	.29090	-.01610	-.15710	.06820	.06670	-.02790
-.349	5.731	.03300	.00690	.49180	.28800	-.01560	-.23940	.10090	.09900	-.04160
	GRADIENT	.00263	.00287	-.00002	.00035	-.00075	-.04173	.01793	.01760	-.00727

RUN NO. 911/ 0 RN/L = 3.50 GRADIENT INTERVAL = -5.00/ 5.00

ALPHAO	BETAO	CNL	CNFL	CAL	CAFL	CLMFL	CYFL	CYNL	CYNFL	CBLFL
4.089	-5.764	.30430	.27810	.48410	.28340	-.12750	.26520	-.11730	-.11620	.04870
3.996	-3.850	.30270	.27630	.48510	.28440	-.12550	.17900	-.08160	-.08090	.03310
3.717	.138	.28470	.25830	.48000	.28050	-.11240	.00590	-.00580	-.00580	.00200
3.584	3.832	.28760	.26240	.48200	.28430	-.11830	-.15190	.06680	.06590	-.02750
3.804	6.128	.29810	.27240	.48170	.28160	-.12480	-.25310	.10730	.10580	-.04580
	GRADIENT	-.00200	-.00185	-.00042	-.00003	.00097	-.04308	.01931	.01911	-.00789

IA156A, AEDC PWT 16T-470, O T S W/SILTS (R8NV50) (10 MAY 80)

REFERENCE DATA

SREF = 2690.0000 SQ.FT. XMRP = 976.0000 IN. XT
LREF = 1290.3000 INCHES YMRP = .0000 IN. YT
BREF = 1290.3000 INCHES ZMRP = 400.0000 IN. ZT
SCALE = .0200

PARAMETRIC DATA

IB-ELV = 10.000 OB-ELV = 5.000
BDFLAP = .000 SPDBRK = .000
RUDDER = .000 SILTS = 1.000
MACH = 1.400 RN/L = 3.500

RUN NO. 912/ 0 RN/L = 3.50 GRADIENT INTERVAL = -5.00/ 5.00

ALPHAO	BETAO	CNL	CNFL	CAL	CAFL	CLMFL	CYFL	CYNL	CYNFL	CBLFL
-8.444	-6.059	-.58040	-.60650	.49410	.28960	.20890	.30210	-.12130	-.11960	.03510
-8.457	-3.924	-.57890	-.60390	.49480	.29290	.21110	.18700	-.07190	-.07060	.02110
-8.142	.277	-.55420	-.57830	.49210	.29360	.20650	-.00480	.00150	.00150	.00130
-8.038	4.339	-.55250	-.57720	.49490	.29530	.20420	-.18030	.07040	.06930	-.01860
-8.005	6.234	-.55990	-.58510	.49160	.29260	.20600	-.27710	.11260	.11090	-.03160
	GRADIENT	.00321	.00325	.00001	.00029	-.00084	-.04446	.01722	.01693	-.00480

RUN NO. 913/ 0 RN/L = 3.51 GRADIENT INTERVAL = -5.00/ 5.00

ALPHAO	BETAO	CNL	CNFL	CAL	CAFL	CLMFL	CYFL	CYNL	CYNFL	CBLFL
-6.345	-5.891	-.40670	-.43180	.48900	.29260	.13990	.26990	-.10510	-.10350	.03520
-6.201	-3.919	-.40010	-.42520	.48980	.29210	.14140	.16980	-.06330	-.06240	.02180
-6.307	.231	-.40350	-.42730	.48660	.29470	.14610	-.00650	.00220	.00230	.00070
-6.043	4.311	-.37860	-.40240	.48870	.29740	.13310	-.17730	.06810	.06720	-.02150
-5.918	6.486	-.38190	-.40630	.48530	.29270	.13370	-.27920	.11120	.10960	-.03560
	GRADIENT	.00260	.00276	-.00014	.00064	-.00100	-.04218	.01597	.01575	-.00526

RUN NO. 914/ 0 RN/L = 3.50 GRADIENT INTERVAL = -5.00/ 5.00

ALPHAO	BETAO	CNL	CNFL	CAL	CAFL	CLMFL	CYFL	CYNL	CYNFL	CBLFL
-4.205	-5.891	-.24900	-.27410	.48620	.29400	.08210	.25750	-.10000	-.09840	.03690
-4.190	-3.860	-.23930	-.26350	.48580	.29810	.07880	.15960	-.06040	-.05950	.02260
-4.215	.300	-.23530	-.25890	.48230	.29660	.07970	-.01020	.00330	.00330	-.00020
-3.880	4.319	-.21040	-.23470	.48730	.29540	.07260	-.16750	.06420	.06340	-.02340
-4.009	6.379	-.22800	-.25220	.48390	.29450	.07770	-.26130	.10340	.10180	-.03720
	GRADIENT	.00352	.00351	.00018	-.00033	-.00075	-.04000	.01523	.01503	-.00562

RUN NO. 915/ 0 RN/L = 3.50 GRADIENT INTERVAL = -5.00/ 5.00

ALPHAO	BETAO	CNL	CNFL	CAL	CAFL	CLMFL	CYFL	CYNL	CYNFL	CBLFL
-.589	-7.127	-.00220	-.02810	.48520	.29530	-.00580	.31120	-.12640	-.12470	.05010
-.493	-4.697	.00900	-.01560	.48020	.29620	-.00930	.19280	-.07800	-.07680	.03140
-.450	-.743	.02000	-.00370	.47820	.29750	-.01340	.02820	-.01220	-.01200	.00470
-.436	3.828	.02420	.00090	.47950	.29810	-.01260	-.15630	.06560	.06440	-.02580
-.462	5.735	.01460	-.00990	.48380	.29650	-.00950	-.24240	.10090	.09920	-.03960
	GRADIENT	.00176	.00191	-.00007	.00022	-.00037	-.04093	.01685	.01657	-.00671

IA156A, AEDC PWT 16T-470, O T S W/SILTS (R8NV50) (10 MAY 80)

REFERENCE DATA

SREF = 2690.0000 SQ.FT. XMRP = 976.0000 IN. XT
LREF = 1290.3000 INCHES YMRP = .0000 IN. YT
BREF = 1290.3000 INCHES ZMRP = 400.0000 IN. ZT
SCALE = .0200

PARAMETRIC DATA

IB-ELV = 10.000 OB-ELV = 5.000
BDFLAP = .000 SPDBRK = .000
RUDDER = .000 SILTS = 1.000
MACH = 1.400 RN/L = 3.500

RUN NO. 916/ 0 RN/L = 3.50 GRADIENT INTERVAL = -5.00/ 5.00

ALPHAO	BETAO	CNL	CNFL	CAL	CAFL	CLMFL	CYFL	CYNL	CYNFL	CBLFL
4.086	-5.765	.29120	.26670	.47470	.29280	-.11470	.26560	-.11900	-.11770	.04720
4.035	-3.799	.28950	.26590	.47270	.29450	-.11580	.17770	-.08260	-.08170	.03220
3.700	.153	.27530	.25160	.47140	.29340	-.10950	.01020	-.01030	-.01030	.00240
3.628	3.941	.28100	.25760	.47290	.29270	-.11410	-.15120	.06450	.06360	-.02650
3.569	5.882	.27650	.25240	.47520	.29270	-.11350	-.24250	.10400	.10260	-.04190
	GRADIENT	-.00112	-.00109	.00002	-.00023	.00023	-.04249	.01900	.01877	-.00758

IA156A, AEDC PWT 16T-470, O T S W/SILTS (R8NV51) (10 MAY 80)

REFERENCE DATA

SREF = 2690.0000 SQ.FT. XMRP = 976.0000 IN. XT
LREF = 1290.3000 INCHES YMRP = .0000 IN. YT
BREF = 1290.3000 INCHES ZMRP = 400.0000 IN. ZT
SCALE = .0200

PARAMETRIC DATA

IB-ELV = 10.000 OB-ELV = 5.000
BDFLAP = .000 SPDBRK = .000
RUDDER = .000 SILTS = 1.000
MACH = 1.550 RN/L = 3.200

RUN NO. 917/ 0 RN/L = 3.19 GRADIENT INTERVAL = -5.00/ 5.00

ALPHAO	BETAO	CNL	CNFL	CAL	CAFL	CLMFL	CYFL	CYNL	CYNFL	CBLFL
-8.555	-6.025	-.56810	-.59130	.46910	.28850	.21140	.29580	-.12160	-.11990	.03310
-8.567	-3.877	-.57070	-.59290	.46940	.29260	.21350	.18910	-.07520	-.07390	.02020
-8.224	.412	-.55860	-.58070	.47230	.29380	.21490	-.00080	-.00120	-.00120	.00150
-8.053	4.487	-.56030	-.58220	.47080	.29630	.21640	-.18160	.07190	.07070	-.01780
-8.050	6.312	-.56250	-.58470	.46600	.29220	.21420	-.27260	.11110	.10960	-.02920
	GRADIENT	.00126	.00129	.00017	.00044	.00035	-.04432	.01758	.01729	-.00454

RUN NO. 918/ 0 RN/L = 3.19 GRADIENT INTERVAL = -5.00/ 5.00

ALPHAO	BETAO	CNL	CNFL	CAL	CAFL	CLMFL	CYFL	CYNL	CYNFL	CBLFL
-6.265	-5.820	-.39010	-.41360	.46870	.28980	.13880	.26910	-.10900	-.10730	.03340
-6.427	-3.972	-.40650	-.42900	.46780	.29280	.14910	.17600	-.06940	-.06850	.02120
-6.209	.217	-.39510	-.41660	.46430	.29330	.15010	-.00300	-.00060	-.00060	.00140
-6.074	4.472	-.39540	-.41780	.46940	.29390	.14980	-.18130	.07170	.07080	-.02090
-5.992	6.606	-.40180	-.42440	.46770	.29140	.15040	-.28220	.11530	.11360	-.03390
	GRADIENT	.00131	.00132	.00019	.00013	.00008	-.04231	.01671	.01650	-.00499

IA156A, AEDC PWT 16T-470, O T S W/SILTS (R8NV51) (10 MAY 80)

REFERENCE DATA

SREF = 2690.0000 SQ.FT. XMRP = 976.0000 IN. XT
LREF = 1290.3000 INCHES YMRP = .0000 IN. YT
BREF = 1290.3000 INCHES ZMRP = 400.0000 IN. ZT
SCALE = .0200

PARAMETRIC DATA

IB-ELV = 10.000 OB-ELV = 5.000
BDFLAP = .000 SPDBRK = .000
RUDDER = .000 SILTS = 1.000
MACH = 1.550 RN/L = 3.200

RUN NO. 919/ 0 RN/L = 3.20 GRADIENT INTERVAL = -5.00/ 5.00

ALPHAO	BETAO	CNL	CNFL	CAL	CAFL	CLMFL	CYFL	CYNL	CYNFL	CBLFL
-4.316	-5.917	-.25070	-.27370	.46410	.29200	.08530	.25990	-.10610	-.10460	.03480
-4.555	-4.132	-.26630	-.28840	.46270	.29310	.09280	.17730	-.07100	-.07010	.02290
-4.096	.321	-.23810	-.26000	.46210	.29310	.08780	-.00870	.00160	.00150	.00030
-3.809	4.600	-.22930	-.25180	.46690	.29430	.08670	-.18070	.07240	.07160	-.02320
-3.787	6.253	-.23580	-.25800	.46450	.29300	.08820	-.25490	.10470	.10320	-.03390
	GRADIENT	.00425	.00421	.00048	.00014	-.00070	-.04100	.01642	.01623	-.00528

RUN NO. 920/ 0 RN/L = 3.19 GRADIENT INTERVAL = -5.00/ 5.00

ALPHAO	BETAO	CNL	CNFL	CAL	CAFL	CLMFL	CYFL	CYNL	CYNFL	CBLFL
-.649	-7.128	-.00950	-.03300	.46120	.28990	-.00330	.30920	-.13120	-.12960	.04750
-.600	-4.736	-.00810	-.03060	.45670	.29060	-.00030	.19410	-.08050	-.07940	.02960
-.528	-.692	.00020	-.02190	.45580	.29270	-.00180	.02300	-.00860	-.00850	.00300
-.520	3.438	.00710	-.01490	.46150	.29590	-.00720	-.14590	.06460	.06370	-.02250
-.536	5.575	.00680	-.01560	.46150	.29380	-.01170	-.23850	.10420	.10260	-.03610
	GRADIENT	.00186	.00192	.00059	.00065	-.00085	-.04160	.01775	.01751	-.00637

RUN NO. 921/ 0 RN/L = 3.19 GRADIENT INTERVAL = -5.00/ 5.00

ALPHAO	BETAO	CNL	CNFL	CAL	CAFL	CLMFL	CYFL	CYNL	CYNFL	CBLFL
4.017	-5.502	.27550	.25210	.46160	.29220	-.10580	.26130	-.12220	-.12090	.04630
3.919	-3.549	.27030	.24760	.45650	.29190	-.10720	.16800	-.08090	-.08000	.03020
3.577	.320	.25940	.23740	.45100	.28920	-.10590	.00360	-.00840	-.00860	.00220
3.671	4.060	.27880	.25660	.45510	.28900	-.11790	-.15350	.06430	.06330	-.02570
3.567	6.099	.27270	.25010	.45450	.28920	-.11630	-.25200	.10850	.10710	-.04200
	GRADIENT	.00109	.00116	-.00019	-.00038	-.00140	-.04225	.01908	.01883	-.00735

IA156A, AEDC PWT 16T-470, O T S W/SILTS (R8NV52) (10 MAY 80)

REFERENCE DATA

SREF = 2690.0000 SQ.FT. XMRP = 976.0000 IN. XT
LREF = 1290.3000 INCHES YMRP = .0000 IN. YT
BREF = 1290.3000 INCHES ZMRP = 400.0000 IN. ZT
SCALE = .0200

PARAMETRIC DATA

IB-ELV = 10.000 OB-ELV = 9.000
BDFLAP = .000 SPDBRK = .000
RUDDER = .000 SILTS = 1.000
MACH = .300 RN/L = 3.500

RUN NO. 928/ 0 RN/L = 2.68 GRADIENT INTERVAL = -5.00/ 5.00

ALPHAO	BETAO	CNL	CNFL	CAL	CAFL	CLMFL	CYFL	CYNL	CYNFL	CBLFL
-5.998	-10.067	-.26720	-.28930	.27020	.07830	.06100	.39020	-.16540	-.16230	.05360
-6.333	-6.052	-.30130	-.32410	.27250	.07800	.07720	.22060	-.09330	-.09110	.02980
-6.200	.352	-.31120	-.33020	.27270	.09750	.09500	-.02020	.00730	.00710	-.00140
-5.745	6.151	-.29730	-.31760	.27920	.10080	.09240	-.20920	.08940	.08740	-.02980
-5.855	10.085	-.30990	-.33320	.27890	.08180	.09850	-.35860	.15300	.15000	-.04990
	GRADIENT	.00000	.00000	.00000	.00000	.00000	.00000	.00000	.00000	.00000

RUN NO. 929/ 0 RN/L = 2.68 GRADIENT INTERVAL = -5.00/ 5.00

ALPHAO	BETAO	CNL	CNFL	CAL	CAFL	CLMFL	CYFL	CYNL	CYNFL	CBLFL
-.334	-10.550	.01540	-.00670	.27450	.08770	-.03770	.41240	-.17790	-.17560	.06390
-.302	-6.475	-.01310	-.03300	.27380	.10430	-.02010	.23950	-.10460	-.10260	.03850
-.250	-.524	-.01090	-.02930	.27630	.10780	-.01350	.01110	-.00550	-.00550	.00210
-.233	5.554	.02560	.00550	.27470	.10080	-.03330	-.19980	.08900	.08710	-.03240
-.182	9.914	.03160	.01000	.27840	.09840	-.03830	-.36140	.15880	.15660	-.05850
	GRADIENT	.00000	.00000	.00000	.00000	.00000	.00000	.00000	.00000	.00000

RUN NO. 930/ 0 RN/L = 2.68 GRADIENT INTERVAL = -5.00/ 5.00

ALPHAO	BETAO	CNL	CNFL	CAL	CAFL	CLMFL	CYFL	CYNL	CYNFL	CBLFL
6.124	-9.965	.32880	.30220	.25390	.08170	-.14440	.41090	-.18280	-.18130	.07510
5.948	-5.857	.31510	.29610	.25200	.09040	-.13550	.24350	-.10980	-.10850	.04580
5.799	.240	.33530	.31750	.24980	.08740	-.14290	.01700	-.01220	-.01220	.00400
6.019	6.223	.39090	.37110	.25220	.08460	-.17800	-.21310	.09270	.09120	-.04090
5.804	10.078	.38360	.36260	.25240	.07960	-.18080	-.36120	.15780	.15620	-.06820
	GRADIENT	.00000	.00000	.00000	.00000	.00000	.00000	.00000	.00000	.00000

IA156A, AEDC PWT 16T-470, O T S W/SILTS (R8NV53) (10 MAY 80)

REFERENCE DATA

SREF = 2690.0000 SQ.FT. XMRP = 976.0000 IN. XT
LREF = 1290.3000 INCHES YMRP = .0000 IN. YT
BREF = 1290.3000 INCHES ZMRP = 400.0000 IN. ZT
SCALE = .0200

PARAMETRIC DATA

IB-ELV = 10.000 OB-ELV = 9.000
BDFLAP = .000 SPDBRK = .000
RUDDER = .000 SILTS = 1.000
MACH = .300 RN/L = 3.500

RUN NO. 927/ 0 RN/L = 2.67 GRADIENT INTERVAL = -5.00/ 5.00

ALPHAO	BETAO	CNL	CNFL	CAL	CAFL	CLMFL	CYFL	CYNL	CYNFL	CBLFL
-10.105	-7.896	-.53030	-.55230	.26160	.06400	.16050	.30750	-.13290	-.12970	.03700
-10.102	-5.743	-.52030	-.54370	.26530	.05550	.15720	.23140	-.10100	-.09870	.02740
-9.855	.239	-.55000	-.57020	.26570	.07020	.18380	-.00880	.00440	.00430	.00020
-9.978	6.308	-.54850	-.56980	.27160	.07460	.17930	-.22750	.09950	.09730	-.02610
-9.987	8.105	-.56200	-.58510	.27010	.06160	.18790	-.29240	.12630	.12310	-.03380
	GRADIENT	.00000	.00000	.00000	.00000	.00000	.00000	.00000	.00000	.00000

RUN NO. 931/ 0 RN/L = 2.68 GRADIENT INTERVAL = -5.00/ 5.00

ALPHAO	BETAO	CNL	CNFL	CAL	CAFL	CLMFL	CYFL	CYNL	CYNFL	CBLFL
9.927	-7.951	.55640	.53610	.23160	.06300	-.23210	.31440	-.13640	-.13520	.06430
9.995	-5.628	.55770	.53850	.23150	.06870	-.23130	.22420	-.09780	-.09660	.04680
9.865	.278	.56010	.54320	.23340	.07470	-.22870	.02200	-.01520	-.01510	.00420
9.954	6.285	.60250	.58370	.22770	.06640	-.25940	-.19330	.07780	.07660	-.04120
9.732	8.122	.58840	.56810	.22820	.06020	-.25580	-.26530	.11080	.10950	-.05580
	GRADIENT	.00000	.00000	.00000	.00000	.00000	.00000	.00000	.00000	.00000

IA156A, AEDC PWT 16T-470, O T S W/SILTS (R8NV54) (10 MAY 80)

REFERENCE DATA

SREF = 2690.0000 SQ.FT. XMRP = 976.0000 IN. XT
LREF = 1290.3000 INCHES YMRP = .0000 IN. YT
BREF = 1290.3000 INCHES ZMRP = 400.0000 IN. ZT
SCALE = .0200

PARAMETRIC DATA

IB-ELV = 10.000 OB-ELV = 9.000
BDFLAP = .000 SPDBRK = .000
RUDDER = .000 SILTS = 1.000
MACH = .600 RN/L = 3.500

RUN NO. 932/ 0 RN/L = 3.50 GRADIENT INTERVAL = -5.00/ 5.00

ALPHAO	BETAO	CNL	CNFL	CAL	CAFL	CLMFL	CYFL	CYNL	CYNFL	CBLFL
-8.138	-7.854	-.40750	-.43110	.27900	.08290	.10620	.32160	-.13680	-.13370	.03950
-8.087	-5.763	-.41390	-.43730	.28420	.08790	.11100	.23430	-.09950	-.09710	.02770
-7.967	-3.708	-.40860	-.43100	.28630	.09500	.11260	.15230	-.06540	-.06410	.01740
-7.963	.267	-.43260	-.45360	.28540	.09270	.12940	-.00590	.00250	.00240	-.00020
-7.927	4.197	-.40820	-.43020	.28810	.09660	.11480	-.15820	.06950	.06820	-.01840
-7.870	6.095	-.40290	-.42560	.28820	.09380	.11030	-.23210	.10120	.09900	-.02810
-7.785	8.168	-.40170	-.42520	.28690	.08820	.11090	-.31180	.13440	.13150	-.03780
	GRADIENT	.00004	.00009	.00023	.00020	.00029	-.03928	.01706	.01674	-.00453

IA156A, AEDC PWT 16T-470, O T S W/SILTS (R8NV54) (10 MAY 80)

REFERENCE DATA

SREF =	2690.0000 SQ.FT.	XMRP =	976.0000 IN. XT		
LREF =	1290.3000 INCHES	YMRP =	.0000 IN. YT		
BREF =	1290.3000 INCHES	ZMRP =	400.0000 IN. ZT		
SCALE =	.0200				

PARAMETRIC DATA

IB-ELV =	10.000	OB-ELV =	9.000
BDFLAP =	.000	SPDBRK =	.000
RUDDER =	.000	SILTS =	1.000
MACH =	.600	RN/L =	3.500

RUN NO. 933/ 0 RN/L = 3.51 GRADIENT INTERVAL = -5.00/ 5.00

ALPHAO	BETAO	CNL	CNFL	CAL	CAFL	CLMFL	CYFL	CYNL	CYNFL	CBLFL
-6.013	-7.751	-.27690	-.30040	.28400	.09170	.05800	.31620	-.13450	-.13170	.04200
-6.160	-5.863	-.28990	-.31270	.28660	.09820	.06490	.23440	-.10040	-.09810	.03060
-6.084	-3.845	-.29910	-.32120	.28830	.10160	.07260	.14670	-.06330	-.06190	.01870
-6.187	.112	-.31090	-.33140	.28380	.09980	.08530	-.01020	.00340	.00340	-.00030
-5.969	4.214	-.28600	-.30770	.28940	.10350	.07330	-.15620	.06730	.06590	-.02000
-5.766	6.035	-.27470	-.29700	.28960	.10210	.06690	-.22650	.09790	.09590	-.03020
-5.770	8.336	-.27450	-.29750	.29030	.09860	.06600	-.31600	.13590	.13320	-.04190
	GRADIENT	.00165	.00170	.00014	.00024	.00007	-.03758	.01620	.01586	-.00480

RUN NO. 934/ 0 RN/L = 3.51 GRADIENT INTERVAL = -5.00/ 5.00

ALPHAO	BETAO	CNL	CNFL	CAL	CAFL	CLMFL	CYFL	CYNL	CYNFL	CBLFL
-4.123	-7.903	-.17600	-.20090	.28490	.09840	02350	.31850	-.13550	-.13280	.04510
-4.091	-5.806	-.17840	[illegible]	.28740	.10130	.02680	.22270	-.09500	-.09290	.03160
-4.143	-3.813	-.18400	[illegible]	.28820	.10870	.03140	.14110	-.06090	-.05960	.01950
-3.887	.205	-.17430	-.19940	.28420	.10640	.03610	-.00880	.00210	.00190	-.00020
-3.956	4.299	-.16860	-.18990	.28930	.10870	.03350	-.15660	.06710	.06560	-.02200
-3.856	6.017	-.15370	-.17590	.29010	.10620	.02540	-.22360	.09670	.09470	-.03240
-3.746	7.939	-.15520	-.17830	.28940	.10060	.02470	-.29810	.12930	.12680	-.04290
	GRADIENT	.00190	.00191	.00014	.00000	.00026	-.03670	.01578	.01543	-.00512

RUN NO. 935/ 0 RN/L = 3.51 GRADIENT INTERVAL = -5.00/ 5.00

ALPHAO	BETAO	CNL	CNFL	CAL	CAFL	CLMFL	CYFL	CYNL	CYNFL	CBLFL
-.269	-8.793	.03120	.00860	.28340	.09780	-.05060	.35770	-.15590	-.15370	.05550
-.324	-6.788	.02120	-.00070	.28360	.10520	-.04350	.27120	-.11910	-.11690	.04260
-.313	-4.471	.01650	-.00480	.28430	.10860	-.03780	.17410	-.07780	-.07610	.02740
-.289	-.224	.01710	-.00200	.28300	.11120	-.03180	.00690	-.00380	-.00380	.00110
-.267	3.806	.04120	.02120	.28430	.11200	-.04490	-.14170	.06320	.06170	-.02260
-.217	5.654	.05500	.03410	.28490	.11200	-.05320	-.21080	.09490	.09290	-.03450
-.279	7.785	.04550	.02310	.28680	.10580	-.05150	-.29530	.13100	.12870	-.04680
	GRADIENT	.00296	.00312	-.00000	.00041	-.00084	-.03816	.01704	.01665	-.00604

IA156A, AEDC PWT 16T-470, O T S W/SILTS (R8NV54) (10 MAY 80)

REFERENCE DATA

SREF = 2690.0000 SQ.FT. XMRP = 976.0000 IN. XT
LREF = 1290.3000 INCHES YMRP = .0000 IN. YT
BREF = 1290.3000 INCHES ZMRP = 400.0000 IN. ZT
SCALE = .0200

PARAMETRIC DATA

IB-ELV = 10.000 OB-ELV = 9.000
BDFLAP = .000 SPDBRK = .000
RUDDER = .000 SILTS = 1.000
MACH = .600 RN/L = 3.500

RUN NO. 936/ 0 RN/L = 3.51 GRADIENT INTERVAL = -5.00/ 5.00

ALPHAO	BETAO	CNL	CNFL	CAL	CAFL	CLMFL	CYFL	CYNL	CYNFL	CBLFL
4.047	-7.760	.26580	.24460	.27060	.09820	-.13500	.32450	-.14620	-.14460	.05870
4.081	-5.679	.27670	.25590	.26970	.10020	-.13720	.23520	-.10770	-.10630	.04340
4.045	-3.728	.27040	.25060	.26940	.10330	-.13160	.15630	-.07260	-.07160	.02880
3.862	.202	.25750	.23840	.26710	.09960	-.12330	.00750	-.00690	-.00700	.00200
3.891	4.152	.28080	.26130	.26780	.09980	-.13840	-.13950	.06040	.05930	-.02530
3.833	6.086	.28520	.26430	.26850	.09790	-.14310	-.22390	.10030	.09850	-.04060
3.739	7.925	.28220	.26050	.27120	.09580	-.14390	-.29710	.13300	.13100	-.05330
	GRADIENT	.00132	.00136	-.00020	-.00044	-.00087	-.03754	.01688	.01661	-.00687

RUN NO. 937/ 0 RN/L = 3.51 GRADIENT INTERVAL = -5.00/ 5.00

ALPHAO	BETAO	CNL	CNFL	CAL	CAFL	CLMFL	CYFL	CYNL	CYNFL	CBLFL
6.185	-7.948	.39700	.37560	.25890	.08710	-.18880	.32500	-.14580	-.14430	.06250
6.018	-5.777	.38040	.35980	.26050	.09380	-.17960	.23530	-.10630	-.10490	.04520
6.127	-3.840	.38980	.36960	.25970	.09180	-.18030	.15530	-.07110	-.07030	.03080
5.925	.211	.37600	.35710	.26100	.09370	-.17020	-.00010	-.00300	-.00310	.00120
5.722	4.043	.38590	.36610	.26060	.09450	-.17970	-.14020	.05950	.05840	-.02640
5.884	6.104	.39590	.37500	.26110	.09160	-.18660	-.22090	.09720	.09560	-.04190
5.739	8.181	.40200	.38050	.26300	.08900	-.19180	-.30190	.13400	.13220	-.05730
	GRADIENT	-.00052	-.00047	.00012	.00034	.00010	-.03749	.01657	.01633	-.00726

RUN NO. 938/ 0 RN/L = 3.51 GRADIENT INTERVAL = -5.00/ 5.00

ALPHAO	BETAO	CNL	CNFL	CAL	CAFL	CLMFL	CYFL	CYNL	CYNFL	CBLFL
8.049	-8.030	.50560	.48400	.24890	.07710	-.23100	.32530	-.14320	-.14190	.06500
7.954	-5.760	.50250	.48190	.24940	.08370	-.22650	.22780	-.10050	-.09920	.04630
8.156	-3.936	.51310	.49350	.24960	.08580	-.22790	.15210	-.06760	-.06670	.03220
7.840	.174	.49060	.47170	.25310	.08620	-.21260	.00550	-.00550	-.00550	.00230
8.020	4.153	.52560	.50570	.25040	.08440	-.23300	-.13260	.05410	.05300	-.02670
7.706	6.068	.50950	.48840	.25100	.08030	-.22990	-.20960	.08970	.08820	-.04190
7.985	8.203	.53200	.51090	.24940	.07740	-.24190	-.28950	.12600	.12450	-.05840
	GRADIENT	.00151	.00147	.00010	-.00017	-.00061	-.03520	.01505	.01480	-.00728

IA156A, AEDC PWT 16T-470, O T S W/SILTS (R8NV55) (10 MAY 80)

REFERENCE DATA

SREF = 2690.0000 SQ.FT. XMRP = 976.0000 IN. XT
LREF = 1290.3000 INCHES YMRP = .0000 IN. YT
BREF = 1290.3000 INCHES ZMRP = 400.0000 IN. ZT
SCALE = .0200

PARAMETRIC DATA

IB-ELV = 10.000 OB-ELV = 9.000
BDFLAP = .000 SPDBRK = .000
RUDDER = .000 SILTS = 1.000
MACH = .800 RN/L = 3.500

RUN NO. 939/ 0 RN/L = 3.51 GRADIENT INTERVAL = -5.00/ 5.00

ALPHAO	BETAO	CNL	CNFL	CAL	CAFL	CLMFL	CYFL	CYNL	CYNFL	CBLFL
-8.416	-6.010	-.44450	-.46800	.30920	.11660	.11970	.26340	-.11610	-.11330	.03050
-8.319	-3.889	-.45140	-.47620	.32110	.11490	.12720	.17630	-.07810	-.07640	.01930
-8.133	.366	-.45900	-.48040	.31200	.11810	.14190	-.01100	.00450	.00460	.00010
-8.078	4.282	-.43850	-.46180	.31590	.11880	.12260	-.16540	.07350	.07220	-.01830
-7.997	6.197	-.42370	-.44780	.31360	.11660	.11420	-.24460	.10740	.10500	-.02870
	GRADIENT	.00153	.00172	-.00066	.00048	-.00050	-.04185	.01857	.01820	-.00460

RUN NO. 940/ 0 RN/L = 3.50 GRADIENT INTERVAL = -5.00/ 5.00

ALPHAO	BETAO	CNL	CNFL	CAL	CAFL	CLMFL	CYFL	CYNL	CYNFL	CBLFL
-6.329	-6.039	-.30460	-.32840	.31340	.12040	.06840	.26270	-.11560	-.11290	.03300
-6.233	-3.960	-.31410	-.33710	.31550	.12470	.07830	.16430	-.07310	-.07160	.02000
-6.042	.147	-.31050	-.33160	.30830	.12110	.08530	-.00830	.00230	.00240	.00040
-6.109	4.309	-.29960	-.32230	.31400	.12410	.07400	-.16580	.07280	.07150	-.02030
-5.813	6.218	-.27820	-.30160	.31380	.12370	.06180	-.24270	.10710	.10480	-.03160
	GRADIENT	.00176	.00179	-.00018	-.00007	-.00052	-.03991	.01764	.01730	-.00487

RUN NO. 941/ 0 RN/L = 3.50 GRADIENT INTERVAL = -5.00/ 5.00

ALPHAO	BETAO	CNL	CNFL	CAL	CAFL	CLMFL	CYFL	CYNL	CYNFL	CBLFL
-4.318	-6.168	-.18770	-.21130	.31270	.12390	.02680	.25740	-.11290	-.11040	.03530
-4.283	-3.943	-.18900	-.21130	.31320	.12970	.03280	.15650	-.06940	-.06790	.02070
-4.010	.249	-.17400	-.19460	.30540	.12530	.03440	-.00730	.00170	.00160	.00020
-3.782	4.175	-.15140	-.17350	.31210	.12830	.02320	-.15690	.06840	.06710	-.02150
-3.971	6.130	-.15710	-.18000	.31220	.12780	.02150	-.23820	.10480	.10270	-.03360
	GRADIENT	.00462	.00465	-.00015	-.00018	-.00117	-.03861	.01698	.01663	-.00520

RUN NO. 942/ 0 RN/L = 3.51 GRADIENT INTERVAL = -5.00/ 5.00

ALPHAO	BETAO	CNL	CNFL	CAL	CAFL	CLMFL	CYFL	CYNL	CYNFL	CBLFL
-.339	-6.739	.03910	.01650	.30860	.12430	-.05810	.28260	-.12570	-.12360	.04350
-.371	-4.804	.03060	.00920	.30710	.12870	-.05250	.19720	-.08930	-.08750	.03000
-.324	-.381	.02720	.00700	.29660	.12440	-.04430	.01210	-.00600	-.00590	.00200
-.303	3.704	.05700	.03610	.30420	.12920	-.06170	-.14660	.06630	.06480	-.02200
-.314	5.560	.05870	.03670	.30700	.12800	-.06480	-.22610	.10280	.10080	-.03470
	GRADIENT	.00305	.00311	-.00037	.00004	-.00104	-.04043	.01830	.01791	-.00611

IA156A, AEDC PWT 16T-470, O T S W/SILTS (R8NV55) (10 MAY 80)

REFERENCE DATA

SREF = 2690.0000 SQ.FT. XMRP = 976.0000 IN. XT
LREF = 1290.3000 INCHES YMRP = .0000 IN. YT
BREF = 1290.3000 INCHES ZMRP = 400.0000 IN. ZT
SCALE = .0200

PARAMETRIC DATA

IB-ELV = 10.000 OB-ELV = 9.000
BDFLAP = .000 SPDBRK = .000
RUDDER = .000 SILTS = 1.000
MACH = .800 RN/L = 3.500

RUN NO. 943/ 0 RN/L = 3.50 GRADIENT INTERVAL = -5.00/ 5.00

ALPHAO	BETAO	CNL	CNFL	CAL	CAFL	CLMFL	CYFL	CYNL	CYNFL	CBLFL
3.938	-5.652	.30100	.27920	.29450	.12010	-.15780	.25230	-.11480	-.11320	.04610
3.921	-3.662	.30400	.28340	.29250	.12070	-.15570	.16320	-.07600	-.07490	.03030
3.945	.110	.30920	.26900	.28450	.11710	-.15220	.01150	-.00820	-.00820	.00300
3.796	4.071	.32630	.30540	.29030	.11760	-.16740	-.14800	.06560	.06430	-.02630
3.721	6.067	.32150	.29970	.29420	.11930	-.16900	-.23850	.10830	.10640	-.04260
	GRADIENT	.00290	.00286	-.00027	-.00040	-.00153	-.04024	.01831	.01800	-.00732

RUN NO. 944/ 0 RN/L = 3.51 GRADIENT INTERVAL = -5.00/ 5.00

ALPHAO	BETAO	CNL	CNFL	CAL	CAFL	CLMFL	CYFL	CYNL	CYNFL	CBLFL
6.089	-5.845	.43510	.41340	.28870	.11530	-.21240	.25490	-.11650	-.11510	.04690
6.139	-3.843	.44980	.42890	.28700	.11640	-.21830	.16780	-.07760	-.07650	.03110
5.926	.176	.43360	.41360	.28100	.11270	-.20860	.00540	-.00580	-.00580	.00220
5.761	3.987	.44010	.41910	.28500	.11370	-.21470	-.13870	.05990	.05860	-.02420
5.893	6.117	.45660	.43460	.28900	.11320	-.22220	-.22910	.10320	.10150	-.04150
	GRADIENT	-.00126	-.00127	-.00027	-.00035	.00048	-.03915	.01756	.01726	-.00706

IA156A, AEDC PWT 16T-470, O T S W/SILTS (R8NV56) (10 MAY 80)

REFERENCE DATA

SREF = 2690.0000 SQ.FT. XMRP = 976.0000 IN. XT
LREF = 1290.3000 INCHES YMRP = .0000 IN. YT
BREF = 1290.3000 INCHES ZMRP = 400.0000 IN. ZT
SCALE = .0200

PARAMETRIC DATA

IB-ELV = 10.000 OB-ELV = 9.000
BDFLAP = .000 SPDBRK = .000
RUDDER = .000 SILTS = 1.000
MACH = .900 RN/L = 3.500

RUN NO. 952/ 0 RN/L = 3.51 GRADIENT INTERVAL = -5.00/ 5.00

ALPHAO	BETAO	CNL	CNFL	CAL	CAFL	CLMFL	CYFL	CYNL	CYNFL	CBLFL
-8.266	-5.928	-.48010	-.50650	.35840	.14610	.14450	.28090	-.12380	-.12150	.03130
-8.058	-3.754	-.47040	-.49580	.35930	.14920	.14740	.17420	-.07560	-.07450	.01800
-8.186	.261	-.50440	-.52790	.35490	.14590	.17320	-.00250	.00010	.00030	.00140
-8.108	4.358	-.48430	-.50950	.35630	.14790	.15530	-.17770	.07840	.07730	-.01840
-8.107	6.196	-.47970	-.50590	.35710	.14820	.14980	-.26320	.11570	.11370	-.02950
	GRADIENT	-.00169	-.00167	-.00037	-.00016	.00096	-.04338	.01899	.01871	-.00449

IA156A, AEDC PWT 16T-470, O T S W/SILTS (R8NV56) (10 MAY 80)

REFERENCE DATA

SREF = 2690.0000 SQ.FT. XMRP = 976.0000 IN. XT
LREF = 1290.3000 INCHES YMRP = .0000 IN. YT
BREF = 1290.3000 INCHES ZMRP = 400.0000 IN. ZT
SCALE = .0200

PARAMETRIC DATA

IB-ELV = 10.000 OB-ELV = 9.000
BDFLAP = .000 SPDBRK = .000
RUDDER = .000 SILTS = 1.000
MACH = .900 RN/L = 3.500

RUN NO. 953/ 0 RN/L = 3.50 GRADIENT INTERVAL = -5.00/ 5.00

ALPHAO	BETAO	CNL	CNFL	CAL	CAFL	CLMFL	CYFL	CYNL	CYNFL	CBLFL
-6.226	-6.035	-.33700	-.36310	.35730	.15030	.09130	.27660	-.12110	-.11890	.03390
-6.115	-4.004	-.33020	-.35530	.35630	.15320	.09480	.17770	-.07790	-.07670	.02090
-6.029	.147	-.34650	-.36940	.34780	.14710	.11280	-.00180	-.00130	-.00110	.00120
-6.036	4.212	-.32920	-.35400	.35360	.15210	.09870	-.17170	.07410	.07280	-.01990
-5.855	6.186	-.32070	-.34750	.35650	.14690	.09230	-.25970	.11240	.11030	-.03260
	GRADIENT	.00011	.00015	-.00033	-.00014	.00049	-.04253	.01850	.01820	-.00497

RUN NO. 954/ 0 RN/L = 3.50 GRADIENT INTERVAL = -5.00/ 5.00

ALPHAO	BETAO	CNL	CNFL	CAL	CAFL	CLMFL	CYFL	CYNL	CYNFL	CBLFL
-4.243	-6.218	-.20270	-.22810	.35650	.15400	.04230	.27050	-.11630	-.11400	.03660
-4.227	-3.977	-.20960	-.23410	.35470	.15620	.05010	.16670	-.07260	-.07140	.02170
-3.985	.235	-.19910	-.22150	.34150	.14980	05520	-.00530	.00020	.00030	.00040
-4.062	4.405	-.19640	-.22100	.35080	.15460	.04970	-.17540	.07420	.07280	-.02320
-3.876	6.295	-.18080	-.20720	.35350	.14910	.04160	-.25710	.11060	.10850	-.03590
	GRADIENT	.00158	.00157	-.00047	-.00019	-.00005	-.04081	.01751	.01720	-.00536

RUN NO. 955/ 0 RN/L = 3.50 GRADIENT INTERVAL = -5.00/ 5.00

ALPHAO	BETAO	CNL	CNFL	CAL	CAFL	CLMFL	CYFL	CYNL	CYNFL	CBLFL
-.415	-6.981	.02390	-.00070	.35110	.15280	-.04630	.30020	-.12960	-.12770	.04680
-.388	-4.926	.02410	.00050	.34850	.15420	-.04400	.20430	-.09070	-.08900	.03240
-.346	-.610	.02210	.00060	.33160	.14850	-.03940	.01870	-.00860	-.00840	.00320
-.308	3.482	.04970	.02700	.34080	.15330	-.05420	-.14500	.06440	.06310	-.02210
-.312	5.703	.05030	.02640	.34810	.15570	-.05490	-.24090	.10770	.10590	-.03780
	GRADIENT	.00301	.00312	-.00094	-.00012	-.00119	-.04156	.01845	.01810	-.00648

RUN NO. 956/ 0 RN/L = 3.50 GRADIENT INTERVAL = -5.00/ 5.00

ALPHAO	BETAO	CNL	CNFL	CAL	CAFL	CLMFL	CYFL	CYNL	CYNFL	CBLFL
4.107	-5.931	.31400	.29010	.34200	.15090	-.15830	.26960	-.11850	-.11690	.04660
4.174	-3.928	.32530	.30320	.33650	.15070	-.16290	.18050	-.08160	-.08050	.03160
3.727	.181	.30530	.28370	.32540	.14490	-.15580	.00620	-.00410	-.00410	.00180
3.889	4.008	.33280	.31030	.33270	.14810	-.16950	-.15610	.06970	.06850	-.02590
3.707	6.109	.31730	.29320	.34070	.15060	-.16520	-.25260	.11180	.10980	-.04180
	GRADIENT	.00087	.00083	-.00051	-.00034	-.00080	-.04242	.01906	.01877	-.00725

IA156A, AEDC PWT 16T-470, O T S W/SILTS (R8NV57) (10 MAY 80)

REFERENCE DATA

SREF = 2690.0000 SQ.FT. XMRP = 976.0000 IN. XT
LREF = 1290.3000 INCHES YMRP = .0000 IN. YT
BREF = 1290.3000 INCHES ZMRP = 400.0000 IN. ZT
SCALE = .0200

PARAMETRIC DATA

IB-ELV = 10.000 OB-ELV = 9.000
BDFLAP = .000 SPDBRK = .000
RUDDER = .000 SILTS = 1.000
MACH = .950 RN/L = 3.500

RUN NO. 957/ 0 RN/L = 3.50 GRADIENT INTERVAL = -5.00/ 5.00

ALPHAO	BETAO	CNL	CNFL	CAL	CAFL	CLMFL	CYFL	CYNL	CYNFL	CBLFL
-8.168	-6.025	-.49250	-.52190	.40390	.17410	.15390	.29740	-.13130	-.12890	.03440
-8.236	-3.822	-.50360	-.53180	.40520	.17860	.16250	.18160	-.07800	-.07690	.01970
-8.036	.263	-.50850	-.53500	.40280	.17500	.17400	-.00040	-.00160	-.00160	.00270
-7.924	4.230	-.49000	-.51830	.40470	.17780	.16050	-.18490	.08180	.08090	-.01870
-7.872	6.126	-.48490	-.51440	.40500	.17450	.15590	-.27390	.12270	.12050	-.03050
	GRADIENT	.00167	.00166	-.00006	-.00010	-.00023	-.04551	.01984	.01959	-.00477

RUN NO. 959/ 0 RN/L = 3.49 GRADIENT INTERVAL = -5.00/ 5.00

ALPHAO	BETAO	CNL	CNFL	CAL	CAFL	CLMFL	CYFL	CYNL	CYNFL	CBLFL
-6.208	-5.992	-.34820	-.37660	.40240	.17970	.10100	.27950	-.12250	-.12020	.03440
-6.174	-4.054	-.35580	-.38280	.40700	.18860	.10730	.18510	-.08000	-.07880	.02190
-6.259	.135	-.37010	-.39530	.39660	.17840	.12250	-.00140	-.00130	-.00130	.00210
-6.062	4.282	-.34520	-.37280	.40200	.18040	.11090	-.18270	.08060	.07930	-.02140
-5.827	6.394	-.32620	-.35510	.40320	.17980	.10050	-.28040	.12420	.12170	-.03540
	GRADIENT	.00126	.00119	-.00060	-.00099	.00044	-.04412	.01926	.01896	-.00519

RUN NO. 958/ 0 RN/L = 3.49 GRADIENT INTERVAL = -5.00/ 5.00

ALPHAO	BETAO	CNL	CNFL	CAL	CAFL	CLMFL	CYFL	CYNL	CYNFL	CBLFL
-4.273	-6.188	-.21860	-.24680	.40150	.18080	.05520	.27650	-.11960	-.11720	.03680
-4.329	-4.008	-.22610	-.25270	.39960	.18380	.06170	.16970	-.07230	-.07110	.02110
-4.255	.375	-.22880	-.25390	.39320	.18020	.07590	-.01440	.00390	.00390	.00010
-3.812	4.353	-.18720	-.21370	.39930	.18550	.05610	-.18030	.07730	.07580	-.02430
-3.866	6.166	-.19390	-.22300	.40460	.17930	.05460	-.26330	.11400	.11160	-.03660
	GRADIENT	.00456	.00458	-.00006	.00019	-.00060	-.04186	.01788	.01756	-.00542

RUN NO. 960/ 0 RN/L = 3.50 GRADIENT INTERVAL = -5.00/ 5.00

ALPHAO	BETAO	CNL	CNFL	CAL	CAFL	CLMFL	CYFL	CYNL	CYNFL	CBLFL
-.419	-6.876	.02120	-.00640	.39650	.17990	-.03310	.29560	-.12550	-.12300	.04580
-.396	-4.858	.01610	-.00970	.39510	.18380	-.02630	.20220	-.08750	-.08550	.03140
-.362	-.678	.00740	-.01580	.38270	.17930	-.01450	.02050	-.00930	-.00890	.00340
-.320	3.521	.04010	.01540	.39050	.18490	-.03380	-.14910	.06680	.06520	-.02360
-.323	5.725	.04500	.01810	.39670	.18280	-.03850	-.24450	.10860	.10630	-.03950
	GRADIENT	.00287	.00300	-.00055	.00013	-.00090	-.04192	.01841	.01798	-.00656

IA156A, AEDC PWT 16T-470, O T S W/SILTS (R8NV57) (10 MAY 80)

REFERENCE DATA

SREF = 2690.0000 SQ.FT. XMRP = 976.0000 IN. XT
LREF = 1290.3000 INCHES YMRP = .0000 IN. YT
BREF = 1290.3000 INCHES ZMRP = 400.0000 IN. ZT
SCALE = .0200

PARAMETRIC DATA

IB-ELV = 10.000 OB-ELV = 9.000
BDFLAP = .000 SPDBRK = .000
RUDDER = .000 SILTS = 1.000
MACH = .950 RN/L = 3.500

RUN NO. 961/ 0 RN/L = 3.49 GRADIENT INTERVAL = -5.00/ 5.00

ALPHAO	BETAO	CNL	CNFL	CAL	CAFL	CLMFL	CYFL	CYNL	CYNFL	CBLFL
3.921	-5.779	.29540	.26990	.38780	.17540	-.14370	.26200	-.11230	-.11060	.04530
3.965	-3.741	.29960	.27590	.38010	.17630	-.14760	.16680	-.07120	-.07010	.02800
3.688	.018	.28940	.26510	.37170	.16950	-.14350	.01150	-.00570	-.00580	.00290
3.816	3.930	.31920	.29480	.37910	.17630	-.15460	-.14950	.06320	.06180	-.02420
3.768	6.071	.31160	.28520	.38530	.17500	-.14830	-.24630	.10550	.10320	-.04170
	GRADIENT	.00259	.00250	-.00012	.00001	-.00093	-.04123	.01752	.01719	-.00681

IA156A, AEDC PWT 16T-470, O T S W/SILTS (R8NV58) (10 MAY 80)

REFERENCE DATA

SREF = 2690.0000 SQ.FT. XMRP = 976.0000 IN. XT
LREF = 1290.3000 INCHES YMRP = .0000 IN. YT
BREF = 1290.3000 INCHES ZMRP = 400.0000 IN. ZT
SCALE = .0200

PARAMETRIC DATA

IB-ELV = 10.000 OB-ELV = 9.000
BDFLAP = .000 SPDBRK = .000
RUDDER = .000 SILTS = 1.000
MACH = 1.050 RN/L = 3.500

RUN NO. 962/ 0 RN/L = 3.50 GRADIENT INTERVAL = -5.00/ 5.00

ALPHAO	BETAO	CNL	CNFL	CAL	CAFL	CLMFL	CYFL	CYNL	CYNFL	CBLFL
-8.133	-6.006	-.54700	-.58360	.51660	.23600	.19920	.30940	-.13100	-.12830	.03660
-8.303	-3.794	-.57240	-.60930	.52410	.23910	.21780	.19670	-.08310	-.08180	.02130
-8.187	.179	-.57680	-.61200	.52450	.23840	.22640	.00220	.00000	-.00010	.00220
-8.003	4.365	-.55890	-.59460	.52140	.23930	.21590	-.19710	.08670	.08530	-.02110
-8.017	6.256	-.56120	-.59690	.51770	.23590	.21130	-.28740	.12430	.12170	-.03330
	GRADIENT	.00168	.00182	-.00033	.00003	-.00025	-.04826	.02081	.02048	-.00520

RUN NO. 963/ 0 RN/L = 3.50 GRADIENT INTERVAL = -5.00/ 5.00

ALPHAO	BETAO	CNL	CNFL	CAL	CAFL	CLMFL	CYFL	CYNL	CYNFL	CBLFL
-6.221	-6.007	-.39200	-.42900	.51740	.23780	.14310	.29150	-.12280	-.12020	.03830
-6.148	-4.081	-.39360	-.42990	.52000	.24270	.15050	.19200	-.08060	-.07910	.02470
-6.259	.103	-.42160	-.45660	.52070	.24130	.17430	.00010	-.00030	-.00030	.00170
-6.076	4.270	-.39830	-.43300	.51940	.24190	.15860	-.18730	.08100	.07950	-.02340
-5.781	6.385	-.37120	-.40630	.51410	.24080	.14360	-.28560	.12310	.12050	-.03810
	GRADIENT	-.00057	-.00038	-.00007	-.00010	.00097	-.04543	.01935	.01899	-.00576

IA156A, AEDC PWT 16T-470, O T S W/SILTS (R8NV58) (10 MAY 80)

REFERENCE DATA

SREF = 2690.0000 SQ.FT. XMRP = 976.0000 IN. XT
LREF = 1290.3000 INCHES YMRP = .0000 IN. YT
BREF = 1290.3000 INCHES ZMRP = 400.0000 IN. ZT
SCALE = .0200

PARAMETRIC DATA

IB-ELV = 10.000 OB-ELV = 9.000
BDFLAP = .000 SPDBRK = .000
RUDDER = .000 SILTS = 1.000
MACH = 1.050 RN/L = 3.500

RUN NO. 964/ 0 RN/L = 3.50 GRADIENT INTERVAL = -5.00/ 5.00

ALPHAO	BETAO	CNL	CNFL	CAL	CAFL	CLMFL	CYFL	CYNL	CYNFL	CBLFL
-4.138	-6.140	-.23600	-.27280	.51580	.24000	.08830	.28320	-.11760	-.11520	.04150
-4.347	-4.015	-.26510	-.30180	.51740	.24330	.10750	.18100	-.07680	-.07530	.02550
-4.270	.376	-.27110	-.30660	.51630	.23990	.12290	-.01340	.00490	.00470	-.00040
-3.788	4.336	-.22420	-.25820	.51480	.24590	.09860	-.18420	.07950	.07790	-.02670
-3.886	6.178	-.22680	-.26160	.51310	.24310	.09230	-.26750	.11420	.11190	-.04010
	GRADIENT	.00478	.00511	-.00031	.00029	-.00098	-.04374	.01871	.01834	-.00624

RUN NO. 965/ 0 RN/L = 3.50 GRADIENT INTERVAL = -5.00/ 5.00

ALPHAO	BETAO	CNL	CNFL	CAL	CAFL	CLMFL	CYFL	CYNL	CYNFL	CBLFL
-.465	-6.966	.01020	-.02710	.51180	.23960	-.00250	.31000	-.13070	-.12830	.05350
-.443	-4.845	.00040	-.03620	.51190	.24450	.00930	.21160	-.09280	-.09100	.03710
-.400	-.627	-.00400	-.03850	.50940	.24170	01950	.02630	-.01370	-.01360	.00420
-.359	3.660	.01840	-.01620	.51590	.24610	.00650	-.15920	.07300	.07130	-.02870
-.359	5.800	.02380	-.01110	.51740	.24710	-.00050	-.25250	.11160	.10930	-.04480
	GRADIENT	.00212	.00236	.00047	.00019	-.00034	-.04360	.01950	.01908	-.00774

RUN NO. 966/ 0 RN/L = 3.50 GRADIENT INTERVAL = -5.00/ 5.00

ALPHAO	BETAO	CNL	CNFL	CAL	CAFL	CLMFL	CYFL	CYNL	CYNFL	CBLFL
3.949	-5.818	.28440	.24940	.50400	.23930	-.11210	.26750	-.11680	-.11540	.05150
3.940	-3.659	.28500	.25030	.50140	.24030	-.11010	.17150	-.07610	-.07540	.03280
3.707	.163	.27970	.24560	.49680	.23840	-.10690	.00800	-.00520	-.00520	.00240
3.800	4.035	.30790	.27450	.50050	.24180	-.12490	-.16140	.07060	.06960	-.02960
3.771	6.081	.30500	.27050	.50070	.23820	-.12360	-.25210	.10690	.10540	-.04740
	GRADIENT	.00299	.00315	-.00011	.00020	-.00193	-.04327	.01907	.01885	-.00811

IA156A, AEDC PWT 16T-470, O T S W/SILTS (R8NV59) (10 MAY 80)

REFERENCE DATA

SREF = 2690.0000 SQ.FT. XMRP = 976.0000 IN. XT
LREF = 1290.3000 INCHES YMRP = .0000 IN. YT
BREF = 1290.3000 INCHES ZMRP = 400.0000 IN. ZT
SCALE = .0200

PARAMETRIC DATA

IB-ELV = 10.000 OB-ELV = 9.000
BDFLAP = .000 SPDBRK = .000
RUDDER = .000 SILTS = 1.000
MACH = 1.100 RN/L = 3.500

RUN NO. 967/ 0 RN/L = 3.49 GRADIENT INTERVAL = -5.00/ 5.00

ALPHAO	BETAO	CNL	CNFL	CAL	CAFL	CLMFL	CYFL	CYNL	CYNFL	CBLFL
-8.158	-5.993	-.54300	-.57720	.51080	.24790	.19350	.29470	-.12360	-.12100	.03440
-8.263	-3.773	-.55590	-.58980	.51460	.25050	.20450	.18070	-.07380	-.07240	.01940
-8.181	.173	-.56000	-.59110	.51230	.25410	.21150	.00040	-.00070	-.00070	.00190
-7.997	4.386	-.54450	-.57710	.51440	.25360	.20510	-.19170	.08180	.08030	-.02050
-8.011	6.276	-.54160	-.57370	.51020	.25420	.20090	-.28190	.11990	.11730	-.03280
	GRADIENT	.00142	.00158	-.00002	.00037	.00006	-.04564	.01908	.01872	-.00490

RUN NO. 968/ 0 RN/L = 3.49 GRADIENT INTERVAL = -5.00/ 5.00

ALPHAO	BETAO	CNL	CNFL	CAL	CAFL	CLMFL	CYFL	CYNL	CYNFL	CBLFL
-6.214	-6.002	-.37940	-.41230	.50650	.25380	.13040	.27260	-.11200	-.10960	.03580
-6.172	-4.075	-.38420	-.41660	.50720	.25580	.13810	.18070	-.07380	-.07240	.02300
-6.275	.087	-.40690	-.43760	.50480	.25430	15810	-.00110	-.00130	-.00130	.00140
-6.069	4.280	-.37600	-.40660	.50600	.25770	.14180	-.18160	.07500	.07360	-.02280
-6.000	6.264	-.36700	-.39840	.50580	.25750	.13330	-.26780	.11230	.10990	-.03610
	GRADIENT	.00099	.00120	-.00014	.00023	.00044	-.04336	.01781	.01748	-.00548

RUN NO. 969/ 0 RN/L = 3.49 GRADIENT INTERVAL = -5.00/ 5.00

ALPHAO	BETAO	CNL	CNFL	CAL	CAFL	CLMFL	CYFL	CYNL	CYNFL	CBLFL
-4.131	-6.141	-.22630	-.25890	.50280	.25710	.07410	.26650	-.10710	-.10510	.03990
-4.345	-4.016	-.25310	-.28550	.50210	.25650	.09190	.16600	-.06730	-.06600	.02360
-4.254	.369	-.24910	-.27920	.49470	.25430	.10240	-.01410	.00370	.00350	-.00050
-3.786	4.339	-.19890	-.22860	.49980	.26070	.07750	-.17660	.07200	.07060	-.02690
-3.878	6.168	-.20440	-.23530	.50320	.25970	.07460	-.25590	.10550	.10350	-.03970
	GRADIENT	.00639	.00672	-.00030	.00049	-.00165	-.04100	.01666	.01634	-.00603

RUN NO. 970/ 0 RN/L = 3.49 GRADIENT INTERVAL = -5.00/ 5.00

ALPHAO	BETAO	CNL	CNFL	CAL	CAFL	CLMFL	CYFL	CYNL	CYNFL	CBLFL
-.471	-7.078	.01300	-.01980	.50040	.25950	-.01110	.30250	-.12240	-.12040	.05290
-.437	-4.868	.00920	-.02250	.49290	.25750	-.00390	.20180	-.08490	-.08320	.03640
-.394	-.533	.00660	-.02240	.48760	.25870	.00300	.02000	-.00970	-.00960	.00320
-.356	3.599	.02480	-.00420	.49230	.25970	-.00660	-.15320	.06870	.06710	-.02820
-.354	5.784	.03100	.00190	.49230	.26210	-.01410	-.24770	.10770	.10550	-.04470
	GRADIENT	.00182	.00214	-.00008	.00026	-.00030	-.04193	.01814	.01775	-.00763

IA156A, AEDC PWT 16T-470, O T S W/SILTS (R8NV59) (10 MAY 80)

REFERENCE DATA

SREF = 2690.0000 SQ.FT. XMRP = 976.0000 IN. XT
LREF = 1290.3000 INCHES YMRP = .0000 IN. YT
BREF = 1290.3000 INCHES ZMRP = 400.0000 IN. ZT
SCALE = .0200

PARAMETRIC DATA

IB-ELV = 10.000 OB-ELV = 9.000
BDFLAP = .000 SPDBRK = .000
RUDDER = .000 SILTS = 1.000
MACH = 1.100 RN/L = 3.500

RUN NO. 971/ 0 RN/L = 3.49 GRADIENT INTERVAL = -5.00/ 5.00

ALPHAO	BETAO	CNL	CNFL	CAL	CAFL	CLMFL	CYFL	CYNL	CYNFL	CBLFL
4.072	-5.756	.30550	.27640	.48020	.25490	-.12850	.25830	-.11200	-.11080	.04950
3.948	-3.679	.30020	.27100	.48080	.25560	-.12310	.16930	-.07540	-.07480	.03230
3.693	.116	.28180	.25220	.47790	.25150	-.11170	.00450	-.00440	-.00440	.00170
3.794	3.973	.30520	.27720	.47740	.25580	-.12800	-.15970	.06810	.06710	-.02900
3.767	6.056	.30660	.27760	.47880	.25440	-.13220	-.25040	.10400	.10250	-.04660
	GRADIENT	.00067	.00083	-.00044	.00003	-.00065	-.04299	.01875	.01854	-.00801

IA156A, AEDC PWT 16T-470, O T S W/SILTS (R8NV60) (10 MAY 80)

REFERENCE DATA

SREF = 2690.0000 SQ.FT. XMRP = 976.0000 IN. XT
LREF = 1290.3000 INCHES YMRP = .0000 IN. YT
BREF = 1290.3000 INCHES ZMRP = 400.0000 IN. ZT
SCALE = .0200

PARAMETRIC DATA

IB-ELV = 10.000 OB-ELV = 9.000
BDFLAP = .000 SPDBRK = .000
RUDDER = .000 SILTS = 1.000
MACH = 1.150 RN/L = 3.500

RUN NO. 972/ 0 RN/L = 3.49 GRADIENT INTERVAL = -5.00/ 5.00

ALPHAO	BETAO	CNL	CNFL	CAL	CAFL	CLMFL	CYFL	CYNL	CYNFL	CBLFL
-8.143	-6.001	-.53670	-.56850	.50760	.26140	.18690	.29840	-.12330	-.12110	.03570
-8.286	-3.781	-.55760	-.58910	.51190	.26560	.20350	.18750	-.07660	-.07520	.02050
-8.188	.192	-.56840	-.59730	.50780	.26630	.21470	.00710	-.00430	-.00440	.00270
-8.012	4.392	-.55440	-.58430	.50840	.26720	.20940	-.18620	.07770	.07630	-.01970
-8.015	6.263	-.55420	-.58510	.50770	.26300	.20460	-.27950	.11770	.11560	-.03300
	GRADIENT	.00042	.00061	-.00042	.00020	.00070	-.04572	.01888	.01854	-.00492

RUN NO. 973/ 0 RN/L = 3.49 GRADIENT INTERVAL = -5.00/ 5.00

ALPHAO	BETAO	CNL	CNFL	CAL	CAFL	CLMFL	CYFL	CYNL	CYNFL	CBLFL
-6.224	-6.019	-.37150	-.40280	.50580	.26760	.12440	.27810	-.11360	-.11130	.03810
-6.146	-4.078	-.37730	-.40770	.50490	.27050	.13330	.18470	-.07580	-.07440	.02460
-6.274	.108	-.41070	-.43930	.50070	.26480	.15960	.00580	-.00600	-.00610	.00250
-6.063	4.279	-.38470	-.41360	.50340	.27050	.14460	-.17440	.07000	.06870	-.02270
-6.001	6.267	-.38260	-.41220	.50330	.27310	.13830	-.26880	.11090	.10860	-.03650
	GRADIENT	-.00089	-.00071	-.00018	-.00000	.00136	-.04297	.01745	.01712	-.00566

IA156A, AEDC PWT 16T-470, O T S W/SILTS (R8NV60) (10 MAY 80)

REFERENCE DATA

SREF = 2690.0000 SQ.FT. XMRP = 976.0000 IN. XT
LREF = 1290.3000 INCHES YMRP = .0000 IN. YT
BREF = 1290.3000 INCHES ZMRP = 400.0000 IN. ZT
SCALE = .0200

PARAMETRIC DATA

IB-ELV = 10.000 OB-ELV = 9.000
BDFLAP = .000 SPDBRK = .000
RUDDER = .000 SILTS = 1.000
MACH = 1.150 RN/L = 3.500

RUN NO. 974/ 0 RN/L = 3.49 GRADIENT INTERVAL = -5.00/ 5.00

ALPHAO	BETAO	CNL	CNFL	CAL	CAFL	CLMFL	CYFL	CYNL	CYNFL	CBLFL
-4.137	-6.136	-.21620	-.24730	.50310	.27020	.06730	.27100	-.11000	-.10790	.04200
-4.341	-4.027	-.23680	-.26720	.50100	.27050	.08060	.17420	-.07280	-.07150	.02660
-4.272	.369	-.24700	-.27560	.49580	.26630	.09890	-.00710	-.00080	-.00090	-.00010
-3.786	4.337	-.20520	-.23290	.49800	.27600	.08020	-.17180	.06950	.06810	-.02710
-3.901	6.185	-.21660	-.24610	.50190	.27360	.08040	-.25200	.10260	.10070	-.03980
	GRADIENT	.00367	.00399	-.00037	.00063	.00003	-.04137	.01700	.01668	-.00641

RUN NO. 975/ 0 RN/L = 3.49 GRADIENT INTERVAL = -5.00/ 5.00

ALPHAO	BETAO	CNL	CNFL	CAL	CAFL	CLMFL	CYFL	CYNL	CYNFL	CBLFL
-.456	-6.965	.02640	-.00520	.50100	.27110	-.01910	.30200	-.12530	-.12330	.05270
-.423	-4.871	.02920	-.00070	.49630	.27490	-.01810	.20430	-.08730	-.08570	.03630
-.374	-.625	.03460	.00630	.49470	.27240	-.01650	.02190	-.01070	-.01060	.00340
-.336	3.586	.05050	.02270	.49840	.27720	-.02440	-.15450	.06930	.06770	-.02840
-.337	5.781	.05050	.02240	.49860	.27790	-.02570	-.24920	.10790	.10580	-.04520
	GRADIENT	.00252	.00277	.00025	.00027	-.00074	-.04243	.01852	.01814	-.00765

RUN NO. 976/ 0 RN/L = 3.49 GRADIENT INTERVAL = -5.00/ 5.00

ALPHAO	BETAO	CNL	CNFL	CAL	CAFL	CLMFL	CYFL	CYNL	CYNFL	CBLFL
3.932	-5.808	.28760	.25940	.48730	.26980	-.11760	.26860	-.11860	-.11740	.05100
3.960	-3.755	.29340	.26500	.48610	.27180	-.11750	.17940	-.08300	-.08230	.03410
3.829	.185	.29590	.26780	.48310	.26990	-.11820	.01110	-.01020	-.01020	.00270
3.790	3.941	.31970	.29260	.48510	.27100	-.13780	-.15230	.06410	.06320	-.02840
3.759	6.060	.31530	.28780	.48430	.27060	-.13790	-.24640	.10280	.10140	-.04640
	GRADIENT	.00339	.00356	-.00014	-.00011	-.00262	-.04310	.01911	.01890	-.00812

IA156A, AEDC PWT 16T-470, O T S W/SILTS (R8NV61) (10 MAY 80)

REFERENCE DATA

SREF = 2690.0000 SQ.FT. XMRP = 976.0000 IN. XT
LREF = 1290.3000 INCHES YMRP = .0000 IN. YT
BREF = 1290.3000 INCHES ZMRP = 400.0000 IN. ZT
SCALE = .0200

PARAMETRIC DATA

IB-ELV = 10.000 OB-ELV = 9.000
BDFLAP = .000 SPDBRK = .000
RUDDER = .000 SILTS = 1.000
MACH = 1.250 RN/L = 3.500

RUN NO. 977/ 0 RN/L = 3.51 GRADIENT INTERVAL = -5.00/ 5.00

ALPHAO	BETAO	CNL	CNFL	CAL	CAFL	CLMFL	CYFL	CYNL	CYNFL	CBLFL
-8.143	-5.996	-.53720	-.56540	.50030	.27720	.18780	.28970	-.11790	-.11590	.03610
-8.298	-3.785	-.55150	-.57890	.50000	.28010	.19950	.17520	-.06810	-.06670	.02090
-8.186	.202	-.54890	-.57470	.49970	.28100	.20350	-.00320	.00320	.00320	.00160
-8.011	4.371	-.53010	-.55670	.49880	.28330	.19150	-.18810	.08040	.07920	-.02160
-8.027	6.290	-.53550	-.56330	.49740	.27890	.18910	-.28260	.12050	.11860	-.03430
	GRADIENT	.00264	.00273	-.00015	.00039	-.00100	-.04455	.01821	.01789	-.00521

RUN NO. 978/ 0 RN/L = 3.51 GRADIENT INTERVAL = -5.00/ 5.00

ALPHAO	BETAO	CNL	CNFL	CAL	CAFL	CLMFL	CYFL	CYNL	CYNFL	CBLFL
-6.231	-6.004	-.37650	-.40410	.49620	.28090	.12640	.26860	-.10840	-.10640	.03750
-6.173	-4.080	-.37680	-.40410	.49780	.28260	.13180	.17310	-.06750	-.06630	.02410
-6.272	.119	-.38720	-.41310	.49400	.28030	.14380	-.00790	.00420	.00420	.00080
-6.053	4.300	-.36310	-.38940	.49630	.28570	.12650	-.18310	.07700	.07590	-.02410
-5.991	6.272	-.36370	-.39060	.49530	.28450	.12210	-.27130	.11480	.11290	-.03680
	GRADIENT	.00163	.00175	-.00018	.00037	-.00063	-.04251	.01724	.01697	-.00575

RUN NO. 979/ 0 RN/L = 3.52 GRADIENT INTERVAL = -5.00/ 5.00

ALPHAO	BETAO	CNL	CNFL	CAL	CAFL	CLMFL	CYFL	CYNL	CYNFL	CBLFL
-4.151	-6.152	-.22150	-.24940	.49410	.28270	.06880	.26220	-.10550	-.10360	.04010
-4.348	-4.016	-.24010	-.26750	.49570	.28400	.08020	.16350	-.06530	-.06420	.02470
-4.255	.380	-.22280	-.24820	.48850	.28420	.07830	-.01730	.00770	.00760	-.00110
-3.795	4.350	-.18760	-.21310	.49360	.28960	.06240	-.17570	.07360	.07250	-.02630
-3.880	6.179	-.20120	-.22880	.49850	.28470	.06550	-.25710	.10710	.10530	-.03900
	GRADIENT	.00623	.00646	-.00028	.00066	-.00210	-.04055	.01660	.01634	-.00609

RUN NO. 980/ 0 RN/L = 3.50 GRADIENT INTERVAL = -5.00/ 5.00

ALPHAO	BETAO	CNL	CNFL	CAL	CAFL	CLMFL	CYFL	CYNL	CYNFL	CBLFL
-.474	-6.978	.01700	-.01120	.49340	.28440	-.01460	.29580	-.12190	-.12000	.04970
-.444	-4.886	.01880	-.00840	.49150	.28790	-.01340	.20020	-.08410	-.08260	.03420
-.398	-.623	.02740	.00160	.48830	.28700	-.01550	.01980	-.00910	-.00910	.00320
-.363	3.580	.04310	.01800	.49150	.29060	-.02120	-.15210	.06690	.06540	-.02660
-.379	5.795	.03710	.01120	.49090	.28960	-.02100	-.24750	.10530	.10340	-.04260
	GRADIENT	.00287	.00312	-.00000	.00032	-.00092	-.04161	.01784	.01748	-.00718

IA156A, AEDC PWT 16T-470, O T S W/SILTS (R8NV61) (10 MAY 80)

REFERENCE DATA

SREF = 2690.0000 SQ.FT. XMRP = 976.0000 IN. XT
LREF = 1290.3000 INCHES YMRP = .0000 IN. YT
BREF = 1290.3000 INCHES ZMRP = 400.0000 IN. ZT
SCALE = .0200

PARAMETRIC DATA

IB-ELV = 10.000 OB-ELV = 9.000
BDFLAP = .000 SPDBRK = .000
RUDDER = .000 SILTS = 1.000
MACH = 1.250 RN/L = 3.500

RUN NO. 981/ 0 RN/L = 3.50 GRADIENT INTERVAL = -5.00/ 5.00

ALPHAO	BETAO	CNL	CNFL	CAL	CAFL	CLMFL	CYFL	CYNL	CYNFL	CBLFL
3.947	-5.805	.30010	.27400	.48530	.28580	-.12830	.26580	-.11700	-.11590	.04870
3.949	-3.734	.30370	.27770	.48370	.28690	-.12910	.17330	-.07860	-.07800	.03210
3.821	.193	.29770	.27150	.48000	.28130	-.12190	.00230	-.00410	-.00410	.00130
3.759	3.935	.30670	.28170	.48140	.28510	-.13010	-.15990	.07100	.07010	-.02900
3.746	6.066	.29990	.27450	.48200	.28520	-.12900	-.25500	.10920	.10770	-.04590
	GRADIENT	.00038	.00050	-.00031	-.00024	-.00011	-.04345	.01950	.01931	-.00797

IA156A, AEDC PWT 16T-470, O T S W/SILTS (R8NV62) (10 MAY 80)

REFERENCE DATA

SREF = 2690.0000 SQ.FT. XMRP = 976.0000 IN. XT
LREF = 1290.3000 INCHES YMRP = .0000 IN. YT
BREF = 1290.3000 INCHES ZMRP = 400.0000 IN. ZT
SCALE = .0200

PARAMETRIC DATA

IB-ELV = 10.000 OB-ELV = 11.000
BDFLAP = .000 SPDBRK = .000
RUDDER = .000 SILTS = 1.000
MACH = .300 RN/L = 3.500

RUN NO. 985/ 0 RN/L = 2.62 GRADIENT INTERVAL = -5.00/ 5.00

ALPHAO	BETAO	CNL	CNFL	CAL	CAFL	CLMFL	CYFL	CYNL	CYNFL	CBLFL
-5.189	-9.919	-.27730	-.29970	.27580	.08150	.05960	.37400	-.15720	-.15410	.05100
-6.140	-5.798	-.27580	-.29710	.27880	.09530	.06040	.20260	-.08580	-.08380	.02770
-6.046	.188	-.28560	-.30500	.28010	.10010	.07890	-.00520	-.00040	-.00050	.00040
-5.767	6.289	-.27160	-.29240	.28250	.10060	.07450	-.22260	.09500	.09280	-.03220
-5.906	10.172	-.30130	-.32430	.28400	.09260	.08860	-.35940	.15210	.14910	-.05060
	GRADIENT	.00000	.00000	.00000	.00000	.00000	.00000	.00000	.00000	.00000

RUN NO. 986/ 0 RN/L = 2.62 GRADIENT INTERVAL = -5.00/ 5.00

ALPHAO	BETAO	CNL	CNFL	CAL	CAFL	CLMFL	CYFL	CYNL	CYNFL	CBLFL
-.274	-10.576	.02620	.00320	.28020	.08780	-.04740	.41330	-.17720	-.17480	.06410
-.268	-6.531	.00660	-.01380	.27800	.10600	-.03310	.23580	-.10260	-.10060	.03800
-.244	-.362	.00040	-.01810	.27980	.10960	-.02300	.00150	-.00110	-.00110	.00060
-.219	5.616	.02880	.01000	.28140	.11800	-.04030	-.21210	.09430	.09250	-.03440
-.209	9.775	.03950	.01740	.28640	.10370	-.04590	-.37030	.16220	.16000	-.05970
	GRADIENT	.00000	.00000	.00000	.00000	.00000	.00000	.00000	.00000	.00000

IA156A, AEDC PWT 16T-470, O T S W/SILTS (R8NV62) (10 MAY 80)

REFERENCE DATA

SREF = 2690.0000 SQ.FT. XMRP = 976.0000 IN. XT
LREF = 1290.3000 INCHES YMRP = .0000 IN. YT
BREF = 1290.3000 INCHES ZMRP = 400.0000 IN. ZT
SCALE = .0200

PARAMETRIC DATA

IB-ELV = 10.000 OB-ELV = 11.000
BDFLAP = .000 SPDBRK = .000
RUDDER = .000 SILTS = 1.000
MACH = .300 RN/L = 3.500

RUN NO. 987/ 0 RN/L = 2.62 GRADIENT INTERVAL = -5.00/ 5.00

ALPHAO	BETAO	CNL	CNFL	CAL	CAFL	CLMFL	CYFL	CYNL	CYNFL	CBLFL
6.163	-9.878	.35470	.33370	.26180	.08820	-.16220	.40690	-.18120	-.17970	.07560
5.922	-5.672	.34510	.32560	.25850	.09450	-.15220	.22890	-.10430	-.10310	.04400
5.799	.132	.35250	.33500	.25680	.09800	-.15710	.01210	-.01060	-.01060	.00320
5.887	6.149	.39220	.37290	.25750	.09560	-.18510	-.22050	.09610	.09460	-.04140
5.769	10.020	.38580	.36440	.26080	.08710	-.18760	-.37630	.16510	.16340	-.06960
	GRADIENT	.00000	.00000	.00000	.00000	.00000	.00000	.00000	.00000	.00000

IA156A, AEDC PWT 16T-470, O T S W/SILTS (R8NV63) (10 MAY 80)

REFERENCE DATA

SREF = 2690.0000 SQ.FT. XMRP = 976.0000 IN. XT
LREF = 1290.3000 INCHES YMRP = .0000 IN. YT
BREF = 1290.3000 INCHES ZMRP = 400.0000 IN. ZT
SCALE = .0200

PARAMETRIC DATA

IB-ELV = 10.000 OB-ELV = 11.000
BDFLAP = .000 SPDBRK = .000
RUDDER = .000 SILTS = 1.000
MACH = .300 RN/L = 3.500

RUN NO. 984/ 0 RN/L = 2.64 GRADIENT INTERVAL = -5.00/ 5.00

ALPHAO	BETAO	CNL	CNFL	CAL	CAFL	CLMFL	CYFL	CYNL	CYNFL	CBLFL
-10.338	-7.903	-.52100	-.54360	.26830	.06420	.15180	.30970	-.13410	-.13070	.03720
-10.010	-5.743	-.50110	-.52300	.27150	.07810	.14420	.22260	-.09630	-.09410	.02650
-9.964	.320	-.53770	-.55740	.27140	.08020	.17300	-.01470	.00620	.00620	-.00080
-9.977	6.296	-.53240	-.55360	.27420	.07970	.16710	-.23040	.10010	.09780	-.02690
-10.023	8.249	-.54190	-.56410	.27740	.07820	.17380	-.29610	.12660	.12350	-.03480
	GRADIENT	.00000	.00000	.00000	.00000	.00000	.00000	.00000	.00000	.00000

RUN NO. 988/ 0 RN/L = 2.63 GRADIENT INTERVAL = -5.00/ 5.00

ALPHAO	BETAO	CNL	CNFL	CAL	CAFL	CLMFL	CYFL	CYNL	CYNFL	CBLFL
10.065	-7.798	.57850	.55860	.23620	.06980	-.24920	.29710	-.12810	-.12680	.06250
9.942	-5.729	.58080	.56170	.23680	.07600	-.24800	.21680	-.09520	-.09400	.04640
9.776	.230	.57160	.55450	.23910	.07990	-.23990	.01260	-.01220	-.01220	.00350
9.976	6.289	.62750	.60880	.23390	.07390	-.27570	-.20290	.08210	.08090	-.04310
9.935	8.263	.62390	.60390	.23640	.06980	-.27730	-.28600	.11940	.11820	-.05960
	GRADIENT	.00000	.00000	.00000	.00000	.00000	.00000	.00000	.00000	.00000

IA156A, AEDC PWT 16T-470, O T S W/SILTS (R8NV64) (10 MAY 80)

REFERENCE DATA

SREF = 2690.0000 SQ.FT. XMRP = 976.0000 IN. XT
LREF = 1290.3000 INCHES YMRP = .0000 IN. YT
BREF = 1290.3000 INCHES ZMRP = 400.0000 IN. ZT
SCALE = .0200

PARAMETRIC DATA

IB-ELV = 10.000 OB-ELV = 11.000
BDFLAP = .000 SPDBRK = .000
RUDDER = .000 SILTS = 1.000
MACH = .600 RN/L = 3.500

RUN NO. 989/ 0 RN/L = 3.51 GRADIENT INTERVAL = -5.00/ 5.00

ALPHAO	BETAO	CNL	CNFL	CAL	CAFL	CLMFL	CYFL	CYNL	CYNFL	CBLFL
-8.116	-7.801	-.39830	-.42340	.28570	.07890	.09890	.32000	-.13570	-.13250	.03970
-8.131	-5.751	-.40710	-.42990	.28740	.09720	.10300	.23470	-.09980	-.09750	.02810
-8.158	-3.746	-.40770	-.43030	.28930	.09560	.10770	.14990	-.06360	-.06220	.01720
-8.038	.179	-.42290	-.44470	.29010	.09050	.12220	-.00360	.00130	.00130	.00030
-7.907	4.315	-.39810	-.42030	.29270	.09920	.10610	-.16640	.07260	.07130	-.01950
-7.903	6.178	-.39340	-.41680	.29030	.09270	.10230	-.23700	.10280	.10050	-.02880
-7.933	8.182	-.40150	-.42490	.28890	.09100	.10540	-.31590	.13640	.13340	-.03890
	GRADIENT	.00123	.00128	.00042	.00046	-.00023	-.03924	.01690	.01656	-.00455

RUN NO. 990/ 0 RN/L = 3.50 GRADIENT INTERVAL = -5.00/ 5.00

ALPHAO	BETAO	CNL	CNFL	CAL	CAFL	CLMFL	CYFL	CYNL	CYNFL	CBLFL
-6.151	-7.917	-.27430	-.29780	.28580	.09330	05260	.32240	-.13640	-.13350	.04280
-6.133	-5.908	-.28250	-.30510	.28900	.10140	.05770	.23360	-.09970	-.09740	.03070
-6.052	-4.006	-.27880	-.30090	.29140	.10490	.06040	.15310	-.06590	-.06450	.01990
-6.115	.062	-.29570	-.31570	.28710	.10530	.07500	-.00720	.00240	.00240	.00020
-5.951	4.184	-.27270	-.29420	.29230	.10630	.06430	-.15670	.06740	.06610	-.02030
-5.876	6.172	-.26790	-.29040	.29220	.10500	.06000	-.22870	.09860	.09640	-.03080
-5.888	8.143	-.27470	-.29810	.29070	.09810	.06140	-.30760	.13270	.13000	-.04160
	GRADIENT	.00076	.00083	.00011	.00017	.00047	-.03782	.01627	.01594	-.00491

RUN NO. 991/ 0 RN/L = 3.50 GRADIENT INTERVAL = -5.00/ 5.00

ALPHAO	BETAO	CNL	CNFL	CAL	CAFL	CLMFL	CYFL	CYNL	CYNFL	CBLFL
-4.002	-8.052	-.14810	-.17150	.28900	.10090	.00790	.32010	-.13610	-.13340	.04610
-4.241	-5.954	-.17450	-.19760	.28840	.10210	.02030	.22920	-.09730	-.09520	.03270
-4.156	-3.960	-.17120	-.19280	.29080	.11090	.02220	.14340	-.06140	-.05990	.02020
-4.127	.330	-.16900	-.18890	.28800	.11180	.02990	-.01740	.00650	.00620	-.00120
-3.741	4.210	-.13930	-.16030	.29230	.11390	.01810	-.15680	.06750	.06610	-.02240
-3.805	6.054	-.14200	-.16400	.29210	.10990	.01590	-.22480	.09710	.09510	-.03290
-3.828	8.036	-.14550	-.16870	.29140	.10220	.01550	-.30420	.13220	.12960	-.04440
	GRADIENT	.00384	.00392	.00017	.00036	-.00046	-.03676	.01578	.01542	-.00521

IA156A, AEDC PWT 16T-470, O T S W/SILTS (R8NV64) (10 MAY 80)

REFERENCE DATA

SREF = 2690.0000 SQ.FT. XMRP = 976.0000 IN. XT
LREF = 1290.3000 INCHES YMRP = .0000 IN. YT
BREF = 1290.3000 INCHES ZMRP = 400.0000 IN. ZT
SCALE = .0200

PARAMETRIC DATA

IB-ELV = 10.000 OB-ELV = 11.000
BDFLAP = .000 SPDBRK = .000
RUDDER = .000 SILTS = 1.000
MACH = .600 RN/L = 3.500

RUN NO. 992/ 0 RN/L = 3.50 GRADIENT INTERVAL = -5.00/ 5.00

ALPHAO	BETAO	CNL	CNFL	CAL	CAFL	CLMFL	CYFL	CYNL	CYNFL	CBLFL
-.333	-8.763	.04020	.01730	.28640	.10090	-.05840	.35530	-.15390	-.15170	.05540
-.323	-6.686	.03370	.01180	.28600	.10730	-.05310	.26500	-.11590	-.11370	.04200
-.309	-4.451	.03020	.00870	.28850	.11240	-.04810	.16930	-.07520	-.07360	.02680
-.284	-.386	.02850	.00950	.28570	.11500	-.04120	.00870	-.00420	-.00420	.00150
-.253	3.691	.05530	.03480	.28700	.11410	-.05490	-.13960	.06270	.06120	-.02250
-.253	5.787	.06000	.03870	.28810	.11380	-.06050	-.22120	.09870	.09660	-.03550
-.243	7.871	.07020	.04800	.28990	.11150	-.06670	-.30250	.13490	.13260	-.04900
	GRADIENT	.00308	.00321	-.00018	.00021	-.00084	-.03794	.01694	.01656	-.00605

RUN NO. 993/ 0 RN/L = 3.50 GRADIENT INTERVAL = -5.00/ 5.00

ALPHAO	BETAO	CNL	CNFL	CAL	CAFL	CLMFL	CYFL	CYNL	CYNFL	CBLFL
4.168	-7.891	.28930	.26760	.27410	.09910	-.14930	.33140	-.14950	-.14780	.06030
4.092	-5.788	.28760	.26680	.27210	.10320	-.14610	.23450	-.10720	-.10570	.04330
4.040	-3.806	.27860	.25900	.27090	.10600	-.13980	.15750	-.07290	-.07180	.02900
3.837	.078	.26880	.24950	.26980	.10360	-.13270	.01120	-.00830	-.00830	.00270
3.896	4.062	.29780	.27820	.27080	.10420	-.15090	-.14290	.06220	.06110	-.02580
3.844	6.167	.30070	.28010	.27190	.10420	-.15610	-.23220	.10400	.10220	-.04230
3.838	8.161	.30530	.28350	.27400	.09870	-.15920	-.30980	.13870	.13670	-.05590
	GRADIENT	.00246	.00246	-.00001	-.00023	-.00142	-.03818	.01717	.01689	-.00697

RUN NO. 994/ 0 RN/L = 3.50 GRADIENT INTERVAL = -5.00/ 5.00

ALPHAO	BETAO	CNL	CNFL	CAL	CAFL	CLMFL	CYFL	CYNL	CYNFL	CBLFL
6.197	-7.962	.40750	.38590	.26290	.09070	-.19770	.33070	-.14820	-.14670	.06310
6.167	-5.883	.41410	.39320	.26250	.09520	-.19800	.23860	-.10730	-.10600	.04640
6.157	-3.829	.40890	.38910	.26370	.09910	-.19300	.15980	-.07270	-.07170	.03120
5.863	.183	.38420	.36530	.26400	.09860	-.17840	.00290	-.00400	-.00410	.00140
5.796	4.073	.39920	.37930	.26340	.09840	-.19050	-.14380	.06110	.06000	-.02670
5.774	5.985	.41120	.39050	.26370	.09640	-.19820	-.21640	.09500	.09340	-.04100
5.805	8.225	.41910	.39720	.26500	.08990	-.20430	-.30630	.13610	.13430	-.05810
	GRADIENT	-.00125	-.00126	-.00004	-.00009	.00033	-.03843	.01693	.01667	-.00733

IA156A, AEDC PWT 16T-470, O T S W/SILTS (R8NV64) (10 MAY 80)

REFERENCE DATA

SREF = 2690.0000 SQ.FT. XMRP = 976.0000 IN. XT
LREF = 1290.3000 INCHES YMRP = .0000 IN. YT
BREF = 1290.3000 INCHES ZMRP = 400.0000 IN. ZT
SCALE = .0200

PARAMETRIC DATA

IB-ELV = 10.000 OB-ELV = 11.000
BDFLAP = .000 SPDBRK = .000
RUDDER = .000 SILTS = 1.000
MACH = .600 RN/L = 3.500

RUN NO. 995/ 0 RN/L = 3.50 GRADIENT INTERVAL = -5.00/ 5.00

ALPHAO	BETAO	CNL	CNFL	CAL	CAFL	CLMFL	CYFL	CYNL	CYNFL	CBLFL
8.107	-7.821	.52310	.50200	.24900	.08130	-.24220	.30790	-.13520	-.13380	.06200
7.996	-5.734	.52310	.50240	.25180	.08580	-.24000	.21960	-.09650	-.09530	.04490
7.970	-3.774	.51470	.49470	.25240	.08650	-.23320	.14530	-.06470	-.06370	.03050
7.886	.178	.50390	.48490	.25710	.09000	-.22360	.00000	-.00290	-.00300	.00140
7.824	4.107	.52450	.50440	.25420	.08880	-.23870	-.13550	.05570	.05460	-.02700
7.906	6.229	.54270	.52200	.25320	.08540	-.24960	-.21480	.09150	.09000	-.04350
7.889	8.228	.54100	.51940	.25270	.07920	-.25180	-.29820	.13000	.12850	-.05990
	GRADIENT	.00124	.00123	.00023	.00029	-.00069	-.03563	.01528	.01501	-.00730

IA156A, AEDC PWT 16T-470, O T S W/SILTS (R8NV65) (10 MAY 80)

REFERENCE DATA

SREF = 2690.0000 SQ.FT. XMRP = 976.0000 IN. XT
LREF = 1290.3000 INCHES YMRP = .0000 IN. YT
BREF = 1290.3000 INCHES ZMRP = 400.0000 IN. ZT
SCALE = .0200

PARAMETRIC DATA

IB-ELV = 10.000 OB-ELV = 11.000
BDFLAP = .000 SPDBRK = .000
RUDDER = .000 SILTS = 1.000
MACH = .800 RN/L = 3.500

RUN NO. 996/ 0 RN/L = 3.50 GRADIENT INTERVAL = -5.00/ 5.00

ALPHAO	BETAO	CNL	CNFL	CAL	CAFL	CLMFL	CYFL	CYNL	CYNFL	CBLFL
-8.190	-5.988	-.42130	-.44580	.31550	.115'0	.10680	.26430	-.11660	-.11370	.03120
-8.244	-3.759	-.42800	-.45160	.31940	.12290	.11510	.16510	-.07280	-.07120	.01830
-8.164	.181	-.45300	-.47510	.31530	.11760	.13750	-.00090	-.00090	-.00080	.00150
-8.008	4.427	-.41500	-.43820	.31710	.12190	.11010	-.17970	.08030	.07900	-.02000
-7.969	6.241	-.41450	-.43870	.31640	.11780	.10630	-.25560	.11300	.11070	-.03020
	GRADIENT	.00168	.00173	-.00027	-.00011	-.00069	-.04212	.01871	.01835	-.00468

RUN NO. 997/ 0 RN/L = 3.50 GRADIENT INTERVAL = -5.00/ 5.00

ALPHAO	BETAO	CNL	CNFL	CAL	CAFL	CLMFL	CYFL	CYNL	CYNFL	CBLFL
-6.208	-5.978	-.28930	-.31290	.31500	.12380	.05930	.25700	-.11300	-.11040	.03270
-6.158	-4.068	-.29410	-.31710	.31790	.12730	.06610	.17210	-.07680	-.07520	.02130
-6.227	.117	-.31330	-.33450	.31140	.12370	.08310	-.00450	.00030	.00040	.00110
-6.061	4.258	-.28720	-.30960	.31720	.12810	.06580	-.16340	.07220	.07080	-.02000
-5.755	6.394	-.25990	-.28360	.31660	.12620	.05090	-.25210	.11120	.10880	-.03320
	GRADIENT	.00082	.00089	-.00009	.00009	-.00003	-.04030	.01790	.01754	-.00496

IA156A, AEDC PWT 16T-470, O T S W/SILTS (R8NV65) (10 MAY 80)

REFERENCE DATA

SREF = 2690.0000 SQ.FT. XMRP = 976.0000 IN. XT
LREF = 1290.3000 INCHES YMRP = .0000 IN. YT
BREF = 1290.3000 INCHES ZMRP = 400.0000 IN. ZT
SCALE = .0200

PARAMETRIC DATA

IB-ELV = 10.000 OB-ELV = 11.000
BDFLAP = .000 SPDBRK = .000
RUDDER = .000 SILTS = 1.000
MACH = .800 RN/L = 3.500

RUN NO. 998/ 0 RN/L = 3.50 GRADIENT INTERVAL = -5.00/ 5.00

ALPHAO	BETAO	CNL	CNFL	CAL	CAFL	CLMFL	CYFL	CYNL	CYNFL	CBLFL
-4.084	-6.130	-.15740	-.18090	.31560	.12830	.01140	.25460	-.11180	-.10930	.03580
-4.332	-3.976	-.18090	-.20320	.31630	.13270	.02540	.15540	-.06900	-.06750	.02080
-4.236	.375	-.17590	-.19650	.30850	.12770	.03130	-.01440	.00490	.00480	-.00030
-3.804	4.333	-.14140	-.16330	.31430	.13210	.01500	-.16720	.07320	.07170	-.02300
-3.864	6.155	-.14330	-.16630	.31400	.13040	.01200	-.24060	.10590	.10370	-.03430
	GRADIENT	.00469	.00475	-.00027	-.00009	-.00121	-.03883	.01711	.01675	-.00526

RUN NO. 999/ 0 RN/L = 3.50 GRADIENT INTERVAL = -5.00/ 5.00

ALPHAO	BETAO	CNL	CNFL	CAL	CAFL	CLMFL	CYFL	CYNL	CYNFL	CBLFL
-.349	-6.910	.05300	.03030	.31080	.12550	-.06820	.29280	-.12970	-.12750	.04550
-.345	-4.778	.04260	.02150	.30910	.13200	-.06110	.19680	-.08890	-.08720	.03030
-.318	-.519	.03750	.01760	.29970	.13000	-.05320	.01500	-.00690	-.00670	.00270
-.280	3.587	.06880	.04820	.30660	.13370	-.07000	-.14530	.06570	.06440	-.02190
-.281	5.732	.07360	.05200	.30940	.13240	-.07510	-.23560	.10710	.10500	-.03650
	GRADIENT	.00311	.00317	-.00031	.00020	-.00105	-.04091	.01849	.01813	-.00624

RUN NO. 1000/ 0 RN/L = 3.51 GRADIENT INTERVAL = -5.00/ 5.00

ALPHAO	BETAO	CNL	CNFL	CAL	CAFL	CLMFL	CYFL	CYNL	CYNFL	CBLFL
4.101	-5.781	.32570	.30350	.29690	.12110	-.17270	.25620	-.11610	-.11460	.04710
3.955	-3.664	.31960	.29900	.29490	.12380	-.16720	.16000	-.07380	-.07270	.02990
3.717	.123	.30580	.28580	.28840	.12300	-.15710	.01040	-.00740	-.00740	.00280
3.820	4.012	.34160	.32110	.29270	.12320	-.17930	-.14610	.06460	.06330	-.02610
3.767	6.089	.34180	.32010	.29650	.12280	-.18310	-.24140	.10970	.10780	-.04320
	GRADIENT	.00289	.00291	-.00028	-.00008	-.00159	-.03988	.01803	.01772	-.00730

RUN NO. 1001/ 0 RN/L = 3.51 GRADIENT INTERVAL = -5.00/ 5.00

ALPHAO	BETAO	CNL	CNFL	CAL	CAFL	CLMFL	CYFL	CYNL	CYNFL	CBLFL
6.081	-5.826	.45070	.42890	.29180	.11860	-.22390	.25640	-.11660	-.11510	.04680
6.062	-3.782	.45760	.43700	.28960	.12150	-.22660	.16290	-.07500	-.07400	.02980
5.749	.159	.43680	.41670	.28430	.11620	-.21560	.00410	-.00460	-.00460	.00160
5.676	3.974	.44610	.42530	.28840	.11850	-.22210	-.13980	.06040	.05920	-.02400
5.803	6.143	.46200	.44020	.29120	.11740	-.22980	-.22910	.10280	.10110	-.04100
	GRADIENT	-.00150	-.00153	-.00016	-.00039	.00059	-.03903	.01746	.01718	-.00694

IA156A, AEDC PWT 16T-470, O T S W/SILTS (R8NV66) (10 MAY 80)

REFERENCE DATA

SREF = 2690.0000 SQ.FT. XMRP = 976.0000 IN. XT
LREF = 1290.3000 INCHES YMRP = .0000 IN. YT
BREF = 1290.3000 INCHES ZMRP = 400.0000 IN. ZT
SCALE = .0200

PARAMETRIC DATA

IB-ELV = 10.000 OB-ELV = 11.000
BDFLAP = .000 SPDBRK = .000
RUDDER = .000 SILTS = 1.000
MACH = .900 RN/L = 3.500

RUN NO. 1002/ 0 RN/L = 3.50 GRADIENT INTERVAL = -5.00/ 5.00

ALPHAO	BETAO	CNL	CNFL	CAL	CAFL	CLMFL	CYFL	CYNL	CYNFL	CBLFL
-8.139	-6.011	-.45710	-.48320	.36160	.15260	.13250	.28190	-.12430	-.12200	.03140
-8.266	-3.766	-.47720	-.50250	.36280	.15370	.14710	.17390	-.07580	-.07470	.01750
-8.171	.178	-.49600	-.51950	.35850	.14980	.16620	.00470	-.00410	-.00390	.00210
-7.999	4.397	-.45810	-.48240	.35880	.15580	.14070	-.18450	.08100	.07980	-.01930
-8.035	6.278	-.46480	-.49100	.36060	.15020	.13990	-.27020	.11840	.11630	-.03040
	GRADIENT	.00242	.00254	-.00048	.00027	-.00085	-.04392	.01922	.01894	-.00451

RUN NO. 1003/ 0 RN/L = 3.50 GRADIENT INTERVAL = -5.00/ 5.00

ALPHAO	BETAO	CNL	CNFL	CAL	CAFL	CLMFL	CYFL	CYNL	CYNFL	CBLFL
-6.213	-5.983	-.32900	-.35520	.36090	.15290	.08530	.27430	-.12020	-.11790	.03330
-6.159	-4.072	-.33300	-.35790	.36030	.15730	.09140	.18740	-.08230	-.08100	.02170
-6.252	.103	-.35260	-.37540	.35190	.15100	.11140	-.00070	-.00180	-.00150	.00100
-6.049	4.272	-.32130	-.34590	.35750	.15660	.09130	-.17320	.07480	.07350	-.02050
-5.983	6.249	-.31850	-.34450	.35900	.15440	.08770	-.25850	.11180	.10950	-.03270
	GRADIENT	.00140	.00144	-.00034	-.00008	-.00001	-.04322	.01883	.01852	-.00506

RUN NO. 1004/ 0 RN/L = 3.49 GRADIENT INTERVAL = -5.00/ 5.00

ALPHAO	BETAO	CNL	CNFL	CAL	CAFL	CLMFL	CYFL	CYNL	CYNFL	CBLFL
-4.066	-6.140	-.18290	-.20800	.35860	.15940	.03130	.26540	-.11430	-.11200	.03600
-4.344	-4.007	-.20790	-.23240	.35820	.15870	.04540	.16940	-.07350	-.07220	.02140
-4.242	.377	-.20680	-.23010	.34700	.15010	.05420	-.01540	.00490	.00500	-.00130
-3.805	4.332	-.16410	-.18830	.35380	.15980	.03400	-.17100	.07230	.07100	-.02350
-3.878	6.163	-.17120	-.19630	.35490	.15880	.03350	-.25050	.10760	.10550	-.03550
	GRADIENT	.00516	.00520	-.00056	.00009	-.00131	-.04085	.01749	.01718	-.00538

RUN NO. 1005/ 0 RN/L = 3.49 GRADIENT INTERVAL = -5.00/ 5.00

ALPHAO	BETAO	CNL	CNFL	CAL	CAFL	CLMFL	CYFL	CYNL	CYNFL	CBLFL
-.384	-6.979	.04010	.01530	.35420	.15670	-.05740	.30070	-.12990	-.12790	.04720
-.370	-4.834	.03560	.01200	.35180	.15840	-.05300	.20400	-.09070	-.08900	.03220
-.335	-.531	.03450	.01340	.33490	.15540	-.04900	.01650	-.00750	-.00730	.00240
-.302	3.595	.06180	.03930	.34410	.15750	-.06450	-.14940	.06670	.06540	-.02390
-.304	5.740	.06420	.04030	.35110	.15910	-.06500	-.24060	.10760	.10560	-.03880
	GRADIENT	.00308	.00322	-.00094	-.00011	-.00135	-.04194	.01868	.01832	-.00666

IA156A, AEDC PWT 16T-470, O T S W/SILTS (R8NV66) (10 MAY 80)

REFERENCE DATA

SREF = 2690.0000 SQ.FT. XMRP = 976.0000 IN. XT
LREF = 1290.3000 INCHES YMRP = .0000 IN. YT
BREF = 1290.3000 INCHES ZMRP = 400.0000 IN. ZT
SCALE = .0200

PARAMETRIC DATA

IB-ELV = 10.000 OB-ELV = 11.000
BDFLAP = .000 SPDBRK = .000
RUDDER = .000 SILTS = 1.000
MACH = .900 RN/L = 3.500

RUN NO. 1006/ 0 RN/L = 3.50 GRADIENT INTERVAL = -5.00/ 5.00

ALPHAO	BETAO	CNL	CNFL	CAL	CAFL	CLMFL	CYFL	CYNL	CYNFL	CBLFL
4.095	-5.773	.32330	.29970	.34420	.15490	-.16690	.25950	-.11410	-.11250	.04470
3.945	-3.668	.32020	.29840	.33910	.15510	-.16760	.16920	-.07670	-.07570	.02910
3.706	.126	.31080	.28970	.32750	.14760	-.16440	.00950	-.00590	-.00590	.00190
3.810	3.998	.33930	.31700	.33710	.15310	-.17690	-.15290	.06790	.06660	-.02560
3.754	6.078	.33160	.30730	.34380	.15260	-.17600	-.24800	.10960	.10770	-.04160
	GRADIENT	.00251	.00244	-.00025	-.00026	-.00122	-.04202	.01886	.01856	-.00714

IA156A, AEDC PWT 16T-470, O T S W/SILTS (R8NV67) (10 MAY 80)

REFERENCE DATA

SREF = 2690.0000 SQ.FT. XMRP = 976.0000 IN. XT
LREF = 1290.3000 INCHES YMRP = .0000 IN. YT
BREF = 1290.3000 INCHES ZMRP = 400.0000 IN. ZT
SCALE = .0200

PARAMETRIC DATA

IB-ELV = 10.000 OB-ELV = 11.000
BDFLAP = .000 SPDBRK = .000
RUDDER = .000 SILTS = 1.000
MACH = .950 RN/L = 3.500

RUN NO. 1007/ 0 RN/L = 3.49 GRADIENT INTERVAL = -5.00/ 5.00

ALPHAO	BETAO	CNL	CNFL	CAL	CAFL	CLMFL	CYFL	CYNL	CYNFL	CBLFL
-8.174	-5.994	-.49070	-.52010	.40470	.17600	.15050	.29590	-.13070	-.12820	.03350
-8.273	-3.769	-.50260	-.53050	.40810	.18320	.15970	.17780	-.07660	-.07550	.01880
-8.177	.172	-.51210	-.53790	.40360	.18080	.17290	.00630	-.00500	-.00490	.00340
-7.999	4.395	-.48840	-.51700	.40760	.17810	.15700	-.18980	.08350	.08240	-.01920
-8.015	6.270	-.49190	-.52140	.40750	.17820	.15470	-.28210	.12590	.12370	-.03130
	GRADIENT	.00179	.00169	-.00005	-.00062	-.00037	-.04505	.01963	.01936	-.00466

RUN NO. 1008/ 0 RN/L = 3.50 GRADIENT INTERVAL = -5.00/ 5.00

ALPHAO	BETAO	CNL	CNFL	CAL	CAFL	CLMFL	CYFL	CYNL	CYNFL	CBLFL
-6.222	-6.000	-.34970	-.37840	.40550	.18110	.09880	.28580	-.12520	-.12280	.03480
-6.165	-4.074	-.34830	-.37550	.40390	.18590	.10140	.18820	-.08170	-.08040	.02190
-6.250	.100	-.36460	-.39000	.40060	.18280	.11750	-.00030	-.00210	-.00210	.00230
-6.077	4.263	-.34360	-.37120	.40590	.18410	.10580	-.18070	.07870	.07740	-.02090
-5.771	6.406	-.31450	-.34280	.40430	.18670	.09150	-.27690	.12160	.11930	-.03500
	GRADIENT	.00056	.00051	.00024	-.00022	.00053	-.04425	.01924	.01893	-.00513

IA156A, AEDC PWT 16T-470, O T S W/SILTS (R8NV67) (10 MAY 80)

REFERENCE DATA

SREF = 2690.0000 SQ.FT. XMRP = 976.0000 IN. XT
LREF = 1290.3000 INCHES YMRP = .0000 IN. YT
BREF = 1290.3000 INCHES ZMRP = 400.0000 IN. ZT
SCALE = .0200

PARAMETRIC DATA

IB-ELV = 10.000 OB-ELV = 11.000
BDFLAP = .000 SPDBRK = .000
RUDDER = .000 SILTS = 1.000
MACH = .950 RN/L = 3.500

RUN NO. 1009/ 0 RN/L = 3.50 GRADIENT INTERVAL = -5.00/ 5.00

ALPHAO	BETAO	CNL	CNFL	CAL	CAFL	CLMFL	CYFL	CYNL	CYNFL	CBLFL
-4.090	-6.152	-.19960	-.22790	.40600	.18570	.04550	.27630	-.11910	-.11670	.03700
-4.336	-4.001	-.22090	-.24720	.40270	.18990	.05630	.17130	-.07290	-.07170	.02110
-4.255	.372	-.22170	-.24630	.39530	.18550	.06850	-.01350	.00330	.00320	.00030
-3.805	4.339	-.17650	-.20260	.40160	.19050	.04770	-.17800	.07580	.07430	-.02390
-3.884	6.157	-.18810	-.21680	.40580	.18420	.04790	-.26140	.11240	.11000	-.03650
	GRADIENT	.00523	.00526	-.00016	.00005	-.00097	-.04189	.01782	.01750	-.00538

RUN NO. 1010/ 0 RN/L = 3.50 GRADIENT INTERVAL = -5.00/ 5.00

ALPHAO	BETAO	CNL	CNFL	CAL	CAFL	CLMFL	CYFL	CYNL	CYNFL	CBLFL
-.403	-6.989	.03100	.00300	.40040	.18510	-.04150	.30500	-.12930	-.12670	.04740
-.384	-4.820	.02530	-.00060	.39710	.18750	-.03460	.20530	-.08900	-.08700	.03190
-.355	-.578	.01710	-.00630	.38590	.18330	-.02230	.01890	-.00880	-.00850	.00290
-.317	3.642	.05070	.02570	.39500	.18830	-.04230	-.15460	.06950	.06790	-.02530
-.314	5.778	.05720	.03030	.40080	.18740	-.04810	-.24630	.10900	.10660	-.04030
	GRADIENT	.00300	.00310	-.00025	.00009	-.00091	-.04253	.01873	.01831	-.00676

RUN NO. 1011/ 0 RN/L = 3.49 GRADIENT INTERVAL = -5.00/ 5.00

ALPHAO	BETAO	CNL	CNFL	CAL	CAFL	CLMFL	CYFL	CYNL	CYNFL	CBLFL
4.100	-5.936	.31230	.28680	.38940	.17870	-.15360	.26480	-.11220	-.11040	.04590
3.927	-3.611	.30940	.28560	.38340	.18010	-.15560	.16220	-.06850	-.06740	.02700
3.704	.194	.29740	.27270	.37470	.17140	-.15170	.00470	-.00270	-.00270	.00110
3.820	4.058	.32890	.30430	.38180	.17900	-.16500	-.15170	.06340	.06200	-.02500
3.768	6.090	.32230	.29610	.38780	.17980	-.15900	-.24510	.10410	.10190	-.04190
	GRADIENT	.00256	.00245	-.00020	-.00014	-.00123	-.04093	.01720	.01687	-.00678

IA156A, AEDC PWT 16T-470, O T S W/SILTS (R8NV68) (10 MAY 80)

REFERENCE DATA

SREF = 2690.0000 SQ.FT. XMRP = 976.0000 IN. XT
LREF = 1290.3000 INCHES YMRP = .0000 IN. YT
BREF = 1290.3000 INCHES ZMRP = 400.0000 IN. ZT
SCALE = .0200

PARAMETRIC DATA

IB-ELV = 10.000 OB-ELV = 11.000
BDFLAP = .000 SPDBRK = .000
RUDDER = .000 SILTS = 1.000
MACH = 1.050 RN/L = 3.500

RUN NO. 1012/ 0 RN/L = 3.52 GRADIENT INTERVAL = -5.00/ 5.00

ALPHAO	BETAO	CNL	CNFL	CAL	CAFL	CLMFL	CYFL	CYNL	CYNFL	CBLFL
-8.150	-6.001	-.54060	-.57730	.51860	.23960	.19330	.30840	-.13070	-.12790	.03610
-8.302	-3.778	-.55810	-.59360	.51990	.24830	.20770	.19200	-.08100	-.07950	.02050
-8.183	.171	-.57580	-.61300	.53370	.23390	.22300	.00370	-.00120	-.00120	.00230
-7.975	4.397	-.55000	-.58590	.52540	.24290	.20940	-.19720	.08580	.08430	-.02130
-8.018	6.265	-.55200	-.58790	.52020	.23810	.20490	-.28870	.12440	.12180	-.03360
	GRADIENT	.00105	.00101	.00064	-.00063	.00017	-.04761	.02041	.02004	-.00512

RUN NO. 1013/ 0 RN/L = 3.50 GRADIENT INTERVAL = -5.00/ 5.00

ALPHAO	BETAO	CNL	CNFL	CAL	CAFL	CLMFL	CYFL	CYNL	CYNFL	CBLFL
-6.221	-6.006	-.38490	-.42200	.52150	.24130	.13700	.28930	-.12170	-.11900	.03760
-6.153	-4.085	-.38650	-.42320	.52320	.24430	.14400	.19260	-.08070	-.07930	.02440
-6.258	.108	-.41450	-.44960	.52310	.24490	16770	-.00040	-.00040	-.00040	.00130
-6.060	4.277	-.39020	-.42490	.52190	.24560	.15130	-.18560	.07980	.07830	-.02340
-5.999	6.257	-.38820	-.42390	.51850	.24140	.14550	-.28200	.12130	.11870	-.03690
	GRADIENT	-.00045	-.00021	-.00016	.00016	.00088	-.04523	.01920	.01885	-.00572

RUN NO. 1014/ 0 RN/L = 3.50 GRADIENT INTERVAL = -5.00/ 5.00

ALPHAO	BETAO	CNL	CNFL	CAL	CAFL	CLMFL	CYFL	CYNL	CYNFL	CBLFL
-4.105	-6.160	-.22760	-.26450	.51860	.24450	.08150	.28410	-.11790	-.11550	.04130
-4.348	-4.027	-.25370	-.29010	.51950	.24870	.09870	.18340	-.07820	-.07670	.02560
-4.141	.192	-.25350	-.28870	.51870	.24710	.11340	-.00550	.00120	.00110	.00030
-4.009	4.261	-.23400	-.26800	.51710	.24940	.09850	-.18040	.07740	.07580	-.02620
-3.867	6.166	-.21960	-.25410	.51600	.24860	.08670	-.26560	.11330	.11100	-.04040
	GRADIENT	.00236	.00265	-.00029	.00008	-.00000	-.04390	.01878	.01840	-.00625

RUN NO. 1015/ 0 RN/L = 3.50 GRADIENT INTERVAL = -5.00/ 5.00

ALPHAO	BETAO	CNL	CNFL	CAL	CAFL	CLMFL	CYFL	CYNL	CYNFL	CBLFL
-.437	-6.999	.02030	-.01680	.51440	.24620	-.01010	.31330	-.13170	-.12930	.05360
-.421	-4.839	.01000	-.02630	.51370	.24940	.00180	.21280	-.09330	-.09150	.03690
-.393	-.626	.00450	-.02980	.51180	.24590	.01240	.02870	-.01500	-.01490	.00440
-.359	3.574	.02770	-.00650	.51870	.25380	-.00060	-.15520	.07130	.06970	-.02840
-.359	5.766	.03370	-.00110	.52090	.25300	-.00810	-.25030	.11080	.10850	-.04480
	GRADIENT	.00210	.00235	.00059	.00052	-.00028	-.04374	.01956	.01916	-.00776

IA156A, AEDC PWT 16T-470, O T S W/SILTS (R8NV68) (10 MAY 80)

REFERENCE DATA

SREF = 2690.0000 SQ.FT. XMRP = 976.0000 IN. XT
LREF = 1290.3000 INCHES YMRP = .0000 IN. YT
BREF = 1290.3000 INCHES ZMRP = 400.0000 IN. ZT
SCALE = .0200

PARAMETRIC DATA

IB-ELV = 10.000 OB-ELV = 11.000
BDFLAP = .000 SPDBRK = .000
RUDDER = .000 SILTS = 1.000
MACH = 1.050 RN/L = 3.500

RUN NO. 1016/ 0 RN/L = 3.50 GRADIENT INTERVAL = -5.00/ 5.00

ALPHAO	BETAO	CNL	CNFL	CAL	CAFL	CLMFL	CYFL	CYNL	CYNFL	CBLFL
4.071	-5.752	.29800	.26320	.50530	.24480	-.12100	.26360	-.11380	-.11250	.05010
3.954	-3.693	.28920	.25490	.50370	.24610	-.11550	.17150	-.07570	-.07500	.03220
3.685	.145	.28530	.25160	.49890	.24430	-.11320	.00930	-.00550	-.00550	.00220
3.810	4.089	.31540	.28170	.50240	.24270	-.13160	-.16090	.07020	.06920	-.02980
3.747	6.071	.31150	.27700	.50300	.24160	-.13020	-.25050	.10600	.10450	-.04730
	GRADIENT	.00339	.00346	-.00016	-.00044	-.00208	-.04272	.01875	.01853	-.00797

IA156A, AEDC PWT 16T-470, O T S W/SILTS (R8NV69) (10 MAY 80)

REFERENCE DATA

SREF = 2690.0000 SQ.FT. XMRP = 976.0000 IN. XT
LREF = 1290.3000 INCHES YMRP = .0000 IN. YT
BREF = 1290.3000 INCHES ZMRP = 400.0000 IN. ZT
SCALE = .0200

PARAMETRIC DATA

IB-ELV = 10.000 OB-ELV = 11.000
BDFLAP = .000 SPDBRK = .000
RUDDER = .000 SILTS = 1.000
MACH = 1.100 RN/L = 3.500

RUN NO. 1017/ 0 RN/L = 3.50 GRADIENT INTERVAL = -5.00/ 5.00

ALPHAO	BETAO	CNL	CNFL	CAL	CAFL	CLMFL	CYFL	CYNL	CYNFL	CBLFL
-8.097	-5.926	-.52550	-.55920	.51260	.25300	.18370	.28710	-.12010	-.11760	.03330
-8.280	-3.763	-.54720	-.58090	.51840	.25730	.19690	.18280	-.07530	-.07390	.01940
-8.190	.161	-.55300	-.58390	.51380	.25860	.20520	.00270	-.00190	-.00200	.00200
-8.006	4.422	-.53720	-.56970	.51660	.25700	.19820	-.19130	.08140	.07980	-.02070
-7.997	6.266	-.53240	-.56570	.51580	.25590	.19400	-.28050	.11880	.11620	-.03310
	GRADIENT	.00126	.00140	-.00021	-.00004	.00013	-.04571	.01915	.01879	-.00491

RUN NO. 1018/ 0 RN/L = 3.50 GRADIENT INTERVAL = -5.00/ 5.00

ALPHAO	BETAO	CNL	CNFL	CAL	CAFL	CLMFL	CYFL	CYNL	CYNFL	CBLFL
-6.199	-5.999	-.37070	-.40370	.51000	.25900	.12410	.27150	-.11140	-.10900	.03530
-6.174	-4.095	-.38150	-.41440	.51130	.25920	.13410	.18170	-.07430	-.07300	.02270
-6.278	.121	-.39880	-.42950	.50790	.25890	.15120	-.00620	.00080	.00080	.00060
-6.064	4.278	-.36740	-.39790	.50730	.26290	.13460	-.17950	.07370	.07230	-.02280
-5.886	6.403	-.35260	-.38490	.51040	.25700	.12370	-.27620	.11610	.11360	-.03770
	GRADIENT	.00167	.00196	-.00048	.00044	.00007	-.04314	.01768	.01735	-.00543

IA156A, AEDC PWT 16T-470, O T S W/SILTS (R8NV69) (10 MAY 80)

REFERENCE DATA

SREF = 2690.0000 SQ.FT. XMRP = 976.0000 IN. XT
LREF = 1290.3000 INCHES YMRP = .0000 IN. YT
BREF = 1290.3000 INCHES ZMRP = 400.0000 IN. ZT
SCALE = .0200

PARAMETRIC DATA

IB-ELV = 10.000 OB-ELV = 11.000
BDFLAP = .000 SPDBRK = .000
RUDDER = .000 SILTS = 1.000
MACH = 1.100 RN/L = 3.500

RUN NO. 1019/ 0 RN/L = 3.50 GRADIENT INTERVAL = -5.00/ 5.00

ALPHAO	BETAO	CNL	CNFL	CAL	CAFL	CLMFL	CYFL	CYNL	CYNFL	CBLFL
-4.238	-6.148	-.22990	-.26250	.50740	.26040	.07180	.26670	-.10750	-.10540	.03930
-4.335	-4.024	-.24170	-.27390	.50430	.25960	.08360	.16790	-.06840	-.06710	.02360
-4.254	.256	-.24140	-.27160	.49810	.25920	.09550	-.01110	.00220	.00210	-.00030
-3.792	4.279	-.19280	-.22210	.50200	.26860	.07160	-.17240	.06950	.06820	-.02660
-3.868	6.150	-.19710	-.22820	.50620	.26240	.06860	-.25480	.10500	.10300	-.04010
	GRADIENT	.00583	.00618	-.00029	.00107	-.00140	-.04099	.01661	.01629	-.00604

RUN NO. 1020/ 0 RN/L = 3.50 GRADIENT INTERVAL = -5.00/ 5.00

ALPHAO	BETAO	CNL	CNFL	CAL	CAFL	CLMFL	CYFL	CYNL	CYNFL	CBLFL
-.440	-7.008	.02140	-.01120	.50170	.26170	-.01750	.29830	-.12120	-.11910	.05200
-.423	-4.851	.01320	-.01840	.49610	.26480	-.00860	.20090	-.08450	-.08290	.03580
-.387	-.508	.01460	-.01470	.49040	.26220	-.00350	.01800	-.00890	-.00890	.00270
-.354	3.675	.03500	.00600	.49410	.25970	-.01400	-.15640	.06990	.06830	-.02900
-.360	5.796	.03760	.00820	.49570	.26430	-.02000	-.24780	.10750	.10530	-.04500
	GRADIENT	.00254	.00285	-.00024	-.00060	-.00062	-.04191	.01811	.01773	-.00760

RUN NO. 1021/ 0 RN/L = 3.50 GRADIENT INTERVAL = -5.00/ 5.00

ALPHAO	BETAO	CNL	CNFL	CAL	CAFL	CLMFL	CYFL	CYNL	CYNFL	CBLFL
4.046	-5.934	.31410	.28400	.48790	.25610	-.13420	.27010	-.11550	-.11410	.05120
3.910	-3.607	.30260	.27390	.48230	.26180	-.12760	.16580	-.07350	-.07290	.03090
3.691	.192	.29140	.26170	.48180	.25700	-.11930	.00210	-.00330	-.00330	.00100
3.794	4.044	.31080	.28240	.47940	.25500	-.13380	-.15790	.06690	.06580	-.02910
3.760	6.059	.31450	.28580	.48000	.25800	-.13900	-.24820	.10300	.10150	-.04630
	GRADIENT	.00108	.00112	-.00038	-.00089	-.00082	-.04230	.01835	.01813	-.00784

IA156A, AEDC PWT 16T-470, O T S W/SILTS (R8NV70) (10 MAY 80)

REFERENCE DATA

SREF = 2690.0000 SQ.FT. XMRP = 976.0000 IN. XT
LREF = 1290.3000 INCHES YMRP = .0000 IN. YT
BREF = 1290.3000 INCHES ZMRP = 400.0000 IN. ZT
SCALE = .0200

PARAMETRIC DATA

IB-ELV = 10.000 OB-ELV = 11.000
BDFLAP = .000 SPDBRK = .000
RUDDER = .000 SILTS = 1.000
MACH = 1.150 RN/L = 3.500

RUN NO. 1022/ 0 RN/L = 3.50 GRADIENT INTERVAL = -5.00/ 5.00

ALPHAO	BETAO	CNL	CNFL	CAL	CAFL	CLMFL	CYFL	CYNL	CYNFL	CBLFL
-8.134	-5.933	-.52450	-.55620	.51160	.26780	.17970	.29290	-.12080	-.11850	.03490
-8.287	-3.765	-.54960	-.58150	.51540	.26790	.19730	.18440	-.07560	-.07420	.01980
-8.184	.189	-.56080	-.58990	.51200	.27160	.20840	.00760	-.00440	-.00440	.00250
-8.013	4.416	-.54540	-.57530	.51150	.27030	.20290	-.18380	.07580	.07440	-.01950
-8.025	6.285	-.54240	-.57300	.50910	.26730	.19610	-.27520	.11580	.11360	-.03270
	GRADIENT	.00055	.00079	-.00047	.00029	.00066	-.04501	.01851	.01817	-.00481

RUN NO. 1023/ 0 RN/L = 3.50 GRADIENT INTERVAL = -5.00/ 5.00

ALPHAO	BETAO	CNL	CNFL	CAL	CAFL	CLMFL	CYFL	CYNL	CYNFL	CBLFL
-6.207	-5.999	-.36400	-.39540	.50830	.27140	.11820	.27660	-.11270	-.11040	.03740
-6.146	-4.081	-.36930	-.40000	.50840	.27240	.12720	.18510	-.07550	-.07420	.02420
-6.279	.113	-.40360	-.43210	.50370	.26930	.15340	.00490	-.00550	-.00550	.00220
-6.064	4.278	-.37670	-.40570	.50820	.27470	.13790	-.17530	.06980	.06840	-.02290
-5.879	6.410	-.36050	-.39030	.50740	.27560	.12660	-.27230	.11230	.11000	-.03760
	GRADIENT	-.00089	-.00069	-.00003	.00027	.00129	-.04311	.01738	.01706	-.00563

RUN NO. 1024/ 0 RN/L = 3.50 GRADIENT INTERVAL = -5.00/ 5.00

ALPHAO	BETAO	CNL	CNFL	CAL	CAFL	CLMFL	CYFL	CYNL	CYNFL	CBLFL
-4.244	-6.153	-.21720	-.24870	.50690	.27250	.06370	.27330	-.11070	-.10860	.04140
-4.342	-4.026	-.23040	-.26120	.50610	.27520	.07450	.17540	-.07330	-.07200	.02630
-4.269	.373	-.23810	-.26640	.49930	.27300	.09230	-.00830	.00010	.00000	-.00050
-3.799	4.328	-.20080	-.22850	.50170	.27960	.07540	-.17000	.06800	.06670	-.02690
-3.890	6.176	-.21160	-.24090	.50680	.27890	.07570	-.25160	.10200	.09990	-.03980
	GRADIENT	.00344	.00382	-.00055	.00051	.00018	-.04135	.01691	.01660	-.00636

RUN NO. 1025/ 0 RN/L = 3.50 GRADIENT INTERVAL = -5.00/ 5.00

ALPHAO	BETAO	CNL	CNFL	CAL	CAFL	CLMFL	CYFL	CYNL	CYNFL	CBLFL
-.430	-7.050	.03580	.00440	.50290	.27490	-.02580	.30570	-.12640	-.12440	.05310
-.405	-4.893	.03680	.00660	.50050	.27750	-.02410	.20650	-.08800	-.08650	.03630
-.369	-.554	.04070	.01250	.49880	.27750	-.02220	.02030	-.01000	-.00990	.00280
-.336	3.601	.05790	.03010	.50170	.27800	-.02930	-.15430	.06920	.06760	-.02870
-.346	5.794	.05650	.02840	.50140	.28250	-.03090	-.24990	.10800	.10590	-.04560
	GRADIENT	.00247	.00276	.00014	.00006	-.00060	-.04248	.01850	.01814	-.00765

IA156A, AEDC PWT 16T-470, O T S W/SILTS (R8NV70) (10 MAY 80)

REFERENCE DATA

SREF = 2690.0000 SQ.FT. XMRP = 976.0000 IN. XT
LREF = 1290.3000 INCHES YMRP = .0000 IN. YT
BREF = 1290.3000 INCHES ZMRP = 400.0000 IN. ZT
SCALE = .0200

PARAMETRIC DATA

IB-ELV = 10.000 OB-ELV = 11.000
BDFLAP = .000 SPDBRK = .000
RUDDER = .000 SILTS = 1.000
MACH = 1.150 RN/L = 3.500

RUN NO. 1026/ 0 RN/L = 3.50 GRADIENT INTERVAL = -5.00/ 5.00

ALPHAO	BETAO	CNL	CNFL	CAL	CAFL	CLMFL	CYFL	CYNL	CYNFL	CBLFL
4.075	-5.757	.30340	.27500	.48950	.27150	-.12710	.26610	-.11650	-.11530	.05040
3.928	-3.663	.29910	.27040	.49050	.27500	-.12310	.17740	-.08170	-.08100	.03310
3.704	.117	.29470	.26650	.48740	.27270	-.12070	.01590	-.01270	-.01260	.00330
3.806	3.989	.32680	.29960	.48760	.27440	-.14370	-.15090	.06290	.06200	-.02810
3.754	6.054	.32310	.29510	.48880	.27280	-.14420	-.24390	.10160	.10020	-.04620
	GRADIENT	.00364	.00384	-.00038	-.00008	-.00271	-.04290	.01890	.01869	-.00800

IA156A, AEDC PWT 16T-470, O T S W/SILTS (R8NV71) (10 MAY 80)

REFERENCE DATA

SREF = 2690.0000 SQ.FT. XMRP = 976.0000 IN. XT
LREF = 1290.3000 INCHES YMRP = .0000 IN. YT
BREF = 1290.3000 INCHES ZMRP = 400.0000 IN. ZT
SCALE = .0200

PARAMETRIC DATA

IB-ELV = 12.000 OB-ELV = 11.000
BDFLAP = .000 SPDBRK = .000
RUDDER = .000 SILTS = 1.000
MACH = .600 RN/L = 3.500

RUN NO. 1030/ 0 RN/L = 3.50 GRADIENT INTERVAL = -5.00/ 5.00

ALPHAO	BETAO	CNL	CNFL	CAL	CAFL	CLMFL	CYFL	CYNL	CYNFL	CBLFL
-8.234	-7.829	-.39770	-.42140	.28220	.08560	.09350	.31850	-.13350	-.13040	.03950
-8.114	-5.816	-.39020	-.41340	.28640	.09300	.09270	.23240	-.09760	-.09520	.02830
-8.139	-3.803	-.39660	-.41900	.28980	.09930	.09830	.14880	-.06210	-.06070	.01740
-8.046	.301	-.40640	-.42720	.28700	.09760	.11130	-.01700	.00840	.00840	-.00130
-7.916	4.243	-.38710	-.40950	.29030	.09760	.09800	-.16420	.07200	.07070	-.01920
-7.776	6.289	-.37120	-.39420	.29090	.10000	.09000	-.24070	.10500	.10270	-.02960
-7.792	8.315	-.38070	-.40430	.28900	.09220	.09450	-.31710	.13630	.13340	-.03860
	GRADIENT	.00116	.00116	.00006	-.00021	-.00002	-.03891	.01667	.01633	-.00455

RUN NO. 1031/ 0 RN/L = 3.49 GRADIENT INTERVAL = -5.00/ 5.00

ALPHAO	BETAO	CNL	CNFL	CAL	CAFL	CLMFL	CYFL	CYNL	CYNFL	CBLFL
-6.166	-7.930	-.26710	-.29040	.28570	.09670	.04540	.32000	-.13430	-.13140	.04280
-6.123	-5.906	-.27220	-.29500	.28820	.10050	.05030	.23240	-.09820	-.09580	.03090
-6.053	-3.999	-.27430	-.29660	.29030	.10400	.05420	.15200	-.06440	-.06290	.02000
-6.113	.073	-.28370	-.30430	.28620	.10260	.06670	-.00710	.00280	.00280	.00010
-5.949	4.187	-.26120	-.28270	.29130	.10710	.05580	-.15570	.06760	.06630	-.02040
-5.886	6.167	-.25700	-.27970	.29130	.10300	.05120	-.22960	.09970	.09750	-.03100
-5.690	8.315	-.24550	-.26930	.29180	.10030	.04670	-.31380	.13500	.13220	-.04240
	GRADIENT	.00161	.00170	.00012	.00038	.00019	-.03758	.01612	.01578	-.00494

IA156A, AEDC PWT 16T-470, O T S W/SILTS (R8NV71) (10 MAY 80)

REFERENCE DATA

SREF = 2690.0000 SQ.FT. XMRP = 976.0000 IN. XT
LREF = 1290.3000 INCHES YMRP = .0000 IN. YT
BREF = 1290.3000 INCHES ZMRP = 400.0000 IN. ZT
SCALE = .0200

PARAMETRIC DATA

IB-ELV = 12.000 OB-ELV = 11.000
BDFLAP = .000 SPDBRK = .000
RUDDER = .000 SILTS = 1.000
MACH = .600 RN/L = 3.500

RUN NO. 1042/ 0 RN/L = 3.50 GRADIENT INTERVAL = -5.00/ 5.00

ALPHAO	BETAO	CNL	CNFL	CAL	CAFL	CLMFL	CYFL	CYNL	CYNFL	CBLFL
-4.139	-7.848	-.16270	-.18620	.28650	.09630	.01180	.30810	-.12870	-.12600	.04390
-4.203	-5.940	-.16950	-.19200	.28760	.10340	.01540	.22290	-.09310	-.09090	.03210
-4.233	-3.917	-.16940	-.19130	.28660	.10620	.01950	.13640	-.05690	-.05550	.01930
-4.127	.371	-.16590	-.18590	.28660	.10930	.02580	-.02320	.00990	.00960	-.00200
-3.739	4.228	-.13330	-.15450	.29060	.11230	.01270	-.16040	.06940	.06800	-.02310
-3.804	6.065	-.13500	-.15730	.29010	.10860	.01110	-.22710	.09900	.09690	-.03360
-3.832	8.043	-.13960	-.16290	.29080	.10280	.01050	-.30510	.13350	.13090	-.04520
	GRADIENT	.00437	.00446	.00048	.00075	-.00079	-.03646	.01551	.01516	-.00520

RUN NO. 1043/ 0 RN/L = 3.50 GRADIENT INTERVAL = -5.00/ 5.00

ALPHAO	BETAO	CNL	CNFL	CAL	CAFL	CLMFL	CYFL	CYNL	CYNFL	CBLFL
-.332	-8.766	.05310	.03010	.28480	.09900	-.06520	.35160	-.15110	-.14880	.05480
-.318	-6.571	.04280	.02090	.28480	.10560	-.05880	.25500	-.11090	-.10870	.04080
-.304	-4.542	.04070	.01920	.28630	.11140	-.05540	.17190	-.07580	-.07420	.02800
-.278	-.389	.03740	.01830	.28390	.11390	-.04770	.00740	-.00320	-.00320	.00160
-.246	3.690	.06450	.04420	.28600	.11650	-.06150	-.14040	.06310	.06170	-.02230
-.248	5.784	.06640	.04490	.28680	.11360	-.06560	-.22140	.09920	.09720	-.03560
-.244	7.880	.07620	.05340	.28760	.10660	-.07190	-.30320	.13560	.13320	-.04930
	GRADIENT	.00288	.00303	-.00004	.00062	-.00073	-.03794	.01687	.01651	-.00611

RUN NO. 1044/ 0 RN/L = 3.50 GRADIENT INTERVAL = -5.00/ 5.00

ALPHAO	BETAO	CNL	CNFL	CAL	CAFL	CLMFL	CYFL	CYNL	CYNFL	CBLFL
4.016	-8.006	.28740	.26540	.27340	.09680	-.15130	.33070	-.14800	-.14630	.06000
4.084	-5.830	.29040	.26950	.27170	.10450	-.15040	.23660	-.10770	-.10620	.04430
4.047	-3.841	.29250	.27250	.27040	.10550	-.14840	.15300	-.07040	-.06940	.02900
3.961	.182	.28730	.26760	.26890	.10030	-.14280	.00620	-.00600	-.00610	.00210
3.891	4.129	.30590	.28560	.26950	.10120	-.15670	-.14520	.06370	.06250	-.02640
3.844	6.178	.30770	.28700	.27100	.10330	-.16170	-.23090	.10390	.10210	-.04210
3.838	8.159	.31340	.29110	.27370	.09710	-.16500	-.30770	.13790	.13590	-.05550
	GRADIENT	.00167	.00163	-.00011	-.00054	-.00103	-.03741	.01682	.01655	-.00695

IA156A, AEDC PWT 16T-470, O T S W/SILTS (R8NV71) (10 MAY 80)

REFERENCE DATA

SREF = 2690.0000 SQ.FT. XMRP = 976.0000 IN. XT
LREF = 1290.3000 INCHES YMRP = .0000 IN. YT
BREF = 1290.3000 INCHES ZMRP = 400.0000 IN. ZT
SCALE = .0200

PARAMETRIC DATA

IB-ELV = 12.000 OB-ELV = 11.000
BDFLAP = .000 SPDBRK = .000
RUDDER = .000 SILTS = 1.000
MACH = .600 RN/L = 3.500

RUN NO. 1045/ 0 RN/L = 3.51 GRADIENT INTERVAL = -5.00/ 5.00

ALPHAO	BETAO	CNL	CNFL	CAL	CAFL	CLMFL	CYFL	CYNL	CYNFL	CBLFL
6.193	-7.946	.42040	.39880	.26220	.09220	-.20580	.32540	-.14520	-.14370	.06290
6.176	-5.889	.42510	.40420	.26260	.09800	-.20610	.23650	-.10660	-.10540	.04710
6.146	-3.831	.41800	.39750	.26260	.09580	-.19990	.15820	-.07150	-.07050	.03160
5.858	.189	.39160	.37240	.26340	.09740	-.18440	.00160	-.00330	-.00340	.00180
5.792	4.072	.40770	.38730	.26240	.09570	-.19640	-.14520	.06230	.06120	-.02680
5.732	6.148	.41510	.39390	.26340	.09650	-.20290	-.22390	.09930	.09770	-.04260
5.792	8.167	.42430	.40230	.26490	.09060	-.20920	-.30370	.13510	.13340	-.05750
	GRADIENT	-.00133	-.00132	-.00002	-.00001	.00046	-.03839	.01693	.01666	-.00739

RUN NO. 1046/ 0 RN/L = 3.51 GRADIENT INTERVAL = -5.00/ 5.00

ALPHAO	BETAO	CNL	CNFL	CAL	CAFL	CLMFL	CYFL	CYNL	CYNFL	CBLFL
8.069	-7.802	.53630	.51460	.25150	.08140	- 25090	.30900	-.13600	-.13460	.06340
7.983	-5.735	.52840	.50730	.25110	.08510	-.24520	.22300	-.09850	-.09730	.04620
7.974	-3.764	.52650	.50670	.25300	.09160	-.24160	.14140	-.06260	-.06170	.03070
7.880	.174	.51220	.49280	.25640	.09060	-.23000	.00270	-.00400	-.00410	.00190
7.926	4.199	.54330	.52270	.25300	.08660	-.24910	-.13680	.05650	.05530	-.02720
7.886	6.200	.55200	.53080	.25280	.08350	-.25610	-.21150	.09050	.08900	-.04310
7.898	8.245	.55080	.52900	.25270	.07530	-.25810	-.29900	.13040	.12890	-.06010
	GRADIENT	.00213	.00203	-.00000	-.00063	-.00096	-.03493	.01496	.01469	-.00727

IA156A, AEDC PWT 16T-470, O T S W/SILTS (R8NV72) (10 MAY 80)

REFERENCE DATA

SREF = 2690.0000 SQ.FT. XMRP = 976.0000 IN. XT
LREF = 1290.3000 INCHES YMRP = .0000 IN. YT
BREF = 1290.3000 INCHES ZMRP = 400.0000 IN. ZT
SCALE = .0200

PARAMETRIC DATA

IB-ELV = 12.000 OB-ELV = 11.000
BDFLAP = .000 SPDBRK = .000
RUDDER = .000 SILTS = 1.000
MACH = .800 RN/L = 3.500

RUN NO. 1047/ 0 RN/L = 3.50 GRADIENT INTERVAL = -5.00/ 5.00

ALPHAO	BETAO	CNL	CNFL	CAL	CAFL	CLMFL	CYFL	CYNL	CYNFL	CBLFL
-8.304	-5.868	-.42670	-.45090	.31510	.11570	.10830	.25400	-.10980	-.10700	.02990
-8.251	-3.829	-.43280	-.45650	.31970	.12210	.11590	.16520	-.07190	-.07020	.01860
-8.163	.342	-.44850	-.46990	.31590	.12250	.13330	-.01130	.00520	.00530	.00050
-8.002	4.333	-.41430	-.43750	.31890	.12350	.10910	-.17250	.07650	.07520	-.01870
-7.991	6.251	-.41190	-.43610	.31690	.12060	.10450	-.25080	.11010	.10770	-.02920
	GRADIENT	.00222	.00229	-.00010	.00017	-.00080	-.04138	.01818	.01782	-.00457

RUN NO. 1048/ 0 RN/L = 3.50 GRADIENT INTERVAL = -5.00/ 5.00

ALPHAO	BETAO	CNL	CNFL	CAL	CAFL	CLMFL	CYFL	CYNL	CYNFL	CBLFL
-6.203	-5.976	-.28290	-.30670	.31620	.12410	.05580	.25560	-.11130	-.10860	.03270
-6.142	-4.058	-.28710	-.31010	.31880	.12800	.06250	.17000	-.07460	-.07290	.02110
-6.236	.113	-.31560	-.33650	.31220	.12550	.08340	-.00400	.00050	.00070	.00130
-6.050	4.259	-.28420	-.30650	.31750	.13050	.06430	-.16530	.07220	.07090	-.01970
-5.788	6.350	-.26180	-.28550	.31730	.12640	.05190	-.25330	.11140	.10900	-.03300
	GRADIENT	.00034	.00043	-.00016	.00030	.00022	-.04032	.01765	.01729	-.00491

RUN NO. 1049/ 0 RN/L = 3.50 GRADIENT INTERVAL = -5.00/ 5.00

ALPHAO	BETAO	CNL	CNFL	CAL	CAFL	CLMFL	CYFL	CYNL	CYNFL	CBLFL
-4.135	-6.074	-.15790	-.18150	.31520	.12760	.01100	.25000	-.10860	-.10600	.03510
-4.334	-3.986	-.17970	-.20200	.31650	.13250	.02420	.15570	-.06810	-.06650	.02110
-4.238	.373	-.17840	-.19880	.31000	.13000	.03140	-.01560	.00590	.00580	-.00030
-3.788	4.319	-.13810	-.15990	.31520	.13250	.01280	-.16640	.07300	.07160	-.02260
-3.866	6.161	-.14120	-.16400	.31530	.13080	.01060	-.24060	.10590	.10360	-.03380
-3.826	6.368	-.13820	-.16170	.31380	.12960	.01010	-.24990	.11050	.10810	-.03530
	GRADIENT	.00493	.00499	-.00018	-.00001	-.00132	-.03879	.01699	.01663	-.00526

RUN NO. 1050/ 0 RN/L = 3.50 GRADIENT INTERVAL = -5.00/ 5.00

ALPHAO	BETAO	CNL	CNFL	CAL	CAFL	CLMFL	CYFL	CYNL	CYNFL	CBLFL
-.351	-6.864	.05450	.03230	.31140	.12380	-.07000	.28420	-.12460	-.12230	.04440
-.339	-4.760	.04760	.02610	.30960	.13100	-.06460	.19100	-.08530	-.08350	.02980
-.315	-.547	.04110	.02120	.30040	.12840	-.05560	.01740	-.00780	-.00760	.00330
-.276	3.623	.07340	.05240	.30670	.13180	-.07280	-.14390	.06480	.06330	-.02170
-.273	5.732	.07880	.05690	.30920	.13230	-.07730	-.23210	.10540	.10330	-.03610
	GRADIENT	.00307	.00313	-.00035	.00009	-.00097	-.03995	.01791	.01751	-.00614

IA156A, AEDC PWT 16T-470, O T S W/SILTS (R8NV72) (10 MAY 80)

REFERENCE DATA

SREF = 2690.0000 SQ.FT. XMRP = 976.0000 IN. XT
LREF = 1290.3000 INCHES YMRP = .0000 IN. YT
BREF = 1290.3000 INCHES ZMRP = 400.0000 IN. ZT
SCALE = .0200

PARAMETRIC DATA

IB-ELV = 12.000 OB-ELV = 11.000
BDFLAP = .000 SPDBRK = .000
RUDDER = .000 SILTS = 1.000
MACH = .800 RN/L = 3.500

RUN NO. 1051/ 0 RN/L = 3.49 GRADIENT INTERVAL = -5.00/ 5.00

ALPHAO	BETAO	CNL	CNFL	CAL	CAFL	CLMFL	CYFL	CYNL	CYNFL	CBLFL
4.088	-5.750	.33360	.31170	.29750	.12320	-.17750	.25190	-.11400	-.11240	.04720
3.968	-3.736	.32460	.30420	.29500	.12480	-.17150	.15690	-.07170	-.07060	.02990
3.862	.188	.32480	.30450	.28920	.12350	-.16670	.00870	-.00620	-.00620	.00270
3.796	3.973	.34360	.32330	.29370	.11200	-.18190	-.14350	.06350	.06230	-.02550
3.771	6.089	.34320	.32120	.29690	.12260	-.18450	-.23920	.10880	.10690	-.04280
	GRADIENT	.00245	.00246	-.00018	-.00165	-.00133	-.03896	.01753	.01724	-.00719

RUN NO. 1052/ 0 RN/L = 3.50 GRADIENT INTERVAL = -5.00/ 5.00

ALPHAO	BETAO	CNL	CNFL	CAL	CAFL	CLMFL	CYFL	CYNL	CYNFL	CBLFL
6.093	-5.815	.45550	.43370	.29200	.11910	-.22740	.24740	-.11210	-.11070	.04600
6.050	-3.777	.46000	.43940	.29000	.12250	-.22850	.16530	-.07490	-.07390	.03030
5.751	.160	.44150	.42160	.28490	.11870	-.21870	.00600	-.00480	-.00480	.00240
5.680	4.069	.44850	.42770	.28800	.11830	-.22410	-.14360	.06240	.06120	-.02440
5.760	6.016	.46600	.44410	.29110	.11750	-.23240	-.22680	.10240	.10070	-.04070
	GRADIENT	-.00147	-.00149	-.00026	-.00054	.00056	-.03938	.01750	.01722	-.00697

IA156A, AEDC PWT 16T-470, O T S W/SILTS (R8NV73) (10 MAY 80)

REFERENCE DATA

SREF = 2690.0000 SQ.FT. XMRP = 976.0000 IN. XT
LREF = 1290.3000 INCHES YMRP = .0000 IN. YT
BREF = 1290.3000 INCHES ZMRP = 400.0000 IN. ZT
SCALE = .0200

PARAMETRIC DATA

IB-ELV = 12.000 OB-ELV = 11.000
BDFLAP = .000 SPDBRK = .000
RUDDER = .000 SILTS = 1.000
MACH = .900 RN/L = 3.500

RUN NO. 1053/ 0 RN/L = 3.50 GRADIENT INTERVAL = -5.00/ 5.00

ALPHAO	BETAO	CNL	CNFL	CAL	CAFL	CLMFL	CYFL	CYNL	CYNFL	CBLFL
-8.265	-5.904	-.47100	-.49750	.36410	.14700	.13750	.27810	-.12260	-.12020	.03190
-8.238	-3.811	-.47270	-.49770	.36450	.15610	.14370	.17650	-.07660	-.07530	.01840
-8.189	.338	-.49690	-.52000	.36040	.15310	.16590	-.01020	.00360	.00380	.00060
-7.993	4.302	-.46110	-.48570	.36240	.15570	.14290	-.18330	.08020	.07900	-.01870
	GRADIENT	.00137	.00143	-.00026	-.00005	-.00006	-.04435	.01933	.01902	-.00457

IA156A, AEDC PWT 16T-470, O T S W/SILTS (R8NV73) (10 MAY 80)

REFERENCE DATA

SREF = 2690.0000 SQ.FT. XMRP = 976.0000 IN. XT
LREF = 1290.3000 INCHES YMRP = .0000 IN. YT
BREF = 1290.3000 INCHES ZMRP = 400.0000 IN. ZT
SCALE = .0200

PARAMETRIC DATA

IB-ELV = 12.000 OB-ELV = 11.000
BDFLAP = .000 SPDBRK = .000
RUDDER = .000 SILTS = 1.000
MACH = .900 RN/L = 3.500

RUN NO. 1054/ 0 RN/L = 3.50 GRADIENT INTERVAL = -5.00/ 5.00

ALPHAO	BETAO	CNL	CNFL	CAL	CAFL	CLMFL	CYFL	CYNL	CYNFL	CBLFL
202	-5.973	-.32680	-.35290	.36080	.15250	.08340	.27230	-.11840	-.11590	.03370
-6.173	-4.070	-.32800	-.35300	.36020	.14870	.08950	.18450	-.08100	-.07960	.02210
-6.253	.118	-.35440	-.37730	.35280	.15160	.11250	-.00090	-.00110	-.00090	.00090
-6.057	4.276	-.32330	-.34740	.35680	.15920	.09230	-.17500	.07570	.07440	-.02060
-5.843	6.363	-.30620	-.33230	.36130	.15660	.08230	-.26850	.11610	.11380	-.03400
	GRADIENT	.00055	.00066	-.00041	.00126	.00034	-.04308	.01878	.01845	-.00512

RUN NO. 1055/ 0 RN/L = 3.50 GRADIENT INTERVAL = -5.00/ 5.00

ALPHAO	BETAO	CNL	CNFL	CAL	CAFL	CLMFL	CYFL	CYNL	CYNFL	CBLFL
-4.160	-6.094	-.18750	-.21260	.35960	.15750	.03310	.26380	-.11330	-.11090	.03620
-4.335	-4.006	-.20590	-.22970	.35800	.16260	.04460	.16840	-.07290	-.07160	.02210
-4.250	.375	-.20700	-.22980	.34780	.15310	05460	-.01520	.00480	.00480	-.00110
-3.800	4.325	-.16730	-.19120	.35440	.16090	.03460	-.17620	.07470	.07330	-.02400
-3.881	6.172	-.17210	-.19740	.35710	.15930	.03480	-.25300	.10830	.10620	-.03550
	GRADIENT	.00454	.00454	-.00047	-.00024	-.00114	-.04137	.01772	.01739	-.00553

RUN NO. 1056/ 0 RN/L = 3.50 GRADIENT INTERVAL = -5.00/ 5.00

ALPHAO	BETAO	CNL	CNFL	CAL	CAFL	CLMFL	CYFL	CYNL	CYNFL	CBLFL
-.383	-7.001	.04300	.01880	.35490	.15440	-.05960	.29830	-.12720	-.12510	.04740
-.364	-4.814	.04070	.01770	.35170	.15410	-.05660	.20420	-.08930	-.08750	.03290
-.332	-.509	.03790	.01650	.33630	.15340	-.05050	.01650	-.00710	-.00690	.00270
-.297	3.586	.06560	.04310	.34360	.15790	-.06560	-.14720	.06600	.06470	-.02370
-.300	5.750	.06500	.04100	.35090	.15860	-.06420	-.23860	.10630	.10430	-.03830
	GRADIENT	.00293	.00300	-.00099	.00045	-.00105	-.04184	.01849	.01812	-.00674

RUN NO. 1058/ 0 RN/L = 3.51 GRADIENT INTERVAL = -5.00/ 5.00

ALPHAO	BETAO	CNL	CNFL	CAL	CAFL	CLMFL	CYFL	CYNL	CYNFL	CBLFL
4.100	-5.777	.32880	.30530	.34400	.15450	-.17070	.25700	-.11220	-.11060	.04520
3.958	-3.686	.32580	.30380	.33960	.15340	-.17120	.16460	-.07400	-.07300	.02910
3.691	.102	.31690	.29550	.32930	.14320	-.16770	.00900	-.00500	-.00490	.00260
3.806	3.991	.33970	.31760	.33650	.15360	-.17790	-.15190	.06770	.06650	-.02510
3.757	6.067	.33520	.31130	.34470	.15000	-.17740	-.24880	.11040	.10840	-.04160
	GRADIENT	.00183	.00181	-.00039	.00004	-.00088	-.04123	.01846	.01817	-.00706

IA156A, AEDC PWT 16T-470, O T S W/SILTS (R8NV74) (10 MAY 80)

REFERENCE DATA

SREF = 2690.0000 SQ.FT. XMRP = 976.0000 IN. XT
LREF = 1290.3000 INCHES YMRP = .0000 IN. YT
BREF = 1290.3000 INCHES ZMRP = 400.0000 IN. ZT
SCALE = .0200

PARAMETRIC DATA

IB-ELV = 12.000 OB-ELV = 11.000
BDFLAP = .000 SPDBRK = .000
RUDDER = .000 SILTS = 1.000
MACH = .950 RN/L = 3.500

RUN NO. 1059/ 0 RN/L = 3.50 GRADIENT INTERVAL = -5.00/ 5.00

ALPHAO	BETAO	CNL	CNFL	CAL	CAFL	CLMFL	CYFL	CYNL	CYNFL	CBLFL
-8.242	-5.880	-.49830	-.52780	.40770	.16990	.15270	.29000	-.12680	-.12430	.03300
-8.273	-3.814	-.50400	-.53170	.40840	.18430	.15860	.18120	-.07720	-.07600	.01930
-8.173	.400	-.51470	-.54120	.40720	.18090	.17440	-.00970	.00350	.00360	.00170
-8.007	4.354	-.48860	-.51700	.40930	.18170	.15870	-.18860	.08400	.08290	-.01930
-8.032	6.270	-.49330	-.52280	.40860	.17990	.15610	-.28270	.12660	.12430	-.03130
	GRADIENT	.00184	.00176	.00011	-.00032	.00005	-.04527	.01973	.01945	-.00472

RUN NO. 1060/ 0 RN/L = 3.50 GRADIENT INTERVAL = -5.00/ 5.00

ALPHAO	BETAO	CNL	CNFL	CAL	CAFL	CLMFL	CYFL	CYNL	CYNFL	CBLFL
-6.220	-5.996	-.34780	-.37660	.40640	.17770	.09710	.28450	-.12410	-.12160	.03510
-6.170	-4.074	-.34550	-.37250	.40560	.18580	.09930	.18930	-.08200	-.08060	.02240
-6.247	.101	-.36400	-.38920	.40210	.18350	.11690	.00140	-.00230	-.00220	.00250
-6.069	4.265	-.34110	-.36880	.40730	.18500	.10500	-.18260	.08010	.07880	-.02100
-5.780	6.369	-.31540	-.34490	.41020	.18280	.09200	-.28130	.12380	.12130	-.03540
	GRADIENT	.00053	.00044	.00020	-.00010	.00069	-.04460	.01944	.01911	-.00520

RUN NO. 1061/ 0 RN/L = 3.50 GRADIENT INTERVAL = -5.00/ 5.00

ALPHAO	BETAO	CNL	CNFL	CAL	CAFL	CLMFL	CYFL	CYNL	CYNFL	CBLFL
-4.121	-6.098	-.19810	-.22580	.40540	.18620	.04370	.27170	-.11670	-.11410	.03680
-4.336	-4.006	-.21970	-.24580	.40410	.18920	.05510	.17270	-.07320	-.07180	.02180
-4.251	.375	-.22280	-.24800	.39850	.18420	.06960	-.01540	.00490	.00490	-.00010
-3.806	4.342	-.17930	-.20600	.40400	.18740	.04830	-.18420	.07900	.07750	-.02490
-3.876	6.160	-.18330	-.21140	.40620	.18770	.04590	-.26390	.11410	.11170	-.03680
	GRADIENT	.00474	.00468	-.00003	-.00023	-.00074	-.04276	.01823	.01788	-.00558

RUN NO. 1062/ 0 RN/L = 3.50 GRADIENT INTERVAL = -5.00/ 5.00

ALPHAO	BETAO	CNL	CNFL	CAL	CAFL	CLMFL	CYFL	CYNL	CYNFL	CBLFL
-.398	-6.992	.03730	.00970	.40130	.17710	-.04510	.30050	-.12650	-.12380	.04720
-.379	-4.843	.03090	.00520	.39900	.18850	-.03770	.20490	-.08810	-.08590	.03230
-.347	-.532	.02280	-.00090	.38800	.18210	-.02430	.01660	-.00720	-.00680	.00250
-.307	3.589	.05810	.03290	.39540	.18610	-.04570	-.15110	.06810	.06640	-.02470
-.306	5.751	.06310	.03590	.39800	.18190	-.05120	-.24130	.10700	.10450	-.03960
	GRADIENT	.00319	.00325	-.00044	-.00029	-.00092	-.04223	.01853	.01806	-.00676

IA156A, AEDC PWT 16T-470, O T S W/SILTS (R8NV74) (10 MAY 80)

REFERENCE DATA

SREF = 2690.0000 SQ.FT. XMRP = 976.0000 IN. XT
LREF = 1290.3000 INCHES YMRP = .0000 IN. YT
BREF = 1290.3000 INCHES ZMRP = 400.0000 IN. ZT
SCALE = .0200

PARAMETRIC DATA

IB-ELV = 12.000 OB-ELV = 11.000
BDFLAP = .000 SPDBRK = .000
RUDDER = .000 SILTS = 1.000
MACH = .950 RN/L = 3.500

RUN NO. 1063/ 0 RN/L = 3.50 GRADIENT INTERVAL = -5.00/ 5.00

ALPHAO	BETAO	CNL	CNFL	CAL	CAFL	CLMFL	CYFL	CYNL	CYNFL	CBLFL
3.973	-5.846	.31030	.28550	.38630	.17950	-.15470	.26020	-.11060	-.10870	.04590
3.965	-3.756	.31870	.29500	.38360	.18130	-.16070	.16790	-.07030	-.06910	.02870
3.868	.183	.31670	.29210	.37440	.17210	-.16210	.00480	-.00200	-.00210	.00170
3.788	3.934	.33390	.30940	.38090	.17810	-.16900	-.14800	.06240	.06100	-.02420
3.762	6.067	.32880	.30270	.36480	.17690	-.16340	-.24570	.10500	.10280	-.04210
	GRADIENT	.00196	.00185	-.00037	-.00043	-.00107	-.04108	.01726	.01692	-.00688

IA156A, AEDC PWT 16T-470, O T S W/SILTS (R8NV75) (10 MAY 80)

REFERENCE DATA

SREF = 2690.0000 SQ.FT. XMRP = 976.0000 IN. XT
LREF = 1290.3000 INCHES YMRP = .0000 IN. YT
BREF = 1290.3000 INCHES ZMRP = 400.0000 IN. ZT
SCALE = .0200

PARAMETRIC DATA

IB-ELV = 12.000 OB-ELV = 11.000
BDFLAP = .000 SPDBRK = .000
RUDDER = .000 SILTS = 1.000
MACH = 1.050 RN/L = 3.500

RUN NO. 1064/ 0 RN/L = 3.50 GRADIENT INTERVAL = -5.00/ 5.00

ALPHAO	BETAO	CNL	CNFL	CAL	CAFL	CLMFL	CYFL	CYNL	CYNFL	CBLFL
-8.235	-5.891	-.55010	-.58720	.52200	.22720	.19580	.30130	-.12700	-.12430	.03550
-8.265	-3.820	-.56490	-.60290	.52470	.23210	.20890	.19560	-.08160	-.08010	.02110
-8.181	.395	-.56610	-.60090	.52650	.24560	.21730	-.01040	.00650	.00630	.00060
-8.023	4.347	-.55790	-.59080	.52840	.26670	.21280	-.19759	.08950	.08820	-.02130
-8.027	6.273	-.55390	-.59050	.52300	.23780	.20430	-.29220	.12700	.12440	-.03380
	GRADIENT	.00084	.00147	.00045	.00423	.00049	-.04819	.02095	.02061	-.00519

RUN NO. 1065/ 0 RN/L = 3.51 GRADIENT INTERVAL = -5.00/ 5.00

ALPHAO	BETAO	CNL	CNFL	CAL	CAFL	CLMFL	CYFL	CYNL	CYNFL	CBLFL
-6.221	-6.014	-.38310	-.42020	.52050	.24080	.13410	.29340	-.12240	-.11970	.03840
-6.150	-4.070	-.39010	-.42690	.52320	.24360	.14400	.19380	-.08050	-.07890	.02480
-6.266	.103	-.41370	-.44910	.52440	.24360	.16700	-.00160	.00100	.00100	.00140
-6.040	4.270	-.38650	-.42130	.52260	.24750	.14980	-.18750	.08180	.08030	-.02360
-6.018	6.270	-.38720	-.42280	.51890	.24170	.14490	-.28320	.12280	.12020	-.03720
	GRADIENT	.00043	.00067	-.00007	.00047	.00070	-.04572	.01946	.01909	-.00580

IA156A, AEDC PWT 16T-470, O T S W/SILTS (R8NV75) (10 MAY 80)

REFERENCE DATA

SREF = 2690.0000 SQ.FT. XMRP = 976.0000 IN. XT
LREF = 1290.3000 INCHES YMRP = .0000 IN. YT
BREF = 1290.3000 INCHES ZMRP = 400.0000 IN. ZT
SCALE = .0200

PARAMETRIC DATA

IB-ELV = 12.000 OB-ELV = 11.000
BDFLAP = .000 SPDBRK = .000
RUDDER = .000 SILTS = 1.000
MACH = 1.050 RN/L = 3.500

RUN NO. 1066/ 0 RN/L = 3.50 GRADIENT INTERVAL = -5.00/ 5.00

ALPHAO	BETAO	CNL	CNFL	CAL	CAFL	CLMFL	CYFL	CYNL	CYNFL	CBLFL
-4.139	-6.114	-.22730	-.26420	.51800	.24360	.08030	.28300	-.11650	-.11410	.04150
-4.344	-4.021	-.25110	-.28770	.52030	.24670	.09730	.18080	-.07590	-.07450	.02550
-4.271	.362	-.25930	-.29500	.52040	.24600	.11500	-.00970	.00390	.00380	-.00010
-3.794	4.347	-.21500	-.24940	.51810	.24990	.09020	-.18920	.08190	.08040	-.02780
-3.881	6.180	-.21760	-.25230	.51620	.24920	.08400	-.27020	.11560	.11340	-.04080
	GRADIENT	.00421	.00447	-.00026	.00037	-.00077	-.04420	.01885	.01850	-.00636

RUN NO. 1067/ 0 RN/L = 3.50 GRADIENT INTERVAL = -5.00/ 5.00

ALPHAO	BETAO	CNL	CNFL	CAL	CAFL	CLMFL	CYFL	CYNL	CYNFL	CBLFL
-.434	-7.039	.02460	-.01260	.51330	.24410	-.01400	.31880	-.13280	-.13030	.05490
-.416	-4.882	.01550	-.02090	.51360	.24640	-.00230	.21700	-.09400	-.09220	.03800
-.390	-.537	.00770	-.02730	.51410	.24510	.01060	.02280	-.01150	-.01130	.00370
-.352	3.599	.03340	-.00150	.52040	.25110	-.00290	-.15750	.07260	.07100	-.02860
-.352	5.767	.03930	.00350	.52160	.24910	-.01010	-.24960	.11070	.10850	-.04460
	GRADIENT	.00208	.00226	.00080	.00055	-.00005	-.04416	.01964	.01924	-.00785

RUN NO. 1068/ 0 RN/L = 3.50 GRADIENT INTERVAL = -5.00/ 5.00

ALPHAO	BETAO	CNL	CNFL	CAL	CAFL	CLMFL	CYFL	CYNL	CYNFL	CBLFL
3.960	-5.839	.29230	.25700	.50640	.24120	-.11820	.26650	-.11420	-.11280	.05130
3.945	-3.748	.29650	.26200	.50450	.24540	-.12000	.17390	-.07580	-.07500	.03280
3.925	.184	.29740	.26310	.50010	.23470	-.11870	.00650	-.00390	-.00390	.00210
3.799	3.943	.31780	.28350	.50410	.24220	-.13370	-.15550	.06840	.06740	-.02840
3.771	6.067	.31470	.28000	.50360	.24200	-.13320	-.24810	.10610	.10460	-.04670
	GRADIENT	.00275	.00278	-.00006	-.00043	-.00177	-.04283	.01875	.01851	-.00796

IA156A, AEDC PWT 16T-470, O T S W/SILTS (R8NV76) (10 MAY 80)

REFERENCE DATA

SREF = 2690.0000 SQ.FT. XMRP = 976.0000 IN. XT
LREF = 1290.3000 INCHES YMRP = .0000 IN. YT
BREF = 1290.3000 INCHES ZMRP = 400.0000 IN. ZT
SCALE = .0200

PARAMETRIC DATA

IB-ELV = 12.000 OB-ELV = 11.000
BDFLAP = .000 SPDBRK = .000
RUDDER = .000 SILTS = 1.000
MACH = 1.100 RN/L = 3.500

RUN NO. 1069/ 0 RN/L = 3.50 GRADIENT INTERVAL = -5.00/ 5.00

ALPHAO	BETAO	CNL	CNFL	CAL	CAFL	CLMFL	CYFL	CYNL	CYNFL	CBLFL
-8.222	-6.002	-.53640	-.57050	.51380	.25190	.18530	.29560	-.12240	-.11990	.03440
-8.271	-3.866	-.54480	-.57830	.51710	.25650	.19400	.18250	-.07370	-.07230	.01960
-8.193	.284	-.55250	-.58380	.51580	.25810	.20420	-.00880	.00450	.00440	.00070
-8.019	4.302	-.53500	-.56770	.51840	.25670	.19720	-.18950	.08190	.08050	-.02030
-8.001	6.248	-.53380	-.56670	.51560	.25700	.19360	-.28310	.12110	.11850	-.03300
	GRADIENT	.00118	.00128	.00016	.00003	.00040	-.04555	.01905	.01871	-.00488

RUN NO. 1070/ 0 RN/L = 3.50 GRADIENT INTERVAL = -5.00/ 5.00

ALPHAO	BETAO	CNL	CNFL	CAL	CAFL	CLMFL	CYFL	CYNL	CYNFL	CBLFL
-6.216	-6.014	-.37050	-.40390	.50940	.25520	.12260	.27310	-.11080	-.10840	.03600
-6.155	-4.091	-.37630	-.40860	.51000	.25890	.13040	.18110	-.07350	-.07210	.02320
-6.285	.117	-.39940	-.42970	.50810	.26330	.14860	-.00930	.00390	.00390	.00040
-6.066	4.273	-.36700	-.39760	.50900	.26230	.13340	-.18090	.07540	.07410	-.02290
-5.855	6.375	-.34410	-.37600	.50970	.26010	.11900	-.27730	.11710	.11460	-.03780
	GRADIENT	.00110	.00130	-.00012	.00041	.00037	-.04328	.01780	.01748	-.00551

RUN NO. 1071/ 0 RN/L = 3.50 GRADIENT INTERVAL = -5.00/ 5.00

ALPHAO	BETAO	CNL	CNFL	CAL	CAFL	CLMFL	CYFL	CYNL	CYNFL	CBLFL
-4.144	-6.117	-.21640	-.24930	.50580	.25860	.06440	.26620	-.10590	-.10390	.03970
-4.345	-4.025	-.23970	-.27200	.50340	.25850	.08120	.16860	-.06740	-.06610	.02400
-4.263	.373	-.23990	-.27070	.49940	.25830	.09490	-.01570	.00480	.00470	-.00070
-3.796	4.339	-.19330	-.22340	.50380	.26560	.07110	-.17830	.07270	.07140	-.02750
-3.871	6.167	-.19390	-.22480	.50600	.26510	.06550	-.25830	.10670	.10470	-.04040
	GRADIENT	.00545	.00571	.00003	.00083	-.00113	-.04149	.01675	.01643	-.00615

RUN NO. 1072/ 0 RN/L = 3.50 GRADIENT INTERVAL = -5.00/ 5.00

ALPHAO	BETAO	CNL	CNFL	CAL	CAFL	CLMFL	CYFL	CYNL	CYNFL	CBLFL
-.432	-7.047	.02700	-.00540	.50000	.26000	-.02170	.29970	-.12070	-.11870	.05270
-.421	-4.889	.01850	-.01330	.49630	.26320	-.01230	.20710	-.08630	-.08460	.03740
-.381	-.536	.02040	-.00950	.49260	.26080	-.00620	.01860	-.00870	-.00860	.00300
-.352	3.597	.03900	.00930	.49660	.25830	-.01560	-.15360	.06900	.06740	-.02840
-.349	5.788	.04310	.01330	.49780	.26550	-.02190	-.24720	.10730	.10510	-.04490
	GRADIENT	.00240	.00265	.00003	-.00058	-.00037	-.04251	.01830	.01791	-.00775

IA156A, AEDC PWT 16T-470, O T S W/SILTS (R8NV76) (10 MAY 80)

REFERENCE DATA

SREF = 2690.0000 SQ.FT. XMRP = 976.0000 IN. XT
LREF = 1290.3000 INCHES YMRP = .0000 IN. YT
BREF = 1290.3000 INCHES ZMRP = 400.0000 IN. ZT
SCALE = .0200

PARAMETRIC DATA

IB-ELV = 12.000 OB-ELV = 11.000
BDFLAP = .000 SPDBRK = .000
RUDDER = .000 SILTS = 1.000
MACH = 1.100 RN/L = 3.500

RUN NO. 1073/ 0 RN/L = 3.51 GRADIENT INTERVAL = -5.00/ 5.00

ALPHAO	BETAO	CNL	CNFL	CAL	CAFL	CLMFL	CYFL	CYNL	CYNFL	CBLFL
4.082	-5.734	.31690	.28760	.48310	.25760	-.13580	.25250	-.10770	-.10640	.04840
3.923	-3.736	.30970	.28010	.48340	.25650	-.13100	.16660	-.07290	-.07220	.03160
3.823	.181	.30100	.27100	.48200	.25660	-.12360	.00040	-.00190	-.00190	.00110
3.797	3.912	.31700	.28830	.48170	.25780	-.13770	-.15710	.06730	.06630	-.02850
3.759	6.042	.31590	.28640	.48180	.25650	-.14090	-.24840	.10420	.10270	-.04620
	GRADIENT	.00093	.00104	-.00022	.00017	-.00085	-.04232	.01833	.01811	-.00786

IA156A, AEDC PWT 16T-470, O T S W/SILTS (R8NV77) (10 MAY 80)

REFERENCE DATA

SREF = 2690.0000 SQ.FT. XMRP = 976.0000 IN. XT
LREF = 1290.3000 INCHES YMRP = .0000 IN. YT
BREF = 1290.3000 INCHES ZMRP = 400.0000 IN. ZT
SCALE = .0200

PARAMETRIC DATA

IB-ELV = 8.000 OB-ELV = 11.000
BDFLAP = .000 SPDBRK = .000
RUDDER = .000 SILTS = 1.000
MACH = .600 RN/L = 3.500

RUN NO. 1077/ 0 RN/L = 3.50 GRADIENT INTERVAL = -5.00/ 5.00

ALPHAO	BETAO	CNL	CNFL	CAL	CAFL	CLMFL	CYFL	CYNL	CYNFL	CBLFL
-8.237	-7.852	-.43340	-.45720	.28310	.08340	.12010	.32790	-.13780	-.13470	.03900
-8.105	-5.811	-.42650	-.44920	.28400	.09080	.11950	.23750	-.10110	-.09880	.02800
-8.136	-3.804	-.43700	-.46150	.29140	.08060	.12700	.15690	-.06660	-.06510	.01770
-8.043	.294	-.43550	-.45480	.28190	.10080	.13430	-.00970	.00490	.00490	-.00060
-7.918	4.247	-.42360	-.44780	.29050	.07780	.12500	-.16160	.07060	.06930	-.01890
-7.903	6.174	-.41990	-.44200	.28920	.09930	.12010	-.23610	.10280	.10060	-.02860
-7.921	8.177	-.42180	-.44500	.28520	.08840	.12230	-.30970	.13290	.13000	-.03720
	GRADIENT	.00166	.00170	-.00013	-.00032	-.00024	-.03957	.01704	.01670	-.00455

RUN NO. 1078/ 0 RN/L = 3.50 GRADIENT INTERVAL = -5.00/ 5.00

ALPHAO	BETAO	CNL	CNFL	CAL	CAFL	CLMFL	CYFL	CYNL	CYNFL	CBLFL
-6.160	-7.925	-.29470	-.31790	.28390	.09220	.06840	.32540	-.13680	-.13390	.04190
-6.125	-5.906	-.30370	-.32600	.28570	.09720	.07360	.24200	-.10340	-.10100	.03110
-6.049	-4.002	-.30510	-.32700	.28840	.10240	.07810	.16010	-.06880	-.06750	.02020
-6.113	.076	-.31860	-.33900	.28520	.09940	.09110	-.00400	.00080	.00080	.00030
-5.959	4.184	-.29530	-.31650	.28990	.10500	.07990	-.15170	.06560	.06430	-.01970
-5.881	6.166	-.28790	-.31000	.28900	.10310	.07540	-.22470	.09730	.09510	-.03010
-5.686	8.298	-.27790	-.30100	.29010	.09970	.07080	-.31020	.13340	.13060	-.04140
	GRADIENT	.00120	.00129	.00018	.00032	.00022	-.03809	.01642	.01610	-.00487

IA156A, AEDC PWT 16T-470, O T S W/SILTS (R8NV77) (10 MAY 80)

REFERENCE DATA

SREF = 2690.0000 SQ.FT. XMRP = 976.0000 IN. XT
LREF = 1290.3000 INCHES YMRP = .0000 IN. YT
BREF = 1290.3000 INCHES ZMRP = 400.0000 IN. ZT
SCALE = .0200

PARAMETRIC DATA

IB-ELV = 8.000 OB-ELV = 11.000
BDFLAP = .000 SPDBRK = .000
RUDDER = .000 SILTS = 1.000
MACH = .600 RN/L = 3.500

RUN NO. 1079/ 0 RN/L = 3.50 GRADIENT INTERVAL = -5.00/ 5.00

ALPHAO	BETAO	CNL	CNFL	CAL	CAFL	CLMFL	CYFL	CYNL	CYNFL	CBLFL
-4.011	-8.034	-.16990	-.19330	.28750	.09570	.02430	.32420	-.13690	-.13420	.04520
-4.229	-5.946	-.19540	-.21770	.28760	.10250	.03620	.23180	-.09860	-.09640	.03230
-4.237	-3.905	-.19660	-.21780	.28790	.10830	.03950	.14350	-.06180	-.06060	.01960
-4.049	.181	-.18470	-.20440	.28590	.10810	.04280	-.00570	.00080	.00050	.00010
-3.721	4.263	-.15780	-.17890	.29150	.11010	.03250	-.15700	.06730	.06590	-.02260
-3.804	6.057	-.16100	-.18290	.28990	.10870	.03080	-.22350	.09660	.09450	-.03290
-3.839	8.043	-.16720	-.19010	.29040	.10210	.03180	-.30130	.13020	.12770	-.04340
	GRADIENT	.00475	.00476	.00044	.00022	-.00086	-.03679	.01581	.01549	-.00517

RUN NO. 1080/ 0 RN/L = 3.50 GRADIENT INTERVAL = -5.00/ 5.00

ALPHAO	BETAO	CNL	CNFL	CAL	CAFL	CLMFL	CYFL	CYNL	CYNFL	CBLFL
-.342	-8.724	.01910	-.00350	.28480	.10070	-.04170	.35420	-.15310	-.15090	.05360
-.336	-6.507	.01030	-.01140	.28530	.10590	-.03580	.25900	-.11330	-.11110	.04020
-.322	-4.536	.00880	-.01280	.28650	.10790	-.03220	.17730	-.07890	-.07730	.02760
-.297	-.416	.00700	-.01180	.28340	.11200	-.02560	.01280	-.00620	-.00620	.00170
-.268	3.690	.03210	.01240	.28520	.11350	-.03890	-.13630	.06080	.05930	-.02180
-.262	5.784	.03900	.01760	.28490	.11050	-.04440	-.21670	.09710	.09510	-.03480
-.256	7.880	.04830	.02620	.28810	.10820	-.05050	-.29710	.13220	.12990	-.04780
	GRADIENT	.00283	.00306	-.00016	.00068	-.00081	-.03812	.01698	.01661	-.00601

RUN NO. 1081/ 0 RN/L = 3.50 GRADIENT INTERVAL = -5.00/ 5.00

ALPHAO	BETAO	CNL	CNFL	CAL	CAFL	CLMFL	CYFL	CYNL	CYNFL	CBLFL
4.168	-7.890	.26770	.24650	.27210	.09790	-.13260	.33340	-.15030	-.14870	.05940
4.094	-5.794	.26830	.24780	.27010	.10090	-.13150	.23900	-.11000	-.10860	.04350
4.034	-3.797	.25960	.23990	.27050	.10210	-.12520	.16290	-.07570	-.07460	.02940
3.846	.081	.24940	.23030	.26830	.10180	-.11770	.01520	-.01050	-.01050	.00300
3.893	4.060	.27950	.26050	.26900	.10450	-.13700	-.13810	.06020	.05900	-.02530
3.845	6.167	.28080	.26050	.27090	.10190	-.14040	-.22930	.10300	.10120	-.04190
3.840	8.154	.28800	.26630	.27270	.09640	-.14470	-.30140	.13490	.13300	-.05480
	GRADIENT	.00255	.00264	-.00019	.00031	-.00152	-.03831	.01730	.01701	-.00696

IA156A, AEDC PWT 16T-470, O T S W/SILTS (R8NV77) (10 MAY 80)

REFERENCE DATA

SREF = 2690.0000 SQ.FT. XMRP = 976.0000 IN. XT
LREF = 1290.3000 INCHES YMRP = .0000 IN. YT
BREF = 1290.3000 INCHES ZMRP = 400.0000 IN. ZT
SCALE = .0200

PARAMETRIC DATA

IB-ELV = 8.000 OB-ELV = 11.000
BDFLAP = .000 SPDBRK = .000
RUDDER = .000 SILTS = 1.000
MACH = .600 RN/L = 3.500

RUN NO. 1082/ 0 RN/L = 3.50 GRADIENT INTERVAL = -5.00/ 5.00

ALPHAO	BETAO	CNL	CNFL	CAL	CAFL	CLMFL	CYFL	CYNL	CYNFL	CBLFL
6.183	-7.952	.39220	.37100	.26270	.08960	-.18400	.33450	-.15000	-.14850	.06300
6.174	-5.891	.39440	.37350	.26240	.09310	-.18340	.24710	-.11240	-.11130	.04730
6.140	-3.820	.38760	.36820	.26200	.09650	-.17770	.16390	-.07490	-.07400	.03120
5.860	.186	.36710	.34840	.26290	.09810	-.16420	.00850	-.00740	-.00730	.00180
5.799	4.076	.38050	.36130	.26250	.09690	-.17510	.13830	.05830	.05730	-.02640
5.757	5.988	.39020	.36970	.26250	.09580	-.18110	-.21110	.09250	.09100	-.04090
5.835	8.249	.40330	.38160	.26360	.08770	-.18900	-.30210	.13320	.13150	-.05810
	GRADIENT	-.00092	-.00089	.00006	.00005	.00034	-.03827	.01687	.01663	-.00729

RUN NO. 1083/ 0 RN/L = 3.50 GRADIENT INTERVAL = -5.00/ 5.00

ALPHAO	BETAO	CNL	CNFL	CAL	CAFL	CLMFL	CYFL	CYNL	CYNFL	CBLFL
8.082	-7.801	.50980	.48830	.25200	.07790	-.22950	.31460	-.13930	-.13790	.06290
7.988	-5.739	.50010	.47940	.25140	.08330	-.22370	.22770	-.10140	-.10010	.04570
7.976	-3.763	.49690	.47740	.25170	.08690	-.21980	.14730	-.06610	-.06520	.03040
7.879	.175	.48520	.46640	.25620	.08840	-.20880	.00920	-.00820	-.00830	.00210
7.933	4.200	.51440	.49470	.25250	.08650	-.22760	-.13140	.05330	.05220	-.02690
7.876	6.194	.52160	.50110	.25140	.08350	-.23310	-.20670	.08790	.08650	-.04280
7.899	8.234	.52840	.50740	.25230	.08000	-.23900	-.29240	.12720	.12570	-.05950
	GRADIENT	.00222	.00219	.00010	-.00005	-.00099	-.03500	.01500	.01474	-.00720

IA156A, AEDC PWT 16T-470, O T S. W/SILTS (R8NV78) (10 MAY 80)

REFERENCE DATA

SREF = 2690.0000 SQ.FT. XMRP = 976.0000 IN. XT
LREF = 1290.3000 INCHES YMRP = .0000 IN. YT
BREF = 1290.3000 INCHES ZMRP = 400.0000 IN. ZT
SCALE = .0200

PARAMETRIC DATA

IB-ELV = 8.000 OB-ELV = 11.000
BDFLAP = .000 SPDBRK = .000
RUDDER = .000 SILTS = 1.000
MACH = .800 RN/L = 3.500

RUN NO. 1084/ 0 RN/L = 3.50 GRADIENT INTERVAL = -5.00/ 5.00

ALPHAO	BETAO	CNL	CNFL	CAL	CAFL	CLMFL	CYFL	CYNL	CYNFL	CBLFL
-8.208	-5.827	-.44020	.46430	.31280	.10790	.11880	.25870	-.11370	-.11100	.02950
-8.259	-3.794	-.44580	-.46890	.31610	.12040	.12620	.16470	-.07160	-.07010	.01740
-8.153	.187	-.46360	-.48540	.31240	.11610	.14410	.00400	-.00300	-.00280	.00210
-7.985	4.362	-.42960	-.45270	.31470	.12040	.11920	-.17410	.07660	.07530	-.01860
-7.993	6.251	-.42820	-.45190	.31170	.11780	.11640	-.24770	.10820	.10590	-.02840
	GRADIENT	.00204	.00203	-.00017	.00001	-.00090	-.04155	.01818	.01783	-.00442

RUN NO. 1085/ 0 RN/L = 3.50 GRADIENT INTERVAL = -5.00/ 5.00

ALPHAO	BETAO	CNL	CNFL	CAL	CAFL	CLMFL	CYFL	CYNL	CYNFL	CBLFL
-6.227	-5.994	-.30630	-.32980	.31300	.12160	.07060	.25830	-.11380	-.11110	.03210
-6.157	-4.053	-.30950	-.33200	.31550	.12770	.07710	.17270	-.07680	-.07520	.02080
-6.226	.106	-.32480	-.34550	.30830	.12340	.09160	.00020	-.00170	-.00160	.00160
-6.034	4.269	-.29740	-.31990	.31340	.12370	.07460	-.16240	.07090	.06960	-.01940
-5.982	6.249	-.29600	-.31940	.31230	.12350	.07050	-.24670	.10790	.10560	-.03100
	GRADIENT	.00146	.00145	-.00025	-.00048	-.00030	-.04027	.01775	.01740	-.00483

RUN NO. 1086/ 0 RN/L = 3.50 GRADIENT INTERVAL = -5.00/ 5.00

ALPHAO	BETAO	CNL	CNFL	CAL	CAFL	CLMFL	CYFL	CYNL	CYNFL	CBLFL
-4.202	-6.102	-.17980	-.20300	.31300	.11970	.02620	.25790	-.11340	-.11100	.03510
-4.327	-3.995	-.19450	-.21660	.31370	.12520	.03620	.16040	-.07090	-.06950	.02060
-4.235	.359	-.19060	-.21110	.30610	.12490	.04190	-.01170	.00360	.00350	.00000
-3.799	4.314	-.15500	-.17660	.31190	.13220	.02540	-.16510	.07220	.07090	-.02260
-3.854	6.166	-.15820	-.18120	.31140	.12830	.02470	-.24010	.10550	.10340	-.03370
	GRADIENT	.00469	.00475	-.00024	.00083	-.00126	-.03918	.01722	.01689	-.00519

RUN NO. 1087/ 0 RN/L = 3.50 GRADIENT INTERVAL = -5.00/ 5.00

ALPHAO	BETAO	CNL	CNFL	CAL	CAFL	CLMFL	CYFL	CYNL	CYNFL	CBLFL
-.368	-6.886	.03150	.00920	.30990	.12010	-.05310	.29450	-.13060	-.12840	.04500
-.357	-4.773	.02720	.00610	.30740	.12550	-.04940	.20020	-.09110	-.08930	.03060
-.328	-.488	.02310	.00360	.29770	.12890	-.04190	.01770	-.00910	-.00890	.00320
-.291	3.604	.05510	.03430	.30470	.12630	-.06030	-.13970	.06300	.06170	-.02040
-.293	5.707	.05790	.03610	.30680	.12660	-.06270	-.22650	.10310	.10110	-.03470
	GRADIENT	.00330	.00334	-.00034	.00010	-.00128	-.04059	.01840	.01803	-.00609

IA156A, AEDC PWT 16T-470, O T S W/SILTS (R8NV78) (10 MAY 80)

REFERENCE DATA

SREF = 2690.0000 SQ.FT. XMRP = 976.0000 IN. XT
LREF = 1290.3000 INCHES YMRP = .0000 IN. YT
BREF = 1290.3000 INCHES ZMRP = 400.0000 IN. ZT
SCALE = .0200

PARAMETRIC DATA

IB-ELV = 8.000 OB-ELV = 11.000
BDFLAP = .000 SPDBRK = .000
RUDDER = .000 SILTS = 1.000
MACH = .800 RN/L = 3.500

RUN NO. 1088/ 0 RN/L = 3.50 GRADIENT INTERVAL = -5.00/ 5.00

ALPHAO	BETAO	CNL	CNFL	CAL	CAFL	CLMFL	CYFL	CYNL	CYNFL	CBLFL
4.102	-5.778	.31010	.28870	.29620	.12240	-.16080	.25890	-.11840	-.11680	.04820
3.956	-3.668	.30110	.28130	.29420	.12340	-.15430	.16300	-.07590	-.07490	.03090
3.725	.127	.29110	.27110	.28680	.11920	-.14560	.01430	-.01020	-.01020	.00420
3.815	4.006	.32950	.30880	.29190	.12060	-.16880	-.14100	.06200	.06080	-.02470
3.759	6.090	.32070	.29890	.29450	.11790	-.16930	-.23420	.10650	.10460	-.04170
	GRADIENT	.00372	.00361	-.00029	-.00036	-.00190	-.03961	.01797	.01768	-.00725

RUN NO. 1089/ 0 RN/L = 3.50 GRADIENT INTERVAL = -5.00/ 5.00

ALPHAO	BETAO	CNL	CNFL	CAL	CAFL	CLMFL	CYFL	CYNL	CYNFL	CBLFL
6.021	-5.724	.42630	.40480	.29000	.11510	-.20690	.25300	-.11610	-.11470	.04650
6.060	-3.767	.44090	.42050	.28760	.11800	-.21360	.16470	-.07640	-.07540	.03110
5.741	.168	.41640	.39700	.28230	.11590	-.19950	.00690	-.00590	-.00590	.00230
5.688	3.981	.43310	.41270	.28490	.11650	-.21200	-.13630	.05850	.05730	-.02480
5.728	6.167	.44140	.41970	.28850	.10860	-.21540	-.22920	.10370	.10190	-.04190
	GRADIENT	-.00103	-.00103	-.00035	-.00020	.00022	-.03885	.01741	.01713	-.00722

IA156A, AEDC PWT 16T-470, O T S W/SILTS (R8NV79) (10 MAY 80)

REFERENCE DATA

SREF = 2690.0000 SQ.FT. XMRP = 976.0000 IN. XT
LREF = 1290.3000 INCHES YMRP = .0000 IN. YT
BREF = 1290.3000 INCHES ZMRP = 400.0000 IN. ZT
SCALE = .0200

PARAMETRIC DATA

IB-ELV = 8.000 OB-ELV = 11.000
BDFLAP = .000 SPDBRK = .000
RUDDER = .000 SILTS = 1.000
MACH = .900 RN/L = 3.500

RUN NO. 1090/ 0 RN/L = 3.50 GRADIENT INTERVAL = -5.00/ 5.00

ALPHAO	BETAO	CNL	CNFL	CAL	CAFL	CLMFL	CYFL	CYNL	CYNFL	CBLFL
-8.163	-5.980	-.47100	-.49740	.35920	.13820	.14160	.28220	-.12370	-.12120	.03180
-8.256	-3.765	-.49260	-.51760	.36040	.15080	.15650	.17370	-.07450	-.07330	.01760
-8.171	.183	-.50650	-.52930	.35570	.14460	.17490	.00530	-.00400	-.00380	.00240
-8.000	4.389	-.47630	-.50080	.35780	.15200	.15340	-.17800	.07780	.07660	-.01840
-8.015	6.269	-.48040	-.50640	.35900	.14820	.15220	-.26490	.11530	.11310	-.02940
	GRADIENT	.00206	.00211	-.00031	.00016	-.00043	-.04314	.01869	.01839	-.00442

IA156A, AEDC PWT 16T-470, O T S W/SILTS (R8NV79) (10 MAY 80)

REFERENCE DATA

SREF = 2690.0000 SQ.FT. XMRP = 976.0000 IN. XT
LREF = 1290.3000 INCHES YMRP = .0000 IN. YT
BREF = 1290.3000 INCHES ZMRP = 400.0000 IN. ZT
SCALE = .0200

PARAMETRIC DATA

IB-ELV = 8.000 OB-ELV = 11.000
BDFLAP = .000 SPDBRK = .000
RUDDER = .000 SILTS = 1.000
MACH = .900 RN/L = 3.500

RUN NO. 1091/ 0 RN/L = 3.50 GRADIENT INTERVAL = -5.00/ 5.00

ALPHAO	BETAO	CNL	CNFL	CAL	CAFL	CLMFL	CYFL	CYNL	CYNFL	CBLFL
-6.207	-5.982	-.33860	-.36440	.35890	.15000	.09170	.27650	-.12040	-.11810	.03350
-6.160	-4.066	-.34250	-.36740	.35890	.14860	.09920	.18500	-.08060	-.07930	.02140
-6.246	.099	-.36590	-.38850	.35070	.14780	.12100	.00390	-.00420	-.00390	.00180
-6.053	4.268	-.33770	-.36190	.35620	.15630	.10360	-.16860	.07200	.07070	-.01940
-5.987	6.245	-.33680	-.36210	.35840	.15140	.10000	-.25550	.10980	.10760	-.03170
	GRADIENT	.00058	.00066	-.00032	.00092	.00053	-.04243	.01831	.01800	-.00490

RUN NO. 1092/ 0 RN/L = 3.50 GRADIENT INTERVAL = -5.00/ 5.00

ALPHAO	BETAO	CNL	CNFL	CAL	CAFL	CLMFL	CYFL	CYNL	CYNFL	CBLFL
-4.073	-6.116	-.19180	-.21690	.35900	.15830	.03850	.26640	-.11490	-.11260	.03640
-4.333	-3.999	-.21560	-.23940	.35660	.16020	.05250	.17040	-.07430	-.07300	.02170
-4.257	.376	-.22110	-.24380	.34450	.14790	06510	-.01260	.00370	.00380	-.00070
-3.789	4.327	-.17560	-.19960	.35270	.15800	.04300	-.17010	.07220	.07090	-.02310
-3.880	6.173	-.18540	-.21070	.35530	.15590	.04460	-.24970	.10710	.10510	-.03490
	GRADIENT	.00470	.00468	-.00051	-.00031	-.00107	-.04091	.01760	.01729	-.00538

RUN NO. 1093/ 0 RN/L = 3.50 GRADIENT INTERVAL = -5.00/ 5.00

ALPHAO	BETAO	CNL	CNFL	CAL	CAFL	CLMFL	CYFL	CYNL	CYNFL	CBLFL
-.389	-6.982	.03240	.00760	.35360	.14930	-.05100	.30500	-.13220	-.13010	.04790
-.373	-4.837	.03020	.00700	.35120	.15450	-.04800	.20870	-.09330	-.09150	.03320
-.343	-.533	.02300	.00190	.33250	.14820	-.03870	.02050	-.00960	-.00940	.00320
-.307	3.577	.05290	.03050	.34230	.15210	-.05500	-.14740	.06650	.06530	-.02360
-.309	5.752	.05310	.02930	.34940	.15230	-.05490	-.23900	.10700	.10510	-.03820
	GRADIENT	.00266	.00276	-.00108	-.00029	-.00081	-.04233	.01900	.01864	-.00675

RUN NO. 1094/ 0 RN/L = 3.50 GRADIENT INTERVAL = -5.00/ 5.00

ALPHAO	BETAO	CNL	CNFL	CAL	CAFL	CLMFL	CYFL	CYNL	CYNFL	CBLFL
4.085	-5.763	.31100	.28740	.34270	.14750	-.15790	.26600	-.11850	-.11700	.04570
3.944	-3.664	.30870	.28690	.33640	.14610	-.15990	.17000	-.07760	-.07670	.02910
3.705	.123	.29700	.27620	.32600	.14320	-.15510	.01200	-.00700	-.00700	.00290
3.811	3.993	.32670	.30440	.33430	.15050	-.16780	-.14960	.06640	.06520	-.02450
3.760	6.091	.31750	.29360	.34110	.14590	-.16600	-.24450	.10870	.10680	-.04060
	GRADIENT	.00237	.00230	-.00027	.00058	-.00104	-.04174	.01881	.01853	-.00700

IA156A, AEDC PWT 16T-470, O T S W/SILTS (R8NV80) (10 MAY 80)

REFERENCE DATA

SREF = 2690.0000 SQ.FT. XMRP = 976.0000 IN. XT
LREF = 1290.3000 INCHES YMRP = .0000 IN. YT
BREF = 1290.3000 INCHES ZMRP = 400.0000 IN. ZT
SCALE = .0200

PARAMETRIC DATA

IB-ELV = 8.000 OB-ELV = 11.000
BDFLAP = .000 SPDBRK = .000
RUDDER = .000 SILTS = 1.000
MACH = .950 RN/L = 3.500

RUN NO. 1095/ 0 RN/L = 3.50 GRADIENT INTERVAL = -5.00/ 5.00

ALPHAO	BETAO	CNL	CNFL	CAL	CAFL	CLMFL	CYFL	CYNL	CYNFL	CBLFL
-8.294	-6.047	-.51380	-.54320	.40610	.17520	.16190	.30370	-.13480	-.13230	.03550
-8.203	-3.771	-.50530	-.53260	.40550	.18260	.16380	.18310	-.07880	-.07770	.02020
-8.185	.173	-.52700	-.55310	.40390	.17710	.18260	.00680	-.00450	-.00440	.00370
-8.002	4.454	-.50070	-.52860	.40490	.17790	.16610	-.19360	.08680	.08570	-.02000
-8.009	6.271	-.50450	-.53380	.40490	.17470	.16450	-.28210	.12650	.12430	-.03110
	GRADIENT	.00064	.00056	-.00007	-.00056	.00022	-.04581	.02015	.01988	-.00490

RUN NO. 1096/ 0 RN/L = 3.50 GRADIENT INTERVAL = -5.00/ 5.00

ALPHAO	BETAO	CNL	CNFL	CAL	CAFL	CLMFL	CYFL	CYNL	CYNFL	CBLFL
-6.221	-6.002	-.35380	-.38210	.40400	.18080	.10240	.28950	-.12790	-.12550	.03660
-6.164	-4.065	-.35810	-.38550	.40320	.18270	.10860	.19260	-.08410	-.08290	.02320
-6.250	.111	-.37600	-.40100	.39920	.18120	.12540	.00380	-.00400	-.00390	.00290
-6.035	4.265	-.35210	-.37960	.40370	.17890	.11460	-.18030	.07940	.07820	-.02100
-6.006	6.274	-.35240	-.38120	.40350	.17290	.11110	-.27350	.12160	.11930	-.03390
	GRADIENT	.00072	.00070	.00006	-.00046	.00072	-.04476	.01963	.01934	-.00531

RUN NO. 1097/ 0 RN/L = 3.50 GRADIENT INTERVAL = -5.00/ 5.00

ALPHAO	BETAO	CNL	CNFL	CAL	CAFL	CLMFL	CYFL	CYNL	CYNFL	CBLFL
-4.066	-6.173	-.20510	-.23290	.40470	.18660	.04950	.28060	-.12210	-.11960	.03870
-4.331	-3.998	-.22780	-.25430	.40120	.18080	.06220	.17430	-.07470	-.07340	.02240
-4.261	.376	-.23290	-.25750	.39470	.17890	.07640	-.01110	.00220	.00230	.00110
-3.793	4.340	-.19010	-.21650	.39990	.18790	.05690	-.18110	.07830	.07690	-.02420
-3.885	6.172	-.19850	-.22670	.40200	.18100	.05720	-.26230	.11410	.11180	-.03620
	GRADIENT	.00442	.00444	-.00018	.00083	-.00057	-.04262	.01834	.01801	-.00558

RUN NO. 1098/ 0 RN/L = 3.51 GRADIENT INTERVAL = -5.00/ 5.00

ALPHAO	BETAO	CNL	CNFL	CAL	CAFL	CLMFL	CYFL	CYNL	CYNFL	CBLFL
-.411	-7.031	.02250	-.00520	.39880	.20090	-.03470	.30580	-.13030	-.12770	.04760
-.392	-4.836	.01720	-.00820	.39620	.17760	-.02760	.20970	-.09150	-.08940	.03310
-.358	-.565	.01100	-.01200	.38440	.18150	-.01640	.02190	-.01050	-.01010	.00370
-.321	3.586	.04270	.01800	.39350	.18690	-.03550	-.15180	.06840	.06690	-.02430
-.326	5.762	.04560	.01870	.39950	.18590	-.03830	-.24150	.10720	.10490	-.03880
	GRADIENT	.00301	.00309	-.00033	.00110	-.00092	-.04293	.01899	.01856	-.00682

IA156A, AEDC PWT 16T-470, O T S W/SILTS (R8NV80) (10 MAY 80)

REFERENCE DATA

SREF = 2690.0000 SQ.FT. XMRP = 976.0000 IN. XT
LREF = 1290.3000 INCHES YMRP = .0000 IN. YT
BREF = 1290.3000 INCHES ZMRP = 400.0000 IN. ZT
SCALE = .0200

PARAMETRIC DATA

IB-ELV = 8.000 OB-ELV = 11.000
BDFLAP = .000 SPDBRK = .000
RUDDER = .000 SILTS = 1.000
MACH = .950 RN/L = 3.500

RUN NO. 1099/ 0 RN/L = 3.50 GRADIENT INTERVAL = -5.00/ 5.00

ALPHAO	BETAO	CNL	CNFL	CAL	CAFL	CLMFL	CYFL	CYNL	CYNFL	CBLFL
4.075	-5.728	.30380	.27890	.38650	.17690	-.14560	.25800	-.11000	-.10820	.04470
3.951	-3.749	.30000	.27640	.38110	.17730	-.14710	.16670	-.07040	-.06930	.02790
3.844	.183	.30070	.27690	.37220	.17370	-.14960	.00730	-.00370	-.00380	.00240
3.797	3.935	.31570	.29140	.38040	.17850	-.15640	-.14590	.06130	.06000	-.02330
3.766	6.057	.31350	.28690	.38720	.17580	-.15140	-.24440	.10400	.10180	-.04080
	GRADIENT	.00203	.00194	-.00011	.00015	-.00121	-.04068	.01714	.01683	-.00666

IA156A, AEDC PWT 16T-470, O T S W/SILTS (R8NV81) (10 MAY 80)

REFERENCE DATA

SREF = 2690.0000 SQ.FT. XMRP = 976.0000 IN. XT
LREF = 1290.3000 INCHES YMRP = .0000 IN. YT
BREF = 1290.3000 INCHES ZMRP = 400.0000 IN. ZT
SCALE = .0200

PARAMETRIC DATA

IB-ELV = 8.000 OB-ELV = 11.000
BDFLAP = .000 SPDBRK = .000
RUDDER = .000 SILTS = 1.000
MACH = 1.050 RN/L = 3.500

RUN NO. 1102/ 0 RN/L = 3.50 GRADIENT INTERVAL = -5.00/ 5.00

ALPHAO	BETAO	CNL	CNFL	CAL	CAFL	CLMFL	CYFL	CYNL	CYNFL	CBLFL
-8.214	-5.985	-.55530	-.59200	.50960	.22760	.20410	.30630	-.13030	-.12770	.03600
-8.268	-3.873	-.57550	-.61200	.51910	.22800	.22170	.20060	-.08550	-.08410	.02180
-8.188	.281	-.58170	-.61620	.51780	.23280	.22800	-.00240	.00190	.00190	.00160
-8.026	4.295	-.56990	-.60490	.51780	.23920	.22170	-.19310	.08540	.08400	-.02050
-8.003	6.264	-.56690	-.60240	.51460	.23510	.21450	-.29020	.12630	.12370	-.03330
	GRADIENT	.00067	.00086	-.00016	.00137	.00001	-.04820	.02092	.02058	-.00518

RUN NO. 1103/ 0 RN/L = 3.50 GRADIENT INTERVAL = -5.00/ 5.00

ALPHAO	BETAO	CNL	CNFL	CAL	CAFL	CLMFL	CYFL	CYNL	CYNFL	CBLFL
-6.206	-5.996	-.39870	-.43550	.51720	.22970	.14690	.29640	-.12500	-.12240	.03870
-6.165	-4.087	-.40540	-.44220	.52000	.23960	.15630	.19910	-.08420	-.08280	.02530
-6.271	.104	-.42910	-.46430	.51840	.23530	.17790	.00050	-.00040	-.00040	.00160
-6.068	4.277	-.40320	-.43720	.51570	.24480	.16170	-.18540	.08120	.07970	-.02310
-5.861	6.383	-.38350	-.41900	.51530	.23850	.14920	-.28730	.12560	.12290	-.03800
	GRADIENT	.00026	.00059	-.00051	.00062	.00065	-.04597	.01977	.01943	-.00579

IA156A, AEDC PWT 16T-470, O T S W/SILTS (R8NV81) (10 MAY 80)

REFERENCE DATA

SREF = 2690.0000 SQ.FT. XMRP = 976.0000 IN. XT
LREF = 1290.3000 INCHES YMRP = .0000 IN. YT
BREF = 1290.3000 INCHES ZMRP = 400.0000 IN. ZT
SCALE = .0200

PARAMETRIC DATA

IB-ELV = 8.000 OB-ELV = 11.000
BDFLAP = .000 SPDBRK = .000
RUDDER = .000 SILTS = 1.000
MACH = 1.050 RN/L = 3.500

RUN NO. 1104/ 0 RN/L = 3.50 GRADIENT INTERVAL = -5.00/ 5.00

ALPHAO	BETAO	CNL	CNFL	CAL	CAFL	CLMFL	CYFL	CYNL	CYNFL	CBLFL
-4.122	-6.131	-.24110	-.27800	.51490	.24000	.09180	.28550	-.11900	-.11670	.04160
-4.345	-4.018	-.26890	-.30500	.51670	.24550	.10950	.18390	-.07820	-.07680	.02570
-4.269	.372	-.27630	-.31190	.51850	.24040	.12550	-.00980	.00380	.00360	.00000
-3.793	4.343	-.23160	-.26580	.51650	.24260	.10180	-.18710	.08150	.07990	-.02720
-3.868	6.162	-.23320	-.26680	.51150	.24810	.09480	-.26970	.11660	.11430	-.04030
	GRADIENT	.00435	.00458	-.00002	-.00036	-.00084	-.04437	.01909	.01874	-.00632

RUN NO. 1105/ 0 RN/L = 3.49 GRADIENT INTERVAL = -5.00/ 5.00

ALPHAO	BETAO	CNL	CNFL	CAL	CAFL	CLMFL	CYFL	CYNL	CYNFL	CBLFL
-.450	-7.051	.00600	-.03100	.51180	.23440	-.00020	.32360	-.13580	-.13340	.05520
-.431	-4.894	-.00030	-.03670	.51230	.23760	.01000	.22160	-.09670	-.09480	.03840
-.401	-.555	-.00630	-.04010	.51040	.24570	.02040	.02700	-.01360	-.01350	.00400
-.371	3.591	.01520	-.01910	.51660	.24600	.00870	-.15400	.07090	.06930	-.02780
-.371	5.773	.02090	-.01380	.51870	.24490	.00190	-.24740	.11000	.10770	-.04390
	GRADIENT	.00180	.00205	.00050	.00100	-.00013	-.04427	.01975	.01933	-.00780

RUN NO. 1106/ 0 RN/L = 3.49 GRADIENT INTERVAL = -5.00/ 5.00

ALPHAO	BETAO	CNL	CNFL	CAL	CAFL	CLMFL	CYFL	CYNL	CYNFL	CBLFL
4.083	-5.750	.28600	.25180	.50460	.24640	-.11170	.26650	-.11580	-.11460	.05070
3.909	-3.651	.27500	.24070	.50230	.24170	-.10510	.17210	-.07630	-.07560	.03240
3.738	.112	.27610	.24230	.49720	.23890	-.10500	.01260	-.00710	-.00710	.00300
3.803	3.989	.30390	.27040	.50150	.24160	-.12320	-.15460	.06740	.06640	-.02850
3.764	6.060	.29960	.26570	.50180	.24120	-.12110	-.24610	.10470	.10320	-.04630
	GRADIENT	.00380	.00390	-.00010	-.00001	-.00238	-.04277	.01881	.01859	-.00797

IA156A, AEDC PWT 16T-470, O T S W/SILTS (R8NV82) (10 MAY 80)

REFERENCE DATA

SREF = 2690.0000 SQ.FT. XMRP = 976.0000 IN. XT
LREF = 1290.3000 INCHES YMRP = .0000 IN. YT
BREF = 1290.3000 INCHES ZMRP = 400.0000 IN. ZT
SCALE = .0200

PARAMETRIC DATA

IB-ELV = 8.000 OB-ELV = 11.000
BDFLAP = .000 SPDBRK = .000
RUDDER = .000 SILTS = 1.000
MACH = 1.100 RN/L = 3.500

RUN NO. 1107/ 0 RN/L = 3.51 GRADIENT INTERVAL = -5.00/ 5.00

ALPHAO	BETAO	CNL	CNFL	CAL	CAFL	CLMFL	CYFL	CYNL	CYNFL	CBLFL
-8.232	-5.903	-.55360	-.58730	.51170	.25030	.19900	.29020	-.12100	-.11860	.03330
-8.255	-3.825	-.55630	-.58930	.51550	.25520	.20520	.18800	-.07710	-.07570	.02010
-8.187	.192	-.56650	-.59740	.51220	.25500	.21450	-.00210	.00130	.00130	.00150
-8.011	4.349	-.54460	-.57640	.51360	.25460	.20580	-.18560	.07970	.07820	-.01980
-8.016	6.268	-.54680	-.57820	.50910	.25710	.20340	-.27780	.11890	.11640	-.03210
	GRADIENT	.00145	.00160	-.00023	-.00007	.00006	-.04569	.01918	.01882	-.00488

RUN NO. 1108/ 0 RN/L = 3.50 GRADIENT INTERVAL = -5.00/ 5.00

ALPHAO	BETAO	CNL	CNFL	CAL	CAFL	CLMFL	CYFL	CYNL	CYNFL	CBLFL
-6.213	-6.003	-.38760	-.42020	.50680	.25570	.13500	.27710	-.11350	-.11110	.03590
-6.166	-4.086	-.39300	-.42520	.50900	.25690	.14250	.18450	-.07560	-.07430	.02310
-6.283	.119	-.41220	-.44250	.50430	.25350	16050	-.00120	-.00100	-.00100	.00130
-6.042	4.262	-.37770	-.40810	.50480	.25740	.14340	-.17890	.07480	.07340	-.02260
-6.011	6.265	-.37210	-.40320	.50560	.25900	.13510	-.26820	.11380	.11140	-.03590
	GRADIENT	.00182	.00203	-.00050	.00006	.00012	-.04353	.01802	.01769	-.00547

RUN NO. 1109/ 0 RN/L = 3.51 GRADIENT INTERVAL = -5.00/ 5.00

ALPHAO	BETAO	CNL	CNFL	CAL	CAFL	CLMFL	CYFL	CYNL	CYNFL	CBLFL
-4.293	-6.047	-.24860	-.28100	.50360	.25670	.08320	.26780	-.10780	-.10570	.03920
-4.317	-4.024	-.25580	-.28720	.50100	.26150	.09380	.16920	-.06860	-.06740	.02380
-4.257	.346	-.25390	-.28400	.49730	.25490	.10450	-.01330	.00370	.00350	-.00050
-3.776	4.319	-.20710	-.23660	.50160	.26220	.08180	-.17610	.07220	.07080	-.02680
-3.893	6.173	-.21140	-.24160	.50370	.26170	.07760	-.25640	.10620	.10410	-.03960
	GRADIENT	.00575	.00598	.00006	.00006	-.00137	-.04139	.01687	.01656	-.00606

RUN NO. 1110/ 0 RN/L = 3.50 GRADIENT INTERVAL = -5.00/ 5.00

ALPHAO	BETAO	CNL	CNFL	CAL	CAFL	CLMFL	CYFL	CYNL	CYNFL	CBLFL
-.453	-7.058	.00880	-.02320	.50140	.26360	-.00890	.31040	-.12560	-.12350	.05380
-.435	-4.893	.00180	-.02970	.49360	.24970	.00020	.20960	-.08740	-.08570	.03730
-.401	-.488	.00140	-.02770	.49070	.25860	.00590	.02050	-.00980	-.00970	.00310
-.365	3.607	.02220	-.00590	.49210	.26020	-.00450	-.15110	.06750	.06600	-.02780
-.367	5.777	.02740	-.00160	.49450	.25700	-.01090	-.24390	.10570	.10350	-.04400
	GRADIENT	.00237	.00277	-.00018	.00125	-.00053	-.04244	.01822	.01784	-.00766

IA156A, AEDC PWT 16T-470, O T S W/SILTS (R8NV82) (10 MAY 80)

REFERENCE DATA

SREF = 2690.0000 SQ.FT. XMRP = 976.0000 IN. XT
LREF = 1290.3000 INCHES YMRP = .0000 IN. YT
BREF = 1290.3000 INCHES ZMRP = 400.0000 IN. ZT
SCALE = .0200

PARAMETRIC DATA

IB-ELV = 8.000 OB-ELV = 11.000
BDFLAP = .000 SPDBRK = .000
RUDDER = .000 SILTS = 1.000
MACH = 1.100 RN/L = 3.500

RUN NO. 1111/ 0 RN/L = 3.50 GRADIENT INTERVAL = -5.00/ 5.00

ALPHAO	BETAO	CNL	CNFL	CAL	CAFL	CLMFL	CYFL	CYNL	CYNFL	CBLFL
4.078	-5.753	.30050	.27090	.48070	.25100	-.12410	.25950	-.11160	-.11030	.04910
3.945	-3.680	.29330	.26440	.48170	.25790	-.11900	.16830	-.07440	-.07380	.03150
3.680	.122	.27740	.24830	.47880	.25480	-.10960	.00600	-.00520	-.00520	.00190
3.789	3.976	.30120	.27330	.47970	.25500	-.12610	-.15490	.06550	.06450	-.02820
3.768	6.065	.30130	.27290	.47920	.25630	-.12930	-.24580	.10210	.10060	-.04570
	GRADIENT	.00104	.00117	-.00026	-.00038	-.00094	-.04221	.01827	.01806	-.00780

IA156A, AEDC PWT 16T-470, O T S W/SILTS (R8NV83) (10 MAY 80)

REFERENCE DATA

SREF = 2690.0000 SQ.FT. XMRP = 976.0000 IN. XT
LREF = 1290.3000 INCHES YMRP = .0000 IN. YT
BREF = 1290.3000 INCHES ZMRP = 400.0000 IN. ZT
SCALE = .0200

PARAMETRIC DATA

IB-ELV = 8.000 OB-ELV = 9.000
BDFLAP = .000 SPDBRK = .000
RUDDER = .000 SILTS = 1.000
MACH = .600 RN/L = 3.500

RUN NO. 1114/ 0 RN/L = 3.51 GRADIENT INTERVAL = -5.00/ 5.00

ALPHAO	BETAO	CNL	CNFL	CAL	CAFL	CLMFL	CYFL	CYNL	CYNFL	CBLFL
-8.219	-7.832	-.44200	-.46600	.28280	.07580	.12720	.32460	-.13580	-.13270	.03800
-8.099	-5.891	-.42880	-.45180	.28440	.08850	.12230	.24630	-.10450	-.10200	.02860
-8.140	-3.791	-.43370	-.45580	.28770	.09540	.12770	.15250	-.06380	-.06240	.01650
-8.051	.301	-.44480	-.46540	.28520	.09300	.14070	-.01080	.00510	.00500	-.00100
-7.910	4.243	-.42520	-.44690	.29000	.09820	.12740	-.16090	.07100	.06970	-.01910
-7.897	6.183	-.41830	-.44100	.28750	.09250	.12280	-.23490	.10250	.10030	-.02850
-7.934	8.177	-.42720	-.45060	.28740	.08880	.12730	-.31220	.13490	.13200	-.03770
	GRADIENT	.00103	.00109	.00028	.00034	-.00002	-.03902	.01678	.01644	-.00443

RUN NO. 1115/ 0 RN/L = 3.51 GRADIENT INTERVAL = -5.00/ 5.00

ALPHAO	BETAO	CNL	CNFL	CAL	CAFL	CLMFL	CYFL	CYNL	CYNFL	CBLFL
-6.156	-7.922	-.30270	-.32580	.28550	.09380	.07420	.32530	-.13610	-.13330	.04130
-6.128	-5.909	-.30990	-.33230	.28700	.09840	.07920	.23800	-.10030	-.09810	.02980
-6.052	-4.007	-.31110	-.33270	.28830	.10390	.08290	.15690	-.06650	-.06520	.01910
-6.113	.075	-.32350	-.34330	.28630	.10720	.09610	-.00290	.00090	.00080	-.00010
-5.946	4.190	-.29960	-.32130	.29130	.10570	.08570	-.15170	.06610	.06480	-.01990
-5.887	6.166	-.29750	-.32130	.29130	.09080	.08240	-.22760	.09920	.09690	-.03050
-5.690	8.305	-.28220	-.30520	.28970	.09920	.07560	-.31070	.13440	.13170	-.04150
	GRADIENT	.00141	.00140	.00037	.00022	.00034	-.03764	.01618	.01586	-.00476

IA156A, AEDC PWT 16T-470, O T S W/SILTS (R8NV83) (10 MAY 80)

REFERENCE DATA

SREF = 2690.0000 SQ.FT. XMRP = 976.0000 IN. XT
LREF = 1290.3000 INCHES YMRP = .0000 IN. YT
BREF = 1290.3000 INCHES ZMRP = 400.0000 IN. ZT
SCALE = .0200

PARAMETRIC DATA

IB-ELV = 8.000 OB-ELV = 9.000
BDFLAP = .000 SPDBRK = .000
RUDDER = .000 SILTS = 1.000
MACH = .600 RN/L = 3.500

RUN NO. 1117/ 0 RN/L = 3.49 GRADIENT INTERVAL = -5.00/ 5.00

ALPHAO	BETAO	CNL	CNFL	CAL	CAFL	CLMFL	CYFL	CYNL	CYNFL	CBLFL
-4.005	-7.950	-.17560	-.19860	.28730	.09920	.02940	.32340	-.13590	-.13320	.04450
-4.230	-5.941	-.20010	-.22250	.28780	.10270	.04140	.22680	-.09560	-.09350	.03100
-4.234	-3.892	-.20310	-.22450	.28860	.10730	.04520	.14100	-.05970	-.05840	.01850
-4.049	.174	-.19340	-.21290	.28570	.10910	.04990	-.00510	.00090	.00070	-.00010
-3.718	4.264	-.16410	-.18480	.29150	.11300	.03900	-.15640	.06750	.06610	-.02260
-3.792	6.053	-.16640	-.18810	.28960	.10850	.03730	-.22330	.09730	.09530	-.03310
-3.831	8.046	-.17250	-.19520	.29070	.10410	.03790	-.29960	.13020	.12780	-.04340
	GRADIENT	.00478	.00487	.00036	.00070	-.00076	-.03647	.01560	.01527	-.00504

RUN NO. 1118/ 0 RN/L = 3.50 GRADIENT INTERVAL = -5.00/ 5.00

ALPHAO	BETAO	CNL	CNFL	CAL	CAFL	CLMFL	CYFL	CYNL	CYNFL	CBLFL
-.345	-8.769	.01350	-.00890	.28460	.09850	-.03600	.35970	-.15530	-.15320	.05430
-.339	-6.697	.00620	-.01550	.28430	.10430	-.03050	.26930	-.11740	-.11520	.04150
-.327	-4.423	-.00020	-.02080	.28680	.11320	-.02480	.17200	-.07590	-.07430	.02650
-.300	-.384	.00020	-.01860	.28400	.11130	-.01820	.01120	-.00510	-.00510	.00130
-.272	3.688	.02390	.00390	.28530	.11230	-.03080	-.13480	.06090	.05950	-.02180
-.267	5.772	.03120	.01000	.28610	.10640	-.03660	-.21450	.09670	.09480	-.03450
-.260	7.866	.04190	.01990	.28830	.10800	-.04340	-.29470	.13200	.12980	-.04730
	GRADIENT	.00298	.00305	-.00018	-.00011	-.00074	-.03782	.01686	.01649	-.00595

RUN NO. 1119/ 0 RN/L = 3.49 GRADIENT INTERVAL = -5.00/ 5.00

ALPHAO	BETAO	CNL	CNFL	CAL	CAFL	CLMFL	CYFL	CYNL	CYNFL	CBLFL
4.061	-8.068	.25180	.23070	.27440	.10050	-.12160	.33930	-.15220	-.15060	.06050
4.074	-5.756	.24710	.22650	.27200	.10110	-.11720	.24060	-.10970	-.10820	.04380
4.049	-3.766	.24840	.22900	.27010	.10320	-.11480	.15390	-.07110	-.07010	.02840
3.826	.145	.23560	.21670	.26950	.10250	-.10640	.00930	-.00690	-.00700	.00240
3.894	4.109	.26750	.24870	.27020	.10380	-.12570	-.14000	.06140	.06030	-.02480
3.848	6.179	.27020	.24990	.27240	.10380	-.12900	-.22900	.10260	.10090	-.04140
3.834	8.158	.27520	.25400	.27380	.09900	-.13320	-.30380	.13570	.13370	-.05460
	GRADIENT	.00244	.00251	.00001	.00008	-.00139	-.03732	.01683	.01656	-.00676

IA156A FORCE DATA WITH FLOW ANGULARITY CORRECTION

IA156A, AEDC PWT 16T-470, O T S W/SILTS

(R8NV83) (10 MAY 80)

REFERENCE DATA

SREF = 2690.0000 SQ.FT.
LREF = 1290.3000 INCHES
BREF = 1290.3000 INCHES
SCALE = .0200

XMRP = 976.0000 IN. XT
YMRP = .0000 IN. YT
ZMRP = 400.0000 IN. ZT

PARAMETRIC DATA

IB-ELV = 8.000
BDFLAP = .000
RUDDER = .000
MACH = .600
OB-ELV = 9.000
SPDBRK = .000
SILTS = 1.000
RN/L = 3.500

RUN NO. 1120/ 0 RN/L = 3.49 GRADIENT INTERVAL = -5.00/ 5.00

ALPHAO	BETAO	CNL	CNFL	CAL	CAFL	CLMFL	CYFL	CYNL	CYNFL	CBLFL
6.199	-7.959	.37910	.35800	.26230	.08850	-.17350	.33330	-.14870	-.14730	.06290
6.166	-5.903	.38100	.36040	.26250	.09350	-.17220	.24450	-.11030	-.10900	.04700
6.146	-3.877	.37590	.35650	.26320	.09850	-.16750	.16590	-.07500	-.07410	.03220
5.896	.134	.35500	.33620	.26400	.09720	-.15330	.00770	-.00620	-.00610	.00270
5.802	4.075	.36610	.34700	.26380	.09830	-.16270	-.13900	.05930	.05840	-.02540
5.758	5.987	.37550	.35510	.26400	.09590	-.16920	-.21380	.09440	.09290	-.04040
5.823	8.257	.38870	.36750	.26530	.09130	-.17750	-.30460	.13500	.13330	-.05740
	GRADIENT	-.00124	-.00121	.00008	-.00003	.00061	-.03834	.01689	.01666	-.00724

RUN NO. 1121/ 0 RN/L = 3.50 GRADIENT INTERVAL = -5.00/ 5.00

ALPHAO	BETAO	CNL	CNFL	CAL	CAFL	CLMFL	CYFL	CYNL	CYNFL	CBLFL
8.087	-7.805	.49110	.47020	.25120	.07880	-.21690	.31410	-.13830	-.13690	.06280
7.992	-5.743	.48820	.46800	.25170	.08520	-.21400	.22580	-.09980	-.09860	.04570
7.975	-3.763	.48250	.46300	.25210	.08700	-.20870	.14740	-.06570	-.06490	.03050
7.881	.167	.47020	.45160	.25620	.08740	-.19760	.00850	-.00700	-.00700	.00260
7.924	4.200	.49880	.47920	.25480	.08740	-.21480	-.13340	.05490	.05380	-.02590
7.893	6.205	.51020	.49010	.25310	.08620	-.22300	-.20790	.08890	.08750	-.04190
7.886	8.231	.51000	.48890	.25350	.07910	-.22590	-.29770	.13010	.12870	-.05890
	GRADIENT	.00207	.00206	.00034	.00005	-.00078	-.03526	.01515	.01491	-.00708

IA156A, AEDC PWT 16T-470, O T S W/SILTS (R8NV85) (10 MAY 80)

REFERENCE DATA

SREF = 2690.0000 SQ.FT. XMRP = 976.0000 IN. XT
LREF = 1290.3000 INCHES YMRP = .0000 IN. YT
BREF = 1290.3000 INCHES ZMRP = 400.0000 IN. ZT
SCALE = .0200

PARAMETRIC DATA

IB-ELV = 8.000 OB-ELV = 9.000
BDFLAP = .000 SPDBRK = .000
RUDDER = .000 SILTS = 1.000
MACH = .800 RN/L = 3.500

RUN NO. 1132/ 0 RN/L = 3.51 GRADIENT INTERVAL = -5.00/ 5.00

ALPHAO	BETAO	CNL	CNFL	CAL	CAFL	CLMFL	CYFL	CYNL	CYNFL	CBLFL
-8.228	-5.851	-.45040	-.47540	.31140	.10790	.12610	.26070	-.11520	-.11250	.02970
-8.232	-3.849	-.45280	-.47670	.31590	.11200	.13210	.16630	-.07270	-.07120	.01780
-8.166	.278	-.46900	-.49090	.31200	.11620	.14800	-.00720	.00280	.00290	.00030
-7.998	4.292	-.43800	-.46160	.31300	.11760	.12500	-.17170	.07720	.07580	-.01920
-8.010	6.257	-.43580	-.46040	.31250	.11470	.12030	-.25370	.11230	.11010	-.02960
	GRADIENT	.00179	.00183	-.00036	.00069	-.00085	-.04152	.01841	.01806	-.00454

RUN NO. 1133/ 0 RN/L = 3.50 GRADIENT INTERVAL = -5.00/ 5.00

ALPHAO	BETAO	CNL	CNFL	CAL	CAFL	CLMFL	CYFL	CYNL	CYNFL	CBLFL
-6.217	-5.991	-.30650	-.33050	.31350	.12000	.07320	.26110	-.11510	-.11250	.03230
-6.150	-4.044	-.31620	-.33900	.31440	.12560	.08170	.17430	-.07750	-.07590	.02100
-6.231	.132	-.33030	-.35150	.30780	.12130	.09490	-.00350	.00040	.00050	.00050
-6.023	4.270	-.30110	-.32390	.31270	.12270	.07690	-.16570	.07420	.07290	-.02060
-5.980	6.239	-.30310	-.32680	.31330	.12320	.07340	-.24810	.11050	.10820	-.03170
	GRADIENT	.00181	.00181	-.00021	-.00035	-.00057	-.04090	.01825	.01790	-.00500

RUN NO. 1134/ 0 RN/L = 3.50 GRADIENT INTERVAL = -5.00/ 5.00

ALPHAO	BETAO	CNL	CNFL	CAL	CAFL	CLMFL	CYFL	CYNL	CYNFL	CBLFL
-4.121	-6.083	-.18050	-.20400	.31320	.12370	.02850	.25550	-.11230	-.10990	.03460
-4.332	-3.988	-.19980	-.22250	.31340	.12190	.04010	.16050	-.07110	-.06960	.02080
-4.233	.372	-.19650	-.21740	.30610	.12420	.04490	-.01460	.00560	.00540	-.00060
-3.803	4.330	-.16130	-.18350	.31190	.12740	.02660	-.17230	.07760	.07620	-.02300
-3.861	6.148	-.16440	-.18770	.31250	.12560	.02370	-.24890	.11200	.10980	-.03390
	GRADIENT	.00456	.00463	-.00021	.00066	-.00158	-.04001	.01787	.01752	-.00526

RUN NO. 1135/ 0 RN/L = 3.50 GRADIENT INTERVAL = -5.00/ 5.00

ALPHAO	BETAO	CNL	CNFL	CAL	CAFL	CLMFL	CYFL	CYNL	CYNFL	CBLFL
-.375	-6.864	.02540	.00270	.30940	.12390	-.04810	.29070	-.12920	-.12710	.04400
-.361	-4.564	.01930	-.00200	.30670	.12870	-.04480	.18730	-.08440	-.08270	.02800
-.335	-.469	.01580	-.00420	.29750	.12450	-.03790	.01610	-.00710	-.00710	.00270
-.300	3.591	.04640	.02570	.30510	.13190	-.05520	-.14570	.06660	.06520	-.02130
-.297	5.727	.05160	.02970	.30800	.12870	-.05840	-.23550	.10790	.10590	-.03560
	GRADIENT	.00332	.00339	-.00020	.00039	-.00127	-.04083	.01852	.01814	-.00605

IA156A, AEDC PWT 16T-470, O T S W/SILTS (R8NV85) (10 MAY 80)

REFERENCE DATA

SREF = 2690.0000 SQ.FT. XMRP = 976.0000 IN. XT
LREF = 1290.3000 INCHES YMRP = .0000 IN. YT
BREF = 1290.3000 INCHES ZMRP = 400.0000 IN. ZT
SCALE = .0200

PARAMETRIC DATA

IB-ELV = 8.000 OB-ELV = 9.000
BDFLAP = .000 SPDBRK = .000
RUDDER = .000 SILTS = 1.000
MACH = .800 RN/L = 3.500

RUN NO. 1136/ 0 RN/L = 3.50 GRADIENT INTERVAL = -5.00/ 5.00

ALPHAO	BETAO	CNL	CNFL	CAL	CAFL	CLMFL	CYFL	CYNL	CYNFL	CBLFL
3.989	-5.860	.29400	.27210	.29550	.11960	-.14860	.26180	-.11990	-.11840	.04810
3.975	-3.748	.29480	.27410	.29310	.11940	-.14520	.16590	-.07760	-.07660	.03070
3.871	.191	.29630	.27600	.28610	.11720	-.14260	.00900	-.00720	-.00730	.00250
3.791	3.961	.31500	.29460	.29000	.11910	-.15740	-.14510	.06420	.06300	-.02540
3.774	6.089	.31710	.29510	.29460	.11800	-.16120	-.23990	.10920	.10730	-.04280
	GRADIENT	.00260	.00264	-.00041	-.00004	-.00157	-.04034	.01839	.01811	-.00728

RUN NO. 1137/ 0 RN/L = 3.50 GRADIENT INTERVAL = -5.00/ 5.00

ALPHAO	BETAO	CNL	CNFL	CAL	CAFL	CLMFL	CYFL	CYNL	CYNFL	CBLFL
6.082	-5.825	.42450	.40280	.28980	.11400	-.20030	.25650	-.11800	-.11660	.04720
6.052	-3.780	.43250	.41160	.28700	.11420	-.20330	.16380	-.07600	-.07490	.03040
5.757	.158	.41520	.39500	.28210	.11320	- 19280	.00380	-.00470	-.00470	.00150
5.687	4.070	.42500	.40420	.28540	.11380	-.20010	-.14470	.06240	.06120	-.02550
5.758	6.033	.43630	.41470	.28720	.11470	-.20580	-.22700	.10210	.10050	-.04100
	GRADIENT	-.00096	-.00095	-.00020	-.00005	.00041	-.03930	.01763	.01734	-.00712

IA156A, AEDC PWT 16T-470, O T S W/SILTS (R8NV86) (10 MAY 80)

REFERENCE DATA

SREF = 2690.0000 SQ.FT. XMRP = 976.0000 IN. XT
LREF = 1290.3000 INCHES YMRP = .0000 IN. YT
BREF = 1290.3000 INCHES ZMRP = 400.0000 IN. ZT
SCALE = .0200

PARAMETRIC DATA

IB-ELV = 8.000 OB-ELV = 9.000
BDFLAP = .000 SPDBRK = .000
RUDDER = .000 SILTS = 1.000
MACH = .900 RN/L = 3.500

RUN NO. 1139/ 0 RN/L = 3.50 GRADIENT INTERVAL = -5.00/ 5.00

ALPHAO	BETAO	CNL	CNFL	CAL	CAFL	CLMFL	CYFL	CYNL	CYNFL	CBLFL
-8.106	-5.989	-.47170	-.49790	.35850	.14890	.14500	.28330	-.12450	-.12220	.03140
-8.269	-3.772	-.49170	-.51700	.35970	.15070	.15840	.17410	-.07490	-.07370	.01730
-8.177	.180	-.50820	-.53170	.35490	.14740	.17650	.00610	-.00470	-.00440	.00210
-7.996	4.388	-.47750	-.50280	.35770	.15020	.15260	-.18060	.07930	.07820	-.01950
-8.012	6.268	-.47680	-.50300	.35860	.14710	.14820	-.26550	.11670	.11460	-.03070
	GRADIENT	.00180	.00180	-.00024	-.00005	-.00076	-.04348	.01891	.01863	-.00452

IA156A, AEDC PWT 16T-470, O T S W/SILTS (RBNV86) (10 MAY 80)

REFERENCE DATA

SREF = 2690.0000 SQ.FT. XMRP = 976.0000 IN. XT
LREF = 1290.3000 INCHES YMRP = .0000 IN. YT
BREF = 1290.3000 INCHES ZMRP = 400.0000 IN. ZT
SCALE = .0200

PARAMETRIC DATA

IB-ELV = 8.000 OB-ELV = 9.000
BDFLAP = .000 SPDBRK = .000
RUDDER = .000 SILTS = 1.000
MACH = .900 RN/L = 3.500

RUN NO. 1140/ 0 RN/L = 3.50 GRADIENT INTERVAL = -5.00/ 5.00

ALPHAO	BETAO	CNL	CNFL	CAL	CAFL	CLMFL	CYFL	CYNL	CYNFL	CBLFL
-6.214	-5.990	-.34150	-.36730	.35820	.15280	.09620	.27890	-.12280	-.12050	.03380
-6.164	-4.072	-.34490	-.36970	.35820	.15590	.10220	.18760	-.08340	-.08210	.02190
-6.253	.100	-.36640	-.38930	.34910	.14990	.12200	.00260	-.00360	-.00340	.00100
-6.063	4.260	-.33510	-.35970	.35480	.15640	.10130	-.17050	.07310	.07190	-.02060
-5.777	6.360	-.31190	-.33760	.35720	.15480	.08960	-.26340	.11370	.11160	-.03410
	GRADIENT	.00117	.00120	-.00041	.00006	-.00011	-.04298	.01878	.01848	-.00510

RUN NO. 1141/ 0 RN/L = 3.50 GRADIENT INTERVAL = -5.00/ 5.00

ALPHAO	BETAO	CNL	CNFL	CAL	CAFL	CLMFL	CYFL	CYNL	CYNFL	CBLFL
-4.123	-6.093	-.20300	-.22860	.35790	.15580	.04630	.26920	-.11650	-.11430	.03580
-4.340	-4.003	-.22360	-.24790	.35600	.15930	.05830	.17320	-.07610	-.07480	.02180
-4.253	.378	-.22520	-.24760	.34290	.15120	06770	-.01130	.00280	.00290	-.00110
-3.800	4.332	-.18190	-.20630	.35080	.15630	.04570	-.17190	.07270	.07150	-.02340
-3.869	6.156	-.18510	-.21040	.35390	.15830	.04350	-.24920	.10720	.10520	-.03500
	GRADIENT	.00491	.00490	-.00067	-.00039	-.00145	-.04141	.01785	.01755	-.00542

RUN NO. 1142/ 0 RN/L = 3.50 GRADIENT INTERVAL = -5.00/ 5.00

ALPHAO	BETAO	CNL	CNFL	CAL	CAFL	CLMFL	CYFL	CYNL	CYNFL	CBLFL
-.404	-6.963	.01970	-.00530	.35360	.15490	-.04080	.30640	-.13290	-.13090	.04700
-.385	-4.826	.01700	-.00650	.34980	.15770	-.03850	.21210	-.09410	-.09250	.03260
-.354	-.537	.01400	-.00720	.33150	.14940	-.03540	.01960	-.00880	-.00870	.00320
-.319	3.586	.04480	.02240	.34200	.15190	-.05260	-.14460	.06410	.06300	-.02230
-.319	5.744	.04800	.02400	.34860	.15780	-.05390	-.23770	.10620	.10440	-.03710
	GRADIENT	.00328	.00341	-.00095	-.00070	-.00166	-.04242	.01881	.01849	-.00653

RUN NO. 1143/ 0 RN/L = 3.50 GRADIENT INTERVAL = -5.00/ 5.00

ALPHAO	BETAO	CNL	CNFL	CAL	CAFL	CLMFL	CYFL	CYNL	CYNFL	CBLFL
4.083	-5.726	.30390	.28040	.34170	.15410	-.14980	.26100	-.11680	-.11540	.04520
3.960	-3.778	.30230	.28000	.33630	.15130	-.15130	.17330	-.07950	-.07850	.02980
3.857	.180	.30330	.28190	.32520	.14580	-.15100	.01040	-.00750	-.00750	.00260
3.771	3.897	.31470	.29250	.33380	.15070	-.15730	-.14770	.06530	.06410	-.02410
3.758	6.064	.31090	.28650	.34110	.14930	-.15690	-.24750	.10990	.10800	-.04080
	GRADIENT	.00160	.00162	-.00035	-.00009	-.00077	-.04182	.01886	.01857	-.00702

IA156A, AEDC PWT 16T-470, O T S W/SILTS

(R8NV87) (10 MAY 80)

REFERENCE DATA

SREF = 2690.0000 SQ.FT. XMRP = 976.0000 IN. XT
LREF = 1290.3000 INCHES YMRP = .0000 IN. YT
BREF = 1290.3000 INCHES ZMRP = 400.0000 IN. ZT
SCALE = .0200

PARAMETRIC DATA

IB-ELV = 8.000 OB-ELV = 9.000
BDFLAP = .000 SPDBRK = .000
RUDDER = .000 SILTS = 1.000
MACH = .950 RN/L = 3.500

RUN NO. 1144/ 0 RN/L = 3.50 GRADIENT INTERVAL = -5.00/ 5.00

ALPHAO	BETAO	CNL	CNFL	CAL	CAFL	CLMFL	CYFL	CYNL	CYNFL	CBLFL
-8.259	-5.902	-.51260	-.54240	.40470	.17240	.16460	.29360	-.13000	-.12760	.03340
-8.255	-3.821	-.50980	-.53710	.40230	.18180	.16720	.18790	-.08120	-.08010	.01980
-8.175	.389	-.52500	-.55120	.40490	.17900	.18280	-.00590	.00130	.00130	.00090
-8.017	4.353	-.49870	-.52660	.40430	.17840	.16550	-.18900	.08300	.08200	-.02000
-8.001	6.248	-.50130	-.53070	.40380	.17640	.16230	-.28370	.12680	.12460	-.03200
	GRADIENT	.00131	.00124	.00025	-.00042	-.00017	-.04611	.02008	.01983	-.00487

RUN NO. 1145/ 0 RN/L = 3.50 GRADIENT INTERVAL = -5.00/ 5.00

ALPHAO	BETAO	CNL	CNFL	CAL	CAFL	CLMFL	CYFL	CYNL	CYNFL	CBLFL
-6.216	-5.993	-.35830	-.38680	.40400	.18160	.10760	.28980	-.12740	-.12500	.03540
-6.163	-4.073	-.35790	-.38490	.40330	.18530	.11120	.19170	-.08330	-.08200	.02200
-6.250	.107	-.37770	-.40240	.39960	.18530	12910	.00420	-.00470	-.00460	.00170
-6.075	4.266	-.35480	-.38240	.40360	.18040	.11550	-.17880	.07740	.07630	-.02130
-5.773	6.363	-.32570	-.35460	.40380	.18150	.10080	-.27670	.12140	.11910	-.03550
	GRADIENT	.00037	.00030	.00004	-.00059	.00052	-.04443	.01927	.01898	-.00519

RUN NO. 1146/ 0 RN/L = 3.49 GRADIENT INTERVAL = -5.00/ 5.00

ALPHAO	BETAO	CNL	CNFL	CAL	CAFL	CLMFL	CYFL	CYNL	CYNFL	CBLFL
-4.115	-6.097	-.21550	-.24340	.40230	.18370	.05710	.27780	-.12000	-.11760	.03670
-4.333	-4.005	-.23420	-.26020	.40030	.18690	.06850	.17460	-.07390	-.07260	.02090
-4.255	.374	-.23820	-.26360	.39520	.17980	.08220	-.01040	.00170	.00170	-.00030
-3.806	4.343	-.19320	-.21920	.39950	.18990	.06020	-.17730	.07600	.07460	-.02440
-3.876	6.157	-.20010	-.22800	.40110	.18360	.05840	-.26140	.11350	.11120	-.03680
	GRADIENT	.00481	.00481	-.00011	.00033	-.00092	-.04215	.01794	.01762	-.00542

RUN NO. 1147/ 0 RN/L = 3.49 GRADIENT INTERVAL = -5.00/ 5.00

ALPHAO	BETAO	CNL	CNFL	CAL	CAFL	CLMFL	CYFL	CYNL	CYNFL	CBLFL
-.416	-6.985	.01490	-.01300	.39760	.18120	-.02750	.30780	-.13070	-.12820	.04680
-.397	-4.840	.00820	-.01780	.39540	.18460	-.01990	.20940	-.09030	-.08830	.03170
-.367	-.542	.00080	-.02230	.38300	.18010	-.00940	.02070	-.00920	-.00890	.00200
-.331	3.582	.03250	.00770	.39130	.18570	-.02950	-.14840	.06650	.06510	-.02400
-.331	5.762	.03810	.01150	.39720	.18360	-.03510	-.24360	.10790	.10580	-.03940
	GRADIENT	.00285	.00300	-.00050	.00012	-.00111	-.04250	.01862	.01822	-.00661

IA156A, AEDC PWT 16T-470, O T S W/SILTS (R8NV87) (10 MAY 80)

REFERENCE DATA

SREF = 2690.0000 SQ.FT. XMRP = 976.0000 IN. XT
LREF = 1290.3000 INCHES YMRP = .0000 IN. YT
BREF = 1290.3000 INCHES ZMRP = 400.0000 IN. ZT
SCALE = .0200

PARAMETRIC DATA

IB-ELV = 8.000 OB-ELV = 9.000
BDFLAP = .000 SPDBRK = .000
RUDDER = .000 SILTS = 1.000
MACH = .950 RN/L = 3.500

RUN NO. 1148/ 0 RN/L = 3.49 GRADIENT INTERVAL = -5.00/ 5.00

ALPHAO	BETAO	CNL	CNFL	CAL	CAFL	CLMFL	CYFL	CYNL	CYNFL	CBLFL
3.978	-5.855	.28510	.25960	.38790	.17650	-.13250	.26660	-.11460	-.11280	.04560
3.964	-3.754	.28630	.26220	.37940	.17440	-.13540	.16840	-.07180	-.07070	.02760
3.852	.184	.28930	.26560	.36970	.17250	-.14000	.00740	-.00350	-.00350	.00130
3.794	3.946	.30580	.28160	.37510	.17450	-.14580	-.14750	.06170	.06040	-.02360
3.767	6.073	.30280	.27690	.38360	.17790	-.14170	-.24490	.10430	.10210	-.04100
	GRADIENT	.00252	.00251	-.00057	.00001	-.00135	-.04102	.01734	.01703	-.00665

IA156A, /EDC PWT 16T-470, O T S W/SILTS (R8NV88) (10 MAY 80)

REFERENCE DATA

SREF = 2690.0000 SQ.FT. XMRP = 976.0000 IN. XT
LREF = 1290.3000 INCHES YMRP = .0000 IN. YT
BREF = 1290.3000 INCHES ZMRP = 400.0000 IN. ZT
SCALE = .0200

PARAMETRIC DATA

IB-ELV = 8.000 OB-ELV = 9.000
BDFLAP = .000 SPDBRK = .000
RUDDER = .000 SILTS = 1.000
MACH = 1.050 RN/L = 3.500

RUN NO. 1149/ 0 RN/L = 3.50 GRADIENT INTERVAL = -5.00/ 5.00

ALPHAO	BETAO	CNL	CNFL	CAL	CAFL	CLMFL	CYFL	CYNL	CYNFL	CBLFL
-8.264	-5.919	-.57250	-.60970	.51810	.23250	.21380	.30500	-.12930	-.12670	.03470
-8.287	-3.832	-.58000	-.61730	.52400	.23730	.22480	.19710	-.08270	-.08130	.02040
-8.186	.397	-.58550	-.62040	.52470	.24060	.23190	-.00700	.00360	.00350	.00060
-8.011	4.342	-.57330	-.60900	.52230	.23880	.22370	-.19510	.08510	.08370	-.02100
-8.017	6.263	-.56830	-.60380	.51800	.23610	.21550	-.28720	.12340	.12090	-.03350
	GRADIENT	.00079	.00099	-.00020	.00019	-.00011	-.04799	.02053	.02018	-.00506

RUN NO. 1150/ 0 RN/L = 3.50 GRADIENT INTERVAL = -5.00/ 5.00

ALPHAO	BETAO	CNL	CNFL	CAL	CAFL	CLMFL	CYFL	CYNL	CYNFL	CBLFL
-6.217	-6.000	-.40050	-.43720	.51720	.23820	.15090	.29420	-.12340	-.12070	.03740
-6.143	-4.071	-.40240	-.43890	.52040	.24310	.15930	.19510	-.08120	-.07970	.02380
-6.263	.102	-.43290	-.46770	.52120	.24170	.18250	.00170	-.00110	-.00100	.00110
-6.050	4.276	-.40330	-.43770	.51950	.24320	.16350	-.18730	.08060	.07920	-.02400
-6.010	6.261	-.40100	-.43590	.51570	.24360	.15690	-.28200	.12120	.11870	-.03730
	GRADIENT	-.00011	.00014	-.00011	.00001	.00050	-.04581	.01938	.01904	-.00573

IA156A, AEDC PWT 16T-470, O T S W/SILTS (R8NV88) (10 MAY 80)

REFERENCE DATA

SREF = 2690.0000 SQ.FT. XMRP = 976.0000 IN. XT
LREF = 1290.3000 INCHES YMRP = .0000 IN. YT
BREF = 1290.3000 INCHES ZMRP = 400.0000 IN. ZT
SCALE = .0200

PARAMETRIC DATA

IB-ELV = 8.000 OB-ELV = 9.000
BDFLAP = .000 SPDBRK = .000
RUDDER = .000 SILTS = 1.000
MACH = 1.050 RN/L = 3.500

RUN NO. 1151/ 0 RN/L = 3.50 GRADIENT INTERVAL = -5.00/ 5.00

ALPHAO	BETAO	CNL	CNFL	CAL	CAFL	CLMFL	CYFL	CYNL	CYNFL	CBLFL
-4.122	-6.105	-.24690	-.28360	.51610	.24220	.09610	.28590	-.11840	-.11600	.04050
-4.348	-4.023	-.27380	-.31000	.51720	.24490	.11460	.18420	-.07760	-.07610	.02450
-4.265	.371	-.27750	-.31240	.51650	.24120	.12890	-.01150	.00470	.00460	-.00110
-3.797	4.336	-.23630	-.26950	.51350	.24970	.10650	-.18450	.07950	.07790	-.02720
-3.885	6.173	-.23880	-.27340	.51350	.24560	.10090	-.27040	.11570	.11340	-.04060
	GRADIENT	.00439	.00475	-.00044	.00055	-.00089	-.04412	.01879	.01842	-.00618

RUN NO. 1152/ 0 RN/L = 3.50 GRADIENT INTERVAL = -5.00/ 5.00

ALPHAO	BETAO	CNL	CNFL	CAL	CAFL	CLMFL	CYFL	CYNL	CYNFL	CBLFL
-.451	-7.057	.00430	-.03250	.51170	.24510	.00250	.32230	-.13520	-.13280	.05470
-.435	-4.891	-.00590	-.04250	.51170	.24090	.01450	.22080	-.09610	-.09420	.03790
-.409	-.539	-.01440	-.04850	.50990	.24020	.02660	.02770	-.01440	-.01430	.00410
-.376	3.592	.00880	-.02470	.51480	.24830	.01310	-.15260	.06990	.06830	-.02760
-.373	5.772	.01660	-.01770	.51770	.24850	.00550	-.24810	.11040	.10810	-.04420
	GRADIENT	.00170	.00207	.00036	.00086	-.00014	-.04402	.01956	.01915	-.00772

RUN NO. 1153/ 0 RN/L = 3.50 GRADIENT INTERVAL = -5.00/ 5.00

ALPHAO	BETAO	CNL	CNFL	CAL	CAFL	CLMFL	CYFL	CYNL	CYNFL	CBLFL
4.063	-5.735	.27790	.24270	.50200	.23700	-.10590	.26100	-.11280	-.11150	.04930
3.941	-3.723	.27220	.23800	.50100	.24190	-.10120	.17270	-.07590	-.07520	.03260
3.717	.017	.26980	.23660	.49560	.24040	-.09920	.01660	-.00970	-.00960	.00330
3.796	3.944	.29460	.26160	.49980	.23980	-.11520	-.15220	.06600	.06500	-.02820
3.767	6.061	.29280	.25880	.49990	.23940	-.11350	-.24640	.10430	.10290	-.04650
	GRADIENT	.00295	.00311	-.00015	-.00027	-.00184	-.04238	.01851	.01829	-.00793

IA156A FORCE DATA WITH FLOW ANGULARITY CORRECTION

IA156A, AEDC PWT 16T-470, O T S W/SILTS

(R8NV89) (10 MAY 80)

REFERENCE DATA

SREF = 2690.0000 SQ.FT.
LREF = 1290.3000 INCHES
BREF = 1290.3000 INCHES
SCALE = .0200

XMRP = 976.0000 IN. XT
YMRP = .0000 IN. YT
ZMRP = 400.0000 IN. ZT

PARAMETRIC DATA

IB-ELV = 8.000
BDFLAP = .000
RUDDER = .000
MACH = 1.100
OB-ELV = 9.000
SPDBRK = .000
SILTS = 1.000
RN/L = 3.500

RUN NO. 1154/ 0 RN/L = 3.50 GRADIENT INTERVAL = -5.00/ 5.00

ALPHAO	BETAO	CNL	CNFL	CAL	CAFL	CLMFL	CYFL	CYNL	CYNFL	CBLFL
-8.241	-5.914	-.55740	-.59020	.51030	.25440	.20530	.29220	-.12360	-.12120	.03290
-8.257	-3.818	-.56140	-.59410	.51420	.25730	.20990	.18650	-.07610	-.07470	.01910
-8.183	.180	-.56920	-.60010	.51200	.25460	.21790	.00020	-.00020	-.00030	.00120
-8.011	4.357	-.55280	-.58440	.51260	.25720	.20980	-.18920	.08070	.07930	-.02050
-8.012	6.257	-.55170	-.58380	.51000	.25400	.20630	-.28090	.11950	.11700	-.03290
	GRADIENT	.00107	.00121	-.00019	-.00001	-.00003	-.04595	.01918	.01884	-.00485

RUN NO. 1155/ 0 RN/L = 3.50 GRADIENT INTERVAL = -5.00/ 5.00

ALPHAO	BETAO	CNL	CNFL	CAL	CAFL	CLMFL	CYFL	CYNL	CYNFL	CBLFL
-6.202	-5.994	-.39460	-.42730	.50660	.25590	.13970	.28120	-.11530	-.11290	.03560
-6.179	-4.081	-.39910	-.43140	.50750	.25720	.14830	.18290	-.07420	-.07280	.02210
-6.274	.100	-.41490	-.44500	.50240	.25590	16420	-.00110	-.00060	-.00060	.00060
-6.064	4.280	-.38650	-.41670	.50580	.25830	.14880	-.18000	.07440	.07300	-.02320
-6.003	6.253	-.38140	-.41250	.50300	.24970	.14240	-.27120	.11350	.11110	-.03640
	GRADIENT	.00151	.00176	-.00020	.00013	.00006	-.04340	.01777	.01744	-.00542

RUN NO. 1156/ 0 RN/L = 3.50 GRADIENT INTERVAL = -5.00/ 5.00

ALPHAO	BETAO	CNL	CNFL	CAL	CAFL	CLMFL	CYFL	CYNL	CYNFL	CBLFL
-4.123	-6.105	-.23780	-.27020	.50360	.25820	.08280	.26750	-.10780	-.10580	.03870
-4.346	-4.020	-.26270	-.29430	.50030	.25920	.09890	.16750	-.06750	-.06620	.02260
-4.258	.363	-.25680	-.28660	.49500	.25830	.10850	-.01330	.00390	.00370	-.00120
-3.785	4.336	-.21190	-.24100	.49830	.26340	.08660	-.17640	.07210	.07070	-.02730
-3.802	6.170	-.21710	-.24750	.50200	.26370	.08300	-.25990	.10750	.10550	-.04060
	GRADIENT	.00600	.00630	-.00026	.00049	-.00141	-.04116	.01670	.01638	-.00596

RUN NO. 1157/ 0 RN/L = 3.50 GRADIENT INTERVAL = -5.00/ 5.00

ALPHAO	BETAO	CNL	CNFL	CAL	CAFL	CLMFL	CYFL	CYNL	CYNFL	CBLFL
-.456	-7.037	.00370	-.02870	.49930	.25750	-.00410	.30860	-.12530	-.12330	.05310
-.437	-4.905	-.00260	-.03410	.49240	.25960	.00450	.20740	-.08700	-.08530	.03660
-.402	-.515	-.00180	-.03080	.48800	.25430	.00930	.02210	-.01100	-.01090	.00320
-.373	3.594	.01560	-.01220	.49080	.26530	-.00060	-.15030	.06710	.06550	-.02770
-.369	5.774	.02200	-.00680	.49320	.26230	-.00740	-.24510	.10650	.10430	-.04440
	GRADIENT	.00212	.00256	-.00020	.00065	-.00058	-.04209	.01812	.01773	-.00757

IA156A, AEDC PWT 16T-470, O T S W/SILTS (R8NV89) (10 MAY 80)

REFERENCE DATA

SREF = 2690.0000 SQ.FT. XMRP = 976.0000 IN. XT
LREF = 1290.3000 INCHES YMRP = .0000 IN. YT
BREF = 1290.3000 INCHES ZMRP = 400.0000 IN. ZT
SCALE = .0200

PARAMETRIC DATA

IB-ELV = 8.000 OB-ELV = 9.000
BDFLAP = .000 SPDBRK = .000
RUDDER = .000 SILTS = 1.000
MACH = 1.100 RN/L = 3.500

RUN NO. 1158/ 0 RN/L = 3.50 GRADIENT INTERVAL = -5.00/ 5.00

ALPHAO	BETAO	CNL	CNFL	CAL	CAFL	CLMFL	CYFL	CYNL	CYNFL	CBLFL
3.961	-5.845	.28610	.25670	.48020	.25500	-.11680	.26270	-.11240	-.11110	.04920
3.944	-3.745	.28820	.25960	.48020	.25810	-.11600	.17340	-.07670	-.07610	.03220
3.822	.184	.28330	.25420	.47820	.25460	-.10870	.00350	-.00480	-.00480	.00120
3.780	3.932	.29530	.26790	.47710	.25270	-.11990	-.15440	.06510	.06420	-.02860
3.771	6.068	.29620	.26810	.47930	.25760	-.12300	-.24690	.10240	.10100	-.04590
	GRADIENT	.00091	.00106	-.00040	-.00070	-.00049	-.04270	.01847	.01827	-.00792

IA156A, AEDC PWT 16T-470, O T S W/SILTS (R8NV90) (10 MAY 80)

REFERENCE DATA

SREF = 2690.0000 SQ.FT. XMRP = 976.0000 IN. XT
LREF = 1290.3000 INCHES YMRP = .0000 IN. YT
BREF = 1290.3000 INCHES ZMRP = 400.0000 IN. ZT
SCALE = .0200

PARAMETRIC DATA

IB-ELV = 8.000 OB-ELV = 9.000
BDFLAP = .000 SPDBRK = .000
RUDDER = .000 SILTS = 1.000
MACH = 1.150 RN/L = 3.500

RUN NO. 1159/ 0 RN/L = 3.49 GRADIENT INTERVAL = -5.00/ 5.00

ALPHAO	BETAO	CNL	CNFL	CAL	CAFL	CLMFL	CYFL	CYNL	CYNFL	CBLFL
-8.245	-5.924	-.55070	-.58200	.50840	.26470	.19760	.29880	-.12400	-.12180	.03480
-8.273	-3.821	-.56330	-.59440	.51030	.26670	.20960	.19200	-.07850	-.07700	.02020
-8.197	.395	-.57700	-.60550	.50720	.26960	.22080	-.00320	.00070	.00060	.00080
-8.012	4.342	-.56480	-.59420	.50840	.26890	.21650	-.18050	.07560	.07430	-.01950
-8.013	6.266	-.56040	-.58990	.50420	.26640	.20940	-.27330	.11510	.11300	-.03200
	GRADIENT	-.00022	-.00001	-.00024	.00027	.00087	-.04564	.01888	.01853	-.00486

RUN NO. 1160/ 0 RN/L = 3.50 GRADIENT INTERVAL = -5.00/ 5.00

ALPHAO	BETAO	CNL	CNFL	CAL	CAFL	CLMFL	CYFL	CYNL	CYNFL	CBLFL
-6.211	-6.001	-.38310	-.41400	.50470	.26660	.13250	.28400	-.11630	-.11400	.03780
-6.157	-4.080	-.39120	-.42120	.50500	.27050	.14240	.18760	-.07610	-.07470	.02360
-6.277	.102	-.41870	-.44650	.49890	.26570	.16600	.00580	-.00490	-.00500	.00160
-6.058	4.283	-.39160	-.42000	.50250	.27170	.15160	-.17760	.07170	.07040	-.02340
-6.000	6.253	-.38510	-.41430	.50250	.27240	.14290	-.26850	.11100	.10880	-.03680
	GRADIENT	-.00005	.00014	-.00030	.00014	.00110	-.04367	.01767	.01735	-.00562

IA156A. AEDC PWT 16T-470, O T S W/SILTS (R8NV90) (10 MAY 80)

REFERENCE DATA

SREF = 2690.0000 SQ.FT. XMRP = 976.0000 IN. XT
LREF = 1290.3000 INCHES YMRP = .0000 IN. YT
BREF = 1290.3000 INCHES ZMRP = 400.0000 IN. ZT
SCALE = .0200

PARAMETRIC DATA

IB-ELV = 8.000 OB-ELV = 9.000
BDFLAP = .000 SPOBRK = .000
RUDDER = .000 SILTS = 1.000
MACH = 1.150 RN/L = 3.500

RUN NO. 1161/ 0 RN/L = 3.50 GRADIENT INTERVAL = -5.00/ 5.00

ALPHAO	BETAO	CNL	CNFL	CAL	CAFL	CLMFL	CYFL	CYNL	CYNFL	CBLFL
-4.119	-6.114	-.22560	-.25600	.50330	.27260	.07490	.27360	-.11090	-.10890	.04120
-4.340	-4.024	-.24360	-.27330	.49940	.27220	.08640	.17700	-.07350	-.07220	.02580
-4.279	.374	-.25570	-.28340	.49350	.26930	.10510	-.00760	.00020	.00010	-.00050
-3.795	4.332	-.22010	-.24730	.49860	.27680	.08950	-.17310	.07010	.06880	-.02750
-3.894	6.179	-.22670	-.25520	.50000	.27530	.08810	-.25470	.10410	.10210	-.04020
	GRADIENT	.00271	.00301	-.00012	.00053	.00044	-.04190	.01718	.01687	-.00637

RUN NO. 1162/ 0 RN/L = 3.49 GRADIENT INTERVAL = -5.00/ 5.00

ALPHAO	BETAO	CNL	CNFL	CAL	CAFL	CLMFL	CYFL	CYNL	CYNFL	CBLFL
-.448	-7.070	.01720	-.01350	.49910	.26790	-.01200	.31160	-.12880	-.12660	.05380
-.413	-4.929	.02330	-.00660	.49610	.27510	-.01210	.21030	-.08970	-.08810	.03690
-.378	-.504	.02750	-.00010	.49300	.27420	-.01190	.02070	-.01010	-.01010	.00280
-.348	3.596	.04120	.01460	.49540	.27790	-.01690	-.15070	.06790	.06640	-.02810
-.358	5.780	.03940	.01170	.49770	.27860	-.01790	-.24640	.10660	.10450	-.04490
	GRADIENT	.00208	.00247	-.00009	.00032	-.00055	-.04235	.01848	.01812	-.00763

RUN NO. 1163/ 0 RN/L = 3.50 GRADIENT INTERVAL = -5.00/ 5.00

ALPHAO	BETAO	CNL	CNFL	CAL	CAFL	CLMFL	CYFL	CYNL	CYNFL	CBLFL
3.969	-5.846	.27830	.25030	.48570	.26930	-.11190	.27030	-.11820	-.11690	.05070
3.937	-3.734	.28160	.25320	.48730	.26940	-.11030	.17960	-.08350	-.08280	.03340
3.820	.186	.28670	.25890	.48330	.26620	-.11040	.01370	-.01280	-.01270	.00280
3.826	3.967	.30870	.28230	.48370	.27280	-.12900	-.14780	.06170	.06080	-.02770
3.727	6.007	.30590	.27890	.48590	.27260	-.12970	-.24020	.10030	.09900	-.04560
	GRADIENT	.00351	.00376	-.00047	.00043	-.00241	-.04252	.01885	.01864	-.00793

IA156A, AEDC PWT 16T-470, O T S W/SILTS (R8NV91) (10 MAY 80)

REFERENCE DATA

SREF = 2690.0000 SQ.FT. XMRP = 976.0000 IN. XT
LREF = 1290.3000 INCHES YMRP = .0000 IN. YT
BREF = 1290.3000 INCHES ZMRP = 400.0000 IN. ZT
SCALE = .0200

PARAMETRIC DATA

IB-ELV = 8.000 OB-ELV = 9.000
BDFLAP = .000 SPDBRK = .000
RUDDER = .000 SILTS = 1.000
MACH = 1.250 RN/L = 3.500

RUN NO. 1164/ 0 RN/L = 3.50 GRADIENT INTERVAL = -5.00/ 5.00

ALPHAO	BETAO	CNL	CNFL	CAL	CAFL	CLMFL	CYFL	CYNL	CYNFL	CBLFL
-8.253	-5.912	-.55100	-.57850	.49630	.27610	.19850	.28730	-.11720	-.11530	.03480
-8.266	-3.806	-.55570	-.58260	.49810	.27940	.20560	.17740	-.06840	-.06700	.02060
-8.197	.403	-.56110	-.58680	.49740	.27930	.21220	-.00960	.00650	.00640	.00020
-8.008	4.363	-.53850	-.56450	.49630	.28350	.19940	-.18760	.08030	.07910	-.02220
-8.020	6.274	-.54270	-.57000	.49680	.27990	.19570	-.27960	.12000	.11810	-.03450
	GRADIENT	.00207	.00218	-.00022	.00050	-.00073	-.04468	.01820	.01788	-.00523

RUN NO. 1165/ 0 RN/L = 3.50 GRADIENT INTERVAL = -5.00/ 5.00

ALPHAO	BETAO	CNL	CNFL	CAL	CAFL	CLMFL	CYFL	CYNL	CYNFL	CBLFL
-6.244	-6.014	-.38610	-.41320	.49470	.28190	.13300	.27200	-.10950	-.10760	.03710
-6.183	-4.077	-.38490	-.41180	.49570	.28190	.13800	.17560	-.06890	-.06770	.02360
-6.278	.117	-.39860	-.42390	.49290	.28180	15060	-.00540	.00380	.00380	.00060
-6.050	4.293	-.37240	-.39810	.49420	.28450	.13470	-.18180	.07700	.07590	-.02460
-6.001	6.271	-.37380	-.40080	.49490	.28150	.13120	-.27270	.11550	.11360	-.03760
	GRADIENT	.00149	.00163	-.00018	.00031	-.00039	-.04270	.01743	.01716	-.00576

RUN NO. 1166/ 0 RN/L = 3.49 GRADIENT INTERVAL = -5.00/ 5.00

ALPHAO	BETAO	CNL	CNFL	CAL	CAFL	CLMFL	CYFL	CYNL	CYNFL	CBLFL
-4.135	-6.129	-.23290	-.26080	.49570	.28200	.07710	.26490	-.10660	-.10480	.03990
-4.339	-4.003	-.24740	-.27410	.49290	.28140	.08660	.16130	-.06380	-.06280	.02380
-4.265	.380	-.23460	-.26000	.48860	.28290	.08610	-.01820	.00880	.00870	-.00180
-3.793	4.340	-.19830	-.22340	.49410	.29030	.06990	-.17460	.07350	.07240	-.02660
-3.889	6.192	-.21020	-.23680	.49480	.28610	.07240	-.25640	.10760	.10590	-.03930
	GRADIENT	.00583	.00603	.00012	.00105	-.00197	-.04028	.01646	.01621	-.00604

RUN NO. 1167/ 0 RN/L = 3.50 GRADIENT INTERVAL = -5.00/ 5.00

ALPHAO	BETAO	CNL	CNFL	CAL	CAFL	CLMFL	CYFL	CYNL	CYNFL	CBLFL
-.478	-7.082	.00780	-.02020	.49330	.28260	-.00880	.30920	-.12790	-.12600	.05170
-.444	-4.897	.01300	-.01380	.49180	.28530	-.00840	.20310	-.08540	-.08400	.03440
-.399	-.550	.02290	-.00200	.48600	.28790	-.01150	.02000	-.00890	-.00890	.00270
-.376	3.595	.03420	.00920	.48910	.28260	-.01550	-.15030	.06680	.06540	-.02680
-.383	5.801	.03010	.00510	.49110	.28900	-.01490	-.24550	.10480	.10290	-.04260
	GRADIENT	.00249	.00271	-.00033	-.00031	-.00084	-.04162	.01792	.01759	-.00721

IA156A, AEDC PWT 16T-470, O T S W/SILTS (R8NV91) (10 MAY 80)

REFERENCE DATA

SREF = 2690.0000 SQ.FT. XMRP = 976.0000 IN. XT
LREF = 1290.3000 INCHES YMRP = .0000 IN. YT
BREF = 1290.3000 INCHES ZMRP = 400.0000 IN. ZT
SCALE = .0200

PARAMETRIC DATA

IB-ELV = 8.000 OB-ELV = 9.000
BDFLAP = .000 SPDBRK = .000
RUDDER = .000 SILTS = 1.000
MACH = 1.250 RN/L = 3.500

RUN NO. 1168/ 0 RN/L = 3.49 GRADIENT INTERVAL = -5.00/ 5.00

ALPHAO	BETAO	CNL	CNFL	CAL	CAFL	CLMFL	CYFL	CYNL	CYNFL	CBLFL
4.077	-5.702	.30220	.27660	.48420	.28700	-.12780	.25920	-.11420	-.11320	.04770
3.954	-3.767	.29790	.27220	.48430	.28730	-.12420	.17440	-.08000	-.07940	.03230
3.808	.180	.29050	.26500	.47900	.28160	-.11540	.00430	-.00610	-.00610	.00130
3.745	3.875	.29640	.27200	.48050	.28590	-.12290	-.15440	.06870	.06780	-.02820
3.771	6.090	.29390	.26910	.48080	.28580	-.12390	-.25330	.10920	.10780	-.04600
	GRADIENT	-.00022	-.00005	-.00051	-.00020	.00019	-.04303	.01945	.01925	-.00792

IA156A, AEDC PWT 16T-470, O T S W/SILTS (R8NV92) (10 MAY 80)

REFERENCE DATA

SREF = 2690.0000 SQ.FT. XMRP = 976.0000 IN. XT
LREF = 1290.3000 INCHES YMRP = .0000 IN. YT
BREF = 1290.3000 INCHES ZMRP = 400.0000 IN. ZT
SCALE = .0200

PARAMETRIC DATA

IB-ELV = 8.000 OB-ELV = 5.000
BDFLAP = .000 SPDBRK = .000
RUDDER = .000 SILTS = 1.000
MACH = .600 RN/L = 3.500

RUN NO. 1173/ 0 RN/L = 3.50 GRADIENT INTERVAL = -5.00/ 5.00

ALPHAO	BETAO	CNL	CNFL	CAL	CAFL	CLMFL	CYFL	CYNL	CYNFL	CBLFL
-8.025	-7.908	-.43370	-.45740	.28360	.08310	.12890	.33030	-.13890	-.13580	.03850
-8.116	-5.784	-.45740	-.48090	.28360	.08530	.14180	.24110	-.10250	-.10030	.02750
-8.121	-3.803	-.45110	-.47320	.28450	.09530	.14250	.15490	-.06520	-.06390	.01630
-8.048	.275	-.46490	-.48530	.28230	.09330	.15640	-.00990	.00480	.00480	-.00120
-7.900	4.226	-.43880	-.46030	.28520	.09750	.13980	-.15980	.07130	.07010	-.01910
-7.898	6.164	-.43380	-.45680	.28530	.09350	.13540	-.23490	.10320	.10100	-.02840
-7.725	8.229	-.42950	-.45270	.28780	.09160	.13470	-.31580	.13670	.13390	-.03810
	GRADIENT	.00151	.00158	.00008	.00027	-.00032	-.03920	.01700	.01669	-.00441

RUN NO. 1174/ 0 RN/L = 3.49 GRADIENT INTERVAL = -5.00/ 5.00

ALPHAO	BETAO	CNL	CNFL	CAL	CAFL	CLMFL	CYFL	CYNL	CYNFL	CBLFL
-6.148	-7.913	-.32030	-.34360	.28480	.09080	.08830	.32850	-.13810	-.13530	.04120
-6.110	-5.932	-.32940	-.35290	.28740	.09280	.09370	.24130	-.10290	-.10060	.03000
-6.066	-3.987	-.33070	-.35240	.28830	.10360	.09780	.15690	-.06710	-.06580	.01890
-6.110	.107	-.34110	-.36120	.28290	.10120	.11030	-.00220	.00000	.00000	-.00010
-5.962	4.196	-.31790	-.33940	.28940	.10490	.09880	-.15590	.06810	.06680	-.02040
-5.737	6.239	-.29590	-.31820	.28970	.10550	.08730	-.23640	.10340	.10130	-.03180
-5.875	8.145	-.32170	-.34470	.28760	.09720	.09750	-.30760	.13280	.13020	-.04020
	GRADIENT	.00156	.00159	.00013	.00016	.00012	-.03823	.01652	.01620	-.00480

IA156A, AEDC PWT 16T-470, O T S W/SILTS (R8NV92) (10 MAY 80)

REFERENCE DATA

SREF = 2690.0000 SQ.FT. XMRP = 976.0000 IN. XT
LREF = 1290.3000 INCHES YMRP = .0000 IN. YT
BREF = 1290.3000 INCHES ZMRP = 400.0000 IN. ZT
SCALE = .0200

PARAMETRIC DATA

IB-ELV = 8.000 OB-ELV = 5.000
BDFLAP = .000 SPDBRK = .000
RUDDER = .000 SILTS = 1.000
MACH = .600 RN/L = 3.500

RUN NO. 1175/ 0 RN/L = 3.49 GRADIENT INTERVAL = -5.00/ 5.00

ALPHAO	BETAO	CNL	CNFL	CAL	CAFL	CLMFL	CYFL	CYNL	CYNFL	CBLFL
-4.027	-8.037	-.19930	-.22300	.28780	.09600	.04590	.32640	-.13790	-.13530	.04440
-4.229	-5.935	-.21980	-.24200	.28690	.10350	.05600	.23230	-.09840	-.09630	.03150
-4.242	-3.901	-.22410	-.24620	.28810	.10350	.06120	.14580	-.06250	-.06120	.01910
-4.043	.175	-.21300	-.23270	.28520	.10970	.06450	-.00420	.00020	.00000	.00010
-3.706	4.278	-.18010	-.20110	.28970	.11250	.05190	-.15620	.06770	.06630	-.02230
-3.658	6.060	-.17870	-.20040	.29030	.11040	.04880	-.22340	.09720	.09520	-.03260
-3.824	8.031	-.19180	-.21440	.29060	.10300	.05170	-.30130	.13080	.12850	-.04300
	GRADIENT	.00538	.00552	.00020	.00110	-.00114	-.03692	.01592	.01559	-.00506

RUN NO. 1176/ 0 RN/L = 3.49 GRADIENT INTERVAL = -5.00/ 5.00

ALPHAO	BETAO	CNL	CNFL	CAL	CAFL	CLMFL	CYFL	CYNL	CYNFL	CBLFL
-.373	-8.758	-.01740	-.03970	.28430	.09890	-.01580	.36220	-.15630	-.15420	.05370
-.357	-6.585	-.02310	-.04460	.28460	.10610	-.01010	.26240	-.11410	-.11200	.03990
-.346	-4.536	-.02830	-.04880	.28490	.11120	-.00570	.17720	-.07800	-.07640	.02680
-.319	-.396	-.02710	-.04600	.28300	.11130	-.00080	.01360	-.00590	-.00600	.00180
-.289	3.682	.00090	-.01880	.28430	.11430	-.01580	-.13500	.06110	.05980	-.02130
-.286	5.791	.00520	-.01550	.28600	.11230	-.02060	-.21680	.09800	.09610	-.03420
-.275	7.868	.01790	-.00430	.28890	.10860	-.02640	-.29740	.13310	.13090	-.04740
	GRADIENT	.00355	.00364	-.00007	.00038	-.00122	-.03799	.01603	.01657	-.00585

RUN NO. 1177/ 0 RN/L = 3.50 GRADIENT INTERVAL = -5.00/ 5.00

ALPHAO	BETAO	CNL	CNFL	CAL	CAFL	CLMFL	CYFL	CYNL	CYNFL	CBLFL
4.089	-8.005	.22580	.20430	.27130	.09540	-.10160	.33190	-.14950	-.14790	.05840
4.083	-5.781	.23020	.20950	.27080	.09960	-.10110	.24340	-.11170	-.11030	.04370
4.051	-3.799	.23060	.21090	.27070	.10180	-.09830	.15800	-.07370	-.07270	.02830
3.835	.083	.21260	.19370	.26770	.10080	-.08760	.01510	-.01070	-.01080	.00260
3.900	4.057	.24420	.22510	.26990	.09980	-.10500	-.13600	.05900	.05780	-.02510
3.844	6.165	.24900	.22820	.27110	.10120	-.11030	-.22670	.10100	.09920	-.04160
3.835	8.163	.25520	.23410	.27210	.09960	-.11530	-.30170	.13410	.13220	-.05490
	GRADIENT	.00176	.00183	-.00010	-.00025	-.00087	-.03743	.01689	.01661	-.00680

IA156A, AEDC PWT 16T-470, O T S W/SILTS (R8NV92) (10 MAY 80)

REFERENCE DATA

SREF = 2690.0000 SQ.FT. XMRP = 976.0000 IN. XT
LREF = 1290.3000 INCHES YMRP = .0000 IN. YT
BREF = 1290.3000 INCHES ZMRP = 400.0000 IN. ZT
SCALE = .0200

PARAMETRIC DATA

IB-ELV = 8.000 OB-ELV = 5.000
BDFLAP = .000 SPDBRK = .000
RUDDER = .000 SILTS = 1.000
MACH = .600 RN/L = 3.500

RUN NO. 1178/ 0 RN/L = 3.51 GRADIENT INTERVAL = -5.00/ 5.00

ALPHAO	BETAO	CNL	CNFL	CAL	CAFL	CLMFL	CYFL	CYNL	CYNFL	CBLFL
6.194	-7.953	.35340	.33220	.26400	.08990	-.15160	.33380	-.14980	-.14840	.06250
6.164	-5.881	.35800	.33730	.26420	.09500	-.15150	.24250	-.11010	-.10880	.04640
6.145	-3.824	.35250	.33280	.26350	.09590	-.14670	.16410	-.07510	-.07420	.03120
5.867	.188	.33260	.31380	.26470	.09850	-.13280	.00530	-.00520	-.00530	.00100
5.796	4.071	.34300	.32450	.26310	.09810	-.14290	-.13860	.05880	.05790	-.02630
5.752	5.986	.35550	.33510	.26410	.09620	-.15130	-.21430	.09450	.09300	-.04120
5.824	8.273	.36860	.34730	.26420	.09170	-.16060	-.30480	.13500	.13330	-.05780
	GRADIENT	-.00122	-.00107	-.00005	.00028	.00050	-.03835	.01696	.01673	-.00728

RUN NO. 1179/ 0 RN/L = 3.50 GRADIENT INTERVAL = -5.00/ 5.00

ALPHAO	BETAO	CNL	CNFL	CAL	CAFL	CLMFL	CYFL	CYNL	CYNFL	CBLFL
8.083	-7.803	.47030	.44920	.25270	.07830	-.19740	.31310	-.13830	-.13700	.06240
8.000	-5.751	.46280	.44230	.25350	.08450	-.19230	.22820	-.10070	-.09960	.04560
7.965	-3.753	.46060	.44110	.25380	.08820	-.18840	.14510	-.06440	-.06350	.02990
7.877	.175	.45040	.43180	.25580	.08940	-.17780	.00610	-.00480	-.00490	.00190
7.923	4.198	.47360	.45460	.25490	.09030	-.19270	-.13400	.05550	.05450	-.02680
7.890	6.206	.48340	.46320	.25430	.08690	-.20110	-.20950	.09010	.08870	-.04250
7.883	8.226	.48140	.46070	.25470	.08260	-.20440	-.29770	.13050	.12910	-.05880
	GRADIENT	.00165	.00171	.00014	.00026	-.00055	-.03510	.01508	.01484	-.00713

IA156A, AEDC PWT 16T-470, O T S W/SILTS (R8NV93) (10 MAY 80)

REFERENCE DATA

SREF = 2690.0000 SQ.FT. XMRP = 976.0000 IN. XT
LREF = 1290.3000 INCHES YMRP = .0000 IN. YT
BREF = 1290.3000 INCHES ZMRP = 400.0000 IN. ZT
SCALE = .0200

PARAMETRIC DATA

IB-ELV = 8.000 OB-ELV = 5.000
BDFLAP = .000 SPDBRK = .000
RUDDER = .000 SILTS = 1.000
MACH = .800 RN/L = 3.500

RUN NO. 1180/ 0 RN/L = 3.49 GRADIENT INTERVAL = -5.00/ 5.00

ALPHAO	BETAO	CNL	CNFL	CAL	CAFL	CLMFL	CYFL	CYNL	CYNFL	CBLFL
-8.230	-5.879	-.46120	-.48530	.31310	.11380	.13640	.26060	-.11470	-.11210	.02840
-8.259	-3.819	-.46690	-.49030	.31700	.12210	.14370	.16840	-.07340	-.07190	.01680
-8.164	.382	-.48390	-.50570	.31230	.11890	.16070	-.01020	.00470	.00480	-.00050
-7.986	4.361	-.45010	-.47320	.31440	.11990	.13620	-.17410	.07920	.07800	-.02040
-8.003	6.266	-.44670	-.47070	.31320	.11930	.13110	-.25160	.11220	.11000	-.02990
	GRADIENT	.00200	.00204	-.00033	-.00027	-.00087	-.04188	.01866	.01833	-.00454

RUN NO. 1181/ 0 RN/L = 3.50 GRADIENT INTERVAL = -5.00/ 5.00

ALPHAO	BETAO	CNL	CNFL	CAL	CAFL	CLMFL	CYFL	CYNL	CYNFL	CBLFL
-6.206	-5.984	-.32590	-.34940	.31310	.12130	.08720	.26400	-.11600	-.11340	.03140
-6.149	-4.060	-.33090	-.35430	.31450	.12390	.09470	.17520	-.07760	-.07600	.01990
-6.237	.107	-.34750	-.36860	.30820	.11950	.10880	-.00130	-.00020	-.00010	.00020
-6.056	4.261	-.31890	-.34150	.31380	.12500	.09130	-.16730	.07520	.07400	-.02130
-5.762	6.342	-.29400	-.31770	.31400	.12580	.07770	-.25140	.11210	.10990	-.03290
	GRADIENT	.00144	.00154	-.00008	.00013	-.00041	-.04116	.01836	.01803	-.00495

RUN NO. 1182/ 0 RN/L = 3.50 GRADIENT INTERVAL = -5.00/ 5.00

ALPHAO	BETAO	CNL	CNFL	CAL	CAFL	CLMFL	CYFL	CYNL	CYNFL	CBLFL
-4.283	-6.020	-.21330	-.23680	.31200	.12330	.04820	.25480	-.11150	-.10910	.03310
-4.316	-3.984	-.21730	-.23960	.31290	.12960	.05420	.16060	-.07090	-.06940	.01980
-4.232	.381	-.21180	-.23260	.30630	.12630	.05820	-.01380	.00570	.00560	-.00120
-3.800	4.338	-.17680	-.19880	.31250	.13070	.04140	-.17000	.07700	.07570	-.02380
-3.862	6.153	-.18100	-.20400	.31220	.12810	.03950	-.24670	.11090	.10890	-.03440
	GRADIENT	.00480	.00485	-.00007	.00012	-.00150	-.03973	.01777	.01743	-.00523

RUN NO. 1183/ 0 RN/L = 3.50 GRADIENT INTERVAL = -5.00/ 5.00

ALPHAO	BETAO	CNL	CNFL	CAL	CAFL	CLMFL	CYFL	CYNL	CYNFL	CBLFL
-.385	-6.929	.00510	-.01720	.30890	.12640	-.03180	.29640	-.13190	-.12980	.04400
-.382	-4.788	-.00200	-.02330	.30620	.12810	-.02780	.20330	-.09160	-.09000	.02940
-.348	-.519	-.00290	-.02280	.29690	.12700	-.02230	.01940	-.00850	-.00840	.00200
-.317	3.586	.02370	.00290	.30430	.13150	-.03740	-.14400	.06650	.06530	-.02200
-.315	5.721	.02920	.00710	.30830	.13040	-.04090	-.23450	.10780	.10600	-.03600
	GRADIENT	.00305	.00311	-.00024	.00040	-.00113	-.04149	.01889	.01855	-.00614

IA156A, AEDC PWT 16T-470, O T S W/SILTS (R8NV93) (10 MAY 80)

REFERENCE DATA

SREF = 2690.0000 SQ.FT. XMRP = 976.0000 IN. XT
LREF = 1290.3000 INCHES YMRP = .0000 IN. YT
BREF = 1290.3000 INCHES ZMRP = 400.0000 IN. ZT
SCALE = .0200

PARAMETRIC DATA

IB-ELV = 8.000 OB-ELV = 5.000
BDFLAP = .000 SPDBRK = .000
RUDDER = .000 SILTS = 1.000
MACH = .800 RN/L = 3.500

RUN NO. 1184/ 0 RN/L = 3.50 GRADIENT INTERVAL = -5.00/ 5.00

ALPHAO	BETAO	CNL	CNFL	CAL	CAFL	CLMFL	CYFL	CYNL	CYNFL	CBLFL
4.095	-5.771	.27550	.25380	.29490	.11990	-.13130	.26160	-.11990	-.11840	.04660
3.965	-3.678	.26670	.24660	.29170	.12200	-.12500	.16440	-.07670	-.07570	.02890
3.727	.120	.25600	.23600	.28490	.11820	-.11640	.01420	-.00920	-.00930	.00220
3.811	4.005	.28940	.26920	.28980	.12120	-.13630	-.14540	.06510	.06390	-.02640
3.769	6.084	.29090	.26920	.29360	.11830	-.14030	-.23950	.10930	.10750	-.04330
	GRADIENT	.00298	.00296	-.00024	-.00010	-.00148	-.04032	.01846	.01817	-.00720

RUN NO. 1185/ 0 RN/L = 3.50 GRADIENT INTERVAL = -5.00/ 5.00

ALPHAO	BETAO	CNL	CNFL	CAL	CAFL	CLMFL	CYFL	CYNL	CYNFL	CBLFL
6.095	-5.818	.40190	.38010	.28840	.11220	-.18260	.25460	-.11710	-.11570	.04610
6.044	-3.784	.40320	.38260	.28710	.11680	-.18210	.17130	-.07930	-.07830	.03020
5.748	.159	.38350	.36360	.28060	.11170	-.16840	.00520	-.00460	-.00460	.00110
5.691	3.986	.39880	.37830	.28400	.11600	-.17930	-.13970	.06050	.05940	-.02570
5.834	6.160	.41860	.39700	.28770	.11430	-.18960	-.22980	.10400	.10240	-.04240
	GRADIENT	-.00059	-.00058	-.00041	-.00011	.00038	-.04003	.01800	.01773	-.00720

IA156A, AEDC PWT 16T-470, O T S W/SILTS (R8NV94) (10 MAY 80)

REFERENCE DATA

SREF = 2690.0000 SQ.FT. XMRP = 976.0000 IN. XT
LREF = 1290.3000 INCHES YMRP = .0000 IN. YT
BREF = 1290.3000 INCHES ZMRP = 400.0000 IN. ZT
SCALE = .0200

PARAMETRIC DATA

IB-ELV = 8.000 OB-ELV = 5.000
BDFLAP = .000 SPDBRK = .000
RUDDER = .000 SILTS = 1.000
MACH = .900 RN/L = 3.500

RUN NO. 1186/ 0 RN/L = 3.50 GRADIENT INTERVAL = -5.00/ 5.00

ALPHAO	BETAO	CNL	CNFL	CAL	CAFL	CLMFL	CYFL	CYNL	CYNFL	CBLFL
-8.190	-5.916	-.48620	-.51300	.35780	.14170	.15460	.28370	-.12590	-.12360	.03110
-8.261	-3.757	-.50420	-.53000	.36060	.15000	.16720	.17770	-.07740	-.07620	.01720
-8.166	.176	-.51470	-.53790	.35420	.14760	.18130	.00690	-.00530	-.00510	.00210
-8.002	4.417	-.48280	-.50810	.35760	.13990	.15810	-.18630	.08240	.08120	-.02050
-8.004	6.263	-.48260	-.50890	.35970	.15160	.15480	-.26850	.11890	.11690	-.03160
	GRADIENT	.00268	.00274	-.00035	-.00124	-.00117	-.04455	.01956	.01927	-.00462

IA156A, AEDC PWT 16T-470, O T S W/SILTS (R8NV94) (10 MAY 80)

REFERENCE DATA

SREF = 2690.0000 SQ.FT. XMRP = 976.0000 IN. XT
LREF = 1290.3000 INCHES YMRP = .0000 IN. YT
BREF = 1290.3000 INCHES ZMRP = 400.0000 IN. ZT
SCALE = .0200

PARAMETRIC DATA

IB-ELV = 8.000 OB-ELV = 5.000
BDFLAP = .000 SPDBRK = .000
RUDDER = .000 SILTS = 1.000
MACH = .900 RN/L = 3.500

RUN NO. 1187/ 0 RN/L = 3.50 GRADIENT INTERVAL = -5.00/ 5.00

ALPHAO	BETAO	CNL	CNFL	CAL	CAFL	CLMFL	CYFL	CYNL	CYNFL	CBLFL
-6.212	-5.982	-.35490	-.38100	.35750	.15150	.10590	.27920	-.12290	-.12060	.03300
-6.173	-4.073	-.35820	-.38320	.35760	.15730	.11190	.18860	-.08380	-.08260	.02130
-6.254	.091	-.37300	-.39560	.34920	.14680	.12740	.00290	-.00400	-.00370	.00110
-6.039	4.266	-.34060	-.36520	.35500	.15740	.10740	-.17230	.07500	.07380	-.02150
-5.991	6.248	-.34130	-.36730	.35640	.15320	.10470	-.25930	.11280	.11070	-.03340
	GRADIENT	.00211	.00216	-.00031	.00001	-.00054	-.04328	.01904	.01875	-.00513

RUN NO. 1188/ 0 RN/L = 3.50 GRADIENT INTERVAL = -5.00/ 5.00

ALPHAO	BETAO	CNL	CNFL	CAL	CAFL	CLMFL	CYFL	CYNL	CYNFL	CBLFL
-4.069	-6.114	-.21240	-.23760	.35780	.15320	.05520	.26880	-.11660	-.11440	.03530
-4.336	-4.001	-.23330	-.25750	.35530	.16010	.06670	.17290	-.07560	-.07440	.02150
-4.247	.379	-.23160	-.25380	.34370	.15240	07360	-.01370	.00440	.00440	-.00160
-3.792	4.317	-.19270	-.21700	.35170	.15980	.05470	-.17290	.07400	.07270	-.02420
-3.879	6.244	-.19880	-.22420	.35230	.15680	.05330	-.25580	.11050	.10850	-.03630
	GRADIENT	.00480	.00479	-.00047	-.00007	-.00139	-.04159	.01799	.01769	-.00549

RUN NO. 1189/ 0 RN/L = 3.50 GRADIENT INTERVAL = -5.00/ 5.00

ALPHAO	BETAO	CNL	CNFL	CAL	CAFL	CLMFL	CYFL	CYNL	CYNFL	CBLFL
-.418	-6.997	.00220	-.02270	.35310	.15480	-.02710	.30800	-.13390	-.13190	.04620
-.400	-4.849	-.00120	-.02460	.34930	.15780	-.02430	.21170	-.09370	-.09210	.03160
-.365	-.473	-.00040	-.02150	.33010	.14920	-.02440	.01960	-.00850	-.00830	.00280
-.335	3.592	.02700	.00440	.34000	.14980	-.03980	-.14360	.06350	.06240	-.02200
-.335	5.739	.02730	.00290	.34610	.15450	-.03870	-.23530	.10540	.10360	-.03630
	GRADIENT	.00330	.00340	-.00114	-.00096	-.00181	-.04212	.01863	.01831	-.00635

RUN NO. 1190/ 0 RN/L = 3.50 GRADIENT INTERVAL = -5.00/ 5.00

ALPHAO	BETAO	CNL	CNFL	CAL	CAFL	CLMFL	CYFL	CYNL	CYNFL	CBLFL
4.050	-5.715	.28320	.25940	.34130	.15340	-.13350	.25910	-.11710	-.11570	.04390
3.950	-3.708	.27640	.25410	.33500	.14980	-.13180	.17430	-.08040	-.07950	.02910
3.708	.090	.26440	.24300	.32270	.14350	-.12710	.01600	-.01070	-.01060	.00330
3.803	3.954	.29280	.27050	.33180	.14870	-.13900	-.14980	.06680	.06560	-.02490
3.762	6.072	.29040	.26600	.33910	.14810	-.13970	-.24920	.11110	.10930	-.04150
	GRADIENT	.00216	.00216	-.00041	-.00014	-.00095	-.04230	.01921	.01894	-.00705

IA156A, AEDC PWT 16T-470, O T S W/SILTS (R8NV95) (10 MAY 80)

REFERENCE DATA

SREF = 2690.0000 SQ.FT. XMRP = 976.0000 IN. XT
LREF = 1290.3000 INCHES YMRP = .0000 IN. YT
BREF = 1290.3000 INCHES ZMRP = 400.0000 IN. ZT
SCALE = .0200

PARAMETRIC DATA

IB-ELV = 8.000 OB-ELV = 5.000
BDFLAP = .000 SPDBRK = .000
RUDDER = .000 SILTS = 1.000
MACH = .950 RN/L = 3.500

RUN NO. 1191/ 0 RN/L = 3.50 GRADIENT INTERVAL = -5.00/ 5.00

ALPHAO	BETAO	CNL	CNFL	CAL	CAFL	CLMFL	CYFL	CYNL	CYNFL	CBLFL
-8.132	-5.921	-.51130	-.54070	.40380	.17240	.16950	.29770	-.13280	-.13040	.03390
-8.276	-3.763	-.52490	-.55300	.40280	.18120	.17900	.18450	-.08010	-.07900	.01900
-8.174	.169	-.53430	-.56070	.40130	.17470	.19040	.00760	-.00490	-.00490	.00200
-8.010	4.434	-.51060	-.53820	.40300	.17740	.17260	-.19240	.08530	.08430	-.02090
-7.997	6.260	-.51090	-.54030	.40180	.17450	.16960	-.28160	.12610	.12390	-.03250
	GRADIENT	.00180	.00185	.00003	-.00045	-.00083	-.04599	.02019	.01994	-.00487

RUN NO. 1192/ 0 RN/L = 3.49 GRADIENT INTERVAL = -5.00/ 5.00

ALPHAO	BETAO	CNL	CNFL	CAL	CAFL	CLMFL	CYFL	CYNL	CYNFL	CBLFL
-6.239	-6.007	-.37320	-.40190	.40250	.17930	.11820	.28920	-.12740	-.12500	.03510
-6.152	-4.059	-.36730	-.39450	.40140	.18290	.11960	.18860	-.08190	-.08070	.02140
-6.251	.098	-.38580	-.41080	.39750	.18270	.13470	.00440	-.00390	-.00380	.00140
-6.044	4.274	-.36130	-.38850	.40110	.17850	.12110	-.18010	.07900	.07790	-.02220
-6.001	6.257	-.36050	-.38950	.40070	.17800	.11720	-.27260	.12070	.11840	-.03510
	GRADIENT	.00072	.00072	-.00004	-.00053	.00018	-.04425	.01931	.01903	-.00523

RUN NO. 1193/ 0 RN/L = 3.49 GRADIENT INTERVAL = -5.00/ 5.00

ALPHAO	BETAO	CNL	CNFL	CAL	CAFL	CLMFL	CYFL	CYNL	CYNFL	CBLFL
-4.072	-6.110	-.22520	-.25310	.40220	.18370	.06620	.27700	-.11970	-.11720	.03650
-4.336	-4.005	-.24610	-.27270	.39920	.18450	.07790	.17410	-.07350	-.07220	.02070
-4.260	.372	-.24890	-.27400	.39420	.17940	.09080	-.01130	.00300	.00300	-.00100
-3.798	4.338	-.20420	-.23080	.39760	.18710	.06930	-.17790	.07670	.07540	-.02490
-3.881	6.155	-.21230	-.24050	.39870	.18090	.06790	-.25960	.11300	.11070	-.03700
	GRADIENT	.00492	.00493	-.00021	.00029	-.00096	-.04219	.01799	.01768	-.00546

RUN NO. 1194/ 0 RN/L = 3.48 GRADIENT INTERVAL = -5.00/ 5.00

ALPHAO	BETAO	CNL	CNFL	CAL	CAFL	CLMFL	CYFL	CYNL	CYNFL	CBLFL
-.431	-7.014	-.00220	-.03010	.39780	.18170	-.01510	.30980	-.13180	-.12930	.04720
-.411	-4.850	-.00880	-.03410	.39180	.18240	-.00800	.20880	-.08940	-.08750	.03160
-.380	-.542	-.01390	-.03760	.38480	.18080	.00210	.02010	-.00830	-.00800	.00240
-.343	3.578	.01570	-.00910	.38880	.18320	-.01660	-.14670	.06590	.06450	-.02370
-.343	5.762	.02230	-.00470	.39300	.17870	-.02240	-.23890	.10590	.10380	-.03870
	GRADIENT	.00288	.00294	-.00037	.00009	-.00099	-.04219	.01843	.01804	-.00656

IA156A, AEDC PWT 16T-470, O T S W/SILTS (R8NV95) (10 MAY 80)

REFERENCE DATA

SREF = 2690.0000 SQ.FT. XMRP = 976.0000 IN. XT
LREF = 1290.3000 INCHES YMRP = .0000 IN. YT
BREF = 1290.3000 INCHES ZMRP = 400.0000 IN. ZT
SCALE = .0200

PARAMETRIC DATA

IB-ELV = 8.000 OB-ELV = 5.000
BDFLAP = .000 SPDBRK = .000
RUDDER = .000 SILTS = 1.000
MACH = .950 RN/L = 3.500

RUN NO. 1195/ 0 RN/L = 3.49 GRADIENT INTERVAL = -5.00/ 5.00

ALPHAO	BETAO	CNL	CNFL	CAL	CAFL	CLMFL	CYFL	CYNL	CYNFL	CBLFL
4.079	-5.762	.27360	.24810	.38590	.17480	-.12040	.26330	-.11340	-.11160	.04500
3.933	-3.661	.26390	.23980	.37720	.17210	-.11900	.16550	-.07100	-.07000	.02710
3.702	.123	.26030	.23630	.36790	.17040	-.12030	.00850	-.00400	-.00400	.00180
3.815	3.995	.28720	.26270	.37610	.17470	-.12940	-.14980	.06300	.06170	-.02410
3.764	6.074	.28260	.25630	.38470	.17800	-.12460	-.24530	.10490	.10280	-.04100
	GRADIENT	.00306	.00301	-.00013	.00034	-.00136	-.04118	.01750	.01720	-.00669

IA156A, AEDC PWT 16T-470, O T S W/SILTS (R8NV96) (10 MAY 80)

REFERENCE DATA

SREF = 2690.0000 SQ.FT. XMRP = 976.0000 IN. XT
LREF = 1290.3000 INCHES YMRP = .0000 IN. YT
BREF = 1290.3000 INCHES ZMRP = 400.0000 IN. ZT
SCALE = .0200

PARAMETRIC DATA

IB-ELV = 8.000 OB-ELV = 5.000
BDFLAP = .000 SPDBRK = .000
RUDDER = .000 SILTS = 1.000
MACH = 1.050 RN/L = 3.500

RUN NO. 1196/ 0 RN/L = 3.50 GRADIENT INTERVAL = -5.00/ 5.00

ALPHAO	BETAO	CNL	CNFL	CAL	CAFL	CLMFL	CYFL	CYNL	CYNFL	CBLFL
-8.154	-5.981	-.57100	-.60790	.51560	.23100	.21850	.31190	-.13240	-.12970	.03580
-8.291	-3.794	-.59040	-.62740	.51960	.23340	.23380	.19430	-.08150	-.08010	.02000
-8.203	.186	-.60530	-.64020	.52460	.24020	.24450	.00230	-.00010	-.00020	.00140
-8.003	4.335	-.58100	-.61640	.52130	.23800	.23180	-.19130	.08350	.08210	-.02070
-8.011	6.249	-.58380	-.61940	.51730	.23470	.22630	-.28560	.12310	.12060	-.03340
	GRADIENT	.00119	.00138	.00020	.00056	-.00027	-.04743	.02030	.01995	-.00501

RUN NO. 1197/ 0 RN/L = 3.50 GRADIENT INTERVAL = -5.00/ 5.00

ALPHAO	BETAO	CNL	CNFL	CAL	CAFL	CLMFL	CYFL	CYNL	CYNFL	CBLFL
-6.215	-5.998	-.41630	-.45300	.51620	.23710	.16210	.29710	-.12470	-.12200	.03770
-6.157	-4.060	-.42040	-.45680	.51960	.24220	.17120	.19790	-.08220	-.08070	.02400
-6.263	.161	-.44390	-.47900	.52020	.23970	.19120	-.00230	.00110	.00120	.00050
-6.064	4.290	-.41950	-.45360	.51910	.24280	.17460	-.18800	.08150	.08010	-.02420
-5.814	6.342	-.39670	-.43180	.51350	.24060	.16110	-.28310	.12160	.11920	-.03780
	GRADIENT	.00009	.00036	-.00006	.00007	.00042	-.04622	.01961	.01926	-.00577

IA156A, AEDC PWT 16T-470, O T S W/SILTS (R8NV96) (10 MAY 80)

REFERENCE DATA

SREF = 2690.0000 SQ.FT. XMRP = 976.0000 IN. XT
LREF = 1290.3000 INCHES YMRP = .0000 IN. YT
BREF = 1290.3000 INCHES ZMRP = 400.0000 IN. ZT
SCALE = .0200

PARAMETRIC DATA

IB-ELV = 8.000 OB-ELV = 5.000
BDFLAP = .000 SPDBRK = .000
RUDDER = .000 SILTS = 1.000
MACH = 1.050 RN/L = 3.500

RUN NO. 1198/ 0 RN/L = 3.50 GRADIENT INTERVAL = -5.00/ 5.00

ALPHAO	BETAO	CNL	CNFL	CAL	CAFL	CLMFL	CYFL	CYNL	CYNFL	CBLFL
-4.123	-6.110	-.26290	-.29950	.51480	.24080	.10880	.28470	-.11760	-.11520	.04020
-4.348	-4.024	-.28940	-.32560	.51730	.24520	.12660	.18210	-.07620	-.07470	.02410
-4.265	.359	-.29290	-.32790	.51600	.24010	.14090	-.01000	.00440	.00430	-.00090
-3.787	4.330	-.25120	-.28460	.51390	.24960	.11830	-.18240	.07860	.07710	-.02660
-3.875	6.159	-.25020	-.28460	.51000	.24230	.11180	-.26360	.11210	.10990	-.03930
	GRADIENT	.00448	.00481	-.00041	.00050	-.00092	-.04364	.01853	.01817	-.00606

RUN NO. 1199/ 0 RN/L = 3.50 GRADIENT INTERVAL = -5.00/ 5.00

ALPHAO	BETAO	CNL	CNFL	CAL	CAFL	CLMFL	CYFL	CYNL	CYNFL	CBLFL
-.466	-7.077	-.01260	-.04930	.51090	.24400	.01510	.32120	-.13440	-.13190	.05450
-.448	-4.893	-.02230	-.05820	.50990	.24000	.02710	.21920	-.09470	-.09290	.03770
-.424	-.539	-.03100	-.06500	.50760	.23770	03930	.02840	-.01480	-.01470	.00430
-.388	3.586	-.00610	-.03950	.51380	.24710	.02490	-.15100	.06920	.06760	-.02730
-.386	5.766	.00080	-.03310	.51740	.24860	.01700	-.24480	.10850	.10620	-.04360
	GRADIENT	.00187	.00217	.00045	.00082	-.00023	-.04366	.01932	.01892	-.00767

RUN NO. 1200/ 0 RN/L = 3.50 GRADIENT INTERVAL = -5.00/ 5.00

ALPHAO	BETAO	CNL	CNFL	CAL	CAFL	CLMFL	CYFL	CYNL	CYNFL	CBLFL
4.070	-5.753	.26540	.22980	.50430	.23820	-.09570	.26750	-.11610	-.11480	.05120
3.940	-3.673	.25490	.22060	.49970	.24050	-.08910	.17170	-.07650	-.07590	.03260
3.705	.113	.25400	.22000	.49690	.24070	-.08570	.01300	-.00840	-.00830	.00280
3.803	3.989	.28610	.25330	.50070	.24090	-.10550	-.15390	.06650	.06560	-.02880
3.769	6.064	.28120	.24790	.49810	.23880	-.10350	-.24470	.10320	.10170	-.04640
	GRADIENT	.00409	.00428	.00013	.00005	-.00215	-.04250	.01867	.01847	-.00801

IA156A, AEDC PWT 16T-470, O T S W/SILTS (R8NV97) (10 MAY 80)

REFERENCE DATA

SREF = 2690.0000 SQ.FT. XMRP = 976.0000 IN. XT
LREF = 1290.3000 INCHES YMRP = .0000 IN. YT
BREF = 1290.3000 INCHES ZMRP = 400.0000 IN. ZT
SCALE = .0200

PARAMETRIC DATA

IB-ELV = 8.000 OB-ELV = 5.000
BDFLAP = .000 SPDBRK = .000
RUDDER = .000 SILTS = 1.000
MACH = 1.100 RN/L = 3.500

RUN NO. 1201/ 0 RN/L = 3.50 GRADIENT INTERVAL = -5.00/ 5.00

ALPHAO	BETAO	CNL	CNFL	CAL	CAFL	CLMFL	CYFL	CYNL	CYNFL	CBLFL
-8.174	-5.983	-.57040	-.60430	.51050	.24900	.21330	.29810	-.12480	-.12220	.03360
-8.275	-3.797	-.57740	-.61040	.51450	.25750	.22070	.18340	-.07460	-.07310	.01860
-8.184	.190	-.57810	-.60870	.51050	.25500	.22660	-.00210	.00140	.00140	.00080
-8.018	4.331	-.56670	-.59860	.51510	.25020	.22010	-.18860	.08020	.07870	-.02040
-8.006	6.254	-.56280	-.59450	.50870	.25330	.21610	-.28050	.11940	.11700	-.03290
	GRADIENT	.00133	.00146	.00008	-.00090	-.00008	-.04577	.01905	.01868	-.00480

RUN NO. 1202/ 0 RN/L = 3.50 GRADIENT INTERVAL = -5.00/ 5.00

ALPHAO	BETAO	CNL	CNFL	CAL	CAFL	CLMFL	CYFL	CYNL	CYNFL	CBLFL
-6.211	-5.998	-.40080	-.43330	.50280	.25170	.14800	.27500	-.11250	-.11010	.03480
-6.170	-4.046	-.41160	-.44400	.50820	.25530	.15920	.18250	-.07380	-.07240	.02190
-6.293	.153	-.43130	-.46200	.50490	.25460	17600	-.00390	.00090	.00090	.00020
-6.065	4.291	-.39550	-.42520	.50260	.26000	.15730	-.18020	.07500	.07360	-.02310
-5.794	6.334	-.37450	-.40550	.50360	.25050	.14460	-.27310	.11480	.11240	-.03700
	GRADIENT	.00191	.00224	-.00067	.00056	-.00022	-.04351	.01785	.01751	-.00540

RUN NO. 1203/ 0 RN/L = 3.50 GRADIENT INTERVAL = -5.00/ 5.00

ALPHAO	BETAO	CNL	CNFL	CAL	CAFL	CLMFL	CYFL	CYNL	CYNFL	CBLFL
-4.111	-6.118	-.25050	-.28260	.50230	.25440	.09270	.26820	-.10700	-.10490	.03870
-4.347	-4.024	-.27550	-.30770	.49920	.25460	.10990	.16930	-.06790	-.06650	.02270
-4.258	.366	-.27290	-.30270	.49510	.25620	.12080	-.01530	.00540	.00520	-.00120
-3.786	4.326	-.22710	-.25610	.49730	.26160	.09820	-.17470	.07090	.06960	-.02640
-3.880	6.168	-.22730	-.25750	.50000	.25910	.09230	-.25570	.10540	.10340	-.03970
	GRADIENT	.00570	.00509	-.00024	.00083	-.00133	-.04121	.01662	.01630	-.00587

RUN NO. 1204/ 0 RN/L = 3.50 GRADIENT INTERVAL = -5.00/ 5.00

ALPHAO	BETAO	CNL	CNFL	CAL	CAFL	CLMFL	CYFL	CYNL	CYNFL	CBLFL
-.471	-7.063	-.01230	-.04460	.49740	.25810	.00770	.30440	-.12310	-.12100	.05290
-.441	-4.903	-.01260	-.04410	.49290	.25680	.01480	.20700	-.08630	-.08460	.03680
-.415	-.535	-.01740	-.04620	.48490	.25510	.02130	.02300	-.01120	-.01110	.00360
-.383	3.594	.00210	-.02590	.48970	.26170	.01080	-.14900	.06670	.06510	-.02750
-.382	5.794	.00840	-.02020	.49200	.26150	.00320	-.24430	.10570	.10350	-.04420
	GRADIENT	.00170	.00212	-.00039	.00057	-.00045	-.04190	.01800	.01761	-.00757

IA156A, AEDC PWT 16T-470, O T S W/SILTS (R8NV97) (10 MAY 80)

REFERENCE DATA

SREF = 2690.0000 SQ.FT. XMRP = 976.0000 IN. XT
LREF = 1290.3000 INCHES YMRP = .0000 IN. YT
BREF = 1290.3000 INCHES ZMRP = 400.0000 IN. ZT
SCALE = .0200

PARAMETRIC DATA

IB-ELV = 8.000 OB-ELV = 5.000
BDFLAP = .000 SPDBRK = .000
RUDDER = .000 SILTS = 1.000
MACH = 1.100 RN/L = 3.500

RUN NO. 1205/ 0 RN/L = 3.50 GRADIENT INTERVAL = -5.00/ 5.00

ALPHAO	BETAO	CNL	CNFL	CAL	CAFL	CLMFL	CYFL	CYNL	CYNFL	CBLFL
4.085	-5.767	.28110	.25220	.47930	.25630	-.11080	.26100	-.11250	-.11120	.04970
3.929	-3.665	.27250	.24390	.47740	.25450	-.10410	.16900	-.07550	-.07480	.03190
3.699	.120	.26090	.23150	.47780	.24250	-.09370	.00900	-.00780	-.00780	.00210
3.792	3.985	.28370	.25600	.47730	.24890	-.11000	-.15510	.06480	.06390	-.02880
3.770	6.066	.28510	.25700	.47880	.25040	-.11310	-.24520	.10150	.10010	-.04610
	GRADIENT	.00148	.00160	-.00001	-.00072	-.00078	-.04237	.01834	.01813	-.00793

IA156A, AEDC PWT 16T-470, O T S W/SILTS (R8NV98) (28 MAY 80)

REFERENCE DATA

SREF = 2690.0000 SQ.FT. XMRP = 976.0000 IN. XT
LREF = 1290.3000 INCHES YMRP = .0000 IN. YT
BREF = 1290.3000 INCHES ZMRP = 400.0000 IN. ZT
SCALE = .0200

PARAMETRIC DATA

IB-ELV = 8.000 OB-ELV = 5.000
BDFLAP = .000 SPDBRK = .000
RUDDER = .000 SILTS = 1.000
MACH = 1.150 RN/L = 3.500

RUN NO. 1206/ 0 RN/L = 3.50 GRADIENT INTERVAL = -5.00/ 5.00

ALPHAO	BETAO	CNL	CNFL	CAL	CAFL	CLMFL	CYFL	CYNL	CYNFL	CBLFL
-8.116	-5.938	-.55340	-.58500	.50850	.26010	.20320	.29810	-.12270	-.12040	.03470
-8.284	-3.757	-.58010	-.61140	.51020	.26100	.22070	.18570	-.07540	-.07390	.01920
-8.189	.179	-.58930	-.61800	.50790	.26860	.23080	.00430	-.00230	-.00230	.00160
-7.997	4.409	-.57430	-.60380	.50860	.26690	.22430	-.18430	.07760	.07620	-.01970
-8.024	6.284	-.57620	-.60600	.50470	.26460	.21970	-.27620	.11650	.11440	-.03200
	GRADIENT	.00075	.00096	-.00019	.00071	.00042	-.04530	.01874	.01838	-.00477

RUN NO. 1207/ 0 RN/L = 3.50 GRADIENT INTERVAL = -5.00/ 5.00

ALPHAO	BETAO	CNL	CNFL	CAL	CAFL	CLMFL	CYFL	CYNL	CYNFL	CBLFL
-6.217	-6.006	-.39570	-.42700	.50730	.26330	.14230	.28400	-.11550	-.11320	.03760
-6.140	-4.065	-.39670	-.42630	.50320	.26620	.14940	.18400	-.07410	-.07270	.02330
-6.279	.087	-.43570	-.46390	.50220	.26660	.17740	.00940	-.00630	-.00630	.00210
-6.037	4.273	-.40300	-.43120	.50150	.26990	.16040	-.17520	.06990	.06860	-.02260
-6.014	6.269	-.40230	-.43150	.50090	.26830	.15500	-.26670	.11060	.10830	-.03610
	GRADIENT	-.00074	-.00058	-.00020	.00044	.00131	-.04308	.01727	.01695	-.00551

IA156A, AEDC PWT 16T-470, O T S W/SILTS (R8NV98) (28 MAY 80)

REFERENCE DATA

SREF = 2690.0000 SQ.FT. XMRP = 976.0000 IN. XT
LREF = 1290.3000 INCHES YMRP = .0000 IN. YT
BREF = 1290.3000 INCHES ZMRP = 400.0000 IN. ZT
SCALE = .0200

PARAMETRIC DATA

IB-ELV = 8.000 OB-ELV = 5.000
BDFLAP = .000 SPDBRK = .000
RUDDER = .000 SILTS = 1.000
MACH = 1.150 RN/L = 3.500

RUN NO. 1208/ 0 RN/L = 3.50 GRADIENT INTERVAL = -5.00/ 5.00

ALPHAO	BETAO	CNL	CNFL	CAL	CAFL	CLMFL	CYFL	CYNL	CYNFL	CBLFL
-4.099	-6.128	-.23880	-.26920	.50250	.26520	.08500	.27350	-.10990	-.10790	.04120
-4.341	-4.015	-.26020	-.29040	.49740	.26850	.09890	.17390	-.07130	-.06990	.02530
-4.281	.366	-.27040	-.29880	.49480	.26320	.11730	-.00440	-.00110	-.00120	.00030
-3.789	4.344	-.23080	-.25840	.50130	.27590	.09860	-.17360	.07010	.06880	-.02730
-3.884	6.169	-.23510	-.26380	.49770	.27000	.09650	-.25000	.10220	.10020	-.03930
	GRADIENT	.00342	.00373	.00045	.00085	.00004	-.04156	.01690	.01658	-.00628

RUN NO. 1210/ 0 RN/L = 3.51 GRADIENT INTERVAL = -5.00/ 5.00

ALPHAO	BETAO	CNL	CNFL	CAL	CAFL	CLMFL	CYFL	CYNL	CYNFL	CBLFL
-.458	-7.033	.00190	-.02860	.49670	.27040	-.00090	.30820	-.12700	-.12490	.05360
-.434	-4.804	.00330	-.02690	.49660	.27190	.00150	.20610	-.08780	-.08620	.03660
-.396	-.513	.00970	-.01740	.49150	.27570	00060	.02240	-.01080	-.01070	.00330
-.363	3.669	.02750	.00060	.49550	.27190	-.00680	-.15310	.06880	.06730	-.02830
-.367	5.788	.02750	.00000	.49590	.27410	-.00850	-.24510	.10580	.10380	-.04460
	GRADIENT	.00285	.00324	-.00013	.00000	-.00098	-.04239	.01848	.01811	-.00766

RUN NO. 1211/ 0 RN/L = 3.50 GRADIENT INTERVAL = -5.00/ 5.00

ALPHAO	BETAO	CNL	CNFL	CAL	CAFL	CLMFL	CYFL	CYNL	CYNFL	CBLFL
4.062	-5.756	.27500	.24690	.48500	.26680	-.10640	.26780	-.11800	-.11680	.05070
3.949	-3.648	.27150	.24350	.48350	.26880	-.10170	.17690	-.08260	-.08190	.03330
3.698	.165	.26640	.23820	.48430	.26220	-.09660	.01660	-.01400	-.01400	.00330
3.790	4.004	.29360	.26690	.48290	.26470	-.11770	-.14880	.06210	.06120	-.02810
3.765	6.064	.29640	.26930	.48510	.27160	-.12090	-.24380	.10140	.10000	-.04630
	GRADIENT	.00289	.00306	-.00008	-.00053	-.00209	-.04257	.01891	.01870	-.00802

IA156A, AEDC PWT 16T-470, O T S W/SILTS (R8NVA0) (10 MAY 80)

REFERENCE DATA

SREF = 2690.0000 SQ.FT. XMRP = 976.0000 IN. XT
LREF = 1290.3000 INCHES YMRP = .0000 IN. YT
BREF = 1290.3000 INCHES ZMRP = 400.0000 IN. ZT
SCALE = .0200

PARAMETRIC DATA

IB-ELV = 8.000 OB-ELV = 5.000
BDFLAP = .000 SPDBRK = .000
RUDDER = .000 SILTS = 1.000
MACH = 1.250 RN/L = 3.500

RUN NO. 1224/ 0 RN/L = 3.50 GRADIENT INTERVAL = -5.00/ 5.00

ALPHAO	BETAO	CNL	CNFL	CAL	CAFL	CLMFL	CYFL	CYNL	CYNFL	CBLFL
-8.261	-5.906	-.56920	-.59710	.49410	.27160	.21010	.28520	-.11630	-.11450	.03570
-8.253	-3.859	-.56870	-.59580	.49200	.27390	.21480	.17620	-.06840	-.06700	.02150
-8.194	.281	-.57050	-.59640	.49340	.27430	.22000	-.00880	.00620	.00620	.00070
-7.998	4.303	-.54950	-.57610	.49290	.27730	.20770	-.18680	.07980	.07870	-.02160
-8.035	6.278	-.55520	-.58300	.49300	.27630	.20460	-.28340	.12180	.11990	-.03460
	GRADIENT	.00234	.00240	.00011	.00041	-.00086	-.04447	.01816	.01785	-.00528

RUN NO. 1225/ 0 RN/L = 3.50 GRADIENT INTERVAL = -5.00/ 5.00

ALPHAO	BETAO	CNL	CNFL	CAL	CAFL	CLMFL	CYFL	CYNL	CYNFL	CBLFL
-6.248	-6.015	-.40170	-.42910	.49150	.27530	.14380	.27010	-.10880	-.10680	.03810
-6.179	-4.080	-.39760	-.42470	.49120	.27530	.14820	.17480	-.06850	-.06730	.02440
-6.268	.127	-.40730	-.43280	.48880	.27640	15800	-.00740	.00450	.00450	.00080
-6.056	4.287	-.38210	-.40820	.49090	.28040	.14230	-.18320	.07680	.07570	-.02430
-5.806	6.385	-.36770	-.39500	.49070	.27880	.13230	-.27830	.11780	.11590	-.03870
	GRADIENT	.00184	.00196	-.00004	.00061	-.00070	-.04279	.01737	.01709	-.00582

RUN NO. 1226/ 0 RN/L = 3.50 GRADIENT INTERVAL = -5.00/ 5.00

ALPHAO	BETAO	CNL	CNFL	CAL	CAFL	CLMFL	CYFL	CYNL	CYNFL	CBLFL
-4.129	-6.126	-.24400	-.27200	.49210	.27850	.08630	.26310	-.10580	-.10400	.04070
-4.347	-4.012	-.25870	-.28590	.48930	.27830	.09560	.16250	-.06470	-.06370	.02490
-4.264	.386	-.24690	-.27330	.48620	.27490	.09540	-.01910	.00880	.00880	-.00120
-3.782	4.332	-.20930	-.23490	.49330	.28770	.07790	-.17440	.07290	.07180	-.02640
-3.884	6.187	-.22020	-.24710	.48950	.28190	.07990	-.25630	.10730	.10550	-.03930
	GRADIENT	.00586	.00605	.00046	.00109	-.00208	-.04039	.01649	.01624	-.00614

RUN NO. 1227/ 0 RN/L = 3.50 GRADIENT INTERVAL = -5.00/ 5.00

ALPHAO	BETAO	CNL	CNFL	CAL	CAFL	CLMFL	CYFL	CYNL	CYNFL	CBLFL
-.484	-7.074	-.00160	-.02960	.49080	.28060	-.00070	.30580	-.12700	-.12510	.05190
-.454	-4.892	.00090	-.02620	.48880	.28430	.00110	.20240	-.08600	-.08450	.03510
-.407	-.556	.01240	-.01330	.48330	.28230	-.00200	.02060	-.01040	-.01040	.00340
-.379	3.595	.02500	.00080	.48810	.29140	-.00650	-.15120	.06570	.06430	-.02640
-.392	5.798	.02030	-.00530	.48730	.28560	-.00640	-.24530	.10360	.10160	-.04230
	GRADIENT	.00284	.00318	-.00009	.00083	-.00089	-.04166	.01787	.01753	-.00725

IA156A, AEDC PWT 16T-470, O T S W/SILTS (R8NVA0) (10 MAY 80)

REFERENCE DATA

SREF = 2690.0000 SQ.FT. XMRP = 976.0000 IN. XT
LREF = 1290.3000 INCHES YMRP = .0000 IN. YT
BREF = 1290.3000 INCHES ZMRP = 400.0000 IN. ZT
SCALE = .0200

PARAMETRIC DATA

IB-ELV = 8.000 OB-ELV = 5.000
BDFLAP = .000 SPDBRK = .000
RUDDER = .000 SILTS = 1.000
MACH = 1.250 RN/L = 3.500

RUN NO. 1228/ 0 RN/L = 3.50 GRADIENT INTERVAL = -5.00/ 5.00

ALPHAO	BETAO	CNL	CNFL	CAL	CAFL	CLMFL	CYFL	CYNL	CYNFL	CBLFL
3.893	-5.679	.27760	.25170	.48230	.28260	-.11330	.26000	-.11530	-.11420	.04790
3.928	-3.875	.28520	.25920	.48300	.28390	-.11540	.18150	-.08430	-.08370	.03380
3.820	.192	.28000	.25420	.47740	.27660	-.10700	.00200	-.00700	-.00690	.00160
3.756	3.872	.28480	.25990	.47860	.28090	-.11350	-.15470	.06780	.06690	-.02790
3.766	6.079	.28340	.25740	.47920	.27500	-.11350	-.25260	.10770	.10630	-.04550
	GRADIENT	-.00007	.00007	-.00058	-.00041	.00028	-.04341	.01962	.01943	-.00796

IA156A, AEDC PWT 16T-470, O T S W/SILTS (R8NVA1) (10 MAY 80)

REFERENCE DATA

SREF = 2690.0000 SQ.FT. XMRP = 976.0000 IN. XT
LREF = 1290.3000 INCHES YMRP = .0000 IN. YT
BREF = 1290.3000 INCHES ZMRP = 400.0000 IN. ZT
SCALE = .0200

PARAMETRIC DATA

IB-ELV = 8.000 OB-ELV = 5.000
BDFLAP = .000 SPDBRK = .000
RUDDER = .000 SILTS = 1.000
MACH = 1.400 RN/L = 3.500

RUN NO. 1229/ 0 RN/L = 3.50 GRADIENT INTERVAL = -5.00/ 5.00

ALPHAO	BETAO	CNL	CNFL	CAL	CAFL	CLMFL	CYFL	CYNL	CYNFL	CBLFL
-8.267	-5.901	-.57500	-.60040	.48900	.28780	.21220	.28490	-.11180	-.11020	.03390
-8.304	-3.776	-.57800	-.60280	.49040	.29070	.21690	.17220	-.06330	-.06220	.01990
-8.202	.428	-.57460	-.59820	.48840	.29070	.21820	-.01340	.00740	.00740	.00040
-8.002	4.404	-.55800	-.58200	.48960	.29310	.20860	-.19210	.07860	.07740	-.01990
-8.009	6.323	-.56460	-.58920	.48730	.29230	.20860	-.28830	.11990	.11820	-.03270
	GRADIENT	.00243	.00253	-.00010	.00029	-.00100	-.04453	.01734	.01706	-.00486

RUN NO. 1230/ 0 RN/L = 3.50 GRADIENT INTERVAL = -5.00/ 5.00

ALPHAO	BETAO	CNL	CNFL	CAL	CAFL	CLMFL	CYFL	CYNL	CYNFL	CBLFL
-6.282	-5.994	-.41690	-.44160	.48470	.28930	.14980	.26680	-.10170	-.10000	.03500
-6.224	-4.051	-.40930	-.43350	.48700	.29230	.14920	.17010	-.06130	-.06040	.02210
-6.285	.156	-.41200	-.43560	.48360	.29170	.15310	-.00770	.00540	.00550	.00040
-6.038	4.332	-.38980	-.41360	.48620	.29480	.14010	-.18350	.07350	.07270	-.02220
-5.969	6.303	-.38730	-.41130	.48390	.29230	.13720	-.27580	.11260	.11100	-.03500
	GRADIENT	.00232	.00237	-.00010	.00030	-.00108	-.04218	.01608	.01588	-.00528

IA156A, AEDC PWT 16T-470, O T S W/SILTS (R8NVA1) (10 MAY 80)

REFERENCE DATA

SREF = 2690.0000 SQ.FT. XMRP = 976.0000 IN. XT
LREF = 1290.3000 INCHES YMRP = .0000 IN. YT
BREF = 1290.3000 INCHES ZMRP = 400.0000 IN. ZT
SCALE = .0200

PARAMETRIC DATA

IB-ELV = 8.000 OB-ELV = 5.000
BDFLAP = .000 SPDBRK = .000
RUDDER = .000 SILTS = 1.000
MACH = 1.400 RN/L = 3.500

RUN NO. 1231/ 0 RN/L = 3.50 GRADIENT INTERVAL = -5.00/ 5.00

ALPHAO	BETAO	CNL	CNFL	CAL	CAFL	CLMFL	CYFL	CYNL	CYNFL	CBLFL
-4.143	-6.119	-.25380	-.27870	.48350	.29230	.08940	.26110	-.09990	-.09840	.03780
-4.385	-4.000	-.26690	-.29050	.48330	.29640	.09360	.15890	-.05750	-.05670	.02240
-4.262	.422	-.24980	-.27320	.48060	.29460	.08930	-.02140	.01040	.01030	-.00170
-3.759	4.378	-.20990	-.23330	.48280	.29530	.07410	-.17620	.06970	.06880	-.02470
-3.859	6.215	-.22370	-.24760	.48360	.29380	.07820	-.25860	.10400	.10240	-.03690
	GRADIENT	.00675	.00677	-.00007	-.00014	-.00230	-.04002	.01519	.01498	-.00562

RUN NO. 1232/ 0 RN/L = 3.50 GRADIENT INTERVAL = -5.00/ 5.00

ALPHAO	BETAO	CNL	CNFL	CAL	CAFL	CLMFL	CYFL	CYNL	CYNFL	CBLFL
-.552	-7.095	-.01600	-.04130	.48140	.29370	.00490	.30500	-.12320	-.12160	.04970
-.508	-4.921	-.00530	-.02960	.47700	.29470	.00080	.19830	-.07930	-.07820	.03270
-.464	-.562	.00670	-.01670	.47650	.29730	-.00430	.01680	-.00660	-.00650	.00290
-.444	3.595	.01220	-.01090	.47640	.29470	-.00310	-.15030	.06280	.06170	-.02460
-.461	5.805	.00540	-.01820	.47930	.29110	-.00120	-.24830	.10300	.10130	-.04020
	GRADIENT	.00206	.00220	-.00007	.00000	-.00046	-.04094	.01669	.01643	-.00673

RUN NO. 1233/ 0 RN/L = 3.50 GRADIENT INTERVAL = -5.00/ 5.00

ALPHAO	BETAO	CNL	CNFL	CAL	CAFL	CLMFL	CYFL	CYNL	CYNFL	CBLFL
3.935	-5.661	.27490	.25100	.47600	.29520	-.10720	.25670	-.11370	-.11260	.04580
3.910	-3.641	.27670	.25320	.47210	.29300	-.10980	.16500	-.07590	-.07520	.03000
3.655	.229	.26330	.24020	.46980	.28970	-.10140	.00060	-.00430	-.00440	.00070
3.736	4.056	.27470	.25170	.47050	.29140	-.10740	-.16000	.06890	.06810	-.02820
3.692	6.093	.26830	.24510	.47180	.29300	-.10580	-.25530	.11010	.10870	-.04420
	GRADIENT	-.00027	-.00020	-.00021	-.00021	.00032	-.04223	.01881	.01862	-.00756

IA156A, AEDC PWT 16T-470, O T S W/SILTS (R8NVA2) (10 MAY 80)

REFERENCE DATA

SREF = 2690.0000 SQ.FT. XMRP = 976.0000 IN. XT
LREF = 1290.3000 INCHES YMRP = .0000 IN. YT
BREF = 1290.3000 INCHES ZMRP = 400.0000 IN. ZT
SCALE = .0200

PARAMETRIC DATA

IB-ELV = 8.000 OB-ELV = 5.000
BDFLAP = .000 SPDBRK = .000
RUDDER = .000 SILTS = 1.000
MACH = 1.550 RN/L = 3.200

RUN NO. 1212/ 0 RN/L = 3.20 GRADIENT INTERVAL = -5.00/ 5.00

ALPHAO	BETAO	CNL	CNFL	CAL	CAFL	CLMFL	CYFL	CYNL	CYNFL	CBLFL
-8.321	-5.932	-.55090	-.57350	.46520	.27860	.20720	.29300	-.12100	-.11920	.03320
-8.412	-3.712	-.56360	-.58580	.46490	.28680	.21460	.17870	-.07130	-.07010	.01910
-8.276	.314	-.56220	-.58310	.46530	.29150	.21920	.00550	-.00410	-.00400	.00210
-8.033	4.496	-.56280	-.58410	.46830	.29380	.22050	-.18050	.07220	.07100	-.01790
-8.010	6.424	-.56180	-.58340	.46370	.28940	.21760	-.27850	.11480	.11330	-.03040
	GRADIENT	.00010	.00020	.00042	.00085	.00072	-.04377	.01749	.01720	-.00451

RUN NO. 1213/ 0 RN/L = 3.20 GRADIENT INTERVAL = -5.00/ 5.00

ALPHAO	BETAO	CNL	CNFL	CAL	CAFL	CLMFL	CYFL	CYNL	CYNFL	CBLFL
-6.376	-5.979	-.39720	-.41950	.46090	.28530	.14350	.27190	-.11030	-.10860	.03360
-6.309	-4.025	-.39500	-.41670	.46150	.28970	.14670	.17750	-.07000	-.06900	.02120
-6.326	.241	-.40800	-.42920	.45890	.28950	15750	.00070	-.00200	-.00190	.00150
-6.040	4.435	-.39920	-.42050	.46530	.29350	.15380	-.17630	.06920	.06840	-.02040
-5.961	6.413	-.40210	-.42350	.46270	.28960	.15360	-.26990	.11020	.10870	-.03260
	GRADIENT	-.00050	-.00046	.00045	.00045	.00084	-.04182	.01645	.01624	-.00492

RUN NO. 1214/ 0 RN/L = 3.21 GRADIENT INTERVAL = -5.00/ 5.00

ALPHAO	BETAO	CNL	CNFL	CAL	CAFL	CLMFL	CYFL	CYNL	CYNFL	CBLFL
-4.254	-6.145	-.24580	-.26890	.46060	.28420	.08600	.26910	-.10930	-.10780	.03610
-4.488	-3.997	-.25990	-.28150	.45540	.28520	.09260	.16880	-.06670	-.06590	.02150
-4.353	.498	-.25950	-.28070	.45530	.28670	.09900	-.00920	.00070	.00070	.00000
-3.760	4.479	-.23370	-.25530	.46100	.29440	.09210	-.17220	.06790	.06720	-.02220
-3.825	6.317	-.24340	-.26400	.45440	.29130	.09350	-.25480	.10440	.10310	-.03420
	GRADIENT	.00303	.00303	.00065	.00107	-.00003	-.04022	.01586	.01569	-.00515

RUN NO. 1215/ 0 RN/L = 3.20 GRADIENT INTERVAL = -5.00/ 5.00

ALPHAO	BETAO	CNL	CNFL	CAL	CAFL	CLMFL	CYFL	CYNL	CYNFL	CBLFL
-.590	-7.139	-.00910	-.03200	.45560	.28170	-.00020	.30360	-.12720	-.12550	.04700
-.561	-5.002	-.00470	-.02690	.45330	.28340	-.00040	.20200	-.08260	-.08160	.03120
-.520	-.606	.00280	-.01830	.44730	.29000	-.00320	.01890	-.00670	-.00660	.00270
-.510	3.511	.01090	-.01050	.45560	.27390	-.00830	-.14960	.06680	.06590	-.02320
-.517	5.704	.01150	-.01040	.45480	.28980	-.01260	-.24320	.10730	.10560	-.03730
	GRADIENT	.00197	.00189	.00202	-.00391	-.00124	-.04093	.01785	.01761	-.00629

IA156A, AEDC PWT 16T-470, O T S W/SILTS (R8NVA2) (10 MAY 80)

REFERENCE DATA

SREF = 2690.0000 SQ.FT. XMRP = 976.0000 IN. XT
LREF = 1290.3000 INCHES YMRP = .0000 IN. YT
BREF = 1290.3000 INCHES ZMRP = 400.0000 IN. ZT
SCALE = .0200

PARAMETRIC DATA

IB-ELV = 8.000 OB-ELV = 5.000
BDFLAP = .000 SPDBRK = .000
RUDDER = .000 SILTS = 1.000
MACH = 1.550 RN/L = 3.200

RUN NO. 1216/ 0 RN/L = 3.20 GRADIENT INTERVAL = -5.00/ 5.00

ALPHAO	BETAO	CNL	CNFL	CAL	CAFL	CLMFL	CYFL	CYNL	CYNFL	CBLFL
4.128	-5.607	.26250	.23940	.45450	.28910	-.09530	.26360	-.12320	-.12190	.04700
3.967	-3.526	.25770	.23550	.45070	.28750	-.09790	.17140	-.08360	-.08270	.03030
3.605	.251	.25330	.23200	.44860	.28340	-.09990	.01150	-.01440	-.01450	.00340
3.637	4.006	.27010	.24910	.44570	.28690	-.11250	-.14470	.05880	.05800	-.02430
3.619	6.083	.27040	.24840	.44840	.28430	-.11210	-.24280	.10340	.10210	-.04090
	GRADIENT	.00164	.00180	-.00066	-.00008	-.00194	-.04197	.01890	.01868	-.00725

IA156A, AEDC PWT 16T-470, O T S W/SILTS (R8NVA3) (10 MAY 80)

REFERENCE DATA

SREF = 2690.0000 SQ.FT. XMRP = 976.0000 IN. XT
LREF = 1290.3000 INCHES YMRP = .0000 IN. YT
BREF = 1290.3000 INCHES ZMRP = 400.0000 IN. ZT
SCALE = .0200

PARAMETRIC DATA

IB-ELV = 12.000 OB-ELV = 5.000
BDFLAP = .000 SPDBRK = .000
RUDDER = .000 SILTS = 1.000
MACH = .600 RN/L = 3.500

RUN NO. 1240/ 0 RN/L = 3.50 GRADIENT INTERVAL = -5.00/ 5.00

ALPHAO	BETAO	CNL	CNFL	CAL	CAFL	CLMFL	CYFL	CYNL	CYNFL	CBLFL
-8.152	-7.797	-.42430	-.44860	.27900	.08170	.11510	.32360	-.13470	-.13170	.03840
-8.060	-5.766	-.41990	-.44440	.28240	.08050	.11580	.23230	-.09700	-.09460	.02710
-8.078	-3.773	-.42610	-.44860	.28500	.09660	.12030	.15070	-.06250	-.06110	.01640
-7.979	.297	-.43680	-.45760	.28250	.09240	.13380	-.01380	.00720	.00720	-.00140
-7.850	4.216	-.41030	-.43250	.28560	.09400	.11760	-.16390	.07250	.07120	-.01950
-7.838	6.120	-.40430	-.42710	.28560	.09440	.11330	-.23430	.10230	.10010	-.02840
-7.891	8.133	-.41630	-.44020	.28510	.08680	.11870	-.31480	.13540	.13250	-.03790
	GRADIENT	.00195	.00199	.00007	-.00033	-.00031	-.03939	.01690	.01656	-.00449

RUN NO. 1241/ 0 RN/L = 3.50 GRADIENT INTERVAL = -5.00/ 5.00

ALPHAO	BETAO	CNL	CNFL	CAL	CAFL	CLMFL	CYFL	CYNL	CYNFL	CBLFL
-6.112	-7.857	-.29460	-.31840	.28160	.09060	.06720	.32260	-.13460	-.13170	.04140
-6.081	-5.857	-.29870	-.32180	.28290	.09490	.07020	.23720	-.10040	-.09810	.03050
-5.997	-3.963	-.29990	-.32230	.28500	.09980	.07490	.15520	-.06560	-.06420	.01950
-6.039	.085	-.31160	-.33200	.28170	.09950	.08800	-.00810	.00310	.00310	-.00030
-5.909	4.157	-.29060	-.31220	.28710	.10390	.07730	-.15520	.06730	.06600	-.02020
-5.832	6.110	-.28450	-.30730	.28620	.09830	.07250	-.23040	.09970	.09760	-.03080
-5.639	8.191	-.26840	-.29200	.28850	.09610	.06650	-.31370	.13470	.13210	-.04180
	GRADIENT	.00115	.00125	.00026	.00051	.00029	-.03822	.01637	.01603	-.00489

IA156A, AEDC PWT 16T-470, O T S W/SILTS

(R8NVA3) (10 MAY 80)

REFERENCE DATA

SREF = 2690.0000 SQ.FT. XMRP = 976.0000 IN. XT
LREF = 1290.3000 INCHES YMRP = .0000 IN. YT
BREF = 1290.3000 INCHES ZMRP = 400.0000 IN. ZT
SCALE = .0200

PARAMETRIC DATA

IB-ELV = 12.000 OB-ELV = 5.000
BDFLAP = .000 SPDBRK = .000
RUDDER = .000 SILTS = 1.000
MACH = .600 RN/L = 3.500

RUN NO. 1242/ 0 RN/L = 3.49 GRADIENT INTERVAL = -5.00/ 5.00

ALPHAO	BETAO	CNL	CNFL	CAL	CAFL	CLMFL	CYFL	CYNL	CYNFL	CBLFL
-3.979	-7.922	-.17080	-.19430	.28320	.09600	.02440	.31950	-.13390	-.13120	.04440
-4.201	-5.904	-.19310	-.21570	.28460	.10160	.03360	.22940	-.09560	-.09440	.03220
-4.186	-3.853	-.19330	-.21530	.28540	.10470	.03800	.14040	-.05930	-.05800	.01920
-3.980	.176	-.18500	-.20510	.28330	.10720	.04270	-.01000	.00330	.00310	-.00040
-3.668	4.205	-.15480	-.17620	.28760	.10840	.03060	-.15860	.06880	.06740	-.02290
-3.774	6.004	-.16120	-.18330	.28810	.10640	.03010	-.22510	.09770	.09570	-.03290
-3.800	7.983	-.16430	-.18740	.28800	.10140	.02990	-.30060	.12990	.12760	-.04310
	GRADIENT	.00478	.00485	.00027	.00046	-.00092	-.03710	.01590	.01556	-.00522

RUN NO. 1243/ 0 RN/L = 3.50 GRADIENT INTERVAL = -5.00/ 5.00

ALPHAO	BETAO	CNL	CNFL	CAL	CAFL	CLMFL	CYFL	CYNL	CYNFL	CBLFL
-.354	-8.693	.01210	-.01050	.28140	.09840	-.03900	.35580	-.15230	-.15010	.05360
-.344	-6.614	.00330	-.01870	.28100	.10170	-.03340	.26880	-.11640	-.11410	.04180
-.330	-4.366	-.00050	-.02170	.28230	.10800	-.02860	.17160	-.07500	-.07350	.02700
-.303	-.313	.00020	-.01920	.27990	.10960	-.02250	.01020	-.00380	-.00380	.00170
-.271	3.752	.02840	.00820	.28090	.10990	-.03720	-.13240	.05980	.05840	-.02100
-.267	5.854	.03540	.01380	.28440	.10930	-.04290	-.21750	.09750	.09560	-.03470
-.258	7.945	.04710	.02450	.28600	.10630	-.04990	-.29830	.13280	.13050	-.04790
	GRADIENT	.00356	.00368	-.00017	.00023	-.00106	-.03745	.01661	.01625	-.00591

RUN NO. 1244/ 0 RN/L = 3.50 GRADIENT INTERVAL = -5.00/ 5.00

ALPHAO	BETAO	CNL	CNFL	CAL	CAFL	CLMFL	CYFL	CYNL	CYNFL	CBLFL
4.282	-8.106	.26990	.24830	.26930	.09480	-.13290	.33530	-.15030	-.14880	.06040
4.109	-5.880	.26130	.24020	.26920	.10020	-.12640	.24200	-.11080	-.10940	.04450
4.094	-3.892	.25870	.23850	.26730	.10150	-.12210	.16100	-.07480	-.07380	.02950
3.910	-.003	.24750	.22760	.26670	.09870	-.11330	.01280	-.00930	-.00930	.00290
3.942	4.078	.27200	.25220	.26720	.09970	-.12780	-.13800	.05950	.05840	-.02520
3.885	6.223	.27780	.25710	.26870	.10160	-.13320	-.22740	.10020	.09850	-.04170
3.875	8.228	.28370	.26170	.26910	.09430	-.13730	-.30240	.13370	.13170	-.05530
	GRADIENT	.00170	.00175	-.00001	-.00022	-.00074	-.03751	.01685	.01659	-.00686

IA156A, AEDC PWT 16T-470, O T S W/SILTS (R8NVA3) (10 MAY 80)

REFERENCE DATA

SREF = 2690.0000 SQ.FT. XMRP = 976.0000 IN. XT
LREF = 1290.3000 INCHES YMRP = .0000 IN. YT
BREF = 1290.3000 INCHES ZMRP = 400.0000 IN. ZT
SCALE = .0200

PARAMETRIC DATA

IB-ELV = 12.000 OB-ELV = 5.000
BDFLAP = .000 SPDBRK = .000
RUDDER = .000 SILTS = 1.000
MACH = .600 RN/L = 3.500

RUN NO. 1245/ 0 RN/L = 3.50 GRADIENT INTERVAL = -5.00/ 5.00

ALPHAO	BETAO	CNL	CNFL	CAL	CAFL	CLMFL	CYFL	CYNL	CYNFL	CBLFL
6.245	-8.012	.38840	.36700	.26260	.09060	-.17900	.33110	-.14910	-.14770	.06250
6.219	-5.943	.38800	.36720	.26280	.09600	-.17660	.24000	-.10970	-.10840	.04660
6.204	-3.868	.38600	.36600	.26210	.09780	-.17290	.16030	-.07360	-.07270	.03120
5.928	.168	.36270	.34280	.26280	.09530	-.15740	.00390	-.00500	-.00500	.00150
5.855	4.103	.37710	.35740	.26120	.09550	-.16910	-.14370	.06060	.05960	-.02730
5.781	6.202	.37810	.35690	.26110	.09140	-.17250	-.21860	.09550	.09400	-.04210
5.768	8.130	.39020	.36850	.26190	.08910	-.17950	-.29630	.13010	.12840	-.05680
	GRADIENT	-.00114	-.00110	-.00011	-.00029	.00049	-.03814	.01684	.01660	-.00734

RUN NO. 1246/ 0 RN/L = 3.50 GRADIENT INTERVAL = -5.00/ 5.00

ALPHAO	BETAO	CNL	CNFL	CAL	CAFL	CLMFL	CYFL	CYNL	CYNFL	CBLFL
8.135	-7.857	.50090	.47920	.25140	.07820	- 22240	.31390	-.13950	-.13820	.06290
8.050	-5.782	.49620	.47560	.25160	.08630	-.21840	.22560	-.10090	-.09970	.04590
8.036	-3.796	.49370	.47390	.25190	.08830	-.21450	.14530	-.06520	-.06430	.03030
7.950	.173	.47860	.45940	.25540	.09000	-.20210	.00680	-.00650	-.00660	.00200
7.992	4.235	.50710	.48720	.25230	.08680	-.22010	-.13470	.05530	.05410	-.02720
7.938	6.240	.51310	.49240	.25020	.08200	-.22660	-.20680	.08780	.08640	-.04200
7.946	8.284	.51730	.49540	.25180	.07540	-.23090	-.29690	.12900	.12740	-.05940
	GRADIENT	.00169	.00168	.00005	-.00019	-.00071	- 03486	.01501	.01474	-.00716

IA156A FORCE DATA WITH FLOW ANGULARITY CORRECTION

IA156A, AEDC PWT 16T-470, O T S W/SILTS

(R8NVA4) (10 MAY 80)

REFERENCE DATA

SREF = 2690.0000 SQ.FT. XMRP = 976.0000 IN. XT
LREF = 1290.3000 INCHES YMRP = .0000 IN. YT
BREF = 1290.3000 INCHES ZMRP = 400.0000 IN. ZT
SCALE = .0200

PARAMETRIC DATA

IB-ELV = 12.000 OB-ELV = 5.000
BDFLAP = .000 SPDBRK = .000
RUDDER = .000 SILTS = 1.000
MACH = .800 RN/L = 3.500

RUN NO. 1247/ 0 RN/L = 3.50 GRADIENT INTERVAL = -5.00/ 5.00

ALPHAO	BETAO	CNL	CNFL	CAL	CAFL	CLMFL	CYFL	CYNL	CYNFL	CBLFL
-8.178	-5.803	-.44270	-.46720	.31370	.11470	.12140	.25610	-.11140	-.10870	.02910
-8.184	-3.772	-.45030	-.47420	.31550	.11830	.12920	.16420	-.07150	-.06990	.01780
-8.099	.387	-.46570	-.48750	.31120	.11660	.14700	-.01180	.00520	.00530	.00010
-7.928	4.305	-.43420	-.45760	.31410	.11890	.12370	-.17100	.07580	.07440	-.01890
-7.942	6.214	-.43220	-.45630	.31200	.11680	.11910	-.24980	.10930	.10700	-.02900
	GRADIENT	.00194	.00200	-.00018	.00007	-.00063	-.04151	.01824	.01787	-.00454

RUN NO. 1248/ 0 RN/L = 3.50 GRADIENT INTERVAL = -5.00/ 5.00

ALPHAO	BETAO	CNL	CNFL	CAL	CAFL	CLMFL	CYFL	CYNL	CYNFL	CBLFL
-6.143	-5.924	-.30350	-.32740	.31180	.11940	.07160	.25610	-.11120	-.10860	.03180
-6.094	-4.028	-.31240	-.33550	.31380	.12460	.08020	.17080	-.07470	-.07300	.02060
-6.164	.072	-.33340	-.35450	.30800	.12230	09710	.00080	-.00160	-.00140	.00120
-5.981	4.219	-.30230	-.32490	.31200	.12500	.07830	-.16540	.07310	.07170	-.02040
-5.887	6.213	-.29430	-.31820	.31310	.12180	.07170	-.24480	.10710	.10480	-.03140
	GRADIENT	.00124	.00130	-.00022	.00005	-.00024	-.04077	.01792	.01755	-.00497

RUN NO. 1249/ 0 RN/L = 3.50 GRADIENT INTERVAL = -5.00/ 5.00

ALPHAO	BETAO	CNL	CNFL	CAL	CAFL	CLMFL	CYFL	CYNL	CYNFL	CBLFL
-4.088	-6.032	-.17960	-.20310	.31110	.12590	.02740	.25020	-.10820	-.10570	.03420
-4.286	-3.931	-.20080	-.22320	.31220	.12940	.03960	.15680	-.06830	-.06660	.02050
-4.157	.407	-.19720	-.21790	.30560	.12450	.04670	-.01600	.00610	.00600	-.00060
-3.746	4.285	-.16090	-.18340	.31110	.12570	.02890	-.16840	.07410	.07270	-.02300
-3.826	6.107	-.16270	-.18540	.31050	.12690	.02610	-.24130	.10610	.10400	-.03370
	GRADIENT	.00478	.00477	-.00016	-.00046	-.00124	-.03959	.01733	.01695	-.00529

RUN NO. 1250/ 0 RN/L = 3.50 GRADIENT INTERVAL = -5.00/ 5.00

ALPHAO	BETAO	CNL	CNFL	CAL	CAFL	CLMFL	CYFL	CYNL	CYNFL	CBLFL
-.370	-6.859	.02920	.00660	.30820	.12430	-.05130	.29200	-.12850	-.12630	.04440
-.364	-4.706	.01930	-.00210	.30540	.12840	-.04540	.19500	-.08690	-.08510	.02940
-.337	-.421	.01320	-.00680	.29680	.12610	-.03610	.01870	-.00810	-.00790	.00300
-.300	3.655	.04360	.02300	.30310	.13050	-.05220	-.14080	.06370	.06240	-.02120
-.299	5.785	.04810	.02620	.30780	.13060	-.05590	-.22950	.10390	.10190	-.03540
	GRADIENT	.00287	.00297	-.00029	.00024	-.00079	-.04017	.01801	.01764	-.00605

IA156A, AEDC PWT 16T-470, O T S W/SILTS (R8NVA4) (10 MAY 80)

REFERENCE DATA

SREF = 2690.0000 SQ.FT. XMRP = 976.0000 IN. XT
LREF = 1290.3000 INCHES YMRP = .0000 IN. YT
BREF = 1290.3000 INCHES ZMRP = 400.0000 IN. ZT
SCALE = .0200

PARAMETRIC DATA

IB-ELV = 12.000 OB-ELV = 5.000
BDFLAP = .000 SPDBRK = .000
RUDDER = .000 SILTS = 1.000
MACH = .800 RN/L = 3.500

RUN NO. 1251/ 0 RN/L = 3.50 GRADIENT INTERVAL = -5.00/ 5.00

ALPHAO	BETAO	CNL	CNFL	CAL	CAFL	CLMFL	CYFL	CYNL	CYNFL	CBLFL
4.142	-5.836	.30560	.28350	.29430	.11820	-.15500	.25670	-.11670	-.11510	.04790
4.011	-3.728	.29190	.27140	.29100	.11930	-.14600	.15970	-.07380	-.07270	.02990
3.780	.115	.27880	.25820	.28590	.11780	-.13490	.01290	-.00880	-.00880	.00340
3.872	4.058	.31450	.29410	.28920	.12020	-.15650	-.14270	.06250	.06120	-.02580
3.808	6.146	.31400	.29210	.29340	.11810	-.15920	-.23560	.10590	.10390	-.04280
	GRADIENT	.00293	.00294	-.00023	.00012	-.00137	-.03884	.01751	.01720	-.00716

RUN NO. 1252/ 0 RN/L = 3.50 GRADIENT INTERVAL = -5.00/ 5.00

ALPHAO	BETAO	CNL	CNFL	CAL	CAFL	CLMFL	CYFL	CYNL	CYNFL	CBLFL
6.143	-5.864	.43370	.41180	.28840	.11310	-.20710	.25180	-.11510	-.11360	.04740
6.116	-3.819	.42900	.40830	.28470	.11590	-.20400	.16520	-.07590	-.07490	.03150
5.812	.154	.40950	.38920	.28060	.11350	- 18990	.00850	-.00610	-.00610	.00250
5.749	4.024	.42250	.40160	.28410	.11390	-.19930	-.14010	.06000	.05880	-.02540
5.881	6.222	.44180	.41990	.28710	.11210	-.20900	-.22990	.10250	.10080	-.04240
	GRADIENT	-.00085	-.00087	-.00008	-.00026	.00061	-.03893	.01733	.01705	-.00725

IA156A, AEDC PWT 16T-470, O T S W/SILTS (R8NVA5) (10 MAY 80)

REFERENCE DATA

SREF = 2690.0000 SQ.FT. XMRP = 976.0000 IN. XT
LREF = 1290.3000 INCHES YMRP = .0000 IN. YT
BREF = 1290.3000 INCHES ZMRP = 400.0000 IN. ZT
SCALE = .0200

PARAMETRIC DATA

IB-ELV = 12.000 OB-ELV = 5.000
BDFLAP = .000 SPDBRK = .000
RUDDER = .000 SILTS = 1.000
MACH = .900 RN/L = 3.500

RUN NO. 1253/ 0 RN/L = 3.50 GRADIENT INTERVAL = -5.00/ 5.00

ALPHAO	BETAO	CNL	CNFL	CAL	CAFL	CLMFL	CYFL	CYNL	CYNFL	CBLFL
-8.381	-5.946	-.49310	-.52070	.35740	.13900	.15130	.28330	-.12420	-.12170	.03150
-8.127	-3.743	-.48590	-.51180	.36160	.15280	.15550	.17480	-.07560	-.07440	.01780
-8.097	.172	-.50500	-.52830	.35510	.14810	.17500	.00420	-.00350	-.00330	.00210
-7.929	4.414	-.47630	-.50170	.35860	.15030	.15280	-.18960	.08320	.08190	-.02030
-7.965	6.237	-.47540	-.50190	.35910	.15030	.14960	-.26920	.11850	.11630	-.03130
	GRADIENT	.00125	.00131	-.00035	-.00030	-.00040	-.04469	.01948	.01918	-.00468

IA156A, AEDC PWT 16T-470, O T S W/SILTS (R8NVA5) (10 MAY 80)

REFERENCE DATA

SREF = 2690.0000 SQ.FT. XMRP = 976.0000 IN. XT
LREF = 1290.3000 INCHES YMRP = .0000 IN. YT
BREF = 1290.3000 INCHES ZMRP = 400.0000 IN. ZT
SCALE = .0200

PARAMETRIC DATA

IB-ELV = 12.000 OB-ELV = 5.000
BDFLAP = .000 SPDBRK = .000
RUDDER = .000 SILTS = 1.000
MACH = .900 RN/L = 3.500

RUN NO. 1254/ 0 RN/L = 3.50 GRADIENT INTERVAL = -5.00/ 5.00

ALPHAO	BETAO	CNL	CNFL	CAL	CAFL	CLMFL	CYFL	CYNL	CYNFL	CBLFL
-6.157	-5.933	-.34250	-.36860	.35900	.15280	.09780	.27190	-.11800	-.11560	.03330
-6.107	-3.992	-.34910	-.37470	.35770	.15320	.10540	.18170	-.07920	-.07780	.02160
-6.098	.260	-.36120	-.38410	.34930	.15080	.12150	-.00910	.00190	.00220	.00020
-5.995	4.228	-.34100	-.36610	.35470	.15300	.10590	-.17470	.07560	.07430	-.02100
-5.941	6.201	-.33330	-.35970	.35730	.15320	.09970	-.26130	.11330	.11100	-.03340
	GRADIENT	.00094	.00101	-.00038	-.00003	.00011	-.04338	.01884	.01851	-.00518

RUN NO. 1255/ 0 RN/L = 3.50 GRADIENT INTERVAL = -5.00/ 5.00

ALPHAO	BETAO	CNL	CNFL	CAL	CAFL	CLMFL	CYFL	CYNL	CYNFL	CBLFL
-4.049	-5.942	-.20680	-.23210	.35750	.15560	.04910	.26190	-.11180	-.10950	.03570
-4.275	-3.950	-.22480	-.24940	.35500	.15760	.06070	.16640	-.07170	-.07030	.02170
-4.181	.363	-.22520	-.24770	.34360	.15180	06930	-.01420	.00460	.00470	-.00080
-3.755	4.252	-.18380	-.20840	.35180	.15770	.04890	-.17230	.07290	.07160	-.02330
-3.839	6.105	-.19130	-.21710	.35430	.15580	.04960	-.25060	.10760	.10550	-.03510
	GRADIENT	.00491	.00492	-.00043	-.00001	-.00138	-.04130	.01763	.01730	-.00548

RUN NO. 1256/ 0 RN/L = 3.50 GRADIENT INTERVAL = -5.00/ 5.00

ALPHAO	BETAO	CNL	CNFL	CAL	CAFL	CLMFL	CYFL	CYNL	CYNFL	CBLFL
-.406	-6.906	.01490	-.01000	.35340	.15530	-.03750	.29750	-.12680	-.12470	.04630
-.386	-4.764	.01160	-.01190	.34930	.15730	-.03370	.20680	-.09060	-.08880	.03280
-.355	-.424	.01070	-.01060	.33090	.14980	-.03210	.01740	-.00710	-.00680	.00340
-.321	3.663	.03980	.01710	.34270	.15670	-.04720	-.14610	.06470	.06340	-.02140
-.321	5.811	.04100	.01670	.34850	.15630	-.04800	-.23630	.10530	.10340	-.03630
	GRADIENT	.00331	.00341	-.00082	-.00009	-.00158	-.04190	.01844	.01807	-.00644

RUN NO. 1257/ 0 RN/L = 3.50 GRADIENT INTERVAL = -5.00/ 5.00

ALPHAO	BETAO	CNL	CNFL	CAL	CAFL	CLMFL	CYFL	CYNL	CYNFL	CBLFL
4.138	-5.831	.29990	.27610	.33930	.15140	-.14990	.25970	-.11430	-.11280	.04620
4.005	-3.746	.29700	.27490	.33350	.15010	-.14960	.16780	-.07560	-.07460	.03020
3.772	.075	.28850	.26730	.32430	.14590	-.14610	.01110	-.00680	-.00680	.00360
3.863	4.007	.31410	.29180	.33290	.14990	-.15740	-.14710	.06380	.06260	-.02450
3.797	6.125	.30770	.28370	.33870	.15010	-.15530	-.23840	.10360	.10170	-.03960
	GRADIENT	.00223	.00220	-.00007	-.00002	-.00102	-.04061	.01798	.01770	-.00706

IA156A, AEDC PWT 16T-470, O T S W/SILTS (R8NVA6) (10 MAY 80)

REFERENCE DATA

SREF = 2690.0000 SQ.FT. XMRP = 976.0000 IN. XT
LREF = 1290.3000 INCHES YMRP = .0000 IN. YT
BREF = 1290.3000 INCHES ZMRP = 400.0000 IN. ZT
SCALE = .0200

PARAMETRIC DATA

IB-ELV = 12.000 OB-ELV = 5.000
BDFLAP = .000 SPDBRK = .000
RUDDER = .000 SILTS = 1.000
MACH = .950 RN/L = 3.500

RUN NO. 1258/ 0 RN/L = 3.50 GRADIENT INTERVAL = -5.00/ 5.00

ALPHAO	BETAO	CNL	CNFL	CAL	CAFL	CLMFL	CYFL	CYNL	CYNFL	CBLFL
-8.122	-5.896	-.50040	-.52970	.40180	.17460	.15950	.29010	-.12780	-.12530	.03340
-8.204	-3.800	-.51560	-.54350	.40230	.17870	.16940	.18140	-.07800	-.07670	.01960
-8.120	.348	-.52420	-.55040	.40020	.17580	.18250	-.00800	.00310	.00310	.00140
-7.943	4.317	-.49730	-.52550	.40260	.17800	.16630	-.18980	.08460	.08340	-.02000
-7.957	6.224	-.49850	-.52820	.40250	.17550	.16350	-.28090	.12500	.12270	-.03170
	GRADIENT	.00222	.00219	.00003	-.00009	-.00036	-.04573	.02003	.01972	-.00488

RUN NO. 1259/ 0 RN/L = 3.50 GRADIENT INTERVAL = -5.00/ 5.00

ALPHAO	BETAO	CNL	CNFL	CAL	CAFL	CLMFL	CYFL	CYNL	CYNFL	CBLFL
-6.172	-5.943	-.36140	-.38980	.40070	.17970	.10950	.28160	-.12270	-.12020	.03490
-6.107	-4.037	-.36220	-.38950	.39960	.18160	.11410	.18890	-.08180	-.08040	.02250
-6.186	.092	-.37790	-.40310	.39670	.17750	12990	.00190	-.00240	-.00230	.00190
-6.011	4.226	-.35250	-.37980	.39990	.18240	.11690	-.17970	.07880	.07740	-.02150
-5.740	6.301	-.32750	-.35670	.40190	.17970	.10410	-.27370	.12060	.11810	-.03530
	GRADIENT	.00117	.00117	.00004	.00010	.00034	-.04461	.01944	.01910	-.00532

RUN NO. 1260/ 0 RN/L = 3.50 GRADIENT INTERVAL = -5.00/ 5.00

ALPHAO	BETAO	CNL	CNFL	CAL	CAFL	CLMFL	CYFL	CYNL	CYNFL	CBLFL
-4.061	-6.053	-.21670	-.24480	.40050	.18190	.05840	.27120	-.11630	-.11370	.03660
-4.287	-3.951	-.23860	-.26480	.39840	.18560	.07190	.16830	-.07050	-.06900	.02100
-4.181	.370	-.23790	-.26300	.39170	.18100	.08390	-.01480	.00530	.00530	-.00070
-3.754	4.279	-.19510	-.22150	.39740	.18550	.06410	-.17490	.07590	.07430	-.02440
-3.839	6.095	-.20280	-.23080	.39860	.18270	.06230	-.25810	.11230	.10980	-.03650
	GRADIENT	.00520	.00518	-.00015	-.00003	-.00088	-.04171	.01778	.01741	-.00551

RUN NO. 1261/ 0 RN/L = 3.50 GRADIENT INTERVAL = -5.00/ 5.00

ALPHAO	BETAO	CNL	CNFL	CAL	CAFL	CLMFL	CYFL	CYNL	CYNFL	CBLFL
-.422	-6.933	.00780	-.01980	.39600	.18110	-.02330	.30060	-.12660	-.12400	.04670
-.402	-4.791	.00160	-.02420	.39260	.18420	-.01570	.20130	-.08560	-.08340	.03140
-.366	-.454	-.00030	-.02350	.38100	.18000	-.00830	.01750	-.00710	-.00670	.00310
-.334	3.660	.02700	.00190	.39240	.18560	-.02360	-.15050	.06800	.06630	-.02400
-.336	5.826	.03320	.00650	.39510	.18340	-.03090	-.23950	.10610	.10380	-.03860
	GRADIENT	.00297	.00306	-.00005	.00016	-.00091	-.04164	.01818	.01772	-.00656

IA156A, AEDC PWT 16T-470, O T S W/SILTS (R8NVA6) (10 MAY 80)

REFERENCE DATA

SREF = 2690.0000 SQ.FT. XMRP = 976.0000 IN. XT
LREF = 1290.3000 INCHES YMRP = .0000 IN. YT
BREF = 1290.3000 INCHES ZMRP = 400.0000 IN. ZT
SCALE = .0200

PARAMETRIC DATA

IB-ELV = 12.000 OB-ELV = 5.000
BDFLAP = .000 SPDBRK = .000
RUDDER = .000 SILTS = 1.000
MACH = .950 RN/L = 3.500

RUN NO. 1262/ 0 RN/L = 3.50 GRADIENT INTERVAL = -5.00/ 5.00

ALPHAO	BETAO	CNL	CNFL	CAL	CAFL	CLMFL	CYFL	CYNL	CYNFL	CBLFL
4.114	-5.814	.28980	.26470	.38130	.17630	-.13670	.25670	-.10900	-.10730	.04530
3.989	-3.714	.28450	.26060	.37600	.17440	-.13630	.16250	-.06940	-.06830	.02830
3.766	.120	.27680	.25260	.37110	.17360	-.13490	.00860	-.00470	-.00480	.00270
3.867	4.044	.30620	.28170	.37210	.17000	-.14650	-.14750	.06140	.06010	-.02450
3.800	6.128	.29920	.27300	.37700	.16740	-.14190	-.23860	.10050	.09810	-.04080
	GRADIENT	.00282	.00274	-.00050	-.00057	-.00132	-.03996	.01686	.01655	-.00681

IA156A, AEDC PWT 16T-470, O T S W/SILTS (R8NVA7) (10 MAY 80)

REFERENCE DATA

SREF = 2690.0000 SQ.FT. XMRP = 976.0000 IN. XT
LREF = 1290.3000 INCHES YMRP = .0000 IN. YT
BREF = 1290.3000 INCHES ZMRP = 400.0000 IN. ZT
SCALE = .0200

PARAMETRIC DATA

IB-ELV = 12.000 OB-ELV = 5.000
BDFLAP = .000 SPDBRK = .000
RUDDER = .000 SILTS = 1.000
MACH = 1.050 RN/L = 3.500

RUN NO. 1263/ 0 RN/L = 3.50 GRADIENT INTERVAL = -5.00/ 5.00

ALPHAO	BETAO	CNL	CNFL	CAL	CAFL	CLMFL	CYFL	CYNL	CYNFL	CBLFL
-8.095	-5.938	-.55300	-.59010	.50700	.22800	.20470	.30370	-.12790	-.12520	.03570
-8.223	-3.739	-.57770	-.61430	.51470	.23620	.22200	.19080	-.07940	-.07800	.02040
-8.113	.176	-.58320	-.61770	.52030	.24460	.23140	.00270	.00030	.00040	.00180
-7.953	4.360	-.56200	-.59730	.51580	.23870	.21860	-.19940	.08780	.08650	-.02170
-7.956	6.216	-.56170	-.59700	.51430	.23830	.21220	-.29240	.12600	.12350	-.03400
	GRADIENT	.00197	.00213	.00012	.00029	-.00045	-.04818	.02065	.02031	-.00520

RUN NO. 1264/ 0 RN/L = 3.50 GRADIENT INTERVAL = -5.00/ 5.00

ALPHAO	BETAO	CNL	CNFL	CAL	CAFL	CLMFL	CYFL	CYNL	CYNFL	CBLFL
-6.075	-5.927	-.39430	-.43150	.51580	.23760	.14740	.29030	-.12020	-.11750	.03780
-6.087	-4.033	-.40320	-.43990	.52060	.24490	.15810	.19010	-.07780	-.07630	.02380
-6.194	.104	-.43190	-.46680	.51820	.24280	.18200	-.00180	.00220	.00220	.00080
-6.001	4.237	-.40280	-.43720	.51670	.24540	.16300	-.19040	.08370	.08230	-.02430
-5.962	6.210	-.39890	-.43360	.51330	.24240	.15460	-.28750	.12470	.12220	-.03770
	GRADIENT	.00005	.00033	-.00047	.00006	.00059	-.04601	.01953	.01918	-.00582

IA156A, AEDC PWT 16T-470, O T S W/SILTS (R8NVA7) (10 MAY 80)

REFERENCE DATA

SREF = 2690.0000 SQ.FT. XMRP = 976.0000 IN. XT
LREF = 1290.3000 INCHES YMRP = .0000 IN. YT
BREF = 1290.3000 INCHES ZMRP = 400.0000 IN. ZT
SCALE = .0200

PARAMETRIC DATA

IB-ELV = 12.000 OB-ELV = 5.000
BDFLAP = .000 SPDBRK = .000
RUDDER = .000 SILTS = 1.000
MACH = 1.050 RN/L = 3.500

RUN NO. 1265/ 0 RN/L = 3.50 GRADIENT INTERVAL = -5.00/ 5.00

ALPHAO	BETAO	CNL	CNFL	CAL	CAFL	CLMFL	CYFL	CYNL	CYNFL	CBLFL
-4.169	-6.040	-.25100	-.28730	.51530	.24630	.09610	.28290	-.11590	-.11350	.04090
-4.298	-3.967	-.27240	-.30880	.51660	.24710	.11280	.17830	-.07340	-.07200	.02470
-4.203	.358	-.27690	-.31250	.51710	.24350	.12920	-.01230	.00650	.00640	-.00080
-3.755	4.280	-.23210	-.26630	.51400	.24770	.10470	-.18550	.08090	.07940	-.02730
-3.842	6.113	-.23400	-.26870	.51110	.24570	.09800	-.26860	.11490	.11260	-.04030
	GRADIENT	.00479	.00505	-.00031	.00006	-.00090	-.04412	.01871	.01836	-.00630

RUN NO. 1266/ 0 RN/L = 3.50 GRADIENT INTERVAL = -5.00/ 5.00

ALPHAO	BETAO	CNL	CNFL	CAL	CAFL	CLMFL	CYFL	CYNL	CYNFL	CBLFL
-.451	-6.988	.00470	-.03220	.51030	.24420	.00110	.31870	-.13300	-.13060	.05480
-.430	-4.840	-.00170	-.03790	.50910	.24730	.01100	.21740	-.09430	-.09240	.03800
-.407	-.438	-.01130	-.04590	.50910	.24490	02440	.02530	-.01270	-.01260	.00400
-.375	3.677	.01100	-.02340	.51790	.25300	.01190	-.15530	.07160	.07000	-.02780
-.367	5.843	.02120	-.01440	.51330	.24090	.00170	-.24770	.11020	.10790	-.04380
	GRADIENT	.00145	.00166	.00102	.00066	.00014	-.04376	.01947	.01906	-.00773

RUN NO. 1267/ 0 RN/L = 3.50 GRADIENT INTERVAL = -5.00/ 5.00

ALPHAO	BETAO	CNL	CNFL	CAL	CAFL	CLMFL	CYFL	CYNL	CYNFL	CBLFL
4.116	-5.817	.28290	.24740	.50330	.24160	-.11050	.26580	-.11580	-.11440	.05130
3.972	-3.711	.27120	.23620	.50060	.24080	-.10250	.17130	-.07670	-.07590	.03260
3.787	.113	.27280	.23850	.49850	.24090	-.10000	.01290	-.00830	-.00820	.00280
3.854	4.043	.30080	.26730	.49920	.24180	-.11890	-.15510	.06770	.06670	-.02920
3.804	6.119	.29900	.26430	.49990	.23660	-.11840	-.24630	.10400	.10260	-.04680
	GRADIENT	.00383	.00403	-.00018	.00013	-.00213	-.04210	.01863	.01839	-.00797

IA156A, AEDC PWT 16T-470, O T S W/SILTS (R8NVA8) (10 MAY 80)

REFERENCE DATA

SREF = 2690.0000 SQ.FT. XMRP = 976.0000 IN. XT
LREF = 1290.3000 INCHES YMRP = .0000 IN. YT
BREF = 1290.3000 INCHES ZMRP = 400.0000 IN. ZT
SCALE = .0200

PARAMETRIC DATA

IB-ELV = 12.000 OB-ELV = 5.000
BDFLAP = .000 SPDBRK = .000
RUDDER = .000 SILTS = 1.000
MACH = 1.100 RN/L = 3.500

RUN NO. 1268/ 0 RN/L = 3.50 GRADIENT INTERVAL = -5.00/ 5.00

ALPHAO	BETAO	CNL	CNFL	CAL	CAFL	CLMFL	CYFL	CYNL	CYNFL	CBLFL
-8.103	-5.932	-.54240	-.57590	.50750	.25210	.19450	.28700	-.11780	-.11530	.03320
-8.214	-3.748	-.55940	-.59330	.51530	.25480	.20700	.18060	-.07150	-.07010	.01900
-8.118	.177	-.56460	-.59600	.51280	.25550	.21640	-.00370	.00330	.00330	.00090
-7.959	4.361	-.54860	-.58110	.51640	.25730	.20740	-.19750	.08490	.08340	-.02140
-7.951	6.217	-.54520	-.57740	.51120	.25680	.20170	-.28570	.12110	.11870	-.03320
	GRADIENT	.00136	.00153	.00014	.00031	.00003	-.04662	.01929	.01893	-.00499

RUN NO. 1269/ 0 RN/L = 3.50 GRADIENT INTERVAL = -5.00/ 5.00

ALPHAO	BETAO	CNL	CNFL	CAL	CAFL	CLMFL	CYFL	CYNL	CYNFL	CBLFL
-6.168	-5.957	-.38940	-.42260	.50660	.25580	.13590	.27240	-.10940	-.10700	.03540
-6.117	-4.044	-.39490	-.42740	.50630	.25740	.14460	.17750	-.06960	-.06830	.02210
-6.213	.099	-.41450	-.44550	.50490	.25560	16290	-.00760	.00430	.00430	.00020
-5.981	4.228	-.37730	-.40790	.50490	.26010	.14330	-.18400	.07710	.07580	-.02360
-5.980	6.223	-.37810	-.41000	.50520	.25510	.13930	-.27550	.11620	.11380	-.03680
	GRADIENT	.00212	.00235	-.00017	.00033	-.00015	-.04370	.01774	.01742	-.00552

RUN NO. 1270/ 0 RN/L = 3.50 GRADIENT INTERVAL = -5.00/ 5.00

ALPHAO	BETAO	CNL	CNFL	CAL	CAFL	CLMFL	CYFL	CYNL	CYNFL	CBLFL
-4.029	-6.054	-.23070	-.26350	.50310	.25710	.07750	.26360	-.10350	-.10150	.03920
-4.294	-3.964	-.26010	-.29230	.50120	.25930	.09670	.16550	-.06470	-.06350	.02310
-4.189	.363	-.25550	-.28610	.49480	.25560	.10730	-.01720	.00760	.00740	-.00120
-3.727	4.275	-.20330	-.23300	.49910	.26440	.08130	-.17700	.07310	.07180	-.02730
-3.851	6.108	-.21320	-.24370	.50090	.26250	.07970	-.26040	.10760	.10560	-.04060
	GRADIENT	.00679	.00710	-.00028	.00059	-.00179	-.04159	.01673	.01642	-.00611

RUN NO. 1271/ 0 RN/L = 3.50 GRADIENT INTERVAL = -5.00/ 5.00

ALPHAO	BETAO	CNL	CNFL	CAL	CAFL	CLMFL	CYFL	CYNL	CYNFL	CBLFL
-.458	-6.986	.00450	-.02820	.49850	.25880	-.00600	.30360	-.12170	-.11970	.05340
-.434	-4.836	-.00030	-.03200	.49240	.26150	.00250	.20630	-.08620	-.08450	.03720
-.400	-.468	-.00030	-.02980	.48810	.25920	.00880	.02230	-.01040	-.01030	.00350
-.367	3.667	.02050	-.00850	.49510	.26600	-.00220	-.15060	.06750	.06590	-.02800
-.366	5.838	.02570	-.00350	.49290	.26410	-.01040	-.24340	.10600	.10380	-.04410
	GRADIENT	.00242	.00274	.00031	.00052	-.00053	-.04197	.01807	.01768	-.00767

IA156A, AEDC PWT 16T-470, O T S W/SILTS (R8NVA8) (10 MAY 80)

REFERENCE DATA

SREF = 2690.0000 SQ.FT. XMRP = 976.0000 IN. XT
LREF = 1290.3000 INCHES YMRP = .0000 IN. YT
BREF = 1290.3000 INCHES ZMRP = 400.0000 IN. ZT
SCALE = .0200

PARAMETRIC DATA

IB-ELV = 12.000 OB-ELV = 5.000
BDFLAP = .000 SPDBRK = .000
RUDDER = .000 SILTS = 1.000
MACH = 1.100 RN/L = 3.500

RUN NO. 1272/ 0 RN/L = 3.50 GRADIENT INTERVAL = -5.00/ 5.00

ALPHAO	BETAO	CNL	CNFL	CAL	CAFL	CLMFL	CYFL	CYNL	CYNFL	CBLFL
4.134	-5.837	.30100	.27060	.48140	.25270	-.12480	.25980	-.11230	-.11100	.04970
3.984	-3.725	.28820	.25920	.47780	.25690	-.11710	.16870	-.07580	-.07510	.03190
3.776	.118	.27730	.24740	.47870	.25270	-.10730	.00620	-.00610	-.00600	.00170
3.840	4.028	.30040	.27250	.47890	.25970	-.12320	-.15680	.06700	.06600	-.02930
3.794	6.117	.29900	.26980	.47870	.25360	-.12570	-.24470	.10180	.10040	-.04640
	GRADIENT	.00159	.00173	.00014	.00037	-.00080	-.04198	.01842	.01820	-.00789

IA156A, AEDC PWT 16T-470, O T S W/SILTS (R8NVA9) (10 MAY 80)

REFERENCE DATA

SREF = 2690.0000 SQ.FT. XMRP = 976.0000 IN. XT
LREF = 1290.3000 INCHES YMRP = .0000 IN. YT
BREF = 1290.3000 INCHES ZMRP = 400.0000 IN. ZT
SCALE = .0200

PARAMETRIC DATA

IB-ELV = 12.000 OB-ELV = 5.000
BDFLAP = .000 SPDBRK = .000
RUDDER = .000 SILTS = 1.000
MACH = 1.150 RN/L = 3.500

RUN NO. 1273/ 0 RN/L = 3.50 GRADIENT INTERVAL = -5.00/ 5.00

ALPHAO	BETAO	CNL	CNFL	CAL	CAFL	CLMFL	CYFL	CYNL	CYNFL	CBLFL
-8.106	-5.939	-.54390	-.57580	.51150	.26730	.19230	.29740	-.12080	-.11850	.03570
-8.213	-3.740	-.55680	-.58790	.50750	.26770	.20560	.18390	-.07300	-.07160	.01980
-8.116	.191	-.58000	-.61040	.51470	.26610	.22230	.00120	.00000	.00000	.00140
-7.934	4.331	-.55580	-.58530	.50860	.27150	.21060	-.18530	.07800	.07670	-.01990
-7.974	6.231	-.55840	-.58920	.50690	.26560	.20640	-.28090	.11920	.11710	-.03290
	GRADIENT	.00017	.00037	.00012	.00048	.00059	-.04574	.01871	.01838	-.00492

RUN NO. 1274/ 0 RN/L = 3.51 GRADIENT INTERVAL = -5.00/ 5.00

ALPHAO	BETAO	CNL	CNFL	CAL	CAFL	CLMFL	CYFL	CYNL	CYNFL	CBLFL
-6.162	-5.951	-.38390	-.41570	.50740	.26750	.13090	.28060	-.11310	-.11070	.03800
-6.104	-4.035	-.38770	-.41850	.50470	.27000	.13920	.18340	-.07280	-.07140	.02390
-6.198	.094	-.41820	-.44710	.50210	.26710	.16480	.00400	-.00330	-.00330	.00190
-5.994	4.239	-.38680	-.41610	.50430	.27130	.14690	-.18010	.07320	.07190	-.02360
-5.969	6.213	-.38490	-.41490	.50340	.27200	.14110	-.26980	.11180	.10960	-.03700
	GRADIENT	.00011	.00029	-.00005	.00016	.00093	-.04393	.01765	.01732	-.00574

IA156A, AEDC PWT 16T-470, O T S W/SILTS (R8NVA9) (10 MAY 80)

REFERENCE DATA

SREF = 2690.0000 SQ.FT. XMRP = 976.0000 IN. XT
LREF = 1290.3000 INCHES YMRP = .0000 IN. YT
BREF = 1290.3000 INCHES ZMRP = 400.0000 IN. ZT
SCALE = .0200

PARAMETRIC DATA

IB-ELV = 12.000 OB-ELV = 5.000
BDFLAP = .000 SPDBRK = .000
RUDDER = .000 SILTS = 1.000
MACH = 1.150 RN/L = 3.500

RUN NO. 1275/ 0 RN/L = 3.51 GRADIENT INTERVAL = -5.00/ 5.00

ALPHAO	BETAO	CNL	CNFL	CAL	CAFL	CLMFL	CYFL	CYNL	CYNFL	CBLFL
-4.038	-6.052	-.21860	-.24980	.50220	.27040	.06950	.26910	-.10780	-.10570	.04150
-4.300	-3.967	-.24560	-.27570	.50010	.27290	.08540	.17380	-.07080	-.06950	.02600
-4.202	.367	-.24910	-.27800	.49470	.26840	.10150	-.00880	.00150	.00140	-.00040
-3.747	4.274	-.21180	-.24010	.50040	.27610	.08470	-.17110	.06920	.06800	-.02740
-3.861	6.129	-.22180	-.25140	.50270	.27530	.08350	-.25760	.10520	.10330	-.04090
	GRADIENT	.00401	.00423	.00001	.00036	-.00002	-.04186	.01698	.01668	-.00647

RUN NO. 1276/ 0 RN/L = 3.50 GRADIENT INTERVAL = -5.00/ 5.00

ALPHAO	BETAO	CNL	CNFL	CAL	CAFL	CLMFL	CYFL	CYNL	CYNFL	CBLFL
-.443	-7.017	.02210	-.00910	.49950	.27110	-.01630	.31200	-.12840	-.12630	.05460
-.417	-4.818	.02290	-.00710	.49540	.27490	-.01440	.20700	-.08770	-.08610	.03690
-.384	-.496	.02660	-.00160	.49410	.27560	-.01310	.02240	-.01020	-.01010	.00320
-.349	3.667	.04530	.01730	.50040	.03150	-.02080	-.15180	.06850	.06690	-.02830
-.350	5.859	.04520	.01670	.49910	.27780	-.02160	-.24640	.10630	.10430	-.04520
	GRADIENT	.00263	.00287	.00058	.00077	-.00075	-.04229	.01841	.01803	-.00769

RUN NO. 1277/ 0 RN/L = 3.50 GRADIENT INTERVAL = -5.00/ 5.00

ALPHAO	BETAO	CNL	CNFL	CAL	CAFL	CLMFL	CYFL	CYNL	CYNFL	CBLFL
4.119	-5.814	.29150	.26320	.48420	.27060	-.11950	.26480	-.11670	-.11540	.05040
3.983	-3.718	.28760	.25880	.48780	.27230	-.11470	.17810	-.08330	-.08250	.03360
3.772	.121	.28380	.25490	.48660	.26820	-.11080	.01750	-.01460	-.01440	.00330
3.856	4.026	.31480	.28780	.48400	.27440	-.13310	-.14770	.06200	.06110	-.02850
3.798	6.127	.31260	.28510	.48760	.27580	-.13550	-.24400	.10140	.10000	-.04630
	GRADIENT	.00352	.00376	-.00049	.00027	-.00239	-.04207	.01876	.01854	-.00802

IA156A, AEDC PWT 16T-470, O T S W/SILTS (R8NVB0) (10 MAY 80)

REFERENCE DATA

SREF = 2690.0000 SQ.FT. XMRP = 976.0000 IN. XT
LREF = 1290.3000 INCHES YMRP = .0000 IN. YT
BREF = 1290.3000 INCHES ZMRP = 400.0000 IN. ZT
SCALE = .0200

PARAMETRIC DATA

IB-ELV = 12.000 OB-ELV = 5.000
BDFLAP = .000 SPDBRK = .000
RUDDER = .000 SILTS = 1.000
MACH = 1.250 RN/L = 3.500

RUN NO. 1278/ 0 RN/L = 3.50 GRADIENT INTERVAL = -5.00/ 5.00

ALPHAO	BETAO	CNL	CNFL	CAL	CAFL	CLMFL	CYFL	CYNL	CYNFL	CBLFL
-8.117	-5.934	-.54230	-.57100	.50240	.27880	.19150	.28920	-.11650	-.11460	.03620
-8.222	-3.728	-.55840	-.58650	.50390	.28120	.20410	.17400	-.06580	-.06450	.02080
-8.114	.192	-.55670	-.58360	.50280	.28160	.20940	-.00360	.00530	.00540	.00130
-7.937	4.364	-.53980	-.56780	.50400	.28250	.19730	-.19260	.08260	.08150	-.02250
-7.972	6.250	-.54060	-.56900	.50270	.27860	.19210	-.28800	.12370	.12190	-.03540
	GRADIENT	.00232	.00233	.00002	.00016	-.00086	-.04530	.01834	.01804	-.00535

RUN NO. 1279/ 0 RN/L = 3.50 GRADIENT INTERVAL = -5.00/ 5.00

ALPHAO	BETAO	CNL	CNFL	CAL	CAFL	CLMFL	CYFL	CYNL	CYNFL	CBLFL
-6.202	-5.973	-.38410	-.41220	.49840	.28200	.12990	.27140	-.10810	-.10610	.03770
-6.133	-4.024	-.38240	-.41030	.50000	.28300	.13490	.17310	-.06630	-.06510	.02390
-6.196	.131	-.39360	-.42020	.49640	.28250	.14790	-.00840	.00590	.00600	.00060
-5.998	4.246	-.37220	-.39920	.50030	.28780	.13230	-.18190	.07680	.07570	-.02420
-5.797	6.327	-.35800	-.38590	.49820	.28550	.12240	-.27860	.11800	.11600	-.03860
	GRADIENT	.00123	.00134	.00003	.00058	-.00031	-.04293	.01730	.01703	-.00582

RUN NO. 1280/ 0 RN/L = 3.50 GRADIENT INTERVAL = -5.00/ 5.00

ALPHAO	BETAO	CNL	CNFL	CAL	CAFL	CLMFL	CYFL	CYNL	CYNFL	CBLFL
-4.179	-6.048	-.23210	-.26080	.49810	.28330	.07430	.25270	-.10470	-.10280	.04010
-4.309	-3.970	-.24750	-.27540	.49820	.28530	.08450	.16040	-.06250	-.06150	.02430
-4.187	.370	-.23270	-.25960	.49380	.28350	.08450	-.01770	.00850	.00850	-.00110
-3.744	4.281	-.19260	-.21880	.49630	.28990	.06560	-.17450	.07280	.07190	-.02640
-3.855	6.144	-.20490	-.23250	.49950	.28830	.06760	-.26080	.10870	.10690	-.04010
	GRADIENT	.00659	.00680	-.00024	.00054	-.00225	-.04060	.01640	.01617	-.00614

RUN NO. 1281/ 0 RN/L = 3.51 GRADIENT INTERVAL = -5.00/ 5.00

ALPHAO	BETAO	CNL	CNFL	CAL	CAFL	CLMFL	CYFL	CYNL	CYNFL	CBLFL
-.472	-7.033	.01420	-.01390	.49260	.28560	-.01380	.30570	-.12590	-.12400	.05180
-.444	-4.826	.01640	-.01130	.49480	.28350	-.01180	.20420	-.08600	-.08450	.03520
-.401	-.499	.02440	-.00180	.49040	.28940	-.01280	.02150	-.01030	-.01020	.00340
-.365	3.669	.04280	.01770	.49290	.29600	-.01930	-.14900	.06540	.06400	-.02660
-.377	5.868	.03720	.01100	.49200	.28930	-.01880	-.24300	.10320	.10120	-.04240
	GRADIENT	.00310	.00341	-.00023	.00147	-.00088	-.04158	.01782	.01748	-.00728

IA156A, AEDC PWT 16T-470, O T S W/SILTS (R8NVB0) (10 MAY 80)

REFERENCE DATA

SREF = 2690.0000 SQ.FT. XMRP = 976.0000 IN. XT
LREF = 1290.3000 INCHES YMRP = .0000 IN. YT
BREF = 1290.3000 INCHES ZMRP = 400.0000 IN. ZT
SCALE = .0200

PARAMETRIC DATA

IB-ELV = 12.000 OB-ELV = 5.000
BDFLAP = .000 SPDBRK = .000
RUDDER = .000 SILTS = 1.000
MACH = 1.250 RN/L = 3.500

RUN NO. 1282/ 0 RN/L = 3.51 GRADIENT INTERVAL = -5.00/ 5.00

ALPHAO	BETAO	CNL	CNFL	CAL	CAFL	CLMFL	CYFL	CYNL	CYNFL	CBLFL
4.122	-5.803	.30370	.27700	.48490	.28490	-.13060	.26230	-.11560	-.11440	.04830
3.999	-3.707	.30140	.27480	.48600	.28720	-.12780	.17070	-.07900	-.07830	.03170
3.758	.132	.28760	.26130	.48190	.28400	-.11610	.00690	-.00840	-.00830	.00190
3.825	4.039	.30210	.27600	.48310	.28350	-.12620	-.15870	.06990	.06900	-.02890
3.778	6.113	.29600	.26990	.48230	.28350	-.12470	-.25050	.10700	.10550	-.04550
	GRADIENT	.00010	.00017	-.00037	-.00048	.00020	-.04253	.01923	.01902	-.00782

IA156A, AEDC PWT 16T-470, O T S W/SILTS (R8NVB1) (10 MAY 80)

REFERENCE DATA

SREF = 2690.0000 SQ.FT. XMRP = 976.0000 IN. XT
LREF = 1290.3000 INCHES YMRP = .0000 IN. YT
BREF = 1290.3000 INCHES ZMRP = 400.0000 IN. ZT
SCALE = .0200

PARAMETRIC DATA

IB-ELV = 12.000 OB-ELV = 5.000
BDFLAP = .000 SPDBRK = .000
RUDDER = .000 SILTS = 1.000
MACH = 1.400 RN/L = 3.500

RUN NO. 1283/ 0 RN/L = 3.49 GRADIENT INTERVAL = -5.00/ 5.00

ALPHAO	BETAO	CNL	CNFL	CAL	CAFL	CLMFL	CYFL	CYNL	CYNFL	CBLFL
-8.172	-5.916	-.56130	-.58750	.49390	.29250	.19940	.29050	-.11470	-.11300	.03440
-8.232	-3.703	-.56610	-.59180	.49840	.29580	.20590	.17470	-.06530	-.06420	.02020
-8.132	.227	-.56190	-.58650	.49570	.29760	.20740	-.00500	.00200	.00190	.00130
-7.934	4.409	-.54540	-.57070	.49760	.29680	.19860	-.19330	.07680	.07560	-.02060
-7.993	6.316	-.55470	-.58030	.49440	.29530	.20120	-.29080	.11870	.11710	-.03350
	GRADIENT	.00257	.00261	-.00009	.00012	-.00091	-.04536	.01752	.01724	-.00503

RUN NO. 1284/ 0 RN/L = 3.50 GRADIENT INTERVAL = -5.00/ 5.00

ALPHAO	BETAO	CNL	CNFL	CAL	CAFL	CLMFL	CYFL	CYNL	CYNFL	CBLFL
-6.235	-5.949	-.40160	-.42740	.49050	.29380	.13750	.26930	-.10340	-.10170	.03520
-6.174	-4.010	-.39910	-.42430	.49250	.29670	.13940	.17140	-.06300	-.06210	.02220
-6.227	.157	-.40430	-.42950	.49380	.29170	.14470	-.00710	.00350	.00350	.00040
-5.972	4.288	-.37400	-.39870	.49180	.29850	.12970	-.18170	.07070	.06990	-.02230
-5.941	6.258	-.38410	-.40950	.49080	.29220	.13320	-.27770	.11150	.10990	-.03550
	GRADIENT	.00302	.00308	-.00008	.00021	-.00117	-.04255	.01611	.01591	-.00536

IA156A, AEDC PWT 16T-470, O T S W/SILTS (R8NVB1) (10 MAY 80)

REFERENCE DATA

SREF = 2690.0000 SQ.FT. XMRP = 976.0000 IN. XT
LREF = 1290.3000 INCHES YMRP = .0000 IN. YT
BREF = 1290.3000 INCHES ZMRP = 400.0000 IN. ZT
SCALE = .0200

PARAMETRIC DATA

IB-ELV = 12.000 OB-ELV = 5.000
BDFLAP = .000 SPDBRK = .000
RUDDER = .000 SILTS = 1.000
MACH = 1.400 RN/L = 3.500

RUN NO. 1285/ 0 RN/L = 3.50 GRADIENT INTERVAL = -5.00/ 5.00

ALPHAO	BETAO	CNL	CNFL	CAL	CAFL	CLMFL	CYFL	CYNL	CYNFL	CBLFL
-4.308	-5.994	-.25990	-.28550	.48880	.29600	.08520	.26210	-.10070	-.09920	.03740
-4.303	-3.954	-.24950	-.27480	.49040	.29800	.08200	.16490	-.06110	-.06020	.02310
-4.210	.427	-.23860	-.26300	.48470	.29670	.07960	-.01840	.00760	.00760	-.00140
-3.718	4.312	-.19920	-.22400	.49090	.30090	.06530	-.17390	.06740	.06660	-.02460
-3.823	6.165	-.21580	-.24080	.48720	.29640	.07070	-.26020	.10360	.10210	-.03720
	GRADIENT	.00601	.00607	.00003	.00034	-.00199	-.04100	.01555	.01534	-.00577

RUN NO. 1286/ 0 RN/L = 3.50 GRADIENT INTERVAL = -5.00/ 5.00

ALPHAO	BETAO	CNL	CNFL	CAL	CAFL	CLMFL	CYFL	CYNL	CYNFL	CBLFL
-.534	-7.071	.00320	-.02300	.48750	.28440	-.00930	.30950	-.12530	-.12360	.05010
-.500	-4.898	.00830	-.01690	.48240	.29800	-.01060	.20360	-.08180	-.08050	.03320
-.449	-.441	.02390	-.00050	.48060	.29440	-.01650	.01740	-.00690	-.00690	.00290
-.429	3.664	.03110	.00700	.48540	.30330	-.01650	-.15060	.06330	.06230	-.02490
-.442	5.877	.02260	-.00210	.48630	.30110	-.01410	-.24950	.10470	.10300	-.04090
	GRADIENT	.00267	.00280	.00034	.00060	-.00070	-.04137	.01694	.01668	-.00679

RUN NO. 1287/ 0 RN/L = 3.49 GRADIENT INTERVAL = -5.00/ 5.00

ALPHAO	BETAO	CNL	CNFL	CAL	CAFL	CLMFL	CYFL	CYNL	CYNFL	CBLFL
4.136	-5.764	.29630	.27150	.47910	.29720	-.11860	.26320	-.11790	-.11650	.04690
4.015	-3.670	.29150	.26710	.47730	.29720	-.11880	.16760	-.07930	-.07840	.03030
3.731	.162	.27810	.25390	.47630	.29620	-.11140	.00720	-.00870	-.00880	.00180
3.793	4.054	.29250	.26900	.47640	.29930	-.12040	-.15570	.06620	.06540	-.02770
3.718	6.096	.28840	.26410	.47820	.29820	-.11950	-.25150	.10770	.10630	-.04370
	GRADIENT	.00014	.00026	-.00012	.00027	-.00021	-.04185	.01884	.01862	-.00751

IA156A, AEDC PWT 16T-470, O T S W/SILTS (R8NV82) (10 MAY 80)

REFERENCE DATA

SREF = 2690.0000 SQ.FT. XMRP = 976.0000 IN. XT
LREF = 1290.3000 INCHES YMRP = .0000 IN. YT
BREF = 1290.3000 INCHES ZMRP = 400.0000 IN. ZT
SCALE = .0200

PARAMETRIC DATA

IB-ELV = 12.000 OB-ELV = 5.000
BDFLAP = .000 SPDBRK = .000
RUDDER = .000 SILTS = 1.000
MACH = 1.550 RN/L = 3.200

RUN NO. 1288/ 0 RN/L = 3.00 GRADIENT INTERVAL = -5.00/ 5.00

ALPHAO	BETAO	CNL	CNFL	CAL	CAFL	CLMFL	CYFL	CYNL	CYNFL	CBLFL
-8.285	-5.892	-.55430	-.57760	.47110	.29370	.20420	.28900	-.11880	-.11710	.03260
-8.337	-3.675	-.56140	-.58430	.47380	.29640	.21080	.17610	-.06970	-.06860	.01910
-8.205	.319	-.55860	-.58090	.47520	.29790	.21390	-.00320	.00030	.00040	.00090
-7.984	4.502	-.55150	-.57400	.47550	.29960	.21110	-.19110	.07710	.07590	-.01960
-7.934	6.371	-.55280	-.57570	.47200	.29580	.20860	-.28430	.11710	.11550	-.03130
	GRADIENT	.00121	.00126	.00021	.00039	.00003	-.04491	.01796	.01768	-.00473

RUN NO. 1289/ 0 RN/L = 3.00 GRADIENT INTERVAL = -5.00/ 5.00

ALPHAO	BETAO	CNL	CNFL	CAL	CAFL	CLMFL	CYFL	CYNL	CYNFL	CBLFL
-6.328	-5.943	-.39820	-.42130	.46840	.29300	.14060	.27490	-.11130	-.10960	.03400
-6.270	-3.986	-.40360	-.42630	.46890	.29490	.14670	.17760	-.06960	-.06860	.02140
-6.272	.238	-.40490	-.42710	.46820	.29500	.5350	-.00500	.00070	.00080	.00080
-5.982	4.385	-.38890	-.41130	.47130	.29860	.14590	-.18220	.07300	.07210	-.02150
-5.925	6.371	-.39390	-.41650	.46990	.29480	.14580	-.27850	.11440	.11270	-.03410
	GRADIENT	.00175	.00179	.00029	.00044	-.00009	-.04298	.01703	.01681	-.00512

RUN NO. 1290/ 0 RN/L = 3.00 GRADIENT INTERVAL = -5.00/ 5.00

ALPHAO	BETAO	CNL	CNFL	CAL	CAFL	CLMFL	CYFL	CYNL	CYNFL	CBLFL
-4.204	-6.069	-.24320	-.26660	.46710	.29410	.08120	.26590	-.10860	-.10700	.03570
-4.444	-3.944	-.26110	-.28350	.46500	.29520	.09050	.16710	-.06630	-.06540	.02150
-4.280	.501	-.25280	-.27490	.46330	.29550	.09270	-.01680	.00550	.00550	-.00110
-3.717	4.430	-.22020	-.24270	.46700	.29760	.08240	-.17700	.07220	.07140	-.02340
-3.798	6.262	-.23700	-.25930	.46510	.29610	.08720	-.26540	.11050	.10910	-.03570
	GRADIENT	.00482	.00481	.00023	.00028	-.00094	-.04109	.01653	.01633	-.00536

RUN NO. 1291/ 0 RN/L = 3.00 GRADIENT INTERVAL = -5.00/ 5.00

ALPHAO	BETAO	CNL	CNFL	CAL	CAFL	CLMFL	CYFL	CYNL	CYNFL	CBLFL
-.583	-7.072	-.00640	-.03020	.46110	.29010	-.00580	.30740	-.12990	-.12820	.04730
-.548	-4.907	-.00130	-.02400	.45860	.29370	-.00490	.20390	-.08420	-.08310	.03110
-.520	-.554	-.00010	-.02250	.45660	.29460	-.00250	.01770	-.00540	-.00530	.00210
-.504	3.581	.01050	-.01180	.46170	.29830	-.00950	-.15360	.06890	.06810	-.02390
-.509	5.749	.01250	-.01020	.46170	.29710	-.01490	-.24770	.10980	.10830	-.03790
	GRADIENT	.00138	.00143	.00036	.00054	-.00053	-.04212	.01804	.01781	-.00648

IA156A, AEDC PWT 16T-470, O T S W/SILTS (R8NVB2) (10 MAY 80)

REFERENCE DATA

SREF = 2690.0000 SQ.FT. XMRP = 976.0000 IN. XT
LREF = 1290.3000 INCHES YMRP = .0000 IN. YT
BREF = 1290.3000 INCHES ZMRP = 400.0000 IN. ZT
SCALE = .0200

PARAMETRIC DATA

IB-ELV = 12.000 OB-ELV = 5.000
BDFLAP = .000 SPDBRK = .000
RUDDER = .000 SILTS = 1.000
MACH = 1.550 RN/L = 3.200

RUN NO. 1292/ 0 RN/L = 3.00 GRADIENT INTERVAL = -5 00/ 5.00

ALPHAO	BETAO	CNL	CNFL	CAL	CAFL	CLMFL	CYFL	CYNL	CYNFL	CBLFL
4.186	-5.682	.27960	.25620	.46250	.29550	-.10990	.26260	-.12230	-.12090	.04660
3.986	-3.541	.27050	.24760	.45820	.29500	-.10890	.16670	-.08060	-.07970	.02950
3.703	.248	.26480	.24220	.45370	.29070	-.10820	.00550	-.00970	-.00980	.00240
3.683	4.063	.27530	.25310	.45470	.29290	-.11720	-.15220	.06470	.06370	-.02560
3.648	6.133	.27390	.25120	.45380	.29150	-.11710	-.25130	.10970	.10830	-.04230
	GRADIENT	.00063	.00073	-.00046	-.00028	-.00109	-.04194	.01911	.01886	-.00725

IA156A, AEDC PWT 16T-470, O T S W/SILTS (R8NVB3) (10 MAY 80)

REFERENCE DATA

SREF = 2690.0000 SQ.FT. XMRP = 976.0000 IN. XT
LREF = 1290.3000 INCHES YMRP = .0000 IN. YT
BREF = 1290.3000 INCHES ZMRP = 400.0000 IN. ZT
SCALE = .0200

PARAMETRIC DATA

IB-ELV = 12.000 OB-ELV = 9.000
BDFLAP = .000 SPDBRK = .000
RUDDER = .000 SILTS = 1.000
MACH = .600 RN/L = 3.500

RUN NO. 1295/ 0 RN/L = 3.50 GRADIENT INTERVAL = -5.00/ 5.00

ALPHAO	BETAO	CNL	CNFL	CAL	CAFL	CLMFL	CYFL	CYNL	CYNFL	CBLFL
-8.119	-7.790	-.40300	-.42680	.28130	.08820	.10050	.31390	-.13000	-.12690	.03760
-8.082	-5.753	-.40540	-.42930	.28580	.09030	.10230	.22830	-.09500	-.09250	.02690
-8.072	-3.742	-.40770	-.43010	.28690	.09670	.10640	.14800	-.06120	-.05980	.01670
-7.981	.359	-.41920	-.44000	.28500	.09780	.11930	-.01650	.00830	.00830	-.00150
-7.836	4.240	-.39530	-.41760	.28950	.09800	.10480	-.16770	.07440	.07300	-.01990
-7.859	6.141	-.39210	-.41560	.28760	.09380	.10160	-.24140	.10580	.10360	-.02920
-7.879	8.123	-.39770	-.42140	.28650	.09000	.10470	-.31410	.13520	.13230	-.03780
	GRADIENT	.00151	.00153	.00032	.00016	-.00017	-.03956	.01699	.01664	-.00458

RUN NO. 1296/ 0 RN/L = 3.49 GRADIENT INTERVAL = -5.00/ 5.00

ALPHAO	BETAO	CNL	CNFL	CAL	CAFL	CLMFL	CYFL	CYNL	CYNFL	CBLFL
-6.119	-7.865	-.27850	-.30240	.28410	.09200	.05430	.31840	-.13210	-.12910	.04130
-6.070	-5.846	-.28300	-.30650	.28650	.09680	.05750	.23300	-.09790	-.09560	.03040
-5.997	-3.956	-.28520	-.30740	.28820	.10350	.06210	.15140	-.06380	-.06230	.01940
-6.035	.089	-.29600	-.31640	.28430	.10330	.07510	-.00960	.00410	.00410	-.00040
-5.902	4.151	-.27530	-.29750	.29060	.10310	.06460	-.15760	.06850	.06720	-.02050
-5.812	6.114	-.26480	-.28770	.29080	.10230	.05810	-.23380	.10140	.09920	-.03140
-5.845	8.081	-.27050	-.29960	.29050	.09520	.06150	-.31050	.13370	.13090	-.04110
	GRADIENT	.00122	.00122	.00030	-.00005	.00031	-.03811	.01632	.01597	-.00492

IA156A, AEDC PWT 16T-470, O T S W/SILTS (R8NVB3) (10 MAY 80)

REFERENCE DATA

SREF = 2690.0000 SQ.FT. XMRP = 976.0000 IN. XT
LREF = 1290.3000 INCHES YMRP = .0000 IN. YT
BREF = 1290.3000 INCHES ZMRP = 400.0000 IN. ZT
SCALE = .0200

PARAMETRIC DATA

IB-ELV = 12.000 OB-ELV = 9.000
BDFLAP = .000 SPDBRK = .000
RUDDER = .000 SILTS = 1.000
MACH = .600 RN/L = 3.500

RUN NO. 1297/ 0 RN/L = 3.49 GRADIENT INTERVAL = -5.00/ 5.00

ALPHAO	BETAO	CNL	CNFL	CAL	CAFL	CLMFL	CYFL	CYNL	CYNFL	CBLFL
-4.186	-7.885	-.17490	-.19840	.28580	.09940	.01860	.31360	-.13040	-.12770	.04380
-4.176	-5.895	-.17620	-.19930	.28720	.10300	.02070	.22400	-.09340	-.09120	.03170
-4.190	-3.851	-.17990	-.20200	.28930	.10790	.02550	.13670	-.05720	-.05580	.01890
-3.978	.173	-.16940	-.18960	.28640	.10890	.02970	-.01180	.00440	.00430	-.00060
-3.670	4.213	-.13580	-.15720	.29050	.11190	.01640	-.16130	.07010	.06870	-.02320
-3.770	6.000	-.14240	-.16470	.28930	.10720	.01670	-.22620	.09790	.09580	-.03320
-3.798	7.974	-.14600	-.16950	.29100	.10210	.01560	-.30410	.13110	.12850	-.04360
	GRADIENT	.00547	.00556	.00015	.00050	-.00113	-.03696	.01579	.01544	-.00522

RUN NO. 1298/ 0 RN/L = 3.49 GRADIENT INTERVAL = -5.00/ 5.00

ALPHAO	BETAO	CNL	CNFL	CAL	CAFL	CLMFL	CYFL	CYNL	CYNFL	CBLFL
-.340	-8.690	.03190	.00880	.28510	.10040	-.05470	.35620	-.15250	-.15030	.05450
-.331	-6.609	.02360	.00170	.28300	.10500	-.04790	.26210	-.11300	-.11080	.04110
-.315	-4.354	.02140	.00020	.28570	.11220	-.04400	.16610	-.07250	-.07090	.02630
-.289	-.306	.02270	.00320	.28290	.11240	-.03920	.00610	-.00140	-.00140	.00110
-.260	3.764	.04890	.02870	.28460	.11390	-.05340	-.13920	.06340	.06200	-.02220
-.254	5.857	.05550	.03360	.28680	.11140	-.05870	-.22100	.09970	.09770	-.03550
-.245	7.949	.06710	.04420	.28730	.10620	-.06480	-.29900	.13360	.13130	-.04840
	GRADIENT	.00339	.00351	-.00013	.00021	-.00116	-.03761	.01674	.01637	-.00597

RUN NO. 1299/ 0 RN/L = 3.49 GRADIENT INTERVAL = -5.00/ 5.00

ALPHAO	BETAO	CNL	CNFL	CAL	CAFL	CLMFL	CYFL	CYNL	CYNFL	CBLFL
4.199	-7.951	.28700	.26570	.27150	.10000	-.14790	.32410	-.14540	-.14380	.05880
4.108	-5.827	.28010	.25900	.27020	.10200	-.14230	.23540	-.10740	-.10590	.04360
4.094	-3.848	.27850	.25800	.26980	.10400	-.13850	.15390	-.07120	-.07020	.02850
3.907	.076	.26700	.24740	.26780	.10130	-.13000	.00760	-.00670	-.00670	.00180
3.939	4.101	.29410	.27440	.26880	.10140	-.14570	-.14180	.06180	.06060	-.02630
3.887	6.231	.29970	.27870	.27070	.10280	-.15140	-.23190	.10290	.10120	-.04270
3.874	8.224	.30440	.28250	.27030	.09730	-.15510	-.30390	.13510	.13310	-.05590
	GRADIENT	.00198	.00208	-.00012	-.00033	-.00092	-.03720	.01673	.01645	-.00689

IA156A, AEDC PWT 16T-470, O T S W/SILTS (R8NVB3) (10 MAY 80)

REFERENCE DATA

SREF = 2690.0000 SQ.FT. XMRP = 976.0000 IN. XT
LREF = 1290.3000 INCHES YMRP = .0000 IN. YT
BREF = 1290.3000 INCHES ZMRP = 400.0000 IN. ZT
SCALE = .0200

PARAMETRIC DATA

IB-ELV = 12.000 OB-ELV = 9.000
BDFLAP = .000 SPDBRK = .000
RUDDER = .000 SILTS = 1.000
MACH = .600 RN/L = 3.500

RUN NO. 1300/ 0 RN/L = 3.50 GRADIENT INTERVAL = -5.00/ 5.00

ALPHAO	BETAO	CNL	CNFL	CAL	CAFL	CLMFL	CYFL	CYNL	CYNFL	CBLFL
6.239	-8.007	.41040	.38900	.26220	.09220	-.19760	.32700	-.14600	-.14460	.06270
6.221	-5.934	.41250	.39150	.26070	.09330	-.19610	.23690	-.10730	-.10600	.04650
6.207	-3.861	.40520	.38470	.26150	.09520	-.18980	.15760	-.07180	-.07090	.03090
5.933	.197	.38440	.36460	.26340	.09740	-.17560	.00030	-.00280	-.00270	.00060
5.852	4.115	.39640	.37680	.26170	.09750	-.18550	-.14530	.06180	.06080	-.02770
5.824	6.058	.40700	.38590	.26200	.09520	-.19300	-.21550	.09460	.09320	-.04170
5.838	8.110	.41370	.39200	.26220	.09050	-.19940	-.29740	.13170	.12990	-.05690
	GRADIENT	-.00113	-.00101	.00003	.00029	.00056	-.03798	.01675	.01651	-.00735

RUN NO. 1301/ 0 RN/L = 3.50 GRADIENT INTERVAL = -5.00/ 5.00

ALPHAO	BETAO	CNL	CNFL	CAL	CAFL	CLMFL	CYFL	CYNL	CYNFL	CBLFL
8.134	-7.858	.52640	.50420	.25140	.07650	- 24280	.30700	-.13500	-.13360	.06260
8.039	-5.780	.51680	.49580	.25070	.08430	-.23680	.22330	-.09880	-.09760	.04590
8.044	-3.799	.51310	.49370	.24990	.09080	-.23220	.14230	-.06290	-.06200	.03030
7.947	.182	.50310	.48350	.25510	.08800	-.22180	-.00020	-.00230	-.00240	.00170
7.983	4.222	.52670	.50720	.25090	.09130	-.23830	-.13660	.05680	.05570	-.02740
7.948	6.247	.54050	.51870	.25310	.07960	-.24730	-.21080	.08990	.08840	-.04290
7.938	8.284	.54060	.51820	.25260	.07540	-.24990	-.30040	.13110	.12960	-.06050
	GRADIENT	.00171	.00169	.00012	.00006	-.00077	-.03476	.01492	.01467	-.00719

IA156A, AEDC PWT 16T-470, O T S W/SILTS (R8NV84) (10 MAY 80)

REFERENCE DATA

SREF = 2690.0000 SQ.FT. XMRP = 976.0000 IN. XT
LREF = 1290.3000 INCHES YMRP = .0000 IN. YT
BREF = 1290.3000 INCHES ZMRP = 400.0000 IN. ZT
SCALE = .0200

PARAMETRIC DATA

IB-ELV = 12.000 OB-ELV = 9.000
BDFLAP = .000 SPDBRK = .000
RUDDER = .000 SILTS = 1.000
MACH = .800 RN/L = 3.500

RUN NO. 1302/ 0 RN/L = 3.50 GRADIENT INTERVAL = -5.00/ 5.00

ALPHAO	BETAO	CNL	CNFL	CAL	CAFL	CLMFL	CYFL	CYNL	CYNFL	CBLFL
-8.194	-5.835	-.43720	-.46050	.31130	.12170	.11460	.25020	-.10860	-.10590	.02900
-8.031	-3.872	-.42360	-.44730	.31740	.12150	.11400	.16590	-.07120	-.06960	.01810
-8 097	.378	-.45480	-.47660	.31340	.11710	.13750	-.01380	.00670	.00680	.00000
-7 33	4.308	-.42150	-.44450	.31470	.12150	.11280	-.17320	.07700	.07560	-.01940
-7. 1	6.209	-.42070	-.44520	.31470	.11700	.11050	-.25060	.10900	.10660	-.02910
	GRADIENT	.00015	.00024	-.00034	-.00001	-.00007	-.04146	.01812	.01775	-.00458

RUN NO. 1303/ 0 RN/L = 3.50 GRADIENT INTERVAL = -5.00/ 5.00

ALPHAO	BETAO	CNL	CNFL	CAL	CAFL	CLMFL	CYFL	CYNL	CYNFL	CBLFL
-6.147	-5.926	-.29520	-.31900	.31250	.12060	.06250	.25470	-.11050	-.10780	.03220
-6.097	-4.006	-.29990	-.32270	.31440	.12680	.06960	.16520	-.07180	-.07010	.02030
-6.162	.123	-.31650	-.33700	.30730	.12510	08510	-.00370	.00080	.00100	.00070
-5.993	4.229	-.29170	-.31480	.31610	.12500	.06890	-.16700	.07380	.07240	-.02070
-5.783	6.303	-.26710	-.29030	.31450	.12700	.05530	-.24920	.10890	.10660	-.03220
	GRADIENT	.00099	.00095	.00020	-.00022	-.00008	-.04034	.01768	.01730	-.00498

RUN NO. 1304/ 0 RN/L = 3.50 GRADIENT INTERVAL = -5.00/ 5.00

ALPHAO	BETAO	CNL	CNFL	CAL	CAFL	CLMFL	CYFL	CYNL	CYNFL	CBLFL
-4.140	-6.025	-.16900	-.19250	.31310	.12700	.01670	.24930	-.10780	-.10520	.03460
-4.277	-3.930	-.18690	-.20950	.31420	.12910	.02870	.15350	-.06670	-.06500	.02030
-4.169	.373	-.18310	-.20360	.30580	.12640	.03510	-.01740	.00690	.00680	-.00100
-3.749	4.270	-.14600	-.16780	.31350	.13160	.01740	-.16830	.07430	.07290	-.02320
-3.821	6.099	-.14580	-.16910	.31320	.12810	.01400	-.23990	.10520	.10300	-.03360
	GRADIENT	.00492	.00502	-.00012	.00029	-.00133	-.03925	.01719	.01682	-.00530

RUN NO. 1306/ 0 RN/L = 3.50 GRADIENT INTERVAL = -5.00/ 5.00

ALPHAO	BETAO	CNL	CNFL	CAL	CAFL	CLMFL	CYFL	CYNL	CYNFL	CBLFL
-.363	-6.811	.03970	.01750	.30920	.12820	-.06180	.28740	-.12570	-.12350	.04390
-.352	-4.652	.03320	.01190	.30670	.13080	-.05670	.18920	-.08430	-.08250	.02890
-.324	-.486	.03110	.01100	.29720	.12780	-.04980	.01560	-.00680	-.00660	.00240
-.289	3.686	.06060	.03980	.30540	.13200	-.06600	-.14410	.06560	.06420	-.02190
-.286	5.801	.06610	.04420	.30860	.13060	-.07010	-.23250	.10560	.10350	-.03610
	GRADIENT	.00329	.00335	-.00016	.00014	-.00112	-.03997	.01798	.01759	-.00509

IA156A, AEDC PWT 16T-470, O T S W/SILTS (R8NVB4) (10 MAY 80)

REFERENCE DATA

SREF = 2690.0000 SQ.FT. XMRP = 976.0000 IN. XT
LREF = 1290.3000 INCHES YMRP = .0000 IN. YT
BREF = 1290.3000 INCHES ZMRP = 400.0000 IN. ZT
SCALE = .0200

PARAMETRIC DATA

IB-ELV = 12.000 OB-ELV = 9.000
BDFLAP = .000 SPDBRK = .000
RUDDER = .000 SILTS = 1.000
MACH = .800 RN/L = 3.500

RUN NO. 1314/ 0 RN/L = 3.49 GRADIENT INTERVAL = -5.00/ 5.00

ALPHAO	BETAO	CNL	CNFL	CAL	CAFL	CLMFL	CYFL	CYNL	CYNFL	CBLFL
6.135	-5.878	.44400	.42190	.29040	.11530	-.21950	.25520	-.11630	-.11480	.04730
6.107	-3.811	.44810	.42780	.28620	.12310	-.22030	.16010	-.07340	-.07240	.03010
5.823	.172	.43600	.41470	.28690	.11300	-.21010	.00350	-.00330	-.00330	.00150
5.769	4.035	.43890	.41800	.28510	.11460	-.21340	-.13910	.06050	.05930	-.02470
5.762	6.056	.44580	.42430	.29000	.11860	-.21990	-.22580	.10140	.09980	-.04060
	GRADIENT	-.00118	-.00126	-.00014	-.00109	.00089	-.03814	.01707	.01679	-.00699

IA156A, AEDC PWT 16T-470, O T S W/SILTS (R8NVB5) (10 MAY 80)

REFERENCE DATA

SREF = 2690.0000 SQ.FT. XMRP = 976.0000 IN. XT
LREF = 1290.3000 INCHES YMRP = .0000 IN. YT
BREF = 1290.3000 INCHES ZMRP = 400.0000 IN. ZT
SCALE = .0200

PARAMETRIC DATA

IB-ELV = 12.000 OB-ELV = 9.000
BDFLAP = .000 SPDBRK = .000
RUDDER = .000 SILTS = 1.000
MACH = .800 RN/L = 3.500

RUN NO. 1313/ 0 RN/L = 3.49 GRADIENT INTERVAL = -5.00/ 5.00

ALPHAO	BETAO	CNL	CNFL	CAL	CAFL	CLMFL	CYFL	CYNL	CYNFL	CBLFL
-.366	-6.780	.04120	.01870	.30930	.12660	-.06310	.28720	-.12580	-.12360	.04390
-.353	-4.684	.03630	.01490	.30840	.13140	-.05950	.19230	-.08530	-.08360	.02910
-.323	-.479	.03290	.01260	.29990	.12840	-.05170	.01590	-.00630	-.00610	.00250
-.288	3.692	.06300	.04170	.30920	.13340	-.06750	-.14720	.06700	.06560	-.02220
-.287	5.812	.06780	.04560	.30970	.12950	-.07170	-.23450	.10660	.10460	-.03630
	GRADIENT	.00318	.00319	.00009	.00024	-.00095	-.04053	.01818	.01781	-.00612

IA156A, AEDC PWT 16T-470, O T S W/SILTS (R8NVB6) (10 MAY 80)

REFERENCE DATA

SREF = 2690.0000 SQ.FT. XMRP = 976.0000 IN. XT
LREF = 1290.3000 INCHES YMRP = .0000 IN. YT
BREF = 1290.3000 INCHES ZMRP = 400.0000 IN. ZT
SCALE = .0200

PARAMETRIC DATA

IB-ELV = 12.000 OB-ELV = 9.000
BDFLAP = .000 SPDBRK = .000
RUDDER = .000 SILTS = 1.000
MACH = .900 RN/L = 3.500

RUN NO. 1308/ 0 RN/L = 3.50 GRADIENT INTERVAL = -5.00/ 5.00

ALPHAO	BETAO	CNL	CNFL	CAL	CAFL	CLMFL	CYFL	CYNL	CYNFL	CBLFL
-8.117	-5.915	-.46660	-.49350	.36290	.14980	.13760	.28390	-.12470	-.12230	.03180
-8.125	-3.844	-.47680	-.50240	.36220	.15150	.14760	.17920	-.07750	-.07620	.01820
-8.105	.288	-.50040	-.52370	.35780	.15100	.16910	-.00720	.00190	.00210	.00070
-7.938	4.265	-.46740	-.49230	.35870	.15270	.14630	-.18490	.08140	.08010	-.01980
-7.950	6.207	-.46690	-.49370	.35990	.14790	.14210	-.27270	.12000	.11780	-.03180
	GRADIENT	.00111	.00120	-.00044	.00015	-.00013	-.04490	.01959	.01927	-.00468

RUN NO. 1309/ 0 RN/L = 3.50 GRADIENT INTERVAL = -5.00/ 5.00

ALPHAO	BETAO	CNL	CNFL	CAL	CAFL	CLMFL	CYFL	CYNL	CYNFL	CBLFL
-6.168	-5.940	-.33610	-.36270	.36150	.15060	.08960	.27420	-.11930	-.11690	.03340
-6.098	-4.024	-.33340	-.35790	.35620	.15790	.09340	.18180	-.07960	-.07820	.02150
-6.178	.118	-.36160	-.38450	.35280	.15220	11740	-.00100	-.00170	-.00140	.00090
-6.009	4.234	-.32900	-.35410	.35530	.15300	.09660	-.17520	.07580	.07440	-.02110
-5.808	6.308	-.30830	-.33370	.35860	.16060	.08510	-.26760	.11580	.11360	-.03440
	GRADIENT	.00053	.00045	-.00011	-.00059	.00039	-.04323	.01882	.01848	-.00516

RUN NO. 1310/ 0 RN/L = 3.49 GRADIENT INTERVAL = -5.00/ 5.00

ALPHAO	BETAO	CNL	CNFL	CAL	CAFL	CLMFL	CYFL	CYNL	CYNFL	CBLFL
-4.101	-6.042	-.19560	-.22120	.35780	.15660	.03850	.26570	-.11390	-.11150	.03610
-4.291	-3.954	-.21460	-.23910	.35520	.15800	.05060	.16860	-.07310	-.07180	.02190
-4.185	.374	-.21570	-.23810	.34460	.15420	.06010	-.01500	.00490	.00490	-.00110
-3.750	4.279	-.17060	-.19480	.35160	.15860	.03820	-.17350	.07390	.07250	-.02370
-3.839	6.099	-.17730	-.20270	.35420	.15720	.03780	-.25090	.10770	.10550	-.03520
	GRADIENT	.00524	.00529	-.00047	.00006	-.00144	-.04157	.01786	.01753	-.00553

RUN NO. 1311/ 0 RN/L = 3.49 GRADIENT INTERVAL = -5.00/ 5.00

ALPHAO	BETAO	CNL	CNFL	CAL	CAFL	CLMFL	CYFL	CYNL	CYNFL	CBLFL
-.394	-6.907	.03150	.00670	.35300	.15580	-.05240	.29840	-.12770	-.12570	.04690
-.379	-4.756	.02800	.00450	.34980	.15850	-.04900	.20310	-.08940	-.08760	.03250
-.345	-.449	.02750	.00630	.33160	.15240	-.04690	.01660	-.00680	-.00670	.00290
-.313	3.662	.05470	.03200	.34660	.15830	-.06010	-.14840	.06580	.06450	-.02310
-.314	5.816	.05450	.03040	.35020	.15710	-.06010	-.23870	.10640	.10450	-.03780
	GRADIENT	.00315	.00324	-.00041	-.00003	-.00130	-.04177	.01844	.01807	-.00661

IA156A, AEDC PWT 16T-470, O T S W/SILTS (R8NVB6) (10 MAY 80)

REFERENCE DATA

SREF = 2690.0000 SQ.FT. XMRP = 976.0000 IN. XT
LREF = 1290.3000 INCHES YMRP = .0000 IN. YT
BREF = 1290.3000 INCHES ZMRP = 400.0000 IN. ZT
SCALE = .0200

PARAMETRIC DATA

IB-ELV = 12.000 OB-ELV = 9.000
BDFLAP = .000 SPDBRK = .000
RUDDER = .000 SILTS = 1.000
MACH = .900 RN/L = 3.500

RUN NO. 1312/ 0 RN/L = 3.50 GRADIENT INTERVAL = -5.00/ 5.00

ALPHAO	BETAO	CNL	CNFL	CAL	CAFL	CLMFL	CYFL	CYNL	CYNFL	CBLFL
4.130	-5.824	.31600	.29220	.34210	.15310	-.16220	.25850	-.11380	-.11230	.04540
4.011	-3.747	.31160	.28930	.33710	.15270	-.16120	.16600	-.07540	-.07430	.02930
3.764	.085	.30470	.28330	.32880	.14960	-.15990	.01020	-.00610	-.00610	.00270
3.854	4.013	.32700	.30470	.33520	.15180	-.16760	-.14830	.06510	.06390	-.02480
3.797	6.139	.32270	.29860	.34140	.15230	-.16770	-.24590	.10780	.10590	-.04130
	GRADIENT	.00200	.00200	-.00024	-.00011	-.00083	-.04050	.01811	.01781	-.00697

IA156A, AEDC PWT 16T-470, O T S (R8NVB7) (10 MAY 80)

REFERENCE DATA

SREF = 2690.0000 SQ.FT. XMRP = 976.0000 IN. XT
LREF = 1290.3000 INCHES YMRP = .0000 IN. YT
BREF = 1290.3000 INCHES ZMRP = 400.0000 IN. ZT
SCALE = .0200

PARAMETRIC DATA

IB-ELV = 12.000 OB-ELV = 9.000
BDFLAP = .000 SPDBRK = .000
RUDDER = .000 SILTS = .000
MACH = .800 RN/L = 3.500

RUN NO. 1324/ 0 RN/L = 3.50 GRADIENT INTERVAL = -5.00/ 5.00

ALPHAO	BETAO	CNL	CNFL	CAL	CAFL	CLMFL	CYFL	CYNL	CYNFL	CBLFL
4.191	-5.942	.32730	.30570	.29510	.12110	-.17070	.25500	-.11600	-.11440	.04820
3.993	-3.685	.30920	.28860	.29170	.12020	-.15960	.15800	-.07310	-.07210	.02980
3.798	.170	.29920	.27940	.28670	.12290	-.15150	.00740	-.00540	-.00540	.00250
3.859	4.112	.32910	.30840	.28930	.11840	-.17010	-.14570	.06510	.06390	-.02630
3.814	6.168	.32800	.30620	.29280	.11880	-.17340	-.23730	.10770	.10570	-.04260
	GRADIENT	.00257	.00256	-.00030	-.00023	-.00136	-.03895	.01772	.01744	-.00720

IA156A, AEDC PWT 16T-470, O T S (R8NVB8) (10 MAY 80)

REFERENCE DATA

SREF = 2690.0000 SQ.FT. XMRP = 976.0000 IN. XT
LREF = 1290.3000 INCHES YMRP = .0000 IN. YT
BREF = 1290.3000 INCHES ZMRP = 400.0000 IN. ZT
SCALE = .0200

PARAMETRIC DATA

IB-ELV = 12.000 OB-ELV = 9.000
BDFLAP = .000 SPDBRK = .000
RUDDER = .000 SILTS = .000
MACH = .950 RN/L = 3.500

RUN NO. 1325/ 0 RN/L = 3.51 GRADIENT INTERVAL = -5.00/ 5.00

ALPHAO	BETAO	CNL	CNFL	CAL	CAFL	CLMFL	CYFL	CYNL	CYNFL	CBLFL
-8.097	-5.930	-.48930	-.51850	.39960	.17140	.15160	.29070	-.12770	-.12510	.03300
-8.217	-3.731	-.51270	-.54130	.40820	.17960	.16510	.17840	-.07630	-.07490	.01880
-8.102	.172	-.51680	-.54330	.40420	.17550	.17520	.00270	-.00180	-.00180	.00300
-7.953	4.376	-.50000	-.52840	.41000	.18290	.16340	-.19590	.08630	.08500	-.01990
-7.952	6.218	-.49740	-.52730	.40840	.17950	.15890	-.28280	.12610	.12360	-.03150
	GRADIENT	.00160	.00162	.00024	.00042	-.00024	-.04618	.02007	.01973	-.00478

RUN NO. 1326/ 0 RN/L = 3.50 GRADIENT INTERVAL = -5.00/ 5.00

ALPHAO	BETAO	CNL	CNFL	CAL	CAFL	CLMFL	CYFL	CYNL	CYNFL	CBLFL
-6.175	-5.944	-.35210	-.38080	.40420	.18110	.10070	.28350	-.12340	-.12090	.03440
-6.101	-4.027	-.34870	-.37550	.40280	.18740	.10370	.18660	-.08040	-.07900	.02160
-6.189	.101	-.37160	-.39660	.39970	.18140	12130	.00180	-.00280	-.00270	.00260
-6.004	4.224	-.34560	-.37270	.40370	.18630	.10860	-.18080	.07900	.07770	-.02090
-5.732	6.302	-.32420	-.35370	.41000	.18430	.09850	-.27870	.12300	.12030	-.03550
	GRADIENT	.00037	.00034	.00011	-.00013	.00059	-.04453	.01932	.01899	-.00515

RUN NO. 1327/ 0 RN/L = 3.50 GRADIENT INTERVAL = -5.00/ 5.00

ALPHAO	BETAO	CNL	CNFL	CAL	CAFL	CLMFL	CYFL	CYNL	CYNFL	CBLFL
-4.091	-6.044	-.20730	-.23540	.40360	.18400	.04940	.27380	-.11760	-.11500	.03660
-4.285	-3.951	-.22680	-.25330	.40040	.18610	.06120	.17130	-.07240	-.07100	.02100
-4.192	.371	-.23160	-.25660	.39560	.18430	.07660	-.01390	.00410	.00410	-.00010
-3.741	4.269	-.18760	-.21410	.39930	.18730	.05470	-.17960	.07700	.07540	-.02410
-3.844	6.109	-.19200	-.22000	.40170	.18480	.05180	-.26190	.11350	.11100	-.03640
	GRADIENT	.00466	.00467	-.00015	.00014	-.00071	-.04269	.01817	.01780	-.00548

RUN NO. 1328/ 0 RN/L = 3.50 GRADIENT INTERVAL = -5.00/ 5.00

ALPHAO	BETAO	CNL	CNFL	CAL	CAFL	CLMFL	CYFL	CYNL	CYNFL	CBLFL
-.413	-6.913	.02450	-.00310	.39940	.18590	-.03760	.30460	-.12900	-.12630	.04760
-.384	-4.779	.02430	-.00200	.39760	.18540	-.03330	.20590	-.08810	-.08600	.03210
-.355	-.459	.01490	-.00840	.38340	.18140	-.02070	.01860	-.00810	-.00780	.00320
-.324	3.651	.04220	.01720	.39580	.18800	-.03670	-.14900	.06640	.06480	-.02370
-.324	5.830	.04930	.02310	.39690	.18670	-.04520	-.24260	.10700	.10470	-.03900
	GRADIENT	.00209	.00225	-.00024	.00030	-.00038	-.04211	.01833	.01789	-.00662

IA156A, AEDC PWT 16T-470, O T S (R8NVB8) (10 MAY 80)

REFERENCE DATA

SREF = 2690.0000 SQ.FT. XMRP = 976.0000 IN. XT
LREF = 1290.3000 INCHES YMRP = .0000 IN. YT
BREF = 1290.3000 INCHES ZMRP = 400.0000 IN. ZT
SCALE = .0200

PARAMETRIC DATA

IB-ELV = 12.000 OB-ELV = 9.000
BDFLAP = .000 SPDBRK = .000
RUDDER = .000 SILTS = .000
MACH = .950 RN/L = 3.500

RUN NO. 1329/ 0 RN/L = 3.50 GRADIENT INTERVAL = -5.00/ 5.00

ALPHAO	BETAO	CNL	CNFL	CAL	CAFL	CLMFL	CYFL	CYNL	CYNFL	CBLFL
3.924	-5.698	.29350	.26780	.38900	.17800	-.14380	.25040	-.10690	-.10500	.04420
3.965	-3.935	.30010	.27570	.38350	.18130	-.14820	.17250	-.07300	-.07190	.02970
3.923	.180	.30610	.28120	.37620	.17450	-.15220	.00600	-.00360	-.00360	.00220
3.839	3.929	.32110	.29690	.38380	.18360	-.15800	-.14440	.05950	.05820	-.02350
3.802	6.118	.31570	.28950	.38410	.17630	-.15440	-.24090	.10170	.09950	-.04090
	GRADIENT	.00265	.00267	.00001	.00026	-.00124	-.04030	.01685	.01655	-.00676

IA156A, AEDC PWT 16T-470, O T S (R8NVB9) (10 MAY 80)

REFERENCE DATA

SREF = 2690.0000 SQ.FT. XMRP = 976.0000 IN. XT
LREF = 1290.3000 INCHES YMRP = .0000 IN. YT
BREF = 1290.3000 INCHES ZMRP = 400.0000 IN. ZT
SCALE = .0200

PARAMETRIC DATA

IB-ELV = 12.000 OB-ELV = 9.000
BDFLAP = .000 SPDBRK = .000
RUDDER = .000 SILTS = .000
MACH = 1.050 RN/L = 3.500

RUN NO. 1330/ 0 RN/L = 3.50 GRADIENT INTERVAL = -5.00/ 5.00

ALPHAO	BETAO	CNL	CNFL	CAL	CAFL	CLMFL	CYFL	CYNL	CYNFL	CBLFL
-8.212	-5.901	-.55780	-.59490	.51970	.23840	.20120	.30060	-.12630	-.12360	.03510
-8.202	-3.826	-.56300	-.60000	.52490	.24180	.21070	.19610	-.08150	-.08010	.02120
-8.119	.330	-.57650	-.61230	.52810	.24020	.22340	-.00840	.00490	.00480	.00080
-7.949	4.306	-.55450	-.59010	.52270	.24090	.21040	-.19720	.08600	.08470	-.02090
-7.959	6.215	-.55580	-.59120	.52010	.24220	.20460	-.29320	.12580	.12330	-.03390
	GRADIENT	.00101	.00119	-.00026	-.00011	-.00001	-.04837	.02060	.02027	-.00518

RUN NO. 1331/ 0 RN/L = 3.51 GRADIENT INTERVAL = -5.00/ 5.00

ALPHAO	BETAO	CNL	CNFL	CAL	CAFL	CLMFL	CYFL	CYNL	CYNFL	CBLFL
-6.179	-5.965	-.39130	-.42790	.51740	.24070	.13970	.29300	-.12170	-.11900	.03820
-6.081	-4.041	-.39200	-.42820	.52160	.24550	.14810	.19000	-.07810	-.07660	.02430
-6.191	.114	-.42070	-.45570	.52270	.24610	.17240	-.00250	.00180	.00190	.00110
-6.024	4.226	-.39530	-.42970	.52110	.24930	.15440	-.18840	.08120	.07980	-.02340
-5.734	6.328	-.36470	-.39960	.51500	.24310	.13680	-.28960	.12440	.12180	-.03840
	GRADIENT	-.00041	-.00019	-.00006	.00046	.00077	-.04577	.01927	.01892	-.00577

IA156A, AEDC PWT 16T-470, O T S (R8NVB9) (10 MAY 80)

REFERENCE DATA

SREF = 2690.0000 SQ.FT. XMRP = 976.0000 IN. XT
LREF = 1290.3000 INCHES YMRP = .0000 IN. YT
BREF = 1290.3000 INCHES ZMRP = 400.0000 IN. ZT
SCALE = .0200

PARAMETRIC DATA

IB-ELV = 12.000 OB-ELV = 9.000
BDFLAP = .000 SPDBRK = .000
RUDDER = .000 SILTS = .000
MACH = 1.050 RN/L = 3.500

RUN NO. 1332/ 0 RN/L = 3.50 GRADIENT INTERVAL = -5.00/ 5.00

ALPHAO	BETAO	CNL	CNFL	CAL	CAFL	CLMFL	CYFL	CYNL	CYNFL	CBLFL
-4.097	-6.071	-.23560	-.27220	.51520	.24280	.08480	.28290	-.11620	-.11380	.04120
-4.289	-3.962	-.26100	-.29710	.51780	.24770	.10290	.18070	-.07550	-.07400	.02530
-4.196	.369	-.26870	-.30390	.51870	.24730	.12110	-.01130	.00500	.00480	-.00010
-3.744	4.287	-.21950	-.25340	.51530	.24950	.09420	-.18400	.07890	.07740	-.02670
-3.846	6.113	-.22280	-.25730	.51410	.24690	.08780	-.27000	.11490	.11270	-.04050
	GRADIENT	.00491	.00518	-.00029	.00021	-.00096	-.04422	.01872	.01835	-.00630

RUN NO. 1333/ 0 RN/L = 3.50 GRADIENT INTERVAL = -5.00/ 5.00

ALPHAO	BETAO	CNL	CNFL	CAL	CAFL	CLMFL	CYFL	CYNL	CYNFL	CBLFL
-.444	-7.004	.01600	-.02040	.51030	.24630	-.00880	.31890	-.13300	-.13060	.05500
-.419	-4.832	.01140	-.02490	.51310	.24860	.00080	.21600	-.09410	-.09220	.03780
-.395	-.438	.00200	-.03210	.51080	.24850	.01360	.02330	-.01170	-.01160	.00370
-.361	3.665	.02490	-.00910	.51590	.25160	.00090	-.15380	.07060	.06900	-.02770
-.363	5.855	.03060	-.00410	.51960	.25220	-.00670	-.24890	.10990	.10760	-.04390
	GRADIENT	.00154	.00182	.00032	.00035	.00005	-.04353	.01938	.01896	-.00771

RUN NO. 1334/ 0 RN/L = 3.50 GRADIENT INTERVAL = -5.00/ 5.00

ALPHAO	BETAO	CNL	CNFL	CAL	CAFL	CLMFL	CYFL	CYNL	CYNFL	CBLFL
3.901	-5.731	.27990	.24400	.50390	.23800	-.11280	.26100	-.11220	-.11080	.04960
3.920	-3.899	.28150	.24770	.50320	.25000	-.11240	.18030	-.07930	-.07860	.03420
3.916	.181	.29220	.25820	.49810	.24340	-.11270	.00920	-.00650	-.00640	.00250
3.837	3.924	.31110	.27770	.50110	.24410	-.12720	-.15100	.06540	.06450	-.02770
3.798	6.097	.30530	.27060	.49870	.23540	-.12570	-.24350	.10260	.10120	-.04560
	GRADIENT	.00377	.00382	-.00028	-.00077	-.00186	-.04235	.01849	.01828	-.00791

IA156A, AEDC PWT 16T-470, O T S

(R8NVCO) (10 MAY 80)

REFERENCE DATA

SREF = 2690.0000 SQ.FT. XMRP = 976.0000 IN. XT
LREF = 1290.3000 INCHES YMRP = .0000 IN. YT
BREF = 1290.3000 INCHES ZMRP = 400.0000 IN. ZT
SCALE = .0200

PARAMETRIC DATA

IB-ELV = 12.000 OB-ELV = 9.000
BDFLAP = .000 SPDBRK = .000
RUDDER = .000 SILTS = .000
MACH = 1.100 RN/L = 3.500

RUN NO. 1335/ 0 RN/L = 3.50 GRADIENT INTERVAL = -5.00/ 5.00

ALPHAO	BETAO	CNL	CNFL	CAL	CAFL	CLMFL	CYFL	CYNL	CYNFL	CBLFL
-8.085	-5.959	-.53460	-.56870	.51310	.25310	.18750	.29240	-.12130	-.11880	.03430
-8.216	-3.758	-.55200	-.58540	.51650	.25710	.19990	.17980	-.07220	-.07080	.01930
-8.117	.180	-.55880	-.59040	.51590	.25680	.20870	-.00490	.00270	.00270	.00140
-7.932	4.337	-.53520	-.56710	.51460	.25940	.19770	-.19450	.08260	.08110	-.02060
-7.956	6.215	-.53480	-.56730	.51360	.25510	.19340	-.28400	.12010	.11760	-.03260
	GRADIENT	.00211	.00229	-.00024	.00029	-.00029	-.04623	.01912	.01877	-.00493

RUN NO. 1336/ 0 RN/L = 3.50 GRADIENT INTERVAL = -5.00/ 5.00

ALPHAO	BETAO	CNL	CNFL	CAL	CAFL	CLMFL	CYFL	CYNL	CYNFL	CBLFL
-6.157	-5.944	-.37560	-.40860	.50820	.25700	.12630	.27100	-.10980	-.10740	.03560
-6.103	-4.030	-.38140	-.41360	.50800	.25870	.13490	.17840	-.07160	-.07020	.02270
-6.217	.094	-.40630	-.43720	.50670	.25740	15520	-.00460	.00120	.00120	.00110
-5.993	4.241	-.36790	-.39860	.50690	.26010	.13520	-.18460	.07630	.07500	-.02320
-5.966	6.211	-.36830	-.40010	.50670	.25770	.13010	-.27470	.11510	.11270	-.03640
	GRADIENT	.00164	.00182	-.00013	.00017	.00003	-.04389	.01788	.01756	-.00555

RUN NO. 1337/ 0 RN/L = 3.50 GRADIENT INTERVAL = -5.00/ 5.00

ALPHAO	BETAO	CNL	CNFL	CAL	CAFL	CLMFL	CYFL	CYNL	CYNFL	CBLFL
-4.082	-6.072	-.22360	-.25620	.50490	.25950	.06900	.26710	-.10620	-.10410	.03970
-4.299	-3.969	-.25010	-.28170	.50210	.26120	.08760	.16730	-.06680	-.06560	.02380
-4.187	.366	-.24590	-.27610	.49480	.25670	.09860	-.01530	.00510	.00500	-.00060
-3.746	4.294	-.19750	-.22710	.50070	.26510	.07420	-.17790	.07180	.07050	-.02700
-3.842	6.107	-.19920	-.23000	.50400	.26240	.07000	-.25740	.10550	.10350	-.03990
	GRADIENT	.00627	.00652	-.00020	.00045	-.00155	-.04178	.01677	.01647	-.00614

RUN NO. 1338/ 0 RN/L = 3.50 GRADIENT INTERVAL = -5.00/ 5.00

ALPHAO	BETAO	CNL	CNFL	CAL	CAFL	CLMFL	CYFL	CYNL	CYNFL	CBLFL
-.450	-6.989	.01650	-.01600	.49960	.26200	-.01590	.30400	-.12220	-.12010	.05360
-.416	-4.820	.01670	-.01470	.49450	.26420	-.01000	.20670	-.08660	-.08490	.03750
-.391	-.464	.01130	-.01790	.49120	.26310	-.00140	.02050	-.00970	-.00960	.00360
-.356	3.674	.03150	.00290	.49430	.26850	-.01170	-.15220	.06790	.06640	-.02800
-.358	5.852	.03810	.00880	.49450	.26460	-.02040	-.24500	.10680	.10460	-.04430
	GRADIENT	.00172	.00205	-.00003	.00050	-.00018	-.04226	.01818	.01781	-.00771

IA156A, AEDC PWT 16T-470, O T S (R8NVC0) (10 MAY 80)

REFERENCE DATA

SREF = 2690.0000 SQ.FT. XMRP = 976.0000 IN. XT
LREF = 1290.3000 INCHES YMRP = .0000 IN. YT
BREF = 1290.3000 INCHES ZMRP = 400.0000 IN. ZT
SCALE = .0200

PARAMETRIC DATA

IB-ELV = 12.000 OB-ELV = 9.000
BDFLAP = .000 SPDBRK = .000
RUDDER = .000 SILTS = .000
MACH = 1.100 RN/L = 3.500

RUN NO. 1339/ 0 RN/L = 3.48 GRADIENT INTERVAL = -5.00/ 5.00

ALPHAO	BETAO	CNL	CNFL	CAL	CAFL	CLMFL	CYFL	CYNL	CYNFL	CBLFL
3.930	-5.730	.29800	.26830	.48360	.25880	-.12830	.25570	-.10930	-.10790	.04850
3.914	-3.895	.29750	.26760	.48280	.25570	-.12530	.17740	-.07840	-.07770	.03320
3.893	.179	.29590	.26640	.48100	.25820	-.11900	.00180	-.00370	-.00360	.00140
3.825	3.917	.30900	.28080	.47960	.25880	-.13050	-.15450	.06560	.06470	-.02820
3.808	6.099	.31350	.28450	.47960	.25550	-.13630	-.24680	.10260	.10110	-.04600
	GRADIENT	.00144	.00166	-.00041	.00040	-.00063	-.04250	.01843	.01823	-.00786

IA156A, AEDC PWT 16T-470, O T S (R8NVC1) (10 MAY 80)

REFERENCE DATA

SREF = 2690.0000 SQ.FT. XMRP = 976.0000 IN. XT
LREF = 1290.3000 INCHES YMRP = .0000 IN. YT
BREF = 1290.3000 INCHES ZMRP = 400.0000 IN. ZT
SCALE = .0200

PARAMETRIC DATA

IB-ELV = 12.000 OB-ELV = 9.000
BDFLAP = .000 SPDBRK = .000
RUDDER = .000 SILTS = .000
MACH = 1.150 RN/L = 3.500

RUN NO. 1341/ 0 RN/L = 3.50 GRADIENT INTERVAL = -5.00/ 5.00

ALPHAO	BETAO	CNL	CNFL	CAL	CAFL	CLMFL	CYFL	CYNL	CYNFL	CBLFL
-8.145	-5.961	-.53500	-.56660	.51030	.26640	.18440	.29680	-.12160	-.11930	.03560
-8.230	-3.764	-.55590	-.58670	.51300	.27200	.20040	.18380	-.07350	-.07220	.02010
-8.120	.169	-.56590	-.59510	.51290	.27250	.21130	.00480	-.00230	-.00240	.00240
-7.920	4.347	-.54610	-.57550	.51370	.27750	.20110	-.19050	.07920	.07780	-.02010
-7.956	6.224	-.54680	-.57750	.50980	.26710	.19760	-.28100	.11810	.11590	-.03240
	GRADIENT	.00124	.00142	.00009	.00068	.00006	-.04615	.01883	.01850	-.00496

RUN NO. 1342/ 0 RN/L = 3.50 GRADIENT INTERVAL = -5.00/ 5.00

ALPHAO	BETAO	CNL	CNFL	CAL	CAFL	CLMFL	CYFL	CYNL	CYNFL	CBLFL
-6.162	-5.954	-.37130	-.40260	.50690	.26910	.12120	.27900	-.11280	-.11050	.03810
-6.104	-4.044	-.37670	-.40690	.50730	.27380	.12950	.18310	-.07350	-.07210	.02420
-6.201	.104	-.40580	-.43460	.50220	.26760	.15520	.00430	-.00390	-.00390	.00230
-6.020	4.237	-.38210	-.41090	.50400	.27220	.14170	-.17570	.07070	.06940	-.02240
-5.837	6.332	-.36130	-.39120	.50540	.27270	.12710	-.27710	.11480	.11250	-.03780
	GRADIENT	-.00066	-.00049	-.00040	-.00019	.00148	-.04333	.01741	.01709	-.00563

IA156A, AEDC PWT 16T-470, O T S (R8NVC1) (10 MAY 80)

REFERENCE DATA

SREF = 2690.0000 SQ.FT. XMRP = 976.0000 IN. XT
LREF = 1290.3000 INCHES YMRP = .0000 IN. YT
BREF = 1290.3000 INCHES ZMRP = 400.0000 IN. ZT
SCALE = .0200

PARAMETRIC DATA

IB-ELV = 12.000 OB-ELV = 9.000
BDFLAP = .000 SPDBRK = .000
RUDDER = .000 SILTS = .000
MACH = 1.150 RN/L = 3.500

RUN NO. 1343/ 0 RN/L = 3.50 GRADIENT INTERVAL = -5.00/ 5.00

ALPHAO	BETAO	CNL	CNFL	CAL	CAFL	CLMFL	CYFL	CYNL	CYNFL	CBLFL
-4.112	-6.068	-.21480	-.24570	.50290	.27170	.06350	.26940	-.10820	-.10610	.04160
-4.306	-3.976	-.23630	-.26650	.50320	.27440	.07670	.17450	-.07160	-.07020	.02660
-4.195	.373	-.24150	-.27020	.49840	.27120	.09390	-.00890	.00110	.00100	-.00020
-3.756	4.290	-.20320	-.23120	.50060	.27700	.07730	-.17120	.06890	.06760	-.02700
-3.849	6.122	-.20900	-.23820	.50540	.27840	.07430	-.25590	.10380	.10180	-.04010
	GRADIENT	.00391	.00418	-.00033	.00030	.00014	-.04183	.01699	.01666	-.00648

RUN NO. 1344/ 0 RN/L = 3.50 GRADIENT INTERVAL = -5.00/ 5.00

ALPHAO	BETAO	CNL	CNFL	CAL	CAFL	CLMFL	CYFL	CYNL	CYNFL	CBLFL
-.438	-6.994	.03260	.00160	.50070	.27450	-.02550	.31050	-.12770	-.12560	.05450
-.411	-4.805	.03250	.00290	.49780	.27860	-.02290	.20510	-.08680	-.08520	.03660
-.370	-.483	.03850	.01010	.49650	.27610	-.02080	.01970	-.00960	-.00960	.00330
-.342	3.670	.05530	.02770	.49900	.28130	-.02920	-.15380	.06910	.06760	-.02810
-.341	5.850	.05790	.03000	.50000	.28110	-.03280	-.24740	.10690	.10490	-.04460
	GRADIENT	.00268	.00292	.00014	.00031	-.00074	-.04235	.01839	.01803	-.00763

RUN NO. 1345/ 0 RN/L = 3.50 GRADIENT INTERVAL = -5.00/ 5.00

ALPHAO	BETAO	CNL	CNFL	CAL	CAFL	CLMFL	CYFL	CYNL	CYNFL	CBLFL
3.991	-5.883	.29360	.26510	.48820	.27280	-.12400	.27010	-.11810	-.11670	.05130
4.006	-3.805	.29570	.26710	.48980	.27470	-.12190	.18240	-.08530	-.08450	.03430
3.899	.181	.30210	.27360	.48670	.27210	-.12160	.01380	-.01290	-.01280	.00320
3.830	3.979	.32410	.29690	.48700	.27450	-.14030	-.15010	.06280	.06190	-.02800
3.801	6.112	.32320	.29550	.48690	.27280	-.14270	-.24230	.10050	.09910	-.04540
	GRADIENT	.00363	.00381	-.00036	-.00003	-.00234	-.04272	.01902	.01880	-.00800

IA156A, AEDC PWT 16T-470, O T S (R8NVC2) (10 MAY 80)

REFERENCE DATA

SREF = 2690.0000 SQ.FT. XMRP = 976.0000 IN. XT
LREF = 1290.3000 INCHES YMRP = .0000 IN. YT
BREF = 1290.3000 INCHES ZMRP = 400.0000 IN. ZT
SCALE = .0200

PARAMETRIC DATA

IB-ELV = 12.000 OB-ELV = 9.000
BDFLAP = .000 SPDBRK = .000
RUDDER = .000 SILTS = .000
MACH = 1.250 RN/L = 3.500

RUN NO. 1346/ 0 RN/L = 3.50 GRADIENT INTERVAL = -5.00/ 5.00

ALPHAO	BETAO	CNL	CNFL	CAL	CAFL	CLMFL	CYFL	CYNL	CYNFL	CBLFL
-8.243	-5.890	-.54980	-.57810	.50280	.27950	.19140	.28550	-.11530	-.11330	.03500
-8.205	-3.763	-.54860	-.57660	.50460	.28190	.19750	.17520	-.06650	-.06520	.02120
-8.116	.197	-.55070	-.57750	.50600	.28330	.20270	-.00690	.00620	.00620	.00130
-7.947	4.332	-.53040	-.55740	.50260	.28560	.18910	-.19240	.08240	.08120	-.02180
-7.966	6.227	-.53310	-.56070	.50210	.28540	.18550	-.28170	.12070	.11880	-.03400
	GRADIENT	.00227	.00239	-.00025	.00046	-.00105	-.04541	.01839	.01809	-.00531

RUN NO. 1347/ 0 RN/L = 3.50 GRADIENT INTERVAL = -5.00/ 5.00

ALPHAO	BETAO	CNL	CNFL	CAL	CAFL	CLMFL	CYFL	CYNL	CYNFL	CBLFL
-6.182	-5.943	-.37790	-.40570	.50010	.28400	.12410	.26520	-.10540	-.10340	.03680
-6.118	-4.035	-.37430	-.40180	.50100	.28570	.12780	.17170	-.06590	-.06480	.02380
-6.198	.130	-.38530	-.41170	.49850	.28410	13960	-.00870	.00530	.00530	.00110
-5.991	4.255	-.35800	-.38440	.50040	.28950	.12180	-.18390	.07750	.07630	-.02370
-5.947	6.219	-.36700	-.39510	.50160	.28430	.12160	-.27890	.11810	.11610	-.03750
	GRADIENT	.00196	.00209	-.00007	.00046	-.00072	-.04290	.01730	.01702	-.00573

RUN NO. 1348/ 0 RN/L = 3.49 GRADIENT INTERVAL = -5.00/ 5.00

ALPHAO	BETAO	CNL	CNFL	CAL	CAFL	CLMFL	CYFL	CYNL	CYNFL	CBLFL
-4.105	-6.078	-.21970	-.24790	.49860	.28610	.06620	.26340	-.10440	-.10240	.04020
-4.305	-3.963	-.23550	-.26300	.49970	.28800	.07620	.16110	-.06240	-.06140	.02430
-4.193	.376	-.22350	-.24990	.49630	.28750	.07580	-.01880	.00970	.00970	-.00090
-3.737	4.277	-.18560	-.21190	.50020	.29150	.05920	-.17570	.07320	.07220	-.02580
-3.849	6.126	-.19840	-.22530	.49770	.28920	.06140	-.25540	.10640	.10450	-.03860
	GRADIENT	.00599	.00614	.00004	.00041	-.00203	-.04089	.01646	.01622	-.00608

RUN NO. 1349/ 0 RN/L = 3.49 GRADIENT INTERVAL = -5.00/ 5.00

ALPHAO	BETAO	CNL	CNFL	CAL	CAFL	CLMFL	CYFL	CYNL	CYNFL	CBLFL
-.462	-7.000	.02540	-.00300	.49770	.28870	-.02200	.30730	-.12630	-.12430	.05210
-.433	-4.850	.02720	.00010	.49550	.29230	-.02000	.20300	-.08490	-.08340	.03500
-.387	-.453	.03650	.01040	.49180	.29090	-.02080	.01800	-.00810	-.00820	.00310
-.360	3.674	.04980	.02420	.49580	.29540	-.02530	-.15140	.06710	.06560	-.02650
-.369	5.855	.04840	.02260	.49440	.29470	-.02720	-.24600	.10470	.10270	-.04210
	GRADIENT	.00265	.00282	.00003	.00036	-.00062	-.04158	.01783	.01748	-.00722

IA156A, AEDC PWT 16T-470, O T S (R8NVC2) (10 MAY 80)

REFERENCE DATA

SREF = 2690.0000 SQ.FT. XMRP = 976.0000 IN. XT
LREF = 1290.3000 INCHES YMRP = .0000 IN. YT
BREF = 1290.3000 INCHES ZMRP = 400.0000 IN. ZT
SCALE = .0200

PARAMETRIC DATA

IB-ELV = 12.000 OB-ELV = 9.000
BDFLAP = .000 SPDBRK = .000
RUDDER = .000 SILTS = .000
MACH = 1.250 RN/L = 3.500

RUN NO. 1350/ 0 RN/L = 3.50 GRADIENT INTERVAL = -5.00/ 5.00

ALPHAO	BETAO	CNL	CNFL	CAL	CAFL	CLMFL	CYFL	CYNL	CYNFL	CBLFL
3.994	-5.868	.30470	.27830	.48680	.28860	-.13410	.26420	-.11530	-.11410	.04870
4.025	-3.792	.31330	.28650	.49030	.28950	-.13550	.17510	-.08060	-.07980	.03290
3.893	.194	.30400	.27770	.48410	.28650	-.12520	.00220	-.00600	-.00590	.00160
3.799	3.967	.31080	.28540	.48540	.28850	-.13220	-.15840	.06950	.06860	-.02840
3.789	6.135	.30710	.28140	.48360	.28740	-.13270	-.25270	.10830	.10680	-.04530
	GRADIENT	-.00034	-.00016	-.00064	-.00013	.00045	-.04298	.01934	.01912	-.00790

IA156A, AEDC PWT 16T-470, O T S (R8NVC3) (10 MAY 80)

REFERENCE DATA

SREF = 2690.0000 SQ.FT. XMRP = 976.0000 IN. XT
LREF = 1290.3000 INCHES YMRP = .0000 IN. YT
BREF = 1290.3000 INCHES ZMRP = 400.0000 IN. ZT
SCALE = .0200

PARAMETRIC DATA

IB-ELV = 12.000 OB-ELV = -2.000
BDFLAP = .000 SPDBRK = .000
RUDDER = .000 SILTS = .000
MACH = 1.150 RN/L = 3.500

RUN NO. 1355/ 0 RN/L = 3.50 GRADIENT INTERVAL = -5.00/ 5.00

ALPHAO	BETAO	CNL	CNFL	CAL	CAFL	CLMFL	CYFL	CYNL	CYNFL	CBLFL
-8.032	-5.992	-.56050	-.59160	.50090	.26070	.20930	.30030	-.12340	-.12120	.03620
-8.220	-3.826	-.58140	-.61190	.49910	.26200	.22430	.18810	-.07620	-.07480	.02090
-8.140	.284	-.59610	-.62500	.50050	.26470	.23620	-.00220	.00090	.00090	.00190
-7.952	4.281	-.57580	-.60470	.49830	.26530	.22690	-.18430	.07730	.07610	-.01890
-7.960	6.216	-.57250	-.60250	.49880	.26230	.22070	-.27720	.11650	.11460	-.03190
	GRADIENT	.00067	.00087	-.00010	.00041	.00033	-.04594	.01893	.01861	-.00491

RUN NO. 1356/ 0 RN/L = 3.50 GRADIENT INTERVAL = -5.00/ 5.00

ALPHAO	BETAO	CNL	CNFL	CAL	CAFL	CLMFL	CYFL	CYNL	CYNFL	CBLFL
-6.177	-5.962	-.40560	-.43650	.49910	.26510	.14900	.27810	-.11300	-.11070	.03790
-6.105	-4.037	-.40970	-.43990	.49770	.26510	.15770	.18380	-.07410	-.07280	.02440
-6.203	.110	-.43470	-.46340	.49350	.26210	.17940	.00440	-.00380	-.00390	.00260
-6.024	4.235	-.40900	-.43740	.49840	.27250	.16420	-.17690	.07080	.06950	-.02250
-5.753	6.323	-.37850	-.40760	.49430	.26810	.14640	-.27220	.11200	.10980	-.03740
	GRADIENT	.00008	.00030	.00008	.00089	.00079	-.04361	.01752	.01720	-.00567

IA156A, AEDC PWT 16T-470, O T S (R8NVC3) (10 MAY 80)

REFERENCE DATA

SREF = 2690.0000 SQ.FT. XMRP = 976.0000 IN. XT
LREF = 1290.3000 INCHES YMRP = .0000 IN. YT
BREF = 1290.3000 INCHES ZMRP = 400.0000 IN. ZT
SCALE = .0200

PARAMETRIC DATA

IB-ELV = 12.000 OB-ELV = -2.000
BDFLAP = .000 SPDBRK = .000
RUDDER = .000 SILTS = .000
MACH = 1.150 RN/L = 3.500

RUN NO. 1357/ 0 RN/L = 3.50 GRADIENT INTERVAL = -5.00/ 5.00

ALPHAO	BETAO	CNL	CNFL	CAL	CAFL	CLMFL	CYFL	CYNL	CYNFL	CBLFL
-4.099	-6.078	-.24730	-.27780	.49800	.26940	.08930	.27430	-.11060	-.10850	.04240
-4.300	-3.975	-.26970	-.29930	.49460	.27000	.10400	.17690	-.07240	-.07120	.02680
-4.196	.375	-.27030	-.29880	.49050	.26620	.11760	-.00970	.00160	.00160	.00000
-3.743	4.281	-.23070	-.25860	.49400	.27240	.10000	-.17080	.06770	.06640	-.02690
-3.848	6.110	-.23830	-.26730	.49770	.27270	.09720	-.25360	.10190	.10000	-.03990
	GRADIENT	.00463	.00484	-.00009	.00027	-.00042	-.04213	.01697	.01667	-.00650

RUN NO. 1358/ 0 RN/L = 3.50 GRADIENT INTERVAL = -5.00/ 5.00

ALPHAO	BETAO	CNL	CNFL	CAL	CAFL	CLMFL	CYFL	CYNL	CYNFL	CBLFL
-.466	-7.023	-.00260	-.03350	.49470	.26820	.00220	.31100	-.12820	-.12610	.05530
-.439	-4.831	-.00150	-.03060	.49010	.27510	.00440	.21100	-.08970	-.08810	.03840
-.400	-.461	.00460	-.02360	.49140	.27210	.00510	.02340	-.01190	-.01180	.00390
-.373	3.668	.01880	-.00820	.49350	.27980	-.00110	-.15060	.06660	.06510	-.02820
-.370	5.854	.02050	-.00700	.49040	.27410	-.00310	-.24030	.10270	.10070	-.04440
	GRADIENT	.00238	.00263	.00040	.00054	-.00064	-.04255	.01839	.01802	-.00784

RUN NO. 1359/ 0 RN/L = 3.50 GRADIENT INTERVAL = -5.00/ 5.00

ALPHAO	BETAO	CNL	CNFL	CAL	CAFL	CLMFL	CYFL	CYNL	CYNFL	CBLFL
4.002	-5.895	.26970	.24180	.48300	.26970	-.10380	.27120	-.11820	-.11690	.05230
3.980	-3.776	.27310	.24490	.48460	.27030	-.10240	.18120	-.08430	-.08350	.03460
3.896	.180	.27250	.24400	.47970	.26370	-.09790	.01440	-.01270	-.01260	.00330
3.840	3.994	.29620	.26920	.48180	.27000	-.11750	-.14850	.06190	.06100	-.02850
3.794	6.112	.28950	.26210	.47880	.26480	-.11590	-.24130	.09920	.09790	-.04640
	GRADIENT	.00295	.00311	-.00037	-.00005	-.00192	-.04243	.01881	.01859	-.00812

IA156A, AEDC PWT 16T-470, O T S (R8NVC4) (10 MAY 80)

REFERENCE DATA

SREF = 2690.0000 SQ.FT. XMRP = 976.0000 IN. XT
LREF = 1290.3000 INCHES YMRP = .0000 IN. YT
BREF = 1290.3000 INCHES ZMRP = 400.0000 IN. ZT
SCALE = .0200

PARAMETRIC DATA

IB-ELV = 12.000 OB-ELV = -2.000
BDFLAP = .000 SPDBRK = .000
RUDDER = .000 SILTS = .000
MACH = 1.250 RN/L = 3.500

RUN NO. 1360/ 0 RN/L = 3.50 GRADIENT INTERVAL = -5.00/ 5.00

ALPHAO	BETAO	CNL	CNFL	CAL	CAFL	CLMFL	CYFL	CYNL	CYNFL	CBLFL
-8.101	-5.952	-.56420	-.59240	.50020	.27920	.20840	.29290	-.11880	-.11690	.03680
-8.213	-3.740	-.57410	-.60180	.50070	.28030	.21890	.17630	-.06800	-.06670	.02160
-8.132	.191	-.58370	-.61040	.49930	.27940	.22850	-.00050	.00260	.00270	.00230
-7.941	4.368	-.55260	-.57970	.49820	.28170	.20950	-.19280	.08180	.08070	-.02190
-7.973	6.231	-.56200	-.59000	.49870	.28010	.20820	-.28230	.11970	.11780	-.03400
	GRADIENT	.00270	.00277	-.00031	.00018	-.00119	-.04552	.01848	.01818	-.00537

RUN NO. 1361/ 0 RN/L = 3.50 GRADIENT INTERVAL = -5.00/ 5.00

ALPHAO	BETAO	CNL	CNFL	CAL	CAFL	CLMFL	CYFL	CYNL	CYNFL	CBLFL
-6.206	-5.971	-.40130	-.42900	.49570	.28110	.14490	.27170	-.10870	-.10670	.03830
-6.109	-4.022	-.40000	-.42730	.49550	.28190	.15000	.17490	-.06800	-.06680	.02460
-6.202	.116	-.41580	-.44280	.49760	.27920	16480	-.00360	.00280	.00290	.00170
-5.988	4.255	-.38550	-.41200	.49630	.28570	.14450	-.18350	.07670	.07560	-.02430
-5.954	6.220	-.38840	-.41570	.49390	.28250	.14110	-.27450	.11540	.11340	-.03750
	GRADIENT	.00175	.00185	.00010	.00046	-.00066	-.04330	.01748	.01720	-.00591

RUN NO. 1362/ 0 RN/L = 3.50 GRADIENT INTERVAL = -5.00/ 5.00

ALPHAO	BETAO	CNL	CNFL	CAL	CAFL	CLMFL	CYFL	CYNL	CYNFL	CBLFL
-4.063	-6.095	-.24390	-.27210	.49470	.28210	.08700	.26510	-.10540	-.10350	.04120
-4.303	-3.959	-.26310	-.29050	.49520	.28520	.09920	.16220	-.06330	-.06220	.02530
-4.191	.373	-.25020	-.27670	.49010	.28120	.09900	-.01580	.00730	.00730	-.00040
-3.759	4.309	-.21130	-.23710	.49370	.28990	.08010	-.17320	.07130	.07030	-.02630
-3.832	6.102	-.22140	-.24820	.49350	.28490	.08160	-.25240	.10390	.10220	-.03890
	GRADIENT	.00621	.00640	-.00020	.00054	-.00227	-.04057	.01628	.01602	-.00624

RUN NO. 1363/ 0 RN/L = 3.50 GRADIENT INTERVAL = -5.00/ 5.00

ALPHAO	BETAO	CNL	CNFL	CAL	CAFL	CLMFL	CYFL	CYNL	CYNFL	CBLFL
-.484	-7.045	-.00270	-.03080	.49300	.28610	.00030	.30820	-.12680	-.12490	.05290
-.455	-4.776	-.00150	-.02850	.48930	.28710	.00220	.20190	-.08430	-.08290	.03530
-.414	-.532	.00820	-.01770	.48650	.28790	.00020	.02350	-.01100	-.01090	.00390
-.383	3.724	.02350	-.00180	.49020	.29180	-.00550	-.15120	.06560	.06420	-.02700
-.396	5.888	.01830	-.00760	.49040	.28940	-.00490	-.24540	.10300	.10100	-.04280
	GRADIENT	.00294	.00314	.00011	.00055	-.00091	-.04154	.01763	.01731	-.00733

IA156A, AEDC PWT 16T-470, O T S (R8NVC4) (10 MAY 80)

REFERENCE DATA

SREF = 2690.0000 SQ.FT. XMRP = 976.0000 IN. XT
LREF = 1290.3000 INCHES YMRP = .0000 IN. YT
BREF = 1290.3000 INCHES ZMRP = 400.0000 IN. ZT
SCALE = .0200

PARAMETRIC DATA

IB-ELV = 12.000 OB-ELV = -2.000
BDFLAP = .000 SPDBRK = .000
RUDDER = .000 SILTS = .000
MACH = 1.250 RN/L = 3.500

RUN NO. 1364/ 0 RN/L = 3.50 GRADIENT INTERVAL = -5.00/ 5.00

ALPHAO	BETAO	CNL	CNFL	CAL	CAFL	CLMFL	CYFL	CYNL	CYNFL	CBLFL
4.094	-5.769	.28980	.26360	.48300	.28450	-.11790	.26360	-.11600	-.11490	.04920
3.990	-3.665	.28860	.26220	.48530	.28550	-.11560	.17080	-.07960	-.07890	.03220
3.760	.191	.27720	.25110	.48010	.28320	-.10570	.00860	-.00910	-.00910	.00250
3.825	4.099	.29060	.26560	.47910	.28370	-.11500	-.15960	.06970	.06880	-.02920
3.778	6.130	.28370	.25820	.48080	.28400	-.11350	-.24980	.10610	.10470	-.04550
	GRADIENT	.00026	.00045	-.00080	-.00023	.00007	-.04256	.01923	.01903	-.00791

IA156A, AEDC PWT 16T-470, O T S (R8NVC5) (10 MAY 80)

REFERENCE DATA

SREF = 2690.0000 SQ.FT. XMRP = 976.0000 IN. XT
LREF = 1290.3000 INCHES YMRP = .0000 IN. YT
BREF = 1290.3000 INCHES ZMRP = 400.0000 IN. ZT
SCALE = .0200

PARAMETRIC DATA

IB-ELV = 12.000 OB-ELV = -2.000
BDFLAP = .000 SPDBRK = .000
RUDDER = .000 SILTS = .000
MACH = 1.400 RN/L = 3.500

RUN NO. 1365/ 0 RN/L = 3.00 GRADIENT INTERVAL = -5.00/ 5.00

ALPHAO	BETAO	CNL	CNFL	CAL	CAFL	CLMFL	CYFL	CYNL	CYNFL	CBLFL
-8.079	-5.931	-.56690	-.59260	.48970	.28990	.20980	.29440	-.11870	-.11710	.03480
-8.212	-3.723	-.58140	-.60630	.49410	.29570	.21890	.17530	-.06580	-.06460	.02050
-8.138	.218	-.57730	-.60160	.49250	.29570	.22100	-.00140	.00030	.00030	.00200
-7.957	4.469	-.56830	-.59260	.49160	.29720	.21560	-.19230	.07640	.07520	-.02020
-7.941	6.289	-.57160	-.59640	.48860	.29380	.21550	-.28920	.11860	.11710	-.03320
	GRADIENT	.00161	.00168	-.00030	.00019	-.00041	-.04488	.01737	.01707	-.00497

RUN NO. 1366/ 0 RN/L = 3.00 GRADIENT INTERVAL = -5.00/ 5.00

ALPHAO	BETAO	CNL	CNFL	CAL	CAFL	CLMFL	CYFL	CYNL	CYNFL	CBLFL
-6.230	-5.938	-.41850	-.44400	.48920	.29210	.15030	.27550	-.10680	-.10510	.03660
-6.179	-4.021	-.40940	-.43420	.48850	.29560	.15020	.17340	-.06390	-.06290	.02280
-6.212	.150	-.41140	-.43540	.48500	.29450	.15440	-.00610	.00320	.00330	.00070
-5.966	4.280	-.39250	-.41680	.48970	.29780	.14450	-.17970	.07000	.06920	-.02200
-5.944	6.270	-.39700	-.42170	.49610	.29400	.14550	-.27240	.10930	.10780	-.03500
	GRADIENT	.00203	.00209	.00014	.00026	-.00068	-.04254	.01613	.01591	-.00540

IA156A, AEDC PWT 16T-470, O T S (R8NVC5) (10 MAY 80)

REFERENCE DATA

SREF = 2690.0000 SQ.FT. XMRP = 976.0000 IN. XT
LREF = 1290.3000 INCHES YMRP = .0000 IN. YT
BREF = 1290.3000 INCHES ZMRP = 400.0000 IN. ZT
SCALE = .0200

PARAMETRIC DATA

IB-ELV = 12.000 OB-ELV = -2.000
BDFLAP = .000 SPDBRK = .000
RUDDER = .000 SILTS = .000
MACH = 1.400 RN/L = 3.500

RUN NO. 1367/ 0 RN/L = 2.99 GRADIENT INTERVAL = -5.00/ 5.00

ALPHAO	BETAO	CNL	CNFL	CAL	CAFL	CLMFL	CYFL	CYNL	CYNFL	CBLFL
-4.094	-6.078	-.25390	-.27870	.48550	.29620	.08950	.26510	-.10220	-.10070	.03880
-4.349	-3.947	-.27040	-.29520	.48510	.29500	.09610	.16160	-.05960	-.05870	.02300
-4.202	.412	-.25100	-.27510	.48190	.29560	.09130	-.01600	.00670	.00680	-.00090
-3.737	4.341	-.21810	-.24200	.48500	.29870	.08020	-.17290	.06670	.06600	-.02440
-3.816	6.142	-.23640	-.26080	.48270	.29400	.08670	-.25840	.10230	.10090	-.03710
	GRADIENT	.00628	.00639	-.00003	.00044	-.00190	-.04037	.01524	.01505	-.00571

RUN NO. 1368/ 0 RN/L = 3.00 GRADIENT INTERVAL = -5.00/ 5.00

ALPHAO	BETAO	CNL	CNFL	CAL	CAFL	CLMFL	CYFL	CYNL	CYNFL	CBLFL
-.508	-6.997	-.01430	-.03980	.48270	.29550	.00390	.30780	-.12470	-.12300	.05040
-.481	-4.824	-.00870	-.03330	.47830	.29640	.00190	.20150	-.08060	-.07930	.03320
-.432	-.491	.00870	-.01530	.47710	.29830	-.00500	.01820	-.00710	-.00700	.00300
-.414	3.632	.01640	-.00710	.48060	.30090	-.00550	-.14880	.06240	.06130	-.02470
-.423	5.820	.00790	-.01600	.47960	.29890	-.00280	-.24430	.10170	.10010	-.03990
	GRADIENT	.00298	.00311	.00027	.00053	-.00088	-.04143	.01691	.01663	-.00685

RUN NO. 1369/ 0 RN/L = 3.00 GRADIENT INTERVAL = -5.00/ 5.00

ALPHAO	BETAO	CNL	CNFL	CAL	CAFL	CLMFL	CYFL	CYNL	CYNFL	CBLFL
4.039	-5.870	.26950	.24470	.47560	.29300	-.10180	.27100	-.12160	-.12030	.04820
3.998	-3.653	.26940	.24560	.47110	.29440	-.10490	.16860	-.07990	-.07900	.03040
3.743	.167	.26560	.24120	.47240	.29200	-.10150	.00760	-.00930	-.00930	.00160
3.786	4.056	.27500	.25170	.47110	.29480	-.10780	-.15600	.06690	.06600	-.02740
3.747	6.132	.27440	.25060	.47310	.29490	-.10890	-.25300	.10870	.10730	-.04360
	GRADIENT	.00073	.00080	-.00000	.00005	-.00038	-.04211	.01904	.01881	-.00750

IA156A, AEDC PWT 16T-470, O T S (R8NVC6) (10 MAY 80)

REFERENCE DATA

SREF = 2690.0000 SQ.FT. XMRP = 976.0000 IN. XT
LREF = 1290.3000 INCHES YMRP = .0000 IN. YT
BREF = 1290.3000 INCHES ZMRP = 400.0000 IN. ZT
SCALE = .0200

PARAMETRIC DATA

IB-ELV = 12.000 OB-ELV = -2.000
BDFLAP = .000 SPDBRK = .000
RUDDER = .000 SILTS = .000
MACH = 1.550 RN/L = 3.200

RUN NO. 1370/ 0 RN/L = 2.99 GRADIENT INTERVAL = -5.00/ 5.00

ALPHAO	BETAO	CNL	CNFL	CAL	CAFL	CLMFL	CYFL	CYNL	CYNFL	CBLFL
-8.164	-5.912	-.55630	-.57940	.46790	.28970	.21060	.29180	-.11960	-.11790	.03340
-8.309	-3.679	-.57070	-.59320	.46920	.29400	.21890	.17690	-.06910	-.06800	.01930
-8.198	.297	-.56740	-.58900	.46930	.29680	.22260	.00140	-.00190	-.00190	.00190
-7.977	4.573	-.56820	-.59030	.47100	.29620	.22380	-.19490	.07790	.07670	-.01940
-7.950	6.390	-.57230	-.59450	.46640	.29380	.22350	-.28530	.11670	.11510	-.03070
	GRADIENT	.00030	.00034	.00022	.00026	.00059	-.04506	.01782	.01755	-.00469

RUN NO. 1371/ 0 RN/L = 3.00 GRADIENT INTERVAL = -5.00/ 5.00

ALPHAO	BETAO	CNL	CNFL	CAL	CAFL	CLMFL	CYFL	CYNL	CYNFL	CBLFL
-6.347	-5.953	-.40980	-.43250	.46480	.29160	.14990	.27560	-.11110	-.10940	.03440
-6.238	-3.981	-.40620	-.42870	.46460	.29240	.15310	.17320	-.06690	-.06600	.02110
-6.280	.235	-.41810	-.44010	.46610	.29450	16420	-.00390	.00020	.00020	.00140
-5.976	4.383	-.39920	-.42110	.46440	.29560	.15630	-.17890	.07060	.06970	-.02070
-5.921	6.372	-.40930	-.43180	.46720	.29470	.15890	-.27320	.11100	.10940	-.03300
	GRADIENT	.00083	.00090	-.00002	.00038	.00039	-.04210	.01644	.01622	-.00500

RUN NO. 1372/ 0 RN/L = 3.00 GRADIENT INTERVAL = -5.00/ 5.00

ALPHAO	BETAO	CNL	CNFL	CAL	CAFL	CLMFL	CYFL	CYNL	CYNFL	CBLFL
-4.201	-6.099	-.25600	-.27910	.46410	.29150	.09160	.27030	.11000	-.10840	.03650
-4.444	-3.944	-.27170	-.29420	.46070	.29190	.10030	.16570	-.06530	-.06440	.02170
-4.272	.499	-.26410	-.28640	.46080	.29270	.10270	-.01640	.00490	.00490	-.00070
-3.722	4.430	-.23460	-.25680	.46250	.29520	.09380	-.17480	.07010	.06940	-.02260
-3.793	6.247	-.25230	-.27450	.46180	.29250	.09910	-.26050	.10730	.10590	-.03450
	GRADIENT	.00437	.00441	.00021	.00039	-.00075	-.04067	.01616	.01597	-.00529

RUN NO. 1373/ 0 RN/L = 3.00 GRADIENT INTERVAL = -5.00/ 5.00

ALPHAO	BETAO	CNL	CNFL	CAL	CAFL	CLMFL	CYFL	CYNL	CYNFL	CBLFL
-.593	-7.033	-.02110	-.04440	.45660	.28880	.00540	.30490	-.12870	-.12700	.04680
-.564	-4.900	-.01700	-.03990	.45570	.28880	.00660	.20400	-.08410	-.08300	.03140
-.529	-.542	-.01290	-.03490	.45180	.29220	.00740	.01850	-.00620	-.00600	.00230
-.513	3.574	-.00310	-.02510	.45870	.29630	.00060	-.15180	.06760	.06680	-.02340
-.524	5.750	-.00220	-.02480	.45950	.29440	-.00380	-.24680	.10870	.10710	-.03750
	GRADIENT	.00163	.00174	.00034	.00088	-.00070	-.04199	.01790	.01768	-.00647

IA156A, AEDC PWT 16T-470, O T S (R8NVC6) (10 MAY 80)

REFERENCE DATA

SREF = 2690.0000 SQ.FT. XMRP = 976.0000 IN. XT
LREF = 1290.3000 INCHES YMRP = .0000 IN. YT
BREF = 1290.3000 INCHES ZMRP = 400.0000 IN. ZT
SCALE = .0200

PARAMETRIC DATA

IB-ELV = 12.000 OB-ELV = -2.000
BDFLAP = .000 SPDBRK = .000
RUDDER = .000 SILTS = .000
MACH = 1.550 RN/L = 3.200

RUN NO. 1374/ 0 RN/L = 3.01 GRADIENT INTERVAL = -5.00/ 5.00

ALPHAO	BETAO	CNL	CNFL	CAL	CAFL	CLMFL	CYFL	CYNL	CYNFL	CBLFL
4.179	-5.685	.26850	.24530	.45980	.29300	-.10060	.26640	-.12350	-.12220	.04730
4.009	-3.558	.26060	.23780	.45520	.29220	-.10010	.17000	-.08270	-.08180	.03030
3.680	.254	.25310	.23070	.45100	.28890	-.09890	.00590	-.01000	-.01010	.00270
3.685	4.056	.26540	.24330	.45200	.29100	-.10810	-.15240	.06420	.06320	-.02520
3.639	6.130	.26330	.24040	.45260	.28860	-.10770	-.25060	.10850	.10720	-.04170
	GRADIENT	.00063	.00072	-.00042	-.00016	-.00105	-.04234	.01929	.01904	-.00729

IA156A, AEDC PWT 16T-470, O T S W/SILTS (R8NVC7) (10 MAY 80)

REFERENCE DATA

SREF = 2690.0000 SQ.FT. XMRP = 976.0000 IN. XT
LREF = 1290.3000 INCHES YMRP = .0000 IN. YT
BREF = 1290.3000 INCHES ZMRP = 400.0000 IN. ZT
SCALE = .0200

PARAMETRIC DATA

IB-ELV = 9.000 OB-ELV = -2.000
BDFLAP = .000 SPDBRK = .000
RUDDER = .000 SILTS = 1.000
MACH = 1.150 RN/L = 3.500
IB-AIL = 1.000

RUN NO. 1377/ 0 RN/L = 3.50 GRADIENT INTERVAL = -5.00/ 5.00

ALPHAO	BETAO	CNL	CNFL	CAL	CAFL	CLMFL	CYFL	CYNL	CYNFL	CBLFL
-8.173	-5.880	-.58060	-.61200	.49480	.25100	.22480	.28870	-.11910	-.11690	.03460
-8.191	-3.835	-.58470	-.61530	.49350	.25340	.23250	.18620	-.07490	-.07340	.02110
-8.131	.278	-.59200	-.62090	.48930	.25140	.23810	-.00270	.00160	.00170	.00180
-7.960	4.259	-.58270	-.61190	.49330	.25630	.23450	-.18650	.07980	.07860	-.01910
-7.945	6.207	-.57700	-.60710	.49510	.25650	.22630	-.27560	.11730	.11530	-.03150
	GRADIENT	.00024	.00041	-.00003	.00035	.00025	-.04605	.01911	.01878	-.00497

RUN NO. 1378/ 0 RN/L = 3.50 GRADIENT INTERVAL = -5.00/ 5.00

ALPHAO	BETAO	CNL	CNFL	CAL	CAFL	CLMFL	CYFL	CYNL	CYNFL	CBLFL
-6.183	-5.970	-.41580	-.44630	.49650	.26300	.15900	.28100	-.11420	-.11190	.03870
-6.102	-4.029	-.41650	-.44630	.49360	.26210	.16660	.18230	-.07350	-.07200	.02480
-6.194	.113	-.43600	-.46410	.48430	.25420	.18380	.00310	-.00190	-.00190	.00240
-6.013	4.232	-.41870	-.44760	.49390	.26170	.17350	-.17610	.07240	.07120	-.02220
-5.788	6.345	-.39240	-.42150	.49020	.26230	.15750	-.27090	.11290	.11070	-.03670
	GRADIENT	-.00027	-.00016	.00003	-.00005	.00084	-.04338	.01766	.01733	-.00569

IA156A, AEDC PWT 16T-470, O T S W/SILTS (R8NVC7) (10 MAY 80)

REFERENCE DATA

SREF = 2690.0000 SQ.FT. XMRP = 976.0000 IN. XT
LREF = 1290.3000 INCHES YMRP = .0000 IN. YT
BREF = 1290.3000 INCHES ZMRP = 400.0000 IN. ZT
SCALE = .0200

PARAMETRIC DATA

IB-ELV = 9.000 OB-ELV = -2.000
BDFLAP = .000 SPDBRK = .000
RUDDER = .000 SILTS = 1.000
MACH = 1.150 RN/L = 3.500
IB-AIL = 1.000

RUN NO. 1379/ 0 RN/L = 3.50 GRADIENT INTERVAL = -5.00/ 5.00

ALPHAO	BETAO	CNL	CNFL	CAL	CAFL	CLMFL	CYFL	CYNL	CYNFL	CBLFL
-4.099	-6.089	-.25500	-.28570	.49530	.26400	.09850	.27340	-.11020	-.10820	.04290
-4.295	-3.970	-.27700	-.30650	.49130	.26660	.11230	.17460	-.07180	-.07040	.02700
-4.200	.373	-.28000	-.30800	.48330	.26060	.12710	-.00730	.00080	.00070	.00070
-3.743	4.276	-.24210	-.26990	.49220	.26890	.11040	-.16940	.06800	.06670	-.02640
-3.851	6.111	-.24930	-.27830	.49470	.26840	.10840	-.25090	.10170	.09980	-.03920
	GRADIENT	.00414	.00435	.00007	.00025	-.00016	-.04172	.01695	.01662	-.00647

RUN NO. 1380/ 0 RN/L = 3.50 GRADIENT INTERVAL = -5.00/ 5.00

ALPHAO	BETAO	CNL	CNFL	CAL	CAFL	CLMFL	CYFL	CYNL	CYNFL	CBLFL
-.470	-7.021	-.01140	-.04190	.49310	.26820	.00970	.30950	-.12760	-.12550	.05530
-.444	-4.837	-.01100	-.04080	.49060	.27090	.01290	.20880	-.08870	-.08720	.03830
-.409	-.465	-.00600	-.03370	.48540	.26870	.01240	.02280	-.01130	-.01120	.00420
-.381	3.667	.00910	-.01760	.49120	.27630	.00600	-.15010	.06680	.06530	-.02770
-.383	5.857	.00820	-.01980	.49210	.27110	.00640	-.24330	.10430	.10240	-.04450
	GRADIENT	.00235	.00272	.00006	.00062	-.00080	-.04220	.01828	.01793	-.00776

RUN NO. 1381/ 0 RN/L = 3.50 GRADIENT INTERVAL = -5.00/ 5.00

ALPHAO	BETAO	CNL	CNFL	CAL	CAFL	CLMFL	CYFL	CYNL	CYNFL	CBLFL
4.123	-5.832	.26240	.23410	.48250	.26590	-.09490	.26980	-.11790	-.11670	.05230
3.967	-3.698	.25650	.22820	.48190	.26490	-.09050	.17820	-.08290	-.08220	.03430
3.794	.112	.25720	.22930	.47930	.26440	-.08850	.01920	-.01550	-.01550	.00430
3.843	4.035	.28350	.25670	.48000	.26660	-.10870	-.14890	.06170	.06080	-.02810
3.806	6.132	.28070	.25300	.48040	.26250	-.10710	-.24340	.09990	.09860	-.04630
	GRADIENT	.00351	.00370	-.00024	.00022	-.00237	-.04230	.01870	.01850	-.00807

IA156A, AEDC PWT 16T-470, O T S W/SILTS (R8NVC8) (10 MAY 80)

REFERENCE DATA

SREF = 2690.0000 SQ.FT. XMRP = 976.0000 IN. XT
LREF = 1290.3000 INCHES YMRP = .0000 IN. YT
BREF = 1290.3000 INCHES ZMRP = 400.0000 IN. ZT
SCALE = .0200

PARAMETRIC DATA

IB-ELV = 9.000 OB-ELV = -2.000
BDFLAP = .000 SPDBRK = .000
RUDDER = .000 SILTS = 1.000
MACH = 1.250 RN/L = 3.500
IB-AIL = 1.000

RUN NO. 1382/ 0 RN/L = 3.50 GRADIENT INTERVAL = -5.00/ 5.00

ALPHAO	BETAO	CNL	CNFL	CAL	CAFL	CLMFL	CYFL	CYNL	CYNFL	CBLFL
-8.176	-5.848	-.57840	-.60660	.49630	.27300	.22000	.28600	-.11620	-.11430	.03630
-8.215	-3.768	-.58480	-.61220	.49560	.27700	.22760	.17630	-.06820	-.06680	.02180
-8.127	.191	-.58810	-.61470	.49800	.27520	.23460	-.00110	.00320	.00330	.00240
-7.940	4.342	-.56570	-.59290	.49640	.27740	.21960	-.18900	.08050	.07940	-.02140
-7.947	6.219	-.56300	-.59040	.49330	.27780	.21290	-.27970	.11930	.11750	-.03330
	GRADIENT	.00238	.00240	.00009	.00005	-.00101	-.04505	.01834	.01803	-.00533

RUN NO. 1383/ 0 RN/L = 3.50 GRADIENT INTERVAL = -5.00/ 5.00

ALPHAO	BETAO	CNL	CNFL	CAL	CAFL	CLMFL	CYFL	CYNL	CYNFL	CBLFL
-6.194	-5.956	-.41530	-.44300	.49350	.27620	.15490	.27160	-.10920	-.10730	.03880
-6.125	-4.037	-.41430	-.44160	.49370	.27820	.15980	.17970	-.07030	-.06900	.02560
-6.197	.120	-.42160	-.44760	.49140	.27870	.17070	-.00630	.00430	.00440	.00150
-5.982	4.247	-.39540	-.42150	.49160	.28160	.15300	-.17850	.07440	.07330	-.02350
-5.952	6.225	-.39750	-.42520	.49350	.27910	.14930	-.27150	.11400	.11210	-.03690
	GRADIENT	.00228	.00242	-.00025	.00041	-.00082	-.04324	.01747	.01718	-.00593

RUN NO. 1384/ 0 RN/L = 3.50 GRADIENT INTERVAL = -5.00/ 5.00

ALPHAO	BETAO	CNL	CNFL	CAL	CAFL	CLMFL	CYFL	CYNL	CYNFL	CBLFL
-4.069	-6.097	-.25550	-.28390	.49410	.27870	.09700	.26540	-.10570	-.10390	.04180
-4.303	-3.963	-.27370	-.30110	.49190	.28100	.10710	.16430	-.06510	-.06400	.02590
-4.181	.374	-.25740	-.28360	.48650	.27820	.10590	-.01560	.00720	.00720	-.00040
-3.748	4.293	-.22310	-.24930	.49290	.28460	.08920	-.17440	.07180	.07080	-.02630
-3.839	6.122	-.23310	-.26000	.49120	.28200	.09030	-.25690	.10590	.10420	-.03930
	GRADIENT	.00609	.00623	.00010	.00042	-.00213	-.04103	.01658	.01633	-.00632

RUN NO. 1385/ 0 RN/L = 3.50 GRADIENT INTERVAL = -5.00/ 5.00

ALPHAO	BETAO	CNL	CNFL	CAL	CAFL	CLMFL	CYFL	CYNL	CYNFL	CBLFL
-.490	-6.970	-.01260	-.04090	.49100	.28170	.00870	.30780	-.12640	-.12450	.05320
-.462	-4.814	-.01070	-.03780	.48830	.28470	.00990	.20390	-.08540	-.08400	.03600
-.423	-.532	-.00180	-.02750	.48360	.28390	.00790	.02360	-.01100	-.01090	.00420
-.391	3.727	.01350	-.01130	.48680	.28850	.00260	-.15000	.06510	.06380	-.02660
-.403	5.885	.00980	-.01590	.48980	.28860	.00240	-.24580	.10330	.10140	-.04260
	GRADIENT	.00283	.00310	-.00018	.00044	-.00085	-.04144	.01762	.01730	-.00733

IA156A, AEDC PWT 16T-470, O T S W/SILTS (R8NVC8) (10 MAY 80)

REFERENCE DATA

SREF = 2690.0000 SQ.FT. XMRP = 976.0000 IN. XT
LREF = 1290.3000 INCHES YMRP = .0000 IN. YT
BREF = 1290.3000 INCHES ZMRP = 400.0000 IN. ZT
SCALE = .0200

PARAMETRIC DATA

IB-ELV = 9.000 OB-ELV = -2.000
BDFLAP = .000 SPDBRK = .000
RUDDER = .000 SILTS = 1.000
MACH = 1.250 RN/L = 3.500
IB-AIL = 1.000

RUN NO. 1386/ 0 RN/L = 3.50 GRADIENT INTERVAL = -5.00/ 5.00

ALPHAO	BETAO	CNL	CNFL	CAL	CAFL	CLMFL	CYFL	CYNL	CYNFL	CBLFL
4.166	-5.804	.28600	.25970	.48300	.28260	-.11210	.26680	-.11740	-.11640	.04990
3.973	-3.652	.27720	.25100	.48440	.28500	-.10710	.17230	-.07990	-.07930	.03250
3.766	.204	.26450	.23840	.47740	.27880	-.09550	.00370	-.00690	-.00690	.00200
3.832	4.085	.28040	.25520	.47880	.28110	-.10640	-.15860	.06880	.06790	-.02890
3.784	6.139	.27630	.25080	.48020	.28020	-.10570	-.25340	.10750	.10610	-.04580
	GRADIENT	.00042	.00055	-.00072	-.00050	.00009	-.04277	.01922	.01903	-.00794

IA156A, AEDC PWT 16T-470, O T S W/SILTS (R8NVC9) (10 MAY 80)

REFERENCE DATA

SREF = 2690.0000 SQ.FT. XMRP = 976.0000 IN. XT
LREF = 1290.3000 INCHES YMRP = .0000 IN. YT
BREF = 1290.3000 INCHES ZMRP = 400.0000 IN. ZT
SCALE = .0200

PARAMETRIC DATA

IB-ELV = 9.000 OB-ELV = -2.000
BDFLAP = .000 SPDBRK = .000
RUDDER = .000 SILTS = 1.000
MACH = 1.400 RN/L = 3.500
IB-AIL = 1.000

RUN NO. 1387/ 0 RN/L = 2.99 GRADIENT INTERVAL = -5.00/ 5.00

ALPHAO	BETAO	CNL	CNFL	CAL	CAFL	CLMFL	CYFL	CYNL	CYNFL	CBLFL
-8.086	-5.933	-.57480	-.60000	.48670	.28810	.21700	.29200	-.11690	-.11530	.03510
-8.203	-3.723	-.59550	-.62080	.49510	.29190	.22870	.18130	-.06800	-.06670	.02140
-8.137	.221	-.58460	-.60840	.48810	.29270	.22770	.00070	-.00030	-.00020	.00240
-7.965	4.466	-.57630	-.60080	.49140	.29260	.22240	-.19530	.07790	.07670	-.02030
-7.938	6.284	-.57780	-.60260	.48590	.28920	.22200	-.28760	.11790	.11640	-.03280
	GRADIENT	.00234	.00243	-.00044	.00008	-.00078	-.04599	.01782	.01752	-.00510

RUN NO. 1388/ 0 RN/L = 3.00 GRADIENT INTERVAL = -5.00/ 5.00

ALPHAO	BETAO	CNL	CNFL	CAL	CAFL	CLMFL	CYFL	CYNL	CYNFL	CBLFL
-6.256	-5.968	-.42840	-.45410	.48830	.28870	.15840	.27350	-.10550	-.10390	.03660
-6.152	-3.991	-.41830	-.44280	.48560	.29190	.15770	.17140	-.06290	-.06190	.02290
-6.217	.147	-.42530	-.44940	.48590	.29170	.16390	-.00440	.00270	.00290	.00120
-5.972	4.285	-.39440	-.41750	.48010	.29400	.14900	-.17680	.06880	.06800	-.02130
-5.942	6.276	-.41230	-.43690	.48600	.29130	.15520	-.27730	.11110	.10970	-.03530
	GRADIENT	.00289	.00306	-.00066	.00025	-.00105	-.04207	.01591	.01570	-.00534

IA156A, AEDC PWT 16T-470, O T S W/SILTS (R8NVC9) (10 MAY 80)

REFERENCE DATA

SREF = 2690.0000 SQ.FT. XMRP = 976.0000 IN. XT
LREF = 1290.3000 INCHES YMRP = .0000 IN. YT
BREF = 1290.3000 INCHES ZMRP = 400.0000 IN. ZT
SCALE = .0200

PARAMETRIC DATA

IB-ELV = 9.000 OB-ELV = -2.000
BDFLAP = .000 SPDBRK = .000
RUDDER = .000 SILTS = 1.000
MACH = 1.400 RN/L = 3.500
IB-AIL = 1.000

RUN NO. 1389/ 0 RN/L = 3.01 GRADIENT INTERVAL = -5.00/ 5.00

ALPHAO	BETAO	CNL	CNFL	CAL	CAFL	CLMFL	CYFL	CYNL	CYNFL	CBLFL
-4.254	-6.082	-.27270	-.29780	.48350	.29160	.10080	.26650	-.10250	-.10090	.03910
-4.339	-3.952	-.27710	-.30170	.48400	.29360	.10250	.16140	-.05900	-.05810	.02340
-4.212	.410	-.26190	-.28600	.48170	.29220	.09940	-.01630	.00680	.00690	-.00060
-3.745	4.326	-.23260	-.25650	.48490	.29490	.08890	-.17330	.06660	.06590	-.02400
-3.801	6.150	-.24110	-.26450	.47580	.29080	.09180	-.25350	.10010	.09870	-.03620
	GRADIENT	.00534	.00543	.00010	.00015	-.00163	-.04044	.01517	.01498	-.00572

RUN NO. 1390/ 0 RN/L = 3.00 GRADIENT INTERVAL = -5.00/ 5.00

ALPHAO	BETAO	CNL	CNFL	CAL	CAFL	CLMFL	CYFL	CYNL	CYNFL	CBLFL
-.511	-6.961	-.02070	-.04630	.48350	.29410	.01050	.30590	-.12330	-.12170	.05030
-.481	-4.830	-.01410	-.03870	.47730	.29310	.00780	.20220	-.08060	-.07940	.03360
-.440	-.450	-.00140	-.02510	.47400	.29510	.00260	.01800	-.00720	-.00700	.00330
-.421	3.647	.00460	-.01850	.47840	.29790	.00310	-.15090	.06280	.06190	-.02470
-.428	5.812	.00060	-.02310	.48010	.29780	.00410	-.24530	.10180	.10020	-.03980
	GRADIENT	.00221	.00239	.00012	.00056	-.00056	-.04166	.01691	.01667	-.00688

RUN NO. 1391/ 0 RN/L = 3.01 GRADIENT INTERVAL = -5.00/ 5.00

ALPHAO	BETAO	CNL	CNFL	CAL	CAFL	CLMFL	CYFL	CYNL	CYNFL	CBLFL
4.141	-5.774	.26880	.24440	.47410	.29230	-.09750	.26560	-.11930	-.11820	.04780
4.008	-3.662	.26630	.24210	.47410	.29100	-.09910	.17030	-.08100	-.08020	.03110
3.738	.170	.25620	.23250	.46970	.29100	-.09420	.00720	-.00930	-.00930	.00180
3.780	4.063	.26510	.24220	.46890	.29210	-.10000	-.15780	.06710	.06630	-.02740
3.742	6.124	.26480	.24060	.47610	.29230	-.10060	-.25350	.10900	.10760	-.04360
	GRADIENT	-.00015	.00002	-.00067	.00014	-.00012	-.04247	.01917	.01896	-.00757

IA156A, AEDC PWT 16T-470, O T S W/SILTS (R8NVD0) (10 MAY 80)

REFERENCE DATA

SREF = 2690.0000 SQ.FT. XMRP = 976.0000 IN. XT
LREF = 1290.3000 INCHES YMRP = .0000 IN. YT
BREF = 1290.3000 INCHES ZMRP = 400.0000 IN. ZT
SCALE = .0200

PARAMETRIC DATA

IB-ELV = 9.000 OB-ELV = -2.000
BDFLAP = .000 SPDBRK = .000
RUDDER = .000 SILTS = 1.000
MACH = 1.550 RN/L = 3.200
IB-AIL = 1.000

RUN NO. 1392/ 0 RN/L = 3.00 GRADIENT INTERVAL = -5.00/ 5.00

ALPHAO	BETAO	CNL	CNFL	CAL	CAFL	CLMFL	CYFL	CYNL	CYNFL	CBLFL
-8.172	-5.914	-.56510	-.58790	.46770	.28940	.21850	.28980	-.11840	-.11670	.03340
-8.299	-3.678	-.57900	-.60130	.46770	.29230	.22540	.17650	-.06890	-.06770	.01960
-8.186	.311	-.57840	-.60040	.47210	.29440	.22980	-.00170	-.00070	-.00060	.00190
-7.997	4.570	-.57600	-.59790	.47020	.29470	.23000	-.19350	.07700	.07580	-.01890
-7.945	6.384	-.57640	-.59830	.46510	.29200	.22740	-.28360	.11580	.11430	-.03020
	GRADIENT	.00037	.00041	.00029	.00029	.00055	-.04486	.01770	.01740	-.00467

RUN NO. 1393/ 0 RN/L = 3.00 GRADIENT INTERVAL = -5.00/ 5.00

ALPHAO	BETAO	CNL	CNFL	CAL	CAFL	CLMFL	CYFL	CYNL	CYNFL	CBLFL
-6.325	-5.946	-.41550	-.43830	.46450	.28910	.15620	.27600	-.11150	-.10980	.03480
-6.247	-3.971	-.41970	-.44200	.46490	.29150	.16180	.17300	-.06700	-.06600	.02140
-6.268	.230	-.42500	-.44670	.46290	.29080	.16950	-.00570	.00100	.00110	.00130
-5.981	4.383	-.41150	-.43320	.46490	.29370	.16390	-.17920	.07050	.06970	-.02040
-5.920	6.369	-.41480	-.43700	.46560	.29240	.16410	-.27540	.11180	.11030	-.03310
	GRADIENT	.00098	.00105	-.00000	.00026	.00025	-.04216	.01646	.01624	-.00500

RUN NO. 1394/ 0 RN/L = 3.00 GRADIENT INTERVAL = -5.00/ 5.00

ALPHAO	BETAO	CNL	CNFL	CAL	CAFL	CLMFL	CYFL	CYNL	CYNFL	CBLFL
-4.203	-6.098	-.26100	-.28410	.46170	.28840	.09730	.27050	-.11010	-.10860	.03680
-4.445	-3.939	-.28020	-.30260	.45980	.28960	.10690	.16600	-.06520	-.06440	.02190
-4.279	.498	-.27140	-.29320	.45790	.28980	.10840	-.01450	.00380	.00380	-.00020
-3.713	4.427	-.24140	-.26330	.46080	.29260	.09960	-.17610	.07070	.07000	-.02250
-3.801	6.270	-.25930	-.28120	.45930	.28910	.10490	-.26430	.10890	.10760	-.03470
	GRADIENT	.00458	.00464	.00011	.00035	-.00085	-.04089	.01623	.01605	-.00530

RUN NO. 1395/ 0 RN/L = 3.00 GRADIENT INTERVAL = -5.00/ 5.00

ALPHAO	BETAO	CNL	CNFL	CAL	CAFL	CLMFL	CYFL	CYNL	CYNFL	CBLFL
-.596	-7.027	-.02750	-.05070	.45740	.28680	.01180	.30620	-.12940	-.12770	.04740
-.568	-4.900	-.02420	-.04680	.45420	.28840	.01310	.20470	-.08430	-.08320	.03180
-.532	-.554	-.01910	-.04070	.45050	.29020	.01230	.01980	-.00670	-.00660	.00270
-.520	3.579	-.01060	-.03220	.45620	.29300	.00660	-.15140	.06720	.06650	-.02320
-.527	5.752	-.01130	-.03350	.45600	.29150	.00330	-.24700	.10850	.10690	-.03720
	GRADIENT	.00160	.00172	.00023	.00054	-.00076	-.04200	.01787	.01766	-.00649

IA156A, AEDC PWT 16T-470, O T S W/SILTS (R8NVD0) (10 MAY 80)

REFERENCE DATA

SREF = 2690.0000 SQ.FT. XMRP = 976.0000 IN. XT
LREF = 1290.3000 INCHES YMRP = .0000 IN. YT
BREF = 1290.3000 INCHES ZMRP = 400.0000 IN. ZT
SCALE = .0200

PARAMETRIC DATA

IB-ELV = 9.000 OB-ELV = -2.000
BDFLAP = .000 SPDBRK = .000
RUDDER = .000 SILTS = 1.000
MACH = 1.550 RN/L = 3.200
IB-AIL = 1.000

RUN NO. 1396/ 0 RN/L = 3.00 GRADIENT INTERVAL = -5.00/ 5.00

ALPHAO	BETAO	CNL	CNFL	CAL	CAFL	CLMFL	CYFL	CYNL	CYNFL	CBLFL
4.170	-5.671	.25890	.23570	.45930	.29090	-.09370	.26710	-.12390	-.12270	.04740
3.997	-3.548	.24850	.22570	.45310	.28710	-.09230	.16890	-.08240	-.08150	.03020
3.686	.252	.24570	.22380	.44770	.28590	-.09270	.00850	-.01180	-.01200	.00330
3.676	4.057	.25420	.23260	.44760	.28720	-.10090	-.15040	.06340	.06250	-.02470
3.653	6.138	.25530	.23330	.44770	.28600	-.10160	-.25110	.10910	.10770	-.04160
	GRADIENT	.00075	.00091	-.00072	.00001	-.00113	-.04199	.01917	.01894	-.00722

IA156A, AEDC PWT 16T-470, O T S W/SILTS (R8NVD1) (10 MAY 80)

REFERENCE DATA

SREF = 2690.0000 SQ.FT. XMRP = 976.0000 IN. XT
LREF = 1290.3000 INCHES YMRP = .0000 IN. YT
BREF = 1290.3000 INCHES ZMRP = 400.0000 IN. ZT
SCALE = .0200

PARAMETRIC DATA

IB-ELV = 8.000 OB-ELV = -2.000
BDFLAP = .000 SPDBRK = .000
RUDDER = .000 SILTS = 1.000
MACH = 1.150 RN/L = 3.500

RUN NO. 1399/ 0 RN/L = 3.50 GRADIENT INTERVAL = -5.00/ 5.00

ALPHAO	BETAO	CNL	CNFL	CAL	CAFL	CLMFL	CYFL	CYNL	CYNFL	CBLFL
-8.190	-5.889	-.58080	-.61160	.48710	.24790	.22630	.29140	-.12110	-.11900	.03460
-8.181	-3.823	-.58980	-.61940	.49210	.25810	.23600	.18380	-.07510	-.07370	.02050
-8.123	.267	-.59000	-.61780	.48680	.25560	.23730	-.00400	.00280	.00280	.00110
-7.970	4.264	-.57960	-.60780	.48870	.25890	.23400	-.18310	.07850	.07730	-.01900
-7.952	6.212	-.56640	-.59560	.48770	.25350	.22230	-.27350	.11640	.11450	-.03160
	GRADIENT	.00126	.00143	-.00042	.00010	-.00025	-.04537	.01899	.01867	-.00488

RUN NO. 1400/ 0 RN/L = 3.51 GRADIENT INTERVAL = -5.00/ 5.00

ALPHAO	BETAO	CNL	CNFL	CAL	CAFL	CLMFL	CYFL	CYNL	CYNFL	CBLFL
-6.165	-5.957	-.41620	-.44640	.48970	.25670	.16260	.27970	-.11400	-.11170	.03780
-6.115	-4.038	-.42470	-.45360	.48750	.26090	.17210	.18630	-.07590	-.07450	.02480
-6.201	.111	-.44120	-.46920	.48300	.25240	.18700	.00240	-.00220	-.00210	.00200
-6.017	4.233	-.41530	-.44290	.48560	.26190	.17240	-.17470	.07230	.07110	-.02250
-5.795	6.354	-.38870	-.41760	.48640	.25770	.15600	-.27180	.11360	.11150	-.03730
	GRADIENT	.00113	.00129	-.00023	.00012	.00004	-.04365	.01792	.01760	-.00572

IA156A, AEDC PWT 16T-470, O T S W/SILTS (R8NVD1) (10 MAY 80)

REFERENCE DATA

SREF = 2690.0000 SQ.FT. XMRP = 976.0000 IN. XT
LREF = 1290.3000 INCHES YMRP = .0000 IN. YT
BREF = 1290.3000 INCHES ZMRP = 400.0000 IN. ZT
SCALE = .0200

PARAMETRIC DATA

IB-ELV = 8.000 OB-ELV = -2.000
BDFLAP = .000 SPDBRK = .000
RUDDER = .000 SILTS = 1.000
MACH = 1.150 RN/L = 3.500

RUN NO. 1401/ 0 RN/L = 3.50 GRADIENT INTERVAL = -5.00/ 5.00

ALPHAO	BETAO	CNL	CNFL	CAL	CAFL	CLMFL	CYFL	CYNL	CYNFL	CBLFL
-4.100	-6.094	-.26370	-.29390	.49240	.26420	.10550	.27070	-.10930	-.10730	.04200
-4.292	-3.967	-.28370	-.31260	.48830	.26590	.11820	.17120	-.07020	-.06890	.02600
-4.195	.370	-.28130	-.30880	.48080	.26050	.12830	-.00940	.00230	.00210	-.00010
-3.741	4.274	-.24140	-.26870	.48540	.26550	.11030	-.17060	.06970	.06840	-.02690
-3.865	6.134	-.25330	-.28180	.49120	.26700	.11040	-.25410	.10340	.10150	-.04010
	GRADIENT	.00505	.00525	-.00038	-.00007	-.00090	-.04148	.01697	.01666	-.00641

RUN NO. 1402/ 0 RN/L = 3.51 GRADIENT INTERVAL = -5.00/ 5.00

ALPHAO	BETAO	CNL	CNFL	CAL	CAFL	CLMFL	CYFL	CYNL	CYNFL	CBLFL
-.474	-6.986	-.01710	-.04730	.48890	.26670	.01440	.31120	-.12830	-.12630	.05510
-.444	-4.835	-.01380	-.04330	.48870	.26910	.01580	.21080	-.08990	-.08840	.03830
-.409	-.483	-.00780	-.03480	.48240	.26830	.01450	.02190	-.01110	-.01100	.00360
-.382	3.676	.00660	-.01970	.48850	.27480	.00810	-.15140	.06720	.06560	-.02820
-.383	5.859	.00660	-.02080	.48910	.27120	.00760	-.24570	.10550	.10350	-.04520
	GRADIENT	.00239	.00277	-.00003	.00066	-.00090	-.04257	.01846	.01809	-.00782

RUN NO. 1403/ 0 RN/L = 3.50 GRADIENT INTERVAL = -5.00/ 5.00

ALPHAO	BETAO	CNL	CNFL	CAL	CAFL	CLMFL	CYFL	CYNL	CYNFL	CBLFL
4.108	-5.814	.26030	.23260	.47960	.26470	-.09310	.26720	-.11690	-.11570	.05130
3.968	-3.697	.25760	.22960	.48250	.26660	-.09070	.17860	-.08330	-.08270	.03400
3.794	.117	.25780	.23050	.47790	.26550	-.08930	.01550	-.01320	-.01320	.00330
3.852	4.044	.28520	.25880	.47940	.26880	-.10870	-.15330	.06380	.06280	-.02950
3.804	6.132	.27690	.25010	.47800	.26540	-.10540	-.24350	.10060	.09930	-.04690
	GRADIENT	.00358	.00379	-.00040	.00029	-.00234	-.04287	.01900	.01880	-.00820

IA156A, AEDC PWT 16T-470, O T S W/SILTS (R8NVD2) (10 MAY 80)

REFERENCE DATA

SREF = 2690.0000 SQ.FT. XMRP = 976.0000 IN. XT
LREF = 1290.3000 INCHES YMRP = .0000 IN. YT
BREF = 1290.3000 INCHES ZMRP = 400.0000 IN. ZT
SCALE = .0200

PARAMETRIC DATA

IB-ELV = 8.000 OB-ELV = -2.000
BDFLAP = .000 SPDBRK = .000
RUDDER = .000 SILTS = 1.000
MACH = 1.250 RN/L = 3.500

RUN NO. 1404/ 0 RN/L = 3.50 GRADIENT INTERVAL = -5.00/ 5.00

ALPHAO	BETAO	CNL	CNFL	CAL	CAFL	CLMFL	CYFL	CYNL	CYNFL	CBLFL
-8.058	-5.883	-.56900	-.59720	.49670	.27400	.21660	.28940	-.11750	-.11560	.03670
-8.212	-3.720	-.58610	-.61320	.49520	.27630	.22940	.17460	-.06760	-.06630	.02130
-8.130	.187	-.58660	-.61190	.49390	.27790	.23380	-.00120	.00330	.00330	.00170
-7.955	4.413	-.56810	-.59480	.49440	.27850	.22040	-.19520	.08330	.08220	-.02240
-7.957	6.242	-.57250	-.60050	.49630	.27740	.21760	-.28560	.12220	.12040	-.03490
	GRADIENT	.00224	.00229	-.00010	.00027	-.00113	-.04548	.01856	.01827	-.00538

RUN NO. 1405/ 0 RN/L = 3.49 GRADIENT INTERVAL = -5.00/ 5.00

ALPHAO	BETAO	CNL	CNFL	CAL	CAFL	CLMFL	CYFL	CYNL	CYNFL	CBLFL
-6.183	-5.954	-.41730	-.44440	.49220	.27840	.15580	.27330	-.10980	-.10800	.03840
-6.129	-4.043	-.41780	-.44440	.49190	.27970	.16240	.17650	-.06900	-.06780	.02480
-6.212	.135	-.43030	-.45630	.49340	.27700	17530	-.01000	.00530	.00530	.00080
-5.997	4.255	-.39890	-.42500	.49280	.28220	.15420	-.18230	.07620	.07510	-.02440
-5.829	6.348	-.39020	-.41780	.49410	.27950	.14680	-.28110	.11800	.11610	-.03880
	GRADIENT	.00227	.00233	.00011	.00030	-.00098	-.04324	.01750	.01722	-.00593

RUN NO. 1406/ 0 RN/L = 3.50 GRADIENT INTERVAL = -5.00/ 5.00

ALPHAO	BETAO	CNL	CNFL	CAL	CAFL	CLMFL	CYFL	CYNL	CYNFL	CBLFL
-4.212	-6.077	-.26490	-.29230	.48990	.27990	.10070	.26300	-.10480	-.10300	.04070
-4.313	-3.978	-.27840	-.30520	.49170	.28200	.10970	.16390	-.06460	-.06350	.02530
-4.191	.370	-.26160	-.28740	.48810	.27900	.10810	-.01790	.00820	.00820	-.00100
-3.749	4.283	-.22100	-.24630	.49040	.28580	.08870	-.17490	.07200	.07090	-.02680
-3.836	6.115	-.23450	-.26080	.48860	.28280	.09110	-.25460	.10500	.10340	-.03930
	GRADIENT	.00689	.00707	-.00017	.00044	-.00250	-.04103	.01654	.01627	-.00630

RUN NO. 1407/ 0 RN/L = 3.51 GRADIENT INTERVAL = -5.00/ 5.00

ALPHAO	BETAO	CNL	CNFL	CAL	CAFL	CLMFL	CYFL	CYNL	CYNFL	CBLFL
-.491	-6.993	-.01560	-.04250	.48510	.28540	.01090	.30240	-.12400	-.12220	.05190
-.471	-4.853	-.01400	-.04190	.49420	.28380	.01290	.20920	-.08730	-.08590	.03650
-.424	-.443	-.00480	-.02980	.48120	.28410	.00960	.01950	-.00940	-.00930	.00320
-.392	3.681	.01190	-.01230	.48610	.28970	.00340	-.15160	.06570	.06430	-.02710
-.405	5.873	.00580	-.01930	.48750	.28940	.00450	-.24650	.10350	.10170	-.04310
	GRADIENT	.00302	.00346	-.00097	.00068	-.00111	-.04229	.01793	.01760	-.00745

IA156A, AEDC PWT 16T-470, O T S W/SILTS (R8NVD2) (10 MAY 80)

REFERENCE DATA

SREF = 2690.0000 SQ.FT. XMRP = 976.0000 IN. XT
LREF = 1290.3000 INCHES YMRP = .0000 IN. YT
BREF = 1290.3000 INCHES ZMRP = 400.0000 IN. ZT
SCALE = .0200

PARAMETRIC DATA

IB-ELV = 8.000 OB-ELV = -2.000
BDFLAP = .000 SPDBRK = .000
RUDDER = .000 SILTS = 1.000
MACH = 1.250 RN/L = 3.500

RUN NO. 1408/ 0 RN/L = 3.50 GRADIENT INTERVAL = -5.00/ 5.00

ALPHAO	BETAO	CNL	CNFL	CAL	CAFL	CLMFL	CYFL	CYNL	CYNFL	CBLFL
4.160	-5.799	.28100	.25490	.48220	.28210	-.10910	.26570	-.11630	-.11530	.04920
3.982	-3.661	.27460	.24880	.48160	.28340	-.10540	.17150	-.07920	-.07860	.03210
3.771	.206	.26310	.23730	.47580	.27630	-.09470	.00360	-.00660	-.00660	.00140
3.835	4.085	.28180	.25750	.48040	.28720	-.10640	-.16060	.06980	.06890	-.02970
3.786	6.141	.27560	.25100	.47750	.28270	-.10540	-.25220	.10710	.10560	-.04620
	GRADIENT	.00093	.00112	-.00015	.00049	-.00013	-.04287	.01924	.01904	-.00798

IA156A, AEDC PWT 16T-470, O T S W/SILTS (R8NVD3) (10 MAY 80)

REFERENCE DATA

SREF = 2690.0000 SQ.FT. XMRP = 976.0000 IN. XT
LREF = 1290.3000 INCHES YMRP = .0000 IN. YT
BREF = 1290.3000 INCHES ZMRP = 400.0000 IN. ZT
SCALE = .0200

PARAMETRIC DATA

IB-ELV = 8.000 OB-ELV = -2.000
BDFLAP = .000 SPDBRK = .000
RUDDER = .000 SILTS = 1.000
MACH = 1.400 RN/L = 3.500

RUN NO. 1409/ 0 RN/L = 3.00 GRADIENT INTERVAL = -5.00/ 5.00

ALPHAO	BETAO	CNL	CNFL	CAL	CAFL	CLMFL	CYFL	CYNL	CYNFL	CBLFL
-8.086	-5.930	-.57850	-.60410	.48870	.28760	.21980	.29390	-.11750	-.11590	.03500
-8.220	-3.728	-.58780	-.61160	.48690	.29240	.22610	.17660	-.06590	-.06470	.02040
-8.142	.230	-.58660	-.61010	.48750	.29140	.22930	-.00160	.00110	.00110	.00180
-7.943	4.451	-.58100	-.60490	.49080	.29540	.22540	-.19360	.07730	.07610	-.02050
-7.969	6.303	-.58390	-.60750	.48160	.29170	.22460	-.28710	.11790	.11630	-.03290
	GRADIENT	.00084	.00082	.00048	.00037	-.00009	-.04527	.01752	.01722	-.00500

RUN NO. 1410/ 0 RN/L = 2.99 GRADIENT INTERVAL = -5.00/ 5.00

ALPHAO	BETAO	CNL	CNFL	CAL	CAFL	CLMFL	CYFL	CYNL	CYNFL	CBLFL
-6.257	-5.962	-.43140	-.45620	.48520	.28920	.16040	.27180	-.10520	-.10350	.03610
-6.163	-4.003	-.41830	-.44240	.48560	.29340	.15790	.17040	-.06300	-.06210	.02250
-6.200	.152	-.42580	-.44920	.48340	.29240	.16480	-.00680	.00360	.00380	.00050
-5.976	4.285	-.40350	-.42680	.48480	.29600	.15280	-.17820	.06930	.06860	-.02190
-5.941	6.262	-.41390	-.43820	.48460	.29130	.15590	-.27780	.11180	.11030	-.03570
	GRADIENT	.00178	.00188	-.00010	.00031	-.00061	-.04206	.01596	.01577	-.00536

IA156A, AEDC PWT 16T-470, O T S W/SILTS (R8NVD3) (10 MAY 80)

REFERENCE DATA

SREF = 2690.0000 SQ.FT. XMRP = 976.0000 IN. XT
LREF = 1290.3000 INCHES YMRP = .0000 IN. YT
BREF = 1290.3000 INCHES ZMRP = 400.0000 IN. ZT
SCALE = .0200

PARAMETRIC DATA

IB-ELV = 8.000 OB-ELV = -2.000
BDFLAP = .000 SPDBRK = .000
RUDDER = .000 SILTS = 1.000
MACH = 1.400 RN/L = 3.500

RUN NO. 1411/ 0 RN/L = 2.99 GRADIENT INTERVAL = -5.00/ 5.00

ALPHAO	BETAO	CNL	CNFL	CAL	CAFL	CLMFL	CYFL	CYNL	CYNFL	CBLFL
-4.076	-6.072	-.26470	-.29000	.48630	.29270	.09900	.26380	-.10160	-.10010	.03870
-4.353	-3.952	-.28160	-.30570	.48270	.29370	.10510	.16020	-.05870	-.05780	.02280
-4.200	.417	-.25960	-.28280	.47770	.29280	.09880	-.01820	.00740	.00740	-.00120
-3.744	4.333	-.22750	-.25060	.48130	.29570	.08810	-.17340	.06680	.06600	-.02470
-3.816	6.148	-.24480	-.26860	.48220	.29290	.09420	-.25810	.10210	.10070	-.03730
	GRADIENT	.00650	.00662	-.00019	.00023	-.00204	-.04028	.01515	.01494	-.00573

RUN NO. 1412/ 0 RN/L = 2.99 GRADIENT INTERVAL = -5.00/ 5.00

ALPHAO	BETAO	CNL	CNFL	CAL	CAFL	CLMFL	CYFL	CYNL	CYNFL	CBLFL
-.514	-7.000	-.02560	-.05090	.48300	.29450	.01310	.30420	-.12230	-.12070	.04970
-.487	-4.816	-.02020	-.04420	.47510	.29360	.01070	.20020	-.07960	-.07850	.03300
-.442	-.499	-.00410	-.02720	.47280	.29580	.00380	.01740	-.00690	-.00680	.00290
-.424	3.637	.00340	-.01960	.47890	.29850	.00380	-.15160	.06310	.06210	-.02520
-.432	5.812	-.00460	-.02820	.48020	.29850	.00680	-.24600	.10250	.10090	-.04050
	GRADIENT	.00280	.00292	.00044	.00058	-.00082	-.04162	.01688	.01663	-.00689

RUN NO. 1413/ 0 RN/L = 2.99 GRADIENT INTERVAL = -5.00/ 5.00

ALPHAO	BETAO	CNL	CNFL	CAL	CAFL	CLMFL	CYFL	CYNL	CYNFL	CBLFL
4.136	-5.765	.26560	.24150	.47400	.29330	-.09610	.26410	-.11800	-.11690	.04720
3.993	-3.651	.26050	.23730	.47090	.29340	-.09690	.16830	-.07920	-.07840	.03050
3.759	.176	.25460	.23130	.46830	.29060	-.09320	.00610	-.00870	-.00880	.00130
3.790	4.045	.26550	.24250	.47140	.29260	-.09930	-.15750	.06710	.06630	-.02780
3.737	6.120	.26070	.23770	.46910	.29260	-.09880	-.25050	.10770	.10630	-.04370
	GRADIENT	.00065	.00068	.00007	-.00010	-.00031	-.04233	.01901	.01880	-.00757

IA156A, AEDC PWT 16T-470, O T S W/SILTS (R8NVD4) (10 MAY 80)

REFERENCE DATA

SREF = 2690.0000 SQ.FT. XMRP = 976.0000 IN. XT
LREF = 1290.3000 INCHES YMRP = .0000 IN. YT
BREF = 1290.3000 INCHES ZMRP = 400.0000 IN. ZT
SCALE = .0200

PARAMETRIC DATA

IB-ELV = 8.000 OB-ELV = -2.000
BDFLAP = .000 SPDBRK = .000
RUDDER = .000 SILTS = 1.000
MACH = 1.550 RN/L = 3.200

RUN NO. 1414/ 0 RN/L = 3.00 GRADIENT INTERVAL = -5.00/ 5.00

ALPHAO	BETAO	CNL	CNFL	CAL	CAFL	CLMFL	CYFL	CYNL	CYNFL	CBLFL
-8.173	-5.906	-.57280	-.59540	.46810	.29040	.22200	.29250	-.12000	-.11830	.03310
-8.310	-3.678	-.58610	-.60830	.46880	.29310	.22940	.17380	-.06750	-.06630	.01890
-8.207	.302	-.57780	-.59900	.46840	.29420	.22980	-.00030	-.00100	-.00090	.00160
-7.990	4.583	-.57880	-.60010	.46980	.29630	.23130	-.19870	.07960	.07840	-.01970
-7.954	6.387	-.58290	-.60520	.46980	.29430	.23040	-.29110	.11930	.11780	-.03140
	GRADIENT	.00087	.00098	.00012	.00039	.00023	-.04511	.01782	.01753	-.00468

RUN NO. 1415/ 0 RN/L = 3.00 GRADIENT INTERVAL = -5.00/ 5.00

ALPHAO	BETAO	CNL	CNFL	CAL	CAFL	CLMFL	CYFL	CYNL	CYNFL	CBLFL
-6.355	-5.955	-.42650	-.44890	.46460	.28990	.16130	.27510	-.11060	-.10900	.03400
-6.251	-3.965	-.41990	-.44200	.46270	.29000	.16250	.17530	-.06790	-.06700	.02120
-6.276	.218	-.42750	-.44890	.46330	.29180	17140	-.00550	.00120	.00130	.00090
-5.974	4.381	-.41180	-.43320	.46460	.29400	.16480	-.18010	.07140	.07060	-.02090
-5.924	6.362	-.41910	-.44090	.46440	.29210	.16520	-.27940	.11390	.11240	-.03370
	GRADIENT	.00097	.00105	.00023	.00048	.00028	-.04258	.01669	.01649	-.00504

RUN NO. 1416/ 0 RN/L = 3.00 GRADIENT INTERVAL = -5.00/ 5.00

ALPHAO	BETAO	CNL	CNFL	CAL	CAFL	CLMFL	CYFL	CYNL	CYNFL	CBLFL
-4.193	-6.090	-.26350	-.28610	.45980	.28870	.09890	.26700	-.10850	-.10700	.03600
-4.448	-3.945	-.28300	-.30480	.45950	.29080	.10850	.16450	-.06430	-.06350	.02140
-4.285	.497	-.27520	-.29680	.45910	.29160	.11040	-.01880	.00600	.00600	-.00100
-3.718	4.433	-.24650	-.26800	.45880	.29250	.10220	-.17870	.07180	.07100	-.02320
-3.794	6.252	-.26370	-.28540	.46200	.29200	.10740	-.26390	.10880	.10740	-.03510
	GRADIENT	.00430	.00434	-.00008	.00020	-.00073	-.04097	.01624	.01604	-.00532

RUN NO. 1417/ 0 RN/L = 3.00 GRADIENT INTERVAL = -5.00/ 5.00

ALPHAO	BETAO	CNL	CNFL	CAL	CAFL	CLMFL	CYFL	CYNL	CYNFL	CBLFL
-.600	-7.077	-.03100	-.05370	.45410	.28680	.01400	.30390	-.12790	-.12620	.04660
-.575	-4.886	-.03060	-.05310	.45460	.28850	.01600	.20410	-.08370	-.08270	.03130
-.535	-.570	-.02160	-.04320	.45060	.28930	.01380	.01820	-.00590	-.00570	.00220
-.523	3.572	-.01340	-.03460	.45590	.29450	.00850	-.15290	.06760	.06680	-.02370
-.529	5.754	-.01160	-.03370	.45710	.29070	.00310	-.24780	.10890	.10740	-.03780
	GRADIENT	.00203	.00219	.00015	.00071	-.00088	-.04222	.01789	.01768	-.00650

IA156A, AEDC PWT 16T-470, O T S W/SILTS (R8NVD4) (10 MAY 80)

REFERENCE DATA

SREF = 2690.0000 SQ.FT. XMRP = 976.0000 IN. XT
LREF = 1290.3000 INCHES YMRP = .0000 IN. YT
BREF = 1290.3000 INCHES ZMRP = 400.0000 IN. ZT
SCALE = .0200

PARAMETRIC DATA

IB-ELV = 8.000 OB-ELV = -2.000
BDFLAP = .000 SPDBRK = .000
RUDDER = .000 SILTS = 1.000
MACH = 1.550 RN/L = 3.200

RUN NO. 1418/ 0 RN/L = 3.00 GRADIENT INTERVAL = -5.00/ 5.00

ALPHAO	BETAO	CNL	CNFL	CAL	CAFL	CLMFL	CYFL	CYNL	CYNFL	CBLFL
4.174	-5.670	.25900	.23590	.45950	.29240	-.09300	.26500	-.12270	-.12150	.04690
3.981	-3.537	.24470	.22260	.45140	.28940	-.09030	.16630	-.08090	-.08000	.02940
3.707	.254	.24330	.22200	.44670	.28690	-.09240	.00320	-.00860	-.00870	.00240
3.701	4.070	.25840	.23670	.45080	.28800	-.10170	-.15620	.06590	.06500	-.02610
3.631	6.106	.25230	.23030	.44960	.28810	-.09960	-.25140	.10930	.10790	-.04210
	GRADIENT	.00180	.00186	-.00008	-.00018	-.00150	-.04240	.01930	.01906	-.00730

IA156A, AEDC PWT 16T-470, O T S W/SILTS (R8NVD5) (10 MAY 80)

REFERENCE DATA

SREF = 2690.0000 SQ.FT. XMRP = 976.0000 IN. XT
LREF = 1290.3000 INCHES YMRP = .0000 IN. YT
BREF = 1290.3000 INCHES ZMRP = 400.0000 IN. ZT
SCALE = .0200

PARAMETRIC DATA

IB-ELV = 8.000 OB-ELV = -2.000
BDFLAP = .000 SPDBRK = .000
RUDDER = .000 SILTS = 1.000
MACH = 1.550 RN/L = 3.200

RUN NO. 1419/ 0 RN/L = 3.00 GRADIENT INTERVAL = -5.00/ 5.00

ALPHAO	BETAO	CNL	CNFL	CAL	CAFL	CLMFL	CYFL	CYNL	CYNFL	CBLFL
-8.336	-5.820	-.58300	-.60540	.46590	.28870	.22690	.28620	-.11710	-.11540	.03200
-8.337	-3.710	-.58370	-.60560	.46740	.29270	.22850	.17620	-.06880	-.06760	.01920
-8.188	.540	-.58130	-.60260	.47040	.29490	.23190	-.01430	.00500	.00500	.00000
-7.992	4.474	-.57610	-.59750	.46790	.29470	.23060	-.18900	.07560	.07440	-.01880
-7.957	6.376	-.58210	-.60390	.46610	.29270	.22990	-.28760	.11810	.11660	-.03100
	GRADIENT	.00092	.00099	.00007	.00025	.00026	-.04463	.01764	.01735	-.00464

IA156A, AEDC PWT 16T-470, O T S W/SILTS (R8NVD6) (10 MAY 80)

REFERENCE DATA

SREF = 2690.0000 SQ.FT. XMRP = 976.0000 IN. XT
LREF = 1290.3000 INCHES YMRP = .0000 IN. YT
BREF = 1290.3000 INCHES ZMRP = 400.0000 IN. ZT
SCALE = .0200

PARAMETRIC DATA

IB-ELV = 10.000 OB-ELV = -2.000
BDFLAP = .000 SPDBRK = .000
RUDDER = .000 SILTS = 1.000
MACH = 1.150 RN/L = 3.500

RUN NO. 1432/ 0 RN/L = 3.50 GRADIENT INTERVAL = -5.00/ 5.00

ALPHAO	BETAO	CNL	CNFL	CAL	CAFL	CLMFL	CYFL	CYNL	CYNFL	CBLFL
-8.038	-5.907	-.56670	-.59790	.50260	.26060	.21500	.29530	-.12200	-.11990	.03550
-8.227	-3.794	-.58690	-.61780	.50130	.25900	.23010	.18610	-.07540	-.07390	.02060
-8.153	.354	-.60350	-.63220	.50150	.26390	.24120	-.00410	.00100	.00090	.00150
-7.957	4.313	-.58640	-.61550	.50080	.26330	.23410	-.18630	.07820	.07690	-.01920
-7.971	6.241	-.57780	-.60760	.50070	.26310	.22520	-.27720	.11680	.11480	-.03200
	GRADIENT	.00003	.00025	-.00006	.00054	.00051	-.04594	.01894	.01860	-.00491

RUN NO. 1433/ 0 RN/L = 3.50 GRADIENT INTERVAL = -5.00/ 5.00

ALPHAO	BETAO	CNL	CNFL	CAL	CAFL	CLMFL	CYFL	CYNL	CYNFL	CBLFL
-6.187	-5.974	-.40960	-.44040	.50000	.26420	.15350	.28160	-.11500	-.11270	.03820
-6.100	-4.044	-.41310	-.44290	.49920	.26760	.16150	.18420	-.07430	-.07290	.02420
-6.207	.105	-.44150	-.46990	.49380	.26180	.18460	.00320	-.00340	-.00350	.00220
-6.019	4.250	-.41640	-.44470	.49740	.26940	.17000	-.17870	.07190	.07060	-.02280
-5.950	6.204	-.40600	-.43570	.49790	.26500	.16030	-.26840	.11050	.10840	-.03630
	GRADIENT	-.00040	-.00022	-.00022	.00022	.00103	-.04376	.01763	.01730	-.00567

RUN NO. 1434/ 0 RN/L = 3.50 GRADIENT INTERVAL = -5.00/ 5.00

ALPHAO	BETAO	CNL	CNFL	CAL	CAFL	CLMFL	CYFL	CYNL	CYNFL	CBLFL
-4.105	-6.088	-.25000	-.28080	.49850	.26680	.09430	.27140	-.10920	-.10720	.04200
-4.305	-3.979	-.27500	-.30440	.49460	.26900	.11000	.17370	-.07130	-.07000	.02610
-4.201	.370	-.27730	-.30540	.48990	.26680	.12390	-.00880	.00120	.00110	.00000
-3.751	4.297	-.23600	-.26380	.49520	.27240	.10450	-.17310	.06900	.06770	-.02730
-3.849	6.117	-.24200	-.27080	.49700	.27150	.10280	-.25240	.10150	.09960	-.03990
	GRADIENT	.00462	.00481	.00005	.00039	-.00060	-.04191	.01695	.01663	-.00644

RUN NO. 1435/ 0 RN/L = 3.50 GRADIENT INTERVAL = -5.00/ 5.00

ALPHAO	BETAO	CNL	CNFL	CAL	CAFL	CLMFL	CYFL	CYNL	CYNFL	CBLFL
-.465	-7.059	-.00600	-.03660	.49530	.27100	.00620	.31470	-.12950	-.12740	.05590
-.441	-4.843	-.00720	-.03690	.49190	.27280	.01030	.20850	-.08850	-.08690	.03800
-.409	-.455	-.00480	-.03270	.48810	.27090	.01210	.02150	-.01090	-.01080	.00350
-.377	3.670	.01260	-.01470	.49230	.27530	.00450	-.15350	.06800	.06640	-.02880
-.377	5.843	.01410	-.01360	.49280	.27400	.00140	-.24520	.10470	.10270	-.04530
	GRADIENT	.00231	.00259	.00004	.00029	-.00067	-.04253	.01838	.01800	-.00785

IA156A, AEDC PWT 16T-470, O T S W/SILTS (R8NVD6) (10 MAY 80)

REFERENCE DATA

SREF = 2690.0000 SQ.FT. XMRP = 976.0000 IN. XT
LREF = 1290.3000 INCHES YMRP = .0000 IN. YT
BREF = 1290.3000 INCHES ZMRP = 400.0000 IN. ZT
SCALE = .0200

PARAMETRIC DATA

IB-ELV = 10.000 OB-ELV = -2.000
BDFLAP = .000 SPDBRK = .000
RUDDER = .000 SILTS = 1.000
MACH = 1.150 RN/L = 3.500

RUN NO. 1436/ 0 RN/L = 3.50 GRADIENT INTERVAL = -5.00/ 5.00

ALPHAO	BETAO	CNL	CNFL	CAL	CAFL	CLMFL	CYFL	CYNL	CYNFL	CBLFL
3.986	-5.876	.26360	.23530	.48410	.26780	-.09850	.27020	-.11760	-.11630	.05230
4.011	-3.800	.27240	.24380	.48510	.26830	-.09930	.18110	-.08380	-.08310	.03480
3.888	.183	.26970	.24170	.48100	.26710	-.09500	.01130	-.01120	-.01110	.00270
3.833	3.991	.28560	.25900	.48120	.27010	-.11050	-.15030	.06270	.06170	-.02860
3.791	6.099	.28700	.25980	.48140	.26750	-.11280	-.24570	.10130	.09990	-.04730
	GRADIENT	.00168	.00193	-.00050	.00023	-.00142	-.04254	.01880	.01858	-.00814

IA156A, AEDC PWT 16T-470, O T S W/SILTS (R8NVD7) (10 MAY 80)

REFERENCE DATA

SREF = 2690.0000 SQ.FT. XMRP = 976.0000 IN. XT
LREF = 1290.3000 INCHES YMRP = .0000 IN. YT
BREF = 1290.3000 INCHES ZMRP = 400.0000 IN. ZT
SCALE = .0200

PARAMETRIC DATA

IB-ELV = 10.000 OB-ELV = -2.000
BDFLAP = .000 SPDBRK = .000
RUDDER = .000 SILTS = 1.000
MACH = 1.250 RN/L = 3.500

RUN NO. 1437/ 0 RN/L = 3.50 GRADIENT INTERVAL = -5.00/ 5.00

ALPHAO	BETAO	CNL	CNFL	CAL	CAFL	CLMFL	CYFL	CYNL	CYNFL	CBLFL
-8.206	-5.869	-.57000	-.59780	.49440	.27470	.21420	.28470	-.11580	-.11400	.03580
-8.220	-3.786	-.57860	-.60600	.49920	.27870	.22340	.17840	-.06880	-.06740	.02190
-8.123	.183	-.58140	-.60770	.49900	.27940	.22980	-.00130	.00320	.00320	.00190
-7.968	4.350	-.56060	-.58760	.49710	.28010	.21520	-.19040	.08130	.08020	-.02180
-7.961	6.231	-.56440	-.59190	.49730	.28090	.21110	-.28330	.12060	.11880	-.03450
	GRADIENT	.00224	.00228	-.00026	.00017	-.00103	-.04533	.01845	.01814	-.00537

RUN NO. 1438/ 0 RN/L = 3.50 GRADIENT INTERVAL = -5.00/ 5.00

ALPHAO	BETAO	CNL	CNFL	CAL	CAFL	CLMFL	CYFL	CYNL	CYNFL	CBLFL
-6.190	-5.956	-.40850	-.43610	.49480	.27880	.15050	.27040	-.10880	-.10680	.03850
-6.130	-4.040	-.40810	-.43540	.49640	.28120	.15560	.17490	-.06830	-.06710	.02480
-6.210	.123	-.41980	-.44580	.49240	.27850	.16870	-.00730	.00420	.00420	.00120
-5.993	4.254	-.39280	-.41890	.49480	.28440	.14970	-.18340	.07640	.07530	-.02430
-5.966	6.246	-.39500	-.42220	.49440	.28260	.14580	-.27770	.11690	.11500	-.03800
	GRADIENT	.00184	.00198	-.00019	.00038	-.00071	-.04320	.01745	.01717	-.00592

IA156A, AEDC PWT 16T-470, O T S W/SILTS (R8NVD7) (10 MAY 80)

REFERENCE DATA

SREF = 2690.0000 SQ.FT. XMRP = 976.0000 IN. XT
LREF = 1290.3000 INCHES YMRP = .0000 IN. YT
BREF = 1290.3000 INCHES ZMRP = 400.0000 IN. ZT
SCALE = .0200

PARAMETRIC DATA

IB-ELV = 10.000 OB-ELV = -2.000
BDFLAP = .000 SPDBRK = .000
RUDDER = .000 SILTS = 1.000
MACH = 1.250 RN/L = 3.500

RUN NO. 1439/ 0 RN/L = 3.50 GRADIENT INTERVAL = -5.00/ 5.00

ALPHAO	BETAO	CNL	CNFL	CAL	CAFL	CLMFL	CYFL	CYNL	CYNFL	CBLFL
-4.099	-6.084	-.24980	-.27760	.49430	.28200	.09290	.26440	-.10550	-.10370	.04130
-4.302	-3.965	-.26530	-.29250	.49260	.28260	.10250	.16380	-.06480	-.06370	.02560
-4.205	.380	-.25740	-.28350	.48880	.28140	.10420	-.01880	.00850	.00850	-.00090
-3.753	4.301	-.21800	-.24380	.49300	.28680	.08520	-.17380	.07160	.07050	-.02660
-3.869	6.159	-.23280	-.25930	.49310	.28610	.08790	-.25620	.10550	.10380	-.03940
	GRADIENT	.00565	.00582	.00003	.00049	-.00205	-.04086	.01651	.01624	-.00631

RUN NO. 1440/ 0 RN/L = 3.50 GRADIENT INTERVAL = -5.00/ 5.00

ALPHAO	BETAO	CNL	CNFL	CAL	CAFL	CLMFL	CYFL	CYNL	CYNFL	CBLFL
-.487	-7.095	-.00770	-.03570	.49270	.28570	.00550	.30980	-.12740	-.12550	.05310
-.460	-4.831	-.00670	-.03390	.48920	.28680	.00720	.20300	-.08520	-.08370	.03560
-.418	-.484	.00300	-.02250	.48380	.28490	.00440	.02050	-.00980	-.00970	.00340
-.391	3.669	.01690	-.00820	.48940	.29040	-.00070	-.15240	.06610	.06470	-.02720
-.399	5.848	.01180	-.01390	.48820	.28810	-.00030	-.24540	.10320	.10130	-.04300
	GRADIENT	.00277	.00302	.00001	.00042	-.00093	-.04181	.01780	.01745	-.00739

RUN NO. 1441/ 0 RN/L = 3.50 GRADIENT INTERVAL = -5.00/ 5.00

ALPHAO	BETAO	CNL	CNFL	CAL	CAFL	CLMFL	CYFL	CYNL	CYNFL	CBLFL
3.994	-5.859	.27980	.25340	.48320	.28260	-.11160	.26700	-.11720	-.11610	.04970
4.009	-3.789	.28500	.25860	.48370	.28410	-.11170	.17720	-.08180	-.08110	.03330
3.884	.192	.27770	.25180	.47710	.28020	-.10310	.00450	-.00750	-.00750	.00180
3.812	3.991	.28600	.26070	.48040	.28360	-.11020	-.15970	.06930	.06840	-.02930
3.781	6.115	.27850	.25340	.47920	.28300	-.10910	-.25150	.10690	.10550	-.04590
	GRADIENT	.00011	.00025	-.00043	-.00007	.00021	-.04330	.01941	.01921	-.00804

IA156A, AEDC PWT 16T-470, O T S W/SILTS (R8NVD8) (10 MAY 80)

REFERENCE DATA

SREF = 2690.0000 SQ.FT. XMRP = 976.0000 IN. XT
LREF = 1290.3000 INCHES YMRP = .0000 IN. YT
BREF = 1290.3000 INCHES ZMRP = 400.0000 IN. ZT
SCALE = .0200

PARAMETRIC DATA

IB-ELV = 10.000 OB-ELV = -2.000
BDFLAP = .000 SPDBRK = .000
RUDDER = .000 SILTS = 1.000
MACH = 1.400 RN/L = 3.500

RUN NO. 1442/ 0 RN/L = 3.00 GRADIENT INTERVAL = -5.00/ 5.00

ALPHAO	BETAO	CNL	CNFL	CAL	CAFL	CLMFL	CYFL	CYNL	CYNFL	CBLFL
-8.250	-5.867	-.58460	-.61020	.48920	.28920	.22030	.28870	-.11630	-.11470	.03430
-8.255	-3.766	-.58640	-.61120	.49220	.29390	.22430	.17890	-.06700	-.06580	.02100
-8.143	.441	-.58090	-.60460	.48930	.29430	.22480	-.01170	.00500	.00490	.00070
-7.980	4.369	-.57180	-.59540	.48710	.29530	.21920	-.18890	.07610	.07490	-.01970
-7.971	6.295	-.57760	-.60210	.48440	.29000	.22080	-.28730	.11850	.11690	-.03290
	GRADIENT	.00179	.00194	-.00063	.00017	-.00062	-.04521	.01759	.01729	-.00500

RUN NO. 1443/ 0 RN/L = 3.00 GRADIENT INTERVAL = -5.00/ 5.00

ALPHAO	BETAO	CNL	CNFL	CAL	CAFL	CLMFL	CYFL	CYNL	CYNFL	CBLFL
-6.241	-5.956	-.41580	-.44090	.48450	.28990	.15280	.26930	-.10430	-.10260	.03610
-6.180	-4.023	-.41440	-.43920	.48930	.29400	.15480	.17160	-.06300	-.06200	.02270
-6.214	.163	-.41490	-.43860	.48280	.29240	.15800	-.00660	.00400	.00410	.00070
-6.015	4.[illegible]	-.40160	-.42540	.48740	.29750	.14990	-.18040	.07100	.07020	-.02200
-5.715	6.3.6	-.38560	-.40970	.48280	.29340	.14310	-.27820	.11240	.11090	-.03600
	GRADIENT	.00154	.00166	-.00023	.00042	-.00059	-.04232	.01611	.01589	-.00537

RUN NO. 1444/ 0 RN/L = 3.00 GRADIENT INTERVAL = -5.00/ 5.00

ALPHAO	BETAO	CNL	CNFL	CAL	CAFL	CLMFL	CYFL	CYNL	CYNFL	CBLFL
-4.136	-6.072	-.25980	-.28500	.48610	.29390	.09480	.26290	-.10100	-.09950	.03860
-4.348	-3.959	-.27020	-.29460	.48370	.29480	.09850	.16150	-.05930	-.05840	.02310
-4.211	.422	-.25260	-.27620	.47970	.29460	.09390	-.01890	.00790	.00790	-.00120
-3.760	4.343	-.22640	-.24990	.48300	.29780	.08490	-.17370	.06690	.06610	-.02440
-3.823	6.170	-.24230	-.26620	.48160	.29370	.09070	-.25930	.10260	.10120	-.03700
	GRADIENT	.00525	.00536	-.00010	.00035	-.00163	-.04039	.01520	.01500	-.00572

RUN NO. 1445/ 0 RN/L = 3.00 GRADIENT INTERVAL = -5.00/ 5.00

ALPHAO	BETAO	CNL	CNFL	CAL	CAFL	CLMFL	CYFL	CYNL	CYNFL	CBLFL
-.508	-6.973	-.01620	-.04170	.48180	.29400	.00730	.30680	-.12410	-.12250	.05030
-.475	-4.828	-.00790	-.03240	.47680	.29400	.00370	.19910	-.07960	-.07840	.03300
-.432	-.493	.00590	-.01760	.47460	.29680	-.00230	.01670	-.00660	-.00650	.00290
-.415	3.629	.01200	-.01100	.47970	.30120	-.00180	-.15250	.06370	.06270	-.02520
-.423	5.806	.00430	-.01970	.48030	.29800	.00140	-.24670	.10270	.10100	-.04030
	GRADIENT	.00236	.00254	.00034	.00085	-.00066	-.04158	.01694	.01668	-.00688

IA156A, AEDC PWT 16T-470, O T S W/SILTS (R8NVD8) (10 MAY 80)

REFERENCE DATA

SREF = 2690.0000 SQ.FT. XMRP = 976.0000 IN. XT
LREF = 1290.3000 INCHES YMRP = .0000 IN. YT
BREF = 1290.3000 INCHES ZMRP = 400.0000 IN. ZT
SCALE = .0200

PARAMETRIC DATA

IB-ELV = 10.000 OB-ELV = -2.000
BDFLAP = .000 SPDBRK = .000
RUDDER = .000 SILTS = 1.000
MACH = 1.400 RN/L = 3.500

RUN NO. 1446/ 0 RN/L = 3.00 GRADIENT INTERVAL = -5.00/ 5.00

ALPHAO	BETAO	CNL	CNFL	CAL	CAFL	CLMFL	CYFL	CYNL	CYNFL	CBLFL
4.022	-5.939	.26510	.24070	.47410	.29360	-.09800	.26650	-.11940	-.11820	.04770
4.000	-3.722	.26970	.24590	.47220	.29340	-.10200	.17130	-.08070	-.07980	.03130
3.874	.227	.26820	.24490	.46910	.29320	-.10110	.00620	-.00850	-.00860	.00150
3.761	4.009	.27100	.24750	.47300	.29390	-.10320	-.15860	.06780	.06700	-.02770
3.736	6.121	.26610	.24250	.47170	.29350	-.10260	-.25340	.10910	.10770	-.04390
	GRADIENT	.00016	.00020	.00010	.00006	-.00015	-.04267	.01920	.01898	-.00763

IA156A, AEDC PWT 16T-470, O T S W/SILTS (R8NVD9) (10 MAY 80)

REFERENCE DATA

SREF = 2690.0000 SQ.FT. XMRP = 976.0000 IN. XT
LREF = 1290.3000 INCHES YMRP = .0000 IN. YT
BREF = 1290.3000 INCHES ZMRP = 400.0000 IN. ZT
SCALE = .0200

PARAMETRIC DATA

IB-ELV = 10.000 OB-ELV = -2.000
BDFLAP = .000 SPDBRK = .000
RUDDER = .000 SILTS = 1.000
MACH = 1.550 RN/L = 3.200

RUN NO. 1447/ 0 RN/L = 3.00 GRADIENT INTERVAL = -5.00/ 5.00

ALPHAO	BETAO	CNL	CNFL	CAL	CAFL	CLMFL	CYFL	CYNL	CYNFL	CBLFL
-8.341	-5.829	-.57070	-.59370	.46610	.28730	.21940	.28460	-.11670	-.11500	.03230
-8.341	-3.718	-.57530	-.59780	.46980	.29310	.22310	.17290	-.06740	-.06630	.01900
-8.201	.507	-.57400	-.59570	.47150	.29640	.22700	-.00890	.00180	.00190	.00080
-7.997	4.485	-.57040	-.59200	.46940	.29650	.22670	-.18840	.07470	.07360	-.01840
-7.962	6.384	-.57880	-.60110	.46840	.29330	.22760	-.28450	.11610	.11460	-.03050
	GRADIENT	.00059	.00070	-.00004	.00042	.00044	-.04404	.01731	.01705	-.00456

RUN NO. 1448/ 0 RN/L = 3.00 GRADIENT INTERVAL = -5.00/ 5.00

ALPHAO	BETAO	CNL	CNFL	CAL	CAFL	CLMFL	CYFL	CYNL	CYNFL	CBLFL
-6.352	-5.969	-.41540	-.43820	.46410	.28900	.15480	.27790	-.11270	-.11100	.03460
-6.254	-3.972	-.41090	-.43290	.46260	.29140	.15690	.17200	-.06660	-.06560	.02110
-6.281	.234	-.41910	-.44060	.46400	.29310	.16570	-.00710	.00130	.00140	.00090
-6.011	4.388	-.40750	-.42910	.46520	.29720	.16110	-.17920	.07040	.06950	-.02060
-5.699	6.475	-.39470	-.41700	.46620	.29400	.15530	-.27810	.11290	.11130	-.03400
	GRADIENT	.00040	.00045	.00031	.00069	.00051	-.04201	.01639	.01616	-.00499

IA156A, AEDC PWT 16T-470, O T S W/SILTS (R8NVD9) (10 MAY 80)

REFERENCE DATA

SREF = 2690.0000 SQ.FT. XMRP = 976.0000 IN. XT
LREF = 1290.3000 INCHES YMRP = .0000 IN. YT
BREF = 1290.3000 INCHES ZMRP = 400.0000 IN. ZT
SCALE = .0200

PARAMETRIC DATA

IB-ELV = 10.000 OB-ELV = -2.000
BDFLAP = .000 SPDBRK = .000
RUDDER = .000 SILTS = 1.000
MACH = 1.550 RN/L = 3.200

RUN NO. 1449/ 0 RN/L = 3.00 GRADIENT INTERVAL = -5.00/ 5.00

ALPHAO	BETAO	CNL	CNFL	CAL	CAFL	CLMFL	CYFL	CYNL	CYNFL	CBLFL
-4.424	-6.026	-.28000	-.30310	.46310	.29040	.10360	.26620	-.10810	-.10660	.03570
-4.414	-3.939	-.27310	-.29540	.45910	.29010	.10320	.16420	-.06450	-.06370	.02150
-4.287	.512	-.26710	-.28880	.45860	.29150	.10540	-.01650	.00440	.00440	-.00070
-3.740	4.453	-.24060	-.26250	.46030	.29310	.09810	-.17660	.07060	.06990	-.02280
-3.791	6.260	-.25540	-.27740	.46170	.29160	.10270	-.26270	.10810	.10670	-.03490
	GRADIENT	.00382	.00387	.00014	.00036	-.00058	-.04061	.01609	.01591	-.00527

RUN NO. 1450/ 0 RN/L = 3.00 GRADIENT INTERVAL = -5.00/ 5.00

ALPHAO	BETAO	CNL	CNFL	CAL	CAFL	CLMFL	CYFL	CYNL	CYNFL	CBLFL
-.592	-7.039	-.02370	-.04690	.45670	.28640	.00860	.30730	-.12970	-.12790	.04720
-.569	-4.878	-.02420	-.04670	.45290	.28640	.01220	.19950	-.08210	-.08090	.03080
-.531	-.603	-.01700	-.03860	.45020	.29080	.01050	.01840	-.00600	-.00580	.00230
-.520	3.619	-.00790	-.02970	.45710	.29540	.00480	-.15530	.06930	.06850	-.02400
-.523	5.747	-.00640	-.02880	.45810	.29420	-.00030	-.24960	.10980	.10820	-.03790
	GRADIENT	.00192	.00200	.00049	.00106	-.00087	-.04176	.01782	.01758	-.00645

RUN NO. 1451/ 0 RN/L = 3.00 GRADIENT INTERVAL = -5.00/ 5.00

ALPHAO	BETAO	CNL	CNFL	CAL	CAFL	CLMFL	CYFL	CYNL	CYNFL	CBLFL
4.053	-5.739	.25680	.23370	.45890	.29230	-.09410	.26660	-.12350	-.12230	.04730
4.017	-3.533	.25810	.23560	.45430	.29040	-.09740	.16660	-.08110	-.08020	.02990
3.669	.302	.24940	.22770	.45010	.28980	-.09630	.00170	-.00770	-.00790	.00220
3.689	4.100	.25970	.23790	.44980	.28910	-.10440	-.15720	.06690	.06600	-.02600
3.621	6.097	.25810	.23560	.45040	.28790	-.10360	-.25220	.10970	.10830	-.04220
	GRADIENT	.00021	.00030	-.00059	-.00017	-.00092	-.04243	.01939	.01916	-.00732

IA156A, AEDC PWT 16T-470, O T S W/SILTS (R8NVE0) (10 MAY 80)

REFERENCE DATA

SREF = 2690.0000 SQ.FT. XMRP = 976.0000 IN. XT
LREF = 1290.3000 INCHES YMRP = .0000 IN. YT
BREF = 1290.3000 INCHES ZMRP = 400.0000 IN. ZT
SCALE = .0200

PARAMETRIC DATA

IB-ELV = 10.000 OB-ELV = -7.000
BDFLAP = .000 SPDBRK = .000
RUDDER = .000 SILTS = 1.000
MACH = 1.400 RN/L = 3.500

RUN NO. 1456/ 0 RN/L = 3.00 GRADIENT INTERVAL = -5.00/ 5.00

ALPHAO	BETAO	CNL	CNFL	CAL	CAFL	CLMFL	CYFL	CYNL	CYNFL	CBLFL
-8.242	-5.844	-.59750	-.62290	.48810	.28750	.23050	.28720	-.11510	-.11350	.03410
-8.256	-3.761	-.59680	-.62130	.48970	.29270	.23370	.17770	-.06700	-.06580	.02080
-8.139	.453	-.58920	-.61280	.48740	.29220	.23360	-.01140	.00430	.00430	.00060
-7.986	4.388	-.58410	-.60810	.48980	.29500	.22990	-.18730	.07420	.07300	-.02000
-7.939	6.270	-.58730	-.61130	.48380	.29210	.22950	-.28280	.11580	.11420	-.03280
	GRADIENT	.00156	.00162	.00001	.00028	-.00046	-.04479	.01732	.01703	-.00500

RUN NO. 1457/ 0 RN/L = 3.00 GRADIENT INTERVAL = -5.00/ 5.00

ALPHAO	BETAO	CNL	CNFL	CAL	CAFL	CLMFL	CYFL	CYNL	CYNFL	CBLFL
-6.246	-5.958	-.43370	-.45900	.48720	.29050	.16450	.27380	-.10610	-.10440	.03680
-6.159	-3.997	-.42700	-.45150	.48680	.29340	.16460	.17330	-.06440	-.06340	.02300
-6.233	.171	-.42760	-.45110	.48300	.29350	16780	-.00550	.00260	.00270	.00070
-5.970	4.276	-.40630	-.43000	.48640	.29710	.15780	-.17510	.06740	.06660	-.02200
-5.944	6.275	-.40880	-.43300	.48280	.29060	.15800	-.27270	.10890	.10750	-.03570
	GRADIENT	.00250	.00259	-.00005	.00045	-.00082	-.04212	.01593	.01571	-.00544

RUN NO. 1458/ 0 RN/L = 3.00 GRADIENT INTERVAL = -5.00/ 5.00

ALPHAO	BETAO	CNL	CNFL	CAL	CAFL	CLMFL	CYFL	CYNL	CYNFL	CBLFL
-4.124	-6.083	-.26980	-.29480	.48440	.29300	.10320	.26640	-.10320	-.10170	.03910
-4.343	-3.951	-.28160	-.30590	.48480	.29620	.10760	.16310	-.06010	-.05920	.02320
-4.224	.410	-.26410	-.28760	.47980	.29560	.10290	-.01330	.00510	.00510	-.00080
-3.733	4.330	-.23240	-.25580	.48350	.29800	.09200	-.16800	.06420	.06340	-.02420
-3.839	6.188	-.25120	-.27500	.48260	.29530	.09880	-.25660	.10080	.09940	-.03710
	GRADIENT	.00591	.00602	-.00018	.00021	-.00187	-.03999	.01501	.01480	-.00572

RUN NO. 1459/ 0 RN/L = 3.00 GRADIENT INTERVAL = -5.00/ 5.00

ALPHAO	BETAO	CNL	CNFL	CAL	CAFL	CLMFL	CYFL	CYNL	CYNFL	CBLFL
-.517	-6.972	-.02790	-.05340	.48190	.29350	.01660	.30860	-.12480	-.12310	.05040
-.485	-4.840	-.01830	-.04250	.47700	.29490	.01200	.20160	-.08060	-.07940	.03320
-.440	-.487	-.00410	-.02750	.47400	.29640	.00600	.01890	-.00770	-.00760	.00290
-.422	3.622	.00200	-.02110	.48020	.30110	.00680	-.14860	.06110	.06010	-.02500
-.437	5.801	-.00930	-.03330	.47900	.29680	.01170	-.24390	.10090	.09920	-.04030
	GRADIENT	.00241	.00254	.00037	.00073	-.00062	-.04139	.01674	.01648	-.00688

IA156A, AEDC PWT 16T-470, O T S W/SILTS (R8NVE0) (10 MAY 80)

REFERENCE DATA

SREF = 2690.0000 SQ.FT. XMRP = 976.0000 IN. XT
LREF = 1290.3000 INCHES YMRP = .0000 IN. YT
BREF = 1290.3000 INCHES ZMRP = 400.0000 IN. ZT
SCALE = .0200

PARAMETRIC DATA

IB-ELV = 10.000 OB-ELV = -7.000
BDFLAP = .000 SPDBRK = .000
RUDDER = .000 SILTS = 1.000
MACH = 1.400 RN/L = 3.500

RUN NO. 1460/ 0 RN/L = 3.00 GRADIENT INTERVAL = -5.00/ 5.00

ALPHAO	BETAO	CNL	CNFL	CAL	CAFL	CLMFL	CYFL	CYNL	CYNFL	CBLFL
4.136	-5.767	.26620	.24180	.47510	.29430	-.09510	.26690	-.11940	-.11820	.04770
4.003	-3.658	.26270	.23900	.47120	.29310	-.09590	.17070	-.08050	-.07970	.03100
3.743	.171	.25190	.22830	.46980	.29200	-.09020	.00740	-.00910	-.00920	.00150
3.776	4.050	.26220	.23910	.47080	.29290	-.09620	-.15810	.06700	.06620	-.02810
3.733	6.110	.25920	.23550	.47330	.29330	-.09540	-.25170	.10790	.10660	-.04400
	GRADIENT	-.00006	.00002	-.00005	-.00003	-.00004	-.04266	.01914	.01893	-.00767

IA156A, AEDC PWT 16T-470, O T S W/SILTS (R8NVE1) (10 MAY 80)

REFERENCE DATA

SREF = 2690.0000 SQ.FT. XMRP = 976.0000 IN. XT
LREF = 1290.3000 INCHES YMRP = .0000 IN. YT
BREF = 1290.3000 INCHES ZMRP = 400.0000 IN. ZT
SCALE = .0200

PARAMETRIC DATA

IB-ELV = 10.000 OB-ELV = -7.000
BDFLAP = .000 SPDBRK = .000
RUDDER = .000 SILTS = 1.000
MACH = 1.550 RN/L = 3.200

RUN NO. 1461/ 0 RN/L = 3.00 GRADIENT INTERVAL = -5.00/ 5.00

ALPHAO	BETAO	CNL	CNFL	CAL	CAFL	CLMFL	CYFL	CYNL	CYNFL	CBLFL
-8.270	-5.810	-.57710	-.59960	.46950	.29330	.22610	.28570	-.11690	-.11520	.03230
-8.315	-3.812	-.58880	-.61130	.47340	.29590	.23250	.18400	-.07190	-.07070	.02010
-8.210	.409	-.58290	-.60470	.47460	.29900	.23490	.00050	-.00190	-.00190	.00160
-8.018	4.364	-.58100	-.60300	.47280	.29690	.23540	-.18130	.07220	.07100	-.01780
-7.967	6.384	-.58930	-.61150	.47160	.29730	.23530	-.28240	.11530	.11380	-.03040
	GRADIENT	.00096	.00102	-.00007	.00013	.00036	-.04466	.01761	.01732	-.00463

RUN NO. 1462/ 0 RN/L = 3.00 GRADIENT INTERVAL = -5.00/ 5.00

ALPHAO	BETAO	CNL	CNFL	CAL	CAFL	CLMFL	CYFL	CYNL	CYNFL	CBLFL
-6.355	-5.967	-.42810	-.45070	.46770	.29340	.16500	.27650	-.11210	-.11060	.03430
-6.251	-3.988	-.42180	-.44410	.46790	.29450	.16590	.17680	-.06890	-.06790	.02160
-6.282	.238	-.42920	-.45090	.46670	.29520	.17420	-.00380	-.00020	-.00010	.00120
-6.006	4.395	-.41760	-.43930	.46670	.29730	.16970	-.17780	.06960	.06870	-.02060
-5.825	6.502	-.41150	-.43350	.46670	.29690	.16560	-.27860	.11310	.11160	-.03410
	GRADIENT	.00049	.00057	-.00014	.00033	.00046	-.04230	.01652	.01629	-.00503

IA156A, AEDC PWT 16T-470, O T S W/SILTS (R8NVE1) (10 MAY 80)

REFERENCE DATA

SREF = 2690.0000 SQ.FT. XMRP = 976.0000 IN. XT
LREF = 1290.3000 INCHES YMRP = .0000 IN. YT
BREF = 1290.3000 INCHES ZMRP = 400.0000 IN. ZT
SCALE = .0200

PARAMETRIC DATA

IB-ELV = 10.000 OB-ELV = -7.000
BDFLAP = .000 SPDBRK = .000
RUDDER = .000 SILTS = 1.000
MACH = 1.550 RN/L = 3.200

RUN NO. 1463/ 0 RN/L = 3.00 GRADIENT INTERVAL = -5.00/ 5.00

ALPHAO	BETAO	CNL	CNFL	CAL	CAFL	CLMFL	CYFL	CYNL	CYNFL	CBLFL
-4.320	-6.108	-.27740	-.30010	.46130	.28990	.10670	.26790	-.10910	-.10760	.03580
-4.449	-3.954	-.28790	-.31020	.46410	.29420	.11310	.16600	-.06540	-.06460	.02160
-4.278	.503	-.27570	-.29720	.45940	.29370	.11260	-.01510	.00400	.00400	-.00050
-3.731	4.446	-.25180	-.27370	.46220	.29470	.10640	-.17780	.07120	.07050	-.02310
-3.795	6.261	-.26430	-.28620	.46330	.29400	.11010	-.26160	.10780	.10650	-.03480
	GRADIENT	.00426	.00431	-.00024	.00006	-.00078	-.04093	.01625	.01607	-.00531

RUN NO. 1464/ 0 RN/L = 3.00 GRADIENT INTERVAL = -5.00/ 5.00

ALPHAO	BETAO	CNL	CNFL	CAL	CAFL	CLMFL	CYFL	CYNL	CYNFL	CBLFL
-.608	-7.094	-.03520	-.05830	.45870	.28850	.01700	.30740	-.12970	-.12800	.04710
-.577	-4.908	-.03320	-.05570	.45530	.29010	.01920	.20420	-.08440	-.08330	.03130
-.543	-.585	-.02930	-.05080	.45190	.29320	01910	.01960	-.00730	-.00720	.00240
-.530	3.568	-.02010	-.04170	.45920	.29630	.01300	-.15320	.06690	.06610	-.02360
-.535	5.744	-.01940	-.04180	.45960	.29330	.00920	-.24830	.10830	.10670	-.03780
	GRADIENT	.00154	.00165	.00045	.00073	-.00073	-.04217	.01785	.01763	-.00648

RUN NO. 1465/ 0 RN/L = 3.00 GRADIENT INTERVAL = -5.00/ 5.00

ALPHAO	BETAO	CNL	CNFL	CAL	CAFL	CLMFL	CYFL	CYNL	CYNFL	CBLFL
4.171	-5.664	.25710	.23390	.45980	.29330	-.09090	.26620	-.12310	-.12190	.04710
3.998	-3.552	.24850	.22600	.45430	.29110	-.09020	.16980	-.08210	-.08120	.03010
3.682	.256	.24190	.22020	.44920	.28920	-.08930	.00450	-.00930	-.00940	.00250
3.668	4.052	.25340	.23150	.45280	.29190	-.09800	-.15710	.06640	.06540	-.02630
3.634	6.107	.24950	.22700	.45290	.28910	-.09600	-.25320	.10990	.10850	-.04240
	GRADIENT	.00064	.00072	-.00020	.00010	-.00103	-.04299	.01953	.01928	-.00742

IA156A, AEDC PWT 16T-470, O T S W/SILTS (R8NVE2) (10 MAY 80)

REFERENCE DATA

SREF = 2690.0000 SQ.FT. XMRP = 976.0000 IN. XT
LREF = 1290.3000 INCHES YMRP = .0000 IN. YT
BREF = 1290.3000 INCHES ZMRP = 400.0000 IN. ZT
SCALE = .0200

PARAMETRIC DATA

IB-ELV = 12.000 OB-ELV = -7.000
BDFLAP = .000 SPDBRK = .000
RUDDER = .000 SILTS = 1.000
MACH = 1.400 RN/L = 3.500

RUN NO. 1469/ 0 RN/L = 3.01 GRADIENT INTERVAL = -5.00/ 5.00

ALPHAO	BETAO	CNL	CNFL	CAL	CAFL	CLMFL	CYFL	CYNL	CYNFL	CBLFL
-8.220	-5.866	-.59200	-.61780	.49120	.29100	.22560	.29010	-.11680	-.11520	.03480
-8.243	-3.806	-.58840	-.61330	.49120	.29330	.22750	.18150	-.06850	-.06740	.02150
-8.148	.314	-.58610	-.61010	.49080	.29560	.23010	-.00430	.00180	.00180	.00150
-7.969	4.331	-.57630	-.60040	.49180	.29790	.22420	-.18830	.07540	.07430	-.02020
-7.958	6.275	-.58250	-.60710	.48840	.29480	.22530	-.28450	.11680	.11520	-.03310
	GRADIENT	.00148	.00158	.00007	.00057	-.00040	-.04545	.01768	.01741	-.00512

RUN NO. 1470/ 0 RN/L = 3.00 GRADIENT INTERVAL = -5.00/ 5.00

ALPHAO	BETAO	CNL	CNFL	CAL	CAFL	CLMFL	CYFL	CYNL	CYNFL	CBLFL
-6.243	-5.961	-.42320	-.44860	.48850	.29240	.15780	.27260	-.10550	-.10380	.03670
-6.154	-4.001	-.41920	-.44410	.48880	.29520	.15900	.17280	-.06370	-.06270	.02320
-6.224	.176	-.42120	-.44520	.48640	.29550	.16260	-.00610	.00300	.00310	.00070
-6.003	4.295	-.40480	-.42880	.48800	.29860	.15370	-.17750	.06930	.06860	-.02210
-5.780	6.389	-.39570	-.42030	.48650	.29530	.14980	-.27460	.11030	.10880	-.03600
	GRADIENT	.00173	.00184	-.00010	.00041	-.00064	-.04223	.01603	.01583	-.00546

RUN NO. 1471/ 0 RN/L = 3.00 GRADIENT INTERVAL = -5.00/ 5.00

ALPHAO	BETAO	CNL	CNFL	CAL	CAFL	CLMFL	CYFL	CYNL	CYNFL	CBLFL
-4.149	-6.089	-.26630	-.29190	.48860	.29560	.09930	.26780	-.10330	-.10160	.03930
-4.346	-3.957	-.27720	-.30180	.48710	.29860	.10370	.16220	-.05970	-.05890	.02320
-4.209	.412	-.25890	-.28270	.48230	.29810	.09820	-.01300	.00500	.00500	-.00050
-3.744	4.347	-.22760	-.25140	.48560	.29970	.08750	-.17320	.06660	.06580	-.02470
-3.839	6.181	-.24530	-.26960	.48430	.29620	.09390	-.25810	.10180	.10040	-.03730
	GRADIENT	.00594	.00604	-.00020	.00013	-.00194	-.04038	.01520	.01501	-.00576

RUN NO. 1472/ 0 RN/L = 2.99 GRADIENT INTERVAL = -5.00/ 5.00

ALPHAO	BETAO	CNL	CNFL	CAL	CAFL	CLMFL	CYFL	CYNL	CYNFL	CBLFL
-.513	-6.969	-.02100	-.04670	.48450	.29660	.01090	.30560	-.12380	-.12210	.05000
-.482	-4.838	-.01650	-.04130	.48180	.29760	.00960	.20190	-.08100	-.07980	.03330
-.437	-.502	-.00040	-.02410	.47690	.29930	.00250	.01900	-.00800	-.00780	.00300
-.416	3.637	.00820	-.01540	.48300	.30260	.00220	-.15010	.06240	.06140	-.02530
-.427	5.798	-.00020	-.02420	.48220	.30270	.00510	-.24470	.10130	.09970	-.04030
	GRADIENT	.00292	.00306	.00013	.00059	-.00088	-.04154	.01692	.01666	-.00692

IA156A, AEDC PWT 16T-470, O T S W/SILTS (R8NVE2) (10 MAY 80)

REFERENCE DATA

SREF = 2690.0000 SQ.FT. XMRP = 976.0000 IN. XT
LREF = 1290.3000 INCHES YMRP = .0000 IN. YT
BREF = 1290.3000 INCHES ZMRP = 400.0000 IN. ZT
SCALE = .0200

PARAMETRIC DATA

IB-ELV = 12.000 OB-ELV = -7.000
BDFLAP = .000 SPDBRK = .000
RUDDER = .000 SILTS = 1.000
MACH = 1.400 RN/L = 3.500

RUN NO. 1473/ 0 RN/L = 3.00 GRADIENT INTERVAL = -5.00/ 5.00

ALPHAO	BETAO	CNL	CNFL	CAL	CAFL	CLMFL	CYFL	CYNL	CYNFL	CBLFL
4.135	-5.756	.27050	.24630	.47380	.29510	-.09940	.26440	-.11860	-.11740	.04730
3.990	-3.653	.26550	.24160	.47300	.29490	-.09950	.17020	-.08030	-.07950	.03080
3.741	.166	.25810	.23460	.47270	.29760	-.09510	.00870	-.00950	-.00960	.00180
3.769	4.047	.26840	.24480	.47360	.29570	-.10060	-.15840	.06750	.06670	-.02820
3.738	6.128	.26240	.23830	.47380	.29410	-.09870	-.25310	.10900	.10760	-.04420
	GRADIENT	.00038	.00042	.00008	.00010	-.00015	-.04268	.01920	.01899	-.00766

IA156A, AEDC PWT 16T-470, O T S W/SILTS (R8NVE3) (10 MAY 80)

REFERENCE DATA

SREF = 2690.0000 SQ.FT. XMRP = 976.0000 IN. XT
LREF = 1290.3000 INCHES YMRP = .0000 IN. YT
BREF = 1290.3000 INCHES ZMRP = 400.0000 IN. ZT
SCALE = .0200

PARAMETRIC DATA

IB-ELV = 12.000 OB-ELV = -7.000
BDFLAP = .000 SPDBRK = .000
RUDDER = .000 SILTS = 1.000
MACH = 1.550 RN/L = 3.200

RUN NO. 1474/ 0 RN/L = 3.01 GRADIENT INTERVAL = -5.00/ 5.00

ALPHAO	BETAO	CNL	CNFL	CAL	CAFL	CLMFL	CYFL	CYNL	CYNFL	CBLFL
-8.324	-5.833	-.57890	-.60170	.47180	.29590	.22560	.28650	-.11750	-.11580	.03230
-8.344	-3.712	-.58390	-.60650	.47510	.29910	.22940	.17700	-.06920	-.06810	.01930
-8.209	.318	-.57640	-.59820	.47450	.30040	.23030	-.00020	-.00180	-.00170	.00170
-8.003	4.487	-.58030	-.60240	.47740	.30270	.23380	-.18720	.07440	.07330	-.01850
-7.961	6.383	-.58360	-.60610	.47280	.29910	.23180	-.28320	.11560	.11410	-.03070
	GRADIENT	.00043	.00049	.00028	.00044	.00054	-.04442	.01752	.01725	-.00461

RUN NO. 1475/ 0 RN/L = 3.01 GRADIENT INTERVAL = -5.00/ 5.00

ALPHAO	BETAO	CNL	CNFL	CAL	CAFL	CLMFL	CYFL	CYNL	CYNFL	CBLFL
-6.358	-5.963	-.42300	-.44600	.47070	.29510	.16030	.28150	-.11420	-.11260	.03500
-6.256	-3.975	-.41640	-.43910	.46950	.29610	.16160	.17530	-.06800	-.06700	.02150
-6.273	.249	-.42320	-.44510	.46890	.29720	.16990	-.00210	-.00100	-.00090	.00140
-5.983	4.379	-.41400	-.43610	.47150	.30120	.16660	-.17620	.06930	.06840	-.02050
-5.702	6.519	-.40300	-.42550	.46970	.29790	.16010	-.27810	.11270	.11120	-.03410
	GRADIENT	.00028	.00035	.00024	.00061	.00060	-.04208	.01643	.01621	-.00503

IA156A, AEDC PWT 16T-470, O T S W/SILTS (R8NVE3) (10 MAY 80)

REFERENCE DATA

SREF = 2590.0000 SQ.FT. XMRP = 976.0000 IN. XT
LREF = 1290.3000 INCHES YMRP = .0000 IN. YT
BREF = 1290.3000 INCHES ZMRP = 400.0000 IN. ZT
SCALE = .0200

PARAMETRIC DATA

IB-ELV = 12.000 OB-ELV = -7.000
BDFLAP = .000 SPDBRK = .000
RUDDER = .000 SILTS = 1.000
MACH = 1.550 RN/L = 3.200

RUN NO. 1476/ 0 RN/L = 3.01 GRADIENT INTERVAL = -5.00/ 5.00

ALPHAO	BETAO	CNL	CNFL	CAL	CAFL	CLMFL	CYFL	CYNL	CYNFL	CBLFL
-4.196	-6.135	-.26220	-.28530	.46580	.29410	.09880	.27040	-.11060	-.10910	.03650
-4.451	-3.949	-.28300	-.30540	.46730	.29780	.10920	.16490	-.06490	-.06410	.02160
-4.265	.492	-.26830	-.29030	.46340	.29690	.10810	-.01440	.00380	.00380	-.00050
-3.742	4.439	-.24490	-.26710	.46520	.29830	.10200	-.17490	.07020	.06940	-.02270
-3.795	6.255	-.26090	-.28310	.46470	.29710	.10690	-.26120	.10770	.10630	-.03470
	GRADIENT	.00452	.00454	-.00026	.00005	-.00085	-.04051	.01609	.01590	-.00528

RUN NO. 1477/ 0 RN/L = 3.01 GRADIENT INTERVAL = -5.00/ 5.00

ALPHAO	BETAO	CNL	CNFL	CAL	CAFL	CLMFL	CYFL	CYNL	CYNFL	CBLFL
-.600	-7.044	-.02850	-.05180	.46110	.29280	.01220	.31000	-.13100	-.12930	.04760
-.576	-4.909	-.02920	-.05170	.45810	.29230	.01560	.20320	-.08430	-.08320	.03120
-.540	-.559	-.02450	-.04660	.45460	.29380	.01610	.01670	-.00590	-.00580	.00200
-.528	3.565	-.01410	-.03620	.46260	.29840	.00930	-.15340	.06740	.06670	-.02380
-.527	5.739	-.01340	-.03570	.45980	.29640	.00550	-.24740	.10800	.10640	-.03750
	GRADIENT	.00178	.00182	.00052	.00072	-.00074	-.04209	.01790	.01769	-.00649

RUN NO. 1478/ 0 RN/L = 3.01 GRADIENT INTERVAL = -5.00/ 5.00

ALPHAO	BETAO	CNL	CNFL	CAL	CAFL	CLMFL	CYFL	CYNL	CYNFL	CBLFL
4.178	-5.674	.26350	.24030	.46280	.29550	-.09590	.26930	-.12480	-.12350	.04760
4.001	-3.551	.25210	.22950	.45720	.29400	-.09370	.16960	-.08200	-.08110	.03020
3.684	.248	.24460	.22280	.45010	.29060	-.09130	.00690	-.01060	-.01070	.00290
3.670	4.055	.26020	.23770	.45530	.29200	-.10190	-.15710	.06660	.06570	-.02630
3.642	6.120	.25430	.23150	.45430	.29080	-.09960	-.25260	.10940	.10810	-.04240
	GRADIENT	.00107	.00108	-.00025	-.00026	-.00108	-.04295	.01954	.01930	-.00743

IA156A, AEDC PWT 16T-470, O T S W/SILTS (R8NVE4) (10 MAY 80)

REFERENCE DATA

SREF = 2690.0000 SQ.FT. XMRP = 976.0000 IN. XT
LREF = 1290.3000 INCHES YMRP = .0000 IN. YT
BREF = 1290.3000 INCHES ZMRP = 400.0000 IN. ZT
SCALE = .0200

PARAMETRIC DATA

IB-ELV = 8.000 OB-ELV = -7.000
BDFLAP = .000 SPDBRK = .000
RUDDER = .000 SILTS = 1.000
MACH = 1.400 RN/L = 3.500

RUN NO. 1482/ 0 RN/L = 3.00 GRADIENT INTERVAL = -5.00/ 5.00

ALPHAO	BETAO	CNL	CNFL	CAL	CAFL	CLMFL	CYFL	CYNL	CYNFL	CBLFL
-8.170	-5.743	-.59710	-.62210	.48730	.28690	.23300	.28160	-.11260	-.11100	.03360
-8.235	-3.742	-.60530	-.62990	.49000	.29030	.23910	.18010	-.06780	-.06650	.02110
-8.142	.226	-.59960	-.62310	.48880	.29180	.24000	-.00040	-.00040	-.00030	.00170
-7.983	4.478	-.59050	-.61400	.48840	.29520	.23390	-.19590	.07800	.07680	-.02090
-7.936	6.285	-.58870	-.61280	.48620	.29270	.23180	-.29060	.11840	.11690	-.03370
	GRADIENT	.00180	.00194	-.00019	.00060	-.00064	-.04575	.01775	.01744	-.00511

RUN NO. 1483/ 0 RN/L = 3.00 GRADIENT INTERVAL = -5.00/ 5.00

ALPHAO	BETAO	CNL	CNFL	CAL	CAFL	CLMFL	CYFL	CYNL	CYNFL	CBLFL
-6.266	-5.970	-.44010	-.46510	.48630	.28970	.16930	.27440	-.10600	-.10440	.03660
-6.155	-4.011	-.42740	-.45150	.48510	.29240	.16750	.17430	-.06440	-.06340	.02310
-6.219	.148	-.43530	-.45870	.48420	.29250	17310	-.00370	.00210	.00230	.00070
-6.003	4.286	-.41530	-.43860	.48420	.29460	.16230	-.17810	.06890	.06810	-.02190
-5.730	6.412	-.40490	-.42870	.48250	.29140	.15780	-.27840	.11140	.11000	-.03630
	GRADIENT	.00146	.00155	-.00011	.00026	-.00063	-.04247	.01606	.01585	-.00542

RUN NO. 1484/ 0 RN/L = 3.00 GRADIENT INTERVAL = -5.00/ 5.00

ALPHAO	BETAO	CNL	CNFL	CAL	CAFL	CLMFL	CYFL	CYNL	CYNFL	CBLFL
-4.110	-6.113	-.27560	-.30040	.48370	.29270	.10780	.26750	-.10260	-.10110	.03920
-4.346	-3.947	-.28890	-.31280	.48260	.29430	.11300	.16060	-.05880	-.05790	.02290
-4.218	.418	-.26990	-.29310	.47930	.29380	.10720	-.01540	.00590	.00590	-.00100
-3.760	4.353	-.24090	-.26380	.48070	.29630	.09660	-.17170	.06570	.06500	-.02440
-3.822	6.157	-.25750	-.28110	.48020	.29190	.10320	-.25640	.10090	.09950	-.03700
	GRADIENT	.00576	.00588	-.00024	.00023	-.00196	-.04004	.01500	.01480	-.00570

RUN NO. 1485/ 0 RN/L = 3.00 GRADIENT INTERVAL = -5.00/ 5.00

ALPHAO	BETAO	CNL	CNFL	CAL	CAFL	CLMFL	CYFL	CYNL	CYNFL	CBLFL
-.521	-7.010	-.03300	-.05800	.48040	.29320	.02040	.30590	-.12310	-.12150	.05000
-.492	-4.839	-.02720	-.05120	.47510	.29270	.01800	.19880	-.07880	-.07770	.03280
-.439	-.498	-.00770	-.03080	.47580	.29870	.00920	.01770	-.00710	-.00700	.00280
-.431	3.621	-.00860	-.03130	.47570	.29730	.01320	-.14920	.06140	.06050	-.02490
-.444	5.803	-.01710	-.04080	.47950	.29660	.01640	-.24580	.10160	.10000	-.04060
	GRADIENT	.00222	.00237	.00007	.00055	-.00058	-.04114	.01657	.01634	-.00682

IA156A, AEDC PWT 16T-470, O T S W/SILTS (R8NVE4) (10 MAY 80)

REFERENCE DATA

SREF = 2690.0000 SQ.FT. XMRP = 976.0000 IN. XT
LREF = 1290.3000 INCHES YMRP = .0000 IN. YT
BREF = 1290.3000 INCHES ZMRP = 400.0000 IN. ZT
SCALE = .0200

PARAMETRIC DATA

IB-ELV = 8.000 OB-ELV = -7.000
BDFLAP = .000 SPDBRK = .000
RUDDER = .000 SILTS = 1.000
MACH = 1.400 RN/L = 3.500

RUN NO. 1486/ 0 RN/L = 3.00 GRADIENT INTERVAL = -5.00/ 5.00

ALPHAO	BETAO	CNL	CNFL	CAL	CAFL	CLMFL	CYFL	CYNL	CYNFL	CBLFL
4.148	-5.744	.26530	.24080	.47740	.29190	-.09270	.26270	-.11760	-.11640	.04710
3.977	-3.686	.25710	.23390	.46820	.29110	-.09130	.16930	-.07910	-.07840	.03080
3.759	.077	.24840	.22530	.46780	.29030	-.08700	.01060	-.01040	-.01050	.00230
3.771	4.006	.25820	.23520	.47080	.29180	-.09230	-.15620	.06620	.06540	-.02760
3.730	6.119	.25160	.22820	.47080	.29120	-.09020	-.25420	.10900	.10760	-.04410
	GRADIENT	.00016	.00019	.00034	.00009	-.00014	-.04232	.01890	.01870	-.00759

IA156A, AEDC PWT 16T-470, O T S W/SILTS (R8NVE5) (10 MAY 80)

REFERENCE DATA

SREF = 2690.0000 SQ.FT. XMRP = 976.0000 IN. XT
LREF = 1290.3000 INCHES YMRP = .0000 IN. YT
BREF = 1290.3000 INCHES ZMRP = 400.0000 IN. ZT
SCALE = .0200

PARAMETRIC DATA

IB-ELV = 8.000 OB-ELV = -7.000
BDFLAP = .000 SPDBRK = .000
RUDDER = .000 SILTS = 1.000
MACH = 1.550 RN/L = 3.200

RUN NO. 1487/ 0 RN/L = 3.00 GRADIENT INTERVAL = -5.00/ 5.00

ALPHAO	BETAO	CNL	CNFL	CAL	CAFL	CLMFL	CYFL	CYNL	CYNFL	CBLFL
-8.297	-5.822	-.58590	-.60830	.47000	.29360	.23240	.28470	-.11660	-.11490	.03200
-8.325	-3.708	-.59090	-.61270	.47040	.29570	.23570	.17830	-.06970	-.06850	.01940
-8.212	.298	-.58930	-.61050	.47340	.29810	.23840	.00070	-.00170	-.00160	.00170
-7.973	4.570	-.58500	-.60640	.47080	.29820	.23820	-.19120	.07610	.07490	-.01890
-7.986	6.416	-.59200	-.61370	.46810	.29560	.23840	-.28830	.11750	.11600	-.03080
	GRADIENT	.00072	.00076	.00004	.00030	.00030	-.04464	.01762	.01733	-.00463

RUN NO. 1488/ 0 RN/L = 3.00 GRADIENT INTERVAL = -5.00/ 5.00

ALPHAO	BETAO	CNL	CNFL	CAL	CAFL	CLMFL	CYFL	CYNL	CYNFL	CBLFL
-6.347	-5.954	-.42980	-.45240	.46550	.28960	.16760	.27350	-.11030	-.10870	.03380
-6.262	-3.975	-.42760	-.44960	.46520	.29210	.17010	.17330	-.06730	-.06640	.02120
-6.268	.229	-.43250	-.45350	.46410	.29460	.17730	-.00230	-.00080	-.00070	.00140
-6.003	4.398	-.42440	-.44590	.46730	.29710	.17410	-.17760	.06990	.06910	-.02050
-5.917	6.366	-.43030	-.45200	.46670	.29610	.17470	-.27190	.10980	.10830	-.03270
	GRADIENT	.00038	.00044	.00032	.00060	.00048	-.04191	.01639	.01618	-.00498

IA156A, AEDC PWT 16T-470, O T S W/SILTS (R8NVE5) (10 MAY 80)

REFERENCE DATA

SREF = 2690.0000 SQ.FT. XMRP = 976.0000 IN. XT
LREF = 1290.3000 INCHES YMRP = .0000 IN. YT
BREF = 1290.3000 INCHES ZMRP = 400.0000 IN. ZT
SCALE = .0200

PARAMETRIC DATA

IB-ELV = 8.000 OB-ELV = -7.000
BDFLAP = .000 SPDBRK = .000
RUDDER = .000 SILTS = 1.000
MACH = 1.550 RN/L = 3.200

RUN NO. 1489/ 0 RN/L = 3.01 GRADIENT INTERVAL = -5.00/ 5.00

ALPHAO	BETAO	CNL	CNFL	CAL	CAFL	CLMFL	CYFL	CYNL	CYNFL	CBLFL
-4.218	-6.128	-.27590	-.29870	.46340	.29070	.10800	.27020	-.10990	-.10850	.03630
-4.450	-3.947	-.29360	-.31520	.46180	.29400	.11680	.16330	-.06390	-.06310	.02130
-4.281	.503	-.27960	-.30070	.45990	.29430	.11580	-.01820	.00570	.00570	-.00090
-3.731	4.440	-.25630	-.27780	.46230	.29520	.10990	-.17890	.07170	.07100	-.02300
-3.802	6.257	-.27060	-.29220	.46020	.29170	.11470	-.25870	.10650	.10520	-.03420
	GRADIENT	.00442	.00443	.00005	.00014	-.00081	-.04080	.01616	.01598	-.00528

RUN NO. 1490/ 0 RN/L = 3.00 GRADIENT INTERVAL = -5.00/ 5.00

ALPHAO	BETAO	CNL	CNFL	CAL	CAFL	CLMFL	CYFL	CYNL	CYNFL	CBLFL
-.611	-7.039	-.04170	-.06490	.46180	.28960	.02230	.30610	-.12880	-.12720	.04680
-.585	-4.909	-.04090	-.06290	.45380	.28950	.02460	.20280	-.08360	-.08260	.03100
-.546	-.562	-.03330	-.05450	.45030	.29120	02300	.01760	-.00660	-.00640	.00210
-.537	3.564	-.02540	-.04690	.45980	.29490	.01710	-.15480	.06770	.06700	-.02390
-.537	5.749	-.02370	-.04570	.45750	.29200	.01290	-.24990	.10870	.10710	-.03790
	GRADIENT	.00183	.00189	.00069	.00064	-.00088	-.04221	.01786	.01766	-.00648

RUN NO. 1491/ 0 RN/L = 3.00 GRADIENT INTERVAL = -5.00/ 5.00

ALPHAO	BETAO	CNL	CNFL	CAL	CAFL	CLMFL	CYFL	CYNL	CYNFL	CBLFL
4.175	-5.666	.24920	.22670	.45560	.29060	-.08600	.26560	-.12270	-.12150	.04680
3.989	-3.546	.24140	.21920	.45260	.28930	-.08540	.16820	-.08110	-.08020	.02980
3.686	.255	.23880	.21730	.44950	.28810	-.08560	.00610	-.01030	-.01040	.00260
3.680	4.059	.24900	.22760	.45090	.28950	-.09400	-.15810	.06650	.06560	-.02620
3.634	6.109	.24470	.22270	.45000	.28720	-.09230	-.25430	.11030	.10890	-.04250
	GRADIENT	.00100	.00110	-.00022	.00003	-.00113	-.04291	.01941	.01917	-.00736

IA156A, AEDC PWT 16T-470, O T S W/SILTS (R8NVE6) (10 MAY 80)

REFERENCE DATA

SREF = 2690.0000 SQ.FT. XMRP = 976.0000 IN. XT
LREF = 1290.3000 INCHES YMRP = .0000 IN. YT
BREF = 1290.3000 INCHES ZMRP = 400.0000 IN. ZT
SCALE = .0200

PARAMETRIC DATA

IB-ELV = 10.000 OB-ELV = 2.000
BDFLAP = .000 SPDBRK = .000
RUDDER = .000 SILTS = 1.000
MACH = 1.050 RN/L = 3.500

RUN NO. 1494/ 0 RN/L = 3.50 GRADIENT INTERVAL = -5.00/ 5.00

ALPHAO	BETAO	CNL	CNFL	CAL	CAFL	CLMFL	CYFL	CYNL	CYNFL	CBLFL
-8.215	-5.881	-.58660	-.62380	.51330	.22930	.22670	.31130	-.13320	-.13050	.03570
-8.178	-3.769	-.59240	-.62900	.51630	.23380	.23560	.19680	-.08300	-.08150	.02090
-8.131	.175	-.59650	-.63130	.51770	.23690	.24190	.00650	-.00230	-.00230	.00250
-7.965	4.333	-.58350	-.61910	.51690	.23500	.23370	-.19420	.08440	.08300	-.02030
-7.960	6.223	-.58000	-.61600	.51200	.23040	.22590	-.28930	.12390	.12140	-.03320
	GRADIENT	.00112	.00124	.00007	.00014	-.00025	-.04826	.02067	.02031	-.00509

RUN NO. 1495/ 0 RN/L = 3.50 GRADIENT INTERVAL = -5.00/ 5.00

ALPHAO	BETAO	CNL	CNFL	CAL	CAFL	CLMFL	CYFL	CYNL	CYNFL	CBLFL
-6.164	-5.957	-.41650	-.45330	.51250	.23550	.16400	.29470	-.12430	-.12160	.03820
-6.120	-4.055	-.42360	-.45970	.51580	.23980	.17320	.19640	-.08230	-.08080	.02460
-6.203	.112	-.44300	-.47770	.51470	.23880	19210	.00190	-.00100	-.00100	.00160
-6.009	4.243	-.41690	-.45090	.51250	.24130	.17460	-.18380	.07920	.07780	-.02280
-5.960	6.205	-.41510	-.44960	.51020	.23840	.16780	-.28160	.12070	.11820	-.03630
	GRADIENT	.00080	.00105	-.00040	.00018	.00018	-.04582	.01946	.01911	-.00571

RUN NO. 1496/ 0 RN/L = 3.50 GRADIENT INTERVAL = -5.00/ 5.00

ALPHAO	BETAO	CNL	CNFL	CAL	CAFL	CLMFL	CYFL	CYNL	CYNFL	CBLFL
-4.074	-6.119	-.26100	-.29720	.51110	.23890	.10810	.28820	-.11950	-.11710	.04150
-4.306	-3.974	-.28950	-.32520	.51070	.24130	.12650	.18360	-.07790	-.07640	.02510
-4.199	.365	-.29310	-.32790	.51030	.23950	.14150	-.00870	.00280	.00260	.00010
-3.752	4.297	-.24700	-.28040	.51090	.24640	.11700	-.18160	.07710	.07560	-.02630
-3.847	6.110	-.24910	-.28340	.50800	.24130	.11160	-.26150	.11030	.10810	-.03890
	GRADIENT	.00504	.00531	.00002	.00060	-.00107	-.04416	.01874	.01837	-.00621

RUN NO. 1497/ 0 RN/L = 3.50 GRADIENT INTERVAL = -5.00/ 5.00

ALPHAO	BETAO	CNL	CNFL	CAL	CAFL	CLMFL	CYFL	CYNL	CYNFL	CBLFL
-.462	-7.007	-.01200	-.04860	.50730	.24190	.01510	.32140	-.13530	-.13290	.05520
-.449	-4.843	-.02250	-.05820	.50670	.24420	.02700	.21950	-.09630	-.09450	.03800
-.422	-.474	-.03010	-.06410	.50580	.24310	.03890	.02680	-.01410	-.01400	.00390
-.387	3.651	-.00600	-.04000	.51250	.24700	.02520	-.15300	.06970	.06810	-.02780
-.387	5.829	-.00030	-.03460	.51260	.24650	.01690	-.24620	.10840	.10620	-.04400
	GRADIENT	.00191	.00211	.00067	.00032	-.00018	-.04385	.01953	.01913	-.00775

IA156A, AEDC PWT 16T-470, O T S W/SILTS (R8NVE6) (10 MAY 80)

REFERENCE DATA

SREF = 2690.0000 SQ.FT. XMRP = 976.0000 IN. XT
LREF = 1290.3000 INCHES YMRP = .0000 IN. YT
BREF = 1290.3000 INCHES ZMRP = 400.0000 IN. ZT
SCALE = .0200

PARAMETRIC DATA

IB-ELV = 10.000 OB-ELV = 2.000
BDFLAP = .000 SPDBRK = .000
RUDDER = .000 SILTS = 1.000
MACH = 1.050 RN/L = 3.500

RUN NO. 1498/ 0 RN/L = 3.50 GRADIENT INTERVAL = -5.00/ 5.00

ALPHAO	BETAO	CNL	CNFL	CAL	CAFL	CLMFL	CYFL	CYNL	CYNFL	CBLFL
4.108	-5.804	.26760	.23220	.49950	.23720	-.09690	.26820	-.11670	-.11530	.05170
3.975	-3.713	.26120	.22670	.49820	.23880	-.09250	.17660	-.07910	-.07840	.03340
3.776	.114	.25790	.22390	.49450	.23750	-.08720	.01460	-.00970	-.00960	.00310
3.851	4.045	.28790	.25440	.49770	.23860	-.10680	-.15650	.06700	.06600	-.02980
3.796	6.106	.28460	.25080	.49700	.23690	-.10670	-.24620	.10340	.10190	-.04720
	GRADIENT	.00346	.00359	-.00006	-.00002	-.00186	-.04294	.01884	.01862	-.00815

IA156A, AEDC PWT 16T-470, O T S W/SILTS (R8NVE7) (10 MAY 80)

REFERENCE DATA

SREF = 2690.0000 SQ.FT. XMRP = 976.0000 IN. XT
LREF = 1290.3000 INCHES YMRP = .0000 IN. YT
BREF = 1290.3000 INCHES ZMRP = 400.0000 IN. ZT
SCALE = .0200

PARAMETRIC DATA

IB-ELV = 10.000 OB-ELV = 2.000
BDFLAP = .000 SPDBRK = .000
RUDDER = .000 SILTS = 1.000
MACH = 1.100 RN/L = 3.500

RUN NO. 1499/ 0 RN/L = 3.50 GRADIENT INTERVAL = -5.00/ 5.00

ALPHAO	BETAO	CNL	CNFL	CAL	CAFL	CLMFL	CYFL	CYNL	CYNFL	CBLFL
-8.219	-5.891	-.57350	-.60710	.50380	.24500	.21830	.29430	-.12560	-.12320	.03350
-8.204	-3.785	-.57210	-.60490	.50920	.25220	.21850	.18490	-.07560	-.07420	.01960
-8.112	.164	-.57670	-.60720	.50750	.25320	.22500	.00140	-.00070	-.00070	.00170
-7.946	4.428	-.55720	-.58920	.50900	.25160	.21780	-.19610	.08350	.08200	-.02090
-7.964	6.232	-.55870	-.59070	.50680	.25130	.21450	-.28260	.11960	.11720	-.03230
	GRADIENT	.00185	.00194	-.00002	-.00008	-.00011	-.04639	.01938	.01903	-.00494

RUN NO. 1500/ 0 RN/L = 3.50 GRADIENT INTERVAL = -5.00/ 5.00

ALPHAO	BETAO	CNL	CNFL	CAL	CAFL	CLMFL	CYFL	CYNL	CYNFL	CBLFL
-6.164	-5.953	-.40390	-.43660	.50340	.25230	.15020	.27750	-.11440	-.11200	.03590
-6.143	-4.058	-.41000	-.44200	.50280	.25380	.15800	.18300	-.07510	-.07370	.02280
-6.224	.087	-.42670	-.45720	.50040	.25240	.17390	-.00070	-.00110	-.00110	.00130
-5.999	4.241	-.39200	-.42230	.50160	.25600	.15670	-.18000	.07440	.07300	-.02270
-5.962	6.205	-.39170	-.42300	.50170	.25410	.15160	-.26910	.11260	.11030	-.03560
	GRADIENT	.00217	.00238	-.00014	.00027	-.00016	-.04374	.01802	.01768	-.00548

IA156A, AEDC PWT 16T-470, O T S W/SILTS (R8NVE7) (10 MAY 80)

REFERENCE DATA

SREF = 2690.0000 SQ.FT. XMRP = 976.0000 IN. XT
LREF = 1290.3000 INCHES YMRP = .0000 IN. YT
BREF = 1290.3000 INCHES ZMRP = 400.0000 IN. ZT
SCALE = .0200

PARAMETRIC DATA

IB-ELV = 10.000 OB-ELV = 2.000
BDFLAP = .000 SPDBRK = .000
RUDDER = .000 SILTS = 1.000
MACH = 1.100 RN/L = 3.500

RUN NO. 1501/ 0 RN/L = 3.51 GRADIENT INTERVAL = -5.00/ 5.00

ALPHAO	BETAO	CNL	CNFL	CAL	CAFL	CLMFL	CYFL	CYNL	CYNFL	CBLFL
-4.064	-6.124	-.24880	-.28090	.49940	.25650	.09230	.27130	-.10930	-.10720	.03980
-4.304	-3.972	-.27630	-.30760	.49620	.25630	.10950	.16890	-.06830	-.06700	.02350
-4.191	.371	-.26930	-.29930	.49020	.25320	.11900	-.01470	.00380	.00360	-.00060
-3.737	4.274	-.21910	-.24840	.49540	.26040	.09510	-.17070	.06800	.06670	-.02600
-3.857	6.128	-.22590	-.25640	.49940	.25930	.09190	-.25550	.10360	.10170	-.03950
	GRADIENT	.00684	.00708	-.00012	.00047	-.00167	-.04120	.01653	.01621	-.00599

RUN NO. 1502/ 0 RN/L = 3.49 GRADIENT INTERVAL = -5.00/ 5.00

ALPHAO	BETAO	CNL	CNFL	CAL	CAFL	CLMFL	CYFL	CYNL	CYNFL	CBLFL
-.472	-6.996	-.01170	-.04390	.49590	.25810	.00750	.30570	-.12370	-.12170	.05370
-.442	-4.844	-.01360	-.04490	.49080	.25930	.01410	.21030	-.08860	-.08690	.03780
-.413	-.478	-.01750	-.04650	.48520	.25760	02170	.02330	-.01160	-.01160	.00350
-.380	3.654	.00290	-.02600	.48890	.25740	.01070	-.15070	.06680	.06520	-.02820
-.376	5.836	.01160	-.01730	.49080	.26190	.00150	-.24320	.10520	.10300	-.04470
	GRADIENT	.00191	.00220	-.00023	-.00023	-.00038	-.04248	.01828	.01789	-.00777

RUN NO. 1503/ 0 RN/L = 3.50 GRADIENT INTERVAL = -5.00/ 5.00

ALPHAO	BETAO	CNL	CNFL	CAL	CAFL	CLMFL	CYFL	CYNL	CYNFL	CBLFL
4.105	-5.818	.28070	.25120	.47500	.25100	-.10910	.26050	-.11230	-.11100	.05010
3.961	-3.699	.27650	.24730	.47750	.25360	-.10640	.17100	-.07670	-.07600	.03240
3.792	.122	.26740	.23790	.47600	.25150	-.09700	.00760	-.00740	-.00730	.00190
3.836	4.038	.28640	.25800	.47670	.25220	-.11190	-.15640	.06490	.06390	-.02950
3.791	6.090	.28950	.26130	.47860	.25810	-.11660	-.24560	.10150	.10010	-.04730
	GRADIENT	.00129	.00140	-.00010	-.00018	-.00072	-.04232	.01830	.01808	-.00800

IA156A, AEDC PWT 16T-470, O T S W/SILTS (R8NVE8) (10 MAY 80)

REFERENCE DATA

SREF = 2690.0000 SQ.FT. XMRP = 976.0000 IN. XT
LREF = 1290.3000 INCHES YMRP = .0000 IN. YT
BREF = 1290.3000 INCHES ZMRP = 400.0000 IN. ZT
SCALE = .0200

PARAMETRIC DATA

IB-ELV = 10.000 OB-ELV = 2.000
BDFLAP = .000 SPDBRK = .000
RUDDER = .000 SILTS = 1.000
MACH = 1.150 RN/L = 3.500

RUN NO. 1504/ 0 RN/L = 3.50 GRADIENT INTERVAL = -5.00/ 5.00

ALPHAO	BETAO	CNL	CNFL	CAL	CAFL	CLMFL	CYFL	CYNL	CYNFL	CBLFL
-8.224	-5.884	-.56370	-.59490	.50250	.26000	.20790	.29290	-.12090	-.11870	.03460
-8.207	-3.764	-.57780	-.60870	.50640	.26270	.21950	.18980	-.07790	-.07640	.02040
-8.128	.156	-.58770	-.61660	.50570	.26670	.22940	.01160	-.00630	-.00630	.00270
-8.010	4.213	-.57450	-.60410	.50590	.26670	.22400	-.17870	.07400	.07280	-.01840
-7.965	6.247	-.57230	-.60250	.50410	.26440	.21740	-.27960	.11700	.11500	-.03230
	GRADIENT	.00043	.00059	-.00006	.00050	.00055	-.04620	.01905	.01871	-.00487

RUN NO. 1505/ 0 RN/L = 3.51 GRADIENT INTERVAL = -5.00/ 5.00

ALPHAO	BETAO	CNL	CNFL	CAL	CAFL	CLMFL	CYFL	CYNL	CYNFL	CBLFL
-6.163	-5.962	-.39110	-.42200	.50350	.26740	.14040	.28360	-.11630	-.11400	.03840
-6.108	-4.043	-.39950	-.42960	.50210	.26790	.14910	.18710	-.07660	-.07520	.02430
-6.197	.091	-.42540	-.45380	.49570	.26390	17300	.00600	-.00530	-.00530	.00210
-6.035	4.259	-.40670	-.43490	.49980	.27200	.16020	-.17700	.07010	.06890	-.02270
-5.956	6.210	-.39680	-.42610	.49980	.26880	.15060	-.26910	.11000	.10780	-.03660
	GRADIENT	-.00086	-.00063	-.00028	.00050	.00133	-.04386	.01767	.01736	-.00566

RUN NO. 1506/ 0 RN/L = 3.50 GRADIENT INTERVAL = -5.00/ 5.00

ALPHAO	BETAO	CNL	CNFL	CAL	CAFL	CLMFL	CYFL	CYNL	CYNFL	CBLFL
-4.053	-6.089	-.23460	-.26530	.50100	.26950	.08240	.27690	-.11260	-.11060	.04270
-4.308	-3.975	-.26070	-.29020	.49630	.27040	.09780	.17570	-.07320	-.07190	.02620
-4.206	.359	-.26140	-.28950	.49140	.26760	.11130	-.00170	-.00320	-.00320	.00040
-3.756	4.297	-.22580	-.25360	.49570	.27220	.09620	-.16930	.06710	.06580	-.02700
-3.861	6.129	-.23130	-.26030	.49850	.27200	.09380	-.24960	.10040	.09840	-.03970
	GRADIENT	.00415	.00435	-.00009	.00020	-.00014	-.04170	.01695	.01663	-.00642

RUN NO. 1507/ 0 RN/L = 3.51 GRADIENT INTERVAL = -5.00/ 5.00

ALPHAO	BETAO	CNL	CNFL	CAL	CAFL	CLMFL	CYFL	CYNL	CYNFL	CBLFL
-.455	-7.001	.00640	-.02440	.49600	.27030	-.00360	.31330	-.12960	-.12740	.05500
-.432	-4.850	.00670	-.02310	.49310	.27340	-.00090	.21240	-.09050	-.08890	.03790
-.395	-.487	.01160	-.01620	.49050	.27250	-.00100	.02230	-.01120	-.01120	.00320
-.365	3.645	.02930	.00210	.49610	.27820	-.00970	-.15040	.06680	.06520	-.02820
-.365	5.852	.02900	.00150	.49500	.27880	-.01000	-.24540	.10530	.10330	-.04540
	GRADIENT	.00265	.00295	.00034	.00056	-.00103	-.04272	.01851	.01814	-.00778

IA156A, AEDC PWT 16T-470, O T S W/SILTS (R8NVE8) (10 MAY 80)

REFERENCE DATA

SREF = 2690.0000 SQ.FT. XMRP = 976.0000 IN. XT
LREF = 1290.3000 INCHES YMRP = .0000 IN. YT
BREF = 1290.3000 INCHES ZMRP = 400.0000 IN. ZT
SCALE = .0200

PARAMETRIC DATA

IB-ELV = 10.000 OB-ELV = 2.000
BDFLAP = .000 SPDBRK = .000
RUDDER = .000 SILTS = 1.000
MACH = 1.150 RN/L = 3.500

RUN NO. 1508/ 0 RN/L = 3.50 GRADIENT INTERVAL = -5.00/ 5.00

ALPHAO	BETAO	CNL	CNFL	CAL	CAFL	CLMFL	CYFL	CYNL	CYNFL	CBLFL
4.103	-5.794	.27740	.24950	.48250	.27080	-.10670	.26850	-.11740	-.11620	.05110
3.996	-3.720	.28050	.25240	.48760	.27430	-.10700	.18140	-.08530	-.08460	.03420
3.757	.111	.26900	.24070	.48050	.26400	-.09840	.02170	-.01660	-.01660	.00380
3.841	4.038	.30330	.27620	.48380	.27110	-.12330	-.15050	.06190	.06090	-.02900
3.790	6.100	.30090	.27380	.48580	.27390	-.12450	-.24210	.09970	.09840	-.04660
	GRADIENT	.00296	.00309	-.00048	-.00040	-.00212	-.04278	.01898	.01876	-.00815

IA156A, AEDC PWT 16T-470, O T S W/SILTS (R8NVE9) (10 MAY 80)

REFERENCE DATA

SREF = 2690.0000 SQ.FT. XMRP = 976.0000 IN. XT
LREF = 1290.3000 INCHES YMRP = .0000 IN. YT
BREF = 1290.3000 INCHES ZMRP = 400.0000 IN. ZT
SCALE = .0200

PARAMETRIC DATA

IB-ELV = 10.000 OB-ELV = 2.000
BDFLAP = .000 SPDBRK = .000
RUDDER = .000 SILTS = 1.000
MACH = 1.150 RN/L = 3.500

RUN NO. 1509/ 0 RN/L = 3.51 GRADIENT INTERVAL = -5.00/ 5.00

ALPHAO	BETAO	CNL	CNFL	CAL	CAFL	CLMFL	CYFL	CYNL	CYNFL	CBLFL
-.455	-6.952	.00610	-.02450	.49710	.27250	-.00430	.30950	-.12800	-.12590	.05430
-.427	-4.786	.00760	-.02170	.49180	.27380	-.00150	.20700	-.08860	-.08700	.03710
-.393	-.539	.01280	-.01480	.48900	.27170	-.00140	.02520	-.01240	-.01240	.00360
-.362	3.716	.02890	.00100	.49220	.27110	-.00730	-.15120	.06720	.06560	-.02880
-.361	5.867	.03290	.00530	.49550	.27850	-.01340	-.24590	.10550	.10340	-.04540
	GRADIENT	.00251	.00267	.00005	-.00032	-.00068	-.04213	.01833	.01795	-.00775

IA156A, AEDC PWT 16T-470, O T S (R8N001) (10 MAY 80)

REFERENCE DATA

SREF = 2690.0000 SQ.FT. XMRP = 976.0000 IN. XT
LREF = 1290.3000 INCHES YMRP = .0000 IN. YT
BREF = 1290.3000 INCHES ZMRP = 400.0000 IN. ZT
SCALE = .0200

PARAMETRIC DATA

IB-ELV = 10.000 OB-ELV = 5.000
BDFLAP = .000 SPDBRK = .000
RUDDER = .000 SILTS = .000
MACH = .600 RN/L = 3.500

RUN NO. 801/ 0 RN/L = 3.51 GRADIENT INTERVAL = -5.00/ 5.00

ALPHAO	BETAO	CNFO	CAFO	CLMFO	CYFO	CYNFO	CBLFO	CNBO	CABO	CLMBO
-.312	-6.620	.18410	.03010	-.11380	.16060	-.10240	.05530	.02110	.03910	-.01140
-.295	-.356	.13700	.03680	-.07910	.01640	-.00810	.00300	01920	.03530	-.01050
-.308	5.848	.13560	.03660	-.08550	-.12220	.08190	-.04380	.02110	.03810	-.01180
	GRADIENT	.00000	.00000	.00000	.00000	.00000	.00000	.00000	.00000	.00000

IA156A, AEDC PWT 16T-470, O T S (R8N002) (10 MAY 80)

REFERENCE DATA

SREF = 2690.0000 SQ.FT. XMRP = 976.0000 IN. XT
LREF = 1290.3000 INCHES YMRP = .0000 IN. YT
BREF = 1290.3000 INCHES ZMRP = 400.0000 IN. ZT
SCALE = .0200

PARAMETRIC DATA

IB-ELV = 10.000 OB-ELV = 5.000
BDFLAP = .000 SPDBRK = .000
RUDDER = .000 SILTS = .000
MACH = .700 RN/L = 3.500

RUN NO. 803/ 0 RN/L = 3.50 GRADIENT INTERVAL = -5.00/ 5.00

ALPHAO	BETAO	CNFO	CAFO	CLMFO	CYFO	CYNFO	CBLFO	CNBO	CABO	CLMBO
-.307	-6.786	.19950	.03260	-.12510	.16900	-.10840	.05780	.02150	.04040	-.01160
-.309	-.446	.14870	.03870	-.08800	.02080	-.01140	.00470	.01930	.03570	-.01050
-.343	5.803	.15070	.03870	-.09570	-.12230	.08200	-.04440	.02150	.03920	-.01190
	GRADIENT	.00000	.00000	.00000	.00000	.00000	.00000	.00000	.00000	.00000

IA156A, AEDC PWT 16T-470, O T S (R8N003) (10 MAY 80)

REFERENCE DATA

SREF = 2690.0000 SQ.FT. XMRP = 976.0000 IN. XT
LREF = 1290.3000 INCHES YMRP = .0000 IN. YT
BREF = 1290.3000 INCHES ZMRP = 400.0000 IN. ZT
SCALE = .0200

PARAMETRIC DATA

IB-ELV = 10.000 OB-ELV = 5.000
BDFLAP = .000 SPDBRK = .000
RUDDER = .000 SILTS = .000
MACH = .800 RN/L = 3.500

RUN NO. 804/ 0 RN/L = 3.50 GRADIENT INTERVAL = -5.00/ 5.00

ALPHAO	BETAO	CNFO	CAFO	CLMFO	CYFO	CYNFO	CBLFO	CNBO	CABO	CLMBO
-.315	-6.863	.21920	.03950	-.13730	.17350	-.11100	.05920	.02210	.04150	-.01190
-.322	-.508	.15670	.04260	-.09270	.02250	-.01200	.00540	.01970	.03650	-.01070
-.361	5.804	.15960	.04450	-.10110	-.12550	.08400	-.04590	.02160	.03980	-.01180
	GRADIENT	.00000	.00000	.00000	.00000	.00000	.00000	.00000	.00000	.00000

IA156A, AEDC PWT 16T-470, O T S (R8N004) (10 MAY 80)

REFERENCE DATA

SREF = 2690.0000 SQ.FT. XMRP = 976.0000 IN. XT
LREF = 1290.3000 INCHES YMRP = .0000 IN. YT
BREF = 1290.3000 INCHES ZMRP = 400.0000 IN. ZT
SCALE = .0200

PARAMETRIC DATA

IB-ELV = 10.000 OB-ELV = 5.000
BDFLAP = .000 SPDBRK = .000
RUDDER = .000 SILTS = .000
MACH = .850 RN/L = 3.500

RUN NO. 805/ 0 RN/L = 3.50 GRADIENT INTERVAL = -5.00/ 5.00

ALPHAO	BETAO	CNFO	CAFO	CLMFO	CYFO	CYNFO	CBLFO	CNBO	CABO	CLMBO
-.323	-6.768	.22530	.04570	-.13920	.17410	-.11130	.05980	.02320	.04370	-.01250
-.325	-.526	.15610	.04490	-.09100	.02230	-.01170	.00540	.02050	.03820	-.01110
-.372	5.679	.15580	.04940	-.09620	-.12100	.08020	-.04440	.02240	.04160	-.01210
	GRADIENT	.00000	.00000	.00000	.00000	.00000	.00000	.00000	.00000	.00000

IA156A, AEDC PWT 16T-470, O T S (R8N005) (10 MAY 80)

REFERENCE DATA

SREF = 2690.0000 SQ.FT. XMRP = 976.0000 IN. XT
LREF = 1290.3000 INCHES YMRP = .0000 IN. YT
BREF = 1290.3000 INCHES ZMRP = 400.0000 IN. ZT
SCALE = .0200

PARAMETRIC DATA

IB-ELV = 10.000 OB-ELV = 5.000
BDFLAP = .000 SPDBRK = .000
RUDDER = .000 SILTS = .000
MACH = .900 RN/L = 3.500

RUN NO. 806/ 0 RN/L = 3.50 GRADIENT INTERVAL = -5.00/ 5.00

ALPHAO	BETAO	CNFO	CAFO	CLMFO	CYFO	CYNFO	CBLFO	CNBO	CABO	CLMBO
-.339	-6.784	.20780	.05640	-.12100	.17100	-.10910	.06050	.02770	.04630	-.01640
-.340	-.528	.14180	.05410	-.07720	.02180	-.01110	.00570	.02100	.03980	-.01120
-.387	5.707	.14240	.06030	-.08170	-.12110	.07910	-.04600	.02330	.04360	-.01260
	GRADIENT	.00000	.00000	.00000	.00000	.00000	.00000	.00000	.00000	.00000

IA156A, AEDC PWT 16T-470, O T S (R8N006) (10 MAY 80)

REFERENCE DATA

SREF = 2690.0000 SQ.FT. XMRP = 976.0000 IN. XT
LREF = 1290.3000 INCHES YMRP = .0000 IN. YT
BREF = 1290.3000 INCHES ZMRP = 400.0000 IN. ZT
SCALE = .0200

PARAMETRIC DATA

IB-ELV = 10.000 OB-ELV = 5.000
BDFLAP = .000 SPDBRK = .000
RUDDER = .000 SILTS = .000
MACH = .920 RN/L = 3.500

RUN NO. 807/ 0 RN/L = 3.50 GRADIENT INTERVAL = -5.00/ 5.00

ALPHAO	BETAO	CNFO	CAFO	CLMFO	CYFO	CYNFO	CBLFO	CNBO	CABO	CLMBO
-.348	-6.787	.20460	.06340	-.11740	.16750	-.10520	.05980	.02530	.04770	-.01350
-.343	-.555	.13700	.05970	-.07240	.02140	-.01060	.00620	.02150	.04040	-.01150
-.389	5.691	.14060	.06700	-.07840	-.12200	.07960	-.04640	.02400	.04440	-.01310
	GRADIENT	.00000	.00000	.00000	.00000	.00000	.00000	.00000	.00000	.00000

IA156A, AEDC PWT 16T-470, O T S (R8N007) (10 MAY 80)

REFERENCE DATA

SREF = 2690.0000 SQ.FT. XMRP = 976.0000 IN. XT
LREF = 1290.3000 INCHES YMRP = .0000 IN. YT
BREF = 1290.3000 INCHES ZMRP = 400.0000 IN. ZT
SCALE = .0200

PARAMETRIC DATA

IB-ELV = 10.000 OB-ELV = 5.000
BDFLAP = .000 SPDBRK = .000
RUDDER = .000 SILTS = .000
MACH = .940 RN/L = 3.500

RUN NO. 808/ 0 RN/L = 3.50 GRADIENT INTERVAL = -5.00/ 5.00

ALPHAO	BETAO	CNFO	CAFO	CLMFO	CYFO	CYNFO	CBLFO	CNBO	CABO	CLMBO
-.350	-6.771	.20190	.06990	-.11410	.16490	-.10230	.05990	.02630	.04970	-.01410
-.343	-.582	.12650	.06670	-.06160	.02150	-.01080	.00660	.02770	.04200	-.01750
-.393	5.795	.13690	.07330	-.07460	-.12400	.07950	-.04760	.02550	.04710	-.01390
	GRADIENT	.00000	.00000	.00000	.00000	.00000	.00000	.00000	.00000	.00000

IA156A, AEDC PWT 16T-470, O T S (R8N008) (10 MAY 80)

REFERENCE DATA

SREF = 2690.0000 SQ.FT. XMRP = 976.0000 IN. XT
LREF = 1290.3000 INCHES YMRP = .0000 IN. YT
BREF = 1290.3000 INCHES ZMRP = 400.0000 IN. ZT
SCALE = .0200

PARAMETRIC DATA

IB-ELV = 10.000 OB-ELV = 5.000
BDFLAP = .000 SPDBRK = .000
RUDDER = .000 SILTS = .000
MACH = .950 RN/L = 3.500

RUN NO. 816/ 0 RN/L = 3.50 GRADIENT INTERVAL = -5.00/ 5.00

BETAO	ALPHAO	CNFO	CAFO	CLMFO	CYFO	CYNFO	CBLFO	CNBO	CABO	CLMBO
.566	-5.898	-.11080	.06790	.09720	-.01490	.00800	-.00370	.02540	.04740	-.01370
.266	-1.055	.07520	.07320	-.02380	-.00190	.00220	-.00100	.02380	.04380	-.01300
.197	.029	.12520	.06790	-.06110	.00060	.00070	-.00010	.02450	.04560	-.01330
-.170	5.745	.34490	.06400	-.21770	.00900	-.00460	.00390	.02400	.04500	-.01290
	GRADIENT	.04614	-.00489	-.03442	.00231	-.00138	.00083	.00065	.00166	-.00028

IA156A, AEDC PWT 16T-470, O T S (R8N009) (10 MAY 80)

REFERENCE DATA

SREF = 2690.0000 SQ.FT. XMRP = 976.0000 IN. XT
LREF = 1290.3000 INCHES YMRP = .0000 IN. YT
BREF = 1290.3000 INCHES ZMRP = 400.0000 IN. ZT
SCALE = .0200

PARAMETRIC DATA

IB-ELV = 10.000 OB-ELV = 5.000
BDFLAP = .000 SPDBRK = .000
RUDDER = .000 SILTS = .000
MACH = .950 RN/L = 3.500

RUN NO. 820/ 0 RN/L = 3.50 GRADIENT INTERVAL = -5.00/ 5.00

ALPHAO	BETAO	CNFO	CAFO	CLMFO	CYFO	CYNFO	CBLFO	CNBO	CABO	CLMBO
-.433	-6.912	.17660	.06900	-.09640	.15950	-.09680	.05830	.02800	.05310	-.01490
-.362	-.195	.11160	.06790	-.05030	.00250	.00100	.00110	.02420	.04520	-.01300
-.330	5.845	.15220	.07370	-.08350	-.12840	.08270	-.04920	.02650	.04930	-.01430
	GRADIENT	.00000	.00000	.00000	.00000	.00000	.00000	.00000	.00000	.00000

IA156A, AEDC PWT 16T-470, O T S (R8N010) (10 MAY 80)

REFERENCE DATA

SREF = 2690.0000 SQ.FT. XMRP = 976.0000 IN. XT
LREF = 1290.3000 INCHES YMRP = .0000 IN. YT
BREF = 1290.3000 INCHES ZMRP = 400.0000 IN. ZT
SCALE = .0200

PARAMETRIC DATA

IB-ELV = 10.000 OB-ELV = 5.000
BDFLAP = .000 SPDBRK = .000
RUDDER = .000 SILTS = .000
MACH = .960 RN/L = 3.500

RUN NO. 818/ 0 RN/L = 3.50 GRADIENT INTERVAL = -5.00/ 5.00

ALPHAO	BETAO	CNFO	CAFO	CLMFO	CYFO	CYNFO	CBLFO	CNBO	CABO	CLMBO
-.432	-6.901	.17030	.07220	-.09000	.15880	-.09560	.05900	.02860	.05410	-.01520
-.372	-.535	.10850	.06950	-.04690	.01060	-.00380	.00440	.02430	.04600	-.01290
-.342	5.840	.14270	.07590	-.07480	-.12710	.08160	-.04970	.02750	.05140	-.01480
	GRADIENT	.00000	.00000	.00000	.00000	.00000	.00000	.00000	.00000	.00000

IA156A, AEDC PWT 16T-470, O T S (R8N011) (10 MAY 80)

REFERENCE DATA

SREF = 2690.0000 SQ.FT. XMRP = 976.0000 IN. XT
LREF = 1290.3000 INCHES YMRP = .0000 IN. YT
BREF = 1290.3000 INCHES ZMRP = 400.0000 IN. ZT
SCALE = .0200

PARAMETRIC DATA

IB-ELV = 10.000 OB-ELV = 5.000
BDFLAP = .000 SPDBRK = .000
RUDDER = .000 SILTS = .000
MACH = .970 RN/L = 3.500

RUN NO. 821/ 0 RN/L = 3.50 GRADIENT INTERVAL = -5.00/ 5.00

ALPHAO	BETAO	CNFO	CAFO	CLMFO	CYFO	CYNFO	CBLFO	CNBO	CABO	CLMBO
-.443	-6.731	.16140	.07470	-.08160	.15330	-.09070	.05850	.02950	.05560	-.01570
-.377	-.325	.09850	.07150	-.03790	.00560	-.00120	.00270	.02450	.04630	-.01300
-.342	5.959	.13770	.07680	-.06990	-.13090	.08380	-.05150	.02790	.05230	-.01500
	GRADIENT	.00000	.00000	.00000	.00000	.00000	.00000	.00000	.00000	.00000

IA156A, AEDC PWT 16T-470, O T S (R8N012) (10 MAY 80)

REFERENCE DATA

SREF = 2690.0000 SQ.FT. XMRP = 976.0000 IN. XT
LREF = 1290.3000 INCHES YMRP = .0000 IN. YT
BREF = 1290.3000 INCHES ZMRP = 400.0000 IN. ZT
SCALE = .0200

PARAMETRIC DATA

IB-ELV = 10.000 OB-ELV = 5.000
BDFLAP = .000 SPDBRK = .000
RUDDER = .000 SILTS = .000
MACH = .980 RN/L = 3.500

RUN NO. 822/ 0 RN/L = 3.51 GRADIENT INTERVAL = -5.00/ 5.00

ALPHAO	BETAO	CNFO	CAFO	CLMFO	CYFO	CYNFO	CBLFO	CNBO	CABO	CLMBO
-.156	-6.192	.16900	.07510	-.08570	.13620	-.07930	.05380	.03000	.05680	-.01600
-.374	.020	.10150	.07200	-.03770	-.00030	.00320	.00020	.02710	.05050	-.01460
-.004	5.943	.15010	.07870	-.07620	-.12940	.08290	-.05280	.02910	.05450	-.01560
	GRADIENT	.00000	.00000	.00000	.00000	.00000	.00000	.00000	.00000	.00000

IA156A, AEDC PWT 16T-470, O T S (R8N013) (10 MAY 80)

REFERENCE DATA

SREF = 2690.0000 SQ.FT. XMRP = 976.0000 IN. XT
LREF = 1290.3000 INCHES YMRP = .0000 IN. YT
BREF = 1290.3000 INCHES ZMRP = 400.0000 IN. ZT
SCALE = .0200

PARAMETRIC DATA

IB-ELV = 10.000 OB-ELV = 5.000
BDFLAP = .000 SPDBRK = .000
RUDDER = .000 SILTS = .000
MACH = .990 RN/L = 3.500

RUN NO. 823/ 0 RN/L = 3.50 GRADIENT INTERVAL = -5.00/ 5.00

ALPHAO	BETAO	CNFO	CAFO	CLMFO	CYFO	CYNFO	CBLFO	CNBO	CABO	CLMBO
-.071	-6.202	.18080	.07760	-.09340	.13650	-.07880	.05540	.03030	.05740	-.01620
-.328	.120	.10310	.07450	-.03760	-.00400	.00560	-.00140	.02770	.05110	-.01510
-.058	5.687	.15230	.08020	-.07710	-.12190	.07740	-.05060	.02900	.05420	-.01560
	GRADIENT	.00000	.00000	.00000	.00000	.00000	.00000	.00000	.00000	.00000

IA156A, AEDC PWT 16T-470, O T S (R8N014) (10 MAY 80)

REFERENCE DATA

SREF = 2690.0000 SQ.FT. XMRP = 976.0000 IN. XT
LREF = 1290.3000 INCHES YMRP = .0000 IN. YT
BREF = 1290.3000 INCHES ZMRP = 400.0000 IN. ZT
SCALE = .0200

PARAMETRIC DATA

IB-ELV = 10.000 OB-ELV = 5.000
BDFLAP = .000 SPDBRK = .000
RUDDER = .000 SILTS = .000
MACH = 1.010 RN/L = 3.500

RUN NO. 824/ 0 RN/L = 3.51 GRADIENT INTERVAL = -5.00/ 5.00

ALPHAO	BETAO	CNFO	CAFO	CLMFO	CYFO	CYNFO	CBLFO	CNBO	CABO	CLMBO
.039	-6.145	.18640	.08360	-.09470	.13570	-.07900	.05700	.03260	.06110	-.01750
-.230	.302	.10240	.07590	-.03420	-.00640	.00720	-.00260	.03210	.05950	-.01740
-.111	6.034	.14930	.08660	-.07230	-.13340	.08540	-.05620	.03160	.05930	-.01700
	GRADIENT	.00000	.00000	.00000	.00000	.00000	.00000	.00000	.00000	.00000

IA156A, AEDC PWT 16T-470, O T S (R8N015) (10 MAY 80)

REFERENCE DATA

SREF = 2690.0000 SQ.FT. XMRP = 976.0000 IN. XT
LREF = 1290.3000 INCHES YMRP = .0000 IN. YT
BREF = 1290.3000 INCHES ZMRP = 400.0000 IN. ZT
SCALE = .0200

PARAMETRIC DATA

IB-ELV = 10.000 OB-ELV = 5.000
BDFLAP = .000 SPDBRK = .000
RUDDER = .000 SILTS = .000
MACH = 1.020 RN/L = 3.500

RUN NO. 825/ 0 RN/L = 3.51 GRADIENT INTERVAL = -5.00/ 5.00

ALPHAO	BETAO	CNFO	CAFO	CLMFO	CYFO	CYNFO	CBLFO	CNBO	CABO	CLMBO
-.021	-6.211	.18320	.08610	-.09120	.13630	-.07960	.05790	.03360	.06300	-.01800
-.340	.134	.09610	.08260	-.02630	-.00400	.00580	-.00150	.03300	.06120	-.01800
-.052	6.077	.15070	.08950	-.07170	-.13500	.08670	-.05740	.03240	.06080	-.01740
	GRADIENT	.00000	.00000	.00000	.00000	.00000	.00000	.00000	.00000	.00000

IA156A, AEDC PWT 16T-470, O T S (R8N016) (10 MAY 80)

REFERENCE DATA

SREF = 2690.0000 SQ.FT. XMRP = 976.0000 IN. XT
LREF = 1290.3000 INCHES YMRP = .0000 IN. YT
BREF = 1290.3000 INCHES ZMRP = 400.0000 IN. ZT
SCALE = .0200

PARAMETRIC DATA

IB-ELV = 10.000 OB-ELV = 5.000
BDFLAP = .000 SPDBRK = .000
RUDDER = .000 SILTS = .000
MACH = 1.030 RN/L = 3.500

RUN NO. 826/ 0 RN/L = 3.51 GRADIENT INTERVAL = -5.00/ 5.00

ALPHAO	BETAO	CNFO	CAFO	CLMFO	CYFO	CYNFO	CBLFO	CNBO	CABO	CLMBO
-.007	-6.500	.18470	.08880	-.09060	.14320	-.08410	.06150	.03520	.06630	-.01880
-.314	.180	.09930	.08590	-.02730	-.00360	.00580	-.00140	.03410	.06310	-.01850
-.099	6.275	.15190	.09190	-.07160	-.13920	.08930	-.05980	.03400	.06350	-.01830
	GRADIENT	.00000	.00000	.00000	.00000	.00000	.00000	.00000	.00000	.00000

IA156A, AEDC PWT 16T-470, O T S (R8N017) (10 MAY 80)

REFERENCE DATA

SREF = 2690.0000 SQ.FT. XMRP = 976.0000 IN. XT
LREF = 1290.3000 INCHES YMRP = .0000 IN. YT
BREF = 1290.3000 INCHES ZMRP = 400.0000 IN. ZT
SCALE = .0200

PARAMETRIC DATA

IB-ELV = 10.000 OB-ELV = 5.000
BDFLAP = .000 SPDBRK = .000
RUDDER = .000 SILTS = .000
MACH = 1.040 RN/L = 3.500

RUN NO. 827/ 0 RN/L = 3.51 GRADIENT INTERVAL = -5.00/ 5.00

ALPHAO	BETAO	CNFO	CAFO	CLMFO	CYFO	CYNFO	CBLFO	CNBO	CABO	CLMBO
-.214	-6.395	.16850	.09110	-.07790	.14660	-.08690	.06230	.03650	.06870	-.01960
-.345	.160	.09100	.08920	-.01920	-.00370	.00590	-.00160	.03580	.06660	-.01940
-.040	6.152	.15160	.09570	-.06930	-.13480	.08720	-.05850	.03480	.06490	-.01880
	GRADIENT	.00000	.00000	.00000	.00000	.00000	.00000	.00000	.00000	.00000

IA156A, AEDC PWT 16T-470, O T S (R8N018) (10 MAY 80)

REFERENCE DATA

SREF = 2690.0000 SQ.FT. XMRP = 976.0000 IN. XT
LREF = 1290.3000 INCHES YMRP = .0000 IN. YT
BREF = 1290.3000 INCHES ZMRP = 400.0000 IN. ZT
SCALE = .0200

PARAMETRIC DATA

IB-ELV = 10.000 OB-ELV = 5.000
BDFLAP = .000 SPDBRK = .000
RUDDER = .000 SILTS = .000
MACH = 1.050 RN/L = 3.500

RUN NO. 828/ 0 RN/L = 3.51 GRADIENT INTERVAL = -5.00/ 5.00

ALPHAO	BETAO	CNFO	CAFO	CLMFO	CYFO	CYNFO	CBLFO	CNBO	CABO	CLMBO
-.128	-6.378	.17120	.09090	-.07950	.14490	-.08670	.06160	.03720	.07010	-.01980
-.291	.263	.08700	.09210	-.01510	-.00380	.00550	-.00230	.03540	.06590	-.01920
-.145	6.216	.13770	.09800	-.05830	-.13720	.08880	-.05920	.03480	.06470	-.01880
	GRADIENT	.00000	.00000	.00000	.00000	.00000	.00000	.00000	.00000	.00000

IA156A, AEDC PWT 16T-470, O T S (R8N019) (10 MAY 80)

REFERENCE DATA

SREF = 2690.0000 SQ.FT. XMRP = 976.0000 IN. XT
LREF = 1290.3000 INCHES YMRP = .0000 IN. YT
BREF = 1290.3000 INCHES ZMRP = 400.0000 IN. ZT
SCALE = .0200

PARAMETRIC DATA

IB-ELV = 10.000 OB-ELV = 5.000
BDFLAP = .000 SPDBRK = .000
RUDDER = .000 SILTS = .000
MACH = 1.060 RN/L = 3.500

RUN NO. 829/ 0 RN/L = 3.50 GRADIENT INTERVAL = -5.00/ 5.00

ALPHAO	BETAO	CNFO	CAFO	CLMFO	CYFO	CYNFO	CBLFO	CNBO	CABO	CLMBO
-.024	-6.353	.17800	.09450	-.08400	.14350	-.08590	.06150	.03570	.06730	-.01910
-.275	.284	.09430	.09270	-.02050	-.00790	.00870	-.00360	.03410	.06330	-.01850
-.170	6.205	.14050	.09790	-.06110	-.13580	.08780	-.05890	.03320	.06160	-.01800
	GRADIENT	.00000	.00000	.00000	.00000	.00000	.00000	.00000	.00000	.00000

IA156A, AEDC PWT 16T-470, O T S (R8N020) (10 MAY 80)

REFERENCE DATA

SREF = 2690.0000 SQ.FT. XMRP = 976.0000 IN. XT
LREF = 1290.3000 INCHES YMRP = .0000 IN. YT
BREF = 1290.3000 INCHES ZMRP = 400.0000 IN. ZT
SCALE = .0200

PARAMETRIC DATA

IB-ELV = 10.000 OB-ELV = 5.000
BDFLAP = .000 SPDBRK = .000
RUDDER = .000 SILTS = .000
MACH = 1.080 RN/L = 3.500

RUN NO. 830/ 0 RN/L = 3.48 GRADIENT INTERVAL = -5.00/ 5.00

ALPHAO	BETAO	CNFO	CAFO	CLMFO	CYFO	CYNFO	CBLFO	CNBO	CABO	CLMBO
-.161	-6.471	.17820	.09800	-.08420	.14150	-.08350	.06120	.03260	.06110	-.01760
-.313	.183	.10500	.09230	-.03020	-.00530	.00690	-.00250	.03190	.05890	-.01740
-.214	6.199	.14970	.09910	-.06980	-.13480	.08660	-.05890	.02980	.05520	-.01620
	GRADIENT	.00000	.00000	.00000	.00000	.00000	.00000	.00000	.00000	.00000

IA156A, AEDC PWT 16T-470, O T S (R8N021) (10 MAY 80)

REFERENCE DATA

SREF = 2690.0000 SQ.FT. XMRP = 976.0000 IN. XT
LREF = 1290.3000 INCHES YMRP = .0000 IN. YT
BREF = 1290.3000 INCHES ZMRP = 400.0000 IN. ZT
SCALE = .0200

PARAMETRIC DATA

IB-ELV = 10.000 OB-ELV = 5.000
BDFLAP = .000 SPDBRK = .000
RUDDER = .000 SILTS = .000
MACH = 1.100 RN/L = 3.500

RUN NO. 831/ 0 RN/L = 3.50 GRADIENT INTERVAL = -5.00/ 5.00

ALPHAO	BETAO	CNFO	CAFO	CLMFO	CYFO	CYNFO	CBLFO	CNBO	CABO	CLMBO
-.224	-6.217	.17740	.09780	-.08520	.13570	-.07990	.05940	.03230	.06050	-.01740
-.347	.132	.10790	.09520	-.03340	-.00360	.00570	-.00230	.03000	.05540	-.01640
-.016	6.090	.15980	.10010	-.07760	-.13150	.08480	-.05810	.02910	.05380	-.01580
	GRADIENT	.00000	.00000	.00000	.00000	.00000	.00000	.00000	.00000	.00000

IA156A, AEDC PWT 16T-470, O T S (R8N022) (10 MAY 80)

REFERENCE DATA

SREF = 2690.0000 SQ.FT. XMRP = 976.0000 IN. XT
LREF = 1290.3000 INCHES YMRP = .0000 IN. YT
BREF = 1290.3000 INCHES ZMRP = 400.0000 IN. ZT
SCALE = .0200

PARAMETRIC DATA

IB-ELV = 10.000 OB-ELV = 5.000
BDFLAP = .000 SPDBRK = .000
RUDDER = .000 SILTS = .000
MACH = 1.150 RN/L = 3.500

RUN NO. 836/ 0 RN/L = 3.50 GRADIENT INTERVAL = -5.00/ 5.00

ALPHAO	BETAO	CNFO	CAFO	CLMFO	CYFO	CYNFO	CBLFO	CNBO	CABO	CLMBO
.183	-5.955	.17400	.10530	-.08560	.13230	-.08150	.06050	.02820	.05330	-.01510
-.344	.100	.13470	.10080	-.05450	-.00230	.00390	-.00100	.02870	.05320	-.01560
-.189	5.963	.16890	.10700	-.08450	-.13330	.08620	-.05790	.02810	.05170	-.01540
	GRADIENT	.00000	.00000	.00000	.00000	.00000	.00000	.00000	.00000	.00000

IA156A, AEDC PWT 16T-470, O T S (R8N023) (10 MAY 80)

REFERENCE DATA

SREF = 2690.0000 SQ.FT. XMRP = 976.0000 IN. XT
LREF = 1290.3000 INCHES YMRP = .0000 IN. YT
BREF = 1290.3000 INCHES ZMRP = 400.0000 IN. ZT
SCALE = .0200

PARAMETRIC DATA

IB-ELV = 10.000 OB-ELV = 5.000
BDFLAP = .000 SPDBRK = .000
RUDDER = .000 SILTS = .000
MACH = 1.200 RN/L = 3.500

RUN NO. 837/ 0 RN/L = 3.51 GRADIENT INTERVAL = -5.00/ 5.00

ALPHAO	BETAO	CNFO	CAFO	CLMFO	CYFO	CYNFO	CBLFO	CNBO	CABO	CLMBO
.094	-5.933	.19400	.10980	-.10290	.13210	-.08140	.05860	.02630	.04960	-.01410
-.213	.260	.15440	.10520	-.07230	-.00540	.00610	-.00270	.02710	.05010	-.01470
-.233	6.027	.17260	.10920	-.09060	-.13520	.08740	-.05680	.02670	.04920	-.01450
	GRADIENT	.00000	.00000	.00000	.00000	.00000	.00000	.00000	.00000	.00000

IA156A, AEDC PWT 16T-470, O T S (R8N024) (10 MAY 80)

REFERENCE DATA

SREF = 2690.0000 SQ.FT. XMRP = 976.0000 IN. XT
LREF = 1290.3000 INCHES YMRP = .0000 IN. YT
BREF = 1290.3000 INCHES ZMRP = 400.0000 IN. ZT
SCALE = .0200

PARAMETRIC DATA

IB-ELV = 10.000 OB-ELV = 5.000
BDFLAP = .000 SPDBRK = .000
RUDDER = .000 SILTS = .000
MACH = 1.250 RN/L = 3.500

RUN NO. 838/ 0 RN/L = 3.50 GRADIENT INTERVAL = -5.00/ 5.00

ALPHAO	BETAO	CNFO	CAFO	CLMFO	CYFO	CYNFO	CBLFO	CNBO	CABO	CLMBO
-.160	-6.422	.20920	.10820	-.11410	.14370	-.08640	.05890	.02830	.05370	-.01500
-.274	.269	.16550	.10780	-.08320	-.00730	.00790	-.00270	.02600	.04820	-.01410
-.219	5.956	.17540	.11130	-.09480	-.13330	.08650	-.05460	.02610	.04820	-.01420
	GRADIENT	.00000	.00000	.00000	.00000	.00000	.00000	.00000	.00000	.00000

IA156A, AEDC PWT 16T-470, O T S (R8N025) (10 MAY 80)

REFERENCE DATA

SREF = 2690.0000 SQ.FT. XMRP = 976.0000 IN. XT
LREF = 1290.3000 INCHES YMRP = .0000 IN. YT
BREF = 1290.3000 INCHES ZMRP = 400.0000 IN. ZT
SCALE = .0200

PARAMETRIC DATA

IB-ELV = 10.000 OB-ELV = 5.000
BDFLAP = .000 SPDBRK = .000
RUDDER = .000 SILTS = .000
MACH = 1.300 RN/L = 3.500

RUN NO. 839/ 0 RN/L = 3.50 GRADIENT INTERVAL = -5.00/ 5.00

ALPHAO	BETAO	CNFO	CAFO	CLMFO	CYFO	CYNFO	CBLFO	CNBO	CABO	CLMBO
-.187	-6.415	.20860	.11000	-.11600	.14060	-.08390	.05660	.02710	.05130	-.01440
-.333	.162	.16830	.10810	-.08730	-.00490	.00630	-.00150	.02520	.04690	-.01360
-.214	6.171	.17670	.11180	-.09760	-.13640	.08830	-.05490	.02550	.04710	-.01390
	GRADIENT	.00000	.00000	.00000	.00000	.00000	.00000	.00000	.00000	.00000

IA156A, AEDC PWT 16T-470, O T S (R8N026) (10 MAY 80)

REFERENCE DATA

SREF = 2690.0000 SQ.FT. XMRP = 976.0000 IN. XT
LREF = 1290.3000 INCHES YMRP = .0000 IN. YT
BREF = 1290.3000 INCHES ZMRP = 400.0000 IN. ZT
SCALE = .0200

PARAMETRIC DATA

IB-ELV = 10.000 OB-ELV = 5.000
BDFLAP = .000 SPDBRK = .000
RUDDER = .000 SILTS = .000
MACH = 1.400 RN/L = 3.500

RUN NO. 840/ 0 RN/L = 3.50 GRADIENT INTERVAL = -5.00/ 5.00

ALPHAO	BETAO	CNFO	CAFO	CLMFO	CYFO	CYNFO	CBLFO	CNBO	CABO	CLMBO
-.188	-6.466	.19960	.11280	-.11310	.14560	-.08790	.05540	.02570	.04900	-.01360
-.345	.249	.16820	.11230	-.09240	-.00710	.00840	-.00270	.02410	.04510	-.01300
-.211	6.167	.16650	.11310	-.09480	-.13880	.09090	-.05280	.02470	.04640	-.01330
	GRADIENT	.00000	.00000	.00000	.00000	.00000	.00000	.00000	.00000	.00000

IA156A, AEDC PWT 16T-470, O T S (R8N027) (10 MAY 80)

REFERENCE DATA

SREF = 2690.0000 SQ.FT. XMRP = 976.0000 IN. XT
LREF = 1290.3000 INCHES YMRP = .0000 IN. YT
BREF = 1290.3000 INCHES ZMRP = 400.0000 IN. ZT
SCALE = .0200

PARAMETRIC DATA

IB-ELV = 10.000 OB-ELV = 5.000
BDFLAP = .000 SPDBRK = .000
RUDDER = .000 SILTS = .000
MACH = 1.550 RN/L = 3.200

RUN NO. 841/ 0 RN/L = 3.19 GRADIENT INTERVAL = -5.00/ 5.00

ALPHAO	BETAO	CNFO	CAFO	CLMFO	CYFO	CYNFO	CBLFO	CNBO	CABO	CLMBO
-.168	-6.478	.18670	.11220	-.10740	.14790	-.09120	.05220	.02390	.04640	-.01240
-.435	.244	.14890	.11270	-.08300	-.00870	.01000	-.00330	.02210	.04130	-.01190
-.301	6.109	.14880	.11150	-.08680	-.14260	.09630	-.05020	.02250	.04270	-.01200
	GRADIENT	.00000	.00000	.00000	.00000	.00000	.00000	.00000	.00000	.00000

IA156A, AEDC PWT 16T-470, O T S (R8N028) (10 MAY 80)

REFERENCE DATA

SREF = 2690.0000 SQ.FT. XMRP = 976.0000 IN. XT
LREF = 1290.3000 INCHES YMRP = .0000 IN. YT
BREF = 1290.3000 INCHES ZMRP = 400.0000 IN. ZT
SCALE = .0200

PARAMETRIC DATA

IB-ELV = 10.000 OB-ELV = 5.000
BDFLAP = .000 SPDBRK = .000
RUDDER = .000 SILTS = .000
MACH = .600 RN/L = 3.500

RUN NO. 846/ 0 RN/L = 3.50 GRADIENT INTERVAL = -5.00/ 5.00

ALPHAO	BETAO	CNFO	CAFO	CLMFO	CYFO	CYNFO	CBLFO	CNBO	CABO	CLMBO
-.334	-6.579	.16140	.02700	-.09950	.15010	-.09400	.05060	.02230	.04110	-.01220
.127	-5.884	.15130	.03240	-.09330	.12680	-.08240	.04620	.02160	.03980	-.01180
.111	.087	.12060	.03340	-.06910	-.00310	.00180	.00080	.01940	.03550	-.01060
-.270	5.876	.15450	.03080	-.09780	-.12880	.08780	-.04480	.02200	.03960	-.01230
.110	6.556	.15330	.02960	-.09740	-.13680	.09090	-.04770	.02130	.03820	-.01190
	GRADIENT	.00000	.00000	.00000	.00000	.00000	.00000	.00000	.00000	.00000

IA156A, AEDC PWT 16T-470, O T S (R8N029) (10 MAY 80)

REFERENCE DATA

SREF = 2690.0000 SQ.FT. XMRP = 976.0000 IN. XT
LREF = 1290.3000 INCHES YMRP = .0000 IN. YT
BREF = 1290.3000 INCHES ZMRP = 400.0000 IN. ZT
SCALE = .0200

PARAMETRIC DATA

IB-ELV = 10.000 OB-ELV = 5.000
BDFLAP = .000 SPDBRK = .000
RUDDER = .000 SILTS = .000
MACH = .900 RN/L = 3.500

RUN NO. 845/ 0 RN/L = 3.51 GRADIENT INTERVAL = -5.00/ 5.00

ALPHAO	BETAO	CNFO	CAFO	CLMFO	CYFO	CYNFO	CBLFO	CNBO	CABO	CLMBO
-.394	-6.843	.19020	.05400	-.11050	.16270	-.10250	.05710	.02520	.04730	-.01360
.079	-5.835	.17970	.05490	-.10500	.13930	-.08990	.05210	.02500	.04720	-.01330
-.355	-.269	.12630	.05130	-.06560	.00030	.00290	.00060	.02170	.04050	-.01170
.065	.262	.12680	.05230	-.06720	-.00520	.00420	-.00020	.02090	.03910	-.01120
-.299	5.811	.16120	.05600	-.09450	-.12920	.08530	-.04760	.02480	.04600	-.01350
.043	6.812	.16480	.05470	-.09720	-.14690	.09500	-.05340	.02500	.04600	-.01370
	GRADIENT	.00094	.00188	-.00301	-.01035	.00245	-.00151	-.00151	-.00264	.00094

IA156A, AEDC PWT 16T-470, O T S (R8N030) (10 MAY 80)

REFERENCE DATA

SREF = 2690.0000 SQ.FT. XMRP = 976.0000 IN. XT
LREF = 1290.3000 INCHES YMRP = .0000 IN. YT
BREF = 1290.3000 INCHES ZMRP = 400.0000 IN. ZT
SCALE = .0200

PARAMETRIC DATA

IB-ELV = 10.000 OB-ELV = 5.000
BDFLAP = .000 SPDBRK = .000
RUDDER = .000 SILTS = .000
MACH = 1.100 RN/L = 3.500

RUN NO. 844/ 0 RN/L = 3.50 GRADIENT INTERVAL = -5.00/ 5.00

ALPHAO	BETAO	CNFO	CAFO	CLMFO	CYFO	CYNFO	CBLFO	CNBO	CABO	CLMBO
-.513	-6.849	.17060	.09800	-.08030	.15280	-.09030	.06640	.03270	.06120	-.01760
.050	-5.864	.17100	.09880	-.08260	.12900	-.07890	.05960	.02980	.05630	-.01590
-.403	-.197	.10130	.09530	-.02880	.00330	.00050	.00160	.03000	.05520	-.01640
.034	.184	.11120	.09660	-.03660	-.00340	.00280	.00100	.02930	.05390	-.01600
-.331	5.850	.14450	.10050	-.06600	-.12770	.08250	-.05620	.02940	.05410	-.01600
-.018	6.825	.15790	.09740	-.07660	-.14360	.08920	-.06230	.03120	.05730	-.01700
	GRADIENT	.02597	.00341	-.02046	-.01758	.00603	-.00157	-.00184	-.00341	.00105

IA156A, AEDC PWT 16T-470, O T S (R8N031) (10 MAY 80)

REFERENCE DATA

SREF = 2690.0000 SQ.FT. XMRP = 976.0000 IN. XT
LREF = 1290.3000 INCHES YMRP = .0000 IN. YT
BREF = 1290.3000 INCHES ZMRP = 400.0000 IN. ZT
SCALE = .0200

PARAMETRIC DATA

IB-ELV = 10.000 OB-ELV = 5.000
BDFLAP = .000 SPDBRK = .000
RUDDER = .000 SILTS = .000
MACH = 1.550 RN/L = 3.200

RUN NO. 842/ 0 RN/L = 3.20 GRADIENT INTERVAL = -5.00/ 5.00

ALPHAO	BETAO	CNFO	CAFO	CLMFO	CYFO	CYNFO	CBLFO	CNBO	CABO	CLMBO
-.615	-6.815	.16850	.11180	-.09330	.15740	-.09770	.05550	.02370	.04630	-.01230
.179	-6.058	.17520	.11370	-.10140	.14130	-.09090	.05260	.02350	.04580	-.01210
-.533	-.323	.13630	.11200	-.07310	.00290	.00170	.00100	.02190	.04100	-.01180
.170	.324	.14700	.11220	-.08280	-.00410	.00230	.00040	.02210	.04150	-.01180
-.475	5.830	.14350	.11130	-.08250	-.13490	.09130	-.04740	.02210	.04180	-.01170
-.489	6.059	.14070	.11000	-.08070	-.14340	.09680	-.05020	.02310	.04390	-.01230
.098	6.797	.14770	.10810	-.08590	-.15030	.09810	-.05190	.02300	.04380	-.01220
	GRADIENT	.01654	.00031	-.01499	-.01082	.00093	-.00093	.00031	.00077	-.00000

IA156A, AEDC PWT 16T-470, O T S (R8N034) (10 MAY 80)

REFERENCE DATA

SREF = 2690.0000 SQ.FT. XMRP = 976.0000 IN. XT
LREF = 1290.3000 INCHES YMRP = .0000 IN. YT
BREF = 1290.3000 INCHES ZMRP = 400.0000 IN. ZT
SCALE = .0200

PARAMETRIC DATA

IB-ELV = 10.000 OB-ELV = 5.000
BDFLAP = .000 SPDBRK = .000
RUDDER = .000 SILTS = .000
MACH = 1.100 RN/L = 3.500
Z = 4.500

RUN NO. 835/ 0 RN/L = 3.51 GRADIENT INTERVAL = -5.00/ 5.00

ALPHAO	BETAO	CNFO	CAFO	CLMFO	CYFO	CYNFO	CBLFO	CNBO	CABO	CLMBO
.133	-5.950	.18860	.10010	-.09540	.12710	-.07740	.05900	.02940	.05560	-.01560
-.326	.162	.10330	.09650	-.02850	.00000	.00380	-.00070	03120	.05790	-.01690
-.142	6.104	.13490	.10130	-.06030	-.13360	.08570	-.05880	.02960	.05490	-.01610
	GRADIENT	.00000	.00000	.00000	.00000	.00000	.00000	.00000	.00000	.00000

IA156A, AEDC PWT 16T-470, O T S (R8N035) (10 MAY 80)

REFERENCE DATA

SREF = 2690.0000 SQ.FT. XMRP = 976.0000 IN. XT
LREF = 1290.3000 INCHES YMRP = .0000 IN. YT
BREF = 1290.3000 INCHES ZMRP = 400.0000 IN. ZT
SCALE = .0200

PARAMETRIC DATA

IB-ELV = 10.000 OB-ELV = 5.000
BDFLAP = .000 SPDBRK = .000
RUDDER = .000 SILTS = .000
MACH = 1.100 RN/L = 3.500
Z = 5.500

RUN NO. 834/ 0 RN/L = 3.51 GRADIENT INTERVAL = -5.00/ 5.00

ALPHAO	BETAO	CNFO	CAFO	CLMFO	CYFO	CYNFO	CBLFO	CNBO	CABO	CLMBO
.202	-5.983	.18230	.09960	-.09130	.12710	-.07740	.05950	.02940	.05570	-.01570
-.218	.317	.10510	.09660	-.03120	-.00900	.00930	-.00440	.03030	.05580	-.01650
-.235	5.993	.14020	.10090	-.06390	-.13220	.08500	-.05760	.02900	.05380	-.01580
	GRADIENT	.00000	.00000	.00000	.00000	.00000	.00000	.00000	.00000	.00000

IA156A, AEDC PWT 16T-470, O T S (R8N036) (10 MAY 80)

REFERENCE DATA

SREF = 2690.0000 SQ.FT. XMRP = 976.0000 IN. XT
LREF = 1290.3000 INCHES YMRP = .0000 IN. YT
BREF = 1290.3000 INCHES ZMRP = 400.0000 IN. ZT
SCALE = .0200

PARAMETRIC DATA

IB-ELV = 10.000 OB-ELV = 5.000
BDFLAP = .000 SPDBRK = .000
RUDDER = .000 SILTS = .000
MACH = 1.100 RN/L = 3.500
Z = 6.500

RUN NO. 832/ 0 RN/L = 3.50 GRADIENT INTERVAL = -5.00/ 5.00

ALPHAO	BETAO	CNFO	CAFO	CLMFO	CYFO	CYNFO	CBLFO	CNBO	CABO	CLMBO
-.157	-6.418	.18330	.09740	-.08930	.14220	-.08400	.06180	.03250	.06090	-.01750
-.303	.234	.10880	.09570	-.03390	-.00680	.00770	-.00360	.03000	.05550	-.01630
-.097	6.205	.16030	.10110	-.07800	-.13320	.08590	-.05920	.02900	.05370	-.01580
	GRADIENT	.00000	.00000	.00000	.00000	.00000	.00000	.00000	.00000	.00000

IA156A, AEDC PWT 16T-470, O T S (R8N037) (10 MAY 80)

REFERENCE DATA

SREF = 2690.0000 SQ.FT. XMRP = 976.0000 IN. XT
LREF = 1290.3000 INCHES YMRP = .0000 IN. YT
BREF = 1290.3000 INCHES ZMRP = 400.0000 IN. ZT
SCALE = .0200

PARAMETRIC DATA

IB-ELV = 10.000 OB-ELV = 5.000
BDFLAP = .000 SPDBRK = .000
RUDDER = .000 SILTS = .000
MACH = 1.550 RN/L = 3.200

RUN NO. 843/ 0 RN/L = 3.19 GRADIENT INTERVAL = -5.00/ 5.00

ALPHAO	BETAO	CNFO	CAFO	CLMFO	CYFO	CYNFO	CBLFO	CNBO	CABO	CLMBO
.171	.281	.14540	.11190	-.08150	-.00380	.00210	.00060	.02200	.04150	-.01180
-.533	-.269	.13590	.11310	-.07260	-.00070	.00440	-.00010	.02190	.04090	-.01180
-.536	-.291	.13720	.11210	-.07420	.00950	-.00330	.00220	.02200	.04140	-.01180
.186	.269	.15240	.11240	-.08620	-.00430	.00350	-.00020	.02170	.04080	-.01160
.164	.278	.14440	.11200	-.08100	-.00810	.00630	-.00120	.02150	.04060	-.01150
-.514	-.290	.14840	.11290	-.08160	.00980	-.00320	.00240	.02210	.04150	-.01180
	GRADIENT	.01201	-.00106	-.01186	-.02105	.00857	-.00323	-.00048	-.00055	.00030

IA156A, AEDC PWT 16T-470, O T S W/SILTS (R8N040) (10 MAY 80)

REFERENCE DATA

SREF = 2690.0000 SQ.FT. XMRP = 976.0000 IN. XT
LREF = 1290.3000 INCHES YMRP = .0000 IN. YT
BREF = 1290.3000 INCHES ZMRP = 400.0000 IN. ZT
SCALE = .0200

PARAMETRIC DATA

IB-ELV = 10.000 OB-ELV = 5.000
BDFLAP = .000 SPDBRK = .000
RUDDER = .000 SILTS = 1.000
MACH = .300 RN/L = 3.500

RUN NO. 862/ 0 RN/L = 2.70 GRADIENT INTERVAL = -5.00/ 5.00

ALPHAO	BETAO	CNFO	CAFO	CLMFO	CYFO	CYNFO	CBLFO	CNBO	CABO	CLMBO
-5.920	-9.943	.01060	.01350	.00320	.26460	-.16320	.07960	.02280	.04160	-.01260
-6.155	-5.902	-.02920	.02270	.03100	.15970	-.09570	.04640	.02190	.04010	-.01200
-6.275	.408	-.07070	.02720	.06030	-.00300	.00590	-.00430	.01970	.03610	-.01080
-5.806	6.205	-.06750	.02770	.05490	-.14520	.09370	-.04680	.02050	.03710	-.01140
-5.909	10.174	-.09070	.01870	.06700	-.23800	.15180	-.07450	.02310	.04190	-.01280
	GRADIENT	.00000	.00000	.00000	.00000	.00000	.00000	.00000	.00000	.00000

RUN NO. 863/ 0 RN/L = 2.68 GRADIENT INTERVAL = -5.00/ 5.00

ALPHAO	BETAO	CNFO	CAFO	CLMFO	CYFO	CYNFO	CBLFO	CNBO	CABO	CLMBO
-.323	-10.566	.16300	.01480	-.09710	.23690	-.15000	.07900	.02250	.04040	-.01250
-.295	-6.495	.12420	.02650	-.07020	.14310	-.08860	.04590	.02070	.03740	-.01150
-.254	-.400	.10050	.02970	-.05340	.00840	-.00160	.00080	.01870	.03440	-.01030
-.216	5.676	.11910	.03070	-.07150	-.11220	.07710	-.04110	.01930	.03450	-.01080
-.202	9.729	.11900	.02490	-.07540	-.19700	.13330	-.06980	.02150	.03860	-.01200
	GRADIENT	.00000	.00000	.00000	.00000	.00000	.00000	.00000	.00000	.00000

IA156A, AEDC PWT 16T-470, O T S W/SILTS (R8N040) (10 MAY 80)

REFERENCE DATA

SREF = 2690.0000 SQ.FT. XMRP = 976.0000 IN. XT
LREF = 1290.3000 INCHES YMRP = .0000 IN. YT
BREF = 1290.3000 INCHES ZMRP = 400.0000 IN. ZT
SCALE = .0200

PARAMETRIC DATA

IB-ELV = 10.000 OB-ELV = 5.000
BDFLAP = .000 SPDBRK = .000
RUDDER = .000 SILTS = 1.000
MACH = .300 RN/L = 3.500

RUN NO. 865/ 0 RN/L = 2.67 GRADIENT INTERVAL = -5.00/ 5.00

ALPHAO	BETAO	CNFO	CAFO	CLMFO	CYFO	CYNFO	CBLFO	CNBO	CABO	CLMBO
6.308	-9.980	.31740	.01270	-.20490	.18610	-.12300	.07480	.02150	.03930	-.01190
5.980	-5.655	.29190	.01840	-.18740	.11060	-.07260	.04280	.02030	.03750	-.01110
6.119	.063	.30560	.02090	-.19240	.01770	-.01030	.00370	.01770	.03170	-.00990
5.672	6.053	.31370	.01740	-.20480	-.08680	.06080	-.03780	.02040	.03610	-.01150
5.788	10.128	.31490	.01260	-.20820	-.16300	.11300	-.06710	.02110	.03760	-.01190
	GRADIENT	.00000	.00000	.00000	.00000	.00000	.00000	.00000	.00000	.00000

IA156A, AEDC PWT 16T-470, O T S W/SILTS (R8N041) (10 MAY 80)

REFERENCE DATA

SREF = 2690.0000 SQ.FT. XMRP = 976.0000 IN. XT
LREF = 1290.3000 INCHES YMRP = .0000 IN. YT
BREF = 1290.3000 INCHES ZMRP = 400.0000 IN. ZT
SCALE = .0200

PARAMETRIC DATA

IB-ELV = 10.000 OB-ELV = 5.000
BDFLAP = .000 SPDBRK = .000
RUDDER = .000 SILTS = 1.000
MACH = .300 RN/L = 3.500

RUN NO. 861/ 0 RN/L = 2.74 GRADIENT INTERVAL = -5.00/ 5.00

ALPHAO	BETAO	CNFO	CAFO	CLMFO	CYFO	CYNFO	CBLFO	CNBO	CABO	CLMBO
-10.091	-6.034	-.13730	.01440	.10360	.18610	-.11190	.05170	.02150	.03940	-.01180
-10.067	.359	-.18560	.01470	.13850	.00530	.00110	-.00190	.02260	.04130	-.01240
-9.910	6.266	-.19250	.01010	.13780	-.15300	.09920	-.04720	.02580	.04690	-.01430
	GRADIENT	.00000	.00000	.00000	.00000	.00000	.00000	.00000	.00000	.00000

RUN NO. 866/ 0 RN/L = 2.66 GRADIENT INTERVAL = -5.00/ 5.00

ALPHAO	BETAO	CNFO	CAFO	CLMFO	CYFO	CYNFO	CBLFO	CNBO	CABO	CLMBO
10.042	-5.845	.43650	.01080	-.28750	.10050	-.06520	.04310	.01830	.03310	-.01020
9.871	.222	.43390	.01210	-.28130	.01960	-.01120	.00370	.01740	.03040	-.00990
10.015	6.282	.45250	.00410	-.30120	-.06430	.04520	-.03510	.01930	.03380	-.01100
	GRADIENT	.00000	.00000	.00000	.00000	.00000	.00000	.00000	.00000	.00000

IA156A, AEDC PWT 16T-470, O T S W/SILTS (R8N042) (10 MAY 80)

REFERENCE DATA

SREF = 2690.0000 SQ.FT. XMRP = 976.0000 IN. XT
LREF = 1290.3000 INCHES YMRP = .0000 IN. YT
BREF = 1290.3000 INCHES ZMRP = 400.0000 IN. ZT
SCALE = .0200

PARAMETRIC DATA

IB-ELV = 10.000 OB-ELV = 5.000
BDFLAP = .000 SPDBRK = .000
RUDDER = .000 SILTS = 1.000
MACH = .600 RN/L = 3.500

RUN NO. 867/ 0 RN/L = 3.50 GRADIENT INTERVAL = -5.00/ 5.00

ALPHAO	BETAO	CNFO	CAFO	CLMFO	CYFO	CYNFO	CBLFO	CNBO	CABO	CLMBO
-8.043	-7.716	-.07480	.02440	.05860	.22960	-.14170	.06700	.02710	.04990	-.01480
[illegible] 204	-5.827	-.08700	.03200	.06730	.16960	-.10410	.04880	.02290	.04240	-.01250
[illegible] 073	-3.782	-.09130	.03380	.07140	.10850	-.06540	.03050	.02300	.04250	-.01250
-8.198	.321	-.12230	.03260	.09440	-.00440	.00570	-.00330	.02130	.03960	-.01160
-7.861	4.154	-.10800	.03480	.08020	-.10440	.06770	-.03280	.02170	.03970	-.01200
-7.808	6.039	-.10100	.03320	.07350	-.15840	.10180	-.04890	.02280	.04150	-.01250
-8.047	8.247	-.11240	.02900	.07940	-.21690	.13850	-.06580	.02410	.04430	-.01320
	GRADIENT	-.00217	.00012	.00116	-.02684	.01678	-.00798	-.00017	-.00036	.00006

RUN NO. 868/ 0 RN/L = 3.50 GRADIENT INTERVAL = -5.00/ 5.00

ALPHAO	BETAO	CNFO	CAFO	CLMFO	CYFO	CYNFO	CBLFO	CNBO	CABO	CLMBO
-6.177	-7.939	-.00360	.03050	.01030	.22240	-.13830	.06650	.02370	.04390	-.01290
-6.117	-5.788	-.01880	.03460	.02050	.15950	-.09870	.04720	.02290	.04220	-.01250
-5.974	-3.847	-.02840	.03680	.02820	.09940	-.06070	.02900	.02230	.04100	-.01220
-6.102	.060	-.05720	.03560	.04990	.00000	.00210	-.00160	.02050	.03780	-.01120
-6.078	4.270	-.04900	.03630	.04020	-.10470	.06750	-.03340	.02170	.03950	-.01200
-5.857	6.111	-.04060	.03520	.03230	-.15250	.09820	-.04830	.02260	.04130	-.01250
-5.838	8.303	-.04020	.03240	.03040	-.20470	.13100	-.06390	.02320	.04270	-.01270
	GRADIENT	-.00248	-.00006	.00143	-.02514	.01579	-.00769	-.00007	-.00018	.00002

RUN NO. 869/ 0 RN/L = 3.50 GRADIENT INTERVAL = -5.00/ 5.00

ALPHAO	BETAO	CNFO	CAFO	CLMFO	CYFO	CYNFO	CBLFO	CNBO	CABO	CLMBO
-4.175	-8.137	.05960	.03140	-.03260	.21520	-.13450	.06630	.02340	.04330	-.01280
-4.259	-6.128	.04020	.03580	-.01990	.15970	-.09950	.04890	.02260	.04170	-.01230
-4.224	-3.918	.02950	.03860	-.01120	.09450	-.05740	.02850	.02180	.04030	-.01190
-3.977	.211	.01460	.03810	.00120	-.00540	.00570	-.00310	.02020	.03720	-.01100
-3.796	4.128	.02770	.03860	-.01130	-.09480	.06090	-.03120	.02120	.03840	-.01170
-3.913	6.094	.02780	.03710	-.01380	-.14470	.09350	-.04740	.02200	.04020	-.01210
-3.786	8.019	.02830	.03500	-.01520	-.19010	.12260	-.06150	.02240	.04080	-.01230
	GRADIENT	-.00025	-.00000	.00001	-.02353	.01471	-.00742	-.00008	-.00024	.00003

IA156A, AEDC PWT 16T-470, O T S W/SILTS (R8N042) (10 MAY 80)

REFERENCE DATA

SREF = 2690.0000 SQ.FT. XMRP = 976.0000 IN. XT
LREF = 1290.3000 INCHES YMRP = .0000 IN. YT
BREF = 1290.3000 INCHES ZMRP = 400.0000 IN. ZT
SCALE = .0200

PARAMETRIC DATA

IB-ELV = 10.000 OB-ELV = 5.000
BDFLAP = .000 SPDBRK = .000
RUDDER = .000 SILTS = 1.000
MACH = .600 RN/L = 3.500

RUN NO. 870/ 0 RN/L = 3.50 GRADIENT INTERVAL = -5.00/ 5.00

ALPHAO	BETAO	CNFO	CAFO	CLMFO	CYFO	CYNFO	CBLFO	CNBO	CABO	CLMBO
-.372	-8.780	.17880	.02740	-.11140	.20710	-.13140	.06880	.02270	.04190	-.01240
-.357	-6.657	.16150	.03290	-.10040	.15580	-.09840	.05130	.02180	.04030	-.01190
-.342	-4.603	.15070	.03730	-.09250	.10650	-.06660	.03470	.02100	.03870	-.01140
-.309	-.391	.12880	.03780	-.07400	.00790	-.00270	.00110	.01930	.03540	-.01060
-.271	3.723	.15020	.03830	-.09220	-.07520	.05110	-.02750	.02000	.03610	-.01110
-.265	5.794	.15240	.03690	-.09670	-.11970	.08050	-.04300	.02120	.03820	-.01180
-.263	7.882	.15060	.03440	-.09750	-.16580	.11100	-.05860	.02220	.04000	-.01240
	GRADIENT	-.00008	.00012	.00005	-.02183	.01414	-.00747	-.00012	-.00031	.00004

RUN NO. 871/ 0 RN/L = 3.50 GRADIENT INTERVAL = -5.00/ 5.00

ALPHAO	BETAO	CNFO	CAFO	CLMFO	CYFO	CYNFO	CBLFO	CNBO	CABO	CLMBO
4.130	-7.788	.29890	.02530	-.19500	.16040	-.10540	.06180	.02140	.03910	-.01180
4.227	-5.976	.29700	.02850	-.19400	.11990	-.07860	.04600	.02060	.03800	-.01130
3.952	-3.829	.27850	.03030	-.18030	.08070	-.05290	.03030	.02050	.03780	-.01120
4.097	-.000	.27030	.03060	-.17160	.00980	-.00600	.00260	.01900	.03420	-.01060
3.938	4.125	.28600	.03030	-.18560	-.06580	.04430	-.02670	.01920	.03460	-.01070
3.808	6.166	.28730	.02850	-.18940	-.10760	.07320	-.04270	.02070	.03670	-.01170
3.678	7.918	.27620	.02650	-.18350	-.14410	.09770	-.05570	.02140	.03800	-.01200
	GRADIENT	.00098	-.00000	-.00070	-.01842	.01222	-.00717	-.00016	-.00040	.00006

RUN NO. 872/ 0 RN/L = 3.50 GRADIENT INTERVAL = -5.00/ 5.00

ALPHAO	BETAO	CNFO	CAFO	CLMFO	CYFO	CYNFO	CBLFO	CNBO	CABO	CLMBO
6.274	-8.006	.37090	.01930	-.24460	.15250	-.10080	.06210	.02120	.03870	-.01170
6.155	-5.963	.36130	.02340	-.23830	.11600	-.07650	.04630	.02100	.03850	-.01150
6.263	-3.868	.36520	.02600	-.24000	.07650	-.04990	.03020	.02020	.03650	-.01120
5.934	.202	.33040	.02640	-.21240	.00310	-.00160	.00020	.01900	.03430	-.01060
5.841	4.115	.34560	.02540	-.22660	-.05880	.03930	-.02540	.01920	.03440	-.01070
5.930	6.270	.35180	.02350	-.23390	-.10150	.06890	-.04230	.02060	.03620	-.01170
5.614	7.985	.34170	.02090	-.22850	-.13510	.09190	-.05510	.02130	.03820	-.01190
	GRADIENT	-.00250	-.00007	.00171	-.01696	.01118	-.00697	-.00013	-.00026	.00006

IA156A, AEDC PWT 16T-470, O T S W/SILTS (R8N042) (10 MAY 80)

REFERENCE DATA

SREF = 2690.0000 SQ.FT. XMRP = 976.0000 IN. XT
LREF = 1290.3000 INCHES YMRP = .0000 IN. YT
BREF = 1290.3000 INCHES ZMRP = 400.0000 IN. ZT
SCALE = .0200

PARAMETRIC DATA

IB-ELV = 10.000 OB-ELV = 5.000
BDFLAP = .000 SPDBRK = .000
RUDDER = .000 SILTS = 1.000
MACH = .600 RN/L = 3.500

RUN NO. 873/ 0 RN/L = 3.50 GRADIENT INTERVAL = -5.00/ 5.00

ALPHAO	BETAO	CNFO	CAFO	CLMFO	CYFO	CYNFO	CBLFO	CNBO	CABO	CLMBO
8.126	-7.971	.42690	.01260	-.28360	.14150	-.09320	.06020	.02180	.03990	-.01200
8.003	-5.692	.42320	.01840	-.28080	.09990	-.06510	.04210	.02040	.03730	-.01120
7.988	-3.728	.42050	.02020	-.27780	.06360	-.04070	.02690	.01970	.03590	-.01090
8.046	.165	.40960	.01900	-.26730	.00800	-.00490	.00170	.01910	.03460	-.01060
7.840	4.160	.41410	.01990	-.27350	-.05300	.03510	-.02460	.01910	.03390	-.01080
7.965	6.229	.42150	.01610	-.28150	-.08670	.05840	-.03920	.02060	.03660	-.01160
7.842	8.218	.41020	.01310	-.27580	-.12550	.08560	-.05510	.02110	.03740	-.01190
	GRADIENT	-.00080	-.00004	.00054	-.01478	.00961	-.00653	-.00008	-.00025	.00001

IA156A, AEDC PWT 16T-470, O T S W/SILTS (R8N043) (10 MAY 80)

REFERENCE DATA

SREF = 2690.0000 SQ.FT. XMRP = 976.0000 IN. XT
LREF = 1290.3000 INCHES YMRP = .0000 IN. YT
BREF = 1290.3000 INCHES ZMRP = 400.0000 IN. ZT
SCALE = .0200

PARAMETRIC DATA

IB-ELV = 10.000 OB-ELV = 5.000
BDFLAP = .000 SPDBRK = .000
RUDDER = .000 SILTS = 1.000
MACH = .800 RN/L = 3.500

RUN NO. 874/ 0 RN/L = 3.50 GRADIENT INTERVAL = -5.00/ 5.00

ALPHAO	BETAO	CNFO	CAFO	CLMFO	CYFO	CYNFO	CBLFO	CNBO	CABO	CLMBO
-8.320	-6.125	-.07710	.04530	.06450	.18620	-.11450	.05400	.02410	.04480	-.01310
-8.413	-3.880	-.09420	.04780	.07680	.11440	-.06920	.03250	.02400	.04440	-.01310
-8.113	.346	-.12410	.04480	.09990	.00260	.00080	-.00070	.02170	.04020	-.01180
-8.023	4.302	-.10250	.04680	.08020	-.11200	.07210	-.03440	.02320	.04320	-.01260
-7.956	6.209	-.09760	.04600	.07480	-.16930	.10800	-.05150	.02400	.04470	-.01300
	GRADIENT	-.00103	-.00012	.00043	-.02767	.01727	-.00818	-.00010	-.00015	.00006

RUN NO. 875/ 0 RN/L = 3.50 GRADIENT INTERVAL = -5.00/ 5.00

ALPHAO	BETAO	CNFO	CAFO	CLMFO	CYFO	CYNFO	CBLFO	CNBO	CABO	CLMBO
-6.193	-5.894	-.00500	.04600	.01370	.16960	-.10520	.05080	.02380	.04430	-.01290
-6.103	-3.865	-.01650	.04860	.02250	.10350	-.06350	.03080	.02300	.04250	-.01250
-6.214	.135	-.05840	.04440	.05350	.00070	.00090	-.00070	.02130	.03930	-.01160
-5.908	4.136	-.03190	.04760	.03110	-.10110	.06470	-.03180	.02230	.04130	-.01210
-5.930	6.364	-.02960	.04590	.02690	-.16420	.10490	-.05140	.02390	.04420	-.01300
	GRADIENT	-.00192	-.00012	.00107	-.02557	.01602	-.00782	-.00009	-.00015	.00005

IA156A, AEDC PWT 16T-470, O T S W/SILTS (R8N043) (10 MAY 80)

REFERENCE DATA

SREF = 2690.0000 SQ.FT. XMRP = 976.0000 IN. XT
LREF = 1290.3000 INCHES YMRP = .0000 IN. YT
BREF = 1290.3000 INCHES ZMRP = 400.0000 IN. ZT
SCALE = .0200

PARAMETRIC DATA

IB-ELV = 10.000 OB-ELV = 5.000
BDFLAP = .000 SPDBRK = .000
RUDDER = .000 SILTS = 1.000
MACH = .800 RN/L = 3.500

RUN NO. 876/ 0 RN/L = 3.50 GRADIENT INTERVAL = -5.00/ 5.00

ALPHAO	BETAO	CNFO	CAFO	CLMFO	CYFO	CYNFO	CBLFO	CNBO	CABO	CLMBO
-4.122	-5.859	.06360	.04550	-.03370	.15570	-.09770	.04830	.02370	.04460	-.01270
-4.174	-3.836	.04830	.04860	-.02230	.09650	-.05940	.02950	.02250	.04160	-.01220
-4.296	.380	.00870	.04570	.00700	-.00550	.00470	-.00270	.02050	.03800	-.01110
-3.794	4.109	.03860	.04690	-.01750	-.09610	.06140	-.03120	.02190	.04080	-.01190
-3.859	6.127	.04510	.04670	-.02390	-.14940	.09590	-.04850	.02290	.04230	-.01250
	GRADIENT	-.00140	-.00022	.00074	-.02424	.01521	-.00764	-.00008	-.00012	.00004

RUN NO. 877/ 0 RN/L = 3.50 GRADIENT INTERVAL = -5.00/ 5.00

ALPHAO	BETAO	CNFO	CAFO	CLMFO	CYFO	CYNFO	CBLFO	CNBO	CABO	CLMBO
-.405	-6.884	.19380	.04140	-.12040	.16710	-.10640	.05600	.02290	.04250	-.01240
-.384	-4.775	.17870	.04570	-.11000	.11210	-.07140	.03770	.02150	.04010	-.01160
-.341	-.555	.14530	.04330	-.08430	.01150	-.00590	.00330	.02000	.03690	-.01090
-.291	3.683	.16940	.04520	-.10470	-.07750	.05160	-.02830	.02080	.03850	-.01130
-.283	5.775	.17870	.04630	-.11360	-.12820	.08540	-.04620	.02160	.03960	-.01180
	GRADIENT	-.00109	-.00006	.00062	-.02242	.01454	-.00780	-.00008	-.00019	.00004

RUN NO. 878/ 0 RN/L = 3.50 GRADIENT INTERVAL = -5.00/ 5.00

ALPHAO	BETAO	CNFO	CAFO	CLMFO	CYFO	CYNFO	CBLFO	CNBO	CABO	CLMBO
4.072	-5.795	.33330	.03880	-.21920	.12510	-.08180	.04870	.02180	.04070	-.01180
4.020	-3.904	.32730	.04060	-.21450	.08420	-.05490	.03300	.02050	.03790	-.01120
3.768	.170	.28970	.03730	-.18530	.00910	-.00540	.00240	.02020	.03670	-.01120
3.638	3.968	.31260	.03840	-.20440	-.06480	.04340	-.02650	.02050	.03720	-.01130
3.833	6.171	.31990	.03750	-.21170	-.11460	.07770	-.04530	.02180	.03940	-.01210
	GRADIENT	-.00196	-.00029	.00135	-.01892	.01248	-.00756	-.00000	-.00009	-.00001

RUN NO. 879/ 0 RN/L = 3.50 GRADIENT INTERVAL = -5.00/ 5.00

ALPHAO	BETAO	CNFO	CAFO	CLMFO	CYFO	CYNFO	CBLFO	CNBO	CABO	CLMBO
6.131	-5.815	.39970	.03650	-.26420	.11850	-.07830	.04600	.02210	.04060	-.01210
5.812	-3.671	.38700	.03850	-.25570	.07540	-.04930	.02930	.02080	.03820	-.01140
5.708	.237	.36320	.03590	-.23620	.00380	-.00220	.00110	.01980	.03600	-.01090
5.831	4.132	.38300	.03670	-.25290	-.06240	.04150	-.02500	.02030	.03680	-.01130
5.719	5.964	.37570	.03610	-.24990	-.10440	.07100	-.04110	.02130	.03870	-.01180
	GRADIENT	-.00052	-.00023	.00036	-.01766	.01164	-.00696	-.00006	-.00018	.00001

IA156A, AEDC PWT 16T-470, O T S W/SILTS (R8N044) (10 MAY 80)

REFERENCE DATA

SREF = 2690.0000 SQ.FT. XMRP = 976.0000 IN. XT
LREF = 1290.3000 INCHES YMRP = .0000 IN. YT
BREF = 1290.3000 INCHES ZMRP = 400.0000 IN. ZT
SCALE = .0200

PARAMETRIC DATA

IB-ELV = 10.000 OB-ELV = 5.000
BDFLAP = .000 SPDBRK = .000
RUDDER = .000 SILTS = 1.000
MACH = .900 RN/L = 3.500

RUN NO. 880/ 0 RN/L = 3.50 GRADIENT INTERVAL = -5.00/ 5.00

ALPHAO	BETAO	CNFO	CAFO	CLMFO	CYFO	CYNFO	CBLFO	CNBO	CABO	CLMBO
-8.312	-6.090	-.10150	.06410	.09100	.18170	-.10990	.05430	.02630	.04950	-.01410
-8.309	-3.820	-.11900	.06600	.10410	.10990	-.06390	.03230	.02570	.04810	-.01380
-8.093	.296	-.15500	.06260	.13030	-.00110	.00260	-.00080	.02340	.04350	-.01260
-7.993	4.299	-.13360	.06540	.11160	-.11330	.07130	-.03490	.02470	.04690	-.01320
-7.946	6.205	-.12990	.06650	.10780	-.17010	.10660	-.05230	.02630	.04930	-.01420
	GRADIENT	-.00183	-.00008	.00095	-.02749	.01665	-.00828	-.00013	-.00015	.00007

RUN NO. 881/ 0 RN/L = 3.50 GRADIENT INTERVAL = -5.00/ 5.00

ALPHAO	BETAO	CNFO	CAFO	CLMFO	CYFO	CYNFO	CBLFO	CNBO	CABO	CLMBO
-6.117	-5.816	-.02030	.06340	.03360	.16840	-.10330	.05210	.02650	.04970	-.01420
-6.284	-3.992	-.04260	.06560	.04950	.10990	-.06530	.03350	.02490	.04660	-.01340
-6.101	.042	-.07960	.06100	.07670	.00400	-.00140	.00110	.02280	.04230	-.01240
-6.038	4.340	-.06160	.06500	.06120	-.10910	.06790	-.03480	.02430	.04540	-.01310
-6.124	6.348	-.06270	.06570	.06060	-.16640	.10380	-.05290	.02570	.04790	-.01390
	GRADIENT	-.00221	-.00006	.00135	-.02628	.01599	-.00820	-.00007	-.00013	.00003

RUN NO. 882/ 0 RN/L = 3.50 GRADIENT INTERVAL = -5.00/ 5.00

ALPHAO	BETAO	CNFO	CAFO	CLMFO	CYFO	CYNFO	CBLFO	CNBO	CABO	CLMBO
-4.268	-6.189	.04790	.06230	-.01410	.16830	-.10380	.05360	.02610	.04920	-.01400
-4.162	-3.882	.03250	.06400	-.00330	.09910	-.05890	.03130	.02460	.04590	-.01330
-4.197	.246	-.01390	.06040	.03070	-.00080	.00140	-.00100	.02210	.04110	-.01200
-3.912	4.303	.01760	.06340	.00550	-.10380	.06440	-.03470	.02430	.04490	-.01320
-3.796	6.101	.02610	.06380	-.00170	-.15110	.09440	-.05050	.02520	.04650	-.01370
	GRADIENT	-.00185	-.00008	.00110	-.02479	.01506	-.00806	-.00004	-.00013	.00001

RUN NO. 883/ 0 RN/L = 3.50 GRADIENT INTERVAL = -5.00/ 5.00

ALPHAO	BETAO	CNFO	CAFO	CLMFO	CYFO	CYNFO	CBLFO	CNBO	CABO	CLMBO
-.435	-6.931	.18790	.05900	-.10850	.16600	-.10500	.05760	.02480	.04670	-.01330
-.406	-4.831	.17240	.06030	-.09940	.11470	-.07220	.04020	.02350	.04390	-.01260
-.357	-.518	.12990	.05590	-.06820	.01010	-.00440	.00340	.02090	.03940	-.01110
-.306	3.667	.16070	.06010	-.09170	-.07750	.05080	-.02960	.02230	.04170	-.01200
-.306	5.770	.16400	.06150	-.09590	-.12560	.08210	-.04680	.02360	.04390	-.01280
	GRADIENT	-.00142	-.00003	.00094	-.02262	.01448	-.00822	-.00014	-.00026	.00007

IA156A, AEDC PWT 16T-470, O T S W/SILTS (R8N044) (10 MAY 80)

REFERENCE DATA

SREF = 2690.0000 SQ.FT. XMRP = 976.0000 IN. XT
LREF = 1290.3000 INCHES YMRP = .0000 IN. YT
BREF = 1290.3000 INCHES ZMRP = 400.0000 IN. ZT
SCALE = .0200

PARAMETRIC DATA

IB-ELV = 10.000 OB-ELV = 5.000
BDFLAP = .000 SPDBRK = .000
RUDDER = .000 SILTS = 1.000
MACH = .900 RN/L = 3.500

RUN NO. 884/ 0 RN/L = 3.50 GRADIENT INTERVAL = -5.00/ 5.00

ALPHAO	BETAO	CNFO	CAFO	CLMFO	CYFO	CYNFO	CBLFO	CNBO	CABO	CLMBO
4.009	-5.714	.33290	.05940	-.21270	.12160	-.07790	.04710	.02350	.04400	-.01270
3.883	-3.867	.32680	.05840	-.20960	.08320	-.05310	.03230	.02220	.04150	-.01190
3.799	.163	.29490	.05370	-.18540	.00750	-.00410	.00210	.02100	.03900	-.01140
3.718	3.965	.31650	.05670	-.20240	-.06790	.04470	-.02680	.02210	.04120	-.01200
3.633	5.901	.31030	.05770	-.19990	-.11350	.07410	-.04330	.02390	.04460	-.01300
	GRADIENT	-.00138	-.00023	.00097	-.01929	.01249	-.00755	-.00002	-.00004	-.00001

IA156A, AEDC PWT 16T-470, O T S W/SILTS (R8N045) (10 MAY 80)

REFERENCE DATA

SREF = 2690.0000 SQ.FT. XMRP = 976.0000 IN. XT
LREF = 1290.3000 INCHES YMRP = .0000 IN. YT
BREF = 1290.3000 INCHES ZMRP = 400.0000 IN. ZT
SCALE = .0200

PARAMETRIC DATA

IB-ELV = 10.000 OB-ELV = 5.000
BDFLAP = .000 SPDBRK = .000
RUDDER = .000 SILTS = 1.000
MACH = .950 RN/L = 3.500

RUN NO. 885/ 0 RN/L = 3.50 GRADIENT INTERVAL = -5.00/ 5.00

ALPHAO	BETAO	CNFO	CAFO	CLMFO	CYFO	CYNFO	CBLFO	CNBO	CABO	CLMBO
-8.385	-6.134	-.12670	.07800	.11640	.19010	-.11750	.05890	.02930	.05480	-.01580
-8.374	-3.850	-.14080	.08130	.12760	.11520	-.06750	.03520	.02860	.05330	-.01550
-8.059	.201	-.17320	.07910	.15120	.00530	-.00180	.00120	.02630	.04890	-.01420
-7.981	4.275	-.15540	.08080	.13570	-.11710	.07420	-.03710	.02810	.05270	-.01510
-7.931	6.166	-.14840	.08060	.12900	-.17760	.11300	-.05590	.02930	.05530	-.01570
	GRADIENT	-.00179	-.00006	.00099	-.02859	.01744	-.00890	-.00006	-.00007	.00005

RUN NO. 886/ 0 RN/L = 3.50 GRADIENT INTERVAL = -5.00/ 5.00

ALPHAO	BETAO	CNFO	CAFO	CLMFO	CYFO	CYNFO	CBLFO	CNBO	CABO	CLMBO
-6.186	-5.886	-.03960	.07450	.05350	.16960	-.10370	.05360	.02910	.05520	-.01550
-6.104	-3.866	-.05610	.08100	.06650	.10570	-.06200	.03340	.02720	.05080	-.01470
-6.229	.088	-.10390	.07740	.10130	.00430	-.00200	.00130	.02560	.04730	-.01390
-5.890	4.177	-.07590	.08040	.07880	-.10920	.06850	-.03580	.02740	.05070	-.01490
-5.963	6.370	-.07290	.07920	.07420	-.17340	.10980	-.05620	.02930	.05490	-.01580
	GRADIENT	-.00241	-.00007	.00149	-.02673	.01623	-.00861	.00003	-.00001	-.00003

IA156A, AEDC PWT 16T-470, O T S W/SILTS (R8N045) (10 MAY 80)

REFERENCE DATA

SREF = 2690.0000 SQ.FT. XMRP = 976.0000 IN. XT
LREF = 1290.3000 INCHES YMRP = .0000 IN. YT
BREF = 1290.3000 INCHES ZMRP = 400.0000 IN. ZT
SCALE = .0200

PARAMETRIC DATA

IB-ELV = 10.000 OB-ELV = 5.000
BDFLAP = .000 SPDBRK = .000
RUDDER = .000 SILTS = 1.000
MACH = .950 RN/L = 3.500

RUN NO. 887/ 0 RN/L = 3.50 GRADIENT INTERVAL = -5.00/ 5.00

ALPHAO	BETAO	CNFO	CAFO	CLMFO	CYFO	CYNFO	CBLFO	CNBO	CABO	CLMBO
-4.317	-6.270	.03030	.07790	.00510	.16950	-.10360	.05560	.02780	.05200	-.01500
-4.292	-4.005	.01180	.07940	.01790	.10120	-.05920	.03310	.02640	.04950	-.01410
-4.154	.396	-.03130	.07670	.05000	-.00540	.00400	-.00240	.02510	.04630	-.01370
-3.888	4.287	-.00090	.07870	.02470	-.10550	.06550	-.03600	.02660	.04930	-.01450
-4.059	6.259	.00300	.07860	.01990	-.15940	.10010	-.05390	.02830	.05240	-.01530
	GRADIENT	-.00171	-.00010	.00096	-.02491	.01502	-.00833	.00002	-.00004	-.00005

RUN NO. 888/ 0 RN/L = 3.50 GRADIENT INTERVAL = -5.00/ 5.00

ALPHAO	BETAO	CNFO	CAFO	CLMFO	CYFO	CYNFO	CBLFO	CNBO	CABO	CLMBO
-.452	-6.978	.18020	.07330	-.09890	.16200	-.09910	.05880	.02800	.05290	-.01490
-.422	-4.828	.16110	.07430	-.08590	.10740	-.06410	.03950	.02640	.04990	-.01410
-.367	-.566	.11500	.07110	-.05260	.01030	-.00410	.00380	.02310	.04350	-.01240
-.314	3.685	.14660	.07530	-.07720	-.07650	.04880	-.03060	.02500	.04650	-.01350
-.313	5.791	.15210	.07730	-.08290	-.12740	.08160	-.04940	.02660	.04940	-.01440
	GRADIENT	-.00171	.00012	.00103	-.02160	.01326	-.00823	-.00016	-.00040	.00007

RUN NO. 889/ 0 RN/L = 3.50 GRADIENT INTERVAL = -5.00/ 5.00

ALPHAO	BETAO	CNFO	CAFO	CLMFO	CYFO	CYNFO	CBLFO	CNBO	CABO	CLMBO
4.030	-5.635	.32850	.07190	-.20590	.11520	-.07160	.04750	.02500	.04720	-.01330
3.878	-3.794	.31370	.07110	-.19620	.07540	-.04550	.03150	.02360	.04450	-.01260
3.700	.220	.27890	.06620	-.16950	.00360	-.00110	.00110	.02460	.04560	-.01330
3.828	4.057	.31350	.07010	-.19630	-.06570	.04140	-.02730	.02440	.04550	-.01320
3.780	6.076	.31150	.07210	-.19570	-.11100	.07050	-.04500	.02620	.04850	-.01420
	GRADIENT	-.00009	-.00014	.00004	-.01797	.01107	-.00749	.00010	.00013	-.00008

IA156A, AEDC PWT 16T-470, O T S W/SILTS (R8N046) (10 MAY 80)

REFERENCE DATA

SREF = 2690.0000 SQ.FT. XMRP = 976.0000 IN. XT
LREF = 1290.3000 INCHES YMRP = .0000 IN. YT
BREF = 1290.3000 INCHES ZMRP = 400.0000 IN. ZT
SCALE = .0200

PARAMETRIC DATA

IB-ELV = 10.000 OB-ELV = 5.000
BDFLAP = .000 SPDBRK = .000
RUDDER = .000 SILTS = 1.000
MACH = 1.050 RN/L = 3.500

RUN NO. 892/ 0 RN/L = 3.50 GRADIENT INTERVAL = -5.00/ 5.00

ALPHAO	BETAO	CNFO	CAFO	CLMFO	CYFO	CYNFO	CBLFO	CNBO	CABO	CLMBO
-8.394	-6.044	-.17090	.09240	.16280	.18910	-.11550	.06300	.03630	.06930	-.01920
-8.401	-3.919	-.18870	.09580	.17680	.12370	-.07370	.04080	.03620	.06850	-.01930
-8.206	.356	-.22150	.09550	.20120	-.00040	.00260	-.00110	.03430	.06400	-.01860
-8.110	4.340	-.20850	.09680	.18960	-.11590	.07460	-.03970	.03470	.06460	-.01870
-8.047	6.243	-.19560	.09550	.17740	-.17340	.10920	-.05850	.03490	.06540	-.01880
	GRADIENT	-.00246	.00012	.00160	-.02901	.01795	-.00975	-.00018	-.00048	.00007

RUN NO. 893/ 0 RN/L = 3.50 GRADIENT INTERVAL = -5.00/ 5.00

ALPHAO	BETAO	CNFO	CAFO	CLMFO	CYFO	CYNFO	CBLFO	CNBO	CABO	CLMBO
-6.309	-6.106	-.08360	.09340	.10180	.18000	-.10870	.06300	.03680	.07040	-.01940
-6.249	-3.982	-.10300	.09580	.11600	.11470	-.06800	.04010	.03610	.06810	-.01930
-6.076	.168	-.14360	.09540	.14640	.00540	-.00160	.00080	.03440	.06410	-.01860
-6.134	4.331	-.12750	.09650	.13100	-.11160	.07080	-.04030	.03400	.06300	-.01850
-5.824	6.212	-.10580	.09610	.11310	-.16060	.10020	-.05750	.03430	.06370	-.01850
	GRADIENT	-.00294	.00008	.00180	-.02722	.01670	-.00967	-.00025	-.00061	.00010

RUN NO. 894/ 0 RN/L = 3.50 GRADIENT INTERVAL = -5.00/ 5.00

ALPHAO	BETAO	CNFO	CAFO	CLMFO	CYFO	CYNFO	CBLFO	CNBO	CABO	CLMBO
-4.192	-5.878	-.00300	.09270	.04430	.15970	-.09620	.05930	.03650	.06970	-.01930
-4.435	-4.131	-.03070	.09610	.06480	.11230	-.06690	.04130	.03600	.06760	-.01930
-4.347	.164	-.07820	.09470	.10020	.00520	-.00150	.00090	.03490	.06510	-.01880
-4.040	4.363	-.04240	.09610	.07070	-.10430	.06550	-.03970	.03410	.06320	-.01850
-3.833	6.221	-.01960	.09670	.05170	-.15300	.09540	-.05830	.03460	.06430	-.01870
	GRADIENT	-.00141	-.00000	.00072	-.02550	.01559	-.00954	-.00022	-.00052	.00009

RUN NO. 895/ 0 RN/L = 3.50 GRADIENT INTERVAL = -5.00/ 5.00

ALPHAO	BETAO	CNFO	CAFO	CLMFO	CYFO	CYNFO	CBLFO	CNBO	CABO	CLMBO
-.497	-6.991	.16330	.09320	-.07330	.16680	-.10080	.06930	.03710	.07050	-.01970
-.464	-4.863	.13730	.09500	-.05430	.11570	-.07000	.04820	.03650	.06840	-.01960
-.409	-.590	.08690	.09180	-.01540	.01620	-.00850	.00620	.03430	.06400	-.01850
-.352	3.655	.11480	.09800	-.03770	-.07620	.04990	-.03470	.03400	.06320	-.01840
-.344	5.795	.12640	.09950	-.04970	-.12370	.07930	-.05450	.03440	.06410	-.01850
	GRADIENT	-.00265	.00035	.00196	-.02253	.01408	-.00973	-.00029	-.00061	.00014

IA156A, AEDC PWT 16T-470, O T S W/SILTS (R8N046) (10 MAY 80)

REFERENCE DATA

SREF = 2690.0000 SQ.FT. XMRP = 976.0000 IN. XT
LREF = 1290.3000 INCHES YMRP = .0000 IN. YT
BREF = 1290.3000 INCHES ZMRP = 400.0000 IN. ZT
SCALE = .0200

PARAMETRIC DATA

IB-ELV = 10.000 OB-ELV = 5.000
BDFLAP = .000 SPDBRK = .000
RUDDER = .000 SILTS = 1.000
MACH = 1.050 RN/L = 3.500

RUN NO. 896/ 0 RN/L = 3.50 GRADIENT INTERVAL = -5.00/ 5.00

ALPHAO	BETAO	CNFO	CAFO	CLMFO	CYFO	CYNFO	CBLFO	CNBO	CABO	CLMBO
3.963	-5.872	.31110	.09410	-.18090	.12500	-.07780	.05770	.03490	.06620	-.01850
4.045	-3.828	.29800	.09450	-.17140	.08230	-.05060	.03860	.03500	.06570	-.01880
3.692	.160	.25650	.09060	-.13970	.00810	-.00440	.00310	.03370	.06300	-.01820
3.637	3.941	.28940	.09480	-.16600	-.06480	.04190	-.03110	.03300	.06120	-.01800
3.867	6.115	.30280	.09460	-.17750	-.10890	.06870	-.05070	.03440	.06390	-.01870
	GRADIENT	-.00119	.00003	.00076	-.01893	.01190	-.00897	-.00026	-.00058	.00010

IA156A, AEDC PWT 16T-470, O T S W/SILTS (R8N047) (10 MAY 80)

REFERENCE DATA

SREF = 2690.0000 SQ.FT. XMRP = 976.0000 IN. XT
LREF = 1290.3000 INCHES YMRP = .0000 IN. YT
BREF = 1290.3000 INCHES ZMRP = 400.0000 IN. ZT
SCALE = .0200

PARAMETRIC DATA

IB-ELV = 10.000 OB-ELV = 5.000
BDFLAP = .000 SPDBRK = .000
RUDDER = .000 SILTS = 1.000
MACH = 1.100 RN/L = 3.500

RUN NO. 897/ 0 RN/L = 3.49 GRADIENT INTERVAL = -5.00/ 5.00

ALPHAO	BETAO	CNFO	CAFO	CLMFO	CYFO	CYNFO	CBLFO	CNBO	CABO	CLMBO
-8.358	-6.136	-.16310	.09900	.15850	.18540	-.11220	.06330	.03440	.06620	-.01810
-8.433	-3.920	-.17750	.10300	.16940	.11660	-.06830	.03900	.03350	.06290	-.01790
-8.252	.215	-.20930	.10040	.19320	.00040	.00180	-.00050	.03130	.05850	-.01690
-8.165	4.341	-.19360	.10410	.18090	-.11370	.07200	-.03930	.03220	.05990	-.01740
-8.137	6.282	-.18600	.10250	.17340	-.17200	.10690	-.05890	.03270	.06130	-.01760
	GRADIENT	-.00195	.00013	.00139	-.02788	.01698	-.00948	-.00016	-.00036	.00006

RUN NO. 898/ 0 RN/L = 3.50 GRADIENT INTERVAL = -5.00/ 5.00

ALPHAO	BETAO	CNFO	CAFO	CLMFO	CYFO	CYNFO	CBLFO	CNBO	CABO	CLMBO
-6.235	-5.974	-.07050	.10050	.09240	.16490	-.09770	.05890	.03310	.06280	-.01760
-6.460	-4.032	-.09460	.10200	.11070	.11090	-.06470	.03880	.03260	.06130	-.01750
-6.219	.115	-.13040	.10030	.13760	.00220	.00040	.00000	.03070	.05710	-.01660
-6.157	4.333	-.10440	.10220	.11480	-.10880	.06750	-.03940	.03060	.05650	-.01670
-5.878	6.244	-.09500	.10250	.09850	-.15770	.09720	-.05820	.03200	.05940	-.01730
	GRADIENT	-.00115	.00003	.00047	-.02626	.01580	-.00935	-.00024	-.00057	.00010

IA156A, AEDC PWT 16T-470, O T S W/SILTS (R8N047) (10 MAY 80)

REFERENCE DATA

SREF = 2690.0000 SQ.FT. XMRP = 976.0000 IN. XT
LREF = 1290.3000 INCHES YMRP = .0000 IN. YT
BREF = 1290.3000 INCHES ZMRP = 400.0000 IN. ZT
SCALE = .0200

PARAMETRIC DATA

IB-ELV = 10.000 OB-ELV = 5.000
BDFLAP = .000 SPDBRK = .000
RUDDER = .000 SILTS = 1.000
MACH = 1.100 RN/L = 3.500

RUN NO. 899/ 0 RN/L = 3.50 GRADIENT INTERVAL = -5.00/ 5.00

ALPHAO	BETAO	CNFO	CAFO	CLMFO	CYFO	CYNFO	CBLFO	CNBO	CABO	CLMBO
-4.135	-6.044	.02150	.10070	.02590	.15320	-.09080	.05890	.03260	.06170	-.01740
-4.267	-3.979	-.00540	.10100	.04590	.09900	-.05730	.03760	.03190	.05950	-.01730
-4.129	.386	-.04720	.09870	.07760	-.00250	.00270	-.00220	.03010	.05540	-.01640
-3.853	4.244	-.00750	.10200	.04510	-.09550	.05860	-.03850	.02970	.05470	-.01620
-4.015	6.208	-.00010	.10300	.03710	-.14610	.08960	-.05770	.03110	.05760	-.01690
	GRADIENT	-.00046	.00011	.00006	-.02364	.01409	-.00925	-.00027	-.00059	.00014

RUN NO. 900/ 0 RN/L = 3.50 GRADIENT INTERVAL = -5.00/ 5.00

ALPHAO	BETAO	CNFO	CAFO	CLMFO	CYFO	CYNFO	CBLFO	CNBO	CABO	CLMBO
-.383	-7.070	.17780	.09940	-.08540	.15980	-.09560	.06820	.03290	.06200	-.01760
-.420	-4.981	.15660	.10030	-.07010	.11270	-.06720	.04820	.03170	.05900	-.01710
-.399	-.647	.10880	.09650	-.03420	.01560	-.00750	.00610	.02890	.05340	-.01570
-.384	3.467	.12850	.10040	-.05120	-.07070	.04620	-.03300	.02870	.05330	-.01560
-.348	5.975	.14340	.10240	-.06510	-.12650	.08000	-.05650	.02940	.05440	-.01590
	GRADIENT	-.00340	.00000	.00229	-.02172	.01343	-.00961	-.00036	-.00068	.00018

RUN NO. 901/ 0 RN/L = 3.50 GRADIENT INTERVAL = -5.00/ 5.00

ALPHAO	BETAO	CNFO	CAFO	CLMFO	CYFO	CYNFO	CBLFO	CNBO	CABO	CLMBO
4.196	-5.913	.34110	.09750	-.20550	.12130	-.07490	.05590	.02920	.05520	-.01560
3.868	-3.725	.31220	.09820	-.18510	.07800	-.04800	.03630	.02920	.05470	-.01570
3.661	.204	.27250	.09570	-.15320	.00570	-.00320	.00180	.02970	.05490	-.01620
3.820	4.039	.31050	.09750	-.18480	-.06600	.04150	-.03180	.02830	.05210	-.01540
3.780	6.063	.31520	.09850	-.19030	-.10790	.06750	-.05050	.02890	.05330	-.01580
	GRADIENT	-.00026	-.00009	.00007	-.01855	.01153	-.00877	-.00011	-.00033	.00004

IA156A, AEDC PWT 16T-470, O T S W/SILTS (R8N048) (10 MAY 80)

REFERENCE DATA

SREF = 2690.0000 SQ.FT. XMRP = 976.0000 IN. XT
LREF = 1290.3000 INCHES YMRP = .0000 IN. YT
BREF = 1290.3000 INCHES ZMRP = 400.0000 IN. ZT
SCALE = .0200

PARAMETRIC DATA

IB-ELV = 10.000 OB-ELV = 5.000
BDFLAP = .000 SPDBRK = .000
RUDDER = .000 SILTS = 1.000
MACH = 1.150 RN/L = 3.500

RUN NO. 902/ 0 RN/L = 3.50 GRADIENT INTERVAL = -5.00/ 5.00

ALPHAO	BETAO	CNFO	CAFO	CLMFO	CYFO	CYNFO	CBLFO	CNBO	CABO	CLMBO
-8.420	-6.010	-.15000	.10400	.15050	.18240	-.11020	.06310	.03200	.06180	-.01670
-8.432	-3.894	-.16370	.10770	.16210	.12140	-.07140	.04070	.03150	.05940	-.01690
-8.234	.369	-.20100	.10700	.19010	.00300	.00020	-.00020	.02880	.05390	-.01550
-8.194	4.324	-.19250	.10840	.18140	-.10950	.06900	-.03820	.03020	.05630	-.01640
-8.136	6.243	-.17940	.10840	.16920	-.16550	.10300	-.05780	.03050	.05710	-.01640
	GRADIENT	-.00357	.00008	.00240	-.02809	.01703	-.00960	-.00016	-.00039	.00006

RUN NO. 903/ 0 RN/L = 3.49 GRADIENT INTERVAL = -5.00/ 5.00

ALPHAO	BETAO	CNFO	CAFO	CLMFO	CYFO	CYNFO	CBLFO	CNBO	CABO	CLMBO
-6.433	-6.108	-.05950	.10560	.08460	.17320	-.10340	.06360	.03150	.06020	-.01670
-6.084	-3.837	-.06710	.10640	.09060	.10450	-.06100	.03840	.03040	.05700	-.01630
-6.206	.121	-.12230	.10300	.13220	.00830	-.00430	.00200	.02880	.05350	-.01560
-6.150	4.334	-.10100	.10730	.11250	-.10260	.06310	-.03890	.02900	.05370	-.01570
-5.938	6.320	-.08190	.10780	.09610	-.15630	.09650	-.05890	.03010	.05590	-.01630
	GRADIENT	-.00405	.00012	.00260	-.02536	.01520	-.00946	-.00017	-.00040	.00007

RUN NO. 904/ 0 RN/L = 3.50 GRADIENT INTERVAL = -5.00/ 5.00

ALPHAO	BETAO	CNFO	CAFO	CLMFO	CYFO	CYNFO	CBLFO	CNBO	CABO	CLMBO
-4.285	-6.227	.03140	.10520	.01770	.16150	-.09630	.06360	.03140	.05960	-.01670
-4.310	-3.932	.01040	.10590	.03320	.10010	-.05920	.03980	.02990	.05590	-.01620
-4.022	.234	-.02580	.10290	.06160	.00500	-.00240	.00030	.02860	.05290	-.01550
-3.778	4.160	-.00040	.10570	.03920	-.09130	.05610	-.03830	.02820	.05190	-.01540
-3.957	6.115	.00310	.10750	.03420	-.14230	.08750	-.05730	.02960	.05450	-.01610
	GRADIENT	-.00141	-.00003	.00080	-.02364	.01424	-.00965	-.00021	-.00050	.00010

RUN NO. 905/ 0 RN/L = 3.50 GRADIENT INTERVAL = -5.00/ 5.00

ALPHAO	BETAO	CNFO	CAFO	CLMFO	CYFO	CYNFO	CBLFO	CNBO	CABO	CLMBO
-.374	-7.077	.19320	.10370	-.09740	.16260	-.09800	.06890	.03140	.05930	-.01680
-.407	-4.717	.17510	.10560	-.08540	.10720	-.06460	.04570	.03010	.05610	-.01620
-.387	-.679	.13700	.10240	-.05710	.01560	-.00750	.00640	.02820	.05200	-.01530
-.358	3.482	.15650	.10720	-.07260	-.07170	.04710	-.03320	.02760	.05110	-.01500
-.371	5.720	.16140	.10760	-.07840	-.12220	.07810	-.05470	.02830	.05220	-.01540
	GRADIENT	-.00223	.00020	.00153	-.02182	.01362	-.00962	-.00030	-.00061	.00015

IA156A, AEDC PWT 16T-470, O T S W/SILTS (R8N048) (10 MAY 80)

REFERENCE DATA

SREF = 2690.0000 SQ.FT. XMRP = 976.0000 IN. XT
LREF = 1290.3000 INCHES YMRP = .0000 IN. YT
BREF = 1290.3000 INCHES ZMRP = 400.0000 IN. ZT
SCALE = .0200

PARAMETRIC DATA

IB-ELV = 10.000 OB-ELV = 5.000
BDFLAP = .000 SPDBRK = .000
RUDDER = .000 SILTS = 1.000
MACH = 1.150 RN/L = 3.500

RUN NO. 906/ 0 RN/L = 3.50 GRADIENT INTERVAL = -5.00/ 5.00

ALPHAO	BETAO	CNFO	CAFO	CLMFO	CYFO	CYNFO	CBLFO	CNBO	CABO	CLMBO
4.100	-5.735	.33570	.10290	-.20270	.12300	-.07680	.05600	.02820	.05300	-.01510
3.871	-3.574	.31250	.10350	-.18590	.08140	-.05100	.03700	.02850	.05330	-.01540
3.762	.188	.29430	.10110	-.17030	.01020	-.00680	.00350	.02830	.05260	-.01530
3.918	4.194	.32980	.10370	-.19990	-.06630	.04160	-.03220	.02710	.04980	-.01480
3.702	5.896	.32400	.10430	-.19670	-.10410	.06550	-.04860	.02780	.05120	-.01520
	GRADIENT	.00230	.00003	-.00186	-.01901	.01192	-.00891	-.00018	-.00045	.00008

IA156A, AEDC PWT 16T-470, O T S W/SILTS (R8N049) (10 MAY 80)

REFERENCE DATA

SREF = 2690.0000 SQ.FT. XMRP = 976.0000 IN. XT
LREF = 1290.3000 INCHES YMRP = .0000 IN. YT
BREF = 1290.3000 INCHES ZMRP = 400.0000 IN. ZT
SCALE = .0200

PARAMETRIC DATA

IB-ELV = 10.000 OB-ELV = 5.000
BDFLAP = .000 SPDBRK = .000
RUDDER = .000 SILTS = 1.000
MACH = 1.250 RN/L = 3.500

RUN NO. 907/ 0 RN/L = 3.50 GRADIENT INTERVAL = -5.00/ 5.00

ALPHAO	BETAO	CNFO	CAFO	CLMFO	CYFO	CYNFO	CBLFO	CNBO	CABO	CLMBO
-8.169	-5.854	-.12070	.11120	.12870	.17480	-.10490	.06170	.02870	.05580	-.01490
-8.464	-3.941	-.14180	.11350	.14480	.11810	-.06870	.04100	.02790	.05330	-.01480
-8.271	.353	-.17130	.11130	.16720	-.00220	.00500	-.00110	.02630	.04930	-.01410
-8.168	4.376	-.15670	.11290	.15290	-.11620	.07560	-.04110	.02740	.05140	-.01470
-8.104	6.294	-.14810	.11320	.14460	-.17350	.11070	-.06080	.02830	.05340	-.01510
	GRADIENT	-.00185	-.00008	.00102	-.02817	.01735	-.00987	-.00006	-.00024	.00001

RUN NO. 908/ 0 RN/L = 3.50 GRADIENT INTERVAL = -5.00/ 5.00

ALPHAO	BETAO	CNFO	CAFO	CLMFO	CYFO	CYNFO	CBLFO	CNBO	CABO	CLMBO
-6.224	-5.927	-.03800	.11060	.06620	.16380	-.09820	.06050	.02810	.05370	-.01480
-6.462	-4.030	-.06200	.11180	.08380	.11010	-.06410	.04040	.02740	.05180	-.01460
-6.215	.096	-.08690	.10940	.10270	.00190	.00170	.00070	.02610	.04890	-.01410
-6.146	4.359	-.06920	.11210	.08630	-.11000	.07060	-.04060	.02650	.04920	-.01440
-5.860	6.264	-.05810	.11060	.07590	-.16260	.10280	-.05940	.02820	.05290	-.01510
	GRADIENT	-.00083	.00004	.00028	-.02624	.01606	-.00966	-.00011	-.00031	.00002

IA156A, AEDC PWT 16T-470, O T S W/SILTS (R8N049) (10 MAY 80)

REFERENCE DATA

SREF = 2690.0000 SQ.FT. XMRP = 976.0000 IN. XT
LREF = 1290.3000 INCHES YMRP = .0000 IN. YT
BREF = 1290.3000 INCHES ZMRP = 400.0000 IN. ZT
SCALE = .0200

PARAMETRIC DATA

IB-ELV = 10.000 OB-ELV = 5.000
BDFLAP = .000 SPDBRK = .000
RUDDER = .000 SILTS = 1.000
MACH = 1.250 RN/L = 3.500

RUN NO. 909/ 0 RN/L = 3.50 GRADIENT INTERVAL = -5.00/ 5.00

ALPHAO	BETAO	CNFO	CAFO	CLMFO	CYFO	CYNFO	CBLFO	CNBO	CABO	CLMBO
-4.383	-6.232	.03520	.10890	.01140	.16040	-.09600	.06140	.02880	.05520	-.01520
-4.297	-4.024	.02900	.11070	.01580	.09710	-.05660	.03800	.02760	.05200	-.01480
-4.171	.380	.00350	.10850	.03500	-.00460	.00550	-.00210	.02630	.04890	-.01420
-3.910	4.253	.02550	.11140	.01580	-.09730	.06170	-.03750	.02600	.04810	-.01420
-4.018	6.273	.02060	.11030	.01690	-.15170	.09540	-.05760	.02720	.05070	-.01470
	GRADIENT	-.00054	.00007	.00010	-.02348	.01429	-.00912	-.00020	-.00048	.00007

RUN NO. 910/ 0 RN/L = 3.50 GRADIENT INTERVAL = -5.00/ 5.00

ALPHAO	BETAO	CNFO	CAFO	CLMFO	CYFO	CYNFO	CBLFO	CNBO	CABO	CLMBO
-.412	-7.127	.20130	.10940	-.10870	.16450	-.10010	.06620	.02840	.05420	-.01500
-.440	-4.817	.18680	.11150	-.09850	.10870	-.06550	.04420	.02710	.05120	-.01450
-.401	-.646	.16050	.10830	-.07930	.01390	-.00620	.00570	.02610	.04870	-.01410
-.373	3.822	.17520	.11390	-.09230	-.07970	.05220	-.03440	.02490	.04630	-.01350
-.349	5.731	.17230	.11270	-.09200	-.12330	.07900	-.05150	.02610	.04830	-.01420
	GRADIENT	-.00129	.00029	.00067	-.02180	.01362	-.00910	-.00025	-.00057	.00012

RUN NO. 911/ 0 RN/L = 3.50 GRADIENT INTERVAL = -5.00/ 5.00

ALPHAO	BETAO	CNFO	CAFO	CLMFO	CYFO	CYNFO	CBLFO	CNBO	CABO	CLMBO
4.089	-5.764	.35640	.11050	-.22290	.12460	-.07820	.05340	.02620	.04930	-.01400
3.996	-3.850	.34150	.11120	-.21220	.08450	-.05280	.03670	.02630	.04910	-.01420
3.717	.138	.31190	.10750	-.18880	.00560	-.00310	.00240	.02640	.04910	-.01420
3.584	3.832	.32310	.11090	-.19960	-.06680	.04360	-.03000	.02520	.04650	-.01370
3.804	6.128	.32980	.11060	-.20650	-.11420	.07270	-.04950	.02560	.04730	-.01390
	GRADIENT	-.00246	-.00005	.00170	-.01970	.01255	-.00868	-.00014	-.00033	.00006

IA156A, AEDC PWT 16T-470, O T S W/SILTS (R8N050) (10 MAY 80)

REFERENCE DATA

SREF = 2690.0000 SQ.FT. XMRP = 976.0000 IN. XT
LREF = 1290.3000 INCHES YMRP = .0000 IN. YT
BREF = 1290.3000 INCHES ZMRP = 400.0000 IN. ZT
SCALE = .0200

PARAMETRIC DATA

IB-ELV = 10.000 OB-ELV = 5.000
BDFLAP = .000 SPDBRK = .000
RUDDER = .000 SILTS = 1.000
MACH = 1.400 RN/L = 3.500

RUN NO. 912/ 0 RN/L = 3.50 GRADIENT INTERVAL = -5.00/ 5.00

ALPHAO	BETAO	CNFO	CAFO	CLMFO	CYFO	CYNFO	CBLFO	CNBO	CABO	CLMBO
-8.444	-6.059	-.10980	.11920	.12080	.18600	-.11340	.06210	.02610	.05130	-.01340
-8.457	-3.924	-.12370	.12110	.13000	.12000	-.07170	.03980	.02500	.04850	-.01300
-8.142	.277	-.14630	.11860	.14550	.00100	.00250	-.00060	.02410	.04530	-.01290
-8.038	4.339	-.13710	.11930	.13550	-.11340	.07420	-.03860	.02480	.04690	-.01320
-8.005	6.234	-.13710	.11800	.13430	-.17190	.11140	-.05740	.02520	.04800	-.01340
	GRADIENT	-.00164	-.00022	.00068	-.02825	.01766	-.00949	-.00003	-.00020	-.00002

RUN NO. 913/ 0 RN/L = 3.51 GRADIENT INTERVAL = -5.00/ 5.00

ALPHAO	BETAO	CNFO	CAFO	CLMFO	CYFO	CYNFO	CBLFO	CNBO	CABO	CLMBO
-6.345	-5.891	-.03910	.11750	.06510	.16800	-.10250	.05760	.02510	.04880	-.01310
-6.201	-3.919	-.05040	.11720	.07270	.10850	-.06440	.03670	.02510	.04820	-.01320
-6.307	.231	-.07660	.11640	.09070	.00080	.00200	-.00050	.02380	.04460	-.01280
-6.043	4.311	-.06260	.11750	.07670	-.10960	.07080	-.03730	.02380	.04490	-.01280
-5.918	6.486	-.06110	.11470	.07430	-.17130	.11010	-.05790	.02450	.04660	-.01290
	GRADIENT	-.00150	.00004	.00050	-.02650	.01643	-.00899	-.00016	-.00040	.00005

RUN NO. 914/ 0 RN/L = 3.50 GRADIENT INTERVAL = -5.00/ 5.00

ALPHAO	BETAO	CNFO	CAFO	CLMFO	CYFO	CYNFO	CBLFO	CNBO	CABO	CLMBO
-4.205	-5.891	.03590	.11500	.00780	.15470	-.09370	.05470	.02510	.04850	-.01310
-4.190	-3.860	.03110	.11740	.01000	.09750	-.05740	.03430	.02420	.04600	-.01290
-4.215	.300	.00980	.11440	.02450	-.00190	.00350	-.00140	.02360	.04410	-.01280
-3.880	4.319	.02470	.11450	.01010	-.10110	.06450	-.03530	.02430	.04560	-.01300
-4.009	6.379	.01410	.11320	.01660	-.15570	.09910	-.05440	.02420	.04590	-.01290
	GRADIENT	-.00081	-.00036	.00003	-.02428	.01490	-.00851	.00001	-.00005	-.00001

RUN NO. 915/ 0 RN/L = 3.50 GRADIENT INTERVAL = -5.00/ 5.00

ALPHAO	BETAO	CNFO	CAFO	CLMFO	CYFO	CYNFO	CBLFO	CNBO	CABO	CLMBO
-.589	-7.127	.18560	.11290	-.10240	.16790	-.10240	.06280	.02590	.04980	-.01360
-.493	-4.697	.17590	.11480	-.09690	.10490	-.06290	.03970	.02460	.04690	-.01310
-.450	-.743	.16240	.11380	-.08740	.01570	-.00710	.00620	.02370	.04470	-.01270
-.436	3.828	.16720	.11640	-.09310	-.08080	.05370	-.03190	.02330	.04360	-.01250
-.462	5.735	.15680	.11480	-.08720	-.12720	.08290	-.04890	.02450	.04610	-.01310
	GRADIENT	-.00097	.00020	.00040	-.02176	.01367	-.00840	-.00015	-.00038	.00007

IA156A, AEDC PWT 16T-470, O T S W/SILTS (R8N050) (10 MAY 80)

REFERENCE DATA

SREF = 2690.0000 SQ.FT. XMRP = 976.0000 IN. XT
LREF = 1290.3000 INCHES YMRP = .0000 IN. YT
BREF = 1290.3000 INCHES ZMRP = 400.0000 IN. ZT
SCALE = .0200

PARAMETRIC DATA

IB-ELV = 10.000 OB-ELV = 5.000
BDFLAP = .000 SPDBRK = .000
RUDDER = .000 SILTS = 1.000
MACH = 1.400 RN/L = 3.500

RUN NO. 916/ 0 RN/L = 3.50 GRADIENT INTERVAL = -5.00/ 5.00

ALPHAO	BETAO	CNFO	CAFO	CLMFO	CYFO	CYNFO	CBLFO	CNBO	CABO	CLMBO
4.086	-5.765	.34770	.11530	-.22300	.12600	-.07990	.05160	.02450	.04610	-.01310
4.035	-3.799	.33150	.11520	-.21190	.08460	-.05300	.03550	.02370	.04400	-.01280
3.700	.153	.31240	.11260	-.19730	.00700	-.00410	.00290	.02360	.04450	-.01260
3.628	3.941	.31610	.11460	-.20110	-.06780	.04460	-.02850	.02340	.04370	-.01260
3.569	5.882	.31490	.11350	-.20200	-.11170	.07260	-.04540	.02410	.04500	-.01300
	GRADIENT	-.00201	-.00008	.00141	-.01969	.01261	-.00827	-.00004	-.00004	.00003

IA156A, AEDC PWT 16T-470, O T S W/SILTS (R8N051) (10 MAY 80)

REFERENCE DATA

SREF = 2690.0000 SQ.FT. XMRP = 976.0000 IN. XT
LREF = 1290.3000 INCHES YMRP = .0000 IN. YT
BREF = 1290.3000 INCHES ZMRP = 400.0000 IN. ZT
SCALE = .0200

PARAMETRIC DATA

IB-ELV = 10.000 OB-ELV = 5.000
BDFLAP = .000 SPDBRK = .000
RUDDER = .000 SILTS = 1.000
MACH = 1.550 RN/L = 3.200

RUN NO. 917/ 0 RN/L = 3.19 GRADIENT INTERVAL = -5.00/ 5.00

ALPHAO	BETAO	CNFO	CAFO	CLMFO	CYFO	CYNFO	CBLFO	CNBO	CABO	CLMBO
-8.555	-6.025	-.09880	.12200	.11210	.17930	-.11090	.05850	.02320	.04580	-.01190
-8.567	-3.877	-.11210	.12380	.12100	.11840	-.07120	.03840	.02220	.04330	-.01150
-8.224	.412	-.13430	.12290	.13550	.00290	.00180	-.00040	.02210	.04180	-.01180
-8.053	4.487	-.13440	.12210	.13350	-.11040	.07330	-.03730	.02190	.04150	-.01170
-8.050	6.312	-.13390	.11970	.13180	-.16370	.10740	-.05420	.02220	.04250	-.01170
	GRADIENT	-.00269	-.00020	.00151	-.02735	.01727	-.00905	-.00004	-.00022	-.00002

RUN NO. 918/ 0 RN/L = 3.19 GRADIENT INTERVAL = -5.00/ 5.00

ALPHAO	BETAO	CNFO	CAFO	CLMFO	CYFO	CYNFO	CBLFO	CNBO	CABO	CLMBO
-6.265	-5.820	-.02940	.11960	.05780	.16350	-.10110	.05410	.02350	.04590	-.01210
-6.427	-3.972	-.05010	.12130	.07190	.11000	-.06650	.03580	.02250	.04350	-.01170
-6.209	.217	-.06720	.11950	.08230	.00220	.00100	.00040	.02150	.04040	-.01150
-6.074	4.472	-.06890	.11860	.08100	-.11020	.07230	-.03620	.02240	.04250	-.01190
-5.992	6.606	-.06870	.11560	.07900	-.16830	.10970	-.05550	.02260	.04320	-.01190
	GRADIENT	-.00222	-.00032	.00107	-.02608	.01644	-.00853	-.00001	-.00012	-.00002

IA156A, AEDC PWT 16T-470, O T S W/SILTS (R8N051) (10 MAY 80)

REFERENCE DATA

SREF = 2690.0000 SQ.FT. XMRP = 976.0000 IN. XT
LREF = 1290.3000 INCHES YMRP = .0000 IN. YT
BREF = 1290.3000 INCHES ZMRP = 400.0000 IN. ZT
SCALE = .0200

PARAMETRIC DATA

IB-ELV = 10.000 OB-ELV = 5.000
BDFLAP = .000 SPDBRK = .000
RUDDER = .000 SILTS = 1.000
MACH = 1.550 RN/L = 3.200

RUN NO. 919/ 0 RN/L = 3.20 GRADIENT INTERVAL = -5.00/ 5.00

ALPHAO	BETAO	CNFO	CAFO	CLMFO	CYFO	CYNFO	CBLFO	CNBO	CABO	CLMBO
-4.316	-5.917	.03150	.11720	.01000	.15480	-.09590	.05150	.02300	.04510	-.01190
-4.555	-4.132	.01300	.11880	.02250	.10790	-.06530	.03460	.02210	.04250	-.01160
-4.096	.321	.00400	.11730	.02670	-.00090	.00260	-.00070	.02190	.04120	-.01170
-3.809	4.600	.00790	.11630	.02100	-.10740	.06980	-.03460	.02250	.04270	-.01190
-3.787	6.253	.00710	.11440	.02040	-.14930	.09690	-.04920	.02220	.04220	-.01180
	GRADIENT	-.00059	-.00029	-.00016	-.02465	.01547	-.00792	00005	.00002	-.00003

RUN NO. 920/ 0 RN/L = 3.19 GRADIENT INTERVAL = -5.00/ 5.00

ALPHAO	BETAO	CNFO	CAFO	CLMFO	CYFO	CYNFO	CBLFO	CNBO	CABO	CLMBO
-.649	-7.128	.17210	.11290	-.09660	.16890	-.10620	.05910	.02340	.04570	-.01210
-.600	-4.736	.15550	.11480	-.08670	.10720	-.06540	.03710	.02250	.04300	-.01190
-.528	-.692	.14090	.11370	-.07660	.01340	- 00560	.00410	.02210	.04150	-.01180
-.520	3.438	.14290	.11520	-.07970	-.07720	.05290	-.02760	.02200	.04150	-.01180
-.536	5.575	.14160	.11310	-.08100	-.12580	.08450	-.04440	.02240	.04250	-.01190
	GRADIENT	-.00153	.00005	.00085	-.02256	.01447	-.00791	-.00006	-.00018	.00001

RUN NO. 921/ 0 RN/L = 3.19 GRADIENT INTERVAL = -5.00/ 5.00

ALPHAO	BETAO	CNFO	CAFO	CLMFO	CYFO	CYNFO	CBLFO	CNBO	CABO	CLMBO
4.017	-5.502	.32460	.11460	-.21100	.12780	-.08360	.04980	.02340	.04500	-.01230
3.919	-3.549	.30780	.11300	-.19980	.08200	-.05350	.03270	.02270	.04300	-.01210
3.577	.320	.29560	.11130	-.19120	.00540	-.00390	.00260	.02190	.04140	-.01170
3.671	4.060	.30690	.11300	-.20070	-.06990	.04600	-.02730	.02230	.04200	-.01190
3.567	6.099	.30070	.11170	-.19810	-.11870	.07820	-.04500	.02250	.04260	-.01200
	GRADIENT	-.00014	-.00000	-.00010	-.01996	.01307	-.00788	-.00005	-.00013	.00003

IA156A, AEDC PWT 16T-470, O T S W/SILTS (R8N052) (10 MAY 80)

REFERENCE DATA

SREF = 2690.0000 SQ.FT. XMRP = 976.0000 IN. XT
LREF = 1290.3000 INCHES YMRP = .0000 IN. YT
BREF = 1290.3000 INCHES ZMRP = 400.0000 IN. ZT
SCALE = .0200

PARAMETRIC DATA

IB-ELV = 10.000 OB-ELV = 9.000
BDFLAP = .000 SPDBRK = .000
RUDDER = .000 SILTS = 1.000
MACH = .300 RN/L = 3.500

RUN NO. 928/ 0 RN/L = 2.68 GRADIENT INTERVAL = -5.00/ 5.00

ALPHAO	BETAO	CNFO	CAFO	CLMFO	CYFO	CYNFO	CBLFO	CNBO	CABO	CLMBO
-5.998	-10.067	.01930	.01620	-.00500	.26740	-.16650	.08170	.02210	.04030	-.01220
-6.333	-6.052	-.01740	.02020	.02020	.15960	-.09740	.04780	.02280	.04170	-.01250
-6.200	.352	-.05300	.02910	.04650	-.00640	.00570	-.00350	.01900	.03440	-.01050
-5.745	6.151	-.05450	.02850	.04200	-.14270	.09150	-.04590	.02030	.03690	-.01120
-5.855	10.085	-.07120	.02090	.04850	-.23800	.15150	-.07420	.02330	.04220	-.01290
	GRADIENT	.00000	.00000	.00000	.00000	.00000	.00000	.00000	.00000	.00000

RUN NO. 929/ 0 RN/L = 2.68 GRADIENT INTERVAL = -5.00/ 5.00

ALPHAO	BETAO	CNFO	CAFO	CLMFO	CYFO	CYNFO	CBLFO	CNBO	CABO	CLMBO
-.334	-10.550	.17380	.01630	-.10720	.24230	-.15370	.08080	.02220	.04040	-.01220
-.302	-6.475	.13960	.02870	-.08420	.14920	-.09340	.04860	.01990	.03640	-.01090
-.250	-.524	.12490	.03280	-.07170	.01350	-.00500	.00260	.01840	.03340	-.01010
-.233	5.554	.15070	.02960	-.09490	-.10600	.07310	-.03920	.02010	.03610	-.01120
-.182	9.914	.14600	.02490	-.09670	-.19530	.13240	-.07010	.02160	.03860	-.01210
	GRADIENT	.00000	.00000	.00000	.00000	.00000	.00000	.00000	.00000	.00000

RUN NO. 930/ 0 RN/L = 2.68 GRADIENT INTERVAL = -5.00/ 5.00

ALPHAO	BETAO	CNFO	CAFO	CLMFO	CYFO	CYNFO	CBLFO	CNBO	CABO	CLMBO
6.124	-9.965	.32880	.01460	-.21500	.19090	-.12570	.07530	.02060	.03720	-.01140
5.948	-5.857	.31460	.01990	-.20640	.11600	-.07570	.04510	.01900	.03490	-.01040
5.799	.240	.32440	.01980	-.20970	.02010	-.01130	.00460	.01790	.03220	-.00990
6.019	6.223	.36420	.01590	-.24140	-.08530	.06040	-.03810	.01980	.03480	-.01120
5.804	10.078	.34880	.01040	-.23430	-.15840	.11080	-.06620	.02100	.03730	-.01180
	GRADIENT	.00000	.00000	.00000	.00000	.00000	.00000	.00000	.00000	.00000

IA156A, AEDC PWT 16T-470, O T S W/SILTS (R8N053) (10 MAY 80)

REFERENCE DATA

SREF = 2690.0000 SQ.FT. XMRP = 976.0000 IN. XT
LREF = 1290.3000 INCHES YMRP = .0000 IN. YT
BREF = 1290.3000 INCHES ZMRP = 400.0000 IN. ZT
SCALE = .0200

PARAMETRIC DATA

IB-ELV = 10.000 OB-ELV = 9.000
BDFLAP = .000 SPDBRK = .000
RUDDER = .000 SILTS = 1.000
MACH = .300 RN/L = 3.500

RUN NO. 927/ 0 RN/L = 2.67 GRADIENT INTERVAL = -5.00/ 5.00

ALPHAO	BETAO	CNFO	CAFO	CLMFO	CYFO	CYNFO	CBLFO	CNBO	CABO	CLMBO
-10.105	-7.896	-.12670	.01090	.09460	.22860	-.14110	.06690	.02200	.04000	-.01220
-10.102	-5.743	-.13100	.01160	.09860	.17070	-.10480	.04940	.02350	.04290	-.01290
-9.855	.239	-.16580	.01850	.12420	.00160	.00130	-.00130	.02020	.03700	-.01110
-9.978	6.308	-.18130	.01760	.12830	-.16270	.10330	-.04880	.02130	.03890	-.01180
-9.987	8.105	-.19630	.01310	.13550	-.21100	.13320	-.06260	.02310	.04190	-.01280
	GRADIENT	.00000	.00000	.00000	.00000	.00000	.00000	.00000	.00000	.00000

RUN NO. 931/ 0 RN/L = 2.68 GRADIENT INTERVAL = -5.00/ 5.00

ALPHAO	BETAO	CNFO	CAFO	CLMFO	CYFO	CYNFO	CBLFO	CNBO	CABO	CLMBO
9.927	-7.951	.44890	.00390	-.29960	.13380	-.08710	.05780	.02030	.03680	-.01120
9.995	-5.628	.44770	.00730	-.29760	.09670	-.06240	.04150	.01910	.03440	-.01070
9.865	.278	.45900	.00980	-.30220	.01990	-.01120	.00470	.01690	.03020	-.00950
9.954	6.285	.47720	.00310	-.32110	-.06580	.04660	-.03440	.01880	.03260	-.01080
9.732	8.122	.46090	.00140	-.31140	-.09840	.06930	-.04790	.02030	.03510	-.01160
	GRADIENT	.00000	.00000	.00000	.00000	.00000	.00000	.00000	.00000	.00000

IA156A, AEDC PWT 16T-470, O T S W/SILTS (R8N054) (10 MAY 80)

REFERENCE DATA

SREF = 2690.0000 SQ.FT. XMRP = 976.0000 IN. XT
LREF = 1290.3000 INCHES YMRP = .0000 IN. YT
BREF = 1290.3000 INCHES ZMRP = 400.0000 IN. ZT
SCALE = .0200

PARAMETRIC DATA

IB-ELV = 10.000 OB-ELV = 9.000
BDFLAP = .000 SPDBRK = .000
RUDDER = .000 SILTS = 1.000
MACH = .600 RN/L = 3.500

RUN NO. 932/ 0 RN/L = 3.50 GRADIENT INTERVAL = -5.00/ 5.00

ALPHAO	BETAO	CNFO	CAFO	CLMFO	CYFO	CYNFO	CBLFO	CNBO	CABO	CLMBO
-8.138	-7.854	-.05050	.02750	.04070	.22660	-.13990	.06710	.02360	.04390	-.01270
-8.087	-5.763	-.06390	.03130	.05030	.16660	-.10160	.04870	.02340	.04330	-.01270
-7.967	-3.708	-.07000	.03460	.05510	.10740	-.06460	.03060	.02240	.04140	-.01220
-7.963	.267	-.09720	.03290	.07540	.00090	.00230	-.00170	.02100	.03880	-.01140
-7.927	4.197	-.08790	.03390	.06500	-.10420	.06800	-.03280	.02200	.04010	-.01210
-7.870	6.095	-.08370	.03330	.05990	-.15690	.10130	-.04890	.02280	.04170	-.01250
-7.785	8.168	-.08410	.03010	.05840	-.21080	.13470	-.06440	.02350	.04330	-.01290
	GRADIENT	-.00227	-.00009	.00126	-.02677	.01677	-.00802	-.00005	-.00017	.00001

IA156A, AEDC PWT 16T-470, O T S W/SILTS (R8N054) (10 MAY 80)

REFERENCE DATA

SREF = 2690.0000 SQ.FT. XMRP = 976.0000 IN. XT
LREF = 1290.3000 INCHES YMRP = .0000 IN. YT
BREF = 1290.3000 INCHES ZMRP = 400.0000 IN. ZT
SCALE = .0200

PARAMETRIC DATA

IB-ELV = 10.000 OB-ELV = 9.000
BDFLAP = .000 SPDBRK = .000
RUDDER = .000 SILTS = 1.000
MACH = .600 RN/L = 3.500

RUN NO. 933/ 0 RN/L = 3.51 GRADIENT INTERVAL = -5.00/ 5.00

ALPHAO	BETAO	CNFO	CAFO	CLMFO	CYFO	CYNFO	CBLFO	CNBO	CABO	CLMBO
-6.013	-7.751	.01920	.03040	-.00780	.21650	-.13460	.06550	.02350	.04370	-.01270
-6.160	-5.863	.00270	.03400	.00360	.16250	-.10040	.04880	.02290	.04240	-.01240
-6.084	-3.845	-.01110	.03680	.01400	.10260	-.06270	.03040	.02210	.04080	-.01210
-6.187	.112	-.03850	.03520	.03470	-.00090	.00260	-.00160	.02040	.03770	-.01110
-5.969	4.214	-.02470	.03650	.02140	-.10170	.06580	-.03250	.02170	.03920	-.01200
-5.766	6.035	-.01650	.03590	.01400	-.14940	.09630	-.04750	.02230	.04070	-.01230
-5.770	8.336	-.01800	.03350	.01300	-.20610	.13180	-.06440	.02290	.04200	-.01260
	GRADIENT	-.00166	-.00004	.00089	-.02535	.01594	-.00780	-.00005	-.00020	.00001

RUN NO. 934/ 0 RN/L = 3.51 GRADIENT INTERVAL = -5.00/ 5.00

ALPHAO	BETAO	CNFO	CAFO	CLMFO	CYFO	CYNFO	CBLFO	CNBO	CABO	CLMBO
-4.123	-7.903	.07460	.03220	-.04560	.21000	-.13120	.06540	.02300	.04230	-.01260
-4.091	-5.806	.06340	.03540	-.03790	.14950	-.09290	.04640	.02290	.04230	-.01240
-4.143	-3.813	.05240	.03920	-.02890	.09440	-.05780	.02900	.02140	.03930	-.01170
-3.887	.205	.03530	.03780	-.01540	-.00020	.00190	-.00150	.02010	.03700	-.01100
-3.956	4.299	.04150	.03820	-.02340	-.09870	.06340	-.03230	.02130	.03840	-.01180
-3.856	6.017	.05070	.03680	-.03140	-.14080	.09120	-.04610	.02220	.04040	-.01230
-3.746	7.939	.04720	.03340	-.03040	-.18630	.12050	-.06050	.02300	.04210	-.01270
	GRADIENT	-.00133	-.00012	.00067	-.02381	.01494	-.00756	-.00001	-.00011	-.00001

RUN NO. 935/ 0 RN/L = 3.51 GRADIENT INTERVAL = -5.00/ 5.00

ALPHAO	BETAO	CNFO	CAFO	CLMFO	CYFO	CYNFO	CBLFO	CNBO	CABO	CLMBO
-.269	-8.793	.19650	.02820	-.12650	.20800	-.13240	.06990	.02260	.04160	-.01240
-.324	-6.788	.18360	.03330	-.11840	.16110	-.10220	.05360	.02180	.04030	-.01190
-.313	-4.471	.17030	.03810	-.10900	.10450	-.06550	.03440	.02140	.03910	-.01180
-.289	-.224	.15320	.03830	-.09380	.00680	-.00180	.00110	.01910	.03500	-.01050
-.267	3.806	.17290	.03840	-.11110	-.07610	.05170	-.02770	.02000	.03620	-.01110
-.217	5.654	.18110	.03770	-.11870	-.11440	.07750	-.04170	.02090	.03740	-.01170
-.279	7.785	.16960	.03480	-.11330	-.16320	.10920	-.05760	.02240	.04040	-.01240
	GRADIENT	.00028	.00004	-.00022	-.02183	.01417	-.00751	-.00017	-.00036	.00009

IA156A, AEDC PWT 16T-470, O T S W/SILTS (R8N054) (10 MAY 80)

REFERENCE DATA

SREF = 2690.0000 SQ.FT. XMRP = 976.0000 IN. XT
LREF = 1290.3000 INCHES YMRP = .0000 IN. YT
BREF = 1290.3000 INCHES ZMRP = 400.0000 IN. ZT
SCALE = .0200

PARAMETRIC DATA

IB-ELV = 10.000 OB-ELV = 9.000
BDFLAP = .000 SPDBRK = .000
RUDDER = .000 SILTS = 1.000
MACH = .600 RN/L = 3.500

RUN NO. 936/ 0 RN/L = 3.51 GRADIENT INTERVAL = -5.00/ 5.00

ALPHAO	BETAO	CNFO	CAFO	CLMFO	CYFO	CYNFO	CBLFO	CNBO	CABO	CLMBO
4.047	-7.760	.31950	.02650	-.21210	.16090	-.10580	.06210	.02120	.03860	-.01170
4.081	-5.679	.31860	.02940	-.21190	.11720	-.07700	.04510	.02080	.03820	-.01140
4.045	-3.728	.30890	.03200	-.20420	.07860	-.05140	.02990	.01980	.03640	-.01080
3.862	.202	.28830	.03060	-.18730	.01010	-.00570	.00230	.01910	.03490	-.01050
3.891	4.152	.30950	.02990	-.20480	-.06210	.04220	-.02560	.01950	.03480	-.01100
3.833	6.086	.31040	.02800	-.20810	-.10570	.07220	-.04160	.02090	.03700	-.01180
3.739	7.925	.30420	.02580	-.20570	-.14280	.09760	-.05540	.02170	.03880	-.01220
	GRADIENT	.00008	-.00027	-.00008	-.01786	.01188	-.00704	-.00004	-.00020	-.00003

RUN NO. 937/ 0 RN/L = 3.51 GRADIENT INTERVAL = -5.00/ 5.00

ALPHAO	BETAO	CNFO	CAFO	CLMFO	CYFO	CYNFO	CBLFO	CNBO	CABO	CLMBO
6.185	-7.948	.39160	.01970	-.26200	.15160	-.09990	.06190	.02140	.03910	-.01180
6.018	-5.777	.37900	.02440	-.25380	.11160	-.07290	.04460	.02070	.03790	-.01130
6.127	-3.840	.38330	.02540	-.25610	.07540	-.04900	.03010	.02020	.03710	-.01100
5.925	.211	.36600	.02580	-.24130	.00610	-.00350	.00170	.01890	.03450	-.01040
5.722	4.043	.37200	.02610	-.24790	-.05920	.04010	-.02520	.01980	.03490	-.01120
5.884	6.104	.37470	.02370	-.25240	-.09740	.06670	-.04040	.02090	.03690	-.01180
5.739	8.181	.37190	.02080	-.25240	-.13640	.09350	-.05590	.02150	.03820	-.01210
	GRADIENT	-.00146	.00009	.00107	-.01708	.01130	-.00702	-.00005	-.00028	-.00002

RUN NO. 938/ 0 RN/L = 3.51 GRADIENT INTERVAL = -5.00/ 5.00

ALPHAO	BETAO	CNFO	CAFO	CLMFO	CYFO	CYNFO	CBLFO	CNBO	CABO	CLMBO
8.049	-8.030	.44830	.01380	-.30110	.14360	-.09430	.06160	.02150	.03910	-.01190
7.954	-5.760	.44500	.01830	-.29910	.10150	-.06560	.04310	.02060	.03760	-.01130
8.156	-3.936	.45190	.02040	-.30310	.06980	-.04480	.02970	.01900	.03550	-.01080
7.840	.174	.43180	.02120	-.28610	.00900	-.00520	.00260	.01890	.03360	-.01060
8.020	4.153	.44870	.01980	-.30060	-.05080	.03430	-.02380	.01990	.03500	-.01130
7.706	6.068	.43640	.01710	-.29470	-.08610	.05850	-.03810	.02120	.03730	-.01200
7.985	8.203	.43990	.01340	-.29970	-.12040	.08260	-.05360	.02110	.03740	-.01190
	GRADIENT	-.00042	-.00007	.00033	-.01491	.00978	-.00661	.00004	-.00006	-.00006

IA156A, AEDC PWT 16T-470, O T S W/SILTS (R8N055) (10 MAY 80)

REFERENCE DATA

SREF = 2690.0000 SQ.FT. XMRP = 976.0000 IN. XT
LREF = 1290.3000 INCHES YMRP = .0000 IN. YT
BREF = 1290.3000 INCHES ZMRP = 400.0000 IN. ZT
SCALE = .0200

PARAMETRIC DATA

IB-ELV = 10.000 OB-ELV = 9.000
BDFLAP = .000 SPDBRK = .000
RUDDER = .000 SILTS = 1.000
MACH = .800 RN/L = 3.500

RUN NO. 939/ 0 RN/L = 3.51 GRADIENT INTERVAL = -5.00/ 5.00

ALPHAO	BETAO	CNFO	CAFO	CLMFO	CYFO	CYNFO	CBLFO	CNBO	CABO	CLMBO
-8.416	-6.010	-.06210	.04670	.05260	.17940	-.11010	.05300	.02350	.04350	-.01280
-8.319	-3.889	-.07590	.04800	.06250	.11860	-.07170	.03440	.02480	.04610	-.01350
-8.133	.366	-.10830	.04530	.08710	-.00260	.00420	-.00190	.02150	.03990	-.01160
-8.078	4.282	-.09260	.04730	.07160	-.10790	.06990	-.03360	.02330	.04320	-.01270
-7.997	6.197	-.08280	.04700	.06270	-.16320	.10420	-.05020	.02410	.04460	-.01310
	GRADIENT	-.00212	-.00009	.00118	-.02773	.01734	-.00833	-.00019	-.00037	.00010

RUN NO. 940/ 0 RN/L = 3.50 GRADIENT INTERVAL = -5.00/ 5.00

ALPHAO	BETAO	CNFO	CAFO	CLMFO	CYFO	CYNFO	CBLFO	CNBO	CABO	CLMBO
-6.329	-6.039	.01020	.04670	.00090	.17350	-.10720	.05300	.02370	.04420	-.01290
-6.233	-3.960	-.00690	.04880	.01350	.10830	-.06630	.03280	.02300	.04250	-.01260
-6.042	.147	-.03520	.04520	.03510	-.00040	.00190	-.00080	.02110	.03920	-.01140
-6.109	4.309	-.02250	.04750	.02230	-.10500	.06750	-.03320	.02270	.04200	-.01240
-5.813	6.218	-.00640	.04770	.00910	-.15610	.10000	-.04940	.02340	.04320	-.01270
	GRADIENT	-.00188	-.00016	.00105	-.02579	.01618	-.00798	-.00004	-.00006	.00002

RUN NO. 941/ 0 RN/L = 3.50 GRADIENT INTERVAL = -5.00/ 5.00

ALPHAO	BETAO	CNFO	CAFO	CLMFO	CYFO	CYNFO	CBLFO	CNBO	CABO	CLMBO
-4.318	-6.168	.07620	.04660	-.04490	.16510	-.10310	.05210	.02360	.04400	-.01280
-4.283	-3.943	.06240	.04950	-.03430	.09940	-.06100	.03110	.02220	.04110	-.01210
-4.010	.249	.03660	.04620	-.01480	.00030	.00130	-.00080	.02060	.03810	-.01120
-3.782	4.175	.05740	.04800	-.03290	-.09560	.06130	-.03130	.02210	.04070	-.01200
-3.971	6.130	.05850	.04780	-.03550	-.14740	.09470	-.04810	.02300	.04200	-.01260
	GRADIENT	-.00068	-.00019	.00022	-.02402	.01506	-.00769	-.00002	-.00006	.00001

RUN NO. 942/ 0 RN/L = 3.51 GRADIENT INTERVAL = -5.00/ 5.00

ALPHAO	BETAO	CNFO	CAFO	CLMFO	CYFO	CYNFO	CBLFO	CNBO	CABO	CLMBO
-.339	-6.739	.21320	.04300	-.13700	.16230	-.10320	.05540	.02260	.04190	-.01220
-.371	-4.804	.19980	.04650	-.12770	.11340	-.07180	.03860	.02140	.03980	-.01160
-.324	-.381	.16690	.04420	-.10250	.00900	-.00360	.00270	.02020	.03720	-.01100
-.303	3.704	.19250	.04690	-.12360	-.07680	.05160	-.02800	.02080	.03830	-.01140
-.314	5.560	.19680	.04630	-.12880	-.12130	.08110	-.04370	.02200	.04030	-.01210
	GRADIENT	-.00095	.00004	.00055	-.02237	.01452	-.00783	-.00007	-.00018	.00003

IA156A, AEDC PWT 16T-470, O T S W/SILTS (R8N055) (10 MAY 80)

REFERENCE DATA

SREF = 2690.0000 SQ.FT. XMRP = 976.0000 IN. XT
LREF = 1290.3000 INCHES YMRP = .0000 IN. YT
BREF = 1290.3000 INCHES ZMRP = 400.0000 IN. ZT
SCALE = .0200

PARAMETRIC DATA

IB-ELV = 10.000 OB-ELV = 9.000
BDFLAP = .000 SPDBRK = .000
RUDDER = .000 SILTS = 1.000
MACH = .800 RN/L = 3.500

RUN NO. 943/ 0 RN/L = 3.50 GRADIENT INTERVAL = -5.00/ 5.00

ALPHAO	BETAO	CNFO	CAFO	CLMFO	CYFO	CYNFO	CBLFO	CNBO	CABO	CLMBO
3.938	-5.652	.34750	.04090	-.23220	.12460	-.08130	.04870	.02180	.04010	-.01190
3.921	-3.662	.34310	.04190	-.22870	.08080	-.05240	.03180	.02060	.03790	-.01120
3.945	.110	.31940	.03850	-.20930	.01030	-.00590	.00330	.02020	.03670	-.01120
3.796	4.071	.34410	.03930	-.23000	-.06590	.04430	-.02690	.02090	.03790	-.01160
3.721	6.067	.34110	.03930	-.23000	-.11250	.07630	-.04430	.02180	.03950	-.01210
	GRADIENT	.00018	-.00033	-.00021	-.01897	.01251	-.00759	.00004	.00000	-.00005

RUN NO. 944/ 0 RN/L = 3.51 GRADIENT INTERVAL = -5.00/ 5.00

ALPHAO	BETAO	CNFO	CAFO	CLMFO	CYFO	CYNFO	CBLFO	CNBO	CABO	CLMBO
6.089	-5.845	.41830	.03850	-.28010	.12060	-.07920	.04630	.02170	.03980	-.01190
6.139	-3.843	.42500	.03970	-.28530	.07950	-.05160	.03030	.02100	.03830	-.01150
5.926	.176	.39860	.03580	-.26490	.00630	-.00320	.00260	.02000	.03630	-.01110
5.761	3.987	.40750	.03740	-.27330	-.05820	.03910	-.02310	.02100	.03780	-.01170
5.893	6.117	.40940	.03670	-.27660	-.10230	.06980	-.03980	.02210	.04010	-.01220
	GRADIENT	-.00227	-.00030	.00156	-.01759	.01159	-.00682	-.00000	-.00007	-.00002

IA156A, AEDC PWT 16T-470, O T S W/SILTS (R8N056) (10 MAY 80)

REFERENCE DATA

SREF = 2690.0000 SQ.FT. XMRP = 976.0000 IN. XT
LREF = 1290.3000 INCHES YMRP = .0000 IN. YT
BREF = 1290.3000 INCHES ZMRP = 400.0000 IN. ZT
SCALE = .0200

PARAMETRIC DATA

IB-ELV = 10.000 OB-ELV = 9.000
BDFLAP = .000 SPDBRK = .000
RUDDER = .000 SILTS = 1.000
MACH = .900 RN/L = 3.500

RUN NO. 952/ 0 RN/L = 3.51 GRADIENT INTERVAL = -5.00/ 5.00

ALPHAO	BETAO	CNFO	CAFO	CLMFO	CYFO	CYNFO	CBLFO	CNBO	CABO	CLMBO
-8.266	-5.928	-.08640	.06550	.07890	.18230	-.11000	.05410	.02640	.04960	-.01420
-8.058	-3.754	-.09300	.06700	.08430	.11080	-.06430	.03210	.02540	.04740	-.01370
-8.186	.261	-.14190	.06360	.11990	.00230	.00070	-.00020	.02350	.04350	-.01280
-8.108	4.358	-.12980	.06650	.10780	-.11300	.07100	-.03480	.02530	.04720	-.01360
-8.107	6.196	-.12580	.06710	.10320	-.17080	.10670	-.05240	.02620	.04950	-.01390
	GRADIENT	-.00451	-.00006	.00288	-.02759	.01668	-.00825	-.00001	-.00002	.00001

IA156A FORCE DATA WITH FLOW ANGULARITY CORRECTION

IA156A, AEDC PWT 16T-470, O T S W/SILTS

(R8N056) (10 MAY 80)

REFERENCE DATA

SREF = 2690.0000 SQ.FT. XMRP = 976.0000 IN. XT
LREF = 1290.3000 INCHES YMRP = .0000 IN. YT
BREF = 1290.3000 INCHES ZMRP = 400.0000 IN. ZT
SCALE = .0200

PARAMETRIC DATA

IB-ELV = 10.000 OB-ELV = 9.000
BDFLAP = .000 SPDBRK = .000
RUDDER = .000 SILTS = 1.000
MACH = .900 RN/L = 3.500

RUN NO. 953/ 0 RN/L = 3.50 GRADIENT INTERVAL = -5.00/ 5.00

ALPHAO	BETAO	CNFO	CAFO	CLMFO	CYFO	CYNFO	CBLFO	CNBO	CABO	CLMBO
-6.226	-6.035	-.01150	.06450	.02610	.17410	-.10610	.05420	.02610	.04900	-.01400
-6.115	-4.004	-.02170	.06540	.03320	.10960	-.06490	.03380	.02510	.04690	-.01350
-6.029	.147	-.06660	.06170	.06640	.00250	-.00050	.00040	.02290	.04260	-.01240
-6.036	4.212	-.05000	.06530	.05120	-.10500	.06500	-.03340	.02480	.04610	-.01340
-5.855	6.186	-.04110	.06440	.04300	-.16230	.10110	-.05190	.02680	.05010	-.01440
	GRADIENT	-.00347	-.00002	.00221	-.02612	.01581	-.00818	-.00004	-.00010	.00001

RUN NO. 954/ 0 RN/L = 3.50 GRADIENT INTERVAL = -5.00/ 5.00

ALPHAO	BETAO	CNFO	CAFO	CLMFO	CYFO	CYNFO	CBLFO	CNBO	CABO	CLMBO
-4.243	-6.218	.06340	.06350	-.02680	.16460	-.10090	.05370	.02540	.04800	-.01350
-4.227	-3.977	.04360	.06530	-.01260	.10030	-.05970	.03260	.02450	.04550	-.01330
-3.985	.235	.00800	.06070	.01320	.00100	.00030	-.00030	.02250	.04200	-.01210
-4.062	4.405	.02290	.06410	-.00060	-.10520	.06500	-.03490	.02470	.04590	-.01330
-3.876	6.295	.03530	.06300	-.01080	-.15440	.09660	-.05180	.02640	.04920	-.01430
	GRADIENT	-.00248	-.00014	.00144	-.02452	.01488	-.00805	.00002	.00005	.00000

RUN NO. 955/ 0 RN/L = 3.50 GRADIENT INTERVAL = -5.00/ 5.00

ALPHAO	BETAO	CNFO	CAFO	CLMFO	CYFO	CYNFO	CBLFO	CNBO	CABO	CLMBO
-.415	-6.981	.20470	.05900	-.12290	.16580	-.10430	.05950	.02460	.04670	-.01310
-.388	-4.926	.18950	.06130	-.11410	.11310	-.07070	.04130	.02360	.04430	-.01270
-.346	-.610	.14910	.05770	-.08520	.01080	-.00480	.00440	.02150	.04020	-.01160
-.308	3.482	.17610	.06150	-.10580	-.07330	.04770	-.02820	.02260	.04250	-.01210
-.312	5.703	.18160	.06350	-.11160	-.12590	.08220	-.04740	.02390	.04440	-.01300
	GRADIENT	-.00166	.00002	.00104	-.02218	.01409	-.00827	-.00012	-.00022	.00007

RUN NO. 956/ 0 RN/L = 3.50 GRADIENT INTERVAL = -5.00/ 5.00

ALPHAO	BETAO	CNFO	CAFO	CLMFO	CYFO	CYNFO	CBLFO	CNBO	CABO	CLMBO
4.107	-5.931	.35600	.06090	-.23190	.12700	-.08120	.04960	.02390	.04470	-.01290
4.174	-3.928	.35600	.06040	-.23360	.08540	-.05440	.03360	.02210	.04130	-.01190
3.727	.181	.31510	.05520	-.20350	.00590	-.00300	.00200	.02160	.04030	-.01160
3.889	4.008	.34650	.05870	-.22760	-.07020	.04610	-.02730	.02250	.04180	-.01220
3.707	6.109	.33590	.06040	-.22200	-.11850	.07690	-.04480	.02420	.04480	-.01310
	GRADIENT	-.00130	-.00023	.00084	-.01961	.01266	-.00767	.00005	.00006	-.00004

IA156A, AEDC PWT 16T-470, O T S W/SILTS (R8N057) (10 MAY 80)

REFERENCE DATA

SREF = 2690.0000 SQ.FT. XMRP = 976.0000 IN. XT
LREF = 1290.3000 INCHES YMRP = .0000 IN. YT
BREF = 1290.3000 INCHES ZMRP = 400.0000 IN. ZT
SCALE = .0200

PARAMETRIC DATA

IB-ELV = 10.000 OB-ELV = 9.000
BDFLAP = .000 SPDBRK = .000
RUDDER = .000 SILTS = 1.000
MACH = .950 RN/L = 3.500

RUN NO. 957/ 0 RN/L = 3.50 GRADIENT INTERVAL = -5.00/ 5.00

ALPHAO	BETAO	CNFO	CAFO	CLMFO	CYFO	CYNFO	CBLFO	CNBO	CABO	CLMBO
-8.168	-6.025	-.10440	.08160	.10080	.18850	-.11460	.05810	.02940	.05510	-.01590
-8.236	-3.822	-.12260	.08390	.11350	.11460	-.06670	.03500	.02820	.05240	-.01530
-8.036	.263	-.15660	.08070	.13780	.00470	-.00160	.00130	.02650	.04910	-.01440
-7.924	4.230	-.14050	.08290	.12380	-.11320	.07130	-.03570	.02830	.05270	-.01530
-7.872	6.126	-.13420	.08220	.11690	-.17180	.10910	-.05370	.02960	.05560	-.01580
	GRADIENT	-.00225	-.00013	.00130	-.02828	.01713	-.00878	.00001	.00003	.00000

RUN NO. 959/ 0 RN/L = 3.49 GRADIENT INTERVAL = -5.00/ 5.00

ALPHAO	BETAO	CNFO	CAFO	CLMFO	CYFO	CYNFO	CBLFO	CNBO	CABO	CLMBO
-6.208	-5.992	-.02980	.08090	.04660	.17140	-.10450	.05490	.02840	.05350	-.01520
-6.174	-4.054	-.04550	.08370	.05790	.11170	-.06560	.03600	.02700	.05080	-.01450
-6.259	.135	-.08960	.07900	.08900	.00300	-.00140	.00120	.02520	.04680	-.01360
-6.062	4.282	-.06860	.08120	.07080	-.11050	.06930	-.03590	.02750	.05090	-.01500
-5.827	6.394	-.05000	.08070	.05540	-.17220	.10870	-.05560	.02900	.05390	-.01570
	GRADIENT	-.00278	-.00030	.00156	-.02665	.01618	-.00862	.00006	.00001	-.00006

RUN NO. 958/ 0 RN/L = 3.49 GRADIENT INTERVAL = -5.00/ 5.00

ALPHAO	BETAO	CNFO	CAFO	CLMFO	CYFO	CYNFO	CBLFO	CNBO	CABO	CLMBO
-4.273	-6.188	.04490	.07870	-.00740	.16350	-.09980	.05440	.02830	.05330	-.01510
-4.329	-4.008	.02510	.08050	.00630	.09850	-.05740	.03270	.02660	.04960	-.01440
-4.255	.375	-.01950	.07830	.03920	-.00420	.00290	-.00130	.02500	.04580	-.01380
-3.812	4.353	.01740	.08080	.00920	-.10530	.06520	-.03580	.02650	.04870	-.01450
-3.866	6.166	.02120	.07930	.00460	-.15590	.09750	-.05270	.02910	.05390	-.01580
	GRADIENT	-.00108	.00003	.00047	-.02436	.01465	-.00819	-.00002	-.00012	-.00001

RUN NO. 960/ 0 RN/L = 3.50 GRADIENT INTERVAL = -5.00/ 5.00

ALPHAO	BETAO	CNFO	CAFO	CLMFO	CYFO	CYNFO	CBLFO	CNBO	CABO	CLMBO
-.419	-6.876	.19140	.07450	-.10930	.15790	-.09610	.05780	.02760	.05200	-.01480
-.396	-4.858	.17360	.07630	-.09760	.10720	-.06400	.03970	.02580	.04880	-.01380
-.362	-.678	.12760	.07250	-.06440	.01090	-.00460	.00470	.02330	.04390	-.01250
-.320	3.521	.15980	.07730	-.08940	-.07350	.04670	-.02920	.02460	.04570	-.01330
-.323	5.725	.16570	.07770	-.09600	-.12450	.07960	-.04850	.02690	.05030	-.01450
	GRADIENT	-.00164	.00012	.00097	-.02156	.01321	-.00822	-.00014	-.00037	.00006

IA156A, AEDC PWT 16T-470, O T S W/SILTS (R8N057) (10 MAY 80)

REFERENCE DATA

SREF = 2690.0000 SQ.FT. XMRP = 976.0000 IN. XT
LREF = 1290.3000 INCHES YMRP = .0000 IN. YT
BREF = 1290.3000 INCHES ZMRP = 400.0000 IN. ZT
SCALE = .0200

PARAMETRIC DATA

IB-ELV = 10.000 OB-ELV = 9.000
BDFLAP = .000 SPDBRK = .000
RUDDER = .000 SILTS = 1.000
MACH = .950 RN/L = 3.500

RUN NO. 961/ 0 RN/L = 3.49 GRADIENT INTERVAL = -5.00/ 5.00

ALPHAO	BETAO	CNFO	CAFO	CLMFO	CYFO	CYNFO	CBLFO	CNBO	CABO	CLMBO
3.921	-5.779	.34390	.07400	-.21970	.11900	-.07390	.04910	.02550	.04790	-.01360
3.965	-3.741	.33470	.07290	-.21440	.07360	-.04390	.03070	.02370	.04460	-.01270
3.688	.018	.29910	.06740	-.18750	.00880	-.00450	.00320	.02440	.04530	-.01320
3.816	3.930	.33340	.07290	-.21370	-.06270	.03910	-.02610	.02440	.04510	-.01330
3.768	6.071	.32950	.07390	-.21180	-.10920	.06900	-.04460	.02640	.04890	-.01440
	GRADIENT	-.00011	.00001	.00005	-.01777	.01082	-.00740	.00009	.00006	-.00008

IA156A, AEDC PWT 16T-470, O T S W/SILTS (R8N058) (10 MAY 80)

REFERENCE DATA

SREF = 2690.0000 SQ.FT. XMRP = 976.0000 IN. XT
LREF = 1290.3000 INCHES YMRP = .0000 IN. YT
BREF = 1290.3000 INCHES ZMRP = 400.0000 IN. ZT
SCALE = .0200

PARAMETRIC DATA

IB-ELV = 10.000 OB-ELV = 9.000
BDFLAP = .000 SPDBRK = .000
RUDDER = .000 SILTS = 1.000
MACH = 1.050 RN/L = 3.500

RUN NO. 962/ 0 RN/L = 3.50 GRADIENT INTERVAL = -5.00/ 5.00

ALPHAO	BETAO	CNFO	CAFO	CLMFO	CYFO	CYNFO	CBLFO	CNBO	CABO	CLMBO
-8.133	-6.006	-.14650	.10040	.14560	.19010	-.11400	.06390	.03660	.06950	-.01940
-8.303	-3.794	-.17200	.10290	.16490	.12020	-.07030	.03990	.03690	.06970	-.01970
-8.187	.179	-.20820	.10160	.19220	.00480	-.00010	.00100	.03530	.06580	-.01900
-8.003	4.365	-.19400	.10290	.17870	-.11940	.07660	-.04060	.03570	.06670	-.01920
-8.017	6.256	-.18620	.10120	.17000	-.17690	.11100	-.05970	.03570	.06710	-.01910
	GRADIENT	-.00264	.00000	.00165	-.02937	.01801	-.00987	-.00014	-.00036	.00006

RUN NO. 963/ 0 RN/L = 3.50 GRADIENT INTERVAL = -5.00/ 5.00

ALPHAO	BETAO	CNFO	CAFO	CLMFO	CYFO	CYNFO	CBLFO	CNBO	CABO	CLMBO
-6.221	-6.007	-.06870	.09380	.08940	.17390	-.10440	.06170	.03700	.07010	-.01970
-6.148	-4.081	-.08380	.10080	.10070	.11370	-.06710	.04070	.03640	.06860	-.01940
-6.259	.103	-.13910	.10140	.14240	.00310	-.00010	.00080	.03500	.06480	-.01900
-6.076	4.270	-.11370	.10150	.12000	-.11130	.07020	-.03960	.03460	.06440	-.01880
-5.781	6.385	-.09050	.10040	.10050	-.17010	.10570	-.06040	.03510	.06550	-.01890
	GRADIENT	-.00359	.00008	.00232	-.02695	.01644	-.00962	-.00022	-.00050	.00007

IA156A, AEDC PWT 16T-470, O T S W/SILTS (R8N058) (10 MAY 80)

REFERENCE DATA

SREF = 2690.0000 SQ.FT. XMRP = 976.0000 IN. XT
LREF = 1290.3000 INCHES YMRP = .0000 IN. YT
BREF = 1290.3000 INCHES ZMRP = 400.0000 IN. ZT
SCALE = .0200

PARAMETRIC DATA

IB-ELV = 10.000 OB-ELV = 9.000
BDFLAP = .000 SPDBRK = .000
RUDDER = .000 SILTS = 1.000
MACH = 1.050 RN/L = 3.500

RUN NO. 964/ 0 RN/L = 3.50 GRADIENT INTERVAL = -5.00/ 5.00

ALPHAO	BETAO	CNFO	CAFO	CLMFO	CYFO	CYNFO	CBLFO	CNBO	CABO	CLMBO
-4.138	-6.140	.01840	.09810	.02690	.16290	-.09760	.06110	.03690	.07020	-.01950
-4.347	-4.015	-.01750	.09980	.05320	.10440	-.06140	.03900	.03670	.06870	-.01970
-4.270	.376	-.06500	.09900	.08940	-.00430	.00430	-.00190	.03550	.06580	-.01930
-3.788	4.336	-.02130	.10060	.05400	-.10530	.06580	-.03970	.03400	.06310	-.01850
-3.886	6.178	-.01120	.10040	.04430	-.15330	.09510	-.05790	.03480	.06460	-.01880
	GRADIENT	-.00064	.00009	.00024	-.02510	.01523	-.00942	-.00032	-.00067	.00014

RUN NO. 965/ 0 RN/L = 3.50 GRADIENT INTERVAL = -5.00/ 5.00

ALPHAO	BETAO	CNFO	CAFO	CLMFO	CYFO	CYNFO	CBLFO	CNBO	CABO	CLMBO
-.465	-6.966	.17300	.09630	-.08250	.16130	-.09720	.06760	.03730	.07100	-.01980
-.443	-4.845	.14620	.09840	-.06280	.11000	-.06610	.04670	.03670	.06850	-.01970
-.400	-.627	.09550	.09510	-.02400	.01340	-.00640	.00560	.03450	.06440	-.01870
-.359	3.660	.12260	.10020	-.04610	-.07920	.05200	-.03550	.03460	.06460	-.01860
-.359	5.800	.13290	.10190	-.05650	-.12670	.08100	-.05530	.03490	.06510	-.01890
	GRADIENT	-.00275	.00021	.00194	-.02224	.01389	-.00966	-.00025	-.00046	.00013

RUN NO. 966/ 0 RN/L = 3.50 GRADIENT INTERVAL = -5.00/ 5.00

ALPHAO	BETAO	CNFO	CAFO	CLMFO	CYFO	CYNFO	CBLFO	CNBO	CABO	CLMBO
3.949	-5.818	.31990	.09650	-.18920	.12120	-.07520	.05620	.03500	.06660	-.01860
3.940	-3.659	.30150	.09700	-.17620	.07650	-.04670	.03610	.03470	.06550	-.01850
3.707	.163	.27080	.09280	-.15250	.00590	-.00300	.00280	.03410	.06390	-.01840
3.800	4.035	.30570	.09720	-.18020	-.06910	.04440	-.03190	.03340	.06220	-.01810
3.771	6.081	.30770	.09740	-.18330	-.11080	.07020	-.05090	.03450	.06400	-.01870
	GRADIENT	.00056	.00003	-.00053	-.01893	.01184	-.00884	-.00017	-.00043	.00005

IA156A, AEDC PWT 16T-470, O T S W/SILTS (R8N059) (10 MAY 80)

REFERENCE DATA

SREF = 2690.0000 SQ.FT. XMRP = 976.0000 IN. XT
LREF = 1290.3000 INCHES YMRP = .0000 IN. YT
BREF = 1290.3000 INCHES ZMRP = 400.0000 IN. ZT
SCALE = .0200

PARAMETRIC DATA

IB-ELV = 10.000 OB-ELV = 9.000
BDFLAP = .000 SPDBRK = .000
RUDDER = .000 SILTS = 1.000
MACH = 1.100 RN/L = 3.500

RUN NO. 967/ 0 RN/L = 3.49 GRADIENT INTERVAL = -5.00/ 5.00

ALPHAO	BETAO	CNFO	CAFO	CLMFO	CYFO	CYNFO	CBLFO	CNBO	CABO	CLMBO
-8.158	-5.993	-.13830	.10360	.14120	.17830	-.10560	.06090	.03420	.06570	-.01790
-8.263	-3.773	-.15870	.10560	.15600	.10990	-.06290	.03690	.03390	.06410	-.01810
-8.181	.173	-.19330	.10500	.18180	.00320	.00090	.00030	.03110	.05830	-.01680
-7.997	4.386	-.17920	.10720	.16890	-.11690	.07390	-.04010	.03260	.06040	-.01770
-8.011	6.276	-.17010	.10660	.15990	-.17150	.10660	-.05880	.03210	.06000	-.01730
	GRADIENT	-.00245	.00020	.00153	-.02781	.01677	-.00944	-.00015	-.00044	.00005

RUN NO. 968/ 0 RN/L = 3.49 GRADIENT INTERVAL = -5.00/ 5.00

ALPHAO	BETAO	CNFO	CAFO	CLMFO	CYFO	CYNFO	CBLFO	CNBO	CABO	CLMBO
-6.214	-6.002	-.05480	.10340	.07980	.16170	-.09540	.05860	.03290	.06260	-.01750
-6.172	-4.075	-.07260	.10430	.09260	.10680	-.06180	.03860	.03250	.06100	-.01740
-6.275	.087	-.12240	.10340	.12990	.00170	00080	.00020	.03080	.05710	-.01670
-6.069	4.280	-.09380	.10520	.10550	-.10810	.06700	-.03900	.03060	.05650	-.01670
-6.000	6.264	-.07860	.10620	.09230	-.15950	.09810	-.05840	.03140	.05840	-.01700
	GRADIENT	-.00253	.00011	.00153	-.02572	.01542	-.00929	-.00023	-.00054	.00008

RUN NO. 969/ 0 RN/L = 3.49 GRADIENT INTERVAL = -5.00/ 5.00

ALPHAO	BETAO	CNFO	CAFO	CLMFO	CYFO	CYNFO	CBLFO	CNBO	CABO	CLMBO
-4.131	-6.141	.03190	.10320	.01560	.15280	-.09010	.05950	.03260	.06160	-.01740
-4.345	-4.016	-.00200	.10310	.04130	.09550	-.05470	.03690	.03240	.06050	-.01750
-4.254	.369	-.04070	.10120	.07070	-.00530	.00450	-.00250	.03010	.05550	-.01640
-3.786	4.339	.00590	.10480	.03340	-.10030	.06160	-.03990	.02980	.05460	-.01630
-3.878	6.168	.01220	.10580	.02600	-.14630	.08970	-.05760	.03090	.05700	-.01680
	GRADIENT	.00078	.00019	-.00081	-.02343	.01391	-.00919	-.00031	-.00071	.00015

RUN NO. 970/ 0 RN/L = 3.49 GRADIENT INTERVAL = -5.00/ 5.00

ALPHAO	BETAO	CNFO	CAFO	CLMFO	CYFO	CYNFO	CBLFO	CNBO	CABO	CLMBO
-.471	-7.078	.18370	.10200	-.09170	.15810	-.09400	.06750	.03280	.06230	-.01740
-.437	-4.868	.16190	.10240	-.07630	.10600	-.06300	.04610	.03170	.05920	-.01710
-.394	-.533	.11730	.09970	-.04260	.01080	-.00430	.00450	.02910	.05360	-.01580
-.356	3.599	.14090	.10330	-.06260	-.07670	.05030	-.03500	.02900	.05370	-.01580
-.354	5.784	.15190	.10490	-.07320	-.12530	.07980	-.05530	.02910	.05390	-.01580
	GRADIENT	-.00254	.00010	.00167	-.02158	.01338	-.00958	-.00032	-.00065	.00015

IA156A, AEDC PWT 16T-470, O T S W/SILTS (R8N059) (10 MAY 80)

REFERENCE DATA

SREF = 2690.0000 SQ.FT. XMRP = 976.0000 IN. XT
LREF = 1290.3000 INCHES YMRP = .0000 IN. YT
BREF = 1290.3000 INCHES ZMRP = 400.0000 IN. ZT
SCALE = .0200

PARAMETRIC DATA

IB-ELV = 10.000 OB-ELV = 9.000
BDFLAP = .000 SPDBRK = .000
RUDDER = .000 SILTS = 1.000
MACH = 1.100 RN/L = 3.500

RUN NO. 971/ 0 RN/L = 3.49 GRADIENT INTERVAL = -5.00/ 5.00

ALPHAO	BETAO	CNFO	CAFO	CLMFO	CYFO	CYNFO	CBLFO	CNBO	CABO	CLMBO
4.072	-5.756	.34180	.10000	-.20810	.11710	-.07250	.05390	.02910	.05500	-.01550
3.948	-3.679	.32270	.10080	-.19410	.07610	-.04670	.03560	.02920	.05450	-.01580
3.693	.116	.28410	.09740	-.16440	.00460	-.00230	.00220	.02970	.05490	-.01610
3.794	3.973	.31570	.10010	-.19040	-.06910	.04390	-.03140	.02800	.05150	-.01530
3.767	6.056	.32090	.10040	-.19640	-.11110	.06960	-.05030	.02890	.05340	-.01580
	GRADIENT	-.00089	-.00009	.00046	-.01898	.01184	-.00876	-.00016	-.00039	.00007

IA156A, AEDC PWT 16T-470, O T S W/SILTS (R8N060) (10 MAY 80)

REFERENCE DATA

SREF = 2690.0000 SQ.FT. XMRP = 976.0000 IN. XT
LREF = 1290.3000 INCHES YMRP = .0000 IN. YT
BREF = 1290.3000 INCHES ZMRP = 400.0000 IN. ZT
SCALE = .0200

PARAMETRIC DATA

IB-ELV = 10.000 OB-ELV = 9.000
BDFLAP = .000 SPDBRK = .000
RUDDER = .000 SILTS = 1.000
MACH = 1.150 RN/L = 3.500

RUN NO. 972/ 0 RN/L = 3.49 GRADIENT INTERVAL = -5.00/ 5.00

ALPHAO	BETAO	CNFO	CAFO	CLMFO	CYFO	CYNFO	CBLFO	CNBO	CABO	CLMBO
-8.143	-6.001	-.12620	.10740	.13200	.18150	-.10810	.06310	.03180	.06170	-.01660
-8.286	-3.781	-.14910	.11030	.15010	.11390	-.06600	.03870	.03150	.05930	-.01690
-8.188	.192	-.18870	.10860	.17910	.00700	-.00200	.00160	.02890	.05390	-.01560
-8.012	4.392	-.17360	.11080	.16570	-.11360	.07160	-.03960	.02990	.05530	-.01620
-8.015	6.263	-.16560	.11000	.15680	-.17170	.10680	-.05950	.03090	.05770	-.01670
	GRADIENT	-.00294	.00007	.00186	-.02784	.01684	-.00958	-.00019	-.00048	.00008

RUN NO. 973/ 0 RN/L = 3.49 GRADIENT INTERVAL = -5.00/ 5.00

ALPHAO	BETAO	CNFO	CAFO	CLMFO	CYFO	CYNFO	CBLFO	CNBO	CABO	CLMBO
-6.224	-6.019	-.04080	.10800	.06850	.16520	-.09810	.06160	.03130	.06000	-.01650
-6.146	-4.078	-.05750	.10890	.08150	.10930	-.06390	.04070	.03040	.05720	-.01630
-6.274	.108	-.11360	.10590	.12380	.00580	-.00250	.00160	.02860	.05320	-.01550
-6.063	4.279	-.08810	.10910	.10170	-.10360	.06450	-.03890	.02890	.05330	-.01580
-6.001	6.267	-.07870	.11060	.09190	-.16040	.09920	-.05950	.02960	.05500	-.01600
	GRADIENT	-.00367	.00002	.00242	-.02548	.01536	-.00953	-.00018	-.00047	.00006

IA156A, AEDC PWT 16T-470, O T S W/SILTS (R8N060) (10 MAY 80)

REFERENCE DATA

SREF = 2690.0000 SQ.FT. XMRP = 976.0000 IN. XT
LREF = 1290.3000 INCHES YMRP = .0000 IN. YT
BREF = 1290.3000 INCHES ZMRP = 400.0000 IN. ZT
SCALE = .0200

PARAMETRIC DATA

IB-ELV = 10.000 OB-ELV = 9.000
BDFLAP = .000 SPDBRK = .000
RUDDER = .000 SILTS = 1.000
MACH = 1.150 RN/L = 3.500

RUN NO. 974/ 0 RN/L = 3.49 GRADIENT INTERVAL = -5.00/ 5.00

ALPHAO	BETAO	CNFO	CAFO	CLMFO	CYFO	CYNFO	CBLFO	CNBO	CABO	CLMBO
-4.137	-6.136	.04860	.10820	.00360	.15530	-.09230	.06190	.03110	.05900	-.01650
-4.341	-4.027	.01950	.10780	.02480	.09960	-.05850	.04020	.03040	.05690	-.01640
-4.272	.369	-.02570	.10480	.05890	-.00120	.00180	-.00170	.02870	.05290	-.01560
-3.786	4.337	.01110	.10890	.02850	-.09750	.06030	-.04010	.02760	.05070	-.01510
-3.901	6.185	.01180	.10940	.02560	-.14470	.08920	-.05780	.02950	.05420	-.01610
	GRADIENT	-.00117	.00012	.00057	-.02355	.01421	-.00960	-.00034	-.00074	.00016

RUN NO. 975/ 0 RN/L = 3.49 GRADIENT INTERVAL = -5.00/ 5.00

ALPHAO	BETAO	CNFO	CAFO	CLMFO	CYFO	CYNFO	CBLFO	CNBO	CABO	CLMBO
-.456	-6.965	.19680	.10570	-.10210	.15740	-.09500	.06670	.03160	.05960	-.01690
-.423	-4.871	.18410	.10790	-.09380	.10740	-.06470	.04590	.02990	.05600	-.01610
-.374	-.625	.14830	.10480	-.06690	.01060	-.00420	.00480	.02840	.05240	-.01550
-.336	3.586	.16670	.10930	-.08240	-.07800	.05140	-.03510	.02780	.05130	-.01510
-.337	5.781	.17110	.11010	-.08810	-.12650	.08120	-.05560	.02810	.05180	-.01540
	GRADIENT	-.00207	.00016	.00136	-.02193	.01373	-.00958	-.00025	-.00056	.00012

RUN NO. 976/ 0 RN/L = 3.49 GRADIENT INTERVAL = -5.00/ 5.00

ALPHAO	BETAO	CNFO	CAFO	CLMFO	CYFO	CYNFO	CBLFO	CNBO	CABO	CLMBO
3.932	-5.808	.33670	.10510	-.20570	.12370	-.07760	.05610	.02820	.05350	-.01500
3.960	-3.755	.32300	.10620	-.19560	.08180	-.05120	.03770	.02830	.05300	-.01530
3.829	.185	.30630	.10320	-.18140	.00760	-.00500	.00330	.02810	.05210	-.01520
3.790	3.941	.33100	.10590	-.20260	-.06620	.04190	-.03070	.02710	.04970	-.01490
3.759	6.060	.33130	.10630	-.20430	-.11040	.06970	-.05020	.02750	.05040	-.01500
	GRADIENT	.00100	-.00004	-.00087	-.01923	.01209	-.00889	-.00016	-.00043	.00005

IA156A, AEDC PWT 16T-470, O T S W/SILTS (R8N061) (10 MAY 80)

REFERENCE DATA

SREF = 2690.0000 SQ.FT. XMRP = 976.0000 IN. XT
LREF = 1290.3000 INCHES YMRP = .0000 IN. YT
BREF = 1290.3000 INCHES ZMRP = 400.0000 IN. ZT
SCALE = .0200

PARAMETRIC DATA

IB-ELV = 10.000 OB-ELV = 9.000
BDFLAP = .000 SPDBRK = .000
RUDDER = .000 SILTS = 1.000
MACH = 1.250 RN/L = 3.500

RUN NO. 977/ 0 RN/L = 3.51 GRADIENT INTERVAL = -5.00/ 5.00

ALPHAO	BETAO	CNFO	CAFO	CLMFO	CYFO	CYNFO	CBLFO	CNBO	CABO	CLMBO
-8.143	-5.996	-.10770	.11240	.11750	.17720	-.10630	.06240	.02820	.05500	-.01460
-8.298	-3.785	-.12920	.11430	.13300	.10910	-.06280	.03820	.02730	.05220	-.01440
-8.186	.202	-.15720	.11270	.15420	.00020	.00370	.00000	.02580	.04840	-.01390
-8.011	4.371	-.14080	.11450	.13910	-.11530	.07550	-.04050	.02660	.04970	-.01440
-8.027	6.290	-.13750	.11340	.13470	-.17380	.11140	-.06030	.02780	.05260	-.01480
	GRADIENT	-.00138	.00003	.00071	-.02752	.01696	-.00965	-.00008	-.00030	-.00000

RUN NO. 978/ 0 RN/L = 3.51 GRADIENT INTERVAL = -5.00/ 5.00

ALPHAO	BETAO	CNFO	CAFO	CLMFO	CYFO	CYNFO	CBLFO	CNBO	CABO	CLMBO
-6.231	-6.004	-.02860	.11210	.05780	.16190	-.09710	.06000	.02760	.05290	-.01460
-6.173	-4.080	-.04010	.11310	.06590	.10550	-.06120	.03940	.02730	.05140	-.01460
-6.272	.119	-.07840	.11080	.09420	-.00190	.00420	-.00010	.02590	.04840	-.01400
-6.053	4.300	-.05750	.11340	.07570	-.11050	.07110	-.04000	.02630	.04870	-.01420
-5.991	6.272	-.05490	.11320	.07160	-.16350	.10400	-.05910	.02690	.05050	-.01450
	GRADIENT	-.00208	.00004	.00117	-.02578	.01579	-.00947	-.00012	-.00032	.00005

RUN NO. 979/ 0 RN/L = 3.52 GRADIENT INTERVAL = -5.00/ 5.00

ALPHAO	BETAO	CNFO	CAFO	CLMFO	CYFO	CYNFO	CBLFO	CNBO	CABO	CLMBO
-4.151	-6.152	.05590	.11140	-.00530	.15290	-.09140	.05910	.02780	.05300	-.01480
-4.348	-4.016	.03360	.11250	.01060	.09600	-.05570	.03750	.02750	.05170	-.01470
-4.255	.380	.01030	.11060	.02780	-.00700	.00710	-.00240	.02540	.04730	-.01370
-3.795	4.350	.03740	.11330	.00460	-.10270	.06530	-.03870	.02550	.04690	-.01390
-3.880	6.179	.03250	.11220	.00650	-.15070	.09520	-.05660	.02750	.05110	-.01490
	GRADIENT	.00035	.00009	-.00063	-.02374	.01446	-.00911	-.00024	-.00058	.00010

RUN NO. 980/ 0 RN/L = 3.50 GRADIENT INTERVAL = -5.00/ 5.00

ALPHAO	BETAO	CNFO	CAFO	CLMFO	CYFO	CYNFO	CBLFO	CNBO	CABO	CLMBO
-.474	-6.978	.20120	.11060	-.11020	.15670	-.09520	.06300	.02820	.05380	-.01500
-.444	-4.886	.18960	.11290	-.10290	.10660	-.06410	.04350	.02710	.05120	-.01450
-.398	-.623	.16560	.11030	-.08540	.00970	-.00340	.00440	.02590	.04310	-.01400
-.363	3.580	.17990	.11510	-.09740	-.07820	.05160	-.03290	.02520	.04650	-.01370
-.379	5.795	.17580	.11420	-.09680	-.12810	.08260	-.05270	.02590	.04780	-.01420
	GRADIENT	-.00116	.00026	.00066	-.02183	.01367	-.00902	-.00022	-.00056	.00009

IA156A, AEDC PWT 16T-470, O T S W/SILTS (R8N061) (10 MAY 80)

REFERENCE DATA

SREF = 2690.0000 SQ.FT. XMRP = 976.0000 IN. XT
LREF = 1290.3000 INCHES YMRP = .0000 IN. YT
BREF = 1290.3000 INCHES ZMRP = 400.0000 IN. ZT
SCALE = .0200

PARAMETRIC DATA

IB-ELV = 10.000 OB-ELV = 9.000
BDFLAP = .000 SPDBRK = .000
RUDDER = .000 SILTS = 1.000
MACH = 1.250 RN/L = 3.500

RUN NO. 981/ 0 RN/L = 3.50 GRADIENT INTERVAL = -5.00/ 5.00

ALPHAO	BETAO	CNFO	CAFO	CLMFO	CYFO	CYNFO	CBLFO	CNBO	CABO	CLMBO
3.947	-5.805	.35630	.11300	-.22470	.12500	-.07860	.05370	.02610	.04900	-.01400
3.949	-3.734	.34240	.11330	-.21510	.08150	-.05110	.03570	.02600	.04850	-.01400
3.821	.193	.32160	.10950	-.19810	.00310	-.00140	.00170	.02620	.04890	-.01420
3.759	3.935	.33530	.11290	-.21040	-.07160	.04710	-.03130	.02500	.04590	-.01370
3.746	6.066	.33370	.11270	-.21080	-.11640	.07470	-.04980	.02540	.04690	-.01390
	GRADIENT	-.00096	-.00006	.00064	-.01996	.01280	-.00874	-.00013	-.00034	.00004

IA156A, AEDC PWT 16T-470, O T S W/SILTS (R8N062) (10 MAY 80)

REFERENCE DATA

SREF = 2690.0000 SQ.FT. XMRP = 976.0000 IN. XT
LREF = 1290.3000 INCHES YMRP = .0000 IN. YT
BREF = 1290.3000 INCHES ZMRP = 400.0000 IN. ZT
SCALE = .0200

PARAMETRIC DATA

IB-ELV = 10.000 OB-ELV = 11.000
BDFLAP = .000 SPDBRK = .000
RUDDER = .000 SILTS = 1.000
MACH = .300 RN/L = 3.500

RUN NO. 985/ 0 RN/L = 2.62 GRADIENT INTERVAL = -5.00/ 5.00

ALPHAO	BETAO	CNFO	CAFO	CLMFO	CYFO	CYNFO	CBLFO	CNBO	CABO	CLMBO
-6.189	-9.919	.02270	.02290	-.01030	.26180	-.16220	.07930	.02240	.04100	-.01230
-6.140	-5.798	.00690	.03230	.00170	.15010	-.09110	.04430	.02130	.03880	-.01170
-6.046	.188	-.02890	.03710	.02780	.00650	-.00250	-.00090	.01940	.03550	-.01070
-5.767	6.289	-.03270	.03530	.02480	-.15030	.09600	-.04870	.02090	.03790	-.01150
-5.906	10.172	-.05790	.02770	.03760	-.23960	.15190	-.07530	.02300	.04180	-.01280
	GRADIENT	.00000	.00000	.00000	.00000	.00000	.00000	.00000	.00000	.00000

RUN NO. 986/ 0 RN/L = 2.62 GRADIENT INTERVAL = -5.00/ 5.00

ALPHAO	BETAO	CNFO	CAFO	CLMFO	CYFO	CYNFO	CBLFO	CNBO	CABO	CLMBO
-.274	-10.576	.18760	.02340	-.11930	.24200	-.15390	.08100	.02300	.04190	-.01270
-.268	-6.531	.15930	.03570	-.09930	.14740	-.09250	.04770	.02050	.03720	-.01130
-.244	-.362	.14030	.04030	-.08420	.00930	-.00240	.00080	.01850	.03390	-.01010
-.219	5.616	.16230	.04100	-.10590	-.11260	.07730	-.04170	.01890	.03400	-.01050
-.209	9.775	.15720	.03360	-.10640	-.20190	.13630	-.07210	.02210	.03940	-.01240
	GRADIENT	.00000	.00000	.00000	.00000	.00000	.00000	.00000	.00000	.00000

IA156A, AEDC PWT 16T-470, O T S W/SILTS (R8N062) (10 MAY 80)

REFERENCE DATA

SREF = 2690.0000 SQ.FT. XMRP = 976.0000 IN. XT
LREF = 1290.3000 INCHES YMRP = .0000 IN. YT
BREF = 1290.3000 INCHES ZMRP = 400.0000 IN. ZT
SCALE = .0200

PARAMETRIC DATA

IB-ELV = 10.000 OB-ELV = 11.000
BDFLAP = .000 SPDBRK = .000
RUDDER = .000 SILTS = 1.000
MACH = .300 RN/L = 3.500

RUN NO. 987/ 0 RN/L = 2.62 GRADIENT INTERVAL = -5.00/ 5.00

ALPHAO	BETAO	CNFO	CAFO	CLMFO	CYFO	CYNFO	CBLFO	CNBO	CABO	CLMBO
6.163	-9.878	.35220	.02200	-.23320	.18940	-.12500	.07550	.02100	.03820	-.01170
5.922	-5.672	.33730	.02790	-.22370	.11020	-.07240	.04280	.01940	.03590	-.01060
5.799	.132	.34440	.02860	-.22570	.01920	-.01110	.00380	.01750	.03150	-.00980
5.887	6.149	.37400	.02590	-.25050	-.08820	.06220	-.03900	.01940	.03410	-.01100
5.769	10.020	.36010	.01900	-.24480	-.16500	.11480	-.06810	.02140	.03790	-.01200
	GRADIENT	.00000	.00000	.00000	.00000	.00000	.00000	.00000	.00000	.00000

IA156A, AEDC PWT 16T-470, O T S W/SILTS (R8N063) (10 MAY 80)

REFERENCE DATA

SREF = 2690.0000 SQ.FT. XMRP = 976.0000 IN. XT
LREF = 1290.3000 INCHES YMRP = .0000 IN. YT
BREF = 1290.3000 INCHES ZMRP = 400.0000 IN. ZT
SCALE = .0200

PARAMETRIC DATA

IB-ELV = 10.000 OB-ELV = 11.000
BDFLAP = .000 SPDBRK = .000
RUDDER = .000 SILTS = 1.000
MACH = .300 RN/L = 3.500

RUN NO. 984/ 0 RN/L = 2.64 GRADIENT INTERVAL = -5.00/ 5.00

ALPHAO	BETAO	CNFO	CAFO	CLMFO	CYFO	CYNFO	CBLFO	CNBO	CABO	CLMBO
-10.338	-7.903	-.11320	.01800	.08410	.23390	-.14320	.06720	.02260	.04160	-.01240
-10.010	-5.743	-.11230	.02410	.08370	.16930	-.10260	.04820	.02190	.03960	-.01210
-9.964	.320	-.15190	.02740	.11180	.00300	.00130	-.00220	.01970	.03610	-.01080
-9.977	6.296	-.16610	.02610	.11570	-.16190	.10300	-.04960	.02120	.03850	-.01170
-10.023	8.249	-.17830	.02470	.12130	-.21130	.13340	-.06370	.02220	.04010	-.01230
	GRADIENT	.00000	.00000	.00000	.00000	.00000	.00000	.00000	.00000	.00000

RUN NO. 988/ 0 RN/L = 2.63 GRADIENT INTERVAL = -5.00/ 5.00

ALPHAO	BETAO	CNFO	CAFO	CLMFO	CYFO	CYNFO	CBLFO	CNBO	CABO	CLMBO
10.065	-7.798	.46950	.01240	-.31670	.12720	-.08300	.05580	.01990	.03610	-.01100
9.942	-5.729	.46850	.01630	-.31480	.09610	-.06200	.04110	.01910	.03430	-.01070
9.776	.230	.47340	.01820	-.31480	.01880	-.01080	.00400	.01720	.03060	-.00970
9.976	6.289	.49830	.01290	-.33790	-.06800	.04780	-.03590	.01870	.03270	-.01070
9.935	8.263	.48870	.01030	-.33320	-.10350	.07290	-.05110	.02010	.03500	-.01150
	GRADIENT	.00000	.00000	.00000	.00000	.00000	.00000	.00000	.00000	.00000

IA156A, AEDC PWT 16T-470, O T S W/SILTS (R8N064) (10 MAY 80)

REFERENCE DATA

SREF = 2690.0000 SQ.FT. XMRP = 976.0000 IN. XT
LREF = 1290.3000 INCHES YMRP = .0000 IN. YT
BREF = 1290.3000 INCHES ZMRP = 400.0000 IN. ZT
SCALE = .0200

PARAMETRIC DATA

IB-ELV = 10.000 OB-ELV = 11.000
BDFLAP = .000 SPDBRK = .000
RUDDER = .000 SILTS = 1.000
MACH = .600 RN/L = 3.500

RUN NO. 989/ 0 RN/L = 3.51 GRADIENT INTERVAL = -5.00/ 5.00

ALPHAO	BETAO	CNFO	CAFO	CLMFO	CYFO	CYNFO	CBLFO	CNBO	CABO	CLMBO
-8.116	-7.801	-.03990	.03000	.03180	.22580	-.13940	.06740	.02510	.04640	-.01360
-8.131	-5.751	-.05230	.03650	.04070	.16610	-.10170	.04920	.02280	.04200	-.01240
-8.158	-3.746	-.06220	.03790	.04870	.10620	-.06380	.03060	.02250	.04160	-.01230
-8.038	.179	-.08530	.03600	.06640	.00350	.00060	-.00080	.02180	.04010	-.01190
-7.907	4.315	-.07480	.03790	.05450	-.10980	.07120	-.03460	.02230	.04040	-.01230
-7.903	6.178	-.07300	.03550	.05100	-.16070	.10320	-.05000	.02340	.04280	-.01290
-7.933	8.182	-.07780	.03310	.05200	-.21470	.13730	-.06600	.02350	.04320	-.01280
	GRADIENT	-.00153	.00000	.00069	-.02680	.01675	-.00809	-.00002	-.00015	-.00000

RUN NO. 990/ 0 RN/L = 3.50 GRADIENT INTERVAL = -5.00/ 5.00

ALPHAO	BETAO	CNFO	CAFO	CLMFO	CYFO	CYNFO	CBLFO	CNBO	CABO	CLMBO
-6.151	-7.917	.02710	.03370	-.01430	.22010	-.13660	.06700	.02350	.04330	-.01290
-6.133	-5.908	.01390	.03860	-.00500	.16170	-.10000	.04910	.02270	.04150	-.01240
-6.052	-4.006	.00610	.04090	.00130	.10560	-.06470	.03170	.02210	.04040	-.01220
-6.115	.062	-.02280	.04010	.02310	.00080	.00170	-.00100	.02000	.03680	-.01100
-5.951	4.184	-.01090	.04030	.01080	-.10170	.06580	-.03260	.02160	.03930	-.01190
-5.876	6.172	-.00740	.03920	.00620	-.15080	.09710	-.04830	.02250	.04100	-.01240
-5.888	8.143	-.01290	.03560	.00760	-.20220	.12990	-.06410	.02340	.04270	-.01280
	GRADIENT	-.00206	-.00007	.00115	-.02531	.01593	-.00785	-.00006	-.00013	.00004

RUN NO. 991/ 0 RN/L = 3.50 GRADIENT INTERVAL = -5.00/ 5.00

ALPHAO	BETAO	CNFO	CAFO	CLMFO	CYFO	CYNFO	CBLFO	CNBO	CABO	CLMBO
-4.002	-8.052	.09770	.03600	-.06250	.20980	-.13140	.06620	.02340	.04310	-.01280
-4.241	-5.954	.07280	.03830	-.04550	.15380	-.09550	.04810	.02310	.04250	-.01260
-4.156	-3.960	.06510	.04290	-.03940	.09660	-.05880	.03000	.02160	.03950	-.01190
-4.127	.330	.04360	.04270	-.02250	-.00600	.00560	-.00280	.01990	.03620	-.01090
-3.741	4.210	.06390	.04250	-.04020	-.09820	.06320	-.03230	.02110	.03790	-.01170
-3.805	6.054	.06360	.04050	-.04190	-.14180	.09150	-.04670	.02200	.04000	-.01220
-3.828	8.036	.05830	.03630	-.04050	-.19130	.12350	-.06240	.02320	.04250	-.01280
	GRADIENT	-.00023	-.00005	-.00003	-.02384	.01493	-.00763	-.00007	-.00021	.00003

IA156A, AEDC PWT 16T-470, O T S W/SILTS (R8N064) (10 MAY 80)

REFERENCE DATA

SREF = 2690.0000 SQ.FT. XMRP = 976.0000 IN. XT
LREF = 1290.3000 INCHES YMRP = .0000 IN. YT
BREF = 1290.3000 INCHES ZMRP = 400.0000 IN. ZT
SCALE = .0200

PARAMETRIC DATA

IB-ELV = 10.000 OB-ELV = 11.000
BDFLAP = .000 SPDBRK = .000
RUDDER = .000 SILTS = 1.000
MACH = .600 RN/L = 3.500

RUN NO. 992/ 0 RN/L = 3.50 GRADIENT INTERVAL = -5.00/ 5.00

ALPHAO	BETAO	CNFO	CAFO	CLMFO	CYFO	CYNFO	CBLFO	CNBO	CABO	CLMBO
-.333	-8.763	.20830	.03220	-.13600	.20680	-.13140	.06990	.02280	.04200	-.01250
-.323	-6.686	.19880	.03690	-.13000	.15730	-.09960	.05290	.02190	.04040	-.01190
-.309	-4.451	.18660	.04150	-.12150	.10110	-.06320	.03380	.02150	.03940	-.01170
-.284	-.386	.16630	.04220	-.10460	.00810	-.00250	.00170	.01900	.03520	-.01040
-.253	3.691	.18760	.04150	-.12250	-.07490	.05110	-.02740	.02040	.03690	-.01140
-.253	5.787	.19050	.04140	-.12740	-.12080	.08120	-.04340	.02120	.03790	-.01190
-.243	7.871	.19170	.03820	-.13060	-.16610	.11160	-.05950	.02230	.03980	-.01240
	GRADIENT	.00013	-.00000	-.00012	-.02162	.01404	-.00752	-.00013	-.00031	.00004

RUN NO. 993/ 0 RN/L = 3.50 GRADIENT INTERVAL = -5.00/ 5.00

ALPHAO	BETAO	CNFO	CAFO	CLMFO	CYFO	CYNFO	CBLFO	CNBO	CABO	CLMBO
4.168	-7.891	.33940	.02940	-.22750	.16330	- 10770	.06350	.02160	.03950	-.01190
4.092	-5.788	.33080	.03340	-.22210	.11700	-.07700	.04510	.02080	.03810	-.01140
4.040	-3.806	.31940	.03620	-.21360	.07920	-.05180	.03020	.01970	.03590	-.01080
3.837	.078	.30320	.03440	-.19970	.01150	-.00690	.00310	.01940	.03510	-.01070
3.896	4.062	.32600	.03400	-.21810	-.06340	.04310	-.02610	.01960	.03510	-.01100
3.844	6.167	.32750	.03280	-.22210	-.11000	.07520	-.04340	.02060	.03650	-.01170
3.838	8.161	.32420	.02880	-.22160	-.14850	.10150	-.05800	.02190	.03900	-.01230
	GRADIENT	.00086	-.00028	-.00059	-.01813	.01206	-.00716	-.00001	-.00010	-.00003

RUN NO. 994/ 0 RN/L = 3.50 GRADIENT INTERVAL = -5.00/ 5.00

ALPHAO	BETAO	CNFO	CAFO	CLMFO	CYFO	CYNFO	CBLFO	CNBO	CABO	CLMBO
6.197	-7.962	.40360	.02350	-.27220	.15400	-.10170	.06260	.02160	.03940	-.01190
6.167	-5.883	.40490	.02780	-.27320	.11190	-.07330	.04520	.02090	.03820	-.01150
6.157	-3.829	.40040	.03080	-.26980	.07710	-.05020	.03040	.01980	.03640	-.01090
5.863	.183	.37760	.03020	-.25080	.00730	-.00430	.00180	.01900	.03410	-.01060
5.796	4.073	.38610	.03010	-.25950	-.06070	.04100	-.02570	.01990	.03480	-.01130
5.774	5.985	.39140	.02820	-.26580	-.09560	.06490	-.03950	.02070	.03640	-.01170
5.805	8.225	.38840	.02350	-.26600	-.13830	.09480	-.05680	.02190	.03900	-.01230
	GRADIENT	-.00183	-.00009	.00132	-.01744	.01154	-.00710	.00001	-.00020	-.00005

IA156A, AEDC PWT 16T-470, O T S W/SILTS (R8N064) (10 MAY 80)

REFERENCE DATA

SREF = 2690.0000 SQ.FT. XMRP = 976.0000 IN. XT
LREF = 1290.3000 INCHES YMRP = .0000 IN. YT
BREF = 1290.3000 INCHES ZMRP = 400.0000 IN. ZT
SCALE = .0200

PARAMETRIC DATA

IB-ELV = 10.000 OB-ELV = 11.000
BDFLAP = .000 SPDBRK = .000
RUDDER = .000 SILTS = 1.000
MACH = .600 RN/L = 3.500

RUN NO. 995/ 0 RN/L = 3.50 GRADIENT INTERVAL = -5.00/ 5.00

ALPHAO	BETAO	CNFO	CAFO	CLMFO	CYFO	CYNFO	CBLFO	CNBO	CABO	CLMBO
8.107	-7.821	.46190	.01770	-.31250	.13530	-.08870	.05820	.02110	.03880	-.01160
7.996	-5.734	.46300	.02200	-.31340	.09770	-.06320	.04160	.02070	.03760	-.01150
7.970	-3.774	.45900	.02410	-.30990	.06740	-.04330	.02810	.02000	.03620	-.01110
7.886	.178	.44490	.02460	-.29730	.00630	-.00340	.00160	.01900	.03430	-.01050
7.824	4.107	.45600	.02400	-.30770	-.05270	.03550	-.02440	.02010	.03530	-.01140
7.906	6.229	.46070	.02170	-.31380	-.08720	.05910	-.03940	.02070	.03630	-.01180
7.889	8.228	.45190	.01700	-.31000	-.12440	.08540	-.05530	.02160	.03830	-.01210
	GRADIENT	-.00038	-.00001	.00028	-.01524	.01000	-.00666	.00001	-.00011	-.00004

IA156A, AEDC PWT 16T-470, O T S W/SILTS (R8N065) (10 MAY 80)

REFERENCE DATA

SREF = 2690.0000 SQ.FT. XMRP = 976.0000 IN. XT
LREF = 1290.3000 INCHES YMRP = .0000 IN. YT
BREF = 1290.3000 INCHES ZMRP = 400.0000 IN. ZT
SCALE = .0200

PARAMETRIC DATA

IB-ELV = 10.000 OB-ELV = 11.000
BDFLAP = .000 SPDBRK = .000
RUDDER = .000 SILTS = 1.000
MACH = .800 RN/L = 3.500

RUN NO. 996/ 0 RN/L = 3.50 GRADIENT INTERVAL = -5.00/ 5.00

ALPHAO	BETAO	CNFO	CAFO	CLMFO	CYFO	CYNFO	CBLFO	CNBO	CABO	CLMBO
-8.190	-5.988	-.04440	.04910	.03860	.18050	-.11080	.05380	.02450	.04540	-.01330
-8.244	-3.759	-.06010	.05240	.05030	.11090	-.06670	.03260	.02360	.04330	-.01290
-8.164	.181	-.10070	.04760	.08070	.00510	-.00090	.00060	.02210	.04090	-.01200
-8.008	4.427	-.07800	.05020	.05990	-.11590	.07510	-.03580	.02320	.04280	-.01270
-7.969	6.241	-.07430	.04930	.05540	-.16920	.10850	-.05230	.02420	.04460	-.01320
	GRADIENT	-.00209	-.00026	.00109	-.02772	.01733	-.00836	-.00004	-.00005	.00002

RUN NO. 997/ 0 RN/L = 3.50 GRADIENT INTERVAL = -5.00/ 5.00

ALPHAO	BETAO	CNFO	CAFO	CLMFO	CYFO	CYNFO	CBLFO	CNBO	CABO	CLMBO
-6.208	-5.978	.02400	.05000	-.00960	.16930	-.10490	.05210	.02360	.04360	-.01280
-6.158	-4.068	.01090	.05230	.00020	.11270	-.06920	.03460	.02300	.04240	-.01250
-6.227	.117	-.03060	.04860	.03110	.00270	-.00010	.00030	.02120	.03910	-.01150
-6.061	4.258	-.01060	.05100	.01290	-.10330	.06680	-.03280	.02250	.04140	-.01230
-5.755	6.394	.00840	.04990	-.00300	-.16170	.10370	-.05140	.02370	.04360	-.01300
	GRADIENT	-.00259	-.00016	.00154	-.02594	.01633	-.00810	-.00006	-.00012	.00002

IA156A, AEDC PWT 16T-470, O T S W/SILTS (R8N065) (10 MAY 80)

REFERENCE DATA

SREF = 2690.0000 SQ.FT. XMRP = 976.0000 IN. XT
LREF = 1290.3000 INCHES YMRP = .0000 IN. YT
BREF = 1290.3000 INCHES ZMRP = 400.0000 IN. ZT
SCALE = .0200

PARAMETRIC DATA

IB-ELV = 10.000 OB-ELV = 11.000
BDFLAP = .000 SPDBRK = .000
RUDDER = .000 SILTS = 1.000
MACH = .800 RN/L = 3.500

RUN NO. 998/ 0 RN/L = 3.50 GRADIENT INTERVAL = -5.00/ 5.00

ALPHAO	BETAO	CNFO	CAFO	CLMFO	CYFO	CYNFO	CBLFO	CNBO	CABO	CLMBO
-4.084	-6.130	.09890	.05040	-.06170	.16260	-.10170	.05190	.02360	.04360	-.01280
-4.332	-3.976	.07350	.05280	-.04340	.09960	-.06110	.03140	.02220	.04100	-.01210
-4.236	.375	.04050	.04930	-.01890	-.00420	.00390	-.00160	.02070	.03820	-.01130
-3.804	4.333	.06900	.05120	-.04230	-.10260	.06580	-.03340	.02190	.04050	-.01190
-3.864	6.155	.07180	.05040	-.04660	-.14880	.09580	-.04890	.02300	.04190	-.01260
	GRADIENT	-.00066	-.00020	.00022	-.02433	.01527	-.00780	-.00004	-.00007	.00003

RUN NO. 999/ 0 RN/L = 3.50 GRADIENT INTERVAL = -5.00/ 5.00

ALPHAO	BETAO	CNFO	CAFO	CLMFO	CYFO	CYNFO	CBLFO	CNBO	CABO	CLMBO
-.349	-6.910	.22860	.04530	-.14950	.16780	-.10700	.05780	.02260	.04260	-.01210
-.345	-4.778	.21270	.04960	-.13810	.11260	-.07140	.03890	.02120	.03940	-.01150
-.318	-.519	.18110	.04850	-.11380	.01100	-.00470	.00370	.01980	.03640	-.01090
-.280	3.587	.20520	.05070	-.13380	-.07570	.05090	-.02770	.02060	.03750	-.01140
-.281	5.732	.21160	.04990	-.14100	-.12540	.08400	-.04570	.02160	.03930	-.01190
	GRADIENT	-.00094	.00013	.00055	-.02252	.01463	-.00796	-.00007	-.00023	.00001

RUN NO. 1000/ 0 RN/L = 3.51 GRADIENT INTERVAL = -5.00/ 5.00

ALPHAO	BETAO	CNFO	CAFO	CLMFO	CYFO	CYNFO	CBLFO	CNBO	CABO	CLMBO
4.101	-5.781	.36710	.04310	-.24780	.12580	-.08230	.04930	.02220	.04110	-.01210
3.955	-3.664	.35700	.04530	-.24060	.07870	-.05100	.03120	.02060	.03790	-.01130
3.717	.123	.32490	.04290	-.21550	.00990	-.00560	.00300	.02000	.03630	-.01110
3.820	4.012	.35910	.04350	-.24260	-.06460	.04320	-.02670	.02050	.03700	-.01140
3.767	6.089	.35980	.04300	-.24520	-.11360	.07690	-.04490	.02170	.03910	-.01200
	GRADIENT	.00031	-.00023	-.00029	-.01867	.01227	-.00754	-.00001	-.00012	-.00001

RUN NO. 1001/ 0 RN/L = 3.51 GRADIENT INTERVAL = -5.00/ 5.00

ALPHAO	BETAO	CNFO	CAFO	CLMFO	CYFO	CYNFO	CBLFO	CNBO	CABO	CLMBO
6.081	-5.826	.43370	.04200	-.29260	.12090	-.07950	.04610	.02180	.03980	-.01200
6.062	-3.782	.43650	.04420	-.29510	.07770	-.05050	.02900	.02070	.03760	-.01140
5.749	.159	.40670	.03990	-.27230	.00580	-.00290	.00190	.02020	.03670	-.01110
5.676	3.974	.41730	.04140	-.28220	-.05900	.03940	-.02310	.02080	.03730	-.01160
5.803	6.143	.41980	.04050	-.28590	-.10200	.06930	-.03960	.02180	.03930	-.01210
	GRADIENT	-.00250	-.00036	.00169	-.01763	.01159	-.00672	.00001	-.00004	-.00003

IA156A, AEDC PWT 16T-470, O T S W/SILTS (R8N066) (10 MAY 80)

REFERENCE DATA

SREF = 2690.0000 SQ.FT. XMRP = 976.0000 IN. XT
LREF = 1290.3000 INCHES YMRP = .0000 IN. YT
BREF = 1290.3000 INCHES ZMRP = 400.0000 IN. ZT
SCALE = .0200

PARAMETRIC DATA

IB-ELV = 10.000 OB-ELV = 11.000
BDFLAP = .000 SPDBRK = .000
RUDDER = .000 SILTS = 1.000
MACH = .900 RN/L = 3.500

RUN NO. 1002/ 0 RN/L = 3.50 GRADIENT INTERVAL = -5.00/ 5.00

ALPHAO	BETAO	CNFO	CAFO	CLMFO	CYFO	CYNFO	CBLFO	CNBO	CABO	CLMBO
-8.139	-6.011	-.07130	.06880	.06710	.18310	-.11050	.05400	.02600	.04890	-.01400
-8.266	-3.766	-.09220	.07000	.08310	.11200	-.06500	.03190	.02530	.04680	-.01380
-8.171	.178	-.13230	.06590	.11180	.00830	-.00330	.00110	.02350	.04350	-.01280
-7.999	4.397	-.11120	.07020	.09360	-.11420	.07190	-.03590	.02430	.04520	-.01320
-8.035	6.278	-.11190	.06980	.09240	-.17270	.10810	-.05360	.02620	.04880	-.01420
	GRADIENT	-.00224	.00004	.00122	-.02773	.01678	-.00831	-.00012	-.00019	.00007

RUN NO. 1003/ 0 RN/L = 3.50 GRADIENT INTERVAL = -5.00/ 5.00

ALPHAO	BETAO	CNFO	CAFO	CLMFO	CYFO	CYNFO	CBLFO	CNBO	CABO	CLMBO
-6.213	-5.983	-.00320	.06670	.01900	.17290	-.10540	.05350	.02630	.04920	-.01420
-6.159	-4.072	-.01580	.06860	.02830	.11640	-.06910	.03530	.02490	.04630	-.01350
-6.252	.103	-.06310	.06430	.06240	.00450	-.00140	.00030	.02280	.04220	-.01240
-6.049	4.272	-.04010	.06790	.04280	-.10510	.06560	-.03420	.02460	.04560	-.01330
-5.983	6.249	-.03510	.06790	.03750	-.16100	.10070	-.05220	.02600	.04850	-.01400
	GRADIENT	-.00291	-.00008	.00174	-.02655	.01614	-.00833	-.00004	-.00008	.00002

RUN NO. 1004/ 0 RN/L = 3.49 GRADIENT INTERVAL = -5.00/ 5.00

ALPHAO	BETAO	CNFO	CAFO	CLMFO	CYFO	CYNFO	CBLFO	CNBO	CABO	CLMBO
-4.066	-6.140	.07870	.06700	-.03870	.16210	-.09920	.05260	.02510	.04700	-.01350
-4.344	-4.007	.04920	.06760	-.01810	.10270	-.06080	.03260	.02450	.04590	-.01320
-4.242	.377	.00880	.06320	.01130	-.00430	.00380	-.00260	.02320	.04300	-.01260
-3.805	4.332	.04610	.06800	-.01780	-.10070	.06270	-.03450	.02410	.04430	-.01320
-3.878	6.163	.04710	.06740	-.02020	-.14980	.09390	-.05090	.02500	.04620	-.01370
	GRADIENT	-.00053	.00003	.00016	-.02439	.01481	-.00805	-.00005	-.00020	.00000

RUN NO. 1005/ 0 RN/L = 3.49 GRADIENT INTERVAL = -5.00/ 5.00

ALPHAO	BETAO	CNFO	CAFO	CLMFO	CYFO	CYNFO	CBLFO	CNBO	CABO	CLMBO
-.384	-6.979	.21930	.06200	-.13520	.16630	-.10430	.05980	.02480	.04670	-.01330
-.370	-4.834	.20250	.06410	-.12440	.11370	-.07090	.04120	.02360	.04430	-.01270
-.335	-.531	.16290	.06140	-.09600	.01060	-.00430	.00350	.02120	.03940	-.01150
-.302	3.595	.19110	.06440	-.11840	-.07520	.04950	-.03020	.02250	.04230	-.01210
-.304	5.740	.19620	.06610	-.12340	-.12460	.08160	-.04830	.02390	.04420	-.01300
	GRADIENT	-.00141	.00003	.00075	-.02242	.01429	-.00847	-.00013	-.00024	.00007

IA156A, AEDC PWT 16T-470, O T S W/SILTS (R8N066) (10 MAY 80)

REFERENCE DATA

SREF = 2690.0000 SQ.FT. XMRP = 976.0000 IN. XT
LREF = 1290.3000 INCHES YMRP = .0000 IN. YT
BREF = 1290.3000 INCHES ZMRP = 400.0000 IN. ZT
SCALE = .0200

PARAMETRIC DATA

IB-ELV = 10.000 OB-ELV = 11.000
BDFLAP = .000 SPDBRK = .000
RUDDER = .000 SILTS = 1.000
MACH = .900 RN/L = 3.500

RUN NO. 1006/ 0 RN/L = 3.50 GRADIENT INTERVAL = -5.00/ 5.00

ALPHAO	BETAO	CNFO	CAFO	CLMFO	CYFO	CYNFO	CBLFO	CNBO	CABO	CLMBO
4.095	-5.773	.36630	.06350	-.24100	.12340	-.07860	.04770	.02360	.04420	-.01270
3.945	-3.668	.35960	.06300	-.23760	.08180	-.05180	.03130	.02180	.04070	-.01170
3.706	.126	.32690	.05790	-.21370	.00890	-.00480	.00210	.02120	.03930	-.01150
3.810	3.998	.35670	.06140	-.23610	-.06700	.04420	-.02720	.02230	.04180	-.01200
3.754	6.078	.35070	.06250	-.23380	-.11520	.07500	-.04460	.02430	.04480	-.01320
	GRADIENT	-.00035	-.00020	.00018	-.01941	.01252	-.00763	.00007	.00015	-.00004

IA156A, AEDC PWT 16T-470, O T S W/SILTS (R8N067) (10 MAY 80)

REFERENCE DATA

SREF = 2690.0000 SQ.FT. XMRP = 976.0000 IN. XT
LREF = 1290.3000 INCHES YMRP = .0000 IN. YT
BREF = 1290.3000 INCHES ZMRP = 400.0000 IN. ZT
SCALE = .0200

PARAMETRIC DATA

IB-ELV = 10.000 OB-ELV = 11.000
BDFLAP = .000 SPDBRK = .000
RUDDER = .000 SILTS = 1.000
MACH = .950 RN/L = 3.500

RUN NO. 1007/ 0 RN/L = 3.49 GRADIENT INTERVAL = -5.00/ 5.00

ALPHAO	BETAO	CNFO	CAFO	CLMFO	CYFO	CYNFO	CBLFO	CNBO	CABO	CLMBO
-8.174	-5.994	-.09910	.08300	.09630	.18860	-.11450	.05740	.02940	.05480	-.01590
-8.273	-3.769	-.11850	.08640	.10970	.11300	-.06550	.03390	.02790	.05160	-.01510
-8.177	.172	-.15320	.08330	.13500	.00940	-.00420	.00250	.02580	.04730	-.01410
-7.999	4.395	-.13610	.08430	.11980	-.11640	.07350	-.03670	.02860	.05330	-.01540
-8.015	6.270	-.13210	.08420	.11470	-.17680	.11250	-.05540	.02950	.05540	-.01590
	GRADIENT	-.00208	-.00025	.00118	-.02812	.01704	-.00866	.00009	.00022	-.00004

RUN NO. 1008/ 0 RN/L = 3.50 GRADIENT INTERVAL = -5.00/ 5.00

ALPHAO	BETAO	CNFO	CAFO	CLMFO	CYFO	CYNFO	CBLFO	CNBO	CABO	CLMBO
-6.222	-6.000	-.02610	.08290	.04360	.17610	-.10720	.05570	.02870	.05330	-.01550
-6.165	-4.074	-.03700	.08380	.05030	.11510	-.06770	.03610	.02710	.05040	-.01470
-6.250	.100	-.08230	.08120	.08330	.00500	-.00230	.00140	.02540	.04670	-.01390
-6.077	4.263	-.06220	.08310	.06600	-.10840	.06800	-.03550	.02770	.05140	-.01500
-5.771	6.406	-.03880	.08310	.04630	-.16890	.10660	-.05520	.02830	.05290	-.01530
	GRADIENT	-.00303	-.00008	.00189	-.02681	.01628	-.00859	.00007	.00012	-.00004

IA156A, AEDC PWT 16T-470, O T S W/SILTS (R8N067) (10 MAY 80)

REFERENCE DATA

SREF = 2690.0000 SQ.FT. XMRP = 976.0000 IN. XT
LREF = 1290.3000 INCHES YMRP = .0000 IN. YT
BREF = 1290.3000 INCHES ZMRP = 400.0000 IN. ZT
SCALE = .0200

PARAMETRIC DATA

IB-ELV = 10.000 OB-ELV = 11.000
BDFLAP = .000 SPDBRK = .000
RUDDER = .000 SILTS = 1.000
MACH = .950 RN/L = 3.500

RUN NO. 1009/ 0 RN/L = 3.50 GRADIENT INTERVAL = -5.00/ 5.00

ALPHAO	BETAO	CNFO	CAFO	CLMFO	CYFO	CYNFO	CBLFO	CNBO	CABO	CLMBO
-4.090	-6.152	.05960	.08150	-.01820	.16380	-.09960	.05420	.02830	.05280	-.01530
-4.336	-4.001	.03200	.08320	.00090	.10050	-.05830	.03280	.02630	.04890	-.01420
-4.255	.372	-.00980	.08060	.03140	-.00240	.00200	-.00120	.02460	.04520	-.01350
-3.805	4.339	.02940	.08280	.00000	-.10260	.06370	-.03540	.02610	.04800	-.01430
-3.884	6.157	.02950	.08150	-.00240	-.15350	.09620	-.05270	.02870	.05300	-.01560
	GRADIENT	-.00047	-.00006	.00001	-.02434	.01461	-.00817	-.00003	-.00012	-.00001

RUN NO. 1010/ 0 RN/L = 3.50 GRADIENT INTERVAL = -5.00/ 5.00

ALPHAO	BETAO	CNFO	CAFO	CLMFO	CYFO	CYNFO	CBLFO	CNBO	CABO	CLMBO
-.403	-6.989	.20300	.07640	-.11890	.16350	-.09950	.05980	.02790	.05290	-.01490
-.384	-4.820	.18520	.07830	-.10700	.10960	-.06520	.04040	.02590	.04910	-.01380
-.355	-.578	.13840	.07450	-.07300	.01130	-.00450	.00420	.02340	.04400	-.01250
-.317	3.642	.17210	.07980	-.09970	-.07570	.04870	-.03110	.02500	.04620	-.01360
-.314	5.778	.18060	.08080	-.10760	-.12410	.07950	-.04940	.02690	.05010	-.01450
	GRADIENT	-.00156	.00018	.00087	-.02190	.01346	-.00845	-.00011	-.00034	.00002

RUN NO. 1011/ 0 RN/L = 3.49 GRADIENT INTERVAL = -5.00/ 5.00

ALPHAO	BETAO	CNFO	CAFO	CLMFO	CYFO	CYNFO	CBLFO	CNBO	CABO	CLMBO
4.100	-5.936	.35740	.07580	-.23020	.12050	-.07420	.04940	.02550	.04820	-.01360
3.927	-3.611	.34490	.07540	-.22320	.07270	-.04270	.02950	.02380	.04480	-.01280
3.704	.194	.30890	.07000	-.19640	.00650	-.00280	.00110	.02460	.04570	-.01340
3.820	4.058	.34440	.07500	-.22330	-.06200	.03890	-.02690	.02460	.04530	-.01340
3.768	6.090	.34030	.07620	-.22090	-.10780	.06840	-.04480	.02620	.04840	-.01430
	GRADIENT	-.00004	-.00005	-.00003	-.01756	.01064	-.00735	.00010	.00006	-.00008

IA156A, AEDC PWT 16T-470, O T S W/SILTS (R8N068) (10 MAY 80)

REFERENCE DATA

SREF = 2690.0000 SQ.FT. XMRP = 976.0000 IN. XT
LREF = 1290.3000 INCHES YMRP = .0000 IN. YT
BREF = 1290.3000 INCHES ZMRP = 400.0000 IN. ZT
SCALE = .0200

PARAMETRIC DATA

IB-ELV = 10.000 OB-ELV = 11.000
BDFLAP = .000 SPDBRK = .000
RUDDER = .000 SILTS = 1.000
MACH = 1.050 RN/L = 3.500

RUN NO. 1012/ 0 RN/L = 3.52 GRADIENT INTERVAL = -5.00/ 5.00

ALPHAO	BETAO	CNFO	CAFO	CLMFO	CYFO	CYNFO	CBLFO	CNBO	CABO	CLMBO
-8.150	-6.001	-.13880	.10210	.13920	.19020	-.11380	.06340	.03670	.07000	-.01940
-8.302	-3.778	-.15970	.10560	.15490	.11820	-.06860	.03860	.03550	.06720	-.01890
-8.183	.171	-.20310	.10230	.18760	.00670	-.00120	.00110	.03720	.06950	-.02000
-7.975	4.397	-.18530	.10550	.17170	-.11870	.07600	-.04100	.03590	.06690	-.01940
-8.018	6.265	-.17820	.10310	.16340	-.17690	.11100	-.06010	.03590	.06750	-.01930
	GRADIENT	-.00305	-.00000	.00199	-.02899	.01770	-.00974	.00004	-.00004	-.00006

RUN NO. 1013/ 0 RN/L = 3.50 GRADIENT INTERVAL = -5.00/ 5.00

ALPHAO	BETAO	CNFO	CAFO	CLMFO	CYFO	CYNFO	CBLFO	CNBO	CABO	CLMBO
-6.221	-6.006	-.05970	.10130	.08220	.17340	-.10370	.06100	.03710	.07060	-.01970
-6.153	-4.085	-.07520	.10240	.09340	.11530	-.06770	.04040	.03670	.06960	-.01960
-6.258	.108	-.13060	.10320	.13520	.00430	-.00050	.00050	.03520	.06520	-.01910
-6.060	4.277	-.10450	.10380	.11260	-.10910	.06910	-.03960	.03470	.06430	-.01890
-5.999	6.257	-.09510	.10190	.10320	-.16720	.10450	-.05980	.03570	.06680	-.01920
	GRADIENT	-.00351	.00017	.00230	-.02684	.01636	-.00957	-.00024	-.00063	.00008

RUN NO. 1014/ 0 RN/L = 3.50 GRADIENT INTERVAL = -5.00/ 5.00

ALPHAO	BETAO	CNFO	CAFO	CLMFO	CYFO	CYNFO	CBLFO	CNBO	CABO	CLMBO
-4.105	-6.160	.02810	.10050	.01910	.16400	-.09810	.06100	.03690	.07030	-.01950
-4.348	-4.027	-.00640	.10270	.04410	.10640	-.06250	.03900	.03640	.06810	-.01960
-4.141	192	-.05180	.10090	.07950	.00120	.00100	-.00050	.03520	.06570	-.01900
-4.009	4.261	-.02340	.10250	.05480	-.10230	.06420	-.03920	.03400	.06290	-.01850
-3.867	6.166	-.00410	.10280	.03820	-.15120	.09420	-.05820	.03450	.06410	-.01870
	GRADIENT	-.00210	-.00003	.00133	-.02518	.01529	-.00944	-.00029	-.00063	.00013

RUN NO. 1015/ 0 RN/L = 3.50 GRADIENT INTERVAL = -5.00/ 5.00

ALPHAO	BETAO	CNFO	CAFO	CLMFO	CYFO	CYNFO	CBLFO	CNBO	CABO	CLMBO
-.437	-6.999	.18350	.10000	-.09060	.16310	-.09800	.06770	.03710	.06980	-.01990
-.421	-4.839	.15740	.10150	-.07160	.11150	-.06700	.04660	.03620	.06740	-.01960
-.393	-.626	.10580	.09820	-.03240	.01570	-.00760	.00590	.03420	.06360	-.01850
-.359	3.574	.13290	.10380	-.05390	-.07610	.05030	-.03500	.03410	.06350	-.01850
-.359	5.766	.14470	.10470	-.06530	-.12460	.08010	-.05530	.03480	.06500	-.01870
	GRADIENT	-.00292	.00027	.00211	-.02230	.01394	-.00970	-.00025	-.00046	.00013

IA156A, AEDC PWT 16T-470, O T S W/SILTS (R8N068) (10 MAY 80)

REFERENCE DATA

SREF = 2690.0000 SQ.FT. XMRP = 976.0000 IN. XT
LREF = 1290.3000 INCHES YMRP = .0000 IN. YT
BREF = 1290.3000 INCHES ZMRP = 400.0000 IN. ZT
SCALE = .0200

PARAMETRIC DATA

IB-ELV = 10.000 OB-ELV = 11.000
BDFLAP = .000 SPDBRK = .000
RUDDER = .000 SILTS = 1.000
MACH = 1.050 RN/L = 3.500

RUN NO. 1016/ 0 RN/L = 3.50 GRADIENT INTERVAL = -5.00/ 5.00

ALPHAO	BETAO	CNFO	CAFO	CLMFO	CYFO	CYNFO	CBLFO	CNBO	CABO	CLMBO
4.071	-5.752	.33140	.09940	-.19790	.12000	-.07400	.05440	.03480	.06590	-.01860
3.954	-3.693	.30830	.09980	-.18120	.07720	-.04700	.03560	.03430	.06450	-.01830
3.685	.145	.27920	.09540	-.15950	.00730	-.00360	.00250	.03370	.06330	-.01800
3.810	4.089	.31390	.09900	-.18690	-.06790	.04380	-.03220	.03370	.06230	-.01830
3.747	6.071	.31560	.09910	-.18980	-.10950	.06960	-.05080	.03450	.06420	-.01860
	GRADIENT	.00076	-.00010	-.00076	-.01865	.01167	-.00871	-.00008	-.00028	-.00000

IA156A, AEDC PWT 16T-470, O T S W/SILTS (R8N069) (10 MAY 80)

REFERENCE DATA

SREF = 2690.0000 SQ.FT. XMRP = 976.0000 IN. XT
LREF = 1290.3000 INCHES YMRP = .0000 IN. YT
BREF = 1290.3000 INCHES ZMRP = 400.0000 IN. ZT
SCALE = .0200

PARAMETRIC DATA

IB-ELV = 10.000 OB-ELV = 11.000
BDFLAP = .000 SPDBRK = .000
RUDDER = .000 SILTS = 1.000
MACH = 1.100 RN/L = 3.500

RUN NO. 1017/ 0 RN/L = 3.50 GRADIENT INTERVAL = -5.00/ 5.00

ALPHAO	BETAO	CNFO	CAFO	CLMFO	CYFO	CYNFO	CBLFO	CNBO	CABO	CLMBO
-8.097	-5.926	-.12720	.10610	.13230	.17530	-.10350	.05930	.03380	.06500	-.01770
-8.280	-3.763	-.14920	.10890	.14880	.11160	-.06400	.03690	.03360	.06350	-.01790
-8.190	.161	-.18470	.10730	.17490	.00500	-.00040	.00050	.03090	.05790	-.01660
-8.006	4.422	-.17070	.10920	.16220	-.11590	.07340	-.04050	.03250	.06040	-.01760
-7.997	6.266	-.16080	.10740	.15290	-.17040	.10600	-.05910	.03340	.06250	-.01790
	GRADIENT	-.00254	.00004	.00157	-.02780	.01680	-.00946	-.00013	-.00036	.00003

RUN NO. 1018/ 0 RN/L = 3.50 GRADIENT INTERVAL = -5.00/ 5.00

ALPHAO	BETAO	CNFO	CAFO	CLMFO	CYFO	CYNFO	CBLFO	CNBO	CABO	CLMBO
-6.199	-5.999	-.04570	.10650	.07250	.16200	-.09540	.05800	.03300	.06250	-.01750
-6.174	-4.095	-.06660	.10610	.08750	.10870	-.06270	.03840	.03290	.06210	-.01760
-6.278	.121	-.11290	.10590	.12260	-.00010	.00200	-.00090	.03070	.05700	-.01670
-6.064	4.278	-.08440	.10720	.09810	-.10580	.06570	-.03900	.03040	.05640	-.01650
-5.886	6.403	-.06580	.10740	.08220	-.16280	.10030	-.06040	.03230	.06020	-.01750
	GRADIENT	-.00215	.00013	.00128	-.02562	.01533	-.00924	-.00030	-.00068	.00013

IA156A, AEDC PWT 16T-470, O T S W/SILTS (R8N069) (10 MAY 80)

REFERENCE DATA

SREF = 2690.0000 SQ.FT. XMRP = 976.0000 IN. XT
LREF = 1290.3000 INCHES YMRP = .0000 IN. YT
BREF = 1290.3000 INCHES ZMRP = 400.0000 IN. ZT
SCALE = .0200

PARAMETRIC DATA

IB-ELV = 10.000 OB-ELV = 11.000
BDFLAP = .000 SPDBRK = .000
RUDDER = .000 SILTS = 1.000
MACH = 1.100 RN/L = 3.500

RUN NO. 1019/ 0 RN/L = 3.50 GRADIENT INTERVAL = -5.00/ 5.00

ALPHAO	BETAO	CNFO	CAFO	CLMFO	CYFO	CYNFO	CBLFO	CNBO	CABO	CLMBO
-4.238	-6.148	.03560	.10570	.01270	.15430	-.09100	.05910	.03260	.06220	-.01720
-4.335	-4.024	.00900	.10550	.03270	.09730	-.05590	.03690	.03220	.06050	-.01730
-4.254	.256	-.03210	.10390	.06410	-.00200	.00260	-.00190	.03020	.05570	-.01650
-3.792	4.279	.01350	.10770	.02750	-.09720	.05980	-.03950	.02930	.05370	-.01600
-3.868	6.150	.02130	.10780	.01920	-.14440	.08890	-.05790	.03110	.05740	-.01700
	GRADIENT	.00043	.00026	-.00054	-.02342	.01393	-.00920	-.00035	-.00082	.00016

RUN NO. 1020/ 0 RN/L = 3.50 GRADIENT INTERVAL = -5.00/ 5.00

ALPHAO	BETAO	CNFO	CAFO	CLMFO	CYFO	CYNFO	CBLFO	CNBO	CABO	CLMBO
-.440	-7.008	.19210	.10440	-.09850	.15590	-.09290	.06630	.03270	.06190	-.01740
-.423	-4.851	.16800	.10490	-.08180	.10620	-.06290	.04550	.03160	.05910	-.01700
-.387	-.508	.12740	.10180	-.05020	.01030	-.00400	.00380	.02930	.05440	-.01590
-.354	3.675	.15150	.10530	-.07070	-.07750	.05080	-.03590	.02890	.05390	-.01560
-.360	5.796	.16040	.10690	-.07970	-.12410	.07930	-.05570	.02940	.05460	-.01590
	GRADIENT	-.00198	.00004	.00134	-.02155	.01334	-.00955	-.00032	-.00061	.00016

RUN NO. 1021/ 0 RN/L = 3.50 GRADIENT INTERVAL = -5.00/ 5.00

ALPHAO	BETAO	CNFO	CAFO	CLMFO	CYFO	CYNFO	CBLFO	CNBO	CABO	CLMBO
4.046	-5.934	.35430	.10160	-.21740	.12370	-.07620	.05570	.03010	.05720	-.01600
3.910	-3.607	.32770	.10330	-.19830	.07570	-.04620	.03420	.02870	.05390	-.01540
3.691	.192	.29420	.10070	-.17190	.00470	-.00220	.00140	.02960	.05480	-.01610
3.794	4.044	.32230	.10140	-.19600	-.06690	.04260	-.03160	.02840	.05240	-.01550
3.760	6.059	.32950	.10250	-.20300	-.10880	.06850	-.05000	.02870	.05310	-.01560
	GRADIENT	-.00069	-.00025	.00029	-.01864	.01161	-.00860	-.00004	-.00020	-.00001

IA156A FORCE DATA WITH FLOW ANGULARITY CORRECTION

IA156A, AEDC PWT 16T-470, O T S W/SILTS

(R8N070) (10 MAY 80)

REFERENCE DATA

SREF = 2690.0000 SQ.FT. XMRP = 976.0000 IN. XT
LREF = 1290.3000 INCHES YMRP = .0000 IN. YT
BREF = 1290.3000 INCHES ZMRP = 400.0000 IN. ZT
SCALE = .0200

PARAMETRIC DATA

IB-ELV = 10.000 OB-ELV = 11.000
BDFLAP = .000 SPDBRK = .000
RUDDER = .000 SILTS = 1.000
MACH = 1.150 RN/L = 3.500

RUN NO. 1022/ 0 RN/L = 3.50 GRADIENT INTERVAL = -5.00/ 5.00

ALPHAO	BETAO	CNFO	CAFO	CLMFO	CYFO	CYNFO	CBLFO	CNBO	CABO	CLMBO
-8.134	-5.933	-.11580	.11030	.12480	.17860	-.10610	.06180	.03180	.06140	-.01660
-8.287	-3.765	-.14210	.11190	.14460	.11360	-.06550	.03800	.03190	.06030	-.01700
-8.184	.189	-.17990	.11080	.17260	.00760	-.00240	.00140	.02910	.05460	-.01560
-8.013	4.416	-.16610	.11300	.15970	-.11170	.07020	-.03940	.02990	.05540	-.01620
-8.025	6.285	-.15610	.11230	.14970	-.16820	.10490	-.05910	.03070	.05740	-.01650
	GRADIENT	-.00286	.00014	.00179	-.02755	.01659	-.00946	-.00024	-.00059	.00010

RUN NO. 1023/ 0 RN/L = 3.50 GRADIENT INTERVAL = -5.00/ 5.00

ALPHAO	BETAO	CNFO	CAFO	CLMFO	CYFO	CYNFO	CBLFO	CNBO	CABO	CLMBO
-6.207	-5.999	-.03220	.11020	.06240	.16480	-.09750	.06080	.03140	.06010	-.01660
-6.146	-4.081	-.04930	.11090	.07530	.11000	-.06390	.04040	.03070	.05790	-.01640
-6.279	.113	-.10490	.10870	.11740	.00640	-.00260	.00120	.02840	.05290	-.01540
-6.064	4.278	-.07920	.11200	.09490	-.10350	.06420	-.03940	.02900	.05340	-.01580
-5.879	6.410	-.06230	.11290	.07970	-.16130	.09980	-.06070	.02980	.05530	-.01610
	GRADIENT	-.00359	.00013	.00235	-.02554	.01532	-.00955	-.00020	-.00054	.00007

RUN NO. 1024/ 0 RN/L = 3.50 GRADIENT INTERVAL = -5.00/ 5.00

ALPHAO	BETAO	CNFO	CAFO	CLMFO	CYFO	CYNFO	CBLFO	CNBO	CABO	CLMBO
-4.244	-6.153	.05190	.11000	.00070	.15690	-.09290	.06170	.03140	.05980	-.01670
-4.342	-4.026	.02810	.11020	.01820	.10070	-.05900	.04010	.03080	.05760	-.01660
-4.269	.373	-.01720	.10810	.05280	-.00100	.00190	-.00200	.02830	.05230	-.01540
-3.799	4.328	.01690	.11130	.02400	-.09560	.05900	-.04000	.02770	.05070	-.01520
-3.890	6.176	.01880	.11270	.02020	-.14350	.08840	-.05800	.02940	.05390	-.01610
	GRADIENT	-.00151	.00012	.00083	-.02349	.01412	-.00959	-.00037	-.00083	.00017

RUN NO. 1025/ 0 RN/L = 3.50 GRADIENT INTERVAL = -5.00/ 5.00

ALPHAO	BETAO	CNFO	CAFO	CLMFO	CYFO	CYNFO	CBLFO	CNBO	CABO	CLMBO
-.430	-7.050	.20630	.10840	-.10950	.15980	-.09600	.06730	.03130	.05930	-.01670
-.405	-4.893	.19230	.11000	-.10040	.10870	-.06520	.04600	.03020	.05680	-.01620
-.369	-.554	.15640	.10820	-.07270	.01080	-.00400	.00410	.02830	.05220	-.01540
-.336	3.601	.17460	.11230	-.08810	-.07730	.05110	-.03530	.02780	.05120	-.01520
-.346	5.794	.17940	.11270	-.09370	-.12630	.08120	-.05610	.02810	.05170	-.01530
	GRADIENT	-.00213	.00027	.00148	-.02190	.01370	-.00957	-.00028	-.00066	.00012

IA156A, AEDC PWT 16T-470, O T S W/SILTS (R8N070) (10 MAY 80)

REFERENCE DATA

SREF = 2690.0000 SQ.FT. XMRP = 976.0000 IN. XT
LREF = 1290.3000 INCHES YMRP = .0000 IN. YT
BREF = 1290.3000 INCHES ZMRP = 400.0000 IN. ZT
SCALE = .0200

PARAMETRIC DATA

IB-ELV = 10.000 OB-ELV = 11.000
BDFLAP = .000 SPDBRK = .000
RUDDER = .000 SILTS = 1.000
MACH = 1.150 RN/L = 3.500

RUN NO. 1026/ 0 RN/L = 3.50 GRADIENT INTERVAL = -5.00/ 5.00

ALPHAO	BETAO	CNFO	CAFO	CLMFO	CYFO	CYNFO	CBLFO	CNBO	CABO	CLMBO
4.075	-5.757	.34980	.10730	-.21570	.12310	-.07670	.05520	.02840	.05380	-.01510
3.928	-3.663	.33200	.10860	-.20220	.08150	-.05060	.03670	.02870	.05350	-.01550
3.704	.117	.31030	.10590	-.18490	.01080	-.00680	.00390	.02830	.05240	-.01530
3.806	3.989	.33970	.10820	-.20880	-.06430	.04080	-.03040	.02720	.04980	-.01500
3.754	6.054	.34060	.10840	-.21140	-.10820	.06850	-.04990	.02800	.05160	-.01530
	GRADIENT	.00103	-.00005	-.00088	-.01906	.01195	-.00877	-.00020	-.00048	.00007

IA156A, AEDC PWT 16T-470, O T S W/SILTS (R8N071) (10 MAY 80)

REFERENCE DATA

SREF = 2690.0000 SQ.FT. XMRP = 976.0000 IN. XT
LREF = 1290.3000 INCHES YMRP = .0000 IN. YT
BREF = 1290.3000 INCHES ZMRP = 400.0000 IN. ZT
SCALE = .0200

PARAMETRIC DATA

IB-ELV = 12.000 OB-ELV = 11.000
BDFLAP = .000 SPDBRK = .000
RUDDER = .000 SILTS = 1.000
MACH = .600 RN/L = 3.500

RUN NO. 1030/ 0 RN/L = 3.50 GRADIENT INTERVAL = -5.00/ 5.00

ALPHAO	BETAO	CNFO	CAFO	CLMFO	CYFO	CYNFO	CBLFO	CNBO	CABO	CLMBO
-8.234	-7.829	-.03200	.03140	.02510	.22440	-.13780	.06760	.02370	.04360	-.01290
-8.114	-5.816	-.03900	.03620	.02990	.16390	-.09980	.04920	.02310	.04240	-.01270
-8.139	-3.803	-.04950	.03920	.03800	.10420	-.06220	.03090	.02240	.04080	-.01240
-8.046	.301	-.07220	.03750	.05520	-.00680	.00720	-.00300	.02080	.03810	-.01140
-7.916	4.243	-.06520	.03790	.04590	-.10690	.07080	-.03400	.02240	.04040	-.01250
-7.776	6.289	-.05570	.03760	.03750	-.16340	.10520	-.05070	.02310	.04210	-.01270
-7.792	8.315	-.06280	.03460	.04030	-.21530	.13700	-.06540	.02360	.04350	-.01290
	GRADIENT	-.00198	-.00016	.00100	-.02649	.01653	-.00807	-.00000	-.00005	-.00001

RUN NO. 1031/ 0 RN/L = 3.49 GRADIENT INTERVAL = -5.00/ 5.00

ALPHAO	BETAO	CNFO	CAFO	CLMFO	CYFO	CYNFO	CBLFO	CNBO	CABO	CLMBO
-6.166	-7.930	.03680	.03480	-.02270	.21790	-.13490	.06720	.02330	.04270	-.01280
-6.123	-5.906	.02290	.03820	-.01320	.16040	-.09870	.04930	.02280	.04190	-.01250
-6.053	-3.999	.01400	.04110	-.00610	.10450	-.06380	.03220	.02230	.04060	-.01230
-6.113	.073	-.01140	.03980	.01340	-.00140	.00300	-.00090	.02050	.03760	-.01130
-5.949	4.187	-.00010	.04120	.00150	-.10210	.06620	-.03260	.02150	.03880	-.01190
-5.886	6.167	.00360	.03980	-.00310	-.15270	.09830	-.04850	.02270	.04120	-.01260
-5.690	8.315	.00790	.03690	-.00800	-.20580	.13150	-.06460	.02380	.04350	-.01310
	GRADIENT	-.00171	.00001	.00092	-.02524	.01588	-.00792	-.00010	-.00022	.00005

IA156A, AEDC PWT 16T-470, O T S W/SILTS (R8N071) (10 MAY 80)

REFERENCE DATA

SREF = 2690.0000 SQ.FT. XMRP = 976.0000 IN. XT
LREF = 1290.3000 INCHES YMRP = .0000 IN. YT
BREF = 1290.3000 INCHES ZMRP = 400.0000 IN. ZT
SCALE = .0200

PARAMETRIC DATA

IB-ELV = 12.000 OB-ELV = 11.000
BDFLAP = .000 SPDBRK = .000
RUDDER = .000 SILTS = 1.000
MACH = .600 RN/L = 3.500

RUN NO. 1042/ 0 RN/L = 3.50 GRADIENT INTERVAL = -5.00/ 5.00

ALPHAO	BETAO	CNFO	CAFO	CLMFO	CYFO	CYNFO	CBLFO	CNBO	CABO	CLMBO
-4.139	-7.848	.09350	.03330	-.06040	.19860	-.12420	.06410	.02360	.04400	-.01270
-4.203	-5.940	.08000	.03790	-.05200	.14700	-.09130	.04740	.02250	.04200	-.01210
-4.233	-3.917	.06820	.04110	-.04300	.08930	-.05450	.02900	.02180	.03950	-.01210
-4.127	.371	.04880	.04160	-.02790	-.01310	.00930	-.00370	.02000	.03640	-.01100
-3.739	4.228	.07040	.04190	-.04680	-.10230	.06550	-.03310	.02120	.03790	-.01190
-3.804	6.065	.06910	.04030	-.04740	-.14600	.09420	-.04740	.02240	.03980	-.01260
-3.832	8.043	.06470	.03660	-.04650	-.19390	.12550	-.06300	.02330	.04250	-.01290
	GRADIENT	.00018	.00010	-.00039	-.02353	.01474	-.00762	-.00008	-.00021	.00003

RUN NO. 1043/ 0 RN/L = 3.50 GRADIENT INTERVAL = -5.00/ 5.00

ALPHAO	BETAO	CNFO	CAFO	CLMFO	CYFO	CYNFO	CBLFO	CNBO	CABO	CLMBO
-.332	-8.766	.21830	.03150	-.14340	.20010	-.12770	.06900	.02300	.04210	-.01260
-.318	-6.571	.20520	.03640	-.13570	.14910	-.09490	.05130	.02190	.04050	-.01190
-.304	-4.542	.19510	.04060	-.12910	.10080	-.06350	.03500	.02150	.03930	-.01180
-.278	-.389	.17430	.04190	-.11150	.00500	-.00090	.00190	.01920	.03510	-.01050
-.246	3.690	.19600	.04230	-.12990	-.07710	.05190	-.02720	.02030	.03590	-.01150
-.248	5.784	.19730	.04070	-.13360	-.12310	.08250	-.04340	.02160	.03840	-.01210
-.244	7.880	.19820	.03670	-.13680	-.16860	.11310	-.05980	.02280	.04070	-.01280
	GRADIENT	.00009	.00021	-.00008	-.02161	.01402	-.00756	-.00015	-.00041	.00004

RUN NO. 1044/ 0 RN/L = 3.50 GRADIENT INTERVAL = -5.00/ 5.00

ALPHAO	BETAO	CNFO	CAFO	CLMFO	CYFO	CYNFO	CBLFO	CNBO	CABO	CLMBO
4.016	-8.006	.34260	.02910	-.23120	.16120	-.10640	.06370	.02200	.04040	-.01210
4.084	-5.830	.33640	.03360	-.22760	.11680	-.07730	.04630	.02090	.03790	-.01160
4.047	-3.841	.33170	.03580	-.22360	.07530	-.04960	.03010	.02000	.03630	-.01110
3.961	.182	.31680	.03450	-.21070	.00830	-.00520	.00260	.01960	.03550	-.01090
3.891	4.129	.33230	.03370	-.22460	-.06640	.04480	-.02660	.02030	.03580	-.01150
3.844	6.178	.33430	.03300	-.22860	-.11030	.07510	-.04310	.02070	.03660	-.01170
3.838	8.159	.33290	.02890	-.22910	-.14830	.10090	-.05750	.02230	.03950	-.01260
	GRADIENT	.00006	-.00026	-.00011	-.01777	.01184	-.00711	.00004	-.00006	-.00005

IA156A, AEDC PWT 16T-470, O T S W/SILTS (R8N071) (10 MAY 80)

REFERENCE DATA

SREF = 2690.0000 SQ.FT. XMRP = 976.0000 IN. XT
LREF = 1290.3000 INCHES YMRP = .0000 IN. YT
BREF = 1290.3000 INCHES ZMRP = 400.0000 IN. ZT
SCALE = .0200

PARAMETRIC DATA

IB-ELV = 12.000 OB-ELV = 11.000
BDFLAP = .000 SPDBRK = .000
RUDDER = .000 SILTS = 1.000
MACH = .600 RN/L = 3.500

RUN NO. 1045/ 0 RN/L = 3.51 GRADIENT INTERVAL = -5.00/ 5.00

ALPHAO	BETAO	CNFO	CAFO	CLMFO	CYFO	CYNFO	CBLFO	CNBO	CABO	CLMBO
6.193	-7.946	.41430	.02490	-.28060	.15000	-.09890	.06220	.02160	.03910	-.01200
6.176	-5.889	.41510	.02850	-.28240	.11030	-.07280	.04590	.02090	.03830	-.01150
6.146	-3.831	.40790	.03050	-.27680	.07560	-.04930	.03080	.02050	.03710	-.01130
5.858	.189	.38500	.03000	-.25810	.00600	-.00390	.00220	.01920	.03500	-.01060
5.792	4.072	.39410	.02960	-.26710	-.06240	.04190	-.02580	.02050	.03590	-.01160
5.732	6.148	.39650	.02830	-.27120	-.10050	.06830	-.04110	.02110	.03690	-.01210
5.792	8.167	.39560	.02460	-.27250	-.13790	.09400	-.05610	.02200	.03880	-.01250
	GRADIENT	-.00177	-.00011	.00125	-.01746	.01154	-.00716	-.00000	-.00015	-.00004

RUN NO. 1046/ 0 RN/L = 3.51 GRADIENT INTERVAL = -5.00/ 5.00

ALPHAO	BETAO	CNFO	CAFO	CLMFO	CYFO	CYNFO	CBLFO	CNBO	CABO	CLMBO
8.069	-7.802	.47390	.01890	-.32220	.13550	-.08920	.05940	.02170	.03980	-.01190
7.983	-5.735	.46760	.02260	-.31880	.09850	-.06430	.04290	.02110	.03790	-.01180
7.974	-3.764	.46870	.02600	-.31830	.06480	-.04180	.02830	.01980	.03560	-.01110
7.880	.174	.45280	.02500	-.30440	.00660	-.00380	.00210	.01940	.03500	-.01070
7.926	4.199	.46920	.02400	-.31880	-.05400	.03600	-.02440	.02060	.03620	-.01170
7.886	6.200	.47010	.02110	-.32210	-.08700	.05870	-.03900	.02130	.03750	-.01200
7.898	8.245	.46020	.01780	-.31760	-.12550	.08580	-.05540	.02180	.03860	-.01220
	GRADIENT	.00008	-.00025	-.00008	-.01492	.00977	-.00662	.00010	.00008	-.00008

IA156A, AEDC PWT 16T-470, O T S W/SILTS (R8N072) (10 MAY 80)

REFERENCE DATA

SREF = 2690.0000 SQ.FT. XMRP = 976.0000 IN. XT
LREF = 1290.3000 INCHES YMRP = .0000 IN. YT
BREF = 1290.3000 INCHES ZMRP = 400.0000 IN. ZT
SCALE = .0200

PARAMETRIC DATA

IB-ELV = 12.000 OB-ELV = 11.000
BDFLAP = .000 SPDBRK = .000
RUDDER = .000 SILTS = 1.000
MACH = .800 RN/L = 3.500

RUN NO. 1047/ 0 RN/L = 3.50 GRADIENT INTERVAL = -5.00/ 5.00

ALPHAO	BETAO	CNFO	CAFO	CLMFO	CYFO	CYNFO	CBLFO	CNBO	CABO	CLMBO
-8.304	-5.868	-.04670	.04940	.03900	.17220	-.10470	.05200	.02420	.04530	-.01300
-8.251	-3.829	-.06080	.05310	.04990	.11100	-.06660	.03320	.02370	.04320	-.01310
-8.163	.342	-.09570	.04950	.07580	-.00240	.00410	-.00120	.02140	.03960	-.01160
-8.002	4.333	-.07600	.05120	.05750	-.11150	.07180	-.03410	.02320	.04280	-.01270
-7.991	6.251	-.07080	.05090	.05200	-.16730	.10650	-.05100	.02420	.04460	-.01320
	GRADIENT	-.00191	-.00024	.00097	-.02726	.01696	-.00824	-.00006	-.00006	.00005

RUN NO. 1048/ 0 RN/L = 3.50 GRADIENT INTERVAL = -5.00/ 5.00

ALPHAO	BETAO	CNFO	CAFO	CLMFO	CYFO	CYNFO	CBLFO	CNBO	CABO	CLMBO
-6.203	-5.976	.02860	.05110	-.01360	.16700	-.10300	.05210	.02370	.04350	-.01300
-6.142	-4.058	.01570	.05300	-.00400	.10930	-.06690	.03430	.02300	.04240	-.01260
-6.236	.113	-.03030	.04940	.02980	.00200	.00040	.00050	.02090	.03870	-.01140
-6.050	4.259	-.01000	.05210	.01140	-.10430	.06680	-.03260	.02230	.04100	-.01220
-5.788	6.350	.00650	.05090	-.00240	-.16340	.10410	-.05140	.02370	.04380	-.01290
	GRADIENT	-.00310	-.00011	.00186	-.02568	.01608	-.00804	-.00008	-.00017	.00005

RUN NO. 1049/ 0 RN/L = 3.50 GRADIENT INTERVAL = -5.00/ 5.00

ALPHAO	BETAO	CNFO	CAFO	CLMFO	CYFO	CYNFO	CBLFO	CNBO	CABO	CLMBO
-4.135	-6.074	.09940	.05100	-.06270	.15870	-.09900	.05130	.02360	.04340	-.01290
-4.334	-3.986	.07540	.05340	-.04550	.09800	-.05990	.03180	.02230	.04080	-.01220
-4.238	.373	.04120	.05060	-.02040	-.00550	.00470	-.00160	.02040	.03770	-.01110
-3.788	4.319	.07180	.05260	-.04500	-.10190	.06480	-.03270	.02180	.04000	-.01200
-3.866	6.161	.07410	.05220	-.04840	-.14860	.09520	-.04840	.02280	.04140	-.01260
-3.826	6.368	.07580	.05060	-.05000	-.15470	.09910	-.05040	.02350	.04270	-.01300
	GRADIENT	-.00056	-.00011	.00016	-.02406	.01501	-.00776	-.00007	-.00011	.00003

RUN NO. 1050/ 0 RN/L = 3.50 GRADIENT INTERVAL = -5.00/ 5.00

ALPHAO	BETAO	CNFO	CAFO	CLMFO	CYFO	CYNFO	CBLFO	CNBO	CABO	CLMBO
-.351	-6.864	.23080	.04840	-.15160	.16180	-.10280	.05660	.02220	.04100	-.01210
-.339	-4.760	.21630	.05100	-.14200	.10800	-.06810	.03820	.02150	.03980	-.01170
-.315	-.547	.18450	.04950	-.11730	.01160	-.00520	.00450	.01990	.03670	-.01090
-.276	3.623	.20790	.05090	-.13690	-.07560	.05050	-.02740	.02090	.03830	-.01150
-.273	5.732	.21480	.05060	-.14420	-.12450	.08300	-.04510	.02190	.03950	-.01210
	GRADIENT	-.00101	-.00001	.00062	-.02190	.01415	-.00783	-.00007	-.00018	.00002

IA156A, AEDC PWT 16T-470, O T S W/SILTS (R8N072) (10 MAY 80)

REFERENCE DATA

SREF = 2690.0000 SQ.FT. XMRP = 976.0000 IN. XT
LREF = 1290.3000 INCHES YMRP = .0000 IN. YT
BREF = 1290.3000 INCHES ZMRP = 400.0000 IN. ZT
SCALE = .0200

PARAMETRIC DATA

IB-ELV = 12.000 OB-ELV = 11.000
BDFLAP = .000 SPDBRK = .000
RUDDER = .000 SILTS = 1.000
MACH = .800 RN/L = 3.500

RUN NO. 1051/ 0 RN/L = 3.49 GRADIENT INTERVAL = -5.00/ 5.00

ALPHAO	BETAO	CNFO	CAFO	CLMFO	CYFO	CYNFO	CBLFO	CNBO	CABO	CLMBO
4.088	-5.750	.37470	.04530	-.25440	.12250	-.08040	.04940	.02190	.04030	-.01190
3.968	-3.736	.36260	.04710	-.24580	.07570	-.04920	.03130	.02040	.03760	-.01120
3.862	.188	.33850	.04420	-.22620	.00820	-.00470	.00310	.02030	.03680	-.01120
3.796	3.973	.36290	.04530	-.24590	-.06420	.04280	-.02610	.02030	.03650	-.01130
3.771	6.089	.36160	.04350	-.24730	-.11310	.07650	-.04450	.02200	.03950	-.01230
	GRADIENT	.00000	-.00024	.00002	-.01814	.01193	-.00744	-.00001	-.00014	-.00001

RUN NO. 1052/ 0 RN/L = 3.50 GRADIENT INTERVAL = -5.00/ 5.00

ALPHAO	BETAO	CNFO	CAFO	CLMFO	CYFO	CYNFO	CBLFO	CNBO	CABO	CLMBO
6.093	-5.815	.43890	.04320	-.29780	.11550	-.07620	.04530	.02180	.03990	-.01200
6.050	-3.777	.44050	.04560	-.29920	.07740	-.05040	.02960	.02060	.03750	-.01140
5.751	.160	.41240	.04180	-.27770	.00560	-.00290	.00280	.01990	.03610	-.01100
5.680	4.069	.41860	.04280	-.28430	-.06160	.04090	-.02330	.02070	.03710	-.01160
5.760	6.016	.42330	.04170	-.28930	-.10240	.06940	-.03910	.02180	.03920	-.01220
	GRADIENT	-.00280	-.00036	.00190	-.01772	.01164	-.00674	.00001	-.00005	-.00003

IA156A, AEDC PWT 16T-470, O T S W/SILTS (R8N073) (10 MAY 80)

REFERENCE DATA

SREF = 2690.0000 SQ.FT. XMRP = 976.0000 IN. XT
LREF = 1290.3000 INCHES YMRP = .0000 IN. YT
BREF = 1290.3000 INCHES ZMRP = 400.0000 IN. ZT
SCALE = .0200

PARAMETRIC DATA

IB-ELV = 12.000 OB-ELV = 11.000
BDFLAP = .000 SPDBRK = .000
RUDDER = .000 SILTS = 1.000
MACH = .900 RN/L = 3.500

RUN NO. 1053/ 0 RN/L = 3.50 GRADIENT INTERVAL = -5.00/ 5.00

ALPHAO	BETAO	CNFO	CAFO	CLMFO	CYFO	CYNFO	CBLFO	CNBO	CABO	CLMBO
-8.265	-5.904	-.07690	.06970	.07070	.18020	-.10930	.05470	.02660	.04940	-.01440
-8.238	-3.811	-.08830	.07150	.07890	.11260	-.06540	.03320	.02500	.04650	-.01350
-8.189	.338	-.13390	.06830	.11210	-.00170	.00310	-.00140	.02310	.04280	-.01260
-7.993	4.302	-.11450	.07130	.09530	-.11430	.07150	-.03510	.02470	.04580	-.01340
	GRADIENT	-.00329	-.00003	.00207	-.02796	.01687	-.00842	-.00004	-.00009	.00001

IA156A, AEDC PWT 16T-470, O T S W/SILTS (R8N073) (10 MAY 80)

REFERENCE DATA

SREF = 2690.0000 SQ.FT. XMRP = 976.0000 IN. XT
LREF = 1290.3000 INCHES YMRP = .0000 IN. YT
BREF = 1290.3000 INCHES ZMRP = 400.0000 IN. ZT
SCALE = .0200

PARAMETRIC DATA

IB-ELV = 12.000 OB-ELV = 11.000
BDFLAP = .000 SPDBRK = .000
RUDDER = .000 SILTS = 1.000
MACH = .900 RN/L = 3.500

RUN NO. 1054/ 0 RN/L = 3.50 GRADIENT INTERVAL = -5.00/ 5.00

ALPHAO	BETAO	CNFO	CAFO	CLMFO	CYFO	CYNFO	CBLFO	CNBO	CABO	CLMBO
-6.202	-5.973	-.00180	.06750	.01690	.17070	-.10410	.05390	.02600	.04870	-.01400
-6.173	-4.070	-.01390	.06830	.02600	.11350	-.06790	.03580	.02510	.04670	-.01350
-6.253	.118	-.06530	.06510	.06340	.00200	.00000	.00010	.02290	.04250	-.01240
-6.057	4.276	-.04140	.06950	.04320	-.10840	.06710	-.03430	.02410	.04440	-.01320
-5.843	6.363	-.02730	.06990	.03170	-.16810	.10450	-.05360	.02600	.04780	-.01430
	GRADIENT	-.00331	.00014	.00207	-.02659	.01618	-.00840	-.00012	-.00028	.00004

RUN NO. 1055/ 0 RN/L = 3.50 GRADIENT INTERVAL = -5.00/ 5.00

ALPHAO	BETAO	CNFO	CAFO	CLMFO	CYFO	CYNFO	CBLFO	CNBO	CABO	CLMBO
-4.160	-6.094	.07660	.06720	-.03750	.16020	-.09830	.05310	.02510	.04690	-.01360
-4.335	-4.006	.05060	.06930	-.01940	.10070	-.06020	.03340	.02380	.04400	-.01300
-4.250	.375	.00880	.06440	.01060	-.00550	.00420	-.00230	.02270	.04220	-.01240
-3.800	4.325	.04450	.06840	-.01740	-.10510	.06500	-.03530	.02390	.04380	-.01310
-3.881	6.172	.04480	.06850	-.01890	-.15240	.09480	-.05110	.02520	.04600	-.01390
	GRADIENT	-.00089	-.00013	.00036	-.02469	.01502	-.00824	.00001	-.00003	-.00001

RUN NO. 1056/ 0 RN/L = 3.50 GRADIENT INTERVAL = -5.00/ 5.00

ALPHAO	BETAO	CNFO	CAFO	CLMFO	CYFO	CYNFO	CBLFO	CNBO	CABO	CLMBO
-.383	-7.001	.22290	.06430	-.13820	.16310	-.10210	.06020	.02420	.04500	-.01310
-.364	-4.814	.20800	.06620	-.12900	.11180	-.06960	.04200	.02300	.04270	-.01250
-.332	-.509	.16570	.06200	-.09900	.00880	-.00340	.00380	.02150	.03980	-.01170
-.297	3.586	.19370	.06510	-.12070	-.07530	.04940	-.02980	.02240	.04160	-.01220
-.300	5.750	.19520	.06660	-.12360	-.12420	.08090	-.04780	.02400	.04400	-.01320
	GRADIENT	-.00177	-.00014	.00104	-.02229	.01418	-.00855	-.00007	-.00014	.00004

RUN NO. 1058/ 0 RN/L = 3.51 GRADIENT INTERVAL = -5.00/ 5.00

ALPHAO	BETAO	CNFO	CAFO	CLMFO	CYFO	CYNFO	CBLFO	CNBO	CABO	CLMBO
4.100	-5.777	.37130	.06460	-.24550	.12000	-.07660	.04830	.02350	.04380	-.01270
3.958	-3.686	.36310	.06370	-.24130	.07760	-.04920	.03130	.02200	.04110	-.01190
3.691	.102	.33180	.05890	-.21830	.00670	-.00360	.00290	.02140	.03960	-.01160
3.806	3.991	.35710	.06260	-.23710	-.06820	.04460	-.02660	.02210	.04080	-.01210
3.757	6.067	.35250	.06360	-.23570	-.11690	.07570	-.04460	.02390	.04420	-.01300
	GRADIENT	-.00075	-.00014	.00052	-.01899	.01222	-.00754	.00001	-.00004	-.00003

IA156A, AEDC PWT 16T-470, O T S W/SILTS (R8N074) (10 MAY 80)

REFERENCE DATA

SREF = 2690.0000 SQ.FT. XMRP = 976.0000 IN. XT
LREF = 1290.3000 INCHES YMRP = .0000 IN. YT
BREF = 1290.3000 INCHES ZMRP = 400.0000 IN. ZT
SCALE = .0200

PARAMETRIC DATA

IB-ELV = 12.000 OB-ELV = 11.000
BDFLAP = .000 SPDBRK = .000
RUDDER = .000 SILTS = 1.000
MACH = .950 RN/L = 3.500

RUN NO. 1059/ 0 RN/L = 3.50 GRADIENT INTERVAL = -5.00/ 5.00

ALPHAO	BETAO	CNFO	CAFO	CLMFO	CYFO	CYNFO	CBLFO	CNBO	CABO	CLMBO
-8.242	-5.880	-.10310	.08470	.09790	.18270	-.11090	.05660	.02950	.05470	-.01600
-8.273	-3.814	-.11630	.08730	.10690	.11320	-.06580	.03470	.02770	.05110	-.01510
-8.173	.400	-.15570	.08520	.13630	-.00230	.00270	-.00040	.02650	.04830	-.01460
-8.007	4.354	-.13680	.08630	.11930	-.11740	.07420	-.03670	.02840	.05270	-.01540
-8.032	6.270	-.13320	.08600	.11460	-.17920	.11370	-.05550	.02950	.05510	-.01590
	GRADIENT	-.00258	-.00013	.00158	-.02822	.01713	-.00874	.00008	.00019	-.00004

RUN NO. 1060/ 0 RN/L = 3.50 GRADIENT INTERVAL = -5.00/ 5.00

ALPHAO	BETAO	CNFO	CAFO	CLMFO	CYFO	CYNFO	CBLFO	CNBO	CABO	CLMBO
-6.220	-5.996	-.02380	.08350	.04110	.17450	-.10650	.05610	.02880	.05390	-.01550
-6.170	-4.074	-.03310	.08430	.04630	.11420	-.06740	.03670	.02700	.05060	-.01450
-6.247	.101	-.07940	.08270	.08040	.00460	-.00200	.00190	.02530	.04630	-.01380
-6.069	4.265	-.06160	.08460	.06450	-.11090	.06950	-.03570	.02770	.05100	-.01510
-5.780	6.369	-.03970	.08420	.04630	-.17290	.10890	-.05580	.02950	.05470	-.01610
	GRADIENT	-.00342	.00004	.00219	-.02699	.01642	-.00868	.00008	.00005	-.00007

RUN NO. 1061/ 0 RN/L = 3.50 GRADIENT INTERVAL = -5.00/ 5.00

ALPHAO	BETAO	CNFO	CAFO	CLMFO	CYFO	CYNFO	CBLFO	CNBO	CABO	CLMBO
-4.121	-6.098	.06130	.08260	-.02060	.16090	-.09800	.05410	.02760	.05180	-.01490
-4.336	-4.006	.03420	.08350	-.00190	.10060	-.05870	.03370	.02610	.04900	-.01400
-4.251	.375	-.01010	.08130	.03080	-.00510	.00390	-.00160	.02520	.04640	-.01370
-3.806	4.342	.02760	.08300	-.00010	-.11840	.06730	-.03680	.02670	.04910	-.01460
-3.876	6.160	.03220	.08350	-.00510	-.15660	.09810	-.05310	.02810	.05190	-.01530
	GRADIENT	-.00095	-.00007	.00034	-.02502	.01508	-.00844	.00007	.00000	-.00007

RUN NO. 1062/ 0 RN/L = 3.50 GRADIENT INTERVAL = -5.00/ 5.00

ALPHAO	BETAO	CNFO	CAFO	CLMFO	CYFO	CYNFO	CBLFO	CNBO	CABO	CLMBO
-.398	-6.992	.20760	.07850	-.12300	.15960	-.09700	.05970	.02760	.05180	-.01480
-.379	-4.843	.18990	.08060	-.11130	.10800	-.06450	.04090	.02570	.04820	-.01380
-.347	-.532	.14250	.07640	-.07690	.00860	-.00300	.00370	.02370	.04420	-.01280
-.307	3.589	.17890	.08020	-.10560	-.07450	.04770	-.03020	.02520	.04670	-.01370
-.306	5.751	.18590	.08020	-.11280	-.12310	.07870	-.04850	.02720	.05060	-.01470
	GRADIENT	-.00138	-.00005	.00073	-.02165	.01331	-.00843	-.00006	-.00018	.00001

IA156A, AEDC PWT 16T-470, O T S W/SILTS (R8N074) (10 MAY 80)

REFERENCE DATA

SREF = 2690.0000 SQ.FT. XMRP = 976.0000 IN. XT
LREF = 1290.3000 INCHES YMRP = .0000 IN. YT
BREF = 1290.3000 INCHES ZMRP = 400.0000 IN. ZT
SCALE = .0200

PARAMETRIC DATA

IB-ELV = 12.000 OB-ELV = 11.000
BDFLAP = .000 SPDBRK = .000
RUDDER = .000 SILTS = 1.000
MACH = .950 RN/L = 3.500

RUN NO. 1063/ 0 RN/L = 3.50 GRADIENT INTERVAL = -5.00/ 5.00

ALPHAO	BETAO	CNFO	CAFO	CLMFO	CYFO	CYNFO	CBLFO	CNBO	CABO	CLMBO
3.973	-5.846	.35990	.07720	-.23360	.11780	-.07310	.04970	.02480	.04660	-.01330
3.965	-3.756	.35400	.07680	-.23070	.07340	-.04350	.03140	.02370	.04440	-.01270
3.868	.183	.32410	.07160	-.20860	.00490	-.00180	.00190	.02450	.04520	-.01340
3.788	3.934	.34850	.07540	-.22720	-.06200	.03870	-.02610	.02450	04520	-.01330
3.762	6.067	.34440	.07620	-.22500	-.10950	.06940	-.04490	.02610	.04810	-.01420
	GRADIENT	-.00077	-.00019	.00050	-.01761	.01069	-.00748	.00010	.00010	-.00008

IA156A, AEDC PWT 16T-470, O T S W/SILTS (R8N075) (10 MAY 80)

REFERENCE DATA

SREF = 2690.0000 SQ.FT. XMRP = 976.0000 IN. XT
LREF = 1290.3000 INCHES YMRP = .0000 IN. YT
BREF = 1290.3000 INCHES ZMRP = 400.0000 IN. ZT
SCALE = .0200

PARAMETRIC DATA

IB-ELV = 12.000 OB-ELV = 11.000
BDFLAP = .000 SPDBRK = .000
RUDDER = .000 SILTS = 1.000
MACH = 1.050 RN/L = 3.500

RUN NO. 1064/ 0 RN/L = 3.50 GRADIENT INTERVAL = -5.00/ 5.00

ALPHAO	BETAO	CNFO	CAFO	CLMFO	CYFO	CYNFO	CBLFO	CNBO	CABO	CLMBO
-8.235	-5.891	-.14200	.10240	.14080	.18400	-.11020	.06230	.03710	.07110	-.01960
-8.265	-3.820	-.16210	.10330	.15570	.11840	-.06900	.03970	.03810	.07160	-.02040
-8.181	.395	-.19650	.10530	.18190	-.00340	.00520	-.00160	.03480	.06490	-.01880
-8.023	4.347	-.18300	.11220	.17050	-.12010	.07730	-.04070	.03290	.06180	-.01760
-8.027	6.273	-.17770	.10350	.16250	-.18040	.11310	-.06050	.03660	.06890	-.01960
	GRADIENT	-.00262	.00108	.00186	-.02920	.01791	-.00984	-.00064	-.00120	.00034

RUN NO. 1065/ 0 RN/L = 3.51 GRADIENT INTERVAL = -5.00/ 5.00

ALPHAO	BETAO	CNFO	CAFO	CLMFO	CYFO	CYNFO	CBLFO	CNBO	CABO	CLMBO
-6.221	-6.014	-.05710	.10100	.07880	.17450	-.10430	.06220	.03720	.07090	-.01970
-6.150	-4.070	-.07550	.10310	.09230	.11500	-.06760	.04110	.03680	.06920	-.01980
-6.266	.103	-.12860	.10330	.13260	.00190	.00080	.00060	.03550	.06620	-.01910
-6.040	4.270	-.10230	.10470	.10990	-.11170	.07070	-.03970	.03480	.06440	-.01890
-6.018	6.270	-.09450	.10270	.10190	-.16960	.10590	-.05990	.03560	.06680	-.01910
	GRADIENT	-.00322	.00019	.00211	-.02718	.01658	-.00969	-.00024	-.00058	.00011

IA156A, AEDC PWT 16T-470, O T S W/SILTS (R8N075) (10 MAY 80)

REFERENCE DATA

SREF = 2690.0000 SQ.FT. XMRP = 976.0000 IN. XT
LREF = 1290.3000 INCHES YMRP = .0000 IN. YT
BREF = 1290.3000 INCHES ZMRP = 400.0000 IN. ZT
SCALE = .0200

PARAMETRIC DATA

IB-ELV = 12.000 OB-ELV = 11.000
BDFLAP = .000 SPDBRK = .000
RUDDER = .000 SILTS = 1.000
MACH = 1.050 RN/L = 3.500

RUN NO. 1066/ 0 RN/L = 3.50 GRADIENT INTERVAL = -5.00/ 5.00

ALPHAO	BETAO	CNFO	CAFO	CLMFO	CYFO	CYNFO	CBLFO	CNBO	CABO	CLMBO
-4.139	-6.114	.02910	.10080	.01710	.16250	-.09730	.06120	.03680	.07010	-.01950
-4.344	-4.021	-.00390	.10280	.04100	.10370	-.06090	.03900	.03660	.06860	-.01960
-4.271	.362	-.05350	.10260	.07930	-.00290	.00350	-.00140	.03570	.06590	-.01940
-3.794	4.347	-.01020	.10360	.04390	-.10840	.06790	-.04090	.03430	.06320	-.01880
-3.881	6.180	-.00090	.10420	.03470	-.15540	.09660	-.05880	.03470	.06410	-.01890
	GRADIENT	-.00093	.00009	.00049	-.02533	.01538	-.00954	-.00027	-.00064	.00009

RUN NO. 1067/ 0 RN/L = 3.50 GRADIENT INTERVAL = -5.00/ 5.00

ALPHAO	BETAO	CNFO	CAFO	CLMFO	CYFO	CYNFO	CBLFO	CNBO	CABO	CLMBO
-.434	-7.039	.18830	.09970	-.09580	.16440	-.09890	.06940	.03710	.07010	-.01980
-.416	-4.882	.16320	.10190	-.07720	.11220	-.06740	.04790	.03640	.06800	-.01960
-.390	-.537	.10860	.09960	-.03530	.01160	-.00520	.00510	.03500	.06490	-.01900
-.352	3.599	.13560	.10470	-.05700	-.07890	.05180	-.03520	.03500	.06510	-.01890
-.352	5.767	.14800	.10500	-.06860	-.12560	.08050	-.05480	.03570	.06650	-.01930
	GRADIENT	-.00333	.00032	.00244	-.02254	.01406	-.00980	-.00017	-.00035	.00008

RUN NO. 1068/ 0 RN/L = 3.50 GRADIENT INTERVAL = -5.00/ 5.00

ALPHAO	BETAO	CNFO	CAFO	CLMFO	CYFO	CYNFO	CBLFO	CNBO	CABO	CLMBO
3.960	-5.839	.33050	.09940	-.19860	.12050	-.07440	.05580	.03540	.06690	-.01890
3.945	-3.748	.31650	.10090	-.18830	.07730	-.04690	.03630	.03450	.06480	-.01850
3.825	.184	.28760	.09690	-.16640	.00530	-.00230	.00260	.03420	.06400	-.01840
3.799	3.943	.31590	.09970	-.18920	-.06710	.04320	-.03070	.03440	.06340	-.01870
3.771	6.067	.31910	.10020	-.19330	-.11000	.07000	-.05020	.03480	.06460	-.01880
	GRADIENT	-.00013	-.00016	-.00007	-.01877	.01171	-.00871	-.00001	-.00018	-.00003

IA156A, AEDC PWT 16T-470, O T S W/SILTS (R8N076) (10 MAY 80)

REFERENCE DATA

SREF = 2690.0000 SQ.FT. XMRP = 976.0000 IN. XT
LREF = 1290.3000 INCHES YMRP = .0000 IN. YT
BREF = 1290.3000 INCHES ZMRP = 400.0000 IN. ZT
SCALE = .0200

PARAMETRIC DATA

IB-ELV = 12.000 OB-ELV = 11.000
BDFLAP = .000 SPDBRK = .000
RUDDER = .000 SILTS = 1.000
MACH = 1.100 RN/L = 3.500

RUN NO. 1069/ 0 RN/L = 3.50 GRADIENT INTERVAL = -5.00/ 5.00

ALPHAO	BETAO	CNFO	CAFO	CLMFO	CYFO	CYNFO	CBLFO	CNBO	CABO	CLMBO
-8.222	-6.002	-.12920	.10690	.13260	.17890	-.10580	.06120	.03410	.06530	-.01790
-8.271	-3.866	-.14570	.10900	.14500	.11030	-.06320	.03740	.03350	.06370	-.01780
-8.193	.284	-.18350	.10820	.17280	-.00330	.00490	-.00150	.03140	.05840	-.01700
-8.019	4.302	-.16840	.11030	.15990	-.11620	.07380	-.03970	.03270	.06090	-.01770
-8.001	6.248	-.16220	.11000	.15320	-.17300	.10770	-.05910	.03280	.06140	-.01770
	GRADIENT	-.00281	.00016	.00185	-.02773	.01677	-.00944	-.00010	-.00035	.00001

RUN NO. 1070/ 0 RN/L = 3.50 GRADIENT INTERVAL = -5.00/ 5.00

ALPHAO	BETAO	CNFO	CAFO	CLMFO	CYFO	CYNFO	CBLFO	CNBO	CABO	CLMBO
-6.216	-6.014	-.04420	.10570	.06980	.16130	-.09500	.05890	.03340	.06330	-.01780
-6.155	-4.091	-.06170	.10720	.08260	.10720	-.06200	.03890	.03240	.06080	-.01740
-6.285	.117	-.10920	.10810	.11860	-.00340	00430	-.00110	.03030	.05580	-.01660
-6.066	4.273	-.08280	.10840	.09580	-.10770	.06700	-.03910	.03060	.05640	-.01670
-5.855	6.375	-.05970	.10870	.07700	-.16440	.10130	-.06050	.03190	.05940	-.01730
	GRADIENT	-.00254	.00014	.00159	-.02569	.01542	-.00933	-.00022	-.00053	.00008

RUN NO. 1071/ 0 RN/L = 3.50 GRADIENT INTERVAL = -5.00/ 5.00

ALPHAO	BETAO	CNFO	CAFO	CLMFO	CYFO	CYNFO	CBLFO	CNBO	CABO	CLMBO
-4.144	-6.117	.04450	.10570	.00470	.15190	-.08930	.05950	.03290	.06220	-.01750
-4.345	-4.025	.01200	.10480	.02880	.09640	-.05520	.03740	.03230	.06080	-.01730
-4.263	.373	-.03160	.10450	.06250	-.00630	.00510	-.00260	.03080	.05660	-.01680
-3.796	4.339	.01370	.10800	.02560	-.10210	.06280	-.04060	.03010	.05500	-.01650
-3.871	6.167	.02380	.10940	.01580	-.14760	.09070	-.05830	.03090	.05660	-.01690
	GRADIENT	.00002	.00037	-.00024	-.02373	.01410	-.00932	-.00026	-.00070	.00010

RUN NO. 1072/ 0 RN/L = 3.50 GRADIENT INTERVAL = -5.00/ 5.00

ALPHAO	BETAO	CNFO	CAFO	CLMFO	CYFO	CYNFO	CBLFO	CNBO	CABO	CLMBO
-.432	-7.047	.19640	.10490	-.10310	.15590	-.09270	.06710	.03240	.06130	-.01720
-.421	-4.889	.17460	.10540	-.08760	.10790	-.06420	.04740	.03180	.05940	-.01720
-.381	-.536	.13160	.10290	-.05470	.00990	-.00380	.00440	.03000	.05510	-.01640
-.352	3.597	.15360	.10660	-.07300	-.07740	.05070	-.03500	.02970	.05500	-.01620
-.349	5.788	.16340	.10860	-.08290	-.12540	.08000	-.05520	.02980	.05500	-.01620
	GRADIENT	-.00254	.00014	.00177	-.02184	.01354	-.00971	-.00025	-.00052	.00012

IA156A, AEDC PWT 16T-470, O T S W/SILTS (R8N076) (10 MAY 80)

REFERENCE DATA

SREF = 2690.0000 SQ.FT. XMRP = 976.0000 IN. XT
LREF = 1290.3000 INCHES YMRP = .0000 IN. YT
BREF = 1290.3000 INCHES ZMRP = 400.0000 IN. ZT
SCALE = .0200

PARAMETRIC DATA

IB-ELV = 12.000 OB-ELV = 11.000
BDFLAP = .000 SPDBRK = .000
RUDDER = .000 SILTS = 1.000
MACH = 1.100 RN/L = 3.500

RUN NO. 1073/ 0 RN/L = 3.51 GRADIENT INTERVAL = -5.00/ 5.00

ALPHAO	BETAO	CNFO	CAFO	CLMFO	CYFO	CYNFO	CBLFO	CNBO	CABO	CLMBO
4.082	-5.734	.35290	.10340	-.21810	.11340	-.06980	.05260	.02930	.05550	-.01560
3.923	-3.736	.33390	.10340	-.20420	.07480	-.04570	.03490	.02960	.05510	-.01600
3.823	.181	.30160	.10150	-.17850	.00260	-.00070	.00160	.03000	.05560	-.01630
3.797	3.912	.32690	.10320	-.20020	-.06850	.04360	-.03090	.02870	.05280	-.01570
3.759	6.042	.33190	.10400	-.20600	-.11060	.06970	-.05010	.02950	.05390	-.01620
	GRADIENT	-.00098	-.00003	.00057	-.01873	.01167	-.00860	-.00012	-.00030	.00004

IA156A, AEDC PWT 16T-470, O T S W/SILTS (R8N077) (10 MAY 80)

REFERENCE DATA

SREF = 2690.0000 SQ.FT. XMRP = 976.0000 IN. XT
LREF = 1290.3000 INCHES YMRP = .0000 IN. YT
BREF = 1290.3000 INCHES ZMRP = 400.0000 IN. ZT
SCALE = .0200

PARAMETRIC DATA

IB-ELV = 8.000 OB-ELV = 11.000
BDFLAP = .000 SPDBRK = .000
RUDDER = .000 SILTS = 1.000
MACH = .600 RN/L = 3.500

RUN NO. 1077/ 0 RN/L = 3.50 GRADIENT INTERVAL = -5.00/ 5.00

ALPHAO	BETAO	CNFO	CAFO	CLMFO	CYFO	CYNFO	CBLFO	CNBO	CABO	CLMBO
-8.237	-7.852	-.06800	.02950	.05490	.23040	-.14120	.06750	.02380	.04340	-.01310
-8.105	-5.811	-.07600	.03340	.06020	.16770	-.10240	.04910	.02270	.04160	-.01250
-8.136	-3.804	-.08790	.03310	.06960	.11000	-.06600	.03160	.02450	.04460	-.01360
-8.043	.294	-.10360	.03620	.08170	-.00260	.00440	-.00230	.01940	.03540	-.01060
-7.918	4.247	-.10290	.03080	.07590	-.10820	.07030	-.03390	.02430	.04470	-.01330
-7.903	6.174	-.09730	.03590	.07030	-.16200	.10410	-.05000	.02210	.04020	-.01220
-7.921	8.177	-.10090	.03130	.07120	-.21210	.13510	-.06420	.02330	.04280	-.01270
	GRADIENT	-.00188	-.00028	.00080	-.02711	.01693	-.00814	-.00003	-.00000	.00004

RUN NO. 1078/ 0 RN/L = 3.50 GRADIENT INTERVAL = -5.00/ 5.00

ALPHAO	BETAO	CNFO	CAFO	CLMFO	CYFO	CYNFO	CBLFO	CNBO	CABO	CLMBO
-6.160	-7.925	.00650	.03230	.00320	.22130	-.13700	.06640	.02320	.04230	-.01280
-6.125	-5.906	-.00910	.03570	.01340	.16630	-.10290	.04970	.02230	.04090	-.01220
-6.049	-4.002	-.01860	.03820	.02100	.10960	-.06720	.03250	.02190	.03990	-.01210
-6.113	.076	-.04620	.03660	.04140	.00130	.00100	-.00090	.02040	.03760	-.01110
-5.959	4.184	-.03330	.03840	.02840	-.10060	.06520	-.03210	.02120	.03850	-.01170
-5.881	6.166	-.02880	.03760	.02380	-.15050	.09700	-.04770	.02210	.04020	-.01220
-5.686	8.298	-.02470	.03530	.01920	-.20360	.13040	-.06370	.02300	.04200	-.01270
	GRADIENT	-.00179	.00002	.00090	-.02568	.01617	-.00789	-.00009	-.00017	.00005

IA156A, AEDC PWT 16T-470, O T S W/SILTS (R8N077) (10 MAY 80)

REFERENCE DATA

SREF = 2690.0000 SQ.FT. XMRP = 976.0000 IN. XT
LREF = 1290.3000 INCHES YMRP = .0000 IN. YT
BREF = 1290.3000 INCHES ZMRP = 400.0000 IN. ZT
SCALE = .0200

PARAMETRIC DATA

IB-ELV = 8.000 OB-ELV = 11.000
BDFLAP = .000 SPDBRK = .000
RUDDER = .000 SILTS = 1.000
MACH = .600 RN/L = 3.500

RUN NO. 1079/ 0 RN/L = 3.50 GRADIENT INTERVAL = -5.00/ 5.00

ALPHAO	BETAO	CNFO	CAFO	CLMFO	CYFO	CYNFO	CBLFO	CNBO	CABO	CLMBO
-4.011	-8.034	.07580	.03330	-.04410	.21060	-.13140	.06540	.02340	.04320	-.01280
-4.229	-5.946	.05090	.03740	-.02760	.15460	-.09600	.04780	.02230	.04100	-.01220
-4.237	-3.905	.04040	.04060	-.01970	.09610	-.05880	.02930	.02120	.03880	-.01170
-4.049	.181	.02620	.04020	-.00800	.00100	.00110	-.00120	.01970	.03620	-.01080
-3.721	4.263	.04370	.03990	-.02400	-.09910	.06400	-.03270	.02120	.03820	-.01180
-3.804	6.057	.04190	.03860	-.02480	-.14210	.09210	-.04680	.02190	.03970	-.01220
-3.839	8.043	.03600	.03520	-.02200	-.18930	.12220	-.06140	.02280	.04200	-.01250
	GRADIENT	.00040	-.00009	-.00053	-.02390	.01503	-.00759	-.00000	-.00007	-.00001

RUN NO. 1080/ 0 RN/L = 3.50 GRADIENT INTERVAL = -5.00/ 5.00

ALPHAO	BETAO	CNFO	CAFO	CLMFO	CYFO	CYNFO	CBLFO	CNBO	CABO	CLMBO
-.342	-8.724	.18680	.03110	-.11810	.20520	-.13020	.06810	.02260	.04120	-.01240
-.336	-6.507	.17340	.03580	-.11020	.15380	-.09740	.05070	.02170	.04010	-.01180
-.322	-4.536	.16390	.03850	-.10350	.10600	-.06650	.03470	.02150	.03960	-.01180
-.297	-.416	.14500	.04000	-.08720	.00990	-.00370	.00190	.01880	.03470	-.01030
-.268	3.690	.16400	.04030	-.10430	-.07300	.05000	-.02680	.01970	.03560	-.01090
-.262	5.784	.16700	.03870	-.10910	-.11910	.08050	-.04260	.02140	.03790	-.01210
-.256	7.880	.16920	.03580	-.11230	-.16340	.10980	-.05830	.02220	.04010	-.01230
	GRADIENT	.00001	.00022	-.00009	-.02176	.01416	-.00748	-.00022	-.00049	.00011

RUN NO. 1081/ 0 RN/L = 3.50 GRADIENT INTERVAL = -5.00/ 5.00

ALPHAO	BETAO	CNFO	CAFO	CLMFO	CYFO	CYNFO	CBLFO	CNBO	CABO	CLMBO
4.168	-7.890	.31800	.02810	-.20960	.16450	-.10830	.06280	.02120	.03870	-.01170
4.094	-5.794	.31100	.03120	-.20570	.11990	-.07900	.04530	.02050	.03770	-.01120
4.034	-3.797	.29990	.03380	-.19760	.08270	-.05400	.03070	.01970	.03620	-.01080
3.846	.081	.28320	.03260	-.18350	.01440	-.00890	.00350	.01910	.03460	-.01060
3.893	4.060	.30620	.03280	-.20210	-.06160	.04220	-.02550	.01890	.03380	-.01060
3.845	6.167	.30600	.03110	-.20470	-.10860	.07460	-.04310	.02030	.03600	-.01140
3.840	8.154	.30520	.02730	-.20570	-.14430	.09880	-.05670	.02170	.03870	-.01220
	GRADIENT	.00082	-.00013	-.00059	-.01837	.01225	-.00715	-.00010	-.00031	.00003

IA156A, AEDC PWT 16T-470, O T S W/SILTS (R8N077) (10 MAY 80)

REFERENCE DATA

SREF = 2690.0000 SQ.FT. XMRP = 976.0000 IN. XT
LREF = 1290.3000 INCHES YMRP = .0000 IN. YT
BREF = 1290.3000 INCHES ZMRP = 400.0000 IN. ZT
SCALE = .0200

PARAMETRIC DATA

IB-ELV = 8.000 OB-ELV = 11.000
BDFLAP = .000 SPDBRK = .000
RUDDER = .000 SILTS = 1.000
MACH = .600 RN/L = 3.500

RUN NO. 1082/ 0 RN/L = 3.50 GRADIENT INTERVAL = -5.00/ 5.00

ALPHAO	BETAO	CNFO	CAFO	CLMFO	CYFO	CYNFO	CBLFO	CNBO	CABO	CLMBO
6.183	-7.952	.38620	.02280	-.25730	.15590	-.10270	.06250	.02120	.03870	-.01170
6.174	-5.891	.38530	.02590	-.25710	.11740	-.07720	.04640	.02080	.03830	-.01140
6.140	-3.820	.37990	.02860	-.25280	.08010	-.05200	.03050	.01950	.03610	-.01060
5.860	.186	.35750	.02890	-.23460	.01100	-.00690	.00220	.01870	.03400	-.01040
5.799	4.076	.36600	.02880	-.24330	-.05800	.03920	-.02520	.01930	.03420	-.01090
5.757	5.988	.36790	.02700	-.24710	-.09290	.06340	-.03930	.02050	.03580	-.01170
5.835	8.249	.36800	.02260	-.24950	-.13600	.09310	-.05640	.02170	.03820	-.01230
	GRADIENT	-.00178	.00003	.00122	-.01749	.01155	-.00705	-.00003	-.00024	-.00004

RUN NO. 1083/ 0 RN/L = 3.50 GRADIENT INTERVAL = -5.00/ 5.00

ALPHAO	BETAO	CNFO	CAFO	CLMFO	CYFO	CYNFO	CBLFO	CNBO	CABO	CLMBO
8.082	-7.801	.44650	.01640	-.29910	.13990	-.09180	.05910	.02150	.03950	-.01180
7.988	-5.739	.44130	.02030	-.29600	.10260	-.06660	.04260	.02060	.03760	-.01140
7.976	-3.763	.44070	.02290	-.29480	.06980	-.04480	.02820	.01940	.03540	-.01070
7.879	.175	.42320	.02270	-.27930	.01080	-.00620	.00230	.01880	.03410	-.01040
7.933	4.200	.44010	.02220	-.29450	-.05020	.03410	-.02400	.01970	.03490	-.01110
7.876	6.194	.43860	.01980	-.29600	-.08390	.05730	-.03860	.02050	.03610	-.01160
7.899	8.234	.43570	.01630	-.29630	-.12190	.08390	-.05470	.02100	.03720	-.01180
	GRADIENT	-.00006	-.00009	.00002	-.01507	.00991	-.00656	.00004	-.00006	-.00005

IA156A, AEDC PWT 16T-470, O T S W/SILTS (R8N078) (10 MAY 80)

REFERENCE DATA

SREF = 2690.0000 SQ.FT. XMRP = 976.0000 IN. XT
LREF = 1290.3000 INCHES YMRP = .0000 IN. YT
BREF = 1290.3000 INCHES ZMRP = 400.0000 IN. ZT
SCALE = .0200

PARAMETRIC DATA

IB-ELV = 8.000 OB-ELV = 11.000
BDFLAP = .000 SPDBRK = .000
RUDDER = .000 SILTS = 1.000
MACH = .800 RN/L = 3.500

RUN NO. 1084/ 0 RN/L = 3.50 GRADIENT INTERVAL = -5.00/ 5.00

ALPHAO	BETAO	CNFO	CAFO	CLMFO	CYFO	CYNFO	CBLFO	CNBO	CABO	CLMBO
-8.208	-5.827	-.06120	.04760	.05220	.17630	-.10800	.05160	.02410	.04450	-.01310
-8.259	-3.794	-.07690	.05030	.06350	.11080	-.06610	.03180	.02310	.04280	-.01250
-8.153	.187	-.11180	.04590	.08980	.00790	-.00220	.00120	.02180	.04050	-.01180
-7.985	4.362	-.09190	.04800	.07100	-.11270	.07290	-.03440	.02310	.04310	-.01250
-7.993	6.251	-.08810	.04780	.06700	-.16550	.10570	-.05020	.02370	.04390	-.01290
	GRADIENT	-.00179	-.00028	.00088	-.02742	.01705	-.00812	.00000	.00004	-.00000

RUN NO. 1085/ 0 RN/L = 3.50 GRADIENT INTERVAL = -5.00/ 5.00

ALPHAO	BETAO	CNFO	CAFO	CLMFO	CYFO	CYNFO	CBLFO	CNBO	CABO	CLMBO
-6.227	-5.994	.00840	.04840	.00330	.17130	-.10610	.05150	.02350	.04330	-.01290
-6.157	-4.053	-.00380	.05070	.01250	.11320	-.06930	.03390	.02250	.04160	-.01220
-6.226	.106	-.04340	.04650	.04150	.00430	-.00100	.00080	.02070	.03870	-.01120
-6.034	4.269	-.02400	.04880	.02390	-.10300	.06630	-.03210	.02250	.04140	-.01230
-5.982	6.249	-.02010	.04830	.01930	-.15930	.10210	-.04970	.02340	.04320	-.01280
	GRADIENT	-.00243	-.00023	.00137	-.02598	.01629	-.00793	.00000	-.00002	-.00001

RUN NO. 1086/ 0 RN/L = 3.50 GRADIENT INTERVAL = -5.00/ 5.00

ALPHAO	BETAO	CNFO	CAFO	CLMFO	CYFO	CYNFO	CBLFO	CNBO	CABO	CLMBO
-4.202	-6.102	.07780	.04810	-.04470	.16510	-.10320	.05140	.02320	.04350	-.01250
-4.327	-3.995	.05750	.05080	-.03030	.10160	-.06210	.03130	.02210	.04090	-.01210
-4.235	.359	.02540	.04740	-.00660	-.00250	.00290	-.00140	.02050	.03800	-.01110
-3.799	4.314	.05370	.05020	-.02990	-.10130	.06520	-.03280	.02160	.03960	-.01190
-3.854	6.166	.05500	.04920	-.03250	-.14870	.09590	-.04830	.02300	.04180	-.01270
	GRADIENT	-.00057	-.00008	.00014	-.02441	.01531	-.00771	-.00007	-.00017	.00003

RUN NO. 1087/ 0 RN/L = 3.50 GRADIENT INTERVAL = -5.00/ 5.00

ALPHAO	BETAO	CNFO	CAFO	CLMFO	CYFO	CYNFO	CBLFO	CNBO	CABO	CLMBO
-.368	-6.886	.20810	.04550	-.13250	.16920	-.10760	.05740	.02230	.04130	-.01210
-.357	-4.773	.19580	.04860	-.12470	.11510	-.07290	.03930	.02110	.03920	-.01150
-.328	-.488	.16660	.04760	-.10190	.01180	-.00560	.00430	.01960	.03590	-.01070
-.291	3.604	.19020	.04860	-.12230	-.07330	.04950	-.02600	.02080	.03830	-.01140
-.293	5.707	.19440	.04820	-.12690	-.12190	.08180	-.04360	.02180	.03970	-.01200
	GRADIENT	-.00072	-.00000	.00033	-.02250	.01462	-.00780	-.00004	-.00011	.00001

IA156A, AEDC PWT 16T-470, O T S W/SILTS (R8N078) (10 MAY 80)

REFERENCE DATA

SREF = 2690.0000 SQ.FT. XMRP = 976.0000 IN. XT
LREF = 1290.3000 INCHES YMRP = .0000 IN. YT
BREF = 1290.3000 INCHES ZMRP = 400.0000 IN. ZT
SCALE = .0200

PARAMETRIC DATA

IB-ELV = 8.000 OB-ELV = 11.000
BDFLAP = .000 SPDBRK = .000
RUDDER = .000 SILTS = 1.000
MACH = .800 RN/L = 3.500

RUN NO. 1088/ 0 RN/L = 3.50 GRADIENT INTERVAL = -5.00/ 5.00

ALPHAO	BETAO	CNFO	CAFO	CLMFO	CYFO	CYNFO	CBLFO	CNBO	CABO	CLMBO
4.102	-5.778	.35290	.04360	-.23600	.12780	-.08370	.05050	.02140	.03940	-.01170
956	-3.668	.34090	.04540	-.22760	.08090	-.05280	.03250	.01980	.03660	-.01080
25	.127	.31140	.04150	-.20470	.01170	-.00710	.00470	.01990	.03640	-.01100
3.815	4.006	.34590	.04220	-.23160	-.06280	.04240	-.02500	.02070	.03740	-.01150
3.759	6.090	.34100	.04120	-.23030	-.11060	.07530	-.04340	.02180	.03930	-.01210
	GRADIENT	.00068	-.00041	-.00054	-.01873	.01241	-.00749	.00012	.00010	-.00009

RUN NO. 1089/ 0 RN/L = 3.50 GRADIENT INTERVAL = -5.00/ 5.00

ALPHAO	BETAO	CNFO	CAFO	CLMFO	CYFO	CYNFO	CBLFO	CNBO	CABO	CLMBO
6.021	-5.724	.41170	.04020	-.27540	.12040	-.07930	.04600	.02150	.03960	-.01180
6.060	-3.767	.41890	.04180	-.28130	.07900	-.05120	.03050	.02040	.03750	-.01120
5.741	.168	.38580	.03790	-.25630	.00820	-.00460	.00270	.01940	.03540	-.01070
5.688	3.981	.40210	.03940	-.27040	-.05660	.03800	-.02370	.02040	.03680	-.01140
5.728	6.167	.39870	.03830	-.26940	-.10230	.07020	-.04040	.02170	.03910	-.01210
	GRADIENT	-.00220	-.00031	.00143	-.01750	.01151	-.00700	-.00000	-.00009	-.00002

IA156A, AEDC PWT 16T-470, O T S W/SILTS (R8N079) (10 MAY 80)

REFERENCE DATA

SREF = 2690.0000 SQ.FT. XMRP = 976.0000 IN. XT
LREF = 1290.3000 INCHES YMRP = .0000 IN. YT
BREF = 1290.3000 INCHES ZMRP = 400.0000 IN. ZT
SCALE = .0200

PARAMETRIC DATA

IB-ELV = 8.000 OB-ELV = 11.000
BDFLAP = .000 SPDBRK = .000
RUDDER = .000 SILTS = 1.000
MACH = .900 RN/L = 3.500

RUN NO. 1090/ 0 RN/L = 3.50 GRADIENT INTERVAL = -5.00/ 5.00

ALPHAO	BETAO	CNFO	CAFO	CLMFO	CYFO	CYNFO	CBLFO	CNBO	CABO	CLMBO
-8.163	-5.980	-.08380	.06590	.07630	.18270	-.10990	.05460	.02640	.04980	-.01410
-8.256	-3.765	-.10660	.06870	.09360	.11090	-.06370	.03220	.02500	.04620	-.01360
-8.171	.183	-.14560	.06470	.12200	.00910	-.00320	.00150	.02280	.04240	-.01240
-8.000	4.389	-.12740	.06830	.10620	-.11050	.06990	-.03480	.02450	.04550	-.01330
-8.015	6.269	-.12820	.06840	.10490	-.16890	.10610	-.05230	.02600	.04840	-.01400
	GRADIENT	-.00248	-.00004	.00149	-.02717	.01640	-.00822	-.00006	-.00008	.00003

IA156A, AEDC PWT 16T-470, O T S W/SILTS (R8N079) (10 MAY 80)

REFERENCE DATA

SREF = 2690.0000 SQ.FT. XMRP = 976.0000 IN. XT
LREF = 1290.3000 INCHES YMRP = .0000 IN. YT
BREF = 1290.3000 INCHES ZMRP = 400.0000 IN. ZT
SCALE = .0200

PARAMETRIC DATA

IB-ELV = 8.000 OB-ELV = 11.000
BDFLAP = .000 SPDBRK = .000
RUDDER = .000 SILTS = 1.000
MACH = .900 RN/L = 3.500

RUN NO. 1091/ 0 RN/L = 3.50 GRADIENT INTERVAL = -5.00/ 5.00

ALPHAO	BETAO	CNFO	CAFO	CLMFO	CYFO	CYNFO	CBLFO	CNBO	CABO	CLMBO
-6.207	-5.982	-.01230	.06610	.02610	.17280	-.10470	.05370	.02580	.04830	-.01390
-6.160	-4.066	-.02780	.06750	.03730	.11370	-.06680	.03490	.02490	.04630	-.01350
-6.246	.099	-.07700	.06310	.07330	.00670	-.00260	.00130	.02250	.04190	-.01220
-6.053	4.268	-.05600	.06760	.05540	-.10180	.06380	-.03310	.02420	.04470	-.01320
-5.987	6.245	-.05120	.06830	.05070	-.15790	.09890	-.05110	.02530	.04690	-.01380
	GRADIENT	-.00338	.00001	.00217	-.02586	.01567	-.00816	-.00008	-.00019	.00004

RUN NO. 1092/ 0 RN/L = 3.50 GRADIENT INTERVAL = -5.00/ 5.00

ALPHAO	BETAO	CNFO	CAFO	CLMFO	CYFO	CYNFO	CBLFO	CNBO	CABO	CLMBO
-4.073	-6.116	.06950	.06600	-.03150	.16170	-.09850	.05290	.02510	.04690	-.01350
-4.333	-3.999	.04090	.06770	-.01100	.10240	-.06050	.03280	.02380	.04430	-.01290
-4.257	.376	-.00600	.06230	.02300	-.00280	.00330	-.00170	.02270	.04170	-.01240
-3.789	4.327	.03420	.06690	-.00840	-.10050	.06280	-.03390	.02400	.04420	-.01310
-3.880	6.173	.03280	.06620	-.00870	-.14920	.09370	-.05020	.02540	.04680	-.01390
	GRADIENT	-.00098	-.00012	.00045	-.02436	.01481	-.00801	.00002	-.00002	-.00002

RUN NO. 1093/ 0 RN/L = 3.50 GRADIENT INTERVAL = -5.00/ 5.00

ALPHAO	BETAO	CNFO	CAFO	CLMFO	CYFO	CYNFO	CBLFO	CNBO	CABO	CLMBO
-.389	-6.982	.21200	.06200	-.12930	.16880	-.10570	.06060	.02470	.04620	-.01330
-.373	-4.837	.19780	.06440	-.12060	.11600	-.07230	.04220	.02320	.04340	-.01250
-.343	-.533	.15050	.05990	-.08610	.01220	-.00510	.00430	.02110	.03920	-.01140
-.307	3.577	.18020	.06400	-.10890	-.07480	.04980	-.02950	.02230	.04150	-.01210
-.309	5.752	.18340	.06560	-.11270	-.12400	.08150	-.04740	.02390	.04400	-.01300
	GRADIENT	-.00216	-.00006	.00144	-.02269	.01452	-.00852	-.00011	-.00023	.00005

RUN NO. 1094/ 0 RN/L = 3.50 GRADIENT INTERVAL = -5.00/ 5.00

ALPHAO	BETAO	CNFO	CAFO	CLMFO	CYFO	CYNFO	CBLFO	CNBO	CABO	CLMBO
4.085	-5.763	.35430	.06210	-.23100	.12830	-.08240	.04880	.02360	.04430	-.01260
3.944	-3.664	.34790	.06160	-.22800	.08300	-.05270	.03150	.02180	.04060	-.01180
3.705	.123	.31330	.05700	-.20210	.00960	-.00490	.00320	.02080	.03860	-.01130
3.811	3.993	.34340	.06030	-.22470	-.06590	.04390	-.02600	.02230	.04110	-.01220
3.760	6.091	.33680	.06140	-.22220	-.11420	.07490	-.04340	.02390	.04410	-.01300
	GRADIENT	-.00056	-.00017	.00041	-.01945	.01262	-.00751	.00007	.00007	-.00005

IA156A, AEDC PWT 16T-470, O T S W/SILTS (R8N080) (10 MAY 80)

REFERENCE DATA

SREF = 2690.0000 SQ.FT. XMRP = 976.0000 IN. XT
LREF = 1290.3000 INCHES YMRP = .0000 IN. YT
BREF = 1290.3000 INCHES ZMRP = 400.0000 IN. ZT
SCALE = .0200

PARAMETRIC DATA

IB-ELV = 8.000 OB-ELV = 11.000
BDFLAP = .000 SPDBRK = .000
RUDDER = .000 SILTS = 1.000
MACH = .950 RN/L = 3.500

RUN NO. 1095/ 0 RN/L = 3.50 GRADIENT INTERVAL = -5.00/ 5.00

ALPHAO	BETAO	CNFO	CAFO	CLMFO	CYFO	CYNFO	CBLFO	CNBO	CABO	CLMBO
-8.294	-6.047	-.11420	.08310	.10770	.19220	-.11720	.06000	.02940	.05470	-.01590
-8.203	-3.771	-.12330	.08520	.11410	.11430	-.06630	.03550	.02730	.05110	-.01470
-8.185	.173	-.16640	.08260	.14560	.00830	-.00320	.00280	.02600	.04790	-.01420
-8.002	4.454	-.14760	.08350	.12880	-.11980	.07690	-.03770	.02790	.05220	-.01500
-8.009	6.271	-.14440	.08300	.12450	-.17730	.11310	-.05520	.02930	.05490	-.01580
	GRADIENT	-.00285	-.00020	.00171	-.02848	.01743	-.00891	.00008	.00015	-.00004

RUN NO. 1096/ 0 RN/L = 3.50 GRADIENT INTERVAL = -5.00/ 5.00

ALPHAO	BETAO	CNFO	CAFO	CLMFO	CYFO	CYNFO	CBLFO	CNBO	CABO	CLMBO
-6.221	-6.002	-.03110	.08210	.04720	.17760	-.10860	.05770	.02830	.05300	-.01520
-6.164	-4.065	-.04550	.08260	.05730	.11650	-.06860	.03760	.02740	.05120	-.01480
-6.250	.111	-.09250	.08030	.09190	.00650	-.00280	.00240	.02510	.04640	-.01360
-6.035	4.265	-.07540	.08200	.07650	-.10900	.06940	-.03540	.02750	.05130	-.01490
-6.006	6.274	-.06690	.08180	.06830	-.16810	.10730	-.05420	.02890	.05400	-.01550
	GRADIENT	-.00360	-.00007	.00231	-.02707	.01656	-.00876	.00001	.00001	-.00001

RUN NO. 1097/ 0 RN/L = 3.50 GRADIENT INTERVAL = -5.00/ 5.00

ALPHAO	BETAO	CNFO	CAFO	CLMFO	CYFO	CYNFO	CBLFO	CNBO	CABO	CLMBO
-4.066	-6.173	.05380	.08150	-.01350	.16670	-.10150	.05620	.02780	.05180	-.01500
-4.331	-3.998	.02460	.08140	.00640	.10190	-.05910	.03430	.02650	.04970	-.01420
-4.261	.376	-.02030	.07930	.03990	-.00190	.00240	-.00010	.02470	.04530	-.01350
-3.793	4.340	.01570	.08170	.01090	-.10600	.06690	-.03570	.02630	.04840	-.01440
-3.885	6.172	.01620	.08080	.00870	-.15510	.09810	-.05220	.02810	.05210	-.01530
	GRADIENT	-.00123	.00003	.00066	-.02491	.01509	-.00833	-.00003	-.00017	-.00002

RUN NO. 1098/ 0 RN/L = 3.51 GRADIENT INTERVAL = -5.00/ 5.00

ALPHAO	BETAO	CNFO	CAFO	CLMFO	CYFO	CYNFO	CBLFO	CNBO	CABO	CLMBO
-.411	-7.031	.19330	.07600	-.11120	.16350	-.09940	.06020	.02770	.05220	-.01480
-.392	-4.836	.17650	.07870	-.09990	.11150	-.06650	.04170	.02550	.04780	-.01370
-.358	-.565	.12970	.07450	-.06570	.01150	-.00420	.00520	.02300	.04300	-.01240
-.321	3.586	.16260	.07920	-.09180	-.07510	.04880	-.02970	.02470	.04600	-.01340
-.326	5.762	.16650	.07970	-.09640	-.12260	.07890	-.04750	.02690	.05030	-.01450
	GRADIENT	-.00169	.00005	.00100	-.02216	.01369	-.00848	-.00010	-.00022	.00004

IA156A, AEDC PWT 16T-470, O T S W/SILTS (R8N080) (10 MAY 80)

REFERENCE DATA

SREF = 2690.0000 SQ.FT. XMRP = 976.0000 IN. XT
LREF = 1290.3000 INCHES YMRP = .0000 IN. YT
BREF = 1290.3000 INCHES ZMRP = 400.0000 IN. ZT
SCALE = .0200

PARAMETRIC DATA

IB-ELV = 8.000 OB-ELV = 11.000
BDFLAP = .000 SPDBRK = .000
RUDDER = .000 SILTS = 1.000
MACH = .950 RN/L = 3.500

RUN NO. 1099/ 0 RN/L = 3.50 GRADIENT INTERVAL = -5.00/ 5.00

ALPHAO	BETAO	CNFO	CAFO	CLMFO	CYFO	CYNFO	CBLFO	CNBO	CABO	CLMBO
4.075	-5.728	.34700	.07460	-.22190	.11840	-.07260	.04800	.02490	.04720	-.01330
3.951	-3.749	.33420	.07420	-.21400	.07490	-.04390	.03050	.02360	.04430	-.01270
3.844	.183	.30540	.06990	-.19210	.00670	-.00240	.00260	.02380	.04410	-.01290
3.797	3.935	.33210	.07370	-.21300	-.06140	.03890	-.02500	.02440	.04510	-.01320
3.766	6.057	.32990	.07510	-.21220	-.10870	.06940	-.04340	.02650	.04900	-.01450
	GRADIENT	-.00033	-.00007	.00017	-.01773	.01077	-.00722	.00010	.00010	-.00006

IA156A, AEDC PWT 16T-470, O T S W/SILTS (R8N081) (10 MAY 80)

REFERENCE DATA

SREF = 2690.0000 SQ.FT. XMRP = 976.0000 IN. XT
LREF = 1290.3000 INCHES YMRP = .0000 IN. YT
BREF = 1290.3000 INCHES ZMRP = 400.0000 IN. ZT
SCALE = .0200

PARAMETRIC DATA

IB-ELV = 8.000 OB-ELV = 11.000
BDFLAP = .000 SPDBRK = .000
RUDDER = .000 SILTS = 1.000
MACH = 1.050 RN/L = 3.500

RUN NO. 1102/ 0 RN/L = 3.50 GRADIENT INTERVAL = -5.00/ 5.00

ALPHAO	BETAO	CNFO	CAFO	CLMFO	CYFO	CYNFO	CBLFO	CNBO	CABO	CLMBO
-8.214	-5.985	-.15170	.09670	.14950	.18750	-.11280	.06260	.03670	.07040	-.01940
-8.268	-3.873	-.17820	.10160	.17000	.12210	-.07180	.04030	.03650	.06870	-.01960
-8.188	.281	-.21380	.09990	.19580	.00260	.00160	-.00010	.03450	.06470	-.01860
-8.026	4.295	-.20100	.10280	.18450	-.11680	.07590	-.03980	.03500	.06510	-.01890
-8.003	6.264	-.19130	.10000	.17410	-.17740	.11260	-.05970	.03550	.06670	-.01910
	GRADIENT	-.00282	.00014	.00180	-.02924	.01808	-.00981	-.00019	-.00044	.00009

RUN NO. 1103/ 0 RN/L = 3.50 GRADIENT INTERVAL = -5.00/ 5.00

ALPHAO	BETAO	CNFO	CAFO	CLMFO	CYFO	CYNFO	CBLFO	CNBO	CABO	CLMBO
-6.206	-5.996	-.07370	.09900	.09330	.17750	-.10640	.06250	.03680	.06990	-.01960
-6.165	-4.087	-.09130	.09990	.10660	.11900	-.07010	.04180	.03680	.06960	-.01960
-6.271	.104	-.14400	.09960	.14610	.00440	-.00010	.00090	.03510	.06550	-.01900
-6.068	4.277	-.11810	.10170	.12380	-.10940	.07020	-.03910	.03390	.06320	-.01830
-5.861	6.383	-.09830	.09970	.10710	-.17040	.10740	-.06060	.03550	.06650	-.01910
	GRADIENT	-.00321	.00022	.00206	-.02731	.01677	-.00967	-.00035	-.00077	.00016

IA156A, AEDC PWT 16T-470, O T S W/SILTS (R8N081) (10 MAY 80)

REFERENCE DATA

SREF = 2690.0000 SQ.FT. XMRP = 976.0000 IN. XT
LREF = 1290.3000 INCHES YMRP = .0000 IN. YT
BREF = 1290.3000 INCHES ZMRP = 400.0000 IN. ZT
SCALE = .0200

PARAMETRIC DATA

IB-ELV = 8.000 OB-ELV = 11.000
BDFLAP = .000 SPDBRK = .000
RUDDER = .000 SILTS = 1.000
MACH = 1.050 RN/L = 3.500

RUN NO. 1104/ 0 RN/L = 3.50 GRADIENT INTERVAL = -5.00/ 5.00

ALPHAO	BETAO	CNFO	CAFO	CLMFO	CYFO	CYNFO	CBLFO	CNBO	CABO	CLMBO
-4.122	-6.131	.01320	.09820	.03110	.16460	-.09870	.06130	.03680	.07010	-.01950
-4.345	-4.018	-.02080	.10110	.05590	.10600	-.06230	.03920	.03610	.06760	-.01950
-4.269	.372	-.06890	.09940	.09270	-.00160	.00340	-.00140	.03550	.06610	-.01930
-3.793	4.343	-.02580	.10100	.05770	-.10650	.06760	-.04050	.03420	.06340	-.01860
-3.868	6.162	-.01660	.10200	.04830	-.15390	.09680	-.05850	.03360	.06270	-.01820
	GRADIENT	-.00078	-.00002	.00036	-.02540	.01553	-.00953	-.00023	-.00050	.00011

RUN NO. 1105/ 0 RN/L = 3.49 GRADIENT INTERVAL = -5.00/ 5.00

ALPHAO	BETAO	CNFO	CAFO	CLMFO	CYFO	CYNFO	CBLFO	CNBO	CABO	CLMBO
-.450	-7.051	.17000	.09710	-.08000	.16860	-.10120	.07000	.03700	.07030	-.01970
-.431	-4.894	.14680	.09950	-.06290	.11580	-.06930	.04840	.03640	.06790	-.01960
-.401	-.555	.09460	.09740	-.02300	.01430	-.00620	.00550	.03370	.06310	-.01820
-.371	3.591	.11920	.10130	-.04300	-.07600	.05060	-.03450	.03430	.06420	-.01850
-.371	5.773	.13040	.10340	-.05400	-.12360	.07990	-.05420	.03470	.06470	-.01870
	GRADIENT	-.00332	.00021	.00240	-.02261	.01413	-.00977	-.00025	-.00044	.00013

RUN NO. 1106/ 0 RN/L = 3.49 GRADIENT INTERVAL = -5.00/ 5.00

ALPHAO	BETAO	CNFO	CAFO	CLMFO	CYFO	CYNFO	CBLFO	CNBO	CABO	CLMBO
4.083	-5.750	.32020	.09910	-.18870	.12190	-.07500	.05520	.03420	.06480	-.01820
3.909	-3.651	.29630	.09810	-.17140	.07850	-.04740	.03590	.03430	.06470	-.01840
3.738	.112	.26850	.09440	-.15040	.00870	-.00380	.00370	.03380	.06300	-.01820
3.803	3.989	.30220	.09770	-.17730	-.06550	.04290	-.03080	.03350	.06220	-.01810
3.764	6.060	.30400	.09870	-.18000	-.10770	.06900	-.04970	.03400	.06320	-.01840
	GRADIENT	.00081	-.00005	-.00080	-.01885	.01182	-.00873	-.00010	-.00033	.00004

IA156A, AEDC PWT 16T-470, O T S W/SILTS (R8N082) (10 MAY 80)

REFERENCE DATA

SREF = 2690.0000 SQ.FT. XMRP = 976.0000 IN. XT
LREF = 1290.3000 INCHES YMRP = .0000 IN. YT
BREF = 1290.3000 INCHES ZMRP = 400.0000 IN. ZT
SCALE = .0200

PARAMETRIC DATA

IB-ELV = 8.000 OB-ELV = 11.000
BDFLAP = .000 SPDBRK = .000
RUDDER = .000 SILTS = 1.000
MACH = 1.100 RN/L = 3.500

RUN NO. 1107/ 0 RN/L = 3.51 GRADIENT INTERVAL = -5.00/ 5.00

ALPHAO	BETAO	CNFO	CAFO	CLMFO	CYFO	CYNFO	CBLFO	CNBO	CABO	CLMBO
-8.232	-5.903	-.14750	.10470	.14900	.17640	-.10390	.05960	.03370	.06460	-.01770
-8.255	-3.825	-.16110	.10820	.15900	.11410	-.06520	.03780	.03300	.06200	-.01770
-8.187	.192	-.19900	.10580	.18660	.00130	.00240	-.00040	.03080	.05770	-.01660
-8.011	4.349	-.18150	.10830	.17160	-.11340	.07240	-.03910	.03180	.05910	-.01720
-8.016	6.268	-.17550	.10790	.16490	-.16860	.10570	-.05810	.03140	.05890	-.01690
	GRADIENT	-.00246	.00002	.00151	-.02783	.01683	-.00941	-.00014	-.00035	.00006

RUN NO. 1108/ 0 RN/L = 3.50 GRADIENT INTERVAL = -5.00/ 5.00

ALPHAO	BETAO	CNFO	CAFO	CLMFO	CYFO	CYNFO	CBLFO	CNBO	CABO	CLMBO
-6.213	-6.003	-.06180	.10420	.08540	.16490	-.09670	.05900	.03270	.06200	-.01740
-6.166	-4.086	-.07800	.10560	.09780	.11020	-.06350	.03910	.03220	.06050	-.01730
-6.283	.119	-.12700	.10400	.13380	.00240	.00110	.00000	.03030	.05650	-.01640
-6.042	4.262	-.09650	.10510	.10850	-.10580	.06660	-.03880	.03040	.05640	-.01650
-6.011	6.265	-.08300	.10640	.09660	-.15830	.09830	-.05840	.03110	.05800	-.01680
	GRADIENT	-.00224	-.00006	.00130	-.02687	.01558	-.00933	-.00022	-.00049	.00010

RUN NO. 1109/ 0 RN/L = 3.51 GRADIENT INTERVAL = -5.00/ 5.00

ALPHAO	BETAO	CNFO	CAFO	CLMFO	CYFO	CYNFO	CBLFO	CNBO	CABO	CLMBO
-4.293	-6.047	.01800	.10390	.02680	.15500	-.09100	.05940	.03240	.06110	-.01730
-4.317	-4.024	-.00510	.10510	.04440	.09770	-.05570	.03720	.03130	.05840	-.01690
-4.257	.346	-.04560	.10220	.07510	-.00370	.00420	-.00230	.03010	.05570	-.01640
-3.776	4.319	.00020	.10600	.03850	-.09980	.06210	-.04010	.02950	.05430	-.01610
-3.893	6.173	.00690	.10670	.03050	-.14580	.09010	-.05780	.03020	.05660	-.01630
	GRADIENT	.00047	.00010	-.00058	-.02366	.01411	-.00926	-.00022	-.00049	.00010

RUN NO. 1110/ 0 RN/L = 3.50 GRADIENT INTERVAL = -5.00/ 5.00

ALPHAO	BETAO	CNFO	CAFO	CLMFO	CYFO	CYNFO	CBLFO	CNBO	CABO	CLMBO
-.453	-7.058	.18020	.10410	-.08870	.16220	-.09620	.06870	.03200	.06080	-.01700
-.435	-4.893	.15760	.10320	-.07270	.11040	-.06500	.04740	.03150	.05870	-.01700
-.401	-.488	.11460	.10110	-.03980	.01150	-.00430	.00430	.02910	.05400	-.01580
-.365	3.607	.13850	.10520	-.05980	-.07510	.04960	-.03450	.02810	.05220	-.01520
-.367	5.777	.14880	.10590	-.06970	-.12240	.07840	-.05450	.02900	.05400	-.01570
	GRADIENT	-.00234	.00023	.00159	-.02183	.01349	-.00964	-.00040	-.00077	.00021

IA156A, AEDC PWT 16T-470, O T S W/SILTS (R8N082) (10 MAY 80)

REFERENCE DATA

SREF = 2690.0000 SQ.FT. XMRP = 976.0000 IN. XT
LREF = 1290.3000 INCHES YMRP = .0000 IN. YT
BREF = 1290.3000 INCHES ZMRP = 400.0000 IN. ZT
SCALE = .0200

PARAMETRIC DATA

IB-ELV = 8.000 OB-ELV = 11.000
BDFLAP = .000 SPDBRK = .000
RUDDER = .000 SILTS = 1.000
MACH = 1.100 RN/L = 3.500

RUN NO. 1111/ 0 RN/L = 3.50 GRADIENT INTERVAL = -5.00/ 5.00

ALPHAO	BETAO	CNFO	CAFO	CLMFO	CYFO	CYNFO	CBLFO	CNBO	CABO	CLMBO
4.[illegible]	-5.753	.33640	.09980	-.20330	.11820	-.07240	.05350	.02960	.05580	-.01590
3.945	-3.680	.31790	.10230	-.18990	.07680	-.04640	.03480	.02890	.05390	-.01560
3.680	.122	.28090	.09960	-.16100	.00630	-.00240	.00250	.02910	.05380	-.01580
3.789	3.976	.31230	.10120	-.18700	-.06590	.04240	-.03060	.02790	.05170	-.01520
3.768	6.065	.31680	.10190	-.19270	-.10800	.06830	-.04940	.02850	.05250	-.01550
	GRADIENT	-.00071	-.00014	.00036	-.01864	.01160	-.00854	-.00013	-.00029	.00005

IA156A, AEDC PWT 16T-470, O T S W/SILTS (R8N083) (10 MAY 80)

REFERENCE DATA

SREF = 2690.0000 SQ.FT. XMRP = 976.0000 IN. XT
LREF = 1290.3000 INCHES YMRP = .0000 IN. YT
BREF = 1290.3000 INCHES ZMRP = 400.0000 IN. ZT
SCALE = .0200

PARAMETRIC DATA

IB-ELV = 8.000 OB-ELV = 9.000
BDFLAP = .000 SPDBRK = .000
RUDDER = .000 SILTS = 1.000
MACH = .600 RN/L = 3.500

RUN NO. 1114/ 0 RN/L = 3.51 GRADIENT INTERVAL = -5.00/ 5.00

ALPHAO	BETAO	CNFO	CAFO	CLMFO	CYFO	CYNFO	CBLFO	CNBO	CABO	CLMBO
-8.219	-7.832	-.07680	.02860	.06260	.22860	-.13980	.06660	.02400	.04400	-.01320
-8.099	-5.891	-.08030	.03260	.06410	.17380	-.10600	.05030	.02310	.04260	-.01260
-8.140	-3.791	-.09050	.03650	.07240	.10690	-.06360	.03000	.02210	.04070	-.01210
-8.051	.301	-.11230	.03470	.08880	-.00270	.00490	-.00280	.02070	.03810	-.01130
-7.910	4.243	-.10470	.03650	.07940	-.10820	.07090	-.03400	.02170	.03940	-.01200
-7.897	6.183	-.10080	.03430	.07450	-.16020	.10360	-.04970	.02270	.04160	-.01250
-7.934	8.177	-.10600	.03200	.07660	-.21340	.13660	-.06480	.02330	.04270	-.01280
	GRADIENT	-.00179	-.00000	.00089	-.02678	.01674	-.00797	-.00005	-.00016	.00001

RUN NO. 1115/ 0 RN/L = 3.51 GRADIENT INTERVAL = -5.00/ 5.00

ALPHAO	BETAO	CNFO	CAFO	CLMFO	CYFO	CYNFO	CBLFO	CNBO	CABO	CLMBO
-6.156	-7.922	-.00140	.03240	.00980	.22080	-.13620	.06570	.02310	.04300	-.01260
-6.128	-5.909	-.01580	.03630	.01960	.16350	-.10040	.04840	.02240	.04120	-.01230
-6.052	-4.007	-.02420	.03910	.02650	.10700	-.06500	.03120	.02160	.03930	-.01190
-6.113	.075	-.05160	.03900	.04720	.00150	.00140	-.00120	.01980	.03600	-.01090
-5.946	4.190	-.04040	.03880	.03520	-.10120	.06620	-.03230	.02160	.03870	-.01210
-5.887	6.166	-.03860	.03490	.03170	-.15230	.09870	-.04820	.02370	.04320	-.01310
-5.690	8.305	-.03020	.03530	.02460	-.20420	.13120	-.06370	.02300	.04180	-.01270
	GRADIENT	-.00197	-.00004	.00106	-.02540	.01600	-.00775	.00000	-.00007	-.00002

IA156A, AEDC PWT 16T-470, O T S W/SILTS (R8N083) (10 MAY 80)

REFERENCE DATA

SREF = 2690.0000 SQ.FT. XMRP = 976.0000 IN. XT
LREF = 1290.3000 INCHES YMRP = .0000 IN. YT
BREF = 1290.3000 INCHES ZMRP = 400.0000 IN. ZT
SCALE = .0200

PARAMETRIC DATA

IB-ELV = 8.000 OB-ELV = 9.000
BDFLAP = .000 SPDBRK = .000
RUDDER = .000 SILTS = 1.000
MACH = .600 RN/L = 3.500

RUN NO. 1117/ 0 RN/L = 3.49 GRADIENT INTERVAL = -5.00/ 5.00

ALPHAO	BETAO	CNFO	CAFO	CLMFO	CYFO	CYNFO	CBLFO	CNBO	CABO	CLMBO
-4.005	-7.950	.06910	.03410	-.03800	.20960	-.13040	.06460	.02300	.04230	-.01260
-4.230	-5.941	.04450	.03740	-.02180	.15070	-.09310	.04610	.02240	.04120	-.01220
-4.234	-3.892	.03380	.04020	-.01330	.09380	-.05660	.02820	.02140	.03950	-.01170
-4.049	.174	.01670	.04090	.00040	.00070	.00180	-.00140	.01950	.03550	-.01070
-3.718	4.264	.03550	.04090	-.01640	-.09920	.06450	-.03260	.02080	.03750	-.01150
-3.792	6.053	.03370	.03870	-.01730	-.14310	.09330	-.04680	.02170	.03950	-.01200
-3.831	8.046	.02850	.03570	-.01540	-.18950	.12280	-.06130	.02270	.04140	-.01250
	GRADIENT	.00021	.00009	-.00038	-.02367	.01485	-.00746	-.00007	-.00024	.00002

RUN NO. 1118/ 0 RN/L = 3.50 GRADIENT INTERVAL = -5.00/ 5.00

ALPHAO	BETAO	CNFO	CAFO	CLMFO	CYFO	CYNFO	CBLFO	CNBO	CABO	CLMBO
-.345	-8.769	.17870	.03040	-.11120	.20790	-.13180	.06890	.02240	.04130	-.01220
-.339	-6.697	.16680	.03490	-.10390	.15920	-.10040	.05240	.02170	.04010	-.01180
-.327	-4.423	.15410	.04050	-.09460	.10200	-.06340	.03340	.02060	.03780	-.01130
-.300	-.384	.13550	.04010	-.07840	.00810	-.00230	.00160	.01880	.03450	-.01030
-.272	3.688	.15400	.03980	-.09520	-.07300	.05050	-.02670	.02000	.03590	-.01110
-.267	5.772	.15840	.03890	-.10050	-.11900	.08070	-.04210	.02120	.03780	-.01190
-.260	7.866	.16070	.03660	-.10410	-.16300	.11030	-.05760	.02200	.03920	-.01240
	GRADIENT	-.00001	-.00009	-.00008	-.02157	.01404	-.00741	-.00007	-.00023	.00002

RUN NO. 1119/ 0 RN/L = 3.49 GRADIENT INTERVAL = -5.00/ 5.00

ALPHAO	BETAO	CNFO	CAFO	CLMFO	CYFO	CYNFO	CBLFO	CNBO	CABO	CLMBO
4.061	-8.068	.30590	.02880	-.19860	.16690	-.10930	.06420	.02110	.03830	-.01170
4.074	-5.756	.29240	.03140	-.19050	.12010	-.07830	.04590	.02060	.03800	-.01130
4.049	-3.766	.28670	.03350	-.18600	.07750	-.05000	.02950	.01940	.03580	-.01060
3.826	.145	.26570	.03260	-.16800	.00980	-.00500	.00260	.01890	.03450	-.01040
3.894	4.109	.29320	.03310	-.19050	-.06270	.04340	-.02500	.01880	.03380	-.01050
3.848	6.179	.29190	.03160	-.19260	-.10920	.07540	-.04230	.02030	.03590	-.01140
3.834	8.158	.29090	.02840	-.19370	-.14620	.10040	-.05640	.02120	.03770	-.01200
	GRADIENT	.00084	-.00005	-.00058	-.01780	.01186	-.00692	-.00008	-.00025	.00001

IA156A, AEDC PWT 16T-470, O T S W/SILTS (R8N083) (10 MAY 80)

REFERENCE DATA

SREF = 2690.0000 SQ.FT. XMRP = 976.0000 IN. XT
LREF = 1290.3000 INCHES YMRP = .0000 IN. YT
BREF = 1290.3000 INCHES ZMRP = 400.0000 IN. ZT
SCALE = .0200

PARAMETRIC DATA

IB-ELV = 8.000 OB-ELV = 9.000
BDFLAP = .000 SPDBRK = .000
RUDDER = .000 SILTS = 1.000
MACH = .600 RN/L = 3.500

RUN NO. 1120/ 0 RN/L = 3.49 GRADIENT INTERVAL = -5.00/ 5.00

ALPHAO	BETAO	CNFO	CAFO	CLMFO	CYFO	CYNFO	CBLFO	CNBO	CABO	CLMBO
6.199	-7.959	.37380	.02250	-.24610	.15510	-.10140	.06250	.02110	.03850	-.01160
6.166	-5.903	.37130	.02600	-.24520	.11470	-.07460	.04600	.02060	.03780	-.01130
6.146	-3.877	.36670	.02940	-.24150	.07990	-.05110	.03140	.01940	.03570	-.01070
5.896	.134	.34450	.02870	-.22280	.00960	-.00510	.00300	.01880	.03430	-.01040
5.802	4.075	.35010	.02900	-.22960	-.05850	.04030	-.02410	.01910	.03380	-.01080
5.758	5.987	.35280	.02720	-.23430	-.09530	.06570	-.03880	.02040	.03570	-.01160
5.823	8.257	.35390	.02360	-.23730	-.13830	.09540	-.05570	.02120	.03720	-.01200
	GRADIENT	-.00210	-.00005	.00151	-.01740	.01149	-.00698	-.00004	-.00024	-.00001

RUN NO. 1121/ 0 RN/L = 3.50 GRADIENT INTERVAL = -5.00/ 5.00

ALPHAO	BETAO	CNFO	CAFO	CLMFO	CYFO	CYNFO	CBLFO	CNBO	CABO	CLMBO
8.087	-7.805	.43080	.01710	-.28580	.13870	-.09050	.05920	.02090	.03790	-.01160
7.992	-5.743	.43010	.02030	-.28600	.10070	-.06480	.04260	.02020	.03700	-.01110
7.975	-3.763	.42720	.02270	-.28320	.06890	-.04360	.02840	.01940	.03530	-.01070
7.881	.167	.40930	.02330	-.26730	.00960	-.00490	.00280	.01850	.03330	-.01030
7.924	4.200	.42490	.02270	-.28130	-.05150	.03550	-.02310	.01960	.03460	-.01110
7.893	6.205	.42700	.02070	-.28540	-.08540	.05870	-.03770	.02010	.03530	-.01140
7.886	8.231	.41870	.01600	-.28240	-.12480	.08650	-.05430	.02110	.03730	-.01190
	GRADIENT	-.00027	-.00000	.00022	-.01512	.00993	-.00647	.00003	-.00009	-.00005

IA156A, AEDC PWT 16T-470, O T S W/SILTS (R8N085) (10 MAY 80)

REFERENCE DATA

SREF = 2690.0000 SQ.FT. XMRP = 976.0000 IN. XT
LREF = 1290.3000 INCHES YMRP = .0000 IN. YT
BREF = 1290.3000 INCHES ZMRP = 400.0000 IN. ZT
SCALE = .0200

PARAMETRIC DATA

IB-ELV = 8.000 OB-ELV = 9.000
BDFLAP = .000 SPDBRK = .000
RUDDER = .000 SILTS = 1.000
MACH = .800 RN/L = 3.500

RUN NO. 1132/ 0 RN/L = 3.51 GRADIENT INTERVAL = -5.00/ 5.00

ALPHAO	BETAO	CNFO	CAFO	CLMFO	CYFO	CYNFO	CBLFO	CNBO	CABO	CLMBO
-8.228	-5.851	-.06910	.04360	.05920	.17970	-.11050	.05210	.02500	.04680	-.01340
-8.232	-3.849	-.08210	.04760	.06900	.11350	-.06840	.03230	.02390	.04470	-.01290
-8.166	.278	-.11550	.04440	.09350	.00040	.00230	-.00130	.02190	.04130	-.01170
-7.998	4.292	-.09640	.04620	.07550	-.11350	.07370	-.03460	.02360	.04410	-.01270
-8.010	6.257	-.09270	.04570	.07100	-.17070	.10910	-.05140	.02460	.04600	-.01330
	GRADIENT	-.00179	-.00017	.00082	-.02788	.01745	-.00822	-.00004	-.00008	.00003

RUN NO. 1133/ 0 RN/L = 3.50 GRADIENT INTERVAL = -5.00/ 5.00

ALPHAO	BETAO	CNFO	CAFO	CLMFO	CYFO	CYNFO	CBLFO	CNBO	CABO	CLMBO
-6.217	-5.991	.00500	.04590	.00670	.17320	-.10750	.05180	.02400	.04510	-.01290
-6.150	-4.044	-.01020	.04900	.01800	.11430	-.07060	.03420	.02280	.04240	-.01230
-6.231	.132	-.04640	.04510	.04480	.00110	00060	-.00030	.02120	.03980	-.01140
-6.023	4.270	-.02590	.04730	.02620	-.10680	.06900	-.03310	.02290	.04250	-.01240
-5.980	6.239	-.02240	.04690	.02210	-.16250	.10410	-.05000	.02370	.04400	-.01280
	GRADIENT	-.00190	-.00021	.00099	-.02660	.01679	-.00810	.00001	.00001	-.00001

RUN NO. 1134/ 0 RN/L = 3.50 GRADIENT INTERVAL = -5.00/ 5.00

ALPHAO	BETAO	CNFO	CAFO	CLMFO	CYFO	CYNFO	CBLFO	CNBO	CABO	CLMBO
-4.121	-6.083	.07720	.04740	-.04270	.16360	-.10240	.05080	.02350	.04360	-.01280
-4.332	-3.988	.05340	.04920	-.02620	.10190	-.06270	.03130	.02270	.04160	-.01240
-4.233	.372	.02260	.04550	-.00360	-.00470	.00410	-.00180	.02090	.03920	-.01130
-3.803	4.330	.05090	.04800	-.02650	-.10520	.06790	-.03340	.02220	.04100	-.01210
-3.861	6.148	.05470	.04720	-.03040	-.15400	.09960	-.04910	.02330	.04300	-.01270
	GRADIENT	-.00041	-.00016	.00005	-.02489	.01569	-.00777	-.00007	-.00008	.00004

RUN NO. 1135/ 0 RN/L = 3.50 GRADIENT INTERVAL = -5.00/ 5.00

ALPHAO	BETAO	CNFO	CAFO	CLMFO	CYFO	CYNFO	CBLFO	CNBO	CABO	CLMBO
-.375	-6.864	.20290	.04270	-.12690	.16730	-.10660	.05640	.02260	.04250	-.01210
-.361	-4.564	.18900	.04740	-.11800	.10770	-.06790	.03630	.02120	.03950	-.01150
-.335	-.469	.15810	.04480	-.09450	.01140	-.00490	.00370	.02000	.03710	-.01090
-.300	3.591	.18280	.04750	-.11490	-.07730	.05240	-.02720	.02080	.03820	-.01130
-.297	5.727	.18930	.04690	-.12180	-.12740	.08560	-.04480	.02200	.04010	-.01210
	GRADIENT	-.00077	.00001	.00039	-.02269	.01475	-.00779	-.00005	-.00016	.00002

IA156A, AEDC PWT 16T-470, O T S W/SILTS (R8N085) (10 MAY 80)

REFERENCE DATA

SREF = 2690.0000 SQ.FT. XMRP = 976.0000 IN. XT
LREF = 1290.3000 INCHES YMRP = .0000 IN. YT
BREF = 1290.3000 INCHES ZMRP = 400.0000 IN. ZT
SCALE = .0200

PARAMETRIC DATA

IB-ELV = 8.000 OB-ELV = 9.000
BDFLAP = .000 SPDBRK = .000
RUDDER = .000 SILTS = 1.000
MACH = .800 RN/L = 3.500

RUN NO. 1136/ 0 RN/L = 3.50 GRADIENT INTERVAL = -5.00/ 5.00

ALPHAO	BETAO	CNFO	CAFO	CLMFO	CYFO	CYNFO	CBLFO	CNBO	CABO	CLMBO
3.989	-5.860	.33940	.04030	-.22400	.12920	-.08490	.05060	.02190	.04110	-.01180
3.975	-3.748	.33130	.04150	-.21830	.08130	-.05310	.03220	.02070	.03870	-.01120
3.871	.191	.30720	.03890	-.19860	.00860	-.00500	.00280	.02030	.03720	-.01110
3.791	3.961	.33320	.03990	-.22030	-.06530	.04390	-.02580	.02040	.03690	-.01130
3.774	6.089	.33430	.03880	-.22310	-.11410	.07740	-.04420	.02210	.03990	-.01220
	GRADIENT	.00020	-.00021	-.00022	-.01901	.01258	-.00752	-.00004	-.00023	-.00001

RUN NO. 1137/ 0 RN/L = 3.50 GRADIENT INTERVAL = -5.00/ 5.00

ALPHAO	BETAO	CNFO	CAFO	CLMFO	CYFO	CYNFO	CBLFO	CNBO	CABO	CLMBO
6.082	-5.825	.40620	.03870	-.26890	.12070	-.08010	.04650	.02170	.03980	-.01190
6.052	-3.780	.40950	.03950	-.27220	.07800	-.05110	.02970	.02090	.03850	-.01140
5.757	.158	.37910	.03690	-.24870	.00630	-.00360	.00200	.02030	.03680	-.01120
5.687	4.070	.39230	.03800	-.26050	-.06120	.04080	-.02390	.02080	.03710	-.01170
5.758	6.033	.39250	.03680	-.26260	-.10210	.06940	-.03900	.02160	.03920	-.01190
	GRADIENT	-.00220	-.00019	.00150	-.01773	.01171	-.00683	-.00001	-.00018	-.00004

IA156A, AEDC PWT 16T-470, O T S W/SILTS (R8N086) (10 MAY 80)

REFERENCE DATA

SREF = 2690.0000 SQ.FT. XMRP = 976.0000 IN. XT
LREF = 1290.3000 INCHES YMRP = .0000 IN. YT
BREF = 1290.3000 INCHES ZMRP = 400.0000 IN. ZT
SCALE = .0200

PARAMETRIC DATA

IB-ELV = 8.000 OB-ELV = 9.000
BDFLAP = .000 SPDBRK = .000
RUDDER = .000 SILTS = 1.000
MACH = .900 RN/L = 3.500

RUN NO. 1139/ 0 RN/L = 3.50 GRADIENT INTERVAL = -5.00/ 5.00

ALPHAO	BETAO	CNFO	CAFO	CLMFO	CYFO	CYNFO	CBLFO	CNBO	CABO	CLMBO
-8.106	-5.989	-.08570	.06620	.07990	.18160	-.10970	.05410	.02630	.04890	-.01420
-8.269	-3.772	-.10900	.06780	.09670	.10950	-.06330	.03160	.02520	.04700	-.01370
-8.177	.180	-.14820	.05410	.12490	.00750	-.00300	.00090	.02350	.04340	-.01280
-7.996	4.388	-.12710	.06660	.10620	-.11410	.07170	-.03620	.02530	.04760	-.01350
-8.012	6.268	-.12440	.06730	.10230	-.17190	.10780	-.05370	.02620	.04950	-.01400
	GRADIENT	-.00214	-.00014	.00110	-.02742	.01656	-.00831	.00002	.00008	.00002

IA156A, AEDC PWT 16T-470, O T S W/SILTS (R8N086) (10 MAY 80)

REFERENCE DATA

SREF = 2690.0000 SQ.FT. XMRP = 976.0000 IN. XT
LREF = 1290.3000 INCHES YMRP = .0000 IN. YT
BREF = 1290.3000 INCHES ZMRP = 400.0000 IN. ZT
SCALE = .0200

PARAMETRIC DATA

IB-ELV = 8.000 OB-ELV = 9.000
BDFLAP = .000 SPDBRK = .000
RUDDER = .000 SILTS = 1.000
MACH = .900 RN/L = 3.500

RUN NO. 1140/ 0 RN/L = 3.50 GRADIENT INTERVAL = -5.00/ 5.00

ALPHAO	BETAO	CNFO	CAFO	CLMFO	CYFO	CYNFO	CBLFO	CNBO	CABO	CLMBO
-6.214	-5.990	-.01680	.06510	.03120	.17480	-.10670	.05390	.02590	.04840	-.01390
-6.164	-4.072	-.03040	.06740	.04080	.11610	-.06950	.03540	.02480	.04600	-.01350
-6.253	.100	-.08000	.06270	.07650	.00470	-.00190	.00020	.02280	.04280	-.01230
-6.063	4.260	-.05460	.06610	.05480	-.10430	.06460	-.03410	.02460	.04610	-.01330
-5.777	6.360	-.03780	.06710	.04150	-.16420	.10240	-.05330	.02570	.04790	-.01390
	GRADIENT	-.00291	-.00016	.00168	-.02645	.01609	-.00834	-.00002	.00001	.00002

RUN NO. 1141/ 0 RN/L = 3.50 GRADIENT INTERVAL = -5.00/ 5.00

ALPHAO	BETAO	CNFO	CAFO	CLMFO	CYFO	CYNFO	CBLFO	CNBO	CABO	CLMBO
-4.123	-6.093	.05940	.06410	-.02230	.16360	-.10010	.05260	.02560	.04820	-.01370
-4.340	-4.003	.03350	.06640	-.00430	.10460	-.06250	.03310	.02430	.04530	-.01320
-4.253	.378	-.00970	.06230	.02700	-.00310	.00280	-.00230	.02240	.04170	-.01220
-3.800	4.332	.02880	.06540	-.00330	-.10220	.06310	-.03460	.02440	.04530	-.01320
-3.869	6.156	.03300	.06610	-.00720	-.15010	.09380	-.05060	.02530	.04640	-.01390
	GRADIENT	-.00073	-.00013	.00025	-.02481	.01507	-.00812	.00000	-.00001	.00000

RUN NO. 1142/ 0 RN/L = 3.50 GRADIENT INTERVAL = -5.00/ 5.00

ALPHAO	BETAO	CNFO	CAFO	CLMFO	CYFO	CYNFO	CBLFO	CNBO	CABO	CLMBO
-.404	-6.963	.19900	.06050	-.11700	.16930	-.10620	.05970	.02500	.04690	-.01340
-.385	-4.826	.18450	.06240	-.10880	.11720	-.07300	.04180	.02360	.04420	-.01270
-.354	-.537	.14250	.05800	-.07840	.01110	-.00460	.00430	.02120	.04040	-.01130
-.319	3.586	.17280	.06270	-.10160	-.07380	.04840	-.02840	.02240	.04200	-.01210
-.319	5.744	.17940	.06400	-.10790	-.12430	.08160	-.04670	.02400	.04430	-.01310
	GRADIENT	-.00145	.00003	.00090	-.02272	.01444	-.00835	-.00015	-.00027	.00007

RUN NO. 1143/ 0 RN/L = 3.50 GRADIENT INTERVAL = -5.00/ 5.00

ALPHAO	BETAO	CNFO	CAFO	CLMFO	CYFO	CYNFO	CBLFO	CNBO	CABO	CLMBO
4.083	-5.726	.34460	.06130	-.22150	.12410	-.07990	.04810	.02350	.04400	-.01260
3.960	-3.778	.33850	.06010	-.21910	.08270	-.05270	.03200	.02220	.04170	-.01200
3.857	.180	.31010	.05520	-.19770	.00870	-.00520	.00280	.02140	.04010	-.01150
3.771	3.897	.33290	.05890	-.21510	-.06610	.04370	-.02540	.02220	.04110	-.01200
3.758	6.064	.32820	.05910	-.21400	-.11710	.07660	-.04340	.02440	.04560	-.01320
	GRADIENT	-.00080	-.00017	.00057	-.01938	.01255	-.00748	-.00000	-.00008	.00000

IA156A, AEDC PWT 16T-470, O T S W/SILTS (R8N087) (10 MAY 80)

REFERENCE DATA

SREF = 2690.0000 SQ.FT. XMRP = 976.0000 IN. XT
LREF = 1290.3000 INCHES YMRP = .0000 IN. YT
BREF = 1290.3000 INCHES ZMRP = 400.0000 IN. ZT
SCALE = .0200

PARAMETRIC DATA

IB-ELV = 8.000 OB-ELV = 9.000
BDFLAP = .000 SPDBRK = .000
RUDDER = .000 SILTS = 1.000
MACH = .950 RN/L = 3.500

RUN NO. 1144/ 0 RN/L = 3.50 GRADIENT INTERVAL = -5.00/ 5.00

ALPHAO	BETAO	CNFO	CAFO	CLMFO	CYFO	CYNFO	CBLFO	CNBO	CABO	CLMBO
-8.259	-5.902	-.11600	.08080	.11010	.18490	-.11260	.05710	.02980	.05550	-.01610
-8.255	-3.821	-.12650	.08360	.11690	.11670	-.06800	.03520	.02730	.05090	-.01480
-8.175	.389	-.16780	.08370	.14770	.00040	.00140	-.00120	.02620	.04810	-.01430
-8.017	4.353	-.14790	.08350	.12940	-.11570	.07260	-.03750	.02790	.05170	-.01520
-8.001	6.248	-.14240	.08230	.12320	-.17780	.11240	-.05630	.02940	.05510	-.01580
	GRADIENT	-.00269	-.00001	.00159	-.02842	.01719	-.00889	.00007	.00009	-.00005

RUN NO. 1145/ 0 RN/L = 3.50 GRADIENT INTERVAL = -5.00/ 5.00

ALPHAO	BETAO	CNFO	CAFO	CLMFO	CYFO	CYNFO	CBLFO	CNBO	CABO	CLMBO
-6.216	-5.993	-.03480	.08130	.05170	.17690	-.10810	.05630	.02850	.05280	-.01550
-6.163	-4.073	-.04730	.08280	.06010	.11480	-.06750	.03620	.02700	.05020	-.01470
-6.250	.107	-.09670	.08210	.09560	.00560	-.00280	.00080	.02470	.04520	-.01350
-6.075	4.266	-.07630	.08270	.07770	-.10770	.06690	-.03580	.02760	.05100	-.01500
-5.773	6.363	-.05240	.08180	.05800	-.16860	.10600	-.05550	.02880	.05370	-.01560
	GRADIENT	-.00348	-.00001	.00212	-.02668	.01612	-.00863	.00007	.00009	-.00004

RUN NO. 1146/ 0 RN/L = 3.49 GRADIENT INTERVAL = -5.00/ 5.00

ALPHAO	BETAO	CNFO	CAFO	CLMFO	CYFO	CYNFO	CBLFO	CNBO	CABO	CLMBO
-4.115	-6.097	.04400	.07930	-.00480	.16360	-.09940	.05390	.02790	.05250	-.01500
-4.333	-4.005	.01790	.08160	.01330	.10100	-.05840	.03270	.02590	.04810	-.01410
-4.255	.374	-.02650	.07920	.04590	-.00220	.00180	-.00180	.02540	.04650	-.01400
-3.806	4.343	.01250	.08250	.01470	-.10290	.06370	-.03570	.02600	.04770	-.01430
-3.876	6.157	.01500	.08080	.01060	-.15460	.09680	-.05280	.02800	.05140	-.01530
	GRADIENT	-.00081	.00010	.00029	-.02441	.01461	-.00819	.00001	-.00005	-.00002

RUN NO. 1147/ 0 RN/L = 3.49 GRADIENT INTERVAL = -5.00/ 5.00

ALPHAO	BETAO	CNFO	CAFO	CLMFO	CYFO	CYNFO	CBLFO	CNBO	CABO	CLMBO
-.416	-6.985	.18550	.07380	-.10260	.16390	-.09950	.05930	.02790	.05290	-.01490
-.397	-4.840	.16720	.07610	-.09050	.11020	-.06520	.04030	.02600	.04910	-.01380
-.367	-.542	.11960	.07340	-.05650	.01070	-.00380	.00410	.02310	.04320	-.01240
-.331	3.582	.15240	.07790	-.08200	-.07350	.04720	-.02960	.02470	.04560	-.01350
-.331	5.762	.16130	.07810	-.09040	-.12440	.07970	-.04850	.02660	.04960	-.01440
	GRADIENT	-.00182	.00021	.00106	-.02182	.01335	-.00830	-.00016	-.00042	.00004

IA156A, AEDC PWT 16T-470, O T S W/SILTS (R8N087) (10 MAY 80)

REFERENCE DATA

SREF = 2690.0000 SQ.FT. XMRP = 976.0000 IN. XT
LREF = 1290.3000 INCHES YMRP = .0000 IN. YT
BREF = 1290.3000 INCHES ZMRP = 400.0000 IN. ZT
SCALE = .0200

PARAMETRIC DATA

IB-ELV = 8.000 OB-ELV = 9.000
BDFLAP = .000 SPDBRK = .000
RUDDER = .000 SILTS = 1.000
MACH = .950 RN/L = 3.500

RUN NO. 1148/ 0 RN/L = 3.49 GRADIENT INTERVAL = -5.00/ 5.00

ALPHAO	BETAO	CNFO	CAFO	CLMFO	CYFO	CYNFO	CBLFO	CNBO	CABO	CLMBO
3.978	-5.855	.33170	.07310	-.20800	.12130	-.07500	.04920	.02550	.04810	-.01360
3.964	-3.754	.32020	.07140	-.20150	.07420	-.04380	.03010	.02410	.04530	-.01290
3.852	.184	.29510	.06710	-.18190	.00560	-.00190	.00140	.02370	.04420	-.01280
3.794	3.946	.32010	.07070	-.20170	-.06260	.03950	-.02530	.02420	.04480	-.01310
3.767	6.073	.31870	.07340	-.20160	-.10990	.06980	-.04370	.02590	.04760	-.01420
	GRADIENT	-.00006	-.00010	.08001	-.01776	.01082	-.00720	.00001	-.00007	-.00003

IA156A, AEDC PWT 16T-470, O T S W/SILTS (R8N088) (10 MAY 80)

REFERENCE DATA

SREF = 2690.0000 SQ.FT. XMRP = 976.0000 IN. XT
LREF = 1290.3000 INCHES YMRP = .0000 IN. YT
BREF = 1290.3000 INCHES ZMRP = 400.0000 IN. ZT
SCALE = .0200

PARAMETRIC DATA

IB-ELV = 8.000 OB-ELV = 9.000
BDFLAP = .000 SPDBRK = .000
RUDDER = .000 SILTS = 1.000
MACH = 1.050 RN/L = 3.500

RUN NO. 1149/ 0 RN/L = 3.50 GRADIENT INTERVAL = -5.00/ 5.00

ALPHAO	BETAO	CNFO	CAFO	CLMFO	CYFO	CYNFO	CBLFO	CNBO	CABO	CLMBO
-8.264	-5.919	-.16470	.09840	.16090	.18700	-.11180	.06180	.03720	.07140	-.01960
-8.287	-3.832	-.18100	.10250	.17370	.12010	-.06960	.03890	.03730	.07030	-.01990
-8.186	.397	-.21740	.10270	.20050	-.00080	.00330	-.00180	.03490	.06500	-.01890
-8.011	4.342	-.20450	.10290	.18800	-.11770	.07550	-.04070	.03560	.06630	-.01930
-8.017	6.263	-.19370	.10180	.17700	-.17620	.11050	-.06020	.03550	.06640	-.01910
	GRADIENT	-.00294	.00005	.00180	-.02909	.01775	-.00974	-.00021	-.00050	.00008

RUN NO. 1150/ 0 RN/L = 3.50 GRADIENT INTERVAL = -5.00/ 5.00

ALPHAO	BETAO	CNFO	CAFO	CLMFO	CYFO	CYNFO	CBLFO	CNBO	CABO	CLMBO
-6.217	-6.000	-.07850	.09830	.09810	.17510	-.10440	.06090	.03670	.06990	-.01950
-6.143	-4.071	-.09400	.10060	.11000	.11500	-.06720	.03980	.03650	.06870	-.01950
-6.263	.102	-.14930	.10180	.15140	.00390	-.00030	.00010	.03480	.06470	-.01880
-6.050	4.276	-.12020	.10250	.12640	-.11130	.07020	-.04020	.03440	.06350	-.01880
-6.010	6.261	-.11080	.10110	.11690	-.16830	.10500	-.06000	.03490	.06510	-.01890
	GRADIENT	-.00314	.00023	.00196	-.02711	.01646	-.00958	-.00025	-.00062	.00008

IA156A, AEDC PWT 16T-470, O T S W/SILTS (R8N088) (10 MAY 80)

REFERENCE DATA

SREF = 2690.0000 SQ.FT. XMRP = 976.0000 IN. XT
LREF = 1290.3000 INCHES YMRP = .0000 IN. YT
BREF = 1290.3000 INCHES ZMRP = 400.0000 IN. ZT
SCALE = .0200

PARAMETRIC DATA

IB-ELV = 8.000 OB-ELV = 9.000
BDFLAP = .000 SPDBRK = .000
RUDDER = .000 SILTS = 1.000
MACH = 1.050 RN/L = 3.500

RUN NO. 1151/ 0 RN/L = 3.50 GRADIENT INTERVAL = -5.00/ 5.00

ALPHAO	BETAO	CNFO	CAFO	CLMFO	CYFO	CYNFO	CBLFO	CNBO	CABO	CLMBO
-4.122	-6.105	.00850	.09840	.03670	.16350	-.09750	.06030	.03670	.06930	-.01960
-4.348	-4.023	-.02630	.10040	.06180	.10500	-.06120	.03810	.03620	.06800	-.01940
-4.265	.371	-.07250	.10060	.09690	-.00390	.00450	-.00260	.03490	.06440	-.01900
-3.797	4.336	-.03090	.10170	.06280	-.10580	.06620	-.04030	.03320	.06110	-.01820
-3.885	6.173	-.02250	.10020	.05420	-.15530	.09660	-.05880	.03460	.06410	-.01880
	GRADIENT	-.00073	.00015	.00026	-.02521	.01524	-.00938	-.00036	-.00083	.00014

RUN NO. 1152/ 0 RN/L = 3.50 GRADIENT INTERVAL = -5.00/ 5.00

ALPHAO	BETAO	CNFO	CAFO	CLMFO	CYFO	CYNFO	CBLFO	CNBO	CABO	CLMBO
-.451	-7.057	.16770	.09740	-.07630	.16700	-.10000	.06930	.03670	.06910	-.01970
-.435	-4.891	.14140	.09830	-.05710	.11430	-.06810	.04800	.03650	.06810	-.01970
-.409	-.539	.08700	.09620	-.01550	.01330	-.00600	.00550	.03410	.06320	-.01850
-.376	3.592	.11460	.10100	-.03780	-.07620	.05020	-.03430	.03350	.06220	-.01820
-.373	5.772	.12770	.10200	-.05020	-.12500	.08050	-.05460	.03430	.06380	-.01860
	GRADIENT	-.00324	.00031	.00234	-.02246	.01395	-.00970	-.00036	-.00070	.00018

RUN NO. 1153/ 0 RN/L = 3.50 GRADIENT INTERVAL = -5.00/ 5.00

ALPHAO	BETAO	CNFO	CAFO	CLMFO	CYFO	CYNFO	CBLFO	CNBO	CABO	CLMBO
4.063	-5.735	.30890	.09570	-.17850	.11700	-.07170	.05390	.03520	.06610	-.01880
3.941	-3.723	.29150	.09650	-.16570	.07630	-.04610	.03620	.03420	.06410	-.01840
3.717	.017	.26320	.09330	-.14480	.00900	-.00400	.00410	.03320	.06200	-.01790
3.796	3.944	.29510	.09630	-.17010	-.06620	.04310	-.03040	.03300	.06100	-.01790
3.767	6.061	.29700	.09620	-.17330	-.10960	.06980	-.04980	.03390	.06300	-.01840
	GRADIENT	.00053	-.00002	-.00062	-.01859	.01164	-.00869	-.00016	-.00040	.00006

IA156A, AEDC PWT 16T-470, O T S W/SILTS (R8N089) (10 MAY 80)

REFERENCE DATA

SREF = 2690.0000 SQ.FT. XMRP = 976.0000 IN. XT
LREF = 1290.3000 INCHES YMRP = .0000 IN. YT
BREF = 1290.3000 INCHES ZMRP = 400.0000 IN. ZT
SCALE = .0200

PARAMETRIC DATA

IB-ELV = 8.000 OB-ELV = 9.000
BDFLAP = .000 SPDBRK = .000
RUDDER = .000 SILTS = 1.000
MACH = 1.100 RN/L = 3.500

RUN NO. 1154/ 0 RN/L = 3.50 GRADIENT INTERVAL = -5.00/ 5.00

ALPHAO	BETAO	CNFO	CAFO	CLMFO	CYFO	CYNFO	CBLFO	CNBO	CABO	CLMBO
-8.241	-5.914	-.15260	.10620	.15390	.17580	-.10400	.05890	.03280	.06260	-.01740
-8.257	-3.818	-.16590	.10800	.16320	.11230	-.06410	.03670	.03270	.06170	-.01740
-8.183	.180	-.20320	.10580	.19060	.00270	.00120	-.00050	.03080	.05770	-.01660
-8.011	4.357	-.18600	.10770	.17540	-.11490	.07290	-.04020	.03150	.05850	-.01710
-8.012	6.257	-.17850	.10670	.16760	-.17050	.10620	-.05900	.03210	.05970	-.01740
	GRADIENT	-.00241	-.00003	.00145	-.02780	.01676	-.00941	-.00014	-.00039	.00004

RUN NO. 1155/ 0 RN/L = 3.50 GRADIENT INTERVAL = -5.00/ 5.00

ALPHAO	BETAO	CNFO	CAFO	CLMFO	CYFO	CYNFO	CBLFO	CNBO	CABO	CLMBO
-6.202	-5.994	-.06600	.10340	.08990	.16600	-.09760	.05880	.03270	.06190	-.01740
-6.179	-4.081	-.08420	.10460	.10310	.10770	-.06200	.03790	.03220	.06090	-.01720
-6.274	.100	-.13060	.10410	.13750	.00090	.00160	-.00080	.03010	.05570	-.01640
-6.064	4.280	-.10150	.10570	.11310	-.10760	.06690	-.03940	.03020	.05560	-.01650
-6.003	6.253	-.09090	.10500	.10290	-.16160	.09950	-.05910	.03100	.05790	-.01680
	GRADIENT	-.00207	.00013	.00120	-.02575	.01542	-.00925	-.00024	-.00063	.00008

RUN NO. 1156/ 0 RN/L = 3.50 GRADIENT INTERVAL = -5.00/ 5.00

ALPHAO	BETAO	CNFO	CAFO	CLMFO	CYFO	CYNFO	CBLFO	CNBO	CABO	CLMBO
-4.123	-6.105	.02220	.10310	.02560	.15270	-.08990	.05840	.03240	.06140	-.01720
-4.346	-4.020	-.01060	.10370	.04980	.09560	-.05420	.03590	.03160	.05890	-.01710
-4.258	.363	-.04890	.10180	.07860	-.00510	.00460	-.00300	.02980	.05490	-.01620
-3.785	4.336	-.00490	.10480	.04310	-.10120	.06230	-.04050	.02910	.05330	-.01600
-3.882	6.170	.00190	.10610	.03550	-.14870	.09160	-.05880	.03030	.05570	-.01660
	GRADIENT	.00052	.00012	-.00068	-.02354	.01393	-.00914	-.00030	-.00067	.00013

RUN NO. 1157/ 0 RN/L = 3.50 GRADIENT INTERVAL = -5.00/ 5.00

ALPHAO	BETAO	CNFO	CAFO	CLMFO	CYFO	CYNFO	CBLFO	CNBO	CABO	CLMBO
-.456	-7.037	.17470	.10200	-.08300	.16080	-.09560	.06790	.03240	.06110	-.01730
-.437	-4.905	.15280	.10190	-.06760	.10830	-.06410	.04670	.03150	.05870	-.01700
-.402	-.515	.11100	.09940	-.03570	.01160	-.00460	.00450	.02900	.05340	-.01580
-.373	3.594	.13330	.10370	-.05490	-.07580	.04980	-.03460	.02780	.05150	-.01510
-.369	5.774	.14330	.10420	-.06500	-.12440	.07950	-.05500	.02890	.05350	-.01570
	GRADIENT	-.00238	.00020	.00156	-.02167	.01340	-.00957	-.00044	-.00085	.00022

IA156A, AEDC PWT 16T-470, O T S W/SILTS (R8N089) (10 MAY 80)

REFERENCE DATA

SREF = 2690.0000 SQ.FT. XMRP = 976.0000 IN. XT
LREF = 1290.3000 INCHES YMRP = .0000 IN. YT
BREF = 1290.3000 INCHES ZMRP = 400.0000 IN. ZT
SCALE = .0200

PARAMETRIC DATA

IB-ELV = 8.000 OB-ELV = 9.000
BDFLAP = .000 SPDBRK = .000
RUDDER = .000 SILTS = 1.000
MACH = 1.100 RN/L = 3.500

RUN NO. 1158/ 0 RN/L = 3.50 GRADIENT INTERVAL = -5.00/ 5.00

ALPHAO	BETAO	CNFO	CAFO	CLMFO	CYFO	CYNFO	CBLFO	CNBO	CABO	CLMBO
3.961	-5.845	.32680	.09890	-.19450	.11790	-.07210	.05400	.02940	.05530	-.01580
3.944	-3.745	.31490	.10040	-.18570	.07700	-.04670	.03580	.02860	.05330	-.01550
3.822	.194	.28150	.09810	-.15940	.00350	-.00110	.00170	.02910	.05380	-.01590
3.780	3.932	.30630	.09960	-.18160	-.06760	.04320	-.03090	.02740	.05050	-.01490
3.771	6.068	.31190	.10060	-.18750	-.11010	.06940	-.04950	.02810	.05170	-.01530
	GRADIENT	-.00118	-.00011	.00058	-.01883	.01171	-.00869	-.00015	-.00036	.00008

IA156A, AEDC PWT 16T-470, O T S W/SILTS (R8N090) (10 MAY 80)

REFERENCE DATA

SREF = 2690.0000 SQ.FT. XMRP = 976.0000 IN. XT
LREF = 1290.3000 INCHES YMRP = .0000 IN. YT
BREF = 1290.3000 INCHES ZMRP = 400.0000 IN. ZT
SCALE = .0200

PARAMETRIC DATA

IB-ELV = 8.000 OB-ELV = 9.000
BDFLAP = .000 SPDBRK = .000
RUDDER = .000 SILTS = 1.000
MACH = 1.150 RN/L = 3.500

RUN NO. 1159/ 0 RN/L = 3.49 GRADIENT INTERVAL = -5.00/ 5.00

ALPHAO	BETAO	CNFO	CAFO	CLMFO	CYFO	CYNFO	CBLFO	CNBO	CABO	CLMBO
-8.245	-5.924	-.13700	.10830	.14290	.18130	-.10800	.06180	.03130	.06010	-.01650
-8.273	-3.821	-.15700	.11070	.15770	.11660	-.06730	.03850	.03110	.05840	-.01670
-8.197	.395	-.19800	.10950	.18770	-.00020	.00290	-.00150	.02840	.05320	-.01530
-8.012	4.342	-.18300	.11080	.17430	-.11060	.07020	-.03900	.02940	.05440	-.01600
-8.013	6.266	-.17310	.11050	.16420	-.16770	.10460	-.05840	.02950	.05520	-.01590
	GRADIENT	-.00326	.00001	.00209	-.02783	.01684	-.00949	-.00021	-.00050	.00009

RUN NO. 1160/ 0 RN/L = 3.50 GRADIENT INTERVAL = -5.00/ 5.00

ALPHAO	BETAO	CNFO	CAFO	CLMFO	CYFO	CYNFO	CBLFO	CNBO	CABO	CLMBO
-6.211	-6.001	-.05080	.10770	.07850	.16790	-.09960	.06150	.03090	.05930	-.01620
-6.157	-4.080	-.06880	.10870	.09210	.11000	-.06360	.04000	.03000	.05720	-.01590
-6.277	.102	-.12170	.10660	.13180	.00490	-.00140	.00070	.02780	.05190	-.01500
-6.058	4.283	-.09590	.10920	.10920	-.10610	.06600	-.03970	.02840	.05230	-.01560
-6.000	6.253	-.08480	.11030	.09850	-.16000	.09930	-.05970	.02920	.05400	-.01590
	GRADIENT	-.00324	.00006	.00204	-.02584	.01550	-.00953	-.00019	-.00059	.00004

IA156A, AEDC PWT 16T-470, O T S W/SILTS (R8N090) (10 MAY 80)

REFERENCE DATA

SREF = 2690.0000 SQ.FT. XMRP = 976.0000 IN. XT
LREF = 1290.3000 INCHES YMRP = .0000 IN. YT
BREF = 1290.3000 INCHES ZMRP = 400.0000 IN. ZT
SCALE = .0200

PARAMETRIC DATA

IB-ELV = 8.000 OB-ELV = 9.000
BDFLAP = .000 SPDBRK = .000
RUDDER = .000 SILTS = 1.000
MACH = 1.150 RN/L = 3.500

RUN NO. 1161/ 0 RN/L = 3.50 GRADIENT INTERVAL = -5.00/ 5.00

ALPHAO	BETAO	CNFO	CAFO	CLMFO	CYFO	CYNFO	CBLFO	CNBO	CABO	CLMBO
-4.119	-6.114	.03970	.10850	.01220	.15590	-.09230	.06120	.03040	.05780	-.01610
-4.340	-4.024	.01280	.10750	.03170	.10030	-.05840	.03960	.02970	.05600	-.01590
-4.279	.374	-.03430	.10490	.06740	-.00240	.00270	-.00210	.02780	.05130	-.01510
-3.795	4.332	.00020	.10880	.03870	-.09920	.06150	-.04080	.02720	.05010	-.01490
-3.894	6.179	.00260	.10920	.03440	-.14660	.09060	-.05840	.02850	.05260	-.01550
	GRADIENT	-.00168	.00014	.00097	-.02386	.01434	-.00962	-.00030	-.00071	.00012

RUN NO. 1162/ 0 RN/L = 3.49 GRADIENT INTERVAL = -5.00/ 5.00

ALPHAO	BETAO	CNFO	CAFO	CLMFO	CYFO	CYNFO	CBLFO	CNBO	CABO	CLMBO
-.448	-7.070	.18840	.10580	-.09380	.16220	-.09730	.06830	.03060	.05790	-.01640
-.413	-4.929	.17750	.10720	-.08680	.11000	-.06590	.04680	.02990	.05570	-.01610
-.378	-.504	.14210	.10490	-.06040	.00960	-.00320	.00400	.02760	.05100	-.01500
-.348	3.596	.15790	.10940	-.07350	-.07730	.05130	-.03480	.02660	.04940	-.01440
-.358	5.780	.16210	.10950	-.07870	-.12660	.08130	-.05550	.02770	.05120	-.01510
	GRADIENT	-.00237	.00025	.00162	-.02198	.01375	-.00957	-.00039	-.00074	.00020

RUN NO. 1163/ 0 RN/L = 3.50 GRADIENT INTERVAL = -5.00/ 5.00

ALPHAO	BETAO	CNFO	CAFO	CLMFO	CYFO	CYNFO	CBLFO	CNBO	CABO	CLMBO
3.969	-5.846	.32760	.10400	-.19680	.12300	-.07620	.05600	.02800	.05310	-.01490
3.937	-3.734	.31520	.10520	-.18760	.08140	-.05040	.03730	.02840	.05300	-.01530
3.820	.186	.29730	.10260	-.17230	.00810	-.00480	.00360	.02780	.05160	-.01510
3.826	3.967	.32150	.10520	-.19340	-.06500	.04170	-.02980	.02640	.04840	-.01450
3.727	6.007	.32400	.10640	-.19700	-.10900	.06910	-.04910	.02700	.04960	-.01480
	GRADIENT	.00079	-.00000	-.00072	-.01901	.01196	-.00871	-.00026	-.00060	.00010

IA156A, AEDC PWT 16T-470, O T S W/SILTS (R8N091) (10 MAY 80)

REFERENCE DATA

SREF = 2690.0000 SQ.FT. XMRP = 976.0000 IN. XT
LREF = 1290 3000 INCHES YMRP = .0000 IN. YT
BREF = 1290.3000 INCHES ZMRP = 400.0000 IN. ZT
SCALE = .0200

PARAMETRIC DATA

IB-ELV = 8.000 OB-ELV = 9.000
BDFLAP = .000 SPDBRK = .000
RUDDER = .000 SILTS = 1.000
MACH = 1.250 RN/L = 3.500

RUN NO. 1164/ 0 RN/L = 3.50 GRADIENT INTERVAL = -5.00/ 5.00

ALPHAO	BETAO	CNFO	CAFO	CLMFO	CYFO	CYNFO	CBLFO	CNBO	CABO	CLMBO
-8.253	-5.912	-.12120	.11170	.12960	.17520	-.10470	.06070	.02750	.05340	-.01430
-8.266	-3.806	-.13700	.11380	.14080	.10940	-.06270	.03780	.02700	.05110	-.01430
-8.197	.403	-.16970	.11130	.16550	-.00490	.00740	-.00230	.02570	.04840	-.01380
-8.008	4.363	-.15040	.11440	.14790	-.11670	.07660	-.04100	.02600	.04850	-.01400
-8.020	6.274	-.14620	.11380	.14310	-.17390	.11200	-.06030	.02730	.05160	-.01460
	GRADIENT	-.00170	.00007	.00092	-.02767	.01705	-.00964	-.00012	-.00032	.00004

RUN NO. 1165/ 0 RN/L = 3.50 GRADIENT INTERVAL = -5.00/ 5.00

ALPHAO	BETAO	CNFO	CAFO	CLMFO	CYFO	CYNFO	CBLFO	CNBO	CABO	CLMBO
-6.244	-6.014	-.03880	.11170	.06720	.16380	-.09780	.05990	.02710	.05170	-.01430
-6.183	-4.077	-.04900	.11240	.07460	.10590	-.06150	.03910	.02690	.05090	-.01430
-6.278	.117	-.08820	.11100	.10360	-.00160	.00460	-.00030	.02520	.04720	-.01360
-6.050	4.293	-.06790	.11320	.08500	-.11080	.07190	-.04050	.02560	.04750	-.01390
-6.001	6.271	-.06580	.11240	.08160	-.16580	.10600	-.05980	.02700	.05080	-.01450
	GRADIENT	-.00226	.00010	.00125	-.02589	.01594	-.00951	-.00016	-.00041	.00005

RUN NO. 1166/ 0 RN/L = 3.49 GRADIENT INTERVAL = -5.00/ 5.00

ALPHAO	BETAO	CNFO	CAFO	CLMFO	CYFO	CYNFO	CBLFO	CNBO	CABO	CLMBO
-4.135	-6.129	.04570	.11050	.00420	.15470	-.09240	.05910	.02790	.05360	-.01470
-4.339	-4.003	.02460	.11220	.01980	.09500	-.05470	.03660	.02670	.05040	-.01420
-4.265	.380	-.00090	.11000	.03820	-.00840	.00830	-.00330	.02540	.04740	-.01370
-3.793	4.340	.02880	.11350	.01330	-.10320	.06620	-.03910	.02510	.04630	-.01370
-3.889	6.192	.02340	.11200	.01530	-.15140	.09640	-.05690	.02660	.04950	-.01440
	GRADIENT	.00039	.00014	-.00069	-.02376	.01449	-.00907	-.00019	-.00049	.00006

RUN NO. 1167/ 0 RN/L = 3.50 GRADIENT INTERVAL = -5.00/ 5.00

ALPHAO	BETAO	CNFO	CAFO	CLMFO	CYFO	CYNFO	CBLFO	CNBO	CABO	CLMBO
-.478	-7.082	.19460	.10990	-.10300	.16400	-.09960	.06560	.02800	.05360	-.01470
-.444	-4.897	.18350	.11230	-.09640	.10800	-.06470	.04380	.02680	.05100	-.01420
-.399	-.550	.15850	.11020	-.07850	.00950	-.00290	.00380	.02490	.04650	-.01340
-.376	3.595	.17050	.11360	-.08850	-.07790	.05230	-.03310	.02490	.04610	-.01360
-.383	5.801	.16960	.11520	-.08960	-.12850	.08330	-.05270	.02500	.04600	-.01370
	GRADIENT	-.00156	.00015	.00096	-.02190	.01378	-.00906	-.00023	-.00058	.00007

IA156A, AEDC PWT 16T-470, O T S W/SILTS (R8N091) (10 MAY 80)

REFERENCE DATA

SREF = 2690.0000 SQ.FT. XMRP = 976.0000 IN. XT
LREF = 1290.3000 INCHES YMRP = .0000 IN. YT
BREF = 1290.3000 INCHES ZMRP = 400.0000 IN. ZT
SCALE = .0200

PARAMETRIC DATA

IB-ELV = 8.000 OB-ELV = 9.000
BDFLAP = .000 SPDBRK = .000
RUDDER = .000 SILTS = 1.000
MACH = 1.250 RN/L = 3.500

RUN NO. 1168/ 0 RN/L = 3.49 GRADIENT INTERVAL = -5.00/ 5.00

ALPHAO	BETAO	CNFO	CAFO	CLMFO	CYFO	CYNFO	CBLFO	CNBO	CABO	CLMBO
4.077	-5.702	.35110	.11220	-.21920	.12070	-.07550	.05240	.02560	.04850	- 01370
3.954	-3.767	.33750	.11250	-.20950	.08120	-.05060	.03590	.02570	.04820	-.01380
3.808	.180	.31540	.10940	-.19150	.00340	-.00110	.00180	.02550	.04760	-.01370
3.745	3.875	.32700	.11270	-.20250	-.06990	.04650	-.03050	.02450	.04490	-.01340
3.771	6.090	.32810	.11250	-.20520	-.11680	.07560	-.04980	.02480	.04570	-.01350
	GRADIENT	-.00142	.00002	.00096	-.01977	.01270	-.00869	-.00016	-.00043	.00005

IA156A, AEDC PWT 16T-470, O T S W/SILTS (R8N092) (10 MAY 80)

REFERENCE DATA

SREF = 2690.0000 SQ.FT. XMRP = 976.0000 IN. XT
LREF = 1290.3000 INCHES YMRP = .0000 IN. YT
BREF = 1290.3000 INCHES ZMRP = 400.0000 IN. ZT
SCALE = .0200

PARAMETRIC DATA

IB-ELV = 8.000 OB-ELV = 5.000
BDFLAP = .000 SPDBRK = .000
RUDDER = .000 SILTS = 1.000
MACH = .600 RN/L = 3.500

RUN NO. 1173/ 0 RN/L = 3.50 GRADIENT INTERVAL = -5.00/ 5.00

ALPHAO	BETAO	CNFO	CAFO	CLMFO	CYFO	CYNFO	CBLFO	CNBO	CABO	CLMBO
-8.025	-7.908	-.07860	.02880	.06600	.23090	-.14160	.06660	.02380	.04370	-.01300
-8.116	-5.784	-.10440	.02970	.08390	.17030	-.10410	.04880	.02360	.04330	-.01290
-8.121	-3.803	-.10970	.03380	.08820	.10840	-.06470	.03000	.02220	.04040	-.01220
-8.048	.275	-.13160	.03270	.10530	-.00250	.00470	-.00290	.02050	.03760	-.01120
-7.900	4.226	-.12120	.03400	.09350	-.10750	.07060	-.03370	.02150	.03920	-.01180
-7.898	6.164	-.11780	.03230	.08870	-.16070	.10370	-.04950	.02300	.04160	-.01270
-7.725	8.229	-.11590	.03060	.08590	-.21470	.13710	-.06480	.02320	.04290	-.01270
	GRADIENT	-.00145	.00002	.00068	-.02689	.01685	-.00793	-.00009	-.00015	.00005

RUN NO. 1174/ 0 RN/L = 3.49 GRADIENT INTERVAL = -5.00/ 5.00

ALPHAO	BETAO	CNFO	CAFO	CLMFO	CYFO	CYNFO	CBLFO	CNBO	CABO	CLMBO
-6.148	-7.913	-.01930	.03040	.02500	.22350	-.13780	.06580	.02330	.04300	-.01280
-6.110	-5.932	-.03570	.03290	.03540	.16670	-.10270	.04880	.02350	.04300	-.01290
-6.066	-3.987	-.04430	.03720	.04290	.10780	-.06550	.03120	.02170	.03960	-.01200
-6.110	.107	-.07100	.03550	.06320	.00250	.00060	-.00110	.02000	.03690	-.01090
-5.962	4.196	-.05850	.03680	.05040	-.10290	.06710	-.03290	.02150	.03880	-.01190
-5.737	6.239	-.04400	.03600	.03850	-.15660	.10120	-.04950	.02230	.04040	-.01230
-5.875	8.145	-.06130	.03210	.04860	-.20240	.13000	-.06290	.02300	.04190	-.01270
	GRADIENT	-.00174	-.00005	.00092	-.02575	.01620	-.00783	-.00002	-.00010	.00001

GRADIENT	-.00174	-.00005	.00092	-.02575	.01620	-.00783	-.00002	-.00010	.00001

IA156A, AEDC PWT 16T-470, O T S W/SILTS (78N092) (10 MAY 80)

REFERENCE DATA

SREF = 2690.0000 SQ.FT. XMRP = 976.0000 IN. XT
LREF = 1290.3000 INCHES YMRP = .0000 IN. YT
BREF = 1290.3000 INCHES ZMRP = 400.0000 IN. ZT
SCALE = 0200

PARAMETRIC DATA

IB-ELV = 8.000 OB-ELV = 5.000
BDFLAP = .000 SPDBRK = .000
RUDDER = .000 SILTS = 1.000
MACH = .600 RN/L = 3.500

RUN NO. 1175/ 0 RN/L = 3.49 GRADIENT INTERVAL = -5.00/ 5.00

ALPHAO	BETAO	CNFO	CAFO	CLMFO	CYFO	CYNFO	CBLFO	CNBO	CABO	CLMBO
-4.027	-8.037	.04740	.03140	-.02030	.21270	-.13250	.06490	.02370	.04370	-.01290
-4.229	-5.935	.02490	.03570	-.00550	.15500	-.09590	.04700	.02220	.04100	-.01210
-4.242	-3.901	.01220	.03720	.00420	.09760	-.05910	.02890	.02210	.04030	-.01220
-4.043	.175	-.00220	.03890	.01660	.00220	.00060	-.00110	.01970	.03590	-.01080
-3.706	4.278	.01690	.03850	-.00070	-.09880	.06390	-.03230	.02100	.03800	-.01160
-3.658	6.060	.01890	.03780	-.00390	-.14170	.09210	-.04620	.02170	.03910	-.01210
-3.824	8.031	.01010	.03330	.00050	-.18990	.12280	-.06100	.02260	.04180	-.01230
	GRADIENT	.00058	.00016	-.00060	-.02401	.01504	-.00748	-.00013	-.00028	.00007

RUN NO. 1176/ 0 RN/L = 3.49 GRADIENT INTERVAL = -5.00/ 5.00

ALPHAO	BETAO	CNFO	CAFO	CLMFO	CYFO	CYNFO	CBLFO	CNBO	CABO	CLMBO
-.373	-8.758	.15680	.02790	-.09300	.21070	-.13350	.06910	.02230	.04120	-.01220
-.357	-6.585	.14390	.03350	-.08460	.15660	-.09850	.05100	.02150	.03950	-.01180
-.346	-4.536	.13170	.03820	-.07610	.10660	-.06610	.03430	.02050	.03760	-.01130
-.319	-.396	.11260	.03810	-.05980	.01180	-.00470	.00230	.01900	.03500	-.01040
-.289	3.682	.13370	.03850	-.07780	-.07220	.04990	-.02640	.01970	.03550	-.01100
-.286	5.791	.13650	.03810	-.08260	-.11920	.08110	-.04230	.02080	.03710	-.01160
-.275	7.868	.13870	.03480	-.08590	-.16420	.11090	-.05800	.02220	.04000	-.01230
	GRADIENT	.00023	.00004	-.00020	-.02176	.01412	-.00739	-.00010	-.00026	.00004

RUN NO. 1177/ 0 RN/L = 3.50 GRADIENT INTERVAL = -5.00/ 5.00

ALPHAO	BETAO	CNFO	CAFO	CLMFO	CYFO	CYNFO	CBLFO	CNBO	CABO	CLMBO
4.089	-8.005	.28080	.02530	-.17860	.16430	-.10740	.06200	.02140	.03920	-.01180
4.083	-5.781	.27470	.02900	-.17500	.12180	-.07960	.04580	.02080	.03810	-.01140
4.051	-3.799	.26800	.03170	-.16980	.07930	-.05140	.02950	.01980	.03660	-.01070
3.835	.083	.24410	.03070	-.15050	.01310	-.00750	.00310	.01890	.03460	-.01040
3.900	4.057	.26880	.03050	-.17020	-.06110	.04240	-.02510	.01900	.03430	-.01060
3.844	6.165	.26940	.02850	-.17400	-.10800	.07440	-.04230	.02090	.03680	-.01180
3.835	8.163	.26820	.02660	-.17490	-.14520	.09950	-.05630	.02110	.03740	-.01190
	GRADIENT	.00013	-.00015	-.00007	-.01788	.01194	-.00695	-.00010	-.00029	.00001

IA156A, AEDC PWT 16T-470, O T S W/SILTS (R8N092) (10 MAY 80)

REFERENCE DATA

SREF = 2690.0000 SQ.FT. XMRP = 976.0000 IN. XT
LREF = 1290.3000 INCHES YMRP = .0000 IN. YT
BREF = 1290.3000 INCHES ZMRP = 400.0000 IN. ZT
SCALE = .0200

PARAMETRIC DATA

IB-ELV = 8.000 OB-ELV = 5.000
BDFLAP = .000 SPDBRK = .000
RUDDER = .000 SILTS = 1.000
MACH = .600 RN/L = 3.500

RUN NO. 1178/ 0 RN/L = 3.51 GRADIENT INTERVAL = -5.00/ 5.00

ALPHAO	BETAO	CNFO	CAFO	CLMFO	CYFO	CYNFO	CBLFO	CNBO	CABO	CLMBO
6.194	-7.953	.34900	.02150	-.22550	.15590	-.10210	.06190	.02120	.03860	-.01170
6.164	-5.881	.34600	.02470	-.22390	.11450	-.07450	.04520	.02070	.03810	-.01130
6.145	-3.824	.33930	.02790	-.21870	.07950	-.05100	.03040	.01970	.03600	-.01090
5.867	.188	.31420	.02770	-.19790	.00800	-.00400	.00140	.01880	.03410	-.01040
5.796	4.071	.32560	.02780	-.20960	-.05780	.03960	-.02490	.01850	.03340	-.01030
5.752	5.986	.33100	.02560	-.21580	-.09530	.06560	-.03940	.02040	.03590	-.01160
5.824	8.273	.33240	.02090	-.21930	-.13770	.09490	-.05610	.02140	.03760	-.01210
	GRADIENT	-.00176	-.00001	.00117	-.01739	.01148	-.00701	-.00015	-.00033	.00008

RUN NO. 1179/ 0 RN/L = 3.50 GRADIENT INTERVAL = -5.00/ 5.00

ALPHAO	BETAO	CNFO	CAFO	CLMFO	CYFO	CYNFO	CBLFO	CNBO	CABO	CLMBO
8.083	-7.803	.40540	.01510	-.26460	.13850	-.09040	.05850	.02110	.03870	-.01160
8.000	-5.751	.40000	.01890	-.26150	.10220	-.06540	.04230	.02050	.03760	-.01120
7.965	-3.753	.39800	.02200	-.25910	.06740	-.04250	.02740	.01940	.03530	-.01070
7.877	.175	.38580	.02200	-.24750	.00930	-.00480	.00210	.01860	.03360	-.01030
7.923	4.198	.39700	.02140	-.25830	-.05160	.03530	-.02380	.01910	.03410	-.01070
7.890	6.206	.39920	.01920	-.26230	-.08620	.05940	-.03830	.02020	.03560	-.01150
7.883	8.226	.39310	.01610	-.26060	-.12510	.08680	-.05430	.02060	.03630	-.01170
	GRADIENT	-.00011	-.00008	.00009	-.01497	.00979	-.00644	-.00004	-.00015	-.00000

IA156A, AEDC PWT 16T-470, O T S W/SILTS (R8N093) (10 MAY 80)

REFERENCE DATA

SREF = 2690.0000 SQ.FT. XMRP = 976.0000 IN. XT
LREF = 1290.3000 INCHES YMRP = .0000 IN. YT
BREF = 1290.3000 INCHES ZMRP = 400.0000 IN. ZT
SCALE = .0200

PARAMETRIC DATA

IB-ELV = 8.000 OB-ELV = 5.000
BDFLAP = .000 SPDBRK = .000
RUDDER = .000 SILTS = 1.000
MACH = .800 RN/L = 3.500

RUN NO. 1180/ 0 RN/L = 3.49 GRADIENT INTERVAL = -5.00/ 5.00

ALPHAO	BETAO	CNFO	CAFO	CLMFO	CYFO	CYNFO	CBLFO	CNBO	CABO	CLMBO
-8.230	-5.879	-.08300	.04660	.07160	.17810	-.10910	.05060	.02410	.04470	-.01310
-8.259	-3.819	-.09700	.05020	.08200	.11410	-.06820	.03130	.02340	.04280	-.01290
-8.164	.382	-.13240	.04600	.10780	-.00190	.00410	-.00270	.02180	.04020	-.01190
-7.986	4.361	-.11050	.04020	.08830	-.11590	.07610	-.03600	.02310	.04280	-.01260
-8.003	6.266	-.10620	.04760	.08330	-.16930	.10910	-.05160	.02400	.04420	-.01310
	GRADIENT	-.00171	-.00025	.00082	-.02811	.01764	-.00823	-.00004	-.00001	.00004

RUN NO. 1181/ 0 RN/L = 3.50 GRADIENT INTERVAL = -5.00/ 5.00

ALPHAO	BETAO	CNFO	CAFO	CLMFO	CYFO	CYNFO	CBLFO	CNBO	CABO	CLMBO
-6.206	-5.984	-.01250	.04720	.02210	.17370	-.10710	.05090	.02340	.04340	-.01280
-6.149	-4.060	-.02660	.04870	.03210	.11480	-.06990	.03300	.02330	.04280	-.01280
-6.237	.107	-.06420	.04620	.06010	.00310	.00040	-.00070	.02110	.03900	-.01150
-6.056	4.261	-.04450	.04860	.04220	-.10800	.07070	-.03410	.02260	.04170	-.01230
-5.762	6.342	-.02670	.04800	.02790	-.16290	.10530	-.05100	.02360	.04320	-.01300
	GRADIENT	-.00215	-.00001	.00122	-.02678	.01690	-.00806	-.00008	-.00013	.00006

RUN NO. 1182/ 0 RN/L = 3.50 GRADIENT INTERVAL = -5.00/ 5.00

ALPHAO	BETAO	CNFO	CAFO	CLMFO	CYFO	CYNFO	CBLFO	CNBO	CABO	CLMBO
-4.283	-6.020	.04970	.04600	-.02120	.16350	-.10160	.04940	.02350	.04390	-.01270
-4.316	-3.984	.03560	.04940	-.01070	.10230	-.06220	.03030	.02240	.04100	-.01230
-4.232	.381	.00530	.04620	.01160	-.00380	.00460	-.00250	.02080	.03870	-.01120
-3.800	4.338	.03390	.04880	-.01150	-.10500	.06890	-.03410	.02200	.04040	-.01200
-3.862	6.153	.03630	.04810	-.01460	-.15290	.09980	-.04940	.02300	.04210	-.01270
	GRADIENT	-.00032	-.00008	-.00001	-.02490	.01575	-.00773	-.00005	-.00008	.00004

RUN NO. 1183/ 0 RN/L = 3.50 GRADIENT INTERVAL = -5.00/ 5.00

ALPHAO	BETAO	CNFO	CAFO	CLMFO	CYFO	CYNFO	CBLFO	CNBO	CABO	CLMBO
-.385	-6.929	.18090	.04290	-.10860	.17090	-.10860	.05640	.02230	.04160	-.01210
-.382	-4.788	.16880	.04590	-.10090	.11730	-.07380	.03810	.02130	.03970	-.01150
-.348	-.519	.13880	.04470	-.07750	.01340	-.00550	.00300	.01990	.03660	-.01090
-.317	3.586	.16050	.04690	-.09560	-.07600	.05250	-.02780	.02070	.03800	-.01140
-.315	5.721	.16780	.04630	-.10290	-.12650	.08580	-.04520	.02210	.04020	-.01220
	GRADIENT	-.00103	.00012	.00067	-.02309	.01509	-.00787	-.00007	-.00021	.00001

IA156A, AEDC PWT 16T-470, O T S W/SILTS (R8N093) (10 MAY 80)

REFERENCE DATA

SREF = 2690.0000 SQ.FT. XMRP = 976.0000 IN. XT
LREF = 1290.3000 INCHES YMRP = .0000 IN. YT
BREF = 1290.3000 INCHES ZMRP = 400.0000 IN. ZT
SCALE = .0200

PARAMETRIC DATA

IB-ELV = 8.000 OB-ELV = 5.000
BDFLAP = .000 SPDBRK = .000
RUDDER = .000 SILTS = 1.000
MACH = .800 RN/L = 3.500

RUN NO. 1184/ 0 RN/L = 3.50 GRADIENT INTERVAL = -5.00/ 5.00

ALPHAO	BETAO	CNFO	CAFO	CLMFO	CYFO	CYNFO	CBLFO	CNBO	CABO	CLMBO
4.095	-5.771	.31650	.03960	-.20430	.12940	-.08440	.04890	.02170	.04030	-.01180
3.965	-3.678	.30490	.04160	-.19610	.08160	-.05260	.03040	.02010	.03690	-.01100
3.727	.120	.27320	.03840	-.17120	.01170	-.00630	.00260	.02000	.03620	-.01100
3.811	4.005	.30700	.03920	-.19770	-.06530	.04490	-.02690	.02030	.03670	-.01130
3.769	6.084	.30770	.03830	-.20060	-.11350	.07770	-.04470	.02170	.03930	-.01200
	GRADIENT	.00031	-.00031	-.00023	-.01912	.01269	-.00746	.00003	-.00003	-.00004

RUN NO. 1185/ 0 RN/L = 3.50 GRADIENT INTERVAL = -5.00/ 5.00

ALPHAO	BETAO	CNFO	CAFO	CLMFO	CYFO	CYNFO	CBLFO	CNBO	CABO	CLMBO
6.095	-5.818	.38240	.03730	-.24910	.12030	-.07900	.04540	.02180	.03980	-.01200
6.044	-3.784	.38170	.03910	-.24890	.08190	-.05290	.02960	.02060	.03770	-.01140
5.748	.159	.34770	.03570	-.22250	.00710	-.00330	.00150	.01990	.03620	-.01090
5.691	3.986	.36610	.03670	-.23820	-.05770	.03890	-.02430	.02040	.03660	-.01140
5.834	6.160	.37170	.03620	-.24430	-.10240	.07030	-.04040	.02160	.03890	-.01210
	GRADIENT	-.00204	-.00031	.00140	-.01797	.01182	-.00694	-.00003	-.00014	.00000

IA156A, AEDC PWT 16T-470, O T S W/SILTS (R8N094) (10 MAY 80)

REFERENCE DATA

SREF = 2690.0000 SQ.FT. XMRP = 976.0000 IN. XT
LREF = 1290.3000 INCHES YMRP = .0000 IN. YT
BREF = 1290.3000 INCHES ZMRP = 400.0000 IN. ZT
SCALE = .0200

PARAMETRIC DATA

IB-ELV = 8.000 OB-ELV = 5.000
BDFLAP = .000 SPDBRK = .000
RUDDER = .000 SILTS = 1.000
MACH = .900 RN/L = 3.500

RUN NO. 1186/ 0 RN/L = 3.50 GRADIENT INTERVAL = -5.00/ 5.00

ALPHAO	BETAO	CNFO	CAFO	CLMFO	CYFO	CYNFO	CBLFO	CNBO	CABO	CLMBO
-8.190	-5.916	-.09900	.06510	.09100	.18370	-.11090	.05360	.02680	.04970	-.01450
-8.261	-3.757	-.11900	.06790	.10570	.11420	-.06610	.03170	.02580	.04760	-.01400
-8.166	.176	-.15380	.06440	.13010	.00960	-.00400	.00100	.02320	.04320	-.01250
-8.002	4.417	-.13430	.06780	.11270	-.11610	.07380	-.03730	.02520	.04690	-.01370
-8.004	6.263	-.13200	.06820	.10950	-.17270	.10910	-.05470	.02630	.04890	-.01430
	GRADIENT	-.00179	-.00000	.00079	-.02819	.01713	-.00845	-.00007	-.00007	.00003

IA156A, AEDC PWT 16T-470, O T S W/SILTS (R8N094) (10 MAY 80)

REFERENCE DATA

SREF = 2690.0000 SQ.FT. XMRP = 976.0000 IN. XT
LREF = 1290.3000 INCHES YMRP = .0000 IN. YT
BREF = 1290.3000 INCHES ZMRP = 400.0000 IN. ZT
SCALE = .0200

PARAMETRIC DATA

IB-ELV = 8.000 OB-ELV = 5.000
BDFLAP = .000 SPDBRK = .000
RUDDER = .000 SILTS = 1.000
MACH = .900 RN/L = 3.500

RUN NO. 1187/ 0 RN/L = 3.50 GRADIENT INTERVAL = -5.00/ 5.00

ALPHAO	BETAO	CNFO	CAFO	CLMFO	CYFO	CYNFO	CBLFO	CNBO	CABO	CLMBO
-6.212	-5.982	-.02910	.06470	.04180	.17550	-.10660	.05310	.02610	.04890	-.01400
-6.173	-4.073	-.04270	.06740	.05140	.11760	-.06990	.03490	.02500	.04610	-.01360
-6.254	.091	-.08530	.06380	.08160	.00670	-.00270	.00040	.02260	.04160	-.01230
-6.039	4.266	-.06100	.06720	.06110	-.10460	.06590	-.03510	.02470	.04560	-.01340
-5.991	6.248	-.05740	.06710	.05740	-.16120	.10150	-.05300	.02600	.04780	-.01420
	GRADIENT	-.00219	-.00002	.00116	-.02665	.01628	-.00839	-.00004	-.00006	.00002

RUN NO. 1188/ 0 RN/L = 3.50 GRADIENT INTERVAL = -5.00/ 5.00

ALPHAO	BETAO	CNFO	CAFO	CLMFO	CYFO	CYNFO	CBLFO	CNBO	CABO	CLMBO
-4.069	-6.114	.04880	.06570	-.01260	.16370	-.09990	.05200	.02520	.04670	-.01370
-4.336	-4.001	.02260	.06730	.00520	.10470	-.06200	.03260	.02420	.04480	-.01320
-4.247	.379	-.01640	.06350	.03320	-.00330	.00360	-.00290	.02230	.04100	-.01220
-3.792	4.317	.01880	.06650	.00560	-.10210	.06420	-.03550	.02430	.04490	-.01320
-3.879	6.244	.01960	.06570	.00410	-.15400	.09700	-.05220	.02540	.04650	-.01400
	GRADIENT	-.00061	-.00011	.00017	-.02486	.01517	-.00819	.00000	-.00000	.00000

RUN NO. 1189/ 0 RN/L = 3.50 GRADIENT INTERVAL = -5.00/ 5.00

ALPHAO	BETAO	CNFO	CAFO	CLMFO	CYFO	CYNFO	CBLFO	CNBO	CABO	CLMBO
-.418	-6.997	.18100	.06030	-.10180	.17040	-.10720	.05890	.02490	.04660	-.01340
-.400	-4.849	.16700	.06290	-.09370	.11730	-.07290	.04080	.02350	.04360	-.01270
-.365	-.473	.12840	.05840	-.06600	.01100	-.00420	.00390	.02110	.03920	-.01140
-.335	3.592	.15510	.06170	-.08670	-.07330	.04840	-.02810	.02260	.04210	-.01220
-.335	5.739	.15880	.06190	-.09060	-.12340	.08150	-.04570	.02440	.04520	-.01330
	GRADIENT	-.00150	-.00015	.00090	-.02260	.01439	-.00817	-.00011	-.00019	.00006

RUN NO. 1190/ 0 RN/L = 3.50 GRADIENT INTERVAL = -5.00/ 5.00

ALPHAO	BETAO	CNFO	CAFO	CLMFO	CYFO	CYNFO	CBLFO	CNBO	CABO	CLMBO
4.050	-5.715	.32440	.05990	-.20420	.12460	-.08040	.04680	.02370	.04440	-.01280
3.950	-3.708	.31370	.05880	-.19830	.08460	-.05390	.03140	.02250	.04190	-.01200
3.708	.080	.27840	.05330	-.17140	.01240	-.00770	.00370	.02130	.04000	-.01150
3.803	3.954	.30940	.05760	-.19510	-.06660	.04450	-.02620	.02230	.04110	-.01220
3.762	6.072	.30560	.05830	-.19490	-.11690	.07690	-.04400	.02430	.04480	-.01330
	GRADIENT	-.00053	-.00015	.00039	-.01974	.01284	-.00752	.00000	-.00010	-.00003

IA156A, AEDC PWT 16T-470, O T S W/SILTS (R8N095) (10 MAY 80)

REFERENCE DATA

SREF = 2690.0000 SQ.FT. XMRP = 976.0000 IN. XT
LREF = 1290.3000 INCHES YMRP = .0000 IN. YT
BREF = 1290.3000 INCHES ZMRP = 400.0000 IN. ZT
SCALE = .0200

PARAMETRIC DATA

IB-ELV = 6.000 OB-ELV = 5.000
BDFLAP = .000 SPDBRK = .000
RUDDER = .000 SILTS = 1.000
MACH = .950 RN/L = 3.500

RUN NO. 1191/ 0 RN/L = 3.50 GRADIENT INTERVAL = -5.00/ 5.00

ALPHAO	BETAO	CNFO	CAFO	CLMFO	CYFO	CYNFO	CBLFO	CNBO	CABO	CLMBO
-8.132	-5.921	-.12210	.08120	.11660	.18850	-.11500	.05740	.02940	.05470	-.01590
-8.276	-3.763	-.14080	.08320	.12990	.11570	-.06720	.03410	.02810	.05200	-.01530
-8.174	.169	-.17670	.08100	.15510	.00950	-.00380	.00110	.02640	.04870	-.01440
-8.010	4.434	-.15700	.08380	.13780	-.11730	.07460	-.03880	.02760	.05140	-.01500
-7.997	6.260	-.15190	.08190	.13180	-.17570	.11180	-.05680	.02940	.05500	-.01580
	GRADIENT	-.00188	.00008	.00089	-.02844	.01731	-.00890	-.00006	-.00006	.00003

RUN NO. 1192/ 0 RN/L = 3.49 GRADIENT INTERVAL = -5.00/ 5.00

ALPHAO	BETAO	CNFO	CAFO	CLMFO	CYFO	CYNFO	CBLFO	CNBO	CABO	CLMBO
-6.239	-6.007	-.04980	.07980	.06420	.17780	-.10830	.05600	.02870	.05370	-.01550
-6.152	-4.059	-.05910	.08180	.07010	.11440	-.06690	.03530	.02720	.05080	-.01470
-6.251	.098	-.10400	.08020	.10260	.00680	-.00280	.00060	.02500	.04580	-.01370
-6.044	4.274	-.08440	.08270	.08500	-.10800	.06810	-.03680	.02720	.05030	-.01480
-6.001	6.257	-.07570	.08060	.07660	-.16670	.10570	-.05570	.02900	.05420	-.01560
	GRADIENT	-.00303	.00011	.00178	-.02669	.01620	-.00865	.00000	-.00006	-.00001

RUN NO. 1193/ 0 RN/L = 3.49 GRADIENT INTERVAL = -5.00/ 5.00

ALPHAO	BETAO	CNFO	CAFO	CLMFO	CYFO	CYNFO	CBLFO	CNBO	CABO	CLMBO
-4.072	-6.110	.03310	.07890	.00490	.16390	-.09920	.05380	.02790	.05240	-.01500
-4.336	-4.005	.00510	.08010	.02410	.10170	-.05820	.03240	.02660	.04950	-.01440
-4.260	.372	-.03780	.07920	.05600	-.00230	.00300	-.00250	.02510	.04590	-.01370
-3.798	4.338	.00060	.08070	.02470	-.10280	.06440	-.03630	.02650	.04870	-.01450
-3.881	6.155	.00310	.07930	.02070	-.15260	.09630	-.05290	.02810	.05190	-.01540
	GRADIENT	-.00070	.00007	.00020	-.02450	.01468	-.00823	-.00002	-.00011	-.00001

RUN NO. 1194/ 0 RN/L = 3.48 GRADIENT INTERVAL = -5.00/ 5.00

ALPHAO	BETAO	CNFO	CAFO	CLMFO	CYFO	CYNFO	CBLFO	CNBO	CABO	CLMBO
-.431	-7.014	.16940	.07390	-.08890	.16580	-.10070	.05970	.02790	.05270	-.01490
-.411	-4.850	.15090	.07620	-.07710	.11020	-.06470	.04020	.02530	.04770	-.01350
-.380	-.542	.10630	.07270	-.04450	.01080	-.00320	.00370	.02370	.04430	-.01280
-.343	3.578	.13590	.07650	-.06770	-.07190	.04680	-.02930	.02480	.04570	-.01360
-.343	5.762	.14480	.07580	-.07610	-.12110	.07820	-.04760	.02710	.05030	-.01470
	GRADIENT	-.00185	.00003	.00116	-.02162	.01324	-.00825	-.00006	-.00024	-.00001

IA156A, AEDC PWT 16T-470, O T S W/SILTS (R8N095) (10 MAY 80)

REFERENCE DATA

SREF = 2690.0000 SQ.FT. XMRP = 976.0000 IN. XT
LREF = 1290.3000 INCHES YMRP = .0000 IN. YT
BREF = 1290.3000 INCHES ZMRP = 400.0000 IN. ZT
SCALE = .0200

PARAMETRIC DATA

IB-ELV = 8.000 OB-ELV = 5.000
BDFLAP = .000 SPDBRK = .000
RUDDER = .000 SILTS = 1.000
MACH = .950 RN/L = 3.500

RUN NO. 1195/ 0 RN/L = 3.49 GRADIENT INTERVAL = -5.00/ 5.00

ALPHAO	BETAO	CNFO	CAFO	CLMFO	CYFO	CYNFO	CBLFO	CNBO	CABO	CLMBO
4.079	-5.762	.31610	.07210	-.19380	.12000	-.07370	.04840	.02540	.04790	-.01360
3.933	-3.661	.29960	.07000	-.18350	.07350	-.04300	.02970	.02410	.04530	-.01290
3.702	.123	.26870	.06590	-.16000	.00680	-.00220	.00210	.02400	.04470	-.01290
3.815	3.995	.30160	.06940	-.18500	-.06200	.03970	-.02570	.02450	.04550	-.01320
3.764	6.074	.29940	.07180	-.18420	-.10850	.06950	-.04360	.02630	.04850	-.01430
	GRADIENT	.00029	-.00007	-.00022	-.01770	.01080	-.00724	.00005	.00003	-.00004

IA156A, AEDC PWT 16T-470, O T S W/SILTS (R8N096) (10 MAY 80)

REFERENCE DATA

SREF = 2690.0000 SQ.FT. XMRP = 976.0000 IN. XT
LREF = 1290.3000 INCHES YMRP = .0000 IN. YT
BREF = 1290.3000 INCHES ZMRP = 400.0000 IN. ZT
SCALE = .0200

PARAMETRIC DATA

IB-ELV = 8.000 OB-ELV = 5.000
BDFLAP = .000 SPDBRK = .000
RUDDER = .000 SILTS = 1.000
MACH = 1.050 RN/L = 3.500

RUN NO. 1196/ 0 RN/L = 3.50 GRADIENT INTERVAL = -5.00/ 5.00

ALPHAO	BETAO	CNFO	CAFO	CLMFO	CYFO	CYNFO	CBLFO	CNBO	CABO	CLMBO
-8.154	-5.981	-.17010	.09780	.16720	.19180	-.11440	.06310	.03690	.07050	-.01950
-8.291	-3.794	-.19320	.10130	.18400	.11940	-.06870	.03830	.03700	.06970	-.01970
-8.203	.186	-.23260	.10160	.21350	.00600	-.00020	.00000	.03490	.06540	-.01880
-8.003	4.335	-.21390	.10280	.19710	-.11440	.07370	-.04040	.03540	.06610	-.01910
-8.011	6.249	-.20640	.10090	.18850	-.17440	.10980	-.06020	.03560	.06700	-.01910
	GRADIENT	-.00250	.00019	.00157	-.02876	.01752	-.00968	-.00019	-.00044	.00007

RUN NO. 1197/ 0 RN/L = 3.50 GRADIENT INTERVAL = -5.00/ 5.00

ALPHAO	BETAO	CNFO	CAFO	CLMFO	CYFO	CYNFO	CBLFO	CNBO	CABO	CLMBO
-6.215	-5.998	-.09180	.09730	.11030	.17710	-.10510	.06130	.03670	.07000	-.01940
-6.157	-4.060	-.10910	.10000	.12330	.11730	-.06800	.04020	.03640	.06880	-.01940
-6.263	.161	-.16070	.10010	.16190	.00200	.00160	-.00080	.03510	.06570	-.01890
-6.064	4.290	-.13380	.10210	.13880	-.11100	.07080	-.04060	.03410	.06340	-.01850
-5.814	6.342	-.11480	.09880	.12190	-.16650	.10430	-.06030	.03510	.06590	-.01890
	GRADIENT	-.00299	.00025	.00188	-.02734	.01662	-.00968	-.00028	-.00065	.00011

IA156A, AEDC PWT 16T-470, O T S W/SILTS (R8N096) (10 MAY 80)

REFERENCE DATA

SREF = 2690.0000 SQ.FT. XMRP = 976.0000 IN. XT
LREF = 1290.3000 INCHES YMRP = .0000 IN. YT
BREF = 1290.3000 INCHES ZMRP = 400.0000 IN. ZT
SCALE = .0200

PARAMETRIC DATA

IB-ELV = 8.000 OB-ELV = 5.000
BDFLAP = .000 SPDBRK = .000
RUDDER = .000 SILTS = 1.000
MACH = 1.050 RN/L = 3.500

RUN NO. 1198/ 0 RN/L = 3.50 GRADIENT INTERVAL = -5.00/ 5.00

ALPHAO	BETAO	CNFO	CAFO	CLMFO	CYFO	CYNFO	CBLFO	CNBO	CABO	CLMBO
-4.123	-6.110	-.00760	.09720	.05030	.15560	-.09690	.06000	.03660	.06950	-.01950
-4.348	-4.024	-.04100	.10030	.07480	.10460	-.06020	.03770	.03620	.06780	-.01950
-4.265	.359	-.08790	.09940	.11010	-.00220	.00410	-.00230	.03510	.06510	-.01900
-3.787	4.330	-.04580	.10080	.07590	-.10350	.06510	-.03960	.03340	.06160	-.01820
-3.875	6.159	-.03640	.09880	.06640	-.15010	.09330	-.05720	.03440	.06390	-.01870
	GRADIENT	-.00075	.00006	.00027	-.02490	.01499	-.00925	-.00033	-.00074	.00015

RUN NO. 1199/ 0 RN/L = 3.50 GRADIENT INTERVAL = -5.00/ 5.00

ALPHAO	BETAO	CNFO	CAFO	CLMFO	CYFO	CYNFO	CBLFO	CNBO	CABO	CLMBO
-.466	-7.077	.15060	.09590	-.06190	.16690	-.09920	.06920	.03680	.06950	-.01960
-.448	-4.893	.12490	.09800	-.04280	.11400	-.06720	.04780	.03590	.06720	-.01930
-.424	-.539	.06980	.09500	-.00090	.01470	-.00660	.00570	.03400	.06340	-.01840
-.388	3.586	.10080	.09960	-.02560	-.07470	.04950	-.03400	.03340	.06240	-.01800
-.386	5.766	.11360	.10120	-.03780	-.12210	.07870	-.05410	.03390	.06340	-.01830
	GRADIENT	-.00293	.00018	.00210	-.02226	.01376	-.00965	-.00030	-.00057	.00015

RUN NO. 1200/ 0 RN/L = 3.50 GRADIENT INTERVAL = -5.00/ 5.00

ALPHAO	BETAO	CNFO	CAFO	CLMFO	CYFO	CYNFO	CBLFO	CNBO	CABO	CLMBO
4.070	-5.753	.29860	.09450	-.16880	.12070	-.07370	.05600	.03550	.06720	-.01890
3.940	-3.673	.27740	.09530	-.15350	.07740	-.04650	.03640	.03430	.06420	-.01850
3.705	.113	.24670	.09280	-.13000	.00890	-.00400	.00350	.03390	.06310	-.01840
3.803	3.989	.28460	.09650	-.16040	-.06540	.04270	-.03100	.03280	.06080	-.01780
3.769	6.064	.28570	.09590	-.16330	-.10650	.06790	-.04960	.03340	.06190	-.01810
	GRADIENT	.00097	.00016	-.00093	-.01864	.01164	-.00880	-.00020	-.00044	.00009

IA156A, AEDC PWT 16T-470, O T S W/SILTS (R8N097) (10 MAY 80)

REFERENCE DATA

SREF = 2690.0000 SQ.FT. XMRP = 976.0000 IN. XT
LREF = 1290.3000 INCHES YMRP = .0000 IN. YT
BREF = 1290.3000 INCHES ZMRP = 400.0000 IN. ZT
SCALE = .0200

PARAMETRIC DATA

IB-ELV = 8.000 OB-ELV = 5.000
BDFLAP = .000 SPDBRK = .000
RUDDER = .000 SILTS = 1.000
MACH = 1.100 RN/L = 3.500

RUN NO. 1201/ 0 RN/L = 3.50 GRADIENT INTERVAL = -5.00/ 5.00

ALPHAO	BETAO	CNFO	CAFO	CLMFO	CYFO	CYNFO	CBLFO	CNBO	CABO	CLMBO
-8.174	-5.983	-.16350	.10280	.16330	.18110	-.10620	.06040	.03390	.06520	-.01780
-8.275	-3.797	-.17850	.10740	.17460	.11170	-.06290	.03610	.03300	.06210	-.01770
-8.184	.190	-.21420	.10540	.20030	.00180	.00250	-.00110	.03060	.05730	-.01650
-8.018	4.331	-.19860	.10800	.18700	-.11280	.07200	-.04010	.03180	.05890	-.01730
-8.006	6.254	-.19140	.10640	.17860	-.16940	.10580	-.05910	.03170	.05940	-.01710
	GRADIENT	-.00243	.00008	.00149	-.02762	.01660	-.00938	-.00014	-.00039	.00005

RUN NO. 1202/ 0 RN/L = 3.50 GRADIENT INTERVAL = -5.00/ 5.00

ALPHAO	BETAO	CNFO	CAFO	CLMFO	CYFO	CYNFO	CBLFO	CNBO	CABO	CLMBO
-6.211	-5.998	-.07720	.10190	.09970	.16240	-.09470	.05740	.03250	.06170	-.01720
-6.170	-4.046	-.09750	.10430	.11520	.10800	-.06130	.03760	.03240	.06080	-.01740
-6.293	.153	-.14530	.10320	.15050	.00010	00290	-.00140	.03070	.05700	-.01670
-6.065	4.291	-.11310	.10480	.12350	-.10650	.06680	-.03930	.02970	.05510	-.01620
-5.794	6.334	-.09180	.10440	.10590	-.16010	.09910	-.05940	.03100	.05790	-.01670
	GRADIENT	-.00189	.00006	.00101	-.02573	.01536	-.00922	-.00032	-.00068	.00014

RUN NO. 1203/ 0 RN/L = 3.50 GRADIENT INTERVAL = -5.00/ 5.00

ALPHAO	BETAO	CNFO	CAFO	CLMFO	CYFO	CYNFO	CBLFO	CNBO	CABO	CLMBO
-4.111	-6.118	.00960	.10210	.03650	.15320	-.08900	.05850	.03210	.06110	-.01700
-4.347	-4.024	-.02560	.10190	.06200	.09690	-.05420	.03610	.03220	.06030	-.01730
-4.258	.366	-.06430	.10140	.09200	-.00530	.00550	-.00330	.02980	.05520	-.01620
-3.786	4.326	-.02040	.10360	.05630	-.09890	.06120	-.03960	.02900	.05350	-.01580
-3.880	6.168	-.00930	.10460	.04580	-.14520	.08960	-.05770	.03020	.05570	-.01640
	GRADIENT	.00045	.00020	-.00055	-.02345	.01382	-.00906	-.00039	-.00082	.00018

RUN NO. 1204/ 0 RN/L = 3.50 GRADIENT INTERVAL = -5.00/ 5.00

ALPHAO	BETAO	CNFO	CAFO	CLMFO	CYFO	CYNFO	CBLFO	CNBO	CABO	CLMBO
-.471	-7.063	.15840	.10020	-.06980	.15890	-.09360	.06760	.03230	.06120	-.01720
-.441	-4.903	.14000	.10170	-.05570	.10830	-.06320	.04680	.03140	.05840	-.01700
-.415	-.535	.09430	.09840	-.02160	.01250	-.00480	.00490	.02880	.05310	-.01570
-.383	3.594	.12050	.10200	-.04390	-.07400	.04900	-.03430	.02800	.05190	-.01520
-.382	5.794	.13100	.10340	-.05420	-.12250	.07840	-.05490	.02860	.05290	-.01550
	GRADIENT	-.00237	.00003	.00145	-.02146	.01321	-.00955	-.00040	-.00077	.00021

IA156A, AEDC PWT 16T-470, O T S W/SILTS (R8N097) (10 MAY 80)

REFERENCE DATA

SREF = 2690.0000 SQ.FT. XMRP = 976.0000 IN. XT
LREF = 1290.3000 INCHES YMRP = .0000 IN. YT
BREF = 1290.3000 INCHES ZMRP = 400.0000 IN. ZT
SCALE = .0200

PARAMETRIC DATA

IB-ELV = 8.000 OB-ELV = 5.000
BDFLAP = .000 SPDBRK = .000
RUDDER = .000 SILTS = 1.000
MACH = 1.100 RN/L = 3.500

RUN NO. 1205/ 0 RN/L = 3.50 GRADIENT INTERVAL = -5.00/ 5.00

ALPHAO	BETAO	CNFO	CAFO	CLMFO	CYFO	CYNFO	CBLFO	CNBO	CABO	CLMBO
4.085	-5.767	.31980	.09860	-.18770	.11760	-.07150	.05460	.02890	.05480	-.01540
3.929	-3.665	.30010	.09830	-.17360	.07630	-.04590	.03550	.02860	.05370	-.01540
3.699	.120	.26330	.09670	-.14440	.00770	-.00360	.00270	.02940	.05420	-.01600
3.792	3.985	.29560	.09870	-.17160	-.06570	.04220	-.03110	.02770	.05100	-.01510
3.770	6.066	.30180	.09950	-.17820	-.10740	.06790	-.04960	.02810	.05190	-.01530
	GRADIENT	-.00056	.00005	.00024	-.01856	.01152	-.00871	-.00012	-.00035	.00004

IA156A, AEDC PWT 16T-470, O T S W/SILTS (R8N098) (28 MAY 80)

REFERENCE DATA

SREF = 2690.0000 SQ.FT. XMRP = 976.0000 IN. XT
LREF = 1290.3000 INCHES YMRP = .0000 IN. YT
BREF = 1290.3000 INCHES ZMRP = 400.0000 IN. ZT
SCALE = .0200

PARAMETRIC DATA

IB-ELV = 8.000 OB-ELV = 5.000
BDFLAP = .000 SPDBRK = .000
RUDDER = .000 SILTS = 1.000
MACH = 1.150 RN/L = 3.500

RUN NO. 1206/ 0 RN/L = 3.50 GRADIENT INTERVAL = -5.00/ 5.00

ALPHAO	BETAO	CNFO	CAFO	CLMFO	CYFO	CYNFO	CBLFO	CNBO	CABO	CLMBO
-8.116	-5.938	-.14480	.10750	.15010	.18070	-.10660	.06160	.03160	.06090	-.01660
-8.284	-3.757	-.17140	.10980	.17000	.11310	-.06450	.03730	.03140	.05940	-.01670
-8.189	.179	-.20930	.10860	.19800	.00540	-.00020	.00030	.02870	.05390	-.01540
-7.997	4.409	-.19380	.11050	.18390	-.11120	.07090	-.03950	.02950	.05490	-.01600
-8.024	6.284	-.18650	.10970	.17580	-.16830	.10530	-.05890	.02980	.05570	-.01600
	GRADIENT	-.00266	.00009	.00164	-.02747	.01659	-.00941	-.00023	-.00054	.00008

RUN NO. 1207/ 0 RN/L = 3.50 GRADIENT INTERVAL = -5.00/ 5.00

ALPHAO	BETAO	CNFO	CAFO	CLMFO	CYFO	CYNFO	CBLFO	CNBO	CABO	CLMBO
-6.217	-6.006	-.06250	.10720	.08870	.16790	-.09840	.06140	.03130	.06010	-.01640
-6.140	-4.065	-.07710	.10950	.10010	.10820	-.06170	.03940	.02960	.05560	-.01590
-6.279	.087	-.13630	.10670	.14440	.00760	-.00230	.00130	.02820	.05260	-.01520
-6.037	4.273	-.10810	.10860	.11990	-.10350	.06440	-.03900	.02820	.05210	-.01530
-6.014	6.269	-.09980	.10880	.11100	-.15850	.09850	-.05910	.02920	.05430	-.01580
	GRADIENT	-.00370	-.00011	.00236	-.02539	.01513	-.00940	-.00017	-.00042	.00007

IA156A, AEDC PWT 16T-470, O T S W/SILTS (R8N098) (28 MAY 80)

REFERENCE DATA

SREF = 2690.0000 SQ.FT. XMRP = 976.0000 IN. XT
LREF = 1290.3000 INCHES YMRP = .0000 IN. YT
BREF = 1290.3000 INCHES ZMRP = 400.0000 IN. ZT
SCALE = .0200

PARAMETRIC DATA

IB-ELV = 8.000 OB-ELV = 5.000
BDFLAP = .000 SPDBRK = .000
RUDDER = .000 SILTS = 1.000
MACH = 1.150 RN/L = 3.500

RUN NO. 1208/ 0 RN/L = 3.50 GRADIENT INTERVAL = -5.00/ 5.00

ALPHAO	BETAO	CNFO	CAFO	CLMFO	CYFO	CYNFO	CBLFO	CNBO	CABO	CLMBO
-4.099	-6.128	.02620	.10710	.02330	.15580	-.09130	.06130	.03050	.05830	-.01610
-4.341	-4.015	-.00290	.10590	.04510	.09870	-.05660	.03900	.03020	.05680	-.01620
-4.281	.366	-.04890	.10410	.08030	.00050	.00130	-.00120	.02840	.05240	-.01550
-3.789	4.344	-.01020	.10840	.04820	-.09850	.06110	-.04080	.02760	.05070	-.01510
-3.884	6.169	-.00830	.10780	.04410	-.14260	.08840	-.05730	.02860	.05270	-.01560
	GRADIENT	-.00104	.00029	.00050	-.02357	.01407	-.00954	-.00031	-.00073	.00013

RUN NO. 1210/ 0 RN/L = 3.51 GRADIENT INTERVAL = -5.00/ 5.00

ALPHAO	BETAO	CNFO	CAFO	CLMFO	CYFO	CYNFO	CBLFO	CNBO	CABO	CLMBO
-.458	-7.033	.17360	.10410	-.08130	.16180	-.09600	.06800	.03040	.05740	-.01630
-.434	-4.804	.15970	.10520	-.07210	.10890	-.06440	.04630	.03020	.05680	-.01620
-.396	-.513	.12740	.10410	-.04770	.01190	-.00410	.00460	.02710	.05030	-.01470
-.363	3.669	.14680	.10790	-.06380	-.07680	.05130	-.03510	.02680	.04960	-.01460
-.367	5.788	.15170	.10820	-.06970	-.12390	.07990	-.05520	.02760	.05090	-.01500
	GRADIENT	-.00155	.00032	.00100	-.02192	.01366	-.00961	-.00040	-.00085	.00019

RUN NO. 1211/ 0 RN/L = 3.50 GRADIENT INTERVAL = -5.00/ 5.00

ALPHAO	BETAO	CNFO	CAFO	CLMFO	CYFO	CYNFO	CBLFO	CNBO	CABO	CLMBO
4.062	-5.756	.32180	.10270	-.19060	.12270	-.07560	.05590	.02820	.05330	-.01500
3.949	-3.648	.30500	.10300	-.17850	.08120	-.04990	.03700	.02800	.05260	-.01500
3.698	.165	.28110	.10160	-.15830	.01070	-.00600	.00400	.02820	.05210	-.01530
3.790	4.004	.31000	.10360	-.18310	-.06370	.04120	-.03040	.02670	.04910	-.01460
3.765	6.064	.31550	.10490	-.18890	-.10800	.06880	-.04990	.02700	.04990	-.01470
	GRADIENT	.00066	.00008	-.00061	-.01894	.01191	-.00881	-.00017	-.00046	.00005

IA156A, AEDC PWT 16T-470, O T S W/SILTS (R8NOA0) (10 MAY 80)

REFERENCE DATA

SREF = 2690.0000 SQ.FT. XMRP = 976.0000 IN. XT
LREF = 1290.3000 INCHES YMRP = .0000 IN. YT
BREF = 1290.3000 INCHES ZMRP = 400.0000 IN. ZT
SCALE = .0200

PARAMETRIC DATA

IB-ELV = 8.000 OB-ELV = 5.000
BDFLAP = .000 SPDBRK = .000
RUDDER = .000 SILTS = 1.000
MACH = 1.250 RN/L = 3.500

RUN NO. 1224/ 0 RN/L = 3.50 GRADIENT INTERVAL = -5.00/ 5.00

ALPHAO	BETAO	CNFO	CAFO	CLMFO	CYFO	CYNFO	CBLFO	CNBO	CABO	CLMBO
-8.261	-5.906	-.13640	.10860	.14190	.17560	-.10510	.06150	.02800	.05420	-.01460
-8.253	-3.859	-.14900	.11000	.15080	.11050	-.06380	.03870	.02700	.05130	-.01440
-8.194	.281	-.17900	.10860	.17330	-.00230	.00570	-.00100	.02590	.04870	-.01390
-7.998	4.303	-.16010	.11090	.15640	-.11500	.07550	-.04030	.02670	.05010	-.01430
-8.035	6.278	-.15700	.11130	.15220	-.17410	.11180	-.06040	.02790	.05230	-.01500
	GRADIENT	-.00139	.00011	.00071	-.02763	.01707	-.00968	-.00004	-.00015	.00001

RUN NO. 1225/ 0 RN/L = 3.50 GRADIENT INTERVAL = -5.00/ 5.00

ALPHAO	BETAO	CNFO	CAFO	CLMFO	CYFO	CYNFO	CBLFO	CNBO	CABO	CLMBO
-6.248	-6.015	-.05230	.10780	.07800	.16430	-.09840	.06070	.02740	.05300	-.01440
-6.179	-4.080	-.06240	.10850	.08510	.10700	-.06230	.03980	.02710	.05160	-.01440
-6.268	.127	-.09620	.10810	.11070	-.00110	.00390	-.00010	.02560	.04810	-.01370
-6.056	4.287	-.07650	.11020	.09220	-.11070	.07100	-.04010	.02610	.04870	-.01410
-5.806	6.385	-.06660	.10960	.08270	-.16790	.10670	-.06080	.02730	.05150	-.01460
	GRADIENT	-.00170	.00020	.00086	-.02602	.01593	-.00955	-.00012	-.00035	.00004

RUN NO. 1226/ 0 RN/L = 3.50 GRADIENT INTERVAL = -5.00/ 5.00

ALPHAO	BETAO	CNFO	CAFO	CLMFO	CYFO	CYNFO	CBLFO	CNBO	CABO	CLMBO
-4.129	-6.126	.03540	.10750	.01290	.15520	-.09280	.05980	.02800	.05400	-.01470
-4.347	-4.012	.01370	.10820	.02840	.09690	-.05630	.03770	.02720	.05180	-.01440
-4.264	.386	-.01200	.10660	.04710	-.00810	.00760	-.00270	.02630	.04930	-.01420
-3.782	4.332	.01880	.11140	.02130	-.10190	.06490	-.03890	.02560	.04750	-.01390
-3.884	6.187	.01250	.10880	.02340	-.15040	.09510	-.05670	.02690	.05030	-.01450
	GRADIENT	.00049	.00037	-.00075	-.02383	.01452	-.00918	-.00019	-.00052	.00006

RUN NO. 1227/ 0 RN/L = 3.50 GRADIENT INTERVAL = -5.00/ 5.00

ALPHAO	BETAO	CNFO	CAFO	CLMFO	CYFO	CYNFO	CBLFO	CNBO	CABO	CLMBO
-.484	-7.074	.18550	.10800	-.09550	.16310	-.09890	.06550	.02800	.05370	-.01470
-.454	-4.892	.17320	.11000	-.08770	.10910	-.06530	.04440	.02700	.05140	-.01430
-.407	-.556	.14920	.10770	-.07010	.01090	-.00430	.00450	.02560	.04800	-.01380
-.379	3.595	.16260	.11410	-.08220	-.07640	.05010	-.03260	.02420	.04500	-.01310
-.392	5.798	.15990	.11220	-.08250	-.12630	.08120	-.05220	.02560	.04750	-.01390
	GRADIENT	-.00128	.00048	.00067	-.02186	.01360	-.00907	-.00033	-.00075	.00014

IA156A, AEDC PWT 16T-470, O T S W/SILTS (R8NOA0) (10 MAY 80)

REFERENCE DATA

SREF = 2690.0000 SQ.FT. XMRP = 976.0000 IN. XT
LREF = 1290.3000 INCHES YMRP = .0000 IN. YT
BREF = 1290.3000 INCHES ZMRP = 400.0000 IN. ZT
SCALE = .0200

PARAMETRIC DATA

IB-ELV = 8.000 OB-ELV = 5.000
BDFLAP = .000 SPDBRK = .000
RUDDER = .000 SILTS = 1.000
MACH = 1.250 RN/L = 3.500

RUN NO. 1228/ 0 RN/L = 3.50 GRADIENT INTERVAL = -5.00/ 5.00

ALPHAO	BETAO	CNFO	CAFO	CLMFO	CYFO	CYNFO	CBLFO	CNBO	CABO	CLMBO
3.893	-5.679	.33490	.11040	-.20640	.12280	-.07670	.05310	.02580	.04900	-.01370
3.928	-3.875	.32890	.11060	-.20240	.08610	-.05390	.03780	.02590	.04890	-.01390
3.820	.192	.30700	.10700	-.18470	.00380	-.00220	.00220	.02580	.04830	-.01390
3.756	3.872	.31640	.11030	-.19400	-.06800	.04460	-.03010	.02490	.04600	-.01360
3.766	6.079	.31660	.10920	-.19630	-.11430	.07330	-.04900	.02600	.04820	-.01410
	GRADIENT	-.00168	-.00005	.00114	-.01990	.01271	-.00876	-.00013	-.00037	.00004

IA156A, AEDC PWT 16T-470, O T S W/SILTS (R8NOA1) (10 MAY 80)

REFERENCE DATA

SREF = 2690.0000 SQ.FT. XMRP = 976.0000 IN. XT
LREF = 1290.3000 INCHES YMRP = .0000 IN. YT
BREF = 1290.3000 INCHES ZMRP = 400.0000 IN. ZT
SCALE = .0200

PARAMETRIC DATA

IB-ELV = 8.000 OB-ELV = 5.000
BDFLAP = .000 SPDBRK = .000
RUDDER = .000 SILTS = 1.000
MACH = 1.400 RN/L = 3.500

RUN NO. 1229/ 0 RN/L = 3.50 GRADIENT INTERVAL = -5.00/ 5.00

ALPHAO	BETAO	CNFO	CAFO	CLMFO	CYFO	CYNFO	CBLFO	CNBO	CABO	CLMBO
-8.267	-5.901	-.12030	.11760	.12960	.17750	-.10760	.05950	.02540	.05010	-.01300
-8.304	-3.776	-.13610	.11950	.14010	.11270	-.06630	.03740	.02480	.04820	-.01290
-8.202	.428	-.16180	.11800	.15740	-.00410	.00630	-.00200	.02360	.04490	-.01250
-8.002	4.404	-.14610	.11860	.14300	-.11920	.07870	-.04000	.02410	.04580	-.01270
-8.009	6.323	-.14610	.11760	.14160	-.17750	.11530	-.05860	.02460	.04690	-.01300
	GRADIENT	-.00127	-.00011	.00039	-.02835	.01772	-.00946	-.00009	-.00030	.00003

RUN NO. 1230/ 0 RN/L = 3.50 GRADIENT INTERVAL = -5.00/ 5.00

ALPHAO	BETAO	CNFO	CAFO	CLMFO	CYFO	CYNFO	CBLFO	CNBO	CABO	CLMBO
-6.282	-5.994	-.05270	.11570	.07650	.16600	-.10060	.05710	.02470	.04860	-.01270
-6.224	-4.051	-.06190	.11790	.08220	.10890	-.06430	.03720	.02430	.04660	-.01270
-6.285	.156	-.08670	.11570	.09870	-.00020	.00330	-.00050	.02360	.04450	-.01270
-6.038	4.332	-.07390	.11640	.08580	-.11350	.07370	-.03790	.02380	.04520	-.01260
-5.969	6.303	-.07120	.11480	.08230	-.16900	.10910	-.05650	.02400	.04580	-.01270
	GRADIENT	-.00144	-.00018	.00043	-.02653	.01646	-.00896	-.00006	-.00017	.00001

IA156A, AEDC PWT 16T-470, O T S W/SILTS (R8NOA1) (10 MAY 80)

REFERENCE DATA

SREF = 2690.0000 SQ.FT. XMRP = 976.0000 IN. XT
LREF = 1290.3000 INCHES YMRP = .0000 IN. YT
BREF = 1290.3000 INCHES ZMRP = 400.0000 IN. ZT
SCALE = .0200

PARAMETRIC DATA

IB-ELV = 8.000 OB-ELV = 5.000
BDFLAP = .000 SPDBRK = .000
RUDDER = .000 SILTS = 1.000
MACH = 1.400 RN/L = 3.500

RUN NO. 1231/ 0 RN/L = 3.50 GRADIENT INTERVAL = -5.00/ 5.00

ALPHAO	BETAO	CNFO	CAFO	CLMFO	CYFO	CYNFO	CBLFO	CNBO	CABO	CLMBO
-4.143	-6.119	.02840	.11460	.01440	.15700	-.09470	.05570	.02490	.04790	-.01300
-4.385	-4.000	.01020	.11650	.02680	.09820	-.05730	.03450	.02360	.04570	-.01230
-4.262	.422	-.00390	.11450	.03520	-.00810	.00790	-.00320	.02350	.04370	-.01270
-3.759	4.378	.01940	.11470	.01440	-.10600	.06790	-.03660	.02350	.04400	-.01260
-3.859	6.215	.01150	.11360	.01910	-.15360	.09790	-.05340	.02390	.04530	-.01270
	GRADIENT	.00101	-.00022	-.00141	-.02437	.01494	-.00849	-.00001	-.00021	-.00004

RUN NO. 1232/ 0 RN/L = 3.50 GRADIENT INTERVAL = -5.00/ 5.00

ALPHAO	BETAO	CNFO	CAFO	CLMFO	CYFO	CYNFO	CBLFO	CNBO	CABO	CLMBO
-.552	-7.095	.17170	.11250	-.09100	.16570	-.10090	.06210	.02540	.04840	-.01340
-.508	-4.921	.16340	.11410	-.08670	.10870	-.06490	.04120	.02430	.04650	-.01280
-.464	-.562	.14830	.11380	-.07680	.01000	-.00320	.00390	.02340	.04430	-.01250
-.444	3.595	.15280	.11610	-.08210	-.07700	.05100	-.03020	.02310	.04300	-.01250
-.461	5.805	.14580	.11470	-.07890	-.12940	.08430	-.04940	.02360	.04430	-.01270
	GRADIENT	-.00126	[illegible]	.00055	-.02181	.01361	-.00839	-.00014	-.00041	.00004

RUN NO. 1233/ 0 RN/L = 3.50 GRADIENT INTERVAL = -5.00/ 5.00

ALPHAO	BETAO	CNFO	CAFO	CLMFO	CYFO	CYNFO	CBLFO	CNBO	CABO	CLMBO
3.935	-5.661	.33490	.11580	-.21280	.12290	-.07750	.05060	.02380	.04530	-.01270
3.910	-3.641	.32030	.11440	-.20350	.07870	-.04900	.03340	.02350	.04400	-.01270
3.655	.229	.30120	.11280	-.18850	.00210	-.00060	.00130	.02310	.04350	-.01230
3.736	4.056	.30740	.11430	-.19420	-.07270	.04810	-.03000	.02290	.04290	-.01240
3.692	6.093	.30590	.11390	-.19490	-.11790	.07680	-.04760	.02320	.04380	-.01240
	GRADIENT	-.00168	-.00001	.00121	-.01967	.01262	-.00824	-.00008	-.00014	.00004

IA156A, AEDC PWT 16T-470, O T S W/SILTS (R8NOA2) (10 MAY 80)

REFERENCE DATA

SREF = 2690.0000 SQ.FT. XMRP = 976.0000 IN. XT
LREF = 1290.3000 INCHES YMRP = .0000 IN. YT
BREF = 1290.3000 INCHES ZMRP = 400.0000 IN. ZT
SCALE = .0200

PARAMETRIC DATA

IB-ELV = 8.000 OB-ELV = 5.000
BDFLAP = .000 SPDBRK = .000
RUDDER = .000 SILTS = 1.000
MACH = 1.550 RN/L = 3.200

RUN NO. 1212/ 0 RN/L = 3.20 GRADIENT INTERVAL = -5.00/ 5.00

ALPHAO	BETAO	CNFO	CAFO	CLMFO	CYFO	CYNFO	CBLFO	CNBO	CABO	CLMBO
-8.321	-5.932	-.09970	.12080	.11410	.17860	-.10960	.05810	.02270	.04420	-.01170
-8.412	-3.712	-.11810	.12060	.12570	.11220	-.06670	.03620	.02220	.04400	-.01130
-8.276	.314	-.14120	.12230	.14150	.00640	.00000	.00070	.02090	.03980	-.01110
-8.033	4.496	-.14140	.12180	.13950	-.10870	.07250	-.03710	.02130	.04060	-.01120
-8.010	6.424	-.13950	.11840	.13680	-.16610	.10940	-.05530	.02160	.04170	-.01130
	GRADIENT	-.00282	.00014	.00167	-.02692	.01696	-.00893	-.00011	-.00041	.00001

RUN NO. 1213/ 0 RN/L = 3.20 GRADIENT INTERVAL = -5.00/ 5.00

ALPHAO	BETAO	CNFO	CAFO	CLMFO	CYFO	CYNFO	CBLFO	CNBO	CABO	CLMBO
-6.376	-5.979	-.03910	.11740	.06530	.16500	-.10140	.05450	.02240	.04400	-.01150
-6.309	-4.025	-.05120	.11950	.07320	.11060	-.06600	.03550	.02170	.04210	-.01130
-6.326	.241	-.07760	.11830	.09120	.00430	.00040	.00080	.02110	.04000	-.01130
-6.040	4.435	-.07520	.11860	.08700	-.10700	.07060	-.03530	.02130	.04070	-.01130
-5.961	6.413	-.07480	.11560	.08470	-.16090	.10530	-.05330	.02130	.04130	-.01110
	GRADIENT	-.00285	-.00011	.00164	-.02572	.01614	-.00837	-.00005	-.00017	-.00000

RUN NO. 1214/ 0 RN/L = 3.21 GRADIENT INTERVAL = -5.00/ 5.00

ALPHAO	BETAO	CNFO	CAFO	CLMFO	CYFO	CYNFO	CBLFO	CNBO	CABO	CLMBO
-4.254	-6.145	.03040	.11540	.01190	.15940	-.09800	.05300	.02300	.04500	-.01190
-4.488	-3.997	.00780	.11670	.02640	.10280	-.06090	.03260	.02160	.04150	-.01130
-4.353	.498	-.01390	.11570	.04140	-.00150	.00370	-.00130	.02120	.03990	-.01130
-3.760	4.479	.00050	.11580	.02790	-.10240	.06690	-.03310	.02150	.04110	-.01140
-3.825	6.317	-.00280	.11310	.02880	-.14940	.09750	-.04950	.02060	.03970	-.01080
	GRADIENT	-.00095	-.00011	.00024	-.02419	.01506	-.00775	-.00001	-.00005	-.00001

RUN NO. 1215/ 0 RN/L = 3.20 GRADIENT INTERVAL = -5.00/ 5.00

ALPHAO	BETAO	CNFO	CAFO	CLMFO	CYFO	CYNFO	CBLFO	CNBO	CABO	CLMBO
-.590	-7.139	.16500	.11150	-.09030	.16580	-.10280	.05810	.02290	.04460	-.01190
-.561	-5.002	.15480	.11400	-.08460	.11170	-.06700	.03880	.02220	.04240	-.01170
-.520	-.606	.13490	.11230	-.07160	.01120	-.00340	.00350	.02110	.03990	-.01120
-.510	3.511	.14090	.11420	-.07780	-.07900	.05530	-.02840	.02140	.04040	-.01140
-.517	5.704	.13980	.11190	-.07900	-.12890	.08740	-.04560	.02190	.04150	-.01170
	GRADIENT	.00146	.00046	-.00151	-.02191	.01426	-.00775	.00007	.00012	-.00005

IA156A, AEDC PWT 16T-470, O T S W/SILTS (R8NOA2) (10 MAY 80)

REFERENCE DATA

SREF = 2690.0000 SQ.FT. XMRP = 976.0000 IN. XT
LREF = 1290.3000 INCHES YMRP = .0000 IN. YT
BREF = 1290.3000 INCHES ZMRP = 400.0000 IN. ZT
SCALE = .0200

PARAMETRIC DATA

IB-ELV = 8.000 OB-ELV = 5.000
BDFLAP = .000 SPDBRK = .000
RUDDER = .000 SILTS = 1.000
MACH = 1.550 RN/L = 3.200

RUN NO. 1216/ 0 RN/L = 3.20 GRADIENT INTERVAL = -5.00/ 5.00

ALPHAO	BETAO	CNFO	CAFO	CLMFO	CYFO	CYNFO	CBLFO	CNBO	CABO	CLMBO
4.128	-5.607	.31260	.11320	-.19990	.12930	-.08390	.05050	.02300	.04420	-.01210
3.967	-3.526	.29800	.11170	-.19110	.08460	-.05470	.03320	.02220	.04210	-.01180
3.605	.251	.28910	.11040	-.18490	.00910	-.00640	.00410	.02130	.04040	-.01130
3.637	4.006	.29790	.11190	-.19340	-.06540	.04360	-.02570	.02090	.03930	-.01130
3.619	6.083	.29760	.11020	-.19460	-.11390	.07560	-.04350	.02200	.04140	-.01180
	GRADIENT	-.00002	.00003	-.00030	-.01991	.01305	-.00782	-.00017	-.00037	.00007

IA156A, AEDC PWT 16T-470, O T S W/SILTS (R8NOA3) (10 MAY 80)

REFERENCE DATA

SREF = 2690.0000 SQ.FT. XMRP = 976.0000 IN. XT
LREF = 1290.3000 INCHES YMRP = .0000 IN. YT
BREF = 1290.3000 INCHES ZMRP = 400.0000 IN. ZT
SCALE = .0200

PARAMETRIC DATA

IB-ELV = 12.000 OB-ELV = 5.000
BDFLAP = .000 SPDBRK = .000
RUDDER = .000 SILTS = 1.000
MACH = .600 RN/L = 3.500

RUN NO. 1240/ 0 RN/L = 3.50 GRADIENT INTERVAL = -5.00/ 5.00

ALPHAO	BETAO	CNFO	CAFO	CLMFO	CYFO	CYNFO	CBLFO	CNBO	CABO	CLMBO
-8.152	-7.797	-.06210	.02630	.04950	.22650	-.13830	.06660	.02430	.04520	-.01310
-8.060	-5.766	-.07090	.03010	.05560	.16290	-.09890	.04790	.02460	.04460	-.01360
-8.078	-3.773	-.08000	.03490	.06290	.10500	-.06240	.03010	.02250	.04070	-.01250
-7.979	.297	-.10160	.03330	.07950	-.00620	.00690	-.00300	.02080	.03780	-.01150
-7.850	4.216	-.09160	.03350	.06800	-.11060	.07190	-.03410	.02220	.04060	-.01220
-7.838	6.120	-.08820	.03390	.06380	-.16050	.10320	-.04920	.02280	.04140	-.01260
-7.891	8.133	-.09610	.03020	.06760	-.21530	.13680	-.06480	.02390	.04330	-.01320
	GRADIENT	-.00148	-.00018	.00066	-.02699	.01681	-.00804	-.00004	-.00002	.00004

RUN NO. 1241/ 0 RN/L = 3.50 GRADIENT INTERVAL = -5.00/ 5.00

ALPHAO	BETAO	CNFO	CAFO	CLMFO	CYFO	CYNFO	CBLFO	CNBO	CABO	CLMBO
-6.112	-7.857	.00800	.03020	.00170	.21870	-.13470	.06580	.02380	.04330	-.01320
-6.081	-5.857	-.00480	.03370	.00970	.16270	-.10030	.04910	.02310	.04200	-.01280
-5.997	-3.963	-.01470	.03650	.01710	.10530	-.06420	.03170	.02230	.04050	-.01240
-6.039	.085	-.04060	.03570	.03750	-.00250	.00360	-.00140	.02040	.03700	-.01130
-5.909	4.157	-.03110	.03720	.02080	-.10340	.06680	-.03260	.02160	.03870	-.01210
-5.832	6.110	-.02750	.03510	.02210	-.15480	.09930	-.04840	.02280	.04110	-.01260
-5.639	8.191	-.01950	.03250	.01500	-.20540	.13130	-.06380	.02360	.04340	-.01290
	GRADIENT	-.00202	.00009	.00119	-.02570	.01613	-.00792	-.00009	-.00022	.00004

IA156A, AEDC PWT 16T-470, O T S W/SILTS (R8NOA3) (10 MAY 80)

REFERENCE DATA

SREF = 2690.0000 SQ.FT. XMRP = 976.0000 IN. XT
LREF = 1290.3000 INCHES YMRP = .0000 IN. YT
BREF = 1290.3000 INCHES ZMRP = 400.0000 IN. ZT
SCALE = .0200

PARAMETRIC DATA

IB-ELV = 12.000 OB-ELV = 5.000
BDFLAP = .000 SPDBRK = .000
RUDDER = .000 SILTS = 1.000
MACH = .600 RN/L = 3.500

RUN NO. 1242/ 0 RN/L = 3.49 GRADIENT INTERVAL = -5.00/ 5.00

ALPHAO	BETAO	CNFO	CAFO	CLMFO	CYFO	CYNFO	CBLFO	CNBO	CABO	CLMBO
-3.979	-7.922	.07560	.03170	-.04420	.20790	-.12900	.06460	.02340	.04280	-.01290
-4.201	-5.904	.05330	.03510	-.03010	.15220	-.09410	.04750	.02270	.04210	-.01230
-4.186	-3.853	.04210	.03830	-.02140	.09340	-.05660	.02890	.02200	.03960	-.01220
-3.980	.176	.02620	.03830	-.00830	-.00260	.00350	-.00160	.02000	.03640	-.01110
-3.668	4.205	.04560	.03780	-.02520	-.10120	.06520	-.03280	.02140	.03840	-.01200
-3.774	6.004	.04260	.03700	-.02500	-.14370	.09280	-.04680	.02210	.03970	-.01230
-3.800	7.983	.03910	.03380	-.02390	-.19010	.12220	-.06110	.02320	.04160	-.01290
	GRADIENT	.00043	-.00006	-.00047	-.02415	.01511	-.00766	-.00007	-.00015	.00002

RUN NO. 1243/ 0 RN/L = 3.50 GRADIENT INTERVAL = -5.00/ 5.00

ALPHAO	BETAO	CNFO	CAFO	CLMFO	CYFO	CYNFO	CBLFO	CNBO	CABO	CLMBO
-.354	-8.693	.18820	.02790	-.11910	.20540	-.12960	.06880	.02270	.04140	-.01250
-.344	-6.614	.17440	.03130	-.11090	.15910	-.10040	.05330	.02200	.04090	-.01190
-.330	-4.366	.16120	.03640	-.10140	.10200	-.06340	.03430	.02120	.03900	-.01160
-.303	-.313	.14200	.03760	-.08440	.00820	-.00250	.00220	.01940	.03520	-.01070
-.271	3.752	.16150	.03720	-.10170	-.07180	.04910	-.02580	.02010	.03610	-.01130
-.267	5.854	.16610	.03680	-.10750	-.11980	.08070	-.04260	.02160	.03830	-.01220
-.258	7.945	.16950	.03380	-.11190	-.16500	.11060	-.05840	.02260	.04040	-.01270
	GRADIENT	.00004	.00010	-.00004	-.02141	.01386	-.00740	-.00014	-.00036	.00004

RUN NO. 1244/ 0 RN/L = 3.50 GRADIENT INTERVAL = -5.00/ 5.00

ALPHAO	BETAO	CNFO	CAFO	CLMFO	CYFO	CYNFO	CBLFO	CNBO	CABO	CLMBO
4.282	-8.106	.32160	.02500	-.21200	.16350	-.10720	.06370	.02160	.03970	-.01190
4.109	-5.880	.30770	.02930	-.20310	.11960	-.07870	.04670	.02100	.03830	-.01160
4.094	-3.892	.29870	.03140	-.19620	.07950	-.05190	.03100	.02020	.03690	-.01110
3.910	-.003	.27600	.02950	-.17740	.00960	-.00560	.00330	.01990	.03640	-.01100
3.942	4.078	.29690	.02960	-.19470	-.06310	.04290	-.02520	.01980	.03540	-.01100
3.885	6.223	.29930	.02950	-.19900	-.10890	.07390	-.04230	.02070	.03610	-.01190
3.875	8.228	.29660	.02490	-.19920	-.14620	.09930	-.05670	.02210	.03900	-.01250
	GRADIENT	-.00018	-.00022	.00015	-.01789	.01189	-.00705	-.00005	-.00019	.00001

IA156A, AEDC PWT 16T-470, O T S W/SILTS (R8NOA3) (10 MAY 80)

REFERENCE DATA

SREF = 2690.0000 SQ.FT. XMRP = 976.0000 IN. XT
LREF = 1290.3000 INCHES YMRP = .0000 IN. YT
BREF = 1290.3000 INCHES ZMRP = 400.0000 IN. ZT
SCALE = .0200

PARAMETRIC DATA

IB-ELV = 12.000 OB-ELV = 5.000
BDFLAP = .000 SPDBRK = .000
RUDDER = .000 SILTS = 1.000
MACH = .600 RN/L = 3.500

RUN NO. 1245/ 0 RN/L = 3.50 GRADIENT INTERVAL = -5.00/ 5.00

ALPHAO	BETAO	CNFO	CAFO	CLMFO	CYFO	CYNFO	CBLFO	CNBO	CABO	CLMBO
6.245	-8.012	.38260	.02310	-.25380	.15300	-.10130	.06190	.02140	.03880	-.01180
6.219	-5.943	.37810	.02680	-.25110	.11240	-.07430	.04560	.02070	.03770	-.01150
6.204	-3.868	.37310	.02880	-.24720	.07590	-.04960	.03040	.02000	.03620	-.01110
5.928	.168	.34710	.02730	-.22630	.00620	-.00370	.00200	.01990	.03590	-.01100
5.855	4.103	.35830	.02710	-.23730	-.06170	.04130	-.02580	.01970	.03490	-.01110
5.781	6.202	.35590	.02400	-.23830	-.09780	.06630	-.04040	.02120	.03730	-.01200
5.768	8.130	.35680	.02110	-.24070	-.13500	.09190	-.05500	.02170	.03820	-.01230
	GRADIENT	-.00188	-.00021	.00126	-.01726	.01140	-.00705	-.00004	-.00016	.00000

RUN NO. 1246/ 0 RN/L = 3.50 GRADIENT INTERVAL = -5.00/ 5.00

ALPHAO	BETAO	CNFO	CAFO	CLMFO	CYFO	CYNFO	CBLFO	CNBO	CABO	CLMBO
8.135	-7.857	.43740	.01620	-.29200	.13850	-.09140	.05900	.02170	.03950	-.01200
8.050	-5.782	.43320	.02070	-.28930	.09970	-.06530	.04250	.02060	.03730	-.01140
8.036	-3.796	.43120	.02280	-.28720	.06600	-.04290	.02790	.01980	.03580	-.01100
7.950	.173	.41520	.02260	-.27340	.00890	-.00580	.00230	.01920	.03500	-.01060
7.992	4.235	.43200	.02150	-.28760	-.05300	.03550	-.02430	.01980	.03520	-.01120
7.938	6.240	.43200	.01780	-.29000	-.08540	.05770	-.03800	.02070	.03630	-.01180
7.946	8.284	.42680	.01310	-.28870	-.12440	.08510	-.05480	.02190	.03880	-.01240
	GRADIENT	.00012	-.00016	-.00006	-.01482	.00976	-.00650	.00000	-.00007	-.00003

IA156A, AEDC PWT 16T-470, O T S W/SILTS (R8NOA4) (10 MAY 80)

REFERENCE DATA

SREF = 2690.0000 SQ.FT. XMRP = 976.0000 IN. XT
LREF = 1290.3000 INCHES YMRP = .0000 IN. YT
BREF = 1290.3000 INCHES ZMRP = 400.0000 IN. ZT
SCALE = .0200

PARAMETRIC DATA

IB-ELV = 12.000 OB-ELV = 5.000
BDFLAP = .000 SPDBRK = .000
RUDDER = .000 SILTS = 1.000
MACH = .800 RN/L = 3.500

RUN NO. 1247/ 0 RN/L = 3.50 GRADIENT INTERVAL = -5.00/ 5.00

ALPHAO	BETAO	CNFO	CAFO	CLMFO	CYFO	CYNFO	CBLFO	CNBO	CABO	CLMBO
-8.178	-5.803	-.06290	.04680	.05350	.17310	-.10560	.05150	.02450	.04540	-.01330
-8.184	-3.772	-.07900	.04830	.06490	.10980	-.06590	.03240	.02390	.04430	-.01290
-8.099	.387	-.11360	.04470	.09100	-.00420	.00500	-.00180	.02170	.04070	-.01170
-7.928	4.305	-.09430	.04750	.07320	-.11360	.07290	-.03440	.02340	.04320	-.01270
-7.942	6.214	-.09030	.04700	.06880	-.16810	.10660	-.05080	.02410	.04480	-.01310
	GRADIENT	-.00196	-.00011	.00108	-.02766	.01718	-.00827	-.00007	-.00014	.00003

RUN NO. 1248/ 0 RN/L = 3.50 GRADIENT INTERVAL = -5.00/ 5.00

ALPHAO	BETAO	CNFO	CAFO	CLMFO	CYFO	CYNFO	CBLFO	CNBO	CABO	CLMBO
-6.143	-5.924	.00730	.04640	.00390	.16710	-.10290	.05130	.02390	.04410	-.01300
-6.094	-4.028	-.00780	.04900	.01500	.11010	-.06720	.03390	.02310	.04240	-.01270
-6.164	.072	-.04780	.04590	.04500	.00250	-.00020	.00070	.02110	.03890	-.01150
-5.981	4.219	-.02770	.04750	.02680	-.10710	.06860	-.03300	.02250	.04180	-.01220
-5.887	6.213	-.02020	.04680	.01960	-.16000	.10180	-.04950	.02390	.04430	-.01300
	GRADIENT	-.00240	-.00018	.00142	-.02634	.01647	-.00811	-.00007	-.00007	.00006

RUN NO. 1249/ 0 RN/L = 3.50 GRADIENT INTERVAL = -5.00/ 5.00

ALPHAO	BETAO	CNFO	CAFO	CLMFO	CYFO	CYNFO	CBLFO	CNBO	CABO	CLMBO
-4.088	-6.032	.07830	.04730	-.04510	.15880	-.09860	.05030	.02350	.04340	-.01280
-4.286	-3.931	.05450	.04930	-.02820	.09850	-.05980	.03120	.02240	.04150	-.01220
-4.157	.407	.02110	.04600	-.00310	-.00620	.00520	-.00180	.02070	.03850	-.01120
-3.746	4.285	.04960	.04710	-.02650	-.10470	.06700	-.03340	.02240	.04140	-.01220
-3.826	6.107	.05280	.04780	-.03040	-.15030	.09640	-.04850	.02280	.04210	-.01240
	GRADIENT	-.00074	-.00028	.00032	-.02472	.01543	-.00786	-.00001	-.00003	.00000

RUN NO. 1250/ 0 RN/L = 3.50 GRADIENT INTERVAL = -5.00/ 5.00

ALPHAO	BETAO	CNFO	CAFO	CLMFO	CYFO	CYNFO	CBLFO	CNBO	CABO	CLMBO
-.370	-6.859	.20750	.04320	-.13160	.16670	-.10550	.05690	.02260	.04240	-.01210
-.364	-4.706	.19090	.04710	-.12040	.11080	-.06950	.03810	.02140	.03970	-.01160
-.337	-.421	.15780	.04530	-.09470	.01170	-.00490	.00430	.02000	.03670	-.01100
-.300	3.655	.18010	.04750	-.11300	-.07450	.05040	-.02680	.02060	.03760	-.01130
-.299	5.785	.18640	.04710	-.12000	-.12370	.08300	-.04440	.02190	.03970	-.01210
	GRADIENT	-.00135	.00004	.00093	-.02217	.01435	-.00776	-.00010	-.00026	.00004

IA156A, AEDC PWT 16T-470, O T S W/SILTS (R8N0A4) (10 MAY 80)

REFERENCE DATA

SREF = 2690.0000 SQ.FT. XMRP = 976.0000 IN. XT
LREF = 1290.3000 INCHES YMRP = .0000 IN. YT
BREF = 1290.3000 INCHES ZMRP = 400.0000 IN. ZT
SCALE = .0200

PARAMETRIC DATA

IB-ELV = 12.000 OB-ELV = 5.000
BDFLAP = .000 SPDBRK = .000
RUDDER = .000 SILTS = 1.000
MACH = .800 RN/L = 3.500

RUN NO. 1251/ 0 RN/L = 3.50 GRADIENT INTERVAL = -5.00/ 5.00

ALPHAO	BETAO	CNFO	CAFO	CLMFO	CYFO	CYNFO	CBLFO	CNBO	CABO	CLMBO
4.142	-5.836	.34700	.04000	-.23050	.12440	-.08130	.05030	.02210	.04080	-.01200
4.011	-3.728	.33050	.04130	-.21910	.07670	-.04970	.03150	.02050	.03830	-.01110
3.780	.115	.29630	.03900	-.19210	.00950	-.00540	.00380	.02060	.03740	-.01140
3.872	4.058	.33200	.03970	-.21970	-.06430	.04310	-.02610	.02040	.03700	-.01130
3.808	6.146	.33130	.03900	-.22150	-.11150	.07530	-.04410	.02200	.03960	-.01220
	GRADIENT	.00023	-.00020	-.00011	-.01811	.01192	-.00740	-.00001	-.00017	-.00003

RUN NO. 1252/ 0 RN/L = 3.50 GRADIENT INTERVAL = -5.00/ 5.00

ALPHAO	BETAO	CNFO	CAFO	CLMFO	CYFO	CYNFO	CBLFO	CNBO	CABO	CLMBO
6.143	-5.864	.41280	.03800	-.27530	.11680	-.07690	.04670	.02190	.04010	-.01200
6.116	-3.819	.40820	.03900	-.27260	.07670	-.04970	.03090	.02070	.03780	-.01130
5.812	.154	.37650	.03630	-.24770	.00700	-.00370	.00300	.02030	.03690	-.01120
5.749	4.024	.39010	.03730	-.26030	-.05910	.03920	-.02400	.02090	.03770	-.01160
5.881	6.222	.39560	.03670	-.26580	-.10260	.06940	-.04020	.02190	.03980	-.01210
	GRADIENT	-.00233	-.00022	.00159	-.01732	.01134	-.00700	.00002	-.00001	-.00004

IA156A, AEDC PWT 16T-470, O T S W/SILTS (R8N0A5) (10 MAY 80)

REFERENCE DATA

SREF = 2690.0000 SQ.FT. XMRP = 976.0000 IN. XT
LREF = 1290.3000 INCHES YMRP = .0000 IN. YT
BREF = 1290.3000 INCHES ZMRP = 400.0000 IN. ZT
SCALE = .0200

PARAMETRIC DATA

IB-ELV = 12.000 OB-ELV = 5.000
BDFLAP = .000 SPDBRK = .000
RUDDER = .000 SILTS = 1.000
MACH = .900 RN/L = 3.500

RUN NO. 1253/ 0 RN/L = 3.50 GRADIENT INTERVAL = -5.00/ 5.00

ALPHAO	BETAO	CNFO	CAFO	CLMFO	CYFO	CYNFO	CBLFO	CNBO	CABO	CLMBO
-8.381	-5.946	-.09650	.06380	.08550	.18340	-.11040	.05480	.02760	.05170	-.01480
-8.127	-3.743	-.10350	.06830	.09170	.11110	-.06420	.03240	.02590	.04780	-.01410
-8.097	.172	-.14590	.06380	.12230	.00700	-.00230	.00130	.02340	.04390	-.01260
-7.929	4.414	-.12710	.06760	.10560	-.11940	.07500	-.03730	.02550	.04750	-.01380
-7.965	6.237	-.12450	.06820	.10210	-.17380	.10910	-.05430	.02640	.04960	-.01420
	GRADIENT	-.00279	-.00007	.00163	-.02828	.01708	-.00855	-.00004	-.00002	.00003

IA156A, AEDC PWT 16T-470, O T S W/SILTS (R8NOA5) (10 MAY 80)

REFERENCE DATA

SREF = 2690.0000 SQ.FT. XMRP = 976.0000 IN. XT
LREF = 1290.3000 INCHES YMRP = .0000 IN. YT
BREF = 1290.3000 INCHES ZMRP = 400.0000 IN. ZT
SCALE = .0200

PARAMETRIC DATA

IB-ELV = 12.000 OB-ELV = 5.000
BDFLAP = .000 SPOBRK = .000
RUDDER = .000 SILTS = 1.000
MACH = .900 RN/L = 3.500

RUN NO. 1254/ 0 RN/L = 3.50 GRADIENT INTERVAL = -5.00/ 5.00

ALPHAO	BETAO	CNFO	CAFO	CLMFO	CYFO	CYNFO	CBLFO	CNBO	CABO	CLMBO
-6.157	-5.933	-.01830	.06570	.03160	.16880	-.10210	.05340	.02610	.04860	-.01410
-6.107	-3.992	-.03460	.06610	.04330	.11070	-.06530	.03520	.02560	.04750	-.01390
-6.098	.260	-.07980	.06300	.07610	-.00300	.00290	-.00100	.02290	.04270	-.01240
-5.995	4.228	-.05780	.06590	.05700	-.10770	.06700	-.03470	.02510	.04680	-.01360
-5.941	6.201	-.05010	.06650	.04980	-.16380	.10240	-.05290	.02640	.04870	-.01440
	GRADIENT	-.00292	-.00003	.00174	-.02657	.01610	-.00850	-.00007	-.00010	.00004

RUN NO. 1255/ 0 RN/L = 3.50 GRADIENT INTERVAL = -5.00/ 5.00

ALPHAO	BETAO	CNFO	CAFO	CLMFO	CYFO	CYNFO	CBLFO	CNBO	CABO	CLMBO
-4.049	-5.942	.05700	.06460	-.02070	.15770	-.09570	.05250	.02530	.04750	-.01360
-4.275	-3.950	.03110	.06600	-.00270	.09890	-.05820	.03300	.02460	.04560	-.01330
-4.181	.363	-.01070	.06230	.02690	-.00540	00440	-.00190	.02250	.04180	-.01220
-3.755	4.252	.02690	.06550	-.00210	-.10270	.06350	-.03430	.02460	.04550	-.01340
-3.839	6.105	.02710	.06520	-.00330	-.15080	.09430	-.05060	.02580	.04740	-.01410
	GRADIENT	-.00068	-.00008	.00020	-.02457	.01483	-.00820	-.00001	-.00003	-.00001

RUN NO. 1256/ 0 RN/L = 3.50 GRADIENT INTERVAL = -5.00/ 5.00

ALPHAO	BETAO	CNFO	CAFO	CLMFO	CYFO	CYNFO	CBLFO	CNBO	CABO	CLMBO
-.406	-6.906	.19590	.06160	-.11550	.16210	-.10030	.05910	.02480	.04650	-.01340
-.386	-4.764	.18120	.06270	-.10670	.11230	-.06920	.04210	.02350	.04400	-.01260
-.355	-.424	.14100	.05820	-.07840	.00850	-.00240	.00470	.02130	.04010	-.01140
-.321	3.663	.16900	.06280	-.09900	-.07520	.04930	-.02730	.02270	.04220	-.01230
-.321	5.811	.17460	.06370	-.10440	-.12430	.08150	-.04570	.02430	.04460	-.01330
	GRADIENT	-.00153	.00000	.00097	-.02227	.01408	-.00824	-.00010	-.00022	.00004

RUN NO. 1257/ 0 RN/L = 3.50 GRADIENT INTERVAL = -5.00/ 5.00

ALPHAO	BETAO	CNFO	CAFO	CLMFO	CYFO	CYNFO	CBLFO	CNBO	CABO	CLMBO
4.138	-5.831	.34430	.06020	-.22230	.12140	-.07740	.04960	.02380	.04460	-.01280
4.005	-3.746	.33540	.05940	-.21750	.07820	-.04940	.03270	.02210	.04160	-.01190
3.772	.075	.30130	.05530	-.19230	.00710	-.00360	.00420	.02120	.03960	-.01150
3.863	4.007	.33220	.05880	-.21530	-.06570	.04300	-.02580	.02230	.04150	-.01210
3.797	6.125	.32690	.05920	-.21360	-.10930	.07110	-.04210	.02400	.04450	-.01300
	GRADIENT	-.00037	-.00007	.00025	-.01856	.01192	-.00755	.00003	-.00001	-.00003

IA156A, AEDC PWT 16T-470, O T S W/SILTS (R8NOA6) (10 MAY 80)

REFERENCE DATA

SREF = 2690.0000 SQ.FT. XMRP = 976.0000 IN. XT
LREF = 1290.3000 INCHES YMRP = .0000 IN. YT
BREF = 1290.3000 INCHES ZMRP = 400.0000 IN. ZT
SCALE = .0200

PARAMETRIC DATA

IB-ELV = 12.000 OB-ELV = 5.000
BDFLAP = .000 SPDBRK = .000
RUDDER = .000 SILTS = 1.000
MACH = .950 RN/L = 3.500

RUN NO. 1258/ 0 RN/L = 3.50 GRADIENT INTERVAL = -5.00/ 5.00

ALPHAO	BETAO	CNFO	CAFO	CLMFO	CYFO	CYNFO	CBLFO	CNBO	CABO	CLMBO
-8.122	-5.896	-.10730	.08090	.10240	.18280	-.11120	.05680	.02920	.05450	-.01580
-8.204	-3.800	-.12800	.08280	.11670	.11260	-.06540	.03490	.02780	.05180	-.01510
-8.120	.348	-.16630	.08070	.14480	-.00050	.00230	-.00050	.02620	.04830	-.01430
-7.943	4.317	-.14560	.08280	.12740	-.11650	.07400	-.03740	.02810	.05240	-.01520
-7.957	6.224	-.14060	.08200	.12130	-.17600	.11180	-.05550	.02970	.05560	-.01600
	GRADIENT	-.00222	-.00000	.00136	-.02822	.01717	-.00890	.00003	.00007	-.00001

RUN NO. 1259/ 0 RN/L = 3.50 GRADIENT INTERVAL = -5.00/ 5.00

ALPHAO	BETAO	CNFO	CAFO	CLMFO	CYFO	CYNFO	CBLFO	CNBO	CABO	CLMBO
-6.172	-5.943	-.03700	.08070	.05200	.17210	-.10460	.05560	.02840	.05270	-.01540
-6.107	-4.037	-.04940	.08110	.06010	.11350	-.06670	.03670	.02730	.05080	-.01470
-6.186	.092	-.09390	.07780	.09210	.00390	-.00120	.00120	.02520	.04660	-.01370
-6.011	4.226	-.07370	.08180	.07500	-.10870	.06810	-.03590	.02730	.05060	-.01460
-5.740	6.301	-.05290	.08080	.05750	-.16780	.10580	-.05510	.02920	.05420	-.01580
	GRADIENT	-.00294	.00008	.00180	-.02689	.01631	-.00879	.00000	-.00002	-.00001

RUN NO. 1260/ 0 RN/L = 3.50 GRADIENT INTERVAL = -5.00/ 5.00

ALPHAO	BETAO	CNFO	CAFO	CLMFO	CYFO	CYNFO	CBLFO	CNBO	CABO	CLMBO
-4.061	-6.053	.04470	.07870	-.00640	.15950	-.09640	.05380	.02810	.05260	-.01510
-4.287	-3.951	.01570	.08030	.01380	.09630	-.05510	.03260	.02630	.04890	-.01420
-4.181	.370	-.02600	.07780	.04440	-.00530	.00450	-.00220	.02510	.04600	-.01370
-3.754	4.279	.01200	.08040	.01430	-.10210	.06360	-.03550	.02640	.04840	-.01440
-3.839	6.095	.01440	.07980	.01040	-.15250	.09580	-.05230	.02800	.05140	-.01530
	GRADIENT	-.00061	.00000	.00018	-.02410	.01441	-.00827	.00001	-.00007	-.00002

RUN NO. 1261/ 0 RN/L = 3.50 GRADIENT INTERVAL = -5.00/ 5.00

ALPHAO	BETAO	CNFO	CAFO	CLMFO	CYFO	CYNFO	CBLFO	CNBO	CABO	CLMBO
-.422	-6.933	.18120	.07430	-.10080	.15960	-.09630	.05930	.02760	.05210	-.01470
-.402	-4.791	.16350	.07660	-.08940	.10550	-.06170	.04010	.02580	.04810	-.01390
-.366	-.454	.12310	.07290	-.06060	.00840	-.00200	.00440	.02320	.04350	-.01250
-.334	3.660	.14950	.07770	-.08060	-.07580	.04940	-.02970	.02510	.04620	-.01370
-.336	5.826	.15810	.07780	-.08930	-.12320	.07920	-.04770	.02670	.04940	-.01450
	GRADIENT	-.00173	.00012	.00109	-.02146	.01315	-.00826	-.00009	-.00023	.00003

IA156A, AEDC PWT 16T-470, O T S W/SILTS (R8N0A6) (10 MAY 80)

REFERENCE DATA

SREF = 2690.0000 SQ.FT. XMRP = 976.0000 IN. XT
LREF = 1290.3000 INCHES YMRP = .0000 IN. YT
BREF = 1290.3000 INCHES ZMRP = 400.0000 IN. ZT
SCALE = .0200

PARAMETRIC DATA

IB-ELV = 12.000 OB-ELV = 5.000
BDFLAP = .000 SPDBRK = .000
RUDDER = .000 SILTS = 1.000
MACH = .950 RN/L = 3.500

RUN NO. 1262/ 0 RN/L = 3.50 GRADIENT INTERVAL = -5.00/ 5.00

ALPHAO	BETAO	CNFO	CAFO	CLMFO	CYFO	CYNFO	CBLFO	CNBO	CABO	CLMBO
4.114	-5.814	.33470	.07290	-.21170	.11490	-.07020	.04910	.02520	.04710	-.01350
3.989	-3.714	.32030	.07130	-.20280	.07090	-.04200	.03110	.02390	.04500	-.01280
3.766	.120	.28820	.06800	-.17800	.00600	-.00240	.00310	.02420	.04500	-.01310
3.867	4.044	.32090	.06990	-.20400	-.06240	.03960	-.02610	.02450	.04540	-.01330
3.800	6.128	.31770	.07030	-.20340	-.10610	.06710	-.04350	.02620	.04860	-.01420
	GRADIENT	.00011	-.00018	-.00018	-.01718	.01052	-.00737	.00008	.00005	-.00006

IA156A, AEDC PWT 16T-470, O T S W/SILTS (R8N0A7) (10 MAY 80)

REFERENCE DATA

SREF = 2690.0000 SQ.FT. XMRP = 976.0000 IN. XT
LREF = 1290.3000 INCHES YMRP = .0000 IN. YT
BREF = 1290.3000 INCHES ZMRP = 400.0000 IN. ZT
SCALE = .0200

PARAMETRIC DATA

IB-ELV = 12.000 OB-ELV = 5.000
BDFLAP = .000 SPDBRK = .000
RUDDER = .000 SILTS = 1.000
MACH = 1.050 RN/L = 3.500

RUN NO. 1263/ 0 RN/L = 3.50 GRADIENT INTERVAL = -5.00/ 5.00

ALPHAO	BETAO	CNFO	CAFO	CLMFO	CYFO	CYNFO	CBLFO	CNBO	CABO	CLMBO
-8.095	-5.938	-.15170	.09610	.14890	.18600	-.11140	.06200	.03710	.07070	-.01960
-8.223	-3.739	-.17750	.10020	.16830	.11570	-.06710	.03830	.03670	.06900	-.01960
-8.113	.176	-.21330	.10170	.19560	.00470	.00070	.00090	.03450	.06450	-.01860
-7.953	4.360	-.19650	.10190	.17980	-.12090	.07810	-.04100	.03530	.06530	-.01920
-7.956	6.216	-.18750	.10150	.17110	-.17920	.11310	-.06010	.03530	.06570	-.01910
	GRADIENT	-.00227	.00021	.00136	-.02922	.01793	-.00979	-.00017	-.00045	.00005

RUN NO. 1264/ 0 RN/L = 3.50 GRADIENT INTERVAL = -5.00/ 5.00

ALPHAO	BETAO	CNFO	CAFO	CLMFO	CYFO	CYNFO	CBLFO	CNBO	CABO	CLMBO
-6.075	-5.927	-.07210	.09740	.09180	.17190	-.10190	.06110	.03720	.07100	-.01960
-6.087	-4.033	-.09060	.10080	.10600	.11190	-.06450	.03980	.03670	.06930	-.01960
-6.194	.104	-.14460	.10150	.14690	.00030	.00280	.00000	.03490	.06440	-.01900
-6.001	4.237	-.11790	.10240	.12330	-.11460	.07320	-.04030	.03440	.06330	-.01880
-5.962	6.210	-.10590	.10100	.11230	-.17160	.10780	-.06030	.03460	.06470	-.01870
	GRADIENT	-.00330	.00019	.00209	-.02739	.01665	-.00969	-.00028	-.00073	.00010

IA156A, AEDC PWT 16T-470, O T S W/SILTS (R8NOA7) (10 MAY 80)

REFERENCE DATA

SREF = 2690.0000 SQ.FT. XMRP = 976.0000 IN. XT
LREF = 1290.3000 INCHES YMRP = .0000 IN. YT
BREF = 1290.3000 INCHES ZMRP = 400.0000 IN. ZT
SCALE = .0200

PARAMETRIC DATA

IB-ELV = 12.000 OB-ELV = 5.000
BDFLAP = .000 SPDBRK = .000
RUDDER = .000 SILTS = 1.000
MACH = 1.050 RN/L = 3.500

RUN NO. 1265/ 0 RN/L = 3.50 GRADIENT INTERVAL = -5.00/ 5.00

ALPHAO	BETAO	CNFO	CAFO	CLMFO	CYFO	CYNFO	CBLFO	CNBO	CABO	CLMBO
-4.169	-6.040	.00870	.09910	.03480	.16200	-.09600	.06070	.03630	.06890	-.01930
-4.298	-3.967	-.02250	.10070	.05730	.10120	-.05810	.03820	.03640	.06800	-.01960
-4.203	.358	-.07040	.10010	.09400	-.00570	.00650	-.00210	.03570	.06590	-.01940
-3.755	4.280	-.02700	.10080	.05870	-.10810	.06850	-.04010	.03420	.06280	-.01870
-3.842	6.113	-.01760	.10060	.04930	-.15550	.09710	-.05810	.03470	.06380	-.01900
	GRADIENT	-.00073	.00001	.00031	-.02537	.01535	-.00949	-.00026	-.00063	.00011

RUN NO. 1266/ 0 RN/L = 3.50 GRADIENT INTERVAL = -5.00/ 5.00

ALPHAO	BETAO	CNFO	CAFO	CLMFO	CYFO	CYNFO	CBLFO	CNBO	CABO	CLMBO
-.451	-6.988	.16930	.09690	-.07890	.16480	-.09810	.06920	.03690	.06980	-.01970
-.430	-4.840	.14570	.09860	-.06150	.11200	-.06640	.04780	.03620	.06780	-.01950
-.407	-.438	.09020	.09690	-.01870	.01180	-.00440	.00530	.03460	.06390	-.01890
-.375	3.677	.11820	.10280	-.04130	-.07860	.05210	-.03450	.03430	.06350	-.01870
-.367	5.843	.13360	.10030	-.05660	-.12550	.08110	-.05410	.03560	.06590	-.01930
	GRADIENT	-.00334	.00048	.00246	-.02238	.01392	-.00966	-.00022	-.00051	.00009

RUN NO. 1267/ 0 RN/L = 3.50 GRADIENT INTERVAL = -5.00/ 5.00

ALPHAO	BETAO	CNFO	CAFO	CLMFO	CYFO	CYNFO	CBLFO	CNBO	CABO	CLMBO
4.116	-5.817	.31700	.09650	-.18560	.11950	-.07350	.05610	.03550	.06710	-.01890
3.972	-3.711	.29460	.09660	-.16960	.07650	-.04620	.03630	.03490	.06530	-.01880
3.787	.113	.26640	.09370	-.14770	.00750	-.00310	.00360	.03430	.06390	-.01850
3.854	4.043	.30130	.09700	-.17610	-.06710	.04370	-.03130	.03350	.06190	-.01820
3.804	6.119	.30480	.09630	-.18090	-.10850	.06910	-.05000	.03470	.06460	-.01880
	GRADIENT	.00090	.00006	-.00087	-.01852	.01160	-.00872	-.00018	-.00044	.00008

IA156A, AEDC PWT 16T-470, O T S W/SILTS (R8NOA8) (10 MAY 80)

REFERENCE DATA

SREF = 2690.0000 SQ.FT. XMRP = 976.0000 IN. XT
LREF = 1290.3000 INCHES YMRP = .0000 IN. YT
BREF = 1290.3000 INCHES ZMRP = 400.0000 IN. ZT
SCALE = .0200

PARAMETRIC DATA

B-ELV = 12.000 OB-ELV = 5.000
BDFLAP = .000 SPDBRK = .000
RUDDER = .000 SILTS = 1.000
MACH = 1.100 RN/L = 3.500

RUN NO. 1268/ 0 RN/L = 3.50 GRADIENT INTERVAL = -5.00/ 5.00

ALPHAO	BETAO	CNFO	CAFO	CLMFO	CYFO	CYNFO	CBLFO	CNBO	CABO	CLMBO
-8.103	-5.932	-.14060	.10370	.14280	.17330	-.10150	.05930	.03340	.06430	-.01760
-8.214	-3.748	-.16030	.10660	.15780	.10850	-.06080	.03650	.03390	.06390	-.01810
-8.118	.177	-.19820	.10600	.18570	-.00070	.00430	-.00080	.03140	.05840	-.01700
-7.959	4.361	-.18210	.10850	.17150	-.11990	.07640	-.04100	.03250	.06010	-.01770
-7.951	6.217	-.17370	.10810	.16260	-.17340	.10820	-.05940	.03210	.05970	-.01740
	GRADIENT	-.00262	.00024	.00163	-.02817	.01692	-.00956	-.00017	-.00046	.00005

RUN NO. 1269/ 0 RN/L = 3.50 GRADIENT INTERVAL = -5.00/ 5.00

ALPHAO	BETAO	CNFO	CAFO	CLMFO	CYFO	CYNFO	CBLFO	CNBO	CABO	CLMBO
-6.168	-5.957	-.06080	.10330	.08430	.16070	-.09360	.05840	.03320	.06320	-.01760
-6.117	-4.044	-.07840	.10470	.09730	.10380	-.05850	.03780	.03250	.06100	-.01740
-6.213	.099	-.12680	.10420	.13370	-.00440	.00610	-.00120	.03100	.05730	-.01690
-5.981	4.228	-.09340	.10580	.10600	-.11100	.06960	-.03970	.03060	.05630	-.01670
-5.980	6.223	-.08670	.10530	.09860	-.16470	.10200	-.05930	.03190	.05930	-.01730
	GRADIENT	-.00182	.00013	.00106	-.02597	.01549	-.00937	-.00023	-.00057	.00008

RUN NO. 1270/ 0 RN/L = 3.50 GRADIENT INTERVAL = -5.00/ 5.00

ALPHAO	BETAO	CNFO	CAFO	CLMFO	CYFO	CYNFO	CBLFO	CNBO	CABO	CLMBO
-4.029	-6.054	.02990	.10250	.01810	.15080	-.08730	.05890	.03280	.06250	-.01740
-4.294	-3.964	-.00580	.10400	.04470	.09400	-.05240	.03650	.03220	.05980	-.01740
-4.189	.363	-.04430	.10130	.07380	-.00860	.00770	-.00310	.03060	.05650	-.01670
-3.727	4.275	.00330	.10570	.03580	-.10300	.06430	-.04020	.02970	.05430	-.01630
-3.851	6.108	.00710	.10670	.03020	-.15060	.09330	-.05870	.03060	.05610	-.01680
	GRADIENT	.00093	.00019	-.00094	-.02391	.01416	-.00931	-.00030	-.00067	.00013

RUN NO. 1271/ 0 RN/L = 3.50 GRADIENT INTERVAL = -5.00/ 5.00

ALPHAO	BETAO	CNFO	CAFO	CLMFO	CYFO	CYNFO	CBLFO	CNBO	CABO	CLMBO
-.458	-6.986	.17690	.10150	-.08640	.15780	-.09290	.06790	.03280	.06210	-.01740
-.434	-4.836	.15700	.10300	-.07190	.10760	-.06320	.04700	.03160	.05870	-.01710
-.400	-.468	.11450	.09980	-.03960	.01060	-.00350	.00480	.02950	.05440	-.01610
-.367	3.667	.14080	.10460	-.06120	-.07590	.05030	-.03470	.02900	.05370	-.01580
-.366	5.838	.14880	.10630	-.06990	-.12350	.07920	-.05450	.02910	.05370	-.01590
	GRADIENT	-.00198	.00018	.00132	-.02159	.01335	-.00961	-.00031	-.00059	.00015

IA156A, AEDC PWT 16T-470, O T S W/SILTS (R8NOA8) (10 MAY 80)

REFERENCE DATA

SREF = 2690.0000 SQ.FT. XMRP = 976.0000 IN. XT
LREF = 1290.3000 INCHES YMRP = .0000 IN. YT
BREF = 1290.3000 INCHES ZMRP = 400.0000 IN. ZT
SCALE = .0200

PARAMETRIC DATA

IB-ELV = 12.000 OB-ELV = 5.000
BDFLAP = .000 SPDBRK = .000
RUDDER = .000 SILTS = 1.000
MACH = 1.100 RN/L = 3.500

RUN NO. 1272/ 0 RN/L = 3.50 GRADIENT INTERVAL = -5.00/ 5.00

ALPHAO	BETAO	CNFO	CAFO	CLMFO	CYFO	CYNFO	CBLFO	CNBO	CABO	CLMBO
4.134	-5.837	.33930	.09890	-.20460	.11640	-.07100	.05450	.03040	.05750	-.01620
3.984	-3.725	.31650	.09990	-.18890	.07530	-.04560	.03550	.02910	.05440	-.01570
3.776	.118	.28170	.09700	-.16180	.00500	-.00190	.00230	.02990	.05570	-.01620
3.840	4.028	.31360	.10090	-.18840	-.06790	.04370	-.03160	.02800	.05160	-.01530
3.794	6.117	.31620	.10010	-.19280	-.10880	.06880	-.04990	.02920	.05380	-.01590
	GRADIENT	-.00035	.00013	.00004	-.01847	.01152	-.00865	-.00014	-.00036	.00005

IA156A, AEDC PWT 16T-470, O T S W/SILTS (R8NOA9) (10 MAY 80)

REFERENCE DATA

SREF = 2690.0000 SQ.FT. XMRP = 976.0000 IN. XT
LREF = 1290.3000 INCHES YMRP = .0000 IN. YT
BREF = 1290.3000 INCHES ZMRP = 400.0000 IN. ZT
SCALE = .0200

PARAMETRIC DATA

IB-ELV = 12.000 OB-ELV = 5.000
BDFLAP = .000 SPDBRK = .000
RUDDER = .000 SILTS = 1.000
MACH = 1.150 RN/L = 3.500

RUN NO. 1273/ 0 RN/L = 3.50 GRADIENT INTERVAL = -5.00/ 5.00

ALPHAO	BETAO	CNFO	CAFO	CLMFO	CYFO	CYNFO	CBLFO	CNBO	CABO	CLMBO
-8.106	-5.939	-.13100	.10850	.13620	.18040	-.10600	.06280	.03190	.06160	-.01670
-8.213	-3.740	-.15180	.10980	.15180	.11120	-.06270	.03770	.03110	.05900	-.01650
-8.116	.191	-.19600	.10880	.18530	.00230	.00230	.00020	.03040	.05690	-.01630
-7.934	4.331	-.17580	.11180	.16770	-.11370	.07240	-.03940	.02950	.05450	-.01610
-7.974	6.231	-.17070	.11040	.16150	-.17280	.10850	-.05960	.03080	.05750	-.01670
	GRADIENT	-.00290	.00025	.00192	-.02787	.01674	-.00955	-.00020	-.00056	.00005

RUN NO. 1274/ 0 RN/L = 3.51 GRADIENT INTERVAL = -5.00/ 5.00

ALPHAO	BETAO	CNFO	CAFO	CLMFO	CYFO	CYNFO	CBLFO	CNBO	CABO	CLMBO
-6.162	-5.951	-.04920	.10750	.07510	.16560	-.09710	.06180	.03180	.06100	-.01670
-6.104	-4.035	-.06480	.10820	.08730	.10680	-.06070	.04010	.03080	.05820	-.01640
-6.198	.094	-.11830	.10680	.12800	.00320	.00030	.00100	.02890	.05360	-.01570
-5.994	4.239	-.08970	.10910	.10320	-.10860	.06810	-.03990	.02930	.05400	-.01600
-5.969	6.213	-.08150	.11060	.09460	-.16260	.10130	-.05980	.03000	.05540	-.01630
	GRADIENT	-.00300	.00011	.00192	-.02603	.01557	-.00967	-.00018	-.00051	.00005

IA156A, AEDC PWT 16T-470, O T S W/SILTS (R8NOA9) (10 MAY 80)

REFERENCE DATA

SREF = 2690.0000 SQ.FT. XMRP = 976.0000 IN. XT
LREF = 1290.3000 INCHES YMRP = .0000 IN. YT
BREF = 1290.3000 INCHES ZMRP = 400.0000 IN. ZT
SCALE = .0200

PARAMETRIC DATA

IB-ELV = 12.000 OB-ELV = 5.000
BDFLAP = .000 SPDBRK = .000
RUDDER = .000 SILTS = 1.000
MACH = 1.150 RN/L = 3.500

RUN NO. 1275/ 0 RN/L = 3.51 GRADIENT INTERVAL = -5.00/ 5.00

ALPHAO	BETAO	CNFO	CAFO	CLMFO	CYFO	CYNFO	CBLFO	CNBO	CABO	CLMBO
-4.038	-6.052	.04540	.10690	.00600	.15310	-.08980	.06130	.03130	.05980	-.01650
-4.300	-3.967	.01410	.10750	.02910	.09830	-.05640	.03970	.03020	.05670	-.01620
-4.202	.367	-.02770	.10500	.06090	-.00340	.00380	-.00200	.02890	.05340	-.01570
-3.747	4.274	.00710	.10930	.03200	-.09910	.06190	-.04030	.02830	.05190	-.01560
-3.861	6.129	.00930	.11030	.02800	-.14950	.09290	-.05910	.02960	.05450	-.01620
	GRADIENT	-.00101	.00020	.00048	-.02395	.01435	-.00971	-.00023	-.00059	.00007

RUN NO. 1276/ 0 RN/L = 3.50 GRADIENT INTERVAL = -5.00/ 5.00

ALPHAO	BETAO	CNFO	CAFO	CLMFO	CYFO	CYNFO	CBLFO	CNBO	CABO	CLMBO
-.443	-7.017	.19410	.10550	-.09950	.16190	-.09670	.06900	.03120	.05920	-.01660
-.417	-4.818	.17920	.10730	-.09040	.10810	-.06410	.04660	.03000	.05620	-.01610
-.384	-.496	.14450	.10560	-.06390	.01040	-.00300	.00460	.02830	.05200	-.01540
-.349	3.667	.16490	.11020	-.08050	-.07750	.05160	-.03480	.02800	.05160	-.01520
-.350	5.859	.16810	.11030	-.08490	-.12600	.08120	-.05550	.02850	.05230	-.01560
	GRADIENT	-.00173	.00034	.00120	-.02188	.01364	-.00959	-.00024	-.00054	.00011

RUN NO. 1277/ 0 RN/L = 3.50 GRADIENT INTERVAL = -5.00/ 5.00

ALPHAO	BETAO	CNFO	CAFO	CLMFO	CYFO	CYNFO	CBLFO	CNBO	CABO	CLMBO
4.119	-5.814	.33830	.10510	-.20580	.12020	-.07420	.05550	.02830	.05350	-.01510
3.983	-3.718	.32290	.10600	-.19460	.08070	-.04980	.03760	.02880	.05360	-.01560
3.772	.121	.29910	.10260	-.17560	.00970	-.00550	.00410	.02890	.05380	-.01560
3.856	4.026	.32790	.10650	-.19950	-.06450	.04150	-.03060	.02700	.04950	-.01480
3.798	6.127	.33270	.10790	-.20540	-.10940	.06920	-.04990	.02750	.05030	-.01510
	GRADIENT	.00066	.00007	-.00065	-.01875	.01179	-.00881	-.00023	-.00053	.00010

IA156A, AEDC PWT 16T-470, O T S W/SILTS (R8NOB0) (10 MAY 80)

REFERENCE DATA

SREF = 2690.0000 SQ.FT. XMRP = 976.0000 IN. XT
LREF = 1290.3000 INCHES YMRP = .0000 IN. YT
BREF = 1290.3000 INCHES ZMRP = 400.0000 IN. ZT
SCALE = .0200

PARAMETRIC DATA

IB-ELV = 12.000 OB-ELV = 5.000
BDFLAP = .000 SPDBRK = .000
RUDDER = .000 SILTS = 1.000
MACH = 1.250 RN/L = 3.500

RUN NO. 1278/ 0 RN/L = 3.50 GRADIENT INTERVAL = -5.00/ 5.00

ALPHAO	BETAO	CNFO	CAFO	CLMFO	CYFO	CYNFO	CBLFO	CNBO	CABO	CLMBO
-8.117	-5.934	-.11390	.11250	.12190	.17660	-.10480	.06240	.02870	.05580	-.01490
-8.222	-3.728	-.13400	.11430	.13700	.10800	-.06100	.03800	.02810	.05350	-.01490
-8.114	.192	-.16270	.11270	.15920	-.00120	.00550	-.00010	.02690	.05040	-.01440
-7.937	4.364	-.14680	.11470	.14420	-.11980	.07870	-.04160	.02790	.05230	-.01500
-7.972	6.250	-.14200	.11500	.13860	-.17860	.11480	-.06160	.02840	.05360	-.01510
	GRADIENT	-.00152	.00005	.00084	-.02815	.01727	-.00984	-.00002	-.00014	-.00001

RUN NO. 1279/ 0 RN/L = 3.50 GRADIENT INTERVAL = -5.00/ 5.00

ALPHAO	BETAO	CNFO	CAFO	CLMFO	CYFO	CYNFO	CBLFO	CNBO	CABO	CLMBO
-6.202	-5.973	-.03530	.11160	.06240	.16330	-.09660	.06060	.02810	.05410	-.01470
-6.133	-4.024	-.04410	.11250	.06910	.10470	-.05960	.03940	.02790	.05290	-.01480
-6.196	.131	-.08230	.11150	.09810	-.00320	.00600	-.00040	.02650	.04960	-.01430
-5.998	4.246	-.06280	.11430	.08010	-.11130	.07180	-.04020	.02700	.05000	-.01470
-5.797	6.327	-.05420	.11320	.07130	-.16860	.10770	-.06090	.02790	.05250	-.01500
	GRADIENT	-.00227	.00022	.00134	-.02612	.01589	-.00962	-.00011	-.00035	.00001

RUN NO. 1280/ 0 RN/L = 3.50 GRADIENT INTERVAL = -5.00/ 5.00

ALPHAO	BETAO	CNFO	CAFO	CLMFO	CYFO	CYNFO	CBLFO	CNBO	CABO	CLMBO
-4.179	-6.048	.04890	.11090	-.00010	.15350	-.09090	.05940	.02870	.05500	-.01510
-4.309	-3.970	.02840	.11190	.01500	.09420	-.05350	.03720	.02790	.05280	-.01490
-4.187	.370	.00320	.11050	.03370	-.00790	.00800	-.00260	.02690	.05000	-.01460
-3.744	4.281	.03400	.11370	.00790	-.10330	.06580	-.03890	.02620	.04820	-.01430
-3.855	6.144	.02970	.11310	.00920	-.15390	.09750	-.05780	.02760	.05130	-.01500
	GRADIENT	.00056	.00021	-.00077	-.02393	.01445	-.00922	-.00021	-.00056	.00007

RUN NO. 1281/ 0 RN/L = 3.51 GRADIENT INTERVAL = -5.00/ 5.00

ALPHAO	BETAO	CNFO	CAFO	CLMFO	CYFO	CYNFO	CBLFO	CNBO	CABO	CLMBO
-.472	-7.033	.19950	.11050	-.10920	.16180	-.09730	.06540	.02810	.05360	-.01490
-.444	-4.826	.18920	.11280	-.10210	.10820	-.06440	.04460	.02770	.05250	-.01470
-.401	-.499	.16380	.11100	-.08330	.01090	-.00380	.00460	.02620	.04890	-.01420
-.365	3.669	.17970	.11650	-.09650	-.07680	.05090	-.03270	.02520	.04660	-.01370
-.377	5.868	.17640	.11450	-.09670	-.12610	.08160	-.05210	.02630	.04880	-.01420
	GRADIENT	-.00115	.00043	.00068	-.02178	.01358	-.00910	-.00029	-.00070	.00012

IA156A, AEDC PWT 16T-470, O T S W/SILTS (R8N080) (10 MAY 80)

REFERENCE DATA

SREF = 2690.0000 SQ.FT. XMRP = 976.0000 IN. XT
LREF = 1290.3000 INCHES YMRP = .0000 IN. YT
BREF = 1290.3000 INCHES ZMRP = 400.0000 IN. ZT
SCALE = .0200

PARAMETRIC DATA

IB-ELV = 12.000 OB-ELV = 5.000
BDFLAP = .000 SPDBRK = .000
RUDDER = .000 SILTS = 1.000
MACH = 1.250 RN/L = 3.500

RUN NO. 1282/ 0 RN/L = 3.51 GRADIENT INTERVAL = -5.00/ 5.00

ALPHAO	BETAO	CNFO	CAFO	CLMFO	CYFO	CYNFO	CBLFO	CNBO	CABO	CLMBO
4.122	-5.803	.35830	.11230	-.22570	.12260	-.07620	.05330	.02670	.05030	-.01430
3.999	-3.707	.34400	.11280	-.21570	.07990	-.04960	.03560	.02660	.04960	-.01430
3.758	.132	.31980	.10960	-.19650	.00540	-.00260	.00270	.02620	.04910	-.01410
3.825	4.039	.33320	.11230	-.20840	-.07080	.04660	-.03110	.02600	.04760	-.01430
3.778	6.113	.33100	.11190	-.20870	-.11420	.07350	-.04910	.02620	.04810	-.01430
	GRADIENT	-.00138	-.00006	.00093	-.01946	.01242	-.00861	-.00008	-.00026	-.00000

IA156A, AEDC PWT 16T-470, O T S W/SILTS (R8N081) (10 MAY 80)

REFERENCE DATA

SREF = 2690.0000 SQ.FT. XMRP = 976.0000 IN. XT
LREF = 1290.3000 INCHES YMRP = .0000 IN. YT
BREF = 1290.3000 INCHES ZMRP = 400.0000 IN. ZT
SCALE = .0200

PARAMETRIC DATA

IB-ELV = 12.000 OB-ELV = 5.000
BDFLAP = .000 SPDBRK = .000
RUDDER = .000 SILTS = 1.000
MACH = 1.400 RN/L = 3.500

RUN NO. 1283/ 0 RN/L = 3.49 GRADIENT INTERVAL = -5.00/ 5.00

ALPHAO	BETAO	CNFO	CAFO	CLMFO	CYFO	CYNFO	CBLFO	CNBO	CABO	CLMBO
-8.172	-5.916	-.10480	.12000	.11560	.18000	-.10910	.06050	.02620	.05160	-.01340
-8.232	-3.703	-.12160	.12260	.12720	.11310	-.06640	.03750	.02580	.04970	-.01350
-8.132	.227	-.14720	.12070	.14540	.00010	.00350	-.00050	.02460	.04630	-.01310
-7.934	4.409	-.13320	.12080	.13140	-.12160	.08010	-.04090	.02530	.04800	-.01340
-7.993	6.316	-.13440	.11930	.13100	-.18050	.11710	-.05980	.02560	.04910	-.01340
	GRADIENT	-.00138	-.00022	.00048	-.02893	.01806	-.00966	-.00006	-.00020	.00001

RUN NO. 1284/ 0 RN/L = 3.50 GRADIENT INTERVAL = -5.00/ 5.00

ALPHAO	BETAO	CNFO	CAFO	CLMFO	CYFO	CYNFO	CBLFO	CNBO	CABO	CLMBO
-6.235	-5.949	-.03720	.11800	.06310	.16690	-.10130	.05770	.02580	.05000	-.01350
-6.174	-4.010	-.04800	.11970	.07060	.10930	-.06460	.03750	.02520	.04840	-.01320
-6.227	.157	-.07410	.11830	.08810	-.00050	.00350	-.00050	.02520	.04710	-.01360
-5.972	4.288	-.05940	.11880	.07320	-.11370	.07390	-.03810	.02470	.04660	-.01320
-5.941	6.258	-.06210	.11670	.07400	-.17170	.11100	-.05760	.02540	.04850	-.01340
	GRADIENT	-.00138	-.00011	.00032	-.02687	.01669	-.00911	-.00006	-.00022	-.00000

IA156A, AEDC PWT 16T-470, O T S W/SILTS (R8NOB1) (10 MAY 80)

REFERENCE DATA

SREF = 2690.0000 SQ.FT. XMRP = 976.0000 IN. XT
LREF = 1290.3000 INCHES YMRP = .0000 IN. YT
BREF = 1290.3000 INCHES ZMRP = 400.0000 IN. ZT
SCALE = .0200

PARAMETRIC DATA

IB-ELV = 12.000 OB-ELV = 5.000
BDFLAP = .000 SPDBRK = .000
RUDDER = .000 SILTS = 1.000
MACH = 1.400 RN/L = 3.500

RUN NO. 1285/ 0 RN/L = 3.50 GRADIENT INTERVAL = -5.00/ 5.00

ALPHAO	BETAO	CNFO	CAFO	CLMFO	CYFO	CYNFO	CBLFO	CNBO	CABO	CLMBO
-4.308	-5.994	.03140	.11630	.00980	.15710	-.09500	.05590	.02560	.04950	-.01340
-4.303	-3.954	.02600	.11780	.01360	.10050	-.05880	.03550	.02530	.04820	-.01340
-4.210	.427	.00920	.11580	.02360	-.00730	.00730	-.00290	.02440	.04560	-.01320
-3.718	4.312	.03350	.11740	.00260	-.10530	.06760	-.03640	.02470	.04620	-.01330
-3.823	6.165	.02330	.11490	.00880	-.15550	.09940	-.05400	.02500	.04750	-.01330
	GRADIENT	.00081	-.00006	-.00125	-.02489	.01529	-.00870	-.00008	-.00025	.00001

RUN NO. 1286/ 0 RN/L = 3.50 GRADIENT INTERVAL = -5.00/ 5.00

ALPHAO	BETAO	CNFO	CAFO	CLMFO	CYFO	CYNFO	CBLFO	CNBO	CABO	CLMBO
-.534	-7.071	.19100	.11500	-.10750	.16650	-.10100	.06260	.02620	.04990	-.01380
-.500	-4.898	.17850	.11590	-.10000	.11030	-.06540	.04200	.02510	.04800	-.01330
-.449	-.441	.16480	.11520	-.09090	.00920	-.00230	.00390	.02440	.04600	-.01300
-.429	3.664	.17390	.11960	-.09880	-.07780	.05180	-.03060	.02410	.04480	-.01300
-.442	5.877	.16350	.11740	-.09320	-.13090	.08570	-.05010	.02480	.04650	-.01330
	GRADIENT	-.00057	.00042	.00017	-.02198	.01369	-.00848	-.00012	-.00037	.00004

RUN NO. 1287/ 0 RN/L = 3.49 GRADIENT INTERVAL = -5.00/ 5.00

ALPHAO	BETAO	CNFO	CAFO	CLMFO	CYFO	CYNFO	CBLFO	CNBO	CABO	CLMBO
4.136	-5.764	.35340	.11780	-.22750	.12480	-.07850	.05140	.02480	.04700	-.01320
4.015	-3.670	.33530	.11730	-.21560	.07880	-.04920	.03380	.02440	.04510	-.01320
3.731	.162	.31830	.11500	-.20240	.00500	-.00250	.00240	.02420	.04570	-.01290
3.793	4.054	.32560	.11800	-.20900	-.07050	.04670	-.02940	.02350	.04370	-.01270
3.718	6.096	.32470	.11660	-.21030	-.11600	.07570	-.04690	.02430	.04520	-.01320
	GRADIENT	-.00125	.00009	.00085	-.01933	.01242	-.00818	-.00012	-.00018	.00006

IA156A, AEDC PWT 16T-470, O T S W/SILTS (R8NOB2) (10 MAY 80)

REFERENCE DATA

SREF = 2690.0000 SQ.FT. XMRP = 976.0000 IN. XT
LREF = 1290.3000 INCHES YMRP = .0000 IN. YT
BREF = 1290.3000 INCHES ZMRP = 400.0000 IN. ZT
SCALE = .0200

PARAMETRIC DATA

IB-ELV = 12.000 OB-ELV = 5.000
BDFLAP = .000 SPDBRK = .000
RUDDER = .000 SILTS = 1.000
MACH = 1.550 RN/L = 3.200

RUN NO. 1288/ 0 RN/L = 3.00 GRADIENT INTERVAL = -5.00/ 5.00

ALPHAO	BETAO	CNFO	CAFO	CLMFO	CYFO	CYNFO	CBLFO	CNBO	CABO	CLMBO
-8.285	-5.892	-.09170	.12360	.10630	.17530	-.10860	.05750	.02330	.04550	-.01200
-8.337	-3.675	-.11020	.12510	.11900	.11130	-.06630	.03600	.02290	.04450	-.01190
-8.205	.319	-.13440	.12430	.13470	.00080	.00360	-.00070	.02240	.04250	-.01190
-7.984	4.502	-.13130	.12310	.13000	-.11610	.07740	-.03910	.02250	.04300	-.01190
-7.934	6.371	-.12960	.12110	.12770	-.17070	.11250	-.05640	.02290	.04410	-.01200
	GRADIENT	-.00255	-.00024	.00133	-.02781	.01758	-.00919	-.00005	-.00018	.00000

RUN NO. 1289/ 0 RN/L = 3.00 GRADIENT INTERVAL = -5.00/ 5.00

ALPHAO	BETAO	CNFO	CAFO	CLMFO	CYFO	CYNFO	CBLFO	CNBO	CABO	CLMBO
-6.328	-5.943	-.03120	.11990	.05810	.16690	-.10320	.05530	.02310	.04560	-.01180
-6.270	-3.986	-.04710	.12200	.06870	.11080	-.06660	.03620	.02270	.04390	-.01180
-6.272	.238	-.07060	.12080	.08430	-.00030	.00330	-.00040	.02220	.04180	-.01180
-5.982	4.385	-.06650	.12080	.07800	-.11150	.07360	-.03650	.02240	.04270	-.01190
-5.925	6.371	-.06400	.11810	.07520	-.16680	.10940	-.05510	.02260	.04300	-.01190
	GRADIENT	-.00233	-.00014	.00112	-.02655	.01675	-.00868	-.00004	-.00014	-.00001

RUN NO. 1290/ 0 RN/L = 3.00 GRADIENT INTERVAL = -5.00/ 5.00

ALPHAO	BETAO	CNFO	CAFO	CLMFO	CYFO	CYNFO	CBLFO	CNBO	CABO	CLMBO
-4.204	-6.069	.03920	.11850	.00340	.15830	-.09790	.05280	.02340	.04580	-.01210
-4.444	-3.944	.01490	.11980	.01980	.10200	-.06100	.03270	.02240	.04340	-.01170
-4.280	.501	-.00250	.11830	.03080	-.00710	.00750	-.00260	.02210	.04130	-.01190
-3.717	4.430	.01400	.11800	.01540	-.10590	.06940	-.03420	.02250	.04270	-.01190
-3.798	6.262	.00820	.11600	.01880	-.15570	.10170	-.05130	.02230	.04220	-.01190
	GRADIENT	-.00019	-.00022	-.00046	-.02482	.01557	-.00799	.00001	-.00009	-.00002

RUN NO. 1291/ 0 RN/L = 3.00 GRADIENT INTERVAL = -5.00/ 5.00

ALPHAO	BETAO	CNFO	CAFO	CLMFO	CYFO	CYNFO	CBLFO	CNBO	CABO	CLMBO
-.583	-7.072	.17490	.11360	-.09990	.16800	-.10520	.05890	.02370	.04650	-.01220
-.548	-4.907	.16320	.11640	-.09250	.11210	-.06810	.03910	.02270	.04370	-.01190
-.520	-.554	.14250	.11540	-.07840	.00990	-.00230	.00300	.02240	.04180	-.01210
-.504	3.581	.14680	.11680	-.08390	-.08120	.05650	-.02910	.02220	.04180	-.01190
-.509	5.749	.14700	.11530	-.08590	-.13130	.08900	-.04630	.02270	.04280	-.01210
	GRADIENT	-.00196	.00004	.00103	-.02278	.01468	-.00804	-.00006	-.00023	-.00000

IA156A, AEDC PWT 16T-470, O T S W/SILTS (R8N0B2) (10 MAY 80)

REFERENCE DATA

SREF = 2690.0000 SQ.FT. XMRP = 976.0000 IN. XT
LREF = 1290.3000 INCHES YMRP = .0000 IN. YT
BREF = 1290.3000 INCHES ZMRP = 400.0000 IN. ZT
SCALE = .0200

PARAMETRIC DATA

IB-ELV = 12.000 OB-ELV = 5.000
BDFLAP = .000 SPDBRK = .000
RUDDER = .000 SILTS = 1.000
MACH = 1.550 RN/L = 3.200

RUN NO. 1292/ 0 RN/L = 3.00 GRADIENT INTERVAL = -5.00/ 5.00

ALPHAO	BETAO	CNFO	CAFO	CLMFO	CYFO	CYNFO	CBLFO	CNBO	CABO	CLMBO
4.186	-5.682	.33040	.11620	-.21580	.12790	-.08300	.05030	.02350	.04520	-.01230
3.986	-3.541	.31050	.11480	-.20250	.08090	-.05260	.03240	.02290	.04310	-.01220
3.703	.248	.30270	.11250	-.19710	.00570	-.00390	.00300	.02250	.04270	-.01200
3.683	4.063	.30900	.11510	-.20330	-.06980	.04670	-.02710	.02220	.04180	-.01190
3.648	6.133	.30480	.11340	-.20230	-.11890	.07940	-.04510	.02270	.04270	-.01220
	GRADIENT	-.00020	.00004	-.00011	-.01982	.01306	-.00783	-.00009	-.00017	.00004

IA156A, AEDC PWT 16T-470, O T S W/SILTS (R8N0B3) (10 MAY 80)

REFERENCE DATA

SREF = 2690.0000 SQ.FT. XMRP = 976.0000 IN. XT
LREF = 1290.3000 INCHES YMRP = .0000 IN. YT
BREF = 1290.3000 INCHES ZMRP = 400.0000 IN. ZT
SCALE = .0200

PARAMETRIC DATA

IB-ELV = 12.000 OB-ELV = 9.000
BDFLAP = .000 SPDBRK = .000
RUDDER = .000 SILTS = 1.000
MACH = .600 RN/L = 3.500

RUN NO. 1295/ 0 RN/L = 3.50 GRADIENT INTERVAL = -5.00/ 5.00

ALPHAO	BETAO	CNFO	CAFO	CLMFO	CYFO	CYNFO	CBLFO	CNBO	CABO	CLMBO
-8.119	-7.790	-.04200	.03020	.03410	.22080	-.13480	.06560	.02370	.04350	-.01300
-8.082	-5.753	-.05270	.03410	.04100	.16060	-.09750	.04790	.02380	.04310	-.01320
-8.072	-3.742	-.06230	.03710	.04820	.10310	-.06150	.03040	.02240	.04080	-.01240
-7.981	.359	-.08250	.03580	.06380	-.00830	.00810	-.00330	.02080	.03790	-.01150
-7.836	4.240	-.07400	.03650	.05390	-.11220	.07300	-.03480	.02240	.04010	-.01250
-7.859	6.141	-.07290	.03450	.05090	-.16450	.10570	-.05030	.02350	.04240	-.01300
-7.879	8.123	-.07770	.03260	.05270	-.21430	.13620	-.06460	.02370	.04290	-.01320
	GRADIENT	-.00150	-.00008	.00074	-.02697	.01685	-.00817	-.00000	-.00009	-.00001

RUN NO. 1296/ 0 RN/L = 3.49 GRADIENT INTERVAL = -5.00/ 5.00

ALPHAO	BETAO	CNFO	CAFO	CLMFO	CYFO	CYNFO	CBLFO	CNBO	CABO	CLMBO
-6.119	-7.865	.02510	.03220	-.01220	.21660	-.13330	.06580	.02390	.04350	-.01320
-6.070	-5.846	.01330	.03490	-.00470	.16020	-.09870	.04900	.02340	.04330	-.01280
-5.997	-3.956	.00340	.03950	.00310	.10320	-.06300	.03170	.02220	.04000	-.01240
-6.035	.089	-.02400	.03770	.02350	-.00360	.00410	-.00150	.02040	.03730	-.01130
-5.902	4.151	-.01370	.03840	.01270	-.10450	.06730	-.03280	.02230	.03980	-.01250
-5.812	6.114	-.00710	.03720	.00580	-.15600	.10000	-.04900	.02290	.04180	-.01260
-5.845	8.081	-.01420	.03380	.00880	-.20470	.13100	-.06380	.02410	.04400	-.01330
	GRADIENT	-.00211	-.00014	.00118	-.02562	.01607	-.00796	.00001	-.00002	-.00001

IA156A, AEDC PWT 16T-470, O T S W/SILTS (R8N083) (10 MAY 80)

REFERENCE DATA

SREF = 2690.0000 SQ.FT. XMRP = 976.0000 IN. XT
LREF = 1290.3000 INCHES YMRP = .0000 IN. YT
BREF = 1290.3000 INCHES ZMRP = 400.0000 IN. ZT
SCALE = .0200

PARAMETRIC DATA

IB-ELV = 12.000 OB-ELV = 9.000
BDFLAP = .000 SPDBRK = .000
RUDDER = .000 SILTS = 1.000
MACH = .600 RN/L = 3.500

RUN NO. 1297/ 0 RN/L = 3.49 GRADIENT INTERVAL = -5.00/ 5.00

ALPHAO	BETAO	CNFO	CAFO	CLMFO	CYFO	CYNFO	CBLFO	CNBO	CABO	CLMBO
-4.186	-7.885	.08190	.03380	-.05100	.20550	-.12730	.06450	.02350	.04310	-.01290
-4.176	-5.895	.07090	.03690	-.04450	.14880	-.09190	.04710	.02300	.04270	-.01250
-4.190	-3.851	.06010	.04070	-.03580	.09150	-.05530	.02870	.02210	.04000	-.01220
-3.978	.173	.04410	.04060	-.02280	-.00400	.00440	-.00180	.02030	.03670	-.01120
-3.670	4.213	.06370	.04060	-.04000	-.10220	.06570	-.03300	.02140	.03830	-.01200
-3.770	6.000	.05960	.03880	-.03900	-.14360	.09270	-.04690	.02240	.04000	-.01250
-3.798	7.974	.05740	.03470	-.03910	-.19090	.12270	-.06170	.02350	.04330	-.01290
	GRADIENT	.00045	-.00001	-.00052	-.02402	.01501	-.00765	-.00009	-.00021	.00002

RUN NO. 1298/ 0 RN/L = 3.49 GRADIENT INTERVAL = -5.00/ 5.00

ALPHAO	BETAO	CNFO	CAFO	CLMFO	CYFO	CYNFO	CBLFO	CNBO	CABO	CLMBO
-.340	-8.690	.20680	.03020	-.13470	.20510	-.12990	.06970	.02310	.04230	-.01260
-.331	-6.609	.19310	.03460	-.12590	.15520	-.09780	.05240	.02200	.04020	-.01210
-.315	-4.354	.18160	.03970	-.11800	.09840	-.06120	.03350	.02130	.03860	-.01180
-.289	-.306	.16490	.04020	-.10310	.00550	-.00070	.00160	.01940	.03540	-.01070
-.260	3.764	.18350	.04020	-.11990	-.07550	.05180	-.02720	.02020	.03610	-.01130
-.254	5.857	.18710	.03880	-.12490	-.12210	.08230	-.04350	.02190	.03870	-.01240
-.245	7.949	.18900	.03510	-.12820	-.16520	.11100	-.05870	.02290	.04120	-.01280
	GRADIENT	.00024	.00006	-.00024	-.02142	.01392	-.00748	-.00014	-.00031	.00006

RUN NO. 1299/ 0 RN/L = 3.49 GRADIENT INTERVAL = -5.00/ 5.00

ALPHAO	BETAO	CNFO	CAFO	CLMFO	CYFO	CYNFO	CBLFO	CNBO	CABO	CLMBO
4.199	-7.951	.34050	.02790	-.22770	.15840	-.10400	.06210	.02130	.03910	-.01170
4.108	-5.827	.32690	.03080	-.21920	.11650	-.07660	.04570	.02110	.03880	-.01150
4.094	-3.848	.31950	.03310	-.21360	.07580	-.04960	.02990	.02050	.03740	-.01130
3.907	.076	.29880	.03250	-.19630	.00780	-.00440	.00230	.01970	.03560	-.01090
3.939	4.101	.32020	.03160	-.21380	-.06570	.04470	-.02620	.01980	.03550	-.01100
3.887	6.231	.32170	.03070	-.21800	-.11120	.07560	-.04320	.02100	.03680	-.01200
3.874	8.224	.31850	.02690	-.21760	-.14740	.10020	-.05720	.02190	.03890	-.01230
	GRADIENT	.00011	-.00019	-.00004	-.01780	.01186	-.00706	-.00009	-.00024	.00004

IA156A, AEDC PWT 16T-470, O T S W/SILTS (R8N0B3) (10 MAY 80)

REFERENCE DATA

SREF = 2690.0000 SQ.FT. XMRP = 976.0000 IN. XT
LREF = 1290.3000 INCHES YMRP = .0000 IN. YT
BREF = 1290.3000 INCHES ZMRP = 400.0000 IN. ZT
SCALE = .0200

PARAMETRIC DATA

IB-ELV = 12.000 OB-ELV = 9.000
BDFLAP = .000 SPDBRK = .000
RUDDER = .000 SILTS = 1.000
MACH = .600 RN/L = 3.500

RUN NO. 1300/ 0 RN/L = 3.50 GRADIENT INTERVAL = -5.00/ 5.00

ALPHAO	BETAO	CNFO	CAFO	CLMFO	CYFO	CYNFO	CBLFO	CNBO	CABO	CLMBO
6.239	-8.007	.40550	.02240	-.27260	.15030	-.09900	.06210	.02140	.03910	-.01170
6.221	-5.934	.40080	.02490	-.27040	.10990	-.07230	.04540	.02100	.03900	-.01140
6.207	-3.861	.39370	.02740	-.26500	.07490	-.04850	.03010	.02050	.03790	-.01120
5.933	.197	.36980	.02830	-.24520	.00460	-.00250	.00120	.01990	.03580	-.01110
5.852	4.115	.37860	.02820	-.25440	-.06270	.04220	-.02620	.01960	.03480	-.01110
5.824	6.058	.38300	.02560	-.25980	-.09630	.06550	-.03980	.02100	.03700	-.01190
5.838	8.110	.38190	.02180	-.26140	-.13560	.09260	-.05530	.02170	.03850	-.01220
	GRADIENT	-.00192	.00010	.00135	-.01725	.01137	-.00706	-.00011	-.00039	.00001

RUN NO. 1301/ 0 RN/L = 3.50 GRADIENT INTERVAL = -5.00/ 5.00

ALPHAO	BETAO	CNFO	CAFO	CLMFO	CYFO	CYNFO	CBLFO	CNBO	CABO	CLMBO
8.134	-7.858	.46260	.01500	-.31280	.13420	- 08810	.05870	.02210	.04080	-.01210
8.039	-5.780	.45570	.01980	-.30830	.09820	-.06380	.04250	.02100	.03810	-.01160
8.044	-3.799	.45270	.02280	-.30540	.06460	-.04150	.02790	.01950	.03530	-.01080
7.947	.182	.44140	.02170	-.29510	.00550	-.00310	.00190	.01960	.03540	-.01090
7.983	4.222	.45380	.02240	-.30600	-.05470	.03700	-.02460	.01950	.03450	-.01100
7.948	6.247	.45860	.01800	-.31200	-.08750	.05920	-.03880	.02180	.03810	-.01240
7.938	8.284	.45010	.01360	-.30830	-.12660	.08670	-.05590	.02240	.03960	-.01270
	GRADIENT	.00014	-.00005	-.00008	-.01487	.00979	-.00654	-.00000	-.00010	-.00002

IA156A, AEDC PWT 16T-470, O T S W/SILTS (R8NOB4) (10 MAY 80)

REFERENCE DATA

SREF = 2690.0000 SQ.FT. XMRP = 976.0000 IN. XT
LREF = 1290.3000 INCHES YMRP = .0000 IN. YT
BREF = 1290.3000 INCHES ZMRP = 400.0000 IN. ZT
SCALE = .0200

PARAMETRIC DATA

IB-ELV = 12.000 OB-ELV = 9.000
BDFLAP = .000 SPDBRK = .000
RUDDER = .000 SILTS = 1.000
MACH = .800 RN/L = 3.500

RUN NO. 1302/ 0 RN/L = 3.50 GRADIENT INTERVAL = -5.00/ 5.00

ALPHAO	BETAO	CNFO	CAFO	CLMFO	CYFO	CYNFO	CBLFO	CNBO	CABO	CLMBO
-8.194	-5.835	-.05410	.04840	.04610	.17080	-.10420	.05140	.02320	.04310	-.01260
-8.031	-3.872	-.05760	.04970	.04860	.11030	-.06580	.03290	.02380	.04420	-.01290
-8.097	.378	-.10180	.04560	.08100	-.00570	.00620	-.00200	.02190	.04100	-.01170
-7.933	4.308	-.08040	.04850	.06190	-.11450	.07370	-.03490	.02300	.04310	-.01240
-7.931	6.209	-.07830	.04770	.05900	-.16820	.10640	-.05100	.02450	.04550	-.01330
	GRADIENT	-.00289	-.00016	.00171	-.02748	.01705	-.00829	-.00010	-.00014	.00006

RUN NO. 1303/ 0 RN/L = 3.50 GRADIENT INTERVAL = -5.00/ 5.00

ALPHAO	BETAO	CNFO	CAFO	CLMFO	CYFO	CYNFO	CBLFO	CNBO	CABO	CLMBO
-6.147	-5.926	.01920	.04770	-.00610	.16700	-.10300	.05180	.02380	.04400	-.01300
-6.097	-4.006	.00600	.05030	.00370	.10710	-.06530	.03330	.02280	.04200	-.01250
-6.162	.123	-.03360	.04730	.03320	-.00030	.00170	.00000	.02050	.03790	-.01120
-5.993	4.229	-.01410	.04840	.01570	-.10740	.06890	-.03350	.02300	.04290	-.01250
-5.783	6.303	.00250	.04910	.00230	-.16100	.10220	-.05040	.02310	.04330	-.01240
	GRADIENT	-.00245	-.00023	.00146	-.02605	.01630	-.00811	.00002	.00011	.00000

RUN NO. 1304/ 0 RN/L = 3.50 GRADIENT INTERVAL = -5.00/ 5.00

ALPHAO	BETAO	CNFO	CAFO	CLMFO	CYFO	CYNFO	CBLFO	CNBO	CABO	CLMBO
-4.140	-6.025	.09160	.04840	-.05620	.15840	-.09830	.05090	.02350	.04380	-.01270
-4.277	-3.930	.06900	.05010	-.04000	.09620	-.05840	.03100	.02250	.04200	-.01220
-4.169	.373	.03650	.04720	-.01580	-.00690	.00580	-.00220	.02050	.03810	-.01110
-3.749	4.270	.06640	.05020	-.03950	-.10310	.06610	-.03340	.02180	.04000	-.01200
-3.821	6.099	.06890	.04870	-.04310	-.14770	.09440	-.04820	.02340	.04240	-.01290
	GRADIENT	-.00044	.00000	.00016	-.02430	.01518	-.00785	-.00009	-.00026	.00003

RUN NO. 1306/ 0 RN/L = 3.50 GRADIENT INTERVAL = -5.00/ 5.00

ALPHAO	BETAO	CNFO	CAFO	CLMFO	CYFO	CYNFO	CBLFO	CNBO	CABO	CLMBO
-.363	-6.811	.22050	.04520	-.14270	.16400	-.10360	.05650	.02230	.04160	-.01200
-.352	-4.652	.20590	.04810	-.13300	.10800	-.06780	.03750	.02120	.03940	-.01150
-.324	-.486	.17740	.04660	-.11060	.00990	-.00380	.00360	.02010	.03670	-.01100
-.289	3.686	.19900	.04870	-.12860	-.07610	.05150	-.02760	.02070	.03780	-.01140
-.286	5.801	.20640	.04800	-.13610	-.12520	.08390	-.04520	.02200	.03990	-.01210
	GRADIENT	-.00083	.00007	.00053	-.02208	.01431	-.00781	-.00006	-.00019	.00001

IA156A, AEDC PWT 16T-470, O T S W/SILTS (R8N0B4) (10 MAY 80)

REFERENCE DATA

SREF = 2690.0000 SQ.FT. XMRP = 976.0000 IN. XT
LREF = 1290.3000 INCHES YMRP = .0000 IN. YT
BREF = 1290.3000 INCHES ZMRP = 400.0000 IN. ZT
SCALE = .0200

PARAMETRIC DATA

IB-ELV = 12.000 OB-ELV = 9.000
BDFLAP = .000 SPDBRK = .000
RUDDER = .000 SILTS = 1.000
MACH = .800 RN/L = 3.500

RUN NO. 1314/ 0 RN/L = 3.49 GRADIENT INTERVAL = -5.00/ 5.00

ALPHAO	BETAO	CNFO	CAFO	CLMFO	CYFO	CYNFO	CBLFO	CNBO	CABO	CLMBO
6.135	-5.878	.42890	.03950	-.28890	.11920	-.07850	.04680	.02210	.04050	-.01220
6.107	-3.811	.42820	.04270	-.28900	.07520	-.04870	.02940	.02030	.03670	-.01130
5.823	.172	.40300	.03790	-.26930	.00480	-.00200	.00210	.02130	.03880	-.01180
5.769	4.035	.40880	.03900	-.27530	-.05900	.03970	-.02320	.02090	.03760	-.01160
5.762	6.056	.40910	.03950	-.27790	-.10140	.06890	-.03900	.02150	.03890	-.01190
	GRADIENT	-.00249	-.00048	.00176	-.01711	.01127	-.00671	.00008	.00012	-.00004

IA156A, AEDC PWT 16T-470, O T S W/SILTS (R8N0B5) (10 MAY 80)

REFERENCE DATA

SREF = 2690.0000 SQ.FT. XMRP = 976.0000 IN. XT
LREF = 1290.3000 INCHES YMRP = .0000 IN. YT
BREF = 1290.3000 INCHES ZMRP = 400.0000 IN. ZT
SCALE = .0200

PARAMETRIC DATA

IB-ELV = 12.000 OB-ELV = 9.000
BDFLAP = .000 SPDBRK = .000
RUDDER = .000 SILTS = 1.000
MACH = .800 RN/L = 3.500

RUN NO. 1313/ 0 RN/L = 3.49 GRADIENT INTERVAL = -5.00/ 5.00

ALPHAO	BETAO	CNFO	CAFO	CLMFO	CYFO	CYNFO	CBLFO	CNBO	CABO	CLMBO
-.366	-6.780	.22140	.04480	-.14330	.16310	-.10330	.05650	.02250	.04170	-.01230
-.353	-4.684	.20920	.04810	-.13540	.10880	-.06820	.03790	.02140	.03990	-.01160
-.323	-.479	.17850	.04670	-.11150	.01030	-.00390	.00370	.02020	.03710	-.01110
-.288	3.692	.20090	.04910	-.13000	-.07800	.05260	-.02810	.02130	.03870	-.01180
-.287	5.812	.20660	.04740	-.13670	-.12610	.08460	-.04550	.02220	.04080	-.01220
	GRADIENT	-.00100	.00012	.00065	-.02230	.01442	-.00788	-.00001	-.00014	-.00002

IA156A, AEDC PWT 16T-470, O T S W/SILTS (R8NOB6) (10 MAY 80)

REFERENCE DATA

SREF = 2690.0000 SQ.FT. XMRP = 976.0000 IN. XT
LREF = 1290.3000 INCHES YMRP = .0000 IN. YT
BREF = 1290.3000 INCHES ZMRP = 400.0000 IN. ZT
SCALE = .0200

PARAMETRIC DATA

IB-ELV = 12.000 OB-ELV = 9.000
BDFLAP = .000 SPDBRK = .000
RUDDER = .000 SILTS = 1.000
MACH = .900 RN/L = 3.500

RUN NO. 1308/ 0 RN/L = 3.50 GRADIENT INTERVAL = -5.00/ 5.00

ALPHAO	BETAO	CNFO	CAFO	CLMFO	CYFO	CYNFO	CBLFO	CNBO	CABO	CLMBO
-8.117	-5.915	-.07740	.06730	.07240	.18330	-.11050	.05490	.02690	.05030	-.01450
-8.125	-3.844	-.09280	.06870	.08370	.11400	-.06600	.03320	.02560	.04780	-.01390
-8.105	.288	-.13720	.06550	.11570	.00000	.00210	-.00110	.02330	.04320	-.01270
-7.938	4.265	-.11830	.06850	.09890	-.11580	.07290	-.03630	.02490	.04600	-.01360
-7.950	6.207	-.11530	.06840	.09480	-.17580	.11040	-.05500	.02670	.04930	-.01460
	GRADIENT	-.00319	-.00003	.00191	-.02833	.01712	-.00857	-.00009	-.00023	.00004

RUN NO. 1309/ 0 RN/L = 3.50 GRADIENT INTERVAL = -5.00/ 5.00

ALPHAO	BETAO	CNFO	CAFO	CLMFO	CYFO	CYNFO	CBLFO	CNBO	CABO	CLMBO
-6.168	-5.940	-.00760	.06600	.02320	.17220	-.10450	.05390	.02670	.04920	-.01450
-6.098	-4.024	-.01890	.06730	.03090	.11240	-.06670	.03510	.02450	.04550	-.01330
-6.178	.118	-.07040	.06390	.06880	.00280	-.00050	.00020	.02290	.04230	-.01250
-6.009	4.234	-.04520	.06590	.04710	-.10770	.06710	-.03480	.02500	.04620	-.01370
-5.808	6.308	-.03020	.06850	.03510	-.16700	.10440	-.05400	.02540	.04680	-.01390
	GRADIENT	-.00319	-.00017	.00197	-.02665	.01620	-.00846	.00006	.00008	-.00005

RUN NO. 1310/ 0 RN/L = 3.49 GRADIENT INTERVAL = -5.00/ 5.00

ALPHAO	BETAO	CNFO	CAFO	CLMFO	CYFO	CYNFO	CBLFO	CNBO	CABO	CLMBO
-4.101	-6.042	.06990	.06480	-.03140	.16160	-.09840	.05310	.02560	.04760	-.01390
-4.291	-3.954	.04370	.06580	-.01310	.10130	-.06010	.03330	.02450	.04560	-.01330
-4.185	.374	.00200	.06320	.01710	-.00500	.00410	-.00230	.02240	.04100	-.01230
-3.750	4.279	.04120	.06580	-.01340	-.10310	.06420	-.03480	.02410	.04440	-.01320
-3.839	6.099	.04190	.06560	-.01510	-.15030	.09400	-.05090	.02540	.04670	-.01390
	GRADIENT	-.00047	-.00001	.00009	-.02482	.01509	-.00827	-.00006	-.00016	.00002

RUN NO. 1311/ 0 RN/L = 3.49 GRADIENT INTERVAL = -5.00/ 5.00

ALPHAO	BETAO	CNFO	CAFO	CLMFO	CYFO	CYNFO	CBLFO	CNBO	CABO	CLMBO
-.394	-6.907	.21310	.06100	-.12970	.16380	-.10200	.05980	.02490	.04640	-.01340
-.379	-4.756	.19760	.06320	-.12030	.11170	-.06910	.04170	.02350	.04370	-.01280
-.345	-.449	.15930	.05880	-.09280	.00940	-.00320	.00410	.02130	.03930	-.01160
-.313	3.662	.18550	.06420	-.11190	-.07510	.04930	-.02930	.02270	.04190	-.01240
-.314	5.816	.19000	.06410	-.11720	-.12400	.08140	-.04740	.02410	.04430	-.01320
	GRADIENT	-.00150	.00011	.00104	-.02220	.01407	-.00844	-.00010	-.00022	.00005

IA156A, AEDC PWT 16T-470, O T S W/SILTS (R8NOB6) (10 MAY 80)

REFERENCE DATA

SREF = 2690.0000 SQ.FT. XMRP = 976.0000 IN. XT
LREF = 1290.3000 INCHES YMRP = .0000 IN. YT
BREF = 1290.3000 INCHES ZMRP = 400.0000 IN. ZT
SCALE = .0200

PARAMETRIC DATA

IB-ELV = 12.000 OB-ELV = 9.000
BDFLAP = .000 SPDBRK = .000
RUDDER = .000 SILTS = 1.000
MACH = .900 RN/L = 3.500

RUN NO. 1312/ 0 RN/L = 3.50 GRADIENT INTERVAL = -5.00/ 5.00

ALPHAO	BETAO	CNFO	CAFO	CLMFO	CYFO	CYNFO	CBLFO	CNBO	CABO	CLMBO
4.130	-5.824	.36020	.06170	-.23580	.12170	-.07730	.04870	.02380	.04420	-.01290
4.011	-3.747	.35110	.06080	-.23040	.07840	-.04950	.03170	.02220	.04150	-.01200
3.764	.085	.32130	.05690	-.20820	.00770	-.00380	.00320	.02130	.03990	-.01150
3.854	4.013	.34650	.05960	-.22740	-.06530	.04300	-.02620	.02230	.04120	-.01220
3.797	6.139	.34270	.06020	-.22710	-.11410	.07400	-.04390	.02400	.04480	-.01300
	GRADIENT	-.00056	-.00015	.00036	-.01852	.01192	-.00746	.00001	-.00004	-.00003

IA156A, AEDC PWT 16T-470, O T S (R8NOB7) (10 MAY 80)

REFERENCE DATA

SREF = 2690.0000 SQ.FT. XMRP = 976.0000 IN. XT
LREF = 1290.3000 INCHES YMRP = .0000 IN. YT
BREF = 1290.3000 INCHES ZMRP = 400.0000 IN. ZT
SCALE = .0200

PARAMETRIC DATA

IB-ELV = 12.000 OB-ELV = 9.000
BDFLAP = .000 SPDBRK = .000
RUDDER = .000 SILTS = .000
MACH = .800 RN/L = 3.500

RUN NO. 1324/ 0 RN/L = 3.50 GRADIENT INTERVAL = -5.00/ 5.00

ALPHAO	BETAO	CNFO	CAFO	CLMFO	CYFO	CYNFO	CBLFO	CNBO	CABO	CLMBO
4.191	-5.942	.36970	.04070	-.24840	.12330	-.08090	.05020	.02160	.04030	-.01170
3.993	-3.685	.35040	.04160	-.23480	.07670	-.04980	.03140	.02060	.03820	-.01120
3.798	.170	.32090	.04050	-.21080	.00680	-.00350	.00280	.01980	.03610	-.01090
3.859	4.112	.34940	.03950	-.23440	-.06620	.04470	-.02680	.02070	.03730	-.01150
3.814	6.168	.34820	.03920	-.23620	-.11270	.07610	-.04420	.02180	.03930	-.01220
	GRADIENT	-.00010	-.00027	.00003	-.01833	.01212	-.00746	.00001	-.00011	-.00004

IA156A, AEDC PWT 16T-470, O T S (R8NOB8) (10 MAY 80)

REFERENCE DATA

SREF = 2690.0000 SQ.FT. XMRP = 976.0000 IN. XT
LREF = 1290.3000 INCHES YMRP = .0000 IN. YT
BREF = 1290.3000 INCHES ZMRP = 400.0000 IN. ZT
SCALE = .0200

PARAMETRIC DATA

IB-ELV = 12.000 OB-ELV = 9.000
BDFLAP = .000 SPDBRK = .000
RUDDER = .000 SILTS = .000
MACH = .950 RN/L = 3.500

RUN NO. 1325/ 0 RN/L = 3.51 GRADIENT INTERVAL = -5.00/ 5.00

ALPHAO	BETAO	CNFO	CAFO	CLMFO	CYFO	CYNFO	CBLFO	CNBO	CABO	CLMBO
-8.097	-5.930	-.09840	.07970	.09440	.18410	-.11190	.05650	.02920	.05470	-.01570
-8.217	-3.731	-.12370	.08320	.11330	.11110	-.06440	.03430	.02860	.05320	-.01550
-8.102	.172	-.15960	.08030	.13890	.00770	-.00310	.00190	.02650	.04910	-.01430
-7.953	4.376	-.14320	.08430	.12530	-.11870	.07480	-.03800	.02830	.05320	-.01520
-7.952	6.218	-.13560	.08350	.11740	-.17620	.11170	-.05560	.02990	.05600	-.01610
	GRADIENT	-.00232	.00015	.00142	-.02837	.01719	-.00892	-.00003	.00001	.00003

RUN NO. 1326/ 0 RN/L = 3.50 GRADIENT INTERVAL = -5.00/ 5.00

ALPHAO	BETAO	CNFO	CAFO	CLMFO	CYFO	CYNFO	CBLFO	CNBO	CABO	CLMBO
-6.175	-5.944	-.02680	.08090	.04380	.17410	-.10590	.05520	.02870	.05350	-.01550
-6.101	-4.027	-.03850	.08290	.05140	.11290	-.06640	.03570	.02680	.05020	-.01440
-6.189	.101	-.08620	.07920	.08560	.00530	-.00290	.00170	.02510	.04650	-.01360
-6.004	4.224	-.06370	.08210	.06690	-.10830	.06760	-.03550	.02710	.05050	-.01460
-5.732	6.302	-.04730	.08180	.05320	-.16990	.10710	-.05570	.02950	.05500	-.01590
	GRADIENT	-.00306	-.00010	.00188	-.02681	.01624	-.00863	.00004	.00004	-.00002

RUN NO. 1327/ 0 RN/L = 3.50 GRADIENT INTERVAL = -5.00/ 5.00

ALPHAO	BETAO	CNFO	CAFO	CLMFO	CYFO	CYNFO	CBLFO	CNBO	CABO	CLMBO
-4.091	-6.044	.05360	.07950	-.01420	.16250	-.09870	.05390	.02810	.05270	-.01510
-4.285	-3.951	.02690	.08030	.00440	.10030	-.05800	.03280	.02640	.04940	-.01420
-4.192	.371	-.01780	.07900	.03750	-.00330	.00260	-.00170	.02500	.04590	-.01370
-3.741	4.269	.02150	.08040	.00560	-.10450	.06460	-.03570	.02640	.04870	-.01450
-3.844	6.109	.02540	.07980	.00050	-.15450	.09670	-.05250	.02800	.05200	-.01520
	GRADIENT	-.00083	.00001	.00028	-.02490	.01490	-.00833	-.00001	-.00010	-.00003

RUN NO. 1328/ 0 RN/L = 3.50 GRADIENT INTERVAL = -5.00/ 5.00

ALPHAO	BETAO	CNFO	CAFO	CLMFO	CYFO	CYNFO	CBLFO	CNBO	CABO	CLMBO
-.413	-6.913	.19800	.07620	-.11450	.16320	-.09920	.06020	.02760	.05180	-.01480
-.384	-4.779	.18360	.07700	-.10550	.10840	-.06390	.04070	.02630	.04960	-.01410
-.355	-.459	.13570	.07300	-.07120	.01060	-.00410	.00450	.02330	.04360	-.01260
-.324	3.651	.16480	.07860	-.09310	-.07300	.04650	-.02940	.02500	.04620	-.01360
-.324	5.830	.17610	.07870	-.10400	-.12300	.07860	-.04830	.02620	.04860	-.01420
	GRADIENT	-.00231	.00018	.00153	-.02153	.01310	-.00832	-.00016	-.00041	.00006

IA156A, AEDC PWT 16T-470, O T S (R8NOB8) (10 MAY 80)

REFERENCE DATA

SREF = 2690.0000 SQ.FT. XMRP = 976.0000 IN. XT
LREF = 1290.3000 INCHES YMRP = .0000 IN. YT
BREF = 1290.3000 INCHES ZMRP = 400.0000 IN. ZT
SCALE = .0200

PARAMETRIC DATA

IB-ELV = 12.000 OB-ELV = 9.000
BDFLAP = .000 SPDBRK = .000
RUDDER = .000 SILTS = .000
MACH = .950 RN/L = 3.500

RUN NO. 1329/ 0 RN/L = 3.50 GRADIENT INTERVAL = -5.00/ 5.00

ALPHAO	BETAO	CNFO	CAFO	CLMFO	CYFO	CYNFO	CBLFO	CNBO	CABO	CLMBO
3.924	-5.698	.34450	.07430	-.22060	.11290	-.06900	.04810	.02570	.04830	-.01380
3.965	-3.935	.33880	.07420	-.21740	.07470	-.04380	.03260	.02440	.04550	-.01310
3.923	.180	.31240	.06940	-.19750	.00620	-.00280	.00250	.02490	.04590	-.01360
3.839	3.929	.33910	.07470	-.21840	-.05860	.03610	-.02520	.02420	.04460	-.01320
3.802	6.118	.33690	.07300	-.21830	-.10570	.06660	-.04380	.02620	.04830	-.01430
	GRADIENT	-.00007	.00004	-.00005	-.01695	.01016	-.00735	-.00002	-.00011	-.00001

IA156A, AEDC PWT 16T-470, O T S (R8NOB9) (10 MAY 80)

REFERENCE DATA

SREF = 2690.0000 SQ.FT. XMRP = 976.0000 IN. XT
LREF = 1290.3000 INCHES YMRP = .0000 IN. YT
BREF = 1290.3000 INCHES ZMRP = 400.0000 IN. ZT
SCALE = .0200

PARAMETRIC DATA

IB-ELV = 12.000 OB-ELV = 9.000
BDFLAP = .000 SPDBRK = .000
RUDDER = .000 SILTS = .000
MACH = 1.050 RN/L = 3.500

RUN NO. 1330/ 0 RN/L = 3.50 GRADIENT INTERVAL = -5.00/ 5.00

ALPHAO	BETAO	CNFO	CAFO	CLMFO	CYFO	CYNFO	CBLFO	CNBO	CABO	CLMBO
-8.212	-5.901	-.14840	.10020	.14620	.18450	-.11000	.06220	.03710	.07100	-.01960
-8.202	-3.826	-.16330	.10300	.15750	.11920	-.06900	.03990	.03700	.06970	-.01980
-8.119	.330	-.20530	.10230	.18890	-.00130	.00390	-.00100	.03580	.06690	-.01930
-7.949	4.306	-.18650	.10360	.17190	-.11860	.07560	-.04020	.03560	.06580	-.01940
-7.959	6.215	-.17890	.10280	.16360	-.17870	.11220	-.06040	.03540	.06620	-.01900
	GRADIENT	-.00291	.00007	.00181	-.02924	.01778	-.00985	-.00017	-.00048	.00005

RUN NO. 1331/ 0 RN/L = 3.51 GRADIENT INTERVAL = -5.00/ 5.00

ALPHAO	BETAO	CNFO	CAFO	CLMFO	CYFO	CYNFO	CBLFO	CNBO	CABO	CLMBO
-6.179	-5.965	-.06280	.09930	.08400	.17440	-.10380	.06190	.03660	.06980	-.01940
-6.081	-4.041	-.07980	.10140	.09630	.11290	-.06580	.04040	.03620	.06860	-.01930
-6.191	.114	-.13480	.10270	.13850	.00160	.00130	.00040	.03490	.06450	-.01900
-6.024	4.226	-.10760	.10360	.11460	-.11240	.07060	-.03960	.03430	.06310	-.01880
-5.734	6.328	-.08320	.10100	.09390	-.17180	.10690	-.06080	.03490	.06510	-.01890
	GRADIENT	-.00338	.00027	.00223	-.02725	.01650	-.00968	-.00023	-.00067	.00006

IA156A, AEDC PWT 16T-470, O T S (R8N0B9) (10 MAY 80)

REFERENCE DATA

SREF = 2690.0000 SQ.FT. XMRP = 976.0000 IN. XT
LREF = 1290.3000 INCHES YMRP = .0000 IN. YT
BREF = 1290.3000 INCHES ZMRP = 400.0000 IN. ZT
SCALE = .0200

PARAMETRIC DATA

IB-ELV = 12.000 OB-ELV = 9.000
BDFLAP = .000 SPDBRK = .000
RUDDER = .000 SILTS = .000
MACH = 1.050 RN/L = 3.500

RUN NO. 1332/ 0 RN/L = 3.50 GRADIENT INTERVAL = -5.00/ 5.00

ALPHAO	BETAO	CNFO	CAFO	CLMFO	CYFO	CYNFO	CBLFO	CNBO	CABO	CLMBO
-4.097	-6.071	.02230	.09900	.02290	.16270	-.09680	.06100	.03660	.06910	-.01960
-4.289	-3.962	-.01080	.10110	.04740	.10400	-.06050	.03890	.03610	.06740	-.01940
-4.196	.369	-.06010	.10150	.08510	-.00350	.00420	-.00150	.03520	.06460	-.01920
-3.744	4.287	-.01420	.10160	.04770	-.10510	.06550	-.03950	.03390	.06230	-.01850
-3.846	6.113	-.00540	.10170	.03860	-.15450	.09590	-.05840	.03450	.06360	-.01880
	GRADIENT	-.00060	.00006	.00019	-.02534	.01527	-.00950	-.00027	-.00062	.00011

RUN NO. 1333/ 0 RN/L = 3.50 GRADIENT INTERVAL = -5.00/ 5.00

ALPHAO	BETAO	CNFO	CAFO	CLMFO	CYFO	CYNFO	CBLFO	CNBO	CABO	CLMBO
-.444	-7.004	.18140	.09780	-.08940	.16580	-.09920	.06950	.03640	.06900	-.01940
-.419	-4.832	.15860	.09990	-.07250	.11180	-.06660	.04770	.03630	.06770	-.01960
-.395	-.438	.10200	.09800	-.02920	.01150	-.00460	.00500	.03420	.06320	-.01860
-.361	3.665	.13070	.10220	-.05270	-.07640	.05050	-.03430	.03400	.06310	-.01850
-.363	5.855	.14550	.10330	-.06590	-.12440	.07990	-.05430	.03470	.06460	-.01880
	GRADIENT	-.00340	.00026	.00242	-.02216	.01379	-.00965	-.00027	-.00055	.00013

RUN NO. 1334/ 0 RN/L = 3.50 GRADIENT INTERVAL = -5.00/ 5.00

ALPHAO	BETAO	CNFO	CAFO	CLMFO	CYFO	CYNFO	CBLFO	CNBO	CABO	CLMBO
3.901	-5.731	.31990	.09610	-.18960	.11800	-.07230	.05460	.03590	.06740	-.01930
3.920	-3.899	.30640	.09940	-.17900	.08020	-.04860	.03820	.03380	.06310	-.01820
3.916	.181	.28280	.09440	-.16120	.00630	-.00260	.00320	.03390	.06300	-.01840
3.837	3.924	.31140	.09750	-.18490	-.06450	.04170	-.02970	.03340	.06170	-.01810
3.798	6.097	.31360	.09610	-.18900	-.10680	.06760	-.04880	.03470	.06410	-.01890
	GRADIENT	.00054	-.00026	-.00068	-.01849	.01154	-.00868	-.00005	-.00018	.00001

IA156A, AEDC PWT 16T-470, O T S (R8NOCO) (10 MAY 80)

REFERENCE DATA

SREF = 2690.0000 SQ.FT. XMRP = 976.0000 IN. XT
LREF = 1290.3000 INCHES YMRP = .0000 IN. YT
BREF = 1290.3000 INCHES ZMRP = 400.0000 IN. ZT
SCALE = .0200

PARAMETRIC DATA

IB-ELV = 12.000 OB-ELV = 9.000
BDFLAP = .000 SPDBRK = .000
RUDDER = .000 SILTS = .000
MACH = 1.100 RN/L = 3.500

RUN NO. 1335/ 0 RN/L = 3.50 GRADIENT INTERVAL = -5.00/ 5.00

ALPHAO	BETAO	CNFO	CAFO	CLMFO	CYFO	CYNFO	CBLFO	CNBO	CABO	CLMBO
-8.085	-5.959	-.13230	.10530	.13510	.17750	-.10440	.06080	.03400	.06520	-.01790
-8.216	-3.758	-.15310	.10810	.15080	.10980	-.06210	.03700	.03340	.06240	-.01800
-8.117	.180	-.19020	.10620	.17830	.00030	.00280	-.00020	.03160	.05880	-.01710
-7.932	4.337	-.17030	.10850	.16100	-.11690	.07360	-.03990	.03180	.05880	-.01730
-7.956	6.215	-.16280	.10770	.15340	-.17090	.10600	-.05840	.03250	.06030	-.01760
	GRADIENT	-.00206	.00005	.00121	-.02801	.01677	-.00950	-.00020	-.00044	.00009

RUN NO. 1336/ 0 RN/L = 3.50 GRADIENT INTERVAL = -5.00/ 5.00

ALPHAO	BETAO	CNFO	CAFO	CLMFO	CYFO	CYNFO	CBLFO	CNBO	CABO	CLMBO
-6.157	-5.944	-.04940	.10420	.07460	.16050	-.09400	.05830	.03300	.06280	-.01750
-6.103	-4.030	-.06800	.10560	.08820	.10550	-.06030	.03830	.03230	.06040	-.01740
-6.217	.094	-.11820	.10470	.12600	-.00080	00240	-.00010	.03080	.05690	-.01680
-5.993	4.241	-.08510	.10600	.09790	-.10960	.06780	-.03930	.03070	.05630	-.01680
-5.966	6.211	-.07640	.10620	.08920	-.16260	.09990	-.05910	.03180	.05870	-.01730
	GRADIENT	-.00206	.00005	.00117	-.02601	.01549	-.00938	-.00019	-.00050	.00007

RUN NO. 1337/ 0 RN/L = 3.50 GRADIENT INTERVAL = -5.00/ 5.00

ALPHAO	BETAO	CNFO	CAFO	CLMFO	CYFO	CYNFO	CBLFO	CNBO	CABO	CLMBO
-4.082	-6.072	.03840	.10390	.01010	.15310	-.08940	.05960	.03260	.06180	-.01740
-4.299	-3.969	.00370	.10450	.03610	.09580	-.05450	.03720	.03160	.05890	-.01710
-4.187	.366	-.03480	.10150	.06500	-.00560	.00490	-.00260	.03020	.05560	-.01650
-3.746	4.294	.01050	.10570	.02840	-.10140	.06200	-.04010	.02960	.05420	-.01630
-3.842	6.107	.01910	.10660	.02010	-.14670	.08990	-.05760	.03080	.05650	-.01690
	GRADIENT	.00066	.00013	-.00080	-.02386	.01409	-.00935	-.00024	-.00057	.00010

RUN NO. 1338/ 0 RN/L = 3.50 GRADIENT INTERVAL = -5.00/ 5.00

ALPHAO	BETAO	CNFO	CAFO	CLMFO	CYFO	CYNFO	CBLFO	CNBO	CABO	CLMBO
-.450	-6.989	.18930	.10280	-.09710	.15840	-.09370	.06830	.03250	.06120	-.01740
-.416	-4.820	.17260	.10400	-.08480	.10800	-.06370	.04740	.03130	.05820	-.01700
-.391	-.464	.12570	.10180	-.04930	.01090	-.00420	.00490	.02920	.05360	-.01600
-.356	3.674	.15250	.10550	-.07140	-.07600	.04980	-.03470	.02850	.05250	-.01560
-.358	5.852	.16170	.10580	-.08110	-.12360	.07900	-.05460	.02930	.05410	-.01600
	GRADIENT	-.00244	.00017	.00164	-.02167	.01337	-.00967	-.00033	-.00067	.00017

IA156A, AEDC PWT 16T-470, O T S (R8NOC0) (10 MAY 80)

REFERENCE DATA

SREF = 2690.0000 SQ.FT. XMRP = 976.0000 IN. XT
LREF = 1290.3000 INCHES YMRP = .0000 IN. YT
BREF = 1290.3000 INCHES ZMRP = 400.0000 IN. ZT
SCALE = .0200

PARAMETRIC DATA

IB-ELV = 12.000 OB-ELV = 9.000
BDFLAP = .000 SPDBRK = .000
RUDDER = .000- SILTS = .000
MACH = 1.100 RN/L = 3.500

RUN NO. 1339/ 0 RN/L = 3.48 GRADIENT INTERVAL = -5.00/ 5.00

ALPHAO	BETAO	CNFO	CAFO	CLMFO	CYFO	CYNFO	CBLFO	CNBO	CABO	CLMBO
3.930	-5.730	.34240	.10130	-.20880	.11540	-.07050	.05350	.02970	.05560	-.01590
3.914	-3.895	.32820	.10040	-.19830	.07920	-.04800	.03710	.02990	.05560	-.01620
3.893	.179	.29800	.09940	-.17500	.00340	-.00090	.00200	.02960	.05430	-.01620
3.825	3.917	.32270	.10060	-.19630	-.06650	.04240	-.03040	.02820	.05180	-.01540
3.808	6.099	.33000	.10100	-.20410	-.10890	.06850	-.04930	.02890	.05310	-.01580
	GRADIENT	-.00080	.00002	.00034	-.01865	.01157	-.00864	-.00022	-.00048	.00010

IA156A, AEDC PWT 16T-470, O T S (R8NOC1) (10 MAY 80)

REFERENCE DATA

SREF = 2690.0000 SQ.FT. XMRP = 976.0000 IN. XT
LREF = 1290.3000 INCHES YMRP = .0000 IN. YT
BREF = 1290.3000 INCHES ZMRP = 400.0000 IN. ZT
SCALE = .0200

PARAMETRIC DATA

IB-ELV = 12.000 OB-ELV = 9.000
BDFLAP = .000 SPDBRK = .000
RUDDER = .000 SILTS = .000
MACH = 1.150 RN/L = 3.500

RUN NO. 1341/ 0 RN/L = 3.50 GRADIENT INTERVAL = -5.00/ 5.00

ALPHAO	BETAO	CNFO	CAFO	CLMFO	CYFO	CYNFO	CBLFO	CNBO	CABO	CLMBO
-8.145	-5.961	-.12250	.10920	.12840	.18080	-.10690	.06290	.03160	.06080	-.01660
-8.230	-3.764	-.14590	.11200	.14630	.11250	-.06440	.03840	.03080	.05800	-.01650
-8.120	169	-.18400	.11050	.17540	.00590	-.00090	.00150	.02920	.05430	-.01580
-7.920	4.347	-.16350	.11320	.15730	-.11530	.07210	-.04000	.02940	.05430	-.01600
-7.956	6.224	-.16080	.11110	.15240	-.17100	.10630	-.05900	.03070	.05700	-.01660
	GRADIENT	-.00210	.00015	.00130	-.02809	.01684	-.00967	-.00017	-.00045	.00006

RUN NO. 1342/ 0 RN/L = 3.50 GRADIENT INTERVAL = -5.00/ 5.00

ALPHAO	BETAO	CNFO	CAFO	CLMFO	CYFO	CYNFO	CBLFO	CNBO	CABO	CLMBO
-6.162	-5.954	-.03620	.10860	.06480	.16540	-.09770	.06190	.03130	.05960	-.01560
-6.104	-4.044	-.05220	.10990	.07690	.10760	-.05200	.04060	.03020	.05680	-.01610
-6.201	.104	-.10830	.10690	.11950	.00480	-.00140	.00160	.02880	.05330	-.01570
-6.020	4.237	-.08460	.10980	.09780	-.10480	.06470	-.03860	.02880	.05290	-.01580
-5.837	6.332	-.06390	.11110	.08010	-.16460	.10170	-.06080	.02990	.05510	-.01630
	GRADIENT	-.00392	-.00001	.00253	-.02565	.01530	-.00956	-.00017	-.00047	.00004

IA156A, AEDC PWT 16T-470, O T S (R8NOC1) (10 MAY 80)

REFERENCE DATA

SREF = 2690.0000 SQ.FT. XMRP = 976.0000 IN. XT
LREF = 1290.3000 INCHES YMRP = .0000 IN. YT
BREF = 1290.3000 INCHES ZMRP = 400.0000 IN. ZT
SCALE = .0200

PARAMETRIC DATA

IB-ELV = 12.000 OB-ELV = 9.000
BDFLAP = .000 SPDBRK = .000
RUDDER = .000 SILTS = .000
MACH = 1.150 RN/L = 3.500

RUN NO. 1343/ 0 RN/L = 3.50 GRADIENT INTERVAL = -5.00/ 5.00

ALPHAO	BETAO	CNFO	CAFO	CLMFO	CYFO	CYNFO	CBLFO	CNBO	CABO	CLMBO
4.112	-6.068	.05180	.10830	-.00030	.15400	-.09080	.06170	.03100	.05880	-.01650
.306	-3.976	.02550	.10870	.01980	.09910	-.05770	.04050	.03020	.05640	-.01630
-.195	.373	-.01850	.10630	.05310	-.00200	.00250	-.00180	.02870	.05290	-.01560
-3.756	4.290	.01520	.10940	.02460	-.09770	.06020	-.03990	.02800	.05120	-.01540
-3.849	6.122	.01990	.11120	.01880	-.14660	.09020	-.05820	.02930	.05360	-.01610
	GRADIENT	-.00141	.00007	.00071	-.02380	.01425	-.00973	-.00027	-.00063	.00011

RUN NO. 1344/ 0 RN/L = 3.50 GRADIENT INTERVAL = -5.00/ 5.00

ALPHAO	BETAO	CNFO	CAFO	CLMFO	CYFO	CYNFO	CBLFO	CNBO	CABO	CLMBO
-.438	-6.994	.20560	.10670	-.10950	.16120	-.09650	.06890	.03100	.05850	-.01660
-.411	-4.805	.19060	.10900	-.09960	.10770	-.06410	.04640	.02960	.05520	-.01600
-.370	-.483	.15260	.10620	-.07060	.01000	-.00360	.00460	.02840	.05250	-.01540
-.342	3.670	.17400	.11030	-.08890	-.07760	.05140	-.03470	.02760	.05090	-.01510
-.341	5.850	.18210	.11120	-.09700	-.12580	.08080	-.05490	.02800	.05130	-.01530
	GRADIENT	-.00200	.00015	.00130	-.02187	.01363	-.00957	-.00024	-.00051	.00011

RUN NO. 1345/ 0 RN/L = 3.50 GRADIENT INTERVAL = -5.00/ 5.00

ALPHAO	BETAO	CNFO	CAFO	CLMFO	CYFO	CYNFO	CBLFO	CNBO	CABO	CLMBO
3.991	-5.883	.34620	.10630	-.21250	.12300	-.07610	.05670	.02850	.05350	-.01530
4.006	-3.805	.33360	.10660	-.20340	.08280	-.05150	.03840	.02870	.05340	-.01550
3.899	.181	.31370	.10440	-.18700	.00880	-.00530	.00400	.02850	.05250	-.01550
3.830	3.979	.33800	.10680	-.20810	-.06480	.04140	-.03010	.02720	.04990	-.01500
3.801	6.112	.34130	.10740	-.21260	-.10770	.06780	-.04880	.02770	.05060	-.01520
	GRADIENT	.00052	.00002	-.00057	-.01896	.01193	-.00880	-.00019	-.00045	.00006

IA156A, AEDC PWT 16T-470, O T S (R8NOC2) (10 MAY 80)

REFERENCE DATA

SREF = 2690.0000 SQ.FT. XMRP = 976.0000 IN. XT
LREF = 1290.3000 INCHES YMRP = .0000 IN. YT
BREF = 1290.3000 INCHES ZMRP = 400.0000 IN. ZT
SCALE = .0200

PARAMETRIC DATA

IB-ELV = 12.000 OB-ELV = 9.000
BDFLAP = .000 SPDBRK = .000
RUDDER = .000 SILTS = .000
MACH = 1.250 RN/L = 3.500

RUN NO. 1346/ 0 RN/L = 3.50 GRADIENT INTERVAL = -5.00/ 5.00

ALPHAO	BETAO	CNFO	CAFO	CLMFO	CYFO	CYNFO	CBLFO	CNBO	CABO	CLMBO
-8.243	-5.890	-.11250	.11310	.12030	.17510	-.10400	.06170	.02830	.05480	-.01480
-8.205	-3.763	-.12610	.11490	.13020	.11010	-.06280	.03860	.02800	.05300	-.01490
-8.116	.197	-.15540	.11340	.15260	-.00130	.00490	-.00010	.02680	.05010	-.01440
-7.947	4.332	-.13720	.11520	.13600	-.11770	.07680	-.04080	.02700	.05030	-.01460
-7.966	6.227	-.13440	.11510	.13180	-.17340	.11110	-.05990	.02760	.05190	-.01480
	GRADIENT	-.00133	.00004	.00068	-.02814	.01725	-.00981	-.00012	-.00033	.00004

RUN NO. 1347/ 0 RN/L = 3.50 GRADIENT INTERVAL = -5.00/ 5.00

ALPHAO	BETAO	CNFO	CAFO	CLMFO	CYFO	CYNFO	CBLFO	CNBO	CABO	CLMBO
-6.182	-5.943	-.02810	.11240	.05620	.16030	-.09500	.05960	.02780	.05340	-.01460
-6.118	-4.035	-.03550	.11350	.06190	.10420	-.06000	.03930	.02750	.05190	-.01470
-6.198	.130	-.07330	.11220	.09030	-.00180	.00440	.00020	.02650	.04930	-.01430
-5.991	4.255	-.05070	.11490	.07010	-.11040	.07070	-.03960	.02630	.04860	-.01430
-5.947	6.219	-.05480	.11300	.07060	-.16820	.10690	-.06020	.02810	.05280	-.01510
	GRADIENT	-.00185	.00017	.00100	-.02589	.01577	-.00952	-.00014	-.00040	.00005

RUN NO. 1348/ 0 RN/L = 3.49 GRADIENT INTERVAL = -5.00/ 5.00

ALPHAO	BETAO	CNFO	CAFO	CLMFO	CYFO	CYNFO	CBLFO	CNBO	CABO	CLMBO
-4.105	-6.078	.06080	.11180	-.01010	.15410	-.09140	.05950	.02820	.05380	-.01500
-4.305	-3.963	.03910	.11320	.00560	.09530	-.05450	.03720	.02750	.05190	-.01470
-4.193	.376	.01430	.11190	.02460	-.00770	.00780	-.00230	.02640	.04900	-.01430
-3.737	4.277	.04290	.11440	.00030	-.10260	.06490	-.03830	.02630	.04840	-.01440
-3.849	6.126	.03730	.11330	.00210	-.14950	.09430	-.05600	.02690	.04990	-.01460
	GRADIENT	.00035	.00014	-.00055	-.02401	.01449	-.00916	-.00015	-.00043	.00004

RUN NO. 1349/ 0 RN/L = 3.49 GRADIENT INTERVAL = -5.00/ 5.00

ALPHAO	BETAO	CNFO	CAFO	CLMFO	CYFO	CYNFO	CBLFO	CNBO	CABO	CLMBO
-.462	-7.000	.21320	.11120	-.11970	.16260	-.09800	.06580	.02850	.05450	-.01500
-.433	-4.850	.20080	.11430	-.11140	.10790	-.06420	.04430	.02710	.05110	-.01450
-.387	-.453	.17370	.11180	-.09140	.00900	-.00270	.00420	.02610	.04850	-.01420
-.360	3.674	.18790	.11670	-.10370	-.07720	.05120	-.03260	.02560	.04710	-.01400
-.369	5.855	.18830	.11610	-.10650	-.12650	.08140	-.05180	.02570	.04740	-.01410
	GRADIENT	-.00156	.00027	.00094	-.02172	.01354	-.00902	-.00018	-.00047	.00006

IA156A, AEDC PWT 16T-470, O T S

(R8NOC2) (10 MAY 80)

REFERENCE DATA

SREF = 2690.0000 SQ.FT. XMRP = 976.0000 IN. XT
LREF = 1290.3000 INCHES YMRP = .0000 IN. YT
BREF = 1290.3000 INCHES ZMRP = 400.0000 IN. ZT
SCALE = .0200

PARAMETRIC DATA

IB-ELV = 12.000 OB-ELV = 9.000
BDFLAP = .000 SPDBRK = .000
RUDDER = .000 SILTS = .000
MACH = 1.250 RN/L = 3.500

RUN NO. 1350/ 0 RN/L = 3.50 GRADIENT INTERVAL = -5.00/ 5.00

ALPHAO	BETAO	CNFO	CAFO	CLMFO	CYFO	CYNFO	CBLFO	CNBO	CABO	CLMBO
3.994	-5.868	.36300	.11300	-.22980	.12360	-.07680	.05370	.02630	.04970	-.01410
4.025	-3.792	.35630	.11370	-.22520	.08190	-.05100	.03670	.02680	.05010	-.01440
3.893	.194	.33230	.11030	-.20610	.00330	-.00140	.00230	.02630	.04930	-.01420
3.799	3.967	.34260	.11390	-.21610	-.07010	.04590	-.03050	.02550	.04650	-.01400
3.789	6.135	.34260	.11340	-.21820	-.11470	.07340	-.04880	.02560	.04710	-.01400
	GRADIENT	-.00181	.00002	.00121	-.01959	.01249	-.00866	-.00017	-.00046	.00005

IA156A, AEDC PWT 16T-470, O T S

(R8NOC3) (10 MAY 80)

REFERENCE DATA

SREF = 2690.0000 SQ.FT. XMRP = 976.0000 IN. XT
LREF = 1290.3000 INCHES YMRP = .0000 IN. YT
BREF = 1290.3000 INCHES ZMRP = 400.0000 IN. ZT
SCALE = .0200

PARAMETRIC DATA

IB-ELV = 12.000 OB-ELV = -2.000
BDFLAP = .000 SPDBRK = .000
RUDDER = .000 SILTS = .000
MACH = 1.150 RN/L = 3.500

RUN NO. 1355/ 0 RN/L = 3.50 GRADIENT INTERVAL = -5.00/ 5.00

ALPHAO	BETAO	CNFO	CAFO	CLMFO	CYFO	CYNFO	CBLFO	CNBO	CABO	CLMBO
-8.032	-5.992	-.14830	.10580	.15190	.18260	-.10820	.06310	.03110	.05980	-.01640
-8.220	-3.826	-.17370	.10660	.17090	.11520	-.06650	.03920	.03050	.05770	-.01630
-8.140	.284	-.21480	.10570	.20180	.00120	.00200	.00010	.02890	.05400	-.01560
-7.952	4.281	-.19620	.10740	.18490	-.11150	.07060	-.03820	.02900	.05370	-.01570
-7.960	6.216	-.18770	.10720	.17580	-.16900	.10570	-.05810	.03010	.05610	-.01620
	GRADIENT	-.00281	.00010	.00175	-.02796	.01691	-.00965	-.00019	-.00050	.00007

RUN NO. 1356/ 0 RN/L = 3.50 GRADIENT INTERVAL = -5.00/ 5.00

ALPHAO	BETAO	CNFO	CAFO	CLMFO	CYFO	CYNFO	CBLFO	CNBO	CABO	CLMBO
-6.177	-5.962	-.06960	.10480	.09370	.16510	-.09750	.06130	.03090	.05930	-.01630
-6.105	-4.037	-.08660	.10510	.10660	.10790	-.06250	.04040	.03020	.05730	-.01610
-6.203	.110	-.13780	.10310	.14530	.00510	-.00150	.00170	.02860	.05310	-.01550
-6.024	4.235	-.11150	.10730	.12210	-.10490	.06500	-.03860	.02840	.05210	-.01550
-5.753	6.323	-.08800	.10690	.10140	-.16110	.09960	-.05960	.02910	.05390	-.01580
	GRADIENT	-.00302	.00027	.00188	-.02572	.01541	-.00955	-.00022	-.00063	.00007

IA156A, AEDC PWT 16T-470, O T S (R8NOC3) (10 MAY 80)

REFERENCE DATA

SREF = 2690.0000 SQ.FT. XMRP = 976.0000 IN. XT
LREF = 1290.3000 INCHES YMRP = .0000 IN. YT
BREF = 1290.3000 INCHES ZMRP = 400.0000 IN. ZT
SCALE = .0200

PARAMETRIC DATA

IB-ELV = 12.000 OB-ELV = -2.000
BDFLAP = .000 SPDBRK = .000
RUDDER = .000 SILTS = .000
MACH = 1.150 RN/L = 3.500

RUN NO. 1357/ 0 RN/L = 3.50 GRADIENT INTERVAL = -5.00/ 5.00

ALPHAO	BETAO	CNFO	CAFO	CLMFO	CYFO	CYNFO	CBLFO	CNBO	CABO	CLMBO
-4.099	-6.078	.02180	.10510	.02640	.15710	-.09250	.06260	.03050	.05850	-.01610
-4.300	-3.975	-.00750	.10510	.04810	.10120	-.05860	.04050	.02960	.05560	-.01590
-4.196	.375	-.04690	.10250	.07820	-.00250	.00310	-.00170	.02850	.05290	-.01550
-3.743	4.281	-.01240	.10570	.04910	-.09790	.06030	-.03990	.02790	.05100	-.01530
-3.848	6.110	-.00890	.10690	.04410	-.14530	.08940	-.05800	.02900	.05350	-.01580
	GRADIENT	-.00075	.00006	.00025	-.02411	.01440	-.00974	-.00021	-.00056	.00007

RUN NO. 1358/ 0 RN/L = 3.50 GRADIENT INTERVAL = -5.00/ 5.00

ALPHAO	BETAO	CNFO	CAFO	CLMFO	CYFO	CYNFO	CBLFO	CNBO	CABO	CLMBO
-.466	-7.023	.17090	.10310	-.07960	.16270	-.09690	.06970	.03090	.05870	-.01640
-.439	-4.831	.15650	.10550	-.07010	.11090	-.06600	.04830	.02910	.05480	-.01560
-.400	-.461	.12040	.10290	-.04210	.01190	-.00460	.00530	.02830	.05250	-.01530
-.373	3.668	.14070	.10740	-.05960	-.07600	.05010	-.03480	.02700	.04980	-.01470
-.370	5.854	.14530	.10630	-.06520	-.12190	.07810	-.05460	.02760	.05090	-.01500
	GRADIENT	-.00192	.00022	.00129	-.02200	.01366	-.00978	-.00025	-.00059	.00011

RUN NO. 1359/ 0 RN/L = 3.50 GRADIENT INTERVAL = -5.00/ 5.00

ALPHAO	BETAO	CNFO	CAFO	CLMFO	CYFO	CYNFO	CBLFO	CNBO	CABO	CLMBO
4.002	-5.895	.32110	.10290	-.19010	.12380	-.07610	.05760	.02780	.05280	-.01480
3.980	-3.776	.30830	.10310	-.18110	.08210	-.05040	.03860	.02820	.05290	-.01510
3.896	.180	.28060	.09910	-.15870	.00930	-.00530	.00410	.02850	.05310	-.01540
3.840	3.994	.31060	.10240	-.18410	-.06350	.04050	-.03060	.02700	.04960	-.01470
3.794	6.112	.30810	.10160	-.18410	-.10690	.06730	-.04980	.02750	.05060	-.01500
	GRADIENT	.00025	-.00010	-.00035	-.01874	.01170	-.00890	-.00015	-.00042	.00005

IA156A, AEDC PWT 16T-470, O T S (R8NOC4) (10 MAY 80)

REFERENCE DATA

SREF = 2690.0000 SQ.FT. XMRP = 976.0000 IN. XT
LREF = 1290.3000 INCHES YMRP = .0000 IN. YT
BREF = 1290.3000 INCHES ZMRP = 400.0000 IN. ZT
SCALE = .0200

PARAMETRIC DATA

IB-ELV = 12.000 OB-ELV = -2.000
BDFLAP = .000 SPDBRK = .000
RUDDER = .000 SILTS = .000
MACH = 1.250 RN/L = 3.500

RUN NO. 1360/ 0 RN/L = 3.50 GRADIENT INTERVAL = -5.00/ 5.00

ALPHAO	BETAO	CNFO	CAFO	CLMFO	CYFO	CYNFO	CBLFO	CNBO	CABO	CLMBO
-8.101	-5.952	-.13120	.11140	.13860	.17840	-.10600	.06340	.02830	.05480	-.01470
-8.213	-3.740	-.15210	.11260	.15360	.10990	-.06280	.03880	.02780	.05310	-.01470
-8.132	.191	-.18610	.11040	.17980	.00220	.00280	.00100	.02670	.05020	-.01430
-7.941	4.368	-.16250	.11240	.15860	-.11780	.07650	-.04100	.02710	.05050	-.01470
-7.973	6.231	-.16170	.11210	.15590	-.17300	.11050	-.06010	.02800	.05280	-.01500
	GRADIENT	-.00121	-.00002	.00056	-.02809	.01718	-.00984	-.00008	-.00032	-.00000

RUN NO. 1361/ 0 RN/L = 3.50 GRADIENT INTERVAL = -5.00/ 5.00

ALPHAO	BETAO	CNFO	CAFO	CLMFO	CYFO	CYNFO	CBLFO	CNBO	CABO	CLMBO
-6.206	-5.971	-.05210	.11040	.07860	.16380	-.09690	.06120	.02770	.05300	-.01460
-6.109	-4.022	-.06290	.11130	.08680	.10560	-.06050	.04020	.02730	.05140	-.01460
-6.202	.116	-.10300	.11010	.11740	.00120	00280	.00100	.02700	.05000	-.01470
-5.988	4.255	-.07990	.11180	.09520	-.11040	.07070	-.04030	.02650	.04900	-.01450
-5.954	6.220	-.07890	.11040	.09230	-.16510	.10480	-.05990	.02730	.05110	-.01470
	GRADIENT	-.00205	.00006	.00101	-.02610	.01585	-.00973	-.00010	-.00029	.00001

RUN NO. 1362/ 0 RN/L = 3.50 GRADIENT INTERVAL = -5.00/ 5.00

ALPHAO	BETAO	CNFO	CAFO	CLMFO	CYFO	CYNFO	CBLFO	CNBO	CABO	CLMBO
-4.063	-6.095	.03480	.10950	.01390	.15490	-.09150	.06060	.02820	.05390	-.01490
-4.303	-3.959	.01170	.11100	.03090	.09550	-.05440	.03820	.02740	.05150	-.01470
-4.191	.373	-.01430	.10890	.05040	-.00580	.00630	-.00180	.02650	.04880	-.01440
-3.759	4.309	.01670	.11200	.02390	-.10160	.06420	-.03890	.02580	.04710	-.01420
-3.832	6.102	.01250	.11000	.02460	-.14750	.09290	-.05620	.02680	.04990	-.01450
	GRADIENT	.00049	.00011	-.00076	-.02383	.01434	-.00932	-.00019	-.00053	.00006

RUN NO. 1363/ 0 RN/L = 3.50 GRADIENT INTERVAL = -5.00/ 5.00

ALPHAO	BETAO	CNFO	CAFO	CLMFO	CYFO	CYNFO	CBLFO	CNBO	CABO	CLMBO
-.484	-7.045	.18390	.10930	-.09360	.16300	-.09800	.06670	.02810	.05350	-.01490
-.455	-4.776	.17130	.11030	-.08550	.10740	-.06350	.04470	.02710	.05140	-.01440
-.414	-.532	.14650	.10910	-.06720	.01130	-.00410	.00520	.02590	.04800	-.01400
-.383	3.724	.16160	.11340	-.08000	-.07760	.05110	-.03340	.02520	.04650	-.01380
-.396	5.888	.15940	.11260	-.08100	-.12710	.08140	-.05280	.02590	.04760	-.01420
	GRADIENT	-.00114	.00036	.00065	-.02176	.01348	-.00919	-.00022	-.00058	.00007

IA156A, AEDC PWT 16T-470, O T S (R8NOC4) (10 MAY 80)

REFERENCE DATA

SREF = 2690.0000 SQ.FT. XMRP = 976.0000 IN. XT
LREF = 1290.3000 INCHES YMRP = .0000 IN. YT
BREF = 1290.3000 INCHES ZMRP = 400.0000 IN. ZT
SCALE = .0200

PARAMETRIC DATA

IB-ELV = 12.000 OB-ELV = -2.000
BDFLAP = .000 SPDBRK = .000
RUDDER = .000 SILTS = .000
MACH = 1.250 RN/L = 3.500

RUN NO. 1364/ 0 RN/L = 3.50 GRADIENT INTERVAL = -5.00/ 5.00

ALPHAO	BETAO	CNFO	CAFO	CLMFO	CYFO	CYNFO	CBLFO	CNBO	CABO	CLMBO
4.094	-5.769	.34330	.11030	-.21140	.12330	-.07650	.05410	.02620	.04900	-.01410
3.990	-3.665	.32970	.11040	-.20220	.07980	-.04950	.03600	.02640	.04920	-.01420
3.760	.191	.30650	.10760	-.18390	.00650	-.00340	.00330	.02610	.04850	-.01420
3.825	4.099	.32050	.11040	-.19680	-.07050	.04600	-.03120	.02500	.04610	-.01370
3.778	6.130	.31830	.11030	-.19670	-.11300	.07230	-.04900	.02550	.04690	-.01390
	GRADIENT	-.00117	.00000	.00069	-.01936	.01230	-.00866	-.00016	-.00040	.00006

IA156A, AEDC PWT 16T-470, O T S (R8NOC5) (10 MAY 80)

REFERENCE DATA

SREF = 2690.0000 SQ.FT. XMRP = 976.0000 IN. XT
LREF = 1290.3000 INCHES YMRP = .0000 IN. YT
BREF = 1290.3000 INCHES ZMRP = 400.0000 IN. ZT
SCALE = .0200

PARAMETRIC DATA

IB-ELV = 12.000 OB-ELV = -2.000
BDFLAP = .000 SPDBRK = .000
RUDDER = .000 SILTS = .000
MACH = 1.400 RN/L = 3.500

RUN NO. 1365/ 0 RN/L = 3.00 GRADIENT INTERVAL = -5.00/ 5.00

ALPHAO	BETAO	CNFO	CAFO	CLMFO	CYFO	CYNFO	CBLFO	CNBO	CABO	CLMBO
-8.079	-5.931	-.11510	.11790	.12650	.18120	-.10990	.06130	.02570	.05020	-.01320
-8.212	-3.723	-.13700	.12060	.14140	.11370	-.06690	.03820	.02490	.04820	-.01300
-8.138	.218	-.16440	.11900	.16080	.00350	.00140	.00050	.02430	.04580	-.01300
-7.957	4.469	-.15470	.11870	.14990	-.12000	.07910	-.04050	.02430	.04570	-.01300
-7.941	6.289	-.15370	.11690	.14790	-.17760	.11550	-.05920	.02480	.04700	-.01320
	GRADIENT	-.00210	-.00023	.00099	-.02854	.01783	-.00961	-.00007	-.00030	-.00000

RUN NO. 1366/ 0 RN/L = 3.00 GRADIENT INTERVAL = -5.00/ 5.00

ALPHAO	BETAO	CNFO	CAFO	CLMFO	CYFO	CYNFO	CBLFO	CNBO	CABO	CLMBO
-6.230	-5.938	-.05130	.11570	.07700	.17080	-.10370	.05940	.02550	.04990	-.01320
-6.179	-4.021	-.06020	.11770	.08240	.11130	-.06560	.03820	.02480	.04750	-.01300
-6.212	.150	-.08670	.11610	.09990	.00070	.00270	.00000	.02400	.04490	-.01290
-5.966	4.280	-.07750	.11670	.08950	-.11170	.07250	-.03760	.02430	.04550	-.01310
-5.944	6.270	-.07850	.11420	.08870	-.16760	.10840	-.05660	.02470	.04670	-.01320
	GRADIENT	-.00209	-.00012	.00086	-.02686	.01664	-.00913	-.00006	-.00024	-.00001

IA156A, AEDC PWT 16T-470, O T S (R8NOC5) (10 MAY 80)

REFERENCE DATA

SREF = 2690.0000 SQ.FT. XMRP = 976.0000 IN. XT
LREF = 1290.3000 INCHES YMRP = .0000 IN. YT
BREF = 1290.3000 INCHES ZMRP = 400.0000 IN. ZT
SCALE = .0200

PARAMETRIC DATA

IB-ELV = 12.000 OB-ELV = -2.000
BDFLAP = .000 SPDBRK = .000
RUDDER = .000 SILTS = .000
MACH = 1.400 RN/L = 3.500

RUN NO. 1367/ 0 RN/L = 2.99 GRADIENT INTERVAL = -5.00/ 5.00

ALPHAO	BETAO	CNFO	CAFO	CLMFO	CYFO	CYNFO	CBLFO	CNBO	CABO	CLMBO
-4.094	-6.078	.03100	.11500	.01390	.15900	-.09600	.05710	.02490	.04820	-.01300
-4.349	-3.947	.00850	.11540	.02910	.10030	-.05840	.03540	.02470	.04750	-.01300
-4.202	.412	-.00450	.11400	.03640	-.00510	.00610	-.00220	.02410	.04480	-.01300
-3.737	4.341	.01430	.11480	.01920	-.10470	.06690	-.03620	.02380	.04450	-.01290
-3.816	6.142	.00170	.11250	.02680	-.15390	.09830	-.05370	.02440	.04590	-.01310
	GRADIENT	.00063	-.00008	-.00114	-.02472	.01511	-.00864	-.00011	-.00037	.00001

RUN NO. 1368/ 0 RN/L = 3.00 GRADIENT INTERVAL = -5.00/ 5.00

ALPHAO	BETAO	CNFO	CAFO	CLMFO	CYFO	CYNFO	CBLFO	CNBO	CABO	CLMBO
-.508	-6.997	.17550	.11250	-.09220	.16610	-.10090	.06310	.02560	.04900	-.01350
-.481	-4.824	.16300	.11360	-.08570	.10980	-.06510	.04200	.02460	.04700	-.01290
-.432	-.491	.15090	.11360	-.07720	.01030	-.00290	.00420	.02400	.04500	-.01290
-.414	3.632	.15990	.11660	-.08520	-.07710	.05160	-.03030	.02350	.04380	-.01270
-.423	5.820	.14950	.11440	-.07990	-.12740	.08350	-.04890	.02390	.04480	-.01290
	GRADIENT	-.00039	.00035	.00008	-.02211	.01381	-.00855	-.00013	-.00038	.00002

RUN NO. 1369/ 0 RN/L = 3.00 GRADIENT INTERVAL = -5.00/ 5.00

ALPHAO	BETAO	CNFO	CAFO	CLMFO	CYFO	CYNFO	CBLFO	CNBO	CABO	CLMBO
4.039	-5.870	.33530	.11420	-.21090	.12910	-.08120	.05310	.02480	.04720	-.01310
3.998	-3.653	.31920	.11370	-.20120	.07980	-.04990	.03380	.02370	.04430	-.01280
3.743	.167	.30670	.11180	-.19030	.00470	-.00210	.00230	.02440	.04590	-.01310
3.786	4.056	.31260	.11430	-.19640	-.07040	.04690	-.02920	.02330	.04320	-.01260
3.747	6.132	.31340	.11280	-.19900	-.11650	.07630	-.04710	.02380	.04420	-.01290
	GRADIENT	-.00085	.00008	.00062	-.01948	.01256	-.00817	-.00005	-.00014	.00003

IA156A, AEDC PWT 16T-470, O T S (R8NOC6) (10 MAY 80)

REFERENCE DATA

SREF = 2690.0000 SQ.FT. XMRP = 976.0000 IN. XT
LREF = 1290.3000 INCHES YMRP = .0000 IN. YT
BREF = 1290.3000 INCHES ZMRP = 400.0000 IN. ZT
SCALE = .0200

PARAMETRIC DATA

IB-ELV = 12.000 OB-ELV = -2.000
BDFLAP = .000 SPDBRK = .000
RUDDER = .000 SILTS = .000
MACH = 1.550 RN/L = 3.200

RUN NO. 1370/ 0 RN/L = 2.99 GRADIENT INTERVAL = -5.00/ 5.00

ALPHAO	BETAO	CNFO	CAFO	CLMFO	CYFO	CYNFO	CBLFO	CNBO	CABO	CLMBO
-8.164	-5.912	-.10000	.12030	.11420	.17810	-.10960	.05840	.02310	.04580	-.01170
-8.309	-3.679	-.12050	.12270	.12850	.11170	-.06640	.03640	.02250	.04380	-.01170
-8.198	.297	-.14350	.12260	.14390	.00420	.00120	.00060	.02160	.04090	-.01150
-7.977	4.573	-.14470	.12070	.14250	-.11810	.07840	-.03930	.02210	.04220	-.01170
-7.950	6.390	-.14570	.11890	.14210	-.17080	.11240	-.05610	.02220	.04240	-.01170
	GRADIENT	-.00290	-.00024	.00167	-.02786	.01755	-.00918	-.00005	-.00019	-.00000

RUN NO. 1371/ 0 RN/L = 3.00 GRADIENT INTERVAL = -5.00/ 5.00

ALPHAO	BETAO	CNFO	CAFO	CLMFO	CYFO	CYNFO	CBLFO	CNBO	CABO	CLMBO
-6.347	-5.953	-.04180	.11820	.06870	.16780	-.10360	.05580	.02270	.04470	-.01170
-6.238	-3.981	-.05500	.11960	.07700	.10870	-.06490	.03570	.02250	.04370	-.01170
-6.280	.235	-.08290	.11920	.09570	.00110	.00230	.00040	.02200	.04150	-.01180
-5.976	4.383	-.07860	.11760	.08940	-.10950	.07200	-.03550	.02190	.04160	-.01160
-5.921	6.372	-.07950	.11570	.08900	-.16400	.10720	-.05380	.02250	.04290	-.01190
	GRADIENT	-.00283	-.00024	.00149	-.02609	.01637	-.00851	-.00007	-.00025	.00001

RUN NO. 1372/ 0 RN/L = 3.00 GRADIENT INTERVAL = -5.00/ 5.00

ALPHAO	BETAO	CNFO	CAFO	CLMFO	CYFO	CYNFO	CBLFO	CNBO	CABO	CLMBO
-4.201	-6.099	.02760	.11610	.01460	.16100	-.09940	.05370	.02320	.04580	-.01190
-4.444	-3.944	.00340	.11680	.03080	.10170	-.06070	.03280	.02250	.04360	-.01170
-4.272	.499	-.01400	.11550	.04180	-.00580	.00660	-.00210	.02220	.04180	-.01190
-3.722	4.430	-.00200	.11500	.02900	-.10400	.06780	-.03320	.02220	.04210	-.01180
-3.793	6.247	-.00700	.11260	.03210	-.15230	.09910	-.05000	.02230	.04240	-.01180
	GRADIENT	-.00072	-.00022	-.00016	-.02456	.01534	-.00788	-.00004	-.00018	-.00001

RUN NO. 1373/ 0 RN/L = 3.00 GRADIENT INTERVAL = -5.00/ 5.00

ALPHAO	BETAO	CNFO	CAFO	CLMFO	CYFO	CYNFO	CBLFO	CNBO	CABO	CLMBO
-.593	-7.033	.15940	.11120	-.08630	.16650	-.10390	.05830	.02320	.04540	-.01200
-.564	-4.900	.14820	.11300	-.07880	.11240	-.06810	.03930	.02300	.04430	-.01200
-.529	-.542	.12870	.11270	-.06570	.01030	-.00260	.00340	.02210	.04170	-.01180
-.513	3.574	.13410	.11380	-.07210	-.08080	.05610	-.02850	.02200	.04130	-.01180
-.524	5.750	.13300	.11190	-.07330	-.13100	.08840	-.04580	.02260	.04290	-.01210
	GRADIENT	-.00169	.00009	.00081	-.02281	.01466	-.00800	-.00012	-.00036	.00002

IA156A, AEDC PWT 16T-470, O T S (R8NOC6) (10 MAY 80)

REFERENCE DATA

SREF = 2690.0000 SQ.FT. XMRP = 976.0000 IN. XT
LREF = 1290.3000 INCHES YMRP = .0000 IN. YT
BREF = 1290.3000 INCHES ZMRP = 400.0000 IN. ZT
SCALE = .0200

PARAMETRIC DATA

IB-ELV = 12.000 OB-ELV = -2.000
BDFLAP = .000 SPDBRK = .000
RUDDER = .000 SILTS = .000
MACH = 1.550 RN/L = 3.200

RUN NO. 1374/ 0 RN/L = 3.01 GRADIENT INTERVAL = -5.00/ 5.00

ALPHAO	BETAO	CNFO	CAFO	CLMFO	CYFO	CYNFO	CBLFO	CNBO	CABO	CLMBO
4.179	-5.685	.31950	.11330	-.20520	.13010	-.08420	.05100	.02320	.04480	-.01210
4.009	-3.558	.30020	.11170	-.19220	.08310	-.05370	.03320	.02280	.04310	-.01210
3.680	.254	.29090	.10950	-.18580	.00630	-.00430	.00330	.02250	.04250	-.01200
3.685	4.056	.29810	.11200	-.19290	-.06940	.04630	-.02640	.02210	.04170	-.01180
3.639	6.130	.29230	.10970	-.19110	-.11820	.07870	-.04430	.02290	.04320	-.01220
	GRADIENT	-.00028	.00004	-.00009	-.02003	.01313	-.00783	-.00009	-.00018	.00004

IA156A, AEDC PWT 16T-470, O T S W/SILTS (R8NOC7) (10 MAY 80)

REFERENCE DATA

SREF = 2690.0000 SQ.FT. XMRP = 976.0000 IN. XT
LREF = 1290.3000 INCHES YMRP = .0000 IN. YT
BREF = 1290.3000 INCHES ZMRP = 400.0000 IN. ZT
SCALE = .0200

PARAMETRIC DATA

IB-ELV = 9.000 OB-ELV = -2.000
BDFLAP = .000 SPDBRK = .000
RUDDER = .000 SILTS = 1.000
MACH = 1.150 RN/L = 3.500
IB-AIL = 1.000

RUN NO. 1377/ 0 RN/L = 3.50 GRADIENT INTERVAL = -5.00/ 5.00

ALPHAO	BETAO	CNFO	CAFO	CLMFO	CYFO	CYNFO	CBLFO	CNBO	CABO	CLMBO
-8.173	-5.880	-.17050	.10070	.17000	.17610	-.10430	.06110	.03140	.06040	-.01650
-8.191	-3.835	-.18540	.10280	.18100	.11390	-.06550	.03920	.03060	.05770	-.01640
-8.131	.278	-.22270	.10030	.20840	.00070	.00270	.00050	.02890	.05420	-.01550
-7.960	4.259	-.20700	.10400	.19490	-.11340	.07240	-.03810	.02920	.05400	-.01590
-7.945	6.207	-.19610	.10450	.18460	-.16880	.10600	-.05730	.03020	.05620	-.01630
	GRADIENT	-.00270	.00014	.00174	-.02808	.01703	-.00955	-.00017	-.00046	.00006

RUN NO. 1378/ 0 RN/L = 3.50 GRADIENT INTERVAL = -5.00/ 5.00

ALPHAO	BETAO	CNFO	CAFO	CLMFO	CYFO	CYNFO	CBLFO	CNBO	CABO	CLMBO
-6.183	-5.970	-.08180	.10360	.10500	.16600	-.09850	.06240	.03050	.05810	-.01610
-6.102	-4.029	-.09780	.10380	.11700	.10760	-.06240	.04080	.02970	.05590	-.01600
-6.194	.113	-.14710	.09920	.15320	.00360	-.00020	.00190	.02810	.05240	-.01520
-6.013	4.232	-.12550	.10350	.13420	-.10610	.06670	-.03810	.02890	.05330	-.01570
-5.788	6.345	-.10320	.10430	.11500	-.16180	.10060	-.05890	.02910	.05400	-.01580
	GRADIENT	-.00336	-.00004	.00209	-.02587	.01563	-.00955	-.00010	-.00032	.00004

IA156A, AEDC PWT 16T-470, O T S W/SILTS (R8NOC7) (10 MAY 80)

REFERENCE DATA

SREF = 2690.0000 SQ.FT. XMRP = 976.0000 IN. XT
LREF = 1290.3000 INCHES YMRP = .0000 IN. YT
BREF = 1290.3000 INCHES ZMRP = 400.0000 IN. ZT
SCALE = .0200

PARAMETRIC DATA

IB-ELV = 9.000 OB-ELV = -2.000
BDFLAP = .000 SPDBRK = .000
RUDDER = .000 SILTS = 1.000
MACH = 1.150 RN/L = 3.500
IB-AIL = 1.000

RUN NO. 1379/ 0 RN/L = 3.50 GRADIENT INTERVAL = -5.00/ 5.00

ALPHAO	BETAO	CNFO	CAFO	CLMFO	CYFO	CYNFO	CBLFO	CNBO	CABO	CLMBO
-4.099	-6.089	.00960	.10240	.03740	.15650	-.09260	.06310	.03070	.05880	-.01620
-4.295	-3.970	-.01780	.10340	.05810	.09940	-.05780	.04080	.02950	.05530	-.01590
-4.200	.373	-.06210	.09960	.09100	-.00200	.00270	-.00080	.02810	.05200	-.01520
-3.743	4.276	-.02660	.10370	.06170	-.09780	.06060	-.03900	.02780	.05120	-.01520
-3.851	6.111	-.02340	.10460	.05730	-.14430	.08920	-.05690	.02900	.05340	-.01580
	GRADIENT	-.00124	.00002	.00057	-.02391	.01435	-.00968	-.00021	-.00050	.00009

RUN NO. 1380/ 0 RN/L = 3.50 GRADIENT INTERVAL = -5.00/ 5.00

ALPHAO	BETAO	CNFO	CAFO	CLMFO	CYFO	CYNFO	CBLFO	CNBO	CABO	CLMBO
-.470	-7.021	.16000	.10190	-.07000	.16150	-.09680	.06980	.03050	.05780	-.01620
-.444	-4.837	.14530	.10340	-.05960	.10950	-.06540	.04830	.02980	.05590	-.01600
-.409	-.465	.10840	.10010	-.03250	.01070	-.00380	.00570	.02770	.05130	-.01500
-.381	3.667	.12910	.10510	-.05000	-.07680	.05070	-.03410	.02670	.04950	-.01450
-.383	5.857	.13160	.10480	-.05310	-.12480	.07990	-.05480	.02800	.05190	-.01520
	GRADIENT	-.00197	.00019	.00118	-.02191	.01366	-.00969	-.00037	-.00076	.00018

RUN NO. 1381/ 0 RN/L = 3.50 GRADIENT INTERVAL = -5.00/ 5.00

ALPHAO	BETAO	CNFO	CAFO	CLMFO	CYFO	CYNFO	CBLFO	CNBO	CABO	CLMBO
4.123	-5.832	.30840	.10040	-.17850	.12280	-.07560	.05760	.02830	.05350	-.01510
3.967	-3.698	.29110	.10020	-.16630	.08060	-.04960	.03840	.02830	.05310	-.01520
3.794	.112	.26870	.09800	-.14840	.01120	-.00670	.00530	.02800	.05200	-.01510
3.843	4.035	.29760	.10040	-.17280	-.06490	.04130	-.03010	.02680	.04940	-.01460
3.806	6.132	.29680	.10020	-.17330	-.10890	.06870	-.04950	.02760	.05100	-.01500
	GRADIENT	.00087	.00003	-.00087	-.01882	.01176	-.00886	-.00019	-.00048	.00008

IA156A, AEDC PWT 16T-470, O T S W/SILTS (R8N0C8) (10 MAY 80)

REFERENCE DATA

SREF = 2690.0000 SQ.FT. XMRP = 976.0000 IN. XT
LREF = 1290.3000 INCHES YMRP = .0000 IN. YT
BREF = 1290.3000 INCHES ZMRP = 400.0000 IN. ZT
SCALE = .0200

PARAMETRIC DATA

IB-ELV = 9.000 OB-ELV = -2.000
BDFLAP = .000 SPDBRK = .000
RUDDER = .000 SILTS = 1.000
MACH = 1.250 RN/L = 3.500
IB-AIL = 1.000

RUN NO. 1382/ 0 RN/L = 3.50 GRADIENT INTERVAL = -5.00/ 5.00

ALPHAO	BETAO	CNFO	CAFO	CLMFO	CYFO	CYNFO	CBLFO	CNBO	CABO	CLMBO
-8.176	-5.848	-.14710	.10860	.15190	.17440	-.10400	.06240	.02820	.05480	-.01470
-8.215	-3.768	-.16290	.11050	.16340	.10960	-.06270	.03930	.02730	.05220	-.01440
-8.127	.191	-.19460	.10870	.18780	.00100	.00360	.00120	.02660	.05030	-.01420
-7.940	4.342	-.17590	.11060	.17060	-.11710	.07650	-.04020	.02720	.05080	-.01460
-7.947	6.219	-.16920	.11030	.16300	-.17300	.11070	-.05950	.02750	.05190	-.01470
	GRADIENT	-.00155	.00002	.00085	-.02796	.01717	-.00980	-.00001	-.00017	-.00003

RUN NO. 1383/ 0 RN/L = 3.50 GRADIENT INTERVAL = -5.00/ 5.00

ALPHAO	BETAO	CNFO	CAFO	CLMFO	CYFO	CYNFO	CBLFO	CNBO	CABO	CLMBO
-6.194	-5.956	-.06680	.10770	.09100	.16330	-.09730	.06180	.02780	.05360	-.01450
-6.125	-4.037	-.07580	.10910	.09800	.10840	-.06240	.04160	.02730	.05200	-.01450
-6.197	.120	-.11210	.10830	.12550	-.00150	.00430	.00080	.02590	.04860	-.01390
-5.982	4.247	-.09030	.10960	.10510	-.10860	.06970	-.03910	.02620	.04870	-.01420
-5.952	6.225	-.08920	.10900	.10200	-.16400	.10430	-.05900	.02770	.05180	-.01490
	GRADIENT	-.00176	.00006	.00086	-.02619	.01595	-.00974	-.00013	-.00040	.00004

RUN NO. 1384/ 0 RN/L = 3.50 GRADIENT INTERVAL = -5.00/ 5.00

ALPHAO	BETAO	CNFO	CAFO	CLMFO	CYFO	CYNFO	CBLFO	CNBO	CABO	CLMBO
-4.069	-6.097	.02220	.10730	.02500	.15480	-.09190	.06120	.02840	.05460	-.01490
-4.303	-3.963	.00000	.10860	.04140	.09630	-.05530	.03900	.02740	.05210	-.01460
-4.181	.374	-.02440	.10640	.05920	-.00630	.00680	-.00160	.02620	.04880	-.01410
-3.748	4.293	.00420	.10940	.03480	-.10270	.06520	-.03880	.02610	.04810	-.01430
-3.839	6.122	-.00060	.10810	.03560	-.15100	.09520	-.05680	.02690	.05010	-.01460
	GRADIENT	.00040	.00009	-.00071	-.02409	.01459	-.00942	-.00016	-.00049	.00004

RUN NO. 1385/ 0 RN/L = 3.50 GRADIENT INTERVAL = -5.00/ 5.00

ALPHAO	BETAO	CNFO	CAFO	CLMFO	CYFO	CYNFO	CBLFO	CNBO	CABO	CLMBO
-.490	-6.970	.17230	.10700	-.08310	.16290	-.09810	.06710	.02830	.05400	-.01500
-.462	-4.814	.16050	.10890	-.07610	.10790	-.06420	.04560	.02710	.05160	-.01440
-.423	-.532	.13470	.10650	-.05740	.01070	-.00380	.00560	.02570	.04810	-.01380
-.391	3.727	.15000	.11160	-.07050	-.07770	.05120	-.03270	.02480	.04600	-.01350
-.403	5.885	.14960	.11150	-.07240	-.12780	.08210	-.05240	.02570	.04750	-.01400
	GRADIENT	-.00123	.00032	.00066	-.02173	.01351	-.00917	-.00027	-.00066	.00011

IA156A, AEDC PWT 16T-470, O T S W/SILTS (R8N0C8) (10 MAY 80)

REFERENCE DATA

SREF = 2690.0000 SQ.FT. XMRP = 976.0000 IN. XT
LREF = 1290.3000 INCHES YMRP = .0000 IN. YT
BREF = 1290.3000 INCHES ZMRP = 400.0000 IN. ZT
SCALE = .0200

PARAMETRIC DATA

IB-ELV = 9.000 OB-ELV = -2.000
BDFLAP = .000 SPDBRK = .000
RUDDER = .000 SILTS = 1.000
MACH = 1.250 RN/L = 3.500
IB-AIL = 1.000

RUN NO. 1386/ 0 RN/L = 3.50 GRADIENT INTERVAL = -5.00/ 5.00

ALPHAO	BETAO	CNFO	CAFO	CLMFO	CYFO	CYNFO	CBLFO	CNBO	CABO	CLMBO
4.166	-5.804	.33660	.10850	-.20480	.12420	-.07710	.05470	.02630	.04970	-.01400
3.973	-3.652	.31940	.10910	-.19270	.08040	-.04980	.03640	.02620	.04870	-.01420
3.766	.204	.29290	.10480	-.17190	.00380	-.00170	.00280	.02610	.04870	-.01410
3.832	4.085	.30920	.10810	-.18670	-.07100	.04640	-.03080	.02520	.04620	-.01380
3.784	6.139	.30920	.10840	-.18830	-.11550	.07390	-.04910	.02550	.04710	-.01390
	GRADIENT	-.00131	-.00013	.00077	-.01957	.01243	-.00869	-.00013	-.00032	.00005

IA156A, AEDC PWT 16T-470, O T S W/SILTS (R8N0C9) (10 MAY 80)

REFERENCE DATA

SREF = 2690.0000 SQ.FT. XMRP = 976.0000 IN. XT
LREF = 1290.3000 INCHES YMRP = .0000 IN. YT
BREF = 1290.3000 INCHES ZMRP = 400.0000 IN. ZT
SCALE = .0200

PARAMETRIC DATA

IB-ELV = 9.000 OB-ELV = -2.000
BDFLAP = .000 SPDBRK = .000
RUDDER = .000 SILTS = 1.000
MACH = 1.400 RN/L = 3.500
IB-AIL = 1.000

RUN NO. 1387/ 0 RN/L = 2.99 GRADIENT INTERVAL = -5.00/ 5.00

ALPHAO	BETAO	CNFO	CAFO	CLMFO	CYFO	CYNFO	CBLFO	CNBO	CABO	CLMBO
-8.086	-5.933	-.12390	.11660	.13450	.17970	-.10930	.06150	.02530	.04980	-.01300
-8.203	-3.723	-.14880	.11870	.15160	.11670	-.06870	.03960	.02540	.04960	-.01310
-8.137	.221	-.17470	.11670	.16950	.00450	.00090	.00130	.02380	.04510	-.01260
-7.965	4.466	-.16450	.11670	.15880	-.12240	.08070	-.04060	.02450	.04660	-.01300
-7.938	6.284	-.16380	.11470	.15670	-.17720	.11530	-.05860	.02480	.04730	-.01310
	GRADIENT	-.00186	-.00024	.00084	-.02920	.01825	-.00979	-.00011	-.00036	.00001

RUN NO. 1388/ 0 RN/L = 3.00 GRADIENT INTERVAL = -5.00/ 5.00

ALPHAO	BETAO	CNFO	CAFO	CLMFO	CYFO	CYNFO	CBLFO	CNBO	CABO	CLMBO
-6.256	-5.968	-.06280	.11430	.08670	.16970	-.10290	.05940	.02570	.05030	-.01320
-6.152	-3.991	-.07190	.11620	.09210	.10920	-.06470	.03820	.02450	.04710	-.01280
-6.217	.147	-.09880	.11460	.11050	.00130	.00240	.00060	.02410	.04560	-.01290
-5.972	4.285	-.08550	.11440	.09650	-.11040	.07160	-.03650	.02310	.04360	-.01230
-5.942	6.276	-.09140	.11260	.09990	-.17160	.11080	-.05720	.02460	.04690	-.01300
	GRADIENT	-.00164	-.00022	.00053	-.02653	.01647	-.00903	-.00017	-.00042	.00006

IA156A, AEDC PWT 16T-470, O T S W/SILTS (R8NOC9) (10 MAY 80)

REFERENCE DATA

SREF = 2690.0000 SQ.FT. XMRP = 976.0000 IN. XT
LREF = 1290.3000 INCHES YMRP = .0000 IN. YT
BREF = 1290.3000 INCHES ZMRP = 400.0000 IN. ZT
SCALE = .0200

PARAMETRIC DATA

IB-ELV = 9.000 OB-ELV = -2.000
BDFLAP = .000 SPDBRK = .000
RUDDER = .000 SILTS = 1.000
MACH = 1.400 RN/L = 3.500
Ib-AIL = 1.000

RUN NO. 1389/ 0 RN/L = 3.01 GRADIENT INTERVAL = -5.00/ 5.00

ALPHAO	BETAO	CNFO	CAFO	CLMFO	CYFO	CYNFO	CBLFO	CNBO	CABO	CLMBO
-4.254	-6.082	.01450	.11300	.02770	.16010	-.09660	.05770	.02510	.04870	-.01310
-4.339	-3.952	.00100	.11440	.03640	.09950	-.05790	.03580	.02460	.04730	-.01290
-4.212	.410	-.01500	.11230	.04580	-.00540	.00630	-.00180	.02410	.04520	-.01290
-3.745	4.326	.00160	.11330	.02990	-.10490	.06710	-.03580	.02390	.04480	-.01290
-3.801	6.150	-.00660	.11030	.03430	-.15110	.09660	-.05230	.02340	.04440	-.01250
	GRADIENT	.00000	-.00014	-.00073	-.02468	.01509	-.00865	-.00009	-.00031	.00000

RUN NO. 1390/ 0 RN/L = 3.00 GRADIENT INTERVAL = -5.00/ 5.00

ALPHAO	BETAO	CNFO	CAFO	CLMFO	CYFO	CYNFO	CBLFO	CNBO	CABO	CLMBO
-.511	-6.961	.16650	.11190	-.08430	.16470	-.09990	.06290	.02570	.04900	-.01360
-.481	-4.830	.15580	.11200	-.07870	.10950	-.06500	.04240	.02460	.04720	-.01300
-.440	-.450	.13960	.11160	-.06770	.00980	-.00270	.00460	.02370	.04460	-.01260
-.421	3.647	.14750	.11500	-.07480	-.07860	.05240	-.03020	.02320	.04320	-.01250
-.428	5.812	.14160	.11340	-.07230	-.12850	.08400	-.04860	.02370	.04460	-.01270
	GRADIENT	-.00101	.00035	.00048	-.02220	.01385	-.00857	-.00017	-.00047	.00006

RUN NO. 1391/ 0 RN/L = 3.01 GRADIENT INTERVAL = -5.00/ 5.00

ALPHAO	BETAO	CNFO	CAFO	CLMFO	CYFO	CYNFO	CBLFO	CNBO	CABO	CLMBO
4.141	-5.774	.32860	.11340	-.20460	.12610	-.07930	.05240	.02440	.04640	-.01290
4.008	-3.662	.31360	.11260	-.19500	.08040	-.05020	.03440	.02420	.04540	-.01300
3.738	.170	.29610	.11060	-.18120	.00410	-.00170	.00260	.02370	.04460	-.01270
3.780	4.063	.30150	.11270	-.18700	-.07180	.04750	-.02900	.02290	.04260	-.01240
3.742	6.124	.30330	.11120	-.19010	-.11760	.07690	-.04690	.02420	.04520	-.01310
	GRADIENT	-.00156	.00001	.00103	-.01970	.01265	-.00821	-.00017	-.00036	.00008

IA156A, AEDC PWT 16T-470, O T S W/SILTS (R8N000) (10 MAY 80)

REFERENCE DATA

SREF = 2690.0000 SQ.FT. XMRP = 976.0000 IN. XT
LREF = 1290.3000 INCHES YMRP = .0000 IN. YT
BREF = 1290.3000 INCHES ZMRP = 400.0000 IN. ZT
SCALE = .0200

PARAMETRIC DATA

IB-ELV = 0.000 OB-ELV = -2.000
BDFLAP = .000 SPDBRK = .000
RUDDER = .000 SILTS = 1.000
MACH = 1.550 RN/L = 3.200
IB-AIL = 1.000

RUN NO. 1392/ 0 RN/L = 3.00 GRADIENT INTERVAL = -5.00/ 5.00

ALPHAO	BETAO	CNFO	CAFO	CLMFO	CYFO	CYNFO	CBLFO	CNBO	CABO	CLMBO
-8.172	-5.914	-.11010	.12010	.12340	.17660	-.10890	.05840	.02280	.04510	-.01160
-8.299	-3.678	-.12950	.12200	.13650	.11120	-.06610	.03680	.02220	.04330	-.01150
-8.186	.311	-.15390	.12140	.15280	.00230	.00220	.00050	.02200	.04200	-.01160
-7.997	4.570	-.15400	.11960	.15070	-.11720	.07780	-.03850	.02190	.04200	-.01150
-7.945	6.384	-.15360	.11810	.14910	-.17010	.11180	-.05530	.02200	.04210	-.01150
	GRADIENT	-.00294	-.00029	.00170	-.02770	.01745	-.00913	-.00004	-.00016	.00000

RUN NO. 1393/ 0 RN/L = 3.00 GRADIENT INTERVAL = -5.00/ 5.00

ALPHAO	BETAO	CNFO	CAFO	CLMFO	CYFO	CYNFO	CBLFO	CNBO	CABO	CLMBO
-6.325	-5.946	-.05110	.11710	.07660	.16750	-.10360	.05610	.02280	.04490	-.01170
-6.247	-3.971	-.06630	.11940	.08670	.10820	-.06490	.03610	.02230	.04340	-.01160
-6.268	.230	-.09110	.11750	.10300	-.00040	.00310	.00050	.02170	.04110	-.01150
-5.981	4.383	-.08860	.11700	.09820	-.11030	.07250	-.03520	.02170	.04140	-.01150
-5.920	6.369	-.08810	.11440	.09650	-.16580	.10830	-.05370	.02220	.04250	-.01170
	GRADIENT	-.00268	-.00029	.00138	-.02616	.01645	-.00853	-.00007	-.00024	.00001

RUN NO. 1394/ 0 RN/L = 3.00 GRADIENT INTERVAL = -5.00/ 5.00

ALPHAO	BETAO	CNFO	CAFO	CLMFO	CYFO	CYNFO	CBLFO	CNBO	CABO	CLMBO
-4.203	-6.098	.01900	.11480	.02210	.16070	-.09940	.05400	.02310	.04520	-.01190
-4.445	-3.939	-.00580	.11600	.03900	.10160	-.06060	.03310	.02240	.04330	-.01170
-4.279	.498	-.02310	.11410	.04950	-.00530	.00610	-.00150	.02180	.04120	-.01170
-3.713	4.427	-.00970	.11370	.03640	-.10530	.06870	-.03310	.02190	.04170	-.01160
-3.801	6.270	-.01620	.11090	.03980	-.15470	.10080	-.05010	.02190	.04210	-.01150
	GRADIENT	-.00054	-.00028	-.00025	-.02472	.01545	-.00791	-.00006	-.00020	.00001

RUN NO. 1395/ 0 RN/L = 3.00 GRADIENT INTERVAL = -5.00/ 5.00

ALPHAO	BETAO	CNFO	CAFO	CLMFO	CYFO	CYNFO	CBLFO	CNBO	CABO	CLMBO
-.596	-7.027	.15250	.11040	-.07970	.16730	-.10440	.05880	.02330	.04550	-.01200
-.568	-4.900	.13980	.11240	-.07140	.11260	-.06820	.03960	.02260	.04350	-.01180
-.532	-.554	.12150	.11140	-.05900	.01060	-.00280	.00390	.02160	.04100	-.01150
-.520	3.579	.12570	.11220	-.06460	-.08120	.05620	-.02820	.02160	.04070	-.01160
-.527	5.752	.12300	.11000	-.06460	-.13150	.08880	-.04540	.02210	.04210	-.01180
	GRADIENT	-.00168	-.00003	.00082	-.02286	.01468	-.00800	-.00012	-.00033	.00002

IA156A, AEDC PWT 16T-470, O T S W/SILTS (R8NOD0) (10 MAY 80)

REFERENCE DATA

SREF = 2690.0000 SQ.FT. XMRP = 976.0000 IN. XT
LREF = 1290.3000 INCHES YMRP = .0000 IN. YT
BREF = 1290.3000 INCHES ZMRP = 400.0000 IN. ZT
SCALE = .0200

PARAMETRIC DATA

IB-ELV = 9.000 OB-ELV = -2.000
BDFLAP = .000 SPDBRK = .000
RUDDER = .000 SILTS = 1.000
MACH = 1.550 RN/L = 3.200
IB-AIL = 1.000

RUN NO. 1396/ 0 RN/L = 3.00 GRADIENT INTERVAL = -5.00/ 5.00

ALPHAO	BETAO	CNFO	CAFO	CLMFO	CYFO	CYNFO	CBLFO	CNBO	CABO	CLMBO
4.170	-5.671	.31020	.11180	-.19720	.13030	-.08430	.05130	.02320	.04490	-.01210
3.997	-3.548	.28830	.10910	-.18260	.08240	-.05340	.03320	.02280	.04340	-.01210
3.686	.252	.28170	.10790	-.17780	.00720	-.00500	.00400	.02190	.04140	-.01160
3.676	4.037	.28700	.10980	-.18390	-.06870	.04610	-.02580	.02150	.04050	-.01150
3.653	6.138	.28270	.10790	-.18280	-.11850	.07900	-.04400	.02200	.04160	-.01170
	GRADIENT	-.00017	.00009	-.00017	-.01987	.01308	-.00776	-.00017	-.00038	.00008

IA156A, AEDC PWT 16T-470, O T S W/SILTS (R8NOD1) (10 MAY 80)

REFERENCE DATA

SREF = 2690.0000 SQ.FT. XMRP = 976.0000 IN. XT
LREF = 1290.3000 INCHES YMRP = .0000 IN. YT
BREF = 1290.3000 INCHES ZMRP = 400.0000 IN. ZT
SCALE = .0200

PARAMETRIC DATA

IB-ELV = 8.000 OB-ELV = -2.000
BDFLAP = .000 SPDBRK = .000
RUDDER = .000 SILTS = 1.000
MACH = 1.150 RN/L = 3.500

RUN NO. 1399/ 0 RN/L = 3.50 GRADIENT INTERVAL = -5.00/ 5.00

ALPHAO	BETAO	CNFO	CAFO	CLMFO	CYFO	CYNFO	CBLFO	CNBO	CABO	CLMBO
-8.190	-5.889	-.17510	.09820	.17360	.17910	-.10680	.06100	.03080	.05920	-.01620
-8.181	-3.823	-.19130	.10300	.18620	.11340	-.06570	.03830	.02960	.05580	-.01580
-8.123	.267	-.22180	.10150	.20890	.00070	.00290	-.00040	.02770	.05190	-.01490
-7.970	4.264	-.20790	.10420	.19660	-.11060	.07080	-.03790	.02220	.05240	-.01530
-7.952	6.212	-.19400	.10280	.18350	-.16650	.10460	-.05710	.02920	.05490	-.01570
	GRADIENT	-.00207	.00015	.00130	-.02770	.01688	-.00942	-.00017	-.00042	.00006

RUN NO. 1400/ 0 RN/L = 3.51 GRADIENT INTERVAL = -5.00/ 5.00

ALPHAO	BETAO	CNFO	CAFO	CLMFO	CYFO	CYNFO	CBLFO	CNBO	CABO	CLMBO
-6.165	-5.957	-.08660	.10110	.10890	.16600	-.09850	.06110	.03020	.05720	-.01610
-6.115	-4.038	-.10470	.10240	.12230	.11100	-.06480	.04090	.02890	.05440	-.01540
-6.201	.111	-.15190	.09850	.15720	.00440	-.00120	.00130	.02800	.05210	-.01510
-6.017	4.233	-.12600	.10310	.13490	-.10470	.06570	-.03820	.02760	.05100	-.01500
-5.795	6.354	-.10290	.10290	.11520	-.16120	.10030	-.05950	.02890	.05400	-.01560
	GRADIENT	-.00259	.00008	.00153	-.02608	.01578	-.00956	-.00016	-.00041	.00005

IA156A, AEDC PWT 16T-470, O T S W/SILTS (R8NOD1) (10 MAY 80)

REFERENCE DATA

SREF = 2690.0000 SQ.FT. XMRP = 976.0000 IN. XT
LREF = 1290.3000 INCHES YMRP = .0000 IN. YT
BREF = 1290.3000 INCHES ZMRP = 400.0000 IN. ZT
SCALE = .0200

PARAMETRIC DATA

IB-ELV = 8.000 OB-ELV = -2.000
BDFLAP = .000 SPDBRK = .000
RUDDER = .000 SILTS = 1.000
MACH = 1.150 RN/L = 3.500

RUN NO. 1401/ 0 RN/L = 3.50 GRADIENT INTERVAL = -5.00/ 5.00

ALPHAO	BETAO	CNFO	CAFO	CLMFO	CYFO	CYNFO	CBLFO	CNBO	CABO	CLMBO
-4.100	-6.094	.00280	.10230	.04330	.15530	-.09210	.06190	.03020	.05750	-.01600
-4.292	-3.967	-.02440	.10310	.06360	.09780	-.05710	.03950	.02890	.05400	-.01560
-4.195	.370	-.06370	.09960	.09280	-.00260	.00330	-.00160	.02750	.05060	-.01500
-3.741	4.274	-.02800	.10260	.06280	-.09850	.06150	-.03960	.02730	.05000	-.01490
-3.865	6.134	-.02760	.10410	.06020	-.14600	.09020	-.05800	.02840	.05250	-.01550
	GRADIENT	-.00060	-.00007	.00003	-.02381	.01438	-.00960	-.00020	-.00049	.00009

RUN NO. 1402/ 0 RN/L = 3.51 GRADIENT INTERVAL = -5.00/ 5.00

ALPHAO	BETAO	CNFO	CAFO	CLMFO	CYFO	CYNFO	CBLFO	CNBO	CABO	CLMBO
-.474	-6.986	.15440	.10060	-.06520	.16260	-.09780	.06960	.03020	.05720	-.01610
-.444	-4.835	.14280	.10310	-.05700	.11090	-.06670	.04830	.02950	.05510	-.01590
-.409	-.483	.10680	.10030	-.03080	.01030	-.00380	.00490	.02710	.05000	-.01470
-.382	3.676	.12700	.10470	-.04810	-.07740	.05090	-.03490	.02630	.04870	-.01430
-.383	5.859	.13020	.10470	-.05160	-.12620	.08080	-.05560	.02740	.05050	-.01500
	GRADIENT	-.00191	.00018	.00108	-.02213	.01382	-.00978	-.00038	-.00076	.00019

RUN NO. 1403/ 0 RN/L = 3.50 GRADIENT INTERVAL = -5.00/ 5.00

ALPHAO	BETAO	CNFO	CAFO	CLMFO	CYFO	CYNFO	CBLFO	CNBO	CABO	CLMBO
4.108	-5.814	.30530	.10000	-.17580	.12230	-.07560	.05620	.02770	.05240	-.01480
3.968	-3.697	.29170	.10080	-.16670	.08140	-.05060	.03790	.02800	.05230	-.01510
3.794	.117	.27040	.09830	-.14960	.00900	-.00540	.00420	.02730	.05050	-.01480
3.852	4.044	.29800	.10110	-.17270	-.06690	.04260	-.03160	.02630	.04820	-.01440
3.804	6.132	.29440	.10060	-.17150	-.10960	.06920	-.05020	.02680	.04940	-.01460
	GRADIENT	.00084	.00004	-.00080	-.01916	.01204	-.00898	-.00022	-.00053	.00009

IA156A, AEDC PWT 16T-470, O T S W/SILTS (R8NOD2) (10 MAY 80)

REFERENCE DATA

SREF = 2690.0000 SQ.FT. XMRP = 976.0000 IN. XT
LREF = 1290.3000 INCHES YMRP = .0000 IN. YT
BREF = 1290.3000 INCHES ZMRP = 400.0000 IN. ZT
SCALE = .0200

PARAMETRIC DATA

IB-ELV = 8.000 OB-ELV = -2.000
BDFLAP = .000 SPDBRK = .000
RUDDER = .000 SILTS = 1.000
MACH = 1.250 RN/L = 3.500

RUN NO. 1404/ 0 RN/L = 3.50 GRADIENT INTERVAL = -5.00/ 5.00

ALPHAO	BETAO	CNFO	CAFO	CLMFO	CYFO	CYNFO	CBLFO	CNBO	CABO	CLMBO
-8.058	-5.883	-.14300	.10890	.14930	.17680	-.10580	.06280	.02810	.05450	-.01470
-8.212	-3.720	-.16520	.11040	.16580	.10910	-.06280	.03840	.02710	.05190	-.01430
-8.130	.187	-.19370	.10980	.18780	.00140	.00320	.00060	.02530	.04760	-.01360
-7.955	4.413	-.17790	.11100	.17230	-.11950	.07780	-.04160	.02660	.05010	-.01430
-7.957	6.242	-.17450	.11060	.16780	-.17570	.11260	-.06100	.02790	.05280	-.01490
	GRADIENT	-.00149	.00008	.00074	-.02812	.01729	-.00984	-.00006	-.00021	-.00000

RUN NO. 1405/ 0 RN/L = 3.49 GRADIENT INTERVAL = -5.00/ 5.00

ALPHAO	BETAO	CNFO	CAFO	CLMFO	CYFO	CYNFO	CBLFO	CNBO	CABO	CLMBO
-6.183	-5.954	-.06740	.10870	.09230	.16490	-.09820	.06160	.02710	.05190	-.01430
-6.129	-4.043	-.08010	.10950	.10170	.10670	-.06180	.04060	.02660	.05050	-.01420
-6.212	.135	-.11860	.10840	.13100	-.00280	.00480	-.00020	.02600	.04860	-.01400
-5.997	4.255	-.09290	.11030	.10740	-.11040	.07050	-.04030	.02610	.04850	-.01410
-5.829	6.348	-.08660	.10900	.10010	-.16950	.10730	-.06150	.02760	.05210	-.01470
	GRADIENT	-.00156	.00010	.00070	-.02616	.01594	-.00975	-.00006	-.00024	.00001

RUN NO. 1406/ 0 RN/L = 3.50 GRADIENT INTERVAL = -5.00/ 5.00

ALPHAO	BETAO	CNFO	CAFO	CLMFO	CYFO	CYNFO	CBLFO	CNBO	CABO	CLMBO
-4.212	-6.077	.01560	.10740	.03040	.15420	-.09170	.06010	.02750	.05290	-.01440
-4.313	-3.978	-.00320	.10950	.04420	.09660	-.05550	.03840	.02690	.05040	-.01440
-4.191	.370	-.02670	.10760	.06200	-.00730	.00720	-.00240	.02560	.04800	-.01400
-3.749	4.283	.00410	.11010	.03530	-.10310	.06500	-.03940	.02540	.04660	-.01390
-3.836	6.115	-.00170	.10840	.03710	-.14980	.09430	-.05690	.02630	.04900	-.01420
	GRADIENT	.00077	.00006	-.00098	-.02417	.01458	-.00942	-.00018	-.00046	.00006

RUN NO. 1407/ 0 RN/L = 3.51 GRADIENT INTERVAL = -5.00/ 5.00

ALPHAO	BETAO	CNFO	CAFO	CLMFO	CYFO	CYNFO	CBLFO	CNBO	CABO	CLMBO
-.491	-6.993	.16770	.10720	-.07960	.16040	-.09650	.06540	.02690	.05150	-.01420
-.471	-4.853	.15900	.10880	-.07390	.11150	-.06630	.04620	.02790	.05300	-.01480
-.424	-.443	.13100	.10650	-.05410	.00940	-.00310	.00430	.02490	.04660	-.01340
-.392	3.681	.14940	.11180	-.06940	-.07780	.05110	-.03340	.02430	.04500	-.01320
-.405	5.873	.14630	.11160	-.06910	-.12800	.08200	-.05310	.02510	.04630	-.01370
	GRADIENT	-.00119	.00034	.00057	-.02219	.01376	-.00933	-.00042	-.00094	.00019

IA156A, AEDC PWT 16T-470, O T S W/SILTS (R8NOD2) (10 MAY 80)

REFERENCE DATA

SREF = 2690.0000 SQ.FT. XMRP = 976.0000 IN. XT
LREF = 1290.3000 INCHES YMRP = .0000 IN. YT
BREF = 1290.3000 INCHES ZMRP = 400.0000 IN. ZT
SCALE = .0200

PARAMETRIC DATA

IB-ELV = 8.000 OB-ELV = -2.000
BDFLAP = .000 SPDBRK = .000
RUDDER = .000 SILTS = 1.000
MACH = 1.250 RN/L = 3.500

RUN NO. 1408/ 0 RN/L = 3.50 GRADIENT INTERVAL = -5.00/ 5.00

ALPHAO	BETAO	CNFO	CAFO	CLMFO	CYFO	CYNFO	CBLFO	CNBO	CABO	CLMBO
4.160	-5.799	.33260	.10800	-.20140	.12370	-.07670	.05400	.02600	.04920	-.01390
3.982	-3.661	.31620	.10800	-.19040	.08050	-.04990	.03570	.02580	.04820	-.01390
3.771	.206	.29100	.10390	-.17010	.00400	-.00170	.00210	.02580	.04820	-.01390
3.835	4.085	.31080	.11010	-.18720	-.07170	.04670	-.03170	.02430	.04460	-.01330
3.786	6.141	.30750	.10890	-.18660	-.11470	.07350	-.04950	.02460	.04520	-.01340
	GRADIENT	-.00069	.00027	.00041	-.01965	.01247	-.00870	-.00019	-.00046	.00008

IA156A, AEDC PWT 16T-470, O T S W/SILTS (R8NOD3) (10 MAY 80)

REFERENCE DATA

SREF = 2690.0000 SQ.FT. XMRP = 976.0000 IN. XT
LREF = 1290.3000 INCHES YMRP = .0000 IN. YT
BREF = 1290.3000 INCHES ZMRP = 400.0000 IN. ZT
SCALE = .0200

PARAMETRIC DATA

IB-ELV = 8.000 OB-ELV = -2.000
BDFLAP = .000 SPDBRK = .000
RUDDER = .000 SILTS = 1.000
MACH = 1.400 RN/L = 3.500

RUN NO. 1409/ 0 RN/L = 3.00 GRADIENT INTERVAL = -5.00/ 5.00

ALPHAO	BETAO	CNFO	CAFO	CLMFO	CYFO	CYNFO	CBLFO	CNBO	CABO	CLMBO
-8.086	-5.930	-.12770	.11660	.13790	.18130	-.11040	.06140	.02560	.05010	-.01320
-8.220	-3.728	-.14710	.11890	.15070	.11380	-.06730	.03830	.02380	.04650	-.01240
-8.142	.230	-.17590	.11730	.17120	.00370	.00140	.00060	.02350	.04460	-.01250
-7.943	4.451	-.16710	.11820	.16130	-.12120	.07970	-.04090	.02390	.04510	-.01280
-7.969	6.303	-.16670	.11600	.15950	-.17720	.11530	-.05890	.02360	.04490	-.01250
	GRADIENT	-.00240	-.00008	.00126	-.02874	.01798	-.00969	.00001	-.00017	-.00005

RUN NO. 1410/ 0 RN/L = 2.99 GRADIENT INTERVAL = -5.00/ 5.00

ALPHAO	BETAO	CNFO	CAFO	CLMFO	CYFO	CYNFO	CBLFO	CNBO	CABO	CLMBO
-6.257	-5.962	-.06550	.11450	.08970	.16890	-.10290	.05880	.02490	.04870	-.01280
-6.163	-4.003	-.07170	.11620	.09300	.10930	-.06510	.03780	.02410	.04660	-.01260
-6.200	.152	-.10090	.11490	.11260	.00040	.00270	-.00030	.02340	.04410	-.01260
-5.976	4.285	-.08940	.11560	.10040	-.11110	.07200	-.03740	.02330	.04400	-.01240
-5.941	6.262	-.09340	.11260	.10170	-.17160	.11070	-.05760	.02430	.04620	-.01290
	GRADIENT	-.00214	-.00007	.00090	-.02659	.01654	-.00907	-.00010	-.00031	.00002

IA156A FORCE DATA WITH FLOW ANGULARITY CORRECTION

IA156A, AEDC PWT 16T-470, O T S W/SILTS

(R8NOD3) (10 MAY 80)

REFERENCE DATA

SREF = 2690.0000 SQ.FT. XMRP = 976.0000 IN. XT
LREF = 1290.3000 INCHES YMRP = .0000 IN. YT
BREF = 1290.3000 INCHES ZMRP = 400.0000 IN. ZT
SCALE = .0200

PARAMETRIC DATA

IB-ELV = 8.000 OB-ELV = -2.000
BDFLAP = .000 SPDBRK = .000
RUDDER = .000 SILTS = 1.000
MACH = 1.400 RN/L = 3.500

RUN NO. 1411/ 0 RN/L = 2.99 GRADIENT INTERVAL = -5.00/ 5.00

ALPHAO	BETAO	CNFO	CAFO	CLMFO	CYFO	CYNFO	CBLFO	CNBO	CABO	CLMBO
-4.076	-6.072	.01800	.11330	.02560	.15860	-.09590	.05690	.02520	.04880	-.01320
-4.353	-3.952	-.00330	.11450	.04010	.09910	-.05800	.03510	.02410	.04630	-.01270
-4.200	.417	-.01500	.11210	.04620	-.00670	.00660	-.00260	.02320	.04370	-.01240
-3.744	4.333	.00330	.11330	.02960	-.10510	.06700	-.03650	.02310	.04330	-.01240
-3.816	6.148	-.00800	.11120	.03630	-.15420	.09820	-.05380	.02390	.04550	-.01260
	GRADIENT	.00073	-.00015	-.00122	-.02464	.01508	-.00864	-.00012	-.00037	.00004

RUN NO. 1412/ 0 RN/L = 2.99 GRADIENT INTERVAL = -5.00/ 5.00

ALPHAO	BETAO	CNFO	CAFO	CLMFO	CYFO	CYNFO	CBLFO	CNBO	CABO	CLMBO
-.514	-7.000	.16270	.11180	-.08080	.16450	-.10000	.06230	.02540	.04850	-.01340
-.487	-4.816	.15120	.11150	-.07460	.10940	-.06500	.04180	.02410	.04630	-.01260
-.442	-.499	.13770	.11160	-.06580	.00940	-.00260	.00410	.02320	.04370	-.01240
-.424	3.637	.14720	.11510	-.07400	-.07920	.05240	-.03080	.02300	.04290	-.01240
-.432	5.812	.13820	.11350	-.06920	-.12970	.08480	-.04950	.02360	.04430	-.01270
	GRADIENT	-.00049	.00042	.00009	-.02232	.01389	-.00859	-.00013	-.00040	.00002

RUN NO. 1413/ 0 RN/L = 2.99 GRADIENT INTERVAL = -5.00/ 5.00

ALPHAO	BETAO	CNFO	CAFO	CLMFO	CYFO	CYNFO	CBLFO	CNBO	CABO	CLMBO
4.136	-5.765	.32640	.11320	-.20250	.12550	-.07900	.05180	.02410	.04590	-.01280
3.993	-3.651	.30980	.11290	-.19210	.07960	-.04980	.03380	.02320	.04330	-.01250
3.759	.176	.29470	.11040	-.17950	.00390	-.00170	.00190	.02330	.04380	-.01250
3.790	4.045	.30240	.11270	-.18670	-.07140	.04730	-.02940	.02300	.04280	-.01240
3.737	6.120	.29910	.11070	-.18690	-.11610	.07590	-.04680	.02300	.04310	-.01240
	GRADIENT	-.00096	-.00002	.00070	-.01962	.01262	-.00821	-.00003	-.00007	.00001

IA156A, AEDC PWT 16T-470, O T S W/SILTS

(R8NOD4) (10 MAY 80)

REFERENCE DATA

SREF = 2690.0000 SQ.FT. XMRP = 976.0000 IN. XT
LREF = 1290.3000 INCHES YMRP = .0000 IN. YT
BREF = 1290.3000 INCHES ZMRP = 400.0000 IN. ZT
SCALE = .0200

PARAMETRIC DATA

IB-ELV = 8.000 OB-ELV = -2.000
BDFLAP = .000 SPDBRK = .000
RUDDER = .000 SILTS = 1.000
MACH = 1.550 RN/L = 3.200

RUN NO. 1414/ 0 RN/L = 3.00 GRADIENT INTERVAL = -5.00/ 5.00

ALPHAO	BETAO	CNFO	CAFO	CLMFO	CYFO	CYNFO	CBLFO	CNBO	CABO	CLMBO
-8.173	-5.906	-.11170	.12050	.12590	.17830	-.11020	.05820	.02250	.04460	-.01150
-8.310	-3.678	-.13340	.12200	.14030	.11020	-.06570	.03600	.02220	.04320	-.01150
-8.207	.302	-.15520	.12140	.15420	.00360	.00120	.00030	.02120	.04040	-.01120
-7.990	4.583	-.15530	.12070	.15250	-.11970	.07930	-.03970	.02140	.04070	-.01130
-7.954	6.387	-.15600	.11880	.15200	-.17390	.11410	-.05690	.02230	.04290	-.01170
	GRADIENT	-.00262	-.00016	.00145	-.02784	.01756	-.00917	-.00010	-.00030	.00002

RUN NO. 1415/ 0 RN/L = 3.00 GRADIENT INTERVAL = -5.00/ 5.00

ALPHAO	BETAO	CNFO	CAFO	CLMFO	CYFO	CYNFO	CBLFO	CNBO	CABO	CLMBO
-6.355	-5.955	-.05640	.11720	.08110	.16760	-.10360	.05560	.02240	.04430	-.01150
-6.251	-3.965	-.06750	.11810	.08820	.10930	-.06590	.03580	.02210	.04330	-.01140
-6.276	.218	-.09360	.11770	.10550	.00000	00280	.00000	.02140	.04060	-.01140
-5.974	4.381	-.08970	.11660	.09940	-.11010	.07220	-.03560	.02140	.04100	-.01130
-5.924	6.362	-.08970	.11390	.09800	-.16710	.10890	-.05460	.02180	.04190	-.01150
	GRADIENT	-.00266	-.00018	.00134	-.02629	.01655	-.00855	-.00008	-.00028	.00001

RUN NO. 1416/ 0 RN/L = 3.00 GRADIENT INTERVAL = -5.00/ 5.00

ALPHAO	BETAO	CNFO	CAFO	CLMFO	CYFO	CYNFO	CBLFO	CNBO	CABO	CLMBO
-4.193	-6.090	.01660	.11440	.02450	.15880	-.09850	.05290	.02260	.04460	-.01150
-4.448	-3.945	-.00730	.11640	.04100	.10060	-.06030	.03240	.02190	.04240	-.01140
-4.285	.497	-.02550	.11470	.05190	-.00780	.00750	-.00250	.02150	.04070	-.01150
-3.718	4.433	-.01330	.11360	.03950	-.10660	.06950	-.03410	.02140	.04090	-.01130
-3.794	6.252	-.01810	.11210	.04240	-.15470	.10060	-.05060	.02170	.04150	-.01150
	GRADIENT	-.00079	-.00034	-.00012	-.02472	.01549	-.00794	-.00006	-.00018	.00001

RUN NO. 1417/ 0 RN/L = 3.00 GRADIENT INTERVAL = -5.00/ 5.00

ALPHAO	BETAO	CNFO	CAFO	CLMFO	CYFO	CYNFO	CBLFO	CNBO	CABO	CLMBO
-.600	-7.077	.14950	.11020	-.07650	.16620	-.10380	.05790	.02270	.04410	-.01180
-.575	-4.886	.13540	.11210	-.06780	.11270	-.06830	.03920	.02250	.04320	-.01180
-.535	-.570	.11900	.11110	-.05700	.01010	-.00250	.00320	.02160	.04070	-.01150
-.523	3.572	.12280	.11250	-.06210	-.08200	.05650	-.02880	.02120	.04000	-.01130
-.529	5.754	.12290	.11000	-.06410	-.13220	.08910	-.04610	.02210	.04210	-.01170
	GRADIENT	-.00151	.00005	.00069	-.02303	.01476	-.00804	-.00015	-.00038	.00006

IA156A, AEDC PWT 16T-470, O T S W/SILTS (R8NOD4) (10 MAY 80)

REFERENCE DATA

SREF = 2690.0000 SQ.FT. XMRP = 976.0000 IN. XT
LREF = 1290.3000 INCHES YMRP = .0000 IN. YT
BREF = 1290.3000 INCHES ZMRP = 400.0000 IN. ZT
SCALE = .0200

PARAMETRIC DATA

IB-ELV = 8.000 OB-ELV = -2.000
BDFLAP = .000 SPDBRK = .000
RUDDER = .000 SILTS = 1.000
MACH = 1.550 RN/L = 3.200

RUN NO. 1418/ 0 RN/L = 3.00 GRADIENT INTERVAL = -5.00/ 5.00

ALPHAO	BETAO	CNFO	CAFO	CLMFO	CYFO	CYNFO	CBLFO	CNBO	CABO	CLMBO
4.174	-5.670	.30910	.11190	-.19580	.12940	-.08380	.05050	.02310	.04460	-.01210
3.981	-3.537	.28590	.10950	-.18030	.08130	-.05250	.03220	.02210	.04180	-.01180
3.707	.254	.27900	.10800	-.17570	.00470	-.00330	.00290	.02130	.04040	-.01130
3.701	4.070	.28900	.11040	-.18440	-.07170	.04770	-.02720	.02170	.04080	-.01160
3.631	6.106	.28150	.10850	-.18120	-.11880	.07900	-.04460	.02190	.04150	-.01170
	GRADIENT	.00041	.00012	-.00054	-.02011	.01317	-.00781	-.00005	-.00013	.00003

IA156A, AEDC PWT 16T-470, O T S W/SILTS (R8NOD5) (10 MAY 80)

REFERENCE DATA

SREF = 2690.0000 SQ.FT. XMRP = 976.0000 IN. XT
LREF = 1290.3000 INCHES YMRP = .0000 IN. YT
BREF = 1290.3000 INCHES ZMRP = 400.0000 IN. ZT
SCALE = .0200

PARAMETRIC DATA

IB-ELV = 8.000 OB-ELV = -2.000
BDFLAP = .000 SPDBRK = .000
RUDDER = .000 SILTS = 1.000
MACH = 1.550 RN/L = 3.200

RUN NO. 1419/ 0 RN/L = 3.00 GRADIENT INTERVAL = -5.00/ 5.00

ALPHAO	BETAO	CNFO	CAFO	CLMFO	CYFO	CYNFO	CBLFO	CNBO	CABO	CLMBO
-8.336	-5.820	-.11810	.11950	.13070	.17440	-.10750	.05710	.02240	.04440	-.01140
-8.337	-3.710	-.13360	.12180	.14030	.11120	-.06660	.03640	.02190	.04270	-.01140
-8.188	.540	-.15690	.12130	.15580	-.00530	.00710	-.00240	.02130	.04060	-.01130
-7.992	4.474	-.15490	.11960	.15200	-.11470	.07600	-.03820	.02140	.04080	-.01130
-7.957	6.376	-.15660	.11810	.15180	-.17180	.11280	-.05640	.02190	.04200	-.01150
	GRADIENT	-.00264	-.00027	.00146	-.02760	.01742	-.00912	-.00006	-.00024	.00001

IA156A, AEDC PWT 16T-470, O T S W/SILTS (R8NOD6) (10 MAY 80)

REFERENCE DATA

SREF = 2690.0000 SQ.FT. XMRP = 976.0000 IN. XT
LREF = 1290.3000 INCHES YMRP = .0000 IN. YT
BREF = 1290.3000 INCHES ZMRP = 400.0000 IN. ZT
SCALE = .0200

PARAMETRIC DATA

IB-ELV = 10.000 OB-ELV = -2.000
BDFLAP = .000 SPDBRK = .000
RUDDER = .000 SILTS = 1.000
MACH = 1.150 RN/L = 3.500

RUN NO. 1432/ 0 RN/L = 3.50 GRADIENT INTERVAL = -5.00/ 5.00

ALPHAO	BETAO	CNFO	CAFO	CLMFO	CYFO	CYNFO	CBLFO	CNBO	CABO	CLMBO
-8.038	-5.907	-.15620	.10460	.15980	.18000	-.10710	.06230	.03120	.06060	-.01630
-8.227	-3.794	-.18030	.10530	.17770	.11520	-.06650	.03900	.03090	.05870	-.01640
-8.153	.354	-.22130	.10550	.20830	.00090	.00230	-.00050	.02870	.05390	-.01540
-7.957	4.313	-.20250	.10730	.19250	-.11240	.07100	-.03880	.02910	.05420	-.01570
-7.971	6.241	-.19260	.10790	.18240	-.16880	.10530	-.05830	.02980	.05570	-.01600
	GRADIENT	-.00280	.00025	.00187	-.02807	.01696	-.00960	-.00022	-.00056	.00009

RUN NO. 1433/ 0 RN/L = 3.50 GRADIENT INTERVAL = -5.00/ 5.00

ALPHAO	BETAO	CNFO	CAFO	CLMFO	CYFO	CYNFO	CBLFO	CNBO	CABO	CLMBO
-6.187	-5.974	-.07540	.10440	.10010	.16710	-.09900	.06190	.03080	.05910	-.01620
-6.100	-4.044	-.09020	.10530	.11130	.10880	-.06290	.04050	.02980	.05650	-.01590
-6.207	.105	-.14340	.10260	.15120	.00410	-.00110	.00130	.02830	.05290	-.01530
-6.019	4.250	-.11830	.10680	.12920	-.10620	.06580	-.03910	.02830	.05220	-.01550
-5.950	6.204	-.10590	.10650	.11730	-.15940	.09860	-.05890	.02970	.05500	-.01610
	GRADIENT	-.00339	.00018	.00216	-.02592	.01552	-.00960	-.00018	-.00052	.00005

RUN NO. 1434/ 0 RN/L = 3.50 GRADIENT INTERVAL = -5.00/ 5.00

ALPHAO	BETAO	CNFO	CAFO	CLMFO	CYFO	CYNFO	CBLFO	CNBO	CABO	CLMBO
-4.105	-6.088	.01600	.10390	.03260	.15580	-.09170	.06210	.03080	.05900	-.01620
-4.305	-3.979	-.01420	.10480	.05540	.09920	-.05770	.03990	.02940	.05510	-.01580
-4.201	.370	-.05390	.10260	.08570	-.00230	.00280	-.00170	.02800	.05180	-.01530
-3.751	4.297	-.01800	.10550	.05520	-.09910	.06100	-.04020	.02790	.05100	-.01530
-3.849	6.117	-.01550	.10640	.05100	-.14460	.08880	-.05770	.02880	.05320	-.01570
	GRADIENT	-.00061	.00007	.00010	-.02395	.01434	-.00968	-.00018	-.00050	.00006

RUN NO. 1435/ 0 RN/L = 3.50 GRADIENT INTERVAL = -5.00/ 5.00

ALPHAO	BETAO	CNFO	CAFO	CLMFO	CYFO	CYNFO	CBLFO	CNBO	CABO	CLMBO
-.465	-7.059	.16740	.10270	-.07510	.16420	-.09810	.07060	.03050	.05790	-.01620
-.441	-4.843	.15080	.10450	-.06400	.10940	-.06520	.04800	.02970	.05550	-.01600
-.409	-.455	.11090	.10200	-.03420	.01020	-.00370	.00480	.02780	.05150	-.01510
-.377	3.670	.13270	.10580	-.05260	-.07810	.05110	-.03540	.02730	.05030	-.01490
-.377	5.843	.13920	.10630	-.05950	-.12500	.07970	-.05560	.02770	.05120	-.01510
	GRADIENT	-.00220	.00015	.00140	-.02203	.01367	-.00980	-.00028	-.00061	.00013

IA156A, AEDC PWT 16T-470, O T S W/SILTS (R8NOD6) (10 MAY 80)

REFERENCE DATA

SREF = 2690.0000 SQ.FT. XMRP = 976.0000 IN. XT
LREF = 1290.3000 INCHES YMRP = .0000 IN. YT
BREF = 1290.3000 INCHES ZMRP = 400.0000 IN. ZT
SCALE = .0200

PARAMETRIC DATA

IB-ELV = 10.000 OB-ELV = -2.000
BDFLAP = .000 SPDBRK = .000
RUDDER = .000 SILTS = 1.000
MACH = 1.150 RN/L = 3.500

RUN NO. 1436/ 0 RN/L = 3.50 GRADIENT INTERVAL = -5.00/ 5.00

ALPHAO	BETAO	CNFO	CAFO	CLMFO	CYFO	CYNFO	CBLFO	CNBO	CABO	CLMBO
3.986	-5.876	.31450	.10200	-.18380	.12330	-.07580	.05760	.02830	.05370	-.01500
4.011	-3.800	.30550	.10200	-.17740	.08160	-.05040	.03880	.02870	.05360	-.01540
3.888	.183	.28070	.09930	-.15770	.00760	-.00430	.00350	.02800	.05220	-.01510
3.833	3.991	.30220	.10240	-.17690	-.06490	.04130	-.03080	.02660	.04900	-.01460
3.791	6.099	.30610	.10280	-.18120	-.10970	.06900	-.05060	.02720	.04990	-.01490
	GRADIENT	-.00047	.00005	.00010	-.01880	.01177	-.00893	-.00027	-.00059	.00010

IA156A, AEDC PWT 16T-470, O T S W/SILTS (R8NOD7) (10 MAY 80)

REFERENCE DATA

SREF = 2690.0000 SQ.FT. XMRP = 976.0000 IN. XT
LREF = 1290.3000 INCHES YMRP = .0000 IN. YT
BREF = 1290.3000 INCHES ZMRP = 400.0000 IN. ZT
SCALE = .0200

PARAMETRIC DATA

IB-ELV = 10.000 OB-ELV = -2.000
BDFLAP = .000 SPDBRK = .000
RUDDER = .000 SILTS = 1.000
MACH = 1.250 RN/L = 3.500

RUN NO. 1437/ 0 RN/L = 3.50 GRADIENT INTERVAL = -5.00/ 5.00

ALPHAO	BETAO	CNFO	CAFO	CLMFO	CYFO	CYNFO	CBLFO	CNBO	CABO	CLMBO
-8.206	-5.869	-.14000	.10910	.14640	.17480	-.10450	.06180	.02780	.05450	-.01440
-8.220	-3.786	-.15530	.11220	.15780	.11190	-.06450	.03950	.02750	.05230	-.01460
-8.123	.183	-.18710	.11060	.18220	.00160	.00290	.00070	.02630	.04950	-.01400
-7.968	4.350	-.16930	.11200	.16540	-.11670	.07590	-.04070	.02690	.05060	-.01440
-7.961	6.231	-.16500	.11240	.16000	-.17380	.11090	-.06040	.02750	.05200	-.01460
	GRADIENT	-.00167	-.00002	.00089	-.02810	.01726	-.00986	-.00007	-.00021	.00002

RUN NO. 1438/ 0 RN/L = 3.50 GRADIENT INTERVAL = -5.00/ 5.00

ALPHAO	BETAO	CNFO	CAFO	CLMFO	CYFO	CYNFO	CBLFO	CNBO	CABO	CLMBO
-6.190	-5.956	-.05990	.10930	.08550	.16370	-.09770	.06130	.02760	.05350	-.01440
-6.130	-4.040	-.06960	.11080	.09270	.10650	-.06170	.04050	.02730	.05190	-.01450
-6.210	.123	-.10860	.10930	.12250	-.00100	.00370	.00030	.02600	.04870	-.01400
-5.993	4.254	-.08520	.11150	.10100	-.11060	.07060	-.04030	.02620	.04870	-.01420
-5.966	6.246	-.08420	.11060	.09790	-.16740	.10580	-.06060	.02720	.05130	-.01450
	GRADIENT	-.00189	.00008	.00101	-.02617	.01595	-.00974	-.00013	-.00039	.00004

IA156A, AEDC PWT 16T-470, O T S W/SILTS (R8NOD7) (10 MAY 80)

REFERENCE DATA

SREF = 2690.0000 SQ.FT. XMRP = 976.0000 IN. XT
LREF = 1290.3000 INCHES YMRP = .0000 IN. YT
BREF = 1290.3000 INCHES ZMRP = 400.0000 IN. ZT
SCALE = .0200

PARAMETRIC DATA

IB-ELV = 10.000 OB-ELV = -2.000
BDFLAP = .000 SPDBRK = .000
RUDDER = .000 SILTS = 1.000
MACH = 1.250 RN/L = 3.500

RUN NO. 1439/ 0 RN/L = 3.50 GRADIENT INTERVAL = -5.00/ 5.00

ALPHAO	BETAO	CNFO	CAFO	CLMFO	CYFO	CYNFO	CBLFO	CNBO	CABO	CLMBO
-4.099	-6.084	.02860	.10930	.02000	.15510	-.09230	.06050	.02790	.05320	-.01470
-4.302	-3.965	.00700	.11000	.03540	.09720	-.05600	.03850	.02720	.05120	-.01460
-4.205	.380	-.02050	.10830	.05610	-.00740	.00700	-.00230	.02600	.04850	-.01410
-3.753	4.301	.00950	.11090	.02990	-.10220	.06440	-.03910	.02590	.04760	-.01410
-3.869	6.159	.00390	.11050	.03210	-.15030	.09440	-.05710	.02650	.04930	-.01430
	GRADIENT	.00018	.00010	-.00057	-.02412	.01456	-.00939	-.00016	-.00044	.00006

RUN NO. 1440/ 0 RN/L = 3.50 GRADIENT INTERVAL = -5.00/ 5.00

ALPHAO	BETAO	CNFO	CAFO	CLMFO	CYFO	CYNFO	CBLFO	CNBO	CABO	CLMBO
-.487	-7.095	.17800	.10820	-.08800	.16440	-.09910	.06690	.02800	.05380	-.01480
-.460	-4.831	.16480	.10960	-.07990	.10810	-.06450	.04500	.02720	.05160	-.01440
-.418	-.484	.14000	.10730	-.06190	.00990	-.00350	.00460	.02550	.04760	-.01380
-.391	3.669	.15460	.11290	-.07420	-.07810	.05130	-.03350	.02510	.04620	-.01370
-.399	5.848	.15160	.11170	-.07440	-.12730	.08150	-.05300	.02570	.04740	-.01400
	GRADIENT	-.00123	.00038	.00070	-.02191	.01363	-.00924	-.00025	-.00064	.00008

RUN NO. 1441/ 0 RN/L = 3.50 GRADIENT INTERVAL = -5.00/ 5.00

ALPHAO	BETAO	CNFO	CAFO	CLMFO	CYFO	CYNFO	CBLFO	CNBO	CABO	CLMBO
3.994	-5.859	.33590	.10880	-.20480	.12500	-.07780	.05480	.02640	.04990	-.01410
4.009	-3.789	.32570	.10920	-.19850	.08320	-.05170	.03710	.02630	.04910	-.01420
3.884	.192	.30370	.10560	-.18050	.00450	-.00220	.00260	.02590	.04840	-.01400
3.812	3.991	.31490	.10970	-.19140	-.07070	.04600	-.03120	.02530	.04610	-.01390
3.781	6.115	.31290	.10940	-.19180	-.11410	.07310	-.04930	.02510	.04630	-.01370
	GRADIENT	-.00142	.00006	.00094	-.01978	.01256	-.00878	-.00013	-.00038	.00004

IA156A, AEDC PWT 16T-470, O T S W/SILTS (R8NOD8) (10 MAY 80)

REFERENCE DATA

SREF = 2690.0000 SQ.FT. XMRP = 976.0000 IN. XT
LREF = 1290.3000 INCHES YMRP = .0000 IN. YT
BREF = 1290.3000 INCHES ZMRP = 400.0000 IN. ZT
SCALE = .0200

PARAMETRIC DATA

IB-ELV = 10.000 OB-ELV = -2.000
BDFLAP = .000 SPDBRK = .000
RUDDER = .000 SILTS = 1.000
MACH = 1.400 RN/L = 3.500

RUN NO. 1442/ 0 RN/L = 3.00 GRADIENT INTERVAL = -5.00/ 5.00

ALPHAO	BETAO	CNFO	CAFO	CLMFO	CYFO	CYNFO	CBLFO	CNBO	CABO	CLMBO
-8.250	-5.867	-.12680	.11730	.13680	.17900	-.10930	.06070	.02560	.05030	-.01320
-8.255	-3.766	-.14220	.11960	.14640	.11630	-.06900	.03920	.02480	.04820	-.01290
-8.143	.441	-.16850	.11830	.16480	-.00260	.00510	-.00140	.02370	.04480	-.01270
-7.980	4.369	-.15920	.11830	.15460	-.11730	.07720	-.03960	.02360	.04470	-.01260
-7.971	6.295	-.16040	.11570	.15390	-.17690	.11480	-.05870	.02450	.04700	-.01290
	GRADIENT	-.00214	-.00016	.00105	-.02871	.01797	-.00969	-.00015	-.00043	.00004

RUN NO. 1443/ 0 RN/L = 3.00 GRADIENT INTERVAL = -5.00/ 5.00

ALPHAO	BETAO	CNFO	CAFO	CLMFO	CYFO	CYNFO	CBLFO	CNBO	CABO	CLMBO
-6.241	-5.956	-.05470	.11490	.08040	.16790	-.10260	.05850	.02510	.04890	-.01300
-6.180	-4.023	-.06590	.11710	.08730	.11020	-.06550	.03810	.02480	.04790	-.01300
-6.214	.163	-.09080	.11530	.10400	.00140	00210	.00020	.02370	.04460	-.01270
-6.015	4.296	-.08410	.11670	.09570	-.11170	.07240	-.03750	.02380	.04470	-.01270
-5.715	6.376	-.07550	.11320	.08740	-.17020	.10960	-.05730	.02410	.04620	-.01270
	GRADIENT	-.00220	-.00005	.00102	-.02667	.01658	-.00909	-.00012	-.00039	.00004

RUN NO. 1444/ 0 RN/L = 3.00 GRADIENT INTERVAL = -5.00/ 5.00

ALPHAO	BETAO	CNFO	CAFO	CLMFO	CYFO	CYNFO	CBLFO	CNBO	CABO	CLMBO
-4.136	-6.072	.02420	.11380	.02010	.15870	-.09610	.05690	.02520	.04910	-.01310
-4.348	-3.959	.00690	.11550	.03160	.10010	-.05860	.03540	.02440	.04660	-.01290
-4.211	.422	-.00740	.11350	.03960	-.00670	.00650	-.00250	.02360	.04420	-.01270
-3.760	4.343	.00700	.11440	.02520	-.10480	.06680	-.03620	.02350	.04410	-.01260
-3.823	6.170	-.00360	.11240	.03200	-.15410	.09810	-.05360	.02400	.04550	-.01270
	GRADIENT	-.00005	-.00014	-.00072	-.02467	.01510	-.00862	-.00011	-.00031	.00004

RUN NO. 1445/ 0 RN/L = 3.00 GRADIENT INTERVAL = -5.00/ 5.00

ALPHAO	BETAO	CNFO	CAFO	CLMFO	CYFO	CYNFO	CBLFO	CNBO	CABO	CLMBO
-.508	-6.973	.17170	.11150	-.08850	.16590	-.10100	.06290	.02550	.04890	-.01340
-.475	-4.828	.16170	.11240	-.08340	.10870	-.06480	.04170	.02450	.04690	-.01290
-.432	-.493	.14660	.11240	-.07340	.00960	-.00290	.00400	.02350	.04420	-.01260
-.415	3.629	.15450	.11640	-.08050	-.07890	.05230	-.03080	.02300	.04300	-.01240
-.423	5.806	.14520	.11380	-.07550	-.12920	.08430	-.04920	.02400	.04520	-.01280
	GRADIENT	-.00087	.00047	.00036	-.02219	.01385	-.00857	-.00018	-.00046	.00006

IA156A, AEDC PWT 16T-470, O T S W/SILTS (R8N0D8) (10 MAY 80)

REFERENCE DATA

SREF = 2690.0000 SQ.FT. XMRP = 976.0000 IN. XT
LREF = 1290.3000 INCHES YMRP = .0000 IN. YT
BREF = 1290.3000 INCHES ZMRP = 400.0000 IN. ZT
SCALE = .0200

PARAMETRIC DATA

IB-ELV = 10.000 OB-ELV = -2.000
BDFLAP = .000 SPDBRK = .000
RUDDER = .000 SILTS = 1.000
MACH = 1.400 RN/L = 3.500

RUN NO. 1446/ 0 RN/L = 3.00 GRADIENT INTERVAL = -5.00/ 5.00

ALPHAO	BETAO	CNFO	CAFO	CLMFO	CYFO	CYNFO	CBLFO	CNBO	CABO	CLMBO
4.022	-5.839	.32880	.11370	-.20550	.12690	-.08020	.05250	.02430	.04630	-.01290
4.000	-3.722	.31700	.11350	-.19840	.08140	-.05120	.03460	.02370	.04430	-.01280
3.874	.227	.30600	.11120	-.18930	.00460	-.00240	.00220	.02330	.04410	-.01250
3.761	4.009	.30840	.11360	-.19230	-.07180	.04750	-.02940	.02350	.04360	-.01280
3.736	6.121	.30510	.11180	-.19240	-.11720	.07660	-.04720	.02360	.04410	-.01280
	GRADIENT	-.00112	.00001	.00080	-.01981	.01276	-.00828	-.00003	-.00009	.00000

IA156A, AEDC PWT 16T-470, O T S W/SILTS (R8N0D9) (10 MAY 80)

REFERENCE DATA

SREF = 2690.0000 SQ.FT. XMRP = 976.0000 IN. XT
LREF = 1290.3000 INCHES YMRP = .0000 IN. YT
BREF = 1290.3000 INCHES ZMRP = 400.0000 IN. ZT
SCALE = .0200

PARAMETRIC DATA

IB-ELV = 10.000 OB-ELV = -2.000
BDFLAP = .000 SPDBRK = .000
RUDDER = .000 SILTS = 1.000
MACH = 1.550 RN/L = 3.200

RUN NO. 1447/ 0 RN/L = 3.00 GRADIENT INTERVAL = -5.00/ 5.00

ALPHAO	BETAO	CNFO	CAFO	CLMFO	CYFO	CYNFO	CBLFO	CNBO	CABO	CLMBO
-8.341	-5.829	-.11010	.11930	.12350	.17370	-.10750	.05710	.02300	.04580	-.01170
-8.341	-3.718	-.12500	.12270	.13370	.11000	-.06600	.03620	.02250	.04370	-.01170
-8.201	.507	-.14950	.12250	.14910	-.00210	.00470	-.00150	.02170	.04100	-.01150
-7.997	4.485	-.14800	.12080	.14620	-.11360	.07510	-.03780	.02160	.04130	-.01140
-7.962	6.384	-.15080	.11910	.14720	-.17070	.11160	-.05580	.02230	.04300	-.01170
	GRADIENT	-.00283	-.00023	.00155	-.02725	.01720	-.00902	-.00011	-.00030	.00004

RUN NO. 1448/ 0 RN/L = 3.00 GRADIENT INTERVAL = -5.00/ 5.00

ALPHAO	BETAO	CNFO	CAFO	CLMFO	CYFO	CYNFO	CBLFO	CNBO	CABO	CLMBO
-6.352	-5.969	-.04650	.11750	.07350	.16860	-.10480	.05610	.02280	.04500	-.01170
-6.254	-3.972	-.06090	.11940	.08200	.10820	-.06530	.03570	.02200	.04290	-.01140
-6.281	.234	-.08470	.11870	.09790	-.00090	.00300	.00000	.02150	.04070	-.01150
-6.011	4.388	-.08390	.11830	.09450	-.11010	.07180	-.03550	.02150	.04100	-.01140
-5.699	6.475	-.07630	.11510	.08690	-.16670	.10840	-.05430	.02230	.04290	-.01170
	GRADIENT	-.00276	-.00013	.00150	-.02611	.01640	-.00852	-.00006	-.00023	-.00000

IA156A, AEDC PWT 16T-470, O T S W/SILTS (R8N0D9) (10 MAY 80)

REFERENCE DATA

SREF = 2690.0000 SQ.FT. XMRP = 976.0000 IN. XT
LREF = 1290.3000 INCHES YMRP = .0000 IN. YT
BREF = 1290.3000 INCHES ZMRP = 400.0000 IN. ZT
SCALE = .0200

PARAMETRIC DATA

IB-ELV = 10.000 OB-ELV = -2.000
BDFLAP = .000 SPDBRK = .000
RUDDER = .000 SILTS = 1.000
MACH = 1.550 RN/L = 3.200

RUN NO. 1449/ 0 RN/L = 3.00 GRADIENT INTERVAL = -5.00/ 5.00

ALPHAO	BETAO	CNFO	CAFO	CLMFO	CYFO	CYNFO	CBLFO	CNBO	CABO	CLMBO
-4.424	-6.026	.01250	.11550	.02720	.15970	-.09920	.05340	.02310	.04540	-.01190
-4.414	-3.939	-.00050	.11630	.03470	.10080	-.06070	.03260	.02230	.04310	-.01170
-4.287	.512	-.01780	.11530	.04520	-.00680	.00660	-.00220	.02170	.04080	-.01160
-3.740	4.453	-.00740	.11420	.03380	-.10530	.06850	-.03360	.02190	.04160	-.01160
-3.791	6.260	-.01090	.11270	.03600	-.15380	.09980	-.05030	.02200	.04190	-.01170
	GRADIENT	-.00089	-.00025	-.00005	-.02455	.01539	-.00789	-.00005	-.00019	.00001

RUN NO. 1450/ 0 RN/L = 3.00 GRADIENT INTERVAL = -5.00/ 5.00

ALPHAO	BETAO	CNFO	CAFO	CLMFO	CYFO	CYNFO	CBLFO	CNBO	CABO	CLMBO
-.592	-7.039	.15680	.11030	-.08330	.16780	-.10530	.05880	.02320	.04560	-.01200
-.569	-4.878	.14060	.11200	-.07250	.11050	-.06720	.03860	.02260	.04370	-.01180
-.531	-.603	.12370	.11150	-.06130	.01040	-.00320	.00340	.02160	.04070	-.01150
-.520	3.619	.12880	.11290	-.06700	-.08330	.05730	-.02910	.02180	.04090	-.01170
-.523	5.747	.12800	.11110	-.06850	-.13260	.08910	-.04620	.02240	.04240	-.01190
	GRADIENT	-.00139	.00011	.00065	-.02281	.01465	-.00797	-.00009	-.00033	.00001

RUN NO. 1451/ 0 RN/L = 3.00 GRADIENT INTERVAL = -5.00/ 5.00

ALPHAO	BETAO	CNFO	CAFO	CLMFO	CYFO	CYNFO	CBLFO	CNBO	CABO	CLMBO
4.053	-5.739	.31060	.11240	-.19780	.13050	-.08480	.05120	.02310	.04480	-.01200
4.017	-3.533	.29610	.11060	-.18850	.08140	-.05300	.03280	.02260	.04290	-.01200
3.669	.302	.28620	.10970	-.18140	.00420	-.00300	.00270	.02170	.04100	-.01160
3.689	4.100	.29210	.11060	-.18800	-.07230	.04820	-.02720	.02190	.04130	-.01170
3.621	6.097	.28750	.10880	-.18640	-.11990	.07950	-.04470	.02250	.04250	-.01200
	GRADIENT	-.00053	-.00000	.00007	-.02014	.01326	-.00786	-.00009	-.00021	.00004

IA156A, AEDC PWT 16T-470, O T S W/SILTS (R8NOE0) (10 MAY 80)

REFERENCE DATA

SREF = 2690.0000 SQ.FT. XMRP = 976.0000 IN. XT
LREF = 1290.3000 INCHES YMRP = .0000 IN. YT
BREF = 1290.3000 INCHES ZMRP = 400.0000 IN. ZT
SCALE = .0200

PARAMETRIC DATA

IB-ELV = 10.000 OB-ELV = -7.000
BDFLAP = .000 SPDBRK = .000
RUDDER = .000 SILTS = 1.000
MACH = 1.400 RN/L = 3.500

RUN NO. 1456/ 0 RN/L = 3.00 GRADIENT INTERVAL = -5.00/ 5.00

ALPHAO	BETAO	CNFO	CAFO	CLMFO	CYFO	CYNFO	CBLFO	CNBO	CABO	CLMBO
-8.242	-5.844	-.13970	.11770	.14840	.17780	-.10840	.06010	.02540	.05020	-.01300
-8.256	-3.761	-.15510	.12010	.15800	.11520	-.06840	.03860	.02450	.04730	-.01290
-8.139	.453	-.17990	.11820	.17540	-.00280	.00510	-.00180	.02360	.04450	-.01260
-7.986	4.388	-.17130	.11900	.16620	-.11660	.07660	-.03990	.02400	.04540	-.01280
-7.939	6.270	-.17160	.11740	.16420	-.17440	.11310	-.05850	.02410	.04570	-.01280
	GRADIENT	-.00203	-.00014	.00104	-.02844	.01779	-.00963	-.00006	-.00024	.00001

RUN NO. 1457/ 0 RN/L = 3.00 GRADIENT INTERVAL = -5.00/ 5.00

ALPHAO	BETAO	CNFO	CAFO	CLMFO	CYFO	CYNFO	CBLFO	CNBO	CABO	CLMBO
-6.246	-5.958	-.06850	.11590	.09280	.17090	-.10400	.05940	.02530	.04920	-.01310
-6.159	-3.997	-.07800	.11730	.09870	.11100	-.06610	.03830	.02450	.04720	-.01290
-6.233	.171	-.10390	.11620	.11560	.00160	.00200	-.00020	.02350	.04410	-.01260
-5.970	4.276	-.09380	.11680	.10480	-.10930	.07050	-.03740	.02360	.04440	-.01270
-5.944	6.275	-.09470	.11350	.10350	-.16790	.10790	-.05730	.02420	.04600	-.01290
	GRADIENT	-.00192	-.00006	.00075	-.02663	.01651	-.00915	-.00011	-.00034	.00002

RUN NO. 1458/ 0 RN/L = 3.00 GRADIENT INTERVAL = -5.00/ 5.00

ALPHAO	BETAO	CNFO	CAFO	CLMFO	CYFO	CYNFO	CBLFO	CNBO	CABO	CLMBO
-4.124	-6.083	.01340	.11430	.03020	.16010	-.09700	.05740	.02490	.04820	-.01300
-4.343	-3.951	-.00440	.11630	.04210	.10130	-.05910	.03560	.02440	.04640	-.01290
-4.224	.410	-.01900	.11420	.05030	-.00370	.00480	-.00210	.02350	.04380	-.01270
-3.733	4.330	-.00100	.11500	.03340	-.10140	.06460	-.03570	.02340	.04380	-.01260
-3.839	6.188	-.01340	.11330	.04150	-.15250	.09710	-.05370	.02380	.04520	-.01260
	GRADIENT	.00034	-.00016	-.00100	-.02447	.01493	-.00861	-.00012	-.00032	.00004

RUN NO. 1459/ 0 RN/L = 3.00 GRADIENT INTERVAL = -5.00/ 5.00

ALPHAO	BETAO	CNFO	CAFO	CLMFO	CYFO	CYNFO	CBLFO	CNBO	CABO	CLMBO
-.517	-6.972	.15910	.11220	-.07720	.16670	-.10150	.06290	.02550	.04870	-.01350
-.485	-4.840	.15040	.11320	-.07290	.11010	-.06550	.04190	.02430	.04640	-.01280
-.440	-.487	.13610	.11260	-.06340	.01080	-.00350	.00410	.02340	.04400	-.01250
-.422	3.622	.14360	.11650	-.07030	-.07670	.05050	-.03050	.02310	.04320	-.01250
-.437	5.801	.13120	.11380	-.06350	-.12780	.08330	-.04930	.02400	.04490	-.01290
	GRADIENT	-.00083	.00038	.00033	-.02208	.01371	-.00856	-.00014	-.00038	.00004

IA156A, AEDC PWT 16T-470, O T S W/SILTS (R8NOE0) (10 MAY 80)

REFERENCE DATA

SREF = 2690.0000 SQ.FT. XMRP = 976.0000 IN. XT
LREF = 1290.3000 INCHES YMRP = .0000 IN. YT
BREF = 1290.3000 INCHES ZMRP = 400.0000 IN. ZT
SCALE = .0200

PARAMETRIC DATA

IB-ELV = 10.000 OB-ELV = -7.000
BDFLAP = .000 SPDBRK = .000
RUDDER = .000 SILTS = 1.000
MACH = 1.400 RN/L = 3.500

RUN NO. 1460/ 0 RN/L = 3.00 GRADIENT INTERVAL = -5.00/ 5.00

ALPHAO	BETAO	CNFO	CAFO	CLMFO	CYFO	CYNFO	CBLFO	CNBO	CABO	CLMBO
4.136	-5.767	.32470	.11420	-.20050	.12740	-.08020	.05220	.02430	.04630	-.01290
4.003	-3.658	.30820	.11330	-.19030	.08150	-.05090	.03420	.02370	.04420	-.01280
3.743	.171	.29180	.11130	-.17670	.00500	-.00230	.00210	.02360	.04450	-.01260
3.776	4.050	.29750	.11340	-.18270	-.07180	.04740	-.02970	.02320	.04320	-.01250
3.733	6.110	.29690	.11190	-.18400	-.11650	.07610	-.04710	.02380	.04450	-.01280
	GRADIENT	-.00138	.00001	.00098	-.01989	.01275	-.00829	-.00006	-.00013	.00004

IA156A, AEDC PWT 16T-470, O T S W/SILTS (R8NOE1) (10 MAY 80)

REFERENCE DATA

SREF = 2690.0000 SQ.FT. XMRP = 976.0000 IN. XT
LREF = 1290.3000 INCHES YMRP = .0000 IN. YT
BREF = 1290.3000 INCHES ZMRP = 400.0000 IN. ZT
SCALE = .0200

PARAMETRIC DATA

IB-ELV = 10.000 OB-ELV = -7.000
BDFLAP = .000 SPDBRK = .000
RUDDER = .000 SILTS = 1.000
MACH = 1.550 RN/L = 3.200

RUN NO. 1461/ 0 RN/L = 3.00 GRADIENT INTERVAL = -5.00/ 5.00

ALPHAO	BETAO	CNFO	CAFO	CLMFO	CYFO	CYNFO	CBLFO	CNBO	CABO	CLMBO
-8.270	-5.810	-.11680	.12240	.13060	.17500	-.10810	.05700	.02250	.04460	-.01150
-8.315	-3.812	-.13340	.12410	.14230	.11710	-.07020	.03780	.02250	.04390	-.01160
-8.210	.409	-.15860	.12370	.15780	.00360	.00130	.00000	.02190	.04150	-.01160
-8.018	4.364	-.15820	.12170	.15560	-.10970	.07270	-.03680	.02190	.04180	-.01160
-7.967	6.384	-.16070	.12120	.15620	-.16940	.11110	-.05580	.02220	.04260	-.01170
	GRADIENT	-.00307	-.00029	.00165	-.02773	.01747	-.00912	-.00007	-.00026	.00000

RUN NO. 1462/ 0 RN/L = 3.00 GRADIENT INTERVAL = -5.00/ 5.00

ALPHAO	BETAO	CNFO	CAFO	CLMFO	CYFO	CYNFO	CBLFO	CNBO	CABO	CLMBO
-6.355	-5.967	-.05830	.11930	.08390	.16840	-.10460	.05560	.02260	.04460	-.01160
-6.251	-3.988	-.07030	.12100	.09100	.11100	-.06710	.03620	.02230	.04340	-.01160
-6.282	.238	-.09490	.11970	.10720	.00110	.00190	.00020	.02170	.04080	-.01160
-6.006	4.395	-.09470	.11880	.10430	-.10880	.07130	-.03550	.02170	.04130	-.01150
-5.825	6.502	-.08850	.11640	.09820	-.16710	.10900	-.05480	.02200	.04210	-.01160
	GRADIENT	-.00292	-.00026	.00159	-.02622	.01651	-.00855	-.00007	-.00025	.00001

IA156A, AEDC PWT 16T-470, O T S W/SILTS (R8NOE1) (10 MAY 80)

REFERENCE DATA

SREF = 2690.0000 SQ.FT. XMRP = 976.0000 IN. XT
LREF = 1290.3000 INCHES YMRP = .0000 IN. YT
BREF = 1290.3000 INCHES ZMRP = 400.0000 IN. ZT
SCALE = .0200

PARAMETRIC DATA

IB-ELV = 10.000 OB-ELV = -7.000
BDFLAP = .000 SPDBRK = .000
RUDDER = .000 SILTS = 1.000
MACH = 1.550 RN/L = 3.200

RUN NO. 1463/ 0 RN/L = 3.00 GRADIENT INTERVAL = -5.00/ 5.00

ALPHAO	BETAO	CNFO	CAFO	CLMFO	CYFO	CYNFO	CBLFO	CNBO	CABO	CLMBO
-4.320	-6.108	.00910	.11580	.03110	.16010	-.09930	.05300	.02270	.04470	-.01170
-4.449	-3.954	-.01050	.11840	.04420	.10220	-.06140	.03270	.02230	.04300	-.01170
-4.278	.503	-.02620	.11600	.05280	-.00580	.00610	-.00200	.02150	.04030	-.01160
-3.731	4.446	-.01700	.11530	.04310	-.10590	.06890	-.03400	.02190	.04160	-.01160
-3.795	6.261	-.02030	.11380	.04490	-.15280	.09940	-.05020	.02190	.04180	-.01160
	GRADIENT	-.00083	-.00037	-.00009	-.02476	.01551	-.00794	-.00005	-.00018	.00001

RUN NO. 1464/ 0 RN/L = 3.00 GRADIENT INTERVAL = -5.00/ 5.00

ALPHAO	BETAO	CNFO	CAFO	CLMFO	CYFO	CYNFO	CBLFO	CNBO	CABO	CLMBO
-.608	-7.094	.14690	.11160	-.07410	.16840	-.10550	.05860	.02320	.04540	-.01190
-.577	-4.908	.13210	.11340	-.06430	.11290	-.06900	.03910	.02250	.04320	-.01180
-.543	-.585	.11340	.11270	-.05190	.01110	-.00360	.00340	.02150	.04050	-.01150
-.530	3.568	.11920	.11400	-.05810	-.08210	.05630	-.02880	.02160	.04070	-.01160
-.535	5.744	.11710	.11180	-.05850	-.13220	.08890	-.04630	.02230	.04240	-.01190
	GRADIENT	-.00154	.00007	.00075	-.02301	.01479	-.00801	-.00011	-.00030	.00002

RUN NO. 1465/ 0 RN/L = 3.00 GRADIENT INTERVAL = -5.00/ 5.00

ALPHAO	BETAO	CNFO	CAFO	CLMFO	CYFO	CYNFO	CBLFO	CNBO	CABO	CLMBO
4.171	-5.664	.30650	.11300	-.19300	.13020	-.08420	.05070	.02320	.04490	-.01210
3.998	-3.552	.28670	.11080	-.17980	.08300	-.05360	.03290	.02250	.04270	-.01190
3.682	.256	.27620	.10920	-.17260	.00550	-.00390	.00300	.02170	.04100	-.01160
3.668	4.052	.28500	.11190	-.18080	-.07210	.04810	-.02750	.02180	.04100	-.01170
3.634	6.107	.27780	.10980	-.17750	-.11950	.07950	-.04490	.02250	.04250	-.01200
	GRADIENT	-.00022	.00014	-.00013	-.02040	.01337	-.00794	-.00009	-.00022	.00003

IA156A, AEDC PWT 16T-470, O T S W/SILTS (R8N0E2) (10 MAY 80)

REFERENCE DATA

SREF = 2690.0000 SQ.FT. XMRP = 976.0000 IN. XT
LREF = 1290.3000 INCHES YMRP = .0000 IN. YT
BREF = 1290.3000 INCHES ZMRP = 400.0000 IN. ZT
SCALE = .0200

PARAMETRIC DATA

IB-ELV = 12.000 OB-ELV = -7.000
BDFLAP = .000 SPDBRK = .000
RUDDER = .000 SILTS = 1.000
MACH = 1.400 RN/L = 3.500

RUN NO. 1469/ 0 RN/L = 3.01 GRADIENT INTERVAL = -5.00/ 5.00

ALPHAO	BETAO	CNFO	CAFO	CLMFO	CYFO	CYNFO	CBLFO	CNBO	CABO	CLMBO
-8.220	-5.866	-.13270	.11850	.14210	.17910	-.10940	.06100	.02580	.05100	-.01320
-8.243	-3.806	-.14500	.12030	.14970	.11720	-.06990	.03980	.02490	.04840	-.01300
-8.148	.314	-.17370	.12000	.16970	.00150	.00250	-.00010	.02400	.04510	-.01290
-7.969	4.331	-.16420	.12030	.15930	-.11800	.07750	-.03990	.02410	.04550	-.01290
-7.958	6.275	-.16410	.11840	.15820	-.17590	.11430	-.05880	.02460	.04680	-.01310
	GRADIENT	-.00238	-.00000	.00120	-.02890	.01811	-.00979	-.00010	-.00036	.00001

RUN NO. 1470/ 0 RN/L = 3.00 GRADIENT INTERVAL = -5.00/ 5.00

ALPHAO	BETAO	CNFO	CAFO	CLMFO	CYFO	CYNFO	CBLFO	CNBO	CABO	CLMBO
-6.243	-5.961	-.05910	.11690	.08480	.16930	-.10320	.05920	.02540	.04950	-.01320
-6.154	-4.001	-.06970	.11860	.09150	.11010	-.06560	.03850	.02490	.04760	-.01310
-6.224	.176	-.09540	.11740	.10830	.00010	.00260	-.00020	.02400	.04490	-.01290
-6.003	4.295	-.08820	.11800	.09950	-.11080	.07180	-.03760	.02400	.04510	-.01290
-5.780	6.389	-.08350	.11550	.09420	-.16910	.10890	-.05740	.02460	.04670	-.01300
	GRADIENT	-.00224	-.00007	.00097	-.02663	.01656	-.00917	-.00011	-.00030	.00002

RUN NO. 1471/ 0 RN/L = 3.00 GRADIENT INTERVAL = -5.00/ 5.00

ALPHAO	BETAO	CNFO	CAFO	CLMFO	CYFO	CYNFO	CBLFO	CNBO	CABO	CLMBO
-4.149	-6.089	.01920	.11580	.02450	.16030	-.09710	.05780	.02550	.04920	-.01340
-4.346	-3.957	.00070	.11790	.03690	.09970	-.05830	.03550	.02460	.04680	-.01300
-4.209	.412	-.01210	.11570	.04400	-.00370	.00480	-.00180	.02380	.04420	-.01290
-3.744	4.347	.00450	.11620	.02800	-.10470	.06660	-.03650	.02380	.04440	-.01280
-3.839	6.181	-.00740	.11420	.03550	-.15380	.09790	-.05380	.02430	.04600	-.01300
	GRADIENT	.00040	-.00021	-.00102	-.02460	.01503	-.00867	-.00010	-.00029	.00002

RUN NO. 1472/ 0 RN/L = 2.99 GRADIENT INTERVAL = -5.00/ 5.00

ALPHAO	BETAO	CNFO	CAFO	CLMFO	CYFO	CYNFO	CBLFO	CNBO	CABO	CLMBO
-.513	-6.969	.16670	.11330	-.08410	.16440	-.10000	.06250	.02570	.04930	-.01350
-.482	-4.838	.15490	.11500	-.07730	.10970	-.06540	.04210	.02480	.04730	-.01310
-.437	-.502	.14130	.11450	-.06860	.01000	-.00320	.00420	.02360	.04450	-.01270
-.416	3.637	.15030	.11800	-.07640	-.07820	.05180	-.03080	.02360	.04410	-.01270
-.427	5.798	.14080	.11600	-.07160	-.12820	.08360	-.04920	.02390	.04500	-.01280
	GRADIENT	-.00056	.00035	.00012	-.02218	.01383	-.00860	-.00014	-.00038	.00005

IA156A, AEDC PWT 16T-470, O T S W/SILTS (R8NOE2) (10 MAY 80)

REFERENCE DATA

SREF = 2690.0000 SQ.FT. XMRP = 976.0000 IN. XT
LREF = 1290.3000 INCHES YMRP = .0000 IN. YT
BREF = 1290.3000 INCHES ZMRP = 400.0000 IN. ZT
SCALE = .0200

PARAMETRIC DATA

IB-ELV = 12.000 OB-ELV = -7.000
BDFLAP = .000 SPDBRK = .000
RUDDER = .000 SILTS = 1.000
MACH = 1.400 RN/L = 3.500

RUN NO. 1473/ 0 RN/L = 3.00 GRADIENT INTERVAL = -5.00/ 5.00

ALPHAO	BETAO	CNFO	CAFO	CLMFO	CYFO	CYNFO	CBLFO	CNBO	CABO	CLMBO
4.135	-5.756	.33000	.11550	-.20560	.12550	-.07920	.05190	.02420	.04600	-.01280
3.990	-3.653	.31370	.11480	-.19540	.08070	-.05040	.03420	.02390	.04450	-.01300
3.741	.166	.30030	.11360	-.18380	.00530	-.00270	.00250	.02350	.04440	-.01260
3.769	4.047	.30470	.11510	-.18880	-.07210	.04780	-.02980	.02360	.04400	-.01270
3.738	6.128	.30160	.11300	-.18850	-.11760	.07680	-.04730	.02410	.04500	-.01300
	GRADIENT	-.00116	.00004	.00085	-.01985	.01276	-.00831	-.00004	-.00007	.00004

IA156A, AEDC PWT 16T-470, O T S W/SILTS (R8NOE3) (10 MAY 80)

REFERENCE DATA

SREF = 2690.0000 SQ.FT. XMRP = 976.0000 IN. XT
LREF = 1290.3000 INCHES YMRP = .0000 IN. YT
BREF = 1290.3000 INCHES ZMRP = 400.0000 IN. ZT
SCALE = .0200

PARAMETRIC DATA

IB-ELV = 12.000 OB-ELV = -7.000
BDFLAP = .000 SPDBRK = .000
RUDDER = .000 SILTS = 1.000
MACH = 1.550 RN/L = 3.200

RUN NO. 1474/ 0 RN/L = 3.01 GRADIENT INTERVAL = -5.00/ 5.00

ALPHAO	BETAO	CNFO	CAFO	CLMFO	CYFO	CYNFO	CBLFO	CNBO	CABO	CLMBO
-8.324	-5.833	-.11300	.12390	.12710	.17480	-.10820	.05710	.02280	.04470	-.01170
-8.344	-3.712	-.12850	.12540	.13760	.11200	-.06740	.03650	.02260	.04400	-.01170
-8.209	.318	-.15090	.12490	.15150	.00310	.00130	.00030	.02280	.04110	-.01160
-8.003	4.487	-.15380	.12420	.15180	-.11380	.07530	-.03780	.02220	.04220	-.01180
-7.961	6.383	-.15330	.12200	.15030	-.17040	.11200	-.05590	.02250	.04320	-.01180
	GRADIENT	-.00307	-.00015	.00172	-.02754	.01741	-.00906	-.00005	-.00022	-.00001

RUN NO. 1475/ 0 RN/L = 3.01 GRADIENT INTERVAL = -5.00/ 5.00

ALPHAO	BETAO	CNFO	CAFO	CLMFO	CYFO	CYNFO	CBLFO	CNBO	CABO	CLMBO
-6.358	-5.963	-.04970	.12070	.07710	.17060	-.10610	.05660	.02300	.04530	-.01180
-6.256	-3.975	-.06420	.12170	.08560	.11010	-.06650	.03610	.02260	.04390	-.01180
-6.273	.249	-.08870	.12080	.10180	.00140	.00150	.00040	.02190	.04130	-.01170
-5.983	4.379	-.08870	.12060	.09930	-.10810	.07090	-.03520	.02210	.04210	-.01170
-5.702	6.519	-.08090	.11700	.09180	-.16650	.10850	-.05460	.02250	.04310	-.01190
	GRADIENT	-.00294	-.00013	.00165	-.02612	.01645	-.00853	-.00006	-.00022	.00001

IA156A, AEDC PWT 16T-470, O T S W/SILTS (R8NOE3) (10 MAY 80)

REFERENCE DATA

SREF = 2690.0000 SQ.FT. XMRP = 976.0000 IN. XT
LREF = 1290.3000 INCHES YMRP = .0000 IN. YT
BREF = 1290.3000 INCHES ZMRP = 400.0000 IN. ZT
SCALE = .0200

PARAMETRIC DATA

IB-ELV = 12.000 OB-ELV = -7.000
BDFLAP = .000 SPDBRK = .000
RUDDER = .000 SILTS = 1.000
MACH = 1.550 RN/L = 3.200

RUN NO. 1476/ 0 RN/L = 3.01 GRADIENT INTERVAL = -5.00/ 5.00

ALPHAO	BETAO	CNFO	CAFO	CLMFO	CYFO	CYNFO	CBLFO	CNBO	CABO	CLMBO
-4.196	-6.135	.02150	.11790	.02100	.16060	-.09990	.05350	.02300	.04520	-.01180
-4.451	-3.949	-.00320	.12030	.03820	.10120	-.06080	.03270	.02240	.04330	-.01170
-4.265	.492	-.01880	.11750	.04670	-.00550	.00580	-.00190	.02200	.04120	-.01190
-3.742	4.439	-.01030	.11710	.03740	-.10400	.06770	-.03320	.02220	.04210	-.01170
-3.795	6.255	-.01610	.11520	.04080	-.15270	.09930	-.05000	.02220	.04220	-.01180
	GRADIENT	-.00090	-.00039	-.00005	-.02446	.01531	-.00786	-.00003	-.00015	-.00000

RUN NO. 1477/ 0 RN/L = 3.01 GRADIENT INTERVAL = -5.00/ 5.00

ALPHAO	BETAO	CNFO	CAFO	CLMFO	CYFO	CYNFO	CBLFO	CNBO	CABO	CLMBO
-.600	-7.044	.15530	.11290	-.08100	.16930	-.10610	.05920	.02330	.04570	-.01200
-.576	-4.909	.13810	.11500	-.06980	.11190	-.06840	.03900	.02250	.04350	-.01180
-.540	-.559	.11880	.11370	-.05670	.00920	-.00240	.00300	.02210	.04160	-.01180
-.528	3.565	.12480	.11550	-.06340	-.08260	.05670	-.02880	.02210	.04170	-.01190
-.527	5.739	.12290	.11330	-.06380	-.13190	.08840	-.04590	.02230	.04250	-.01180
	GRADIENT	-.00160	.00006	.00078	-.02296	.01477	-.00800	-.00005	-.00021	-.00001

RUN NO. 1478/ 0 RN/L = 3.01 GRADIENT INTERVAL = -5.00/ 5.00

ALPHAO	BETAO	CNFO	CAFO	CLMFO	CYFO	CYNFO	CBLFO	CNBO	CABO	CLMBO
4.178	-5.674	.31370	.11460	-.19940	.13120	-.08520	.05130	.02320	.04540	-.01200
4.001	-3.551	.29180	.11250	-.18460	.08250	-.05330	.03300	.02260	.04320	-.01190
3.684	.248	.28180	.11070	-.17720	.00630	-.00470	.00340	.02190	.04140	-.01160
3.670	4.055	.29110	.11300	-.18620	-.07230	.04840	-.02740	.02250	.04240	-.01200
3.642	6.120	.28390	.11100	-.18250	-.12000	.07950	-.04470	.02280	.04310	-.01210
	GRADIENT	-.00009	.00007	-.00021	-.02035	.01337	-.00794	-.00001	-.00011	-.00001

IA156A, AEDC PWT 16T-470, O T S W/SILTS

(R8NOE4) (10 MAY 80)

REFERENCE DATA

SREF = 2690.0000 SQ.FT. XMRP = 976.0000 IN. XT
LREF = 1290.3000 INCHES YMRP = .0000 IN. YT
BREF = 1290.3000 INCHES ZMRP = 400.0000 IN. ZT
SCALE = .0200

PARAMETRIC DATA

IB-ELV = 8.000 OB-ELV = -7.000
BDFLAP = .000 SPDBRK = .000
RUDDER = .000 SILTS = 1.000
MACH = 1.400 RN/L = 3.500

RUN NO. 1482/ 0 RN/L = 3.00 GRADIENT INTERVAL = -5.00/ 5.00

ALPHAO	BETAO	CNFO	CAFO	CLMFO	CYFO	CYNFO	CBLFO	CNBO	CABO	CLMBO
-8.170	-5.743	-.14550	.11720	.15350	.17520	-.10670	.05920	.02510	.04950	-.01280
-8.235	-3.742	-.16120	.11850	.16360	.11770	-.06980	.03920	.02460	.04800	-.01270
-8.142	.226	-.18820	.11790	.18300	.00480	.00060	.00040	.02350	.04420	-.01260
-7.983	4.478	-.17860	.11820	.17220	-.12150	.07980	-.04140	.02360	.04470	-.01250
-7.936	6.285	-.17480	.11680	.16790	-.17890	.11570	-.05990	.02410	.04570	-.01280
	GRADIENT	-.00206	-.00004	.00100	-.02911	.01821	-.00981	-.00012	-.00040	.00002

RUN NO. 1483/ 0 RN/L = 3.00 GRADIENT INTERVAL = -5.00/ 5.00

ALPHAO	BETAO	CNFO	CAFO	CLMFO	CYFO	CYNFO	CBLFO	CNBO	CABO	CLMBO
-6.266	-5.970	-.07570	.11540	.09920	.17110	-.10430	.05930	.02500	.04860	-.01300
-6.155	-4.011	-.08230	.11660	.10300	.11250	-.06690	.03860	.02410	.04640	-.01270
-6.219	.148	-.10950	.11550	.12120	.00260	00140	.00010	.02350	.04420	-.01260
-6.003	4.286	-.10060	.11550	.11110	-.11050	.07140	-.03750	.02330	.04410	-.01250
-5.730	6.412	-.09530	.11300	.10500	-.17090	.10990	-.05790	.02380	.04540	-.01260
	GRADIENT	-.00221	-.00013	.00098	-.02687	.01667	-.00917	-.00010	-.00028	.00002

RUN NO. 1484/ 0 RN/L = 3.00 GRADIENT INTERVAL = -5.00/ 5.00

ALPHAO	BETAO	CNFO	CAFO	CLMFO	CYFO	CYNFO	CBLFO	CNBO	CABO	CLMBO
-4.110	-6.113	.00670	.11[illegible]	.03610	.16120	-.09730	.05750	.02480	.04810	-.01290
-4.346	-3.947	-.01190	.11550	.04870	.09970	-.05810	.03520	.02400	.04570	-.01270
-4.218	.418	-.02390	.11310	.05520	-.00470	.00540	-.00230	.02320	.04360	-.01250
-3.760	4.353	-.00960	.11370	.04030	-.10310	.06570	-.03600	.02290	.04300	-.01230
-3.822	6.157	-.02030	.11160	.04740	-.15250	.09710	-.05340	.02360	.04480	-.01250
	GRADIENT	.00022	-.00022	-.00097	-.02443	.01491	-.00858	-.00013	-.00033	.00005

RUN NO. 1485/ 0 RN/L = 3.00 GRADIENT INTERVAL = -5.00/ 5.00

ALPHAO	BETAO	CNFO	CAFO	CLMFO	CYFO	CYNFO	CBLFO	CNBO	CABO	CLMBO
-.521	-7.010	.15240	.11120	-.07150	.16550	-.10050	.06250	.02500	.04800	-.01320
-.492	-4.839	.14180	.11220	-.06550	.10880	-.06450	.04140	.02400	.04590	-.01270
-.439	-.498	.13170	.11280	-.05920	.01000	-.00290	.00390	.02310	.04340	-.01240
-.431	3.621	.13410	.11450	-.06240	-.07740	.05120	-.03040	.02260	.04230	-.01220
-.444	5.803	.12430	.11310	-.05710	-.12930	.08440	-.04960	.02370	.04450	-.01270
	GRADIENT	-.00092	.00027	.00038	-.02202	.01368	-.00849	-.00017	-.00043	.00006

IA156A, AEDC PWT 16T-470, O T S W/SILTS (R8NOE4) (10 MAY 80)

REFERENCE DATA

SREF = 2690.0000 SQ.FT. XMRP = 976.0000 IN. XT
LREF = 1290.3000 INCHES YMRP = .0000 IN. YT
BREF = 1290.3000 INCHES ZMRP = 400.0000 IN. ZT
SCALE = .0200

PARAMETRIC DATA

IB-ELV = 8.000 OB-ELV = -7.000
BDFLAP = .000 SPDBRK = .000
RUDDER = .000 SILTS = 1.000
MACH = 1.400 RN/L = 3.500

RUN NO. 1486/ 0 RN/L = 3.00 GRADIENT INTERVAL = -5.00/ 5.00

ALPHAO	BETAO	CNFO	CAFO	CLMFO	CYFO	CYNFO	CBLFO	CNBO	CABO	CLMBO
4.148	-5.744	.32130	.11320	-.19680	.12490	-.07860	.05150	.02460	.04670	-.01300
3.977	-3.686	.30080	.11210	-.18390	.08040	-.05000	.03390	.02320	.04320	-.01250
3.759	.077	.28750	.10980	-.17270	.00670	-.00350	.00300	.02310	.04350	-.01240
3.771	4.006	.29250	.11210	-.17800	-.07050	.04670	-.02920	.02300	.04280	-.01240
3.730	6.119	.28890	.11030	-.17740	-.11730	.07660	-.04730	.02340	.04380	-.01260
	GRADIENT	-.00106	.00000	.00075	-.01962	.01257	-.00820	-.00003	-.00005	.00001

IA156A, AEDC PWT 16T-470, O T S W/SILTS (R8NOE5) (10 MAY 80)

REFERENCE DATA

SREF = 2690.0000 SQ.FT. XMRP = 976.0000 IN. XT
LREF = 1290.3000 INCHES YMRP = .0000 IN. YT
BREF = 1290.3000 INCHES ZMRP = 400.0000 IN. ZT
SCALE = .0200

PARAMETRIC DATA

IB-ELV = 8.000 OB-ELV = -7.000
BDFLAP = .000 SPDBRK = .000
RUDDER = .000 SILTS = 1.000
MACH = 1.550 RN/L = 3.200

RUN NO. 1487/ 0 RN/L = 3.00 GRADIENT INTERVAL = -5.00/ 5.00

ALPHAO	BETAO	CNFO	CAFO	CLMFO	CYFO	CYNFO	CBLFO	CNBO	CABO	CLMBO
-8.297	-5.822	-.12260	.12220	.13640	.17520	-.10820	.05670	.02240	.04420	-.01150
-8.325	-3.708	-.13970	.12370	.14720	.11400	-.06830	.03660	.02180	.04250	-.01130
-8.212	.298	-.16260	.12380	.16210	.00470	.00060	.00050	.02120	.04030	-.01130
-7.973	4.570	-.16170	.12150	.15950	-.11500	.07620	-.03830	.02140	.04080	-.01130
-7.986	6.416	-.16510	.12000	.16050	-.17210	.11310	-.05620	.02170	.04180	-.01140
	GRADIENT	-.00263	-.00027	.00146	-.02767	.01746	-.00905	-.00005	-.00020	.00000

RUN NO. 1488/ 0 RN/L = 3.00 GRADIENT INTERVAL = -5.00/ 5.00

ALPHAO	BETAO	CNFO	CAFO	CLMFO	CYFO	CYNFO	CBLFO	CNBO	CABO	CLMBO
-6.347	-5.954	-.06260	.11780	.08790	.16730	-.10370	.05490	.02260	.04450	-.01160
-6.262	-3.975	-.07560	.12000	.09600	.11000	-.06640	.03570	.02200	.04270	-.01140
-6.268	.229	-.09980	.11940	.11180	.00250	.00110	.00050	.02100	.03970	-.01120
-6.003	4.398	-.09920	.11870	.10930	-.10820	.07110	-.03520	.02140	.04090	-.01130
-5.917	6.366	-.09930	.11620	.10790	-.16290	.10630	-.05330	.02160	.04140	-.01140
	GRADIENT	-.00282	-.00016	.00159	-.02606	.01642	-.00847	-.00007	-.00022	.00001

IA156A, AEDC PWT 16T-470, O T S W/SILTS (R8NOE5) (10 MAY 80)

REFERENCE DATA

SREF = 2690.0000 SQ.FT. XMRP = 976.0000 IN. XT
LREF = 1290.3000 INCHES YMRP = .0000 IN. YT
BREF = 1290.3000 INCHES ZMRP = 400.0000 IN. ZT
SCALE = .0200

PARAMETRIC DATA

IB-ELV = 8.000 OB-ELV = -7.000
BDFLAP = .000 SPDBRK = .000
RUDDER = .000 SILTS = 1.000
MACH = 1.550 RN/L = 3.200

RUN NO. 1489/ 0 RN/L = 3.01 GRADIENT INTERVAL = -5.00/ 5.00

ALPHAO	BETAO	CNFO	CAFO	CLMFO	CYFO	CYNFO	CBLFO	CNBO	CABO	CLMBO
-4.218	-6.128	.00830	.11560	.03280	.16170	-.10020	.05340	.02270	.04460	-.01170
-4.450	-3.947	-.01480	.11790	.04890	.10140	-.06080	.03240	.02170	.04180	-.01130
-4.281	.503	-.03020	.11580	.05690	-.00680	.00680	-.00240	.02120	.03980	-.01130
-3.731	4.440	-.02110	.11490	.04740	-.10570	.06890	-.03380	.02150	.04090	-.01140
-3.802	6.257	-.02700	.11230	.05070	-.15060	.09810	-.04930	.02160	.04120	-.01140
	GRADIENT	-.00081	-.00036	-.00014	-.02468	.01546	-.00789	-.00003	-.00011	-.00001

RUN NO. 1490/ 0 RN/L = 3.00 GRADIENT INTERVAL = -5.00/ 5.00

ALPHAO	BETAO	CNFO	CAFO	CLMFO	CYFO	CYNFO	CBLFO	CNBO	CABO	CLMBO
-.611	-7.039	.14070	.11130	-.06860	.16790	-.10510	.05820	.02320	.04540	-.01200
-.585	-4.909	.12540	.11280	-.05830	.11270	-.06860	.03880	.02200	.04240	-.01150
-.546	-.562	.10870	.11130	-.04760	.01020	-.00310	.00310	.02120	.04000	-.01130
-.537	3.564	.11350	.11290	-.05320	-.08250	.05670	-.02900	.02160	.04060	-.01150
-.537	5.749	.11200	.11010	-.05400	-.13260	.08910	-.04630	.02200	.04180	-.01170
	GRADIENT	-.00143	.00001	.00062	-.02304	.01479	-.00800	-.00005	-.00022	.00000

RUN NO. 1491/ 0 RN/L = 3.00 GRADIENT INTERVAL = -5.00/ 5.00

ALPHAO	BETAO	CNFO	CAFO	CLMFO	CYFO	CYNFO	CBLFO	CNBO	CABO	CLMBO
4.175	-5.666	.29870	.11120	-.18690	.13010	-.08400	.05040	.02240	.04350	-.01170
3.989	-3.546	.27980	.10990	-.17400	.08240	-.05260	.03260	.02210	.04190	-.01180
3.686	.255	.27320	.10830	-.16900	.00670	-.00470	.00320	.02150	.04060	-.01150
3.680	4.059	.27980	.11050	-.17590	-.07180	.04780	-.02730	.02150	.04040	-.01150
3.634	6.109	.27230	.10800	-.17270	-.11950	.07950	-.04480	.02200	.04170	-.01170
	GRADIENT	.00000	.00008	-.00025	-.02028	.01320	-.00788	-.00008	-.00020	.00004

IA156A, AEDC PWT 16T-470, O T S W/SILTS (R8NOE6) (10 MAY 80)

REFERENCE DATA

SREF = 2690.0000 SQ.FT. XMRP = 976.0000 IN. XT
LREF = 1290.3000 INCHES YMRP = .0000 IN. YT
BREF = 1290.3000 INCHES ZMRP = 400.0000 IN. ZT
SCALE = .0200

PARAMETRIC DATA

IB-ELV = 10.000 OB-ELV = 2.000
BDFLAP = .000 SPDBRK = .000
RUDDER = .000 SILTS = 1.000
MACH = 1.050 RN/L = 3.500

RUN NO. 1494/ 0 RN/L = 3.50 GRADIENT INTERVAL = -5.00/ 5.00

ALPHAO	BETAO	CNFO	CAFO	CLMFO	CYFO	CYNFO	CBLFO	CNBO	CABO	CLMBO
-8.215	-5.881	-.17790	.09530	.17300	.19020	-.11420	.06320	.03720	.07090	-.01970
-8.178	-3.769	-.19430	.09900	.18560	.12050	-.07030	.03940	.03670	.06860	-.01970
-8.131	.175	-.22830	.09850	.21050	.00810	-.00220	.00170	.03480	.06450	-.01890
-7.965	4.333	-.21530	.09940	.19870	-.11660	.07430	-.03970	.03570	.06620	-.01930
-7.960	6.223	-.20540	.09660	.18820	-.17640	.11070	-.05950	.03600	.06700	-.01940
	GRADIENT	-.00254	.00005	.00158	-.02927	.01785	-.00977	-.00012	-.00029	.00005

RUN NO. 1495/ 0 RN/L = 3.50 GRADIENT INTERVAL = -5.00/ 5.00

ALPHAO	BETAO	CNFO	CAFO	CLMFO	CYFO	CYNFO	CBLFO	CNBO	CABO	CLMBO
-6.164	-5.957	-.09370	.09530	.11170	.17530	-.10520	.06160	.03680	.06930	-.01970
-6.120	-4.055	-.10980	.09750	.12390	.11680	-.06900	.04110	.03610	.06800	-.01930
-6.203	.112	-.15930	.09800	.16130	.00390	-.00060	.00080	.03470	.06430	-.01890
-6.009	4.243	-.13230	.09840	.13800	-.10900	.06870	-.03870	.03400	.06280	-.01860
-5.960	6.205	-.12320	.09710	.12890	-.16670	.10390	-.05890	.03450	.06450	-.01860
	GRADIENT	-.00272	.00011	.00171	-.02721	.01659	-.00962	-.00025	-.00063	.00008

RUN NO. 1496/ 0 RN/L = 3.50 GRADIENT INTERVAL = -5.00/ 5.00

ALPHAO	BETAO	CNFO	CAFO	CLMFO	CYFO	CYNFO	CBLFO	CNBO	CABO	CLMBO
-4.074	-6.119	-.00470	.09490	.04850	.16500	-.09880	.06130	.03620	.06880	-.01920
-4.306	-3.974	-.04100	.09670	.07440	.10500	-.06180	.03870	.03580	.06680	-.01930
-4.199	.365	-.08630	.09640	.10920	-.00240	.00290	-.00140	.03480	.06460	-.01890
-3.752	4.297	-.04270	.09810	.07360	-.10350	.06430	-.03910	.03340	.06170	-.01820
-3.847	6.110	-.03480	.09720	.06530	-.14920	.09250	-.05640	.03430	.06350	-.01860
	GRADIENT	-.00038	.00017	.00004	-.02520	.01524	-.00940	-.00029	-.00061	.00013

RUN NO. 1497/ 0 RN/L = 3.50 GRADIENT INTERVAL = -5.00/ 5.00

ALPHAO	BETAO	CNFO	CAFO	CLMFO	CYFO	CYNFO	CBLFO	CNBO	CABO	CLMBO
-.462	-7.007	.15210	.09400	-.06300	.16640	-.10010	.06970	.03660	.06870	-.01960
-.449	-4.843	.12570	.09600	-.04350	.11370	-.06840	.04800	.03570	.06670	-.01930
-.422	-.474	.06990	.09400	-.00070	.01270	-.00590	.00520	.03400	.06310	-.01840
-.387	3.651	.09950	.09770	-.02480	-.07680	.05040	-.03450	.03400	.06300	-.01840
-.387	5.828	.11440	.09860	-.03940	-.12390	.07920	-.05430	.03440	.06380	-.01870
	GRADIENT	-.00318	.00019	.00228	-.02243	.01399	-.00971	-.00020	-.00044	.00011

IA156A, AEDC PWT 16T-470, O T S W/SILTS (R8N0E6) (10 MAY 80)

REFERENCE DATA

SREF = 2690.0000 SQ.FT. XMRP = 976.0000 IN. XT
LREF = 1290.3000 INCHES YMRP = .0000 IN. YT
BREF = 1290.3000 INCHES ZMRP = 400.0000 IN. ZT
SCALE = .0200

PARAMETRIC DATA

IB-ELV = 10.000 OB-ELV = 2.000
BDFLAP = .000 SPDBRK = .000
RUDDER = .000 SILTS = 1.000
MACH = 1.050 RN/L = 3.500

RUN NO. 1498/ 0 RN/L = 3.50 GRADIENT INTERVAL = -5.00/ 5.00

ALPHAO	BETAO	CNFO	CAFO	CLMFO	CYFO	CYNFO	CBLFO	CNBO	CABO	CLMBO
4.108	-5.804	.30100	.09300	-.17110	.12080	-.07480	.05630	.03540	.06650	-.01900
3.975	-3.713	.28220	.09370	-.15760	.07870	-.04810	.03710	.03450	.06440	-.01860
3.776	.114	.24950	.09070	-.13220	.00920	-.00470	.00380	.03390	.06290	-.01840
3.851	4.045	.28640	.09340	-.16250	-.06680	.04290	-.03200	.03360	.06200	-.01830
3.796	6.106	.29080	.09390	-.16810	-.10770	.06790	-.05040	.03390	.06290	-.01830
	GRADIENT	.00058	-.00004	-.00066	-.01876	.01173	-.00891	-.00012	-.00031	.00004

IA156A, AEDC PWT 16T-470, O T S W/SILTS (R8N0E7) (10 MAY 80)

REFERENCE DATA

SREF = 2690.0000 SQ.FT. XMRP = 976.0000 IN. XT
LREF = 1290.3000 INCHES YMRP = .0000 IN. YT
BREF = 1290.3000 INCHES ZMRP = 400.0000 IN. ZT
SCALE = .0200

PARAMETRIC DATA

IB-ELV = 10.000 OB-ELV = 2.000
BDFLAP = .000 SPDBRK = .000
RUDDER = .000 SILTS = 1.000
MACH = 1.100 RN/L = 3.500

RUN NO. 1499/ 0 RN/L = 3.50 GRADIENT INTERVAL = -5.00/ 5.00

ALPHAO	BETAO	CNFO	CAFO	CLMFO	CYFO	CYNFO	CBLFO	CNBO	CABO	CLMBO
-8.219	-5.891	-.16770	.10080	.16650	.17710	-.10540	.05990	.03360	.06390	-.01780
-8.204	-3.785	-.17600	.10380	.17230	.11270	-.06460	.03750	.03280	.06150	-.01770
-8.112	.164	-.21110	.10260	.19840	.00340	.00070	.00020	.03050	.05720	-.01640
-7.946	4.428	-.19490	.10400	.18400	-.11750	.07370	-.04050	.03190	.05910	-.01740
-7.964	6.232	-.18850	.10340	.17730	-.16950	.10520	-.05830	.03190	.05960	-.01720
	GRADIENT	-.00222	.00003	.00136	-.02804	.01684	-.00950	-.00010	-.00028	.00003

RUN NO. 1500/ 0 RN/L = 3.50 GRADIENT INTERVAL = -5.00/ 5.00

ALPHAO	BETAO	CNFO	CAFO	CLMFO	CYFO	CYNFO	CBLFO	CNBO	CABO	CLMBO
-6.164	-5.953	-.07830	.10050	.10110	.16360	-.09650	.05880	.03270	.06220	-.01740
-6.143	-4.058	-.09670	.10150	.11430	.10800	-.06270	.03850	.03200	.06010	-.01720
-6.224	.087	-.14180	.10080	.14780	.00160	.00090	.00010	.03050	.05650	-.01660
-5.999	4.241	-.11130	.10260	.12250	-.10710	.06610	-.03870	.03030	.05570	-.01660
-5.962	6.205	-.10260	.10280	.11360	-.15850	.09740	-.05790	.03130	.05780	-.01700
	GRADIENT	-.00176	.00013	.00099	-.02592	.01552	-.00930	-.00020	-.00053	.00007

IA156A, AEDC PWT 16T-470, O T S W/SILTS (R8NOE7) (10 MAY 80)

REFERENCE DATA

SREF = 2690.0000 SQ.FT. XMRP = 976.0000 IN. XT
LREF = 1290.3000 INCHES YMRP = .0000 IN. YT
BREF = 1290.3000 INCHES ZMRP = 400.0000 IN. ZT
SCALE = .0200

PARAMETRIC DATA

IB-ELV = 10.000 OB-ELV = 2.000
BDFLAP = .000 SPDBRK = .000
RUDDER = .000 SILTS = 1.000
MACH = 1.100 RN/L = 3.500

RUN NO. 1501/ 0 RN/L = 3.51 GRADIENT INTERVAL = -5.00/ 5.00

ALPHAO	BETAO	CNFO	CAFO	CLMFO	CYFO	CYNFO	CBLFO	CNBO	CABO	CLMBO
-4.064	-6.124	.01140	.10060	.03520	.15500	-.09130	.05970	.03210	.06040	-.01720
-4.304	-3.972	-.02340	.10070	.06070	.09650	-.05530	.03700	.03130	.05820	-.01690
-4.191	.371	-.06120	.09830	.08930	-.00540	.00410	-.00250	.03000	.05530	-.01640
-3.737	4.274	-.01530	.10170	.05240	-.09710	.05930	-.03880	.02930	.05380	-.01610
-3.857	6.128	-.00980	.10300	.04480	-.14550	.08880	-.05740	.03050	.05610	-.01670
	GRADIENT	.00080	.00011	-.00086	-.02348	.01389	-.00919	-.00024	-.00054	.00010

RUN NO. 1502/ 0 RN/L = 3.49 GRADIENT INTERVAL = -5.00/ 5.00

ALPHAO	BETAO	CNFO	CAFO	CLMFO	CYFO	CYNFO	CBLFO	CNBO	CABO	CLMBO
-.472	-6.996	.16100	.09920	-.07150	.15890	-.09440	.06840	.03230	.06050	-.01730
-.442	-4.844	.14170	.09980	-.05740	.10980	-.06510	.04780	.03130	.05810	-.01700
-.413	-.478	.09440	.09750	-.02170	.01170	-.00490	.00480	.02900	.05340	-.01590
-.380	3.654	.12090	.09960	-.04460	-.07600	.04960	-.03490	.02890	.05360	-.01570
-.376	5.836	.13530	.10220	-.05750	-.12320	.07840	-.05510	.02890	.05340	-.01570
	GRADIENT	-.00253	-.00003	.00157	-.02187	.01350	-.00973	-.00028	-.00053	.00015

RUN NO. 1503/ 0 RN/L = 3.50 GRADIENT INTERVAL = -5.00/ 5.00

ALPHAO	BETAO	CNFO	CAFO	CLMFO	CYFO	CYNFO	CBLFO	CNBO	CABO	CLMBO
4.105	-5.818	.31710	.09600	-.18550	.11710	-.07180	.05480	.02950	.05530	-.01590
3.961	-3.699	.30310	.09690	-.17630	.07630	-.04630	.03610	.02920	.05450	-.01580
3.792	.122	.26790	.09470	-.14830	.00660	-.00320	.00250	.02950	.05440	-.01600
3.836	4.038	.29860	.09640	-.17490	-.06650	.04200	-.03190	.02840	.05230	-.01550
3.791	6.090	.30770	.09860	-.18380	-.10810	.06770	-.05070	.02820	.05190	-.01540
	GRADIENT	-.00055	-.00006	.00015	-.01846	.01141	-.00879	-.00010	-.00029	.00004

IA156A, AEDC PWT 16T-470, O T S W/SILTS (R8NOE8) (10 MAY 80)

REFERENCE DATA

SREF = 2690.0000 SQ.FT. XMRP = 976.0000 IN. XT
LREF = 1290.3000 INCHES YMRP = .0000 IN. YT
BREF = 1290.3000 INCHES ZMRP = 400.0000 IN. ZT
SCALE = .0200

PARAMETRIC DATA

IB-ELV = 10.000 OB-ELV = 2.000
BDFLAP = .000 SPDBRK = .000
RUDDER = .000 SILTS = 1.000
MACH = 1.150 RN/L = 3.500

RUN NO. 1504/ 0 RN/L = 3.50 GRADIENT INTERVAL = -5.00/ 5.00

ALPHAO	BETAO	CNFO	CAFO	CLMFO	CYFO	CYNFO	CBLFO	CNBO	CABO	CLMBO
-8.224	-5.884	-.15120	.10480	.15470	.17950	-.10670	.06140	.03120	.05980	-.01640
-8.207	-3.764	-.16980	.10690	.16820	.11600	-.06710	.03900	.03100	.05840	-.01660
-8.128	.156	-.20630	.10660	.19600	.00980	-.00360	.00200	.02380	.05360	-.01560
-8.010	4.213	-.19230	.10800	.18310	-.10790	.06760	-.03770	.02960	.05460	-.01610
-7.965	6.247	-.18600	.10800	.17510	-.16960	.10540	-.05900	.03010	.05600	-.01630
	GRADIENT	-.00278	.00014	.00184	-.02807	.01689	-.00962	-.00017	-.00047	.00006

RUN NO. 1505/ 0 RN/L = 3.51 GRADIENT INTERVAL = -5.00/ 5.00

ALPHAO	BETAO	CNFO	CAFO	CLMFO	CYFO	CYNFO	CBLFO	CNBO	CABO	CLMBO
-6.163	-5.962	-.06150	.10560	.08720	.16780	-.09940	.06200	.03100	.05900	-.01640
-6.108	-4.043	-.07730	.10560	.09960	.11030	-.06400	.04070	.03010	.05700	-.01610
-6.197	.091	-.13010	.10360	.13960	.00560	-.00230	.00120	.02830	.05230	-.01550
-6.035	4.259	-.10760	.10740	.11910	-.10500	.06450	-.03930	.02820	.05180	-.01550
-5.956	6.210	-.09550	.10760	.10740	-.15960	.09820	-.05950	.02940	.05430	-.01600
	GRADIENT	-.00364	.00022	.00234	-.02594	.01548	-.00964	-.00023	-.00063	.00007

RUN NO. 1506/ 0 RN/L = 3.50 GRADIENT INTERVAL = -5.00/ 5.00

ALPHAO	BETAO	CNFO	CAFO	CLMFO	CYFO	CYNFO	CBLFO	CNBO	CABO	CLMBO
-4.053	-6.089	.03080	.10500	.01980	.15790	-.09370	.06280	.03070	.05840	-.01620
-4.308	-3.975	-.00070	.10520	.04330	.10040	-.05880	.04000	.02950	.05490	-.01600
-4.206	.359	-.03970	.10310	.07290	.00190	-.00020	-.00110	.02810	.05160	-.01540
-3.756	4.297	-.00830	.10590	.04620	-.09660	.05940	-.04010	.02780	.05080	-.01530
-3.861	6.129	-.00420	.10700	.04090	-.14270	.08760	-.05760	.02900	.05300	-.01590
	GRADIENT	-.00105	.00008	.00046	-.02380	.01428	-.00968	-.00021	-.00050	.00009

RUN NO. 1507/ 0 RN/L = 3.51 GRADIENT INTERVAL = -5.00/ 5.00

ALPHAO	BETAO	CNFO	CAFO	CLMFO	CYFO	CYNFO	CBLFO	CNBO	CABO	CLMBO
-.455	-7.001	.17830	.10300	-.08510	.16270	-.09740	.06960	.03080	.05800	-.01650
-.432	-4.850	.16360	.10510	-.07540	.11130	-.06650	.04790	.02980	.05510	-.01630
-.395	-.487	.12650	.10280	-.04750	.01050	-.00400	.00440	.02780	.05110	-.01520
-.365	3.645	.15010	.10720	-.06750	-.07640	.05010	-.03490	.02720	.05010	-.01490
-.365	5.852	.15350	.10800	-.07160	-.12500	.07990	-.05590	.02750	.05040	-.01510
	GRADIENT	-.00165	.00024	.00098	-.02210	.01373	-.00975	-.00031	-.00059	.00017

IA156A, AEDC PWT 16T-470, O T S W/SILTS (R8NOE8) (10 MAY 80)

REFERENCE DATA

SREF = 2690.0000 SQ.FT. XMRP = 976.0000 IN. XT
LREF = 1290.3000 INCHES YMRP = .0000 IN. YT
BREF = 1290.3000 INCHES ZMRP = 400.0000 IN. ZT
SCALE = .0200

PARAMETRIC DATA

IB-ELV = 10.000 OB-ELV = 2.000
BDFLAP = .000 SPDBRK = .000
RUDDER = .000 SILTS = 1.000
MACH = 1.150 RN/L = 3.500

RUN NO. 1508/ 0 RN/L = 3.50 GRADIENT INTERVAL = -5.00/ 5.00

ALPHAO	BETAO	CNFO	CAFO	CLMFO	CYFO	CYNFO	CBLFO	CNBO	CABO	CLMBO
4.103	-5.794	.32270	.10280	-.19090	.12200	-.07530	.05610	.02780	.05230	-.01490
3.996	-3.720	.31600	.10420	-.18700	.08260	-.05140	.03810	.02810	.05240	-.01520
3.757	.111	.28180	.09910	-.15980	.01250	-.00740	.00470	.02830	.05230	-.01540
3.841	4.038	.31740	.10280	-.18960	-.06450	.04070	-.03120	.02710	.04960	-.01490
3.790	6.100	.32080	.10470	-.19380	-.10790	.06780	-.05000	.02710	.04970	-.01490
	GRADIENT	.00022	-.00018	-.00037	-.01896	.01187	-.00893	-.00013	-.00036	.00004

IA156A, AEDC PWT 16T-470, O T S W/SILTS (R8NOE9) (10 MAY 80)

REFERENCE DATA

SREF = 2690.0000 SQ.FT. XMRP = 976.0000 IN. XT
LREF = 1290.3000 INCHES YMRP = .0000 IN. YT
BREF = 1290.3000 INCHES ZMRP = 400.0000 IN. ZT
SCALE = .0200

PARAMETRIC DATA

IB-ELV = 10.000 OB-ELV = 2.000
BDFLAP = .000 SPDBRK = .000
RUDDER = .000 SILTS = 1.000
MACH = 1.150 RN/L = 3.500

RUN NO. 1509/ 0 RN/L = 3.51 GRADIENT INTERVAL = -5.00/ 5.00

ALPHAO	BETAO	CNFO	CAFO	CLMFO	CYFO	CYNFO	CBLFO	CNBO	CABO	CLMBO
-.455	-6.952	.17820	.10300	-.08530	.16100	-.09660	.06870	.03060	.05770	-.01640
-.427	-4.786	.16290	.10500	-.07500	.10820	-.06480	.04680	.02930	.05450	-.01580
-.393	-.538	.12720	.10210	-.04850	.01220	-.00510	.00500	.02770	.05090	-.01510
-.362	3.716	.14520	.10520	-.06370	-.07690	.05040	-.03540	.02780	.05110	-.01530
-.361	5.867	.15640	.10760	-.07440	-.12570	.08020	-.05580	.02760	.05070	-.01510
	GRADIENT	-.00208	.00002	.00133	-.02177	.01355	-.00967	-.00018	-.00040	.00006

IA156A, AEDC PWT 16T-470, O T S (R8NW01) (10 MAY 80)

REFERENCE DATA

SREF = 2690.0000 SQ.FT. XMRP = 976.0000 IN. XT
LREF = 1290.3000 INCHES YMRP = .0000 IN. YT
BREF = 1290.3000 INCHES ZMRP = 400.0000 IN. ZT
SCALE = .0200

PARAMETRIC DATA

IB-ELV = 10.000 OB-ELV = 5.000
BDFLAP = .000 SPDBRK = .000
RUDDER = .000 SILTS = .000
MACH = .600 RN/L = 3.500

RUN NO. 801/ 0 RN/L = 3.51 GRADIENT INTERVAL = -5.00/ 5.00

ALPHAO	BETAO	CNW	CBW	CTW	CHEI	CHEO	IB-ELV	OB-ELV	PHII	ALPHAI	MACH
-.312	-6.620	.09300	.01540	.03100	.00330	.00400	10.03110	5.01790	90.00370	-5.99160	.59940
-.295	-.356	.07010	.01150	.02420	.01760	.00540	10.07940	5.02420	90.01720	.03190	.59960
-.308	5.848	.05540	.00980	.01940	.02530	.00410	10.10480	5.01850	90.05780	6.00710	.59940
	GRADIENT	.00000	.00000	.00000	.00000	.00000	.00000	.00000	.00000	.00000	.00000

IA156A, AEDC PWT 16T-470, O T S (R8NW02) (10 MAY 80)

REFERENCE DATA

SREF = 2690.0000 SQ.FT. XMRP = 976.0000 IN. XT
LREF = 1290.3000 INCHES YMRP = .0000 IN. YT
BREF = 1290.3000 INCHES ZMRP = 400.0000 IN. ZT
SCALE = .0200

PARAMETRIC DATA

IB-ELV = 10.000 OB-ELV = 5.000
BDFLAP = .000 SPDBRK = .000
RUDDER = .000 SILTS = .000
MACH = .700 RN/L = 3.500

RUN NO. 803/ 0 RN/L = 3.50 GRADIENT INTERVAL = -5.00/ 5.00

ALPHAO	BETAO	CNW	CBW	CTW	CHEI	CHEO	IB-ELV	OB-ELV	PHII	ALPHAI	MACH
-.307	-6.786	.10020	.01620	.03270	.00190	.00400	10.02740	5.02040	90.20650	-6.02240	.70080
-.309	-.446	.07540	.01240	.02530	.01620	.00660	10.08160	5.03340	90.23360	.03260	.70010
-.343	5.803	.05750	.01050	.02030	.02710	.00530	10.12260	5.02700	90.23360	6.01370	.69950
	GRADIENT	.00000	.00000	.00000	.00000	.00000	.00000	.00000	.00000	.00000	.00000

IA156A, AEDC PWT 16T-470, O T S (R8NW03) (10 MAY 80)

REFERENCE DATA

SREF = 2690.0000 SQ.FT. XMRP = 976.0000 IN. XT
LREF = 1290.3000 INCHES YMRP = .0000 IN. YT
BREF = 1290.3000 INCHES ZMRP = 400.0000 IN. ZT
SCALE = .0200

PARAMETRIC DATA

IB-ELV = 10.000 OB-ELV = 5.000
BDFLAP = .000 SPDBRK = .000
RUDDER = .000 SILTS = .000
MACH = .800 RN/L = 3.500

RUN NO. 804/ 0 RN/L = 3.50 GRADIENT INTERVAL = -5.00/ 5.00

ALPHAO	BETAO	CNW	CBW	CTW	CHEI	CHEO	IB-ELV	OB-ELV	PHII	ALPHAI	MACH
-.315	-6.863	.10580	.01740	.03550	-.00440	.00460	10.00160	5.02560	90.20650	-6.02140	.79990
-.322	-.508	.07670	.01300	.02660	.00920	.00920	10.05840	5.05120	90.22000	.01380	.79970
-.361	5.804	.05640	.01090	.02020	.02440	.00800	10.12200	5.04460	90.24710	6.01480	.79990
	GRADIENT	.00000	.00000	.00000	.00000	.00000	.00000	.00000	.00000	.00000	.00000

IA156A, AEDC PWT 16T-470, O T S (R8NW04) (10 MAY 80)

REFERENCE DATA

SREF = 2690.0000 SQ.FT. XMRP = 976.0000 IN. XT
LREF = 1290.3000 INCHES YMRP = .0000 IN. YT
BREF = 1290.3000 INCHES ZMRP = 400.0000 IN. ZT
SCALE = .0200

PARAMETRIC DATA

IB-ELV = 10.000 OB-ELV = 5.000
BDFLAP = .000 SPDBRK = .000
RUDDER = .000 SILTS = .000
MACH = .850 RN/L = 3.500

RUN NO. 805/ 0 RN/L = 3.50 GRADIENT INTERVAL = -5.00/ 5.00

ALPHAO	BETAO	CNW	CBW	CTW	CHEI	CHEO	IB-ELV	OB-ELV	PHII	ALPHAI	MACH
-.323	-6.768	.10650	.01820	.03670	-.01290	.00390	9.96380	5.02260	90.20650	-5.90010	.84970
-.325	-.526	.07540	.01310	.02710	.01050	.01130	10.06590	5.06550	90.23360	.00580	.85000
-.372	5.679	.05330	.01060	.01940	.02490	.01130	10.12890	5.06560	90.24710	5.89010	.85010
	GRADIENT	.00000	.00000	.00000	.00000	.00000	.00000	.00000	.00000	.00000	.00000

IA156A, AEDC PWT 16T-470, O T S (R8NW05) (10 MAY 80)

REFERENCE DATA

SREF = 2690.0000 SQ.FT. XMRP = 976.0000 IN. XT
LREF = 1290.3000 INCHES YMRP = .0000 IN. YT
BREF = 1290.3000 INCHES ZMRP = 400.0000 IN. ZT
SCALE = .0200

PARAMETRIC DATA

IB-ELV = 10.000 OB-ELV = 5.000
BDFLAP = .000 SPDBRK = .000
RUDDER = .000 SILTS = .000
MACH = .900 RN/L = 3.500

RUN NO. 806/ 0 RN/L = 3.50 GRADIENT INTERVAL = -5.00/ 5.00

ALPHAO	BETAO	CNW	CBW	CTW	CHEI	CHEO	IB-ELV	OB-ELV	PHII	ALPHAI	MACH
-.339	-6.784	.10790	.01770	.03680	-.01560	.00320	9.94890	5.01950	90.20650	-5.89420	.89950
-.340	-.528	.07170	.01250	.02650	.01430	.00870	10.08500	5.05270	90.23360	.01290	.89980
-.387	5.707	.04750	.00900	.01850	.02950	.00890	10.15370	5.05360	90.24710	5.90650	.89970
	GRADIENT	.00000	.00000	.00000	.00000	.00000	.00000	.00000	.00000	.00000	.00000

IA156A, AEDC PWT 16T-470, O T S (R8NW06) (10 MAY 80)

REFERENCE DATA

SREF = 2690.0000 SQ.FT. XMRP = 976.0000 IN. XT
LREF = 1290.3000 INCHES YMRP = .0000 IN. YT
BREF = 1290.3000 INCHES ZMRP = 400.0000 IN. ZT
SCALE = .0200

PARAMETRIC DATA

IB-ELV = 10.000 OB-ELV = 5.000
BDFLAP = .000 SPDBRK = .000
RUDDER = .000 SILTS = .000
MACH = .920 RN/L = 3.500

RUN NO. 807/ 0 RN/L = 3.50 GRADIENT INTERVAL = -5.00/ 5.00

ALPHAO	BETAO	CNW	CBW	CTW	CHEI	CHEO	IB-ELV	OB-ELV	PHII	ALPHAI	MACH
-.348	-6.787	.10470	.01780	.03710	-.01830	.00460	9.93600	5.02830	90.20650	-5.89120	.91980
-.343	-.555	.07090	.01290	.02690	.00610	.01140	10.04830	5.06990	90.22000	-.01170	.92040
-.389	5.691	.04510	.00930	.01880	.01980	.01130	10.11090	5.06940	90.23360	5.88350	.91940
	GRADIENT	.00000	.00000	.00000	.00000	.00000	.00000	.00000	.00000	.00000	.00000

IA156A, AEDC PWT 16T-470, O T S

(R8NW07) (10 MAY 80)

REFERENCE DATA

SREF = 2690.0000 SQ.FT. XMRP = 976.0000 IN. XT
LREF = 1290.3000 INCHES YMRP = .0000 IN. YT
BREF = 1290.3000 INCHES ZMRP = 400.0000 IN. ZT
SCALE = .0200

PARAMETRIC DATA

IB-ELV = 10.000 OB-ELV = 5.000
BDFLAP = .000 SPDBRK = .000
RUDDER = .000 SILTS = .000
MACH = .940 RN/L = 3.500

RUN NO. 808/ 0 RN/L = 3.50 GRADIENT INTERVAL = -5.00/ 5.00

ALPHAO	BETAO	CNW	CBW	CTW	CHEI	CHEO	IB-ELV	OB-ELV	PHII	ALPHAI	MACH
-.350	-6.771	.11080	.01830	.03750	-.02260	.00080	9.91480	5.00510	90.20650	-5.86730	.93950
-.343	-.582	.07450	.01320	.02700	-.00170	.00880	10.01230	5.05440	90.20650	-.03710	.93940
-.393	5.795	.04640	.00900	.02000	.00550	.00960	10.04570	5.05960	90.24710	5.97760	.93940
	GRADIENT	.00000	.00000	.00000	.00000	.00000	.00000	.00000	.00000	.00000	.00000

IA156A, AEDC PWT 16T-470, O T S

(R8NW08) (10 MAY 80)

REFERENCE DATA

SREF = 2690.0000 SQ.FT. XMRP = 976.0000 IN. XT
LREF = 1290.3000 INCHES YMRP = .0000 IN. YT
BREF = 1290.3000 INCHES ZMRP = 400.0000 IN. ZT
SCALE = .0200

PARAMETRIC DATA

IB-ELV = 10.000 OB-ELV = 5.000
BDFLAP = .000 SPDBRK = .000
RUDDER = .000 SILTS = .000
MACH = .950 RN/L = 3.500

RUN NO. 816/ 0 RN/L = 3.50 GRADIENT INTERVAL = -5.00/ 5.00

BETAO	ALPHAO	CNW	CBW	CTW	CHEI	CHEC	IB-ELV	OB-ELV	PHII	ALPHAI	MACH
.566	-5.898	.00140	-.00120	.00090	-.01460	.01310	9.97020	5.08860	-3.73410	-4.75850	.95000
.266	-1.055	.07520	.00970	.03670	-.00990	.01160	9.99240	5.07970	-3.73410	-.36140	.94980
.197	.029	.06980	.01310	.02440	-.00860	.00940	9.99830	5.06570	-3.73460	.62450	.94970
-.170	5.745	.16790	.02620	.07340	-.01130	-.01810	9.98530	4.89380	-3.73400	5.86050	.95000
	GRADIENT	-.00498	.00314	-.01135	.00120	-.00203	.00544	-.01292	-.00046	.90975	-.00009

IA156A, AEDC PWT 16T-470, O T S

(R8NW09) (10 MAY 80)

REFERENCE DATA

SREF = 2690.0000 SQ.FT. XMRP = 976.0000 IN. XT
LREF = 1290.3000 INCHES YMRP = .0000 IN. YT
BREF = 1290.3000 INCHES ZMRP = 400.0000 IN. ZT
SCALE = .0200

PARAMETRIC DATA

IB-ELV = 10.000 OB-ELV = 5.000
BDFLAP = .000 SPDBRK = .000
RUDDER = .000 SILTS = .000
MACH = .950 RN/L = 3.500

RUN NO. 820/ 0 RN/L = 3.50 GRADIENT INTERVAL = -5.00/ 5.00

ALPHAO	BETAO	CNW	CBW	CTW	CHEI	CHEO	IB-ELV	OB-ELV	PHII	ALPHAI	MACH
-.433	-6.912	.09790	.01740	.02850	-.02350	.00210	9.90980	5.01300	89.88190	-6.01340	.94980
-.362	-.195	.07120	.01230	.02370	-.00830	.01070	9.98130	5.06680	89.92250	.31130	.95040
-.330	5.845	.05420	.00970	.02050	-.00110	.00890	10.01480	5.05540	89.93600	6.01590	.94970
	GRADIENT	.00000	.00000	.00000	.00000	.00000	.00000	.00000	.00000	.00000	.00000

IA156A, AEDC PWT 16T-470, O T S

(R8NW10) (10 MAY 80)

REFERENCE DATA

SREF = 2690.0000 SQ.FT. XMRP = 976.0000 IN. XT
LREF = 1290.3000 INCHES YMRP = .0000 IN. YT
BREF = 1290.3000 INCHES ZMRP = 400.0000 IN. ZT
SCALE = .0200

PARAMETRIC DATA

IB-ELV = 10.000 OB-ELV = 5.000
BDFLAP = .000 SPDBRK = .000
RUDDER = .000 SILTS = .000
MACH = .960 RN/L = 3.500

RUN NO. 818/ 0 RN/L = 3.50 GRADIENT INTERVAL = -5.00/ 5.00

ALPHAO	BETAO	CNW	CBW	CTW	CHEI	CHEO	IB-ELV	OB-ELV	PHII	ALPHAI	MACH
-.432	-6.901	.09380	.01790	.02780	-.02460	.00340	9.90420	5.02140	89.93600	-5.99950	.95980
-.372	-.535	.06580	.01280	.02240	-.00880	.01220	9.97840	5.07640	89.96310	-.00860	.95970
-.342	5.840	.04870	.00950	.01970	-.00280	.01020	10.00690	5.06400	89.99010	6.01040	.95980
	GRADIENT	.00000	.00000	.00000	.00000	.00000	.00000	.00000	.00000	.00000	.00000

IA156A, AEDC PWT 16T-470, O T S (R8NW11) (10 MAY 80)

REFERENCE DATA

SREF = 2690.0000 SQ.FT. XMRP = 976.0000 IN. XT
LREF = 1290.3000 INCHES YMRP = .0000 IN. YT
BREF = 1290.3000 INCHES ZMRP = 400.0000 IN. ZT
SCALE = .0200

PARAMETRIC DATA

IB-ELV = 10.000 OB-ELV = 5.000
BDFLAP = .000 SPDBRK = .000
RUDDER = .000 SILTS = .000
MACH = .970 RN/L = 3.500

RUN NO. 821/ 0 RN/L = 3.50 GRADIENT INTERVAL = -5.00/ 5.00

ALPHAO	BETAO	CNW	CBW	CTW	CHEI	CHEO	IB-ELV	OB-ELV	PHII	ALPHAI	MACH
-.443	-6.731	.09820	.01790	.02950	-.03040	.00390	9.87570	5.02460	89.89540	-5.83350	.96970
-.377	-.325	.07060	.01190	.02390	-.00890	.01360	9.97770	5.08620	89.93600	.18980	.96940
-.342	5.959	.04950	.00890	.01960	-.00260	.01010	10.00750	5.06400	89.96310	6.12100	.97010
	GRADIENT	.00000	.00000	.00000	.00000	.00000	.00000	.00000	.00000	.00000	.00000

IA156A, AEDC PWT 16T-470, O T S (R8NW12) (10 MAY 80)

REFERENCE DATA

SREF = 2690.0000 SQ.FT. XMRP = 976.0000 IN. XT
LREF = 1290.3000 INCHES YMRP = .0000 IN. YT
BREF = 1290.3000 INCHES ZMRP = 400.0000 IN. ZT
SCALE = .0200

PARAMETRIC DATA

IB-ELV = 10.000 OB-ELV = 5.000
BDFLAP = .000 SPDBRK = .000
RUDDER = .000 SILTS = .000
MACH = .980 RN/L = 3.500

RUN NO. 822/ 0 RN/L = 3.51 GRADIENT INTERVAL = -5.00/ 5.00

ALPHAO	BETAO	CNW	CBW	CTW	CHEI	CHEO	IB-ELV	OB-ELV	PHII	ALPHAI	MACH
-.156	-6.192	.10070	.01880	.03080	-.03070	.00480	9.87230	5.03050	92.32080	-5.32150	.98050
-.374	.020	.06700	.01240	.02310	-.00950	.01470	9.98160	5.09620	68.14610	.44260	.97980
-.004	5.943	.04900	.00970	.02070	-.00510	.00780	9.99650	5.05030	86.87610	6.09800	.98010
	GRADIENT	.00000	.00000	.00000	.00000	.00000	.00000	.00000	.00000	.00000	.00000

IA156A, AEDC PWT 16T-470, O T S (R8NW13) (10 MAY 80)

REFERENCE DATA

SREF = 2690.0000 SQ.FT. XMRP = 976.0000 IN. XT
LREF = 1290.3000 INCHES YMRP = .0000 IN. YT
BREF = 1290.3000 INCHES ZMRP = 400.0000 IN. ZT
SCALE = .0200

PARAMETRIC DATA

IB-ELV = 10.000 OB-ELV = 5.000
BDFLAP = .000 SPDBRK = .000
RUDDER = .000 SILTS = .000
MACH = .990 RN/L = 3.500

RUN NO. 823/ 0 RN/L = 3.50 GRADIENT INTERVAL = -5.00/ 5.00

ALPHAO	BETAO	CNW	CBW	CTW	CHEI	CHEO	IB-ELV	OB-ELV	PHII	ALPHAI	MACH
-.071	-6.202	.10640	.02000	.03200	-.03020	.00520	9.87390	5.03280	93.05750	-5.32350	.98930
-.328	.120	.07010	.01270	.02420	-.01110	.01520	9.97410	5.10020	66.61430	.53630	.98980
-.058	5.687	.05050	.00980	.02140	-.00920	.00770	9.97640	5.04980	87.24490	5.85510	.99020
	GRADIENT	.00000	.00000	.00000	.00000	.00000	.00000	.00000	.00000	.00000	.00000

IA156A, AEDC PWT 16T-470, O T S (R8NW14) (10 MAY 80)

REFERENCE DATA

SREF = 2690.0000 SQ.FT. XMRP = 976.0000 IN. XT
LREF = 1290.3000 INCHES YMRP = .0000 IN. YT
BREF = 1290.3000 INCHES ZMRP = 400.0000 IN. ZT
SCALE = .0200

PARAMETRIC DATA

IB-ELV = 10.000 OB-ELV = 5.000
BDFLAP = .000 SPDBRK = .000
RUDDER = .000 SILTS = .000
MACH = 1.010 RN/L = 3.500

RUN NO. 824/ 0 RN/L = 3.51 GRADIENT INTERVAL = -5.00/ 5.00

ALPHAO	BETAO	CNW	CBW	CTW	CHEI	CHEO	IB-ELV	OB-ELV	PHII	ALPHAI	MACH
.039	-6.145	.10840	.02160	.03170	-.02500	.00700	9.89720	5.04510	94.11180	-5.26360	1.00600
-.230	.302	.07510	.01300	.02550	-.00570	.01570	10.00130	5.10520	61.53560	.72170	1.00990
-.111	6.034	.04900	.00930	.02140	-.00600	.00400	9.99150	5.02610	87.79040	6.17360	1.00970
	GRADIENT	.00000	.00000	.00000	.00000	.00000	.00000	.00000	.00000	.00000	.00000

IA156A, AEDC PWT 16T-470, O T S (R8NW15) (10 MAY 80)

REFERENCE DATA

SREF = 2690.0000 SQ.FT. XMRP = 976.0000 IN. XT
LREF = 1290.3000 INCHES YMRP = .0000 IN. YT
BREF = 1290.3000 INCHES ZMRP = 400.0000 IN. ZT
SCALE = .0200

PARAMETRIC DATA

IB-ELV = 10.000 OB-ELV = 5.000
BDFLAP = .000 SPDBRK = .000
RUDDER = .000 SILTS = .000
MACH = 1.020 RN/L = 3.500

RUN NO. 825/ 0 RN/L = 3.51 GRADIENT INTERVAL = -5.00/ 5.00

ALPHAO	BETAO	CNW	CBW	CTW	CHEI	CHEO	IB-ELV	OB-ELV	PHII	ALPHAI	MACH
-.021	-6.211	.11340	.02150	.03160	-.02230	.00770	9.90970	5.04980	93.55190	-5.32450	1.01990
-.340	.134	.07410	.01310	.02570	.00170	.01620	10.03590	5.10830	65.25080	.55100	1.01960
-.052	6.077	.05020	.00920	.02210	-.00020	.00180	10.02000	5.01200	87.23120	6.21090	1.01980
	GRADIENT	.00000	.00000	.00000	.00000	.00000	.00000	.00000	.00000	.00000	.00000

IA156A, AEDC PWT 16T-470, O T S (R8NW16) (10 MAY 80)

REFERENCE DATA

SREF = 2690.0000 SQ.FT. XMRP = 976.0000 IN. XT
LREF = 1290.3000 INCHES YMRP = .0000 IN. YT
BREF = 1290.3000 INCHES ZMRP = 400.0000 IN. ZT
SCALE = .0200

PARAMETRIC DATA

IB-ELV = 10.000 OB-ELV = 5.000
BDFLAP = .000 SPDBRK = .000
RUDDER = .000 SILTS = .000
MACH = 1.030 RN/L = 3.500

RUN NO. 826/ 0 RN/L = 3.51 GRADIENT INTERVAL = -5.00/ 5.00

ALPHAO	BETAO	CNW	CBW	CTW	CHEI	CHEO	IB-ELV	OB-ELV	PHII	ALPHAI	MACH
-.007	-6.500	.11480	.02240	.03160	-.01970	.00800	9.92180	5.05230	93.57860	-5.59060	1.02990
-.314	.180	.07560	.01360	.02620	.00940	.01590	10.07460	5.10700	63.95670	.60010	1.02950
-.099	6.275	.05010	.00890	.02230	.00650	-.00130	10.05290	4.99190	87.70860	6.39420	1.02980
	GRADIENT	.00000	.00000	.00000	.00000	.00000	.00000	.00000	.00000	.00000	.00000

IA156A, AEDC PWT 16T-470, O T S (R8NW17) (10 MAY 80)

REFERENCE DATA

SREF = 2690.0000 SQ.FT. XMRP = 976.0000 IN. XT
LREF = 1290.3000 INCHES YMRP = .0000 IN. YT
BREF = 1290.3000 INCHES ZMRP = 400.0000 IN. ZT
SCALE = .0200

PARAMETRIC DATA

IB-ELV = 10.000 OB-ELV = 5.000
BDFLAP = .000 SPDBRK = .000
RUDDER = .000 SILTS = .000
MACH = 1.040 RN/L = 3.500

RUN NO. 827/ 0 RN/L = 3.51 GRADIENT INTERVAL = -5.00/ 5.00

ALPHAO	BETAO	CNW	CBW	CTW	CHEI	CHEO	IB-ELV	OB-ELV	PHII	ALPHAI	MACH
-.214	-6.395	.11120	.02160	.03050	-.01870	.00860	9.92690	5.05620	91.98520	-5.48100	1.03260
-.345	.160	.07250	.01340	.02590	.01460	.01600	10.09870	5.10780	70.26930	.59530	1.04000
-.040	6.152	.05030	.00910	.02290	.01200	-.00270	10.08000	4.98260	87.10830	6.28330	1.04040
	GRADIENT	.00000	.00000	.00000	.00000	.00000	.00000	.00000	.00000	.00000	.00000

IA156A, AEDC PWT 16T-470, O T S (R8NW18) (10 MAY 80)

REFERENCE DATA

SREF = 2690.0000 SQ.FT. XMRP = 976.0000 IN. XT
LREF = 1290.3000 INCHES YMRP = .0000 IN. YT
BREF = 1290.3000 INCHES ZMRP = 400.0000 IN. ZT
SCALE = .0200

PARAMETRIC DATA

IB-ELV = 10.000 OB-ELV = 5.000
BDFLAP = .000 SPDBRK = .000
RUDDER = .000 SILTS = .000
MACH = 1.050 RN/L = 3.500

RUN NO. 828/ 0 RN/L = 3.51 GRADIENT INTERVAL = -5.00/ 5.00

ALPHAO	BETAO	CNW	CBW	CTW	CHEI	CHEO	IB-ELV	OB-ELV	PHII	ALPHAI	MACH
-.128	-6.378	.11070	.02200	.03050	-.01770	.00910	9.93150	5.05970	92.64250	-5.46810	1.05080
-.291	.263	.07100	.01300	.02570	.01640	.01570	10.10860	5.10630	66.18840	.69360	1.05010
-.145	6.216	.04620	.00840	.02190	.01390	-.00080	10.09980	4.99520	87.98110	6.34040	1.04970
	GRADIENT	.00000	.00000	.00000	.00000	.00000	.00000	.00000	.00000	.00000	.00000

IA156A, AEDC PWT 16T-470, O T S (R8NW19) (10 MAY 80)

REFERENCE DATA

SREF = 2690.0000 SQ.FT. XMRP = 976.0000 IN. XT
LREF = 1290.3000 INCHES YMRP = .0000 IN. YT
BREF = 1290.3000 INCHES ZMRP = 400.0000 IN. ZT
SCALE = .0200

PARAMETRIC DATA

IB-ELV = 10.000 OB-ELV = 5.000
BDFLAP = .000 SPDBRK = .000
RUDDER = .000 SILTS = .000
MACH = 1.060 RN/L = 3.500

RUN NO. 829/ 0 RN/L = 3.50 GRADIENT INTERVAL = -5.00/ 5.00

ALPHAO	BETAO	CNW	CBW	CTW	CHEI	CHEO	IB-ELV	OB-ELV	PHII	ALPHAI	MACH
-.024	-6.353	.11100	.02250	.03110	-.01860	.00900	9.92600	5.05960	93.53850	-5.44410	1.05960
-.275	.284	.07140	.01330	.02630	.01380	.01560	10.09650	5.10650	66.47240	.71070	1.05960
-.170	6.205	.04680	.00840	.02230	.01420	-.00040	10.09130	4.99770	88.25340	6.33050	1.06070
	GRADIENT	.00000	.00000	.00000	.00000	.00000	.00000	.00000	.00000	.00000	.00000

IA156A, AEDC PWT 16T-470, O T S (R8NW20) (10 MAY 80)

REFERENCE DATA

SREF = 2690.0000 SQ.FT. XMRP = 976.0000 IN. XT
LREF = 1290.3000 INCHES YMRP = .0000 IN. YT
BREF = 1290.3000 INCHES ZMRP = 400.0000 IN. ZT
SCALE = .0200

PARAMETRIC DATA

IB-ELV = 10.000 OB-ELV = 5.000
BDFLAP = .000 SPDBRK = .000
RUDDER = .000 SILTS = .000
MACH = 1.080 RN/L = 3.500

RUN NO. 830/ 0 RN/L = 3.48 GRADIENT INTERVAL = -5.00/ 5.00

ALPHAO	BETAO	CNW	CBW	CTW	CHEI	CHEO	IB-ELV	OB-ELV	PHII	ALPHAI	MACH
-.161	-6.471	.11280	.02230	.03100	-.01730	.00900	9.93350	5.05940	92.28060	-5.56370	1.07950
-.313	.183	.07530	.01380	.02670	.01370	.01540	10.09650	5.10590	65.86180	.60530	1.08010
-.214	6.199	.04810	.00840	.02260	.01400	-.00500	10.09100	4.96670	88.74290	6.32290	1.07880
	GRADIENT	.00000	.00000	.00000	.00000	.00000	.00000	.00000	.00000	.00000	.00000

IA156A, AEDC PWT 16T-470, O T S

(R8NW21) (10 MAY 80)

REFERENCE DATA

SREF = 2690.0000 SQ.FT. XMRP = 976.0000 IN. XT
LREF = 1290.3000 INCHES YMRP = .0000 IN. YT
BREF = 1290.3000 INCHES ZMRP = 400.0000 IN. ZT
SCALE = .0200

PARAMETRIC DATA

IB-ELV = 10.000 OB-ELV = 5.000
BDFLAP = .000 SPDBRK = .000
RUDDER = .000 SILTS = .000
MACH = 1.100 RN/L = 3.500

RUN NO. 831/ 0 RN/L = 3.50 GRADIENT INTERVAL = -5.00/ 5.00

ALPHAO	BETAO	CNW	CBW	CTW	CHEI	CHEO	IB-ELV	OB-ELV	PHII	ALPHAI	MACH
-.224	-6.217	.10950	.02250	.02900	-.01430	.01060	9.94670	5.07190	91.87780	-5.31850	1.10030
-.347	.132	.07440	.01400	.02600	.01970	.01220	10.12800	5.08540	65.47820	.55100	1.09950
-.016	6.090	.04900	.00910	.02350	.02040	-.01280	10.12480	4.91390	86.83510	6.22080	1.10010
	GRADIENT	.00000	.00000	.00000	.00000	.00000	.00000	.00000	.00000	.00000	.00000

IA156A, AEDC PWT 16T-470, O T S

(R8NW22) (10 MAY 80)

REFERENCE DATA

SREF = 2690.0000 SQ.FT. XMRP = 976.0000 IN. XT
LREF = 1290.3000 INCHES YMRP = .0000 IN. YT
BREF = 1290.3000 INCHES ZMRP = 400.0000 IN. ZT
SCALE = .0200

PARAMETRIC DATA

IB-ELV = 10.000 OB-ELV = 5.000
BDFLAP = .000 SPDBRK = .000
RUDDER = .000 SILTS = .000
MACH = 1.150 RN/L = 3.500

RUN NO. 836/ 0 RN/L = 3.50 GRADIENT INTERVAL = -5.00/ 5.00

ALPHAO	BETAO	CNW	CBW	CTW	CHEI	CHEO	IB-ELV	OB-ELV	PHII	ALPHAI	MACH
.183	-5.955	.10520	.02330	.02850	-.00930	.01280	9.97210	5.08840	-88.42680	6.07610	1.14970
-.344	.100	.08340	.01630	.02550	.02970	.00300	10.18450	5.02490	55.63910	.48770	1.14940
-.189	5.963	.05330	.01020	.02360	.03340	-.02510	10.19350	4.82750	88.45740	6.08930	1.15000
	GRADIENT	.00000	.00000	.00000	.00000	.00000	.00000	.00000	.00000	.00000	.00000

IA156A, AEDC PWT 16T-470, O T S (R8NW23) (10 MAY 80)

REFERENCE DATA

SREF = 2690.0000 SQ.FT. XMRP = 976.0000 IN. XT
LREF = 1290.3000 INCHES YMRP = .0000 IN. YT
BREF = 1290.3000 INCHES ZMRP = 400.0000 IN. ZT
SCALE = .0200

PARAMETRIC DATA

IB-ELV = 10.000 OB-ELV = 5.000
BDFLAP = .000 SPDBRK = .000
RUDDER = .000 SILTS = .000
MACH = 1.200 RN/L = 3.500

RUN NO. 837/ 0 RN/L = 3.51 GRADIENT INTERVAL = -5.00/ 5.00

ALPHAO	BETAO	CNW	CBW	CTW	CHEI	CHEO	IB-ELV	OB-ELV	PHII	ALPHAI	MACH
.094	-5.933	.10910	.02360	.02710	-.00570	.01120	9.99050	5.07850	-89.46520	6.04650	1.19980
-.213	.260	.09820	.01690	.02650	.03180	-.00930	10.20100	4.93860	48.44810	.65680	1.19990
-.233	6.027	.06610	.01080	.02490	.03020	-.03090	10.18050	4.78230	88.70210	6.14300	1.19940
	GRADIENT	.00000	.00000	.00000	.00000	.00000	.00000	.00000	.00000	.00000	.00000

IA156A, AEDC PWT 16T-470, O T S (R8NW24) (10 MAY 80)

REFERENCE DATA

SREF = 2690.0000 SQ.FT. XMRP = 976.0000 IN. XT
LREF = 1290.3000 INCHES YMRP = .0000 IN. YT
BREF = 1290.3000 INCHES ZMRP = 400.0000 IN. ZT
SCALE = .0200

PARAMETRIC DATA

IB-ELV = 10.000 OB-ELV = 5.000
BDFLAP = .000 SPDBRK = .000
RUDDER = .000 SILTS = .000
MACH = 1.250 RN/L = 3.500

RUN NO. 838/ 0 RN/L = 3.50 GRADIENT INTERVAL = -5.00/ 5.00

ALPHAO	BETAO	CNW	CBW	CTW	CHEI	CHEO	IB-ELV	OB-ELV	PHII	ALPHAI	MACH
-.160	-6.422	.12650	.02270	.02280	-.00090	.00620	10.01440	5.04370	92.45490	-5.47900	1.25030
-.274	.269	.09850	.01760	.02390	.03020	-.01660	10.18990	4.88470	64.75330	.69150	1.25000
-.219	5.956	.06590	.01210	.02390	.02300	-.03630	10.14420	4.74070	88.45740	6.07390	1.24970
	GRADIENT	.00000	.00000	.00000	.00000	.00000	.00000	.00000	.00000	.00000	.00000

IA156A, AEDC PWT 16T-470, O T S

(R8NW25) (10 MAY 80)

REFERENCE DATA

SREF = 2690.0000 SQ.FT. XMRP = 976.0000 IN. XT
LREF = 1290.3000 INCHES YMRP = .0000 IN. YT
BREF = 1290.3000 INCHES ZMRP = 400.0000 IN. ZT
SCALE = .0200

PARAMETRIC DATA

IB-ELV = 10.000 OB-ELV = 5.000
BDFLAP = .000 SPDBRK = .000
RUDDER = .000 SILTS = .000
MACH = 1.300 RN/L = 3.500

RUN NO. 839/ 0 RN/L = 3.50 GRADIENT INTERVAL = -5.00/ 5.00

ALPHAO	BETAO	CNW	CBW	CTW	CHEI	CHEO	IB-ELV	OB-ELV	PHII	ALPHAI	MACH
-.187	-6.415	.11510	.02270	.01850	.00360	-.00060	10.03880	4.99510	92.26710	-5.46710	1.29860
-.333	.162	.09560	.01810	.02200	.02440	-.02260	10.15930	4.83830	71.24420	.60220	1.30010
-.214	6.171	.06310	.01260	.02250	.01240	-.03990	10.08780	4.71120	88.48460	6.27350	1.30020
	GRADIENT	.00000	.00000	.00000	.00000	.00000	.00000	.00000	.00000	.00000	.00000

IA156A, AEDC PWT 16T-470, O T S

(R8NW26) (10 MAY 80)

REFERENCE DATA

SREF = 2690.0000 SQ.FT. XMRP = 976.0000 IN. XT
LREF = 1290.3000 INCHES YMRP = .0000 IN. YT
BREF = 1290.3000 INCHES ZMRP = 400.0000 IN. ZT
SCALE = .0200

PARAMETRIC DATA

IB-ELV = 10.000 OB-ELV = 5.000
BDFLAP = .000 SPDBRK = .000
RUDDER = .000 SILTS = .000
MACH = 1.400 RN/L = 3.500

RUN NO. 840/ 0 RN/L = 3.50 GRADIENT INTERVAL = -5.00/ 5.00

ALPHAO	BETAO	CNW	CBW	CTW	CHEI	CHEO	IB-ELV	OB-ELV	PHII	ALPHAI	MACH
-.188	-6.466	.09970	.02070	.01190	.01210	-.00970	10.08650	4.92810	92.73630	-5.48800	1.40120
-.345	.249	.09140	.01750	.01740	.01270	-.03470	10.09840	4.74550	65.66290	.66940	1.39960
-.211	6.167	.06370	.01310	.02080	-.00520	-.04570	9.99160	4.66110	87.87210	6.26690	1.39990
	GRADIENT	.00000	.00000	.00000	.00000	.00000	.00000	.00000	.00000	.00000	.00000

IA156A, AEDC PWT 16T-470, O T S (R8NW27) (10 MAY 80)

REFERENCE DATA

SREF = 2690.0000 SQ.FT. XMRP = 976.0000 IN. XT
LREF = 1290.3000 INCHES YMRP = .0000 IN. YT
BREF = 1290.3000 INCHES ZMRP = 400.0000 IN. ZT
SCALE = .0200

PARAMETRIC DATA

IB-ELV = 10.000 OB-ELV = 5.000
BDFLAP = .000 SPDBRK = .000
RUDDER = .000 SILTS = .000
MACH = 1.550 RN/L = 3.200

RUN NO. 841/ 0 RN/L = 3.19 GRADIENT INTERVAL = -5.00/ 5.00

ALPHAO	BETAO	CNW	CBW	CTW	CHEI	CHEO	IB-ELV	OB-ELV	PHII	ALPHAI	MACH
-.168	-6.478	.08820	.01770	.00700	.01340	-.02310	10.08820	4.84120	93.44510	-5.47110	1.54960
-.435	.244	.08040	.01560	.01150	-.00750	-.04390	9.98890	4.69920	65.70550	.69290	1.55000
-.301	6.109	.06630	.01320	.01780	-.02470	-.05270	9.89290	4.63680	87.95390	6.29980	1.54970
	GRADIENT	.00000	.00000	.00000	.00000	.00000	.00000	.00000	.00000	.00000	.00000

IA156A, AEDC PWT 16T-470, O T S (R8NW28) (10 MAY 80)

REFERENCE DATA

SREF = 2690.0000 SQ.FT. XMRP = 976.0000 IN. XT
LREF = 1290.3000 INCHES YMRP = .0000 IN. YT
BREF = 1290.3000 INCHES ZMRP = 400.0000 IN. ZT
SCALE = .0200

PARAMETRIC DATA

IB-ELV = 10.000 OB-ELV = 5.000
BDFLAP = .000 SPDBRK = .000
RUDDER = .000 SILTS = .000
MACH = .600 RN/L = 3.500

RUN NO. 846/ 0 RN/L = 3.50 GRADIENT INTERVAL = -5.00/ 5.00

ALPHAO	BETAO	CNW	CBW	CTW	CHEI	CHEO	IB-ELV	OB-ELV	PHII	ALPHAI	MACH
-.334	-6.579	.09160	.01370	.02250	.00480	.00520	10.03610	5.02320	90.03070	-5.97070	.59850
.127	-5.884	.08830	.01470	.02630	.00320	.00480	10.03080	5.02160	-89.83370	6.02790	.59940
.111	.087	.06930	.01260	.02330	.02050	.00490	10.08900	5.02200	-90.03840	.27750	.60000
-.270	5.876	.07480	.01100	.01960	.02660	.00370	10.10880	5.01640	89.99010	6.02900	.59910
.110	6.556	.05400	.01180	.01940	.02510	.00190	10.10390	5.00850	-90.02470	-5.96970	.59940
	GRADIENT	.00000	.00000	.00000	.00000	.00000	.00000	.00000	.00000	.00000	.00000

IA156A, AEDC PWT 16T-470, O T S

(R8NW29) (10 MAY 80)

REFERENCE DATA

SREF = 2690.0000 SQ.FT. XMRP = 976.0000 IN. XT
LREF = 1290.3000 INCHES YMRP = .0000 IN. YT
BREF = 1290.3000 INCHES ZMRP = 400.0000 IN. ZT
SCALE = .0200

PARAMETRIC DATA

IB-ELV = 10.000 OB-ELV = 5.000
BDFLAP = .000 SPDBRK = .000
RUDDER = .000 SILTS = .000
MACH = .900 RN/L = 3.500

RUN NO. 845/ 0 RN/L = 3.51 GRADIENT INTERVAL = -5.00/ 5.00

ALPHAO	BETAO	CNW	CBW	CTW	CHEI	CHEO	IB-ELV	OB-ELV	PHII	ALPHAI	MACH
-.394	-6.843	.10890	.01640	.02820	-.01580	.00500	9.94830	5.03030	90.03070	-5.97070	.90020
.079	-5.835	.09060	.01750	.02900	-.02000	.00680	9.92940	5.04140	-89.82010	5.99070	.89950
-.355	-.269	.07470	.01230	.02170	.02060	.01010	10.11380	5.06100	89.69240	.23120	.89960
.065	.262	.06730	.01300	.02380	.02120	.00980	10.11640	5.05920	-89.92920	.23320	.89910
-.299	5.811	.05360	.01090	.01670	.03010	.01040	10.15670	5.06300	89.69240	5.99400	.90020
.043	6.812	.03990	.01070	.01690	.03060	.00940	10.15930	5.05680	-89.91560	-5.97270	.89970
	GRADIENT	-.01393	.00132	.00395	.00113	-.00056	.00489	-.00339	-338.14307	.00377	-.00094

IA156A, AEDC PWT 16T-470, O T S

(R8NW30) (10 MAY 80)

REFERENCE DATA

SREF = 2690.0000 SQ.FT. XMRP = 976.0000 IN. XT
LREF = 1290.3000 INCHES YMRP = .0000 IN. YT
BREF = 1290.3000 INCHES ZMRP = 400.0000 IN. ZT
SCALE = .0200

PARAMETRIC DATA

IB-ELV = 10.000 OB-ELV = 5.000
BDFLAP = .000 SPDBRK = .000
RUDDER = .000 SILTS = .000
MACH = 1.100 RN/L = 3.500

RUN NO. 844/ 0 RN/L = 3.50 GRADIENT INTERVAL = -5.00/ 5.00

ALPHAO	BETAO	CNW	CBW	CTW	CHEI	CHEO	IB-ELV	OB-ELV	PHII	ALPHAI	MACH
-.513	-6.849	.12680	.02210	.02830	-.01590	.00990	9.93940	5.06720	89.48920	-5.91110	1.09940
.050	-5.864	.11590	.02290	.03120	-.01460	.01040	9.94590	5.07060	-89.82010	5.99070	1.09950
-.403	-.197	.08340	.01430	.02590	.01850	.01440	10.11390	5.09720	89.86830	.32010	1.09990
.034	.184	.07870	.01570	.02880	.01770	.00850	10.11020	5.05740	-89.69730	.32290	1.10050
-.331	5.850	.05400	.00860	.02180	.02190	-.00910	10.13160	4.93830	89.59750	5.99620	1.10020
-.018	6.825	.03550	.00870	.02090	.01870	-.01930	10.11510	4.87000	-89.68360	-5.91310	1.09890
	GRADIENT	-.01233	.00367	.00761	-.00210	-.01548	-.00971	-.10441	-471.05352	.00735	.00157

IA156A, AEDC PWT 16T-470, O T S (R8NW31) (10 MAY 80)

REFERENCE DATA

SREF = 2690.0000 SQ.FT. XMRP = 976.0000 IN. XT
LREF = 1290.3000 INCHES YMRP = .0000 IN. YT
BREF = 1290.3000 INCHES ZMRP = 400.0000 IN. ZT
SCALE = .0200

PARAMETRIC DATA

IB-ELV = 10.000 OB-ELV = 5.000
BDFLAP = .000 SPDBRK = .000
RUDDER = .000 SILTS = .000
MACH = 1.550 RN/L = 3.200

RUN NO. 842/ 0 RN/L = 3.20 GRADIENT INTERVAL = -5.00/ 5.00

ALPHAO	BETAO	CNW	CBW	CTW	CHEI	CHEO	IB-ELV	OB-ELV	PHII	ALPHAI	MACH
-.615	-6.815	.08570	.01640	.00580	.01660	-.02010	10.10610	4.86150	89.81420	-5.79470	1.55140
.179	-6.058	.08230	.01790	.00880	.01090	-.02510	10.07650	4.82680	-89.84740	6.24930	1.55010
-.533	-.323	.07030	.01490	.01010	-.00310	-.04360	10.00420	4.69900	89.58400	.27940	1.55060
.170	.324	.06740	.01630	.01480	-.01420	-.04750	9.94670	4.67320	-89.80640	.27870	1.55040
-.475	5.830	.05860	.01320	.01590	-.02330	-.05140	9.89940	4.64470	89.54340	6.04870	1.54970
-.489	6.059	.06180	.01270	.01670	-.02370	-.05220	9.89710	4.63950	89.59750	6.25700	1.55020
.098	6.797	.04410	.01300	.01880	-.03170	-.05360	9.85570	4.62920	-89.77910	-5.79070	1.55050
	GRADIENT	-.00448	.00216	.00726	-.01715	-.00603	-.08886	-.03987	-277.22206	-.00108	-.00031

IA156A, AEDC PWT 16T-470, O T S (R8NW34) (10 MAY 80)

REFERENCE DATA

SREF = 2690.0000 SQ.FT. XMRP = 976.0000 IN. XT
LREF = 1290.3000 INCHES YMRP = .0000 IN. YT
BREF = 1290.3000 INCHES ZMRP = 400.0000 IN. ZT
SCALE = .0200

PARAMETRIC DATA

IB-ELV = 10.000 OB-ELV = 5.000
BDFLAP = .000 SPDBRK = .000
RUDDER = .000 SILTS = .000
MACH = 1.100 RN/L = 3.500
Z = 4.500

RUN NO. 835/ 0 RN/L = 3.51 GRADIENT INTERVAL = -5.00/ 5.00

ALPHAO	BETAO	CNW	CBW	CTW	CHEI	CHEO	IB-ELV	OB-ELV	PHII	ALPHAI	MACH
.133	-5.950	.11100	.02430	.03210	-.01490	.00990	9.94470	5.06700	-89.43790	6.07610	1.10030
-.326	.162	.07570	.01400	.02560	.02230	.01270	10.14030	5.08850	67.22450	.60410	1.09970
-.142	6.104	.04380	.00770	.02030	.02220	-.00880	10.13390	4.94090	67.62680	6.22960	1.10030
	GRADIENT	.00000	.00000	.00000	.00000	.00000	.00000	.00000	.00000	.00000	.00000

IA156A, AEDC PWT 16T-470, O T S

(R8NW35) (10 MAY 80)

REFERENCE DATA

SREF = 2690.0000 SQ.FT. XMRP = 976.0000 IN. XT
LREF = 1290.3000 INCHES YMRP = .0000 IN. YT
BREF = 1290.3000 INCHES ZMRP = 400.0000 IN. ZT
SCALE = .0200

PARAMETRIC DATA

IB-ELV = 10.000 OB-ELV = 5.000
BDFLAP = .000 SPDBRK = .000
RUDDER = .000 SILTS = .000
MACH = 1.100 RN/L = 3.500
Z = 5.500

RUN NO. 834/ 0 RN/L = 3.51 GRADIENT INTERVAL = -5.00/ 5.00

ALPHAO	BETAO	CNW	CBW	CTW	CHEI	CHEO	IB-ELV	OB-ELV	PHII	ALPHAI	MACH
.202	-5.983	.10740	.02390	.03300	-.01510	.00970	9.94410	5.06560	-88.57720	6.11450	1.10000
-.218	.317	.07420	.01360	.02570	.02070	.01230	10.13550	5.08740	55.55330	.73240	1.10030
-.235	5.993	.04560	.00810	.02150	.02240	-.00900	10.13440	4.93940	88.59340	6.12540	1.09990
	GRADIENT	.00000	.00000	.00000	.00000	.00000	.00000	.00000	.00000	.00000	.00000

IA156A, AEDC PWT 16T-470, O T S

(R8NW36) (10 MAY 80)

REFERENCE DATA

SREF = 2690.0000 SQ.FT. XMRP = 976.0000 IN. XT
LREF = 1290.3000 INCHES YMRP = .0000 IN. YT
BREF = 1290.3000 INCHES ZMRP = 400.0000 IN. ZT
SCALE = .0200

PARAMETRIC DATA

IB-ELV = 10.000 OB-ELV = 5.000
BDFLAP = .000 SPDBRK = .000
RUDDER = .000 SILTS = .000
MACH = 1.100 RN/L = 3.500
Z = 6.500

RUN NO. 832/ 0 RN/L = 3.50 GRADIENT INTERVAL = -5.00/ 5.00

ALPHAO	BETAO	CNW	CBW	CTW	CHEI	CHEO	IB-ELV	OB-ELV	PHII	ALPHAI	MACH
-.157	-6.418	.11200	.02280	.02950	-.01520	.01040	9.94230	5.07010	92.40130	-5.50200	1.09950
-.303	.234	.07360	.01390	.02610	.01970	.01200	10.12750	5.08430	65.91860	.65560	1.09920
-.097	6.205	.04760	.00890	.02320	.02100	-.01320	10.12780	4.91100	87.66770	6.32940	1.10020
	GRADIENT	.00000	.00000	.00000	.00000	.00000	.00000	.00000	.00000	.00000	.00000

IA156A, AEDC PWT 16T-470, O T S (R3NW37) (10 MAY 80)

REFERENCE DATA

SREF = 2690.0000 SQ.FT. XMRP = 976.0000 IN. XT
LREF = 1290.3000 INCHES YMRP = .0000 IN. YT
BREF = 1290.3000 INCHES ZMRP = 400.0000 IN. ZT
SCALE = .0200

PARAMETRIC DATA

IB-ELV = 10.000 OB-ELV = 5.000
BDFLAP = .000 SPDBRK = .000
RUDDER = .000 SILTS = .000
MACH = 1.550 RN/L = 3.200

RUN NO. 843/ 0 RN/L = 3.19 GRADIENT INTERVAL = -5.00/ 5.00

ALPHAO	BETAO	CNW	CBW	CTW	CHEI	CHEO	IB-ELV	OB-ELV	PHII	ALPHAI	MACH
.171	.281	.06220	.01690	.01250	-.01430	-.04650	9.94570	4.67830	-89.83370	.31730	1.55060
-.533	-.269	.06610	.01520	.00900	-.00330	-.04290	10.00320	4.70560	89.85480	.32670	1.54910
-.536	-.291	.06680	.01510	.00840	-.00380	-.04260	10.00040	4.70590	89.85480	.31990	1.55060
.186	.269	.06510	.01700	.01240	-.01450	-.04670	9.94530	4.67790	-89.82010	.32830	1.54940
.164	.278	.06360	.01650	.01190	-.01190	-.04650	9.95880	4.67960	-89.82010	.32450	1.55000
-.514	-.290	.07010	.01560	.00950	-.00450	-.04370	9.99690	4.69860	89.84130	.32370	1.54940
	GRADIENT	-.00732	.00267	.00590	-.01729	-.00624	-.08956	-.04414	-321.03234	-.00011	.00052

IA156A, AEDC PWT 16T-470, O T S W/SILTS (R8NW40) (10 MAY 80)

REFERENCE DATA

SREF = 2690.0000 SQ.FT. XMRP = 976.0000 IN. XT
LREF = 1290.3000 INCHES YMRP = .0000 IN. YT
BREF = 1290.3000 INCHES ZMRP = 400.0000 IN. ZT
SCALE = .0200

PARAMETRIC DATA

IB-ELV = 10.000 OB-ELV = 5.000
BDFLAP = .000 SPDBRK = .000
RUDDER = .000 SILTS = 1.000
MACH = .300 RN/L = 3.500

RUN NO. 862/ 0 RN/L = 2.70 GRADIENT INTERVAL = -5.00/ 5.00

ALPHAO	BETAO	CNW	CBW	CTW	CHEI	CHEO	IB-ELV	OB-ELV	PHII	ALPHAI	MACH
-5.920	-9.943	.03830	.00030	-.00790	.00480	.00180	10.03530	5.00670	61.07950	-10.94350	.29880
-6.155	-5.902	.03730	-.00110	-.00950	.00600	.00270	10.04090	5.00970	45.89220	-7.93460	.29660
-6.275	.408	.03950	-.00140	-.01020	.01370	.00460	10.05700	5.01530	-1.88100	-5.71210	.29840
-5.806	6.205	.02890	-.00040	-.00770	.01650	.00400	10.05520	5.01200	-46.29280	-7.91080	.29940
-5.909	10.174	.01590	-.00090	-.00800	.01870	.00360	10.05470	5.00990	-59.81150	-11.14120	.29880
	GRADIENT	.00000	.00000	.00000	.00000	.00000	.00000	.00000	.00000	.00000	.00000

RUN NO. 863/ 0 RN/L = 2.68 GRADIENT INTERVAL = -5.00/ 5.00

ALPHAO	BETAO	CNW	CBW	CTW	CHEI	CHEO	IB-ELV	OB-ELV	PHII	ALPHAI	MACH
-.323	-10.566	.11300	.01340	.01470	.00130	.00060	10.02190	5.00110	89.82780	-10.00150	.29750
-.295	-6.495	.20570	.00930	.09730	.00200	.00240	10.02280	5.00440	89.84130	-5.99260	.29920
-.254	-.400	.19830	.00830	.09550	.01270	.00250	10.03750	5.00460	89.85480	.01600	.29920
-.216	5.676	.19610	.00770	.09370	.01720	.00070	10.04330	5.00130	89.85480	6.01040	.29760
-.202	9.729	.18720	.00700	.08440	.02020	-.00070	10.04740	4.99880	89.88190	10.00230	.29820
	GRADIENT	.00000	.00000	.00000	.00000	.00000	.00000	.00000	.00000	.00000	.00000

IA156A, AEDC PWT 16T-470, O T S W/SILTS (R8NW40) (10 MAY 80)

REFERENCE DATA

SREF = 2690.0000 SQ.FT. XMRP = 976.0000 IN. XT
LREF = 1290.3000 INCHES YMRP = .0000 IN. YT
BREF = 1290.3000 INCHES ZMRP = 400.0000 IN. ZT
SCALE = .0200

PARAMETRIC DATA

IB-ELV = 10.000 OB-ELV = 5.000
BDFLAP = .000 SPDBRK = .000
RUDDER = .000 SILTS = 1.000
MACH = .300 RN/L = 3.500

RUN NO. 865/ 0 RN/L = 2.67 GRADIENT INTERVAL = -5.00/ 5.00

ALPHAO	BETAO	CNW	CBW	CTW	CHEI	CHEO	IB-ELV	OB-ELV	PHII	ALPHAI	MACH
6.308	-9.980	.29590	.02750	.12780	-.00310	-.00540	10.02520	4.99370	-59.12270	12.01540	.30070
5.980	-5.655	.28870	.02450	.12210	-.00030	-.00540	10.03260	4.99510	-45.07980	8.50830	.30050
6.119	.063	.27740	.02170	.10870	.00860	-.00840	10.05020	4.99170	-1.28530	6.42830	.29970
5.672	6.053	.26630	.01760	.11090	.01190	-.01030	10.04920	4.98610	45.82770	8.57470	.30000
5.788	10.128	.25070	.01580	.10770	.01400	-.01210	10.04840	4.98150	59.75290	11.88800	.29970
	GRADIENT	.00000	.00000	.00000	.00000	.00000	.00000	.00000	.00000	.00000	.00000

IA156A, AEDC PWT 16T-470, O T S W/SILTS (R8NW41) (10 MAY 80)

REFERENCE DATA

SREF = 2690.0000 SQ.FT. XMRP = 976.0000 IN. XT
LREF = 1290.3000 INCHES YMRP = .0000 IN. YT
BREF = 1290.3000 INCHES ZMRP = 400.0000 IN. ZT
SCALE = .0200

PARAMETRIC DATA

IB-ELV = 10.000 OB-ELV = 5.000
BDFLAP = .000 SPDBRK = .000
RUDDER = .000 SILTS = 1.000
MACH = .300 RN/L = 3.500

RUN NO. 861/ 0 RN/L = 2.74 GRADIENT INTERVAL = -5.00/ 5.00

ALPHAO	BETAO	CNW	CBW	CTW	CHEI	CHEO	IB-ELV	OB-ELV	PHII	ALPHAI	MACH
-10.091	-6.034	-.01980	-.00890	-.02180	.00850	.00380	10.04690	5.01280	32.51570	-11.07320	.29900
-10.067	.359	-.00980	-.00890	-.02050	.01640	.00700	10.06050	5.01950	-.91490	-9.40700	.29860
-9.910	6.266	-.00400	-.00730	-.01950	.01890	.00820	10.06110	5.02070	-32.02220	-11.04640	.29860
	GRADIENT	.00000	.00000	.00000	.00000	.00000	.00000	.00000	.00000	.00000	.00000

RUN NO. 866/ 0 RN/L = 2.66 GRADIENT INTERVAL = -5.00/ 5.00

ALPHAO	BETAO	CNW	CBW	CTW	CHEI	CHEO	IB-ELV	OB-ELV	PHII	ALPHAI	MACH
10.042	-5.845	.35750	.03470	.14760	-.00010	-.01340	10.03530	4.98170	-31.61390	11.80900	.29760
9.871	.222	.33610	.02940	.13410	.00550	-.01760	10.04570	4.97550	.14680	10.10150	.29730
10.015	6.282	.30620	.02540	.11950	.00760	-.02280	10.04580	4.96490	31.61610	12.01060	.29770
	GRADIENT	.00000	.00000	.00000	.00000	.00000	.00000	.00000	.00000	.00000	.00000

IA156A, AEDC PWT 16T-470, O T S W/SILTS (R8NW42) (27 MAY 80)

REFERENCE DATA

SREF = 2690.0000 SQ.FT. XMRP = 976.0000 IN. XT
LREF = 1290.3000 INCHES YMRP = .0000 IN. YT
BREF = 1290.3000 INCHES ZMRP = 400.0000 IN. ZT
SCALE = .0200

PARAMETRIC DATA

IB-ELV = 10.000 OB-ELV = 5.000
BDFLAP = .000 SPDBRK = .000
RUDDER = .000 SILTS = 1.000
MACH = .600 RN/L = 3.500

RUN NO. 867/ 0 RN/L = 3.50 GRADIENT INTERVAL = -5.00/ 5.00

ALPHAO	BETAO	CNW	CBW	CTW	CHEI	CHEO	IB-ELV	OB-ELV	PHII	ALPHAI
-8.043	-7.716	-.00080	-.00340	-.00750	.00610	.00360	10.07170	5.03295	46.35040	-10.11460
-8.204	-5.827	-.00120	-.00410	-.00790	.00680	.00380	10.07764	5.03479	37.84760	-9.06750
-8.073	-3.782	.00370	-.00390	-.00700	.00930	.00460	10.09883	5.04211	27.42130	-7.94450
-8.198	.321	.00180	-.00460	-.00710	.02110	.00740	10.19884	5.06774	-.85470	-7.23670
-7.861	4.154	.00500	-.00310	-.00790	.02480	.00780	10.23020	5.07140	-27.63390	-7.93560
-7.808	6.039	.00880	-.00270	-.00740	.02590	.00770	10.23953	5.07049	-37.88350	-8.90220
-8.047	8.247	.00510	-.00300	-.00750	.02790	.00800	10.25648	5.07323	-46.25090	-10.50600
	GRADIENT	.00016	.00010	-.00011	.00196	.00041	.01665	.00372	-6.93694	.00313

RUN NO. 868/ 0 RN/L = 3.50 GRADIENT INTERVAL = -5.00/ 5.00

ALPHAO	BETAO	CNW	CBW	CTW	CHEI	CHEO	IB-ELV	OB-ELV	PHII	ALPHAI
-6.177	-7.939	.02940	.00090	-.00060	.00490	.00350	10.06153	5.03204	54.72390	-9.13530
-6.117	-5.788	.03200	.00040	-.00070	.00610	.00410	10.07170	5.03753	46.20000	-7.54550
-5.974	-3.847	.03410	.00010	-.00070	.00910	.00520	10.09713	5.04760	35.72390	-6.26270
-6.102	.060	.03110	-.00060	-.00160	.02070	.00660	10.19545	5.06042	1.44930	-5.26360
-6.078	4.270	.02790	-.00010	-.00200	.02420	.00690	10.22512	5.06316	-34.75800	-6.58210
-5.857	6.111	.04180	.00020	.00540	.02540	.00680	10.23529	5.06225	-46.29280	-7.60990
-5.838	8.303	.06930	-.00040	.03060	.02700	.00670	10.24885	5.06133	-55.27320	-9.25510
	GRADIENT	-.00076	-.00002	-.00016	.00185	.00021	.01565	.00190	-8.68173	-.04289

RUN NO. 869/ 0 RN/L = 3.50 GRADIENT INTERVAL = -5.00/ 5.00

ALPHAO	BETAO	CNW	CBW	CTW	CHEI	CHEO	IB-ELV	OB-ELV	PHII	ALPHAI
-4.175	-8.137	.05410	.00550	.00650	.00390	.00410	10.05306	5.03753	65.50660	-8.30920
-4.259	-6.128	.05300	.00470	.00550	.00460	.00450	10.05899	5.04119	58.26820	-6.67720
-4.224	-3.918	.05230	.00420	.00510	.00780	.00560	10.08611	5.05126	46.43630	-5.02080
-3.977	.211	.05760	.00400	.00610	.02030	.00650	10.19206	5.05950	-.03150	-3.27440
-3.796	4.128	.08790	.00380	.04000	.02300	.00590	10.21495	5.05401	-46.73880	-4.90070
-3.913	6.094	.08420	.00350	.03990	.02430	.00560	10.22596	5.05126	-57.08340	-6.49480
-3.786	8.019	.08140	.00340	.04020	.02590	.00520	10.23953	5.04760	-64.78340	-8.07620
	GRADIENT	.00440	-.00005	.00430	.00190	.00004	.01610	.00036	-11.57652	.01859

IA156A, AEDC PWT 16T-470, O T S W/SILTS

(R8NW42) (27 MAY 80)

REFERENCE DATA

SREF = 2690.0000 SQ.FT.
LREF = 1290.3000 INCHES
BREF = 1290.3000 INCHES
SCALE = .0200

XMRP = 976.0000 IN. XT
YMRP = .0000 IN. YT
ZMRP = 400.0000 IN. ZT

PARAMETRIC DATA

IB-ELV = 10.000 OB-ELV = 5.000
BDFLAP = .000 SPDBRK = .000
RUDDER = .000 SILTS = 1.000
MACH = .600 RN/L = 3.500

RUN NO. 870/ 0 RN/L = 3.50 GRADIENT INTERVAL = -5.00/ 5.00

ALPHAO	BETAO	CNW	CBW	CTW	CHEI	CHEO	IB-ELV	OB-ELV	PHII	ALPHAI
-.372	-8.780	.10170	.01480	.02090	.00280	.00330	10.04373	5.03021	89.88190	-8.02770
-.357	-6.657	.09740	.01380	.01930	.00340	.00490	10.04882	5.04485	89.88190	-5.99360
-.342	-4.603	.09610	.01310	.01870	.00500	.00540	10.06238	5.04943	89.89540	-4.01980
-.309	-.391	.09290	.01160	.02140	.01920	.00560	10.18274	5.05126	89.90900	.03430
-.271	3.723	.13350	.01060	.05710	.02370	.00430	10.22088	5.03936	89.90900	4.00870
-.265	5.794	.13210	.01010	.05640	.02480	.00360	10.23020	5.03295	89.90900	6.00490
-.263	7.882	.12800	.00950	.05510	.02660	.00280	10.24546	5.02563	89.92250	8.01370
	GRADIENT	.00447	-.00030	.00460	.00225	-.00013	.01907	-.00120	.00164	.96422

RUN NO. 871/ 0 RN/L = 3.50 GRADIENT INTERVAL = -5.00/ 5.00

ALPHAO	BETAO	CNW	CBW	CTW	CHEI	CHEO	IB-ELV	OB-ELV	PHII	ALPHAI
4.130	-7.788	.19510	.02510	.08490	.00270	.00090	10.04288	5.00824	-63.51850	8.88620
4.227	-5.976	.19280	.02450	.08330	.00230	.00070	10.03949	5.00641	-56.51950	7.45330
3.952	-3.829	.18310	.02260	.07920	.00580	.00080	10.06916	5.00732	-46.28580	5.70870
4.097	-.000	.17860	.02050	.07460	.01830	-.00060	10.17511	4.99552	-2.77420	4.34910
3.938	4.125	.16900	.01850	.07120	.02240	-.00270	10.20986	4.97986	44.66790	5.89990
3.808	6.166	.16800	.01750	.07000	.02410	-.00350	10.22427	4.97389	57.12550	7.38890
3.678	7.918	.16070	.01620	.06750	.02590	-.00350	10.23953	4.97389	64.09900	8.82290
	GRADIENT	-.00178	-.00052	-.00100	.00207	-.00044	.01757	-.00346	11.43567	.02857

RUN NO. 872/ 0 RN/L = 3.50 GRADIENT INTERVAL = -5.00/ 5.00

ALPHAO	BETAO	CNW	CBW	CTW	CHEI	CHEO	IB-ELV	OB-ELV	PHII	ALPHAI
6.274	-8.006	.22400	.03060	.09630	.00290	-.00160	10.04458	4.98807	-53.53220	10.15920
6.155	-5.963	.21960	.02890	.09310	.00340	-.00180	10.04882	4.98657	-45.85360	8.62090
6.263	-3.868	.22120	.02810	.09160	.00680	-.00280	10.07764	4.97912	-33.65540	7.45000
5.834	.202	.20510	.02380	.08330	.01710	-.00400	10.16494	4.97016	.00460	5.98630
5.841	4.115	.19430	.02170	.07880	.02040	-.00670	10.19291	4.95003	34.08010	7.25470
5.930	6.270	.19030	.02090	.07700	.02180	-.00750	10.20477	4.94406	45.87780	8.68520
5.614	7.985	.18100	.01950	.07420	.02360	-.00790	10.22003	4.94108	54.34490	9.78390
	GRADIENT	-.00337	-.00080	-.00161	.00171	-.00049	.01449	-.00363	8.48343	-.02670

IA156A, AEDC PWT 16T-470, O T S W/SILTS (R8NW42) (27 MAY 80)

REFERENCE DATA

SREF = 2690.0000 SQ.FT. XMRP = 976.0000 IN. XT
LREF = 1290.3000 INCHES YMRP = .0000 IN. YT
BREF = 1290.3000 INCHES ZMRP = 400.0000 IN. ZT
SCALE = .0200

PARAMETRIC DATA

IB-ELV = 10.000 OB-ELV = 5.000
BDFLAP = .000 SPDBRK = .000
RUDDER = .000 SILTS = 1.000
MACH = .600 RN/L = 3.500

RUN NO. 873/ 0 RN/L = 3.50 GRADIENT INTERVAL = -5.00/ 5.00

ALPHAO	BETAO	CNW	CBW	CTW	CHEI	CHEO	IB-ELV	OB-ELV	PHII	ALPHAI
8.126	-7.971	.24350	.03530	.10510	.00270	-.00440	10.04288	4.96718	-46.13940	11.28550
8.003	-5.692	.23720	.03380	.10170	.00420	-.00530	10.05560	4.96047	-37.19990	9.78390
7.988	-3.728	.23390	.03250	.09910	.00710	-.00650	10.08018	4.95152	-26.82710	8.81390
8.046	.165	.22290	.02930	.09300	.01280	-.00880	10.12849	4.93436	-.22510	8.07190
7.840	4.160	.20700	.02620	.08650	.01740	-.01120	10.16748	4.91646	27.24310	8.87490
7.965	6.229	.20590	.02530	.08500	.01870	-.01330	10.17850	4.90080	37.66170	10.07150
7.842	8.218	.19350	.02330	.08070	.02050	-.01430	10.19376	4.89334	46.13560	11.28080
	GRADIENT	-.00341	-.00080	-.00160	.00131	-.00060	.01106	-.00444	6.85483	.00859

IA156A, AEDC PWT 16T-470, O T S W/SILTS (R8NW43) (27 MAY 80)

REFERENCE DATA

SREF = 2690.0000 SQ.FT. XMRP = 976.0000 IN. XT
LREF = 1290.3000 INCHES YMRP = .0000 IN. YT
BREF = 1290.3000 INCHES ZMRP = 400.0000 IN. ZT
SCALE = .0200

PARAMETRIC DATA

IB-ELV = 10.000 OB-ELV = 5.000
BDFLAP = .000 SPDBRK = .000
RUDDER = .000 SILTS = 1.000
MACH = .800 RN/L = 3.500

RUN NO. 874/ 0 RN/L = 3.50 GRADIENT INTERVAL = -5.00/ 5.00

ALPHAO	BETAO	CNW	CBW	CTW	CHEI	CHEO	IB-ELV	OB-ELV	PHII	ALPHAI
-8.320	-6.125	-.00390	-.00370	-.00560	-.01540	.00260	9.87492	5.02952	39.18530	-9.01970
-8.413	-3.880	-.00430	-.00420	-.00620	-.01330	.00380	9.89471	5.04315	27.34290	-7.98410
-8.113	.246	-.00440	-.00450	-.00620	.01300	.00790	10.15668	5.08970	-.31480	-6.86840
-8.023	4.302	-.00380	-.00290	-.00820	.02160	.00830	10.24710	5.09425	-28.21010	-7.86330
-7.956	6.209	-.00260	-.00270	-.00830	.02410	.00830	10.27339	5.09425	-38.44150	-8.82660
	GRADIENT	.00006	.00016	-.00024	.00427	.00055	.04313	.00626	-6.78925	.01550

RUN NO. 875/ 0 RN/L = 3.50 GRADIENT INTERVAL = -5.00/ 5.00

ALPHAO	BETAO	CNW	CBW	CTW	CHEI	CHEO	IB-ELV	OB-ELV	PHII	ALPHAI
-6.193	-5.894	.02650	.00150	.00090	-.01370	.00330	9.89094	5.03747	46.70840	-7.40990
-6.103	-3.865	.02960	.00100	.00060	-.01130	.00520	9.91355	5.05905	35.57380	-6.13560
-6.214	.135	.02220	-.00040	-.00130	.01490	.00790	10.17666	5.08970	.76780	-5.13370
-5.908	4.136	.03930	.00070	.00760	.02210	.00790	10.25236	5.08970	-34.82080	-6.15050
-5.930	6.364	.05090	.00050	.01840	.02460	.00780	10.27864	5.08857	-47.40100	-7.59110
	GRADIENT	.00121	-.00004	.00087	.00417	.00034	.04235	.00383	-8.79823	-.00187

IA156A, AEDC PWT 16T-470, O T S W/SILTS (R8NW43) (27 MAY 80)

REFERENCE DATA

SREF = 2690.0000 SQ.FT. XMRP = 976.0000 IN. XT
LREF = 1290.3000 INCHES YMRP = .0000 IN. YT
BREF = 1290.3000 INCHES ZMRP = 400.0000 IN. ZT
SCALE = .0200

PARAMETRIC DATA

IB-ELV = 10.000 OB-ELV = 5.000
BDFLAP = .000 SPDBRK = .000
RUDDER = .000 SILTS = 1.000
MACH = .800 RN/L = 3.500

RUN NO. 876/ 0 RN/L = 3.50 GRADIENT INTERVAL = -5.00/ 5.00

ALPHAO	BETAO	CNW	CBW	CTW	CHEI	CHEO	IB-ELV	OB-ELV	PHII	ALPHAI
-4.122	-5.859	.05480	.00640	.00800	-.01180	.00440	9.90884	5.04996	58.41110	-6.17040
-4.174	-3.836	.05310	.00570	.00720	-.00960	.00590	9.92956	5.06699	46.58670	-4.72750
-4.296	.380	.05220	.00390	.00930	.01650	.00780	10.19348	5.08857	-2.30640	-3.38850
-3.794	4.109	.07240	.00460	.03250	.02130	.00750	10.24395	5.08516	-46.81550	-4.68940
-3.[illegible]59	6.127	.07110	.00450	.03340	.02370	.00720	10.26918	5.08176	-57.78640	-6.28350
	GRADIENT	.00237	-.00014	.00313	.00394	.00021	.04007	.00235	-11.75358	.01156

RUN NO. 877/ 0 RN/L = 3.50 GRADIENT INTERVAL = -5.00/ 5.00

ALPHAO	BETAO	CNW	CBW	CTW	CHEI	CHEO	IB-ELV	OB-ELV	PHII	ALPHAI
-.405	-6.884	.13620	.01520	.05070	-.00440	.00480	9.97855	5.05450	89.76010	-6.01440
-.384	-4.775	.14300	.01390	.05660	-.00660	.00680	9.95782	5.07721	89.77360	-4.01830
-.341	-.555	.13310	.01180	.05450	.01400	.00810	10.16720	5.09198	89.78710	-.00600
-.291	3.683	.12540	.01130	.05280	.02210	.00710	10.25236	5.08062	89.81420	4.03950
-.283	5.775	.12010	.01140	.05090	.02570	.00660	10.29021	5.07494	89.84130	6.02680
	GRADIENT	-.00208	-.00031	-.00045	.00339	.00004	.03481	.00040	.00480	.95267

RUN NO. 878/ 0 RN/L = 3.50 GRADIENT INTERVAL = -5.00/ 5.00

ALPHAO	BETAO	CNW	CBW	CTW	CHEI	CHEO	IB-ELV	OB-ELV	PHII	ALPHAI
4.072	-5.795	.19370	.02680	.08200	-.00220	.00390	9.99927	5.04428	-56.86760	7.24030
4.020	-3.904	.18840	.02570	.07940	-.00280	.00400	9.99362	5.04542	-46.61340	5.83320
3.768	.170	.17030	.02170	.07080	.01790	.00410	10.20820	5.04656	-.42310	4.08360
3.638	3.968	.16300	.01990	.06700	.02420	.00270	10.27444	5.03066	45.87070	5.63990
3.833	6.171	.16120	.01910	.06550	.02870	.00130	10.32175	5.01476	57.03980	7.43000
	GRADIENT	-.00324	-.00074	-.00158	.00345	-.00016	.03587	-.00185	11.74266	-.02943

RUN NO. 879/ 0 RN/L = 3.50 GRADIENT INTERVAL = -5.00/ 5.00

ALPHAO	BETAO	CNW	CBW	CTW	CHEI	CHEO	IB-ELV	OB-ELV	PHII	ALPHAI
6.131	-5.815	.21430	.03030	.09030	.00040	.00110	10.02421	5.01249	-45.47020	8.49710
5.812	-3.671	.21150	.02890	.08660	.00030	.00170	10.02315	5.01930	-34.56960	6.99470
5.708	.237	.20100	.02610	.08080	.01780	.00140	10.20715	5.01590	.32240	5.87260
5.831	4.132	.19000	.02410	.07580	.02280	-.00480	10.25972	4.95559	34.40880	7.25810
5.719	5.964	.18000	.02280	.07230	.02680	-.00700	10.30177	4.93523	45.52700	8.33190
	GRADIENT	-.00276	-.00062	-.00138	.00288	-.00083	.03033	-.00816	8.83958	.03356

IA156A, AEDC PWT 16T-470, O T S W/SILTS (R8NW44) (27 MAY 80)

REFERENCE DATA

SREF = 2690.0000 SQ.FT. XMRP = 976.0000 IN. XT
LREF = 1290.3000 INCHES YMRP = .0000 IN. YT
BREF = 1290.3000 INCHES ZMRP = 400.0000 IN. ZT
SCALE = .0200

PARAMETRIC DATA

IB-ELV = 10.000 OB-ELV = 5.000
BDFLAP = .000 SPDBRK = .000
RUDDER = .000 SILTS = 1.000
MACH = .900 RN/L = 3.500

RUN NO. 880/ 0 RN/L = 3.50 GRADIENT INTERVAL = -5.00/ 5.00

ALPHAO	BETAO	CNW	CBW	CTW	CHEI	CHEO	IB-ELV	OB-ELV	PHII	ALPHAI
-8.312	-6.090	-.01400	-.00380	-.00490	-.03100	.00740	9.70469	5.09073	39.28540	-8.87030
-8.309	-3.820	-.01380	-.00440	-.00520	-.02760	.00880	9.73927	5.10789	27.48540	-7.74450
-8.093	.296	-.01730	-.00520	-.00580	.00940	.00820	10.12671	5.10053	-.69450	-6.72480
-7.993	4.299	-.01510	-.00470	-.00610	.01790	.00660	10.22320	5.08092	-28.53830	-7.71280
-7.946	6.205	-.01050	-.00480	-.00540	.01870	.00620	10.23228	5.07601	-38.76940	-8.68930
	GRADIENT	-.00016	-.00004	-.00011	.00562	-.00027	.05976	-.00331	-6.89947	.00506

RUN NO. 881/ 0 RN/L = 3.50 GRADIENT INTERVAL = -5.00/ 5.00

ALPHAO	BETAO	CNW	CBW	CTW	CHEI	CHEO	IB-ELV	OB-ELV	PHII	ALPHAI
-6.117	-5.816	.03000	.00110	.00450	-.02540	.00860	9.76165	5.10544	46 94460	-7.20210
-6.284	-3.992	.02580	-.00030	.00290	-.02340	.00970	9.78199	5.11892	35.83110	-6.22990
-6.101	.042	.01810	-.00120	.00100	.01670	01130	10.20958	5.13854	1.66600	-4.92480
-6.038	4.340	.01140	-.00140	-.00030	.02300	.00920	10.28110	5.11279	-35.88130	-6.25770
-6.124	6.348	.00670	-.00170	-.00040	.02430	.00790	10.29585	5.09686	-46.73880	-7.59110
	GRADIENT	-.00173	-.00013	-.00038	.00552	-.00006	.05943	-.00079	-8.60807	-.00667

RUN NO. 882/ 0 RN/L = 3.50 GRADIENT INTERVAL = -5.00/ 5.00

ALPHAO	BETAO	CNW	CBW	CTW	CHEI	CHEO	IB-ELV	OB-ELV	PHII	ALPHAI
-4.268	-6.189	.05730	.00610	.01160	-.02320	.00700	9.78402	5.08582	59.09640	-6.41650
-4.162	-3.882	.05330	.00530	.01030	-.02050	.00890	9.81149	5.10912	47.28110	-4.66830
-4.197	.246	.04110	.00310	.00720	.02150	.01080	10.26407	5.13241	-.52910	-3.20790
-3.912	4.303	.02780	.00320	.00490	.02850	.00910	10.34353	5.11157	-47.63090	-4.82660
-3.796	6.101	.02680	.00300	.00550	.03020	.00880	10.36283	5.10789	-58.42680	-6.15050
	GRADIENT	-.00311	-.00026	-.00066	.00600	.00003	.06513	.00031	-11.59482	-.01826

RUN NO. 883/ 0 RN/L = 3.50 GRADIENT INTERVAL = -5.00/ 5.00

ALPHAO	BETAO	CNW	CBW	CTW	CHEI	CHEO	IB-ELV	OB-ELV	PHII	ALPHAI
-.435	-6.931	.11200	.01620	.02700	-.01570	.00480	9.86031	5.05885	89.74650	-6.00850
-.406	-4.831	.10270	.01530	.02490	-.01810	.00780	9.83590	5.09563	89.76010	-4.02690
-.357	-.518	.08490	.01250	.02190	.02120	.00950	10.26066	5.11647	89.76010	.04680
-.306	3.667	.07540	.01140	.02100	.02850	.00920	10.34353	5.11279	89.77360	4.01840
-.306	5.770	.07450	.01020	.02120	.02960	.00960	10.35602	5.11770	89.80070	6.00600
	GRADIENT	-.00322	-.00046	-.00046	.00550	.00017	.05993	.00203	.00158	.94668

IA156A, AEDC PWT 16T-470, O T S W/SILTS (R8NW44) (27 MAY 80)

REFERENCE DATA

SREF = 2690.0000 SQ.FT. XMRP = 976.0000 IN. XT
LREF = 1290.3000 INCHES YMRP = .0000 IN. YT
BREF = 1290.3000 INCHES ZMRP = 400.0000 IN. ZT
SCALE = .0200

PARAMETRIC DATA

IB-ELV = 10.000 OB-ELV = 5.000
BDFLAP = .000 SPDBRK = .000
RUDDER = .000 SILTS = 1.000
MACH = .900 RN/L = 3.500

RUN NO. 884/ 0 RN/L = 3.50 GRADIENT INTERVAL = -5.00/ 5.00

ALPHAO	BETAO	CNW	CBW	CTW	CHEI	CHEO	IB-ELV	OB-ELV	PHII	ALPHAI
4.009	-5.714	.18970	.02580	.07860	-.01710	.00380	9.84607	5.04659	-56.74930	7.12410
3.883	-3.867	.18460	.02490	.07650	-.01610	.00370	9.85624	5.04536	-47.19190	5.70980
3.799	.163	.16480	.02180	.06910	.02240	.00090	10.27428	5.01103	-.46000	4.12250
3.718	3.965	.15230	.01970	.06440	.02330	-.00330	10.28450	4.96703	45.11180	5.68030
3.633	5.901	.14900	.01840	.06190	.02570	-.00590	10.31175	4.94106	56.93970	7.09640
	GRADIENT	-.00413	-.00067	-.00155	.00508	-.00089	.05518	-.00999	11.78493	-.00765

IA156A, AEDC PWT 16T-470, O T S W/SILTS (R8NW45) (27 MAY 80)

REFERENCE DATA

SREF = 2690.0000 SQ.FT. XMRP = 976.0000 IN. XT
LREF = 1290.3000 INCHES YMRP = .0000 IN. YT
BREF = 1290.3000 INCHES ZMRP = 400.0000 IN. ZT
SCALE = .0200

PARAMETRIC DATA

IB-ELV = 10.000 OB-ELV = 5.000
BDFLAP = .000 SPDBRK = .000
RUDDER = .000 SILTS = 1.000
MACH = .950 RN/L = 3.500

RUN NO. 885/ 0 RN/L = 3.50 GRADIENT INTERVAL = -5.00/ 5.00

ALPHAO	BETAO	CNW	CBW	CTW	CHEI	CHEO	IB-ELV	OB-ELV	PHII	ALPHAI
-8.385	-6.134	-.00170	-.00440	-.00100	-.03820	.00210	9.61711	5.02670	39.36420	-8.85840
-8.374	-3.850	-.00290	-.00530	-.00080	-.04300	.00720	9.56649	5.09153	27.57810	-7.72670
-8.059	.201	-.00810	-.00620	-.00210	-.01630	.01000	9.84809	5.12713	-.06100	-6.61380
-7.981	4.275	-.01550	-.00590	-.00360	-.00990	.01140	9.91559	5.14493	-28.59070	-7.61380
-7.931	6.166	-.01360	-.00580	-.00250	-.00880	.01250	9.92719	5.15891	-38.81820	-8.57010
	GRADIENT	-.00155	-.00007	-.00034	.00407	.00052	.04294	.00657	-6.91351	.01364

RUN NO. 886/ 0 RN/L = 3.50 GRADIENT INTERVAL = -5.00/ 5.00

ALPHAO	BETAO	CNW	CBW	CTW	CHEI	CHEO	IB-ELV	OB-ELV	PHII	ALPHAI
-6.186	-5.886	.03000	.00140	.00580	-.03520	.00220	9.64875	5.02797	47.10930	-7.24170
-6.104	-3.866	.03130	.00020	.00580	-.03780	.00730	9.62133	5.09280	35.97410	-5.97070
-6.229	.088	.01570	-.00200	.00220	-.01140	.01140	9.89977	5.14493	1.13850	-4.97980
-5.890	4.177	.01220	-.00170	.00180	-.00180	.01360	10.00102	5.17289	-35.63710	-5.99750
-5.963	6.370	.01080	-.00180	.00310	.00120	.01380	10.03413	5.17544	-47.78430	-7.44560
	GRADIENT	-.00237	-.00023	-.00050	.00446	.00078	.04708	.00994	-8.90483	-.00473

IA156A, AEDC PWT 16T-470, O T S W/SILTS (R8NW45) (27 MAY 80)

REFERENCE DATA

SREF = 2690.0000 SQ.FT. XMRP = 976.0000 IN. XT
LREF = 1290.3000 INCHES YMRP = .0000 IN. YT
BREF = 1290.3000 INCHES ZMRP = 400.0000 IN. ZT
SCALE = .0200

PARAMETRIC DATA

IB-ELV = 10.000 OB-ELV = 5.000
BDFLAP = .000 SPDBRK = .000
RUDDER = .000 SILTS = 1.000
MACH = .950 RN/L = 3.500

RUN NO. 887/ 0 RN/L = 3.50 GRADIENT INTERVAL = -5.00/ 5.00

ALPHAO	BETAO	CNW	CBW	CTW	CHEI	CHEO	IB-ELV	OB-ELV	PHII	ALPHAI
-4.317	-6.270	.05610	.00670	.01220	-.03220	.00260	9.68039	5.03305	59.31050	-6.45910
-4.292	-4.005	.05090	.00530	.01080	-.03250	.00770	9.67723	5.09789	47.43150	-4.79160
-4.154	.396	.03700	.00280	.00800	-.00750	.01240	9.94090	5.15764	-2.77260	-3.14030
-3.888	4.287	.02450	.00290	.00610	.00260	.01330	10.05060	5.16908	-47.99330	-4.75450
-4.059	6.259	.02140	.00230	.00690	.00720	.01450	10.10475	5.18433	-57.64030	-6.35600
	GRADIENT	-.00318	-.00030	-.00057	.00426	.00068	.04535	.00869	-11.50572	.01254

RUN NO. 888/ 0 RN/L = 3.50 GRADIENT INTERVAL = -5.00/ 5.00

ALPHAO	BETAO	CNW	CBW	CTW	CHEI	CHEO	IB-ELV	OB-ELV	PHII	ALPHAI
-.452	-6.978	.11750	.01760	.02790	-.02370	.00220	9.77004	5.02797	89.69240	-6.02830
-.422	-4.828	.10330	.01650	.02500	-.02780	.00490	9.72680	5.06229	89.69240	-4.01280
-.367	-.566	.08130	.01300	.02120	-.00430	.00990	9.97465	5.12586	89.71940	.00640
-.314	3.685	.06760	.01100	.01890	-.00180	.01110	10.00102	5.14111	89.77360	4.02980
-.313	5.791	.06480	.01000	.01820	.00020	.00900	10.02235	5.11441	89.80070	6.01040
	GRADIENT	-.00419	-.00065	-.00072	.00306	.00073	.03222	.00926	.00954	.94470

RUN NO. 889/ 0 RN/L = 3.50 GRADIENT INTERVAL = -5.00/ 5.00

ALPHAO	BETAO	CNW	CBW	CTW	CHEI	CHEO	IB-ELV	OB-ELV	PHII	ALPHAI
4.030	-5.635	.15740	.02780	.04330	-.02360	-.00370	9.77109	4.96167	-56.10870	7.06990
3.878	-3.794	.14720	.02630	.04050	-.02280	-.00260	9.77953	4.97307	-46.48790	5.66390
3.700	.220	.12660	.02300	.03530	-.00860	-.00220	9.92930	4.97721	.39370	4.04970
3.828	4.057	.11400	.02100	.03140	-.00780	-.01070	9.93773	4.88916	44.93280	5.81030
3.780	6.076	.10600	.01920	.02880	-.00390	-.01460	9.97887	4.84877	56.72540	7.29800
	GRADIENT	-.00424	-.00068	-.00116	.00192	-.00102	.02028	-.01060	11.64607	.01542

IA156A, AEDC PWT 16T-470, O T S W/SILTS (R8NW46) (27 MAY 80)

REFERENCE DATA

SREF = 2690.0000 SQ.FT. XMRP = 976.0000 IN. XT
LREF = 1290.3000 INCHES YMRP = .0000 IN. YT
BREF = 1290.3000 INCHES ZMRP = 400.0000 IN. ZT
SCALE = .0200

PARAMETRIC DATA

IB-ELV = 10.000 OB-ELV = 5.000
BDFLAP = .000 SPDBRK = .000
RUDDER = .000 SILTS = 1.000
MACH = 1.050 RN/L = 3.500

RUN NO. 892/ 0 RN/L = 3.50 GRADIENT INTERVAL = -5.00/ 5.00

ALPHAO	BETAO	CNW	CBW	CTW	CHEI	CHEO	IB-ELV	OB-ELV	PHII	ALPHAI
-8.394	-6.044	-.01830	-.00430	-.00300	-.00380	.00750	9.97759	5.10090	39.29260	-8.65950
-8.401	-3.919	-.01760	-.00560	-.00190	.00380	.01160	10.06734	5.15606	28.16980	-7.61780
-8.206	.356	-.02730	-.00750	-.00080	.02610	.01300	10.34512	5.17489	-1.26600	-6.60780
-8.110	4.340	-.03740	-.00850	-.00170	.03730	.01410	10.48464	5.18969	-29.03760	-7.60100
-8.047	6.243	-.03470	-.00890	-.00160	.03870	.01490	10.50208	5.20045	-39.25060	-8.56620
	GRADIENT	-.00240	-.00035	.00003	.00407	.00030	.05070	.00408	-6.92600	.00488

RUN NO. 893/ 0 RN/L = 3.50 GRADIENT INTERVAL = -5.00/ 5.00

ALPHAO	BETAO	CNW	CBW	CTW	CHEI	CHEO	IB-ELV	OB-ELV	PHII	ALPHAI
-6.309	-6.106	.02860	.00170	.00630	-.00720	.00640	9.93964	5.08610	47.96850	-7.34060
-6.249	-3.982	.02490	-.00020	.00600	-.00110	.01130	10.00772	5.15202	36.43170	-6.01940
-6.076	.168	.00870	-.00290	.00450	.02290	01350	10.30526	5.18162	.24840	-4.72140
-6.134	4.331	-.00580	-.00460	.00310	.03200	.01500	10.41862	5.20180	-36.07670	-6.14950
-5.824	6.212	-.00660	-.00430	.00310	.03340	.01630	10.43605	5.21929	-48.19540	-7.16350
	GRADIENT	-.00369	-.00053	-.00035	.00398	.00045	.04942	.00599	-8.72219	-.01582

RUN NO. 894/ 0 RN/L = 3.50 GRADIENT INTERVAL = -5.00/ 5.00

ALPHAO	BETAO	CNW	CBW	CTW	CHEI	CHEO	IB-ELV	OB-ELV	PHII	ALPHAI
-4.192	-5.878	.06090	.00800	.01320	-.00830	.00780	9.92736	5.10494	58.93930	-6.00150
-4.435	-4.131	.04790	.00550	.01150	-.00440	.01180	9.97089	5.15875	47.76800	-4.86670
-4.347	.164	.03040	.00190	.00940	.02380	.01400	10.31647	5.18835	.47550	-3.19060
-4.040	4.363	.00830	.00070	.00660	.02770	.01670	10.36505	5.22467	-48.07700	-4.82460
-3.833	6.221	.00890	.00020	.00730	.02750	.01680	10.36256	5.22602	-59.45670	-6.15050
	GRADIENT	-.00466	-.00057	-.00058	.00379	.00058	.04653	.00776	-11.28215	.00642

RUN NO. 895/ 0 RN/L = 3.50 GRADIENT INTERVAL = -5.00/ 5.00

ALPHAO	BETAO	CNW	CBW	CTW	CHEI	CHEO	IB-ELV	OB-ELV	PHII	ALPHAI
-.497	-6.991	.12420	.02130	.02710	-.01630	.00740	9.83807	5.09955	89.62460	-5.98760
-.464	-4.863	.10660	.01880	.02520	-.01230	.01130	9.88272	5.15202	89.63820	-4.00420
-.409	-.590	.07890	.01370	.02230	.01410	.01530	10.19564	5.20584	89.65170	.00110
-.352	3.655	.05650	.00990	.01930	.01470	.00750	10.20311	5.10090	89.69240	3.99580
-.344	5.795	.05100	.00820	.01780	.01730	.00100	10.23550	5.01345	89.71940	6.00060
	GRADIENT	-.00588	-.00105	-.00069	.00317	-.00044	.03765	-.00598	.00636	.93920

IA156A, AEDC PWT 16T-470, O T S W/SILTS (R8NW46) (27 MAY 80)

REFERENCE DATA

SREF = 2690.0000 SQ.FT. XMRP = 976.0000 IN. XT
LREF = 1290.3000 INCHES YMRP = .0000 IN. YT
BREF = 1290.3000 INCHES ZMRP = 400.0000 IN. ZT
SCALE = .0200

PARAMETRIC DATA

IB-ELV = 10.000 OB-ELV = 5.000
BDFLAP = .000 SPDBRK = .000
RUDDER = .000 SILTS = 1.000
MACH = 1.050 RN/L = 3.500

RUN NO. 896/ 0 RN/L = 3.50 GRADIENT INTERVAL = -5.00/ 5.00

ALPHAO	BETAO	CNW	CBW	CTW	CHEI	CHEO	IB-ELV	OB-ELV	PHII	ALPHAI
3.963	-5.872	.16030	.03080	.04360	-.02110	.00190	9.78450	5.02556	-57.32710	7.20820
4.045	-3.828	.14890	.02910	.04140	-.02050	.00210	9.79119	5.02825	-45.17740	5.79820
3.692	.160	.12240	.02370	.03510	-.00150	-.00440	10.00326	4.95177	-.35440	4.06100
3.637	3.941	.10320	.02010	.03180	-.00240	-.01520	9.99321	4.83338	45.26930	5.61810
3.867	6.115	.09860	.01800	.03070	.00260	-.02400	10.05239	4.73691	56.22510	7.36560
	GRADIENT	-.00589	-.00116	-.00124	.00235	-.00222	.02625	-.02503	11.63820	-.02693

IA156A, AEDC PWT 16T-470, O T S W/SILTS (R8NW47) (27 MAY 80)

REFERENCE DATA

SREF = 2690.0000 SQ.FT. XMRP = 976.0000 IN. XT
LREF = 1290.3000 INCHES YMRP = .0000 IN. YT
BREF = 1290.3000 INCHES ZMRP = 400.0000 IN. ZT
SCALE = .0200

PARAMETRIC DATA

IB-ELV = 10.000 OB-ELV = 5.000
BDFLAP = .000 SPDBRK = .000
RUDDER = .000 SILTS = 1.000
MACH = 1.100 RN/L = 3.500

RUN NO. 897/ 0 RN/L = 3.49 GRADIENT INTERVAL = -5.00/ 5.00

ALPHAO	BETAO	CNW	CBW	CTW	CHEI	CHEO	IB-ELV	OB-ELV	PHII	ALPHAI
-8.358	-6.136	.00310	-.00420	.00240	.00010	.00800	10.02128	5.11026	39.91510	-8.66550
-8.433	-3.920	-.00350	-.00570	.00250	.00770	.01010	10.11826	5.13920	28.14130	-7.63660
-8.252	.215	-.01570	-.00750	.00290	.03370	.01150	10.45006	5.15850	-.14410	-6.63360
-8.165	4.341	-.02900	-.00830	.00160	.04110	.01290	10.54450	5.17779	-28.87350	-7.63760
-8.137	6.282	-.02810	-.00910	.00210	.04410	.01350	10.58278	5.18606	-39.10420	-8.63970
	GRADIENT	-.00309	-.00031	-.00011	.00404	.00034	.05161	.00467	-6.90191	-.00004

RUN NO. 898/ 0 RN/L = 3.50 GRADIENT INTERVAL = -5.00/ 5.00

ALPHAO	BETAO	CNW	CBW	CTW	CHEI	CHEO	IB-ELV	OB-ELV	PHII	ALPHAI
-6.235	-5.974	.03820	.00250	.00870	-.00770	.00700	9.93196	5.09648	47.83960	-7.20110
-6.460	-4.032	.03000	-.00020	.00830	-.00020	.00960	10.01771	5.13231	35.89550	-6.19520
-6.219	.115	.01430	-.00260	.00720	.02770	.01240	10.37349	5.17090	.88140	-4.84470
-6.157	4.333	.00440	-.00380	.00630	.03490	.01570	10.46538	5.21638	-35.91620	-6.17340
-5.878	6.244	.00320	-.00400	.00630	.03620	.01830	10.48197	5.25222	-48.04910	-7.21200
	GRADIENT	-.00306	-.00043	-.00024	.00419	.00073	.05343	.01005	-8.58518	.00170

IA156A, AEDC PWT 16T-470, O T S W/SILTS (R8NW47) (27 MAY 80)

REFERENCE DATA

SREF = 2690.0000 SQ.FT. XMRP = 976.0000 IN. XT
LREF = 1290.3000 INCHES YMRP = .0000 IN. YT
BREF = 1290.3000 INCHES ZMRP = 400.0000 IN. ZT
SCALE = .0200

PARAMETRIC DATA

IB-ELV = 10.000 OB-ELV = 5.000
BDFLAP = .000 SPDBRK = .000
RUDDER = .000 SILTS = 1.000
MACH = 1.100 RN/L = 3.500

RUN NO. 899/ 0 RN/L = 3.50 GRADIENT INTERVAL = -5.00/ 5.00

ALPHAO	BETAO	CNW	CBW	CTW	CHEI	CHEO	IB-ELV	OB-ELV	PHII	ALPHAI
-4.135	-6.044	.07710	.01000	.01490	-.01100	.00790	9.89422	5.10888	60.03830	-6.11680
-4.267	-3.979	.05990	.00690	.01420	-.00440	.01170	9.96969	5.16125	47.95410	-4.67130
-4.129	.386	.03710	.00290	.01240	.02630	.01430	10.35563	5.19709	-2.78840	-3.01880
-3.853	4.244	.01930	.00190	.00960	.02880	.01610	10.38753	5.22190	-48.46030	-4.64020
-4.015	6.208	.01340	.00060	.00870	.02980	.01070	10.40029	5.14747	-58.13440	-6.22800
	GRADIENT	-.00494	-.00061	-.00056	.00410	.00054	.05163	.00739	-11.72262	.01196

RUN NO. 900/ 0 RN/L = 3.50 GRADIENT INTERVAL = -5.00/ 5.00

ALPHAO	BETAO	CNW	CBW	CTW	CHEI	CHEO	IB-ELV	OB-ELV	PHII	ALPHAI
-.383	-7.070	.13390	.02230	.02660	-.01570	.00830	9.84048	5.11439	90.54430	-6.06410
-.420	-4.981	.11780	.02000	.02580	-.00980	.01240	9.90794	5.17090	90.09840	-4.11460
-.399	-.647	.08800	.01480	.02330	.01580	.01410	10.22163	5.19433	90.12540	-.04970
-.384	3.467	.06550	.01040	.02130	.01970	.00120	10.27140	5.01654	90.17950	3.81870
-.348	5.975	.05770	.00820	.01990	.02250	-.00900	10.30713	4.89893	89.77360	6.16380
	GRADIENT	-.00620	-.00114	-.00053	.00351	-.00131	.04329	-.01806	.00957	.93914

RUN NO. 901/ 0 RN/L = 3.50 GRADIENT INTERVAL = -5.00/ 5.00

ALPHAO	BETAO	CNW	CBW	CTW	CHEI	CHEO	IB-ELV	OB-ELV	PHII	ALPHAI
4.196	-5.913	.17110	.03210	.04380	-.02100	.00060	9.77988	5.00827	-56.23410	7.34450
3.868	-3.725	.15270	.02960	.03980	-.01770	-.00170	9.81761	4.98091	-45.99300	5.59520
3.661	.204	.12890	.02450	.03550	.00390	-.01060	10.06977	4.88096	.18590	4.01470
3.820	4.039	.11070	.02110	.03180	.00160	-.02480	10.04042	4.72149	44.74660	5.78400
3.780	6.063	.10080	.01870	.03040	.00430	-.03160	10.07487	4.64513	56.56820	7.26920
	GRADIENT	-.00541	-.00110	-.00103	.00250	-.00297	.02884	-.03338	11.68825	.02259

IA156A, AEDC PWT 16T-470, O T S W/SILTS (R8NW48) (27 MAY 80)

REFERENCE DATA

SREF = 2690.0000 SQ.FT. XMRP = 976.0000 IN. XT
LREF = 1290.3000 INCHES YMRP = .0000 IN. YT
BREF = 1290.3000 INCHES ZMRP = 400.0000 IN. ZT
SCALE = .0200

PARAMETRIC DATA

IB-ELV = 10.000 OB-ELV = 5.000
BDFLAP = .000 SPDBRK = .000
RUDDER = .000 SILTS = 1.000
MACH = 1.150 RN/L = 3.500

RUN NO. 902/ 0 RN/L = 3.50 GRADIENT INTERVAL = -5.00/ 5.00

ALPHAO	BETAO	CNW	CBW	CTW	CHEI	CHEO	IB-ELV	OB-ELV	PHII	ALPHAI
-8.420	-6.010	.00820	-.00330	.00250	.00590	.00940	10.09675	5.13207	39.12810	-8.61580
-8.432	-3.894	.00050	-.00500	.00310	.01550	.00940	10.22164	5.13207	27.99160	-7.58910
-8.234	.369	-.01380	-.00750	.00410	.04180	.00940	10.56378	5.13207	-1.40360	-6.58010
-8.194	4.324	-.02890	-.00850	.00270	.04980	.01090	10.66785	5.15314	-28.84560	-7.60990
-8.136	6.243	-.02740	-.00900	.00320	.05120	.01450	10.68607	5.20372	-39.09020	-8.58400
	GRADIENT	-.00357	-.00043	-.00005	.00420	.00018	.05463	.00253	-6.91626	.00056

RUN NO. 903/ 0 RN/L = 3.49 GRADIENT INTERVAL = -5.00/ 5.00

ALPHAO	BETAO	CNW	CBW	CTW	CHEI	CHEO	IB-ELV	OB-ELV	PHII	ALPHAI
-6.433	-6.108	.04730	.00410	.00760	-.00230	.00730	9.99319	5.10256	47.46010	-7.39710
-6.084	-3.837	.04250	.00240	.00930	.00910	.00900	10.13838	5.12645	36.28160	-5.80760
-6.206	.121	.01540	-.00210	.00780	.03810	.00990	10.51565	5.13909	.70970	-4.81360
-6.150	4.334	-.00020	-.00380	.00650	.04380	.01440	10.58980	5.20232	-36.12550	-6.14260
-5.938	6.320	-.00330	-.00400	.00590	.04460	.00970	10.60021	5.13628	-48.24420	-7.27730
	GRADIENT	-.00521	-.00075	-.00034	.00422	.00067	.05484	.00935	-8.86011	-.04393

RUN NO. 904/ 0 RN/L = 3.50 GRADIENT INTERVAL = -5.00/ 5.00

ALPHAO	BETAO	CNW	CBW	CTW	CHEI	CHEO	IB-ELV	OB-ELV	PHII	ALPHAI
-4.285	-6.227	.08330	.01190	.01250	-.00600	.00780	9.95006	5.10959	59.78140	-6.31230
-4.310	-3.932	.07190	.00910	.01330	.00680	.01130	10.10846	5.15876	47.24540	-4.65630
-4.022	.234	.04710	.00450	.01370	.03400	.01560	10.46231	5.21918	-.58060	-2.90380
-3.778	4.160	.02280	.00200	.01110	.03750	.00630	10.50784	5.08851	-48.54390	-4.52180
-3.957	6.115	.01700	.00060	.01000	.03970	.00050	10.53646	5.00702	-58.20400	-6.11080
	GRADIENT	-.00607	-.00088	-.00027	.00382	-.00060	.04972	-.00845	-11.83393	.02071

RUN NO. 905/ 0 RN/L = 3.50 GRADIENT INTERVAL = -5.00/ 5.00

ALPHAO	BETAO	CNW	CBW	CTW	CHEI	CHEO	IB-ELV	OB-ELV	PHII	ALPHAI
-.374	-7.077	.13890	.02320	.02570	-.01080	.01140	9.89411	5.16017	90.50380	-6.05320
-.407	-4.717	.12400	.02120	.02530	-.00160	.01520	10.00135	5.21356	90.07130	-3.85890
-.387	-.679	.10030	.01710	.02480	.02580	.00440	10.35563	5.06182	89.69240	-.07930
-.358	3.482	.07450	.01250	.02360	.03000	-.01160	10.41027	4.86720	90.12540	3.83160
-.371	5.720	.06390	.00970	.02180	.03320	-.02100	10.45190	4.75959	90.16600	5.92180
	GRADIENT	-.00604	-.00106	-.00021	.00384	-.00327	.04969	-.04227	.00709	.93800

IA156A, AEDC PWT 16T-470, O T S W/SILTS (R8NW48) (27 MAY 80)

REFERENCE DATA

SREF = 2690.0000 SQ.FT. XMRP = 976.0000 IN. XT
LREF = 1290.3000 INCHES YMRP = .0000 IN. YT
BREF = 1290.3000 INCHES ZMRP = 400.0000 IN. ZT
SCALE = .0200

PARAMETRIC DATA

IB-ELV = 10.000 OB-ELV = 5.000
BDFLAP = .000 SPDBRK = .000
RUDDER = .000 SILTS = 1.000
MACH = 1.150 RN/L = 3.500

RUN NO. 906/ 0 RN/L = 3.50 GRADIENT INTERVAL = -5.00/ 5.00

ALPHAO	BETAO	CNW	CBW	CTW	CHEI	CHEO	IB-ELV	OB-ELV	PHII	ALPHAI
4.100	-5.735	.17090	.03170	.04170	-.01590	-.00050	9.83467	4.99428	-55.93470	7.15290
3.871	-3.574	.15290	.02980	.03860	-.00760	-.00520	9.93141	4.94047	-44.64760	5.49590
3.762	.188	.13480	.02580	.03510	.01390	-.01890	10.20083	4.78363	.09310	4.10140
3.918	4.194	.11660	.02240	.03290	.01120	-.03560	10.16570	4.59245	45.32660	5.94370
3.702	5.896	.10840	.01970	.03210	.01720	-.03940	10.24376	4.54895	56.43950	7.09090
	GRADIENT	-.00467	-.00095	-.00073	.00239	-.00392	.02974	-.04483	11.57896	.06197

IA156A, AEDC PWT 16T-470, O T S W/SILTS (R8NW49) (27 MAY 80)

REFERENCE DATA

SREF = 2690.0000 SQ.FT. XMRP = 976.0000 IN. XT
LREF = 1290.3000 INCHES YMRP = .0000 IN. YT
BREF = 1290.3000 INCHES ZMRP = 400.0000 IN. ZT
SCALE = .0200

PARAMETRIC DATA

IB-ELV = 10.000 OB-ELV = 5.000
BDFLAP = .000 SPDBRK = .000
RUDDER = .000 SILTS = 1.000
MACH = 1.250 RN/L = 3.500

RUN NO. 907/ 0 RN/L = 3.50 GRADIENT INTERVAL = -5.00/ 5.00

ALPHAO	BETAO	CNW	CBW	CTW	CHEI	CHEO	IB-ELV	OB-ELV	PHII	ALPHAI
-8.169	-5.854	.02630	-.00090	.00050	.02260	.01090	10.32434	5.15852	39.45000	-8.31710
-8.464	-3.941	.02090	-.00320	.00200	.02860	.01010	10.40513	5.14689	28.34100	-7.60390
-8.271	.353	.00500	-.00570	.00610	.04650	.01000	10.64618	5.14544	-1.15160	-6.58800
-8.168	4.376	-.01490	-.00700	.00620	.04620	.00430	10.64214	5.06254	-29.09700	-7.58610
-8.104	6.294	-.01340	-.00770	.00720	.04600	-.00100	10.63945	4.98815	-39.35530	-8.55430
	GRADIENT	-.00430	-.00046	.00051	.00214	-.00069	.02881	-.01003	-6.90583	.00477

RUN NO. 908/ 0 RN/L = 3.50 GRADIENT INTERVAL = -5.00/ 5.00

ALPHAO	BETAO	CNW	CBW	CTW	CHEI	CHEO	IB-ELV	OB-ELV	PHII	ALPHAI
-6.224	-5.927	.05780	.00530	.00390	.01500	.01010	10.22199	5.14689	47.83250	-7.11690
-6.462	-4.030	.05080	.00290	.00510	.02350	.01050	10.33646	5.15271	36.06710	-6.14850
-6.215	.096	.04200	.00020	.00850	.04100	.00570	10.57212	5.08290	1.20100	-4.80360
-6.146	4.359	.02340	-.00210	.01010	.04090	-.00290	10.57077	4.96563	-36.18130	-6.12870
-5.860	6.264	.01940	-.00270	.01080	.03870	-.01100	10.54114	4.86965	-48.27910	-7.15750
	GRADIENT	-.00327	-.00060	.00059	.00206	-.00160	.02777	-.02233	-8.61284	.00063

IA156A, AEDC PWT 16T-470, O T S W/SILTS (R8NW49) (27 MAY 80)

REFERENCE DATA

SREF = 2690.0000 SQ.FT. XMRP = 976.0000 IN. XT
LREF = 1290.3000 INCHES YMRP = .0000 IN. YT
BREF = 1290.3000 INCHES ZMRP = 400.0000 IN. ZT
SCALE = .0200

PARAMETRIC DATA

IB-ELV = 10.000 OB-ELV = 5.000
BDFLAP = .000 SPDBRK = .000
RUDDER = .000 SILTS = 1.000
MACH = 1.250 RN/L = 3.500

RUN NO. 909/ 0 RN/L = 3.50 GRADIENT INTERVAL = -5.00/ 5.00

ALPHAO	BETAO	CNW	CBW	CTW	CHEI	CHEO	IB-ELV	OB-ELV	PHII	ALPHAI
-4.383	-6.232	.08230	.01130	.00710	.01000	.01210	10.15466	5.17598	59.48180	-6.33810
-4.297	-4.024	.08020	.01020	.00920	.02120	.01050	10.30548	5.15271	48.31210	-4.69240
-4.171	.380	.06420	.00680	.01250	.03540	-.00070	10.49670	4.99170	-2.46620	-3.03770
-3.910	4.253	.03750	.00480	.01250	.03300	-.01390	10.46439	4.83528	-48.12580	-4.64830
-4.018	6.273	.02800	.00260	.01210	.03190	-.01980	10.44957	4.76536	-58.46850	-6.23890
	GRADIENT	-.00512	-.00066	.00041	.00147	-.00294	.01975	-.03831	-11.64847	.01372

RUN NO. 910/ 0 RN/L = 3.50 GRADIENT INTERVAL = -5.00/ 5.00

ALPHAO	BETAO	CNW	CBW	CTW	CHEI	CHEO	IB-ELV	OB-ELV	PHII	ALPHAI
-.412	-7.127	.13270	.02250	.01930	-.00170	.00780	9.99949	5.11344	90.43620	-6.08300
-.440	-4.817	.12180	.02120	.01990	.00950	.00250	10.14793	5.03636	90.03070	-3.94120
-.401	-.646	.10590	.01810	.02180	.02980	-.01070	10.42129	4.87320	90.05780	-.04260
-.373	3.822	.08290	.01420	.02240	.02660	-.02780	10.37820	4.67056	90.05780	4.14510
-.349	5.731	.07310	.01200	.02190	.02390	-.03330	10.34184	4.60539	89.66530	5.92180
	GRADIENT	-.00451	-.00021	.00029	.00195	-.00351	.02622	-.04238	.00310	.93608

RUN NO. 911/ 0 RN/L = 3.50 GRADIENT INTERVAL = -5.00/ 5.00

ALPHAO	BETAO	CNW	CBW	CTW	CHEI	CHEO	IB-ELV	OB-ELV	PHII	ALPHAI
4.089	-5.764	.16700	.03110	.03610	-.00560	-.01630	9.95243	4.80684	-56.32460	7.15170
3.996	-3.850	.15810	.03000	.03510	.00130	-.02300	10.03751	4.72744	-46.09760	5.74360
3.717	.138	.13890	.02620	.03280	.01580	-.03400	10.23277	4.59709	-1.04690	4.04750
3.584	3.832	.11870	.02270	.03100	.01160	-.04440	10.17621	4.47385	44.73230	5.48180
3.804	6.128	.11210	.02050	.03090	.00560	-.04820	10.09541	4.42882	56.55390	7.31240
	GRADIENT	-.00512	-.00095	-.00053	.00137	-.00279	.01847	-.03301	11.81715	-.03929

IA156A, AEDC PWT 16T-470, O T S W/SILTS (R8NW50) (27 MAY 80)

REFERENCE DATA

SREF = 2690.0000 SQ.FT. XMRP = 976.0000 IN. XT
LREF = 1290.3000 INCHES YMRP = .0000 IN. YT
BREF = 1290.3000 INCHES ZMRP = 400.0000 IN. ZT
SCALE = .0200

PARAMETRIC DATA

IB-ELV = 10.000 OB-ELV = 5.000
BDFLAP = .000 SPDBRK = .000
RUDDER = .000 SILTS = 1.000
MACH = 1.400 RN/L = 3.500

RUN NO. 912/ 0 RN/L = 3.50 GRADIENT INTERVAL = -5.00/ 5.00

ALPHAO	BETAO	CNW	CBW	CTW	CHEI	CHEO	IB-ELV	OB-ELV	PHII	ALPHAI
-8.444	-6.059	.03520	-.00160	.00010	.03870	.01670	10.56031	5.25181	39.76480	-8.55430
-8.457	-3.924	.02790	-.00280	.00090	.03970	.01220	10.57427	5.18396	28.64760	-7.53170
-8.142	.277	.01140	-.00400	.00210	.03930	-.00160	10.56868	4.98034	-.20840	-6.42140
-8.038	4.339	-.00200	-.00470	.00350	.03640	-.01390	10.52820	4.82922	-29.07600	-7.41290
-8.005	6.234	.00000	-.00530	.00510	.03410	-.01850	10.49609	4.77271	-39.25760	-8.39050
	GRADIENT	-.00362	-.00023	.00031	-.00040	-.00316	-.00555	-.04296	-6.98494	.01582

RUN NO. 913/ 0 RN/L = 3.51 GRADIENT INTERVAL = -5.00/ 5.00

ALPHAO	BETAO	CNW	CBW	CTW	CHEI	CHEO	IB-ELV	OB-ELV	PHII	ALPHAI
-6.345	-5.891	.04570	.00340	.00010	.03180	.00920	10.46397	5.13872	47.51740	-7.10900
-6.201	-3.919	.04160	.00250	.00080	.03340	.00260	10.48631	5.03920	37.04660	-5.84640
-6.307	.231	.03810	.00050	.00300	.03430	-.01090	10.49888	4.86608	.25460	-4.83270
-6.043	4.311	.03120	.00010	.00670	.02830	-.02500	10.41511	4.69285	-36.09760	-5.97070
-5.918	6.486	.02730	-.00070	.00850	.02460	-.02920	10.36345	4.64125	-48.89930	-7.28520
	GRADIENT	-.00126	-.00029	.00072	-.00062	-.00335	-.00862	-.04208	-8.88734	-.01436

RUN NO. 914/ 0 RN/L = 3.50 GRADIENT INTERVAL = -5.00/ 5.00

ALPHAO	BETAO	CNW	CBW	CTW	CHEI	CHEO	IB-ELV	OB-ELV	PHII	ALPHAI
-4.205	-5.891	.06930	.00900	.00210	.02630	.00120	10.38719	5.01809	59.68160	-5.93890
-4.190	-3.860	.07110	.00840	.00380	.02810	-.00620	10.41232	4.92383	48.49830	-4.47260
-4.215	.300	.05970	.00690	.00620	.02660	-.02270	10.39137	4.72111	-.62770	-3.01830
-3.880	4.319	.04260	.00640	.00980	.01860	-.03380	10.27968	4.58473	-48.48120	-4.63820
-4.009	6.379	.03430	.00430	.01050	.01340	-.03650	10.20708	4.55156	-58.76780	-6.27760
	GRADIENT	-.00348	-.00025	.00073	-.00116	-.00338	-.01615	-.04150	-11.85612	-.01807

RUN NO. 915/ 0 RN/L = 3.50 GRADIENT INTERVAL = -5.00/ 5.00

ALPHAO	BETAO	CNW	CBW	CTW	CHEI	CHEO	IB-ELV	OB-ELV	PHII	ALPHAI
-.589	-7.127	.11170	.01950	.00970	.01390	-.00580	10.21406	4.92874	89.55690	-6.05020
-.493	-4.697	.10730	.01880	.01120	.01610	-.01450	10.24478	4.82185	89.99010	-3.80840
-.450	-.743	.10240	.01770	.01530	.01610	-.02810	10.24478	4.65476	90.01720	-.11970
-.436	3.828	.08300	.01460	.01850	.00440	-.04050	10.08143	4.50241	90.05780	4.15590
-.462	5.735	.07600	.01250	.01900	-.00220	-.04290	9.99248	4.47293	90.08480	5.92290
	GRADIENT	-.00289	-.00050	.00085	-.00140	-.00304	-.01959	-.03736	.00797	.93423

IA156A, AEDC PWT 16T-470, O T S W/SILTS (R8NW50) (27 MAY 80)

REFERENCE DATA

SREF = 2690.0000 SQ.FT. XMRP = 976.0000 IN. XT
LREF = 1290.3000 INCHES YMRP = .0000 IN. YT
BREF = 1290.3000 INCHES ZMRP = 400.0000 IN. ZT
SCALE = .0200

PARAMETRIC DATA

IB-ELV = 10.000 OB-ELV = 5.000
BDFLAP = .000 SPDBRK = .000
RUDDER = .000 SILTS = 1.000
MACH = 1.400 RN/L = 3.500

RUN NO. 916/ 0 RN/L = 3.50 GRADIENT INTERVAL = -5.00/ 5.00

ALPHAO	BETAO	CNW	CBW	CTW	CHEI	CHEO	IB-ELV	OB-ELV	PHII	ALPHAI
4.086	-5.765	.15490	.02960	.02740	.00070	-.03040	10.02977	4.62650	-56.65180	7.15290
4.035	-3.799	.14490	.02870	.02610	.00230	-.03520	10.05211	4.56753	-45.80480	5.74580
3.700	.153	.13530	.02550	.02630	-.00200	-.04380	9.99498	4.46187	-1.40050	4.04700
3.628	3.941	.11680	.02230	.02780	-.01690	-.04990	9.80859	4.38692	44.78240	5.59520
3.569	5.882	.11260	.02040	.02800	-.02390	-.05230	9.72102	4.35744	56.61100	7.00910
	GRADIENT	-.00362	-.00083	.00022	-.00247	-.00190	-.03134	-.02336	11.69977	-.02243

IA156A, AEDC PWT 16T-470, O T S W/SILTS (R8NW51) (27 MAY 80)

REFERENCE DATA

SREF = 2690.0000 SQ.FT. XMRP = 976.0000 IN. XT
LREF = 1290.3000 INCHES YMRP = .0000 IN. YT
BREF = 1290.3000 INCHES ZMRP = 400.0000 IN. ZT
SCALE = .0200

PARAMETRIC DATA

IB-ELV = 10.000 OB-ELV = 5.000
BDFLAP = .000 SPDBRK = .000
RUDDER = .000 SILTS = 1.000
MACH = 1.550 RN/L = 3.200

RUN NO. 917/ 0 RN/L = 3.19 GRADIENT INTERVAL = -5.00/ 5.00

ALPHAO	BETAO	CNW	CBW	CTW	CHEI	CHEO	IB-ELV	OB-ELV	PHII	ALPHAI
-8.555	-6.025	.04350	-.00190	.00170	.04310	.00650	10.54621	5.08571	39.35700	-8.68340
-8.567	-3.877	.03760	-.00270	.00210	.04210	-.00050	10.53400	4.99463	28.26970	-7.66030
-8.224	.412	.01580	-.00360	.00150	.03030	-.01300	10.38994	4.86033	-.69410	-6.54240
-8.053	4.487	-.00230	-.00460	.00190	.02160	-.02210	10.28372	4.76256	-29.17380	-7.53170
-8.050	6.312	-.00140	-.00510	.00280	.01880	-.02460	10.24953	4.73570	-38.76240	-8.50660
	GRADIENT	-.00477	-.00023	-.00002	-.00245	-.00259	-.02996	-.02778	-6.86710	.01753

RUN NO. 918/ 0 RN/L = 3.19 GRADIENT INTERVAL = -5.00/ 5.00

ALPHAO	BETAO	CNW	CBW	CTW	CHEI	CHEO	IB-ELV	OB-ELV	PHII	ALPHAI
-6.265	-5.820	.05140	.00270	.00090	.03520	-.00480	10.44976	4.94843	47.76080	-7.03970
-6.427	-3.972	.04470	.00120	.00100	.03400	-.01160	10.43511	4.87537	36.66050	-6.06410
-6.209	.217	.04100	.00040	.00240	.02160	-.02280	10.28372	4.75504	1.19660	-4.76450
-6.074	4.472	.03060	-.00040	.00400	.01270	-.03080	10.17506	4.66908	-36.18830	-6.09190
-5.992	6.606	.02370	-.00100	.00500	.00680	-.03310	10.10302	4.64437	-48.36970	-7.41780
	GRADIENT	-.00167	-.00019	.00036	-.00252	-.00227	-.03078	-.02442	-8.62770	-.00408

IA156A, AEDC PWT 16T-470, O T S W/SILTS (R8NW51) (27 MAY 80)

REFERENCE DATA

SREF = 2690.0000 SQ.FT. XMRP = 976.0000 IN. XT
LREF = 1290.3000 INCHES YMRP = .0000 IN. YT
BREF = 1290.3000 INCHES ZMRP = 400.0000 IN. ZT
SCALE = .0200

PARAMETRIC DATA

IB-ELV = 10.000 OB-ELV = 5.000
BDFLAP = .000 SPDBRK = .000
RUDDER = .000 SILTS = 1.000
MACH = 1.550 RN/L = 3.200

RUN NO. 919/ 0 RN/L = 3.20 GRADIENT INTERVAL = -5.00/ 5.00

ALPHAO	BETAO	CNW	CBW	CTW	CHEI	CHEO	IB-ELV	OB-ELV	PHII	ALPHAI
-4.316	-5.917	.06670	.00650	.00250	.03050	-.01250	10.39238	4.86570	59.38190	-6.00850
-4.555	-4.132	.06070	.00500	.00290	.02800	-.01840	10.36186	4.80231	48.24060	-4.86270
-4.096	.321	.06510	.00540	.00580	.00820	-.03290	10.12011	4.64652	.27310	-2.88960
-3.809	4.600	.05010	.00550	.00800	-.00040	-.04010	10.01562	4.56916	-49.98630	-4.76950
-3.787	6.253	.04350	.00460	.00840	-.00460	-.04160	9.96968	4.55305	-58.96260	-6.05320
	GRADIENT	-.00120	.00006	.00058	-.00326	-.00249	-.03975	-.02676	-11.24529	.01362

RUN NO. 920/ 0 RN/L = 3.19 GRADIENT INTERVAL = -5.00/ 5.00

ALPHAO	BETAO	CNW	CBW	CTW	CHEI	CHEO	IB-ELV	OB-ELV	PHII	ALPHAI
-.649	-7.128	.10090	.01620	.00440	.01590	-.01890	10.21413	4.79694	89.55690	-6.03530
-.600	-4.736	.09430	.01550	.00520	.01020	-.02840	10.14453	4.69487	89.57040	-3.80840
-.528	-.692	.08980	.01510	.00940	-.00210	-.04060	9.99703	4.56379	90.03070	-.01450
-.520	3.438	.08050	.01410	.01360	-.01420	-.04650	9.86466	4.50040	90.05780	3.86660
-.536	5.575	.07990	.01290	.01580	-.02200	-.05010	9.77933	4.46172	90.09840	5.86600
	GRADIENT	-.00169	-.00017	.00103	-.00299	-.00221	-.03423	-.02376	.05944	.93901

RUN NO. 921/ 0 RN/L = 3.19 GRADIENT INTERVAL = -5.00/ 5.00

ALPHAO	BETAO	CNW	CBW	CTW	CHEI	CHEO	IB-ELV	OB-ELV	PHII	ALPHAI
4.017	-5.502	.13620	.02710	.01920	-.00370	-.03890	9.97952	4.58206	-56.55430	7.01240
3.919	-3.549	.12510	.02630	.01880	-.01150	-.04510	9.89420	4.51544	-45.63750	5.60280
3.577	.320	.12130	.02420	.02050	-.02580	-.05060	9.73776	4.45635	-.13580	4.02490
3.671	4.060	.11370	.02200	.02400	-.04100	-.05420	9.57149	4.41767	44.46030	5.79390
3.567	6.099	.10760	.02000	.02450	-.04860	-.05530	9.48835	4.40566	56.92540	7.27470
	GRADIENT	-.00150	-.00056	.00068	-.00388	-.00120	-.04240	-.01286	11.83940	.02262

IA156A, AEDC PWT 16T-470, O T S W/SILTS (R8NW52) (10 MAY 80)

REFERENCE DATA

SREF = 2690.0000 SQ.FT. XMRP = 976.0000 IN. XT
LREF = 1290.3000 INCHES YMRP = .0000 IN. YT
BREF = 1290.3000 INCHES ZMRP = 400.0000 IN. ZT
SCALE = .0200

PARAMETRIC DATA

IB-ELV = 10.000 OB-ELV = 9.000
BDFLAP = .000 SPDBRK = .000
RUDDER = .000 SILTS = 1.000
MACH = .300 RN/L = 3.500

RUN NO. 928/ 0 RN/L = 2.68 GRADIENT INTERVAL = -5.00/ 5.00

ALPHAO	BETAO	CNW	CBW	CTW	CHEI	CHEO	IB-ELV	OB-ELV	PHII	ALPHAI	MACH
-5.998	-10.067	.02100	.00300	-.00310	.00790	-.00460	10.03970	8.91500	61.03670	-11.08760	.30010
-6.333	-6.052	.01800	.00150	-.00480	.00910	-.00400	10.04520	8.91750	45.74180	-8.16440	.29950
-6.200	.352	.02540	.00130	-.00450	.01590	-.00220	10.06020	8.92300	-1.38030	-5.63840	.30010
-5.745	6.151	.02860	.00250	-.00600	.01860	-.00260	10.05810	8.92020	-46.32060	-7.83560	.29920
-5.855	10.085	.02490	.00220	-.00800	.02100	-.00280	10.05780	8.91840	-59.76260	-11.04230	.29910
	GRADIENT	.00000	.00000	.00000	.00000	.00000	.00000	.00000	.00000	.00000	.00000

RUN NO. 929/ 0 RN/L = 2.68 GRADIENT INTERVAL = -5.00/ 5.00

ALPHAO	BETAO	CNW	CBW	CTW	CHEI	CHEO	IB-ELV	OB-ELV	PHII	ALPHAI	MACH
-.334	-10.550	.10140	.01580	.01900	.00630	-.00680	10.02880	8.90770	89.74650	-9.98340	.29950
-.302	-6.475	.09300	.01400	.01630	.00670	-.00600	10.02940	8.90910	89.76010	-5.97070	.29990
-.250	-.524	.09190	.01310	.01630	.01630	-.00600	10.04240	8.90910	89.76010	-.10480	.29910
-.233	5.554	.09600	.01230	.01640	.02050	-.00820	10.04810	8.90510	90.13890	5.89220	.30020
-.182	9.914	.09230	.01110	.01480	.02280	-.01000	10.05130	8.90190	89.82780	10.18470	.30020
	GRADIENT	.00000	.00000	.00000	.00000	.00000	.00000	.00000	.00000	.00000	.00000

RUN NO. 930/ 0 RN/L = 2.68 GRADIENT INTERVAL = -5.00/ 5.00

ALPHAO	BETAO	CNW	CBW	CTW	CHEI	CHEO	IB-ELV	OB-ELV	PHII	ALPHAI	MACH
6.124	-9.965	.21740	.03110	.04470	.00150	-.01620	10.03120	8.89400	-59.82550	11.90720	.30030
5.948	-5.857	.20700	.02920	.03910	.00220	-.01770	10.03580	8.89230	-46.20210	8.62210	.30110
5.799	.240	.18840	.02600	.03320	.01110	-.02000	10.05370	8.89050	.46060	6.11450	.30030
6.019	6.223	.17160	.02400	.03080	.01430	-.02340	10.05240	8.88270	45.06160	8.92470	.29890
5.804	10.078	.15510	.02080	.02730	.01680	-.02470	10.05220	8.87860	59.61020	11.85210	.29980
	GRADIENT	.00000	.00000	.00000	.00000	.00000	.00000	.00000	.00000	.00000	.00000

IA156A, AEDC PWT 16T-470, O T S W/SILTS (R8NW53) (10 MAY 80)

REFERENCE DATA

SREF = 2690.0000 SQ.FT. XMRP = 976.0000 IN. XT
LREF = 1290.3000 INCHES YMRP = .0000 IN. YT
BREF = 1290.3000 INCHES ZMRP = 400.0000 IN. ZT
SCALE = .0200

PARAMETRIC DATA

IB-ELV = 10.000 OB-ELV = 9.000
BDFLAP = .000 SPDBRK = .000
RUDDER = .000 SILTS = 1.000
MACH = .300 RN/L = 3.500

RUN NO. 927/ 0 RN/L = 2.67 GRADIENT INTERVAL = -5.00/ 5.00

ALPHAO	BETAO	CNW	CBW	CTW	CHEI	CHEO	IB-ELV	OB-ELV	PHII	ALPHAI	MACH
-10.105	-7.896	-.04960	-.00590	-.01930	.01050	-.00380	10.04820	8.91840	39.73620	-12.12480	.29850
-10.102	-5.743	-.04140	-.00590	-.01780	.01100	-.00370	10.05050	8.91930	31.24480	-10.94150	.29940
-9.855	.239	-.02980	-.00580	-.01550	.01780	-.00100	10.06260	8.92510	-.21850	-9.19720	.30000
-9.978	6.308	-.02420	-.00470	-.01620	.02050	.00050	10.06310	8.92680	-32.01530	-11.12680	.29780
-9.987	8.105	-.02300	-.00480	-.01660	.02150	.00100	10.06310	8.92710	-39.02740	-12.16730	.29750
	GRADIENT	.00000	.00000	.00000	.00000	.00000	.00000	.00000	.00000	.00000	.00000

RUN NO. 931/ 0 RN/L = 2.68 GRADIENT INTERVAL = -5.00/ 5.00

ALPHAO	BETAO	CNW	CBW	CTW	CHEI	CHEO	IB-ELV	OB-ELV	PHII	ALPHAI	MACH
9.927	-7.951	.26710	.03990	.05790	.00010	-.02500	10.03400	8.87990	-40.13640	12.88190	.29950
9.995	-5.628	.26190	.03900	.05510	.00230	-.02660	10.03870	8.87780	-30.77970	11.66080	.29940
9.865	.278	.24790	.03460	.04720	.00760	-.02910	10.04870	8.87410	.50810	10.09000	.29940
9.954	6.285	.21890	.03080	.03980	.01050	-.03440	10.04980	8.86330	31.80880	11.95770	.29940
9.732	8.122	.20530	.02850	.03690	.01150	-.03480	10.04970	8.86170	39.55740	12.84750	.30020
	GRADIENT	.00000	.00000	.00000	.00000	.00000	.00000	.00000	.00000	.00000	.00000

IA156A, AEDC PWT 16T-470, O T S W/SILTS (R8NW54) (27 MAY 80)

REFERENCE DATA

SREF = 2690.0000 SQ.FT. XMRP = 976.0000 IN. XT
LREF = 1290.3000 INCHES YMRP = .0000 IN. YT
BREF = 1290.3000 INCHES ZMRP = 400.0000 IN. ZT
SCALE = .0200

PARAMETRIC DATA

IB-ELV = 10.000 OB-ELV = 9.000
BDFLAP = .000 SPDBRK = .000
RUDDER = .000 SILTS = 1.000
MACH = .600 RN/L = 3.500

RUN NO. 932/ 0 RN/L = 3.50 GRADIENT INTERVAL = -5.00/ 5.00

ALPHAO	BETAO	CNW	CBW	CTW	CHEI	CHEO	IB-ELV	OB-ELV	PHII	ALPHAI
-8.138	-7.854	-.00360	-.00070	-.00800	.00630	-.00390	10.07340	8.89091	46.44350	-10.29070
-8.087	-5.763	.00170	-.00110	-.00740	.00760	-.00330	10.08442	8.89539	37.91910	-8.94800
-7.967	-3.708	.00540	-.00120	-.00680	.00990	-.00210	10.10391	8.90434	27.25730	-7.83160
-7.963	.267	.00340	-.00180	-.00700	.02110	-.00050	10.19684	8.91627	-.51150	-7.02290
-7.927	4.197	.00230	-.00060	-.00830	.02430	-.00010	10.22596	8.91925	-27.64440	-8.02670
-7.870	6.095	.00460	-.00040	-.00870	.02570	.00000	10.23783	8.92000	-37.90440	-8.99580
-7.785	8.168	.01050	-.00020	-.00800	.02730	.00030	10.25139	8.92275	-46.86430	-10.29270
	GRADIENT	-.00039	.00008	-.00019	.00182	.00025	.01546	.00189	-6.94482	-.02425

IA156A, AEDC PWT 16T-470, O T S W/SILTS (R8NW54) (27 MAY 80)

REFERENCE DATA

SREF = 2690.0000 SQ.FT. XMRP = 976.0000 IN. XT
LREF = 1290.3000 INCHES YMRP = .0000 IN. YT
BREF = 1290.3000 INCHES ZMRP = 400.0000 IN. ZT
SCALE = .0200

PARAMETRIC DATA

IB-ELV = 10.000 OB-ELV = 9.000
BDFLAP = .000 SPDBRK = .000
RUDDER = .000 SILTS = 1.000
MACH = .600 RN/L = 3 500

RUN NO. 933/ 0 RN/L = 3.51 GRADIENT INTERVAL = -5.00/ 5.00

ALPHAO	BETAO	CNW	CBW	CTW	CHEI	CHEO	IB-ELV	OB-ELV	PHII	ALPHAI
-6.013	-7.751	.03100	.00380	.00010	.00490	-.00340	10.06153	8.89464	54.78110	-8.90620
-6.160	-5.863	.03100	.00310	-.00070	.00620	-.00300	10.07255	8.89762	46.29310	-7.63460
-6.084	-3.845	.02940	.00260	-.00140	.00900	-.00210	10.09628	8.90434	35.13780	-6.35500
-6.187	.112	.03070	.00170	-.00190	.02060	-.00090	10.19460	8.91329	.93860	-5.35640
-5.969	4.214	.02920	.00290	-.00280	.02370	-.00080	10.22088	8.91403	-34.79290	-6.48190
-5.766	6.035	.03240	.00320	-.00200	.02490	-.00090	10.23105	8.91329	-46.27880	-7.50890
-5.770	8.336	.03040	.00320	-.00190	.02670	-.00090	10.24631	8.91329	-55.62140	-9.25310
	GRADIENT	-.00003	.00004	-.00017	.00182	.00016	.01541	.00120	-8.67851	-.01733

RUN NO. 934/ 0 RN/L = 3.51 GRADIENT INTERVAL = -5.00/ 5.00

ALPHAO	BETAO	CNW	CBW	CTW	CHEI	CHEO	IB-ELV	OB-ELV	PHII	ALPHAI
-4.123	-7.903	.05770	.00790	.00670	.00390	-.00320	10.05306	8.89613	65.13710	-8.08710
-4.091	-5.806	.05890	.00760	.00640	.00470	-.00300	10.05984	8.89762	57.93980	-6.34010
-4.143	-3.813	.05730	.00700	.00580	.00800	-.00230	10.08781	8.90284	46.17140	-4.90070
-3.887	.205	.05900	.00650	.00600	.02020	-.00170	10.19121	8.90732	.00860	-3.19370
-3.956	4.299	.05120	.00670	.00420	.02280	-.00220	10.21325	8.90359	-46.73190	-5.12870
-3.856	6.017	.05080	.00700	.00470	.02380	-.00260	10.22173	8.90061	-57.02770	-6.40950
-3.746	7.939	.04850	.00660	.00490	.02530	-.00280	10.23444	8.89912	-64.74170	-7.99300
	GRADIENT	-.00076	-.00004	-.00020	.00182	.00001	.01543	.00009	-11.45275	-.02950

RUN NO. 935/ 0 RN/L = 3.51 GRADIENT INTERVAL = -5.00/ 5.00

ALPHAO	BETAO	CNW	CBW	CTW	CHEI	CHEO	IB-ELV	OB-ELV	PHII	ALPHAI
-.269	-8.793	.11750	.01720	.02250	.00330	-.00550	10.04797	8.87898	90.47680	-8.04060
-.324	-6.788	.11300	.01630	.02080	.00320	-.00470	10.04712	8.88494	90.05780	-6.11870
-.313	-4.471	.10760	.01560	.01930	.00500	-.00440	10.06238	8.88718	90.05730	-3.89070
-.289	-.224	.10250	.01450	.01920	.01960	-.00430	10.18613	8.88793	90.08480	.19850
-.267	3.806	.10220	.01420	.01860	.02290	-.00560	10.21410	8.87823	90.08480	4.08900
-.217	5.654	.10220	.01400	.01810	.02410	-.00630	10.22427	8.87301	89.66530	5.87040
-.279	7.785	.09620	.01300	.01630	.02630	-.00620	10.24292	8.87376	90.11190	7.92100
	GRADIENT	-.00066	-.00017	-.00008	.00217	-.00014	.01843	-.00107	.00329	.96400

IA156A, AEDC PWT 16T-470, O T S W/SILTS (R8NW54) (27 MAY 80)

REFERENCE DATA

SREF = 2690.0000 SQ.FT. XMRP = 976.0000 IN. XT
LREF = 1290.3000 INCHES YMRP = .0000 IN. YT
BREF = 1290.3000 INCHES ZMRP = 400.0000 IN. ZT
SCALE = .0200

PARAMETRIC DATA

IB-ELV = 10.000 OB-ELV = 9.000
BDFLAP = .000 SPDBRK = .000
RUDDER = .000 SILTS = 1.000
MACH = .600 RN/L = 3.500

RUN NO. 936/ 0 RN/L = 3.51 GRADIENT INTERVAL = -5.00/ 5.00

ALPHAO	BETAO	CNW	CBW	CTW	CHEI	CHEO	IB-ELV	OB-ELV	PHII	ALPHAI
4.047	-7.760	.16690	.02840	.04130	.00260	-.00970	10.04204	8.84765	-63.97730	8.82070
4.081	-5.679	.15980	.02800	.03940	.00180	-.01110	10.03526	8.83721	-56.22710	7.12960
4.045	-3.728	.15280	.02670	.03660	.00530	-.01210	10.06492	8.82975	-44.98920	5.69450
3.862	.202	.14660	.02350	.03220	.01730	-.01300	10.16663	8.82304	.15640	4.12250
3.891	4.152	.13810	.02220	.02980	.02120	-.01540	10.19969	8.80513	45.32660	5.88900
3.833	6.086	.13790	.02130	.02870	.02290	-.01500	10.21410	8.80812	56.63960	7.33570
3.739	7.925	.13010	.02020	.02690	.02460	-.01570	10.22851	8.80290	63.84290	8.85010
	GRADIENT	-.00187	-.00057	-.00086	.00202	-.00042	.01709	-.00312	11.46108	.02504

RUN NO. 937/ 0 RN/L = 3.51 GRADIENT INTERVAL = -5.00/ 5.00

ALPHAO	BETAO	CNW	CBW	CTW	CHEI	CHEO	IB-ELV	OB-ELV	PHII	ALPHAI
6.185	-7.948	.18910	.03440	.05050	.00250	-.01320	10.04119	8.82154	-53.78290	10.06000
6.018	-5.777	.18250	.03240	.04730	.00230	-.01420	10.03949	8.81409	-45.65850	8.40380
6.127	-3.840	.18520	.03170	.04640	.00520	-.01530	10.06407	8.80588	-34.08810	7.32680
5.925	.211	.17800	.02820	.04160	.01450	-.01660	10.14290	8.79618	.11900	6.07060
5.722	4.043	.16290	.02580	.03710	.01880	-.01890	10.17935	8.77903	34.14450	7.11630
5.884	6.104	.15870	.02490	.03530	.02050	-.01910	10.19376	8.77754	45.30510	8.54210
5.739	8.181	.15000	.02360	.03280	.02230	-.02060	10.20901	8.76675	54.48790	10.00230
	GRADIENT	-.00282	-.00075	-.00118	.00173	-.00046	.01467	-.00340	8.65377	-.02939

RUN NO. 938/ 0 RN/L = 3.51 GRADIENT INTERVAL = -5.00/ 5.00

ALPHAO	BETAO	CNW	CBW	CTW	CHEI	CHEO	IB-ELV	OB-ELV	PHII	ALPHAI
8.049	-8.030	.20580	.03930	.05780	.00200	-.01650	10.03695	8.79693	-46.62030	11.27130
7.954	-5.760	.20190	.03780	.05490	.00260	-.01830	10.04204	8.78350	-37.70210	9.78160
8.156	-3.936	.20170	.03720	.05370	.00480	-.01970	10.06068	8.77306	-27.56060	9.03800
7.840	.174	.18730	.03310	.04730	.01010	-.02100	10.10561	8.76337	-.15640	7.86850
8.020	4.153	.17730	.03100	.04320	.01530	-.02430	10.14968	8.73875	26.75130	9.01310
7.706	6.068	.16920	.02890	.03970	.01740	-.02450	10.16748	8.73726	37.81190	9.77930
7.985	8.203	.16030	.02770	.03720	.01870	-.02670	10.17850	8.72085	45.65590	11.35890
	GRADIENT	-.00302	-.00077	-.00130	.00130	-.00057	.01100	-.00423	6.71412	-.00463

IA156A, AEDC PWT 16T-470, O T S W/SILTS (R8NW55) (27 MAY 80)

REFERENCE DATA

SREF = 2690.0000 SQ.FT. XMRP = 976.0000 IN. XT
LREF = 1290.3000 INCHES YMRP = .0000 IN. YT
BREF = 1290.3000 INCHES ZMRP = 400.0000 IN. ZT
SCALE = .0200

PARAMETRIC DATA

IB-ELV = 10.000 OB-ELV = 9.000
BDFLAP = .000 SPDBRK = .000
RUDDER = .000 SILTS = 1.000
MACH = .800 RN/L = 3.500

RUN NO. 939/ 0 RN/L = 3.51 GRADIENT INTERVAL = -5.00/ 5.00

ALPHAO	BETAO	CNW	CBW	CTW	CHEI	CHEO	IB-ELV	OB-ELV	PHII	ALPHAI
-8.416	-6.010	.00450	-.00130	-.00600	-.01510	-.00350	9.87775	8.88762	38.29110	-9.03560
-8.319	-3.889	.00710	-.00170	-.00590	-.01370	-.00260	9.89094	8.89594	27.61370	-7.91080
-8.133	.366	.00480	-.00240	-.00590	.01320	.00050	10.15878	8.92568	-1.17230	-6.89810
-8.078	4.282	.00360	-.00130	-.00790	.02030	.00060	10.23343	8.92681	-27.96910	-7.90290
-7.997	6.197	.00780	-.00080	-.00800	.02240	.00060	10.25551	8.92681	-38.23230	-8.86640
	GRADIENT	-.00043	.00005	-.00024	.00419	.00040	.04222	.00382	-6.80182	.00439

RUN NO. 940/ 0 RN/L = 3.50 GRADIENT INTERVAL = -5.00/ 5.00

ALPHAO	BETAO	CNW	CBW	CTW	CHEI	CHEO	IB-ELV	OB-ELV	PHII	ALPHAI
-6.329	-6.039	.03820	.00390	.00160	-.01400	-.00310	9.88811	8.89132	46.67260	-7.60790
-6.233	-3.960	.03720	.00300	.00080	-.01190	-.00160	9.90790	8.90520	35.58810	-6.28850
-6.042	.147	.03520	.00220	-.00020	.01350	.00070	10.16194	8.92795	.69740	-4.98580
-6.109	4.309	.03260	.00260	-.00220	.02040	.00050	10.23448	8.92568	-35.05100	-6.40560
-5.813	6.218	.03680	.00340	-.00100	.02240	.00020	10.25551	8.92227	-47.20580	-7.42870
	GRADIENT	-.00056	-.00005	-.00036	.00390	.00025	.03945	.00247	-8.54264	-.01490

RUN NO. 941/ 0 RN/L = 3.50 GRADIENT INTERVAL = -5.00/ 5.00

ALPHAO	BETAO	CNW	CBW	CTW	CHEI	CHEO	IB-ELV	OB-ELV	PHII	ALPHAI
-4.318	-6.168	.06620	.00860	.00850	-.01260	-.00260	9.90130	8.89594	58.36820	-6.52160
-4.283	-3.943	.06260	.00780	.00740	-.01090	-.00140	9.91732	8.90705	46.50070	-4.87770
-4.010	.249	.06210	.00700	.00700	.01380	.00000	10.16509	8.92000	-.53640	-3.12660
-3.782	4.175	.05270	.00760	.00530	.01910	-.00020	10.22082	8.91815	-47.31040	-4.73950
-3.971	6.130	.04850	.00710	.00430	.02160	-.00040	10.24710	8.91630	-56.99990	-6.34900
	GRADIENT	-.00121	-.00003	-.00026	.00372	.00015	.03763	.00139	-11.55309	.02153

RUN NO. 942/ 0 RN/L = 3.51 GRADIENT INTERVAL = -5.00/ 5.00

ALPHAO	BETAO	CNW	CBW	CTW	CHEI	CHEO	IB-ELV	OB-ELV	PHII	ALPHAI
-.339	-6.739	.12550	.01860	.02400	-.00570	-.00350	9.96630	8.88762	90.20650	-5.87830
-.371	-4.804	.11980	.01780	.02250	-.00830	-.00250	9.94181	8.89687	89.78710	-4.04550
-.324	-.381	.10750	.01580	.02060	.01260	-.00150	10.15248	8.90612	89.80070	.16240
-.303	3.704	.10080	.01510	.01950	.01900	-.00250	10.21976	8.89687	90.23360	4.06420
-.314	5.560	.09870	.01460	.01820	.02240	-.00320	10.25551	8.89039	90.24710	5.82660
	GRADIENT	-.00224	-.00032	-.00035	.00323	.00000	.03287	.00003	.05180	.95312

IA156A, AEDC PWT 16T-470, O T S W/SILTS (R8NW55) (27 MAY 80)

REFERENCE DATA

SREF = 2690.0000 SQ.FT. XMRP = 976.0000 IN. XT
LREF = 1290.3000 INCHES YMRP = .0000 IN. YT
BREF = 1290.3000 INCHES ZMRP = 400.0000 IN. ZT
SCALE = .0200

PARAMETRIC DATA

IB-ELV = 10.000 OB-ELV = 9.000
BDFLAP = .000 SPDBRK = .000
RUDDER = .000 SILTS = 1.000
MACH = .800 RN/L = 3.500

RUN NO. 943/ 0 RN/L = 3.50 GRADIENT INTERVAL = -5.00/ 5.00

ALPHAO	BETAO	CNW	CBW	CTW	CHEI	CHEO	IB-ELV	OB-ELV	PHII	ALPHAI
3.938	-5.652	.17180	.02980	.04390	-.00560	-.00790	9.96725	8.84691	-57.16690	7.05000
3.921	-3.662	.16250	.02900	.04100	-.00620	-.00870	9.96159	8.83951	-45.65850	5.59950
3.945	.110	.15130	.02620	.03600	.01420	-.00850	10.16930	8.84136	-1.30030	4.23360
3.796	4.071	.14120	.02430	.03200	.02050	-.01030	10.23554	8.82470	45.60580	5.79820
3.721	6.067	.13640	.02290	.02950	.02490	-.01070	10.28180	8.82100	57.39700	7.28360
	GRADIENT	-.00275	-.00061	-.00116	.00344	-.00021	.03527	-.00193	11.80225	.02879

RUN NO. 944/ 0 RN/L = 3.51 GRADIENT INTERVAL = -5.00/ 5.00

ALPHAO	BETAO	CNW	CBW	CTW	CHEI	CHEO	IB-ELV	OB-ELV	PHII	ALPHAI
6.089	-5.845	.18720	.03360	.05100	-.00260	-.01190	9.99551	8.80990	-45.84660	8.48470
6.139	-3.843	.18970	.03330	.05050	-.00340	-.01310	9.98797	8.79880	-34.29740	7.32900
5.926	.176	.18140	.03090	.04570	.01190	-.01290	10.14512	8.80065	-.26200	6.07390
5.761	3.987	.16800	.02830	.04020	.01760	-.01840	10.20505	8.74976	33.78010	7.12300
5.893	6.117	.16180	.02750	.03780	.02250	-.02200	10.25656	8.71645	45.56280	8.54550
	GRADIENT	-.00276	-.00064	-.00131	.00269	-.00067	.02783	-.00620	8.69194	-.02891

IA156A, AEDC PWT 16T-470, O T S W/SILTS (R8NW56) (27 MAY 80)

REFERENCE DATA

SREF = 2690.0000 SQ.FT. XMRP = 976.0000 IN. XT
LREF = 1290.3000 INCHES YMRP = .0000 IN. YT
BREF = 1290.3000 INCHES ZMRP = 400.0000 IN. ZT
SCALE = .0200

PARAMETRIC DATA

IB-ELV = 10.000 OB-ELV = 9.000
BDFLAP = .000 SPDBRK = .000
RUDDER = .000 SILTS = 1.000
MACH = .900 RN/L = 3.500

RUN NO. 952/ 0 RN/L = 3.51 GRADIENT INTERVAL = -5.00/ 5.00

ALPHAO	BETAO	CNW	CBW	CTW	CHEI	CHEO	IB-ELV	OB-ELV	PHII	ALPHAI
-8.266	-5.928	.01520	-.00190	-.01110	-.03380	-.00070	9.67621	8.91301	38.64160	-8.74240
-8.058	-3.754	.01230	-.00220	-.00990	-.03090	.00240	9.70570	8.94942	27.75630	-7.52020
-8.186	.261	-.00700	-.00380	-.01010	.00820	.00200	10.11309	8.94452	-.45300	-6.81830
-8.108	4.358	-.02290	-.00360	-.00740	.01420	.00120	10.18120	8.93471	-28.57680	-7.83400
-8.107	6.196	-.02280	-.00380	-.00530	.01570	.00050	10.19823	8.92613	-38.14160	-8.80410
	GRADIENT	-.00434	-.00017	.00031	.00555	-.00015	.05847	-.00182	-6.94448	-.03941

IA156A, AEDC PWT 16T-470, O T S W/SILTS (R8NW56) (27 MAY 80)

REFERENCE DATA

SREF = 2690.0000 SQ.FT. XMRP = 976.0000 IN. XT
LREF = 1290.3000 INCHES YMRP = .0000 IN. YT
BREF = 1290.3000 INCHES ZMRP = 400.0000 IN. ZT
SCALE = .0200

PARAMETRIC DATA

IB-ELV = 10.000 OB-ELV = 9.000
BDFLAP = .000 SPDBRK = .000
RUDDER = .000 SILTS = 1.000
MACH = .900 RN/L = 3.500

RUN NO. 953/ 0 RN/L = 3.50 GRADIENT INTERVAL = -5.00/ 5.00

ALPHAO	BETAO	CNW	CBW	CTW	CHEI	CHEO	IB-ELV	OB-ELV	PHII	ALPHAI
-6.226	-6.035	.04880	.00310	.00070	-.02640	.00100	9.75147	8.93226	47.45300	-7.42320
-6.115	-4.004	.04550	.00240	.00080	-.02410	.00340	9.77487	8.96168	36.58900	-6.12310
-6.029	.147	.02580	.00040	-.00060	.01310	.00590	10.16871	8.99233	.60490	-4.87010
-6.036	4.212	.00730	.00030	.00070	.02060	.00330	10.25385	8.96046	-35.00220	-6.19160
-5.855	6.186	-.00310	.00040	.00210	.02310	.00170	10.28223	8.94084	-47.17100	-7.31830
	GRADIENT	-.00465	-.00026	-.00001	.00545	-.00001	.05843	-.00012	-8.71400	-.00725

RUN NO. 954/ 0 RN/L = 3.50 GRADIENT INTERVAL = -5.00/ 5.00

ALPHAO	BETAO	CNW	CBW	CTW	CHEI	CHEO	IB-ELV	OB-ELV	PHII	ALPHAI
-4.243	-6.218	.08200	.00830	.01310	-.02410	.00050	9.77487	8.92613	59.31050	-6.43870
-4.227	-3.977	.06970	.00700	.01090	-.02150	.00280	9.80131	8.95433	47.44580	-4.78200
-3.985	.235	.04840	.00520	.00930	.01550	.00450	10.19596	8.97517	-.42700	-3.02430
-4.062	4.405	.02420	.00440	.00880	.02490	.00270	10.30266	8.95310	-47.29640	-4.99120
-3.876	6.295	.02230	.00420	.01050	.02780	.00150	10.33559	8.93839	-58.69120	-6.35240
	GRADIENT	-.00543	-.00031	-.00025	.00554	-.00001	.05987	-.00014	-11.30329	-.02421

RUN NO. 955/ 0 RN/L = 3.50 GRADIENT INTERVAL = -5.00/ 5.00

ALPHAO	BETAO	CNW	CBW	CTW	CHEI	CHEO	IB-ELV	OB-ELV	PHII	ALPHAI
-.415	-6.981	.13990	.01880	.03430	-.01750	-.00280	9.84200	8.89203	89.86830	-6.05360
-.388	-4.926	.12690	.01790	.03190	-.02110	-.00190	9.80538	8.90102	89.88190	-4.12300
-.346	-.610	.10390	.01510	.02710	.01270	-.00150	10.16417	8.90502	89.89540	-.04250
-.308	3.482	.08960	.01360	.02500	.02310	-.00370	10.28223	8.88304	89.96310	3.84090
-.312	5.703	.08110	.01260	.02290	.02540	-.00410	10.30834	8.87904	89.97660	5.93990
	GRADIENT	-.00444	-.00051	-.00082	.00528	-.00021	.05696	-.00211	.00960	.94723

RUN NO. 956/ 0 RN/L = 3.50 GRADIENT INTERVAL = -5.00/ 5.00

ALPHAO	BETAO	CNW	CBW	CTW	CHEI	CHEO	IB-ELV	OB-ELV	PHII	ALPHAI
4.107	-5.931	.18690	.02850	.05890	-.02100	-.01040	9.80640	8.81611	-57.13210	7.33410
4.174	-3.928	.18290	.02800	.05690	-.01990	-.01080	9.81759	8.81211	-45.60960	5.92900
3.727	.181	.16170	.02440	.04640	.01600	-.01500	10.20163	8.77015	-.20880	4.03850
3.889	4.008	.15400	.02320	.04280	.02180	-.01910	10.26747	8.72920	44.34570	5.80110
3.707	6.109	.14240	.02180	.03920	.02460	-.02130	10.29926	8.70722	57.48270	7.28750
	GRADIENT	-.00366	-.00061	-.00179	.00530	-.00105	.05714	-.01045	11.33243	-.02157

IA156A, AEDC PWT 16T-470, O T S W/SILTS (R8NW57) (27 MAY 80)

REFERENCE DATA

SREF = 2690.0000 SQ.FT. XMRP = 976.0000 IN. XT
LREF = 1290.3000 INCHES YMRP = .0000 IN. YT
BREF = 1290.3000 INCHES ZMRP = 400.0000 IN. ZT
SCALE = .0200

PARAMETRIC DATA

IB-ELV = 10.000 OB-ELV = 9.000
BDFLAP = .000 SPDBRK = .000
RUDDER = .000 SILTS = 1.000
MACH = .950 RN/L = 3.500

RUN NO. 957/ 0 RN/L = 3.50 GRADIENT INTERVAL = -5.00/ 5.00

ALPHAO	BETAO	CNW	CBW	CTW	CHEI	CHEO	IB-ELV	OB-ELV	PHII	ALPHAI
-8.168	-6.025	.01910	-.00100	-.00800	-.04410	-.01100	9.55488	8.80606	39.56450	-8.65300
-8.236	-3.822	.01290	-.00220	-.00870	-.04750	-.00470	9.51902	8.87132	27.77770	-7.61920
-8.036	.263	-.00420	-.00330	-.00880	-.01800	.00170	9.83016	8.94161	-.51990	-6.61220
-7.924	4.230	-.02200	-.00330	-.00680	-.00980	.00490	9.91664	8.98229	-28.48950	-7.55480
-7.872	6.126	-.02570	-.00290	-.00440	-.00690	.00650	9.94723	9.00263	-38.80420	-8.52390
	GRADIENT	-.00433	-.00014	.00023	.00469	.00119	.04951	.01380	-6.98708	.00917

RUN NO. 959/ 0 RN/L = 3.49 GRADIENT INTERVAL = -5.00/ 5.00

ALPHAO	BETAO	CNW	CBW	CTW	CHEI	CHEO	IB-ELV	OB-ELV	PHII	ALPHAI
-6.208	-5.992	.05370	.00390	.00300	-.04190	-.01130	9.57809	8.80295	47.50310	-7.33020
-6.174	-4.054	.04670	.00270	.00150	-.04560	-.00740	9.53906	8.84335	36.86790	-6.12810
-6.259	.135	.02590	.00030	-.00110	-.01430	.00030	9.86918	8.92381	.67360	-5.02420
-6.062	4.282	.00840	.00040	.00040	-.00530	.00350	9.96410	8.96449	-35.51850	-6.19860
-5.827	6.394	.00100	.00100	.00350	.00000	.00510	10.02000	8.98483	-48.41850	-7.40240
	GRADIENT	-.00459	-.00028	-.00013	.00484	.00131	.05103	.01454	-8.68299	-.00799

RUN NO. 958/ 0 RN/L = 3.49 GRADIENT INTERVAL = -5.00/ 5.00

ALPHAO	BETAO	CNW	CBW	CTW	CHEI	CHEO	IB-ELV	OB-ELV	PHII	ALPHAI
-4.273	-6.188	.09060	.00850	.01460	-.03820	-.01140	9.61711	8.80191	59.21060	-6.38510
-4.329	-4.008	.07490	.00720	.01160	-.03890	-.00790	9.60973	8.83817	47.15940	-4.82800
-4.255	.375	.04760	.00480	.00830	-.01340	-.00180	9.87867	8.90135	-2.39650	-3.23670
-3.812	4.353	.02480	.00500	.01070	-.00350	.00050	9.98309	8.92636	-48.87840	-4.77100
-3.866	6.166	.01740	.00470	.01130	.00110	.00270	10.03295	8.95432	-58.42680	-6.19860
	GRADIENT	-.00600	-.00027	-.00012	.00426	.00101	.04494	.01061	-11.48292	.01285

RUN NO. 960/ 0 RN/L = 3.50 GRADIENT INTERVAL = -5.00/ 5.00

ALPHAO	BETAO	CNW	CBW	CTW	CHEI	CHEO	IB-ELV	OB-ELV	PHII	ALPHAI
-.419	-6.876	.14170	.01910	.03440	-.02860	-.01370	9.71836	8.77809	89.90900	-5.93430
-.396	-4.858	.12990	.01800	.03180	-.03350	-.01440	9.66668	8.77084	89.92250	-4.04290
-.362	-.678	.10420	.01480	.02640	-.01330	-.00480	9.87973	8.87028	89.93600	-.10320
-.320	3.521	.08900	.01300	.02420	-.01190	-.00630	9.89449	8.85474	89.97660	3.87310
-.323	5.725	.08110	.01210	.02330	-.00980	-.00860	9.91664	8.83092	90.00370	5.94870
	GRADIENT	-.00488	-.00060	-.00091	.00258	.00097	.02717	.01000	.00646	.94467

IA156A, AEDC PWT 16T-470, O T S W/SILTS (R8NW57) (27 MAY 80)

REFERENCE DATA

SREF = 2690.0000 SQ.FT. XMRP = 976.0000 IN. XT
LREF = 1290.3000 INCHES YMRP = .0000 IN. YT
BREF = 1290.3000 INCHES ZMRP = 400.0000 IN. ZT
SCALE = .0200

PARAMETRIC DATA

IB-ELV = 10.000 OB-ELV = 9.000
BDFLAP = .000 SPDBRK = .000
RUDDER = .000 SILTS = 1.000
MACH = .950 RN/L = 3.500

RUN NO. 961/ 0 RN/L = 3.49 GRADIENT INTERVAL = -5.00/ 5.00

ALPHAO	BETAO	CNW	CBW	CTW	CHEI	CHEO	IB-ELV	OB-ELV	PHII	ALPHAI
3.921	-5.779	.19930	.02880	.05820	-.03070	-.02710	9.69621	8.63928	-57.53590	7.11920
3.965	-3.741	.18650	.02770	.05480	-.03250	-.02940	9.67723	8.61546	-45.53300	5.68310
3.688	.018	.16320	.02450	.04550	-.01820	-.02830	9.82805	8.62685	-2.72860	4.02340
3.816	3.930	.15090	.02300	.04040	-.01410	-.03370	9.87129	8.57032	44.18100	5.70820
3.768	6.071	.13860	.02110	.03680	-.01040	-.03630	9.91031	8.54399	56.88260	7.28420
	GRADIENT	-.00463	-.00061	-.00187	.00239	-.00057	.02520	-.00586	11.69661	.00615

IA156A, AEDC PWT 16T-470, O T S W/SILTS (R8NW58) (27 MAY 80)

REFERENCE DATA

SREF = 2690.0000 SQ.FT. XMRP = 976.0000 IN. XT
LREF = 1290.3000 INCHES YMRP = .0000 IN. YT
BREF = 1290.3000 INCHES ZMRP = 400.0000 IN. ZT
SCALE = .0200

PARAMETRIC DATA

IB-ELV = 10.000 OB-ELV = 9.000
BDFLAP = .000 SPDBRK = .000
RUDDER = .000 SILTS = 1.000
MACH = 1.050 RN/L = 3.500

RUN NO. 962/ 0 RN/L = 3.50 GRADIENT INTERVAL = -5.00/ 5.00

ALPHAO	BETAO	CNW	CBW	CTW	CHEI	CHEO	IB-ELV	OB-ELV	PHII	ALPHAI
-8.133	-6.006	.02700	-.00140	-.00470	-.00870	-.01210	9.92290	8.78736	39.96520	-8.46430
-8.303	-3.794	.01820	-.00320	-.00590	.00060	-.00740	10.02747	8.83888	27.68500	-7.49640
-8.187	.179	-.00360	-.00520	-.00520	.02580	-.00440	10.34138	8.87177	.08430	-6.58450
-8.003	4.365	-.02840	-.00610	-.00420	.03120	-.00360	10.40865	8.88054	-29.45660	-7.52710
-8.017	6.256	-.03430	-.00680	-.00420	.03030	-.00290	10.39744	8.88821	-39.39010	-8.54770
	GRADIENT	-.00571	-.00035	.00021	.00373	.00046	.04645	.00508	-7.00449	-.00575

RUN NO. 963/ 0 RN/L = 3.50 GRADIENT INTERVAL = -5.00/ 5.00

ALPHAO	BETAO	CNW	CBW	CTW	CHEI	CHEO	IB-ELV	OB-ELV	PHII	ALPHAI
-6.221	-6.007	.06280	.00430	.00600	-.01400	-.01290	9.86374	8.77859	47.91120	-7.23020
-6.148	-4.081	.05540	.00280	.00500	-.00690	-.00840	9.94299	8.82792	37.52580	-6.01190
-6.259	.103	.02550	-.00080	.00190	.02270	-.00620	10.30277	8.85204	.95890	-4.89210
-6.076	4.270	-.00030	-.00200	.00230	.02420	-.00490	10.32145	8.86629	-35.88130	-6.07740
-5.781	6.385	-.01090	-.00200	.00370	.02300	-.00310	10.30650	8.88602	-49.12920	-7.25590
	GRADIENT	-.00667	-.00058	-.00032	.00373	.00042	.04535	.00460	-8.79123	-.00765

IA156A, AEDC PWT 16T-470, O T S W/SILTS (R8NW58) (27 MAY 80)

REFERENCE DATA

SREF = 2690.0000 SQ.FT. XMRP = 976.0000 IN. XT
LREF = 1290.3000 INCHES YMRP = .0000 IN. YT
BREF = 1290.3000 INCHES ZMRP = 400.0000 IN. ZT
SCALE = .0200

PARAMETRIC DATA

IB-ELV = 10.000 OB-ELV = 9.000
BDFLAP = .000 SPDBRK = .000
RUDDER = .000 SILTS = 1.000
MACH = 1.050 RN/L = 3.500

RUN NO. 964/ 0 RN/L = 3.50 GRADIENT INTERVAL = -5.00/ 5.00

ALPHAO	BETAO	CNW	CBW	CTW	CHEI	CHEO	IB-ELV	OB-ELV	PHII	ALPHAI
-4.138	-6.140	.09320	.01050	.01880	-.01690	-.01360	9.83138	8.77092	60.26650	-6.19860
-4.347	-4.015	.07550	.00760	.01430	-.00980	-.00870	9.91062	8.82463	47.56760	-4.74990
-4.270	.376	.04330	.00400	.01120	.01890	-.00720	10.25543	8.84107	-2.53970	-3.14430
-3.788	4.336	.01120	.00330	.01170	.01840	-.00460	10.24920	8.86958	-49.58920	-4.66570
-3.886	6.178	.00440	.00230	.01070	.01790	-.00350	10.24298	8.88163	-58.86520	-6.14100
	GRADIENT	-.00769	-.00052	-.00032	.00343	.00049	.04123	.00535	-11.63043	.01650

RUN NO. 965/ 0 RN/L = 3.50 GRADIENT INTERVAL = -5.00/ 5.00

ALPHAO	BETAO	CNW	CBW	CTW	CHEI	CHEO	IB-ELV	OB-ELV	PHII	ALPHAI
-.465	-6.966	.15560	.02230	.03920	-.02210	-.01410	9.77334	8.76544	89.81420	-5.97410
-.443	-4.845	.13690	.01990	.03630	-.01810	-.01070	9.81798	8.80271	89.82780	-3.99660
-.400	-.627	.10990	.01510	.03170	.00790	-.00660	10.11841	8.84765	89.85480	-.03880
-.359	3.660	.08130	.01150	.02700	.00910	-.01070	10.13336	8.80271	89.88190	3.99320
-.359	5.800	.07070	.00980	.02460	.01080	-.01580	10.15453	8.74680	89.90900	5.99790
	GRADIENT	-.00654	-.00099	-.00109	.00319	-.00000	.03699	-.00003	.00636	.93942

RUN NO. 966/ 0 RN/L = 3.50 GRADIENT INTERVAL = -5.00/ 5.00

ALPHAO	BETAO	CNW	CBW	CTW	CHEI	CHEO	IB-ELV	OB-ELV	PHII	ALPHAI
3.949	-5.818	.20480	.03100	.06010	-.02570	-.02000	9.73316	8.70076	-57.27140	7.15790
3.940	-3.659	.18990	.02910	.05600	-.02540	-.01820	9.73650	8.72049	-44.78010	5.61540
3.707	.163	.16540	.02510	.04710	-.00680	-.02370	9.94410	8.66020	-.36590	4.06170
3.800	4.035	.14870	.02190	.04230	-.00680	-.03410	9.94410	8.54620	44.83250	5.77160
3.771	6.081	.13480	.01940	.03830	-.00220	-.04260	9.99545	8.45302	56.71110	7.28200
	GRADIENT	-.00535	-.00094	-.00178	.00241	-.00207	.02692	-.02267	11.64774	.02122

IA156A, AEDC PWT 16T-470, O T S W/SILTS (R8NW59) (27 MAY 80)

REFERENCE DATA

SREF = 2690.0000 SQ.FT. XMRP = 976.0000 IN. XT
LREF = 1290.3000 INCHES YMRP = .0000 IN. YT
BREF = 1290.3000 INCHES ZMRP = 400.0000 IN. ZT
SCALE = .0200

PARAMETRIC DATA

IB-ELV = 10.000 OB-ELV = 9.000
BDFLAP = .000 SPDBRK = .000
RUDDER = .000 SILTS = 1.000
MACH = 1.100 RN/L = 3.500

RUN NO. 967/ 0 RN/L = 3.49 GRADIENT INTERVAL = -5.00/ 5.00

ALPHAO	BETAO	CNW	CBW	CTW	CHEI	CHEO	IB-ELV	OB-ELV	PHII	ALPHAI
-8.158	-5.993	.03330	-.00100	-.00290	-.00220	-.00930	9.99484	8.81556	39.92940	-8.46040
-8.263	-3.773	.02360	-.00280	-.00370	.00610	-.00640	10.09784	8.84813	27.77770	-7.44990
-8.181	.173	.00120	-.00480	-.00310	.03200	-.00500	10.42837	8.86385	.16170	-6.57060
-7.997	4.386	-.02250	-.00550	-.00210	.03850	-.00400	10.51132	8.87508	-29.61020	-7.52610
-8.011	6.276	-.02900	-.00630	-.00170	.04110	-.00320	10.54450	8.88406	-39.46680	-8.55560
	GRADIENT	-.00565	-.00033	.00020	.00394	.00029	.05033	.00330	-7.03407	-.01178

RUN NO. 968/ 0 RN/L = 3.49 GRADIENT INTERVAL = -5.00/ 5.00

ALPHAO	BETAO	CNW	CBW	CTW	CHEI	CHEO	IB-ELV	OB-ELV	PHII	ALPHAI
-6.214	-6.002	.06880	.00490	.00770	-.00940	-.01100	9.91252	8.79647	48.01140	-7.22420
-6.172	-4.075	.06030	.00310	.00670	-.00220	-.00820	9.99484	8.82791	37.46140	-6.02280
-6.273	.087	.03060	-.00040	.00380	.02640	-.00630	10.35690	8.84925	1.16400	-4.90010
-6.069	4.280	.00560	-.00130	.00450	.03270	-.00310	10.43730	8.88519	-35.92320	-6.08140
-6.000	6.264	-.00780	-.00180	.00490	.03350	-.00010	10.44751	8.91888	-47.49150	-7.30240
	GRADIENT	-.00655	-.00053	-.00026	.00417	.00061	.05292	.00686	-8.78350	-.00735

RUN NO. 969/ 0 RN/L = 3.49 GRADIENT INTERVAL = -5.00/ 5.00

ALPHAO	BETAO	CNW	CBW	CTW	CHEI	CHEO	IB-ELV	OB-ELV	PHII	ALPHAI
-4.131	-6.141	.10160	.01170	.02000	-.01320	-.01160	9.86907	8.78973	60.40920	-6.19660
-4.345	-4.016	.08340	.00840	.01640	-.00560	-.00770	9.95597	8.83353	47.69640	-4.75390
-4.254	.369	.04990	.00460	.01360	.02400	-.00580	10.32628	8.85487	-2.37800	-3.13920
-3.786	4.339	.02030	.00390	.01430	.02490	-.00330	10.33776	8.88294	-49.47070	-4.67470
-3.878	6.168	.01080	.00270	.01330	.02540	-.00740	10.34414	8.83690	-58.77470	-6.13500
	GRADIENT	-.00755	-.00054	-.00026	.00370	.00052	.04637	.00590	-11.62534	.01570

RUN NO. 970/ 0 RN/L = 3.49 GRADIENT INTERVAL = -5.00/ 5.00

ALPHAO	BETAO	CNW	CBW	CTW	CHEI	CHEO	IB-ELV	OB-ELV	PHII	ALPHAI
-.471	-7.078	.15630	.02310	.03830	-.01830	-.01230	9.81075	8.78187	89.80070	-6.07840
-.437	-4.868	.14140	.02080	.03650	-.01230	-.00800	9.87936	8.83016	89.82780	-4.01870
-.394	-.533	.11230	.01620	.03190	.01370	-.00600	10.19483	8.85262	89.85480	.05030
-.356	3.599	.08640	.01220	.02840	.01540	-.01780	10.21653	8.72010	89.88190	3.93610
-.354	5.784	.07350	.01020	.02620	.01700	-.02550	10.23695	8.63363	89.90900	5.97930
	GRADIENT	-.00650	-.00102	-.00096	.00329	-.00114	.04009	-.01285	.00639	.93959

IA156A, AEDC PWT 16T-470, O T S W/SILTS (R8NW59) (27 MAY 80)

REFERENCE DATA

SREF = 2690.0000 SQ.FT. XMRP = 976.0000 IN. XT
LREF = 1290.3000 INCHES YMRP = .0000 IN. YT
BREF = 1290.3000 INCHES ZMRP = 400.0000 IN. ZT
SCALE = .0200

PARAMETRIC DATA

IB-ELV = 10.000 OB-ELV = 9.000
BDFLAP = .000 SPDBRK = .000
RUDDER = .000 SILTS = 1.000
MACH = 1.100 RN/L = 3.500

RUN NO. 971/ 0 RN/L = 3.49 GRADIENT INTERVAL = -5.00/ 5.00

ALPHAO	BETAO	CNW	CBW	CTW	CHEI	CHEO	IB-ELV	OB-ELV	PHII	ALPHAI
4.072	-5.756	.21100	.03160	.05960	-.02470	-.01980	9.73757	8.69764	-56.36640	7.16240
3.948	-3.679	.19470	.02990	.05550	-.02190	-.02140	9.76959	8.67968	-45.10080	5.61440
3.693	.116	.16990	.02550	.04700	-.00060	-.02930	10.01314	8.59096	-1.23960	4.03580
3.794	3.973	.15250	.02230	.04200	-.00120	-.04030	10.00628	8.46743	44.41010	5.71590
3.767	6.056	.13800	.02000	.03910	.00340	-.04610	10.06339	8.40229	56.63960	7.24880
	GRADIENT	-.00551	-.00099	-.00176	.00270	-.00247	.03084	-.02775	11.69763	.01440

IA156A, AEDC PWT 16T-470, O T S W/SILTS (R8NW60) (27 MAY 80)

REFERENCE DATA

SREF = 2690.0000 SQ.FT. XMRP = 976.0000 IN. XT
LREF = 1290.3000 INCHES YMRP = .0000 IN. YT
BREF = 1290.3000 INCHES ZMRP = 400.0000 IN. ZT
SCALE = .0200

PARAMETRIC DATA

IB-ELV = 10.000 OB-ELV = 9.000
BDFLAP = .000 SPDBRK = .000
RUDDER = .000 SILTS = 1.000
MACH = 1.150 RN/L = 3.500

RUN NO. 972/ 0 RN/L = 3.49 GRADIENT INTERVAL = -5.00/ 5.00

ALPHAO	BETAO	CNW	CBW	CTW	CHEI	CHEO	IB-ELV	OB-ELV	PHII	ALPHAI
-8.143	-6.001	.04320	.00000	-.00260	.00390	-.00820	10.07074	8.82613	40.02960	-8.42860
-8.286	-3.781	.02770	-.00230	-.00350	.01470	-.00720	10.21123	8.83757	27.75630	-7.44300
-8.188	.192	.00590	-.00480	-.00290	.03850	-.00690	10.52085	8.84101	-.04510	-6.54380
-8.012	4.392	-.02020	-.00570	-.00230	.04570	-.00440	10.61452	8.86963	-29.70800	-7.50830
-8.015	6.263	-.02620	-.00640	-.00160	.04750	-.00200	10.63793	8.89710	-39.50870	-8.51390
	GRADIENT	-.00586	-.00041	.00015	.00377	.00034	.04908	.00395	-7.03096	-.01009

RUN NO. 973/ 0 RN/L = 3.49 GRADIENT INTERVAL = -5.00/ 5.00

ALPHAO	BETAO	CNW	CBW	CTW	CHEI	CHEO	IB-ELV	OB-ELV	PHII	ALPHAI
-6.224	-6.019	.07880	.00670	.00770	-.00330	-.00990	9.98153	8.80666	48.01140	-7.22230
-6.146	-4.078	.06910	.00460	.00740	.00700	-.00820	10.11106	8.82613	37.59730	-5.98700
-6.274	.108	.03810	-.00020	.00470	.03540	-.00780	10.48052	8.83071	.88490	-4.87710
-6.063	4.279	.00970	-.00130	.00480	.04030	-.00360	10.54427	8.87879	-36.08370	-6.05260
-6.001	6.267	-.00530	-.00210	.00450	.04180	-.00700	10.56378	8.83986	-47.63790	-7.26880
	GRADIENT	-.00711	-.00071	-.00031	.00399	.00055	.05186	.00630	-8.81697	-.00769

IA156A, AEDC PWT 16T-470, O T S W/SILTS (R8NW60) (27 MAY 80)

REFERENCE DATA

SREF = 2690.0000 SQ.FT. XMRP = 976.0000 IN. XT
LREF = 1290.3000 INCHES YMRP = .0000 IN. YT
BREF = 1290.3000 INCHES ZMRP = 400.0000 IN. ZT
SCALE = .0200

PARAMETRIC DATA

IB-ELV = 10.000 OB-ELV = 9.000
BDFLAP = .000 SPDBRK = .000
RUDDER = .000 SILTS = 1.000
MACH = 1.150 RN/L = 3.500

RUN NO. 974/ 0 RN/L = 3.49 GRADIENT INTERVAL = -5.00/ 5.00

ALPHAO	BETAO	CNW	CBW	CTW	CHEI	CHEO	IB-ELV	OB-ELV	PHII	ALPHAI
-4.137	-6.136	.11090	.01340	.01960	-.00670	-.00980	9.94190	8.80781	60.29510	-6.18170
-4.341	-4.027	.09560	.01060	.01740	.00550	-.00720	10.09155	8.83757	47.65350	-4.74990
-4.272	.369	.05940	.00550	.01460	.03180	-.00350	10.43369	8.87993	-2.46600	-3.14430
-3.786	4.337	.02300	.00380	.01480	.03400	-.01220	10.46231	8.78033	-49.58220	-4.66070
-3.901	6.185	.01590	.00240	.01330	.03620	-.01730	10.49093	8.72195	-58.84430	-6.14300
	GRADIENT	-.00867	-.00082	-.00032	.00345	-.00057	.04493	-.00655	-11.62164	.01701

RUN NO. 975/ 0 RN/L = 3.49 GRADIENT INTERVAL = -5.00/ 5.00

ALPHAO	BETAO	CNW	CBW	CTW	CHEI	CHEO	IB-ELV	OB-ELV	PHII	ALPHAI
-.456	-6.965	.16350	.02340	.03650	-.01130	-.00700	9.88829	8.83986	89.82780	-5.95820
-.423	-4.871	.14990	.02190	.03580	-.00260	-.00470	9.98969	8.86619	89.82780	-4.01120
-.374	-.625	.12820	.01810	.03410	.02420	-.01360	10.33482	8.76431	89.84130	-.03530
-.336	3.586	.10020	.01390	.03090	.02630	-.02940	10.36214	8.58343	89.88190	3.91890
-.337	5.781	.08650	.01160	.02840	.02880	-.03800	10.39466	8.48498	89.90900	5.97060
	GRADIENT	-.00588	-.00095	-.00058	.00342	-.00292	.04410	-.03342	.00639	.93776

RUN NO. 976/ 0 RN/L = 3.49 GRADIENT INTERVAL = -5.00/ 5.00

ALPHAO	BETAO	CNW	CBW	CTW	CHEI	CHEO	IB-ELV	OB-ELV	PHII	ALPHAI
3.932	-5.808	.20930	.03130	.05680	-.01880	-.01960	9.80086	8.59562	-57.41060	7.12030
3.960	-3.755	.19520	.03000	.05430	-.01180	-.02360	9.88246	8.64983	-45.47020	5.66780
3.829	.185	.17810	.02640	.04800	.00930	-.03690	10.14098	8.49757	-.02880	4.15380
3.790	3.941	.15820	.02320	.04410	.00900	-.05030	10.13708	8.34417	44.35280	5.68310
3.759	6.060	.14510	.02060	.04070	.01410	-.05550	10.20343	8.28464	56.79690	7.24210
	GRADIENT	-.00480	-.00088	-.00133	.00272	-.00347	.03335	-.03971	11.67058	-.00115

IA156A, AEDC PWT 16T-470, O T S W/SILTS (R8NW61) (27 MAY 80)

REFERENCE DATA

SREF = 2690.0000 SQ.FT. XMRP = 976.0000 IN. XT
LREF = 1290.3000 INCHES YMRP = .0000 IN. YT
BREF = 1290.3000 INCHES ZMRP = 400.0000 IN. ZT
SCALE = .0200

PARAMETRIC DATA

IB-ELV = 10.000 OB-ELV = 9.000
RDFLAP = .000 SPDBRK = .000
RUDDER = .000 SILTS = 1.000
MACH = 1.250 RN/L = 3.500

RUN NO. 977/ 0 RN/L = 3.51 GRADIENT INTERVAL = -5.00/ 5.00

ALPHAO	BETAO	CNW	CBW	CTW	CHEI	CHEO	IB-ELV	OB-ELV	PHII	ALPHAI
-8.143	-5.996	.03950	.00140	-.00640	.02190	-.00420	10.31491	8.87023	40.15840	-8.39390
-8.298	-3.785	.03210	-.00060	-.00620	.02910	-.00520	10.41187	8.85838	27.90610	-7.42720
-8.186	.202	.01420	-.00290	-.00200	.04550	-.00540	10.63271	8.85601	.04110	-6.52790
-8.011	4.371	-.00980	-.00420	.00100	.04340	-.01000	10.60443	8.80150	-29.46010	-7.48160
-8.027	6.290	-.01620	-.00520	.00220	.04280	-.01340	10.59635	8.76121	-39.52260	-8.50800
	GRADIENT	-.00514	-.00044	.00088	.00174	-.00059	.02338	-.00702	-7.03463	-.00837

RUN NO. 978/ 0 RN/L = 3.51 GRADIENT INTERVAL = -5.00/ 5.00

ALPHAO	BETAO	CNW	CBW	CTW	CHEI	CHEO	IB-ELV	OB-ELV	PHII	ALPHAI
-6.231	-6.004	.07470	.00690	.00180	.01480	-.00510	10.21930	8.85956	48.11880	-7.19160
-6.173	-4.080	.07000	.00550	.00290	.02330	-.00510	10.33376	8.85956	37.69740	-5.98800
-6.272	.119	.04810	.00220	.00540	.04010	-.01080	10.56000	8.79202	1.02490	-4.87010
-6.053	4.300	.02430	.00030	.00810	.03810	-.01920	10.53306	8.69247	-36.10460	-6.03770
-5.991	6.272	.01020	-.00090	.00850	.03680	-.02440	10.51556	8.63085	-47.62400	-7.24500
	GRADIENT	-.00545	-.00062	.00062	.00177	-.00168	.02380	-.01994	-8.80677	-.00574

RUN NO. 979/ 0 RN/L = 3.52 GRADIENT INTERVAL = -5.00/ 5.00

ALPHAO	BETAO	CNW	CBW	CTW	CHEI	CHEO	IB-ELV	OB-ELV	PHII	ALPHAI
-4.151	-6.152	.10410	.01290	.01270	.00950	-.00420	10.14793	8.87023	60.52330	-6.18270
-4.348	-4.016	.09570	.01100	.01220	.02160	-.00660	10.31087	8.84179	47.85390	-4.72790
-4.255	.380	.06980	.00800	.01430	.03420	-.01740	10.48054	8.71381	-2.32880	-3.12300
-3.795	4.350	.03820	.00650	.01670	.03040	-.03020	10.42937	8.56212	-49.48460	-4.65370
-3.880	6.179	.02700	.00480	.01560	.02980	-.03460	10.42129	8.50998	-58.87910	-6.10130
	GRADIENT	-.00686	-.00054	.00054	.00108	-.00281	.01460	-.03335	-11.63041	.01522

RUN NO. 980/ 0 RN/L = 3.50 GRADIENT INTERVAL = -5.00/ 5.00

ALPHAO	BETAO	CNW	CBW	CTW	CHEI	CHEO	IB-ELV	OB-ELV	PHII	ALPHAI
-.474	-6.978	.16030	.02240	.02710	-.00200	-.01030	9.99587	8.79794	89.90900	-5.95720
-.444	-4.886	.15270	.02140	.02760	.00870	-.01490	10.13716	8.74343	89.92250	-4.01470
-.399	-.623	.13390	.01880	.02880	.02890	-.02730	10.40917	8.59649	89.93600	-.02970
-.363	3.580	.11270	.01550	.02820	.02530	-.04190	10.36070	8.42347	89.96310	3.91240
-.379	5.795	.09570	.01320	.02680	.02220	-.04820	10.31895	8.34882	89.99010	5.97490
	GRADIENT	-.00472	-.00070	.00007	.00197	-.00319	.02649	-.03778	.00479	.93632

IA156A, AEDC PWT 16T-470, O T S W/SILTS (R8NW61) (27 MAY 80)

REFERENCE DATA

SREF = 2690.0000 SQ.FT. XMRP = 976.0000 IN. XT
LREF = 1290.3000 INCHES YMRP = .0000 IN. YT
BREF = 1290.3000 INCHES ZMRP = 400.0000 IN. ZT
SCALE = .0200

PARAMETRIC DATA

IB-ELV = 10.000 OB-ELV = 9.000
BDFLAP = .000 SPDBRK = .000
RUDDER = .000 SILTS = 1.000
MACH = 1.250 RN/L = 3.500

RUN NO. 981/ 0 RN/L = 3.50 GRADIENT INTERVAL = -5.00/ 5.00

ALPHAO	BETAO	CNW	CBW	CTW	CHEI	CHEO	IB-ELV	OB-ELV	PHII	ALPHAI
3.947	-5.805	.20330	.03060	.05050	-.00710	-.03260	9.93433	8.53368	-57.46620	7.11040
3.949	-3.734	.19270	.02960	.04910	-.00060	-.03970	10.01276	8.44954	-45.60960	5.63840
3.821	.193	.17900	.02650	.04510	.01410	-.05010	10.20987	8.32630	-.22550	4.14040
3.759	3.935	.15910	.02340	.04220	.00900	-.05900	10.14120	8.22083	44.27410	5.65360
3.746	6.066	.14750	.02100	.03990	.00490	-.06150	10.08598	8.19121	56.63960	7.23100
	GRADIENT	-.00437	-.00081	-.00090	.00127	-.00252	.01702	-.02983	11.71827	-.00119

IA156A, AEDC PWT 16T-470, O T S W/SILTS (R8NW62) (10 MAY 80)

REFERENCE DATA

SREF = 2690.0000 SQ.FT. XMRP = 976.0000 IN. XT
LREF = 1290.3000 INCHES YMRP = .0000 IN. YT
BREF = 1290.3000 INCHES ZMRP = 400.0000 IN. ZT
SCALE = .0200

PARAMETRIC DATA

IB-ELV = 10.000 OB-ELV = 11.000
BDFLAP = .000 SPDBRK = .000
RUDDER = .000 SILTS = 1.000
MACH = .300 RN/L = 3.500

RUN NO. 985/ 0 RN/L = 2.62 GRADIENT INTERVAL = -5.00/ 5.00

ALPHAO	BETAO	CNW	CBW	CTW	CHEI	CHEO	IB-ELV	OB-ELV	PHII	ALPHAI	MACH
-6.189	-9.919	.01830	.00370	-.01020	.00320	-.01080	10.03340	11.23450	59.86710	-11.06840	.29580
-6.140	-5.798	.01900	.00320	-.00900	.00390	-.01030	10.03810	11.23670	45.42680	-7.86470	.29580
-6.046	.188	-.00430	.00270	-.00360	.01050	-.00920	10.05230	11.24090	.14500	-5.48940	.29580
-5.767	6.289	-.06030	.00290	.00420	.01280	-.00970	10.04960	11.23770	-46.80850	-7.95780	.29600
-5.906	10.172	-.08190	.00220	.00470	.01520	-.00980	10.04940	11.23620	-59.75590	-11.14890	.29580
	GRADIENT	.00000	.00000	.00000	.00000	.00000	.00000	.00000	.00000	.00000	.00000

RUN NO. 986/ 0 RN/L = 2.62 GRADIENT INTERVAL = -5.00/ 5.00

ALPHAO	BETAO	CNW	CBW	CTW	CHEI	CHEO	IB-ELV	OB-ELV	PHII	ALPHAI	MACH
-.274	-10.576	.07820	.01620	.02680	.00140	-.01370	10.02190	11.22600	90.05780	-10.01100	.29620
-.268	-6.531	.06480	.01470	.02420	.00100	-.01380	10.02140	11.22560	90.00370	-6.02970	.29620
-.244	-.362	.05510	.01350	.02350	.01080	-.01370	10.03430	11.22590	90.00370	.05430	.29620
-.219	5.616	.04860	.01280	.02370	.01460	-.01630	10.03970	11.22100	89.99010	5.95090	.29760
-.209	9.775	.03940	.01160	.02190	.01740	-.01720	10.04330	11.21940	89.99010	10.04680	.29690
	GRADIENT	.00000	.00000	.00000	.00000	.00000	.00000	.00000	.00000	.00000	.00000

IA156A, AEDC PWT 16T-470, O T S W/SILTS (R8NW62) (10 MAY 80)

REFERENCE DATA

SREF = 2690.0000 SQ.FT. XMRP = 975.0000 IN. XT
LREF = 1290.3000 INCHES YMRP = .0000 IN. YT
BREF = 1290.3000 INCHES ZMRP = 400.0000 IN. ZT
SCALE = .0200

PARAMETRIC DATA

IB-ELV = 10.000 OB-ELV = 11.000
BDFLAP = .000 SPDBRK = .000
RUDDER = .000 SILTS = 1.000
MACH = .300 RN/L = 3.500

RUN NO. 987/ 0 RN/L = 2.62 GRADIENT INTERVAL = -5.00/ 5.00

ALPHAO	BETAO	CNW	CBW	CTW	CHEI	CHEO	IB-ELV	OB-ELV	PHII	ALPHAI	MACH
6.163	-9.878	.12620	.03090	.07040	-.00350	-.02390	10.02470	11.21120	-59.47060	11.85760	.29700
5.922	-5.672	.12300	.02910	.06380	-.00220	-.02730	10.03000	11.20640	-45.49110	8.47640	.29730
5.799	.132	.13510	.02590	.05050	.00590	-.02990	10.04620	11.20420	-.66420	6.11070	.29680
5.887	6.149	.13100	.02350	.04320	.00880	-.03200	10.04470	11.19820	45.30510	8.78290	.29710
5.769	10.020	.11730	.02090	.03840	.01090	-.03300	10.04380	11.19510	59.58160	11.78570	.29690
	GRADIENT	.00000	.00000	.00000	.00000	.00000	.00000	.00000	.00000	.00000	.00000

IA156A, AEDC PWT 16T-470, O T S W/SILTS (R8NW63) (10 MAY 80)

REFERENCE DATA

SREF = 2690.0000 SQ.FT. XMRP = 976.0000 IN. XT
LREF = 1290.3000 INCHES YMRP = .0000 IN. YT
BREF = 1290.3000 INCHES ZMRP = 400.0000 IN. ZT
SCALE = .0200

PARAMETRIC DATA

IB-ELV = 10.000 OB-ELV = 11.000
BDFLAP = .000 SPDBRK = .000
RUDDER = .000 SILTS = 1.000
MACH = .300 RN/L = 3.500

RUN NO. 984/ 0 RN/L = 2.64 GRADIENT INTERVAL = -5.00/ 5.00

ALPHAO	BETAO	CNW	CBW	CTW	CHEI	CHEO	IB-ELV	OB-ELV	PHII	ALPHAI	MACH
-10.338	-7.903	-.03160	-.00490	-.02680	.00600	-.00990	10.04210	11.23770	39.09230	-12.31810	.29570
-10.010	-5.743	-.03460	-.00410	-.02490	.00640	-.00960	10.04410	11.23900	31.47330	-10.87310	.29530
-9.964	.320	-.05870	-.00450	-.01990	.01230	-.00730	10.05470	11.24400	-.68570	-9.31840	.29560
-9.977	6.296	-.09450	-.00380	-.01400	.01500	-.00590	10.05540	11.24550	-31.94890	-11.12620	.29540
-10.023	8.249	-.10400	-.00380	-.01320	.01630	-.00560	10.05570	11.24540	-39.41800	-12.29240	.29550
	GRADIENT	.00000	.00000	.00000	.00000	.00000	.00000	.00000	.00000	.00000	.00000

RUN NO. 988/ 0 RN/L = 2.63 GRADIENT INTERVAL = -5.00/ 5.00

ALPHAO	BETAO	CNW	CBW	CTW	CHEI	CHEO	IB-ELV	OB-ELV	PHII	ALPHAI	MACH
10.065	-7.798	.17920	.03930	.08450	-.00490	-.03430	10.02750	11.19440	-39.22270	12.89990	.29750
9.942	-5.729	.17970	.03810	.08100	-.00300	-.03600	10.03150	11.19220	-31.39050	11.66630	.29690
9.776	.230	.18460	.03380	.06860	.00200	-.03780	10.04100	11.19020	.19650	10.00300	.29680
9.976	6.289	.17080	.03040	.05760	.00450	-.04410	10.04150	11.17760	31.76600	11.97520	.29700
9.935	8.263	.16150	.02850	.05330	.00610	-.04520	10.04210	11.17520	39.47870	13.08520	.29680
	GRADIENT	.00000	.00000	.00000	.00000	.00000	.00000	.00000	.00000	.00000	.00000

IA156A, AEDC PWT 16T-470, O T S W/SILTS (R8NW64) (27 MAY 80)

REFERENCE DATA

SREF = 2690.0000 SQ.FT. XMRP = 976.0000 IN. XT
LREF = 1290.3000 INCHES YMRP = .0000 IN. YT
BREF = 1290.3000 INCHES ZMRP = 400.0000 IN. ZT
SCALE = .0200

PARAMETRIC DATA

IB-ELV = 10.000 OB-ELV = 11.000
BDFLAP = .000 SPDBRK = .000
RUDDER = .000 SILTS = 1.000
MACH = .600 RN/L = 3.500

RUN NO. 989/ 0 RN/L = 3.51 GRADIENT INTERVAL = -5.00/ 5.00

ALPHAO	BETAO	CNW	CBW	CTW	CHEI	CHEO	IB-ELV	OB-ELV	PHII	ALPHAI
-8.116	-7.801	-.00140	.00070	-.01370	.00450	-.00930	10.05814	11.18063	46.31460	-10.24340
-8.131	-5.751	-.00580	.00020	-.01390	.00550	-.00870	10.06662	11.18511	37.69020	-8.97730
-8.158	-3.746	-.01320	-.00010	-.01390	.00820	-.00760	10.08950	11.19331	26.92230	-8.01820
-8.038	.179	-.01940	-.00060	-.01030	.01850	-.00710	10.17680	11.19704	.15380	-7.10050
-7.907	4.315	-.03180	.00000	-.00560	.02180	-.00740	10.20477	11.19480	-28.36030	-8.06770
-7.903	6.178	-.03680	.00010	-.00440	.02270	-.00750	10.21240	11.19406	-38.14860	-9.07090
-7.933	8.182	-.04130	-.00010	-.00380	.02410	-.00750	10.22427	11.19406	-46.35550	-10.39960
	GRADIENT	-.00231	.00001	.00103	.00168	.00002	.01423	.00018	-6.85836	-.00817

RUN NO. 990/ 0 RN/L = 3.50 GRADIENT INTERVAL = -5.00/ 5.00

ALPHAO	BETAO	CNW	CBW	CTW	CHEI	CHEO	IB-ELV	OB-ELV	PHII	ALPHAI
-6.151	-7.917	.03210	.00470	-.00250	.00320	-.00940	10.04712	11.17989	54.68810	-9.11480
-6.133	-5.908	.02740	.00420	-.00280	.00420	-.00910	10.05560	11.18212	46.64390	-7.65080
-6.052	-4.006	.02610	.00400	-.00220	.00690	-.00850	10.07848	11.18660	36.29580	-6.42780
-6.115	.062	.01480	.00290	-.00150	.01800	-.00780	10.17257	11.19182	1.42290	-5.29590
-5.951	4.184	.00100	.00330	.00150	.02060	-.00870	10.19460	11.18511	-34.62540	-6.45850
-5.876	6.172	-.00680	.00340	.00280	.02150	-.00930	10.20223	11.18063	-46.38340	-7.68450
-5.888	8.143	-.01460	.00300	.00310	.02300	-.00930	10.21495	11.18063	-54.41670	-9.16470
	GRADIENT	-.00307	-.00009	.00045	.00167	-.00002	.01416	-.00019	-8.65946	-.00436

RUN NO. 991/ 0 RN/L = 3.50 GRADIENT INTERVAL = -5.00/ 5.00

ALPHAO	BETAO	CNW	CBW	CTW	CHEI	CHEO	IB-ELV	OB-ELV	PHII	ALPHAI
-4.002	-8.052	.05840	.00940	.00980	.00180	-.00950	10.03526	11.17914	66.13160	-8.18070
-4.241	-5.954	.04970	.00820	.00740	.00280	-.00960	10.04373	11.17840	57.53980	-6.54080
-4.156	-3.960	.04650	.00790	.00780	.00570	-.00930	10.06831	11.18063	47.07350	-5.01820
-4.127	.330	.03040	.00700	.00910	.01760	-.00930	10.16918	11.18063	-1.74970	-3.44410
-3.741	4.210	.00970	.00770	.01260	.01930	-.01110	10.18359	11.16721	-47.55430	-4.93720
-3.805	6.054	.00310	.00740	.01240	.02040	-.01140	10.19291	11.16497	-57.50800	-6.41790
-3.828	8.036	-.00360	.00680	.01250	.02190	-.01150	10.20562	11.16422	-64.49160	-8.11330
	GRADIENT	-.00449	-.00003	.00058	.00168	-.00022	.01427	-.00161	-11.57867	.01618

IA156A, AEDC PWT 16T-470, O T S W/SILTS (R8NW64) (27 MAY 80)

REFERENCE DATA

SREF = 2690.0000 SQ.FT. XMRP = 976.0000 IN. XT
LREF = 1290.3000 INCHES YMRP = .0000 IN. YT
BREF = 1290.3000 INCHES ZMRP = 400.0000 IN. ZT
SCALE = .0200

PARAMETRIC DATA

IB-ELV = 10.000 OB-ELV = 11.000
BDFLAP = .000 SPDBRK = .000
RUDDER = .000 SILTS = 1.000
MACH = .600 RN/L = 3.500

RUN NO. 992/ 0 RN/L = 3.50 GRADIENT INTERVAL = -5.00/ 5.00

ALPHAO	BETAO	CNW	CBW	CTW	CHEI	CHEO	IB-ELV	OB-ELV	PHII	ALPHAI
-.333	-8.763	.10570	.01750	.03180	.00100	-.01270	10.02848	11.15527	90.01720	-8.01520
-.323	-6.686	.09760	.01680	.03090	.00070	-.01280	10.02593	11.15453	89.99010	-6.02280
-.309	-4.451	.09050	.01620	.03030	.00310	-.01310	10.04628	11.15229	89.99010	-3.87800
-.284	-.386	.07810	.01480	.02950	.01640	-.01310	10.15900	11.15229	90.00370	.03850
-.253	3.691	.07140	.01450	.03000	.01950	-.01520	10.18528	11.13663	90.00370	3.97650
-.253	5.787	.06760	.01410	.02940	.02080	-.01580	10.19630	11.13215	90.01720	5.99460
-.243	7.871	.06090	.01360	.02870	.02270	-.01670	10.21240	11.12544	89.99010	8.00100
	GRADIENT	-.00235	-.00021	-.00004	.00201	-.00026	.01707	-.00192	.00167	.96469

RUN NO. 993/ 0 RN/L = 3.50 GRADIENT INTERVAL = -5.00/ 5.00

ALPHAO	BETAO	CNW	CBW	CTW	CHEI	CHEO	IB-ELV	OB-ELV	PHII	ALPHAI
4.168	-7.891	.16090	.02860	.06150	.00010	-.01940	10.02085	11.10530	-63.72700	8.97970
4.092	-5.788	.14920	.02750	.05770	-.00090	-.02090	10.01317	11.09411	-56.70050	7.22220
4.040	-3.806	.14360	.02620	.05420	.00210	-.02170	10.03780	11.08814	-45.63750	5.74100
3.837	.078	.14100	.02360	.04660	.01320	-.02300	10.13188	11.07845	-1.72290	4.08750
3.896	4.062	.13680	.02230	.04370	.01730	-.02580	10.16663	11.05756	44.66790	5.81750
3.844	6.167	.13060	.02150	.04230	.01910	-.02650	10.18189	11.05234	56.95400	7.39960
3.838	8.161	.12230	.02050	.04050	.02080	-.02610	10.19630	11.05533	64.01360	9.08860
	GRADIENT	-.00087	-.00049	-.00133	.00193	-.00052	.01634	-.00389	11.47827	.01155

RUN NO. 994/ 0 RN/L = 3.50 GRADIENT INTERVAL = -5.00/ 5.00

ALPHAO	BETAO	CNW	CBW	CTW	CHEI	CHEO	IB-ELV	OB-ELV	PHII	ALPHAI
6.197	-7.962	.18000	.03380	.07070	-.00040	-.02310	10.01696	11.07770	-53.76900	10.07220
6.167	-5.883	.17750	.03260	.06940	-.00090	-.02520	10.01317	11.06204	-45.56090	8.56300
6.157	-3.829	.17620	.03120	.06650	.00170	-.02620	10.03441	11.05458	-33.89270	7.33300
5.863	.183	.16530	.02780	.05750	.01020	-.02730	10.10645	11.04637	-.13400	6.00560
5.796	4.073	.15460	.02580	.05200	.01520	-.02820	10.14883	11.03966	34.00870	7.18670
5.774	5.985	.14910	.02520	.05070	.01660	-.02940	10.16070	11.03071	45.32660	8.37750
5.805	8.225	.13700	.02390	.04750	.01840	-.03040	10.17596	11.02325	54.35920	10.06760
	GRADIENT	-.00273	-.00063	-.00184	.00171	-.00025	.01450	-.00189	8.59266	-.02014

IA156A, AEDC PWT 16T-470, O T S W/SILTS (R8NW64) (27 MAY 80)

REFERENCE DATA

SREF = 2690.0000 SQ.FT. XMRP = 976.0000 IN. XT
LREF = 1290.3000 INCHES YMRP = .0000 IN. YT
BREF = 1290.3000 INCHES ZMRP = 400.0000 IN. ZT
SCALE = .0200

PARAMETRIC DATA

IB-ELV = 10.000 OB-ELV = 11.000
BDFLAP = .000 SPDBRK = .000
RUDDER = .000 SILTS = 1.000
MACH = .600 RN/L = 3.500

RUN NO. 995/ 0 RN/L = 3.50 GRADIENT INTERVAL = -5.00/ 5.00

ALPHAO	BETAO	CNW	CBW	CTW	CHEI	CHEO	IB-ELV	OB-ELV	PHII	ALPHAI
8.107	-7.821	.20700	.03840	.08050	-.00110	-.02690	10.01165	11.04936	-45.73510	11.16810
7.996	-5.734	.20490	.03710	.07770	-.00090	-.02840	10.01317	11.03817	-37.50680	9.79370
7.970	-3.774	.20160	.03560	.07430	.00100	-.02840	10.02848	11.03817	-27.17640	8.80780
7.886	.178	.19720	.03240	.06700	.00510	-.03020	10.06323	11.02474	-.16300	7.90830
7.824	4.107	.18470	.03010	.06090	.01080	-.03350	10.11154	11.00013	27.02210	8.82590
7.906	6.229	.17980	.02900	.05830	.01320	-.03530	10.13188	10.98670	37.91910	10.01220
7.889	8.228	.16080	.02740	.05320	.01500	-.03630	10.14714	10.97925	46.07830	11.30520
	GRADIENT	-.00214	-.00070	-.00170	.00124	-.00065	.01054	-.00483	6.87707	.00207

IA156A, AEDC PWT 16T-470, O T S W/SILTS (R8NW65) (27 MAY 80)

REFERENCE DATA

SREF = 2690.0000 SQ.FT. XMRP = 976.0000 IN. XT
LREF = 1290.3000 INCHES YMRP = .0000 IN. YT
BREF = 1290.3000 INCHES ZMRP = 400.0000 IN. ZT
SCALE = .0200

PARAMETRIC DATA

IB-ELV = 10.000 OB-ELV = 11.000
BDFLAP = .000 SPDBRK = .000
RUDDER = .000 SILTS = 1.000
MACH = .800 RN/L = 3.500

RUN NO. 996/ 0 RN/L = 3.50 GRADIENT INTERVAL = -5.00/ 5.00

ALPHAO	BETAO	CNW	CBW	CTW	CHEI	CHEO	IB-ELV	OB-ELV	PHII	ALPHAI
-8.190	-5.988	.00840	.00040	-.00970	-.01580	-.00760	9.87116	11.11968	38.92060	-8.86780
-8.244	-3.759	-.00190	-.00020	-.01050	-.01370	-.00670	9.89094	11.18801	27.02930	-7.81520
-8.164	.181	-.01400	-.00140	-.00990	.01160	-.00440	10.14196	11.20929	.18590	-6.93320
-8.008	4.427	-.02980	-.00040	-.00620	.01930	-.00490	10.22292	11.20466	-28.91190	-7.92510
-7.969	6.241	-.03350	-.00030	-.00560	.02140	-.00580	10.24500	11.19634	-38.47640	-8.87170
	GRADIENT	-.00341	-.00002	.00053	.00400	.00022	.04028	.00199	-6.83393	-.01627

RUN NO. 997/ 0 RN/L = 3.50 GRADIENT INTERVAL = -5.00/ 5.00

ALPHAO	BETAO	CNW	CBW	CTW	CHEI	CHEO	IB-ELV	OB-ELV	PHII	ALPHAI
-6.208	-5.978	.04150	.00500	.00070	-.01510	-.00730	9.87775	11.18246	46.94460	-7.49350
-6.158	-4.068	.03770	.00420	.00010	-.01350	-.00640	9.89282	11.19079	36.55320	-6.29680
-6.227	.117	.01890	.00260	-.00130	.01200	-.00420	10.14617	11.21114	.94130	-5.16410
-6.061	4.258	.00650	.00320	.00140	.01880	-.00570	10.21766	11.19726	-34.89750	-6.34650
-5.755	6.394	.00040	.00390	.00420	.02070	-.00690	10.23764	11.18616	-48.24420	-7.52410
	GRADIENT	-.00375	-.00012	.00016	.00388	.00008	.03905	.00078	-8.58141	-.00549

IA156A, AEDC PWT 16T-470, O T S W/SILTS (R8NW65) (27 MAY 80)

REFERENCE DATA

SREF = 2690.0000 SQ.FT. XMRP = 976.0000 IN. XT
LREF = 1290.3000 INCHES YMRP = .0000 IN. YT
BREF = 1290.3000 INCHES ZMRP = 400.0000 IN. ZT
SCALE = .0200

PARAMETRIC DATA

IB-ELV = 10.000 OB-ELV = 11.000
BDFLAP = .000 SPDBRK = .000
RUDDER = .000 SILTS = 1.000
MACH = .800 RN/L = 3.500

RUN NO. 998/ 0 RN/L = 3.50 GRADIENT INTERVAL = -5.00/ 5.00

ALPHAO	BETAO	CNW	CBW	CTW	CHEI	CHEO	IB-ELV	OB-ELV	PHII	ALPHAI
-4.084	-6.130	.06830	.00990	.01300	-.01380	-.00720	9.89000	11.18338	59.62450	-6.38220
-4.332	-3.976	.05740	.00830	.01010	-.01240	-.00680	9.90319	11.18708	46.35750	-4.94020
-4.236	.375	.03760	.00710	.00960	.01270	-.00560	10.15353	11.19819	-2.28260	-3.35340
-3.804	4.333	.01870	.00780	.01210	.01730	-.00780	10.20189	11.17783	-48.16760	-4.86810
-3.864	6.155	.01560	.00740	.01190	.01910	-.00850	10.22082	11.17136	-57.77250	-6.31770
	GRADIENT	-.00466	-.00006	.00023	.00361	-.00011	.03631	-.00105	-11.37283	.01456

RUN NO. 999/ 0 RN/L = 3.50 GRADIENT INTERVAL = -5.00/ 5.00

ALPHAO	BETAO	CNW	CBW	CTW	CHEI	CHEO	IB-ELV	OB-ELV	PHII	ALPHAI
-.349	-6.910	.12340	.01890	.03670	-.00660	-.01030	9.95782	11.15470	90.03070	-6.03770
-.345	-4.778	.10950	.01800	.03470	-.00970	-.00990	9.92862	11.15840	89.99010	-4.01870
-.318	-.519	.09070	.01600	.03170	.00990	-.00930	10.12409	11.16395	89.99010	.02910
-.280	3.587	.07910	.01540	.03100	.01600	-.01190	10.18822	11.13990	90.00370	3.94800
-.281	5.732	.07260	.01490	.02990	.01920	-.01300	10.22187	11.12972	90.01720	5.98700
	GRADIENT	-.00364	-.00031	-.00044	.00308	-.00024	.03112	-.00219	.00162	.95233

RUN NO. 1000/ 0 RN/L = 3.51 GRADIENT INTERVAL = -5.00/ 5.00

ALPHAO	BETAO	CNW	CBW	CTW	CHEI	CHEO	IB-ELV	OB-ELV	PHII	ALPHAI
4.101	-5.781	.17460	.02980	.06420	-.00840	-.01920	9.94087	11.07236	-56.74230	7.23100
3.955	-3.664	.16460	.02880	.06000	-.00920	-.01930	9.93333	11.07143	-45.51900	5.61870
3.717	.123	.15010	.02550	.05010	.00970	-.01940	10.12199	11.07051	-1.17710	4.01800
3.820	4.012	.14410	.02430	.04690	.01560	-.02180	10.18402	11.04830	45.06160	5.76390
3.767	6.089	.13560	.02330	.04440	.01990	-.02200	10.22923	11.04645	57.26840	7.31420
	GRADIENT	-.00267	-.00059	-.00170	.00322	-.00033	.03259	-.00303	11.80197	.02083

RUN NO. 1001/ 0 RN/L = 3.51 GRADIENT INTERVAL = -5.00/ 5.00

ALPHAO	BETAO	CNW	CBW	CTW	CHEI	CHEO	IB-ELV	OB-ELV	PHII	ALPHAI
6.081	-5.826	.19220	.03300	.07130	-.00580	-.02350	9.96536	11.03257	-45.83270	8.45500
6.062	-3.782	.19100	.03240	.06960	-.00730	-.02460	9.95123	11.02239	-34.28350	7.23100
5.749	.159	.17750	.03030	.06200	.00710	-.02410	10.09465	11.02702	-.46800	5.89950
5.676	3.974	.16540	.02810	.05620	.01250	-.02770	10.15142	10.99371	34.08730	7.04510
5.803	6.143	.15720	.02730	.05380	.01820	-.03000	10.21135	10.97243	46.14990	8.50340
	GRADIENT	-.00330	-.00055	-.00173	.00256	-.00040	.02587	-.00367	8.81383	-.02568

IA156A, AEDC PWT 16T-470, O T S W/SILTS (R8NW66) (27 MAY 80)

REFERENCE DATA

SREF = 2690.0000 SQ.FT. XMRP = 976.0000 IN. XT
LREF = 1290.3000 INCHES YMRP = .0000 IN. YT
BREF = 1290.3000 INCHES ZMRP = 400.0000 IN. ZT
SCALE = .0200

PARAMETRIC DATA

IB-ELV = 10.000 OB-ELV = 11.000
BDFLAP = .000 SPDBRK = .000
RUDDER = .000 SILTS = 1.000
MACH = .900 RN/L = 3.500

RUN NO. 1002/ 0 RN/L = 3.50 GRADIENT INTERVAL = -5.00/ 5.00

ALPHAO	BETAO	CNW	CBW	CTW	CHEI	CHEO	IB-ELV	OB-ELV	PHII	ALPHAI
-8.139	-6.011	.00690	-.00130	-.00710	-.03280	-.01050	9.68638	11.14511	39.43570	-8.71060
-8.266	-3.766	-.00520	-.00250	-.00870	-.03100	-.00860	9.70469	11.16409	27.22170	-7.70130
-8.171	.178	-.01890	-.00360	-.00810	.00450	-.00750	10.07108	11.17508	.14150	-6.80940
-7.999	4.397	-.03150	-.00300	-.00480	.01260	-.00570	10.16304	11.19306	-29.02370	-7.77850
-8.035	6.278	-.04050	-.00320	-.00360	.01400	-.00510	10.17893	11.19905	-38.73450	-8.80010
	GRADIENT	-.00322	-.00006	.00048	.00530	.00036	.05575	.00356	-6.89055	-.01201

RUN NO. 1003/ 0 RN/L = 3.50 GRADIENT INTERVAL = -5.00/ 5.00

ALPHAO	BETAO	CNW	CBW	CTW	CHEI	CHEO	IB-ELV	OB-ELV	PHII	ALPHAI
-6.213	-5.983	.04100	.00320	.00310	-.02750	-.00860	9.74029	11.16409	47.23820	-7.38660
-6.159	-4.072	.03660	.00240	.00200	-.02570	-.00720	9.75859	11.17807	36.81070	-6.18470
-6.252	.103	.01460	.00030	.00000	.00800	-.00560	10.11082	11.19406	1.02580	-5.07720
-6.049	4.272	.00270	.00070	.00150	.01680	-.00410	10.21071	11.20904	-35.33010	-6.23930
-5.983	6.249	-.01450	.00070	.00250	.02000	-.00310	10.24704	11.21903	-46.84340	-7.44690
	GRADIENT	-.00471	-.00020	-.00006	.00509	.00037	.05419	.00371	-8.64644	-.00649

RUN NO. 1004/ 0 RN/L = 3.49 GRADIENT INTERVAL = -5.00/ 5.00

ALPHAO	BETAO	CNW	CBW	CTW	CHEI	CHEO	IB-ELV	OB-ELV	PHII	ALPHAI
-4.066	-6.140	.06970	.00910	.01620	-.02510	-.00930	9.76470	11.15710	60.10960	-6.29590
-4.344	-4.007	.05560	.00710	.01230	-.02360	-.00880	9.77995	11.16209	46.76570	-4.88010
-4.242	.377	.03140	.00500	.00990	.01000	-.00840	10.13352	11.16609	-2.36640	-3.27630
-3.805	4.332	.01010	.00550	.01210	.02110	-.00660	10.25953	11.18407	-48.50210	-4.80100
-3.878	6.163	.00290	.00480	.01160	.02500	-.00490	10.30380	11.20105	-58.05790	-6.25120
	GRADIENT	-.00546	-.00020	-.00003	.00540	.00026	.05793	.00260	-11.42073	.01590

RUN NO. 1005/ 0 RN/L = 3.49 GRADIENT INTERVAL = -5.00/ 5.00

ALPHAO	BETAO	CNW	CBW	CTW	CHEI	CHEO	IB-ELV	OB-ELV	PHII	ALPHAI
-.384	-6.979	.12580	.01950	.03990	-.01960	-.01290	9.82064	11.12113	90.01720	-6.05060
-.370	-4.834	.11010	.01820	.03680	-.02360	-.01390	9.77995	11.11114	89.99010	-4.03180
-.335	-.531	.08580	.01530	.03180	.00720	-.01430	10.10173	11.10715	90.00370	.03500
-.302	3.595	.07240	.01370	.02950	.02050	-.01250	10.25272	11.12513	90.00370	3.94910
-.304	5.740	.06440	.01270	.02770	.02530	-.01350	10.30721	11.11514	90.01720	5.97820
	GRADIENT	-.00448	-.00053	-.00087	.00525	.00016	.05622	.00164	.00162	.94682

IA156A, AEDC PWT 16T-470, O T S W/SILTS (R8NW66) (27 MAY 80)

REFERENCE DATA

SREF = 2690.0000 SQ.FT. XMRP = 976.0000 IN. XT
LREF = 1290.3000 INCHES YMRP = .0000 IN. YT
BREF = 1290.3000 INCHES ZMRP = 400.0000 IN. ZT
SCALE = .0200

PARAMETRIC DATA

IB-ELV = 10.000 OB-ELV = 11.000
BDFLAP = .000 SPDBRK = .000
RUDDER = .000 SILTS = 1.000
MACH = .900 RN/L = 3.500

RUN NO. 1006/ 0 RN/L = 3.50 GRADIENT INTERVAL = -5.00/ 5.00

ALPHAO	BETAO	CNW	CBW	CTW	CHEI	CHEO	IB-ELV	OB-ELV	PHII	ALPHAI
4.095	-5.773	.17770	.02860	.06210	-.02460	-.02270	9.76978	11.02323	-56.56820	7.20670
3.945	-3.668	.16700	.02770	.05870	-.02280	-.02330	9.78809	11.01724	-45.37960	5.60670
3.706	.126	.14720	.02480	.04880	.01050	-.02640	10.13920	10.98627	-1.05130	4.01800
3.810	3.993	.13810	.02360	.04480	.01730	-.02820	10.21639	10.96829	44.91130	5.74210
3.754	6.078	.12850	.02230	.04190	.02130	-.03020	10.26180	10.94831	57.11120	7.28530
	GRADIENT	-.00377	-.00053	-.00181	.00522	-.00064	.05575	-.00638	11.77842	.01910

IA156A, AEDC PWT 16T-470, O T S W/SILTS (R8NW67) (27 MAY 80)

REFERENCE DATA

SREF = 2690.0000 SQ.FT. XMRP = 976.0000 IN. XT
LREF = 1290.3000 INCHES YMRP = .0000 IN. YT
BREF = 1290.3000 INCHES ZMRP = 400.0000 IN. ZT
SCALE = .0200

PARAMETRIC DATA

IB-ELV = 10.000 OB-ELV = 11.000
BDFLAP = .000 SPDBRK = .000
RUDDER = .000 SILTS = 1.000
MACH = .950 RN/L = 3.500

RUN NO. 1007/ 0 RN/L = 3.49 GRADIENT INTERVAL = -5.00/ 5.00

ALPHAO	BETAO	CNW	CBW	CTW	CHEI	CHEO	IB-ELV	OB-ELV	PHII	ALPHAI
-8.174	-5.994	.00770	-.00150	-.00520	-.04590	-.02070	9.53590	11.03558	39.40710	-8.63910
-8.273	-3.769	-.00100	-.00260	-.00610	-.05000	-.01390	9.49266	11.10602	27.35710	-7.63100
-8.177	.172	-.01730	-.00370	-.00630	-.02120	-.00220	9.79641	11.22721	.14760	-6.73900
-7.999	4.395	-.03430	-.00330	-.00390	-.01270	-.00070	9.88605	11.24275	-29.22970	-7.69640
-8.015	6.270	-.04200	-.00310	-.00240	-.00860	-.00020	9.92930	11.24793	-38.97160	-8.70860
	GRADIENT	-.00408	-.00008	.00027	.00454	.00160	.04787	.01659	-6.93215	-.01062

RUN NO. 1008/ 0 RN/L = 3.50 GRADIENT INTERVAL = -5.00/ 5.00

ALPHAO	BETAO	CNW	CBW	CTW	CHEI	CHEO	IB-ELV	OB-ELV	PHII	ALPHAI
-6.222	-6.000	.04340	.00350	.00470	-.04380	-.02100	9.55805	11.03247	47.48160	-7.33210
-6.165	-4.074	.03760	.00240	.00370	-.04530	-.01640	9.54223	11.08012	37.00370	-6.13110
-6.250	.100	.01510	.00040	.00110	-.01990	-.00510	9.81012	11.19717	1.02840	-5.01420
-6.077	4.263	-.00840	.00060	.00200	-.01270	-.00420	9.88605	11.20649	-35.35800	-6.19360
-5.771	6.406	-.01650	.00130	.00590	-.00790	-.00440	9.93668	11.20442	-48.74600	-7.37960
	GRADIENT	-.00552	-.00022	-.00020	.00391	.00146	.04125	.01516	-8.67935	-.00738

IA156A, AEDC PWT 16T-470, O T S W/SILTS (R8NW67) (27 MAY 80)

REFERENCE DATA

SREF = 2690.0000 SQ.FT. XMRP = 976.0000 IN. XT
LREF = 1290.3000 INCHES YMRP = .0000 IN. YT
BREF = 1290.3000 INCHES ZMRP = 400.0000 IN. ZT
SCALE = .0200

PARAMETRIC DATA

IB-ELV = 10.000 OB-ELV = 11.000
BDFLAP = .000 SPDBRK = .000
RUDDER = .000 SILTS = 1.000
MACH = .950 RN/L = 3.500

RUN NO. 1009/ 0 RN/L = 3.50 GRADIENT INTERVAL = -5.00/ 5.00

ALPHAO	BETAO	CNW	CBW	CTW	CHEI	CHEO	IB-ELV	OB-ELV	PHII	ALPHAI
-4.090	-6.152	.07040	.00940	.01770	-.03900	-.02130	9.60867	11.02936	60.20950	-6.26810
-4.336	-4.001	.05590	.00730	.01370	-.04150	-.01780	9.58231	11.06562	47.02340	-4.82800
-4.255	.372	.03050	.00500	.01030	-.01990	-.00930	9.81012	11.15367	-2.36130	-3.23770
-3.805	4.339	.01030	.00530	.01310	-.01250	-.00940	9.88816	11.15263	-48.79480	-4.75990
-3.884	6.157	.00340	.00470	.01330	-.00920	-.00790	9.92297	11.16817	-58.26670	-6.19760
	GRADIENT	-.00547	-.00024	-.00008	.00350	.00102	.03694	.01060	-11.48606	.01422

RUN NO. 1010/ 0 RN/L = 3.50 GRADIENT INTERVAL = -5.00/ 5.00

ALPHAO	BETAO	CNW	CBW	CTW	CHEI	CHEO	IB-ELV	OB-ELV	PHII	ALPHAI
-.403	-6.989	.12810	.01940	.04000	-.03050	-.02580	9.69832	10.98275	90.01720	-6.03470
-.384	-4.820	.10500	.01830	.03660	-.03700	-.02760	9.62977	10.96410	90.01720	-3.99960
-.355	-.578	.08000	.01490	.03100	-.02180	-.01790	9.79008	11.06458	90.01720	-.00520
-.317	3.642	.06600	.01310	.02890	-.02100	-.02040	9.79852	11.03869	90.03070	3.98620
-.314	5.778	.05960	.01230	.02810	-.01860	-.02200	9.82383	11.02211	89.99010	5.99900
	GRADIENT	-.00461	-.00061	-.00091	.00189	.00085	.01996	.00883	.00159	.94372

RUN NO. 1011/ 0 RN/L = 3.49 GRADIENT INTERVAL = -5.00/ 5.00

ALPHAO	BETAO	CNW	CBW	CTW	CHEI	CHEO	IB-ELV	OB-ELV	PHII	ALPHAI
4.100	-5.936	.18410	.02930	.06160	-.03430	-.04020	9.65824	10.83359	-57.08340	7.33300
3.927	-3.611	.16910	.02800	.05730	-.03820	-.04380	9.61711	10.79630	-44.89160	5.56530
3.704	.194	.14510	.02480	.04690	-.02660	-.04360	9.73945	10.79837	.02350	4.04280
3.820	4.058	.13290	.02330	.04260	-.01730	-.04550	9.83754	10.77869	45.15470	5.79890
3.768	6.090	.12260	.02140	.03920	-.01150	-.04540	9.89871	10.77972	57.01120	7.29860
	GRADIENT	-.00472	-.00061	-.00191	.00272	-.00022	.02873	-.00230	11.74051	.03157

IA156A, AEDC PWT 16T-470, O T S W/SILTS (R8NW68) (27 MAY 80)

REFERENCE DATA

SREF = 2690.0000 SQ.FT. XMRP = 976.0000 IN. XT
LREF = 1290.3000 INCHES YMRP = .0000 IN. YT
BREF = 1290.3000 INCHES ZMRP = 400.0000 IN. ZT
SCALE = .0200

PARAMETRIC DATA

IB-ELV = 10.000 OB-ELV = 11.000
BDFLAP = .000 SPDBRK = .000
RUDDER = .000 SILTS = 1.000
MACH = 1.050 RN/L = 3.500

RUN NO. 1012/ 0 RN/L = 3.52 GRADIENT INTERVAL = -5.00/ 5.00

ALPHAO	BETAO	CNW	CBW	CTW	CHEI	CHEO	IB-ELV	OB-ELV	PHII	ALPHAI
-8.150	-6.001	.01470	-.00130	-.00310	-.01030	-.02540	9.90504	10.97157	39.87220	-8.47420
-8.302	-3.778	.00470	-.00290	-.00410	-.00190	-.02090	9.99879	11.02090	27.59950	-7.49050
-8.183	.171	-.01640	-.00510	-.00330	.02510	-.01810	10.33266	11.05159	.13270	-6.56170
-7.975	4.397	-.04570	-.00590	-.00220	.02850	-.01600	10.37502	11.07461	-29.71150	-7.52810
-8.018	6.265	-.05180	-.00650	-.00220	.02770	-.01460	10.36505	11.08996	-39.38310	-8.55960
	GRADIENT	-.00617	-.00036	.00023	.00369	.00060	.04561	.00656	-7.01164	-.00721

RUN NO. 1013/ 0 RN/L = 3.50 GRADIENT INTERVAL = -5.00/ 5.00

ALPHAO	BETAO	CNW	CBW	CTW	CHEI	CHEO	IB-ELV	OB-ELV	PHII	ALPHAI
-6.221	-6.006	.05190	.00440	.00770	-.01570	-.02650	9.84477	10.95951	47.90410	-7.23220
-6.153	-4.085	.04350	.00280	.00650	-.00900	-.02290	9.91955	10.99897	37.51150	-6.01880
-6.258	.108	.01400	-.00080	.00380	.02070	-.01970	10.27785	11.03405	.92010	-4.89210
-6.060	4.277	-.01510	-.00190	.00430	.02140	-.01840	10.28657	11.04830	-35.99990	-6.07440
-5.999	6.257	-.02570	-.00250	.00470	.02080	-.01710	10.27910	11.06255	-47.51240	-7.28460
	GRADIENT	-.00701	-.00056	-.00026	.00364	.00054	.04393	.00590	-8.79159	-.00639

RUN NO. 1014/ 0 RN/L = 3.50 GRADIENT INTERVAL = -5.00/ 5.00

ALPHAO	BETAO	CNW	CBW	CTW	CHEI	CHEO	IB-ELV	OB-ELV	PHII	ALPHAI
-4.105	-6.160	.07960	.01080	.02120	-.01900	-.02740	9.80794	10.94964	60.55180	-6.19960
-4.348	-4.027	.06150	.00790	.01650	-.01230	-.02360	9.88272	10.99130	47.55320	-4.76290
-4.141	.192	.03040	.00480	.00910	.01600	-.02190	10.21931	11.00993	.17980	-3.02330
-4.009	4.261	-.00400	.00320	.00810	.01620	-.01990	10.22180	11.03186	-47.44280	-4.73890
-3.867	6.166	-.00750	.00250	.00870	.01470	-.01850	10.20311	11.04720	-58.91390	-6.12610
	GRADIENT	-.00790	-.00057	-.00102	.00346	.00045	.04116	.00489	-11.46169	.00541

RUN NO. 1015/ 0 RN/L = 3.50 GRADIENT INTERVAL = -5.00/ 5.00

ALPHAO	BETAO	CNW	CBW	CTW	CHEI	CHEO	IB-ELV	OB-ELV	PHII	ALPHAI
-.437	-6.999	.14150	.02260	.04060	-.02420	-.02850	9.74990	10.93759	89.99010	-6.00090
-.421	-4.839	.12430	.02030	.03780	-.02030	-.02650	9.79343	10.95951	90.00370	-3.98750
-.393	-.626	.09490	.01560	.03230	.00490	-.02280	10.08104	11.00007	90.01720	-.03390
-.359	3.574	.07240	.01180	.02800	.00500	-.02530	10.08228	10.97266	90.01720	3.91410
-.359	5.766	.06160	.01020	.02580	.00610	-.02790	10.09599	10.94416	90.00370	5.96840
	GRADIENT	-.00617	-.00101	-.00116	.00301	.00014	.03435	.00157	.00161	.93917

IA156A, AEDC PWT 16T-470, O T S W/SILTS (R8NW68) (27 MAY 80)

REFERENCE DATA

SREF = 2690.0000 SQ.FT. XMRP = 976.0000 IN. XT
LREF = 1290.3000 INCHES YMRP = .0000 IN. YT
BREF = 1290.3000 INCHES ZMRP = 400.0000 IN. ZT
SCALE = .0200

PARAMETRIC DATA

IB-ELV = 10.000 OB-ELV = 11.000
BDFLAP = .000 SPDBRK = .000
RUDDER = .000 SILTS = 1.000
MACH = 1.050 RN/L = 3.500

RUN NO. 1016/ 0 RN/L = 3.50 GRADIENT INTERVAL = -5.00/ 5.00

ALPHAO	BETAO	CNW	CBW	CTW	CHEI	CHEO	IB-ELV	OB-ELV	PHII	ALPHAI
4.071	-5.752	.19370	.03100	.06140	-.02820	-.03600	9.70525	10.85537	-56.19230	7.16900
3.954	-3.693	.16870	.02930	.05620	-.02820	-.03350	9.70525	10.88278	-44.94040	5.64820
3.685	.145	.14780	.02530	.04760	-.00960	-.03720	9.91285	10.84222	-.63430	4.03790
3.810	4.089	.13220	.02200	.04300	-.00950	-.04350	9.91397	10.77316	45.21910	5.81530
3.747	6.071	.11840	.01960	.03920	-.00490	-.05130	9.96531	10.68765	56.86830	7.26210
	GRADIENT	-.00469	-.00094	-.00169	.00239	-.00129	.02670	-.01410	11.58613	.02347

IA156A, AEDC PWT 16T-470, O T S W/SILTS (R8NW69) (27 MAY 80)

REFERENCE DATA

SREF = 2690.0000 SQ.FT. XMRP = 976.0000 IN. XT
LREF = 1290.3000 INCHES YMRP = .0000 IN. YT
BREF = 1290.3000 INCHES ZMRP = 400.0000 IN. ZT
SCALE = .0200

PARAMETRIC DATA

IB-ELV = 10.000 OB-ELV = 11.000
BDFLAP = .000 SPDBRK = .000
RUDDER = .000 SILTS = 1.000
MACH = 1.100 RN/L = 3.500

RUN NO. 1017/ 0 RN/L = 3.50 GRADIENT INTERVAL = -5.00/ 5.00

ALPHAO	BETAO	CNW	CBW	CTW	CHEI	CHEO	IB-ELV	OB-ELV	PHII	ALPHAI
-8.097	-5.926	.02770	-.00100	-.00050	-.00340	-.02290	9.98112	10.99283	39.80060	-8.39490
-8.280	-3.763	.01630	-.00270	-.00190	.00490	-.02000	10.08253	11.02540	27.62090	-7.46580
-8.190	.161	-.00800	-.00480	-.00180	.03010	-.01790	10.40412	11.04898	.23520	-6.58050
-8.006	4.422	-.03440	-.00550	-.00100	.03640	-.01570	10.48452	11.07369	-29.78830	-7.55680
-7.997	6.266	-.02950	-.00650	.00030	.03850	-.01450	10.51132	11.08716	-39.44590	-8.54770
	GRADIENT	-.00619	-.00034	.00011	.00381	.00053	.04868	.00590	-7.01484	-.01423

RUN NO. 1018/ 0 RN/L = 3.50 GRADIENT INTERVAL = -5.00/ 5.00

ALPHAO	BETAO	CNW	CBW	CTW	CHEI	CHEO	IB-ELV	OB-ELV	PHII	ALPHAI
-6.199	-5.999	.06150	.00490	.00960	-.01050	-.02440	9.89994	10.97599	48.04010	-7.21930
-6.174	-4.095	.05090	.00300	.00790	-.00400	-.02200	9.97426	11.00294	37.59730	-6.03370
-6.278	.121	.01950	-.00040	.00550	.02460	-.01940	10.33393	11.03214	.87430	-4.90810
-6.064	4.278	-.00400	-.00140	.00660	.02990	-.01660	10.40157	11.06358	-35.90920	-6.08540
-5.886	6.403	-.01310	-.00190	.00770	.03020	-.01440	10.40540	11.08829	-48.66240	-7.33310
	GRADIENT	-.00656	-.00053	-.00016	.00406	.00064	.05111	.00724	-8.77830	-.00552

IA156A, AEDC PWT 16T-470, O T S W/SILTS (R8NW69) (27 MAY 80)

REFERENCE DATA

SREF = 2690.0000 SQ.FT. XMRP = 976.0000 IN. XT
LREF = 1290.3000 INCHES YMRP = .0000 IN. YT
BREF = 1290.3000 INCHES ZMRP = 400.0000 IN. ZT
SCALE = .0200

PARAMETRIC DATA

IB-ELV = 10.000 OB-ELV = 11.000
BDFLAP = .000 SPDBRK = .000
RUDDER = .000 SILTS = 1.000
MACH = 1.100 RN/L = 3.500

RUN NO. 1019/ 0 RN/L = 3.50 GRADIENT INTERVAL = -5.00/ 5.00

ALPHAO	BETAO	CNW	CBW	CTW	CHEI	CHEO	IB-ELV	OB-ELV	PHII	ALPHAI
-4.238	-6.148	.08890	.01140	.02150	-.01440	-.02520	9.85535	10.96700	59.75290	-6.25420
-4.335	-4.024	.07240	.00860	.01870	-.00760	-.02210	9.93310	11.00181	47.72510	-4.75890
-4.254	.256	.03850	.00470	.01570	.02180	-.02080	10.29820	11.01641	-.67250	-3.13410
-3.792	4.279	.00790	.00390	.01630	.02280	-.01880	10.31096	11.03887	-48.99690	-4.63660
-3.868	6.150	.00050	.00280	.01450	.02240	-.02130	10.30586	11.01080	-58.73300	-6.11820
	GRADIENT	-.00777	-.00057	-.00029	.00370	.00040	.04593	.00445	-11.64488	.01860

RUN NO. 1020/ 0 RN/L = 3.50 GRADIENT INTERVAL = -5.00/ 5.00

ALPHAO	BETAO	CNW	CBW	CTW	CHEI	CHEO	IB-ELV	OB-ELV	PHII	ALPHAI
-.440	-7.008	.14640	.02270	.04170	-.01980	-.02660	9.79360	10.95128	89.99010	-6.01380
-.423	-4.851	.12810	.02060	.03940	-.01410	-.02370	9.85878	10.98385	90.00370	-4.00210
-.387	-.508	.10030	.01620	.03530	.01090	-.02190	10.15910	11.00406	90.01720	.07350
-.354	3.675	.07460	.01210	.03100	.01160	-.03040	10.16803	10.90860	90.00370	4.00780
-.360	5.796	.06190	.01020	.02850	.01250	-.03520	10.17952	10.85470	90.01720	5.99250
	GRADIENT	-.00628	-.00100	-.00098	.00303	-.00078	.03648	-.00874	.00002	.93947

RUN NO. 1021/ 0 RN/L = 3.50 GRADIENT INTERVAL = -5.00/ 5.00

ALPHAO	BETAO	CNW	CBW	CTW	CHEI	CHEO	IB-ELV	OB-ELV	PHII	ALPHAI
4.046	-5.934	.19780	.03190	.06250	-.02710	-.03570	9.71013	10.84909	-57.34790	7.27310
3.910	-3.607	.17860	.02940	.05750	-.02430	-.03610	9.74215	10.94459	-44.84280	5.54240
3.691	.192	.15550	.02560	.04930	-.00380	-.04210	9.97655	10.77721	-.04420	4.03040
3.794	4.044	.13590	.02220	.04380	-.00430	-.04780	9.97083	10.71320	45.00440	5.76720
3.760	6.059	.12340	.02010	.04120	-.00060	-.05390	10.01314	10.64470	56.76820	7.24760
	GRADIENT	-.00558	-.00094	-.00179	.00261	-.00153	.02981	-.01717	11.74201	.03036

IA156A, AEDC PWT 16T-470, O T S W/SILTS (R8NW70) (27 MAY 80)

REFERENCE DATA

SREF = 2690.0000 SQ.FT. XMRP = 976.0000 IN. XT
LREF = 1290.3000 INCHES YMRP = .0000 IN. YT
BREF = 1290.3000 INCHES ZMRP = 400.0000 IN. ZT
SCALE = .0200

PARAMETRIC DATA

IB-ELV = 10.000 OB-ELV = 11.000
BDFLAP = .000 SPDBRK = .000
RUDDER = .000 SILTS = 1.000
MACH = 1.150 RN/L = 3.500

RUN NO. 1022/ 0 RN/L = 3.50 GRADIENT INTERVAL = -5.00/ 5.00

ALPHAO	BETAO	CNW	CBW	CTW	CHEI	CHEO	IB-ELV	OB-ELV	PHII	ALPHAI
-8.134	-5.933	.03360	-.00010	-.00010	.00340	-.02140	10.06423	11.00501	39.70040	-8.39680
-8.287	-3.765	.01720	-.00240	-.00170	.01440	-.02070	10.20733	11.01303	27.65650	-7.44400
-8.184	.189	-.00630	-.00480	-.00130	.03790	-.01930	10.51304	11.02905	-.02440	-6.54580
-8.013	4.416	-.03410	-.00560	-.00060	.04540	-.01680	10.61061	11.05767	-29.83360	-7.53110
-8.025	6.285	-.02880	-.00670	.00090	.04650	-.01440	10.62492	11.08515	-39.56450	-8.54370
	GRADIENT	-.00627	-.00039	.00013	.00377	.00048	.04900	.00547	-7.02790	-.01321

RUN NO. 1023/ 0 RN/L = 3.50 GRADIENT INTERVAL = -5.00/ 5.00

ALPHAO	BETAO	CNW	CBW	CTW	CHEI	CHEO	IB-ELV	OB-ELV	PHII	ALPHAI
-6.207	-5.999	.06680	.00660	.00970	-.00430	-.02330	9.96988	10.98326	47.99000	-7.20050
-6.146	-4.081	.05780	.00450	.00920	.00570	-.02200	10.09415	10.99814	37.58300	-5.99300
-6.279	.113	.02400	-.00030	.00670	.03470	-.02100	10.47142	11.00959	.84530	-4.88610
-6.064	4.278	-.00080	-.00150	.00740	.03950	-.01780	10.53386	11.04623	-36.03480	-6.05560
-5.879	6.410	-.01290	-.00210	.00810	.03960	-.02010	10.53516	11.01990	-48.82960	-7.31330
	GRADIENT	-.00701	-.00072	-.00022	.00405	.00050	.05264	.00575	-8.80643	-.00718

RUN NO. 1024/ 0 RN/L = 3.50 GRADIENT INTERVAL = -5.00/ 5.00

ALPHAO	BETAO	CNW	CBW	CTW	CHEI	CHEO	IB-ELV	OB-ELV	PHII	ALPHAI
-4.244	-6.153	.09570	.01310	.02140	-.00800	-.02340	9.92675	10.98212	59.65300	-6.24420
-4.342	-4.026	.08140	.01080	.01960	.00390	-.02170	10.07074	11.00158	47.62480	-4.74990
-4.269	.373	.04410	.00560	.01640	.03130	-.01900	10.42718	11.03249	-2.49890	-3.14890
-3.799	4.328	.00930	.00380	.01660	.03230	-.02450	10.44019	10.96952	-49.42890	-4.66070
-3.890	6.176	.00170	.00250	.01530	.03370	-.02820	10.45841	10.92717	-58.87220	-6.13010
	GRADIENT	-.00863	-.00084	-.00037	.00345	-.00032	.04491	-.00363	-11.61306	.01726

RUN NO. 1025/ 0 RN/L = 3.50 GRADIENT INTERVAL = -5.00/ 5.00

ALPHAO	BETAO	CNW	CBW	CTW	CHEI	CHEO	IB-ELV	OB-ELV	PHII	ALPHAI
-.430	-7.050	.15190	.02350	.04010	-.01400	-.02230	9.85681	10.99471	89.99010	-6.03470
-.405	-4.893	.13670	.02200	.03940	-.00510	-.02040	9.96055	11.01646	90.00370	-4.02830
-.369	-.554	.11140	.01810	.03680	.02220	-.02720	10.30880	10.93861	90.01720	.03400
-.336	3.601	.08670	.01400	.03370	.02320	-.03920	10.32181	10.80124	90.01720	3.93510
-.346	5.794	.07040	.01140	.03090	.02620	-.04620	10.36084	10.72110	90.04430	5.98260
	GRADIENT	-.00589	-.00094	-.00067	.00335	-.00221	.04281	-.02529	.00160	.93758

IA156A, AEDC PWT 16T-470, O T S W/SILTS (R8NW70) (27 MAY 80)

REFERENCE DATA

SREF = 2690.0000 SQ.FT. XMRP = 976.0000 IN. XT
LREF = 1290.3000 INCHES YMRP = .0000 IN. YT
BREF = 1290.3000 INCHES ZMRP = 400.0000 IN. ZT
SCALE = .0200

PARAMETRIC DATA

IB-ELV = 10.000 OB-ELV = 11.000
BDFLAP = .000 SPDBRK = .000
RUDDER = .000 SILTS = 1.000
MACH = 1.150 RN/L = 3.500

RUN NO. 1026/ 0 RN/L = 3.50 GRADIENT INTERVAL = -5.00/ 5.00

ALPHAO	BETAO	CNW	CBW	CTW	CHEI	CHEO	IB-ELV	OB-ELV	PHII	ALPHAI
4.075	-5.757	.19460	.03170	.05920	-.02200	-.03540	9.76356	10.84474	-56.26890	7.15240
3.928	-3.663	.17960	.03010	.05630	-.01480	-.03820	9.84749	10.81269	-45.01710	5.58270
3.704	.117	.16110	.02630	.04950	.00620	-.04790	10.10066	10.70164	-1.04340	4.03360
3.806	3.989	.14130	.02330	.04580	.00470	-.05670	10.08114	10.60090	44.66790	5.72680
3.754	6.054	.12970	.02080	.04300	.00940	-.06350	10.14229	10.52305	56.85400	7.23550
	GRADIENT	-.00501	-.00089	-.00137	.00254	-.00242	.03039	-.02767	11.72081	.02055

IA156A, AEDC PWT 16T-470, O T S W/SILTS (R8NW71) (27 MAY 80)

REFERENCE DATA

SREF = 2690.0000 SQ.FT. XMRP = 976.0000 IN. XT
LREF = 1290.3000 INCHES YMRP = .0000 IN. YT
BREF = 1290.3000 INCHES ZMRP = 400.0000 IN. ZT
SCALE = .0200

PARAMETRIC DATA

IB-ELV = 12.000 OB-ELV = 11.000
BDFLAP = .000 SPDBRK = .000
RUDDER = .000 SILTS = 1.000
MACH = .600 RN/L = 3.500

RUN NO. 1030/ 0 RN/L = 3.50 GRADIENT INTERVAL = -5.00/ 5.00

ALPHAO	BETAO	CNW	CBW	CTW	CHEI	CHEO	IB-ELV	OB-ELV	PHII	ALPHAI
-8.234	-7.829	-.00470	.00120	-.01260	.00010	-.00980	12.12085	11.17690	45.98520	-10.34480
-8.114	-5.816	-.00410	.00110	-.01130	.00090	-.00930	12.12763	11.18063	38.02650	-9.01510
-8.139	-3.803	-.00720	.00070	-.01090	.00340	-.00830	12.14882	11.18809	27.30010	-8.03800
-8.046	.301	-.01860	.00010	-.00770	.01430	-.00740	12.24121	11.19480	-.69980	-7.12330
-7.916	4.243	-.02780	.00040	-.00360	.01670	-.00770	12.26155	11.19257	-27.88880	-8.04690
-7.776	6.289	-.03010	.00090	-.00120	.01770	-.00830	12.27002	11.18809	-39.06930	-9.05900
-7.792	8.315	-.03740	.00090	-.00100	.01900	-.00830	12.28104	11.18809	-47.31730	-10.41180
	GRADIENT	-.00256	-.00004	.00091	.00166	.00008	.01407	.00056	-6.85901	.00043

RUN NO. 1031/ 0 RN/L = 3.49 GRADIENT INTERVAL = -5.00/ 5.00

ALPHAO	BETAO	CNW	CBW	CTW	CHEI	CHEO	IB-ELV	OB-ELV	PHII	ALPHAI
-6.166	-7.930	.03320	.00560	-.00030	-.00100	-.00980	12.11241	11.17690	54.65240	-9.13870
-6.123	-5.906	.02990	.00490	-.00090	-.00020	-.00960	12.11848	11.17840	46.64390	-7.64890
-6.053	-3.999	.02700	.00450	-.00060	.00210	-.00900	12.13780	11.18287	36.23150	-6.42880
-6.113	.073	.01750	.00360	.00100	.01330	-.00830	12.23273	11.18809	1.30670	-5.30390
-5.949	4.187	.00200	.00390	.00460	.01550	-.00940	12.25138	11.17989	-34.63240	-6.46450
-5.886	6.167	-.00590	.00400	.00600	.01650	-.00990	12.25985	11.17616	-46.27180	-7.69240
-5.690	8.315	-.01240	.00410	.00780	.01790	-.01020	12.27172	11.17392	-55.84420	-9.20460
	GRADIENT	-.00306	-.00007	.00064	.00163	-.00005	.01386	-.00037	-8.65633	-.00484

IA156A, AEDC PWT 16T-470, O T S W/SILTS (R8NW71) (27 MAY 80)

REFERENCE DATA

SREF = 2690.0000 SQ.FT. XMRP = 976.0000 IN. XT
LREF = 1290.3000 INCHES YMRP = .0000 IN. YT
BREF = 1290.3000 INCHES ZMRP = 400.0000 IN. ZT
SCALE = .0200

PARAMETRIC DATA

IB-ELV = 12.000 OB-ELV = 11.000
BDFLAP = .000 SPDBRK = .000
RUDDER = .000 SILTS = 1.000
MACH = .600 RN/L = 3.500

RUN NO. 1042/ 0 RN/L = 3.50 GRADIENT INTERVAL = -5.00/ 5.00

ALPHAO	BETAO	CNW	CBW	CTW	CHEI	CHEO	IB-ELV	OB-ELV	PHII	ALPHAI
-4.139	-7.848	.04890	.00980	.00810	-.00380	-.01050	12.09114	11.17168	64.83850	-8.05980
-4.203	-5.940	.04110	.00920	.00630	-.00320	-.01070	12.09570	11.17019	57.72550	-6.51900
-4.233	-3.917	.03950	.00860	.00590	-.00020	-.01020	12.11848	11.17392	46.20720	-5.04520
-4.127	.371	.02450	.00780	.00750	.01170	-.01030	12.21917	11.17317	-2.29630	-3.44770
-3.739	4.228	.00210	.00850	.01170	.01300	-.01220	12.23019	11.15900	-47.65190	-4.94820
-3.804	6.065	-.00410	.00820	.01170	.01390	-.01230	12.23782	11.15826	-57.52190	-6.42580
-3.832	8.043	-.00790	.00760	.01130	.01550	-.01250	12.25138	11.15676	-64.46380	-8.12420
	GRADIENT	-.00457	-.00002	.00071	.00164	-.00024	.01390	-.00180	-11.52057	.01861

RUN NO. 1043/ 0 RN/L = 3.50 GRADIENT INTERVAL = -5.00/ 5.00

ALPHAO	BETAO	CNW	CBW	CTW	CHEI	CHEO	IB-ELV	OB-ELV	PHII	ALPHAI
-.332	-8.766	.10230	.01870	.03120	-.00430	-.01400	12.08734	11.14558	89.94960	-8.02020
-.318	-6.571	.09390	.01780	.02920	-.00450	-.01370	12.08583	11.14781	89.96310	-5.91740
-.304	-4.542	.08800	.01730	.02850	-.00330	-.01390	12.09494	11.14632	89.96310	-3.96530
-.278	-.389	.07540	.01590	.02750	.00920	-.01400	12.19798	11.14558	89.97660	.03470
-.246	3.690	.06870	.01550	.02840	.01190	-.01570	12.22086	11.13290	89.99010	3.97380
-.248	5.784	.06430	.01490	.02800	.01360	-.01620	12.23527	11.12917	90.00370	5.99140
-.244	7.880	.05780	.01430	.02720	.01590	-.01700	12.25477	11.12320	90.01720	8.00880
	GRADIENT	-.00235	-.00022	-.00001	.00185	-.00022	.01533	-.00163	.00328	.96438

RUN NO. 1044/ 0 RN/L = 3.50 GRADIENT INTERVAL = -5.00/ 5.00

ALPHAO	BETAO	CNW	CBW	CTW	CHEI	CHEO	IB-ELV	OB-ELV	PHII	ALPHAI
4.016	-8.006	.15320	.02940	.06050	-.00550	-.01960	12.07823	11.10381	-64.95020	9.01370
4.084	-5.830	.14450	.02840	.05750	-.00700	-.02080	12.06684	11.09486	-56.94420	7.24990
4.047	-3.841	.13960	.02770	.05460	-.00600	-.02190	12.07443	11.08665	-45.96510	5.76610
3.961	.182	.13690	.02490	.04680	.00430	-.02370	12.15645	11.07323	-.17180	4.20080
3.891	4.129	.13060	.02300	.04380	.00870	-.02600	12.19374	11.05607	45.23350	5.85900
3.844	6.178	.12240	.02220	.04170	.01130	-.02690	12.21578	11.04936	57.03970	7.40850
3.838	8.159	.11580	.02140	.04020	.01320	-.02670	12.23188	11.05085	64.04210	9.08630
	GRADIENT	-.00113	-.00059	-.00136	.00185	-.00051	.01499	-.00384	11.44154	.01037

IA156A, AEDC PWT 16T-470, O T S W/SILTS (R8NW71) (27 MAY 80)

REFERENCE DATA

SREF = 2690.0000 SQ.FT. XMRP = 976.0000 IN. XT
LREF = 1290.3000 INCHES YMRP = .0000 IN. YT
BREF = 1290.3000 INCHES ZMRP = 400.0000 IN. ZT
SCALE = .0200

PARAMETRIC DATA

IB-ELV = 12.000 OB-ELV = 11.000
BDFLAP = .000 SPDBRK = .000
RUDDER = .000 SILTS = 1.000
MACH = .600 RN/L = 3.500

RUN NO. 1045/ 0 RN/L = 3.51 GRADIENT INTERVAL = -5.00/ 5.00

ALPHAO	BETAO	CNW	CBW	CTW	CHEI	CHEO	IB-ELV	OB-ELV	PHII	ALPHAI
6.193	-7.946	.17660	.03480	.07160	-.00610	-.02370	12.07367	11.07323	-53.80380	10.05370
6.176	-5.889	.17400	.03390	.06960	-.00710	-.02570	12.06608	11.05831	-45.59570	8.56980
6.146	-3.831	.17190	.03230	.06600	-.00680	-.02670	12.06836	11.05085	-33.99730	7.32080
5.858	.189	.15910	.02870	.05710	.00130	-.02780	12.13102	11.04265	-.08520	5.99570
5.792	4.072	.14670	.02680	.05150	.00580	-.02870	12.16916	11.03593	34.04440	7.17790
5.732	6.148	.13930	.02580	.04940	.00810	-.02980	12.18865	11.02773	46.32890	8.46290
5.792	8.167	.12950	.02470	.04690	.00980	-.03100	12.20306	11.01878	54.23760	10.01220
	GRADIENT	-.00319	-.00070	-.00184	.00160	-.00025	.01277	-.00189	8.60869	-.01991

RUN NO. 1046/ 0 RN/L = 3.51 GRADIENT INTERVAL = -5.00/ 5.00

ALPHAO	BETAO	CNW	CBW	CTW	CHEI	CHEO	IB-ELV	OB-ELV	PHII	ALPHAI
8.069	-7.802	.20370	.03980	.08090	-.00650	-.02770	12.07064	11.04339	-45.84660	11.12100
7.983	-5.735	.19950	.03810	.07720	-.00730	-.02870	12.06456	11.03593	-37.56260	9.78000
7.974	-3.764	.19680	.03680	.07420	-.00750	-.02900	12.06304	11.03369	-27.15540	8.80100
7.880	.174	.18880	.03350	.06660	-.00290	-.03090	12.09798	11.01952	-.17230	7.89600
7.926	4.199	.17870	.03140	.06130	.00210	-.03480	12.13780	10.99043	27.31430	8.94350
7.886	6.200	.17210	.03000	.05810	.00440	-.03640	12.15729	10.97850	37.89770	9.97540
7.898	8.245	.15710	.02830	.05350	.00640	-.03750	12.17425	10.97029	46.13560	11.31700
	GRADIENT	-.00227	-.00068	-.00162	.00121	-.00073	.00939	-.00544	6.83962	.01878

IA156A, AEDC PWT 16T-470, 0 T'S W/SILTS (R8NW72) (27 MAY 80)

REFERENCE DATA

SREF = 2690.0000 SQ.FT. XMRP = 976.0000 IN. XT
LREF = 1290.3000 INCHES YMRP = .0000 IN. YT
BREF = 1290.3000 INCHES ZMRP = 400.0000 IN. ZT
SCALE = .0200

PARAMETRIC DATA

IB-ELV = 12.000 OB-ELV = 11.000
BDFLAP = .000 SPDBRK = .000
RUDDER = .000 SILTS = 1.000
MACH = .800 RN/L = 3.500

RUN NO. 1047/ 0 RN/L = 3.50 GRADIENT INTERVAL = -5.00/ 5.00

ALPHAO	BETAO	CNW	CBW	CTW	CHEI	CHEO	IB-ELV	OB-ELV	PHII	ALPHAI
-8.304	-5.868	.00950	.00080	-.01100	-.02420	-.00800	11.89202	11.17598	37.98350	-8.88770
-8.251	-3.829	.00320	.00020	-.01090	-.02220	-.00750	11.91087	11.18061	27.45690	-7.84590
-8.163	.342	-.01530	-.00080	-.00960	.00420	-.00620	12.16416	11.19264	-.98090	-6.93810
-8.002	4.333	-.02870	.00010	-.00590	.01030	-.00660	12.22829	11.18894	-28.40560	-7.87760
-7.991	6.251	-.03260	.00020	-.00450	.01150	-.00720	12.24091	11.18338	-38.46240	-8.89560
	GRADIENT	-.00391	-.00001	.00061	.00400	.00011	.03905	.00103	-6.84352	-.00223

RUN NO. 1048/ 0 RN/L = 3.50 GRADIENT INTERVAL = -5.00/ 5.00

ALPHAO	BETAO	CNW	CBW	CTW	CHEI	CHEO	IB-ELV	OB-ELV	PHII	ALPHAI
-6.203	-5.976	.03990	.00560	.00150	-.02300	-.00820	11.90333	11.17413	46.93030	-7.49250
-6.142	-4.058	.03640	.00490	.00100	-.02140	-.00730	11.91840	11.18246	36.53900	-6.28300
-6.236	.113	.01640	.00300	-.00070	.00430	-.00530	12.16521	11.20096	.96410	-5.16710
-6.050	4.259	.00350	.00350	.00200	.00980	-.00680	12.22304	11.18708	-34.92540	-6.33750
-5.788	6.350	-.00370	.00410	.00450	.01120	-.00790	12.23776	11.17691	-47.86090	-7.51030
	GRADIENT	-.00396	-.00017	.00012	.00375	.00006	.03665	.00056	-8.59292	-.00627

RUN NO. 1049/ 0 RN/L = 3.50 GRADIENT INTERVAL = -5.00/ 5.00

ALPHAO	BETAO	CNW	CBW	CTW	CHEI	CHEO	IB-ELV	OB-ELV	PHII	ALPHAI
-4.135	-6.074	.06530	.01020	.01310	-.02170	-.00780	11.91558	11.17783	59.05360	-6.36330
-4.334	-3.986	.05540	.00890	.01060	-.02010	-.00720	11.93065	11.18338	46.40050	-4.94720
-4.238	.373	.03420	.00750	.01000	.00490	-.00640	12.17152	11.19079	-2.24970	-3.35040
-3.788	4.319	.01520	.00830	.01310	.00840	-.00850	12.20832	11.17136	-48.18150	-4.85010
-3.866	6.161	.00870	.00780	.01320	.00990	-.00920	12.22409	11.16488	-57.77950	-6.32460
-3.826	6.368	.01510	.00770	.01380	.01020	-.00930	12.22724	11.16395	-58.90690	-6.47540
	GRADIENT	-.00484	-.00008	.00029	.00347	-.00015	.03381	-.00139	-11.38391	.01786

RUN NO. 1050/ 0 RN/L = 3.50 GRADIENT INTERVAL = -5.00/ 5.00

ALPHAO	BETAO	CNW	CBW	CTW	CHEI	CHEO	IB-ELV	OB-ELV	PHII	ALPHAI
-.351	-6.864	.11530	.01950	.03740	-.01530	-.01090	11.97587	11.14915	90.00370	-5.99990
-.339	-4.760	.10260	.01880	.03570	-.01880	-.01050	11.94289	11.15285	90.01720	-4.00560
-.315	-.547	.08460	.01680	.03280	.00170	-.01020	12.13787	11.15563	90.01720	.00420
-.276	3.623	.07470	.01590	.03240	.00660	-.01220	12.18939	11.13712	90.01720	3.98570
-.273	5.732	.06750	.01550	.03110	.00950	-.01340	12.21988	11.12602	90.00370	5.99140
	GRADIENT	-.00333	-.00035	-.00039	.00303	-.00020	.02943	-.00187	-.00000	.95325

IA156A, AEDC PWT 16T-470, O T S W/SILTS (R8NW72) (27 MAY 80)

REFERENCE DATA

SREF = 2690.0000 SQ.FT. XMRP = 976.0000 IN. XT
LREF = 1290.3000 INCHES YMRP = .0000 IN. YT
BREF = 1290.3000 INCHES ZMRP = 400.0000 IN. ZT
SCALE = .0200

PARAMETRIC DATA

IB-ELV = 12.000 OB-ELV = 11.000
BDFLAP = .000 SPDBRK = .000
RUDDER = .000 SILTS = 1.000
MACH = .800 RN/L = 3.500

RUN NO. 1051/ 0 RN/L = 3.49 GRADIENT INTERVAL = -5.00/ 5.00

ALPHAO	BETAO	CNW	CBW	CTW	CHEI	CHEO	IB-ELV	OB-ELV	PHII	ALPHAI
4.088	-5.750	.16760	.03090	.06490	-.01700	-.01950	11.95985	11.06958	-56.77010	7.19890
3.968	-3.736	.15720	.02970	.06070	-.01930	-.01960	11.93818	11.06866	-46.03490	5.67770
3.862	.188	.14890	.02670	.05200	.00080	-.01990	12.12841	11.06588	-.13840	4.14680
3.796	3.973	.14040	.02490	.04790	.00580	-.02130	12.18098	11.05293	44.96860	5.72240
3.771	6.089	.13160	.02370	.04520	.00950	-.02130	12.21988	11.05293	57.25410	7.31970
	GRADIENT	-.00218	-.00062	-.00166	.00327	-.00022	.03160	-.00203	11.80510	.00339

RUN NO. 1052/ 0 RN/L = 3.50 GRADIENT INTERVAL = -5.00/ 5.00

ALPHAO	BETAO	CNW	CBW	CTW	CHEI	CHEO	IB-ELV	OB-ELV	PHII	ALPHAI
6.093	-5.815	.18860	.03370	.07200	-.01440	-.02350	11.98434	11.03257	-45.79790	8.45840
6.050	-3.777	.18780	.03290	.07030	-.01670	-.02460	11.96268	11.02239	-34.28350	7.21330
5.751	.160	.17330	.03100	.06320	-.00170	-.02380	12.10399	11.02980	-.42620	5.89730
5.680	4.069	.15960	.02870	.05670	.00280	-.02780	12.14944	10.99279	34.73040	7.10040
5.760	6.016	.15190	.02800	.05470	.00580	-.03050	12.18098	10.96781	45.75610	8.38310
	GRADIENT	-.00359	-.00054	-.00173	.00249	-.00041	.02382	-.00377	8.79673	-.01477

IA156A, AEDC PWT 16T-470, O T S W/SILTS (R8NW73) (27 MAY 80)

REFERENCE DATA

SREF = 2690.0000 SQ.FT. XMRP = 976.0000 IN. XT
LREF = 1290.3000 INCHES YMRP = .0000 IN. YT
BREF = 1290.3000 INCHES ZMRP = 400.0000 IN. ZT
SCALE = .0200

PARAMETRIC DATA

IB-ELV = 12.000 OB-ELV = 11.000
BDFLAP = .000 SPDBRK = .000
RUDDER = .000 SILTS = 1.000
MACH = .900 RN/L = 3.500

RUN NO. 1053/ 0 RN/L = 3.50 GRADIENT INTERVAL = -5.00/ 5.00

ALPHAO	BETAO	CNW	CBW	CTW	CHEI	CHEO	IB-ELV	OB-ELV	PHII	ALPHAI
-8.265	-5.904	-.00350	-.00090	-.00980	-.03430	-.01140	11.77112	11.13612	38.52000	-8.73450
-8.238	-3.811	-.00650	-.00160	-.00880	-.03130	-.00960	11.80164	11.15410	27.54960	-7.69930
-8.189	.338	-.02520	-.00320	-.00830	-.00010	-.00920	12.11898	11.15809	-.99100	-6.82920
-7.993	4.302	-.03600	-.00270	-.00450	.00840	-.00770	12.21536	11.17308	-28.47900	-7.72610
	GRADIENT	-.00364	-.00014	.00053	.00491	.00023	.05119	.00233	-6.90599	-.00165

IA156A, AEDC PWT 16T-470, O T S W/SILTS (R8NW73) (27 MAY 80)

REFERENCE DATA

SREF = 2690.0000 SQ.FT. XMRP = 976.0000 IN. XT
LREF = 1290.3000 INCHES YMRP = .0000 IN. YT
BREF = 1290.3000 INCHES ZMRP = 400.0000 IN. ZT
SCALE = .0200

PARAMETRIC DATA

IB-ELV = 12.000 OB-ELV = 11.000
BDFLAP = .000 SPDBRK = .000
RUDDER = .000 SILTS = 1.000
MACH = .900 RN/L = 3.500

RUN NO. 1054/ 0 RN/L = 3.50 GRADIENT INTERVAL = -5.00/ 5.00

ALPHAO	BETAO	CNW	CBW	CTW	CHEI	CHEO	IB-ELV	OB-ELV	PHII	ALPHAI
-6.202	-5.973	.03720	.00390	.00330	-.03050	-.00940	11.80977	11.15610	47.25250	-7.36880
-6.173	-4.070	.03220	.00300	.00280	-.02800	-.00820	11.83520	11.16808	36.71770	-6.19960
-6.253	.118	.00810	.00060	.00020	.00170	-.00750	12.13930	11.17508	.86030	-5.07520
-6.057	4.276	-.01200	.00100	.00290	.01150	-.00610	12.25055	11.18906	-35.30920	-6.24620
-5.843	6.363	-.02170	.00130	.00510	.01660	-.00530	12.30844	11.19705	-47.99330	-7.44400
	GRADIENT	-.00530	-.00024	.00001	.00474	.00025	.04980	.00251	-8.63096	-.00524

RUN NO. 1055/ 0 RN/L = 3.50 GRADIENT INTERVAL = -5.00/ 5.00

ALPHAO	BETAO	CNW	CBW	CTW	CHEI	CHEO	IB-ELV	OB-ELV	PHII	ALPHAI
-4.160	-6.094	.06340	.00940	.01610	-.02800	-.00910	11.83520	11.15909	59.28190	-6.30480
-4.335	-4.006	.05090	.00770	.01290	-.02620	-.00890	11.85351	11.16109	46.81580	-4.87610
-4.250	.375	.02550	.00540	.01030	.00180	-.00970	12.14043	11.15310	-2.32730	-3.28140
-3.800	4.325	.00190	.00580	.01270	.01390	-.00820	12.27779	11.16808	-48.50210	-4.78100
-3.881	6.172	-.00400	.00510	.01240	.01910	-.00660	12.33682	11.18407	-58.07880	-6.25520
	GRADIENT	-.00588	-.00023	-.00003	.00484	.00008	.05119	.00079	-11.43730	.01780

RUN NO. 1056/ 0 RN/L = 3.50 GRADIENT INTERVAL = -5.00/ 5.00

ALPHAO	BETAO	CNW	CBW	CTW	CHEI	CHEO	IB-ELV	OB-ELV	PHII	ALPHAI
-.383	-7.001	.12130	.02030	.04090	-.02450	-.01310	11.87080	11.11913	90.00370	-6.07350
-.364	-4.814	.10690	.01920	.03820	-.02900	-.01410	11.82503	11.10914	90.00370	-4.00970
-.332	-.509	.08240	.01610	.03300	-.00160	-.01470	12.10373	11.10315	90.01720	.05710
-.297	3.586	.06740	.01430	.03060	.01270	-.01220	12.26417	11.12812	90.01720	3.94370
-.300	5.750	.05870	.01310	.02830	.01950	-.01330	12.34136	11.11714	90.00370	5.98920
	GRADIENT	-.00471	-.00058	-.00091	.00498	.00022	.05238	.00223	.00162	.94670

RUN NO. 1058/ 0 RN/L = 3.51 GRADIENT INTERVAL = -5.00/ 5.00

ALPHAO	BETAO	CNW	CBW	CTW	CHEI	CHEO	IB-ELV	OB-ELV	PHII	ALPHAI
4.100	-5.777	.16850	.02960	.06240	-.02980	-.02200	11.81689	11.03023	-56.61000	7.20890
3.958	-3.686	.15910	.02870	.05900	-.02820	-.02270	11.83317	11.02323	-45.50510	5.62640
3.691	.102	.14200	.02590	.04980	.00260	-.02570	12.14952	10.99326	-1.46610	3.99480
3.806	3.991	.13230	.02410	.04570	.00930	-.02810	12.22557	10.96929	44.89700	5.73440
3.757	6.067	.12480	.02280	.04320	.01380	-.03060	12.27666	10.94431	57.06830	7.27420
	GRADIENT	-.00349	-.00060	-.00173	.00487	-.00070	.05097	-.00702	11.77635	.01599

IA156A, AEDC PWT 16T-470, O T S W/SILTS (R8NW74) (27 MAY 80)

REFERENCE DATA

SREF = 2690.0000 SQ.FT. XMRP = 976.0000 IN. XT
LREF = 1290.3000 INCHES YMRP = .0000 IN. YT
BREF = 1290.3000 INCHES ZMRP = 400.0000 IN. ZT
SCALE = .0200

PARAMETRIC DATA

IB-ELV = 12.000 OB-ELV = 11.000
BDFLAP = .000 SPDBRK = .000
RUDDER = .000 SILTS = 1.000
MACH = .950 RN/L = 3.500

RUN NO. 1059/ 0 RN/L = 3.50 GRADIENT INTERVAL = -5.00/ 5.00

ALPHAO	BETAO	CNW	CBW	CTW	CHEI	CHEO	IB-ELV	OB-ELV	PHII	ALPHAI
-8.242	-5.880	.00230	-.00120	-.00710	-.05220	-.02200	11.56945	11.02211	38.64870	-8.61920
-8.273	-3.814	-.00590	-.00210	-.00750	-.05420	-.01670	11.54836	11.07701	27.62800	-7.64290
-8.173	.400	-.02460	-.00340	-.00740	-.02210	-.00600	11.88691	11.18785	-1.52240	-6.74100
-8.007	4.354	-.04040	-.00290	-.00470	-.01710	-.00370	11.93965	11.21167	-28.96780	-7.68350
-8.032	6.270	-.04930	-.00280	-.00260	-.01400	-.00320	11.97234	11.21685	-38.92280	-8.71660
	GRADIENT	-.00423	-.00010	.00034	.00458	.00160	.04826	.01659	-6.92859	-.00258

RUN NO. 1060/ 0 RN/L = 3.50 GRADIENT INTERVAL = -5.00/ 5.00

ALPHAO	BETAO	CNW	CBW	CTW	CHEI	CHEO	IB-ELV	OB-ELV	PHII	ALPHAI
-6.220	-5.996	.03830	.00410	.00430	-.04610	-.02260	11.63379	11.01590	47.46010	-7.33210
-6.170	-4.074	.03290	.00310	.00350	-.04530	-.01890	11.64223	11.05422	36.94650	-6.13800
-6.247	.101	.00710	.00100	.00060	-.02200	-.00880	11.88797	11.15885	.98620	-5.01320
-6.069	4.265	-.01550	.00100	.00230	-.01730	-.00710	11.93754	11.17645	-35.38600	-6.18870
-5.780	6.369	-.02230	.00170	.00570	-.01490	-.00730	11.96285	11.17438	-48.50900	-7.35290
	GRADIENT	-.00580	-.00025	-.00014	.00336	.00142	.03542	.01466	-8.67397	-.00595

RUN NO. 1061/ 0 RN/L = 3.50 GRADIENT INTERVAL = -5.00/ 5.00

ALPHAO	BETAO	CNW	CBW	CTW	CHEI	CHEO	IB-ELV	OB-ELV	PHII	ALPHAI
-4.121	-6.098	.06510	.00980	.01720	-.03940	-.02200	11.70445	11.02211	59.76720	-6.24330
-4.336	-4.006	.05210	.00790	.01350	-.04060	-.01990	11.69180	11.04387	47.03770	-4.82910
-4.251	.375	.02480	.00540	.01030	-.02370	-.01240	11.87004	11.12155	-2.38930	-3.23320
-3.806	4.342	.00440	.00560	.01300	-.01850	-.01260	11.92488	11.11948	-48.79480	-4.75590
-3.876	6.160	-.00240	.00520	.01400	-.01480	-.01110	11.96391	11.13502	-58.27370	-6.19760
	GRADIENT	-.00572	-.00028	-.00007	.00267	.00089	.02814	.00921	-11.47722	.01494

RUN NO. 1062/ 0 RN/L = 3.50 GRADIENT INTERVAL = -5.00/ 5.00

ALPHAO	BETAO	CNW	CBW	CTW	CHEI	CHEO	IB-ELV	OB-ELV	PHII	ALPHAI
-.398	-6.992	.12090	.02040	.04020	-.03480	-.02670	11.75297	10.97343	89.99010	-6.04270
-.379	-4.843	.10550	.01890	.03700	-.04100	-.02860	11.68758	10.95375	90.00370	-4.02280
-.347	-.532	.07960	.01550	.03140	-.02750	-.02290	11.82996	11.01279	90.01720	.03840
-.307	3.589	.06630	.01390	.02950	-.02590	-.02690	11.84684	10.97136	90.03070	3.93940
-.306	5.751	.05890	.01300	.02880	-.01950	-.02660	11.91434	10.97446	90.00370	5.97930
	GRADIENT	-.00466	-.00059	-.00089	.00180	.00021	.01900	.00218	.00320	.94427

IA156A, AEDC PWT 16T-470, O T S W/SILTS (R8NW74) (27 MAY 80)

REFERENCE DATA

SREF = 2690.0000 SQ.FT. XMRP = 976.0000 IN. XT
LREF = 1290.3000 INCHES YMRP = .0000 IN. YT
BREF = 1290.3000 INCHES ZMRP = 400.0000 IN. ZT
SCALE = .0200

PARAMETRIC DATA

IB-ELV = 12.000 OB-ELV = 11.000
BDFLAP = .000 SPDBRK = .000
RUDDER = .000 SILTS = 1.000
MACH = .950 RN/L = 3.500

RUN NO. 1063/ 0 RN/L = 3.50 GRADIENT INTERVAL = -5.00/ 5.00

ALPHAO	BETAO	CNW	CBW	CTW	CHEI	CHEO	IB-ELV	OB-ELV	PHII	ALPHAI
3.973	-5.846	.17780	.02990	.06230	-.03830	-.03800	11.71606	10.85638	-57.58460	7.19560
3.965	-3.756	.16290	.02920	.05870	-.04370	-.04250	11.65910	10.80976	-45.76300	5.67980
3.868	.183	.14340	.02640	.04900	-.02500	-.04550	11.85633	10.77869	-.12960	4.18350
3.788	3.934	.13090	.02400	.04360	-.01850	-.04560	11.92488	10.77765	44.50320	5.68640
3.762	6.067	.11890	.02190	.03990	-.01080	-.04500	12.00609	10.78387	56.99690	7.27200
	GRADIENT	-.00417	-.00068	-.00197	.00329	-.00041	.03469	-.00421	11.73698	-.00233

IA156A, AEDC PWT 16T-470, O T S W/SILTS (R8NW75) (27 MAY 80)

REFERENCE DATA

SREF = 2690.0000 SQ.FT. XMRP = 976.0000 IN. XT
LREF = 1290.3000 INCHES YMRP = .0000 IN. YT
BREF = 1290.3000 INCHES ZMRP = 400.0000 IN. ZT
SCALE = .0200

PARAMETRIC DATA

IB-ELV = 12.000 OB-ELV = 11.000
BDFLAP = .000 SPDBRK = .000
RUDDER = .000 SILTS = 1.000
MACH = 1.050 RN/L = 3.500

RUN NO. 1064/ 0 RN/L = 3.50 GRADIENT INTERVAL = -5.00/ 5.00

ALPHAO	BETAO	CNW	CBW	CTW	CHEI	CHEO	IB-ELV	OB-ELV	PHII	ALPHAI
-8.235	-5.891	.00530	-.00110	-.00570	-.02150	-.02660	11.88003	10.95841	39.07800	-8.47420
-8.265	-3.820	-.00330	-.00260	-.00640	-.01560	-.02230	11.94588	11.00555	27.97020	-7.47660
-8.181	.395	-.02390	-.00480	-.00510	.01220	-.01820	12.27197	11.05049	-1.54390	-6.59340
-8.023	4.347	-.05180	-.00570	-.00420	.01990	-.01620	12.36789	11.07242	-29.29950	-7.53310
-8.027	6.273	-.05720	-.00610	-.00380	.01730	-.01500	12.33550	11.08557	-39.40410	-8.56360
	GRADIENT	-.00593	-.00038	.00027	.00437	.00075	.05196	.00822	-7.01248	-.00452

RUN NO. 1065/ 0 RN/L = 3.51 GRADIENT INTERVAL = -5.00/ 5.00

ALPHAO	BETAO	CNW	CBW	CTW	CHEI	CHEO	IB-ELV	OB-ELV	PHII	ALPHAI
-6.221	-6.014	.04720	.00490	.00670	-.02680	-.02740	11.82088	10.94964	47.91120	-7.23320
-6.150	-4.070	.03570	.00310	.00490	-.02150	-.02400	11.88003	10.98691	37.44710	-5.99990
-6.266	.103	.00650	-.00030	.00260	.00920	-.01970	12.23460	11.03405	.97470	-4.89910
-6.040	4.270	-.02120	-.00130	.00340	.01140	-.01850	12.26201	11.04720	-36.02780	-6.05560
-6.018	6.270	-.03500	-.00200	.00320	.01040	-.01730	12.24955	11.06036	-47.47060	-7.30640
	GRADIENT	-.00682	-.00053	-.00018	.00395	.00066	.04581	.00723	-8.80982	-.00661

IA156A, AEDC PWT 16T-470, O T S W/SILTS (R8NW75) (27 MAY 80)

REFERENCE DATA

SREF = 2690.0000 SQ.FT. XMRP = 976.0000 IN. XT
LREF = 1290.3000 INCHES YMRP = .0000 IN. YT
BREF = 1290.3000 INCHES ZMRP = 400.0000 IN. ZT
SCALE = .0200

PARAMETRIC DATA

IB-ELV = 12.000 OB-ELV = 11.000
BDFLAP = .000 SPDBRK = .000
RUDDER = .000 SILTS = 1.000
MACH = 1.050 RN/L = 3.500

RUN NO. 1066/ 0 RN/L = 3.50 GRADIENT INTERVAL = -5.00/ 5.00

ALPHAO	BETAO	CNW	CBW	CTW	CHEI	CHEO	IB-ELV	OB-ELV	PHII	ALPHAI
-4.139	-6.114	.07450	.01110	.02040	-.03010	-.02800	11.78405	10.94307	60.10960	-6.17970
-4.344	-4.021	.05780	.00830	.01600	-.02480	-.02400	11.84320	10.98691	47.53170	-4.76090
-4.271	.362	.02520	.00470	.01270	.00550	-.02230	12.18851	11.00555	-2.40460	-3.15500
-3.794	4.347	-.00750	.00370	.01360	.00600	-.02070	12.19474	11.02309	-49.52640	-4.67570
-3.881	6.180	-.01840	.00280	.01240	.00480	-.01950	12.17979	11.03624	-58.85130	-6.14000
	GRADIENT	-.00780	-.00055	-.00029	.00373	.00039	.04262	.00432	-11.59558	.01610

RUN NO. 1067/ 0 RN/L = 3.50 GRADIENT INTERVAL = -5.00/ 5.00

ALPHAO	BETAO	CNW	CBW	CTW	CHEI	CHEO	IB-ELV	OB-ELV	PHII	ALPHAI
-.434	-7.039	.13690	.02320	.04280	-.03380	-.02870	11.74275	10.93539	89.99010	-6.03170
-.416	-4.882	.11790	.02080	.03980	-.03150	-.02760	11.76842	10.94745	90.00370	-4.02380
-.390	-.537	.08690	.01590	.03370	-.00480	-.02360	12.06643	10.99130	90.03070	.04730
-.352	3.599	.06470	.01240	.02960	-.00310	-.02650	12.08540	10.95951	90.01720	3.93610
-.352	5.767	.05540	.01070	.02740	-.00210	-.02890	12.09656	10.93320	90.00370	5.97060
	GRADIENT	-.00628	-.00099	-.00120	.00337	.00014	.03764	.00149	.00163	.93851

RUN NO. 1068/ 0 RN/L = 3.50 GRADIENT INTERVAL = -5.00/ 5.00

ALPHAO	BETAO	CNW	CBW	CTW	CHEI	CHEO	IB-ELV	OB-ELV	PHII	ALPHAI
3.960	-5.839	.18080	.03140	.06310	-.03320	-.03700	11.74945	10.84441	-57.32700	7.17680
3.945	-3.748	.16730	.02970	.05950	-.03820	-.03610	11.69364	10.85427	-45.47720	5.67110
3.825	.184	.14360	.02590	.05020	-.01660	-.03850	11.93472	10.82797	-.04420	4.16410
3.799	3.943	.12730	.02270	.04480	-.00900	-.04580	12.01955	10.74794	44.21680	5.70820
3.771	6.067	.11420	.02020	.04080	-.00350	-.05540	12.08094	10.64271	56.71110	7.27420
	GRADIENT	-.00521	-.00091	-.00191	.00381	-.00126	.04252	-.01377	11.66122	.00184

IA156A, AEDC PWT 16T-470, O T S W/SILTS (R8NW76) (27 MAY 80)

REFERENCE DATA

SREF = 2690.0000 SQ.FT. XMRP = 976.0000 IN. XT
LREF = 1290.3000 INCHES YMRP = .0000 IN. YT
BREF = 1290.3000 INCHES ZMRP = 400.0000 IN. ZT
SCALE = .0200

PARAMETRIC DATA

IB-ELV = 12.000 OB-ELV = 11.000
BDFLAP = .000 SPDBRK = .000
RUDDER = .000 SILTS = 1.000
MACH = 1.100 RN/L = 3.500

RUN NO. 1069/ 0 RN/L = 3.50 GRADIENT INTERVAL = -5.00/ 5.00

ALPHAO	BETAO	CNW	CBW	CTW	CHEI	CHEO	IB-ELV	OB-ELV	PHII	ALPHAI
-8.222	-6.002	.00830	-.00050	-.00420	-.01350	-.02460	11.96564	10.97374	39.70040	-8.51590
-8.271	-3.866	.00030	-.00210	-.00420	-.00670	-.02140	12.04339	11.00968	28.29820	-7.50240
-8.193	.284	-.02200	-.00440	-.00330	.01820	-.01860	12.35226	11.04112	-.64920	-6.58740
-8.019	4.302	-.04590	-.00490	-.00230	.02430	-.01630	12.43010	11.06695	-29.01670	-7.51030
-8.001	6.248	-.05590	-.00570	-.00140	.02720	-.01510	12.46711	11.08043	-39.34830	-8.53380
	GRADIENT	-.00565	-.00034	.00023	.00381	.00062	.04749	.00701	-7.01661	.00024

RUN NO. 1070/ 0 RN/L = 3.50 GRADIENT INTERVAL = -5.00/ 5.00

ALPHAO	BETAO	CNW	CBW	CTW	CHEI	CHEO	IB-ELV	OB-ELV	PHII	ALPHAI
-6.216	-6.014	.05280	.00540	.00880	-.02060	-.02600	11.88445	10.95802	48.01860	-7.23610
-6.155	-4.091	.04220	.00350	.00730	-.01530	-.02350	11.94506	10.98609	37.63300	-6.01880
-6.285	.117	.01090	.00010	.00540	.01400	- 02030	12.29866	11.02203	.93690	-4.90910
-6.066	4.273	-.01810	-.00090	.00590	.01890	-.01700	12.36119	11.05909	-35.88130	-6.07940
-5.855	6.375	-.02930	-.00110	.00710	.01840	-.01540	12.35481	11.07706	-48.63450	-7.29750
	GRADIENT	-.00721	-.00053	-.00017	.00409	.00078	.04982	.00873	-8.78923	-.00668

RUN NO. 1071/ 0 RN/L = 3.50 GRADIENT INTERVAL = -5.00/ 5.00

ALPHAO	BETAO	CNW	CBW	CTW	CHEI	CHEO	IB-ELV	OB-ELV	PHII	ALPHAI
-4.144	-6.117	.08220	.01230	.02230	-.02480	-.02620	11.83643	10.95577	60.16670	-6.18670
-4.345	-4.025	.06390	.00900	.01840	-.01900	-.02300	11.90275	10.99171	47.62480	-4.76390
-4.263	.373	.02940	.00510	.01560	.01130	-.02080	12.26420	11.01641	-2.41150	-3.15290
-3.796	4.339	-.00100	.00420	.01670	.01170	-.01940	12.26931	11.03214	-49.36610	-4.67870
-3.871	6.167	-.00920	.00320	.01520	.01130	-.02240	12.26420	10.99845	-58.75380	-6.13110
	GRADIENT	-.00776	-.00058	-.00021	.00373	.00043	.04452	.00485	-11.59283	.01663

RUN NO. 1072/ 0 RN/L = 3.50 GRADIENT INTERVAL = -5.00/ 5.00

ALPHAO	BETAO	CNW	CBW	CTW	CHEI	CHEO	IB-ELV	OB-ELV	PHII	ALPHAI
-.432	-7.047	.13890	.02350	.04070	-.02810	-.02720	11.79870	10.94454	90.01720	-6.04760
-.421	-4.889	.12320	.02150	.03910	-.02390	-.02520	11.84672	10.96700	89.97660	-4.02980
-.381	-.536	.09360	.01690	.03440	-.00080	-.02250	12.11085	10.99732	90.00370	.04710
-.352	3.597	.07030	.01280	.03080	.00210	-.03140	12.14680	10.89737	90.04420	3.93450
-.349	5.788	.05840	.01080	.02850	.00250	-.03610	12.15190	10.84459	89.99010	5.98700
	GRADIENT	-.00624	-.00103	-.00098	.00308	-.00072	.03558	-.00807	.00795	.93844

IA156A, AEDC PWT 16T-470, O T S W/SILTS (R8NW76) (27 MAY 80)

REFERENCE DATA

SREF = 2690.0000 SQ.FT. XMRP = 976.0000 IN. XT
LREF = 1290.3000 INCHES YMRP = .0000 IN. YT
BREF = 1290.3000 INCHES ZMRP = 400.0000 IN. ZT
SCALE = .0200

PARAMETRIC DATA

IB-ELV = 12.000 OB-ELV = 11.000
BDFLAP = .000 SPDBRK = .000
RUDDER = .000 SILTS = 1.000
MACH = 1.100 RN/L = 3.500

RUN NO. 1073/ 0 RN/L = 3.51 GRADIENT INTERVAL = -5.00/ 5.00

ALPHAO	BETAO	CNW	CBW	CTW	CHEI	CHEO	IB-ELV	OB-ELV	PHII	ALPHAI
4.082	-5.734	.18270	.03190	.06260	-.03260	-.03680	11.74724	10.83673	-56.30370	7.14690
3.923	-3.736	.16720	.03010	.05850	-.03470	-.03780	11.72323	10.82550	-45.82570	5.63180
3.823	.181	.14380	.02630	.05010	-.01640	-.04210	11.93248	10.77721	-.25240	4.14790
3.797	3.912	.12510	.02290	.04470	-.01150	-.04880	11.98851	10.70197	43.98770	5.67110
3.759	6.042	.11170	.02050	.04140	-.00790	-.05650	12.02967	10.61550	56.68250	7.23440
	GRADIENT	-.00551	-.00094	-.00181	.00305	-.00144	.03484	-.01612	11.74156	.00195

IA156A, AEDC PWT 16T-470, O T S W/SILTS (R8NW77) (27 MAY 80)

REFERENCE DATA

SREF = 2690.0000 SQ.FT. XMRP = 976.0000 IN. XT
LREF = 1290.3000 INCHES YMRP = .0000 IN. YT
BREF = 1290.3000 INCHES ZMRP = 400.0000 IN. ZT
SCALE = .0200

PARAMETRIC DATA

IB-ELV = 8.000 OB-ELV = 11.000
BDFLAP = .000 SPDBRK = .000
RUDDER = .000 SILTS = 1.000
MACH = .600 RN/L = 3.500

RUN NO. 1077/ 0 RN/L = 3.50 GRADIENT INTERVAL = -5.00/ 5.00

ALPHAO	BETAO	CNW	CBW	CTW	CHEI	CHEO	IB-ELV	OB-ELV	PHII	ALPHAI
-8.237	-7.852	-.02810	-.00110	-.01360	.01280	-.00740	8.20849	11.19480	46.12130	-10.34480
-8.105	-5.811	-.02700	-.00130	-.01230	.01440	-.00660	8.22205	11.20077	38.10510	-8.98320
-8.136	-3.804	-.03110	-.00160	-.01240	.01720	-.00560	8.24579	11.20823	27.35710	-8.01520
-8.043	.294	-.04230	-.00180	-.00920	.02620	-.00470	8.32207	11.21494	-.69100	-7.10150
-7.918	4.247	-.05390	-.00130	-.00550	.03110	-.00480	8.36360	11.21420	-27.99710	-8.02610
-7.903	6.174	-.06250	-.00100	-.00420	.03230	-.00490	8.37377	11.21345	-38.19040	-9.06490
-7.921	8.177	-.06510	-.00100	-.00330	.03370	-.00470	8.38564	11.21494	-46.43910	-10.38950
	GRADIENT	-.00283	.00004	.00086	.00173	.00010	.01466	.00075	-6.87560	.00001

RUN NO. 1078/ 0 RN/L = 3.50 GRADIENT INTERVAL = -5.00/ 5.00

ALPHAO	BETAO	CNW	CBW	CTW	CHEI	CHEO	IB-ELV	OB-ELV	PHII	ALPHAI
-6.160	-7.925	.01290	.00320	-.00170	.01060	-.00770	8.18984	11.19257	54.72390	-9.11680
-6.125	-5.906	.00870	.00260	-.00240	.01210	-.00730	8.20256	11.19555	46.70840	-7.62810
-6.049	-4.002	.00610	.00220	-.00200	.01470	-.00660	8.22460	11.20077	36.32440	-6.40600
-6.113	.076	-.00690	.00150	-.00050	.02600	-.00570	8.32037	11.20748	1.25740	-5.28090
-5.959	4.184	-.02660	.00230	.00280	.02970	-.00610	8.35173	11.20450	-34.68820	-6.45660
-5.881	6.166	-.03290	.00240	.00420	.03100	-.00630	8.36275	11.20301	-46.39730	-7.67860
-5.686	8.298	-.03980	.00260	.00610	.03280	-.00660	8.37801	11.20077	-55.90680	-9.18260
	GRADIENT	-.00400	.00001	.00059	.00183	.00006	.01552	.00045	-8.67561	-.00653

IA156A, AEDC PWT 16T-470, O T S W/SILTS (R8NW77) (27 MAY 80)

REFERENCE DATA

SREF = 2690.0000 SQ.FT. XMRP = 976.0000 IN. XT
LREF = 1290.3000 INCHES YMRP = .0000 IN. YT
BREF = 1290.3000 INCHES ZMRP = 400.0000 IN. ZT
SCALE = .0200

PARAMETRIC DATA

IB-ELV = 8.000 OB-ELV = 11.000
BDFLAP = .000 SPDBRK = .000
RUDDER = .000 SILTS = 1.000
MACH = .600 RN/L = 3.500

RUN NO. 1079/ 0 RN/L = 3.50 GRADIENT INTERVAL = -5.00/ 5.00

ALPHAO	BETAO	CNW	CBW	CTW	CHEI	CHEO	IB-ELV	OB-ELV	PHII	ALPHAI
-4.011	-8.034	.04000	.00790	.01080	.00920	-.00770	8.17798	11.19257	66.10320	-8.15990
-4.229	-5.946	.03250	.00660	.00850	.01050	-.00760	8.18900	11.19331	57.65410	-6.52100
-4.237	-3.905	.02790	.00610	.00800	.01360	-.00710	8.21527	11.19704	46.18570	-5.02520
-4.049	.181	.01590	.00570	.01020	.02530	-.00700	8.31444	11.19779	.33470	-3.35090
-3.721	4.263	-.00980	.00640	.01440	.02840	-.00810	8.34072	11.18958	-48.17450	-4.96020
-3.804	6.057	-.01600	.00610	.01400	.02960	-.00840	8.35089	11.18735	-57.60550	-6.41790
-3.839	8.043	-.02100	.00560	.01350	.03150	-.00840	8.36699	11.18735	-64.53330	-8.12420
	GRADIENT	-.00462	.00004	.00078	.00181	-.00012	.01536	-.00091	-11.55239	.00800

RUN NO. 1080/ 0 RN/L = 3.50 GRADIENT INTERVAL = -5.00/ 5.00

ALPHAO	BETAO	CNW	CBW	CTW	CHEI	CHEO	IB-ELV	OB-ELV	PHII	ALPHAI
-.342	-8.724	.08220	.01600	.03290	.00780	-.01070	8.16611	11.17019	90.04420	-7.97760
-.336	-6.507	.07350	.01510	.03120	.00760	-.01050	8.16442	11.17168	90.00370	-5.85080
-.322	-4.536	.06870	.01470	.03100	.01030	-.01060	8.18730	11.17094	90.00370	-3.95620
-.297	-.416	.05830	.01340	.03060	.02360	-.01020	8.30003	11.17392	90.01720	.01180
-.268	3.690	.05260	.01310	.03110	.02850	-.01140	8.34156	11.16497	90.01720	3.97710
-.262	5.784	.04830	.01280	.03070	.02990	-.01190	8.35343	11.16124	89.99010	5.99570
-.256	7.880	.04100	.01220	.02970	.03220	-.01280	8.37292	11.15453	89.99010	8.01330
	GRADIENT	-.00196	-.00019	.00001	.00221	-.00010	.01876	-.00072	.00164	.96443

RUN NO. 1081/ 0 RN/L = 3.50 GRADIENT INTERVAL = -5.00/ 5.00

ALPHAO	BETAO	CNW	CBW	CTW	CHEI	CHEO	IB-ELV	OB-ELV	PHII	ALPHAI
4.168	-7.890	.13740	.02710	.06230	.00730	-.01650	8.16187	11.12693	-63.64360	8.98200
4.094	-5.794	.12810	.02610	.05910	.00660	-.01780	8.15594	11.11723	-56.62390	7.23210
4.034	-3.797	.12290	.02490	.05570	.01010	-.01830	8.18561	11.11350	-45.49110	5.73550
3.846	.081	.12330	.02220	.04820	.02330	-.01950	8.29749	11.10455	-1.61160	4.10910
3.893	4.060	.11580	.02110	.04520	.02680	-.02210	8.32715	11.08516	44.63210	5.82510
3.845	6.167	.10860	.02030	.04340	.02900	-.02300	8.34580	11.07845	56.88260	7.40850
3.840	8.154	.10050	.01940	.04150	.03070	-.02260	8.36021	11.08143	63.95670	9.09310
	GRADIENT	-.00091	-.00048	-.00133	.00212	-.00048	.01797	-.00361	11.47109	.01323

IA156A, AEDC PWT 16T-470, O T S W/SILTS (R8NW77) (27 MAY 80)

REFERENCE DATA

SREF = 2690.0000 SQ.FT. XMRP = 976.0000 IN. XT
LREF = 1290.3000 INCHES YMRP = .0000 IN. YT
BREF = 1290.3000 INCHES ZMRP = 400.0000 IN. ZT
SCALE = .0200

PARAMETRIC DATA

IB-ELV = 8.000 OB-ELV = 11.000
BDFLAP = .000 SPDBRK = .000
RUDDER = .000 SILTS = 1.000
MACH = .600 RN/L = 3.500

RUN NO. 1082/ 0 RN/L = 3.50 GRADIENT INTERVAL = -5.00/ 5.00

ALPHAO	BETAO	CNW	CBW	CTW	CHEI	CHEO	IB-ELV	OB-ELV	PHII	ALPHAI
6.183	-7.952	.16160	.03240	.07260	.00660	-.02050	8.15594	11.09709	-53.74810	10.05600
6.174	-5.891	.15470	.03130	.07030	.00670	-.02250	8.15679	11.08218	-45.46320	8.57650
6.140	-3.820	.15300	.02980	.06710	.01000	-.02340	8.18476	11.07546	-33.82990	7.32300
5.860	.186	.14250	.02640	.05810	.02150	-.02460	8.28223	11.06651	-.04780	6.01110
5.799	4.076	.13180	.02450	.05270	.02500	-.02520	8.31190	11.06204	34.00870	7.20110
5.757	5.988	.12480	.02380	.05070	.02630	-.02620	8.32292	11.05458	45.39100	8.37860
5.835	8.249	.11460	.02260	.04790	.02820	-.02740	8.33902	11.04563	54.28770	10.10910
	GRADIENT	-.00268	-.00067	-.00183	.00190	-.00023	.01614	-.00170	8.59060	-.01701

RUN NO. 1083/ 0 RN/L = 3.50 GRADIENT INTERVAL = -5.00/ 5.00

ALPHAO	BETAO	CNW	CBW	CTW	CHEI	CHEO	IB-ELV	OB-ELV	PHII	ALPHAI
8.082	-7.801	.18460	.03730	.08220	.00610	-.02460	8.15170	11.06651	-45.70720	11.13750
7.988	-5.739	.17920	.03570	.07830	.00710	-.02580	8.16018	11.05756	-37.47190	9.79830
7.976	-3.763	.17660	.03430	.07500	.01030	-.02590	8.18730	11.05682	-27.05070	8.81680
7.879	.175	.16780	.03120	.06760	.01690	-.02750	8.24324	11.04488	-.12340	7.91160
7.933	4.200	.15960	.02920	.06220	.02150	-.03110	8.28223	11.01803	27.27160	8.96840
7.876	6.194	.15160	.02780	.05850	.02350	-.03240	8.29918	11.00833	37.86190	9.98000
7.899	8.234	.13960	.02640	.05470	.02560	-.03370	8.31698	10.99864	46.07120	11.32170
	GRADIENT	-.00213	-.00064	-.00161	.00141	-.00065	.01191	-.00488	6.82187	.01993

IA156A, AEDC PWT 16T-470, O T S W/SILTS (R8NW78) (27 MAY 80)

REFERENCE DATA

SREF = 2690.0000 SQ.FT. XMRP = 976.0000 IN. XT
LREF = 1290.3000 INCHES YMRP = .0000 IN. YT
BREF = 1290.3000 INCHES ZMRP = 400.0000 IN. ZT
SCALE = .0200

PARAMETRIC DATA

IB-ELV = 8.000 OB-ELV = 11.000
BDFLAP = .000 SPDBRK = .000
RUDDER = .000 SILTS = 1.000
MACH = .800 RN/L = 3.500

RUN NO. 1084/ 0 RN/L = 3.50 GRADIENT INTERVAL = -5.00/ 5.00

ALPHAO	BETAO	CNW	CBW	CTW	CHEI	CHEO	IB-ELV	OB-ELV	PHII	ALPHAI
-8.208	-5.827	-.01030	-.00060	-.01000	-.00540	-.00660	8.04913	11.18894	38.16230	-8.77620
-8.259	-3.794	-.01270	-.00120	-.00980	-.00210	-.00530	8.08022	11.20096	27.25020	-7.83100
-8.153	.187	-.02660	-.00190	-.00940	.01950	-.00300	8.30502	11.22224	.10190	-6.91240
-7.985	4.362	-.03970	-.00080	-.00550	.02860	-.00270	8.40070	11.22502	-28.65700	-7.86670
-7.993	6.251	-.04570	-.00060	-.00460	.03150	-.00270	8.43119	11.22502	-38.51130	-8.89160
	GRADIENT	-.00331	.00005	.00053	.00375	.00032	.03916	.00293	-6.85509	-.00619

RUN NO. 1085/ 0 RN/L = 3.50 GRADIENT INTERVAL = -5.00/ 5.00

ALPHAO	BETAO	CNW	CBW	CTW	CHEI	CHEO	IB-ELV	OB-ELV	PHII	ALPHAI
-6.227	-5.994	.02820	.00370	.00190	-.00610	-.00610	8.04254	11.19356	47.00190	-7.50630
-6.157	-4.053	.02750	.00310	.00150	-.00340	-.00450	8.06797	11.20836	36.51030	-6.27600
-6.226	.106	.01150	.00200	.00050	.01980	-.00200	8.30818	11.23150	1.00200	-5.15310
-6.034	4.269	-.00480	.00270	.00350	.02810	-.00240	8.39544	11.22779	-35.14180	-6.32460
-5.982	6.249	-.01610	.00280	.00390	.03130	-.00300	8.42909	11.22224	-46.57150	-7.54690
	GRADIENT	-.00388	-.00005	.00024	.00378	.00025	.03935	.00233	-8.61008	-.00590

RUN NO. 1086/ 0 RN/L = 3.50 GRADIENT INTERVAL = -5.00/ 5.00

ALPHAO	BETAO	CNW	CBW	CTW	CHEI	CHEO	IB-ELV	OB-ELV	PHII	ALPHAI
-4.202	-6.102	.04780	.00840	.01350	-.00580	-.00530	8.04536	11.20096	58.79660	-6.40800
-4.327	-3.995	.04100	.00740	.01140	-.00350	-.00440	8.06703	11.20929	46.56520	-4.93820
-4.235	.359	.02320	.00630	.01070	.02110	-.00260	8.32184	11.22594	-2.10240	-3.34020
-3.799	4.314	.00360	.00710	.01370	.02780	-.00340	8.39229	11.21854	-48.16060	-4.84710
-3.854	6.166	-.00100	.00680	.01330	.03030	-.00400	8.41857	11.21299	-57.96740	-6.31770
	GRADIENT	-.00449	-.00004	.00027	.00380	.00013	.03947	.00116	-11.39637	.01694

RUN NO. 1087/ 0 RN/L = 3.50 GRADIENT INTERVAL = -5.00/ 5.00

ALPHAO	BETAO	CNW	CBW	CTW	CHEI	CHEO	IB-ELV	OB-ELV	PHII	ALPHAI
-.368	-6.886	.10630	.01760	.03800	.00080	-.00720	8.10841	11.18338	90.03070	-6.01190
-.357	-4.773	.09640	.01700	.03670	-.00200	-.00710	8.08116	11.18431	89.99010	-4.01070
-.328	-.488	.07790	.01550	.03370	.01830	-.00630	8.29241	11.19171	90.00370	.06290
-.291	3.604	.06800	.01510	.03330	.02640	-.00790	8.37757	11.17691	90.01720	3.97060
-.293	5.707	.05900	.01430	.03160	.02960	-.00900	8.41121	11.16673	90.03070	5.97280
	GRADIENT	-.00340	-.00023	-.00041	.00340	-.00009	.03550	-.00086	.00323	.95278

IA156A, AEDC PWT 16T-470, O T S W/SILTS (R8NW78) (27 MAY 80)

REFERENCE DATA

SREF = 2690.0000 SQ.FT. XMRP = 976.0000 IN. XT
LREF = 1290.3000 INCHES YMRP = .0000 IN. YT
BREF = 1290.3000 INCHES ZMRP = 400.0000 IN. ZT
SCALE = .0200

PARAMETRIC DATA

IB-ELV = 8.000 OB-ELV = 11.000
BDFLAP = .000 SPDBRK = .000
RUDDER = .000 SILTS = 1.000
MACH = .800 RN/L = 3.500

RUN NO. 1088/ 0 RN/L = 3.50 GRADIENT INTERVAL = -5.00/ 5.00

ALPHAO	BETAO	CNW	CBW	CTW	CHEI	CHEO	IB-ELV	OB-ELV	PHII	ALPHAI
4.102	-5.778	.15940	.02950	.06600	-.00060	-.01630	8.09435	11.09919	-56.63090	7.23440
3.956	-3.668	.14960	.02820	.06140	-.00010	-.01570	8.09906	11.10474	-45.40750	5.63180
3.725	.127	.13640	.02530	.05170	.01960	-.01530	8.30607	11.10844	-1.05130	4.03690
3.815	4.006	.12990	.02430	.04860	.02760	-.01740	8.39018	11.08901	45.04020	5.76610
3.759	6.090	.12190	.02250	.04570	.03240	-.01750	8.44065	11.08809	57.23980	7.32750
	GRADIENT	-.00256	-.00051	-.00166	.00360	-.00022	.03788	-.00206	11.78615	.01906

RUN NO. 1089/ 0 RN/L = 3.50 GRADIENT INTERVAL = -5.00/ 5.00

ALPHAO	BETAO	CNW	CBW	CTW	CHEI	CHEO	IB-ELV	OB-ELV	PHII	ALPHAI
6.021	-5.724	.18040	.03190	.07240	.00160	-.01980	8.11682	11.06681	-45.54690	8.35950
6.060	-3.767	.17870	.03220	.07080	.00240	-.02050	8.12523	11.06033	-34.12300	7.23100
5.741	.168	.16420	.02910	.06160	.01810	-.01940	8.29030	11.07051	-.33420	5.90600
5.688	3.981	.15150	.02720	.05600	.02600	-.02200	8.37336	11.04645	34.07300	7.06830
5.728	6.167	.14150	.02620	.05330	.03120	-.02540	8.42804	11.01499	46.57230	8.48200
	GRADIENT	-.00351	-.00065	-.00191	.00305	-.00019	.03208	-.00177	8.80027	-.02268

IA156A, AEDC PWT 16T-470, O T S W/SILTS (R8NW79) (27 MAY 80)

REFERENCE DATA

SREF = 2690.0000 SQ.FT. XMRP = 976.0000 IN. XT
LREF = 1290.3000 INCHES YMRP = .0000 IN. YT
BREF = 1290.3000 INCHES ZMRP = 400.0000 IN. ZT
SCALE = .0200

PARAMETRIC DATA

IB-ELV = 8.000 OB-ELV = 11.000
BDFLAP = .000 SPDBRK = .000
RUDDER = .000 SILTS = 1.000
MACH = .900 RN/L = 3.500

RUN NO. 1090/ 0 RN/L = 3.50 GRADIENT INTERVAL = -5.00/ 5.00

ALPHAO	BETAO	CNW	CBW	CTW	CHEI	CHEO	IB-ELV	OB-ELV	PHII	ALPHAI
-8.163	-5.980	-.00900	-.00120	-.00790	-.03350	-.01190	7.75926	11.13112	39.23540	-8.69870
-8.256	-3.765	-.01870	-.00260	-.00930	-.03380	-.00950	7.75621	11.15510	27.27870	-7.67950
-8.171	.183	-.03530	-.00390	-.00860	-.00730	-.00570	8.02575	11.19306	.09310	-6.80150
-8.000	4.389	-.04840	-.00360	-.00420	.00460	-.00280	8.15222	11.22203	-29.07250	-7.76570
-8.015	6.269	-.05630	-.00370	-.00300	.00790	-.00220	8.18968	11.22802	-38.83210	-8.77820
	GRADIENT	-.00364	-.00012	.00063	.00469	.00082	.04837	.00819	-6.91145	-.01296

IA156A, AEDC PWT 16T-470, O T S W/SILTS (R8NW79) (27 MAY 80)

REFERENCE DATA

SREF = 2690.0000 SQ.FT. XMRP = 976.0000 IN. XT
LREF = 1290.3000 INCHES YMRP = .0000 IN. YT
BREF = 1290.3000 INCHES ZMRP = 400.0000 IN. ZT
SCALE = .0200

PARAMETRIC DATA

IB-ELV = 8.000 OB-ELV = 11.000
BDFLAP = .000 SPDBRK = .000
RUDDER = .000 SILTS = 1.000
MACH = .900 RN/L = 3.500

RUN NO. 1091/ 0 RN/L = 3.50 GRADIENT INTERVAL = -5.00/ 5.00

ALPHAO	BETAO	CNW	CBW	CTW	CHEI	CHEO	IB-ELV	OB-ELV	PHII	ALPHAI
-6.207	-5.982	.02770	.00300	.00290	-.03110	-.01040	7.78367	11.14611	47.30270	-7.36880
-6.160	-4.066	.02320	.00200	.00230	-.03080	-.00800	7.78672	11.17008	36.82500	-6.17570
-6.246	.099	-.00220	-.00020	-.00010	.00020	-.00070	8.10227	11.24301	1.01170	-5.06020
-6.053	4.268	-.02220	.00000	.00270	.01210	.00040	8.23736	11.25490	-35.37900	-6.23430
-5.987	6.245	-.03470	.00010	.00360	.01530	.00030	8.27369	11.25368	-46.89910	-7.44000
	GRADIENT	-.00545	-.00024	.00005	.00515	.00101	.05407	.01018	-8.66338	-.00707

RUN NO. 1092/ 0 RN/L = 3.50 GRADIENT INTERVAL = -5.00/ 5.00

ALPHAO	BETAO	CNW	CBW	CTW	CHEI	CHEO	IB-ELV	OB-ELV	PHII	ALPHAI
-4.073	-6.116	.05420	.00890	.01650	-.02750	-.00930	7.82029	11.15710	59.99550	-6.27400
-4.333	-3.999	.04060	.00660	.01280	-.03050	-.00720	7.78977	11.17807	46.82290	-4.86310
-4.257	.376	.01470	.00430	.01010	.01070	-.00250	8.22147	11.22503	-2.39500	-3.27730
-3.789	4.327	-.00770	.00500	.01310	.02000	-.00320	8.32704	11.21803	-48.68330	-4.77900
-3.880	6.173	-.01660	.00440	.01290	.02270	-.00240	8.35769	11.22602	-58.18320	-6.25420
	GRADIENT	-.00580	-.00020	.00002	.00613	.00049	.06514	.00491	-11.46717	.01638

RUN NO. 1093/ 0 RN/L = 3.50 GRADIENT INTERVAL = -5.00/ 5.00

ALPHAO	BETAO	CNW	CBW	CTW	CHEI	CHEO	IB-ELV	OB-ELV	PHII	ALPHAI
-.389	-6.982	.11120	.01930	.04030	-.01740	-.01340	7.92302	11.11614	90.03070	-6.04760
-.373	-4.837	.09660	.01810	.03760	-.02420	-.01350	7.85385	11.11514	89.99010	-4.02880
-.343	-.533	.07180	.01480	.03260	.01150	-.01020	8.23055	11.14810	90.01720	.03690
-.307	3.577	.05790	.01330	.03040	.02360	-.00880	8.36791	11.16209	90.03070	3.93450
-.309	5.752	.04980	.01220	.02860	.02520	-.00920	8.38607	11.15809	90.00370	5.99140
	GRADIENT	-.00461	-.00057	-.00086	.00570	.00056	.06130	.00560	.00484	.94641

RUN NO. 1094/ 0 RN/L = 3.50 GRADIENT INTERVAL = -5.00/ 5.00

ALPHAO	BETAO	CNW	CBW	CTW	CHEI	CHEO	IB-ELV	OB-ELV	PHII	ALPHAI
4.085	-5.763	.15980	.02770	.06400	-.02180	-.01930	7.87826	11.05720	-56.48470	7.19230
3.944	-3.664	.14810	.02690	.06020	-.02010	-.01920	7.89555	11.05820	-45.26110	5.61000
3.705	.123	.12970	.02430	.05050	.01870	-.02210	8.31228	11.02923	-1.05440	4.02880
3.811	3.993	.12000	.02310	.04620	.02340	-.02440	8.36564	11.00625	44.81820	5.74860
3.760	6.091	.11230	.02180	.04340	.02810	-.02660	8.41899	10.98427	57.06830	7.30970
	GRADIENT	-.00367	-.00050	-.00183	.00567	-.00068	.06122	-.00678	11.76509	.01966

IA156A, AEDC PWT 16T-470, O T S W/SILTS (R8NW80) (27 MAY 80)

REFERENCE DATA

SREF = 2690.0000 SQ.FT. XMRP = 976.0000 IN. XT
LREF = 1290.3000 INCHES YMRP = .0000 IN. YT
BREF = 1290.3000 INCHES ZMRP = 400.0000 IN. ZT
SCALE = .0200

PARAMETRIC DATA

IB-ELV = 8.000 OB-ELV = 11.000
BDFLAP = .000 SPDBRK = .000
RUDDER = .000 SILTS = 1.000
MACH = .950 RN/L = 3.500

RUN NO. 1095/ 0 RN/L = 3.50 GRADIENT INTERVAL = -5.00/ 5.00

ALPHAO	BETAO	CNW	CBW	CTW	CHEI	CHEO	IB-ELV	OB-ELV	PHII	ALPHAI
-8.294	-6.047	-.00840	-.00120	-.00770	-.03670	-.01830	7.71293	11.06044	39.27110	-8.73650
-8.203	-3.771	-.01430	-.00200	-.00720	-.03950	-.01010	7.68340	11.14538	27.55670	-7.56270
-8.185	.173	-.03220	-.00360	-.00760	-.01550	-.00030	7.93652	11.24689	.13140	-6.73110
-8.002	4.454	-.05330	-.00350	-.00390	-.01380	.00090	7.95445	11.26144	-29.59970	-7.71720
-8.009	6.271	-.06430	-.00340	-.00230	-.01230	.00110	7.97027	11.26398	-39.04830	-8.69470
	GRADIENT	-.00474	-.00018	.00041	.00309	.00132	.03254	.01396	-6.94887	-.02180

RUN NO. 1096/ 0 RN/L = 3.50 GRADIENT INTERVAL = -5.00/ 5.00

ALPHAO	BETAO	CNW	CBW	CTW	CHEI	CHEO	IB-ELV	OB-ELV	PHII	ALPHAI
-6.221	-6.002	.03050	.00420	.00400	-.03760	-.01850	7.70344	11.05837	47.48160	-7.33110
-6.164	-4.065	.02470	.00280	.00310	-.03990	-.01250	7.67918	11.12052	36.95370	-6.11720
-6.250	.111	-.00180	.00050	.00070	-.01360	-.00230	7.95656	11.22618	.86110	-5.00420
-6.035	4.265	-.02840	.00060	.00190	-.00950	-.00220	7.99980	11.22721	-35.60920	-6.15690
-6.006	6.274	-.03780	.00080	.00420	-.00570	-.00200	8.03988	11.22928	-47.12920	-7.40830
	GRADIENT	-.00637	-.00026	-.00014	.00365	.00124	.03851	.01282	-8.71034	-.00452

RUN NO. 1097/ 0 RN/L = 3.50 GRADIENT INTERVAL = -5.00/ 5.00

ALPHAO	BETAO	CNW	CBW	CTW	CHEI	CHEO	IB-ELV	OB-ELV	PHII	ALPHAI
-4.066	-6.173	.05550	.00990	.01810	-.03570	-.01880	7.72348	11.05526	60.48050	-6.26710
-4.331	-3.998	.04080	.00780	.01390	-.03950	-.01340	7.68340	11.11120	47.05200	-4.81600
-4.261	.376	.01490	.00520	.01080	-.00930	-.00620	8.00191	11.18578	-2.47590	-3.23570
-3.793	4.340	-.00580	.00530	.01360	-.00200	-.00640	8.07891	11.18371	-48.98290	-4.74490
-3.885	6.172	-.01090	.00460	.01350	.00060	-.00520	8.10706	11.19614	-58.37110	-6.20750
	GRADIENT	-.00559	-.00030	-.00005	.00454	.00085	.04787	.00884	-11.51424	.01460

RUN NO. 1098/ 0 RN/L = 3.51 GRADIENT INTERVAL = -5.00/ 5.00

ALPHAO	BETAO	CNW	CBW	CTW	CHEI	CHEO	IB-ELV	OB-ELV	PHII	ALPHAI
-.411	-7.031	.10920	.01960	.04100	-.02870	-.02330	7.79731	11.00865	90.00370	-6.07440
-.392	-4.836	.09350	.01840	.03790	-.03840	-.02360	7.69500	11.00554	89.99010	-4.00920
-.358	-.565	.06750	.01520	.03230	-.00970	-.01190	7.99770	11.12673	90.00370	.01110
-.321	3.586	.05320	.01340	.02990	-.00700	-.01460	8.02617	11.09877	90.01720	3.93450
-.326	5.762	.04650	.01230	.02920	-.00590	-.01520	8.03777	11.09255	90.03070	5.99030
	GRADIENT	-.00479	-.00059	-.00095	.00374	.00108	.03947	.01115	.00322	.94320

IA156A, AEDC PWT 16T-470, O T S W/SILTS (R8NW80) (27 MAY 80)

REFERENCE DATA

SREF = 2690.0000 SQ.FT. XMRP = 976.0000 IN. XT
LREF = 1290.3000 INCHES YMRP = .0000 IN. YT
BREF = 1290.3000 INCHES ZMRP = 400.0000 IN. ZT
SCALE = .0200

PARAMETRIC DATA

IB-ELV = 8.000 OB-ELV = 11.000
BDFLAP = .000 SPDBRK = .000
RUDDER = .000 SILTS = 1.000
MACH = .950 RN/L = 3.500

RUN NO. 1099/ 0 RN/L = 3.50 GRADIENT INTERVAL = -5.00/ 5.00

ALPHAO	BETAO	CNW	CBW	CTW	CHEI	CHEO	IB-ELV	OB-ELV	PHII	ALPHAI
4.075	-5.728	.16320	.02890	.06270	-.03260	-.03650	7.75617	10.87191	-56.29670	7.16020
3.951	-3.749	.15040	.02760	.05860	-.03560	-.03910	7.72453	10.84498	-45.70720	5.67660
3.844	.183	.13100	.02540	.04960	-.01710	-.03720	7.91965	10.86466	-.09750	4.17060
3.797	3.935	.11940	.02340	.04410	-.00910	-.03970	8.00402	10.83877	44.33140	5.70600
3.766	6.057	.10850	.02170	.04060	-.00160	-.04130	8.08313	10.82219	56.82540	7.27420
	GRADIENT	-.00404	-.00055	-.00189	.00346	-.00007	.03648	-.00076	11.71645	.00076

IA156A, AEDC PWT 16T-470, O T S W/SILTS (R8NW81) (27 MAY 80)

REFERENCE DATA

SREF = 2690.0000 SQ.FT. XMRP = 976.0000 IN. XT
LREF = 1290.3000 INCHES YMRP = .0000 IN. YT
BREF = 1290.3000 INCHES ZMRP = 400.0000 IN. ZT
SCALE = .0200

PARAMETRIC DATA

IB-ELV = 8.000 OB-ELV = 11.000
BDFLAP = .000 SPDBRK = .000
RUDDER = .000 SILTS = 1.000
MACH = 1.050 RN/L = 3.500

RUN NO. 1102/ 0 RN/L = 3.50 GRADIENT INTERVAL = -5.00/ 5.00

ALPHAO	BETAO	CNW	CBW	CTW	CHEI	CHEO	IB-ELV	OB-ELV	PHII	ALPHAI
-8.214	-5.985	.00850	-.00210	-.00240	.00790	-.01910	8.19841	11.04063	39.60030	-8.50800
-8.268	-3.873	-.00200	-.00360	-.00330	.01700	-.01580	8.31176	11.07680	28.28390	-7.49540
-8.188	.281	-.02820	-.00560	-.00320	.04400	-.01330	8.64810	11.10421	-.69940	-6.58540
-8.026	4.295	-.05820	-.00640	-.00170	.05390	-.01140	8.77142	11.12503	-29.02020	-7.50440
-8.003	6.264	-.06620	-.00680	-.00110	.05320	-.01030	8.76270	11.13709	-39.49470	-8.53780
	GRADIENT	-.00688	-.00034	.00019	.00453	.00054	.05641	.00591	-7.01485	.00019

RUN NO. 1103/ 0 RN/L = 3.50 GRADIENT INTERVAL = -5.00/ 5.00

ALPHAO	BETAO	CNW	CBW	CTW	CHEI	CHEO	IB-ELV	OB-ELV	PHII	ALPHAI
-6.206	-5.996	.03880	.00400	.00820	.00030	-.02230	8.10374	11.00555	47.95410	-7.20050
-6.165	-4.087	.03010	.00220	.00670	.00710	-.01930	8.18844	11.03843	37.51150	-6.01090
-6.271	.104	-.00150	-.00120	.00440	.04240	-.01590	8.62817	11.07571	.94650	-4.89110
-6.068	4.277	-.03140	-.00220	.00500	.04610	-.01470	8.67426	11.08886	-36.02090	-6.07540
-5.861	6.383	-.04050	-.00250	.00580	.04580	-.01380	8.67052	11.09873	-48.75990	-7.30050
	GRADIENT	-.00735	-.00053	-.00020	.00467	.00055	.05811	.00603	-8.79128	-.00753

IA156A, AEDC PWT 16T-470, O T S W/SILTS (R8NW81) (27 MAY 80)

REFERENCE DATA

SREF = 2690.0000 SQ.FT. XMRP = 976.0000 IN. XT
LREF = 1290.3000 INCHES YMRP = .0000 IN. YT
BREF = 1290.3000 INCHES ZMRP = 400.0000 IN. ZT
SCALE = .0200

PARAMETRIC DATA

IB-ELV = 8.000 OB-ELV = 11.000
BDFLAP = .000 SPDBRK = .000
RUDDER = .000 SILTS = 1.000
MACH = 1.050 RN/L = 3.500

RUN NO. 1104/ 0 RN/L = 3.50 GRADIENT INTERVAL = -5.00/ 5.00

ALPHAO	BETAO	CNW	CBW	CTW	CHEI	CHEO	IB-ELV	OB-ELV	PHII	ALPHAI
-4.122	-6.131	.06530	.01020	.02160	-.00380	-.02260	8.05759	11.00226	60.38070	-6.17570
-4.345	-4.018	.04770	.00740	.01710	.00320	-.01950	8.13986	11.03624	47.62480	-4.74290
-4.269	.372	.01650	.00390	.01410	.03770	-.01890	8.56962	11.04282	-2.56180	-3.13570
-3.793	4.343	-.01570	.00300	.01480	.03780	-.01750	8.57086	11.05817	-49.65190	-4.66770
-3.868	6.162	-.02980	.00200	.01340	.03710	-.01570	8.56214	11.07790	-58.96260	-6.11520
	GRADIENT	-.00757	-.00053	-.00028	.00420	.00024	.05236	.00260	-11.63174	.01524

RUN NO. 1105/ 0 RN/L = 3.49 GRADIENT INTERVAL = -5.00/ 5.00

ALPHAO	BETAO	CNW	CBW	CTW	CHEI	CHEO	IB-ELV	OB-ELV	PHII	ALPHAI
-.450	-7.051	.12530	.02230	.04400	-.01030	-.02280	7.98504	11.00007	90.00370	-6.03770
-.431	-4.894	.10650	.02000	.04120	-.00700	-.02260	8.02187	11.00226	89.99010	-4.03030
-.401	-.555	.07540	.01510	.03510	.02460	-.02000	8.40644	11.03076	90.00370	.03450
-.371	3.591	.05350	.01140	.03090	.02860	-.02260	8.45626	11.00226	90.03070	3.93290
-.371	5.773	.04270	.00990	.02850	.03080	-.02580	8.48367	10.96718	90.01720	5.98040
	GRADIENT	-.00625	-.00101	-.00122	.00422	.00000	.05148	.00005	.00477	.93845

RUN NO. 1106/ 0 RN/L = 3.49 GRADIENT INTERVAL = -5.00/ 5.00

ALPHAO	BETAO	CNW	CBW	CTW	CHEI	CHEO	IB-ELV	OB-ELV	PHII	ALPHAI
4.083	-5.750	.17170	.03060	.06420	-.01680	-.03170	7.91249	10.90251	-56.00430	7.17900
3.909	-3.651	.15450	.02860	.05950	-.01190	-.03100	7.96718	10.91018	-44.84980	5.59690
3.738	.112	.13300	.02510	.05100	.00960	-.03410	8.21958	10.87620	-1.07950	4.09610
3.803	3.989	.11760	.02180	.04570	.01070	-.04140	8.23329	10.79618	44.47460	5.75190
3.764	6.060	.10330	.01930	.04170	.01790	-.04840	8.32298	10.71944	56.65390	7.27310
	GRADIENT	-.00483	-.00089	-.00180	.00294	-.00136	.03468	-.01495	11.69289	.02234

IA156A, AEDC PWT 16T-470, O T S W/SILTS (R8NW82) (27 MAY 80)

REFERENCE DATA

SREF = 2690.0000 SQ.FT. XMRP = 976.0000 IN. XT
LREF = 1290.3000 INCHES YMRP = .0000 IN. YT
BREF = 1290.3000 INCHES ZMRP = 400.0000 IN. ZT
SCALE = .0200

PARAMETRIC DATA

IB-ELV = 8.000 OB-ELV = 11.000
BDFLAP = .000 SPDBRK = .000
RUDDER = .000 SILTS = 1.000
MACH = 1.100 RN/L = 3.500

RUN NO. 1107/ 0 RN/L = 3.51 GRADIENT INTERVAL = -5.00/ 5.00

ALPHAO	BETAO	CNW	CBW	CTW	CHEI	CHEO	IB-ELV	OB-ELV	PHII	ALPHAI
-8.232	-5.903	.00290	-.00150	-.00210	.01520	-.02060	8.29397	11.01866	39.27110	-8.45440
-8.255	-3.825	-.00600	-.00280	-.00260	.02170	-.01860	8.37692	11.04112	28.07720	-7.46080
-8.187	.192	-.03020	-.00510	-.00220	.05130	-.01570	8.75466	11.07369	.03010	-6.56660
-8.011	4.349	-.05730	-.00540	-.00110	.05910	-.01300	8.85420	11.10401	-29.39380	-7.52120
-8.016	6.268	-.06320	-.00640	-.00050	.06200	-.01170	8.89121	11.11861	-39.48770	-8.54570
	GRADIENT	-.00628	-.00032	.00018	.00456	.00068	.05818	.00769	-7.03079	-.00869

RUN NO. 1108/ 0 RN/L = 3.50 GRADIENT INTERVAL = -5.00/ 5.00

ALPHAO	BETAO	CNW	CBW	CTW	CHEI	CHEO	IB-ELV	OB-ELV	PHII	ALPHAI
-6.213	-6.003	.04360	.00440	.00920	.00620	-.02170	8.17912	11.00631	48.05440	-7.21140
-6.166	-4.086	.03170	.00270	.00760	.01260	-.01990	8.26079	11.02652	37.60440	-6.01090
-6.283	.119	-.00200	-.00050	.00490	.04570	-.01680	8.68320	11.06133	.82680	-4.90010
-6.042	4.262	-.02650	-.00120	.00510	.05210	-.01410	8.76487	11.09166	-35.96510	-6.05060
-6.011	6.265	-.03850	-.00160	.00490	.05330	-.01170	8.78019	11.11861	-47.48460	-7.30640
	GRADIENT	-.00697	-.00047	-.00030	.00474	.00069	.06048	.00780	-8.81277	-.00408

RUN NO. 1109/ 0 RN/L = 3.51 GRADIENT INTERVAL = -5.00/ 5.00

ALPHAO	BETAO	CNW	CBW	CTW	CHEI	CHEO	IB-ELV	OB-ELV	PHII	ALPHAI
-4.293	-6.047	.07370	.01080	.02030	.00150	-.02180	8.11914	11.00518	59.06780	-6.18370
-4.317	-4.024	.05570	.00820	.01770	.00830	-.01920	8.20592	11.03438	47.99000	-4.72990
-4.257	.346	.02350	.00450	.01490	.04290	-.01780	8.64747	11.05010	-2.05050	-3.12750
-3.776	4.319	-.00740	.00360	.01610	.04480	-.01570	8.67171	11.07369	-49.50550	-4.64770
-3.893	6.173	-.01670	.00250	.01490	.04650	-.01810	8.69341	11.04674	-58.76780	-6.14100
	GRADIENT	-.00756	-.00056	-.00020	.00443	.00042	.05658	.00469	-11.68103	.01577

RUN NO. 1110/ 0 RN/L = 3.50 GRADIENT INTERVAL = -5.00/ 5.00

ALPHAO	BETAO	CNW	CBW	CTW	CHEI	CHEO	IB-ELV	OB-ELV	PHII	ALPHAI
-.453	-7.058	.13110	.02260	.04260	-.00470	-.02190	8.04626	11.00406	90.00370	-6.04560
-.435	-4.893	.11050	.02050	.04020	.00030	-.02070	8.10383	11.01754	89.99010	-4.03030
-.401	-.488	.08100	.01590	.03560	.03080	-.01880	8.49305	11.03887	90.00370	.09760
-.365	3.607	.05840	.01190	.03180	.03470	-.02770	8.54282	10.93893	90.01720	3.94690
-.367	5.777	.04630	.01000	.02940	.03690	-.03330	8.57090	10.87604	90.01720	5.97820
	GRADIENT	-.00614	-.00101	-.00099	.00408	-.00081	.05211	-.00907	.00319	.93845

IA156A, AEDC PWT 16T-470, O T S W/SILTS (R8NW82) (27 MAY 80)

REFERENCE DATA

SREF = 2690.0000 SQ.FT. XMRP = 976.0000 IN. XT
LREF = 1290.3000 INCHES YMRP = .0000 IN. YT
BREF = 1290.3000 INCHES ZMRP = 400.0000 IN. ZT
SCALE = .0200

PARAMETRIC DATA

IB-ELV = 8.000 OB-ELV = 11.000
BDFLAP = .000 SPDBRK = .000
RUDDER = .000 SILTS = 1.000
MACH = 1.100 RN/L = 3.500

RUN NO. 1111/ 0 RN/L = 3.50 GRADIENT INTERVAL = -5.00/ 5.00

ALPHAO	BETAO	CNW	CBW	CTW	CHEI	CHEO	IB-ELV	OB-ELV	PHII	ALPHAI
4.078	-5.753	.17480	.03090	.06400	-.01520	-.03160	7.92620	10.89713	-56.26190	7.16130
3.945	-3.680	.15920	.02920	.05980	-.00830	-.03280	8.00510	10.88165	-45.05890	5.61980
3.680	.122	.13640	.02540	.05080	.01610	-.03790	8.30546	10.82438	-1.11640	4.02880
3.789	3.976	.11830	.02210	.04550	.01700	-.04520	8.31695	10.74240	44.48170	5.72350
3.768	6.065	.10740	.01970	.04210	.02360	-.05080	8.40117	10.67951	56.66820	7.26650
	GRADIENT	-.00534	-.00093	-.00187	.00330	-.00162	.04064	-.01820	11.69564	.01453

IA156A, AEDC PWT 16T-470, O T S W/SILTS (R8NW83) (27 MAY 80)

REFERENCE DATA

SREF = 2690.0000 SQ.FT. XMRP = 976.0000 IN. XT
LREF = 1290.3000 INCHES YMRP = .0000 IN. YT
BREF = 1290.3000 INCHES ZMRP = 400.0000 IN. ZT
SCALE = .0200

PARAMETRIC DATA

IB-ELV = 8.000 OB-ELV = 9.000
BDFLAP = .000 SPDBRK = .000
RUDDER = .000 SILTS = 1.000
MACH = .600 RN/L = 3.500

RUN NO. 1114/ 0 RN/L = 3.51 GRADIENT INTERVAL = -5.00/ 5.00

ALPHAO	BETAO	CNW	CBW	CTW	CHEI	CHEO	IB-ELV	OB-ELV	PHII	ALPHAI
-8.219	-7.832	-.01810	-.00240	-.01130	.01190	-.00130	8.20086	8.91030	46.14280	-10.31440
-8.099	-5.891	-.01600	-.00230	-.01080	.01340	-.00040	8.21358	8.91702	38.48420	-9.01910
-8.140	-3.791	-.01790	-.00270	-.01000	.01580	.00050	8.23392	8.92458	27.27870	-8.00930
-8.051	.301	-.03000	-.00300	-.00690	.02550	.00200	8.31614	8.93831	-.73370	-7.10050
-7.910	4.243	-.04730	-.00210	-.00330	.02980	.00220	8.35258	8.94014	-27.99360	-8.02410
-7.897	6.183	-.05390	-.00190	-.00170	.03140	.00230	8.36614	8.94105	-38.25320	-9.06100
-7.934	8.177	-.06000	-.00190	-.00060	.03330	.00240	8.38225	8.94197	-46.39730	-10.38950
	GRADIENT	-.00366	.00007	.00083	.00175	.00021	.01480	.00195	-6.88018	-.00043

RUN NO. 1115/ 0 RN/L = 3.51 GRADIENT INTERVAL = -5.00/ 5.00

ALPHAO	BETAO	CNW	CBW	CTW	CHEI	CHEO	IB-ELV	OB-ELV	PHII	ALPHAI
-6.156	-7.922	.01930	.00210	-.00010	.01100	-.00090	8.19324	8.91329	54.76680	-9.10680
-6.128	-5.909	.01680	.00150	-.00040	.01240	-.00040	8.20510	8.91702	46.74420	-7.62910
-6.052	-4.007	.01300	.00120	.00000	.01430	.00020	8.22121	8.92183	36.38880	-6.40700
-6.113	.075	.00230	.00050	.00190	.02530	.00110	8.31444	8.93007	1.26000	-5.27690
-5.946	4.190	-.02020	.00140	.00550	.02930	.00100	8.34834	8.92915	-34.79980	-6.44470
-5.887	6.166	-.02820	.00140	.00650	.03080	.00090	8.36106	8.92824	-46.40430	-7.67060
-5.690	8.305	-.03580	.00180	.00820	.03240	.00070	8.37462	8.92641	-55.92770	-9.18260
	GRADIENT	-.00405	.00002	.00067	.00183	.00010	.01550	.00089	-8.68450	-.00498

IA156A, AEDC PWT 16T-470, O T S W/SILTS (R8NW83) (27 MAY 80)

REFERENCE DATA

SREF = 2690.0000 SQ.FT. XMRP = 976.0000 IN. XT
LREF = 1290.3000 INCHES YMRP = .0000 IN. YT
BREF = 1290.3000 INCHES ZMRP = 400.0000 IN. ZT
SCALE = .0200

PARAMETRIC DATA

IB-ELV = 8.000 OB-ELV = 9.000
BDFLAP = .000 SPDBRK = .000
RUDDER = .000 SILTS = 1.000
MACH = .600 RN/L = 3.500

RUN NO. 1117/ 0 RN/L = 3.49 GRADIENT INTERVAL = -5.00/ 5.00

ALPHAO	BETAO	CNW	CBW	CTW	CHEI	CHEO	IB-ELV	OB-ELV	PHII	ALPHAI
-4.005	-7.950	.04330	.00690	.01230	.00950	-.00070	8.18052	8.91478	65.91860	-8.08160
-4.230	-5.941	.03540	.00560	.00980	.01080	-.00050	8.19154	8.91627	57.65410	-6.51900
-4.234	-3.892	.03150	.00520	.00960	.01350	-.00010	8.21442	8.91925	46.14990	-5.01320
-4.049	.174	.01850	.00470	.01190	.02500	.00010	8.31190	8.92092	.41920	-3.34480
-3.718	4.264	-.00750	.00540	.01640	.02840	-.00090	8.34072	8.91329	-48.22330	-4.95820
-3.792	6.053	-.01310	.00520	.01610	.02980	-.00120	8.35258	8.91105	-57.68200	-6.40700
-3.831	8.046	-.01820	.00470	.01580	.03190	-.00140	8.37038	8.90956	-64.60280	-8.12420
	GRADIENT	-.00478	.00002	.00083	.00183	-.00010	.01548	-.00073	-11.57189	.00636

RUN NO. 1118/ 0 RN/L = 3.50 GRADIENT INTERVAL = -5.00/ 5.00

ALPHAO	BETAO	CNW	CBW	CTW	CHEI	CHEO	IB-ELV	OB-ELV	PHII	ALPHAI
-.345	-8.769	.08810	.01480	.03460	.00830	-.00280	8.17035	8.89912	90.04430	-8.01520
-.339	-6.697	.07850	.01410	.03300	.00850	-.00210	8.17205	8.90434	89.99010	-6.02870
-.327	-4.423	.07150	.01350	.03220	.01120	-.00210	8.19493	8.90434	89.99010	-3.84620
-.300	-.384	.06070	.01230	.03190	.02410	-.00250	8.30427	8.90135	90.00370	.04340
-.272	3.688	.05350	.01200	.03280	.02890	-.00440	8.34495	8.88718	90.01720	3.97870
-.267	5.772	.04920	.01180	.03200	.03120	-.00530	8.36445	8.88047	90.00370	5.98700
-.260	7.866	.04170	.01150	.03110	.03370	-.00630	8.38564	8.87301	90.00370	8.00320
	GRADIENT	-.00222	-.00018	.00007	.00218	-.00028	.01848	-.00212	.00334	.96468

RUN NO. 1119/ 0 RN/L = 3.49 GRADIENT INTERVAL = -5.00/ 5.00

ALPHAO	BETAO	CNW	CBW	CTW	CHEI	CHEO	IB-ELV	OB-ELV	PHII	ALPHAI
4.061	-8.068	.13880	.02590	.06380	.00860	-.00680	8.17289	8.86928	-64.71400	9.09090
4.074	-5.756	.12850	.02460	.05980	.00880	-.00720	8.17459	8.86630	-56.45690	7.19560
4.049	-3.766	.12410	.02360	.05690	.01240	-.00780	8.20510	8.86182	-45.17050	5.73440
3.826	.145	.11900	.02080	.04870	.02540	-.00840	8.31529	8.85735	-.70730	4.09780
3.894	4.109	.11470	.01990	.04640	.02900	-.01160	8.34580	8.83348	44.93990	5.86340
3.848	6.179	.11000	.01910	.04470	.03130	-.01290	8.36530	8.82378	56.89690	7.42180
3.834	8.158	.10230	.01810	.04290	.03300	-.01430	8.37971	8.81334	63.95670	9.09540
	GRADIENT	-.00119	-.00047	-.00133	.00211	-.00048	.01784	-.00360	11.44203	.01737

IA156A, AEDC PWT 16T-470, O T S W/SILTS (R8NW83) (27 MAY 80)

REFERENCE DATA

SREF = 2690.0000 SQ.FT. XMRP = 976.0000 IN. XT
LREF = 1290.3000 INCHES YMRP = .0000 IN. YT
BREF = 1290.3000 INCHES ZMRP = 400.0000 IN. ZT
SCALE = .0200

PARAMETRIC DATA

IB-ELV = 8.000 OB-ELV = 9.000
BDFLAP = .000 SPDBRK = .000
RUDDER = .000 SILTS = 1.000
MACH = .600 RN/L = 3.500

RUN NO. 1120/ 0 RN/L = 3.49 GRADIENT INTERVAL = -5.00/ 5.00

ALPHAO	BETAO	CNW	CBW	CTW	CHEI	CHEO	IB-ELV	OB-ELV	PHII	ALPHAI
6.199	-7.959	.15620	.03100	.07410	.00880	-.00980	8.17459	8.84690	-53.66450	10.07680
6.166	-5.903	.15430	.02990	.07180	.00940	-.01100	8.17967	8.83795	-45.53300	8.58670
6.146	-3.877	.15540	.02860	.06910	.01210	-.01140	8.20256	8.83497	-34.14390	7.36300
5.896	.134	.14540	.02540	.06030	.02450	-.01310	8.30766	8.82229	-.58720	6.05160
5.802	4.075	.13370	.02310	.05410	.02720	-.01640	8.33054	8.79768	33.95150	7.20890
5.758	5.987	.12590	.02240	.05210	.02780	-.01850	8.33563	8.78201	45.32660	8.38310
5.823	8.257	.11710	.02140	.04980	.03010	-.02050	8.35512	8.76709	54.31630	10.11370
	GRADIENT	-.00273	-.00069	-.00189	.00190	-.00063	.01612	-.00469	8.56229	-.02029

RUN NO. 1121/ 0 RN/L = 3.50 GRADIENT INTERVAL = -5.00/ 5.00

ALPHAO	BETAO	CNW	CBW	CTW	CHEI	CHEO	IB-ELV	OB-ELV	PHII	ALPHAI
8.087	-7.805	.18510	.03580	.08380	.00860	-.01360	8.17289	8.81856	-45.65150	11.15400
7.992	-5.743	.18110	.03450	.08050	.00970	-.01480	8.18222	8.80961	-37.45800	9.80980
7.975	-3.763	.17750	.03300	.07700	.01250	-.01600	8.20595	8.80066	-27.01920	8.82360
7.881	.167	.16940	.02990	.06940	.02150	-.01830	8.28223	8.78350	-.18590	7.92390
7.924	4.200	.15970	.02790	.06380	.02410	-.02190	8.30427	8.75665	27.25730	8.96840
7.893	6.205	.15450	.02670	.06090	.02620	-.02360	8.32207	8.74397	37.81900	10.00530
7.885	8.231	.14110	.02510	.05630	.02870	-.02490	8.34326	8.73428	46.03540	11.31700
	GRADIENT	-.00224	-.00064	-.00166	.00145	-.00074	.01232	-.00553	6.81629	.01924

IA156A, AEDC PWT 16T-470, O T S W/SILTS (R8NW85) (27 MAY 80)

REFERENCE DATA

SREF = 2690.0000 SQ.FT. XMRP = 976.0000 IN. XT
LREF = 1290.3000 INCHES YMRP = .0000 IN. YT
BREF = 1290.3000 INCHES ZMRP = 400.0000 IN. ZT
SCALE = .0200

PARAMETRIC DATA

IB-ELV = 8.000 OB-ELV = 9.000
BDFLAP = .000 SPDBRK = .000
RUDDER = .000 SILTS = 1.000
MACH = .800 RN/L = 3.500

RUN NO. 1132/ 0 RN/L = 3.51 GRADIENT INTERVAL = -5.00/ 5.00

ALPHAO	BETAO	CNW	CBW	CTW	CHEI	CHEO	IB-ELV	OB-ELV	PHII	ALPHAI
-8.228	-5.851	.01300	-.00270	-.00600	.00270	-.00070	8.12839	8.91352	38.23380	-8.79650
-8.232	-3.849	.00470	-.00290	-.00640	.00570	.00050	8.15993	8.92568	27.67790	-7.82350
-7.166	.278	-.00940	-.00360	-.00490	.02710	.00340	8.38493	8.95861	-.51640	-6.92470
-7.78	4.292	-.02720	-.00220	-.00140	.03540	.00390	8.47219	8.96428	-28.24150	-7.83740
-8.010	6.257	-.03460	-.00190	-.00090	.03860	.00410	8.50584	8.96656	-38.49040	-8.89600
	GRADIENT	-.00392	.00008	.00061	.00366	.00042	.03843	.00476	-6.86869	-.00069

RUN NO. 1133/ 0 RN/L = 3.50 GRADIENT INTERVAL = -5.00/ 5.00

ALPHAO	BETAO	CNW	CBW	CTW	CHEI	CHEO	IB-ELV	OB-ELV	PHII	ALPHAI
-6.217	-5.991	.03760	.00250	.00380	.00290	-.00020	8.13049	8.91815	47.01630	-7.49680
-6.150	-4.044	.03580	.00170	.00340	.00530	.00130	8.15572	8.93476	36.50320	-6.25950
-6.231	.132	.01980	.00060	.00310	.02700	00380	8.38388	8.96315	.78190	-5.15250
-6.023	4.270	.00250	.00170	.00620	.03520	.00390	8.47009	8.96428	-35.19760	-6.31210
-5.980	6.239	-.00590	.00180	.00710	.03840	.00390	8.50374	8.96428	-46.57850	-7.53350
	GRADIENT	-.00401	-.00000	.00034	.00360	.00031	.03784	.00356	-8.62431	-.00592

RUN NO. 1134/ 0 RN/L = 3.50 GRADIENT INTERVAL = -5.00/ 5.00

ALPHAO	BETAO	CNW	CBW	CTW	CHEI	CHEO	IB-ELV	OB-ELV	PHII	ALPHAI
-4.121	-6.083	.06060	.00720	.01550	.00330	.00070	8.13470	8.92795	59.29620	-6.35080
-4.332	-3.988	.05270	.00600	.01300	.00530	.00180	8.15572	8.94044	46.50790	-4.93360
-4.233	.372	.03250	.00500	.01300	.02840	.00380	8.39860	8.96315	-2.24790	-3.33250
-3.803	4.330	.01220	.00600	.01650	.03480	.00320	8.46589	8.95634	-48.28600	-4.85050
-3.861	6.148	.00470	.00580	.01650	.03730	.00300	8.49217	8.95407	-57.89780	-6.29230
	GRADIENT	-.00486	-.00000	.00041	.00358	.00017	.03760	.00197	-11.39226	.01600

RUN NO. 1135/ 0 RN/L = 3.50 GRADIENT INTERVAL = -5.00/ 5.00

ALPHAO	BETAO	CNW	CBW	CTW	CHEI	CHEO	IB-ELV	OB-ELV	PHII	ALPHAI
-.375	-6.864	.09820	.01610	.03760	.00610	.00040	8.16413	8.92454	90.00370	-5.99440
-.361	-4.564	.08870	.01540	.03610	.00610	.00130	8.16413	8.93476	90.01720	-3.81530
-.335	-.469	.07180	.01370	.03370	.02600	.00230	8.37336	8.94612	90.01720	.08100
-.300	3.591	.06270	.01340	.03350	.03480	.00120	8.46589	8.93363	90.01720	3.95240
-.297	5.727	.05690	.01310	.03270	.03810	.00030	8.50058	8.92341	90.00370	5.98330
	GRADIENT	-.00319	-.00025	-.00032	.00352	-.00001	.03702	-.00014	.00000	.95249

IA156A, AEDC PWT 16T-470, O T S W/SILTS .. (R8NW85) (27 MAY 80)

REFERENCE DATA

SREF = 2690.0000 SQ.FT. XMRP = 976.0000 IN. XT
LREF = 1290.3000 INCHES YMRP = .0000 IN. YT
BREF = 1290.3000 INCHES ZMRP = 400.0000 IN. ZT
SCALE = .0200

PARAMETRIC DATA

IB-ELV = 8.000 OB-ELV = 9.000
BDFLAP = .000 SPDBRK = .000
RUDDER = .000 SILTS = 1.000
MACH = .800 RN/L = 3.500

RUN NO. 1136/ 0 RN/L = 3.50 GRADIENT INTERVAL = -5.00/ 5.00

ALPHAO	BETAO	CNW	CBW	CTW	CHEI	CHEO	IB-ELV	OB-ELV	PHII	ALPHAI
3.989	-5.860	.15030	.02740	.06550	.00500	-.00400	8.15257	8.88299	-57.71680	7.24170
3.975	-3.748	.14160	.02640	.06180	.00750	-.00410	8.17885	8.88207	-45.86060	5.69690
3.871	.191	.13160	.02350	.05310	.02840	-.00510	8.39860	8.87281	-.08820	4.17280
3.791	3.961	.12460	.02210	.04890	.03360	-.00770	8.45327	8.84876	44.76090	5.71980
3.774	6.089	.11470	.02120	.04640	.03680	-.00840	8.48691	8.84228	57.12550	7.32700
	GRADIENT	-.00221	-.00056	-.00168	.00340	-.00047	.03575	-.00431	11.75443	.00005

RUN NO. 1137/ 0 RN/L = 3.50 GRADIENT INTERVAL = -5.00/ 5.00

ALPHAO	BETAO	CNW	CBW	CTW	CHEI	CHEO	IB-ELV	OB-ELV	PHII	ALPHAI
6.082	-5.825	.17290	.03070	.07290	.00700	-.00830	8.17360	8.84321	-45.75600	8.46690
6.052	-3.780	.17080	.03030	.07110	.00840	-.00970	8.18832	8.83025	-34.24860	7.23390
5.757	.158	.15520	.02770	.06350	.02630	-.01030	8.37652	8.82470	-.48510	5.91650
5.687	4.070	.14410	.02560	.05750	.03110	-.01490	8.42698	8.78214	34.65180	7.11320
5.758	6.033	.13500	.02490	.05510	.03370	-.01790	8.45432	8.75438	45.76330	8.40290
	GRADIENT	-.00340	-.00060	-.00173	.00289	-.00066	.03042	-.00612	8.77669	-.01571

IA156A, AEDC PWT 16T-470, O T S W/SILTS (R8NW86) (27 MAY 80)

REFERENCE DATA

SREF = 2690.0000 SQ.FT. XMRP = 976.0000 IN. XT
LREF = 1290.3000 INCHES YMRP = .0000 IN. YT
BREF = 1290.3000 INCHES ZMRP = 400.0000 IN. ZT
SCALE = .0200

PARAMETRIC DATA

IB-ELV = 8.000 OB-ELV = 9.000
BDFLAP = .000 SPDBRK = .000
RUDDER = .000 SILTS = 1.000
MACH = .900 RN/L = 3.500

RUN NO. 1139/ 0 RN/L = 3.50 GRADIENT INTERVAL = -5.00/ 5.00

ALPHAO	BETAO	CNW	CBW	CTW	CHEI	CHEO	IB-ELV	OB-ELV	PHII	ALPHAI
-8.106	-5.989	.00160	-.00240	-.00500	-.02490	.00390	7.84673	8.96781	39.47870	-8.66530
-8.269	-3.772	-.00880	-.00370	-.00650	-.02460	.00580	7.84978	8.99111	27.27160	-7.69680
-8.177	.180	-.02150	-.00500	-.00590	-.00270	.01010	8.07254	9.04383	.11420	-6.80480
-7.996	4.388	-.04080	-.00450	-.00220	.00810	.00890	8.19195	9.02912	-29.06900	-7.75720
-8.012	6.268	-.04750	-.00440	-.00040	.01260	.00930	8.24304	9.03402	-38.82510	-8.77660
	GRADIENT	-.00392	-.00010	.00053	.00399	.00037	.04179	.00457	-6.90523	-.00977

IA156A, AEDC PWT 16T-470, O T S W/SILTS (R8NW86) (27 MAY 80)

REFERENCE DATA

SREF = 2690.0000 SQ.FT. XMRP = 976.0000 IN. XT
LREF = 1290.3000 INCHES YMRP = .0000 IN. YT
BREF = 1290.3000 INCHES ZMRP = 400.0000 IN. ZT
SCALE = .0200

PARAMETRIC DATA

IB-ELV = 8.000 OB-ELV = 9.000
BDFLAP = .000 SPDBRK = .000
RUDDER = .000 SILTS = 1.000
MACH = .900 RN/L = 3.500

RUN NO. 1140/ 0 RN/L = 3.50 GRADIENT INTERVAL = -5.00/ 5.00

ALPHAO	BETAO	CNW	CBW	CTW	CHEI	CHEO	IB-ELV	OB-ELV	PHII	ALPHAI
-6.214	-5.990	.03260	.00180	.00510	-.02260	.00860	7.87013	9.02544	47.29550	-7.37810
-6.164	-4.072	.02850	.00090	.00460	-.02400	.01070	7.85589	9.05118	36.83930	-6.18110
-6.253	.100	.00340	-.00130	.00280	.00270	.01610	8.13065	9.11739	1.01790	-5.06760
-6.063	4.260	-.01620	-.00090	.00520	.01320	.01380	8.24985	9.08919	-35.24640	-6.23670
-5.777	6.360	-.02640	-.00030	.00760	.01990	.01170	8.32590	9.06344	-48.35570	-7.40080
	GRADIENT	-.00537	-.00022	.00007	.00447	.00037	.04729	.00457	-8.65153	-.00653

RUN NO. 1141/ 0 RN/L = 3.50 GRADIENT INTERVAL = -5.00/ 5.00

ALPHAO	BETAO	CNW	CBW	CTW	CHEI	CHEO	IB-ELV	OB-ELV	PHII	ALPHAI
-4.123	-6.093	.05630	.00710	.01740	-.02040	.00970	7.89250	9.03892	59.61020	-6.27240
-4.340	-4.003	.04450	.00530	.01430	-.02330	.01130	7.86301	9.05854	46.83720	-4.86350
-4.253	.378	.01940	.00300	.01180	.00870	.01520	8.19876	9.10635	-2.44420	-3.27010
-3.800	4.332	-.00240	.00370	.01470	.02050	.01220	8.33272	9.06957	-48.68330	-4.78340
-3.869	6.156	-.00620	.00320	.01460	.02420	.01080	8.37472	9.05241	-58.19710	-6.23470
	GRADIENT	-.00563	-.00020	.00004	.00529	.00012	.05671	.00150	-11.45586	.01395

RUN NO. 1142/ 0 RN/L = 3.50 GRADIENT INTERVAL = -5.00/ 5.00

ALPHAO	BETAO	CNW	CBW	CTW	CHEI	CHEO	IB-ELV	OB-ELV	PHII	ALPHAI
-.404	-6.963	.11230	.01690	.04170	-.01500	.00310	7.94743	8.95801	89.99010	-6.02820
-.385	-4.826	.09620	.01600	.03890	-.02130	.00570	7.88335	8.98988	89.99010	-4.01310
-.354	-.537	.07220	.01310	.03410	.00690	.00560	8.17833	8.98866	90.01720	.03260
-.319	3.586	.06060	.01190	.03240	.02000	.00520	8.32704	8.98375	90.03070	3.94540
-.319	5.744	.05150	.01120	.03050	.02400	.00580	8.37245	8.99111	90.01720	5.98440
	GRADIENT	-.00424	-.00049	-.00078	.00492	-.00006	.05285	-.00073	.00484	.94608

RUN NO. 1143/ 0 RN/L = 3.50 GRADIENT INTERVAL = -5.00/ 5.00

ALPHAO	BETAO	CNW	CBW	CTW	CHEI	CHEO	IB-ELV	OB-ELV	PHII	ALPHAI
4.083	-5.726	.16000	.02640	.06510	-.02020	.00050	7.89454	8.92613	-56.35240	7.16750
3.960	-3.778	.15290	.02560	.06220	-.02040	-.00070	7.89250	8.91301	-45.99300	5.69690
3.857	.180	.13600	.02290	.05320	.00940	-.00290	8.20671	8.89103	-.15690	4.16580
3.771	3.897	.12610	.02140	.04820	.01560	-.00360	8.27709	8.88404	44.32420	5.65870
3.758	6.064	.11640	.02040	.04540	.02150	-.00580	8.34407	8.86206	56.93970	7.28270
	GRADIENT	-.00350	-.00055	-.00183	.00472	-.00038	.05043	-.00379	11.76602	-.00908

IA156A, AEDC PWT 16T-470, O T S W/SILTS (R8NW87) (27 MAY 80)

REFERENCE DATA

SREF = 2690.0000 SQ.FT. XMRP = 976.0000 IN. XT
LREF = 1290.3000 INCHES YMRP = .0000 IN. YT
BREF = 1290.3000 INCHES ZMRP = 400.0000 IN. ZT
SCALE = .0200

PARAMETRIC DATA

IB-ELV = 8.000 OB-ELV = 9.000
BDFLAP = .000 SPDBRK = .000
RUDDER = .000 SILTS = 1.000
MACH = .950 RN/L = 3.500

RUN NO. 1144/ 0 RN/L = 3.50 GRADIENT INTERVAL = -5.00/ 5.00

ALPHAO	BETAO	CNW	CBW	CTW	CHEI	CHEO	IB-ELV	OB-ELV	PHII	ALPHAI
-8.259	-5.902	-.00040	-.00250	-.00580	-.03520	.00000	7.72875	8.92000	38.72740	-8.63350
-8.255	-3.821	-.00630	-.00330	-.00590	-.03910	.00640	7.68762	9.00136	27.68500	-7.62450
-8.175	.389	-.02570	-.00500	-.00550	-.02360	01040	7.85109	9.05221	-1.46210	-6.73850
-8.017	4.353	-.04320	-.00480	-.00210	-.01750	.01550	7.91543	9.11705	-28.93640	-7.68590
-8.001	6.248	-.05460	-.00450	-.00010	-.00950	.01720	7.99980	9.13866	-38.93680	-8.67720
	GRADIENT	-.00452	-.00019	.00046	.00265	.00111	.02798	.01413	-6.92697	-.00526

RUN NO. 1145/ 0 RN/L = 3.50 GRADIENT INTERVAL = -5.00/ 5.00

ALPHAO	BETAO	CNW	CBW	CTW	CHEI	CHEO	IB-ELV	OB-ELV	PHII	ALPHAI
-6.216	-5.993	.03430	.00250	.00530	-.03570	-.00130	7.72348	8.90653	47.46730	-7.32070
-6.163	-4.073	.02910	.00160	.00490	-.03970	.00490	7.68129	8.98229	36.99660	-6.12550
-6.250	.107	.00350	-.00090	.00250	-.02260	00840	7.86164	9.02679	.91570	-5.00860
-6.075	4.266	-.02180	-.00070	.00430	-.01340	.01130	7.95867	9.06365	-35.42780	-6.18900
-5.773	6.363	-.02920	.00010	.00810	-.00550	.01030	8.04199	9.05094	-48.56480	-7.34440
	GRADIENT	-.00610	-.00028	-.00007	.00315	.00077	.03327	.00976	-8.68550	-.00739

RUN NO. 1146/ 0 RN/L = 3.49 GRADIENT INTERVAL = -5.00/ 5.00

ALPHAO	BETAO	CNW	CBW	CTW	CHEI	CHEO	IB-ELV	OB-ELV	PHII	ALPHAI
-4.115	-6.097	.05980	.00780	.01840	-.03420	-.00070	7.73930	8.91275	59.88130	-6.22680
-4.333	-4.005	.04580	.00600	.01480	-.03990	.00430	7.67918	8.97466	47.10930	-4.81840
-4.255	.374	.01940	.00360	.01160	-.01950	.00540	7.89434	8.98865	-2.44440	-3.22700
-3.806	4.343	-.00100	.00380	.01520	-.01050	.00540	7.98926	8.98865	-48.92720	-4.76030
-3.876	6.157	-.00820	.00330	.01570	-.00510	.00650	8.04621	9.00263	-58.36410	-6.19200
	GRADIENT	-.00561	-.00027	.00003	.00354	.00013	.03735	.00170	-11.50053	.01306

RUN NO. 1147/ 0 RN/L = 3.49 GRADIENT INTERVAL = -5.00/ 5.00

ALPHAO	BETAO	CNW	CBW	CTW	CHEI	CHEC	IB-ELV	OB-ELV	PHII	ALPHAI
-.416	-6.985	.11140	.01760	.04170	-.02790	-.00680	7.80574	8.84956	89.99010	-6.02820
-.397	-4.840	.09780	.01630	.03890	-.03830	-.00700	7.69606	8.84749	90.00370	-4.01410
-.367	-.542	.07210	.01320	.03320	-.02040	.00160	7.88484	8.94034	90.01720	.03340
-.331	3.582	.05760	.01150	.03100	-.01400	.00200	7.95234	8.94543	90.01720	3.93520
-.331	5.762	.05100	.01060	.03060	-.00940	.00390	8.00086	8.96958	90.00370	5.98870
	GRADIENT	-.00478	-.00057	-.00094	.00289	.00108	.03053	.01170	.00161	.94389

IA156A, AEDC PWT 16T-470, O T S W/SILTS (R8NW87) (27 MAY 80)

REFERENCE DATA

SREF = 2690.0000 SQ.FT. XMRP = 976.0000 IN. XT
LREF = 1290.3000 INCHES YMRP = .0000 IN. YT
BREF = 1290.3000 INCHES ZMRP = 400.0000 IN. ZT
SCALE = .0200

PARAMETRIC DATA

IB-ELV = 8.000 OB-ELV = 9.000
BDFLAP = .000 SPDBRK = .000
RUDDER = .000 SILTS = 1.000
MACH = .950 RN/L = 3.500

RUN NO. 1148/ 0 RN/L = 3.49 GRADIENT INTERVAL = -5.00/ 5.00

ALPHAO	BETAO	CNW	CBW	CTW	CHEI	CHEO	IB-ELV	OB-ELV	PHII	ALPHAI
3.978	-5.855	.16980	.02680	.06430	-.03250	-.01730	7.75723	8.74080	-57.41060	7.21060
3.964	-3.754	.15570	.02550	.06040	-.03890	-.01800	7.68973	8.73355	-45.54690	5.69580
3.852	.184	.13660	.02300	.05170	-.02210	-.01310	7.86691	8.78430	-.06670	4.18790
3.794	3.946	.12370	.02130	.04610	-.01140	-.01710	7.97977	8.74287	44.41010	5.71210
3.767	6.073	.11230	.01980	.04280	-.00190	-.02100	8.07996	8.70247	56.85400	7.28930
	GRADIENT	-.00416	-.00055	-.00186	.00358	.00013	.03772	.00130	11.68109	-.00087

IA156A, AEDC PWT 16T-470, O T S W/SILTS (R8NW88) (27 MAY 80)

REFERENCE DATA

SREF = 2690.0000 SQ.FT. XMRP = 976.0000 IN. XT
LREF = 1290.3000 INCHES YMRP = .0000 IN. YT
BREF = 1290.3000 INCHES ZMRP = 400.0000 IN. ZT
SCALE = .0200

PARAMETRIC DATA

IB-ELV = 8.000 OB-ELV = 9.000
BDFLAP = .000 SPDBRK = .000
RUDDER = .000 SILTS = 1.000
MACH = 1.050 RN/L = 3.500

RUN NO. 1149/ 0 RN/L = 3.50 GRADIENT INTERVAL = -5.00/ 5.00

ALPHAO	BETAO	CNW	CBW	CTW	CHEI	CHEO	IB-ELV	OB-ELV	PHII	ALPHAI
-8.264	-5.919	-.00280	-.00320	-.00390	.00120	-.00450	8.11495	8.87067	39.17810	-8.49250
-8.287	-3.832	-.01080	-.00440	-.00410	.01060	-.00070	8.23204	8.91233	27.99870	-7.49190
-8.186	.397	-.03460	-.00650	-.00300	.03790	.00300	8.57211	8.96036	-1.58170	-6.58190
-8.011	4.342	-.06240	-.00730	-.00180	.04440	.00490	8.65308	8.98592	-29.35880	-7.50870
-8.017	6.263	-.06960	-.00780	-.00120	.04530	.00540	8.66429	8.99265	-39.45290	-8.54610
	GRADIENT	-.00630	-.00036	.00028	.00416	.00069	.05186	.00903	-7.01689	.00054

RUN NO. 1150/ 0 RN/L = 3.50 GRADIENT INTERVAL = -5.00/ 5.00

ALPHAO	BETAO	CNW	CBW	CTW	CHEI	CHEO	IB-ELV	OB-ELV	PHII	ALPHAI
-6.217	-6.000	.03630	.00270	.00830	-.00560	-.00720	8.03750	8.84107	47.91840	-7.21380
-6.143	-4.071	.02780	.00120	.00710	.00260	-.00340	8.13239	8.88273	37.49000	-5.99440
-6.263	.102	-.00580	-.00220	.00490	.03370	-.00060	8.51979	8.91342	.95890	-4.88350
-6.050	4.276	-.03320	-.00310	.00570	.03710	-.00060	8.56214	8.91342	-36.06970	-6.05700
-6.010	6.261	-.04760	-.00360	.00570	.03810	-.00050	8.57460	8.91452	-47.51240	-7.29000
	GRADIENT	-.00731	-.00052	-.00017	.00413	.00034	.05148	.00368	-8.81293	-.00752

IA156A, AEDC PWT 16T-470, O T S W/SILTS (R8NW88) (27 MAY 80)

REFERENCE DATA

SREF = 2690.0000 SQ.FT. XMRP = 976.0000 IN. XT
LREF = 1290.3000 INCHES YMRP = .0000 IN. YT
BREF = 1290.3000 INCHES ZMRP = 400.0000 IN. ZT
SCALE = .0200

PARAMETRIC DATA

IB-ELV = 8.000 OB-ELV = 9.000
BDFLAP = .000 SPDBRK = .000
RUDDER = .000 SILTS = 1.000
MACH = 1.050 RN/L = 3.500

RUN NO. 1151/ 0 RN/L = 3.50 GRADIENT INTERVAL = -5.00/ 5.00

ALPHAO	BETAO	CNW	CBW	CTW	CHEI	CHEO	IB-ELV	OB-ELV	PHII	ALPHAI
-4.122	-6.105	.06590	.00900	.02190	-.00950	-.00820	7.99397	8.83011	60.30930	-6.15130
-4.348	-4.023	.04850	.00620	.01740	-.00130	-.00460	8.08549	8.86958	47.65350	-4.74730
-4.265	.371	.01610	.00270	.01430	.02810	-.00420	8.45003	8.87396	-2.52270	-3.13350
-3.797	4.336	-.01800	.00190	.01490	.03190	-.00390	8.49737	8.87725	-49.61000	-4.66310
-3.885	6.173	-.03100	.00110	.01390	.03380	-.00020	8.52104	8.91781	-58.92090	-6.12650
	GRADIENT	-.00795	-.00052	-.00031	.00402	.00008	.04988	.00092	-11.63199	.01651

RUN NO. 1152/ 0 RN/L = 3.50 GRADIENT INTERVAL = -5.00/ 5.00

ALPHAO	BETAO	CNW	CBW	CTW	CHEI	CHEO	IB-ELV	OB-ELV	PHII	ALPHAI
-.451	-7.057	.12920	.02120	.04390	-.01530	-.01100	7.92923	8.79942	89.99010	-6.04600
-.435	-4.891	.11230	.01890	.04140	-.01030	-.00910	7.98504	8.82025	90.00370	-4.02720
-.409	-.539	.07890	.01400	.03540	.01840	-.00350	8.32920	8.88163	90.01720	.05110
-.376	3.592	.05640	.01040	.03130	.02260	-.00580	8.38152	8.85642	90.01720	3.93520
-.373	5.772	.04460	.00890	.02900	.02550	-.01160	8.41765	8.79284	90.00370	5.97780
	GRADIENT	-.00660	-.00100	-.00119	.00390	.00040	.04703	.00435	.00160	.93859

RUN NO. 1153/ 0 RN/L = 3.50 GRADIENT INTERVAL = -5.00/ 5.00

ALPHAO	BETAO	CNW	CBW	CTW	CHEI	CHEO	IB-ELV	OB-ELV	PHII	ALPHAI
4.063	-5.735	.17140	.02940	.06440	-.02040	-.01500	7.87231	8.75557	-56.05310	7.16410
3.941	-3.723	.15990	.02770	.06080	-.01560	-.01180	7.92588	8.79065	-45.16350	5.66740
3.717	.017	.13810	.02410	.05200	.00200	-.01690	8.12491	8.73474	-2.56040	4.07520
3.796	3.944	.12160	.02080	.04710	.00510	-.02660	8.16353	8.62841	44.15240	5.72090
3.767	6.061	.10740	.01830	.04320	.01270	-.03170	8.25820	8.57251	56.62540	7.27490
	GRADIENT	-.00499	-.00090	-.00178	.00268	-.00193	.03082	-.02121	11.65129	.01042

IA156A, AEDC PWT 16T-470, O T S W/SILTS (R8NW89) (27 MAY 80)

REFERENCE DATA

SREF = 2690.0000 SQ.FT. XMRP = 976.0000 IN. XT
LREF = 1290.3000 INCHES YMRP = .0000 IN. YT
BREF = 1290.3000 INCHES ZMRP = 400.0000 IN. ZT
SCALE = .0200

PARAMETRIC DATA

IB-ELV = 8.000 OB-ELV = 9.000
BDFLAP = .000 SPDBRK = .000
RUDDER = .000 SILTS = 1.000
MACH = 1.100 RN/L = 3.500

RUN NO. 1154/ 0 RN/L = 3.50 GRADIENT INTERVAL = -5.00/ 5.00

ALPHAO	BETAO	CNW	CBW	CTW	CHEI	CHEO	IB-ELV	OB-ELV	PHII	ALPHAI
-8.2[illegible]	-5.914	.00290	-.00260	-.00160	.00800	-.00350	8.20209	8.88069	39.27830	-8.47270
-8.2[illegible]	-3.818	-.00640	-.00380	-.00220	.01550	-.00120	8.29780	8.90652	28.04860	-7.45820
-8.183	.180	-.03360	-.00600	-.00150	.04350	.00060	8.65512	8.92827	.11110	-6.56210
-8.011	4.357	-.06190	-.00650	.00010	.05190	.00200	8.76232	8.94756	-29.43570	-7.51560
-8.012	6.257	-.06800	-.00730	.00040	.05600	.00290	8.81464	8.95997	-39.43190	-8.53420
	GRADIENT	-.00679	-.00033	.00028	.00443	.00039	.05659	.00502	-7.03220	-.00868

RUN NO. 1155/ 0 RN/L = 3.50 GRADIENT INTERVAL = -5.00/ 5.00

ALPHAO	BETAO	CNW	CBW	CTW	CHEI	CHEO	IB-ELV	OB-ELV	PHII	ALPHAI
-6.202	-5.994	.03990	.00330	.00970	-.00070	-.00650	8.09200	8.84700	48.09020	-7.18800
-6.179	-4.081	.02830	.00150	.00810	.00680	-.00440	8.18678	8.87059	37.54010	-6.01420
-6.274	.100	-.00350	-.00170	.00630	.03760	-.00270	8.57983	8.88968	1.02670	-4.89150
-6.064	4.280	-.03120	-.00240	.00730	.04840	-.00100	8.71766	8.90877	-36.01390	-6.07090
-6.003	6.253	-.04600	-.00310	.00710	.05090	.00370	8.74956	8.97099	-47.47760	-7.28110
	GRADIENT	-.00712	-.00047	-.00010	.00498	.00041	.06349	.00457	-8.79717	-.00677

RUN NO. 1156/ 0 RN/L = 3.50 GRADIENT INTERVAL = -5.00/ 5.00

ALPHAO	BETAO	CNW	CBW	CTW	CHEI	CHEO	IB-ELV	OB-ELV	PHII	ALPHAI
-4.123	-6.105	.07140	.01020	.02270	-.00450	-.00730	8.04855	8.83802	60.39490	-6.15730
-4.346	-4.020	.05300	.00700	.01910	.00370	-.00480	8.14722	8.86610	47.76800	-4.74830
-4.258	.363	.01970	.00340	.01620	.03570	-.00500	8.55559	8.86385	-2.32110	-3.13500
-3.785	4.336	-.01090	.00250	.01710	.04010	.00030	8.61174	8.92413	-49.56130	-4.66310
-3.882	6.170	-.02370	.00150	.01570	.04250	-.00440	8.64236	8.87059	-58.83040	-6.12650
	GRADIENT	-.00765	-.00054	-.00025	.00441	.00060	.05624	.00682	-11.64488	.01635

RUN NO. 1157/ 0 RN/L = 3.50 GRADIENT INTERVAL = -5.00/ 5.00

ALPHAO	BETAO	CNW	CBW	CTW	CHEI	CHEO	IB-ELV	OB-ELV	PHII	ALPHAI
-.456	-7.037	.13110	.02150	.04230	-.00920	-.00960	7.99480	8.81219	90.00370	-6.02820
-.437	-4.905	.11560	.01940	.04020	-.00290	-.00690	8.06684	8.84251	89.99010	-4.04640
-.402	-.515	.08500	.01490	.03620	.02490	-.00300	8.41776	8.88631	90.01720	.07220
-.373	3.594	.06070	.01090	.03240	.02940	-.01360	8.47519	8.76727	90.03070	3.93520
-.369	5.774	.04810	.00910	.02980	.03190	-.02070	8.50709	8.68754	89.99010	5.97560
	GRADIENT	-.00647	-.00100	-.00092	.00383	-.00077	.04841	-.00864	.00479	.93909

IA156A, AEDC PWT 16T-470, O T S W/SILTS (R8NW89) (27 MAY 80)

REFERENCE DATA

SREF = 2690.0000 SQ.FT. XMRP = 976.0000 IN. XT
LREF = 1290.3000 INCHES YMRP = .0000 IN. YT
BREF = 1290.3000 INCHES ZMRP = 400.0000 IN. ZT
SCALE = .0200

PARAMETRIC DATA

IB-ELV = 8.000 OB-ELV = 9.000
BDFLAP = .000 SPDBRK = .000
RUDDER = .000 SILTS = 1.000
MACH = 1.100 RN/L = 3.500

RUN NO. 1158/ 0 RN/L = 3.50 GRADIENT INTERVAL = -5.00/ 5.00

ALPHAO	BETAO	CNW	CBW	CTW	CHEI	CHEO	IB-ELV	OB-ELV	PHII	ALPHAI
3.961	-5.845	.17160	.03010	.06280	-.01840	-.01480	7.88961	8.75379	-57.38270	7.17630
3.944	-3.745	.16280	.02870	.06040	-.01230	-.01600	7.95936	8.74032	-45.49110	5.66190
3.822	.184	.14200	.02470	.05200	.00940	-.02430	8.21996	8.64711	-.14810	4.15990
3.780	3.932	.12240	.02110	.04650	.01230	-.03230	8.25697	8.55727	44.18820	5.68590
3.771	6.068	.10930	.01890	.04340	.01780	-.03550	8.32715	8.52133	56.63960	7.27050
	GRADIENT	-.00526	-.00099	-.00181	.00322	-.00212	.03899	-.02384	11.67979	.00001

IA156A, AEDC PWT 16T-470, O T S W/SILTS (R8NW90) (27 MAY 80)

REFERENCE DATA

SREF = 2690.0000 SQ.FT. XMRP = 976.0000 IN. XT
LREF = 1290.3000 INCHES YMRP = .0000 IN. YT
BREF = 1290.3000 INCHES ZMRP = 400.0000 IN. ZT
SCALE = .0200

PARAMETRIC DATA

IB-ELV = 8.000 OB-ELV = 9.000
BDFLAP = .000 SPDBRK = .000
RUDDER = .000 SILTS = 1.000
MACH = 1.150 RN/L = 3.500

RUN NO. 1159/ 0 RN/L = 3.49 GRADIENT INTERVAL = -5.00/ 5.00

ALPHAO	BETAO	CNW	CBW	CTW	CHEI	CHEO	IB-ELV	OB-ELV	PHII	ALPHAI
-8.245	-5.924	.00720	-.00150	-.00110	.01490	-.00400	8.29384	8.87421	39.29260	-8.45280
-8.273	-3.821	-.00400	-.00340	-.00190	.02500	-.00330	8.42523	8.88222	28.02730	-7.44340
-8.197	.395	-.03230	-.00600	-.00100	.05240	-.00240	8.78168	8.89252	-1.58310	-6.55210
-8.012	4.342	-.06020	-.00660	.00020	.06110	-.00130	8.89486	8.90512	-29.47060	-7.48200
-8.013	6.266	-.06660	-.00720	.00060	.06370	.00220	8.92868	8.95091	-39.58540	-8.51630
	GRADIENT	-.00688	-.00039	.00026	.00445	.00024	.05784	.00280	-7.04332	-.00228

RUN NO. 1160/ 0 RN/L = 3.50 GRADIENT INTERVAL = -5.00/ 5.00

ALPHAO	BETAO	CNW	CBW	CTW	CHEI	CHEO	IB-ELV	OB-ELV	PHII	ALPHAI
-6.211	-6.001	.04660	.00520	.01010	.00770	-.00660	8.20017	8.84444	48.02580	-7.18600
-6.157	-4.080	.03620	.00300	.00940	.01830	-.00550	8.33807	8.85704	37.60440	-5.98240
-6.277	.102	-.00170	-.00140	.00690	.04980	-.00560	8.74785	8.85589	.94480	-4.87350
-6.058	4.283	-.02890	-.00250	.00770	.05710	.00030	8.84282	8.92421	-36.12550	-6.04700
-6.000	6.253	-.04310	-.00320	.00780	.05830	-.00300	8.85843	8.88566	-47.56820	-7.25930
	GRADIENT	-.00778	-.00066	-.00020	.00464	.00069	.06035	.00803	-8.81599	-.00773

IA156A, AEDC PWT 16T-470, O T S W/SILTS (R8NW90) (27 MAY 80)

REFERENCE DATA

SREF = 2690.0000 SQ.FT. XMRP = 976.0000 IN. XT
LREF = 1290.3000 INCHES YMRP = .0000 IN. YT
BREF = 1290.3000 INCHES ZMRP = 400.0000 IN. ZT
SCALE = .0200

PARAMETRIC DATA

IB-ELV = 8.000 OB-ELV = 9.000
BDFLAP = .000 SPDBRK = .000
RUDDER = .000 SILTS = 1.000
MACH = 1.150 RN/L = 3.500

RUN NO. 1161/ 0 RN/L = 3.50 GRADIENT INTERVAL = -5.00/ 5.00

ALPHAO	BETAO	CNW	CBW	CTW	CHEI	CHEO	IB-ELV	OB-ELV	PHII	ALPHAI
-4.119	-6.114	.07890	.01210	.02240	.00570	-.00610	8.17415	8.85017	60.38070	-6.14830
-4.340	-4.024	.06420	.00940	.02020	.01700	-.00510	8.32115	8.86162	47.65350	-4.74130
-4.279	.374	.02670	.00430	.01740	.04790	-.00170	8.72314	8.90054	-2.54150	-3.14220
-3.795	4.332	-.00990	.00250	.01740	.05080	-.00850	8.76086	8.82269	-49.60310	-4.65010
-3.894	6.179	-.02300	.00140	.01600	.05210	-.01300	8.77777	8.77118	-58.92090	-6.12650
	GRADIENT	-.00886	-.00083	-.00034	.00410	-.00039	.05333	-.00441	-11.63429	.01741

RUN NO. 1162/ 0 RN/L = 3.49 GRADIENT INTERVAL = -5.00/ 5.00

ALPHAO	BETAO	CNW	CBW	CTW	CHEI	CHEO	IB-ELV	OB-ELV	PHII	ALPHAI
-.448	-7.070	.13450	.02220	.04060	-.00030	-.00570	8.09650	8.85475	89.97660	-6.04700
-.413	-4.929	.12100	.02080	.04040	.00820	-.00240	8.20667	8.89252	90.00370	-4.06050
-.378	-.504	.09440	.01690	.03800	.03880	-.01190	8.60475	8.78377	90.03070	.08410
-.348	3.596	.06950	.01280	.03470	.04200	-.02440	8.64638	8.64067	90.00370	3.93570
-.358	5.780	.05340	.01020	.03160	.04530	-.03000	8.68931	8.57656	90.01720	5.97340
	GRADIENT	-.00604	-.00094	-.00067	.00400	-.00257	.05208	-.02948	.00008	.93790

RUN NO. 1163/ 0 RN/L = 3.50 GRADIENT INTERVAL = -5.00/ 5.00

ALPHAO	BETAO	CNW	CBW	CTW	CHEI	CHEO	IB-ELV	OB-ELV	PHII	ALPHAI
3.969	-5.846	.17290	.03040	.05990	-.01090	-.01560	7.97295	8.74141	-57.22260	7.17410
3.937	-3.734	.16380	.02890	.05820	-.00130	-.01950	8.08485	8.69676	-45.36570	5.64770
3.820	.186	.14770	.02540	.05190	.02240	-.03100	8.39140	8.56511	.02570	4.15290
3.826	3.967	.12740	.02220	.04790	.02300	-.03980	8.39921	8.46437	44.26700	5.73620
3.727	6.007	.11470	.01980	.04480	.02490	-.04550	8.42393	8.39912	56.76820	7.19290
	GRADIENT	-.00472	-.00087	-.00134	.00317	-.00264	.04105	-.03020	11.63979	.00909

IA156A, AEDC PWT 16T-470, O T S W/SILTS (R8NW91) (27 MAY 80)

REFERENCE DATA

SREF = 2690.0000 SQ.FT. XMRP = 976.0000 IN. XT
LREF = 1290.3000 INCHES YMRP = .0000 IN. YT
BREF = 1290.3000 INCHES ZMRP = 400.0000 IN. ZT
SCALE = .0200

PARAMETRIC DATA

IB-ELV = 8.000 OB-ELV = 9.000
BDFLAP = .000 SPDBRK = .000
RUDDER = .000 SILTS = 1.000
MACH = 1.250 RN/L = 3.500

RUN NO. 1164/ 0 RN/L = 3.50 GRADIENT INTERVAL = -5.00/ 5.00

ALPHAO	BETAO	CNW	CBW	CTW	CHEI	CHEO	IB-ELV	OB-ELV	PHII	ALPHAI
-8.253	-5.912	.01130	-.00030	-.00500	.03590	-.00230	8.58344	8.89274	39.37130	-8.42300
-8.266	-3.806	.00530	-.00170	-.00390	.04270	-.00310	8.67501	8.88326	28.11990	-7.41070
-8.197	.403	-.01910	-.00420	.00050	.06230	-.00300	8.93895	8.88445	-1.53030	-6.53630
-8.008	4.363	-.04490	-.00510	.00350	.05940	-.00600	8.89989	8.84890	-29.43220	-7.47410
-8.020	6.274	-.05250	-.00600	.00460	.05910	-.00810	8.89585	8.82401	-39.50170	-8.49650
	GRADIENT	-.00614	-.00042	.00091	.00207	-.00035	.02790	-.00416	-7.04473	-.00549

RUN NO. 1165/ 0 RN/L = 3.50 GRADIENT INTERVAL = -5.00/ 5.00

ALPHAO	BETAO	CNW	CBW	CTW	CHEI	CHEO	IB-ELV	OB-ELV	PHII	ALPHAI
-6.244	-6.014	.04710	.00530	.00440	.02900	-.00410	8.49052	8.87141	48.14030	-7.19490
-6.183	-4.077	.04270	.00410	.00580	.03810	-.00470	8.61306	8.86430	37.64740	-5.98640
-6.278	.117	.01400	.00100	.00810	.05700	-.00860	8.86758	8.81809	1.00200	-4.86450
-6.050	4.293	-.01160	-.00080	.01110	.05440	-.01500	8.83256	8.74225	-36.11160	-6.02820
-6.001	6.271	-.02900	-.00180	.01090	.05280	-.01830	8.81102	8.70314	-47.59610	-7.24440
	GRADIENT	-.00649	-.00059	.00063	.00195	-.00123	.02625	-.01458	-8.81194	-.00480

RUN NO. 1166/ 0 RN/L = 3.49 GRADIENT INTERVAL = -5.00/ 5.00

ALPHAO	BETAO	CNW	CBW	CTW	CHEI	CHEO	IB-ELV	OB-ELV	PHII	ALPHAI
-4.135	-6.129	.07730	.01150	.01550	.02410	-.00290	8.42454	8.88563	60.60890	-6.14930
-4.339	-4.003	.06510	.00950	.01480	.03550	-.00440	8.57805	8.86786	47.87540	-4.71120
-4.265	.380	.03710	.00670	.01720	.05050	-.01500	8.78004	8.74225	-2.32590	-3.12130
-3.793	4.340	.00400	.00550	.01960	.04650	-.02470	8.72618	8.62730	-49.51250	-4.64300
-3.889	6.192	-.00660	.00370	.01820	.04530	-.02760	8.71002	8.59293	-58.91390	-6.11950
	GRADIENT	-.00731	-.00048	.00057	.00136	-.00243	.01826	-.02883	-11.67008	.01447

RUN NO. 1167/ 0 RN/L = 3.50 GRADIENT INTERVAL = -5.00/ 5.00

ALPHAO	BETAO	CNW	CBW	CTW	CHEI	CHEO	IB-ELV	OB-ELV	PHII	ALPHAI
-.478	-7.082	.12560	.02130	.03230	.01090	-.00730	8.24678	8.83349	89.97660	-6.04110
-.444	-4.897	.11850	.02030	.03360	.02160	-.01300	8.39087	8.76595	89.99010	-4.02170
-.399	-.550	.09860	.01740	.03420	.04430	-.02450	8.69655	8.62967	90.04430	.04380
-.376	3.595	.07390	.01420	.03320	.04090	-.03410	8.65077	8.51591	90.03070	3.93030
-.383	5.801	.06150	.01210	.03130	.03720	-.03930	8.60094	8.45428	89.99010	5.98650
	GRADIENT	-.00525	-.00072	-.00005	.00230	-.00249	.03093	-.02946	.00484	.93639

IA156A, AEDC PWT 16T-470, O T S W/SILTS (R8NW91) (27 MAY 80)

REFERENCE DATA

SREF = 2690.0000 SQ.FT. XMRP = 976.0000 IN. XT
LREF = 1290.3000 INCHES YMRP = .0000 IN. YT
BREF = 1290.3000 INCHES ZMRP = 400.0000 IN. ZT
SCALE = .0200

PARAMETRIC DATA

IB-ELV = 8.000 OB-ELV = 9.000
BDFLAP = .000 SPDBRK = .000
RUDDER = .000 SILTS = 1.000
MACH = 1.250 RN/L = 3.500

RUN NO. 1168/ 0 RN/L = 3.49 GRADIENT INTERVAL = -5.00/ 5.00

ALPHAO	BETAO	CNW	CBW	CTW	CHEI	CHEO	IB-ELV	OB-ELV	PHII	ALPHAI
4.077	-5.702	.16940	.03020	.05370	.00340	-.02990	8.14579	8.56568	-56.11570	7.10660
3.954	-3.767	.16030	.02900	.05250	.01100	-.03460	8.24813	8.50998	-45.79090	5.66740
3.808	.180	.14730	.02570	.04840	.02840	-.04430	8.48244	8.39503	-.41160	4.13130
3.745	3.875	.12720	.02250	.04510	.02230	-.05150	8.40030	8.30971	43.88750	5.61390
3.771	6.090	.11500	.02020	.04300	.01770	-.05540	8.33835	8.26349	56.56820	7.26940
	GRADIENT	-.00432	-.00085	-.00097	.00151	-.00221	.02036	-.02624	11.73209	-.01133

IA156A, AEDC PWT 16T-470, O T S W/SILTS (R8NW92) (27 MAY 80)

REFERENCE DATA

SREF = 2690.0000 SQ.FT. XMRP = 976.0000 IN. XT
LREF = 1290.3000 INCHES YMRP = .0000 IN. YT
BREF = 1290.3000 INCHES ZMRP = 400.0000 IN. ZT
SCALE = .0200

PARAMETRIC DATA

IB-ELV = 8.000 OB-ELV = 5.000
BDFLAP = .000 SPDBRK = .000
RUDDER = .000 SILTS = 1.000
MACH = .600 RN/L = 3.500

RUN NO. 1173/ 0 RN/L = 3.50 GRADIENT INTERVAL = -5.00/ 5.00

ALPHAO	BETAO	CNW	CBW	CTW	CHEI	CHEO	IB-ELV	OB-ELV	PHII	ALPHAI
-8.025	-7.908	-.02210	-.00400	-.01180	.01650	.00450	8.23985	5.04119	47.10220	-10.24180
-8.116	-5.784	-.03300	-.00480	-.01310	.01600	.00480	8.23561	5.04394	37.99060	-8.96170
-8.121	-3.803	-.03560	-.00480	-.01210	.01720	.00560	8.24579	5.05126	27.42840	-7.99280
-8.048	.275	-.04660	-.00500	-.01020	.02620	.00850	8.32207	5.07781	-.54540	-7.09100
-7.900	4.226	-.05810	-.00380	-.00640	.02970	.00900	8.35173	5.08239	-27.95170	-8.00370
-7.898	6.164	-.05790	-.00370	-.00570	.03150	.00910	8.36699	5.08330	-38.19040	-9.04540
-7.725	8.229	-.06950	-.00310	-.00310	.03300	.00960	8.37971	5.08788	-47.36610	-10.29050
	GRADIENT	-.00280	.00012	.00071	.00156	.00042	.01323	.00389	-6.89713	-.00016

RUN NO. 1174/ 0 RN/L = 3.49 GRADIENT INTERVAL = -5.00/ 5.00

ALPHAO	BETAO	CNW	CBW	CTW	CHEI	CHEO	IB-ELV	OB-ELV	PHII	ALPHAI
-6.148	-7.913	.00240	.00000	-.00360	.01430	.00360	8.22121	5.03295	54.80260	-9.09530
-6.110	-5.932	.00070	-.00060	-.00360	.01490	.00420	8.22629	5.03845	46.99480	-7.63050
-6.066	-3.987	-.00690	-.00060	-.00380	.01630	.00540	8.23816	5.04943	36.23150	-6.40440
-6.110	.107	-.01580	-.00140	-.00200	.02520	.00710	8.31359	5.06499	.93250	-5.26840
-5.962	4.196	-.03230	-.00040	.00140	.02880	.00760	8.34411	5.06957	-34.79290	-6.45600
-5.737	6.239	-.04370	.00030	.00310	.03030	.00760	8.35682	5.06957	-47.45670	-7.63140
-5.875	8.145	-.05300	-.00020	.00230	.03230	.00830	8.37377	5.07598	-54.62560	-9.14710
	GRADIENT	-.00310	.00002	.00064	.00153	.00027	.01295	.00246	-8.67939	-.00624

IA156A, AEDC PWT 16T-470, O T S W/SILTS (R8NW92) (27 MAY 80)

REFERENCE DATA

SREF = 2690.0000 SQ.FT. XMRP = 976.0000 IN. XT
LREF = 1290.3000 INCHES YMRP = .0000 IN. YT
BREF = 1290.3000 INCHES ZMRP = 400.0000 IN. ZT
SCALE = .0200

PARAMETRIC DATA

IB-ELV = 8.000 OB-ELV = 5.000
BDFLAP = .000 SPDBRK = .000
RUDDER = .000 SILTS = 1.000
MACH = .600 RN/L = 3.500

RUN NO. 1175/ 0 RN/L = 3.49 GRADIENT INTERVAL = -5.00/ 5.00

ALPHAO	BETAO	CNW	CBW	CTW	CHEI	CHEO	IB-ELV	OB-ELV	PHII	ALPHAI
-4.027	-8.037	.02980	.00440	.00860	.01280	.00490	8.20849	5.04485	66.13160	-8.15930
-4.229	-5.935	.02250	.00340	.00620	.01330	.00530	8.21273	5.04852	57.69700	-6.50360
-4.242	-3.901	.01780	.00290	.00550	.01490	.00650	8.22629	5.05950	46.24300	-5.01260
-4.043	.175	.00430	.00270	.00750	.02460	.00790	8.30851	5.07232	.40160	-3.32690
-3.706	4.278	-.01390	.00340	.01200	.02760	.00720	8.33394	5.06591	-48.50210	-4.95360
-3.658	6.060	-.02160	.00340	.01270	.02900	.00700	8.34580	5.06408	-58.71210	-6.34190
-3.824	8.031	-.02780	.00280	.01140	.03130	.00710	8.36530	5.06499	-64.67230	-8.10080
	GRADIENT	-.00388	.00006	.00080	.00155	.00009	.01315	.00078	-11.58388	.00679

RUN NO. 1176/ 0 RN/L = 3.49 GRADIENT INTERVAL = -5.00/ 5.00

ALPHAO	BETAO	CNW	CBW	CTW	CHEI	CHEO	IB-ELV	OB-ELV	PHII	ALPHAI
-.373	-8.758	.07370	.01230	.02950	.01100	00430	8.19324	5.03936	90.00370	-8.00470
-.357	-6.585	.06450	.01170	.02800	.01080	.00590	8.19154	5.05401	90.00370	-5.92380
-.346	-4.536	.05780	.01110	.02700	.01230	.00660	8.20425	5.06042	90.01720	-3.95310
-.319	-.396	.04680	.01010	.02710	.02280	.00710	8.29325	5.06499	90.00370	.03180
-.289	3.682	.03960	.00980	.02760	.02800	.00620	8.33733	5.05675	90.01720	3.97230
-.286	5.791	.03580	.00950	.02730	.02950	.00570	8.35004	5.05218	90.00370	6.00410
-.275	7.868	.02890	.00910	.02670	.03200	.00500	8.37123	5.04577	89.99010	8.00280
	GRADIENT	-.00222	-.00016	.00007	.00191	-.00005	.01621	-.00044	-.00001	.96441

RUN NO. 1177/ 0 RN/L = 3.50 GRADIENT INTERVAL = -5.00/ 5.00

ALPHAO	BETAO	CNW	CBW	CTW	CHEI	CHEO	IB-ELV	OB-ELV	PHII	ALPHAI
4.089	-8.005	.12390	.02290	.05870	.00330	.00290	8.17035	5.02655	-64.29700	9.06090
4.083	-5.781	.11430	.02220	.05580	.00800	.00310	8.16781	5.02838	-56.44990	7.22280
4.051	-3.799	.11110	.02130	.05300	.01140	.00280	8.19663	5.02563	-45.30990	5.76020
3.835	.083	.10430	.01820	.04420	.02260	.00260	8.29156	5.02380	-1.58130	4.11780
3.900	4.057	.10030	.01730	.04210	.02710	.00000	8.32970	5.00000	44.43880	3.84000
3.844	6.165	.09240	.01660	.04030	.02940	.00000	8.34919	5.00000	56.79690	7.41470
3.835	8.163	.08370	.01580	.03810	.03180	-.00120	8.36953	4.99105	63.91400	9.10400
	GRADIENT	-.00137	-.00051	-.00138	.00200	-.00036	.01691	-.00327	11.42528	.01182

IA156A, AEDC PWT 16T-470, O T S W/SILTS (R8NW92) (27 MAY 80)

REFERENCE DATA

SREF = 2690.0000 SQ.FT. XMRP = 976.0000 IN. XT
LREF = 1290.3000 INCHES YMRP = .0000 IN. YT
BREF = 1290.3000 INCHES ZMRP = 400.0000 IN. ZT
SCALE = .0200

PARAMETRIC DATA

IB-ELV = 8.000 OB-ELV = 5.000
BDFLAP = .000 SPDBRK = .000
RUDDER = .000 SILTS = 1.000
MACH = .600 RN/L = 3.500

RUN NO. 1178/ 0 RN/L = 3.51 GRADIENT INTERVAL = -5.00/ 5.00

ALPHAO	BETAO	CNW	CBW	CTW	CHEI	CHEO	IB-ELV	OB-ELV	PHII	ALPHAI
6.194	-7.953	.14620	.02820	.06810	.00770	.00060	8.16526	5.00549	-53.60190	10.07630
6.164	-5.881	.13800	.02720	.06580	.00840	.00000	8.17120	5.00000	-45.38660	8.57830
6.145	-3.824	.13710	.02570	.06280	.01170	-.00050	8.19917	4.99627	-33.74610	7.34480
5.867	.188	.12700	.02230	.05430	.02230	-.00170	8.28901	4.98732	-.06140	6.03470
5.796	4.071	.11520	.02050	.04870	.02540	-.00410	8.31529	4.96942	33.89440	7.21180
5.752	5.986	.10860	.02000	.04720	.02690	-.00510	8.32800	4.96196	45.30510	8.38380
5.824	8.273	.09900	.01900	.04490	.02910	-.00640	8.34665	4.95226	54.31630	10.13170
	GRADIENT	-.00277	-.00066	-.00179	.00174	-.00046	.01475	-.00339	8.56678	-.01856

RUN NO. 1179/ 0 RN/L = 3.50 GRADIENT INTERVAL = -5.00/ 5.00

ALPHAO	BETAO	CNW	CBW	CTW	CHEI	CHEO	IB-ELV	OB-ELV	PHII	ALPHAI
8.083	-7.803	.17000	.03290	.07790	.00720	-.00250	8.16103	4.98135	-45.63060	11.15590
8.000	-5.751	.16510	.03140	.07440	.00870	-.00340	8.17374	4.97464	-37.40220	9.83000
7.965	-3.753	.16180	.03010	.07110	.01110	-.00460	8.19408	4.96569	-26.96680	8.82090
7.877	.175	.15420	.02710	.06400	.01880	-.00690	8.25935	4.94853	-.13880	7.92680
7.923	4.198	.14560	.02480	.05830	.02140	-.01020	8.28138	4.92392	27.21460	8.97700
7.890	6.206	.13930	.02380	.05550	.02300	-.01200	8.29495	4.91049	37.77610	10.01410
7.883	8.226	.12390	.02250	.05100	.02540	-.01320	8.31529	4.90154	45.96370	11.32360
	GRADIENT	-.00204	-.00067	-.00161	.00129	-.00070	.01096	-.00526	6.81426	.02062

IA156A, AEDC PWT 16T-470, O T S W/SILTS (R8NW93) (27 MAY 80)

REFERENCE DATA

SREF = 2690.0000 SQ.FT. XMRP = 976.0000 IN. XT
LREF = 1290.3000 INCHES YMRP = .0000 IN. YT
BREF = 1290.3000 INCHES ZMRP = 400.0000 IN. ZT
SCALE = .0200

PARAMETRIC DATA

IB-ELV = 8.000 OB-ELV = 5.000
BDFLAP = .000 SPDBRK = .000
RUDDER = .000 SILTS = 1.000
MACH = .800 RN/L = 3.500

RUN NO. 1180/ 0 RN/L = 3.49 GRADIENT INTERVAL = -5.00/ 5.00

ALPHAO	BETAO	CNW	CBW	CTW	CHEI	CHEO	IB-ELV	OB-ELV	PHII	ALPHAI
-8.230	-5.879	-.01460	-.00410	-.01050	.00580	.00530	8.16098	5.06018	38.39120	-8.81240
-8.259	-3.819	-.02210	-.00440	-.01100	.00730	.00670	8.17675	5.07608	27.42840	-7.82750
-8.164	.382	-.03660	-.00490	-.01020	.02150	.01030	8.32605	5.11696	-1.29940	-6.91870
-7.986	4.361	-.04890	-.00330	-.00690	.02850	.01090	8.39965	5.12377	-28.70250	-7.85720
-8.003	6.266	-.05370	-.00300	-.00590	.03130	.01120	8.42909	5.12718	-38.58800	-8.89600
	GRADIENT	-.00328	.00013	.00050	.00260	.00052	.02733	.00587	-6.86201	-.00160

RUN NO. 1181/ 0 RN/L = 3.50 GRADIENT INTERVAL = -5.00/ 5.00

ALPHAO	BETAO	CNW	CBW	CTW	CHEI	CHEO	IB-ELV	OB-ELV	PHII	ALPHAI
-6.206	-5.984	.01310	.00080	-.00020	.00590	.00520	8.16203	5.05905	47.10220	-7.47110
-6.149	-4.060	.01000	.00020	-.00080	.00670	.00690	8.17044	5.07835	36.66760	-6.25850
-6.237	.107	-.00700	-.00080	-.00120	.02090	.01000	8.31974	5.11355	1.00820	-5.14550
-6.056	4.261	-.02370	.00030	.00100	.02840	.01040	8.39860	5.11809	-35.02310	-6.32300
-5.762	6.342	-.02950	.00110	.00330	.03090	.01030	8.42488	5.11696	-48.09090	-7.47600
	GRADIENT	-.00405	.00001	.00022	.00261	.00042	.02742	.00478	-8.61602	-.00761

RUN NO. 1182/ 0 RN/L = 3.50 GRADIENT INTERVAL = -5.00/ 5.00

ALPHAO	BETAO	CNW	CBW	CTW	CHEI	CHEO	IB-ELV	OB-ELV	PHII	ALPHAI
-4.283	-6.020	.03650	.00480	.01020	.00610	.00620	8.16413	5.07040	58.09690	-6.37170
-4.316	-3.984	.02870	.00430	.00880	.00670	.00770	8.17044	5.08743	46.70120	-4.91050
-4.232	.381	.01170	.00340	.00860	.02170	.01000	8.32815	5.11355	-2.41120	-3.32240
-3.800	4.338	-.00660	.00460	.01200	.02810	.00980	8.39544	5.11128	-48.43940	-4.85250
-3.862	6.153	-.01250	.00440	.01150	.03240	.00950	8.44065	5.10787	-57.97440	-6.29720
	GRADIENT	-.00424	.00003	.00038	.00259	.00026	.02719	.00292	-11.42918	.01308

RUN NO. 1183/ 0 RN/L = 3.50 GRADIENT INTERVAL = -5.00/ 5.00

ALPHAO	BETAO	CNW	CBW	CTW	CHEI	CHEO	IB-ELV	OB-ELV	PHII	ALPHAI
-.385	-6.929	.08710	.01380	.03460	.00810	.00700	8.18516	5.07949	90.04430	-6.05400
-.382	-4.788	.07740	.01320	.03290	.00730	.00840	8.17675	5.09538	89.97560	-4.02120
-.348	-.519	.05860	.01160	.03030	.02020	.00990	8.31238	5.11242	90.00370	.03510
-.317	3.586	.04830	.01130	.02990	.02810	.00940	8.39544	5.10674	90.01720	3.94920
-.315	5.721	.04220	.01110	.02920	.03360	.00900	8.45327	5.10220	90.01720	5.97890
	GRADIENT	-.00348	-.00023	-.00036	.00249	.00012	.02616	.00137	.00486	.95187

IA156A, AEDC PWT 16T-470, O T S W/SILTS (R8NW93) (27 MAY 80)

REFERENCE DATA

SREF = 2690.0000 SQ.FT. XMRP = 976.0000 IN. XT
LREF = 1290.3000 INCHES YMRP = .0000 IN. YT
BREF = 1290.3000 INCHES ZMRP = 400.0000 IN. ZT
SCALE = .0200

PARAMETRIC DATA

IB-ELV = 8.000 OB-ELV = 5.000
BDFLAP = .000 SPDBRK = .000
RUDDER = .000 SILTS = 1.000
MACH = .800 RN/L = 3.500

RUN NO. 1184/ 0 RN/L = 3.50 GRADIENT INTERVAL = -5.00/ 5.00

ALPHAO	BETAO	CNW	CBW	CTW	CHEI	CHEO	IB-ELV	OB-ELV	PHII	ALPHAI
4.095	-5.771	.13650	.02460	.06300	.00520	.00590	8.15467	5.06699	-56.46380	7.23720
3.965	-3.678	.12750	.02320	.05850	.00740	.00610	8.17780	5.06927	-45.21930	5.66080
3.727	.120	.11520	.02010	.04920	.02280	.00620	8.33972	5.07040	-1.13840	4.06180
3.811	4.005	.10980	.01940	.04620	.03020	.00340	8.41752	5.03861	44.82540	5.77770
3.769	6.084	.10160	.01850	.04390	.03370	.00240	8.45432	5.02725	57.01120	7.33030
	GRADIENT	-.00230	-.00049	-.00160	.00296	-.00035	.03116	-.00401	11.72011	.01682

RUN NO. 1185/ 0 RN/L = 3.50 GRADIENT INTERVAL = -5.00/ 5.00

ALPHAO	BETAO	CNW	CBW	CTW	CHEI	CHEO	IB-ELV	OB-ELV	PHII	ALPHAI
6.095	-5.818	.16030	.02840	.06950	.00700	.00250	8.17360	5.02839	-45.57480	8.48600
6.044	-3.784	.15530	.02730	.06840	.00880	.00200	8.19252	5.02271	-34.12990	7.24500
5.748	.159	.14040	.02460	.06030	.02160	00150	8.32710	5.01703	-.43230	5.93180
5.691	3.986	.12960	.02290	.05470	.02840	-.00030	8.39860	4.99722	33.98010	7.08670
5.834	6.160	.12170	.02250	.05300	.03110	-.00810	8.42698	4.92506	45.95660	8.55360
	GRADIENT	-.00331	-.00057	-.00176	.00253	-.00030	.02656	-.00327	8.76430	-.02196

IA156A, AEDC PWT 16T-470, O T S W/SILTS (R8NW94) (27 MAY 80)

REFERENCE DATA

SREF = 2690.0000 SQ.FT. XMRP = 976.0000 IN. XT
LREF = 1290.3000 INCHES YMRP = .0000 IN. YT
BREF = 1290.3000 INCHES ZMRP = 400.0000 IN. ZT
SCALE = .0200

PARAMETRIC DATA

IB-ELV = 8.000 OB-ELV = 5.000
BDFLAP = .000 SPDBRK = .000
RUDDER = .000 SILTS = 1.000
MACH = .900 RN/L = 3.500

RUN NO. 1186/ 0 RN/L = 3.50 GRADIENT INTERVAL = -5.00/ 5.00

ALPHAO	BETAO	CNW	CBW	CTW	CHEI	CHEO	IB-ELV	OB-ELV	PHII	ALPHAI
-8.190	-5.916	-.02370	-.00370	-.00900	-.02180	.00340	7.87826	5.04168	38.86340	-8.67330
-8.261	-3.757	-.03020	-.00480	-.01000	-.02330	00640	7.86301	5.07847	27.22880	-7.67000
-8.166	.176	-.04050	- 00540	-.00890	-.00440	.01360	8.05525	5.16674	.13800	-6.78900
-8.002	4.417	-.05580	-.00510	-.00530	.00560	.01320	8.16357	5.16183	-29.19830	-7.77100
-8.004	6.263	-.06400	-.00510	-.00370	.00980	.01350	8.21125	5.16551	-38.82510	-8.76670
	GRADIENT	-.00314	-.00004	.00058	.00352	.00082	.03663	.01005	-6.90351	-.01521

IA156A, AEDC PWT 16T-470, O T S W/SILTS (R8NW94) (27 MAY 80)

REFERENCE DATA

SREF = 2690.0000 SQ.FT. XMRP = 976.0000 IN. XT
LREF = 1290.3000 INCHES YMRP = .0000 IN. YT
BREF = 1290.3000 INCHES ZMRP = 400.0000 IN. ZT
SCALE = .0200

PARAMETRIC DATA

IB-ELV = 8.000 OB-ELV = 5.000
BDFLAP = .000 SPDBRK = .000
RUDDER = .000 SILTS = 1.000
MACH = .900 RN/L = 3.500

RUN NO. 1187/ 0 RN/L = 3.50 GRADIENT INTERVAL = -5.00/ 5.00

ALPHAO	BETAO	CNW	CBW	CTW	CHEI	CHEO	IB-ELV	OB-ELV	PHII	ALPHAI
-6.212	-5.982	.01600	.00050	.00220	-.02000	.00750	7.89657	5.09195	47.33840	-7.36120
-6.173	-4.073	.01190	-.00030	.00190	-.02280	.01100	7.86809	5.13486	36.85360	-6.17810
-6.254	.091	-.01050	-.00170	.00000	-.00320	.01620	8.06745	5.19861	1.11120	-5.06360
-6.039	4.266	-.03430	-.00150	.00180	.00780	.01430	8.18855	5.17532	-35.40690	-6.21980
-5.991	6.248	-.04380	-.00160	.00300	.01330	.01430	8.25098	5.17532	-46.88520	-7.44140
	GRADIENT	-.00554	-.00014	-.00001	.00367	.00040	.03842	.00485	-8.66520	-.00512

RUN NO. 1188/ 0 RN/L = 3.50 GRADIENT INTERVAL = -5.00/ 5.00

ALPHAO	BETAO	CNW	CBW	CTW	CHEI	CHEO	IB-ELV	OB-ELV	PHII	ALPHAI
-4.069	-6.114	.04220	.00600	.01510	-.01750	.00950	7.92200	5.11647	60.13810	-6.25850
-4.336	-4.001	.02980	.00430	.01140	-.02330	.01240	7.86301	5.15203	46.90890	-4.85350
-4.247	.379	.00660	.00240	.00930	.00110	.01450	8.11249	5.17777	-2.43120	-3.25950
-3.792	4.317	-.01410	.00270	.01180	.01070	.01330	8.22147	5.16306	-48.69720	-4.76230
-3.879	6.244	-.01430	.00190	.01250	.01450	.01270	8.26460	5.15570	-58.57290	-6.30220
	GRADIENT	-.00528	-.00020	.00004	.00411	.00012	.04335	.00141	-11.48895	.01753

RUN NO. 1189/ 0 RN/L = 3.50 GRADIENT INTERVAL = -5.00/ 5.00

ALPHAO	BETAO	CNW	CBW	CTW	CHEI	CHEO	IB-ELV	OB-ELV	PHII	ALPHAI
-.418	-6.997	.10060	.01450	.03940	-.01160	.00640	7.98201	5.07847	89.99010	-6.06090
-.400	-4.849	.08520	.01380	.03680	-.01930	.00900	7.90369	5.11034	89.99010	-4.03730
-.365	-.473	.06080	.01140	.03230	.00210	.01330	8.12384	5.16306	90.01720	.09670
-.335	3.592	.04710	.01030	.03030	.01200	.01290	8.23622	5.15816	90.04430	3.95290
-.335	5.739	.03820	.00950	.02820	.02120	.01200	8.34066	5.14712	90.00370	5.98220
	GRADIENT	-.00453	-.00042	-.00077	.00372	.00047	.03953	.00575	.00642	.94657

RUN NO. 1190/ 0 RN/L = 3.50 GRADIENT INTERVAL = -5.00/ 5.00

ALPHAO	BETAO	CNW	CBW	CTW	CHEI	CHEO	IB-ELV	OB-ELV	PHII	ALPHAI
4.050	-5.715	.14950	.02390	.06170	-.01620	.00230	7.93522	5.02820	-56.42200	7.15310
3.950	-3.708	.13760	.02300	.05790	-.01640	.00070	7.93319	5.00858	-45.35170	5.65760
3.708	.080	.11950	.02010	.04890	.01110	.00030	8.22601	5.00368	-1.70070	4.05310
3.803	3.954	.11150	.01890	.04450	.01750	-.00640	8.29866	4.93607	44.39580	5.73180
3.762	6.072	.10350	.01810	.04200	.02350	-.00940	8.36677	4.90610	56.83970	7.29820
	GRADIENT	-.00340	-.00053	-.00175	.00441	-.00093	.04759	-.00949	11.71372	.01130

IA156A, AEDC PWT 16T-470, O T S W/SILTS (R8NW95) (27 MAY 80)

REFERENCE DATA

SREF = 2690.0000 SQ.FT. XMRP = 976.0000 IN. XT
LREF = 1290.3000 INCHES YMRP = .0000 IN. YT
BREF = 1290.3000 INCHES ZMRP = 400.0000 IN. ZT
SCALE = .0200

PARAMETRIC DATA

IB-ELV = 8.000 OB-ELV = 5.000
BDFLAP = .000 SPDBRK = .000
RUDDER = .000 SILTS = 1.000
MACH = .950 RN/L = 3.500

RUN NO. 1191/ 0 RN/L = 3.50 GRADIENT INTERVAL = -5.00/ 5.00

ALPHAO	BETAO	CNW	CBW	CTW	CHEI	CHEO	IB-ELV	OB-ELV	PHII	ALPHAI
-8.132	-5.921	-.01130	-.00390	-.00510	-.02590	.00700	7.82684	5.08899	39.25690	-8.55210
-8.276	-3.763	-.02400	-.00490	-.00670	-.03110	.01230	7.77199	5.15637	27.32860	-7.61070
-8.174	.169	-.04040	-.00620	-.00670	-.02070	.01680	7.88168	5.21357	.16390	-6.72060
-8.010	4.434	-.06080	-.00600	-.00350	-.01800	.01860	7.91016	5.23646	-29.47410	-7.70870
-7.997	6.260	-.06940	-.00580	-.00160	-.01310	.01920	7.96184	5.24408	-39.04840	-8.67720
	GRADIENT	-.00449	-.00013	.00040	.00158	.00076	.01671	.00971	-6.92972	-.01505

RUN NO. 1192/ 0 RN/L = 3.49 GRADIENT INTERVAL = -5.00/ 5.00

ALPHAO	BETAO	CNW	CBW	CTW	CHEI	CHEO	IB-ELV	OB-ELV	PHII	ALPHAI
-6.239	-6.007	.01970	.00100	.00380	-.02570	.00790	7.82895	5.10043	47.49590	-7.33850
-6.152	-4.059	.01390	.00020	.00350	-.03050	.01230	7.77832	5.15637	37.01090	-6.10760
-6.251	.098	-.01330	-.00200	.00110	-.02110	.01540	7.87746	5.19578	1.00290	-5.00360
-6.044	4.274	-.03660	-.00190	.00350	-.01630	.01530	7.92809	5.19450	-35.63710	-6.16920
-6.001	6.257	-.04490	-.00190	.00550	-.01100	.01490	7.98398	5.18942	-47.08730	-7.39190
	GRADIENT	-.00606	-.00025	.00000	.00170	.00036	.01797	.00457	-8.71815	-.00761

RUN NO. 1193/ 0 RN/L = 3.49 GRADIENT INTERVAL = -5.00/ 5.00

ALPHAO	BETAO	CNW	CBW	CTW	CHEI	CHEO	IB-ELV	OB-ELV	PHII	ALPHAI
-4.072	-6.110	.04610	.00670	.01690	-.02550	.00890	7.83106	5.11314	60.29510	-6.21390
-4.336	-4.005	.03130	.00470	.01310	-.03240	.01290	7.75828	5.16399	47.16660	-4.81440
-4.260	.372	.00590	.00220	.00990	-.01880	.01320	7.90172	5.16781	-2.42200	-3.22490
-3.798	4.338	-.01300	.00250	.01310	-.01170	.01100	7.97660	5.13984	-49.01080	-4.74730
-3.881	6.155	-.02120	.00200	.01400	-.00670	.01090	8.02934	5.13857	-58.39890	-6.19100
	GRADIENT	-.00532	-.00027	-.00001	.00249	-.00022	.02628	-.00283	-11.52407	.01416

RUN NO. 1194/ 0 RN/L = 3.48 GRADIENT INTERVAL = -5.00/ 5.00

ALPHAO	BETAO	CNW	CBW	CTW	CHEI	CHEO	IB-ELV	OB-ELV	PHII	ALPHAI
-.431	-7.014	.10260	.01590	.04050	-.02000	.00520	7.88906	5.06611	89.99010	-6.05700
-.411	-4.850	.08600	.01470	.03720	-.02940	.00850	7.78992	5.10806	90.00370	-4.02570
-.380	-.542	.06080	.01180	.03210	-.01390	.00860	7.95340	5.10933	90.01720	.03410
-.343	3.578	.04490	.00990	.02950	-.00570	.01460	8.03988	5.18561	90.01720	3.93520
-.343	5.762	.03750	.00910	.02880	-.00110	.01350	8.08840	5.17162	90.00370	5.99420
	GRADIENT	-.00488	-.00057	-.00092	.00282	.00072	.02972	.00913	.00161	.94452

IA156A, AEDC PWT 16T-470, O T S W/SILTS (R8NW95) (27 MAY 80)

REFERENCE DATA

SREF = 2690.0000 SQ.FT. XMRP = 976.0000 IN. XT
LREF = 1290.3000 INCHES YMRP = .0000 IN. YT
BREF = 1290.3000 INCHES ZMRP = 400.0000 IN. ZT
SCALE = .0200

PARAMETRIC DATA

IB-ELV = 8.000 OB-ELV = 5.000
BDFLAP = .000 SPDBRK = .000
RUDDER = .000 SILTS = 1.000
MACH = .950 RN/L = 3.500

RUN NO. 1195/ 0 RN/L = 3.49 GRADIENT INTERVAL = -5.00/ 5.00

ALPHAO	BETAO	CNW	CBW	CTW	CHEI	CHEO	IB-ELV	OB-ELV	PHII	ALPHAI
4.079	-5.762	.15480	.02520	.06330	-.02470	-.00070	7.83949	4.99275	-56.23410	7.19850
3.933	-3.661	.14180	.02370	.05860	-.03000	.00290	7.78359	5.03687	-44.93350	5.62700
3.702	.123	.12210	.02100	.04980	-.00640	.00380	8.03250	5.04831	-1.03900	4.06180
3.815	3.995	.11000	.01940	.04450	-.00160	-.00230	8.08313	4.97618	44.50320	5.77110
3.764	6.074	.10050	.01780	.04130	.00670	-.00630	8.17887	4.93474	56.76820	7.29820
	GRADIENT	-.00415	-.00056	-.00184	.00370	-.00068	.03902	-.00797	11.68207	.02045

IA156A, AEDC PWT 16T-470, O T S W/SILTS (R8NW96) (27 MAY 80)

REFERENCE DATA

SREF = 2690.0000 SQ.FT. XMRP = 976.0000 IN. XT
LREF = 1290.3000 INCHES YMRP = .0000 IN. YT
BREF = 1290.3000 INCHES ZMRP = 400.0000 IN. ZT
SCALE = .0200

PARAMETRIC DATA

IB-ELV = 8.000 OB-ELV = 5.000
BDFLAP = .000 SPDBRK = .000
RUDDER = .000 SILTS = 1.000
MACH = 1.050 RN/L = 3.500

RUN NO. 1196/ 0 RN/L = 3.50 GRADIENT INTERVAL = -5.00/ 5.00

ALPHAO	BETAO	CNW	CBW	CTW	CHEI	CHEO	IB-ELV	OB-ELV	PHII	ALPHAI
-8.154	-5.981	-.01570	-.00420	-.00250	.00610	.01330	8.17599	5.17893	39.82920	-8.44880
-8.291	-3.794	-.02400	-.00580	-.00360	.01730	.01710	8.31550	5.23005	27.78480	-7.47700
-8.203	.186	-.04790	-.00800	-.00330	.04370	.01900	8.64435	5.25561	.03280	-6.57200
-8.003	4.335	-.07480	-.00850	-.00190	.04840	.01810	8.70291	5.24350	-29.37980	-7.49880
-8.011	6.249	-.08380	-.00920	-.00200	.04970	.01780	8.71910	5.23947	-39.48080	-8.52230
	GRADIENT	-.00625	-.00033	.00021	.00381	.00012	.04742	.00162	-7.03258	-.00425

RUN NO. 1197/ 0 RN/L = 3.50 GRADIENT INTERVAL = -5.00/ 5.00

ALPHAO	BETAO	CNW	CBW	CTW	CHEI	CHEO	IB-ELV	OB-ELV	PHII	ALPHAI
-6.215	-5.998	.02410	.00120	.00790	.00010	.01170	8.10125	5.15740	47.99000	-7.19590
-6.157	-4.060	.01420	-.00030	.00670	.01000	.01610	8.22457	5.21660	37.41130	-5.98140
-6.263	.161	-.01810	-.00360	.00450	.03950	.01650	8.59204	5.22198	.38220	-4.87450
-6.064	4.290	-.04780	-.00440	.00470	.04290	.01490	8.63439	5.20045	-36.17440	-6.06490
-5.814	6.342	-.06030	-.00430	.00560	.04380	.01400	8.64561	5.18835	-48.89230	-7.22960
	GRADIENT	-.00743	-.00049	-.00024	.00395	-.00014	.04922	-.00192	-8.81293	-.00899

IA156A, AEDC PWT 16T-470, O T S W/SILTS (R8NW96) (27 MAY 80)

REFERENCE DATA

SREF = 2690.0000 SQ.FT. XMRP = 976.0000 IN. XT
LREF = 1290.3000 INCHES YMRP = .0000 IN. YT
BREF = 1290.3000 INCHES ZMRP = 400.0000 IN. ZT
SCALE = .0200

PARAMETRIC DATA

IB-ELV = 8.000 OB-ELV = 5.000
BDFLAP = .000 SPDBRK = .000
RUDDER = .000 SILTS = 1.000
MACH = 1.050 RN/L = 3.500

RUN NO. 1198/ 0 RN/L = 3.50 GRADIENT INTERVAL = -5.00/ 5.00

ALPHAO	BETAO	CNW	CBW	CTW	CHEI	CHEO	IB-ELV	OB-ELV	PHII	ALPHAI
-4.123	-6.110	.05340	.00740	.02140	-.00280	.01120	8.06875	5.15068	60.43770	-6.14830
-4.348	-4.024	.03550	.00470	.01670	.00600	.01530	8.17474	5.20584	47.78230	-4.74130
-4.265	.359	.00200	.00130	.01360	.03490	.01400	8.53474	5.18835	-2.37340	-3.12030
-3.787	4.330	-.03560	.00080	.01380	.03930	.01390	8.58955	5.18700	-49.76340	-4.64910
-3.875	6.159	-.03780	-.00030	.01340	.04060	.01810	8.60574	5.24350	-59.01130	-6.11360
	GRADIENT	-.00850	-.00047	-.00035	.00403	-.00017	.05022	-.00228	-11.67306	.01723

RUN NO. 1199/ 0 RN/L = 3.50 GRADIENT INTERVAL = -5.00/ 5.00

ALPHAO	BETAO	CNW	CBW	CTW	CHEI	CHEO	IB-ELV	OB-ELV	PHII	ALPHAI
-.466	-7.077	.12140	.01950	.04360	-.00940	.00730	7.99508	5.09821	89.99010	-6.06790
-.448	-4.893	.09960	.01720	.04060	-.00320	.01090	8.06428	5.14664	90.00370	-4.03120
-.424	-.539	.06640	.01230	.03460	.02590	.01670	8.42263	5.22467	90.01720	.05280
-.388	3.586	.04330	.00890	.03050	.03050	.01170	8.47993	5.15740	90.01720	3.93140
-.386	5.766	.03250	.00730	.02820	.03340	.00560	8.51605	5.07534	90.00370	5.97780
	GRADIENT	-.00665	-.00098	-.00119	.00400	.00011	.04933	.00142	.00161	.93903

RUN NO. 1200/ 0 RN/L = 3.50 GRADIENT INTERVAL = -5.00/ 5.00

ALPHAO	BETAO	CNW	CBW	CTW	CHEI	CHEO	IB-ELV	OB-ELV	PHII	ALPHAI
4.070	-5.753	.16790	.02870	.06410	-.01150	.00560	7.97165	5.07534	-55.96950	7.18300
3.940	-3.673	.15180	.02640	.05930	-.00730	.00700	8.01852	5.09417	-44.66860	5.64670
3.705	.113	.12780	.02250	.05060	.01060	-.00250	8.23204	4.97260	-1.07950	4.07900
3.803	3.989	.11310	.01940	.04590	.01390	-.01560	8.27315	4.82899	44.40300	5.75910
3.769	6.064	.09760	.01690	.04190	.02060	-.02120	8.35661	4.76761	56.58250	7.28380
	GRADIENT	-.00505	-.00091	-.00175	.00276	-.00295	.03314	-.03462	11.62539	.01631

IA156A, AEDC PWT 16T-470, O T S W/SILTS (R8NW97) (27 MAY 80)

REFERENCE DATA

SREF = 2690.0000 SQ.FT. XMRP = 976.0000 IN. XT
LREF = 1290.3000 INCHES YMRP = .0000 IN. YT
BREF = 1290.3000 INCHES ZMRP = 400.0000 IN. ZT
SCALE = .0200

PARAMETRIC DATA

IB-ELV = 8.000 OB-ELV = 5.000
BDFLAP = .000 SPDBRK = .000
RUDDER = .000 SILTS = 1.000
MACH = 1.100 RN/L = 3.500

RUN NO. 1201/ 0 RN/L = 3.50 GRADIENT INTERVAL = -5.00/ 5.00

ALPHAO	BETAO	CNW	CBW	CTW	CHEI	CHEO	IB-ELV	OB-ELV	PHII	ALPHAI
-8.174	-5.983	-.00810	-.00380	-.00080	.01330	.01430	8.26973	5.19709	39.90800	-8.44490
-8.275	-3.797	-.01820	-.00530	-.00170	.02280	.01610	8.39096	5.22190	27.92740	-7.45630
-8.184	.190	-.04310	-.00730	-.00090	.04960	.01590	8.73297	5.21914	.04950	-6.55810
-8.018	4.331	-.07190	-.00800	.00010	.05850	.01470	8.84655	5.20260	-29.29250	-7.50080
-8.006	6.254	-.07820	-.00870	.00050	.06170	.01460	8.88738	5.20122	-39.46680	-8.52430
	GRADIENT	-.00661	-.00033	.00022	.00438	-.00017	.05587	-.00238	-7.04049	-.00691

RUN NO. 1202/ 0 RN/L = 3.50 GRADIENT INTERVAL = -5.00/ 5.00

ALPHAO	BETAO	CNW	CBW	CTW	CHEI	CHEO	IB-ELV	OB-ELV	PHII	ALPHAI
-6.211	-5.998	.03030	.00200	.00980	.00490	.01210	8.16253	5.16677	48.09740	-7.20190
-6.170	-4.046	.01790	.00010	.00810	.01360	.01440	8.27356	5.19847	37.37560	-5.98540
-6.293	.153	-.01400	-.00310	.00610	.04440	.01430	8.66661	5.19709	.49580	-4.89550
-6.065	4.291	-.04070	-.00360	.00670	.05350	.01350	8.78274	5.18606	-36.11160	-6.07480
-5.794	6.334	-.05400	-.00370	.00780	.05630	.02000	8.81847	5.27565	-48.89930	-7.21970
	GRADIENT	-.00703	-.00044	-.00017	.00479	-.00011	.06115	-.00148	-8.81429	-.01005

RUN NO. 1203/ 0 RN/L = 3.50 GRADIENT INTERVAL = -5.00/ 5.00

ALPHAO	BETAO	CNW	CBW	CTW	CHEI	CHEO	IB-ELV	OB-ELV	PHII	ALPHAI
-4.111	-6.118	.06270	.00900	.02240	.00080	.01100	8.11021	5.15161	60.60890	-6.15430
-4.347	-4.024	.04390	.00560	.01870	.00990	.01400	8.22634	5.19295	47.86110	-4.74230
-4.258	.366	.00910	.00200	.01570	.04180	.01240	8.63343	5.17090	-2.34750	-3.12180
-3.786	4.326	-.02400	.00140	.01590	.04680	.01910	8.69724	5.26324	-49.60310	-4.65010
-3.880	6.168	-.03410	.00050	.01510	.04970	.01320	8.73425	5.18193	-58.91390	-6.12550
	GRADIENT	-.00813	-.00051	-.00034	.00447	.00059	.05705	.00817	-11.66820	.01753

RUN NO. 1204/ 0 RN/L = 3.50 GRADIENT INTERVAL = -5.00/ 5.00

ALPHAO	BETAO	CNW	CBW	CTW	CHEI	CHEO	IB-ELV	OB-ELV	PHII	ALPHAI
-.471	-7.063	.12260	.02010	.04200	-.00540	.00830	8.03825	5.11439	89.99010	-6.05990
-.441	-4.903	.10410	.01820	.04040	.00280	.01260	8.13573	5.17366	90.00370	-4.04430
-.415	-.535	.07320	.01330	.03550	.03180	.01710	8.50582	5.23568	90.03070	.05370
-.383	3.594	.05080	.00950	.03210	.03670	.00230	8.56835	5.03170	90.01720	3.93730
-.382	5.794	.03730	.00760	.02900	.03980	-.00690	8.60791	4.92251	90.00370	5.99530
	GRADIENT	-.00628	-.00102	-.00098	.00402	-.00119	.05124	-.01641	.00163	.93934

IA156A, AEDC PWT 16T-470, O T S W/SILTS (R8NW97) (27 MAY 80)

REFERENCE DATA

SREF = 2690.0000 SQ.FT. XMRP = 976.0000 IN. XT
LREF = 1290.3000 INCHES YMRP = .0000 IN. YT
BREF = 1290.3000 INCHES ZMRP = 400.0000 IN. ZT
SCALE = .0200

PARAMETRIC DATA

IB-ELV = 8.000 OB-ELV = 5.000
BDFLAP = .000 SPDBRK = .000
RUDDER = .000 SILTS = 1.000
MACH = 1.100 RN/L = 3.500

RUN NO. 1205/ 0 RN/L = 3.50 GRADIENT INTERVAL = -5.00/ 5.00

ALPHAO	BETAO	CNW	CBW	CTW	CHEI	CHEO	IB-ELV	OB-ELV	PHII	ALPHAI
4.085	-5.767	.17270	.02960	.06310	-.01090	.00440	7.97537	5.06064	-56.13660	7.18850
3.929	-3.665	.15870	.02730	.05930	-.00420	.00150	8.05198	5.02067	-44.91950	5.61060
3.699	.120	.13390	.02300	.05060	.01910	-.00950	8.34374	4.89331	-1.09350	4.05800
3.792	3.985	.11410	.01970	.04550	.01980	-.02090	8.35268	4.76529	44.43880	5.73840
3.770	6.066	.10210	.01760	.04250	.02600	-.02650	8.43180	4.70240	56.59680	7.27490
	GRADIENT	-.00583	-.00099	-.00180	.00313	-.00293	.03918	-.03338	11.68117	.01820

IA156A, AEDC PWT 16T-470, O T S W/SILTS (R8NW98) (27 MAY 80)

REFERENCE DATA

SREF = 2690.0000 SQ.FT. XMRP = 976.0000 IN. XT
LREF = 1290.3000 INCHES YMRP = .0000 IN. YT
BREF = 1290.3000 INCHES ZMRP = 400.0000 IN. ZT
SCALE = .0200

PARAMETRIC DATA

IB-ELV = 8.000 OB-ELV = 5.000
BDFLAP = .000 SPDBRK = .000
RUDDER = .000 SILTS = 1.000
MACH = 1.150 RN/L = 3.500

RUN NO. 1206/ 0 RN/L = 3.50 GRADIENT INTERVAL = -5.00/ 5.00

ALPHAO	BETAO	CNW	CBW	CTW	CHEI	CHEO	IB-ELV	OB-ELV	PHII	ALPHAI
-8.116	-5.938	.00590	-.00280	.00130	.01950	.01350	8.35368	5.18967	39.86500	-8.36150
-8.284	-3.757	-.01280	-.00510	-.00080	.03130	.01390	8.50718	5.19529	27.69220	-7.41270
-8.189	.179	-.04130	-.00730	-.00030	.05770	.01230	8.85063	5.17281	.08910	-6.52340
-7.997	4.409	-.06900	-.00790	.00070	.06870	.01150	8.99373	5.16157	-29.94190	-7.49290
-8.024	6.284	-.07810	-.00860	.00090	.07220	.01510	9.03926	5.21215	-39.69000	-8.52030
	GRADIENT	-.00688	-.00034	.00018	.00456	-.00029	.05927	-.00411	-7.05894	-.01254

RUN NO. 1207/ 0 RN/L = 3.50 GRADIENT INTERVAL = -5.00/ 5.00

ALPHAO	BETAO	CNW	CBW	CTW	CHEI	CHEO	IB-ELV	OB-ELV	PHII	ALPHAI
-6.217	-6.006	.04020	.00400	.01050	.01250	.01110	8.26261	5.15595	48.08300	-7.18510
-6.140	-4.065	.02820	.00190	.00990	.02350	.01220	8.40571	5.17141	37.61870	-5.96260
-6.279	.087	-.00850	-.00270	.00760	.05550	.01080	8.82201	5.15174	1.04600	-4.85750
-6.037	4.273	-.03740	-.00380	.00770	.06500	.01710	8.94559	5.24025	-36.23710	-6.01520
-6.014	6.269	-.05210	-.00450	.00740	.06670	.01270	8.96771	5.17843	-47.68670	-7.27020
	GRADIENT	-.00787	-.00068	-.00026	.00497	.00059	.06470	.00827	-8.85812	-.00667

IA156A, AEDC PWT 16T-470, O T S W/SILTS (R8NW98) (27 MAY 80)

REFERENCE DATA

SREF = 2690.0000 SQ.FT. XMRP = 976.0000 IN. XT
LREF = 1290.3000 INCHES YMRP = .0000 IN. YT
BREF = 1290.3000 INCHES ZMRP = 400.0000 IN. ZT
SCALE = .0200

PARAMETRIC DATA

IB-ELV = 8.000 OB-ELV = 5.000
BDFLAP = .000 SPDBRK = .000
RUDDER = .000 SILTS = 1.000
MACH = 1.150 RN/L = 3.500

RUN NO. 1208/ 0 RN/L = 3.50 GRADIENT INTERVAL = -5.00/ 5.00

ALPHAO	BETAO	CNW	CBW	CTW	CHEI	CHEO	IB-ELV	OB-ELV	PHII	ALPHAI
-4.099	-6.128	.07040	.01090	.02250	.00880	.01080	8.21448	5.15174	60.66590	-6.14340
-4.341	-4.015	.05310	.00790	.02000	.02150	.01270	8.37970	5.17843	47.74650	-4.72330
-4.281	.366	.01740	.00290	.01720	.05440	.01670	8.80770	5.23463	-2.50990	-3.12890
-3.789	4.344	-.02120	.00150	.01730	.05910	.00770	8.86884	5.10818	-49.80520	-4.65210
-3.884	6.169	-.03460	.00040	.01580	.06060	.00260	8.88835	5.03653	-59.01130	-6.11660
	GRADIENT	-.00888	-.00077	-.00033	.00455	-.00057	.05917	-.00805	-11.66650	.01450

RUN NO. 1210/ 0 RN/L = 3.51 GRADIENT INTERVAL = -5.00/ 5.00

ALPHAO	BETAO	CNW	CBW	CTW	CHEI	CHEO	IB-ELV	OB-ELV	PHII	ALPHAI
-.458	-7.033	.12000	.02130	.03960	.00240	.01300	8.13122	5.18265	90.01720	-6.01320
-.434	-4.804	.11000	.01960	.03930	.01350	.01820	8.27562	5.25571	90.00370	-3.94100
-.396	-.513	.08540	.01560	.03710	.04540	00620	8.69061	5.08711	90.01720	.07750
-.363	3.669	.05730	.01140	.03420	.05000	-.00980	8.75046	4.88781	90.01720	4.00520
-.367	5.788	.04470	.00900	.03160	.05320	-.01710	8.79208	4.80424	90.00370	5.98220
	GRADIENT	-.00622	-.00097	-.00060	.00432	-.00330	.05621	-.04340	.00160	.93777

RUN NO. 1211/ 0 RN/L = 3.50 GRADIENT INTERVAL = -5.00/ 5.00

ALPHAO	BETAO	CNW	CBW	CTW	CHEI	CHEO	IB-ELV	OB-ELV	PHII	ALPHAI
4.062	-5.756	.17180	.02960	.06040	-.00440	.00260	8.04871	5.03653	-56.15750	7.15860
3.949	-3.648	.15890	.02780	.05770	.00640	-.00350	8.18326	4.95993	-44.57100	5.60520
3.698	.165	.13860	.02400	.05090	.03300	-.01700	8.52930	4.80538	-.24620	4.05210
3.790	4.004	.11870	.02080	.04680	.03100	-.02930	8.50328	4.66457	44.71800	5.74820
3.765	6.064	.10470	.01850	.04430	.03420	-.03550	8.54491	4.59360	56.69680	7.25940
	GRADIENT	-.00525	-.00091	-.00142	.00321	-.00337	.04177	-.03860	11.66892	.01918

IA156A, AEDC PWT 16T-470, O T S W/SILTS (R8NWA0) (27 MAY 80)

REFERENCE DATA

SREF = 2690.0000 SQ.FT. XMRP = 976.0000 IN. XT
LREF = 1290.3000 INCHES YMRP = .0000 IN. YT
BREF = 1290.3000 INCHES ZMRP = 400.0000 IN. ZT
SCALE = .0200

PARAMETRIC DATA

IB-ELV = 8.000 OB-ELV = 5.000
BDFLAP = .000 SPDBRK = .000
RUDDER = .000 SILTS = 1.000
MACH = 1.250 RN/L = 3.500

RUN NO. 1224/ 0 RN/L = 3.50 GRADIENT INTERVAL = -5.00/ 5.00

ALPHAO	BETAO	CNW	CBW	CTW	CHEI	CHEO	IB-ELV	OB-ELV	PHII	ALPHAI
-8.261	-5.906	.00380	-.00110	-.00560	.03900	.01390	8.62518	5.20215	39.38560	-8.41570
-8.253	-3.859	-.00180	-.00260	-.00420	.04580	.01270	8.71675	5.18470	28.54780	-7.41430
-8.194	.281	-.02330	-.00500	-.00060	.06470	.01250	8.97126	5.18179	-.54230	-6.52200
-7.998	4.303	-.05020	-.00610	.00180	.06320	.00600	8.95107	5.08726	-29.12840	-7.42720
-8.035	6.278	-.05610	-.00710	.00300	.06330	.00040	8.95241	5.00582	-39.48770	-8.49610
	GRADIENT	-.00593	-.00043	.00074	.00214	-.00082	.02887	-.01188	-7.06606	-.00052

RUN NO. 1225/ 0 RN/L = 3.50 GRADIENT INTERVAL = -5.00/ 5.00

ALPHAO	BETAO	CNW	CBW	CTW	CHEI	CHEO	IB-ELV	OB-ELV	PHII	ALPHAI
-6.248	-6.015	.04390	.00440	.00390	.03200	.01290	8.53092	5.18761	48.20470	-7.19160
-6.179	-4.080	.03930	.00320	.00530	.04030	.01340	8.64269	5.19488	37.74750	-5.97710
-6.268	.127	.01340	.00010	.00730	.05990	.00750	8.90663	5.10908	.92980	-4.84810
-6.056	4.287	-.01400	-.00170	.00920	.05850	-.00290	8.88777	4.96563	-36.06270	-6.01880
-5.806	6.385	-.02760	-.00240	.00970	.05730	-.01120	8.87161	4.86728	-49.09440	-7.20740
	GRADIENT	-.00637	-.00059	.00047	.00218	-.00195	.02936	-.02739	-8.82156	-.00446

RUN NO. 1226/ 0 RN/L = 3.50 GRADIENT INTERVAL = -5.00/ 5.00

ALPHAO	BETAO	CNW	CBW	CTW	CHEI	CHEO	IB-ELV	OB-ELV	PHII	ALPHAI
-4.129	-6.126	.07330	.01080	.01450	.02740	.01530	8.46897	5.22252	60.70870	-6.14000
-4.347	-4.012	.06050	.00870	.01350	.03830	.01260	8.61576	5.18325	47.95410	-4.71380
-4.264	.386	.03240	.00590	.01510	.05380	.00010	8.82448	5.00145	-2.39230	-3.10970
-3.782	4.332	.00010	.00460	.01660	.05100	-.01490	8.78678	4.82343	-49.63100	-4.62560
-3.884	6.187	-.00940	.00270	.01510	.05110	-.01990	8.78812	4.76418	-58.99040	-6.10520
	GRADIENT	-.00722	-.00049	.00037	.00156	-.00329	.02101	-.04309	-11.69001	.01729

RUN NO. 1227/ 0 RN/L = 3.50 GRADIENT INTERVAL = -5.00/ 5.00

ALPHAO	BETAO	CNW	CBW	CTW	CHEI	CHEO	IB-ELV	OB-ELV	PHII	ALPHAI
-.484	-7.074	.12130	.02070	.03130	.01540	.01010	8.30738	5.14689	89.97660	-6.03970
-.454	-4.892	.10940	.01970	.03140	.02610	.00380	8.45147	5.05527	89.99010	-4.01870
-.407	-.556	.08760	.01680	.03170	.04780	-.01100	8.74369	4.86965	90.04430	.03750
-.379	3.595	.06520	.01350	.03080	.04590	-.02730	8.71810	4.67649	90.01720	3.92810
-.392	5.798	.05370	.01120	.02920	.04290	-.03250	8.67770	4.61487	90.00370	5.98150
	GRADIENT	-.00521	-.00073	-.00007	.00235	-.00366	.03168	-.04461	.00326	.93630

IA156A, AEDC PWT 16T-470, O T S W/SILTS (R8NWA0) (27 MAY 80)

REFERENCE DATA

SREF = 2690.0000 SQ.FT. XMRP = 976.0000 IN. XT
LREF = 1290.3000 INCHES YMRP = .0000 IN. YT
BREF = 1290.3000 INCHES ZMRP = 400.0000 IN. ZT
SCALE = .0200

PARAMETRIC DATA

IB-ELV = 8.000 OB-ELV = 5.000
BDFLAP = .000 SPDBRK = .000
RUDDER = .000 SILTS = 1.000
MACH = 1.250 RN/L = 3.500

RUN NO. 1228/ 0 RN/L = 3.50 GRADIENT INTERVAL = -5.00/ 5.00

ALPHAO	BETAO	CNW	CBW	CTW	CHEI	CHEO	IB-ELV	OB-ELV	PHII	ALPHAI
3.893	-5.679	.17520	.02910	.05120	.01010	-.01430	8.23601	4.83054	-57.13210	6.99760
3.928	-3.875	.16550	.02850	.05050	.01740	-.02170	8.33431	4.74285	-46.65520	5.72680
3.820	.192	.14750	.02520	.04620	.03410	-.03410	8.55920	4.59591	-.31530	4.15380
3.756	3.872	.12510	.02180	.04270	.03080	-.04360	8.51476	4.48333	43.67990	5.62530
3.766	6.079	.11280	.01960	.04080	.02510	-.04750	8.43800	4.43711	56.49670	7.26090
	GRADIENT	-.00520	-.00086	-.00101	.00177	-.00283	.02385	-.03355	11.65615	-.01963

IA156A, AEDC PWT 16T-470, O T S W/SILTS (R8NWA1) (27 MAY 80)

REFERENCE DATA

SREF = 2690.0000 SQ.FT. XMRP = 976.0000 IN. XT
LREF = 1290.3000 INCHES YMRP = .0000 IN. YT
BREF = 1290.3000 INCHES ZMRP = 400.0000 IN. ZT
SCALE = .0200

PARAMETRIC DATA

IB-ELV = 8.000 OB-ELV = 5.000
BDFLAP = .000 SPDBRK = .000
RUDDER = .000 SILTS = 1.000
MACH = 1.400 RN/L = 3.500

RUN NO. 1229/ 0 RN/L = 3.50 GRADIENT INTERVAL = -5.00/ 5.00

ALPHAO	BETAO	CNW	CBW	CTW	CHEI	CHEO	IB-ELV	OB-ELV	PHII	ALPHAI
-8.267	-5.901	.01050	-.00130	-.00580	.05200	.01850	8.82600	5.27895	39.70760	-8.34730
-8.304	-3.776	.00570	-.00270	-.00450	.05500	.01380	8.86788	5.20808	28.28390	-7.34900
-8.202	.428	-.01610	-.00420	-.00190	.05530	-.00020	8.87207	4.99754	-1.36320	-6.46850
-8.002	4.404	-.04250	-.00440	.00100	.05350	-.01310	8.84694	4.83905	-29.54390	-7.40440
-8.009	6.323	-.04650	-.00490	.00280	.05230	-.01730	8.83018	4.78745	-39.65520	-8.43650
	GRADIENT	-.00589	-.00021	.00067	-.00018	-.00329	-.00253	-.04516	-7.06951	-.00471

RUN NO. 1230/ 0 RN/L = 3.50 GRADIENT INTERVAL = -5.00/ 5.00

ALPHAO	BETAO	CNW	CBW	CTW	CHEI	CHEO	IB-ELV	OB-ELV	PHII	ALPHAI
-6.282	-5.994	.03640	.00280	-.00030	.04670	.01110	8.75200	5.16737	48.43380	-7.13320
-6.224	-4.051	.03310	.00200	.00050	.04910	.00500	8.78551	5.07539	37.87620	-5.93230
-6.285	.156	.01660	.00030	.00330	.05030	-.01020	8.80226	4.87468	1.05750	-4.80100
-6.038	4.332	-.00690	.00000	.00690	.04610	-.02410	8.74362	4.70391	-36.28600	-5.97010
-5.969	6.303	-.01830	-.00040	.00860	.04360	-.02800	8.70872	4.65599	-47.77730	-7.18170
	GRADIENT	-.00477	-.00024	.00076	-.00036	-.00347	-.00499	-.04432	-8.84599	-.00419

IA156A, AEDC PWT 16T-470, O T S W/SILTS (R8NWA1) (27 MAY 80)

REFERENCE DATA

SREF = 2690.0000 SQ.FT. XMRP = 976.0000 IN. XT
LREF = 1290.3000 INCHES YMRP = .0000 IN. YT
BREF = 1290.3000 INCHES ZMRP = 400.0000 IN. ZT
SCALE = .0200

PARAMETRIC DATA

IB-ELV = 8.000 OB-ELV = 5.000
BDFLAP = .000 SPDBRK = .000
RUDDER = .000 SILTS = 1.000
MACH = 1.400 RN/L = 3.500

RUN NO. 1231/ 0 RN/L = 3.50 GRADIENT INTERVAL = -5.00/ 5.00

ALPHAO	BETAO	CNW	CBW	CTW	CHEI	CHEO	IB-ELV	OB-ELV	PHII	ALPHAI
-4.143	-6.119	.06090	.00820	.00750	.04070	.00230	8.66823	5.03468	61.12220	-6.08930
-4.385	-4.000	.05300	.00680	.00720	.04480	-.00430	8.72547	4.94717	48.21910	-4.67980
-4.262	.422	.03450	.00590	.01100	.04350	-.02280	8.70732	4.71988	-2.32460	-3.05890
-3.759	4.378	.01110	.00610	.01560	.03570	-.03390	8.59842	4.58350	-49.81210	-4.60050
-3.859	6.215	.00140	.00470	.01470	.03260	-.03630	8.55514	4.55402	-59.08090	-6.06950
	GRADIENT	-.00499	-.00009	.00100	-.00107	-.00355	-.01495	-.04357	-11.69656	.01645

RUN NO. 1232/ 0 RN/L = 3.50 GRADIENT INTERVAL = -5.00/ 5.00

ALPHAO	BETAO	CNW	CBW	CTW	CHEI	CHEO	IB-ELV	OB-ELV	PHII	ALPHAI
-.552	-7.095	.11130	.01790	.02200	.02890	-.00520	8.50349	4.93611	89.97660	-6.02380
-.508	-4.921	.10150	.01740	.02220	.03080	-.01320	8.53001	4.83782	90.00370	-4.02080
-.464	-.562	.09030	.01630	.02580	.03230	-.02960	8.55095	4.63633	90.04430	.04410
-.444	3.595	.07140	.01380	.02770	.02300	-.04020	8.42111	4.50610	90.00370	3.93130
-.461	5.805	.05780	.01190	.02720	.01470	-.04330	8.30523	4.46801	90.01720	5.98150
	GRADIENT	-.00353	-.00042	.00065	-.00091	-.00318	-.01265	-.03901	.00008	.93376

RUN NO. 1233/ 0 RN/L = 3.50 GRADIENT INTERVAL = -5.00/ 5.00

ALPHAO	BETAO	CNW	CBW	CTW	CHEI	CHEO	IB-ELV	OB-ELV	PHII	ALPHAI
3.935	-5.661	.15560	.02820	.04210	.01630	-.03100	8.32757	4.61913	-57.13910	7.00310
3.910	-3.641	.14830	.02720	.04100	.01780	-.03650	8.34851	4.55156	-45.54690	5.57290
3.655	.229	.14060	.02420	.03930	.01510	-.04450	8.31082	4.45327	-.36850	4.01750
3.736	4.056	.12100	.02140	.03930	.00080	-.05030	8.11117	4.38201	44.72510	5.74430
3.692	6.093	.11130	.01940	.03840	-.00490	-.05280	8.03870	4.35130	56.59680	7.23550
	GRADIENT	-.00354	-.00075	-.00022	-.00221	-.00179	-.03080	-.02203	11.72841	.02149

IA156A, AEDC PWT 16T-470, O T S W/SILTS (R8NWA2) (27 MAY 80)

REFERENCE DATA

SREF = 2690.0000 SQ.FT. XMRP = 976.0000 IN. XT
LREF = 1290.3000 INCHES YMRP = .0000 IN. YT
BREF = 1290.3000 INCHES ZMRP = 400.0000 IN. ZT
SCALE = .0200

PARAMETRIC DATA

IB-ELV = 8.000 OB-ELV = 5.000
BDFLAP = .000 SPDBRK = .000
RUDDER = .000 SILTS = 1.000
MACH = 1.550 RN/L = 3.200

RUN NO. 1212/ 0 RN/L = 3.20 GRADIENT INTERVAL = -5.00/ 5.00

ALPHAO	BETAO	CNW	CBW	CTW	CHEI	CHEO	IB-ELV	OB-ELV	PHII	ALPHAI
-8.321	-5.932	.00760	-.00100	-.00660	.05640	.00740	8.78859	5.09758	39.72190	-8.46670
-8.412	-3.712	.00060	-.00230	-.00540	.05570	.00050	8.78005	5.00659	27.77770	-7.46910
-8.276	.314	-.02640	-.00340	-.00330	.04820	-.01040	8.68848	4.88826	.02350	-6.59180
-8.033	4.496	-.05730	-.00440	-.00070	.04030	-.02030	8.59203	4.78190	-29.31350	-7.51960
-8.010	6.424	-.06180	-.00490	.00040	.03730	-.02260	8.55540	4.75718	-39.41100	-8.54610
	GRADIENT	-.00706	-.00026	.00057	-.00188	-.00253	-.02291	-.02736	-6.95611	-.00754

RUN NO. 1213/ 0 RN/L = 3.20 GRADIENT INTERVAL = -5.00/ 5.00

ALPHAO	BETAO	CNW	CBW	CTW	CHEI	CHEO	IB-ELV	OB-ELV	PHII	ALPHAI
-6.376	-5.979	.02660	.00240	-.00230	.04970	-.00070	8.70679	4.99248	47.98280	-7.21770
-6.309	-4.025	.01840	.00120	-.00150	.04790	-.00890	8.68482	4.90438	37.49720	-6.01320
-6.326	.241	.00240	-.00020	.00130	.03960	-.01960	8.58348	4.78942	.87260	-4.86750
-6.040	4.435	-.02330	-.00050	.00440	.03250	-.02790	8.49680	4.70024	-36.13950	-6.05000
-5.961	6.413	-.03770	-.00090	.00500	.02760	-.03070	8.43697	4.67016	-47.62400	-7.26720
	GRADIENT	-.00493	-.00020	.00070	-.00182	-.00225	-.02223	-.02414	-8.70345	-.00357

RUN NO. 1214/ 0 RN/L = 3.21 GRADIENT INTERVAL = -5.00/ 5.00

ALPHAO	BETAO	CNW	CBW	CTW	CHEI	CHEO	IB-ELV	OB-ELV	PHII	ALPHAI
-4.254	-6.145	.04360	.00620	.00390	.04330	-.00870	8.62866	4.90653	60.66590	-6.16320
-4.488	-3.997	.03510	.00470	.00380	.04190	-.01560	8.61156	4.83239	47.73220	-4.74230
-4.353	.498	.01860	.00410	.00730	.02720	-.02900	8.43209	4.60942	-2.40640	-3.13860
-3.760	4.479	-.00450	.00490	.01210	.01770	-.03810	8.31610	4.59065	-49.60310	-4.65210
-3.825	6.317	-.01220	.00370	.01190	.01490	-.03920	8.28192	4.57883	-58.99740	-6.12550
	GRADIENT	-.00465	.00002	.00097	-.00286	-.00266	-.03497	-.02860	-11.47735	.01807

RUN NO. 1215/ 0 RN/L = 3.20 GRADIENT INTERVAL = -5.00/ 5.00

ALPHAO	BETAO	CNW	CBW	CTW	CHEI	CHEO	IB-ELV	OB-ELV	PHII	ALPHAI
-.590	-7.139	.08550	.01490	.01510	.02880	-.01450	8.45162	4.84421	89.99010	-6.04900
-.561	-5.002	.07930	.01440	.01570	.02420	-.02250	8.39546	4.75826	89.99010	-4.05650
-.520	-.606	.06990	.01380	.02060	.01400	-.03740	8.27093	4.59817	90.01720	.06520
-.510	3.511	.05530	.01320	.02440	.00420	-.04410	8.15128	4.52619	90.04430	3.93460
-.517	5.704	.04790	.01220	.02520	-.00290	-.04730	8.06828	4.49181	90.00370	5.98650
	GRADIENT	-.00355	-.00015	.00092	-.00238	-.00163	-.02907	-.01749	.00658	.93995

IA156A, AEDC PWT 16T-470, O T S W/SILTS (R8NWA2) (27 MAY 80)

REFERENCE DATA

SREF = 2690.0000 SQ.FT. XMRP = 976.0000 IN. XT
LREF = 1290.3000 INCHES YMRP = .0000 IN. YT
BREF = 1290.3000 INCHES ZMRP = 400.0000 IN. ZT
SCALE = .0200

PARAMETRIC DATA

IB-ELV = 8.000 OB-ELV = 5.000
BDFLAP = .000 SPDBRK = .000
RUDDER = .000 SILTS = 1.000
MACH = 1.550 RN/L = 3.200

RUN NO. 1216/ 0 RN/L = 3.20 GRADIENT INTERVAL = -5.00/ 5.00

ALPHAO	BETAO	CNW	CBW	CTW	CHEI	CHEO	IB-ELV	OB-ELV	PHII	ALPHAI
4.128	-5.607	.13760	.02490	.03600	.00950	-.03270	8.21599	4.64867	-56.17830	7.16080
3.967	-3.526	.12290	.02420	.03480	.00510	-.03970	8.16227	4.57346	-44.94040	5.62590
3.605	.251	.12270	.02280	.03580	-.00660	-.04850	8.02780	4.47891	-1.14060	4.05040
3.637	4.006	.10990	.02070	.03690	-.02070	-.05110	7.87355	4.45098	44.35280	5.74050
3.619	6.093	.10190	.01910	.03660	-.02750	-.05240	7.79917	4.43701	56.56820	7.29260
	GRADIENT	-.00172	-.00046	.00028	-.00342	-.00151	-.03833	-.01627	11.85445	.01479

IA156A, AEDC PWT 16T-470, O T S W/SILTS (R8NWA3) (27 MAY 80)

REFERENCE DATA

SREF = 2690.0000 SQ.FT. XMRP = 976.0000 IN. XT
LREF = 1290.3000 INCHES YMRP = .0000 IN. YT
BREF = 1290.3000 INCHES ZMRP = 400.0000 IN. ZT
SCALE = .0200

PARAMETRIC DATA

IB-ELV = 12.000 OB-ELV = 5.000
BDFLAP = .000 SPDBRK = .000
RUDDER = .000 SILTS = 1.000
MACH = .600 RN/L = 3.500

RUN NO. 1240/ 0 RN/L = 3.50 GRADIENT INTERVAL = -5.00/ 5.00

ALPHAO	BETAO	CNW	CBW	CTW	CHEI	CHEO	IB-ELV	OB-ELV	PHII	ALPHAI
-8.152	-7.797	-.01620	-.00240	-.01290	-.00130	.00300	12.11013	5.02746	46.21440	-10.32250
-8.060	-5.766	-.02030	-.00250	-.01250	-.00080	.00330	12.11392	5.03021	38.04790	-8.99520
-8.078	-3.773	-.02570	-.00300	-.01280	.00190	.00410	12.13610	5.03753	27.35000	-8.02310
-7.979	.297	-.03580	-.00310	-.01020	.01460	.00710	12.24375	5.06499	-.69410	-7.10840
-7.850	4.216	-.04960	-.00200	-.00710	.01750	.00760	12.26833	5.06957	-27.97260	-8.03500
-7.838	6.120	-.05280	-.00180	-.00620	.01870	.00750	12.27850	5.06865	-38.12770	-9.05700
-7.891	8.133	-.06130	-.00190	-.00590	.02050	.00770	12.29376	5.07049	-46.35550	-10.40370
	GRADIENT	-.00299	.00012	.00071	.00196	.00044	.01661	.00403	-6.92498	-.00005

RUN NO. 1241/ 0 RN/L = 3.50 GRADIENT INTERVAL = -5.00/ 5.00

ALPHAO	BETAO	CNW	CBW	CTW	CHEI	CHEO	IB-ELV	OB-ELV	PHII	ALPHAI
-6.112	-7.857	.01610	.00190	-.00270	-.00230	.00290	12.10253	5.02655	54.72390	-9.10480
-6.081	-5.857	.01390	.00140	-.00300	-.00140	.00340	12.10937	5.03112	46.68690	-7.63600
-5.997	-3.963	.01240	.00110	-.00280	.00120	.00450	12.13017	5.04113	36.32440	-6.41390
-6.039	.085	-.00220	.00040	-.00210	.01360	.00630	12.23527	5.05767	1.21770	-5.28090
-5.909	4.157	-.01960	.00110	-.00020	.01650	.00640	12.25985	5.05859	-34.69520	-6.47040
-5.832	6.110	-.02770	.00140	.00100	.01790	.00630	12.27172	5.05767	-46.33450	-7.66970
-5.639	8.191	-.03440	.00180	.00280	.01940	.00610	12.28443	5.05584	-55.71880	-9.13670
	GRADIENT	-.00394	.00000	.00032	.00188	.00023	.01596	.00214	-8.74611	-.00724

IA156A, AEDC PWT 16T-470, O T S W/SILTS (R8NWA3) (27 MAY 80)

REFERENCE DATA

SREF = 2690.0000 SQ.FT. XMRP = 976.0000 IN. XT
LREF = 1290.3000 INCHES YMRP = .0000 IN. YT
BREF = 1290.3000 INCHES ZMRP = 400.0000 IN. ZT
SCALE = .0200

PARAMETRIC DATA

IB-ELV = 12.000 OB-ELV = 5.000
BDFLAP = .000 SPDBRK = .000
RUDDER = .000 SILTS = 1.000
MACH = .600 RN/L = 3.500

RUN NO. 1242/ 0 RN/L = 3.49 GRADIENT INTERVAL = -5.00/ 5.00

ALPHAO	BETAO	CNW	CBW	CTW	CHEI	CHEO	IB-ELV	OB-ELV	PHII	ALPHAI
-3.979	-7.922	.04390	.00640	.00900	-.00280	.00360	12.09874	5.03295	66.00380	-8.11430
-4.201	-5.904	.03640	.00550	.00680	-.00220	.00400	12.10329	5.03662	57.65410	-6.54080
-4.186	-3.853	.03230	.00490	.00630	.00070	.00500	12.12593	5.04577	46.18570	-5.02520
-3.980	.176	.02010	.00450	.00780	.01270	.00610	12.22764	5.05584	.46060	-3.35040
-3.668	4.205	-.00220	.00540	.01170	.01500	.00530	12.24714	5.04852	-48.14670	-4.95120
-3.774	6.004	-.01150	.00500	.01110	.01630	.00500	12.25816	5.04577	-57.57060	-6.42480
-3.800	7.983	-.01800	.00460	.01110	.01790	.00470	12.27172	5.04302	-64.57500	-8.12320
	GRADIENT	-.00428	.00006	.00067	.00177	.00004	.01504	.00034	-11.70623	.00919

RUN NO. 1243/ 0 RN/L = 3.50 GRADIENT INTERVAL = -5.00/ 5.00

ALPHAO	BETAO	CNW	CBW	CTW	CHEI	CHEO	IB-ELV	OB-ELV	PHII	ALPHAI
-.354	-8.693	.08920	.01470	.03190	-.00340	.00240	12.09418	5.02197	90.00370	-8.01320
-.344	-6.614	.08070	.01390	.03020	-.00290	.00410	12.09798	5.03753	89.99010	-6.01680
-.330	-4.366	.07430	.01320	.02930	-.00120	.00460	12.11089	5.04211	89.99010	-3.85930
-.303	-.313	.06180	.01190	.02840	.01110	.00510	12.21408	5.04669	90.00370	.04400
-.271	3.752	.05440	.01160	.02890	.01400	.00380	12.23866	5.03479	90.01720	3.97380
-.267	5.854	.04920	.01130	.02820	.01580	.00300	12.25392	5.02746	90.00370	5.99460
-.258	7.945	.04320	.01090	.02750	.01800	.00210	12.27257	5.01922	89.99010	8.00770
	GRADIENT	-.00245	-.00020	-.00005	.00187	-.00010	.01574	-.00090	.00334	.96495

RUN NO. 1244/ 0 RN/L = 3.50 GRADIENT INTERVAL = -5.00/ 5.00

ALPHAO	BETAO	CNW	CBW	CTW	CHEI	CHEO	IB-ELV	OB-ELV	PHII	ALPHAI
4.282	-8.106	.13820	.02610	.06110	-.00360	.00000	12.09266	5.00000	-63.62970	9.15220
4.109	-5.880	.12820	.02470	.05700	-.00430	.00040	12.08734	5.00366	-56.86760	7.23990
4.094	-3.892	.12100	.02350	.05330	-.00300	.00010	12.09722	5.00092	-45.78390	5.77370
3.910	-.003	.11550	.02080	.04550	.00790	-.00060	12.18696	4.99552	-2.91990	4.09940
3.942	4.078	.11290	.01920	.04290	.01260	-.00300	12.22680	4.97762	44.38860	5.80220
3.885	6.223	.10600	.01850	.04100	.01520	-.00320	12.24883	4.97613	56.88260	7.40510
3.875	8.228	.09900	.01740	.03920	.01740	-.00440	12.26748	4.96718	63.97090	9.10220
	GRADIENT	-.00101	-.00054	-.00130	.00195	-.00039	.01620	-.00293	11.31557	.00700

IA156A, AEDC PWT 16T-470, O T S W/SILTS (R8NWA3) (27 MAY 80)

REFERENCE DATA

SREF = 2690.0000 SQ.FT. XMRP = 976.0000 IN. XT
LREF = 1290.3000 INCHES YMRP = .0000 IN. YT
BREF = 1290.3000 INCHES ZMRP = 400.0000 IN. ZT
SCALE = .0200

PARAMETRIC DATA

IB-ELV = 12.000 OB-ELV = 5.000
BDFLAP = .000 SPDBRK = .000
RUDDER = .000 SILTS = 1.000
MACH = .600 RN/L = 3.500

RUN NO. 1245/ 0 RN/L = 3.50 GRADIENT INTERVAL = -5.00/ 5.00

ALPHAO	BETAO	CNW	CBW	CTW	CHEI	CHEO	IB-ELV	OB-ELV	PHII	ALPHAI
6.245	-8.012	.15960	.03030	.06970	-.00230	-.00210	12.10253	4.98434	-53.68540	10.07450
6.219	-5.943	.15420	.02940	.06700	-.00250	-.00230	12.10101	4.98284	-45.52600	8.58220
6.204	-3.868	.15320	.02800	.06450	-.00160	-.00310	12.10785	4.97688	-33.89970	7.33300
5.928	.168	.14320	.02460	.05580	.00770	-.00440	12.18526	4.96718	-.28360	6.00890
5.855	4.103	.13160	.02260	.05040	.01150	-.00690	12.21747	4.94853	33.90150	7.18780
5.781	6.202	.12420	.02150	.04810	.01310	-.00760	12.23103	4.94331	46.26450	8.48200
5.768	8.130	.11470	.02060	.04600	.01470	-.00840	12.24460	4.93735	54.16610	9.91320
	GRADIENT	-.00271	-.00068	-.00177	.00165	-.00048	.01378	-.00355	8.50598	-.01954

RUN NO. 1246/ 0 RN/L = 3.50 GRADIENT INTERVAL = -5.00/ 5.00

ALPHAO	BETAO	CNW	CBW	CTW	CHEI	CHEO	IB-ELV	OB-ELV	PHII	ALPHAI
8.135	-7.857	.18680	.03490	.07820	-.00180	-.00490	12.10633	4.96345	-45.70030	11.14930
8.050	-5.782	.18140	.03360	.07490	-.00190	-.00570	12.10557	4.95748	-37.46500	9.80520
8.036	-3.796	.17860	.03230	.07170	-.00130	-.00700	12.11013	4.94779	-27.07860	8.81460
7.950	.173	.16870	.02910	.06370	.00520	-.00900	12.16407	4.93287	-.15200	7.91390
7.992	4.235	.15940	.02710	.05920	.00990	-.01190	12.20391	4.91124	27.27870	8.96620
7.938	6.240	.15360	.02590	.05660	.01290	-.01320	12.22934	4.90154	37.83330	9.98920
7.946	8.284	.13960	.02440	.05240	.01670	-.01450	12.26155	4.89185	46.03540	11.32170
	GRADIENT	-.00239	-.00065	-.00155	.00139	-.00061	.01167	-.00455	6.76837	.01982

IA156A, AEDC PWT 16T-470, O T S W/SILTS (R8NWA4) (27 MAY 80)

REFERENCE DATA

SREF = 2690.0000 SQ.FT. XMRP = 976.0000 IN. XT
LREF = 1290.3000 INCHES YMRP = .0000 IN. YT
BREF = 1290.3000 INCHES ZMRP = 400.0000 IN. ZT
SCALE = .0200

PARAMETRIC DATA

IB-ELV = 12.000 OB-ELV = 5.000
BDFLAP = .000 SPDBRK = .000
RUDDER = .000 SILTS = 1.000
MACH = .800 RN/L = 3.500

RUN NO. 1247/ 0 RN/L = 3.50 GRADIENT INTERVAL = -5.00/ 5.00

ALPHAO	BETAO	CNW	CBW	CTW	CHEI	CHEO	IB-ELV	OB-ELV	PHII	ALPHAI
-8.178	-5.803	-.01050	-.00210	-.00960	-.02150	.00450	11.91746	5.05110	38.17660	-8.80610
-8.184	-3.772	-.01610	-.00260	-.01000	-.01940	.00540	11.93724	5.06132	27.36420	-7.81910
-8.099	.387	-.02970	-.00340	-.00930	.00560	.00880	12.17888	5.09992	-1.33540	-6.93320
-7.928	4.305	-.04470	-.00220	-.00660	.01150	.00920	12.24091	5.10447	-28.52780	-7.85780
-7.942	6.214	-.04960	-.00210	-.00610	.01320	.00920	12.25878	5.10447	-38.53220	-8.89160
	GRADIENT	-.00354	.00005	.00042	.00385	.00047	.03780	.00538	-6.91945	-.00257

RUN NO. 1248/ 0 RN/L = 3.50 GRADIENT INTERVAL = -5.00/ 5.00

ALPHAO	BETAO	CNW	CBW	CTW	CHEI	CHEO	IB-ELV	OB-ELV	PHII	ALPHAI
-6.143	-5.924	.02370	.00260	.00070	-.01970	.00510	11.93442	5.05791	47.05920	-7.47270
-6.094	-4.028	.02070	.00190	-.00040	-.01760	.00650	11.95420	5.07381	36.66760	-6.28100
-6.164	.072	.00320	.00050	-.00130	.00570	.00920	12.17993	5.10447	1.35690	-5.15310
-5.981	4.219	-.01240	.00140	.00070	.01240	.00920	12.25037	5.10447	-35.03710	-6.31870
-5.887	6.213	-.01800	.00170	.00200	.01430	.00910	12.27035	5.10333	-46.86430	-7.03210
	GRADIENT	-.00401	-.00006	.00013	.00363	.00033	.03588	.00371	-8.69501	-.00510

RUN NO. 1249/ 0 RN/L = 3.50 GRADIENT INTERVAL = -5.00/ 5.00

ALPHAO	BETAO	CNW	CBW	CTW	CHEI	CHEO	IB-ELV	OB-ELV	PHII	ALPHAI
-4.088	-6.032	.04900	.00730	.01190	-.01840	.00610	11.94666	5.06927	59.31050	-6.36630
-4.286	-3.931	.03970	.00610	.00940	-.01640	.00770	11.96550	5.08743	46.47210	-4.93220
-4.157	.407	.02290	.00490	.00850	.00830	.00970	12.20727	5.11014	-2.80650	-3.33210
-3.746	4.285	.00030	.00570	.01140	.01290	.00920	12.25563	5.10447	-48.39760	-4.85410
-3.826	6.107	-.00530	.00540	.01090	.01420	.00870	12.26930	5.09879	-57.91870	-6.31970
	GRADIENT	-.00478	-.00005	.00023	.00361	.00019	.03572	.00214	-11.54383	.01658

RUN NO. 1250/ 0 RN/L = 3.50 GRADIENT INTERVAL = -5.00/ 5.00

ALPHAO	BETAO	CNW	CBW	CTW	CHEI	CHEO	IB-ELV	OB-ELV	PHII	ALPHAI
-.370	-6.859	.09440	.01620	.03610	-.01170	.00650	12.00978	5.07381	90.01720	-6.05660
-.364	-4.706	.08470	.01530	.03430	-.01420	.00860	11.98623	5.09765	89.99010	-4.01820
-.337	-.421	.06790	.01340	.03160	.00780	.00980	12.20201	5.11128	90.00370	.06210
-.300	3.655	.05820	.01260	.03080	.01320	.00890	12.25878	5.10106	90.01720	3.95070
-.299	5.785	.05420	.01240	.02910	.01620	.00850	12.29033	5.09652	90.00370	5.97710
	GRADIENT	-.00318	-.00032	-.00042	.00329	.00004	.03275	.00043	.00324	.95307

IA156A, AEDC PWT 16T-470, O T S W/SILTS (R8NWA4) (27 MAY 80)

REFERENCE DATA

SREF = 2690.0000 SQ.FT. XMRP = 976.0000 IN. XT
LREF = 1290.3000 INCHES YMRP = .0000 IN. YT
BREF = 1290.3000 INCHES ZMRP = 400.0000 IN. ZT
SCALE = .0200

PARAMETRIC DATA

IB-ELV = 12.000 OB-ELV = 5.000
BDFLAP = .000 SPDBRK = .000
RUDDER = .000 SILTS = 1.000
MACH = .800 RN/L = 3.500

RUN NO. 1251/ 0 RN/L = 3.50 GRADIENT INTERVAL = -5.00/ 5.00

ALPHAO	BETAO	CNW	CBW	CTW	CHEI	CHEO	IB-ELV	OB-ELV	PHII	ALPHAI
4.142	-5.836	.15620	.02770	.06360	-.00960	.00550	12.02956	5.06245	-56.63090	7.23770
4.011	-3.728	.14310	.02600	.05810	-.01080	.00540	12.01826	5.06132	-45.42840	5.64820
3.780	.115	.12850	.02260	.04810	.00980	.00560	12.22304	5.06359	-1.24700	4.02990
3.872	4.058	.12420	.02130	.04550	.01400	.00260	12.26720	5.02952	44.92560	5.77700
3.808	6.146	.11550	.02020	.04290	.01750	.00150	12.30399	5.01703	57.15410	7.32860
	GRADIENT	-.00242	-.00060	-.00161	.00318	-.00036	.03188	-.00410	11.60558	.01841

RUN NO. 1252/ 0 RN/L = 3.50 GRADIENT INTERVAL = -5.00/ 5.00

ALPHAO	BETAO	CNW	CBW	CTW	CHEI	CHEO	IB-ELV	OB-ELV	PHII	ALPHAI
6.143	-5.864	.17880	.03130	.07090	-.00640	.00220	12.05971	5.02498	-45.70720	8.46510
6.116	-3.819	.17310	.03030	.06870	-.00810	.00190	12.04369	5.02157	-34.17880	7.24210
5.812	.154	.15740	.02710	.05990	.00810	00180	12.20516	5.02044	-.44730	5.90710
5.749	4.024	.14580	.02480	.05410	.01150	-.00180	12.24091	4.98335	34.04440	7.07160
5.881	6.222	.13770	.02420	.05210	.01350	-.00910	12.26194	4.91580	46.09980	8.54730
	GRADIENT	-.00348	-.00070	-.00186	.00251	-.00047	.02521	-.00485	8.69746	-.02314

IA156A, AEDC PWT 16T-470, O T S W/SILTS (R8NWA5) (27 MAY 80)

REFERENCE DATA

SREF = 2690.0000 SQ.FT. XMRP = 976.0000 IN. XT
LREF = 1290.3000 INCHES YMRP = .0000 IN. YT
BREF = 1290.3000 INCHES ZMRP = 400.0000 IN. ZT
SCALE = .0200

PARAMETRIC DATA

IB-ELV = 12.000 OB-ELV = 5.000
BDFLAP = .000 SPDBRK = .000
RUDDER = .000 SILTS = 1.000
MACH = .900 RN/L = 3.500

RUN NO. 1253/ 0 RN/L = 3.50 GRADIENT INTERVAL = -5.00/ 5.00

ALPHAO	BETAO	CNW	CBW	CTW	CHEI	CHEO	IB-ELV	OB-ELV	PHII	ALPHAI
-8.381	-5.946	-.01520	-.00320	-.00890	-.02750	.00720	11.84029	5.08827	38.34120	-8.90360
-8.127	-3.743	-.01670	-.00350	-.00830	-.02360	.00870	11.87995	5.10666	27.52110	-7.63100
-8.097	.172	-.03310	-.00470	-.00850	.01290	.00990	12.26644	5.12138	.19030	-6.79850
-7.929	4.414	-.05050	-.00450	-.00570	.02140	.01180	12.36293	5.14467	-29.37980	-7.78050
-7.965	6.237	-.05770	-.00450	-.00440	.02240	.01230	12.37428	5.15080	-38.81820	-8.79210
	GRADIENT	-.00414	-.00012	.00032	.00547	.00038	.05871	.00467	-6.97599	-.02129

IA156A, AEDC PWT 16T-470, O T S W/SILTS (R8NWA5) (27 MAY 80)

REFERENCE DATA

SREF = 2690.0000 SQ.FT. XMRP = 976.0000 IN. XT
LREF = 1290.3000 INCHES YMRP = .0000 IN. YT
BREF = 1290.3000 INCHES ZMRP = 400.0000 IN. ZT
SCALE = .0200

PARAMETRIC DATA

IB-ELV = 12.000 OB-ELV = 5.000
BDFLAP = .000 SPDBRK = .000
RUDDER = .000 SILTS = 1.000
MACH = .900 RN/L = 3.500

RUN NO. 1254/ 0 RN/L = 3.50 GRADIENT INTERVAL = -5.00/ 5.00

ALPHAO	BETAO	CNW	CBW	CTW	CHEI	CHEO	IB-ELV	OB-ELV	PHII	ALPHAI
-6.157	-5.933	.02570	.00180	.00280	-.02280	.01170	11.86809	5.14344	47.33840	-7.37470
-6.107	-3.992	.01980	.00100	.00180	-.01800	.01340	11.93691	5.16429	36.61760	-6.15990
-6.098	.260	-.00520	-.00100	.00010	.01610	.01440	12.30277	5.17655	-.49480	-4.99720
-5.995	4.228	-.02690	-.00100	.00170	.02400	.01350	12.39245	5.16551	-35.34410	-6.22840
-5.941	6.201	-.03860	-.00090	.00240	.02700	.01330	12.42650	5.16306	-46.85730	-7.44600
	GRADIENT	-.00568	-.00025	-.00002	.00514	.00001	.05578	.00018	-8.75470	-.00499

RUN NO. 1255/ 0 RN/L = 3.50 GRADIENT INTERVAL = -5.00/ 5.00

ALPHAO	BETAO	CNW	CBW	CTW	CHEI	CHEO	IB-ELV	OB-ELV	PHII	ALPHAI
-4.049	-5.942	.04960	.00720	.01510	-.02080	.01310	11.90843	5.16061	59.52460	-6.18270
-4.275	-3.950	.03660	.00550	.01160	-.01700	.01430	11.94709	5.17532	46.97330	-4.85710
-4.181	.363	.01240	.00340	.00900	.01680	.01460	12.31071	5.17900	-2.21470	-3.26970
-3.755	4.252	-.01050	.00370	.01070	.02430	.01330	12.39585	5.16306	-48.46030	-4.76390
-3.839	6.105	-.01840	.00310	.01050	.02790	.01310	12.43672	5.16061	-58.19710	-6.24230
	GRADIENT	-.00574	-.00022	-.00012	.00509	-.00012	.05525	-.00145	-11.63071	.01780

RUN NO. 1256/ 0 RN/L = 3.50 GRADIENT INTERVAL = -5.00/ 5.00

ALPHAO	BETAO	CNW	CBW	CTW	CHEI	CHEO	IB-ELV	OB-ELV	PHII	ALPHAI
-.406	-6.906	.10990	.01680	.03910	-.01820	.01020	11.93488	5.12505	89.99010	-6.05060
-.386	-4.764	.09530	.01600	.03640	-.02060	.01350	11.91047	5.16551	90.00370	-4.02730
-.355	-.424	.06810	.01340	.03120	.01140	.01290	12.24941	5.15816	90.01720	.07310
-.321	3.663	.05400	.01220	.02930	.02430	.01230	12.39585	5.15030	90.03070	3.95070
-.321	5.811	.04530	.01120	.02720	.02990	.01240	12.45943	5.152[illegible]3	89.99010	5.98370
	GRADIENT	-.00491	-.00045	-.00085	.00535	-.00014	.05781	-.00175	.00320	.94670

RUN NO. 1257/ 0 RN/L = 3.50 GRADIENT INTERVAL = -5.00/ 5.00

ALPHAO	BETAO	CNW	CBW	CTW	CHEI	CHEO	IB-ELV	OB-ELV	PHII	ALPHAI
4.138	-5.831	.16070	.02680	.06210	-.02160	.00990	11.90030	5.12138	-56.41510	7.21880
4.005	-3.746	.14860	.02590	.05790	-.01930	.00890	11.92369	5.10912	-45.40050	5.64710
3.772	.075	.12850	.02290	.04780	.01490	.00300	12.28914	5.03678	-1.82910	4.02720
3.863	4.007	.11810	.02120	.04330	.02000	.00050	12.34704	5.00613	44.48170	5.73110
3.797	6.125	.10770	.02030	.03970	.02340	-.00140	12.38564	4.98601	56.96830	7.29420
	GRADIENT	-.00393	-.00061	-.00188	.00505	-.00108	.05441	-.01326	11.59351	.01287

IA156A, AEDC PWT 16T-470, O T S W/SILTS (R8NWA6) (27 MAY 80)

REFERENCE DATA

SREF = 2690.0000 SQ.FT. XMRP = 976.0000 IN. XT
LREF = 1290.3000 INCHES YMRP = .0000 IN. YT
BREF = 1290.3000 INCHES ZMRP = 400.0000 IN. ZT
SCALE = .0200

PARAMETRIC DATA

IB-ELV = 12.000 OB-ELV = 5.000
BDFLAP = .000 SPDBRK = .000
RUDDER = .000 SILTS = 1.000
MACH = .950 RN/L = 3.500

RUN NO. 1258/ 0 RN/L = 3.50 GRADIENT INTERVAL = -5.00/ 5.00

ALPHAO	BETAO	CNW	CBW	CTW	CHEI	CHEO	IB-ELV	OB-ELV	PHII	ALPHAI
-8.122	-5.896	-.01180	-.00250	-.00660	-.04000	.00630	11.69813	5.08009	39.16380	-8.61130
-8.204	-3.800	-.01910	-.00370	-.00780	-.04590	.01060	11.63590	5.13475	27.77770	-7.64190
-8.120	.348	-.03460	-.00530	-.00790	-.01570	.01500	11.95441	5.19069	-1.13050	-6.75090
-7.943	4.317	-.05160	-.00500	-.00520	-.01430	.01880	11.96918	5.23900	-28.94690	-7.67760
-7.957	6.224	-.05890	-.00470	-.00330	-.00820	.02080	12.03352	5.26442	-38.97160	-8.70270
	GRADIENT	-.00400	-.00016	.00032	.00392	.00101	.04133	.01265	-6.98849	-.00276

RUN NO. 1259/ 0 RN/L = 3.50 GRADIENT INTERVAL = -5.00/ 5.00

ALPHAO	BETAO	CNW	CBW	CTW	CHEI	CHEO	IB-ELV	OB-ELV	PHII	ALPHAI
-6.172	-5.943	.02720	.00210	.00350	-.03670	.00710	11.73293	5.09026	47.50310	-7.32820
-6.107	-4.037	.02240	.00090	.00250	-.03920	.01100	11.70656	5.13984	37.06810	-6.12910
-6.186	.092	-.00260	-.00120	-.00020	-.00880	.01500	12.02719	5.19069	1.09620	-5.01520
-6.011	4.226	-.02680	-.00110	.00160	-.00640	.01730	12.05250	5.21993	-35.42080	-6.19060
-5.740	6.301	-.03250	-.00040	.00510	-.00090	.01570	12.11051	5.19959	-48.45330	-7.35090
	GRADIENT	-.00595	-.00024	-.00011	.00397	.00076	.04186	.00969	-8.77262	-.00750

RUN NO. 1260/ 0 RN/L = 3.50 GRADIENT INTERVAL = -5.00/ 5.00

ALPHAO	BETAO	CNW	CBW	CTW	CHEI	CHEO	IB-ELV	OB-ELV	PHII	ALPHAI
-4.061	-6.053	.05390	.00770	.01620	-.03110	.00860	11.79199	5.10933	60.10960	-6.23730
-4.287	-3.951	.04080	.00570	.01250	-.03340	.01170	11.76774	5.14874	47.13800	-4.82200
-4.181	.370	.01490	.00310	.00920	-.00930	.01420	12.02191	5.18052	-2.37300	-3.22660
-3.754	4.279	-.00780	.00350	.01160	-.00300	.01140	12.08836	5.14493	-48.89230	-4.75190
-3.839	6.095	-.01440	.00300	.01140	.00150	.01170	12.13766	5.14874	-58.36410	-6.19460
	GRADIENT	-.00591	-.00027	-.00012	.00373	-.00003	.03930	-.00033	-11.66437	.01483

RUN NO. 1261/ 0 RN/L = 3.50 GRADIENT INTERVAL = -5.00/ 5.00

ALPHAO	BETAO	CNW	CBW	CTW	CHEI	CHEO	IB-ELV	OB-ELV	PHII	ALPHAI
-.422	-6.933	.10950	.01720	.03900	-.02280	.00590	11.87953	5.07501	89.99010	-6.05460
-.402	-4.791	.09460	.01610	.03580	-.02930	.00640	11.81098	5.08136	90.00370	-4.04440
-.366	-.454	.06910	.01320	.03050	-.00520	.00790	12.06516	5.10043	90.01720	.04810
-.334	3.660	.05430	.01110	.02850	-.00600	.01240	12.05672	5.15764	90.00370	3.93990
-.336	5.826	.04560	.01010	.02740	-.00400	.01120	12.07781	5.14238	90.01720	5.98700
	GRADIENT	-.00478	-.00059	-.00087	.00278	.00071	.02935	.00898	.00003	.94484

IA156A, AEDC PWT 16T-470, O T S W/SILTS (R8NWA6) (27 MAY 80)

REFERENCE DATA

SREF = 2690.0000 SQ.FT. XMRP = 976.0000 IN. XT
LREF = 1290.3000 INCHES YMRP = .0000 IN. YT
BREF = 1290.3000 INCHES ZMRP = 400.0000 IN. ZT
SCALE = .0200

PARAMETRIC DATA

IB-ELV = 12.000 OB-ELV = 5.000
BDFLAP = .000 SPDBRK = .000
RUDDER = .000 SILTS = 1.000
MACH = .950 RN/L = 3.500

RUN NO. 1262/ 0 RN/L = 3.50 GRADIENT INTERVAL = -5.00/ 5.00

ALPHAO	BETAO	CNW	CBW	CTW	CHEI	CHEO	IB-ELV	OB-ELV	PHII	ALPHAI
4.114	-5.814	.16580	.02720	.06050	-.02550	-.00100	11.85106	4.98964	-56.35940	7.19010
3.989	-3.714	.14990	.02590	.05570	-.02910	-.00050	11.81309	4.99482	-45.07980	5.62420
3.766	.120	.12810	.02300	.04630	-.00720	-.00320	12.04406	4.96685	-1.08780	4.04600
3.867	4.044	.11610	.02080	.04110	-.00480	-.01320	12.06938	4.86327	44.61780	5.76280
3.800	6.128	.10490	.01920	.03770	-.00120	-.01620	12.10734	4.83219	56.88260	7.29200
	GRADIENT	-.00435	-.00066	-.00188	.00312	-.00164	.03293	-.01700	11.56333	.01950

IA156A, AEDC PWT 16T-470, O T S W/SILTS (R8NWA7) (27 MAY 80)

REFERENCE DATA

SREF = 2690.0000 SQ.FT. XMRP = 976.0000 IN. XT
LREF = 1290.3000 INCHES YMRP = .0000 IN. YT
BREF = 1290.3000 INCHES ZMRP = 400.0000 IN. ZT
SCALE = .0200

PARAMETRIC DATA

IB-ELV = 12.000 OB-ELV = 5.000
BDFLAP = .000 SPDBRK = .000
RUDDER = .000 SILTS = 1.000
MACH = 1.050 RN/L = 3.500

RUN NO. 1263/ 0 RN/L = 3.50 GRADIENT INTERVAL = -5.00/ 5.00

ALPHAO	BETAO	CNW	CBW	CTW	CHEI	CHEO	IB-ELV	OB-ELV	PHII	ALPHAI
-8.095	-5.938	-.00730	-.00310	-.00310	-.00940	.01080	12.01508	5.14530	39.82210	-8.46230
-8.223	-3.739	-.01530	-.00490	-.00510	-.00540	.01520	12.05973	5.20449	27.64230	-7.46970
-8.113	.176	-.03180	-.00680	-.00540	.01140	.01780	12.26201	5.23947	.09790	-6.57650
-7.953	4.360	-.05820	-.00750	-.00420	.01810	.01930	12.34547	5.25965	-29.58930	-7.54690
-7.956	6.216	-.06690	-.00800	-.00380	.02030	.01980	12.37287	5.26637	-39.40410	-8.53780
	GRADIENT	-.00531	-.00032	.00011	.00289	.00050	.03511	.00679	-7.06692	-.01208

RUN NO. 1264/ 0 RN/L = 3.50 GRADIENT INTERVAL = -5.00/ 5.00

ALPHAO	BETAO	CNW	CBW	CTW	CHEI	CHEO	IB-ELV	OB-ELV	PHII	ALPHAI
-6.075	-5.927	.03470	.00280	.00690	-.01510	.00940	11.95147	5.12646	48.29780	-7.14110
-6.087	-4.033	.02250	.00100	.00510	-.01210	.01390	11.98495	5.18700	37.56870	-5.99790
-6.194	.104	-.00660	-.00270	.00240	.00960	.01690	12.23958	5.22736	.96860	-4.88410
-6.001	4.237	-.03260	-.00350	.00260	.01440	.01670	12.29938	5.22467	-36.02780	-6.06250
-5.962	6.210	-.04550	-.00390	.00250	.01770	.01650	12.34048	5.22198	-47.48460	-7.28460
	GRADIENT	-.00666	-.00054	-.00030	.00320	.00034	.03802	.00456	-8.89867	-.00776

IA156A, AEDC PWT 16T-470, O T S W/SILTS

(R8NWA7) (27 MAY 80)

REFERENCE DATA

SREF = 2690.0000 SQ.FT. XMRP = 976.0000 IN. XT
LREF = 1290.3000 INCHES YMRP = .0000 IN. YT
BREF = 1290.3000 INCHES ZMRP = 400.0000 IN. ZT
SCALE = .0200

PARAMETRIC DATA

IB-ELV = 12.000 OB-ELV = 5.000
BDFLAP = .000 SPDBRK = .000
RUDDER = .000 SILTS = 1.000
MACH = 1.050 RN/L = 3.500

RUN NO. 1265/ 0 RN/L = 3.50 GRADIENT INTERVAL = -5.00/ 5.00

ALPHAO	BETAO	CNW	CBW	CTW	CHEI	CHEO	IB-ELV	OB-ELV	PHII	ALPHAI
-4.169	-6.040	.06090	.00870	.01900	-.01810	.00970	11.91798	5.13050	59.73860	-6.18960
-4.298	-3.967	.04480	.00610	.01510	-.01720	.01420	11.92803	5.19104	47.66780	-4.74590
-4.203	.358	.01320	.00250	.01110	.00720	.01550	12.20969	5.20853	-2.36860	-3.14070
-3.755	4.280	-.01900	.00190	.01140	.00950	.01700	12.23834	5.22871	-49.50550	-4.66670
-3.842	6.113	-.02970	.00100	.01020	.01010	.01900	12.24581	5.25561	-58.92780	-6.12810
	GRADIENT	-.00773	-.00051	-.00046	.00328	.00034	.03810	.00456	-11.78008	.01577

RUN NO. 1266/ 0 RN/L = 3.50 GRADIENT INTERVAL = -5.00/ 5.00

ALPHAO	BETAO	CNW	CBW	CTW	CHEI	CHEO	IB-ELV	OB-ELV	PHII	ALPHAI
-.451	-6.988	.12700	.02090	.04230	-.02140	.00880	11.88115	5.11839	89.99010	-6.05060
-.430	-4.840	.10710	.01850	.03910	-.02120	.01170	11.88338	5.15740	90.00370	-4.04900
-.407	-.438	.07400	.01360	.03250	.00310	.01690	12.15862	5.22736	90.07130	.08060
-.375	3.677	.05160	.01030	.02830	.00340	.00970	12.16235	5.13050	90.01720	3.94690
-.367	5.843	.04150	.00890	.02600	.00400	.00220	12.16983	5.02960	89.99010	5.97820
	GRADIENT	-.00653	-.00096	-.00127	.00292	-.00022	.03310	-.00294	.00175	.93886

RUN NO. 1267/ 0 RN/L = 3.50 GRADIENT INTERVAL = -5.00/ 5.00

ALPHAO	BETAO	CNW	CBW	CTW	CHEI	CHEO	IB-ELV	OB-ELV	PHII	ALPHAI
4.116	-5.817	.17790	.03000	.06230	-.02450	.00460	11.84655	5.06189	-56.06700	7.18560
3.972	-3.711	.16110	.02760	.05720	-.02580	.00390	11.83204	5.05247	-44.82190	5.61650
3.787	.113	.13590	.02370	.04800	-.00940	-.00200	12.01508	4.97808	-1.06010	4.07570
3.854	4.043	.11580	.02050	.04310	-.00530	-.01600	12.06085	4.82461	44.51750	5.75410
3.804	6.119	.10430	.01820	.03920	-.00170	-.02230	12.10103	4.75555	56.66820	7.27090
	GRADIENT	-.00584	-.00092	-.00182	.00264	-.00257	.02943	-.02943	11.52266	.01964

IA156A, AEDC PWT 16T-470, O T S W/SILTS (R8NWA8) (27 MAY 80)

REFERENCE DATA

SREF = 2690.0000 SQ.FT. XMRP = 976.0000 IN. XT
LREF = 1290.3000 INCHES YMRP = .0000 IN. YT
BREF = 1290.3000 INCHES ZMRP = 400.0000 IN. ZT
SCALE = .0200

PARAMETRIC DATA

IB-ELV = 12.000 OB-ELV = 5.000
BDFLAP = .000 SPDBRK = .000
RUDDER = .000 SILTS = 1.000
MACH = 1.100 RN/L = 3.500

RUN NO. 1268/ 0 RN/L = 3.50 GRADIENT INTERVAL = -5.00/ 5.00

ALPHAO	BETAO	CNW	CBW	CTW	CHEI	CHEO	IB-ELV	OB-ELV	PHII	ALPHAI
-8.103	-5.932	.00170	-.00250	-.00100	-.00750	.01160	12.03424	5.15988	39.86500	-8.45640
-8.214	-3.748	-.00940	-.00410	-.00230	-.00280	.01460	12.08798	5.20122	27.77060	-7.46280
-8.118	.177	-.03060	-.00620	-.00350	.01650	.01670	12.33056	5.23017	.15510	-6.57260
-7.959	4.361	-.05680	-.00680	-.00250	.02140	.01770	12.39310	5.24395	-29.56480	-7.54300
-7.951	6.217	-.06450	-.00760	-.00200	.02470	.01790	12.43521	5.24671	-39.41100	-8.53380
	GRADIENT	-.00585	-.00033	-.00002	.00296	.00038	.03738	.00525	-7.07069	-.01232

RUN NO. 1269/ 0 RN/L = 3.50 GRADIENT INTERVAL = -5.00/ 5.00

ALPHAO	BETAO	CNW	CBW	CTW	CHEI	CHEO	IB-ELV	OB-ELV	PHII	ALPHAI
-6.168	-5.957	.04240	.00330	.00860	-.01260	.01050	11.97593	5.14472	48.10450	-7.21730
-6.117	-4.044	.02850	.00130	.00650	-.00970	.01300	12.00909	5.17917	37.61870	-6.01680
-6.213	.099	-.00320	-.00190	.00450	.01240	.01520	12.27824	5.20949	1.11120	-4.89710
-5.981	4.228	-.02930	-.00260	.00510	.01950	.01730	12.36885	5.23844	-35.97900	-6.04960
-5.980	6.223	-.04390	-.00330	.00460	.02150	.02070	12.39437	5.28530	-47.42190	-7.31140
	GRADIENT	-.00699	-.00047	-.00017	.00353	.00052	.04350	.00716	-8.89737	-.00381

RUN NO. 1270/ 0 RN/L = 3.50 GRADIENT INTERVAL = -5.00/ 5.00

ALPHAO	BETAO	CNW	CBW	CTW	CHEI	CHEO	IB-ELV	OB-ELV	PHII	ALPHAI
-4.029	-6.054	.07170	.01040	.02120	-.01530	.01020	11.94506	5.14058	60.83710	-6.13800
-4.294	-3.964	.05200	.00700	.01700	-.01290	.01380	11.97250	5.19020	47.76080	-4.74290
-4.189	.363	.01830	.00340	.01350	.01300	.01520	12.28590	5.20949	-2.32370	-3.13570
-3.727	4.275	-.00970	.00270	.01410	.01520	.01650	12.31397	5.22741	-49.51950	-4.65570
-3.851	6.108	-.02090	.00140	.01250	.01620	.01130	12.32674	5.15574	-58.74690	-6.12810
	GRADIENT	-.00749	-.00053	-.00036	.00346	.00033	.04200	.00452	-11.80416	.01696

RUN NO. 1271/ 0 RN/L = 3.50 GRADIENT INTERVAL = -5.00/ 5.00

ALPHAO	BETAO	CNW	CBW	CTW	CHEI	CHEO	IB-ELV	OB-ELV	PHII	ALPHAI
-.458	-6.986	.12970	.02140	.04080	-.01730	.00990	11.92219	5.13645	89.99010	-6.05060
-.434	-4.836	.11230	.01920	.03850	-.01540	.01410	11.94391	5.19433	90.00370	-4.04850
-.400	-.468	.08160	.01470	.03400	.00770	.01460	12.21826	5.20122	90.01720	.05010
-.367	3.667	.05920	.01080	.03000	.00830	.00050	12.22592	5.00689	90.03070	3.93880
-.366	5.838	.04620	.00890	.02700	.00820	-.00640	12.22464	4.92813	89.99010	5.97170
	GRADIENT	-.00625	-.00099	-.00100	.00281	-.00158	.03344	-.02182	.00317	.93930

IA156A, AEDC PWT 16T-470, O T S W/SILTS (R8NWA8) (27 MAY 80)

REFERENCE DATA

SREF = 2690.0000 SQ.FT. XMRP = 976.0000 IN. XT
LREF = 1290.3000 INCHES YMRP = .0000 IN. YT
BREF = 1290.3000 INCHES ZMRP = 400.0000 IN. ZT
SCALE = .0200

PARAMETRIC DATA

IB-ELV = 12.000 OB-ELV = 5.000
BDFLAP = .000 SPDBRK = .000
RUDDER = .000 SILTS = 1.000
MACH = 1.100 RN/L = 3.500

RUN NO. 1272/ 0 RN/L = 3.50 GRADIENT INTERVAL = -5.00/ 5.00

ALPHAO	BETAO	CNW	CBW	CTW	CHEI	CHEO	IB-ELV	OB-ELV	PHII	ALPHAI
4.134	-5.837	.17990	.03070	.06220	-.02400	.00210	11.84558	5.02894	-56.26890	7.19560
3.984	-3.725	.16240	.02840	.05730	-.02310	-.00040	11.85587	4.99551	-45.07290	5.61330
3.776	.118	.13730	.02420	.04830	-.00570	-.00950	12.05482	4.89331	-1.15340	4.05090
3.840	4.028	.12050	.02090	.04340	-.00320	-.02260	12.08341	4.74620	44.51030	5.72240
3.794	6.117	.10690	.01850	.04030	.00030	-.02690	12.12383	4.69791	56.73970	7.25540
	GRADIENT	-.00540	-.00097	-.00179	.00256	-.00286	.02929	-.03217	11.55501	.01527

IA156A, AEDC PWT 16T-470, O T S W/SILTS (R8NWA9) (27 MAY 80)

REFERENCE DATA

SREF = 2690.0000 SQ.FT. XMRP = 976.0000 IN. XT
LREF = 1290.3000 INCHES YMRP = .0000 IN. YT
BREF = 1290.3000 INCHES ZMRP = 400.0000 IN. ZT
SCALE = .0200

PARAMETRIC DATA

IB-ELV = 12.000 OB-ELV = 5.000
BDFLAP = .000 SPDBRK = .000
RUDDER = .000 SILTS = 1.000
MACH = 1.150 RN/L = 3.500

RUN NO. 1273/ 0 RN/L = 3.50 GRADIENT INTERVAL = -5.00/ 5.00

ALPHAO	BETAO	CNW	CBW	CTW	CHEI	CHEO	IB-ELV	OB-ELV	PHII	ALPHAI
-8.106	-5.939	.00980	-.00140	-.00070	-.00330	.01140	12.08153	5.16017	39.87930	-8.43060
-8.213	-3.740	-.00460	-.00370	-.00200	.00510	.01270	12.18635	5.17843	27.73490	-7.42810
-8.116	.191	-.02720	-.00630	-.00260	.02320	.01320	12.42181	5.18546	.01300	-6.52500
-7.934	4.331	-.05640	-.00680	-.00170	.03050	.01450	12.51678	5.20372	-29.59970	-7.48650
-7.974	6.231	-.06570	-.00770	-.00160	.03360	.01780	12.55711	5.25009	-39.54350	-8.52390
	GRADIENT	-.00642	-.00038	.00004	.00313	.00022	.04078	.00314	-7.10448	-.00923

RUN NO. 1274/ 0 RN/L = 3.51 GRADIENT INTERVAL = -5.00/ 5.00

ALPHAO	BETAO	CNW	CBW	CTW	CHEI	CHEO	IB-ELV	OB-ELV	PHII	ALPHAI
-6.162	-5.951	.04980	.00490	.00870	-.00740	.00970	12.03374	5.13628	48.07590	-7.18470
-6.104	-4.035	.03700	.00280	.00780	-.00010	.01150	12.11883	5.16157	37.59010	-5.98400
-6.198	.094	.00210	-.00160	.00550	.02230	.01180	12.41010	5.16579	1.05920	-4.86010
-5.994	4.239	-.02800	-.00260	.00560	.02710	.01650	12.47255	5.23182	-36.11850	-6.03470
-5.969	6.213	-.04190	-.00340	.00500	.02870	.01180	12.49336	5.16579	-47.55430	-7.27180
	GRADIENT	-.00786	-.00065	-.00027	.00329	.00060	.04273	.00850	-8.90850	-.00631

IA156A, AEDC PWT 16T-470, O T S W/SILTS

(R8NWA9) (27 MAY 80)

REFERENCE DATA

SREF = 2690.0000 SQ.FT. XMRP = 976.0000 IN. XT
LREF = 1290.3000 INCHES YMRP = .0000 IN. YT
BREF = 1290.3000 INCHES ZMRP = 400.0000 IN. ZT
SCALE = .0200

PARAMETRIC DATA

IB-ELV = 12.000 OB-ELV = 5.000
BDFLAP = .000 SPDBRK = .000
RUDDER = .000 SILTS = 1.000
MACH = 1.150 RN/L = 3.500

RUN NO. 1275/ 0 RN/L = 3.51 GRADIENT INTERVAL = -5.00/ 5.00

ALPHAO	BETAO	CNW	CBW	CTW	CHEI	CHEO	IB-ELV	OB-ELV	PHII	ALPHAI
-4.038	-6.052	.07870	.01220	.02070	-.00960	.01050	12.00810	5.14752	60.68020	-6.12910
-4.300	-3.967	.06280	.00910	.01810	-.00100	.01300	12.10834	5.18265	47.62480	-4.73790
-4.202	.367	.02450	.00420	.01450	.02000	.01700	12.38018	5.23885	-2.47850	-3.13820
-3.747	4.274	-.00800	.00260	.01450	.02250	.00580	12.41270	5.08149	-49.54730	-4.64770
-3.861	6.129	-.02160	.00130	.01300	.02440	.00070	12.43742	5.00983	-58.92090	-6.12910
	GRADIENT	-.00860	-.00080	-.00044	.00289	-.00084	.03740	-.01182	-11.78809	.01746

RUN NO. 1276/ 0 RN/L = 3.50 GRADIENT INTERVAL = -5.00/ 5.00

ALPHAO	BETAO	CNW	CBW	CTW	CHEI	CHEO	IB-ELV	OB-ELV	PHII	ALPHAI
-.443	-7.017	.13500	.02220	.03890	-.01180	.01370	11.98246	5.19248	89.99010	-6.06150
-.417	-4.818	.11970	.02060	.03790	-.00740	.01610	12.03374	5.22620	90.00370	-4.02130
-.384	-.496	.09400	.01660	.03520	.01500	.00420	12.31514	5.05901	90.03070	.02630
-.349	3.667	.06900	.01270	.03210	.01580	-.01150	12.32554	4.86835	90.00370	3.93450
-.350	5.859	.05380	.01010	.02930	.01800	-.01830	12.35416	4.79050	90.00370	5.98260
	GRADIENT	-.00598	-.00093	-.00068	.00275	-.00325	.03459	-.04216	.00004	.93768

RUN NO. 1277/ 0 RN/L = 3.50 GRADIENT INTERVAL = -5.00/ 5.00

ALPHAO	BETAO	CNW	CBW	CTW	CHEI	CHEO	IB-ELV	OB-ELV	PHII	ALPHAI
4.119	-5.814	.17940	.03060	.05870	-.01960	-.00010	11.89154	4.99886	-56.15750	7.16130
3.983	-3.718	.16450	.02920	.05570	-.01520	-.00450	11.94283	4.94848	-44.94740	5.59690
3.772	.121	.14510	.02530	.04860	.00270	-.01800	12.15512	4.79394	-.93690	4.04120
3.856	4.026	.12810	.02190	.04480	.00160	-.03040	12.14081	4.65198	44.56050	5.72790
3.798	6.127	.11420	.01970	.04250	.00530	-.03760	12.18895	4.56955	56.82540	7.25320
	GRADIENT	-.00470	-.00094	-.00141	.00216	-.00334	.02548	-.03828	11.55802	.01810

IA156A, AEDC PWT 16T-470, O T S W/SILTS (R8NWB0) (27 MAY 80)

REFERENCE DATA

SREF = 2690.0000 SQ.FT. XMRP = 976.0000 IN. XT
LREF = 1290.3000 INCHES YMRP = .0000 IN. YT
BREF = 1290.3000 INCHES ZMRP = 400.0000 IN. ZT
SCALE = .0200

PARAMETRIC DATA

IB-ELV = 12.000 OB-ELV = 5.000
BDFLAP = .000 SPDBRK = .000
RUDDER = .000 SILTS = 1.000
MACH = 1.250 RN/L = 3.500

RUN NO. 1278/ 0 RN/L = 3.50 GRADIENT INTERVAL = -5.00/ 5.00

ALPHAO	BETAO	CNW	CBW	CTW	CHEI	CHEO	IB-ELV	OB-ELV	PHII	ALPHAI
-8.117	-5.934	.01530	-.00010	-.00460	.01000	.01260	12.25466	5.18325	39.97950	-8.39880
-8.222	-3.728	.00430	-.00200	-.00460	.01830	.01180	12.36643	5.17161	27.82050	-7.39650
-8.114	.192	-.02050	-.00420	-.00160	.03120	.01210	12.54015	5.17598	.10760	-6.51610
-7.937	4.364	-.05120	-.00530	.00100	.03020	.00610	12.52668	5.08872	-29.68700	-7.47170
-7.972	6.250	-.04290	-.00680	.00330	.03010	.00210	12.52533	5.03054	-39.54350	-8.49810
	GRADIENT	-.00686	-.00041	.00069	.00145	-.00071	.01956	-.01036	-7.10656	-.01164

RUN NO. 1279/ 0 RN/L = 3.50 GRADIENT INTERVAL = -5.00/ 5.00

ALPHAO	BETAO	CNW	CBW	CTW	CHEI	CHEO	IB-ELV	OB-ELV	PHII	ALPHAI
-6.202	-5.973	.04560	.00540	.00300	.00680	.01140	12.21157	5.16580	48.17610	-7.20250
-6.133	-4.024	.04140	.00430	.00420	.01590	.01200	12.33411	5.17452	37.56150	-5.98300
-6.196	.131	.01310	.00100	.00620	.02750	00720	12.49032	5.10471	.90080	-4.85410
-5.998	4.246	-.01760	-.00080	.00810	.02610	-.00160	12.47147	4.98104	-36.08370	-6.02080
-5.797	6.327	-.02900	-.00160	.00920	.02410	-.00870	12.44454	4.89690	-48.85750	-7.22620
	GRADIENT	-.00713	-.00062	.00047	.00124	-.00164	.01664	-.02338	-8.90476	-.00413

RUN NO. 1280/ 0 RN/L = 3.50 GRADIENT INTERVAL = -5.00/ 5.00

ALPHAO	BETAO	CNW	CBW	CTW	CHEI	CHEO	IB-ELV	OB-ELV	PHII	ALPHAI
-4.179	-6.048	.07500	.01160	.01310	.00410	.01350	12.17521	5.19634	59.98120	-6.16880
-4.309	-3.970	.06370	.00970	.01270	.01440	.01170	12.31391	5.17016	47.93270	-4.73090
-4.187	.370	.03440	.00670	.01450	.02180	.00070	12.41356	5.01018	-2.22860	-3.11230
-3.744	4.281	.00260	.00550	.01620	.01900	-.01280	12.37586	4.84832	-49.47070	-4.63660
-3.855	6.144	-.00710	.00350	.01530	.01840	-.01750	12.36778	4.79262	-58.90690	-6.12310
	GRADIENT	-.00739	-.00051	.00042	.00058	-.00296	.00779	-.03897	-11.80097	.01801

RUN NO. 1281/ 0 RN/L = 3.51 GRADIENT INTERVAL = -5.00/ 5.00

ALPHAO	BETAO	CNW	CBW	CTW	CHEI	CHEO	IB-ELV	OB-ELV	PHII	ALPHAI
-.472	-7.033	.12790	.02140	.03120	-.00560	.00910	12.05243	5.13235	89.99010	-6.06250
-.444	-4.826	.11520	.02060	.03150	.00380	.00320	12.17117	5.04654	89.99010	-4.01770
-.401	-.499	.09600	.01760	.03200	.01800	-.01010	12.36239	4.88031	90.01720	.02680
-.365	3.669	.07220	.01430	.03090	.01360	-.02510	12.30314	4.70256	90.03070	3.93510
-.377	5.868	.06220	.01210	.02910	.01090	-.03010	12.26678	4.64331	89.99010	5.98370
	GRADIENT	-.00506	-.00074	-.00007	.00117	-.00333	.01572	-.04048	.00479	.93623

IA156A, AEDC PWT 16T-470, O T S W/SILTS (R8NWB0) (27 MAY 80)

REFERENCE DATA

SREF = 2690.0000 SQ.FT. XMRP = 976.0000 IN. XT
LREF = 1290.3000 INCHES YMRP = .0000 IN. YT
BREF = 1290.3000 INCHES ZMRP = 400.0000 IN. ZT
SCALE = .0200

PARAMETRIC DATA

IB-ELV = 12.000 OB-ELV = 5.000
BDFLAP = .000 SPDBRK = .000
RUDDER = .000 SILTS = 1.000
MACH = 1.250 RN/L = 3.500

RUN NO. 1282/ 0 RN/L = 3.51 GRADIENT INTERVAL = -5.00/ 5.00

ALPHAO	BETAO	CNW	CBW	CTW	CHEI	CHEO	IB-ELV	OB-ELV	PHII	ALPHAI
4.122	-5.803	.17300	.03010	.05170	-.01120	-.01590	11.98486	4.81158	-56.24800	7.14020
3.999	-3.707	.16290	.02900	.05050	-.00500	-.02270	12.05967	4.73100	-45.01010	5.59140
3.758	.132	.14510	.02580	.04560	.00440	-.03170	12.17925	4.62435	-1.15030	4.01750
3.825	4.039	.12690	.02260	.04280	.00090	-.04040	12.13212	4.52125	44.54620	5.70820
3.778	6.113	.11340	.02020	.04090	-.00370	-.04360	12.07536	4.48333	56.65390	7.22330
	GRADIENT	-.00465	-.00083	-.00099	.00076	-.00228	.00929	-.02708	11.56216	.01630

IA156A, AEDC PWT 16T-470, O T S W/SILTS (R8NWB1) (27 MAY 80)

REFERENCE DATA

SREF = 2690.0000 SQ.FT. XMRP = 976.0000 IN. XT
LREF = 1290.3000 INCHES YMRP = .0000 IN. YT
BREF = 1290.3000 INCHES ZMRP = 400.0000 IN. ZT
SCALE = .0200

PARAMETRIC DATA

IB-ELV = 12.000 OB-ELV = 5.000
BDFLAP = .000 SPDBRK = .000
RUDDER = .000 SILTS = 1.000
MACH = 1.400 RN/L = 3.500

RUN NO. 1283/ 0 RN/L = 3.49 GRADIENT INTERVAL = -5.00/ 5.00

ALPHAO	BETAO	CNW	CBW	CTW	CHEI	CHEO	IB-ELV	OB-ELV	PHII	ALPHAI
-8.172	-5.916	.01340	-.00060	-.00700	.02570	.01780	12.47881	5.26839	40.11540	-8.34820
-8.232	-3.703	.00550	-.00190	-.00620	.02920	.01290	12.52767	5.19451	28.01300	-7.32920
-8.132	.227	-.02060	-.00330	-.00420	.02620	.00150	12.48579	5.02262	.19560	-6.46750
-7.934	4.409	-.04640	-.00360	-.00070	.02330	-.01310	12.44530	4.83905	-29.76030	-7.42520
-7.993	6.316	-.05060	-.00420	.00120	.02090	-.01750	12.41179	4.78499	-39.62730	-8.49010
	GRADIENT	-.00640	-.00021	.00068	-.00073	-.00321	-.01015	-.04382	-7.12240	-.01414

RUN NO. 1284/ 0 RN/L = 3.50 GRADIENT INTERVAL = -5.00/ 5.00

ALPHAO	BETAO	CNW	CBW	CTW	CHEI	CHEO	IB-ELV	OB-ELV	PHII	ALPHAI
-6.235	-5.949	.03460	.00360	-.00210	.02100	.01110	12.41319	5.16737	48.39810	-7.14110
-6.174	-4.010	.02940	.00270	-.00140	.02390	.00500	12.45368	5.07539	37.82620	-5.94230
-6.227	.157	.01440	.00100	.00160	.02200	-.00900	12.42715	4.88943	1.06190	-4.81500
-5.972	4.288	-.01010	.00080	.00570	.01550	-.02400	12.33640	4.70513	-36.23020	-5.97110
-5.941	6.258	-.02240	.00010	.00670	.01230	-.02690	12.29173	4.66950	-47.70060	-7.19460
	GRADIENT	-.00476	-.00023	.00086	-.00101	-.00349	-.01412	-.04462	-8.92456	-.00306

IA156A, AEDC PWT 16T-470, O T S W/SILTS (R8NWB1) (27 MAY 80)

REFERENCE DATA

SREF = 2690.0000 SQ.FT. XMRP = 976.0000 IN. XT
LREF = 1290.3000 INCHES YMRP = .0000 IN. YT
BREF = 1290.3000 INCHES ZMRP = 400.0000 IN. ZT
SCALE = .0200

PARAMETRIC DATA

IB-ELV = 12.000 OB-ELV = 5.000
BDFLAP = .000 SPDBRK = .000
RUDDER = .000 SILTS = 1.000
MACH = 1.400 RN/L = 3.500

RUN NO. 1285/ 0 RN/L = 3.50 GRADIENT INTERVAL = -5.00/ 5.00

ALPHAO	BETAO	CNW	CBW	CTW	CHEI	CHEO	IB-ELV	OB-ELV	PHII	ALPHAI
-4.308	-5.994	.05570	.00840	.00470	.01640	.00360	12.34897	5.05428	59.52460	-6.12810
-4.303	-3.954	.04930	.00780	.00560	.02060	-.00380	12.40761	4.95331	48.38370	-4.66570
-4.210	.427	.03010	.00660	.00870	.01450	-.02130	12.32244	4.73831	-2.46020	-3.08080
-3.718	4.312	.00750	.00690	.01390	.00550	-.03380	12.19679	4.58473	-49.63100	-4.59750
-3.823	6.165	-.00190	.00510	.01350	.00060	-.03590	12.12838	4.55893	-59.06700	-6.07540
	GRADIENT	-.00504	-.00011	.00100	-.00182	-.00364	-.02537	-.04468	-11.85133	.01575

RUN NO. 1286/ 0 RN/L = 3.50 GRADIENT INTERVAL = -5.00/ 5.00

ALPHAO	BETAO	CNW	CBW	CTW	CHEI	CHEO	IB-ELV	OB-ELV	PHII	ALPHAI
-.534	-7.071	.11030	.01890	.02090	.00530	-.00470	12.19400	4.94226	89.99010	-6.06250
-.500	-4.898	.09680	.01820	.02050	.00780	-.01190	12.22890	4.85380	90.00370	-4.05860
-.449	-.441	.08550	.01730	.02500	.00460	-.02660	12.18422	4.67319	90.01720	.09700
-.429	3.664	.06880	.01480	.02690	-.00660	-.03910	12.03744	4.51961	90.03070	3.93240
-.442	5.877	.05750	.01270	.02610	-.01300	-.04210	11.95738	4.48276	89.99010	5.98370
	GRADIENT	-.00326	-.00039	.00075	-.00167	-.00318	-.02219	-.03905	.00315	.93329

RUN NO. 1287/ 0 RN/L = 3.49 GRADIENT INTERVAL = -5.00/ 5.00

ALPHAO	BETAO	CNW	CBW	CTW	CHEI	CHEO	IB-ELV	OB-ELV	PHII	ALPHAI
4.136	-5.764	.16000	.02880	.04280	-.00470	-.02860	12.06121	4.64862	-56.32460	7.11150
4.015	-3.670	.14710	.02780	.04130	-.00400	-.03350	12.06996	4.58842	-45.05890	5.58710
3.731	.162	.13710	.02510	.03960	-.01080	-.04220	11.98490	4.48153	-1.31740	4.00720
3.793	4.054	.12130	.02230	.03920	-.02690	-.05030	11.78350	4.38201	44.44590	5.70490
3.718	6.096	.11240	.02050	.03800	-.03340	-.05190	11.70218	4.36235	56.61100	7.17680
	GRADIENT	-.00334	-.00071	-.00027	-.00297	-.00217	-.03712	-.02672	11.58757	.01633

IA156A, AEDC PWT 16T-470, O T S W/SILTS (R8NWB2) (27 MAY 80)

REFERENCE DATA

SREF = 2690.0000 SQ.FT. XMRP = 976.0000 IN. XT
LREF = 1290.3000 INCHES YMRP = .0000 IN. YT
BREF = 1290.3000 INCHES ZMRP = 400.0000 IN. ZT
SCALE = .0200

PARAMETRIC DATA

IB-ELV = 12.000 OB-ELV = 5.000
BDFLAP = .000 SPDBRK = .000
RUDDER = .000 SILTS = 1.000
MACH = 1.550 RN/L = 3.200

RUN NO. 1288/ 0 RN/L = 3.00 GRADIENT INTERVAL = -5.00/ 5.00

ALPHAO	BETAO	CNW	CBW	CTW	CHEI	CHEO	IB-ELV	OB-ELV	PHII	ALPHAI
-8.285	-5.892	.01390	-.00080	-.00640	.03120	.00660	12.50092	5.08703	39.59310	-8.54370
-8.337	-3.675	.00600	-.00190	-.00580	.03110	-.00030	12.49970	4.99678	27.69220	-7.52120
-8.205	.319	-.01800	-.00300	-.00380	.01780	-.01270	12.33732	4.86355	.08470	-6.65180
-7.984	4.502	-.04970	-.00360	-.00150	.00900	-.02200	12.22988	4.76363	-29.27510	-7.61120
-7.934	6.371	-.05530	-.00400	-.00060	.00610	-.02440	12.19448	4.73785	-39.24360	-8.58940
	GRADIENT	-.00682	-.00021	.00053	-.00270	-.00265	-.03294	-.02848	-6.96786	-.01273

RUN NO. 1289/ 0 RN/L = 3.00 GRADIENT INTERVAL = -5.00/ 5.00

ALPHAO	BETAO	CNW	CBW	CTW	CHEI	CHEO	IB-ELV	OB-ELV	PHII	ALPHAI
-6.328	-5.943	.03210	.00290	-.00290	.02500	-.00250	12.42523	4.97314	47.92550	-7.27370
-6.270	-3.986	.02390	.00160	-.00250	.02390	-.01070	12.41180	4.88504	37.37560	-6.06250
-6.272	.238	.00830	.00040	.00040	.01050	-.02070	12.24820	4.77760	.98440	-4.93220
-5.982	4.385	-.01920	.00030	.00310	.00150	-.03010	12.13831	4.67660	-35.84640	-6.08930
-5.925	6.371	-.03010	-.00010	.00420	-.00440	-.03190	12.07187	4.65727	-47.38000	-7.32720
	GRADIENT	-.00514	-.00016	.00067	-.00268	-.00232	-.03269	-.02490	-8.74648	-.00235

RUN NO. 1290/ 0 RN/L = 3.00 GRADIENT INTERVAL = -5.00/ 5.00

ALPHAO	BETAO	CNW	CBW	CTW	CHEI	CHEO	IB-ELV	OB-ELV	PHII	ALPHAI
-4.204	-6.069	.04980	.00670	.00340	.01930	-.01110	12.35564	4.88074	60.59460	-6.18270
-4.444	-3.944	.03820	.00530	.00270	.01730	-.01850	12.33122	4.80124	47.60330	-4.77700
-4.280	.501	.02260	.00500	.00610	-.00130	-.03080	12.10578	4.66908	-2.33010	-3.17270
-3.717	4.430	-.00170	.00600	.01030	-.01110	-.03950	11.99857	4.57561	-49.30350	-4.69280
-3.798	6.262	-.01010	.00470	.01010	-.01540	-.04090	11.95153	4.56057	-58.73990	-6.16090
	GRADIENT	-.00474	.00008	.00090	-.00341	-.00251	-.03996	-.02700	-11.56411	.01771

RUN NO. 1291/ 0 RN/L = 3.00 GRADIENT INTERVAL = -5.00/ 5.00

ALPHAO	BETAO	CNW	CBW	CTW	CHEI	CHEO	IB-ELV	OB-ELV	PHII	ALPHAI
-.583	-7.072	.08980	.01550	.01410	.00680	-.01730	12.20302	4.81413	89.97660	-6.07350
-.548	-4.907	.08130	.01500	.01460	.00240	-.02650	12.14930	4.71528	90.01720	-4.04900
-.520	-.554	.07050	.01440	.01850	-.01120	-.04050	11.99748	4.56487	90.03070	.04750
-.504	3.581	.05440	.01370	.02200	-.02460	-.04600	11.85089	4.50577	90.00370	3.94470
-.509	5.749	.05110	.01270	.02350	-.03240	-.04920	11.76556	4.47139	90.01720	5.97820
	GRADIENT	-.00316	-.00015	.00087	-.00318	-.00231	-.03515	-.02477	-.00155	.94177

IA156A, AEDC PWT 16T-470, O T S W/SILTS (R8NWB2) (27 MAY 80)

REFERENCE DATA

SREF = 2690.0000 SQ.FT. XMRP = 976.0000 IN. XT
LREF = 1290.3000 INCHES YMRP = .0000 IN. YT
BREF = 1290.3000 INCHES ZMRP = 400.0000 IN. ZT
SCALE = .0200

PARAMETRIC DATA

IB-ELV = 12.000 OB-ELV = 5.000
BDFLAP = .000 SPDBRK = .000
RUDDER = .000 SILTS = 1.000
MACH = 1.550 RN/L = 3.200

RUN NO. 1292/ 0 RN/L = 3.00 GRADIENT INTERVAL = -5.00/ 5.00

ALPHAO	BETAO	CNW	CBW	CTW	CHEI	CHEO	IB-ELV	OB-ELV	PHII	ALPHAI
4.186	-5.682	.14400	.02600	.03600	-.00900	-.03800	12.02155	4.59173	-56.22710	7.20780
3.986	-3.541	.12980	.02510	.03340	-.01730	-.04530	11.93075	4.51330	-45.03800	5.59910
3.703	.248	.12780	.02370	.03470	-.03410	-.05080	11.74697	4.45420	-1.24700	4.07940
3.683	4.063	.11550	.02150	.03550	-.04790	-.05370	11.59600	4.42305	44.41010	5.75520
3.648	6.133	.10470	.01970	.03480	-.05660	-.05530	11.50063	4.40586	56.53960	7.30310
	GRADIENT	-.00188	-.00047	.00028	-.00402	-.00110	-.04402	-.01187	11.76399	.02100

IA156A, AEDC PWT 16T-470, O T S W/SILTS (R8NWB3) (27 MAY 80)

REFERENCE DATA

SREF = 2690.0000 SQ.FT. XMRP = 976.0000 IN. XT
LREF = 1290.3000 INCHES YMRP = .0000 IN. YT
BREF = 1290.3000 INCHES ZMRP = 400.0000 IN. ZT
SCALE = .0200

PARAMETRIC DATA

IB-ELV = 12.000 OB-ELV = 9.000
BDFLAP = .000 SPDBRK = .000
RUDDER = .000 SILTS = 1.000
MACH = .600 RN/L = 3.500

RUN NO. 1295/ 0 RN/L = 3.50 GRADIENT INTERVAL = -5.00/ 5.00

ALPHAO	BETAO	CNW	CBW	CTW	CHEI	CHEO	IB-ELV	OB-ELV	PHII	ALPHAI
-8.119	-7.790	-.00400	.00000	-.01030	-.00030	-.00340	12.11772	8.89464	46.27880	-10.31440
-8.082	-5.753	-.00820	-.00010	-.01080	.00060	-.00280	12.12509	8.89912	37.89050	-9.01510
-8.072	-3.742	-.01580	-.00030	-.01120	.00310	-.00180	12.14628	8.90657	27.15750	-8.01420
-7.981	.359	-.02300	-.00060	-.00870	.01440	.00000	12.24205	8.92000	-1.15600	-7.12230
-7.836	4.240	-.03180	-.00010	-.00450	.01720	.00010	12.26579	8.92092	-28.11930	-8.04690
-7.859	6.141	-.03700	.00010	-.00320	.01840	.00000	12.27596	8.92000	-38.10670	-9.08890
-7.879	8.123	-.04440	.00000	-.00230	.01980	.00020	12.28782	8.92183	-46.32060	-10.39960
	GRADIENT	-.00200	.00002	.00084	.00178	.00024	.01505	.00181	-6.92482	-.00202

RUN NO. 1296/ 0 RN/L = 3.49 GRADIENT INTERVAL = -5.00/ 5.00

ALPHAO	BETAO	CNW	CBW	CTW	CHEI	CHEO	IB-ELV	OB-ELV	PHII	ALPHAI
-6.119	-7.865	.02700	.00440	-.00050	-.00110	-.00320	12.11165	8.89613	54.68100	-9.12680
-6.070	-5.846	.02370	.00390	-.00110	-.00040	-.00280	12.11696	8.89912	46.65110	-7.63600
-5.997	-3.956	.02280	.00350	-.00080	.00220	-.00190	12.13865	8.90583	36.25300	-6.42380
-6.035	.089	.00880	.00270	-.00010	.01370	-.00090	12.23612	8.91329	1.17810	-5.28990
-5.902	4.151	-.00650	.00320	.00300	.01630	-.00100	12.25816	8.91254	-34.63240	-6.47040
-5.812	6.114	-.01320	.00340	.00450	.01750	-.00120	12.26833	8.91105	-46.38340	-7.66970
-5.845	8.081	-.02330	.00320	.00450	.01900	-.00130	12.28104	8.91030	-54.40270	-9.16070
	GRADIENT	-.00361	-.00004	.00047	.00174	.00011	.01474	.00083	-8.74378	-.00593

IA156A, AEDC PWT 16T-470, O T S W/SILTS (R8NWB3) (27 MAY 80)

REFERENCE DATA

SREF = 2690.0000 SQ.FT. XMRP = 976.0000 IN. XT
LREF = 1290.3000 INCHES YMRP = .0000 IN. YT
BREF = 1290.3000 INCHES ZMRP = 400.0000 IN. ZT
SCALE = .0200

PARAMETRIC DATA

IB-ELV = 12.000 OB-ELV = 9.000
BDFLAP = .000 SPDBRK = .000
RUDDER = .000 SILTS = 1.000
MACH = .600 RN/L = 3.500

RUN NO. 1297/ 0 RN/L = 3.49 GRADIENT INTERVAL = -5.00/ 5.00

ALPHAO	BETAO	CNW	CBW	CTW	CHEI	CHEO	IB-ELV	OB-ELV	PHII	ALPHAI
-4.186	-7.885	.05070	.00840	.00940	-.00170	-.00270	12.10709	8.89986	64.71060	-8.17670
-4.176	-5.895	.04720	.00790	.00880	-.00120	-.00260	12.11089	8.90061	57.73980	-6.53090
-4.190	-3.851	.04230	.00730	.00800	.00160	-.00200	12.13356	8.90508	46.10700	-5.03720
-3.978	.173	.02970	.00700	.00980	.01300	-.00160	12.23019	8.90807	.52480	-3.35800
-3.670	4.213	.00620	.00770	.01380	.01500	-.00270	12.24714	8.89986	-48.07700	-4.96520
-3.770	6.000	-.00290	.00710	.01330	.01600	-.00290	12.25561	8.89837	-57.49410	-6.42280
-3.798	7.974	-.00830	.00680	.01320	.01790	-.00320	12.27172	8.89613	-64.49160	-8.11730
	GRADIENT	-.00448	.00005	.00072	.00166	-.00009	.01408	-.00065	-11.68007	.00868

RUN NO. 1298/ 0 RN/L = 3.49 GRADIENT INTERVAL = -5.00/ 5.00

ALPHAO	BETAO	CNW	CBW	CTW	CHEI	CHEO	IB-ELV	OB-ELV	PHII	ALPHAI
-.340	-8.690	.10100	.01730	.03310	-.00220	-.00520	12.10329	8.88121	90.01720	-8.01320
-.331	-6.609	.09100	.01630	.03120	-.00210	-.00420	12.10405	8.88867	89.99010	-6.01680
-.315	-4.354	.08430	.01580	.03050	-.00040	-.00410	12.11696	8.88942	90.00370	-3.85280
-.289	-.306	.07160	.01460	.03000	.01140	-.00420	12.21663	8.88867	90.00370	.04550
-.260	3.764	.06410	.01410	.03060	.01430	-.00600	12.24121	8.87525	90.01720	3.97920
-.254	5.857	.05920	.01370	.03020	.01610	-.00660	12.25646	8.87077	89.99010	5.99460
-.245	7.949	.05350	.01330	.02950	.01810	-.00760	12.27341	8.86331	89.99010	8.01220
	GRADIENT	-.00249	-.00021	.00001	.00181	-.00023	.01530	-.00175	.00166	.96487

RUN NO. 1299/ 0 RN/L = 3.49 GRADIENT INTERVAL = -5.00/ 5.00

ALPHAO	BETAO	CNW	CBW	CTW	CHEI	CHEO	IB-ELV	OB-ELV	PHII	ALPHAI
4.199	-7.951	.14640	.02850	.06300	-.00320	-.00960	12.09570	8.84840	-63.74090	8.98200
4.108	-5.827	.13440	.02730	.05860	-.00430	-.01030	12.08734	8.84317	-56.72840	7.19670
4.094	-3.848	.12910	.02620	.05530	-.00320	-.01160	12.09570	8.83348	-45.58180	5.74100
3.907	.076	.12510	.02330	.04700	.00730	-.01290	12.18187	8.82378	-1.78360	4.08810
3.939	4.101	.12400	.02180	.04460	.01190	-.01530	12.22086	8.80588	44.65350	5.80650
3.887	6.231	.11760	.02110	.04290	.01460	-.01500	12.24375	8.80812	56.96830	7.40400
3.874	8.224	.10810	.02010	.04070	.01640	-.01600	12.25900	8.80066	64.02780	9.09310
	GRADIENT	-.00064	-.00055	-.00134	.00190	-.00047	.01572	-.00348	11.35143	.01005

IA156A, AEDC PWT 16T-470, O T S W/SILTS (R8NWB3) (27 MAY 80)

REFERENCE DATA

SREF = 2690.0000 SQ.FT. XMRP = 976.0000 IN. XT
LREF = 1290.3000 INCHES YMRP = .0000 IN. YT
BREF = 1290.3000 INCHES ZMRP = 400.0000 IN. ZT
SCALE = .0200

PARAMETRIC DATA

IB-ELV = 12.000 OB-ELV = 9.000
BDFLAP = .000 SPDBRK = .000
RUDDER = .000 SILTS = 1.000
MACH = .600 RN/L = 3.500

RUN NO. 1300/ 0 RN/L = 3.50 GRADIENT INTERVAL = -5.00/ 5.00

ALPHAO	BETAO	CNW	CBW	CTW	CHEI	CHEO	IB-ELV	OB-ELV	PHII	ALPHAI
6.239	-8.007	.16920	.03360	.07270	-.00300	-.01280	12.09722	8.82453	-53.76900	10.06070
6.221	-5.934	.16490	.03240	.07000	-.00400	-.01460	12.08962	8.81110	-45.56090	8.56870
6.207	-3.861	.16230	.03090	.06650	-.00300	-.01560	12.09722	8.80364	-33.89970	7.32520
5.933	.197	.15180	.02740	.05720	.00570	-.01690	12.16831	8.79395	-.01120	6.00340
5.852	4.115	.14210	.02510	.05190	.01000	-.01920	12.20476	8.77679	34.04440	7.18450
5.824	6.058	.13530	.02450	.05040	.01150	-.01930	12.21747	8.77605	45.44830	8.39540
5.838	8.110	.12430	.02340	.04790	.01310	-.02080	12.23103	8.76486	53.81560	9.92930
	GRADIENT	-.00253	-.00073	-.00183	.00163	-.00045	.01351	-.00336	8.51724	-.01948

RUN NO. 1301/ 0 RN/L = 3.50 GRADIENT INTERVAL = -5.00/ 5.00

ALPHAO	BETAO	CNW	CBW	CTW	CHEI	CHEO	IB-ELV	OB-ELV	PHII	ALPHAI
8.134	-7.858	.19500	.03860	.08180	-.00320	-.01680	12.09570	8.79469	-45.79090	11.14220
8.039	-5.780	.18810	.03680	.07740	-.00400	-.01810	12.08962	8.78500	-37.54170	9.78690
8.044	-3.799	.18430	.03530	.07380	-.00340	-.01920	12.09418	8.77679	-27.12400	8.81460
7.947	.182	.17620	.03250	.06640	.00170	-.02130	12.13441	8.76113	-.13000	7.89820
7.983	4.222	.16610	.02990	.06060	.00660	-.02370	12.17594	8.74323	27.25020	8.94350
7.948	6.247	.16420	.02890	.05870	.00830	-.02560	12.19035	8.72905	37.86910	9.98920
7.938	8.284	.14690	.02710	.05360	.01000	-.02700	12.20476	8.71861	46.09980	11.30750
	GRADIENT	-.00227	-.00067	-.00164	.00125	-.00056	.01019	-.00418	6.77822	.01666

IA156A, AEDC PWT 16T-470, O T S W/SILTS (R8NWB4) (27 MAY 80)

REFERENCE DATA

SREF = 2690.0000 SQ.FT. XMRP = 976.0000 IN. XT
LREF = 1290.3000 INCHES YMRP = .0000 IN. YT
BREF = 1290.3000 INCHES ZMRP = 400.0000 IN. ZT
SCALE = .0200

PARAMETRIC DATA

IB-ELV = 12.000 OB-ELV = 9.000
BDFLAP = .000 SPDBRK = .000
RUDDER = .000 SILTS = 1.000
MACH = .800 RN/L = 3.500

RUN NO. 1302/ 0 RN/L = 3.50 GRADIENT INTERVAL = -5.00/ 5.00

ALPHAO	BETAO	CNW	CBW	CTW	CHEI	CHEO	IB-ELV	OB-ELV	PHII	ALPHAI
-8.194	-5.835	-.00160	-.00020	-.01120	-.02100	-.00170	11.92217	8.90427	38.29110	-8.84390
-8.031	-3.872	-.00270	-.00030	-.00840	-.01900	-.00050	11.94101	8.91537	28.37670	-7.74690
-8.097	.378	-.02120	-.00150	-.00840	.00630	.00180	12.18624	8.94044	-1.25230	-6.94010
-7.933	4.308	-.03630	-.00050	-.00590	.01220	.00170	12.24827	8.93930	-28.49290	-7.86770
-7.931	6.209	-.04020	-.00040	-.00460	.01370	.00150	12.26404	8.93703	-38.50430	-8.88570
	GRADIENT	-.00411	-.00003	.00030	.00384	.00027	.03783	.00297	-6.95212	-.01200

RUN NO. 1303/ 0 RN/L = 3.50 GRADIENT INTERVAL = -5.00/ 5.00

ALPHAO	BETAO	CNW	CBW	CTW	CHEI	CHEO	IB-ELV	OB-ELV	PHII	ALPHAI
-6.147	-5.926	.03400	.00460	.00160	-.01970	-.00080	11.93442	8.91260	47.03770	-7.48160
-6.097	-4.006	.03170	.00380	.00120	-.01780	.00040	11.95232	8.92454	36.49600	-6.28100
-6.162	.123	.01340	.00240	.00020	.00630	00240	12.18624	8.94725	.86990	-5.16510
-5.993	4.229	-.00120	.00300	.00300	.01240	.00170	12.25037	8.93930	-35.00920	-6.33850
-5.783	6.303	-.00860	.00350	.00490	.01400	.00110	12.26720	8.93249	-47.69370	-7.54100
	GRADIENT	-.00400	-.00010	.00022	.00367	.00016	.03622	.00180	-8.68345	-.00671

RUN NO. 1304/ 0 RN/L = 3.50 GRADIENT INTERVAL = -5.00/ 5.00

ALPHAO	BETAO	CNW	CBW	CTW	CHEI	CHEO	IB-ELV	OB-ELV	PHII	ALPHAI
-4.140	-6.025	.05830	.00940	.01310	-.01870	-.00020	11.94384	8.91815	58.88220	-6.39110
-4.277	-3.930	.04970	.00820	.01110	-.01620	.00080	11.96739	8.92908	46.47930	-4.93520
-4.169	.373	.02940	.00680	.01020	.00740	.00180	12.19780	8.94044	-2.26200	-3.34990
-3.749	4.270	.00970	.00760	.01310	.01180	.00080	12.24406	8.92908	-48.17450	-4.85210
-3.821	6.099	.00530	.00730	.01260	.01340	.00030	12.26089	8.92341	-57.83520	-6.31870
	GRADIENT	-.00488	-.00008	.00024	.00345	.00000	.03409	.00005	-11.54023	.01635

RUN NO. 1306/ 0 RN/L = 3.50 GRADIENT INTERVAL = -5.00/ 5.00

ALPHAO	BETAO	CNW	CBW	CTW	CHEI	CHEO	IB-ELV	OB-ELV	PHII	ALPHAI
-.363	-6.811	.10510	.01840	.03610	-.01330	-.00220	11.99471	8.89964	90.03070	-6.01380
-.352	-4.652	.09540	.01760	.03470	-.01520	-.00080	11.97681	8.91260	90.01720	-3.97080
-.324	-.486	.07870	.01570	.03220	.00530	-.00030	12.17572	8.91722	90.00370	-.00630
-.289	3.686	.06710	.01480	.03180	.01120	-.00170	12.23776	8.90427	90.01720	3.97870
-.286	5.801	.05840	.01440	.03050	.01380	-.00280	12.26509	8.89409	90.00370	5.98920
	GRADIENT	-.00339	-.00034	-.00035	.00317	-.00011	.03129	-.00100	.00000	.95340

IA156A, AEDC PWT 16T-470, O T S W/SILTS (R8NWB4) (27 MAY 80)

REFERENCE DATA

SREF = 2690.0000 SQ.FT. XMRP = 976.0000 IN. XT
LREF = 1290.3000 INCHES YMRP = .0000 IN. YT
BREF = 1290.3000 INCHES ZMRP = 400.0000 IN. ZT
SCALE = .0200

PARAMETRIC DATA

IB-ELV = 12.000 OB-ELV = 9.000
BDFLAP = .000 SPDBRK = .000
RUDDER = .000 SILTS = 1.000
MACH = .800 RN/L = 3.500

RUN NO. 1314/ 0 RN/L = 3.49 GRADIENT INTERVAL = -5.00/ 5.00

ALPHAO	BETAO	CNW	CBW	CTW	CHEI	CHEO	IB-ELV	OB-ELV	PHII	ALPHAI
6.135	-5.878	.18390	.03310	.07220	-.00950	-.01130	12.03051	8.81545	-45.80480	8.46510
6.107	-3.811	.17940	.03220	.06960	-.01140	-.01230	12.01261	8.80620	-34.26250	7.22220
5.823	.172	.16380	.03010	.06220	.00410	-.01310	12.16311	8.79880	-.31400	5.90380
5.769	4.035	.14810	.02730	.05650	.00790	-.01840	12.20306	8.74976	34.08730	7.08820
5.762	6.056	.13990	.02660	.05420	.01050	-.02100	12.23040	8.72570	45.86350	8.35390
	GRADIENT	-.00399	-.00062	-.00167	.00247	-.00077	.02434	-.00717	8.71066	-.01871

IA156A, AEDC PWT 16T-470, O T S W/SILTS (R8NWB5) (10 MAY 80)

REFERENCE DATA

SREF = 2690.0000 SQ.FT. XMRP = 976.0000 IN. XT
LREF = 1290.3000 INCHES YMRP = .0000 IN. YT
BREF = 1290.3000 INCHES ZMRP = 400.0000 IN. ZT
SCALE = .0200

PARAMETRIC DATA

IB-ELV = 12.000 OB-ELV = 9.000
BDFLAP = .000 SPDBRK = .000
RUDDER = .000 SILTS = 1.000
MACH = .800 RN/L = 3.500

RUN NO. 1313/ 0 RN/L = 3.49 GRADIENT INTERVAL = -5.00/ 5.00

ALPHAO	BETAO	CNW	CBW	CTW	CHEI	CHEO	IB-ELV	OB-ELV	PHII	ALPHAI	MACH
-.366	-6.780	.11320	.01870	.03420	-.01370	-.00190	12.06310	8.90960	89.99010	-5.98400	.79840
-.353	-4.884	.10630	.01790	.03290	-.01610	-.00060	12.05280	8.91660	89.99010	-4.00010	.79760
-.323	-.479	.08850	.01590	.03030	.00480	.00000	12.14030	8.91980	90.00370	.00110	.79840
-.288	3.692	.07790	.01520	.03010	.01100	-.00120	12.16620	8.91330	90.01720	3.98140	.79950
-.287	5.812	.06880	.01460	.02860	.01360	-.00230	12.17700	8.90710	90.01720	5.99790	.80010
	GRADIENT	-.00339	-.00032	-.00033	.00324	-.00007	.01355	-.00039	.00324	.95287	.00023

IA156A, AEDC PWT 16T-470, O T S W/SILTS (R8NWB6) (27 MAY 80)

REFERENCE DATA

SREF = 2690.0000 SQ.FT. XMRP = 976.0000 IN. XT
LREF = 1290.3000 INCHES YMRP = .0000 IN. YT
BREF = 1290.3000 INCHES ZMRP = 400.0000 IN. ZT
SCALE = .0200

PARAMETRIC DATA

IB-ELV = 12.000 OB-ELV = 9.000
BDFLAP = .000 SPDBRK = .000
RUDDER = .000 SILTS = 1.000
MACH = .900 RN/L = 3.500

RUN NO. 1308/ 0 RN/L = 3.50 GRADIENT INTERVAL = -5.00/ 5.00

ALPHAO	BETAO	CNW	CBW	CTW	CHEI	CHEO	IB-ELV	OB-ELV	PHII	ALPHAI
-8.117	-5.915	-.00380	-.00150	-.00710	-.02950	-.00180	11.81994	8.90202	39.08510	-8.69270
-8.125	-3.844	-.01320	-.00240	-.00790	-.02710	.00000	11.84436	8.92000	28.11990	-7.67260
-8.105	.288	-.03160	-.00380	-.00790	.00550	.00010	12.18244	8.92123	-.63160	-6.81140
-7.938	4.265	-.04600	-.00330	-.00540	.01410	.00050	12.28006	8.92613	-28.44060	-7.72210
-7.950	6.207	-.05690	-.00330	-.00430	.01650	-.00010	12.30731	8.91900	-38.69260	-8.76030
	GRADIENT	-.00405	-.00011	.00031	.00510	.00006	.05391	.00075	-6.97482	-.00470

RUN NO. 1309/ 0 RN/L = 3.50 GRADIENT INTERVAL = -5.00/ 5.00

ALPHAO	BETAO	CNW	CBW	CTW	CHEI	CHEO	IB-ELV	OB-ELV	PHII	ALPHAI
-6.168	-5.940	.03080	.00300	.00320	-.02640	-.00050	11.85148	8.91501	47.30270	-7.38460
-6.098	-4.024	.02510	.00230	.00240	-.02330	.00120	11.88301	8.93471	36.82500	-6.18070
-6.178	.118	-.00050	.00000	.00000	.00660	00320	12.19492	8.95923	.88580	-5.06620
-6.009	4.234	-.02340	.00040	.00180	.01690	.00130	12.31185	8.93594	-35.27430	-6.24820
-5.808	6.308	-.03380	.00080	.00390	.02040	.00160	12.35158	8.93962	-47.90970	-7.44890
	GRADIENT	-.00587	-.00023	-.00007	.00487	.00001	.05195	.00015	-8.73057	-.00788

RUN NO. 1310/ 0 RN/L = 3.49 GRADIENT INTERVAL = -5.00/ 5.00

ALPHAO	BETAO	CNW	CBW	CTW	CHEI	CHEO	IB-ELV	OB-ELV	PHII	ALPHAI
-4.101	-6.042	.05550	.00880	.01550	-.02390	-.00070	11.87690	8.91301	59.52460	-6.29390
-4.291	-3.954	.04190	.00690	.01190	-.02100	.00050	11.90640	8.92613	46.83010	-4.87310
-4.185	.374	.01690	.00460	.00950	.00790	.00120	12.20968	8.93471	-2.37300	-3.27880
-3.750	4.279	-.00620	.00530	.01200	.01830	.00300	12.32774	8.95678	-48.59960	-4.78600
-3.839	6.099	-.00880	.00450	.01150	.02280	.00340	12.37883	8.96168	-58.09270	-6.24130
	GRADIENT	-.00584	-.00020	.00000	.00481	.00030	.05152	.00369	-11.58721	.01704

RUN NO. 1311/ 0 RN/L = 3.49 GRADIENT INTERVAL = -5.00/ 5.00

ALPHAO	BETAO	CNW	CBW	CTW	CHEI	CHEO	IB-ELV	OB-ELV	PHII	ALPHAI
-.394	-6.907	.11520	.01910	.04000	-.02170	-.00500	11.89928	8.87005	90.00370	-6.04960
-.379	-4.756	.09810	.01810	.03690	-.02480	-.00330	11.86775	8.88703	89.97660	-4.02380
-.345	-.449	.07210	.01510	.03180	.00370	-.00260	12.16200	8.89403	89.99010	.04710
-.313	3.662	.05760	.01330	.02980	.01450	-.00350	12.28460	8.88504	90.04430	3.94690
-.314	5.816	.04770	.01240	.02750	.02210	-.00250	12.37088	8.89503	90.00370	5.98700
	GRADIENT	-.00482	-.00057	-.00085	.00468	-.00002	.04967	-.00022	.00800	.94683

IA156A, AEDC PWT 16T-470, O T S W/SILTS (R8NWB6) (27 MAY 80)

REFERENCE DATA

SREF = 2690.0000 SQ.FT. XMRP = 976.0000 IN. XT
LREF = 1290.3000 INCHES YMRP = .0000 IN. YT
BREF = 1290.3000 INCHES ZMRP = 400.0000 IN. ZT
SCALE = .0200

PARAMETRIC DATA

IB-ELV = 12.000 OB-ELV = 9.000
BDFLAP = .000 SPDBRK = .000
RUDDER = .000 SILTS = 1.000
MACH = .900 RN/L = 3.500

RUN NO. 1312/ 0 RN/L = 3.50 GRADIENT INTERVAL = -5.00/ 5.00

ALPHAO	BETAO	CNW	CBW	CTW	CHEI	CHEO	IB-ELV	OB-ELV	PHII	ALPHAI
4.130	-5.824	.16550	.02870	.06270	-.02550	-.00950	11.86063	8.82510	-56.52650	7.20330
4.011	-3.747	.15320	.02750	.05850	-.02300	-.00960	11.88606	8.82410	-45.45630	5.64600
3.764	.085	.13330	.02480	.04870	.00510	-.01600	12.17790	8.76016	-1.68820	4.00940
3.854	4.013	.12550	.02290	.04430	.01300	-.01870	12.26758	8.73319	44.66070	5.72240
3.797	6.139	.11580	.02170	.04130	.01630	-.02140	12.30504	8.70622	57.06830	7.29310
	GRADIENT	-.00356	-.00059	-.00183	.00463	-.00117	.04905	-.01169	11.61395	.01164

IA156A, AEDC PWT 16T-470, O T S (R8NWB7) (10 MAY 80)

REFERENCE DATA

SREF = 2690.0000 SQ.FT. XMRP = 976.0000 IN. XT
LREF = 1290.3000 INCHES YMRP = .0000 IN. YT
BREF = 1290.3000 INCHES ZMRP = 400.0000 IN. ZT
SCALE = .0200

PARAMETRIC DATA

IB-ELV = 12.000 OB-ELV = 9.000
BDFLAP = .000 SPDBRK = .000
RUDDER = .000 SILTS = .000
MACH = .800 RN/L = 3.500

RUN NO. 1324/ 0 RN/L = 3.50 GRADIENT INTERVAL = -5.00/ 5.00

ALPHAO	BETAO	CNW	CBW	CTW	CHEI	CHEO	IB-ELV	OB-ELV	PHII	ALPHAI	MACH
4.191	-5.942	.15700	.03030	.06410	-.01250	-.00930	12.07790	8.87220	-56.91630	7.34320	.79900
3.993	-3.685	.14380	.02840	.05790	-.01410	-.00950	12.07400	8.87190	-45.34480	5.59820	.79810
3.798	.170	.13080	.02510	.04790	.00550	-.00900	12.16170	8.87660	-.44160	4.03490	.80130
3.859	4.112	.12470	.02370	.04430	.01010	-.01160	12.17530	8.86020	45.48410	5.80130	.80000
3.814	6.168	.11670	.02260	.04120	.01350	-.01190	12.18660	8.85720	57.25410	7.34540	.80030
	GRADIENT	-.00245	-.00060	-.00174	.00310	-.00027	.01296	-.00151	11.64892	.02764	.00024

IA156A, AEDC PWT 16T-470, O T S (R8NWB8) (27 MAY 80)

REFERENCE DATA

SREF = 2690.0000 SQ.FT. XMRP = 976.0000 IN. XT
LREF = 1290.3000 INCHES YMRP = .0000 IN. YT
BREF = 1290.3000 INCHES ZMRP = 400.0000 IN. ZT
SCALE = .0200

PARAMETRIC DATA

IB-ELV = 12.000 OB-ELV = 9.000
BDFLAP = .000 SPDBRK = .000
RUDDER = .000 SILTS = .000
MACH = .950 RN/L = 3.500

RUN NO. 1325/ 0 RN/L = 3.51 GRADIENT INTERVAL = -5.00/ 5.00

ALPHAO	BETAO	CNW	CBW	CTW	CHEI	CHEO	IB-ELV	OB-ELV	PHII	ALPHAI
-8.097	-5.930	-.00220	-.00180	-.00650	-.04460	-.01080	11.64961	8.80813	39.39990	-8.61400
-8.217	-3.731	-.00930	-.00300	-.00830	-.05060	-.00580	11.58633	8.85992	27.34290	-7.61800
-8.102	.172	-.02370	-.00430	-.00900	-.02690	.00120	11.83629	8.93526	.16880	-6.72500
-7.953	4.376	-.04390	-.00420	-.00660	-.01970	.00470	11.91223	8.97975	-29.27850	-7.69820
-7.952	6.218	-.05170	-.00370	-.00450	-.01290	.00610	11.98395	8.99755	-38.99250	-8.68360
	GRADIENT	-.00427	-.00015	.00021	.00378	.00129	.03991	.01473	-6.98401	-.01273

RUN NO. 1326/ 0 RN/L = 3.50 GRADIENT INTERVAL = -5.00/ 5.00

ALPHAO	BETAO	CNW	CBW	CTW	CHEI	CHEO	IB-ELV	OB-ELV	PHII	ALPHAI
-6.175	-5.944	.03370	.00300	.00250	-.04390	-.01300	11.65699	8.78534	47.46730	-7.33100
-6.101	-4.027	.02840	.00210	.00170	-.04520	-.00900	11.64328	8.82677	36.99660	-6.12690
-6.189	.101	.00150	.00000	-.00200	-.02170	-.00070	11.89113	8.91275	1.00460	-5.01600
-6.004	4.224	-.01860	.00020	.00030	-.01430	.00140	11.96918	8.93780	-35.43480	-6.18150
-5.732	6.302	-.02820	.00090	.00280	-.00890	.00220	12.02613	8.94797	-48.50900	-7.33590
	GRADIENT	-.00570	-.00023	-.00017	.00375	.00126	.03950	.01346	-8.77870	-.00656

RUN NO. 1327/ 0 RN/L = 3.50 GRADIENT INTERVAL = -5.00/ 5.00

ALPHAO	BETAO	CNW	CBW	CTW	CHEI	CHEO	IB-ELV	OB-ELV	PHII	ALPHAI
-4.091	-6.044	.06180	.00870	.01480	-.03760	-.01280	11.72344	8.78741	59.81000	-6.24400
-4.285	-3.951	.04620	.00680	.01100	-.03770	-.01030	11.72238	8.81331	47.08780	-4.82080
-4.192	.371	.01960	.00430	.00750	-.02070	-.00420	11.90168	8.87649	-2.38750	-3.23750
-3.741	4.269	.00040	.00490	.01060	-.01150	-.00110	11.99871	8.90861	-48.87840	-4.72970
-3.844	6.109	-.00870	.00460	.01100	-.00680	.00120	12.04828	8.93526	-58.33630	-6.20630
	GRADIENT	-.00558	-.00024	-.00006	.00320	.00112	.03376	.01165	-11.67120	.01749

RUN NO. 1328/ 0 RN/L = 3.50 GRADIENT INTERVAL = -5.00/ 5.00

ALPHAO	BETAO	CNW	CBW	CTW	CHEI	CHEO	IB-ELV	OB-ELV	PHII	ALPHAI
-.413	-6.913	.11550	.01930	.03750	-.03010	-.01580	11.80254	8.75634	89.97660	-6.02860
-.384	-4.779	.10090	.01820	.03500	-.03500	-.01650	11.75086	8.74908	90.01720	-4.02660
-.355	-.459	.07210	.01470	.02860	-.02020	-.00790	11.90695	8.83817	90.03070	.04440
-.324	3.651	.05800	.01270	.02650	-.02240	-.00810	11.88375	8.83610	90.01720	3.93310
-.324	5.830	.05000	.01190	.02560	-.01690	-.01160	11.94176	8.79984	90.00370	5.98720
	GRADIENT	-.00510	-.00065	-.00101	.00151	.00100	.01594	.01041	.00003	.94417

IA156A, AEDC PWT 16T-470, O T S (R8NW88) (27 MAY 80)

REFERENCE DATA

SREF = 2690.0000 SQ.FT. XMRP = 976.0000 IN. XT
LREF = 1290.3000 INCHES YMRP = .0000 IN. YT
BREF = 1290.3000 INCHES ZMRP = 400.0000 IN. ZT
SCALE = .0200

PARAMETRIC DATA

IB-ELV = 12.000 OB-ELV = 9.000
BDFLAP = .000 SPDBRK = .000
RUDDER = .000 SILTS = .000
MACH = .950 RN/L = 3.500

RUN NO. 1329/ 0 RN/L = 3.50 GRADIENT INTERVAL = -5.00/ 5.00

ALPHAO	BETAO	CNW	CBW	CTW	CHEI	CHEO	IB-ELV	OB-ELV	PHII	ALPHAI
3.924	-5.698	.16920	.02930	.05830	-.03370	-.02600	11.76457	8.65068	-57.16690	6.99670
3.965	-3.935	.15710	.02850	.05540	-.03760	-.02820	11.72344	8.62789	-46.94090	5.74230
3.923	.180	.13530	.02550	.04540	-.02590	-.03130	11.84684	8.59578	-.16570	4.17510
3.839	3.929	.12350	.02310	.04020	-.02330	-.03770	11.87426	8.52948	44.01640	5.65710
3.802	6.118	.11100	.02120	.03700	-.01530	-.03710	11.95863	8.53570	56.88260	7.27670
	GRADIENT	-.00429	-.00069	-.00194	.00184	-.00120	.01936	-.01244	11.56422	-.01685

IA156A, AEDC PWT 16T-470, O T S (R8NW89) (27 MAY 80)

REFERENCE DATA

SREF = 2690.0000 SQ.FT. XMRP = 976.0000 IN. XT
LREF = 1290.3000 INCHES YMRP = .0000 IN. YT
BREF = 1290.3000 INCHES ZMRP = 400.0000 IN. ZT
SCALE = .0200

PARAMETRIC DATA

IB-ELV = 12.000 OB-ELV = 9.000
BDFLAP = .000 SPDBRK = .000
RUDDER = .000 SILTS = .000
MACH = 1.050 RN/L = 3.500

RUN NO. 1330/ 0 RN/L = 3.50 GRADIENT INTERVAL = -5.00/ 5.00

ALPHAO	BETAO	CNW	CBW	CTW	CHEI	CHEO	IB-ELV	OB-ELV	PHII	ALPHAI
-8.212	-5.901	.00340	-.00250	-.00450	-.02020	-.01300	11.89454	8.77749	39.26400	-8.52070
-8.202	-3.826	-.00730	-.00330	-.00580	-.01380	-.00890	11.96598	8.82244	28.19840	-7.49520
-8.119	.330	-.02610	-.00570	-.00660	.01090	-.00600	12.25578	8.85423	-1.04210	-6.58620
-7.949	4.306	-.05090	-.00630	-.00540	.01390	-.00540	12.29315	8.86081	-29.26810	-7.51900
-7.959	6.215	-.06070	-.00690	-.00550	.01400	-.00480	12.29439	8.86738	-39.36920	-8.54250
	GRADIENT	-.00536	-.00037	.00005	.00343	.00043	.04046	.00474	-7.06656	-.00125

RUN NO. 1331/ 0 RN/L = 3.51 GRADIENT INTERVAL = -5.00/ 5.00

ALPHAO	BETAO	CNW	CBW	CTW	CHEI	CHEO	IB-ELV	OB-ELV	PHII	ALPHAI
-6.179	-5.965	.04130	.00400	.00520	-.02680	-.01480	11.82088	8.75776	47.92550	-7.23400
-6.081	-4.041	.03300	.00240	.00380	-.02090	-.01020	11.88673	8.80819	37.61160	-6.00370
-6.191	.114	.00020	-.00120	.00070	.00790	-.00810	12.21841	8.83121	.87350	-4.88990
-6.024	4.226	-.02660	-.00210	.00080	.00890	-.00720	12.23086	8.84107	-35.83250	-6.07720
-5.734	6.328	-.03870	-.00200	.00210	.00730	-.00560	12.21093	8.85861	-49.06650	-7.24780
	GRADIENT	-.00721	-.00054	-.00036	.00361	.00036	.04169	.00398	-8.88383	-.00840

IA156A, AEDC PWT 16T-470, O T S (R8NWB9) (27 MAY 80)

REFERENCE DATA

SREF = 2690.0000 SQ.FT. XMRP = 976.0000 IN. XT
LREF = 1290.3000 INCHES YMRP = .0000 IN. YT
BREF = 1290.3000 INCHES ZMRP = 400.0000 IN. ZT
SCALE = .0200

PARAMETRIC DATA

IB-ELV = 12.000 OB-ELV = 9.000
BDFLAP = .000 SPDBRK = .000
RUDDER = .000 SILTS = .000
MACH = 1.050 RN/L = 3.500

RUN NO. 1332/ 0 RN/L = 3.50 GRADIENT INTERVAL = -5.00/ 5.00

ALPHAO	BETAO	CNW	CBW	CTW	CHEI	CHEO	IB-ELV	OB-ELV	PHII	ALPHAI
-4.097	-6.071	.07120	.01030	.01870	-.02930	-.01540	11.79298	8.75119	60.30930	-6.18450
-4.289	-3.962	.05140	.00750	.01370	-.02390	-.01070	11.85325	8.80271	47.61760	-4.74170
-4.196	.369	.02020	.00390	.00970	.00410	-.00970	12.17107	8.81367	-2.53750	-3.14160
-3.744	4.287	-.01190	.00320	.01060	.00360	-.00690	12.16484	8.84436	-49.58220	-4.66950
-3.846	6.113	-.02010	.00230	.00960	.00310	-.00490	12.15862	8.86629	-58.83740	-6.13090
	GRADIENT	-.00767	-.00053	-.00039	.00339	.00046	.03840	.00501	-11.78012	.01506

RUN NO. 1333/ 0 RN/L = 3.50 GRADIENT INTERVAL = -5.00/ 5.00

ALPHAO	BETAO	CNW	CBW	CTW	CHEI	CHEO	IB-ELV	OB-ELV	PHII	ALPHAI
-.444	-7.004	.12870	.02250	.04040	-.03320	-.01640	11.74945	8.74022	89.97660	-6.06530
-.419	-4.832	.11190	.02040	.03800	-.03020	-.01330	11.78293	8.77421	90.01720	-4.04420
-.395	-.438	.07930	.01520	.03150	-.00340	-.00830	12.08205	8.82902	90.04430	.07780
-.361	3.665	.05800	.01170	.02750	-.00500	-.01250	12.06419	8.78298	90.00370	3.93630
-.363	5.855	.04670	.01020	.02510	-.00460	-.01740	12.06866	8.72926	90.00370	5.98940
	GRADIENT	-.00636	-.00103	-.00124	.00300	.00011	.03352	.00117	-.00150	.93921

RUN NO. 1334/ 0 RN/L = 3.50 GRADIENT INTERVAL = -5.00/ 5.00

ALPHAO	BETAO	CNW	CBW	CTW	CHEI	CHEO	IB-ELV	OB-ELV	PHII	ALPHAI
3.901	-5.731	.17500	.03070	.05950	-.03410	-.02110	11.73940	8.68870	-57.15300	7.00110
3.920	-3.899	.16160	.02910	.05670	-.03560	-.01910	11.72266	8.71063	-46.63430	5.69420
3.916	.181	.13920	.02550	.04750	-.01720	-.02410	11.92803	8.65582	-.05390	4.18590
3.837	3.924	.12110	.02220	.04270	-.01360	-.03320	11.96821	8.55606	43.80160	5.65490
3.798	6.097	.10770	.01980	.03830	-.01200	-.04100	11.98607	8.47056	56.63960	7.25010
	GRADIENT	-.00518	-.00088	-.00180	.00284	-.00179	.03167	-.01966	11.55914	-.01049

IA156A, AEDC PWT 16T-470, O T S (R8NWC0) (27 MAY 80)

REFERENCE DATA

SREF = 2690.0000 SQ.FT. XMRP = 976.0000 IN. XT
LREF = 1290.3000 INCHES YMRP = .0000 IN. YT
BREF = 1290.3000 INCHES ZMRP = 400.0000 IN. ZT
SCALE = .0200

PARAMETRIC DATA

IB-ELV = 12.000 OB-ELV = 9.000
BDFLAP = .000 SPDBRK = .000
RUDDER = .000 SILTS = .000
MACH = 1.100 RN/L = 3.500

RUN NO. 1335/ 0 RN/L = 3.50 GRADIENT INTERVAL = -5.00/ 5.00

ALPHAO	BETAO	CNW	CBW	CTW	CHEI	CHEO	IB-ELV	OB-ELV	PHII	ALPHAI
-8.085	-5.959	.00780	-.00110	-.00150	-.01520	-.01100	11.94620	8.79647	40.02240	-8.46310
-8.216	-3.758	-.00090	-.00300	-.00300	-.00790	-.00810	12.02967	8.82904	27.82760	-7.47350
-8.117	.180	-.02090	-.00510	-.00410	.01620	-.00690	12.32674	8.84251	.15640	-6.57430
-7.932	4.337	-.04860	-.00560	-.00280	.02120	-.00640	12.39054	8.84813	-29.48100	-7.51800
-7.956	6.215	-.05440	-.00640	-.00240	.02350	-.00550	12.41989	8.85823	-39.36220	-8.54450
	GRADIENT	-.00590	-.00032	.00003	.00357	.00021	.04431	.00235	-7.08005	-.00756

RUN NO. 1336/ 0 RN/L = 3.50 GRADIENT INTERVAL = -5.00/ 5.00

ALPHAO	BETAO	CNW	CBW	CTW	CHEI	CHEO	IB-ELV	OB-ELV	PHII	ALPHAI
-6.157	-5.944	.05010	.00460	.00840	-.02140	-.01290	11.87531	8.77513	48.01860	-7.21510
-6.103	-4.030	.03810	.00280	.00630	-.01620	-.01010	11.93476	8.80658	37.51860	-6.01170
-6.217	.094	.00350	-.00070	.00330	.01140	-.00850	12.26548	8.82454	1.14290	-4.90790
-5.993	4.241	-.02040	-.00130	.00400	.01630	-.00510	12.32801	8.86273	-35.96510	-6.07030
-5.966	6.211	-.03430	-.00210	.00360	.01710	-.00150	12.33822	8.90315	-47.40790	-7.29730
	GRADIENT	-.00707	-.00050	-.00028	.00393	.00060	.04752	.00679	-8.88477	-.00734

RUN NO. 1337/ 0 RN/L = 3.50 GRADIENT INTERVAL = -5.00/ 5.00

ALPHAO	BETAO	CNW	CBW	CTW	CHEI	CHEO	IB-ELV	OB-ELV	PHII	ALPHAI
-4.082	-6.072	.07820	.01180	.02040	-.02470	-.01340	11.83757	8.76952	60.48050	-6.18150
-4.299	-3.969	.05920	.00830	.01670	-.01900	-.00970	11.90275	8.81107	47.68210	-4.75570
-4.187	.366	.02530	.00450	.01260	.00900	-.00850	12.23485	8.82454	-2.37320	-3.14100
-3.746	4.294	-.00340	.00370	.01350	.00990	-.00530	12.24634	8.86048	-49.48460	-4.67950
-3.842	6.107	-.01290	.00280	.01250	.00990	-.00900	12.24634	8.81893	-58.72600	-6.13380
	GRADIENT	-.00758	-.00056	-.00040	.00355	.00053	.04219	.00593	-11.75603	.01547

RUN NO. 1338/ 0 RN/L = 3.50 GRADIENT INTERVAL = -5.00/ 5.00

ALPHAO	BETAO	CNW	CBW	CTW	CHEI	CHEO	IB-ELV	OB-ELV	PHII	ALPHAI
-.450	-6.989	.13210	.02310	.03920	-.02910	-.01420	11.78726	8.76053	89.97660	-6.05340
-.416	-4.820	.11640	.02110	.03770	-.02470	-.01020	11.83757	8.80545	90.01720	-4.03210
-.391	-.464	.08730	.01640	.03320	.00240	-.00770	12.15063	8.83353	90.04430	.05150
-.356	3.674	.06210	.01220	.02940	.00190	-.02030	12.14425	8.69203	89.99010	3.94230
-.358	5.852	.05080	.01030	.02690	.00020	-.02630	12.12255	8.62465	90.00370	5.98390
	GRADIENT	-.00640	-.00105	-.00098	.00316	-.00117	.03642	-.01318	-.00311	.93883

IA156A, AEDC PWT 16T-470, O T S (R8NWC0) (27 MAY 80)

REFERENCE DATA

SREF = 2690.0000 SQ.FT. XMRP = 976.0000 IN. XT
LREF = 1290.3000 INCHES YMRP = .0000 IN. YT
BREF = 1290.3000 INCHES ZMRP = 400.0000 IN. ZT
SCALE = .0200

PARAMETRIC DATA

IB-ELV = 12.000 OB-ELV = 9.000
BDFLAP = .000 SPDBRK = .000
RUDDER = .000 SILTS = .000
MACH = 1.100 RN/L = 3.500

RUN NO. 1339/ 0 RN/L = 3.48 GRADIENT INTERVAL = -5.00/ 5.00

ALPHAO	BETAO	CNW	CBW	CTW	CHEI	CHEO	IB-ELV	OB-ELV	PHII	ALPHAI
3.930	-5.730	.17950	.03140	.05980	-.03330	-.02110	11.73924	8.68304	-57.15300	7.00000
3.914	-3.895	.16750	.02980	.05710	-.03330	-.02250	11.73924	8.66732	-46.87830	5.66910
3.893	.179	.14360	.02610	.04810	-.01340	-.03180	11.96678	8.56288	-.26420	4.15300
3.825	3.917	.12440	.02250	.04300	-.01130	-.04060	11.99079	8.46406	43.80160	5.63090
3.808	6.099	.11180	.02040	.04010	-.01060	-.04700	11.99880	8.39218	56.63960	7.24010
	GRADIENT	-.00552	-.00093	-.00181	.00285	-.00232	.03256	-.02601	11.60542	-.01039

IA156A, AEDC PWT 16T-470, O T S (R8NWC1) (27 MAY 80)

REFERENCE DATA

SREF = 2690.0000 SQ.FT. XMRP = 976.0000 IN. XT
LREF = 1290.3000 INCHES YMRP = .0000 IN. YT
BREF = 1290.3000 INCHES ZMRP = 400.0000 IN. ZT
SCALE = .0200

PARAMETRIC DATA

IB-ELV = 12.000 OB-ELV = 9.000
BDFLAP = .000 SPDBRK = .000
RUDDER = .000 SILTS = .000
MACH = 1.150 RN/L = 3.500

RUN NO. 1341/ 0 RN/L = 3.50 GRADIENT INTERVAL = -5.00/ 5.00

ALPHAO	BETAO	CNW	CBW	CTW	CHEI	CHEO	IB-ELV	OB-ELV	PHII	ALPHAI
-8.145	-5.961	.01610	-.00040	-.00070	-.00900	-.00930	12.01509	8.81353	39.82210	-8.47700
-8.230	-3.764	.00250	-.00260	-.00230	.00070	-.00880	12.12911	8.81926	27.86330	-7.45070
-8.120	.169	-.01760	-.00500	-.00290	.02350	-.00900	12.42571	8.81697	.16130	-6.53960
-7.920	4.347	-.04750	-.00590	-.00190	.02960	-.00580	12.50507	8.85360	-29.69050	-7.47740
-7.956	6.224	-.05460	-.00660	-.00160	.03090	-.00360	12.52198	8.87879	-39.52960	-8.51470
	GRADIENT	-.00617	-.00040	.00005	.00354	.00037	.04607	.00428	-7.09628	-.00559

RUN NO. 1342/ 0 RN/L = 3.50 GRADIENT INTERVAL = -5.00/ 5.00

ALPHAO	BETAO	CNW	CBW	CTW	CHEI	CHEO	IB-ELV	OB-ELV	PHII	ALPHAI
-6.162	-5.954	.05770	.00630	.00870	-.01590	-.01190	11.93467	8.78377	48.03290	-7.19830
-6.104	-4.044	.04710	.00430	.00830	-.00610	-.01040	12.04890	8.80094	37.61160	-5.99970
-6.201	.104	.00920	-.00040	.00490	.02060	-.01000	12.38799	8.80552	.94830	-4.87490
-6.020	4.237	-.01980	-.00160	.00470	.02400	-.00510	12.43222	8.86162	-35.99300	-6.06230
-5.837	6.332	-.03300	-.00190	.00540	.02430	-.00970	12.43612	8.80895	-48.64840	-7.29140
	GRADIENT	-.00808	-.00071	-.00043	.00364	.00064	.04631	.00732	-8.88781	-.00740

IA156A, AEDC PWT 16T-470, O T S (R8NWC1) (27 MAY 80)

REFERENCE DATA

SREF = 2690.0000 SQ.FT. XMRP = 976.0000 IN. XT
LREF = 1290.3000 INCHES YMRP = .0000 IN. YT
BREF = 1290.3000 INCHES ZMRP = 400.0000 IN. ZT
SCALE = .0200

PARAMETRIC DATA

IB-ELV = 12.000 OB-ELV = 9.000
BDFLAP = .000 SPDBRK = .000
RUDDER = .000 SILTS = .000
MACH = 1.150 RN/L = 3.500

RUN NO. 1343/ 0 RN/L = 3.50 GRADIENT INTERVAL = -5.00/ 5.00

ALPHAO	BETAO	CNW	CBW	CTW	CHEI	CHEO	IB-ELV	OB-ELV	PHII	ALPHAI
-4.112	-6.068	.08430	.01330	.02000	-.01910	-.01170	11.89737	8.78606	60.20950	-6.18050
-4.306	-3.976	.06890	.01070	.01780	-.00740	-.00910	12.03374	8.81582	47.59620	-4.75370
-4.195	.373	.03250	.00540	.01450	.01700	-.00530	12.34115	8.85933	-2.56960	-3.14000
-3.756	4.290	-.00080	.00370	.01460	.01800	-.01400	12.35416	8.75973	-49.51950	-4.67250
-3.849	6.122	-.01060	.00250	.01320	.01890	-.01910	12.36587	8.70134	-58.86520	-6.13090
	GRADIENT	-.00843	-.00085	-.00039	.00312	-.00057	.03935	-.00648	-11.74401	.01645

RUN NO. 1344/ 0 RN/L = 3.50 GRADIENT INTERVAL = -5.00/ 5.00

ALPHAO	BETAO	CNW	CBW	CTW	CHEI	CHEO	IB-ELV	OB-ELV	PHII	ALPHAI
-.438	-6.994	.13510	.02380	.03810	-.02430	-.00910	11.83676	8.81582	89.96310	-6.04150
-.411	-4.805	.12060	.02210	.03700	-.01580	-.00620	11.93583	8.84902	89.99010	-4.01150
-.370	-.483	.09870	.01810	.03540	.01050	-.01510	12.25660	8.74714	90.01720	.03390
-.342	3.670	.07300	.01400	.03190	.01000	-.03070	12.25009	8.56855	90.03070	3.93470
-.341	5.850	.05910	.01180	.02940	.01090	-.03880	12.26180	8.47582	89.99010	5.97080
	GRADIENT	-.00561	-.00096	-.00060	.00306	-.00289	.03733	-.03303	.00480	.93757

RUN NO. 1345/ 0 RN/L = 3.50 GRADIENT INTERVAL = -5.00/ 5.00

ALPHAO	BETAO	CNW	CBW	CTW	CHEI	CHEO	IB-ELV	OB-ELV	PHII	ALPHAI
3.991	-5.883	.18020	.03190	.05750	-.03000	-.02130	11.77032	8.67616	-57.33400	7.14050
4.006	-3.805	.16770	.03050	.05530	-.02420	-.02550	11.83792	8.62808	-45.44230	5.66590
3.899	.181	.14820	.02690	.04870	-.00430	-.03840	12.06988	8.48040	-.05740	4.14760
3.830	3.979	.13200	.02340	.04480	-.00560	-.04960	12.05473	8.35218	44.41010	5.66700
3.801	6.112	.11640	.02100	.04230	-.00280	-.05710	12.08736	8.26632	56.82540	7.23900
	GRADIENT	-.00459	-.00091	-.00135	.00241	-.00310	.02810	-.03546	11.54297	-.00299

IA156A, AEDC PWT 16T-470, O T S (R8NWC2) (27 MAY 80)

REFERENCE DATA

SREF = 2690.0000 SQ.FT. XMRP = 976.0000 IN. XT
LREF = 1290.3000 INCHES YMRP = .0000 IN. YT
BREF = 1290.3000 INCHES ZMRP = 400.0000 IN. ZT
SCALE = .0200

PARAMETRIC DATA

IB-ELV = 12.000 OB-ELV = 9.000
BDFLAP = .000 SPDBRK = .000
RUDDER = .000 SILTS = .000
MACH = 1.250 RN/L = 3.500

RUN NO. 1346/ 0 RN/L = 3.50 GRADIENT INTERVAL = -5.00/ 5.00

ALPHAO	BETAO	CNW	CBW	CTW	CHEI	CHEO	IB-ELV	OB-ELV	PHII	ALPHAI
-8.243	-5.890	.01920	.00030	-.00500	.00800	-.00620	12.22773	8.84653	39.34270	-8.46310
-8.205	-3.763	.01020	-.00100	-.00490	.01400	-.00710	12.30853	8.83586	28.05580	-7.40620
-8.116	.197	-.00800	-.00320	-.00120	.02950	-.00720	12.51725	8.83468	.10980	-6.52080
-7.947	4.332	-.04010	-.00430	.00130	.02750	-.01230	12.49032	8.77424	-29.42520	-7.46850
-7.966	6.227	-.04760	-.00530	.00220	.02690	-.01550	12.48224	8.73632	-39.46680	-8.49090
	GRADIENT	-.00622	-.00041	.00076	.00165	-.00065	.02224	-.00766	-7.10093	-.00933

RUN NO. 1347/ 0 RN/L = 3.50 GRADIENT INTERVAL = -5.00/ 5.00

ALPHAO	BETAO	CNW	CBW	CTW	CHEI	CHEO	IB-ELV	OB-ELV	PHII	ALPHAI
-6.182	-5.943	.05190	.00630	.00280	.00210	-.00740	12.14828	8.83231	48.14750	-7.17850
-6.118	-4.035	.04680	.00530	.00400	.00980	-.00680	12.25197	8.83942	37.69740	-5.98480
-6.198	.130	.02320	.00210	.00660	.02490	-.01270	12.45531	8.76950	.92190	-4.86190
-5.991	4.255	-.00770	.00040	.00820	.02640	-.02060	12.42164	8.67588	-36.08370	-6.03050
-5.947	6.219	-.02370	-.00090	.00790	.02060	-.02580	12.39740	8.61426	-47.60310	-7.23200
	GRADIENT	-.00657	-.00059	.00051	.00152	-.00166	.02051	-.01972	-8.90022	-.00506

RUN NO. 1348/ 0 RN/L = 3.49 GRADIENT INTERVAL = -5.00/ 5.00

ALPHAO	BETAO	CNW	CBW	CTW	CHEI	CHEO	IB-ELV	OB-ELV	PHII	ALPHAI
-4.105	-6.078	.08000	.01270	.01330	-.00350	-.00530	12.07777	8.85719	60.53760	-6.16260
-4.305	-3.963	.06990	.01070	.01270	.00800	-.00800	12.22773	8.82520	47.79660	-4.73170
-4.193	.376	.04220	.00800	.01490	.01850	-.01930	12.36913	8.69129	-2.30920	-3.12430
-3.737	4.277	.00900	.00670	.01660	.01440	-.03190	12.31391	8.54198	-49.44980	-4.63140
-3.849	6.126	-.00050	.00470	.01500	.01220	-.03640	12.28429	8.48865	-58.86520	-6.11400
	GRADIENT	-.00737	-.00049	.00047	.00081	-.00289	.01087	-.03431	-11.79712	.01887

RUN NO. 1349/ 0 RN/L = 3.49 GRADIENT INTERVAL = -5.00/ 5.00

ALPHAO	BETAO	CNW	CBW	CTW	CHEI	CHEO	IB-ELV	OB-ELV	PHII	ALPHAI
-.462	-7.000	.13000	.02280	.03090	-.01400	-.01070	11.95108	8.79320	89.97660	-6.03150
-.433	-4.850	.11760	.02180	.03130	-.00340	-.01660	12.07898	8.72329	89.99010	-4.04320
-.387	-.453	.09800	.01890	.03170	.01350	-.02880	12.30179	8.57871	90.04430	.06790
-.360	3.674	.07640	.01570	.03100	.00820	-.04390	12.23042	8.39977	90.01720	3.93850
-.369	5.855	.06550	.01350	.02970	.00470	-.04970	12.18329	8.33104	90.01720	5.96860
	GRADIENT	-.00483	-.00072	-.00003	.00139	-.00320	.01812	-.03790	.00328	.93638

IA156A, AEDC PWT 16T-470, O T S (R8NWC2) (27 MAY 80)

REFERENCE DATA

SREF = 2690.0000 SQ.FT. XMRP = 976.0000 IN. XT
LREF = 1290.3000 INCHES YMRP = .0000 IN. YT
BREF = 1290.3000 INCHES ZMRP = 400.0000 IN. ZT
SCALE = .0200

PARAMETRIC DATA

IB-ELV = 12.000 OB-ELV = 9.000
BDFLAP = .000 SPDBRK = .000
RUDDER = .000 SILTS = .000
MACH = 1.250 RN/L = 3.500

RUN NO. 1350/ 0 RN/L = 3.50 GRADIENT INTERVAL = -5.00/ 5.00

ALPHAO	BETAO	CNW	CBW	CTW	CHEI	CHEO	IB-ELV	OB-ELV	PHII	ALPHAI
3.994	-5.868	.17160	.03110	.05130	-.01960	-.03370	11.88351	8.52065	-57.42450	7.11940
4.025	-3.792	.16370	.03060	.05070	-.01270	-.04120	11.96677	8.43177	-45.51900	5.65710
3.893	.194	.14790	.02720	.04640	-.00070	-.05110	12.11155	8.31445	-.24270	4.13520
3.799	3.967	.13030	.02390	.04330	-.00510	-.06040	12.05846	8.20424	44.25980	5.63310
3.789	6.135	.11870	.02150	.04110	-.01270	-.06420	11.96677	8.15921	56.73970	7.23900
	GRADIENT	-.00430	-.00086	-.00095	.00100	-.00247	.01205	-.02932	11.56772	-.00667

IA156A, AEDC PWT 16T-470, O T S (R8NWC3) (27 MAY 80)

REFERENCE DATA

SREF = 2690.0000 SQ.FT. XMRP = 976.0000 IN. XT
LREF = 1290.3000 INCHES YMRP = .0000 IN. YT
BREF = 1290.3000 INCHES ZMRP = 400.0000 IN. ZT
SCALE = .0200

PARAMETRIC DATA

IB-ELV = 12.000 OB-ELV = -2.000
BDFLAP = .000 SPDBRK = .000
RUDDER = .000 SILTS = .000
MACH = 1.150 RN/L = 3.500

RUN NO. 1355/ 0 RN/L = 3.50 GRADIENT INTERVAL = -5.00/ 5.00

ALPHAO	BETAO	CNW	CBW	CTW	CHEI	CHEO	IB-ELV	OB-ELV	PHII	ALPHAI
-8.032	-5.992	-.00210	-.00380	-.00100	-.00370	.05190	12.07687	-1.57081	40.46610	-8.39670
-8.220	-3.826	-.00980	-.00620	-.00260	.00610	.05300	12.19936	-1.55536	28.29820	-7.45660
-8.140	.284	-.02910	-.00870	-.00350	.02880	.05260	12.49466	-1.56098	-.70640	-6.54460
-7.952	4.281	-.04350	-.00930	-.00420	.03620	.05530	12.59093	-1.52304	-29.28900	-7.46060
-7.960	6.216	-.04980	-.00990	-.00390	.03890	.05770	12.62605	-1.48932	-39.56450	-8.50080
	GRADIENT	-.00416	-.00038	-.00020	.00372	.00028	.04841	.00396	-7.10310	.00054

RUN NO. 1356/ 0 RN/L = 3.50 GRADIENT INTERVAL = -5.00/ 5.00

ALPHAO	BETAO	CNW	CBW	CTW	CHEI	CHEO	IB-ELV	OB-ELV	PHII	ALPHAI
-6.177	-5.962	.04900	.00210	.00600	-.00910	.05100	12.01393	-1.58346	48.15460	-7.19630
-6.105	-4.037	.04290	-.00020	.00610	.00030	.05340	12.12390	-1.54974	37.67590	-5.97690
-6.203	.110	.00960	-.00430	.00360	.02650	.05430	12.46474	-1.53709	.87430	-4.85690
-6.024	4.235	-.01580	-.00550	.00370	.03260	.05910	12.54410	-1.46966	-36.04180	-6.04940
-5.753	6.323	-.02810	-.00540	.00420	.03390	.05020	12.56101	-1.59470	-49.11530	-7.23100
	GRADIENT	-.00710	-.00064	-.00029	.00391	.00069	.05083	.00968	-8.91179	-.00852

IA156A, AEDC PWT 16T-470, O T S (R8NWC3) (27 MAY 80)

REFERENCE DATA

SREF = 2690.0000 SQ.FT. XMRP = 976.0000 IN. XT
LREF = 1290.3000 INCHES YMRP = .0000 IN. YT
BREF = 1290.3000 INCHES ZMRP = 400.0000 IN. ZT
SCALE = .0200

PARAMETRIC DATA

IB-ELV = 12.000 OB-ELV = -2.000
BDFLAP = .000 SPDBRK = .000
RUDDER = .000 SILTS = .000
MACH = 1.150 RN/L = 3.500

RUN NO. 1357/ 0 RN/L = 3.50 GRADIENT INTERVAL = -5.00/ 5.00

ALPHAO	BETAO	CNW	CBW	CTW	CHEI	CHEO	IB-ELV	OB-ELV	PHII	ALPHAI
-4.099	-6.078	.08170	.00950	.01730	-.01110	.05210	11.99062	-1.56800	60.52330	-6.16260
-4.300	-3.975	.06450	.00630	.01490	-.00070	.05570	12.11184	-1.51742	47.81810	-4.72770
-4.196	.375	.03030	.00160	.01230	.02440	.06060	12.43742	-1.44858	-2.60170	-3.11670
-3.743	4.281	-.00580	.00010	.01230	.02780	.04700	12.48165	-1.63966	-49.72850	-4.64450
-3.848	6.110	-.01620	-.00120	.01100	.03000	.03820	12.51027	-1.76330	-59.01130	-6.10900
	GRADIENT	-.00850	-.00076	-.00032	.00350	-.00101	.04536	-.01423	-11.81068	.01689

RUN NO. 1358/ 0 RN/L = 3.50 GRADIENT INTERVAL = -5.00/ 5.00

ALPHAO	BETAO	CNW	CBW	CTW	CHEI	CHEO	IB-ELV	OB-ELV	PHII	ALPHAI
-.456	-7.023	.12940	.02020	.03560	-.01720	.05670	11.91951	-1.50337	89.97660	-6.06930
-.439	-4.831	.11530	.01840	.03450	-.00890	.06160	12.01626	-1.43453	89.97660	-4.02910
-.400	-.461	.09080	.01410	.03240	.01900	04800	12.36717	-1.62561	90.03070	.06000
-.373	3.668	.06440	.00970	.02910	.02130	.02310	12.39709	-1.97545	90.01720	3.93530
-.370	5.854	.04870	.00730	.02640	.02470	.01310	12.44132	-2.11595	90.00370	5.98390
	GRADIENT	-.00599	-.00102	-.00063	.00358	-.00452	.04515	-.06345	.00485	.93711

RUN NO. 1359/ 0 RN/L = 3.50 GRADIENT INTERVAL = -5.00/ 5.00

ALPHAO	BETAO	CNW	CBW	CTW	CHEI	CHEO	IB-ELV	OB-ELV	PHII	ALPHAI
4.002	-5.895	.17680	.02910	.05440	-.02150	.04100	11.86939	-1.72396	-57.18080	7.16260
3.980	-3.776	.16540	.02770	.05220	-.01480	.03270	11.94749	-1.84057	-45.30990	5.63970
3.896	.180	.14670	.02330	.04570	.00680	.01730	12.20846	-2.05694	-.04470	4.16860
3.840	3.994	.12590	.01980	.04190	.00870	-.00280	12.23318	-2.33205	44.30270	5.70190
3.794	6.112	.11010	.01690	.03860	.00980	-.00970	12.24749	-2.41105	56.69680	7.24900
	GRADIENT	-.00508	-.00102	-.00133	.00304	-.00456	.03695	-.06320	11.53214	.00565

IA156A, AEDC PWT 16T-470, O T S (R8NWC4) (27 MAY 80)

REFERENCE DATA

SREF = 2690.0000 SQ.FT. XMRP = 976.0000 IN. XT
LREF = 1290.3000 INCHES YMRP = .0000 IN. YT
BREF = 1290.3000 INCHES ZMRP = 400.0000 IN. ZT
SCALE = .0200

PARAMETRIC DATA

IB-ELV = 12.000 OB-ELV = -2.000
BDFLAP = .000 SPDBRK = .000
RUDDER = .000 SILTS = .000
MACH = 1.250 RN/L = 3.500

RUN NO. 1360/ 0 RN/L = 3.50 GRADIENT INTERVAL = -5.00/ 5.00

ALPHAO	BETAO	CNW	CBW	CTW	CHEI	CHEO	IB-ELV	OB-ELV	PHII	ALPHAI
-8.101	-5.952	.01260	-.00230	-.00470	.01190	.05130	12.28025	-1.55392	40.19420	-8.38080
-8.213	-3.740	.00340	-.00440	-.00500	.01810	.05050	12.36374	-1.56555	27.94170	-7.38640
-8.132	.191	-.01740	-.00690	-.00300	.03450	.05220	12.58458	-1.54083	.09260	-6.50590
-7.941	4.368	-.04250	-.00770	-.00090	.03390	.04270	12.57651	-1.67899	-29.71840	-7.46950
-7.973	6.231	-.05020	-.00880	.00000	.03410	.03580	12.57920	-1.77934	-39.55050	-8.47900
	GRADIENT	-.00566	-.00040	.00051	.00193	-.00098	.02594	-.01419	-7.11115	-.01255

RUN NO. 1361/ 0 RN/L = 3.50 GRADIENT INTERVAL = -5.00/ 5.00

ALPHAO	BETAO	CNW	CBW	CTW	CHEI	CHEO	IB-ELV	OB-ELV	PHII	ALPHAI
-6.206	-5.971	.04650	.00360	.00060	.00550	.05080	12.19406	-1.56119	48.20470	-7.19730
-6.109	-4.022	.03980	.00230	.00170	.01370	.05250	12.30449	-1.53646	37.71890	-5.95600
-6.202	.116	.01770	-.00150	.00460	.03030	.04950	12.52803	-1.58010	.99940	-4.84290
-5.988	4.255	-.01170	-.00320	.00650	.02910	.03260	12.51187	-1.82580	-36.20920	-6.01270
-5.954	6.220	-.02560	-.00440	.00610	.02800	.02360	12.49705	-1.95677	-47.66580	-7.23100
	GRADIENT	-.00622	-.00066	.00058	.00186	-.00240	.02505	-.03497	-8.93132	-.00686

RUN NO. 1362/ 0 RN/L = 3.50 GRADIENT INTERVAL = -5.00/ 5.00

ALPHAO	BETAO	CNW	CBW	CTW	CHEI	CHEO	IB-ELV	OB-ELV	PHII	ALPHAI
-4.063	-6.095	.07510	.01000	.01090	.00080	.05350	12.13077	-1.52192	61.05090	-6.14480
-4.303	-3.959	.06320	.00780	.01010	.01220	.05390	12.28429	-1.51610	47.94700	-4.71160
-4.191	.373	.03660	.00450	.01250	.02430	.03930	12.44723	-1.72844	-2.32220	-3.10240
-3.759	4.309	.00320	.00300	.01400	.02200	.01880	12.41626	-2.02658	-49.68670	-4.66050
-3.832	6.102	-.00970	.00130	.01270	.02120	.01200	12.40548	-2.12548	-59.01130	-6.07920
	GRADIENT	-.00724	-.00058	.00047	.00121	-.00423	.01632	-.06152	-11.80422	.01228

RUN NO. 1363/ 0 RN/L = 3.50 GRADIENT INTERVAL = -5.00/ 5.00

ALPHAO	BETAO	CNW	CBW	CTW	CHEI	CHEO	IB-ELV	OB-ELV	PHII	ALPHAI
-.484	-7.045	.12730	.01970	.02830	-.00880	.05210	12.01382	-1.54228	89.99010	-6.07520
-.455	-4.776	.10960	.01890	.02840	.00160	.04450	12.14155	-1.65281	90.01720	-3.97160
-.414	-.532	.09220	.01590	.02910	.02020	.02580	12.39202	-1.92478	90.03070	-.00300
-.383	3.724	.07120	.01190	.02830	.01670	.00360	12.34489	-2.24764	90.01720	3.98640
-.396	5.888	.05940	.00970	.02690	.01200	-.00380	12.28159	-2.34503	90.00370	6.00030
	GRADIENT	-.00452	-.00082	-.00001	.00178	-.00481	.02391	-.06998	-.00000	.93618

IA156A, AEDC PWT 16T-470, O T S (R8NWC4) (27 MAY 80)

REFERENCE DATA

SREF = 2690.0000 SQ.FT. XMRP = 976.0000 IN. XT
LREF = 1290.3000 INCHES YMRP = .0000 IN. YT
BREF = 1290.3000 INCHES ZMRP = 400.0000 IN. ZT
SCALE = .0200

PARAMETRIC DATA

IB-ELV = 12.000 OB-ELV = -2.000
BDFLAP = .000 SPDBRK = .000
RUDDER = .000 SILTS = .000
MACH = 1.250 RN/L = 3.500

RUN NO. 1364/ 0 RN/L = 3.50 GRADIENT INTERVAL = -5.00/ 5.00

ALPHAO	BETAO	CNW	CBW	CTW	CHEI	CHEO	IB-ELV	OB-ELV	PHII	ALPHAI
4.094	-5.769	.17230	.02890	.04830	-.01250	.01950	11.96918	-2.01640	-56.20620	7.10170
3.990	-3.665	.15840	.02810	.04680	-.00380	.00950	12.07415	-2.16184	-44.67560	5.56550
3.760	.191	.14300	.02460	.04230	.00720	-.00490	12.21696	-2.35807	-.16040	4.02950
3.825	4.099	.12530	.02110	.03960	-.00050	-.01850	12.11397	-2.51923	44.96860	5.75430
3.778	6.130	.11390	.01850	.03800	-.00690	-.02250	12.03675	-2.56663	56.68250	7.24120
	GRADIENT	-.00426	-.00090	-.00093	.00042	-.00361	.00506	-.04602	11.54614	.02526

IA156A, AEDC PWT 16T-470, O T S (R8NWC5) (27 MAY 80)

REFERENCE DATA

SREF = 2690.0000 SQ.FT. XMRP = 976.0000 IN. XT
LREF = 1290.3000 INCHES YMRP = .0000 IN. YT
BREF = 1290.3000 INCHES ZMRP = 400.0000 IN. ZT
SCALE = .0200

PARAMETRIC DATA

IB-ELV = 12.000 OB-ELV = -2.000
BDFLAP = .000 SPDBRK = .000
RUDDER = .000 SILTS = .000
MACH = 1.400 RN/L = 3.500

RUN NO. 1365/ 0 RN/L = 3.00 GRADIENT INTERVAL = -5.00/ 5.00

ALPHAO	BETAO	CNW	CBW	CTW	CHEI	CHEO	IB-ELV	OB-ELV	PHII	ALPHAI
-8.079	-5.931	.01270	-.00190	-.00880	.02810	.05310	12.51262	-1.49934	40.11540	-8.46510
-8.212	-3.723	.00300	-.00340	-.00840	.03020	.04880	12.54164	-1.56418	27.89180	-7.48340
-8.138	.218	-.02060	-.00500	-.00690	.02890	.03380	12.52349	-1.79035	.22640	-6.63480
-7.957	4.469	-.04850	-.00560	-.00380	.02540	.01880	12.47462	-2.01653	-29.78830	-7.62790
-7.941	6.289	-.05380	-.00620	-.00150	.02340	.01380	12.44670	-2.09192	-39.36920	-8.59620
	GRADIENT	-.00629	-.00027	.00056	-.00059	-.00366	-.00822	-.05520	-7.04189	-.02046

RUN NO. 1366/ 0 RN/L = 3.00 GRADIENT INTERVAL = -5.00/ 5.00

ALPHAO	BETAO	CNW	CBW	CTW	CHEI	CHEO	IB-ELV	OB-ELV	PHII	ALPHAI
-6.230	-5.938	.03270	.00220	-.00530	.02380	.04700	12.45228	-1.59132	47.93980	-7.25870
-6.179	-4.021	.02820	.00130	-.00450	.02470	.03920	12.46485	-1.70893	37.44000	-6.07620
-6.212	.150	.01220	-.00050	-.00080	.02370	.02160	12.45089	-1.97431	1.07770	-4.93400
-5.966	4.280	-.01260	-.00100	.00340	.01760	.00580	12.36572	-2.21255	-35.91620	-6.08220
-5.944	6.270	-.02530	-.00170	.00460	.01460	.00160	12.32384	-2.27587	-47.39400	-7.33990
	GRADIENT	-.00491	-.00028	.00095	-.00085	-.00402	-.01193	-.06068	-8.83715	-.00027

IA156A, AEDC PWT 16T-470, O T S (R8NWC5) (27 MAY 80)

REFERENCE DATA

SREF = 2690.0000 SQ.FT. XMRP = 976.0000 IN. XT
LREF = 1290.3000 INCHES YMRP = .0000 IN. YT
BREF = 1290.3000 INCHES ZMRP = 400.0000 IN. ZT
SCALE = .0200

PARAMETRIC DATA

IB-ELV = 12.000 OB-ELV = -2.000
BDFLAP = .000 SPDBRK = .000
RUDDER = .000 SILTS = .000
MACH = 1.400 RN/L = 3.500

RUN NO. 1367/ 0 RN/L = 2.99 GRADIENT INTERVAL = -5.00/ 5.00

ALPHAO	BETAO	CNW	CBW	CTW	CHEI	CHEO	IB-ELV	OB-ELV	PHII	ALPHAI
-4.094	-6.078	.05530	.00760	.00260	.01770	.03680	12.36712	-1.74512	60.78000	-6.20140
-4.349	-3.947	.04550	.00610	.00230	.02050	.02870	12.40621	-1.86725	47.62480	-4.77780
-4.202	.412	.03140	.00510	.00630	.01620	.00890	12.34618	-2.16580	-2.28550	-3.16240
-3.737	4.341	.00090	.00500	.01170	.00780	-.00390	12.22890	-2.34792	-49.37320	-4.71060
-3.816	6.142	-.00800	.00330	.01090	.00310	-.00550	12.16328	-2.36757	-58.73300	-6.14280
	GRADIENT	-.00534	-.00013	.00113	-.00152	-.00394	-.02126	-.05819	-11.69886	.01468

RUN NO. 1368/ 0 RN/L = 3.00 GRADIENT INTERVAL = -5.00/ 5.00

ALPHAO	BETAO	CNW	CBW	CTW	CHEI	CHEO	IB-ELV	OB-ELV	PHII	ALPHAI
-.508	-6.997	.10430	.01730	.01850	.00640	.02840	12.20935	-1.87177	89.99010	-6.06330
-.481	-4.824	.09400	.01680	.01850	.00840	.01950	12.23728	-2.00597	89.99010	-4.03420
-.432	-.491	.08230	.01580	.02250	.00750	00020	12.22471	-2.29698	90.01720	.04360
-.414	3.632	.06580	.01330	.02460	-.00510	-.00980	12.05620	-2.42040	90.05780	3.93630
-.423	5.820	.05380	.01120	.02350	-.01350	-.01170	11.95112	-2.44375	89.99010	5.99050
	GRADIENT	-.00333	-.00041	.00072	-.00158	-.00347	-.02126	-.04916	.00799	.94255

RUN NO. 1369/ 0 RN/L = 3.00 GRADIENT INTERVAL = -5.00/ 5.00

ALPHAO	BETAO	CNW	CBW	CTW	CHEI	CHEO	IB-ELV	OB-ELV	PHII	ALPHAI
4.039	-5.870	.14970	.02750	.03930	-.00350	-.00210	12.07622	-2.32580	-57.32710	7.21800
3.998	-3.653	.14200	.02640	.03830	-.00260	-.00940	12.08748	-2.41549	-44.91260	5.62770
3.743	.167	.13550	.02390	.03720	-.00910	-.01790	12.00616	-2.51992	-1.22720	4.06080
3.786	4.056	.11870	.02100	.03600	-.02820	-.02250	11.76723	-2.57644	44.43160	5.76090
3.747	6.132	.10950	.01910	.03520	-.03700	-.02480	11.65715	-2.60469	56.53960	7.29330
	GRADIENT	-.00303	-.00070	-.00030	-.00333	-.00170	-.04160	-.02086	11.58975	.01856

IA156A, AEDC PWT 16T-470, O T S (R8NWC6) (27 MAY 80)

REFERENCE DATA

SREF = 2690.0000 SQ.FT. XMRP = 976.0000 IN. XT
LREF = 1290.3000 INCHES YMRP = .0000 IN. YT
BREF = 1290.3000 INCHES ZMRP = 400.0000 IN. ZT
SCALE = .0200

PARAMETRIC DATA

IB-ELV = 12.000 OB-ELV = -2.000
BDFLAP = .000 SPDBRK = .000
RUDDER = .000 SILTS = .000
MACH = 1.550 RN/L = 3.200

RUN NO. 1370/ 0 RN/L = 2.99 GRADIENT INTERVAL = -5.00/ 5.00

ALPHAO	BETAO	CNW	CBW	CTW	CHEI	CHEO	IB-ELV	OB-ELV	PHII	ALPHAI
-8.164	-5.912	.01320	-.00180	-.00940	.03350	.03600	12.52901	-1.82531	40.12260	-8.46510
-8.309	-3.679	.00350	-.00310	-.00910	.03250	.02820	12.51680	-1.92816	27.81340	-7.49330
-8.198	.297	-.01870	-.00410	-.00790	.01930	.01520	12.35564	-2.09958	.21060	-6.63880
-7.977	4.573	-.04940	-.00500	-.00520	.01110	.00690	12.25552	-2.20902	-29.75340	-7.62890
-7.950	6.390	-.05580	-.00550	-.00410	.00850	.00470	12.22378	-2.23803	-39.32730	-8.60010
	GRADIENT	-.00642	-.00023	.00047	-.00258	-.00257	-.03156	-.03393	-6.97625	-.01913

RUN NO. 1371/ 0 RN/L = 3.00 GRADIENT INTERVAL = -5.00/ 5.00

ALPHAO	BETAO	CNW	CBW	CTW	CHEI	CHEO	IB-ELV	OB-ELV	PHII	ALPHAI
-6.347	-5.953	.02900	.00160	-.00690	.02790	.02730	12.46063	-1.94003	47.90410	-7.28740
-6.238	-3.981	.02480	.00050	-.00610	.02480	.01740	12.42279	-2.07057	37.50430	-6.04150
-6.280	.235	.00750	-.00060	-.00320	.01240	.00610	12.27139	-2.21957	1.00200	-4.93100
-5.976	4.383	-.01620	-.00100	-.00050	.00330	-.00140	12.16029	-2.31504	-35.89530	-6.08020
-5.921	6.372	-.02910	-.00150	.00030	-.00260	-.00260	12.09156	-2.32793	-47.47760	-7.32400
	GRADIENT	-.00490	-.00018	.00067	-.00257	-.00225	-.03140	-.02925	-8.77513	-.00389

RUN NO. 1372/ 0 RN/L = 3.00 GRADIENT INTERVAL = -5.00/ 5.00

ALPHAO	BETAO	CNW	CBW	CTW	CHEI	CHEO	IB-ELV	OB-ELV	PHII	ALPHAI
-4.201	-6.099	.04670	.00550	-.00060	.02220	.01770	12.39104	-2.06661	60.78000	-6.19740
-4.444	-3.944	.03680	.00410	-.00100	.01920	.00980	12.35442	-2.17078	47.66060	-4.77180
-4.272	.499	.02250	.00390	.00240	.00110	-.00380	12.13343	-2.34083	-2.31500	-3.15980
-3.722	4.430	-.00040	.00460	.00620	-.00940	-.01100	12.01717	-2.41818	-49.37320	-4.69160
-3.793	6.247	-.00930	.00330	.00620	-.01360	-.01120	11.97122	-2.42033	-58.81650	-6.14380
	GRADIENT	-.00442	.00006	.00086	-.00343	-.00250	-.04048	-.02974	-11.58131	.01720

RUN NO. 1373/ 0 RN/L = 3.00 GRADIENT INTERVAL = -5.00/ 5.00

ALPHAO	BETAO	CNW	CBW	CTW	CHEI	CHEO	IB-ELV	OB-ELV	PHII	ALPHAI
-.593	-7.033	.08400	.01380	.01030	.00930	.00970	12.23354	-2.17210	89.99010	-6.03750
-.564	-4.900	.07570	.01350	.01050	.00530	.00080	12.18471	-2.28945	90.00370	-4.04020
-.529	-.542	.06600	.01300	.01470	-.00950	-.01210	12.01608	-2.43000	90.04430	.06100
-.513	3.574	.05300	.01250	.01860	-.02350	-.01740	11.86292	-2.48695	90.00370	3.93740
-.524	5.750	.04830	.01140	.01990	-.03160	-.02080	11.77432	-2.52348	90.01720	5.98280
	GRADIENT	-.00267	-.00012	.00096	-.00340	-.00216	-.03798	-.02339	.00009	.94143

IA156A, AEDC PWT 16T-470, O T S (R8NWC6) (27 MAY 80)

REFERENCE DATA

SREF = 2690.0000 SQ.FT. XMRP = 976.0000 IN. XT
LREF = 1290.3000 INCHES YMRP = .0000 IN. YT
BREF = 1290.3000 INCHES ZMRP = 400.0000 IN. ZT
SCALE = .0200

PARAMETRIC DATA

IB-ELV = 12.000 OB-ELV = -2.000
BDFLAP = .000 SPDBRK = .000
RUDDER = .000 SILTS = .000
MACH = 1.550 RN/L = 3.200

RUN NO. 1374/ 0 RN/L = 3.01 GRADIENT INTERVAL = -5.00/ 5.00

ALPHAO	BETAO	CNW	CBW	CTW	CHEI	CHEO	IB-ELV	OB-ELV	PHII	ALPHAI
4.179	-5.685	.14010	.02470	.03160	-.00730	-.01360	12.04014	-2.44612	-56.19230	7.20250
4.009	-3.558	.12610	.02400	.02980	-.01510	-.01910	11.95482	-2.50521	-44.89860	5.62770
3.680	.254	.12560	.02250	.03070	-.03260	-.02360	11.76338	-2.55356	-1.17840	4.06670
3.685	4.056	.11530	.02060	.03230	-.04740	-.02660	11.60147	-2.58579	44.27410	5.75650
3.639	6.130	.10540	.01860	.03180	-.05720	-.02810	11.49427	-2.60191	56.53960	7.30000
	GRADIENT	-.00142	-.00045	.00033	-.00424	-.00099	-.04641	-.01058	11.71174	.01675

IA156A, AEDC PWT 16T-470, O T S W/SILTS (R8NWC7) (10 MAY 80)

REFERENCE DATA

SREF = 2690.0000 SQ.FT. XMRP = 976.0000 IN. XT
LREF = 1290.3000 INCHES YMRP = .0000 IN. YT
BREF = 1290.3000 INCHES ZMRP = 400.0000 IN. ZT
SCALE = .0200

PARAMETRIC DATA

IB-ELV = 9.000 OB-ELV = -2.000
BDFLAP = .000 SPDBRK = .000
RUDDER = .000 SILTS = 1.000
MACH = 1.150 RN/L = 3.500
IB-AIL = 1.000

RUN NO. 1377/ 0 RN/L = 3.50 GRADIENT INTERVAL = -5.00/ 5.00

ALPHAO	BETAO	CNW	CBW	CTW	CHEI	CHEO	IB-ELV	OB-ELV	PHII	ALPHAI	MACH
-8.173	-5.880	-.00100	-.00530	.00140	.02460	.05380	8.24140	-1.92380	39.47150	-8.43830	1.15060
-8.191	-3.835	-.01430	-.00650	.00020	.03450	.05410	8.29540	-1.91940	28.44080	-7.44480	1.15480
-8.131	.278	-.04420	-.00870	-.00180	.06120	.05380	8.43650	-1.92060	-.66370	-6.55150	1.15100
-7.960	4.259	-.05900	-.00950	-.00120	.07120	.05600	8.48650	-1.90540	-29.11790	-7.45370	1.15430
-7.945	6.207	-.06430	-.01010	-.00010	.07510	.05890	8.50280	-1.88830	-39.58540	-8.49290	1.15150
	GRADIENT	-.00553	-.00037	-.00017	.00455	.00023	.02367	.00172	-7.11099	.00011	-.00007

RUN NO. 1378/ 0 RN/L = 3.50 GRADIENT INTERVAL = -5.00/ 5.00

ALPHAO	BETAO	CNW	CBW	CTW	CHEI	CHEO	IB-ELV	OB-ELV	PHII	ALPHAI	MACH
-6.183	-5.970	.04300	.00160	.00940	.01950	.05300	8.21340	-1.92880	48.16890	-7.20030	1.15030
-6.102	-4.029	.03670	-.00070	.00980	.02930	.05450	8.26710	-1.91650	37.64740	-5.96990	1.15260
-6.194	.113	.00240	-.00470	.00750	.05890	.05460	8.42470	-1.91450	.84970	-4.85590	1.15240
-6.013	4.232	-.02420	-.00580	.00760	.06810	.06010	8.46790	-1.87920	-36.12550	-6.03750	1.15110
-5.788	6.345	-.03640	-.00600	.00780	.07010	.05110	8.47770	-1.94020	-49.12230	-7.26360	1.14860
	GRADIENT	-.00737	-.00062	-.00027	.00470	.00068	.02432	.00451	-8.93022	-.00794	-.00018

IA156A, AEDC PWT 16T-470, O T S W/SILTS (R8NWC7) (10 MAY 80)

REFERENCE DATA

SREF = 2690.0000 SQ.FT. XMRP = 976.0000 IN. XT
LREF = 1290.3000 INCHES YMRP = .0000 IN. YT
BREF = 1290.3000 INCHES ZMRP = 400.0000 IN. ZT
SCALE = .0200

PARAMETRIC DATA

IB-ELV = 9.000 OB-ELV = -2.000
BDFLAP = .000 SPDBRK = .000
RUDDER = .000 SILTS = 1.000
MACH = 1.150 RN/L = 3.500
IB-AIL = 1.000

RUN NO. 1379/ 0 RN/L = 3.50 GRADIENT INTERVAL = -5.00/ 5.00

ALPHAO	BETAO	CNW	CBW	CTW	CHEI	CHEO	IB-ELV	OB-ELV	PHII	ALPHAI	MACH
-4.099	-6.089	.07290	.00910	.02050	.01670	.05410	8.19590	-1.92230	60.58030	-6.17260	1.15310
-4.295	-3.970	.05650	.00600	.01840	.02800	.05680	8.25750	-1.90240	47.84680	-4.72270	1.15200
-4.200	.373	.01870	.00100	.01550	.05780	.06110	8.41970	-1.86800	-2.62770	-3.11670	1.15230
-3.743	4.276	-.01390	-.00040	.01540	.06450	.04880	8.44740	-1.95700	-49.77730	-4.63840	1.15040
-3.851	6.111	-.02460	-.00170	.01390	.06770	.03970	8.46080	-2.02180	-59.05310	-6.11300	1.15120
	GRADIENT	-.00854	-.00078	-.00037	.00447	-.00093	.02330	-.00635	-11.83604	.01696	-.00019

RUN NO. 1380/ 0 RN/L = 3.50 GRADIENT INTERVAL = -5.00/ 5.00

ALPHAO	BETAO	CNW	CBW	CTW	CHEI	CHEO	IB-ELV	OB-ELV	PHII	ALPHAI	MACH
-.470	-7.021	.12450	.01950	.03870	.00980	.05920	8.15080	-1.89130	89.99010	-6.07130	1.15180
-.444	-4.837	.10990	.01770	.03800	.01850	.06160	8.19590	-1.87440	90.00370	-4.04020	1.14840
-.409	-.465	.08370	.01350	.03550	.05160	.04850	8.36860	-1.96400	90.01720	.05570	1.15230
-.381	3.667	.05760	.00920	.03260	.05880	.02510	8.40640	-2.12530	90.01720	3.93580	1.15120
-.383	5.857	.04130	.00660	.02940	.06440	.01450	8.43400	-2.19940	90.00370	5.98390	1.15030
	GRADIENT	-.00615	-.00100	-.00063	.00477	-.00428	.02489	-.02941	.00160	.93781	.00033

RUN NO. 1381/ 0 RN/L = 3.50 GRADIENT INTERVAL = -5.00/ 5.00

ALPHAO	BETAO	CNW	CBW	CTW	CHEI	CHEO	IB-ELV	OB-ELV	PHII	ALPHAI	MACH
4.123	-5.832	.17380	.02830	.05860	.00320	.04300	8.12710	-1.99860	-56.01820	7.18690	1.14790
3.967	-3.698	.15740	.02650	.05530	.01380	.03440	8.18490	-2.05640	-44.71040	5.59170	1.14970
3.794	.112	.13630	.02260	.04860	.04040	.01730	8.32860	-2.17290	-1.03280	4.08070	1.15010
3.843	4.035	.11790	.01920	.04500	.04370	-.00160	8.34020	-2.30570	44.49600	5.74010	1.14840
3.806	6.132	.10300	.01640	.04210	.05020	-.00710	8.37030	-2.34490	56.63960	7.27450	1.14980
	GRADIENT	-.00511	-.00094	-.00133	.00385	-.00466	.02000	-.03225	11.53660	.02117	-.00017

IA156A, AEDC PWT 16T-470, O T S W/SILTS (R8NWC8) (10 MAY 80)

REFERENCE DATA

SREF = 2690.0000 SQ.FT. XMRP = 976.0000 IN. XT
LREF = 1290.3000 INCHES YMRP = .0000 IN. YT
BREF = 1290.3000 INCHES ZMRP = 400.0000 IN. ZT
SCALE = .0200

PARAMETRIC DATA

IB-ELV = 9.000 OB-ELV = -2.000
BDFLAP = .000 SPDBRK = .000
RUDDER = .000 SILTS = 1.000
MACH = 1.250 RN/L = 3.500
IB-AIL = 1.000

RUN NO. 1382/ 0 RN/L = 3.50 GRADIENT INTERVAL = -5.00/ 5.00

ALPHAO	BETAO	CNW	CBW	CTW	CHEI	CHEO	IB-ELV	OB-ELV	PHII	ALPHAI	MACH
-8.176	-5.849	-.00110	-.00290	-.00470	.04260	.05270	8.34240	-1.91790	39.45720	-8.37480	1.25190
-8.215	-3.768	-.00870	-.00470	-.00340	.04910	.05190	8.38090	-1.92060	28.14850	-7.38930	1.25060
-8.127	.191	-.02950	-.00720	-.00010	.06950	.05340	8.49230	-1.90950	.09390	-6.50100	1.24990
-7.940	4.342	-.05530	-.00820	.00170	.07080	.04430	8.49500	-1.97750	-29.62070	-7.45270	1.25030
-7.947	6.219	-.06180	-.00900	.00270	.07060	.03640	8.49460	-2.03310	-39.58540	-8.45920	1.25040
	GRADIENT	-.00575	-.00043	.00063	.00266	-.00095	.01396	-.00709	-7.12384	-.00962	-.00004

RUN NO. 1383/ 0 RN/L = 3.50 GRADIENT INTERVAL = -5.00/ 5.00

ALPHAO	BETAO	CNW	CBW	CTW	CHEI	CHEO	IB-ELV	OB-ELV	PHII	ALPHAI	MACH
-6.194	-5.956	.03990	.00280	.00330	.03550	.05220	8.30320	-1.92030	48.26920	-7.16760	1.24900
-6.125	-4.037	.03440	.00140	.00430	.04380	.05390	8.34980	-1.90840	37.78320	-5.95800	1.24960
-6.197	.120	.00660	-.00190	.00750	.06470	.05000	8.46620	-1.93500	.99410	-4.83390	1.25090
-5.982	4.247	-.02380	-.00360	.00910	.06500	.03350	8.46540	-2.05360	-36.27200	-5.99870	1.25230
-5.952	6.225	-.03720	-.00480	.00900	.06470	.02450	8.45860	-2.12060	-47.74940	-7.23690	1.25130
	GRADIENT	-.00703	-.00060	.00058	.00256	-.00246	.01397	-.01751	-8.93922	-.00457	.00033

RUN NO. 1384/ 0 RN/L = 3.50 GRADIENT INTERVAL = -5.00/ 5.00

ALPHAO	BETAO	CNW	CBW	CTW	CHEI	CHEO	IB-ELV	OB-ELV	PHII	ALPHAI	MACH
-4.069	-6.097	.05810	.00940	.01380	.03060	.05520	8.27370	-1.90110	61.07950	-6.14380	1.24890
-4.303	-3.963	.05510	.00720	.01310	.04140	.05530	8.33500	-1.89870	48.04010	-4.70560	1.24850
-4.181	.374	.02890	.00400	.01520	.05850	.04050	8.43380	-2.00180	-2.35060	-3.08720	1.25000
-3.748	4.293	-.00610	.00250	.01650	.05790	.02030	8.42340	-2.14930	-49.75640	-4.63240	1.24870
-3.839	6.122	-.01990	.00070	.01500	.05800	.01350	8.42070	-2.19960	-59.10180	-6.09010	1.24900
	GRADIENT	-.00739	-.00057	.00041	.00203	-.00422	.01092	-.03024	-11.84094	.01531	.00003

RUN NO. 1385/ 0 RN/L = 3.50 GRADIENT INTERVAL = -5.00/ 5.00

ALPHAO	BETAO	CNW	CBW	CTW	CHEI	CHEO	IB-ELV	OB-ELV	PHII	ALPHAI	MACH
-.490	-6.970	.12160	.01890	.03180	.01820	.05340	8.19820	-1.91710	90.00370	-5.99970	1.24930
-.462	-4.814	.10820	.01810	.03200	.02880	.04610	8.25490	-1.96950	90.01720	-4.00590	1.24940
-.423	-.532	.08840	.01510	.03240	.05260	.02660	8.38350	-2.10840	90.03070	-.00340	1.24990
-.391	3.727	.06470	.01160	.03130	.05190	.00450	8.38040	-2.26720	90.00370	3.99020	1.25210
-.403	5.885	.05240	.00940	.03030	.04810	-.00280	8.35790	-2.31980	90.01720	5.99810	1.25120
	GRADIENT	-.00509	-.00076	-.00008	.00271	-.00487	.01471	-.03485	-.00158	.93622	.00032

IA156A, AEDC PWT 16T-470, O T S W/SILTS (R8NWC8) (10 MAY 80)

REFERENCE DATA

SREF = 2690.0000 SQ.FT. XMRP = 976.0000 IN. XT
LREF = 1290.3000 INCHES YMRP = .0000 IN. YT
BREF = 1290.3000 INCHES ZMRP = 400.0000 IN. ZT
SCALE = .0200

PARAMETRIC DATA

IB-ELV = 9.000 OB-ELV = -2.000
BDFLAP = .000 SPDBRK = .000
RUDDER = .000 SILTS = 1.000
MACH = 1.250 RN/L = 3.500
IB-AIL = 1.000

RUN NO. 1386/ 0 RN/L = 3.50 GRADIENT INTERVAL = -5.00/ 5.00

ALPHAO	BETAO	CNW	CBW	CTW	CHEI	CHEO	IB-ELV	OB-ELV	PHII	ALPHAI	MACH
4.166	-5.804	.16920	.02830	.05280	.01270	.01970	8.17890	-2.15450	-55.84420	7.16590	1.24780
3.973	-3.652	.15760	.02710	.05070	.02380	.01060	8.24120	-2.21870	-44.60580	5.54910	1.25010
3.766	.204	.13830	.02370	.04560	.04110	-.00270	8.33990	-2.31200	-.05440	4.04520	1.24670
3.832	4.085	.12130	.02050	.04300	.03330	-.01770	8.29300	-2.42200	44.74660	5.75430	1.25020
3.784	6.139	.10790	.01810	.04140	.02640	-.02160	8.25180	-2.45010	56.62540	7.25120	1.25270
	GRADIENT	-.00469	-.00085	-.00099	.00122	-.00366	.00668	-.02628	11.54871	.02696	.00001

IA156A, AEDC PWT 16T-470, O T S W/SILTS (R8NWC9) (10 MAY 80)

REFERENCE DATA

SREF = 2690.0000 SQ.FT. XMRP = 976.0000 IN. XT
LREF = 1290.3000 INCHES YMRP = .0000 IN. YT
BREF = 1290.3000 INCHES ZMRP = 400.0000 IN. ZT
SCALE = .0200

PARAMETRIC DATA

IB-ELV = 9.000 OB-ELV = -2.000
BDFLAP = .000 SPDBRK = .000
RUDDER = .000 SILTS = 1.000
MACH = 1.400 RN/L = 3.500
IB-AIL = 1.000

RUN NO. 1387/ 0 RN/L = 2.99 GRADIENT INTERVAL = -5.00/ 5.00

ALPHAO	BETAO	CNW	CBW	CTW	CHEI	CHEO	IB-ELV	OB-ELV	PHII	ALPHAI	MACH
-8.086	-5.933	.00780	-.00240	-.00550	.05670	.05400	8.38480	-1.95100	40.11540	-8.47110	1.39940
-8.203	-3.723	-.00060	-.00400	-.00520	.05970	.05030	8.39870	-1.97660	27.91320	-7.46650	1.40070
-8.137	.221	-.02530	-.00560	-.00330	.06070	.03500	8.40680	-2.07120	.17450	-6.63380	1.39920
-7.965	4.466	-.05680	-.00600	-.00020	.05940	.01970	8.39820	-2.16890	-29.73940	-7.62990	1.39930
-7.938	6.284	-.06070	-.00670	.00160	.05790	.01490	8.38940	-2.20020	-39.36220	-8.59420	1.39880
	GRADIENT	-.00687	-.00024	.00061	-.00004	-.00373	-.00009	-.02347	-7.03973	-.02268	-.00017

RUN NO. 1388/ 0 RN/L = 3.00 GRADIENT INTERVAL = -5.00/ 5.00

ALPHAO	BETAO	CNW	CBW	CTW	CHEI	CHEO	IB-ELV	OB-ELV	PHII	ALPHAI	MACH
-6.256	-5.968	.02890	.00160	-.00190	.05170	.04790	8.36020	-1.98880	48.02580	-7.28740	1.40050
-6.152	-3.991	.02560	.00050	-.00070	.05300	.04020	8.36910	-2.03700	37.43280	-6.03150	1.40120
-6.217	.147	-.00620	-.00110	.00260	.05520	.02290	8.38160	-2.14700	1.09530	-4.92500	1.40180
-5.972	4.285	-.01960	-.00130	.00670	.05000	.00650	8.35630	-2.25200	-35.94410	-6.08820	1.40120
-5.942	6.276	-.03480	-.00230	.00760	.04940	.00260	8.34610	-2.27870	-47.47060	-7.33490	1.40030
	GRADIENT	-.00546	-.00022	.00089	-.00036	-.00407	-.00155	-.02598	-8.86591	-.00686	-.00000

IA156A, AEDC PWT 16T-470, O T S W/SILTS (R8NWC9) (10 MAY 80)

REFERENCE DATA

SREF = 2690.0000 SQ.FT. XMRP = 976.0000 IN. XT
LREF = 1290.3000 INCHES YMRP = .0000 IN. YT
BREF = 1290.3000 INCHES ZMRP = 400.0000 IN. ZT
SCALE = .0200

PARAMETRIC DATA

IB-ELV = 9.000 OB-ELV = -2.000
BDFLAP = .000 SPDBRK = .000
RUDDER = .000 SILTS = 1.000
MACH = 1.400 RN/L = 3.500
IB-AIL = 1.000

RUN NO. 1389/ 0 RN/L = 3.01 GRADIENT INTERVAL = -5.00/ 5.00

ALPHAO	BETAO	CNW	CBW	CTW	CHEI	CHEO	IB-ELV	OB-ELV	PHII	ALPHAI	MACH
-4.254	-6.082	.04880	.00670	.00520	.04500	.03850	8.32600	-2.04910	59.81000	-6.26890	1.40120
-4.339	-3.952	.04230	.00560	.00590	.04800	.02950	8.34390	-2.10530	47.79660	-4.76670	1.40180
-4.212	.410	.02330	.00460	.00930	.04740	.00970	8.34600	-2.23080	-2.23600	-3.15780	1.40280
-3.745	4.326	-.00480	.00450	.01430	.04110	-.00340	8.30700	-2.31640	-49.30350	-4.69560	1.40280
-3.801	6.150	-.01390	.00290	.01350	.03600	-.00520	8.28260	-2.32910	-58.91390	-6.14380	1.40210
	GRADIENT	-.00566	-.00013	.00101	-.00082	-.00399	-.00436	-.02556	-11.72514	.01540	.00012

RUN NO. 1390/ 0 RN/L = 3.00 GRADIENT INTERVAL = -5.00/ 5.00

ALPHAO	BETAO	CNW	CBW	CTW	CHEI	CHEO	IB-ELV	OB-ELV	PHII	ALPHAI	MACH
-.511	-6.961	.10030	.01680	.02220	.03210	.02890	8.25280	-2.11660	89.99010	-6.03050	1.40240
-.481	-4.830	.08840	.01630	.02220	.03290	.02090	8.25690	-2.17280	90.00370	-4.04020	1.40240
-.440	-.450	.07620	.01520	.02600	.03710	.00070	8.27760	-2.29500	90.01720	.08430	1.40260
-.421	3.647	.05840	.01270	.02790	.02750	-.00950	8.23180	-2.35980	90.01720	3.94710	1.40020
-.428	5.812	.04960	.01080	.02720	.01860	-.01180	8.18860	-2.37390	90.00370	5.98280	1.40020
	GRADIENT	-.00353	-.00042	.00067	-.00062	-.00349	-.00287	-.02213	.00161	.94221	-.00026

RUN NO. 1391/ 0 RN/L = 3.01 GRADIENT INTERVAL = -5.00/ 5.00

ALPHAO	BETAO	CNW	CBW	CTW	CHEI	CHEO	IB-ELV	OB-ELV	PHII	ALPHAI	MACH
4.141	-5.774	.15270	.02670	.04460	.02010	-.00270	8.20700	-2.31270	-56.20620	7.19800	1.39750
4.008	-3.662	.14250	.02590	.04340	.02280	-.00940	8.22250	-2.35470	-44.89860	5.63970	1.40100
3.738	.170	.13240	.02310	.04070	.02060	-.01770	8.21670	-2.40490	-1.16960	4.06240	1.39880
3.780	4.063	.11530	.02030	.03950	.00270	-.02240	8.12610	-2.43800	44.44590	5.76200	1.39880
3.742	6.124	.10660	.01860	.03890	-.00590	-.02440	8.08220	-2.44970	56.48240	7.29000	1.39860
	GRADIENT	-.00352	-.00072	-.00050	-.00261	-.00168	-.01251	-.01078	11.56528	.01693	-.00028

IA156A, AEDC PWT 16T-470, O T S W/SILTS (R8NWDO) (10 MAY 80)

REFERENCE DATA

SREF = 2690.0000 SQ.FT. XMRP = 976.0000 IN. XT
LREF = 1290.3000 INCHES YMRP = .0000 IN. YT
BREF = 1290.3000 INCHES ZMRP = 400.0000 IN. ZT
SCALE = .0200

PARAMETRIC DATA

IB-ELV = 9.000 OB-ELV = -2.000
BDFLAP = .000 SPDBRK = .000
RUDDER = .000 SILTS = 1.000
MACH = 1.550 RN/L = 3.200
IB-AIL = 1.000

RUN NO. 1392/ 0 RN/L = 3.00 GRADIENT INTERVAL = -5.00/ 5.00

ALPHAO	BETAO	CNW	CBW	CTW	CHEI	CHEO	IB-ELV	OB-ELV	PHII	ALPHAI	MACH
-8.172	-5.914	.00850	-.00240	-.00560	.05880	.03710	8.39910	-2.05450	40.12260	-8.47110	1.54950
-8.299	-3.678	-.00040	-.00350	-.00520	.05810	.02930	8.39940	-2.10310	27.85610	-7.47740	1.55010
-8.186	.311	-.02510	-.00460	-.00430	.04860	.01600	8.35490	-2.18880	.12430	-6.61800	1.55090
-7.997	4.570	-.05750	-.00540	-.00210	.04190	.00730	8.31910	-2.24640	-29.69750	-7.64270	1.55010
-7.945	6.384	-.06170	-.00590	-.00090	.04020	.00520	8.31050	-2.26020	-39.34830	-8.59220	1.54870
	GRADIENT	-.00693	-.00023	.00038	-.00196	-.00266	-.00972	-.01733	-6.97842	-.02252	-.00000

RUN NO. 1393/ 0 RN/L = 3.00 GRADIENT INTERVAL = -5.00/ 5.00

ALPHAO	BETAO	CNW	CBW	CTW	CHEI	CHEO	IB-ELV	OB-ELV	PHII	ALPHAI	MACH
-6.325	-5.946	.02860	.00100	-.00310	.05250	.02810	8.36740	-2.11300	47.99000	-7.26760	1.55070
-6.247	-3.971	.02200	-.00010	-.00260	.05050	.01860	8.35980	-2.17380	37.46140	-6.03250	1.55070
-6.268	.230	.00460	-.00120	.00060	.04080	.00660	8.31700	-2.24980	1.08570	-4.91290	1.55170
-5.981	4.383	-.02240	-.00150	.00300	.03380	-.00070	8.27900	-2.29860	-35.94410	-6.07720	1.55060
-5.920	6.369	-.03570	-.00190	.00400	.02890	-.00200	8.25260	-2.30800	-47.47760	-7.31910	1.55050
	GRADIENT	-.00531	-.00017	.00067	-.00200	-.00231	-.00967	-.01495	-8.78684	-.00483	-.00001

RUN NO. 1394/ 0 RN/L = 3.00 GRADIENT INTERVAL = -5.00/ 5.00

ALPHAO	BETAO	CNW	CBW	CTW	CHEI	CHEO	IB-ELV	OB-ELV	PHII	ALPHAI	MACH
-4.203	-6.098	.04530	.00480	.00310	.04560	.01870	8.33100	-2.17490	60.76570	-6.19640	1.55060
-4.445	-3.939	.03330	.00340	.00230	.04360	.01060	8.32460	-2.22620	47.66060	-4.76470	1.55170
-4.279	.498	.01780	.00330	.00570	.02810	-.00330	8.25530	-2.31410	-2.33410	-3.16140	1.55240
-3.713	4.427	-.00740	.00420	.00950	.01990	-.01070	8.20890	-2.36420	-49.44280	-4.68060	1.55120
-3.801	6.270	-.01400	.00280	.00970	.01650	-.01070	8.18960	-2.36540	-58.86520	-6.16160	1.55100
	GRADIENT	-.00484	.00009	.00086	-.00285	-.00256	-.01387	-.01657	-11.59937	.01758	-.00006

RUN NO. 1395/ 0 RN/L = 3.00 GRADIENT INTERVAL = -5.00/ 5.00

ALPHAO	BETAO	CNW	CBW	CTW	CHEI	CHEO	IB-ELV	OB-ELV	PHII	ALPHAI	MACH
-.596	-7.027	.08140	.01340	.01400	.03110	.01030	8.25140	-2.23290	89.99010	-6.03150	1.55110
-.568	-4.900	.07310	.01290	.01450	.02720	.00140	8.23210	-2.29050	89.99010	-4.04070	1.55220
-.532	-.554	.06210	.01250	.01830	.01610	-.01150	8.17830	-2.37390	90.04430	.04800	1.55100
-.520	3.579	.04700	.01200	.02200	.00430	-.01710	8.12090	-2.41030	90.03070	3.94440	1.55160
-.527	5.752	.04300	.01080	.02320	-.00310	-.02060	8.08510	-2.43260	90.00370	5.98390	1.55030
	GRADIENT	-.00307	-.00011	.00088	-.00270	-.00219	-.01311	-.01417	.00485	.94179	-.00007

IA156A, AEDC PWT 16T-470, O T S W/SILTS (R8NWD0) (10 MAY 80)

REFERENCE DATA

SREF = 2690.0000 SQ.FT. XMRP = 976.0000 IN. XT
LREF = 1290.3000 INCHES YMRP = .0000 IN. YT
BREF = 1290.3000 INCHES ZMRP = 400.0000 IN. ZT
SCALE = .0200

PARAMETRIC DATA

IB-ELV = 9.000 OB-ELV = -2.000
BDFLAP = .000 SPDBRK = .000
RUDDER = .000 SILTS = 1.000
MACH = 1.550 RN/L = 3.200
IB-AIL = 1.000

RUN NO. 1396/ 0 RN/L = 3.00 GRADIENT INTERVAL = -5.00/ 5.00

ALPHAO	BETAO	CNW	CBW	CTW	CHEI	CHEO	IB-ELV	OB-ELV	PHII	ALPHAI	MACH
4.170	-5.671	.13670	.02410	.03500	.01290	-.01330	8.17250	-2.38150	-56.14350	7.19690	1.55000
997	-3.548	.12130	.02330	.03290	.00590	-.01880	8.14160	-2.41610	-44.85680	5.62550	1.55060
3.686	.252	.12080	.02190	.03430	-.00700	-.02320	8.08450	-2.44240	-1.18330	4.07970	1.55220
3.676	4.057	.11100	.01990	.03530	-.02140	-.02660	8.00910	-2.46710	4[illegible].28840	5.75980	1.55050
3.653	6.138	.10070	.01810	.03450	-.03170	-.02800	7.95460	-2.47860	56.43950	7.31330	1.55220
	GRADIENT	-.00135	-.00045	.00032	-.00359	-.00103	-.01742	-.00671	11.72259	.01777	-.00001

IA156A, AEDC PWT 16T-470, O T S W/SILTS (R8NWD1) (27 MAY 80)

REFERENCE DATA

SREF = 2690.0000 SQ.FT. XMRP = 976.0000 IN. XT
LREF = 1290.3000 INCHES YMRP = .0000 IN. YT
BREF = 1290.3000 INCHES ZMRP = 400.0000 IN. ZT
SCALE = .0200

PARAMETRIC DATA

IB-ELV = 8.000 OB-ELV = -2.000
BDFLAP = .000 SPDBRK = .000
RUDDER = .000 SILTS = 1.000
MACH = 1.150 RN/L = 3.500

RUN NO. 1399/ 0 RN/L = 3.50 GRADIENT INTERVAL = -5.00/ 5.00

ALPHAO	BETAO	CNW	CBW	CTW	CHEI	CHEO	IB-ELV	OB-ELV	PHII	ALPHAI
-8.190	-5.889	-.00410	-.00590	.00070	.02130	.05280	8.37709	-1.55817	39.42850	-8.45520
-8.181	-3.823	-.02090	-.00680	-.00080	.03150	.05430	8.50979	-1.53709	28.42650	-7.43690
-8.123	.267	-.05320	-.00870	-.00180	.05890	.05340	8.86624	-1.54974	-.55600	-6.55150
-7.970	4.264	-.06860	-.00950	-.00120	.06780	.05490	8.98202	-1.52866	-29.10750	-7.47840
-7.952	6.212	-.07190	-.01000	.00000	.07150	.05810	9.03015	-1.48370	-39.52260	-8.51280
	GRADIENT	-.00591	-.00033	-.00005	.00450	.00007	.05850	.00103	-7.11392	-.00428

RUN NO. 1400/ 0 RN/L = 3.51 GRADIENT INTERVAL = -5.00/ 5.00

ALPHAO	BETAO	CNW	CBW	CTW	CHEI	CHEO	IB-ELV	OB-ELV	PHII	ALPHAI
-6.165	-5.957	.03900	.00100	.00980	.01730	.05210	8.32506	-1.56800	48.18330	-7.18350
-6.115	-4.038	.03360	-.00130	.01040	.02710	.05390	8.45255	-1.54271	37.64740	-5.97790
-6.201	.111	-.00230	-.00510	.00800	.05600	.05460	8.82851	-1.53288	.88840	-4.85990
-6.017	4.233	-.02970	-.00600	.00800	.06390	.05840	8.93128	-1.47949	-36.07670	-6.04840
-5.795	6.354	-.04400	-.00610	.00830	.06700	.04970	8.97161	-1.60172	-49.06650	-7.28150
	GRADIENT	-.00765	-.00057	-.00029	.00445	.00054	.05792	.00764	-8.91394	-.00822

IA156A, AEDC PWT 16T-470, O T S W/SILTS (R8NWD1) (27 MAY 80)

REFERENCE DATA

SREF = 2690.0000 SQ.FT. XMRP = 976.0000 IN. XT
LREF = 1290.3000 INCHES YMRP = .0000 IN. YT
BREF = 1290.3000 INCHES ZMRP = 400.0000 IN. ZT
SCALE = .0200

PARAMETRIC DATA

IB-ELV = 8.000 OB-ELV = -2.000
BDFLAP = .000 SPDBRK = .000
RUDDER = .000 SILTS = 1.000
MACH = 1.150 RN/L = 3.500

RUN NO. 1401/ 0 RN/L = 3.50 GRADIENT INTERVAL = -5.00/ 5.00

ALPHAO	BETAO	CNW	CBW	CTW	CHEI	CHEO	IB-ELV	OB-ELV	PHII	ALPHAI
-4.100	-6.094	.06900	.00860	.02060	.01650	.05360	8.31465	-1.54693	60.66590	-6.17850
-4.292	-3.967	.05410	.00540	.01870	.02640	.05660	8.44344	-1.50478	47.91120	-4.72070
-4.195	.370	.01720	.00090	.01580	.05610	.06070	8.82981	-1.44718	-2.54610	-3.11360
-3.741	4.274	-.01400	-.00040	.01620	.06160	.04890	8.90136	-1.61296	-49.74940	-4.63740
-3.865	6.134	-.02960	-.00190	.01430	.06480	.03900	8.94299	-1.75206	-59.06000	-6.13480
	GRADIENT	-.00827	-.00071	-.00031	.00432	-.00090	.05619	-.01264	-11.84686	.01675

RUN NO. 1402/ 0 RN/L = 3.51 GRADIENT INTERVAL = -5.00/ 5.00

ALPHAO	BETAO	CNW	CBW	CTW	CHEI	CHEO	IB-ELV	OB-ELV	PHII	ALPHAI
-.474	-6.986	.12370	.01900	.03940	.00950	.05850	8.22359	-1.47809	89.99010	-6.03150
-.444	-4.835	.11050	.01740	.03900	.01710	.06250	8.32246	-1.42189	90.00370	-4.03520
-.409	-.483	.08220	.01320	.03630	.04870	.04770	8.73354	-1.62982	90.01720	.03700
-.382	3.676	.05740	.00890	.03320	.05590	.02510	8.82721	-1.94735	90.01720	3.94230
-.383	5.859	.04120	.00630	.03020	.06190	.01480	8.90526	-2.09206	90.00370	5.98170
	GRADIENT	-.00624	-.00100	-.00068	.00458	-.00439	.05958	-.06163	.00160	.93736

RUN NO. 1403/ 0 RN/L = 3.50 GRADIENT INTERVAL = -5.00/ 5.00

ALPHAO	BETAO	CNW	CBW	CTW	CHEI	CHEO	IB-ELV	OB-ELV	PHII	ALPHAI
4.108	-5.814	.17160	.02760	.05900	.00220	.04240	8.12862	-1.70429	-56.05310	7.16590
3.968	-3.697	.15790	.02620	.05640	.01130	.03410	8.24700	-1.82090	-44.70340	5.59060
3.794	.117	.13580	.02240	.04940	.03770	.01680	8.59044	-2.06396	-1.03410	4.08020
3.852	4.044	.11710	.01880	.04570	.04080	-.00260	8.63077	-2.32976	44.48170	5.74670
3.804	6.132	.10280	.01610	.04300	.04490	-.00850	8.68411	-2.39731	56.63960	7.27450
	GRADIENT	-.00527	-.00096	-.00138	.00380	-.00474	.04938	-.06574	11.52058	.02216

IA156A, AEDC PWT 16T-470, O T S W/SILTS (R8NWD2) (27 MAY 80)

REFERENCE DATA

SREF = 2690.0000 SQ.FT. XMRP = 976.0000 IN. XT
LREF = 1290.3000 INCHES YMRP = .0000 IN. YT
BREF = 1290.3000 INCHES ZMRP = 400.0000 IN. ZT
SCALE = .0200

PARAMETRIC DATA

IB-ELV = 8.000 OB-ELV = -2.000
BDFLAP = .000 SPDBRK = .000
RUDDER = .000 SILTS = 1.000
MACH = 1.250 RN/L = 3.500

RUN NO. 1404/ 0 RN/L = 3.50 GRADIENT INTERVAL = -5.00/ 5.00

ALPHAO	BETAO	CNW	CBW	CTW	CHEI	CHEO	IB-ELV	OB-ELV	PHII	ALPHAI
-8.058	-5.883	.00900	-.00340	-.00040	.04070	.05280	8.64808	-1.53210	40.02960	-8.31040
-8.212	-3.720	-.00580	-.00540	-.00100	.04800	.05210	8.74638	-1.54228	27.86330	-7.36960
-8.130	.187	-.02940	-.00750	.00150	.06760	.05330	9.01032	-1.52483	.12960	-6.50690
-7.955	4.413	-.05370	-.00860	.00290	.06900	.04390	9.02917	-1.66154	-29.98370	-7.48830
-7.957	6.242	-.06150	-.00950	.00360	.06960	.03690	9.03725	-1.76334	-39.66210	-8.47310
	GRADIENT	-.00589	-.00039	.00048	.00255	-.00102	.03436	-.01490	-7.11325	-.01755

RUN NO. 1405/ 0 RN/L = 3.49 GRADIENT INTERVAL = -5.00/ 5.00

ALPHAO	BETAO	CNW	CBW	CTW	CHEI	CHEO	IB-ELV	OB-ELV	PHII	ALPHAI
-6.183	-5.954	.04010	.00240	.00440	.03400	.05240	8.55785	-1.53792	48.32650	-7.15580
-6.129	-4.043	.03390	.00090	.00520	.04220	.05390	8.66827	-1.51610	37.84050	-5.96790
-6.212	.135	.00530	-.00260	.00850	.06330	05070	8.95241	-1.56264	.89640	-4.83790
-5.997	4.255	-.02280	-.00410	.01010	.06360	.03390	8.95645	-1.80697	-36.21620	-6.01760
-5.829	6.348	-.03490	-.00510	.01090	.06280	.02340	8.94568	-1.95968	-48.91320	-7.24380
	GRADIENT	-.00683	-.00060	.00059	.00258	-.00241	.03480	-.03500	-8.92402	-.00535

RUN NO. 1406/ 0 RN/L = 3.50 GRADIENT INTERVAL = -5.00/ 5.00

ALPHAO	BETAO	CNW	CBW	CTW	CHEI	CHEO	IB-ELV	OB-ELV	PHII	ALPHAI
-4.212	-6.077	.06550	.00860	.01390	.02940	.05470	8.49591	-1.50447	60.05250	-6.19740
-4.313	-3.978	.05490	.00680	.01380	.04000	.05540	8.63865	-1.49429	48.13310	-4.71760
-4.191	.370	.02690	.00370	.01610	.05700	.04010	8.86758	-1.71680	-2.23030	-3.09480
-3.749	4.283	-.00760	.00220	.01760	.05590	.02000	8.85276	-2.00913	-49.58920	-4.63140
-3.836	6.115	-.02130	.00050	.01590	.05620	.01320	8.85680	-2.10803	-59.10880	-6.08420
	GRADIENT	-.00754	-.00056	.00046	.00196	-.00427	.02641	-.06212	-11.82481	.01713

RUN NO. 1407/ 0 RN/L = 3.51 GRADIENT INTERVAL = -5.00/ 5.00

ALPHAO	BETAO	CNW	CBW	CTW	CHEI	CHEO	IB-ELV	OB-ELV	PHII	ALPHAI
-.491	-6.993	.11700	.01840	.03210	.01760	.05260	8.33701	-1.53501	89.99010	-6.02950
-.471	-4.853	.10600	.01800	.03330	.02750	.04660	8.47032	-1.62227	90.00370	-4.03520
-.424	-.443	.08510	.01470	.03300	.05130	.02610	8.79082	-1.92041	90.03070	.07950
-.392	3.681	.06320	.01130	.03210	.05030	.00430	8.77735	-2.23746	90.00370	3.94170
-.405	5.873	.05020	.00890	.03080	.04690	-.00240	8.73157	-2.32844	90.00370	5.98390
	GRADIENT	-.00501	-.00078	-.00014	.00270	-.00495	.03640	-.07204	.00007	.93471

IA156A, AEDC PWT 16T-470, O T S W/SILTS (R8NWD2) (27 MAY 80)

REFERENCE DATA

SREF = 2690.0000 SQ.FT. XMRP = 976.0000 IN. XT
LREF = 1290.3000 INCHES YMRP = .0000 IN. YT
BREF = 1290.3000 INCHES ZMRP = 400.0000 IN. ZT
SCALE = .0200

PARAMETRIC DATA

IB-ELV = 8.000 OB-ELV = -2.000
BDFLAP = .000 SPDBRK = .000
RUDDER = .000 SILTS = 1.000
MACH = 1.250 RN/L = 3.500

RUN NO. 1408/ 0 RN/L = 3.50 GRADIENT INTERVAL = -5.00/ 5.00

ALPHAO	BETAO	CNW	CBW	CTW	CHEI	CHEO	IB-ELV	OB-ELV	PHII	ALPHAI
4.160	-5.799	.16800	.02790	.05300	.01170	.01910	8.25755	-2.02222	-55.83020	7.16370
3.982	-3.661	.15510	.02670	.05110	.02180	.01000	8.39356	-2.15456	-44.59890	5.56550
3.771	.206	.13750	.02330	.04650	.03950	-.00320	8.63192	-2.33792	-.02180	4.05160
3.835	4.085	.11930	.02030	.04410	.03110	-.01860	8.51880	-2.52042	44.73230	5.75430
3.786	6.141	.10790	.01080	.04190	.02480	-.02130	8.43396	-2.55241	56.63960	7.25450
	GRADIENT	-.00462	-.00083	-.00090	.00120	-.00369	.01615	-.04723	11.53271	.02456

IA156A, AEDC PWT 16T-470, O T S W/SILTS (R8NWD3) (27 MAY 80)

REFERENCE DATA

SREF = 2690.0000 SQ.FT. XMRP = 976.0000 IN. XT
LREF = 1290.3000 INCHES YMRP = .0000 IN. YT
BREF = 1290.3000 INCHES ZMRP = 400.0000 IN. ZT
SCALE = .0200

PARAMETRIC DATA

IB-ELV = 8.000 OB-ELV = -2.000
BDFLAP = .000 SPDBRK = .000
RUDDER = .000 SILTS = 1.000
MACH = 1.400 RN/L = 3.500

RUN NO. 1409/ 0 RN/L = 3.00 GRADIENT INTERVAL = -5.00/ 5.00

ALPHAO	BETAO	CNW	CBW	CTW	CHEI	CHEO	IB-ELV	OB-ELV	PHII	ALPHAI
-8.086	-5.930	.00900	-.00270	-.00460	.05550	.05430	8.87486	-1.48124	40.10830	-8.46910
-8.220	-3.728	-.00190	-.00420	-.00430	.05710	.04960	8.89720	-1.55211	27.88460	-7.49330
-8.142	.230	-.02760	-.00580	-.00280	.05880	.03500	8.92093	-1.77226	.13710	-6.62980
-7.943	4.451	-.05720	-.00650	.00040	.05740	.01980	8.90139	-2.00145	-29.72540	-7.60710
-7.969	6.303	-.05970	-.00710	.00240	.05570	.01520	8.87765	-2.07081	-39.38310	-8.61600
	GRADIENT	-.00676	-.00028	.00058	.00003	-.00364	.00046	-.05493	-7.04450	-.01633

RUN NO. 1410/ 0 RN/L = 2.99 GRADIENT INTERVAL = -5.00/ 5.00

ALPHAO	BETAO	CNW	CBW	CTW	CHEI	CHEO	IB-ELV	OB-ELV	PHII	ALPHAI
-6.257	-5.962	.02780	.00110	-.00100	.05010	.04820	8.79947	-1.57322	47.99710	-7.28740
-6.163	-4.003	.02600	.00030	.00020	.05130	.04050	8.81622	-1.68933	37.44000	-6.05540
-6.200	.152	.00430	-.00150	.00300	.05350	.02310	8.84694	-1.95169	1.07510	-4.91390
-5.976	4.285	-.02240	-.00170	.00720	.04910	.00660	8.78551	-2.20048	-35.94410	-6.08820
-5.941	6.262	-.03280	-.00260	.00840	.04760	.00260	8.76456	-2.26080	-47.40790	-7.32110
	GRADIENT	-.00584	-.00024	.00084	-.00026	-.00409	-.00370	-.06167	-8.85385	-.00372

IA156A, AEDC PWT 16T-470, O T S W/SILTS (R8NWD3) (27 MAY 80)

REFERENCE DATA

SREF = 2690.0000 SQ.FT. XMRP = 976.0000 IN. XT
LREF = 1290.3000 INCHES YMRP = .0000 IN. YT
BREF = 1290.3000 INCHES ZMRP = 400.0000 IN. ZT
SCALE = .0200

PARAMETRIC DATA

IB-ELV = 8.000 OB-ELV = -2.000
BDFLAP = .000 SPDBRK = .000
RUDDER = .000 SILTS = 1.000
MACH = 1.400 RN/L = 3.500

RUN NO. 1411/ 0 RN/L = 2.99 GRADIENT INTERVAL = -5.00/ 5.00

ALPHAO	BETAO	CNW	CBW	CTW	CHEI	CHEO	IB-ELV	OB-ELV	PHII	ALPHAI
-4.076	-6.072	.05020	.00680	.00680	.04290	.03810	8.69895	-1.72551	60.95110	-6.18450
-4.353	-3.952	.04190	.00520	.00640	.04640	.02980	8.74781	-1.85066	47.69640	-4.78080
-4.200	.417	.02120	.00440	.01010	.04560	.00980	8.73664	-2.15223	-2.31140	-3.15730
-3.744	4.333	-.00770	.00430	.01530	.03910	-.00340	8.64589	-2.34177	-49.28950	-4.70360
-3.816	6.148	-.01610	.00260	.01460	.03530	-.00520	8.59284	-2.36389	-58.80260	-6.14680
	GRADIENT	-.00596	-.00011	.00107	-.00087	-.00402	-.01212	-.05947	-11.70193	.01627

RUN NO. 1412/ 0 RN/L = 2.99 GRADIENT INTERVAL = -5.00/ 5.00

ALPHAO	BETAO	CNW	CBW	CTW	CHEI	CHEO	IB-ELV	OB-ELV	PHII	ALPHAI
-.514	-7.000	.09950	.01640	.02280	.03080	.02890	8.53001	-1.86424	89.99010	-6.07520
-.487	-4.816	.08640	.01580	.02280	.03140	.02040	8.53839	-1.99240	89.99010	-4.03010
-.442	-.499	.07370	.01490	.02680	.03570	.00100	8.59842	-2.28492	90.01720	.03410
-.424	3.637	.05770	.01240	.02870	.02580	-.00950	8.46021	-2.41672	90.03070	3.93690
-.432	5.812	.04760	.01050	.02770	.01850	-.01120	8.35829	-2.43760	89.99010	5.98280
	GRADIENT	-.00339	-.00040	.00070	-.00065	-.00354	-.00908	-.05033	.00481	.94250

RUN NO. 1413/ 0 RN/L = 2.99 GRADIENT INTERVAL = -5.00/ 5.00

ALPHAO	BETAO	CNW	CBW	CTW	CHEI	CHEO	IB-ELV	OB-ELV	PHII	ALPHAI
4.136	-5.765	.14990	.02640	.04520	.01890	-.00240	8.36387	-2.32949	-56.19230	7.19580
3.993	-3.651	.13690	.02540	.04330	.02110	-.00890	8.39459	-2.40935	-44.89160	5.62770
3.759	.176	.12820	.02280	.04140	.01910	-.01750	8.36666	-2.51501	-1.09440	4.08400
3.790	4.045	.11270	.02020	.04060	.00100	-.02220	8.11396	-2.57275	44.23120	5.75870
3.737	6.120	.10300	.01810	.03930	-.00770	-.02410	8.00368	-2.59609	56.49670	7.28670
	GRADIENT	-.00315	-.00068	-.00035	-.00262	-.00173	-.03652	-.02122	11.58020	.01778

IA156A, AEDC PWT 16T-470, 0 T S W/SILTS (R8NWD4) (27 MAY 80)

REFERENCE DATA

SREF = 2690.0000 SQ.FT. XMRP = 976.0000 IN. XT
LREF = 1290.3000 INCHES YMRP = .0000 IN. YT
BREF = 1290.3000 INCHES ZMRP = 400.0000 IN. ZT
SCALE = .0200

PARAMETRIC DATA

IB-ELV = 8.000 OB-ELV = -2.000
BDFLAP = .000 SPDBRK = .000
RUDDER = .000 SILTS = 1.000
MACH = 1.550 RN/L = 3.200

RUN NO. 1414/ 0 RN/L = 3.00 GRADIENT INTERVAL = -5.00/ 5.00

ALPHAO	BETAO	CNW	CBW	CTW	CHEI	CHEO	IB-ELV	OB-ELV	PHII	ALPHAI
-8.173	-5.906	.00790	-.00280	-.00510	.05810	.03710	8.80935	-1.81080	40.11540	-8.45720
-8.310	-3.678	-.00120	-.00390	-.00480	.05730	.02960	8.79958	-1.90970	27.87750	-7.48340
-8.207	.302	-.02360	-.00490	-.00350	.04780	.01660	8.68360	-2.08111	.18590	-6.63880
-7.990	4.583	-.05810	-.00570	-.00110	.04010	.00730	8.58959	-2.20374	-29.79180	-7.63080
-7.954	6.387	-.06580	-.00620	.00010	.03920	.00530	8.57860	-2.23011	-39.30640	-8.59420
	GRADIENT	-.00690	-.00022	.00045	-.00208	-.00269	-.02538	-.03551	-6.98093	-.02053

RUN NO. 1415/ 0 RN/L = 3.00 GRADIENT INTERVAL = -5.00/ 5.00

ALPHAO	BETAO	CNW	CBW	CTW	CHEI	CHEO	IB-ELV	OB-ELV	PHII	ALPHAI
-6.355	-5.955	.02770	.00050	-.00240	.05160	.02880	8.72999	-1.92025	47.96130	-7.28540
-6.251	-3.965	.01840	-.00040	-.00180	.04920	.01850	8.70069	-2.05606	37.37560	-6.03150
-6.276	.218	.00230	-.00150	.00100	.03980	.00690	8.58592	-2.20902	1.19480	-4.92000
-5.974	4.381	-.02580	-.00170	.00370	.03220	-.00080	8.49313	-2.30860	-35.95110	-6.07030
-5.924	6.362	-.03930	-.00220	.00460	.02760	-.00190	8.43697	-2.32041	-47.43580	-7.30820
	GRADIENT	-.00529	-.00016	.00066	-.00204	-.00231	-.02487	-.03026	-8.78542	-.00442

RUN NO. 1416/ 0 RN/L = 3.00 GRADIENT INTERVAL = -5.00/ 5.00

ALPHAO	BETAO	CNW	CBW	CTW	CHEI	CHEO	IB-ELV	OB-ELV	PHII	ALPHAI
-4.193	-6.090	.04360	.00450	.00360	.04420	.01860	8.63964	-2.05474	60.85130	-6.18450
-4.448	-3.945	.03260	.00310	.00310	.04250	.01050	8.61889	-2.16155	47.72510	-4.77080
-4.285	.497	.01650	.00300	.00630	.02690	-.00330	8.42843	-2.33546	-2.23850	-3.16290
-3.718	4.433	-.00930	.00380	.01020	.01890	-.01060	8.33075	-2.41389	-49.44980	-4.67950
-3.794	6.252	-.01730	.00270	.01050	.01530	-.01090	8.28680	-2.41711	-58.87220	-6.14280
	GRADIENT	-.00497	.00008	.00084	-.00283	-.00253	-.03457	-.03031	-11.59104	.01839

RUN NO. 1417/ 0 RN/L = 3.00 GRADIENT INTERVAL = -5.00/ 5.00

ALPHAO	BETAO	CNW	CBW	CTW	CHEI	CHEO	IB-ELV	OB-ELV	PHII	ALPHAI
-.600	-7.077	.07940	.01290	.01440	.03060	.01020	8.47360	-2.16550	89.99010	-6.08220
-.575	-4.886	.07040	.01260	.01490	.02640	.00180	8.42232	-2.27627	89.99010	-4.02960
-.535	-.570	.05930	.01230	.01890	.01490	-.01160	8.28192	-2.42463	90.04430	.03220
-.523	3.572	.04540	.01160	.02270	.00300	-.01710	8 13663	-2.48372	90.01720	3.93630
-.529	5.754	.04000	.01080	.02390	-.00370	-.02030	8.05952	-2.51810	90.01720	5.98390
	GRADIENT	-.00295	-.00012	.00092	-.00277	-.00224	-.03377	-.02460	.00327	.94182

IA156A, AEDC PWT 16T-470, O T S W/SILTS (R8NWD4) (27 MAY 80)

REFERENCE DATA

SREF = 2690.0000 SQ.FT. XMRP = 976.0000 IN. XT
LREF = 1290.3000 INCHES YMRP = .0000 IN. YT
BREF = 1290.3000 INCHES ZMRP = 400.0000 IN. ZT
SCALE = .0200

PARAMETRIC DATA

IB-ELV = 8.000 OB-ELV = -2.000
BDFLAP = .000 SPDBRK = .000
RUDDER = .000 SILTS = 1.000
MACH = 1.550 RN/L = 3.200

RUN NO. 1418/ 0 RN/L = 3.00 GRADIENT INTERVAL = -5.00/ 5.00

ALPHAO	BETAO	CNW	CBW	CTW	CHEI	CHEO	IB-ELV	OB-ELV	PHII	ALPHAI
4.174	-5.670	.13260	.02390	.03590	.01140	-.01330	8.23918	-2.44290	-56.12960	7.19910
3.981	-3.537	.11860	.02290	.03400	.00450	-.01880	8.15494	-2.50199	-44.88470	5.61020
3.707	.254	.11640	.02160	.03460	-.00840	-.02320	8.00811	-2.54926	-1.23210	4.10230
3.701	4.070	.10950	.01980	.03670	-.02340	-.02640	7.84402	-2.58364	44.18820	5.77720
3.631	6.106	.09840	.01790	.03520	-.03240	-.02780	7.74556	-2.59868	56.42520	7.27890
	GRADIENT	-.00120	-.00041	.00036	-.00367	-.00100	-.04088	-.01073	11.71001	.02243

IA156A, AEDC PWT 16T-470, O T S W/SILTS (R8NWD5) (10 MAY 80)

REFERENCE DATA

SREF = 2690.0000 SQ.FT. XMRP = 976.0000 IN. XT
LREF = 1290.3000 INCHES YMRP = .0000 IN. YT
BREF = 1290.3000 INCHES ZMRP = 400.0000 IN. ZT
SCALE = .0200

PARAMETRIC DATA

IB-ELV = 8.000 OB-ELV = -2.000
BDFLAP = .000 SPDBRK = .000
RUDDER = .000 SILTS = 1.000
MACH = 1.550 RN/L = 3.200

RUN NO. 1419/ 0 RN/L = 3.00 GRADIENT INTERVAL = -5.00/ 5.00

ALPHAO	BETAO	CNW	CBW	CTW	CHEI	CHEO	IB-ELV	OB-ELV	PHII	ALPHAI	MACH
-8.336	-5.820	.00450	-.00300	-.00610	.05830	.03780	8.39810	-2.04940	39.12810	-8.52860	1.54830
-8.337	-3.710	.00070	-.00390	-.00500	.05710	.02960	8.39480	-2.10130	27.96310	-7.51900	1.55090
-8.188	.540	-.02020	-.00510	-.00320	.04650	.01560	8.34370	-2.19210	-1.57820	-6.63480	1.55190
-7.992	4.474	-.05400	-.00570	-.00120	.04030	.00750	8.31180	-2.24480	-29.15280	-7.59130	1.55000
-7.957	6.376	-.06040	-.00630	.00030	.03910	.00540	8.30420	-2.25910	-39.26460	-8.59020	1.54830
	GRADIENT	-.00666	-.00022	.00046	-.00206	-.00271	-.01017	-.01759	-6.97902	-.00593	-.00011

IA156A, AEDC PWT 16T-470, O T S W/SILTS (R8NWD6) (27 MAY 80)

REFERENCE DATA

SREF = 2690.0000 SQ.FT. XMRP = 976.0000 IN. XT
LREF = 1290.3000 INCHES YMRP = .0000 IN. YT
BREF = 1290.3000 INCHES ZMRP = 400.0000 IN. ZT
SCALE = .0200

PARAMETRIC DATA

IB-ELV = 10.000 OB-ELV = -2.000
BDFLAP = .000 SPDBRK = .000
RUDDER = .000 SILTS = 1.000
MACH = 1.150 RN/L = 3.500

RUN NO. 1432/ 0 RN/L = 3.50 GRADIENT INTERVAL = -5.00/ 5.00

ALPHAO	BETAO	CNW	CBW	CTW	CHEI	CHEO	IB-ELV	OB-ELV	PHII	ALPHAI
-8.038	-5.907	-.00890	-.00490	.00160	.00740	.05340	10.11627	-1.54974	40.07250	-8.33810
-8.227	-3.794	-.02140	-.00720	.00020	.01820	.05400	10.25677	-1.54131	28.09860	-7.43980
-8.153	.354	-.04750	-.00970	-.00010	.04420	.05380	10.59500	-1.54412	-1.25320	-6.54360
-7.957	4.313	-.06790	-.01030	.00050	.05230	.05730	10.70038	-1.49494	-29.49150	-7.46160
-7.971	6.241	-.07310	-.01070	.00090	.05550	.06010	10.74200	-1.45561	-39.65520	-8.51470
	GRADIENT	-.00574	-.00038	.00004	.00422	.00040	.05493	.00567	-7.10370	-.00095

RUN NO. 1433/ 0 RN/L = 3.50 GRADIENT INTERVAL = -5.00/ 5.00

ALPHAO	BETAO	CNW	CBW	CTW	CHEI	CHEO	IB-ELV	OB-ELV	PHII	ALPHAI
-6.187	-5.974	.02940	.00130	.00960	.00030	.05210	10.02390	-1.56800	48.15460	-7.19730
-6.100	-4.044	.01890	-.00070	.00970	.01070	.05430	10.15920	-1.53709	37.75460	-5.96590
-6.207	.105	-.01760	-.00500	.00750	.04070	.05550	10.54947	-1.52023	.95010	-4.84590
-6.019	4.250	-.03610	-.00620	.00760	.04790	.06070	10.64314	-1.44718	-36.19530	-6.03650
-5.950	6.204	-.04510	-.00670	.00760	.05050	.05360	10.67696	-1.54693	-47.67970	-7.23790
	GRADIENT	-.00663	-.00066	-.00025	.00449	.00077	.05835	.01084	-8.91617	-.00847

RUN NO. 1434/ 0 RN/L = 3.50 GRADIENT INTERVAL = -5.00/ 5.00

ALPHAO	BETAO	CNW	CBW	CTW	CHEI	CHEO	IB-ELV	OB-ELV	PHII	ALPHAI
-4.105	-6.088	.06320	.00880	.02120	-.00250	.05280	9.99086	-1.53817	60.52330	-6.16860
-4.305	-3.979	.04620	.00550	.01860	.00950	.05620	10.14359	-1.51040	47.84680	-4.72670
-4.201	.370	.00820	.00070	.01600	.03810	.06140	10.51565	-1.43734	-2.53910	-3.10800
-3.751	4.297	-.01970	-.00060	.01670	.04360	.04790	10.58720	-1.6270:	-49.79820	-4.64750
-3.849	6.117	-.02780	-.00190	.01550	.04650	.03970	10.62492	-1.74222	-59.03220	-6.10700
	GRADIENT	-.00798	-.00074	-.00024	.00416	-.00096	.05417	-.01354	-11.79536	.01604

RUN NO. 1435/ 0 RN/L = 3.50 GRADIENT INTERVAL = -5.00/ 5.00

ALPHAO	BETAO	CNW	CBW	CTW	CHEI	CHEO	IB-ELV	OB-ELV	PHII	ALPHAI
-.465	-7.059	.12140	.01990	.03780	-.00790	.05780	9.92792	-1.48792	89.99010	-6.09010
-.441	-4.843	.10570	.01800	.03680	.00070	.06230	10.02911	-1.42470	90.00370	-4.03570
-.409	-.455	.08110	.01340	.03410	.03240	.04840	10.44149	-1.61999	90.01720	.07380
-.377	3.670	.05060	.00900	.03140	.03630	.02450	10.49223	-1.95578	90.01720	3.94330
-.377	5.843	.03690	.00670	.02890	.04060	.01290	10.54817	-2.11876	89.99010	5.97630
	GRADIENT	-.00646	-.00106	-.00063	.00421	-.00443	.05482	-.06220	.00160	.93729

IA156A, AEDC PWT 16T-470, O T S W/SILTS (R8NWD6) (27 MAY 80)

REFERENCE DATA

SREF = 2690.0000 SQ.FT. XMRP = 976.0000 IN. XT
LREF = 1290.3000 INCHES YMRP = .0000 IN. YT
BREF = 1290.3000 INCHES ZMRP = 400.0000 IN. ZT
SCALE = .0200

PARAMETRIC DATA

IB-ELV = 10.000 OB-ELV = -2.000
BDFLAP = .000 SPDBRK = .000
RUDDER = .000 SILTS = 1.000
MACH = 1.150 RN/L = 3.500

RUN NO. 1436/ 0 RN/L = 3.50 GRADIENT INTERVAL = -5.00/ 5.00

ALPHAO	BETAO	CNW	CBW	CTW	CHEI	CHEO	IB-ELV	OB-ELV	PHII	ALPHAI
3.986	-5.876	.17110	.02890	.05590	-.01140	.04210	9.88712	-1.70850	-57.17390	7.15370
4.011	-3.800	.16080	.02750	.05360	-.00380	.03190	9.97571	-1.85181	-45.28200	5.68660
3.888	.183	.13860	.02310	.04700	.02020	.01600	10.28278	-2.07520	-.06670	4.17190
3.833	3.991	.11780	.01930	.04340	.02270	-.00210	10.31531	-2.32404	44.22400	5.70950
3.791	6.099	.10350	.01660	.04110	.02560	-.01050	10.35303	-2.42020	56.61100	7.24230
	GRADIENT	-.00552	-.00105	-.00131	.00342	-.00436	.04384	-.06058	11.48704	-.00000

IA156A, AEDC PWT 16T-470, O T S W/SILTS (R8NWD7) (27 MAY 80)

REFERENCE DATA

SREF = 2690.0000 SQ.FT. XMRP = 976.0000 IN. XT
LREF = 1290.3000 INCHES YMRP = .0000 IN. YT
BREF = 1290.3000 INCHES ZMRP = 400.0000 IN. ZT
SCALE = .0200

PARAMETRIC DATA

IB-ELV = 10.000 OB-ELV = -2.000
BDFLAP = .000 SPDBRK = .000
RUDDER = .000 SILTS = 1.000
MACH = 1.250 RN/L = 3.500

RUN NO. 1437/ 0 RN/L = 3.50 GRADIENT INTERVAL = -5.00/ 5.00

ALPHAO	BETAO	CNW	CBW	CTW	CHEI	CHEO	IB-ELV	OB-ELV	PHII	ALPHAI
-8.206	-5.869	-.00190	-.00310	-.00340	.02470	.05150	10.35262	-1.55101	39.42140	-8.40560
-8.220	-3.786	-.00700	-.00480	-.00230	.03100	.05120	10.43745	-1.55537	28.21260	-7.39630
-8.123	.183	-.03430	-.00730	.00090	.04910	.05300	10.68119	-1.52919	.16350	-6.49600
-7.968	4.350	-.05570	-.00840	.00340	.04930	.04370	10.68388	-1.66445	-29.55780	-7.46750
-7.961	6.231	-.06090	-.00940	.00420	.04910	.03610	10.68119	-1.77498	-39.59240	-8.45920
	GRADIENT	-.00598	-.00044	.00070	.00223	-.00093	.03004	-.01356	-7.10077	-.01061

RUN NO. 1438/ 0 RN/L = 3.50 GRADIENT INTERVAL = -5.00/ 5.00

ALPHAO	BETAO	CNW	CBW	CTW	CHEI	CHEO	IB-ELV	OB-ELV	PHII	ALPHAI
-6.190	-5.956	.03840	.00280	.00430	.01810	.05150	10.26374	-1.55101	48.26920	-7.16170
-6.130	-4.040	.03270	.00140	.00550	.02640	.05350	10.37551	-1.52192	37.79750	-5.96300
-6.210	.123	.00140	-.00230	.00780	.04390	.04980	10.61117	-1.57573	98440	-4.83590
-5.993	4.254	-.01900	-.00400	.01050	.04370	.03350	10.60847	-1.81279	-36.20920	-5.99970
-5.966	6.246	-.03070	-.00520	.01020	.04280	.02400	10.59635	-1.95096	-47.74940	-7.23990
	GRADIENT	-.00623	-.00065	.00060	.00209	-.00241	.02813	-.03504	-8.92249	-.00406

IA156A, AEDC PWT 16T-470, O T S W/SILTS (R8NWD7) (27 MAY 80)

REFERENCE DATA

SREF = 2690.0000 SQ.FT. XMRP = 976.0000 IN. XT
LREF = 1290.3000 INCHES YMRP = .0000 IN. YT
BREF = 1290.3000 INCHES ZMRP = 400.0000 IN. ZT
SCALE = .0200

PARAMETRIC DATA

IB-ELV = 10.000 OB-ELV = -2.000
BDFLAP = .000 SPDBRK = .000
RUDDER = .000 SILTS = 1.000
MACH = 1.250 RN/L = 3.500

RUN NO. 1439/ 0 RN/L = 3.50 GRADIENT INTERVAL = -5.00/ 5.00

ALPHAO	BETAO	CNW	CBW	CTW	CHEI	CHEO	IB-ELV	OB-ELV	PHII	ALPHAI
-4.099	-6.084	.06900	.00920	.01460	.01250	.05430	10.18833	-1.51029	60.76570	-6.14280
-4.302	-3.965	.05870	.00710	.01410	.02440	.05430	10.34858	-1.51029	47.99000	-4.70260
-4.205	.380	.02850	.00360	.01520	.03830	.03990	10.53576	-1.71971	-2.36860	-3.09890
-3.753	4.301	.00010	.00230	.01700	.03640	.01970	10.51017	-2.01349	-49.72850	-4.63440
-3.869	6.159	-.01330	.00050	.01590	.03600	.01260	10.50478	-2.11675	-59.08090	-6.12390
	GRADIENT	-.00709	-.00058	.00035	.00148	-.00417	.01997	-.06065	-11.81769	.01475

RUN NO. 1440/ 0 RN/L = 3.50 GRADIENT INTERVAL = -5.00/ 5.00

ALPHAO	BETAO	CNW	CBW	CTW	CHEI	CHEO	IB-ELV	OB-ELV	PHII	ALPHAI
-.487	-7.095	.12360	.01920	.03100	.00140	.05260	10.03885	-1.53501	89.99010	-6.11200
-.460	-4.831	.10920	.01820	.03090	.01250	.04520	10.18833	-1.64263	90.00370	-4.01500
-.418	-.484	.09030	.01520	.03110	.03340	02590	10.46977	-1.92332	90.01720	.04960
-.391	3.669	.06590	.01160	.03020	.03140	.00460	10.44284	-2.23310	90.03070	3.93900
-.399	5.848	.05360	.00910	.02870	.02730	-.00260	10.38763	-2.33081	89.97660	5.96970
	GRADIENT	-.00509	-.00078	-.00008	.00224	-.00477	.03021	-.06942	.00318	.93570

RUN NO. 1441/ 0 RN/L = 3.50 GRADIENT INTERVAL = -5.00/ 5.00

ALPHAO	BETAO	CNW	CBW	CTW	CHEI	CHEO	IB-ELV	OB-ELV	PHII	ALPHAI
3.994	-5.859	.16790	.02860	.04900	-.00200	.02020	9.99587	-2.00622	-57.24350	7.12940
4.009	-3.789	.16030	.02760	.04800	.00590	.01000	10.09945	-2.15456	-45.42140	5.66590
3.884	.192	.14320	.02420	.04370	.02050	-.00490	10.29606	-2.35807	-.23480	4.15510
3.812	3.991	.12170	.02070	.04150	.01310	-.01840	10.19641	-2.51805	44.18820	5.67900
3.781	6.115	.10970	.01810	.04000	.00660	-.02190	10.10888	-2.55952	56.55390	7.24120
	GRADIENT	-.00496	-.00089	-.00084	.00095	-.00365	.01276	-.04675	11.51601	-.00136

IA156A, AEDC PWT 16T-470, O T S W/SILTS (R8NWD8) (27 MAY 80)

REFERENCE DATA

SREF = 2690.0000 SQ.FT. XMRP = 976.0000 IN. XT
LREF = 1290.3000 INCHES YMRP = .0000 IN. YT
BREF = 1290.3000 INCHES ZMRP = 400.0000 IN. ZT
SCALE = .0200

PARAMETRIC DATA

IB-ELV = 10.000 OB-ELV = -2.000
BDFLAP = .000 SPDBRK = .000
RUDDER = .000 SILTS = 1.000
MACH = 1.400 RN/L = 3.500

RUN NO. 1442/ 0 RN/L = 3.00 GRADIENT INTERVAL = -5.00/ 5.00

ALPHAO	BETAO	CNW	CBW	CTW	CHEI	CHEO	IB-ELV	OB-ELV	PHII	ALPHAI
-8.250	-5.867	.00100	-.00290	-.00510	.04000	.05400	10.57846	-1.48577	39.22110	-8.54060
-8.255	-3.766	-.00350	-.00410	-.00410	.04210	.04930	10.60778	-1.55664	28.00590	-7.52590
-8.143	.441	-.02890	-.00590	-.00140	.04130	.03300	10.59661	-1.80241	-1.46340	-6.63880
-7.980	4.369	-.05170	-.00640	.00090	.03860	.01900	10.55891	-2.01351	-29.11790	-7.58630
-7.971	6.295	-.05590	-.00700	.00290	.03670	.01410	10.53239	-2.08740	-39.30640	-8.61010
	GRADIENT	-.00593	-.00028	.00061	-.00043	-.00373	-.00597	-.05619	-7.02187	-.00485

RUN NO. 1443/ 0 RN/L = 3.00 GRADIENT INTERVAL = -5.00/ 5.00

ALPHAO	BETAO	CNW	CBW	CTW	CHEI	CHEO	IB-ELV	OB-ELV	PHII	ALPHAI
-6.241	-5.956	.02630	.00150	-.00090	.03460	.04660	10.50307	-1.59735	47.96130	-7.27750
-6.180	-4.023	.02380	.00050	.00020	.03640	.03940	10.52820	-1.70591	37.47570	-6.06930
-6.214	.163	.00320	-.00110	.00250	.03570	.02160	10.51842	-1.97431	.95360	-4.92300
-6.015	4.296	-.01440	-.00180	.00710	.03080	.00600	10.45001	-2.20953	-35.82550	-6.11200
-5.715	6.376	-.02480	-.00200	.00950	.02630	.00050	10.38719	-2.29246	-49.01770	-7.26760
	GRADIENT	-.00459	-.00028	.00083	-.00067	-.00402	-.00938	-.06055	-8.81175	-.00455

RUN NO. 1444/ 0 RN/L = 3.00 GRADIENT INTERVAL = -5.00/ 5.00

ALPHAO	BETAO	CNW	CBW	CTW	CHEI	CHEO	IB-ELV	OB-ELV	PHII	ALPHAI
-4.136	-6.072	.05220	.00680	.00690	.02830	.03710	10.41511	-1.74059	60.50900	-6.20530
-4.348	-3.959	.04630	.00540	.00690	.03150	.02860	10.45979	-1.86876	47.68210	-4.77980
-4.211	.422	.02710	.00440	.01000	.02820	.00880	10.41371	-2.16731	-2.36790	-3.16190
-3.760	4.343	.00130	.00420	.01480	.02060	-.00370	10.30761	-2.34546	-49.26170	-4.70860
-3.823	6.170	-.00680	.00250	.01410	.01540	-.00530	10.23501	-2.36512	-58.85130	-6.15470
	GRADIENT	-.00540	-.00015	.00095	-.00130	-.00390	-.01818	-.05763	-11.67168	.01560

RUN NO. 1445/ 0 RN/L = 3.00 GRADIENT INTERVAL = -5.00/ 5.00

ALPHAO	BETAO	CNW	CBW	CTW	CHEI	CHEO	IB-ELV	OB-ELV	PHII	ALPHAI
-.508	-6.973	.09930	.01690	.02150	.01640	.02810	10.24897	-1.87630	89.97660	-6.03050
-.475	-4.828	.09050	.01630	.02190	.01790	.01920	10.26991	-2.01050	89.99010	-4.03260
-.432	-.493	.08180	.01520	.02550	.01890	.00010	10.28387	-2.29849	90.03070	.04960
-.415	3.629	.06340	.01280	.02730	.00670	-.00990	10.11354	-2.42163	90.04430	3.93740
-.423	5.806	.05420	.01070	.02630	-.00070	-.01170	10.01124	-2.44375	89.97660	5.98280
	GRADIENT	-.00319	-.00041	.00064	-.00131	-.00345	-.01830	-.04877	.00643	.94247

IA156A, AEDC PWT 16T-470, O T S W/SILTS (R8NWD8) (27 MAY 80)

REFERENCE DATA

SREF = 2690.0000 SQ.FT. XMRP = 976.0000 IN. XT
LREF = 1290.3000 INCHES YMRP = .0000 IN. YT
BREF = 1290.3000 INCHES ZMRP = 400.0000 IN. ZT
SCALE = .0200

PARAMETRIC DATA

IB-ELV = 10.000 OB-ELV = -2.000
BDFLAP = .000 SPDBRK = .000
RUDDER = .000 SILTS = 1.000
MACH = 1.400 RN/L = 3.500

RUN NO. 1446/ 0 RN/L = 3.00 GRADIENT INTERVAL = -5.00/ 5.00

ALPHAO	BETAO	CNW	CBW	CTW	CHEI	CHEO	IB-ELV	OB-ELV	PHII	ALPHAI
4.022	-5.839	.15200	.02670	.04230	.00600	-.00220	10.10377	-2.32703	-57.30610	7.19800
4.000	-3.722	.14230	.02590	.04080	.00650	-.00960	10.11075	-2.41795	-45.43540	5.68010
3.874	.227	.13700	.02340	.03900	-.00010	-.01860	10.01875	-2.52852	-.27700	4.19670
3.761	4.009	.11920	.02040	.03860	-.01660	-.02270	9.81234	-2.57889	44.19540	5.71830
3.736	6.121	.11080	.01830	.03780	-.02470	-.02440	9.71102	-2.59978	56.51100	7.29110
	GRADIENT	-.00298	-.00071	-.00029	-.00298	-.00170	-.03849	-.02087	11.59298	.00215

IA156A, AEDC PWT 16T-470, O T S W/SILTS (R8NWD9) (27 MAY 80)

REFERENCE DATA

SREF = 2690.0000 SQ.FT. XMRP = 976.0000 IN. XT
LREF = 1290.3000 INCHES YMRP = .0000 IN. YT
BREF = 1290.3000 INCHES ZMRP = 400.0000 IN. ZT
SCALE = .0200

PARAMETRIC DATA

IB-ELV = 10.000 OB-ELV = -2.000
BDFLAP = .000 SPDBRK = .000
RUDDER = .000 SILTS = 1.000
MACH = 1.550 RN/L = 3.200

RUN NO. 1447/ 0 RN/L = 3.00 GRADIENT INTERVAL = -5.00/ 5.00

ALPHAO	BETAO	CNW	CBW	CTW	CHEI	CHEO	IB-ELV	OB-ELV	PHII	ALPHAI
-8.341	-5.829	.00120	-.00270	-.00540	.04380	.03690	10.55476	-1.81344	39.11380	-8.53860
-8.341	-3.718	-.00170	-.00380	-.00390	.04270	.02870	10.54133	-1.92157	27.98450	-7.52790
-8.201	.507	-.02120	-.00500	-.00220	.03080	.01520	10.39604	-2.09958	-1.36710	-6.63880
-7.997	4.485	-.05020	-.00570	-.00020	.02320	.00670	10.30325	-2.21165	-29.20520	-7.59320
-7.962	6.384	-.05490	-.00630	.00080	.02130	.00470	10.28005	-2.23803	-39.29240	-8.59220
	GRADIENT	-.00590	-.00023	.00045	-.00238	-.00269	-.02908	-.03543	-6.97165	-.00572

RUN NO. 1448/ 0 RN/L = 3.00 GRADIENT INTERVAL = -5.00/ 5.00

ALPHAO	BETAO	CNW	CBW	CTW	CHEI	CHEO	IB-ELV	OB-ELV	PHII	ALPHAI
-6.352	-5.969	.02610	.00070	-.00180	.03780	.02820	10.48150	-1.92816	47.96850	-7.28740
-6.254	-3.972	.02110	-.00040	-.00080	.03510	.01780	10.44854	-2.06529	37.38990	-6.03650
-6.281	.234	.00640	-.00130	.00170	.02360	.00590	10.30814	-2.22220	1.05570	-4.92200
-6.011	4.388	-.01360	-.00180	.00440	.01540	-.00140	10.20802	-2.31504	-35.81850	-6.09510
-5.699	6.475	-.02260	-.00180	.00610	.00830	-.00360	10.12134	-2.33868	-49.03170	-7.26170
	GRADIENT	-.00415	-.00017	.00062	-.00236	-.00230	-.02878	-.02989	-8.75611	-.00644

IA156A, AEDC PWT 16T-470, O T S W/SILTS (R8NWD9) (27 MAY 80)

REFERENCE DATA

SREF = 2690.0000 SQ.FT. XMRP = 976.0000 IN. XT
LREF = 1290.3000 INCHES YMRP = .0000 IN. YT
BREF = 1290.3000 INCHES ZMRP = 400.0000 IN. ZT
SCALE = .0200

PARAMETRIC DATA

IB-ELV = 10.000 OB-ELV = -2.000
BDFLAP = .000 SPDBRK = .000
RUDDER = .000 SILTS = 1.000
MACH = 1.550 RN/L = 3.200

RUN NO. 1449/ 0 RN/L = 3.00 GRADIENT INTERVAL = -5.00/ 5.00

ALPHAO	BETAO	CNW	CBW	CTW	CHEI	CHEO	IB-ELV	OB-ELV	PHII	ALPHAI
-4.424	-6.026	.04260	.00400	.00310	.03230	.01910	10.41435	-2.04815	59.08210	-6.23810
-4.414	-3.939	.03520	.00320	.00380	.02850	.00980	10.36796	-2.17078	47.85390	-4.74070
-4.287	.512	.02260	.00310	.00690	.01130	-.00380	10.15796	-2.34083	-2.50180	-3.16490
-3.740	4.453	-.00080	.00380	.01070	.00220	-.01120	10.04686	-2.42033	-49.40100	-4.70460
-3.791	6.260	-.00450	.00260	.01070	-.00210	-.01150	9.99703	-2.42356	-58.87220	-6.14180
	GRADIENT	-.00426	.00007	.00082	-.00315	-.00251	-.03846	-.02992	-11.58375	.01182

RUN NO. 1450/ 0 RN/L = 3.00 GRADIENT INTERVAL = -5.00/ 5.00

ALPHAO	BETAO	CNW	CBW	CTW	CHEI	CHEO	IB-ELV	OB-ELV	PHII	ALPHAI
-.592	-7.039	.08690	.01340	.01400	.01770	.00980	10.23610	-2.17078	90.00370	-6.03050
-.569	-4.878	.07290	.01290	.01360	.01370	.00080	10.18726	-2.28945	89.99010	-4.01450
-.531	-.603	.06420	.01240	.01770	.00090	- 01210	10.03099	-2.43000	90.03070	.00730
-.520	3.619	.05130	.01190	.02160	-.01300	-.01740	9.87779	-2.48695	90.03070	3.99020
-.523	5.747	.04900	.01090	.02320	-.02020	-.02080	9.79902	-2.52348	89.99010	5.98500
	GRADIENT	-.00254	-.00012	.00094	-.00314	-.00214	-.03643	-.02326	.00479	.94214

RUN NO. 1451/ 0 RN/L = 3.00 GRADIENT INTERVAL = -5.00/ 5.00

ALPHAO	BETAO	CNW	CBW	CTW	CHEI	CHEO	IB-ELV	OB-ELV	PHII	ALPHAI
4.053	-5.739	.13510	.02410	.03330	.00040	-.01340	10.02488	-2.44397	-57.29220	7.19580
4.017	-3.533	.12400	.02370	.03230	-.00770	-.01970	9.93577	-2.51166	-44.69650	5.63420
3.669	.302	.12190	.02210	.03250	-.02300	-.02380	9.76839	-2.55571	-.50140	4.07370
3.689	4.100	.11180	.02000	.03410	-.03720	-.02700	9.61306	-2.59009	44.48890	5.80130
3.621	6.097	.10400	.01820	.03370	-.04730	-.02810	9.50257	-2.60191	56.48240	7.27230
	GRADIENT	-.00160	-.00048	.00024	-.00387	-.00096	-.04229	-.01028	11.68531	.02121

IA156A, AEDC PWT 16T-470, O T S W/SILTS (R8NWE0) (27 MAY 80)

REFERENCE DATA

SREF = 2690.0000 SQ.FT. XMRP = 976.0000 IN. XT
LREF = 1290.3000 INCHES YMRP = .0000 IN. YT
BREF = 1290.3000 INCHES ZMRP = 400.0000 IN. ZT
SCALE = .0200

PARAMETRIC DATA

IB-ELV = 10.000 OB-ELV = -7.000
BDFLAP = .000 SPDBRK = .000
RUDDER = .000 SILTS = 1.000
MACH = 1.400 RN/L = 3.500

RUN NO. 1456/ 0 RN/L = 3.00 GRADIENT INTERVAL = -5.00/ 5.00

ALPHAO	BETAO	CNW	CBW	CTW	CHEI	CHEO	IB-ELV	OB-ELV	PHII	ALPHAI
-8.242	-5.844	-.00180	-.00410	-.00620	.04270	.07600	10.61615	-5.73404	39.17810	-8.51670
-8.256	-3.761	-.00240	-.00550	-.00460	.04430	.07240	10.63849	-5.78833	28.00590	-7.51900
-8.139	.453	-.02920	-.00730	-.00210	.04370	.05520	10.63012	-6.04767	-1.56900	-6.62890
-7.986	4.388	-.05110	-.00800	.00060	.04080	.04070	10.58963	-6.26631	-29.25060	-7.59420
-7.939	6.270	-.05520	-.00850	.00210	.03860	.03570	10.55891	-6.34170	-39.34830	-8.57030
	GRADIENT	-.00598	-.00031	.00064	-.00043	-.00389	-.00595	-.05869	-7.02627	-.00662

RUN NO. 1457/ 0 RN/L = 3.00 GRADIENT INTERVAL = -5.00/ 5.00

ALPHAO	BETAO	CNW	CBW	CTW	CHEI	CHEO	IB-ELV	OB-ELV	PHII	ALPHAI
-6.246	-5.958	.02760	.00010	-.00190	.03730	.06930	10.54076	-5.83507	48.01140	-7.26860
-6.159	-3.997	.02040	-.00060	-.00110	.03830	.06220	10.55472	-5.94213	37.44710	-6.02760
-6.233	.171	.00310	-.00240	.00180	.03870	.04270	10.56031	-6.23615	.84970	-4.93400
-5.970	4.276	-.01250	-.00290	.00590	.03240	.02610	10.47235	-6.48645	-35.94410	-6.06830
-5.944	6.275	-.02480	-.00350	.00650	.02990	.02210	10.43745	-6.54677	-47.44280	-7.33000
	GRADIENT	-.00398	-.00028	.00085	-.00071	-.00436	-.00993	-.06581	-8.87137	-.00423

RUN NO. 1458/ 0 RN/L = 3.00 GRADIENT INTERVAL = -5.00/ 5.00

ALPHAO	BETAO	CNW	CBW	CTW	CHEI	CHEO	IB-ELV	OB-ELV	PHII	ALPHAI
-4.124	-6.083	.05170	.00560	.00590	.03030	.05920	10.44303	-5.98736	60.68020	-6.20040
-4.343	-3.951	.04690	.00420	.00620	.03360	.05080	10.48910	-6.11402	47.72510	-4.76270
-4.224	.410	.02780	.00320	.00920	.02990	.02950	10.43745	-6.43519	-2.30240	-3.16590
-3.733	4.330	.00190	.00300	.01370	.02240	.01550	10.33274	-6.64629	-49.44980	-4.68760
-3.839	6.188	-.00730	.00130	.01320	.01770	.01420	10.26712	-6.66589	-58.86520	-6.17950
	GRADIENT	-.00541	-.00015	.00090	-.00134	-.00427	-.01875	-.06445	-11.72957	.01576

RUN NO. 1459/ 0 RN/L = 3.00 GRADIENT INTERVAL = -5.00/ 5.00

ALPHAO	BETAO	CNW	CBW	CTW	CHEI	CHEO	IB-ELV	OB-ELV	PHII	ALPHAI
-.517	-6.972	.10210	.01550	.02140	.01810	.04960	10.27270	-6.13211	89.97660	-6.02860
-.485	-4.840	.09360	.01500	.02100	.01900	.03970	10.28527	-6.28139	89.97660	-4.04170
-.440	-.487	.08380	.01390	.02480	.02010	.01980	10.30063	-6.58145	90.04430	.05810
-.422	3.622	.06500	.01140	.02640	.00810	.00940	10.13309	-6.73826	90.03070	3.93530
-.437	5.801	.05310	.00920	.02540	.00160	.00810	10.04234	-6.75787	90.00370	5.98060
	GRADIENT	-.00337	-.00042	.00064	-.00127	-.00359	-.01777	-.05414	.00648	.94262

IA156A, AEDC PWT 16T-470, O T S W/SILTS (R8NWE0) (27 MAY 80)

REFERENCE DATA

SREF = 2690.0000 SQ.FT. XMRP = 976.0000 IN. XT
LREF = 1290.3000 INCHES YMRP = .0000 IN. YT
BREF = 1290.3000 INCHES ZMRP = 400.0000 IN. ZT
SCALE = .0200

PARAMETRIC DATA

IB-ELV = 10.000 OB-ELV = -7.000
BDFLAP = .000 SPDBRK = .000
RUDDER = .000 SILTS = 1.000
MACH = 1.400 RN/L = 3.500

RUN NO. 1460/ 0 RN/L = 3.00 GRADIENT INTERVAL = -5.00/ 5.00

ALPHAO	BETAO	CNW	CBW	CTW	CHEI	CHEO	IB-ELV	OB-ELV	PHII	ALPHAI
4.136	-5.767	.15550	.02580	.04290	.00660	.01490	10.11215	-6.65533	-56.19230	7.20250
4.003	-3.658	.14350	.02490	.04010	.00810	.00820	10.13309	-6.75636	-44.87770	5.64290
3.743	.171	.13650	.02220	.03840	.00370	.00050	10.07166	-6.87246	-1.15380	4.08020
3.776	4.050	.11830	.01940	.03730	-.01540	-.00330	9.82735	-6.92054	44.36000	5.76200
3.733	6.110	.11230	.01740	.03700	-.02370	-.00490	9.72353	-6.94020	56.46810	7.28560
	GRADIENT	-.00327	-.00071	-.00036	-.00305	-.00149	-.03971	-.02128	11.57777	.01635

IA156A, AEDC PWT 16T-470, O T S W/SILTS (R8NWE1) (27 MAY 80)

REFERENCE DATA

SREF = 2690.0000 SQ.FT. XMRP = 976.0000 IN. XT
LREF = 1290.3000 INCHES YMRP = .0000 IN. YT
BREF = 1290.3000 INCHES ZMRP = 400.0000 IN. ZT
SCALE = .0200

PARAMETRIC DATA

IB-ELV = 10.000 OB-ELV = -7.000
BDFLAP = .000 SPDBRK = .000
RUDDER = .000 SILTS = 1.000
MACH = 1.550 RN/L = 3.200

RUN NO. 1461/ 0 RN/L = 3.00 GRADIENT INTERVAL = -5.00/ 5.00

ALPHAO	BETAO	CNW	CBW	CTW	CHEI	CHEO	IB-ELV	OB-ELV	PHII	ALPHAI
-8.270	-5.810	.01150	-.00410	-.00480	.04670	.05540	10.59017	-6.14950	39.30690	-8.46510
-8.315	-3.812	.00190	-.00500	-.00440	.04550	.04830	10.57552	-6.24312	28.62620	-7.52690
-8.210	.409	-.03070	-.00550	-.00410	.03250	.03340	10.41680	-6.43959	-.68310	-6.63580
-8.018	4.364	-.05210	-.00660	-.00100	.02440	.02620	10.31790	-6.53453	-28.47550	-7.54370
-7.967	6.384	-.05550	-.00740	.00100	.02220	.02420	10.29104	-6.56090	-39.32730	-8.59020
	GRADIENT	-.00662	-.00019	.00041	-.00259	-.00271	-.03157	-.03576	-6.98284	.00034

RUN NO. 1462/ 0 RN/L = 3.00 GRADIENT INTERVAL = -5.00/ 5.00

ALPHAO	BETAO	CNW	CBW	CTW	CHEI	CHEO	IB-ELV	OB-ELV	PHII	ALPHAI
-6.355	-5.967	.02740	-.00060	-.00230	.03990	.04630	10.50714	-6.26949	48.00430	-7.28640
-6.251	-3.988	.02140	-.00130	-.00170	.03700	.03570	10.47174	-6.40926	37.52580	-6.03350
-6.282	.238	.00770	-.00240	.00130	.02440	.02360	10.31790	-6.56881	.96940	-4.91290
-6.006	4.395	-.01400	-.00290	.00390	.01640	.01760	10.22023	-6.64793	-35.94410	-6.08820
-5.825	6.502	-.02560	-.00310	.00590	.00960	.01640	10.13721	-6.66375	-48.58570	-7.34980
	GRADIENT	-.00422	-.00019	.00067	-.00246	-.00216	-.03002	-.02850	-8.76393	-.00576

IA156A, AEDC PWT 16T-470, O T S W/SILTS (R8NWE1) (27 MAY 80)

REFERENCE DATA

SREF = 2690.0000 SQ.FT. XMRP = 976.0000 IN. XT
LREF = 1290.3000 INCHES YMRP = .0000 IN. YT
BREF = 1290 3000 INCHES ZMRP = 400.0000 IN. ZT
SCALE = .0200

PARAMETRIC DATA

IB-ELV = 10.000 OB-ELV = -7.000
BDFLAP = .000 SPDBRK = .000
RUDDER = .000 SILTS = 1.000
MACH = 1.550 RN/L = 3.200

RUN NO. 1463/ 0 RN/L = 3.00 GRADIENT INTERVAL = -5.00/ 5.00

ALPHAO	BETAO	CNW	CBW	CTW	CHEI	CHEO	IB-ELV	OB-ELV	PHII	ALPHAI
-4.320	-6.108	.04230	.00320	.00350	.03360	.03640	10.43023	-6.40003	60.12390	-6.24800
-4.449	-3.954	.03480	.00220	.00310	.02990	.02740	10.38505	-6.51871	47.80380	-4.76270
-4.278	.503	.01930	.00230	.00680	.01200	.01350	10.16651	-6.70199	-2.39940	-3.14710
-3.731	4.446	-.00720	.00270	.01050	.00310	.00760	10.05785	-6.77979	-49.49860	-4.68560
-3.795	6.261	-.01040	.00160	.01080	-.00140	.00800	10.00468	-6.77451	-58.90690	-6.14180
	GRADIENT	-.00497	.00006	.00088	-.00321	-.00237	-.03917	-.03130	-11.57767	.01682

RUN NO. 1464/ 0 RN/L = 3.00 GRADIENT INTERVAL = -5.00/ 5.00

ALPHAO	BETAO	CNW	CBW	CTW	CHEI	CHEO	IB-ELV	OB-ELV	PHII	ALPHAI
-.608	-7.094	.08580	.01220	.01400	.01940	.02760	10.25686	-6.51607	89.97660	-6.08520
-.577	-4.908	.07700	.01160	.01390	.01460	.01800	10.19825	-6.64265	90.00370	-4.03970
-.543	-.585	.06450	.01130	.01740	.00180	.00550	10.04198	-6.80748	90.03070	.02700
-.530	3.568	.04990	.01080	.02140	-.01190	.00080	9.88982	-6.86945	90.01720	3.93850
-.535	5.744	.04580	.00970	.02280	-.01920	-.00180	9.80996	-6.89934	90.00370	5.98060
	GRADIENT	-.00320	-.00009	.00088	-.00313	-.00204	-.03639	-.02684	.00162	.04126

RUN NO. 1465/ 0 RN/L = 3.00 GRADIENT INTERVAL = -5.00/ 5.00

ALPHAO	BETAO	CNW	CBW	CTW	CHEI	CHEO	IB-ELV	OB-ELV	PHII	ALPHAI
4.171	-5.664	.13650	.02340	.03390	.00130	.00210	10.03587	-6.85231	-56.10180	7.19910
3.998	-3.552	.12370	.02260	.03180	-.00600	-.00270	9.95436	-6.90901	-44.87770	5.63310
3.682	.256	.12220	.02100	.03170	-.02190	-.00630	9.78043	-6.94769	-1.18990	4.08720
3.668	4.052	.11460	.01910	.03310	-.03650	-.00900	9.62071	-6.97670	44.24550	5.75430
3.634	6.107	.10450	.01730	.03310	-.04650	-.01000	9.51132	-6.98744	56.38240	7.28890
	GRADIENT	-.00120	-.00046	.00017	-.00401	-.00083	-.04388	-.00890	11.72029	.01573

IA156A, AEDC PWT 16T-470, O T S W/SILTS (R8NWE2) (27 MAY 80)

REFERENCE DATA

SREF = 2690.0000 SQ.FT. XMRP = 976.0000 IN. XT
LREF = 1290.3000 INCHES YMRP = .0000 IN. YT
BREF = 1290.3000 INCHES ZMRP = 400.0000 IN. ZT
SCALE = .0200

PARAMETRIC DATA

IB-ELV = 12.000 OB-ELV = -7.000
BDFLAP = .000 SPDBRK = .000
RUDDER = .000 SILTS = 1.000
MACH = 1.400 RN/L = 3.500

RUN NO. 1469/ 0 RN/L = 3.01 GRADIENT INTERVAL = -5.00/ 5.00

ALPHAO	BETAO	CNW	CBW	CTW	CHEI	CHEO	IB-ELV	OB-ELV	PHII	ALPHAI
-8.220	-5.866	-.00780	-.00360	-.00690	.02530	.07570	12.47322	-5.73857	39.34990	-8.51280
-8.243	-3.806	-.00920	-.00490	-.00520	.02670	.07180	12.49277	-5.79737	28.28390	-7.52990
-8.148	.314	-.03280	-.00680	-.00260	.02500	.05550	12.46904	-6.04315	-.51900	-6.63180
-7.969	4.331	-.05600	-.00750	.00070	.02110	.04060	12.41459	-6.26782	-28.93290	-7.55560
-7.958	6.275	-.06020	-.00810	.00250	.01880	.03580	12.38248	-6.34019	-39.28550	-8.58620
	GRADIENT	-.00575	-.00032	.00072	-.00069	-.00384	-.00959	-.05783	-7.03194	-.00222

RUN NO. 1470/ 0 RN/L = 3.00 GRADIENT INTERVAL = -5.00/ 5.00

ALPHAO	BETAO	CNW	CBW	CTW	CHEI	CHEO	IB-ELV	OB-ELV	PHII	ALPHAI
-6.243	-5.961	.02590	.00060	-.00150	.02050	.06850	12.40621	-5.84713	48.00430	-7.27350
-6.154	-4.001	.02140	-.00040	-.00020	.02190	.06130	12.42576	-5.95570	37.46860	-6.03050
-6.224	.176	.00040	-.00210	.00280	.02070	.04220	12.40900	-6.24369	.81620	-4.92900
-6.003	4.295	-.01910	-.00280	.00710	.01400	.02600	12.31546	-6.48796	-35.90230	-6.10210
-5.780	6.389	-.03080	-.00320	.00970	.01000	.02090	12.25961	-6.56486	-48.80170	-7.31610
	GRADIENT	-.00488	-.00029	.00088	-.00095	-.00426	-.01327	-.06418	-8.84461	-.00801

RUN NO. 1471/ 0 RN/L = 3.00 GRADIENT INTERVAL = -5.00/ 5.00

ALPHAO	BETAO	CNW	CBW	CTW	CHEI	CHEO	IB-ELV	OB-ELV	PHII	ALPHAI
-4.149	-6.089	.04930	.00600	.00620	.01500	.05880	12.32942	-5.99339	60.52330	-6.21630
-4.346	-3.957	.04430	.00450	.00660	.01790	.05030	12.36991	-6.12156	47.73220	-4.77180
-4.209	.412	.02340	.00350	.01010	.01260	.02910	12.29591	-6.44122	-2.33120	-3.15480
-3.744	4.347	-.00560	.00320	.01530	.00440	.01510	12.18143	-6.65232	-49.41490	-4.70360
-3.839	6.181	-.01200	.00160	.01430	-.00010	.01400	12.11875	-6.66890	-58.80260	-6.17260
	GRADIENT	-.00599	-.00016	.00104	-.00162	-.00425	-.02259	-.06408	-11.69433	.01482

RUN NO. 1472/ 0 RN/L = 2.99 GRADIENT INTERVAL = -5.00/ 5.00

ALPHAO	BETAO	CNW	CBW	CTW	CHEI	CHEO	IB-ELV	OB-ELV	PHII	ALPHAI
-.513	-6.969	.10130	.01570	.02210	.00380	.04830	12.17305	-6.15171	89.99010	-6.02760
-.482	-4.838	.08980	.01530	.02190	.00550	.03990	12.19679	-6.27837	90.00370	-4.04170
-.437	-.502	.07810	.01420	.02570	.00430	.01980	12.18003	-6.58145	90.01720	.04310
-.416	3.637	.05920	.01180	.02740	-.00900	.00920	12.00741	-6.74128	90.03070	3.94980
-.427	5.798	.05000	.00970	.02640	-.01740	.00760	11.90234	-6.76540	89.99010	5.97840
	GRADIENT	-.00360	-.00041	.00065	-.00170	-.00363	-.02220	-.05474	.00319	.94299

IA156A, AEDC PWT 16T-470, O T S W/SILTS (R8NWE2) (27 MAY 80)

REFERENCE DATA

SREF = 2690.0000 SQ.FT. XMRP = 976.0000 IN. XT
LREF = 1290.3000 INCHES YMRP = .0000 IN. YT
BREF = 1290.3000 INCHES ZMRP = 400.0000 IN. ZT
SCALE = .0200

PARAMETRIC DATA

IB-ELV = 12.000 OB-ELV = -7.000
BDFLAP = .000 SPDBRK = .000
RUDDER = .000 SILTS = 1.000
MACH = 1.400 RN/L = 3.500

RUN NO. 1473/ 0 RN/L = 3.00 GRADIENT INTERVAL = -5.00/ 5.00

ALPHAO	BETAO	CNW	CBW	CTW	CHEI	CHEO	IB-ELV	OB-ELV	PHII	ALPHAI
4.135	-5.756	.14900	.02600	.04370	-.00610	.01440	12.04369	-6.66287	-56.18530	7.19580
3.990	-3.653	.13690	.02510	.04130	-.00510	.00810	12.05620	-6.75787	-44.94740	5.63090
3.741	.166	.13150	.02260	.03920	-.01290	.00000	11.95863	-6.88000	-1.19030	4.07320
3.769	4.047	.11480	.01980	.03840	-.03180	-.00360	11.72220	-6.92423	44.43880	5.75210
3.738	6.128	.10600	.01770	.03750	-.03970	-.00490	11.62337	-6.94020	56.52530	7.30110
	GRADIENT	-.00287	-.00069	-.00038	-.00347	-.00152	-.04343	-.02158	11.61005	.01686

IA156A, AEDC PWT 16T-470, O T S W/SILTS (R8NWE3) (27 MAY 80)

REFERENCE DATA

SREF = 2690.0000 SQ.FT. XMRP = 976.0000 IN. XT
LREF = 1290.3000 INCHES YMRP = .0000 IN. YT
BREF = 1290.3000 INCHES ZMRP = 400.0000 IN. ZT
SCALE = .0200

PARAMETRIC DATA

IB-ELV = 12.000 OB-ELV = -7.000
BDFLAP = .000 SPDBRK = .000
RUDDER = .000 SILTS = 1.000
MACH = 1.550 RN/L = 3.200

RUN NO. 1474/ 0 RN/L = 3.01 GRADIENT INTERVAL = -5.00/ 5.00

ALPHAO	BETAO	CNW	CBW	CTW	CHEI	CHEO	IB-ELV	OB-ELV	PHII	ALPHAI
-8.324	-5.833	-.00130	-.00350	-.00610	.03160	.05460	12.50581	-6.16005	39.23540	-8.51670
-8.344	-3.712	-.00440	-.00460	-.00460	.02980	.04760	12.48383	-6.25235	27.94170	-7.51800
-8.209	.318	-.02790	-.00540	-.00290	.01530	.03280	12.30680	-6.44750	.06310	-6.63180
-8.003	4.487	-.05470	-.00640	-.00060	.00680	.02590	12.20302	-6.53849	-29.24010	-7.59320
-7.961	6.383	-.05640	-.00700	.00050	.00440	.02360	12.17372	-6.56881	-39.31340	-8.58820
	GRADIENT	-.00614	-.00022	.00049	-.00280	-.00264	-.03419	-.03482	-6.97438	-.01044

RUN NO. 1475/ 0 RN/L = 3.01 GRADIENT INTERVAL = -5.00/ 5.00

ALPHAO	BETAO	CNW	CBW	CTW	CHEI	CHEO	IB-ELV	OB-ELV	PHII	ALPHAI
-6.358	-5.963	.02360	-.00010	-.00280	.02540	.04640	12.43011	-6.26818	47.92550	-7.28050
-6.256	-3.975	.01480	-.00090	-.00230	.02220	.03530	12.39104	-6.41454	37.41130	-6.03050
-6.273	.249	.00150	-.00180	.00070	.00890	.02350	12.22866	-6.57013	.81180	-4.91290
-5.983	4.379	-.02030	-.00220	.00280	-.00040	.01770	12.11562	-6.64661	-35.94410	-6.06530
-5.702	6.519	-.02830	-.00230	.00440	-.00730	.01620	12.04014	-6.66639	-49.28950	-7.28740
	GRADIENT	-.00420	-.00016	.00061	-.00271	-.00211	-.03299	-.02781	-8.78064	-.00314

IA156A, AEDC PWT 16T-470, O T S W/SILTS (R8NWE3) (27 MAY 80)

REFERENCE DATA

SREF = 2690.0000 SQ.FT. XMRP = 976.0000 IN. XT
LREF = 1290.3000 INCHES YMRP = .0000 IN. YT
BREF = 1290.3000 INCHES ZMRP = 400.0000 IN. ZT
SCALE = .0200

PARAMETRIC DATA

IB-ELV = 12.000 OB-ELV = -7.000
BDFLAP = .000 SPDBRK = .000
RUDDER = .000 SILTS = 1.000
MACH = 1.550 RN/L = 3.200

RUN NO. 1476/ 0 RN/L = 3.01 GRADIENT INTERVAL = -5.00/ 5.00

ALPHAO	BETAO	CNW	CBW	CTW	CHEI	CHEO	IB-ELV	OB-ELV	PHII	ALPHAI
-4.196	-6.135	.04120	.00400	.00340	.01930	.03550	12.35564	-6.41190	60.99390	-6.21230
-4.451	-3.949	.03180	.00260	.00280	.01560	.02690	12.31046	-6.52530	47.71080	-4.76770
-4.265	.492	.01880	.00270	.00660	-.00300	.01320	12.08718	-6.70595	-2.27030	-3.14410
-3.742	4.439	-.00500	.00320	.00980	-.01310	.00730	11.97669	-6.78374	-49.35220	-4.69560
-3.795	6.255	-.01050	.00180	.01050	-.01790	.00800	11.92419	-6.77451	-58.90000	-6.13880
	GRADIENT	-.00436	.00007	.00083	-.00344	-.00235	-.04001	-.03102	-11.56533	.01601

RUN NO. 1477/ 0 RN/L = 3.01 GRADIENT INTERVAL = -5.00/ 5.00

ALPHAO	BETAO	CNW	CBW	CTW	CHEI	CHEO	IB-ELV	OB-ELV	PHII	ALPHAI
-.600	-7.044	.08460	.01260	.01400	.00700	.02720	12.20546	-6.52134	89.99010	-6.03150
-.576	-4.909	.07730	.01210	.01390	.00240	.01780	12.14930	-6.64529	89.99010	-4.04170
-.540	-.559	.06290	.01170	.01730	-.01260	.00520	11.98216	-6.81143	90.03070	.04810
-.528	3.565	.05050	.01120	.02160	-.02800	.00050	11.81370	-6.87341	90.05780	3.93690
-.527	5.739	.04500	.01000	.02270	-.03550	-.00210	11.73165	-6.90256	89.97660	5.97730
	GRADIENT	-.00316	-.00011	.00091	-.00359	-.00205	-.03959	-.02702	.00800	.94156

RUN NO. 1478/ 0 RN/L = 3.01 GRADIENT INTERVAL = -5.00/ 5.00

ALPHAO	BETAO	CNW	CBW	CTW	CHEI	CHEO	IB-ELV	OB-ELV	PHII	ALPHAI
4.178	-5.674	.13390	.02380	.03430	-.01040	.00200	12.00623	-6.85363	-56.10870	7.20580
4.001	-3.551	.11980	.02290	.03210	-.01850	.00270	11.91762	-6.90901	-44.84980	5.63530
3.684	.248	.11810	.02130	.03200	-.03540	-.00610	11.73275	-6.94554	-1.26070	4.08610
3.670	4.055	.10820	.01940	.03410	-.05130	-.00930	11.55881	-6.97992	44.30270	5.75430
3.642	6.120	.10410	.01740	.03380	-.06100	-.00980	11.45270	-6.98529	56.42520	7.30110
	GRADIENT	-.00153	-.00046	.00026	-.00431	-.00087	-.04717	-.00932	11.72096	.01579

IA156A, AEDC PWT 16T-470, O T S W/SILTS (R8NWE4) (27 MAY 80)

REFERENCE DATA

SREF = 2690.0000 SQ.FT. XMRP = 976.0000 IN. XT
LREF = 1290.3000 INCHES YMRP = .0000 IN. YT
BREF = 1290.3000 INCHES ZMRP = 400.0000 IN. ZT
SCALE = .0200

PARAMETRIC DATA

IB-ELV = 8.000 OB-ELV = -7.000
BDFLAP = .000 SPDBRK = .000
RUDDER = .000 SILTS = 1.000
MACH = 1.400 RN/L = 3.500

RUN NO. 1482/ 0 RN/L = 3.00 GRADIENT INTERVAL = -5.00/ 5.00

ALPHAO	BETAO	CNW	CBW	CTW	CHEI	CHEO	IB-ELV	OB-ELV	PHII	ALPHAI
-8.170	-5.743	.00370	-.00460	-.00530	.05690	.07620	8.89441	-5.73103	38.96350	-8.40860
-8.235	-3.742	-.00530	-.00590	-.00460	.05900	.07340	8.92373	-5.77325	27.96310	-7.48530
-8.142	.226	-.03290	-.00760	-.00230	.06100	.05830	8.95165	-6.00093	.15860	-6.61500
-7.983	4.478	-.05690	-.00830	.00080	.05860	.04190	8.91814	-6.24822	-29.78130	-7.62990
-7.936	6.285	-.05720	-.00880	.00350	.05710	.03670	8.89720	-6.32662	-39.39010	-8.57030
	GRADIENT	-.00627	-.00029	.00066	-.00005	-.00383	-.00077	-.05779	-7.02549	-.02023

RUN NO. 1483/ 0 RN/L = 3.00 GRADIENT INTERVAL = -5.00/ 5.00

ALPHAO	BETAO	CNW	CBW	CTW	CHEI	CHEO	IB-ELV	OB-ELV	PHII	ALPHAI
-6.266	-5.970	.02750	-.00040	-.00080	.05160	.07010	8.82041	-5.82301	47.99710	-7.28540
-6.155	-4.011	.02240	-.00110	.00050	.05230	.06260	8.83018	-5.93609	37.54010	-6.03450
-6.219	.148	.00310	-.00280	.00290	.05440	.04370	8.85950	-6.22108	1.08300	-4.91290
-6.003	4.286	-.01890	-.00350	.00720	.04960	.02690	8.79249	-6.47439	-35.88130	-6.09010
-5.730	6.412	-.02980	-.00380	.00980	.04680	.02180	8.75340	-6.55129	-49.19200	-7.29530
	GRADIENT	-.00498	-.00029	.00081	-.00032	-.00430	-.00453	-.06488	-8.84834	-.00648

RUN NO. 1484/ 0 RN/L = 3.00 GRADIENT INTERVAL = -5.00/ 5.00

ALPHAO	BETAO	CNW	CBW	CTW	CHEI	CHEO	IB-ELV	OB-ELV	PHII	ALPHAI
-4.110	-6.113	.04870	.00520	.00640	.04480	.05970	8.72547	-5.97982	60.93690	-6.21530
-4.346	-3.947	.04350	.00390	.00650	.04810	.05150	8.77155	-6.10346	47.74650	-4.75870
-4.218	.418	.02460	.00280	.01040	.04620	.03020	8.74502	-6.42463	-2.36640	-3.15630
-3.760	4.353	-.00280	.00260	.01490	.04020	.01600	8.66125	-6.63875	-49.42890	-4.71260
-3.822	6.157	-.01840	.00110	.01430	.03590	.01480	8.60122	-6.65684	-58.89300	-6.14080
	GRADIENT	-.00556	-.00016	.00101	-.00094	-.00429	-.01316	-.06466	-11.70459	.01212

RUN NO. 1485/ 0 RN/L = 3.00 GRADIENT INTERVAL = -5.00/ 5.00

ALPHAO	BETAO	CNW	CBW	CTW	CHEI	CHEO	IB-ELV	OB-ELV	PHII	ALPHAI
-.521	-7.010	.10130	.01510	.02190	.03240	.04970	8.55235	-6.13061	89.97660	-6.06930
-.492	-4.839	.08910	.01460	.02160	.03310	.04000	8.56212	-6.27387	89.99010	-4.04270
-.439	-.498	.07820	.01380	.02560	.03610	.01970	8.60401	-6.58296	90.04430	.04460
-.431	3.621	.06010	.01100	.02680	.02790	.01020	8.48952	-6.72620	90.01720	3.93310
-.444	5.803	.05150	.00880	.02570	.02120	.00890	8.39598	-6.74580	90.00370	5.98060
	GRADIENT	-.00342	-.00042	.00062	-.00060	-.00353	-.00842	-.05327	.00329	.94280

IA156A, AEDC PWT 16T-470, O T S W/SILTS (R8NWE4) (27 MAY 80)

REFERENCE DATA

SREF = 2690.0000 SQ.FT. XMRP = 976.0000 IN. XT
LREF = 1290.3000 INCHES YMRP = .0000 IN. YT
BREF = 1290.3000 INCHES ZMRP = 400.0000 IN. ZT
SCALE = .0200

PARAMETRIC DATA

IB-ELV = 8.000 OB-ELV = -7.000
BDFLAP = .000 SPDBRK = .000
RUDDER = .000 SILTS = 1.000
MACH = 1.400 RN/L = 3.500

RUN NO. 1486/ 0 RN/L = 3.00 GRADIENT INTERVAL = -5.00/ 5.00

ALPHAO	BETAO	CNW	CBW	CTW	CHEI	CHEO	IB-ELV	OB-ELV	PHII	ALPHAI
4.148	-5.744	.15060	.02590	.04390	.02080	.01440	8.39040	-6.66287	-56.02520	7.19580
3.977	-3.686	.13940	.02460	.04100	.02270	.00830	8.41692	-6.75485	-45.28200	5.64510
3.759	.077	.13440	.02200	.03890	.02030	.00060	8.39342	-6.87095	-2.59880	4.09370
3.771	4.006	.12110	.01930	.03800	.00160	-.00320	8.12234	-6.91932	44.04500	5.73140
3.730	6.119	.11130	.01710	.03690	-.00550	-.00450	8.03120	-6.93529	56.46810	7.29220
	GRADIENT	-.00239	-.00069	-.00039	-.00276	-.00149	-.03851	-.02132	11.61563	.01418

IA156A, AEDC PWT 16T-470, O T S W/SILTS (R8NWE5) (27 MAY 80)

REFERENCE DATA

SREF = 2690.0000 SQ.FT. XMRP = 976.0000 IN. XT
LREF = 1290.3000 INCHES YMRP = .0000 IN. YT
BREF = 1290.3000 INCHES ZMRP = 400.0000 IN. ZT
SCALE = .0200

PARAMETRIC DATA

IB-ELV = 8.000 OB-ELV = -7.000
BDFLAP = .000 SPDBRK = .000
RUDDER = .000 SILTS = 1.000
MACH = 1.550 RN/L = 3.200

RUN NO. 1487/ 0 RN/L = 3.00 GRADIENT INTERVAL = -5.00/ 5.00

ALPHAO	BETAO	CNW	CBW	CTW	CHEI	CHEO	IB-ELV	OB-ELV	PHII	ALPHAI
-8.297	-5.822	.00790	-.00440	-.00490	.05970	.05530	8.82888	-6.15082	39.29260	-8.49090
-8.325	-3.708	-.00010	-.00520	-.00400	.05860	.04840	8.81545	-6.24180	27.98450	-7.49430
-8.212	.298	-.02390	-.00600	-.00280	.04740	.03380	8.67871	-6.43432	.20880	-6.62590
-7.973	4.570	-.05310	-.00690	-.00030	.03990	.02610	8.58714	-6.53585	-29.81620	-7.60510
-7.986	6.416	-.05590	-.00750	.00080	.03920	.02400	8.57860	-6.56354	-39 37620	-8.61800
	GRADIENT	-.00641	-.00021	.00045	-.00225	-.00268	-.02751	-.03539	-6.98312	-.01578

RUN NO. 1488/ 0 RN/L = 3.00 GRADIENT INTERVAL = -5.00/ 5.00

ALPHAO	BETAO	CNW	CBW	CTW	CHEI	CHEO	IB-ELV	OB-ELV	PHII	ALPHAI
-6.347	-5.954	.02240	-.00060	-.00250	.05260	.04600	8.74220	-6.27345	48.00430	-7.27060
-6.262	-3.975	.02040	-.00160	-.00110	.04980	.03580	8.70801	-6.40795	37.43280	-6.03250
-6.268	.229	.00570	-.00260	.00130	.03910	.02380	8.57738	-6.56618	1.04780	-4.90190
-6.003	4.398	-.01770	-.00300	.00400	.03250	.01800	8.49680	-6.64265	-35.99990	-6.08720
-5.917	6.366	-.02860	-.00350	.00530	.02820	.01740	8.44430	-6.65057	-47.57520	-7.29530
	GRADIENT	-.00455	-.00017	.00061	-.00207	-.00213	-.02524	-.02805	-8.77033	-.00614

IA156A, AEDC PWT 16T-470, 0 T S W/SILTS (R8NWE5) (27 MAY 80)

REFERENCE DATA

SREF = 2690.0000 SQ.FT. XMRP = 976.0000 IN. XT
LREF = 1290.3000 INCHES YMRP = .0000 IN. YT
BREF = 1290.3000 INCHES ZMRP = 400.0000 IN. ZT
SCALE = .0200

PARAMETRIC DATA

IB-ELV = 8.000 OB-ELV = -7.000
BDFLAP = .000 SPDBRK = .000
RUDDER = .000 SILTS - 1.000
MACH = 1.550 RN/L = 3.200

RUN NO. 1489/ 0 RN/L = 3.01 GRADIENT INTERVAL = -5.00/ 3.00

ALPHAO	BETAO	CNW	CBW	CTW	CHEI	CHEO	IB-ELV	OB-ELV	PHII	ALPHAI
-4.218	-6.128	.04160	.00330	.00370	.04590	.03660	8.66040	-6.39740	60.90830	-6.20930
-4.450	-3.947	.03050	.00200	.00270	.04290	.02760	8.62377	-6.51607	47.81100	-4.75570
-4.281	.503	.01710	.00210	.00710	.02690	.01370	8.42843	-6.69935	-2.33250	-3.14660
-3.731	4.440	-.00770	.00260	.01080	.01950	.00800	8.33808	-6.77451	-49.47770	-4.67950
-3.802	6.257	-.01030	.00130	.01120	.01580	.00870	8.29290	-6.76528	-58.90690	-6.14080
	GRADIENT	-.00452	.00007	.00097	-.00281	-.00235	-.03428	-.03104	-11.59284	.01668

RUN NO. 1490/ 0 RN/L = 3.00 GRADIENT INTERVAL = -5.00/ 5.00

ALPHAO	BETAO	CNW	CBW	CTW	CHEI	CHEO	IB-ELV	OB-ELV	PHII	ALPHAI
-.611	-7.039	.08560	.01180	.01450	.03210	.02760	8.49191	-6.51607	89.99010	-6.03350
-.585	-4.909	.07300	.01130	.01430	.02690	.01830	8.42843	-6.63870	89.99010	-4.04170
-.546	-.562	.05960	.01100	.01770	.01640	.00580	8.30023	-6.80352	90.03070	.04810
-.537	3.564	.04560	.01060	.02180	.00390	.00100	8.14762	-6.86681	90.04430	3.93470
-.537	5.749	.04210	.00950	.02330	-.00230	-.00140	8.07484	-6.89504	89.99010	5.97950
	GRADIENT	-.00323	-.00008	.00088	-.00271	-.00205	-.03311	-.02702	.00642	.94140

RUN NO. 1491/ 0 RN/L = 3.00 GRADIENT INTERVAL = -5.00/ 5.00

ALPHAO	BETAO	CNW	CBW	CTW	CHEI	CHEO	IB-ELV	OB-ELV	PHII	ALPHAI
4.175	-5.666	.13030	.02290	.03400	.01290	.00270	8.25750	-6.84440	-56.04610	7.21020
3.989	-3.546	.12050	.02220	.03210	.00630	-.00200	8.17692	-6.90149	-44.85680	5.62770
3.686	.255	.11960	.02090	.03260	-.00640	-.00580	8.02999	-6.94232	-1.18110	4.09420
3.680	4.059	.11280	.01890	.03400	-.02120	-.00860	7.86809	-6.97240	44.18820	5.76630
3.634	6.109	.10290	.01700	.03360	-.03090	-.00960	7.76197	-6.98314	56.36810	7.29000
	GRADIENT	-.00101	-.00043	.00025	-.00362	-.00087	-.04061	-.00932	11.70923	.01826

IA156A, AEDC PWT 16T-470, O T S W/SILTS (R8NWE6) (27 MAY 80)

REFERENCE DATA

SREF = 2690.0000 SQ.FT. XMRP = 976.0000 IN. XT
LREF = 1290.3000 INCHES YMRP = .0000 IN. YT
BREF = 1290.3000 INCHES ZMRP = 400.0000 IN. ZT
SCALE = .0200

PARAMETRIC DATA

IB-ELV = 10.000 OB-ELV = 2.000
BDFLAP = .000 SPDBRK = .000
RUDDER = .000 SILTS = 1.000
MACH = 1.050 RN/L = 3.500

RUN NO. 1494/ 0 RN/L = 3.50 GRADIENT INTERVAL = -5.00/ 5.00

ALPHAO	BETAO	CNW	CBW	CTW	CHEI	CHEO	IB-ELV	OB-ELV	PHII	ALPHAI
-8.215	-5.881	-.02460	-.00570	-.00220	-.00500	.02620	9.96419	2.23248	39.17100	-8.48100
-8.178	-3.769	-.03580	-.00690	-.00280	.00170	.02950	10.04118	2.27687	27.97740	-7.42300
-8.131	.175	-.05750	-.00880	-.00280	.02630	.03230	10.34761	2.31454	.07770	-6.57240
-7.965	4.333	-.08260	-.00970	-.00120	.03280	.03390	10.42858	2.33607	-29.48100	-7.52100
-7.960	6.223	-.08320	-.01020	-.00110	.03240	.03450	10.42360	2.34414	-39.48770	-8.53260
	GRADIENT	-.00578	-.00034	.00020	.00382	.00054	.04756	.00729	-7.09264	-.01405

RUN NO. 1495/ 0 RN/L = 3.50 GRADIENT INTERVAL = -5.00/ 5.00

ALPHAO	BETAO	CNW	CBW	CTW	CHEI	CHEO	IB-ELV	OB-ELV	PHII	ALPHAI
-6.164	-5.957	.01260	.00020	.00850	-.01210	.02530	9.88495	2.22037	48.04720	-7.19930
-6.120	-4.055	.00290	-.00140	.00670	-.00520	.03010	9.96196	2.28494	37.60440	-6.00870
-6.203	.112	-.02670	-.00450	.00460	.02410	.03270	10.32021	2.31992	.85500	-4.87790
-6.009	4.243	-.04780	-.00540	.00560	.02710	.03500	10.35758	2.35086	-36.12550	-6.06030
-5.960	6.205	-.06240	-.00600	.00580	.02870	.03580	10.37751	2.36163	-47.56130	-7.26860
	GRADIENT	-.00611	-.00048	-.00013	.00390	.00059	.04773	.00794	-8.88463	-.00582

RUN NO. 1496/ 0 RN/L = 3.50 GRADIENT INTERVAL = -5.00/ 5.00

ALPHAO	BETAO	CNW	CBW	CTW	CHEI	CHEO	IB-ELV	OB-ELV	PHII	ALPHAI
-4.074	-6.119	.04200	.00650	.02220	-.01450	.02600	9.85816	2.22979	60.76570	-6.19240
-4.306	-3.974	.02560	.00370	.01700	-.00780	.03100	9.93294	2.29705	47.71790	-4.73670
-4.199	.365	-.00810	.00040	.01320	.02110	.03400	10.28284	2.33741	-2.53110	-3.11720
-3.752	4.297	-.03880	-.00010	.01460	.02350	.03690	10.31273	2.37643	-49.77030	-4.66450
-3.847	6.110	-.04230	-.00100	.01420	.02500	.03670	10.33142	2.37374	-58.96960	-6.12290
	GRADIENT	-.00779	-.00046	-.00030	.00383	.00071	.04651	.00959	-11.78292	.01500

RUN NO. 1497/ 0 RN/L = 3.50 GRADIENT INTERVAL = -5.00/ 5.00

ALPHAO	BETAO	CNW	CBW	CTW	CHEI	CHEO	IB-ELV	OB-ELV	PHII	ALPHAI
-.462	-7.007	.11050	.01910	.04320	-.02010	.02710	9.79566	2.24458	90.00370	-6.05840
-.449	-4.843	.09120	.01650	.03940	-.01500	.03180	9.85258	2.30781	89.99010	-4.04170
-.422	-.474	.06130	.01130	.03340	.01360	.03630	10.18941	2.36835	90.00370	.05510
-.387	3.651	.04150	.00790	.02930	.01650	.02760	10.22554	2.25131	90.01720	3.93370
-.387	5.828	.03290	.00650	.02700	.01890	.01960	10.25543	2.14368	90.00370	5.97630
	GRADIENT	-.00586	-.00101	-.00119	.00374	-.00048	.04423	-.00645	.00319	.93886

IA156A, AEDC PWT 16T-470, O T S W/SILTS (R8NWE6) (27 MAY 80)

REFERENCE DATA

SREF = 2690.0000 SQ.FT. XMRP = 976.0000 IN. XT
LREF = 1290.3000 INCHES YMRP = .0000 IN. YT
BREF = 1290.3000 INCHES ZMRP = 400.0000 IN. ZT
SCALE = .0200

PARAMETRIC DATA

IB-ELV = 10.000 OB-ELV = 2.000
BDFLAP = .000 SPDBRK = .000
RUDDER = .000 SILTS = 1.000
MACH = 1.050 RN/L = 3.500

RUN NO. 1498/ 0 RN/L = 3.50 GRADIENT INTERVAL = -5.00/ 5.00

ALPHAO	BETAO	CNW	CBW	CTW	CHEI	CHEO	IB-ELV	OB-ELV	PHII	ALPHAI
4.108	-5.804	.15280	.02850	.06240	-.02070	.02340	9.78896	2.19481	-55.97640	7.18360
3.975	-3.713	.13880	.02640	.05790	-.01910	.02250	9.80682	2.18270	-44.71730	5.62880
3.776	.114	.12080	.02210	.04900	-.00040	.01470	10.01554	2.07776	-1.02400	4.08340
3.851	4.045	.10690	.01870	.04380	.00140	-.00180	10.03744	1.86027	44.46740	5.76630
3.796	6.106	.10000	.01640	.04050	.00440	-.01040	10.07481	1.76600	56.59680	7.27110
	GRADIENT	-.00411	-.00099	-.00182	.00263	-.00314	.02962	-.04163	11.49692	.01960

IA156A, AEDC PWT 16T-470, O T S W/SILTS (R8NWE7) (27 MAY 80)

REFERENCE DATA

SREF = 2690.0000 SQ.FT. XMRP = 976.0000 IN. XT
LREF = 1290.3000 INCHES YMRP = .0000 IN. YT
BREF = 1290.3000 INCHES ZMRP = 400.0000 IN. ZT
SCALE = .0200

PARAMETRIC DATA

IB-ELV = 10.000 OB-ELV = 2.000
BDFLAP = .000 SPDBRK = .000
RUDDER = .000 SILTS = 1.000
MACH = 1.100 RN/L = 3.500

RUN NO. 1499/ 0 RN/L = 3.50 GRADIENT INTERVAL = -5.00/ 5.00

ALPHAO	BETAO	CNW	CBW	CTW	CHEI	CHEO	IB-ELV	OB-ELV	PHII	ALPHAI
-8.219	-5.891	-.01770	-.00500	-.00030	-.00170	.02720	10.00056	2.25488	39.29260	-8.48890
-8.204	-3.785	-.02510	-.00610	-.00040	.00520	.02840	10.08636	2.27142	28.05580	-7.44580
-8.112	.164	-.05120	-.00820	-.00030	.03190	.03040	10.42709	2.29899	.22470	-6.54760
-7.946	4.428	-.07590	-.00880	.00130	.03870	.03190	10.51387	2.31966	-30.03260	-7.55560
-7.964	6.232	-.07880	-.00960	.00120	.04230	.03190	10.55981	2.31966	-39.48080	-8.54250
	GRADIENT	-.00618	-.00033	.00021	.00405	.00043	.05164	.00586	-7.07374	-.01645

RUN NO. 1500/ 0 RN/L = 3.50 GRADIENT INTERVAL = -5.00/ 5.00

ALPHAO	BETAO	CNW	CBW	CTW	CHEI	CHEO	IB-ELV	OB-ELV	PHII	ALPHAI
-6.164	-5.953	.02080	.00100	.01020	-.00800	.02580	9.92853	2.23559	48.11880	-7.19730
-6.143	-4.058	.00930	-.00080	.00860	-.00170	.02900	10.00056	2.27969	37.59010	-6.02950
-6.224	.087	-.02060	-.00380	.00640	.02670	.03130	10.36073	2.31139	1.16490	-4.89490
-5.999	4.241	-.04140	-.00460	.00720	.03410	.03490	10.45517	2.36101	-36.04880	-6.05930
-5.962	6.205	-.05510	-.00530	.00750	.03670	.03740	10.48835	2.39546	-47.50550	-7.27950
	GRADIENT	-.00611	-.00046	-.00017	.00431	.00071	.05477	.00980	-8.87411	-.00369

IA156A, AEDC PWT 16T-470, O T S W/SILTS (R8NWE7) ' 27 MAY 80)

REFERENCE DATA

SREF = 2690.0000 SQ.FT. XMRP = 976.0000 IN. XT
LREF = 1290.3000 INCHES YMRP = .0000 IN. YT
BREF = 1290.3000 INCHES ZMRP = 400.0000 IN. ZT
SCALE = .0200

PARAMETRIC DATA

IB-ELV = 10.000 OB-ELV = 2.000
BDFLAP = .000 SPDBRK = .000
RUDDER = .000 SILTS = 1.000
MACH = 1.100 RN/L = 3.500

RUN NO. 1501/ 0 RN/L = 3.51 GRADIENT INTERVAL = -5.00/ 5.00

ALPHAO	BETAO	CNW	CBW	CTW	CHEI	CHEO	IB-ELV	OB-ELV	PHII	ALPHAI
-4.064	-6.124	.05230	.00820	.02260	-.01100	.02630	9.89422	2.24248	60.93690	-6.19340
-4.304	-3.972	.03460	.00480	.01910	-.00380	.03040	9.97655	2.29899	47.81810	-4.73670
-4.191	.371	-.00080	.00120	.01530	.02560	.03310	10.34669	2.33620	-2.45060	-3.11970
-3.737	4.274	-.03010	.00080	.01640	.02900	.03490	10.39008	2.36101	-49.56830	-4.64950
-3.857	6.128	-.03620	-.00040	.01560	.03110	.02980	10.41688	2.29072	-58.86520	-6.13980
	GRADIENT	-.00785	-.00049	-.00034	.00403	.00055	.05080	.00754	-11.80532	.01734

RUN NO. 1502/ 0 RN/L = 3.49 GRADIENT INTERVAL = -5.00/ 5.00

ALPHAO	BETAO	CNW	CBW	CTW	CHEI	CHEO	IB-ELV	OB-ELV	PHII	ALPHAI
-.472	-6.996	.11530	.01990	.04130	-.01620	.02780	9.83476	2.26315	89.97660	-6.04940
-.442	-4.844	.09770	.01770	.03910	-.01030	.03230	9.90223	2.32517	90.01720	-4.04220
-.413	-.478	.07150	.01270	.03430	.01810	03370	10.25098	2.34447	90.03070	.04990
-.380	3.654	.04930	.00880	.03050	.02050	.01890	10.28161	2.14049	90.00370	3.93530
-.376	5.836	.03820	.00700	.02810	.02190	.00760	10.29948	1.98475	90.00370	5.98170
	GRADIENT	-.00570	-.00105	-.00101	.00365	-.00156	.04498	-.02149	-.00154	.93874

RUN NO. 1503/ 0 RN/L = 3.50 GRADIENT INTERVAL = -5.00/ 5.00

ALPHAO	BETAO	CNW	CBW	CTW	CHEI	CHEO	IB-ELV	OB-ELV	PHII	ALPHAI
4.105	-5.818	.15950	.02900	.06150	-.02010	.02030	9.79017	2.15978	-56.26190	7.17920
3.961	-3.699	.14670	.02750	.05700	-.01620	.01640	9.83476	2.10603	-44.94740	5.59170
3.792	.122	.12840	.02290	.04820	.00460	.00650	10.07870	1.96959	-1.06890	4.08180
3.836	4.038	.11010	.01930	.04340	.00400	-.00940	10.07105	1.77444	44.51030	5.74340
3.791	6.090	.09970	.01720	.04110	.00710	-.01870	10.11061	1.67000	56.59680	7.24450
	GRADIENT	-.00473	-.00106	-.00176	.00260	-.00334	.03041	-.04289	11.56339	.02128

IA156A, AEDC PWT 16T-470, O T S W/SILTS (R8NWE8) (27 MAY 80)

REFERENCE DATA

SREF = 2690.0000 SQ.FT. XMRP = 976.0000 IN. XT
LREF = 1290.3000 INCHES YMRP = .0000 IN. YT
BREF = 1290.3000 INCHES ZMRP = 400.0000 IN. ZT
SCALE = .0200

PARAMETRIC DATA

IB-ELV = 10.000 OB-ELV = 2.000
BDFLAP = .000 SPDBRK = .000
RUDDER = .000 SILTS = 1.000
MACH = 1.150 RN/L = 3.500

RUN NO. 1504/ 0 RN/L = 3.50 GRADIENT INTERVAL = -5.00/ 5.00

ALPHAO	BETAO	CNW	CBW	CTW	CHEI	CHEO	IB-ELV	OB-ELV	PHII	ALPHAI
-8.224	-5.884	-.01090	-.00390	.00040	.00330	.02690	10.06293	2.25794	39.24250	-8.46910
-8.207	-3.764	-.01960	-.00560	-.00020	.01330	.02720	10.19302	2.26216	27.95600	-7.40420
-8.128	.156	-.04790	-.00800	-.00010	.03810	.02690	10.51565	2.25794	.20620	-6.52080
-8.010	4.213	-.07080	-.00890	.00090	.04580	.02970	10.61582	2.29728	-28.70940	-7.46750
-7.965	6.247	-.07810	-.00970	.00150	.04820	.03330	10.64704	2.34786	-39.69700	-8.51080
	GRADIENT	-.00641	-.00041	.00014	.00406	.00032	.05283	.00443	-7.10320	-.00925

RUN NO. 1505/ 0 RN/L = 3.51 GRADIENT INTERVAL = -5.00/ 5.00

ALPHAO	BETAO	CNW	CBW	CTW	CHEI	CHEO	IB-ELV	OB-ELV	PHII	ALPHAI
-6.163	-5.962	.03430	.00330	.01060	-.00270	.02560	9.98853	2.23968	48.12600	-7.18050
-6.108	-4.043	.01950	.00110	.01000	.00650	.02730	10.10456	2.26356	37.66170	-5.97090
-6.197	.091	-.01590	-.00340	.00760	.03550	02820	10.48182	2.27621	1.07690	-4.84590
-6.035	4.259	-.03950	-.00480	.00790	.04090	.03420	10.55207	2.36050	-36.16740	-6.05640
-5.956	6.210	-.05560	-.00540	.00850	.04230	.02810	10.57028	2.27480	-47.64490	-7.24680
	GRADIENT	-.00711	-.00071	-.00025	.00414	.00083	.05386	.01169	-8.89352	-.01070

RUN NO. 1506/ 0 RN/L = 3.50 GRADIENT INTERVAL = -5.00/ 5.00

ALPHAO	BETAO	CNW	CBW	CTW	CHEI	CHEO	IB-ELV	OB-ELV	PHII	ALPHAI
-4.053	-6.089	.06490	.01060	.02230	-.00560	.02650	9.95473	2.25232	60.79430	-6.14380
-4.308	-3.975	.04770	.00730	.01940	.00560	.02940	10.09285	2.29306	47.70360	-4.73270
-4.206	.359	.01500	.00240	.01650	.03240	.03510	10.44149	2.37315	-2.46970	-3.12530
-3.756	4.297	-.02550	.00080	.01680	.03540	.02440	10.48052	2.22282	-49.71460	-4.65950
-3.861	6.129	-.03030	-.00040	.01590	.03730	.01680	10.50524	2.11604	-58.96260	-6.12990
	GRADIENT	-.00883	-.00079	-.00032	.00365	-.00057	.04743	-.00804	-11.77381	.01489

RUN NO. 1507/ 0 RN/L = 3.51 GRADIENT INTERVAL = -5.00/ 5.00

ALPHAO	BETAO	CNW	CBW	CTW	CHEI	CHEO	IB-ELV	OB-ELV	PHII	ALPHAI
-.455	-7.001	.12070	.02100	.03970	-.01090	.03070	9.69295	2.31133	89.99010	-6.03350
-.432	-4.850	.10580	.01930	.03860	-.00260	.03480	9.98969	2.36893	89.99010	-4.03570
-.395	-.487	.08070	.01500	.03570	.02600	.02340	10.35824	2.20877	90.01720	.04350
-.365	3.645	.05850	.01090	.03270	.02830	.00310	10.38816	1.92355	90.01720	3.92340
-.365	5.852	.04630	.00820	.02980	.03130	-.00630	10.42718	1.80788	90.00370	5.98500
	GRADIENT	-.00557	-.00099	-.00069	.00366	-.00372	.04726	-.05228	.00322	.93690

IA156A, AEDC PWT 16T-470, O T S W/SILTS (R8NWE8) (27 MAY 80)

REFERENCE DATA

SREF = 2690.0000 SQ.FT. XMRP = 976.0000 IN. XT
LREF = 1290.3000 INCHES YMRP = .0000 IN. YT
BREF = 1290.3000 INCHES ZMRP = 400.0000 IN. ZT
SCALE = .0200

PARAMETRIC DATA

IB-ELV = 10.000 OB-ELV = 2.000
BDFLAP = .000 SPDBRK = .000
RUDDER = .000 SILTS = 1.000
MACH = 1.150 RN/L = 3.500

RUN NO. 1508/ 0 RN/L = 3.50 GRADIENT INTERVAL = -5.00/ 5.00

ALPHAO	BETAO	CNW	CBW	CTW	CHEI	CHEO	IB-ELV	OB-ELV	PHII	ALPHAI
4.103	-5.794	.16310	.02940	.05870	-.01570	.01730	9.83700	2.12306	-56.08090	7.14710
3.996	-3.720	.15320	.02840	.05590	-.00760	.00950	9.93141	2.01347	-44.80800	5.61780
3.757	.111	.13520	.02380	.04810	.01290	-.00070	10.18782	1.87199	-1.00340	4.04520
3.841	4.038	.11900	.02070	.04480	.01260	-.02050	10.18391	1.64532	44.64640	5.73900
3.790	6.100	.10850	.01840	.04270	.01580	-.02660	10.22554	1.57548	56.72540	7.24570
	GRADIENT	-.00441	-.00099	-.00143	.00259	-.00387	.03241	-.04750	11.53040	.01736

IA156A, AEDC PWT 16T-470, O T S W/SILTS (R8NWE9) (10 MAY 80)

REFERENCE DATA

SREF = 2690.0000 SQ.FT. XMRP = 976.0000 IN. XT
LREF = 1290.3000 INCHES YMRP = .0000 IN. YT
BREF = 1290.3000 INCHES ZMRP = 400.0000 IN. ZT
SCALE = .0200

PARAMETRIC DATA

IB-ELV = 10.000 OB-ELV = 2.000
BDFLAP = .000 SPDBRK = .000
RUDDER = .000 SILTS = 1.000
MACH = 1.150 RN/L = 3.500

RUN NO. 1509/ 0 RN/L = 3.51 GRADIENT INTERVAL = -5.00/ 5.00

ALPHAO	BETAO	CNW	CBW	CTW	CHEI	CHEO	IB-ELV	OB-ELV	PHII	ALPHAI	MACH
-.455	-6.952	.12570	.02120	.03600	-.01080	.03160	9.96430	2.09720	89.99010	-5.99380	1.14870
-.427	-4.786	.11390	.01940	.03530	-.00230	.03490	10.00810	2.12690	90.00370	-3.98120	1.15140
-.393	-.538	.08920	.01530	.03320	.02570	.02320	10.15410	2.04080	90.01720	-.00360	1.15270
-.362	3.716	.06280	.01070	.03060	.02740	.00500	10.16320	1.91480	90.03070	3.99290	1.15260
-.361	5.867	.04800	.00870	.02850	.03080	-.00760	10.18090	1.82730	89.97660	5.99700	1.15000
	GRADIENT	-.00601	-.00102	-.00055	.00349	-.00352	.01824	-.02424	.00318	.93791	.00014

IA156A, AEDC PWT 16T-470, O T S (R8NF01) (10 MAY 80)

REFERENCE DATA

SREF = 2690.0000 SQ.FT. XMRP = 976.0000 IN. XT
LREF = 1290.3000 INCHES YMRP = .0000 IN. YT
BREF = 1290.3000 INCHES ZMRP = 400.0000 IN. ZT
SCALE = .0200

PARAMETRIC DATA

IB-ELV = 10.000 OB-ELV = 5.000
BDFLAP = .000 SPDBRK = .000
RUDDER = .000 SILTS = .000
MACH = .600 RN/L = 3.500

RUN NO. 801/ 0 RN/L = 3.51 GRADIENT INTERVAL = -5.00/ 5.00

ALPHAO	BETAO	CP1	CP2	CP3	CP4	CPBV	RUDDER	CHR	CNVT	CBVT	CTVT
-.312	-6.620	-.24280	-.25590	-.25190	-.22020	-.23430	-.15730	-.01000	.37120	.26420	-.09430
-.295	-.356	-.22230	-.23340	-.21950	-.20360	-.22900	-.06460	.00020	.03110	.01270	-.00050
-.308	5.848	-.2[illegible]080	-.25810	-.23410	-.21950	-.23850	-.01560	.00550	-.28940	-.22510	.08400
	GRADIENT	.00000	.00000	.00000	.00000	.00000	.00000	.00000	.00000	.00000	.00000

IA156A, AEDC PWT 16T-470, O T S (R8NF02) (10 MAY 80)

REFERENCE DATA

SREF = 2690.0000 SQ.FT. XMRP = 976.0000 IN. XT
LREF = 1290.3000 INCHES YMRP = .0000 IN. YT
BREF = 1290.3000 INCHES ZMRP = 400.0000 IN. ZT
SCALE = .0200

PARAMETRIC DATA

IB-ELV = 10.000 OB-ELV = 5.000
BDFLAP = .000 SPDBRK = .000
RUDDER = .000 SILTS = .000
MACH = .700 RN/L = 3.500

RUN NO. 803/ 0 RN/L = 3.50 GRADIENT INTERVAL = -5.00/ 5.00

ALPHAO	BETAO	CP1	CP2	CP3	CP4	CPBV	RUDDER	CHR	CNVT	CBVT	CTVT
-.307	-6.786	-.24950	-.26090	-.26010	-.23190	-.24260	-.17820	-.01080	.38160	.26830	-.09570
-.309	-.446	-.22410	-.23390	-.22290	-.20610	-.22330	-.06360	.00030	.03170	.01340	.00010
-.343	5.803	-.24660	-.26210	-.24360	-.22620	-.24320	-.03730	.00280	-.29110	-.22560	.08260
	GRADIENT	.00000	.00000	.00000	.00000	.00000	.00000	.00000	.00000	.00000	.00000

IA156A, AEDC PWT 16T-470, O T S (R8NF03) (10 MAY 80)

REFERENCE DATA

SREF = 2690.0000 SQ.FT. XMRP = 976.0000 IN. XT
LREF = 1290.3000 INCHES YMRP = .0000 IN. YT
BREF = 1290.3000 INCHES ZMRP = 400.0000 IN. ZT
SCALE = .0200

PARAMETRIC DATA

IB-ELV = 10.000 OB-ELV = 5.000
BDFLAP = .000 SPDBRK = .000
RUDDER = .000 SILTS = .000
MACH = .800 RN/L = 3.500

RUN NO. 804/ 0 RN/L = 3.50 GRADIENT INTERVAL = -5.00/ 5.00

ALPHAO	BETAO	CP1	CP2	CP3	CP4	CPBV	RUDDER	CHR	CNVT	CBVT	CTVT
-.315	-6.863	-.25630	-.26770	-.26670	-.23990	-.25720	-.15630	-.00790	.38020	.26270	-.09120
-.322	-.508	-.22860	-.23800	-.23000	-.20970	-.23120	-.03380	.00290	.03110	.01120	.00380
-.361	5.804	-.24860	-.26270	-.24970	-.22970	-.24890	-.10570	-.00350	-.29530	-.22820	.08100
GRADIENT		.00000	.00000	.00000	.00000	.00000	.00000	.00000	.00000	.00000	.00000

IA156A, AEDC PWT 16T-470, O T S (R8NF04) (10 MAY 80)

REFERENCE DATA

SREF = 2690.0000 SQ.FT. XMRP = 976.0000 IN. XT
LREF = 1290.3000 INCHES YMRP = .0000 IN. YT
BREF = 1290.3000 INCHES ZMRP = 400.0000 IN. ZT
SCALE = .0200

PARAMETRIC DATA

IB-ELV = 10.000 OB-ELV = 5.000
BDFLAP = .000 SPDBRK = .000
RUDDER = .000 SILTS = .000
MACH = .850 RN/L = 3.500

RUN NO. 805/ 0 RN/L = 3.50 GRADIENT INTERVAL = -5.00/ 5.00

ALPHAO	BETAO	CP1	CP2	CP3	CP4	CPBV	RUDDER	CHR	CNVT	CBVT	CTVT
-.323	-6.768	-.27080	-.28050	-.27840	-.25400	-.27610	.00410	.00590	.37060	.25930	-.08850
-.325	-.526	-.23800	-.24800	-.24120	-.22150	-.24280	.01390	.00670	.03020	.01130	.00450
-.372	5.679	-.25850	-.27160	-.26440	-.23910	-.26480	-.17210	-.00880	-.27630	-.20780	.06810
GRADIENT		.00000	.00000	.00000	.00000	.00000	.00000	.00000	.00000	.00000	.00000

IA156A, AEDC PWT 16T-470, O T S (R8NF05) (10 MAY 80)

REFERENCE DATA

SREF = 2690.0000 SQ.FT. XMRP = 976.0000 IN. XT
LREF = 1290.3000 INCHES YMRP = .0000 IN. YT
BREF = 1290.3000 INCHES ZMRP = 400.0000 IN. ZT
SCALE = .0200

PARAMETRIC DATA

IB-ELV = 10.000 OB-ELV = 5.000
BDFLAP = .000 SPDBRK = .000
RUDDER = .000 SILTS = .000
MACH = .900 RN/L = 3.500

RUN NO. 806/ 0 RN/L = 3.50 GRADIENT INTERVAL = -5.00/ 5.00

ALPHAO	BETAO	CP1	CP2	CP3	CP4	CPBV	RUDDER	CHR	CNVT	CBVT	CTVT
-.339	-6.784	-.28700	-.35450	-.29520	-.26590	-.28700	-.02510	.00330	.36210	.25310	-.09410
-.340	-.528	-.24480	-.25360	-.25680	-.22900	-.25580	.01070	.00620	.03090	.01240	.00250
-.387	5.707	-.27050	-.28210	-.27830	-.24960	-.27770	-.17560	-.00880	-.26690	-.20390	.06860
	GRADIENT	.00000	.00000	.00000	.00000	.00000	.00000	.00000	.00000	.00000	.00000

IA156A, AEDC PWT 16T-470, O T S (R8NF06) (10 MAY 80)

REFERENCE DATA

SREF = 2690.0000 SQ.FT. XMRP = 976.0000 IN. XT
LREF = 1290.3000 INCHES YMRP = .0000 IN. YT
BREF = 1290.3000 INCHES ZMRP = 400.0000 IN. ZT
SCALE = .0200

PARAMETRIC DATA

IB-ELV = 10.000 OB-ELV = 5.000
BDFLAP = .000 SPDBRK = .000
RUDDER = .000 SILTS = .000
MACH = .920 RN/L = 3.500

RUN NO. 807/ 0 RN/L = 3.50 GRADIENT INTERVAL = -5.00/ 5.00

ALPHAO	BETAO	CP1	CP2	CP3	CP4	CPBV	RUDDER	CHR	CNVT	CBVT	CTVT
-.348	-6.787	-.29650	-.30380	-.30270	-.27390	-.29830	-.02110	.00360	.35940	.26000	-.09660
-.343	-.555	-.25060	-.25860	-.25830	-.23120	-.25880	-.04070	.00200	.03470	.01710	-.00210
-.389	5.691	-.27830	-.29050	-.27730	-.25660	-.27990	-.17160	-.00840	-.27000	-.21120	.07570
	GRADIENT	.00000	.00000	.00000	.00000	.00000	.00000	.00000	.00000	.00000	.00000

IA156A, AEDC PWT 16T-470, O T S (R8NF07) (10 MAY 80)

REFERENCE DATA

SREF = 2690.0000 SQ.FT. XMRP = 976.0000 IN. XT
LREF = 1290.3000 INCHES YMRP = .0000 IN. YT
BREF = 1290.3000 INCHES ZMRP = 400.0000 IN. ZT
SCALE = .0200

PARAMETRIC DATA

IB-ELV = 10.000 OB-ELV = 5.000
BDFLAP = .000 SPDBRK = .000
RUDDER = .000 SILTS = .000
MACH = .940 RN/L = 3.500

RUN NO. 808/ 0 RN/L = 3.50 GRADIENT INTERVAL = -5.00/ 5.00

ALPHAO	BETAO	CP1	CP2	CP3	CP4	CPBV	RUDDER	CHR	CNVT	CBVT	CTVT
-.350	-6.771	-.30940	-.31630	-.31550	-.28460	-.30690	.06580	.01030	.35300	.25910	-.09780
-.343	-.582	-.26240	-.36830	-.26570	-.24030	-.26850	-.02370	.00340	.03650	.01930	-.00350
-.393	5.795	-.29670	-.30780	-.28970	-.27410	-.29650	-.33720	-.02130	-.26590	-.20510	.06900
	GRADIENT	.00000	.00000	.00000	.00000	.00000	.00000	.00000	.00000	.00000	.00000

IA156A, AEDC PWT 16T-470, O T S (R8NF08) (10 MAY 80)

REFERENCE DATA

SREF = 2690.0000 SQ.FT. XMRP = 976.0000 IN. XT
LREF = 1290.3000 INCHES YMRP = .0000 IN. YT
BREF = 1290.3000 INCHES ZMRP = 400.0000 IN. ZT
SCALE = .0200

PARAMETRIC DATA

IB-ELV = 10.000 OB-ELV = 5.000
BDFLAP = .000 SPDBRK = .000
RUDDER = .000 SILTS = .000
MACH = .950 RN/L = 3.500

RUN NO. 816/ 0 RN/L = 3.50 GRADIENT INTERVAL = -5.00/ 5.00

BETAO	ALPHAO	CP1	CP2	CP3	CP4	CPBV	RUDDER	CHR	CNVT	CBVT	CTVT
.566	-5.898	-.29630	-.30670	-.28900	-.28370	-.30460	-.25750	-.02040	-.02930	-.01600	-.00490
.266	-1.055	-.27700	-.28750	-.26190	-.26150	-.28910	-.05640	-.00470	-.01140	-.00570	-.00230
.197	.029	-.28640	-.29530	-.27630	-.27340	-.28980	-.00960	-.00110	-.00700	-.00350	-.00140
-.170	5.745	-.28110	-.28910	-.27590	-.26830	-.27810	.05540	.00400	.01380	.00840	-.00090
	GRADIENT	-.00867	-.00720	-.01329	-.01098	-.00065	.04319	.00332	.00406	.00203	.00083

IA156A, AEDC PWT 16T-470, O T S (R8NF09) (10 MAY 80)

REFERENCE DATA

SREF = 2690.0000 SQ.FT. XMRP = 976.0000 IN. XT
LREF = 1290.3000 INCHES YMRP = .0000 IN. YT
BREF = 1290.3000 INCHES ZMRP = 400.0000 IN. ZT
SCALE = .0200

PARAMETRIC DATA

IB-ELV = 10.000 OB-ELV = 5.000
BDFLAP = .000 SPDBRK = .000
RUDDER = .000 SILTS = .000
MACH = .950 RN/L = 3.500

RUN NO. 820/ 0 RN/L = 3.50 GRADIENT INTERVAL = -5.00/ 5.00

ALPHAO	BETAO	CP1	CP2	CP3	CP4	CPBV	RUDDER	CHR	CNVT	CBVT	CTVT
-.433	-6.912	-.32820	-.33650	-.33230	-.31550	-.32520	.16730	.01820	.34010	.25290	-.09500
-.362	-.195	-.28260	-.29120	-.27610	-.27160	-.28750	-.07890	-.00100	.00720	.00480	-.00440
-.330	5.845	-.30830	-.32010	-.29900	-.29740	-.30820	-.34440	-.02160	-.27630	-.20880	.07070
	GRADIENT	.00000	.00000	.00000	.00000	.00000	.00000	.00000	.00000	.00000	.00000

IA156A, AEDC PWT 16T-470, O T S (R8NF10) (10 MAY 80)

REFERENCE DATA

SREF = 2690.0000 SQ.FT. XMRP = 976.0000 IN. XT
LREF = 1290.3000 INCHES YMRP = .0000 IN. YT
BREF = 1290.3000 INCHES ZMRP = 400.0000 IN. ZT
SCALE = .0200

PARAMETRIC DATA

IB-ELV = 10.000 OB-ELV = 5.000
BDFLAP = .000 SPDBRK = .000
RUDDER = .000 SILTS = .000
MACH = .960 RN/L = 3.500

RUN NO. 818/ 0 RN/L = 3.50 GRADIENT INTERVAL = -5.00/ 5.00

ALPHAO	BETAO	CP1	CP2	CP3	CP4	CPBV	RUDDER	CHR	CNVT	CBVT	CTVT
-.432	-6.901	-.33530	-.34370	-.33670	-.32230	-.33140	.18780	.01970	.34050	.25430	-.09730
-.372	-.535	-.28530	-.29120	-.28630	-.27430	-.29270	-.08920	-.00180	.02370	.01690	-.00820
-.342	5.840	-.32160	-.33120	-.31230	-.31020	-.31660	-.36620	-.02320	-.27260	-.21220	.07420
	GRADIENT	.00000	.00000	.00000	.00000	.00000	.00000	.00000	.00000	.00000	.00000

IA156A, AEDC PWT 16T-470, O T S (R8NF11) (10 MAY 80)

REFERENCE DATA

SREF = 2690.0000 SQ.FT. XMRP = 976.0000 IN. XT
LREF = 1290.3000 INCHES YMRP = .0000 IN. YT
BREF = 1290.3000 INCHES ZMRP = 400.0000 IN. ZT
SCALE = .0200

PARAMETRIC DATA

IB-ELV = 10.000 OB-ELV = 5.000
BDFLAP = .000 SPDBRK = .000
RUDDER = .000 SILTS = .000
MACH = .970 RN/L = 3.500

RUN NO. 821/ 0 RN/L = 3.50 GRADIENT INTERVAL = -5.00/ 5.00

ALPHAO	BETAO	CP1	CP2	CP3	CP4	CPBV	RUDDER	CHR	CNVT	CBVT	CTVT
-.443	-6.731	-.34540	-.35420	-.34410	-.33130	-.34180	.22610	.02250	.33820	.25460	-.09910
-.377	-.325	-.28680	-.29410	-.28800	-.27710	-.29580	-.15600	-.00680	.01540	.01270	-.00980
-.342	5.959	-.32550	-.33660	-.31950	-.31570	-.32560	-.35240	-.02210	-.28750	-.21980	.07930
	GRADIENT	.00000	.00000	.00000	.00000	.00000	.00000	.00000	.00000	.00000	.00000

IA156A, AEDC PWT 16T-470, O T S (R8NF12) (10 MAY 80)

REFERENCE DATA

SREF = 2690.0000 SQ.FT. XMRP = 976.0000 IN. XT
LREF = 1290.3000 INCHES YMRP = .0000 IN. YT
BREF = 1290.3000 INCHES ZMRP = 400.0000 IN. ZT
SCALE = .0200

PARAMETRIC DATA

IB-ELV = 10.000 OB-ELV = 5.000
BDFLAP = .000 SPDBRK = .000
RUDDER = .000 SILTS = .000
MACH = .980 RN/L = 3.500

RUN NO. 822/ 0 RN/L = 3.51 GRADIENT INTERVAL = -5.00/ 5.00

ALPHAO	BETAO	CP1	CP2	CP3	CP4	CPBV	RUDDER	CHR	CNVT	CBVT	CTVT
-.156	-6.192	-.35330	-.35990	-.35130	-.33960	-.35060	.26840	.02550	.30620	.23250	-.08950
-.374	.020	-.31420	-.32700	-.31130	-.30300	-.32190	-.21300	-.01160	.01000	.00930	-.01170
-.004	5.943	-.33960	-.35060	-.33280	-.32990	-.33830	-.35390	-.02200	-.28810	-.22400	.08470
	GRADIENT	.00000	.00000	.00000	.00000	.00000	.00000	.00000	.00000	.00000	.00000

IA156A, AEDC PWT 16T-470, O T S (R8NF13) (10 MAY 80)

REFERENCE DATA

SREF = 2690.0000 SQ.FT. XMRP = 976.0000 IN. XT
LREF = 1290.3000 INCHES YMRP = .0000 IN. YT
BREF = 1290.3000 INCHES ZMRP = 400.0000 IN. ZT
SCALE = .0200

PARAMETRIC DATA

IB-ELV = 10.000 OB-ELV = 5.000
BDFLAP = .000 SPDBRK = .000
RUDDER = .000 SILTS = .000
MACH = .990 RN/L = 3.500

RUN NO. 823/ 0 RN/L = 3.50 GRADIENT INTERVAL = -5.00/ 5.00

ALPHAO	BETAO	CP1	CP2	CP3	CP4	CPBV	RUDDER	CHR	CNVT	CBVT	CTVT
-.071	-6.202	-.35730	-.36370	-.35410	-.34190	-.35950	.27610	.02600	.30860	.23590	-.09230
.328	.120	-.32050	-.33580	-.30860	-.30790	-.32640	-.24510	-.01400	.00400	.00380	-.00960
-.058	5.687	-.33780	-.34900	-.33040	-.32670	-.33510	-.39030	-.02450	-.27140	-.21240	.07970
	GRADIENT	.00000	.00000	.00000	.00000	.00000	.00000	.00000	.00000	.00000	.00000

IA156A, AEDC PWT 16T-470, O T S (R8NF14) (10 MAY 80)

REFERENCE DATA

SREF = 2690.0000 SQ.FT. XMRP = 976.0000 IN. XT
LREF = 1290.3000 INCHES YMRP = .0000 IN. YT
BREF = 1290.3000 INCHES ZMRP = 400.0000 IN. ZT
SCALE = .0200

PARAMETRIC DATA

IB-ELV = 10.000 OB-ELV = 5.000
BDFLAP = .000 SPDBRK = .000
RUDDER = .000 SILTS = .000
MACH = 1.010 RN/L = 3.500

RUN NO. 824/ 0 RN/L = 3.51 GRADIENT INTERVAL = -5.00/ 5.00

ALPHAO	BETAO	CP1	CP2	CP3	CP4	CPBV	RUDDER	CHR	CNVT	CBVT	CTVT
.039	-6.145	-.38230	-.39240	-.37660	-.36170	-.39130	.20390	.02020	.31190	.24160	-.10070
-.230	.302	-.37550	-.38640	-.35670	-.35740	-.37450	-.26660	-.01560	-.00260	-.00400	-.00440
-.111	6.034	-.37010	-.37990	-.35980	-.35890	-.36816	-.28470	-.01650	-.29960	-.23770	.09870
	GRADIENT	.00000	.00000	.00000	.00000	.00000	.00000	.00000	.00000	.00000	.00000

IA156A, AEDC PWT 16T-470, O T S (R8NF15) (10 MAY 80)

REFERENCE DATA

SREF = 2690.0000 SQ.FT. XMRP = 976.0000 IN. XT
LREF = 1290.3000 INCHES YMRP = .0000 IN. YT
BREF = 1290.3000 INCHES ZMRP = 400.0000 IN. ZT
SCALE = .0200

PARAMETRIC DATA

IB-ELV = 10.000 OB-ELV = 5.000
BDFLAP = .000 SPDBRK = .000
RUDDER = .000 SILTS = .000
MACH = 1.020 RN/L = 3.500

RUN NO. 825/ 0 RN/L = 3.51 GRADIENT INTERVAL = -5.00/ 5.00

ALPHAO	BETAO	CP1	CP2	CP3	CP4	CPBV	RUDDER	CHR	CNVT	CBVT	CTVT
-.021	-6.211	-.39140	-.40460	-.39130	-.37610	-.40790	.14860	.01600	.31710	.24730	-.10670
-.340	.134	-.38620	-.39790	-.36640	-.36700	-.38200	-.22340	-.01220	.00090	-.00240	-.00290
-.052	6.077	-.37980	-.39000	-.36850	-.36990	-.38250	-.23330	-.01250	-.30520	-.24420	.10520
	GRADIENT	.00000	.00000	.00000	.00000	.00000	.00000	.00000	.00000	.00000	.00000

IA156A, AEDC PWT 16T-470, O T S (R8NF16) (10 MAY 80)

REFERENCE DATA

SREF = 2690.0000 SQ.FT. XMRP = 976.0000 IN. XT
LREF = 1290.3000 INCHES YMRP = .0000 IN. YT
BREF = 1290.3000 INCHES ZMRP = 400.0000 IN. ZT
SCALE = .0200

PARAMETRIC DATA

IB-ELV = 10.000 OB-ELV = 5.000
BDFLAP = .000 SPDBRK = .000
RUDDER = .000 SILTS = .000
MACH = 1.030 RN/L = 3.500

RUN NO. 826/ 0 RN/L = 3.51 GRADIENT INTERVAL = -5.00/ 5.00

ALPHAO	BETAO	CP1	CP2	CP3	CP4	CPBV	RUDDER	CHR	CNVT	CBVT	CTVT
-.007	-6.500	-.41230	-.42290	-.41130	-.39390	-.42910	.04940	.00860	.33680	.26240	-.11780
-.314	.180	-.39840	-.41010	-.37720	-.38040	-.39400	-.17170	-.00830	-.00070	-.00430	-.00080
-.099	6.275	-.39730	-.40910	-.38270	-.38640	-.40580	-.17180	-.00790	-.31740	-.25520	.11330
	GRADIENT	.00000	.00000	.00000	.00000	.00000	.00000	.00000	.00000	.00000	.00000

IA156A, AEDC PWT 16T-470, O T S (R8NF17) (10 MAY 80)

REFERENCE DATA

SREF = 2690.0000 SQ.FT. XMRP = 976.0000 IN. XT
LREF = 1290.3000 INCHES YMRP = .0000 IN. YT
BREF = 1290.3000 INCHES ZMRP = 400.0000 IN. ZT
SCALE = .0200

PARAMETRIC DATA

IB-ELV = 10.000 OB-ELV = 5.000
BDFLAP = .000 SPDBRK = .000
RUDDER = .000 SILTS = .000
MACH = 1.040 RN/L = 3.500

RUN NO. 827/ 0 RN/L = 3.51 GRADIENT INTERVAL = -5.00/ 5.00

ALPHAO	BETAO	CP1	CP2	CP3	CP4	CPBV	RUDDER	CHR	CNVT	CBVT	CTVT
-.214	-6.395	-.42800	-.43960	-.42560	-.40820	-.45100	-.01750	.00360	.34290	.26770	-.12290
-.345	.160	-.41850	-.43200	-.39950	-.40460	-.41530	-.12230	-.00440	-.00530	-.00810	.00220
-.040	6.152	-.40540	-.42020	-.39240	-.39460	-.42340	-.13500	-.00510	-.31130	-.25230	.11420
	GRADIENT	.00000	.00000	.00000	.00000	.00000	.00000	.00000	.00000	.00000	.00000

IA156A, AEDC PWT 16T-470, O T S (R8NF18) (10 MAY 80)

REFERENCE DATA

SREF = 2690.0000 SQ.FT. XMRP = 976.0000 IN. XT
LREF = 1290.3000 INCHES YMRP = .0000 IN. YT
BREF = 1290.3000 INCHES ZMRP = 400.0000 IN. ZT
SCALE = .0200

PARAMETRIC DATA

IB-ELV = 10.000 OB-ELV = 5.000
BDFLAP = .000 SPDBRK = .000
RUDDER = .000 SILTS = .000
MACH = 1.050 RN/L = 3.500

RUN NO. 828/ 0 RN/L = 3.51 GRADIENT INTERVAL = -5.00/ 5.00

ALPHAO	BETAO	CP1	CP2	CP3	CP4	CPBV	RUDDER	CHR	CNVT	CBVT	CTVT
-.128	-6.378	-.43600	-.44660	-.43630	-.41610	-.45880	-.06220	.00030	.33840	.26530	-.12330
-.291	.263	-.41170	-.42850	-.39920	-.39970	-.41040	-.09580	-.00260	-.00610	-.00890	.00260
-.145	6.216	-.40460	-.41950	-.39110	-.39300	-.42410	-.07960	-.00100	-.31820	-.25800	.11880
	GRADIENT	.00000	.00000	.00000	.00000	.00000	.00000	.00000	.00000	.00000	.00000

IA156A, AEDC PWT 16T-470, O T S (R8NF19) (10 MAY 80)

REFERENCE DATA

SREF = 2690.0000 SQ.FT. XMRP = 976.0000 IN. XT
LREF = 1290.3000 INCHES YMRP = .0000 IN. YT
BREF = 1290.3000 INCHES ZMRP = 400.0000 IN. ZT
SCALE = .0200

PARAMETRIC DATA

IB-ELV = 10.000 OB-ELV = 5.000
BDFLAP = .000 SPDBRK = .000
RUDDER = .000 SILTS = .000
MACH = 1.060 RN/L = 3.500

RUN NO. 829/ 0 RN/L = 3.50 GRADIENT INTERVAL = -5.00/ 5.00

ALPHAO	BETAO	CP1	CP2	CP3	CP4	CPBV	RUDDER	CHR	CNVT	CBVT	CTVT
-.024	-6.353	-.41810	-.42910	-.41970	-.39800	-.44010	-.05410	.00090	.33630	.26490	-.12320
-.275	.284	-.39700	-.41120	-.38160	-.38340	-.39520	-.10910	-.00350	-.01210	-.01400	.00460
-.170	6.205	-.38500	-.40140	-.37240	-.37570	-.40690	-.10340	-.00270	-.31570	-.25630	.11770
	GRADIENT	.00000	.00000	.00000	.00000	.00000	.00000	.00000	.00000	.00000	.00000

IA156A, AEDC PWT 16T-470, O T S (R8NF20) (10 MAY 80)

REFERENCE DATA

SREF = 2690.0000 SQ.FT. XMRP = 976.0000 IN. XT
LREF = 1290.3000 INCHES YMRP = .0000 IN. YT
BREF = 1290.3000 INCHES ZMRP = 400.0000 IN. ZT
SCALE = .0200

PARAMETRIC DATA

IB-ELV = 10.000 OB-ELV = 5.000
BDFLAP = .000 SPDBRK = .000
RUDDER = .000 SILTS = .000
MACH = 1.080 RN/L = 3.500

RUN NO. 830/ 0 RN/L = 3.48 GRADIENT INTERVAL = -5.00/ 5.00

ALPHAO	BETAO	CP1	CP2	CP3	CP4	CPBV	RUDDER	CHR	CNVT	CBVT	CTVT
-.161	-6.471	-.38260	-.39230	-.37720	-.35950	-.40720	-.05660	.00070	.33260	.26170	-.12170
-.313	.183	-.37110	-.38510	-.35320	-.35540	-.36890	-.11720	-.00410	-.00620	-.00940	.00270
-.214	6.199	-.34710	-.35930	-.33030	-.33560	-.36150	-.12220	-.00410	-.31140	-.25210	.11500
	GRADIENT	.00000	.00000	.00000	.00000	.00000	.00000	.00000	.00000	.00000	.00000

IA156A, AEDC PWT 16T-470, O T S (R8NF21) (10 MAY 80)

REFERENCE DATA

SREF = 2690.0000 SQ.FT. XMRP = 976.0000 IN. XT
LREF = 1290.3000 INCHES YMRP = .0000 IN. YT
BREF = 1290.3000 INCHES ZMRP = 400.0000 IN. ZT
SCALE = .0200

PARAMETRIC DATA

IB-ELV = 10.000 OB-ELV = 5.000
BDFLAP = .000 SPDBRK = .000
RUDDER = .000 SILTS = .000
MACH = 1.100 RN/L = 3.500

RUN NO. 831/ 0 RN/L = 3.50 GRADIENT INTERVAL = -5.00/ 5.00

ALPHAO	BETAO	CP1	CP2	CP3	CP4	CPBV	RUDDER	CHR	CNVT	CBVT	CTVT
-.224	-6.217	-.37950	-.38790	-.37220	-.35720	-.40320	-.08830	-.00160	.31950	.25230	-.11830
-.347	.132	-.35030	-.36240	-.32830	-.33690	-.34590	-.06860	-.00060	-.00460	-.00840	.00320
-.016	6.090	-.33860	-.35080	-.32070	-.32750	-.35370	-.07950	-.00100	-.30370	-.24720	.11430
	GRADIENT	.00000	.00000	.00000	.00000	.00000	.00000	.00000	.00000	.00000	.00000

IA156A, AEDC PWT 16T-470, O T S (R8NF22) (10 MAY 80)

REFERENCE DATA

SREF = 2690.0000 SQ.FT. XMRP = 976.0000 IN. XT
LREF = 1290.3000 INCHES YMRP = .0000 IN. YT
BREF = 1290.3000 INCHES ZMRP = 400.0000 IN. ZT
SCALE = .0200

PARAMETRIC DATA

IB-ELV = 10.000 OB-ELV = 5.000
BDFLAP = .000 SPDBRK = .000
RUDDER = .000 SILTS = .000
MACH = 1.150 RN/L = 3.500

RUN NO. 836/ 0 RN/L = 3.50 GRADIENT INTERVAL = -5.00/ 5.00

ALPHAO	BETAO	CP1	CP2	CP3	CP4	CPBV	RUDDER	CHR	CNVT	CBVT	CTVT
.183	-5.955	-.33260	-.33830	-.33020	-.31610	-.35210	-.05940	-.00880	.28300	.22600	-.10300
-.344	.100	-.33570	-.34570	-.31590	-.32200	-.33320	-.06370	-.00060	.00070	-.00370	.00060
-.189	5.963	-.32780	-.33920	-.30610	-.31240	-.33750	.09710	.01150	-.30620	-.24870	.11940
	GRADIENT	.00000	.00000	.00000	.00000	.00000	.00000	.00000	.00000	.00000	.00000

IA156A, AEDC PWT 16T-470, O T S (R8NF23) (10 MAY 80)

REFERENCE DATA

SREF = 2690.0000 SQ.FT. XMRP = 976.0000 IN. XT
LREF = 1290.3000 INCHES YMRP = .0000 IN. YT
BREF = 1290.3000 INCHES ZMRP = 400.0000 IN. ZT
SCALE = .0200

PARAMETRIC DATA

IB-ELV = 10.000 OB-ELV = 5.000
BDFLAP = .000 SPDBRK = .000
RUDDER = .000 SILTS = .000
MACH = 1.200 RN/L = 3.500

RUN NO. 837/ 0 RN/L = 3.51 GRADIENT INTERVAL = -5.00/ 5.00

ALPHAO	BETAO	CP1	CP2	CP3	CP4	CPBV	RUDDER	CHR	CNVT	CBVT	CTVT
.094	-5.933	-.31090	-.31510	-.30490	-.29340	-.32600	-.16330	-.01590	.27970	.22540	-.10560
-.213	.260	-.31600	-.32630	-.29980	-.30250	-.31230	-.03510	.00100	-.01020	-.01240	.00480
-.233	6.027	-.30940	-.32260	-.29740	-.29600	-.32090	.23310	.02060	-.31020	-.25200	.12450
	GRADIENT	.00000	.00000	.00000	.00000	.00000	.00000	.00000	.00000	.00000	.00000

IA156A, AEDC PWT 16T-470, O T S (R8NF24) (10 MAY 80)

REFERENCE DATA

SREF = 2690.0000 SQ.FT. XMRP = 976.0000 IN. XT
LREF = 1290.3000 INCHES YMRP = .0000 IN. YT
BREF = 1290.3000 INCHES ZMRP = 400.0000 IN. ZT
SCALE = .0200

PARAMETRIC DATA

IB-ELV = 10.000 OB-ELV = 5.000
BDFLAP = .000 SPDBRK = .000
RUDDER = .000 SILTS = .000
MACH = 1.250 RN/L = 3.500

RUN NO. 838/ 0 RN/L = 3.50 GRADIENT INTERVAL = -5.00/ 5.00

ALPHAO	BETAO	CP1	CP2	CP3	CP4	CPBV	RUDDER	CHR	CNVT	CBVT	CTVT
-.160	-6.422	-.33420	-.33890	-.33700	-.31390	-.35360	-.45240	-.02630	.33220	.26250	-.13240
-.274	.269	-.30280	-.31380	-.28940	-.29130	-.30570	-.02430	.00240	-.01300	-.01420	.00630
-.219	5.956	-.30540	-.31490	-.28790	-.28830	-.31940	.35150	.02040	-.30590	-.24880	.12520
	GRADIENT	.00000	.00000	.00000	.00000	.00000	.00000	.00000	.00000	.00000	.00000

IA156A, AEDC PWT 16T-470, O T S (R8NF25) (10 MAY 80)

REFERENCE DATA

SREF = 2690.0000 SQ.FT. XMRP = 976.0000 IN. XT
LREF = 1290.3000 INCHES YMRP = .0000 IN. YT
BREF = 1290.3000 INCHES ZMRP = 400.0000 IN. ZT
SCALE = .0200

PARAMETRIC DATA

IB-ELV = 10.000 OB-ELV = 5.000
BDFLAP = .000 SPDBRK = .000
RUDDER = .000 SILTS = .000
MACH = 1.300 RN/L = 3.500

RUN NO. 839/ 0 RN/L = 3.50 GRADIENT INTERVAL = -5.00/ 5.00

ALPHAO	BETAO	CP1	CP2	CP3	CP4	CPBV	RUDDER	CHR	CNVT	CBVT	CTVT
-.187	-6.415	-.31930	-.32450	-.32110	-.30090	-.33570	-.51460	-.03010	.32420	.25740	-.13120
-.333	.162	-.29400	-.30420	-.28440	-.28240	-.29930	-.04440	.00120	-.00690	-.00870	.00350
-.214	6.171	-.29840	-.30660	-.28010	-.28220	-.31640	.43940	.03390	-.31230	-.25390	.12980
	GRADIENT	.00000	.00000	.00000	.00000	.00000	.00000	.00000	.00000	.00000	.00000

IA156A, AEDC PWT 16T-470, O T S (R8NF26) (10 MAY 80)

REFERENCE DATA

SREF = 2690.0000 SQ.FT. XMRP = 976.0000 IN. XT
LREF = 1290.3000 INCHES YMRP = .0000 IN. YT
BREF = 1290.3000 INCHES ZMRP = 400.0000 IN. ZT
SCALE = .0200

PARAMETRIC DATA

IB-ELV = 10.000 OB-ELV = 5.000
BDFLAP = .000 SPDBRK = .000
RUDDER = .000 SILTS = .000
MACH = 1.400 RN/L = 3.500

RUN NO. 840/ 0 RN/L = 3.50 GRADIENT INTERVAL = -5.00/ 5.00

ALPHAO	BETAO	CP1	CP2	CP3	CP4	CPBV	RUDDER	CHR	CNVT	CBVT	CTVT
-.188	-6.466	-.30530	-.30670	-.30770	-.28520	-.31980	-.64770	-.03820	.33290	.26100	-.13550
-.345	.249	-.28280	-.29030	-.27430	-.26900	-.29330	-.02610	.00230	-.01300	-.01360	.00620
-.211	6.167	-.29040	-.29670	-.28350	-.27770	-.31050	.59260	.04320	-.32020	-.25640	.13410
	GRADIENT	.00000	.00000	.00000	.00000	.00000	.00000	.00000	.00000	.00000	.00000

IA156A, AEDC PWT 16T-470, O T S (R8NF27) (10 MAY 80)

REFERENCE DATA

SREF = 2690.0000 SQ.FT. XMRP = 976.0000 IN. XT
LREF = 1290.3000 INCHES YMRP = .0000 IN. YT
BREF = 1290.3000 INCHES ZMRP = 400.0000 IN. ZT
SCALE = .0200

PARAMETRIC DATA

IB-ELV = 10.000 OB-ELV = 5.000
BDFLAP = .000 SPDBRK = .000
RUDDER = .000 SILTS = .000
MACH = 1.550 RN/L = 3.200

RUN NO. 841/ 0 RN/L = 3.19 GRADIENT INTERVAL = -5.00/ 5.00

ALPHAO	BETAO	CP1	CP2	CP3	CP4	CPBV	RUDDER	CHR	CNVT	CBVT	CTVT
-.168	-6.478	-.28590	-.28320	-.30380	-.26130	-.28890	-.68460	-.04390	.33820	.26250	-.13880
-.435	.244	-.26020	-.26550	-.25090	-.24360	-.24730	.00920	.00490	-.01500	-.01630	.00870
-.301	6.109	-.26610	-.26960	-.26320	-.25550	-.28000	.62770	.04890	-.32850	-.26080	.13900
	GRADIENT	.00000	.00000	.00000	.00000	.00000	.00000	.00000	.00000	.00000	.00000

IA156A, AEDC PWT 16T-470, O T S (R8NF28) (10 MAY 80)

REFERENCE DATA

SREF = 2690.0000 SQ.FT. XMRP = 976.0000 IN. XT
LREF = 1290.3000 INCHES YMRP = .0000 IN. YT
BREF = 1290.3000 INCHES ZMRP = 400.0000 IN. ZT
SCALE = .0200

PARAMETRIC DATA

IB-ELV = 10.000 OB-ELV = 5.000
BDFLAP = .000 SPDBRK = .000
RUDDER = .000 SILTS = .000
MACH = .600 RN/L = 3.500

RUN NO. 846/ 0 RN/L = 3.50 GRADIENT INTERVAL = -5.00/ 5.00

ALPHAO	BETAO	CP1	CP2	CP3	CP4	CPBV	RUDDER	CHR	CNVT	CBVT	CTVT
-.334	-6.579	-.25370	-.27250	-.25960	-.24300	-.24690	-.13660	-.00770	.33930	.25070	-.09060
.127	-5.884	-.24630	-.26380	-.25500	-.23000	-.23930	.02680	-.00430	.24840	.18830	-.05590
.111	.087	-.22340	-.23520	-.21740	-.20990	-.22440	.05700	-.00100	-.04600	-.03430	.02420
-.270	5.876	-.24930	-.27000	-.24290	-.23240	-.24470	-.00560	.00660	-.29710	-.22290	.08110
.110	6.556	-.24150	-.26170	-.23060	-.22630	-.23470	.16360	.01070	-.37560	-.27590	.11360
	GRADIENT	.00000	.00000	.00000	.00000	.00000	.00000	.00000	.00000	.00000	.00000

IA156A, AEDC PWT 16T-470, O T S (R8NF29) (10 MAY 80)

REFERENCE DATA

SREF = 2690.0000 SQ.FT. XMRP = 976.0000 IN. XT
LREF = 1290.3000 INCHES YMRP = .0000 IN. YT
BREF = 1290.3000 INCHES ZMRP = 400.0000 IN. ZT
SCALE = .0200

PARAMETRIC DATA

IB-ELV = 10.000 OB-ELV = 5.000
BDFLAP = .000 SPDBRK = .000
RUDDER = .000 SILTS = .000
MACH = .900 RN/L = 3.500

RUN NO. 845/ 0 RN/L = 3.51 GRADIENT INTERVAL = -5.00/ 5.00

ALPHAO	BETAO	CP1	CP2	CP3	CP4	CPBV	RUDDER	CHR	CNVT	CBVT	CTVT
-.394	-6.843	-.29440	-.30450	-.29060	-.28310	-.29570	.02770	.00750	.33900	.24580	-.08610
.079	-5.835	-.29050	-.30180	-.29470	-.28510	-.29440	.22830	.01300	.25620	.19100	-.05540
-.355	-.269	-.24940	-.26420	-.25320	-.24340	-.26190	-.05350	.00100	.00530	-.00020	.00170
.065	.262	-.23910	-.25450	-.24720	-.23680	-.25460	.04920	-.00140	-.04100	-.03240	.02060
-.299	5.811	-.28460	-.30170	-.28710	-.27350	-.29340	-.17450	-.00870	-.28390	-.21220	.07080
.043	6.812	-.28390	-.30640	-.28830	-.27390	-.29240	.01090	-.00440	-.35830	-.26130	.09980
	GRADIENT	.01939	.01826	.01130	.01242	.01374	.19334	-.00452	-.08716	-.06062	.03558

IA156A, AEDC PWT 16T-470, O T S (R8NF30) (10 MAY 80)

REFERENCE DATA

SREF = 2690.0000 SQ.FT. XMRP = 976.0000 IN. XT
LREF = 1290.3000 INCHES YMRP = .0000 IN. YT
BREF = 1290.3000 INCHES ZMRP = 400.0000 IN. ZT
SCALE = .0200

PARAMETRIC DATA

IB-ELV = 10.000 OB-ELV = 5.000
BDFLAP = .000 SPDBRK = .000
RUDDER = .000 SILTS = .000
MACH = 1.100 RN/L = 3.500

RUN NO. 844/ 0 RN/L = 3.50 GRADIENT INTERVAL = -5.00/ 5.00

ALPHAO	BETAO	CP1	CP2	CP3	CP4	CPBV	RUDDER	CHR	CNVT	CBVT	CTVT
-.513	-6.849	-.38160	-.39350	-.38030	-.36110	-.40830	-.16210	-.00690	.35880	.28020	-.13420
.050	-5.864	-.35110	-.35680	-.34750	-.33340	-.37050	.11840	.00380	.26890	.21650	-.09390
-.403	-.197	-.35110	-.36130	-.32310	-.33480	-.34250	-.07640	-.00070	.00670	.00160	.00000
.034	.184	-.34070	-.35330	-.31860	-.32900	-.33740	.04110	-.00180	-.03690	-.02930	.01920
-.331	5.850	-.34120	-.35520	-.32250	-.32740	-.35600	-.08920	-.00170	-.29600	-.24000	.11070
-.018	6.825	-.36250	-.37660	-.34180	-.34490	-.38540	.13000	.00460	-.37280	-.29520	.14550
	GRADIENT	.02728	.02099	.01180	.01522	.01338	.30824	-.00289	-.11438	-.08106	.05037

IA156A, AEDC PWT 16T-470, O T S (R8NF31) (10 MAY 80)

REFERENCE DATA

SREF = 2690.0000 SQ.FT. XMRP = 976.0000 IN. XT
LREF = 1290.3000 INCHES YMRP = .0000 IN. YT
BREF = 1290.3000 INCHES ZMRP = 400.0000 IN. ZT
SCALE = .0200

PARAMETRIC DATA

IB-ELV = 10.000 OB-ELV = 5.000
BDFLAP = .000 SPDBRK = .000
RUDDER = .000 SILTS = .000
MACH = 1.550 RN/L = 3.200

RUN NO. 842/ 0 RN/L = 3.20 GRADIENT INTERVAL = -5.00/ 5.00

ALPHAO	BETAO	CP1	CP2	CP3	CP4	CPBV	RUDDER	CHR	CNVT	CBVT	CTVT
-.615	-6.815	-.28410	-.28190	-.30440	-.26090	-.29120	-.73390	-.04710	.35750	.27590	-.14680
.179	-6.058	-.27980	-.27930	-.30340	-.25790	-.28200	-.53370	-.04230	.29800	.23460	-.11970
-.533	-.323	-.25850	-.26200	-.25050	-.24090	-.24860	-.07570	-.00060	.00640	.00150	.00060
.170	.324	-.26240	-.26330	-.25370	-.24190	-.25120	.07620	.00070	-.04130	-.03230	.02130
-.475	5.830	-.26050	-.26400	-.25650	-.25040	-.27530	.59360	.04640	-.31250	-.24960	.13270
-.489	6.059	-.27340	-.27710	-.27080	-.26270	-.28870	.62690	.04880	-.32840	-.26100	.13910
.098	6.797	-.27360	-.27490	-.26950	-.26130	-.28530	.80260	.05180	-.38060	-.29420	.16200
	GRADIENT	-.00603	-.00201	-.00495	-.00155	-.00402	.23474	.00201	-.07371	-.05223	.03199

IA156A, AEDC PWT 16T-470, O T S (R8NF34) (10 MAY 80)

REFERENCE DATA

SREF = 2690.0000 SQ.FT. XMRP = 976.0000 IN. XT
LREF = 1290.3000 INCHES YMRP = .0000 IN. YT
BREF = 1290.3000 INCHES ZMRP = 400.0000 IN. ZT
SCALE = .0200

PARAMETRIC DATA

IB-ELV = 10.000 OB-ELV = 5.000
BDFLAP = .000 SPDBRK = .000
RUDDER = .000 SILTS = .000
MACH = 1.100 RN/L = 3.500
Z = 4.500

RUN NO. 835/ 0 RN/L = 3.51 GRADIENT INTERVAL = -5.00/ 5.00

ALPHAO	BETAO	CP1	CP2	CP3	CP4	CPBV	RUDDER	CHR	CNVT	CBVT	CTVT
.133	-5.950	-.34630	-.35180	-.34430	-.33070	-.36520	.11840	.00380	.27040	.21770	-.09410
-.326	.162	-.36470	-.37560	-.34540	-.35050	-.36100	-.06430	-.00020	-.00140	-.00590	.00270
-.142	6.104	-.34520	-.35790	-.32880	-.33360	-.36110	-.05750	.00060	-.30800	-.24980	.11640
	GRADIENT	.00000	.00000	.00000	.00000	.00000	.00000	.00000	.00000	.00000	.00000

IA156A, AEDC PWT 16T-470, O T S (R8NF35) (10 MAY 80)

REFERENCE DATA

SREF = 2690.0000 SQ.FT. XMRP = 976.0000 IN. XT
LREF = 1290.3000 INCHES YMRP = .0000 IN. YT
BREF = 1290.3000 INCHES ZMRP = 400.0000 IN. ZT
SCALE = .0200

PARAMETRIC DATA

IB-ELV = 10.000 OB-ELV = 5.000
BDFLAP = .000 SPDBRK = .000
RUDDER = .000 SILTS = .000
MACH = 1.100 RN/L = 3.500
Z = 5.500

RUN NO. 834/ 0 RN/L = 3.51 GRADIENT INTERVAL = -5.00/ 5.00

ALPHAO	BETAO	CP1	CP2	CP3	CP4	CPBV	RUDDER	CHR	CNVT	CBVT	CTVT
.202	-5.983	-.34720	-.35280	-.34450	-.32950	-.36420	.13370	.00490	.27240	.21880	-.09470
-.218	.317	-.35280	-.36500	-.33140	-.33870	-.34940	-.07000	-.00110	-.02110	-.02090	.00840
-.235	5.993	-.33810	-.35020	-.32230	-.32650	-.35160	-.07680	-.00080	-.30350	-.24560	.11360
	GRADIENT	.00000	.00000	.00000	.00000	.00000	.00000	.00000	.00000	.00000	.00000

IA156A, AEDC PWT 16T-470, O T S (R8NF36) (10 MAY 80)

REFERENCE DATA

SREF = 2690.0000 SQ.FT. XMRP = 976.0000 IN. XT
LREF = 1290.3000 INCHES YMRP = .0000 IN. YT
BREF = 1290.3000 INCHES ZMRP = 400.0000 IN. ZT
SCALE = .0200

PARAMETRIC DATA

IB-ELV = 10.000 OB-ELV = 5.000
BDFLAP = .000 SPDBRK = .000
RUDDER = .000 SILTS = .000
MACH = 1.100 RN/L = 3.500
Z = 6.500

RUN NO. 832/ 0 RN/L = 3.50 GRADIENT INTERVAL = -5.00/ 5.00

ALPHAO	BETAO	CP1	CP2	CP3	CP4	CPBV	RUDDER	CHR	CNVT	CBVT	CTVT
-.157	-6.418	-.37980	-.39150	-.37710	-.36040	-.40660	-.10980	-.00310	.33550	.26340	-.12410
-.303	.234	-.34860	-.36300	-.33350	-.33590	-.34710	-.07880	-.00130	-.00980	-.01250	.00480
-.097	6.205	-.33640	-.35140	-.32190	-.32710	-.35660	-.06420	.00010	-.31050	-.25300	.11760
	GRADIENT	.00000	.00000	.00000	.00000	.00000	.00000	.00000	.00000	.00000	.00000

IA156A, AEDC PWT 16T-470, O T S (R8NF37) (10 MAY 80)

REFERENCE DATA

SREF = 2690.0000 SQ.FT. XMRP = 976.0000 IN. XT
LREF = 1290.3000 INCHES YMRP = .0000 IN. YT
BREF = 1290.3000 INCHES ZMRP = 400.0000 IN. ZT
SCALE = .0200

PARAMETRIC DATA

IB-ELV = 10.000 OB-ELV = 5.000
BDFLAP = .000 SPDBRK = .000
RUDDER = .000 SILTS = .000
MACH = 1.550 RN/L = 3.200

RUN NO. 843/ 0 RN/L = 3.19 GRADIENT INTERVAL = -5.00/ 5.00

ALPHAO	BETAO	CP1	CP2	CP3	CP4	CPBV	RUDDER	CHR	CNVT	CBVT	CTVT
.171	.281	-.26180	-.26270	-.25430	-.24120	-.24820	.08690	.00140	-.03710	-.03040	.02090
-.533	-.269	-.25830	-.26160	-.24880	-.23910	-.24750	-.05690	.00070	.00280	-.00170	.00240
-.536	-.291	-.26100	-.26330	-.25280	-.24180	-.25030	-.06960	-.00020	.01400	.00620	-.00080
.186	.269	-.25680	-.25920	-.24980	-.23820	-.25410	.09110	.00170	-.04510	-.03510	.02330
.164	.278	-.25560	-.25730	-.24870	-.23690	-.25390	.10270	.00260	-.05180	-.03970	.02480
-.514	-.290	-.25980	-.26450	-.25650	-.24330	-.25330	-.07350	-.00050	.01990	.01040	-.00210
	GRADIENT	.00293	.00611	.00329	.00478	-.00284	.28674	.00343	-.10203	-.07180	.04149

IA156A, AEDC PWT 16T-470, O T S W/SILTS (R8NF40) (10 MAY 80)

REFERENCE DATA

SREF = 2690.0000 SQ.FT. XMRP = 976.0000 IN. XT
LREF = 1290.3000 INCHES YMRP = .0000 IN. YT
BREF = 1290.3000 INCHES ZMRP = 400.0000 IN. ZT
SCALE = .0200

PARAMETRIC DATA

IB-ELV = 10.000 OB-ELV = 5.000
BDFLAP = .000 SPDBRK = .000
RUDDER = .000 SILTS = 1.000
MACH = .300 RN/L = 3.500

RUN NO. 862/ 0 RN/L = 2.70 GRADIENT INTERVAL = -5.00/ 5.00

ALPHAO	BETAO	CP1	CP2	CP3	CP4	CPBV	RUDDER	CHR	CNVT	CBVT	CTVT
-5.920	-9.943	-.25930	-.27880	-.25780	-.24590	-.24500	-.15650	-.02680	.52970	.37970	-.14770
-6.155	-5.902	-.24910	-.26750	-.25350	-.23390	-.24810	-.07580	-.00780	.31430	.23180	-.09080
-6.275	.408	-.22360	-.24070	-.22770	-.21080	-.23110	.00590	.00100	-.03780	-.03940	.01580
-5.806	6.205	-.23110	-.25200	-.23160	-.21890	-.22640	.09100	.01170	-.36770	-.28360	.12190
-5.909	10.174	-.26300	-.28310	-.25440	-.25120	-.25810	.20440	.03980	-.57250	-.40620	.17280
	GRADIENT	.00000	.00000	.00000	.00000	.00000	.00000	.00000	.00000	.00000	.00000

RUN NO. 863/ 0 RN/L = 2.68 GRADIENT INTERVAL = -5.00/ 5.00

ALPHAO	BETAO	CP1	CP2	CP3	CP4	CPBV	RUDDER	CHR	CNVT	CBVT	CTVT
-.323	-10.566	-.25340	-.27620	-.24640	-.24010	-.24300	-.19390	-.03480	.54980	.37090	-.13560
-.295	-6.495	-.23500	-.25410	-.22880	-.22020	-.22870	-.10070	-.00930	.32870	.23360	-.08420
-.254	-.400	-.21420	-.22870	-.21440	-.20220	-.21860	-.06750	-.00030	.02460	.00350	.00100
-.216	5.676	-.21780	-.23610	-.20740	-.20570	-.21250	-.03450	.00860	-.26300	-.21150	.07750
-.202	9.729	-.24310	-.26410	-.23350	-.23140	-.23230	.07280	.03730	-.47790	-.34210	.12790
	GRADIENT	.00000	.00000	.00000	.00000	.00000	.00000	.00000	.00000	.00000	.00000

IA156A, AEDC PWT 16T-470, O T S W/SILTS (R8NF40) (10 MAY 80)

REFERENCE DATA

SREF = 2690.0000 SQ.FT. XMRP = 976.0000 IN. XT
LREF = 1290.3000 INCHES YMRP = .0000 IN. YT
BREF = 1290.3000 INCHES ZMRP = 400.0000 IN. ZT
SCALE = .0200

PARAMETRIC DATA

IB-ELV = 10.000 OB-ELV = 5.000
BDFLAP = .000 SPDBRK = .000
RUDDER = .000 SILTS = 1.000
MACH = .300 RN/L = 3.500

RUN NO. 865/ 0 RN/L = 2.67 GRADIENT INTERVAL = -5.00/ 5.00

ALPHAO	BETAO	CP1	CP2	CP3	CP4	CPBV	RUDDER	CHR	CNVT	CBVT	CTVT
6.308	-9.980	-.24380	-.26380	-.24470	-.23280	-.23300	-.07160	-.03390	.44720	.29690	-.09120
5.980	-5.655	-.23190	-.24860	-.23960	-.21630	-.22800	.03120	-.00410	.22350	.15850	-.04030
6.119	.063	-.20040	-.21630	-.19040	-.18790	-.20230	.00330	.00050	.01540	-.00500	.00290
5.672	6.053	-.22880	-.25080	-.21350	-.21780	-.22440	-.01350	.00900	-.24100	-.19780	.06560
5.788	10.128	-.23980	-.25850	-.22210	-.22390	-.23430	.09090	.03930	-.47430	-.34100	.12380
	GRADIENT	.00000	.00000	.00000	.00000	.00000	.00000	.00000	.00000	.00000	.00000

IA156A, AEDC PWT 16T-470, O T S W/SILTS (R8NF41) (10 MAY 80)

REFERENCE DATA

SREF = 2690.0000 SQ.FT. XMRP = 976.0000 IN. XT
LREF = 1290.3000 INCHES YMRP = .0000 IN. YT
BREF = 1290.3000 INCHES ZMRP = 400.0000 IN. ZT
SCALE = .0200

PARAMETRIC DATA

IB-ELV = 10.000 OB-ELV = 5.000
BDFLAP = .000 SPDBRK = .000
RUDDER = .000 SILTS = 1.000
MACH = .300 RN/L = 3.500

RUN NO. 861/ 0 RN/L = 2.74 GRADIENT INTERVAL = -5.00/ 5.00

ALPHAO	BETAO	CP1	CP2	CP3	CP4	CPBV	RUDDER	CHR	CNVT	CBVT	CTVT
-10.091	-6.034	-.24420	-.26400	-.25200	-.22640	-.24760	-.06860	-.00910	.32610	.24710	-.09690
-10.067	.359	-.25700	-.27560	-.26280	-.23750	-.27090	.00310	.00060	-.03470	-.03230	.01430
-9.910	6.266	-.29150	-.31670	-.29530	-.27370	-.29060	.07400	.01060	-.35670	-.27530	.11570
	GRADIENT	.00000	.00000	.00000	.00000	.00000	.00000	.00000	.00000	.00000	.00000

RUN NO. 866/ 0 RN/L = 2.66 GRADIENT INTERVAL = -5.00/ 5.00

ALPHAO	BETAO	CP1	CP2	CP3	CP4	CPBV	RUDDER	CHR	CNVT	CBVT	CTVT
10.042	-5.845	-.20630	-.22530	-.21050	-.18820	-.19370	.02820	-.00160	.23090	.16630	-.04720
9.871	.222	-.19550	-.21400	-.17930	-.17870	-.19350	.00120	.00040	.01280	-.00550	.00250
10.015	6.282	-.21610	-.23770	-.19750	-.20260	-.20340	-.00920	.00670	-.21980	-.18540	.06160
	GRADIENT	.00000	.00000	.00000	.00000	.00000	.00000	.00000	.00000	.00000	.00000

IA156A, AEDC PWT 16T-470, O T S W/SILTS (R8NF42) (10 MAY 80)

REFERENCE DATA

SREF = 2690.0000 SQ.FT. XMRP = 976.0000 IN. XT
LREF = 1290.3000 INCHES YMRP = .0000 IN. YT
BREF = 1290.3000 INCHES ZMRP = 400.0000 IN. ZT
SCALE = .0200

PARAMETRIC DATA

IB-ELV = 10.000 OB-ELV = 5.000
BDFLAP = .000 SPDBRK = .000
RUDDER = .000 SILTS = 1.000
MACH = .600 RN/L = 3.500

RUN NO. 867/ 0 RN/L = 3.50 GRADIENT INTERVAL = -5.00/ 5.00

ALPHAO	BETAO	CP1	CP2	CP3	CP4	CPBV	RUDDER	CHR	CNVT	CBVT	CTVT
-8.043	-7.716	-.30980	-.32970	-.31380	-.29220	-.31340	-.15640	-.01200	.43040	.31340	-.11700
-8.204	-5.827	-.26200	-.27930	-.26950	-.24830	-.26430	-.07860	-.00420	.31290	.23280	-.08600
-8.073	-3.782	-.26310	-.28060	-.27170	-.24540	-.26960	-.03300	-.00030	.18920	.13980	-.05060
-8.198	.321	-.24440	-.26000	-.25180	-.23180	-.25800	-.02080	-.00240	-.03030	-.03110	.01290
-7.861	4.154	-.24760	-.26580	-.24730	-.23400	-.24980	.02510	-.00060	-.23510	-.18630	.07180
-7.808	6.039	-.25680	-.27950	-.26120	-.24610	-.26200	.10310	.00690	-.34490	-.26310	.10310
-8.047	8.247	-.27500	-.29360	-.27750	-.26130	-.27750	.25430	.02260	-.45740	-.32770	.12790
	GRADIENT	.00198	.00190	.00310	.00146	.00250	.00727	-.00004	-.05347	-.04110	.01542

RUN NO. 868/ 0 RN/L = 3.50 GRADIENT INTERVAL = -5.00/ 5.00

ALPHAO	BETAO	CP1	CP2	CP3	CP4	CPBV	RUDDER	CHR	CNVT	CBVT	CTVT
-6.177	-7.939	-.27120	-.28880	-.27710	-.25940	-.27100	-.17180	-.01290	.43480	.31510	-.11740
-6.117	-5.788	-.26110	-.28020	-.26740	-.24810	-.26580	-.08310	-.00390	.30410	.22610	-.08310
-5.974	-3.847	-.25260	-.27350	-.26000	-.24140	-.26160	-.04130	-.00030	.18450	.13650	-.04950
-6.102	.060	-.23360	-.25020	-.23710	-.22360	-.24480	-.02240	-.00230	-.01990	-.02150	.00860
-6.078	4.270	-.24470	-.26610	-.24540	-.23510	-.24960	.03500	-.00030	-.23940	-.18690	.07180
-5.857	6.111	-.25650	-.27700	-.25640	-.24510	-.25930	.11200	.00700	-.34690	-.26260	.10330
-5.838	8.303	-.26570	-.28320	-.26530	-.25350	-.26210	.26390	.02280	-.45380	-.32410	.12700
	GRADIENT	.00093	.00085	.00175	.00073	.00144	.00945	.00001	-.05222	-.03983	.01494

RUN NO. 869/ 0 RN/L = 3.50 GRADIENT INTERVAL = -5.00/ 5.00

ALPHAO	BETAO	CP1	CP2	CP3	CP4	CPBV	RUDDER	CHR	CNVT	CBVT	CTVT
-4.175	-8.137	-.26730	-.28610	-.27360	-.25640	-.26720	-.18430	-.01360	.43950	.31640	-.11670
-4.259	-6.128	-.25540	-.27740	-.26730	-.24470	-.26050	-.10500	-.00530	.32210	.23800	-.08740
-4.224	-3.918	-.24880	-.26560	-.25410	-.23700	-.25690	-.05440	-.00070	.19100	.14110	-.05150
-3.977	.211	-.23180	-.24590	-.22920	-.22160	-.23910	-.02180	-.00240	-.02050	-.02130	.00760
-3.796	4.128	-.24050	-.25920	-.23420	-.22870	-.24000	.04380	-.00050	-.22870	-.17720	.06840
-3.913	6.094	-.25100	-.26800	-.24880	-.23710	-.24930	.11750	.00680	-.34580	-.26050	.10290
-3.786	8.019	-.25380	-.27380	-.25320	-.24180	-.25260	.25480	.02130	-.44800	-.32070	.12670
	GRADIENT	.00106	.00083	.00251	.00106	.00212	.01217	.00002	-.05215	-.03956	.01490

IA156A, AEDC PWT 16T-470, O T S W/SILTS (R8NF42) (10 MAY 80)

REFERENCE DATA

SREF = 2690.0000 SQ.FT. XMRP = 976.0000 IN. XT
LREF = 1290.3000 INCHES YMRP = .0000 IN. YT
BREF = 1290.3000 INCHES ZMRP = 400.0000 IN. ZT
SCALE = .0200

PARAMETRIC DATA

IB-ELV = 10.000 OB-ELV = 5.000
BDFLAP = .000 SPDBRK = .000
RUDDER = .000 SILTS = 1.000
MACH = .600 RN/L = 3.500

RUN NO. 870/ 0 RN/L = 3.50 GRADIENT INTERVAL = -5.00/ 5.00

ALPHAO	BETAO	CP1	CP2	CP3	CP4	CPBV	RUDDER	CHR	CNVT	CBVT	CTVT
-.372	-8.780	-.26040	-.27620	-.26180	-.24740	-.25220	-.22680	-.01750	.46150	.32730	-.11730
-.357	-6.657	-.24870	-.26610	-.25630	-.23680	-.24730	-.12810	-.00670	.34280	.25030	-.08850
-.342	-4.603	-.24080	-.25480	-.24240	-.22670	-.23760	-.08450	-.00200	.23030	.16960	-.05830
-.309	-.391	-.22230	-.23430	-.21490	-.21150	-.22500	-.07450	-.00090	.01550	.00450	.00080
-.271	3.723	-.22820	-.24380	-.21610	-.21720	-.22850	-.08000	-.00150	-.17330	-.13750	.04670
-.265	5.794	-.24190	-.25860	-.22750	-.22810	-.23790	-.02250	.00480	-.28740	-.21840	.07830
-.263	7.882	-.25440	-.27040	-.23790	-.23700	-.24480	.11710	.01990	-.39760	-.28670	.10510
	GRADIENT	.00152	.00134	.00317	.00115	.00110	.00055	.00006	-.04848	-.03689	.01262

RUN NO. 871/ 0 RN/L = 3.50 GRADIENT INTERVAL = -5.00/ 5.00

ALPHAO	BETAO	CP1	CP2	CP3	CP4	CPBV	RUDDER	CHR	CNVT	CBVT	CTVT
4.130	-7.788	-.24550	-.26030	-.23970	-.23130	-.23160	-.04140	-.01090	.36950	.26560	-.08590
4.227	-5.976	-.23550	-.25190	-.23930	-.22220	-.23030	.02480	-.00330	.26130	.19170	-.05780
3.952	-3.829	-.23640	-.24840	-.23590	-.22060	-.23260	.05750	.00110	.15850	.11670	-.03020
4.097	-.000	-.21770	-.23220	-.20410	-.20270	-.21600	-.00400	-.00080	.00700	-.00090	.00200
3.938	4.125	-.21850	-.23560	-.20870	-.20610	-.21590	-.07230	-.00280	-.15950	-.12850	.03910
3.808	6.166	-.23320	-.25410	-.21760	-.21980	-.22700	-.00300	.00570	-.28390	-.21580	.07530
3.678	7.918	-.24360	-.26090	-.22140	-.22680	-.23010	.12050	.01950	-.38100	-.27530	.09930
	GRADIENT	.00222	.00158	.00336	.00179	.00207	-.01632	-.00049	-.03998	-.03083	.00872

RUN NO. 872/ 0 RN/L = 3.50 GRADIENT INTERVAL = -5.00/ 5.00

ALPHAO	BETAO	CP1	CP2	CP3	CP4	CPBV	RUDDER	CHR	CNVT	CBVT	CTVT
6.274	-8.006	-.24180	-.25960	-.23910	-.22810	-.23010	-.05370	-.01160	.37900	.27230	-.09020
6.155	-5.963	-.24040	-.25490	-.23960	-.22480	-.23350	.02120	-.00280	.27000	.19710	-.06040
6.263	-3.868	-.22950	-.24620	-.22540	-.21320	-.22760	.06030	.00260	.16000	.11890	-.03190
5.834	.202	-.21980	-.23040	-.20020	-.20500	-.22050	-.00970	-.00110	.00020	-.00580	.00290
5.841	4.115	-.22070	-.23330	-.20270	-.20360	-.21570	-.07380	-.00400	-.14650	-.11860	.03470
5.930	6.270	-.23130	-.25330	-.21240	-.21690	-.22670	-.00070	.00510	-.27780	-.21200	.07340
5.614	7.985	-.24360	-.26040	-.22440	-.22860	-.23100	.12490	.01940	-.37600	-.27350	.09900
	GRADIENT	.00111	.00163	.00287	.00121	.00149	-.01680	-.00083	-.03840	-.02976	.00834

IA156A, AEDC PWT 16T-470, O T S W/SILTS (R8NF42) (10 MAY 80)

REFERENCE DATA

SREF = 2690.0000 SQ.FT. XMRP = 976.0000 IN. XT
LREF = 1290.3000 INCHES YMRP = .0000 IN. YT
BREF = 1290.3000 INCHES ZMRP = 400.0000 IN. ZT
SCALE = .0200

PARAMETRIC DATA

IB-ELV = 10.000 OB-ELV = 5.000
BDFLAP = .000 SPDBRK = .000
RUDDER = .000 SILTS = 1.000
MACH = .600 RN/L = 3.500

RUN NO. 873/ 0 RN/L = 3.50 GRADIENT INTERVAL = -5.00/ 5.00

ALPHAO	BETAO	CP1	CP2	CP3	CP4	CPBV	RUDDER	CHR	CNVT	CBVT	CTVT
8.126	-7.971	-.24820	-.26730	-.24860	-.23500	-.24450	-.02480	-.00780	.36180	.26360	-.08660
8.003	-5.692	-.23160	-.24990	-.23570	-.21630	-.22460	.05390	.00160	.23420	.17530	-.05210
7.988	-3.728	-.22740	-.23980	-.21760	-.20890	-.22110	.06780	.00420	.14180	.10660	-.02800
8.046	.165	-.22060	-.23140	-.20820	-.20160	-.21520	-.00640	-.00070	.00610	-.00190	.00200
7.840	4.160	-.21480	-.23550	-.20120	-.20340	-.21340	-.07630	-.00500	-.13880	-.11430	.03260
7.965	6.229	-.23350	-.25290	-.21540	-.21770	-.22040	-.03870	.00010	-.24010	-.18960	.06290
7.942	8.218	-.23920	-.25820	-.21820	-.22590	-.23240	.10180	.01610	-.36340	-.27180	.09900
	GRADIENT	.00160	.00054	.00208	.00069	.00097	-.01826	-.00117	-.03558	-.02801	.00768

IA156A, AEDC PWT 16T-470, O T S W/SILTS (R8NF43) (10 MAY 80)

REFERENCE DATA

SREF = 2690.0000 SQ.FT. XMRP = 976.0000 IN. XT
LREF = 1290.3000 INCHES YMRP = .0000 IN. YT
BREF = 1290.3000 INCHES ZMRP = 400.0000 IN. ZT
SCALE = .0200

PARAMETRIC DATA

IB-ELV = 10.000 OB-ELV = 5.000
BDFLAP = .000 SPDBRK = .000
RUDDER = .000 SILTS = 1.000
MACH = .800 RN/L = 3.500

RUN NO. 874/ 0 RN/L = 3.50 GRADIENT INTERVAL = -5.00/ 5.00

ALPHAO	BETAO	CP1	CP2	CP3	CP4	CPBV	RUDDER	CHR	CNVT	CBVT	CTVT
-8.320	-6.125	-.27680	-.29390	-.27920	-.26980	-.29130	.07980	.01050	.33440	.24470	-.08470
-8.413	-3.880	-.27410	-.29260	-.27680	-.26650	-.28790	.11090	.01230	.19380	.14310	-.04570
-8.113	.246	-.25040	-.26300	-.24830	-.23920	-.26450	-.05940	-.00520	-.01680	-.01680	.00450
-8.023	4.302	-.26610	-.28250	-.27040	-.25920	-.27670	-.10690	-.01200	-.23200	-.17690	.06000
-7.956	6.209	-.27720	-.29060	-.27670	-.26700	-.28810	-.00620	-.00410	-.34760	-.25530	.09250
	GRADIENT	.00099	.00125	.00080	.00091	.00138	-.02666	-.00297	-.05204	-.03911	.01292

RUN NO. 875/ 0 RN/L = 3.50 GRADIENT INTERVAL = -5.00/ 5.00

ALPHAO	BETAO	CP1	CP2	CP3	CP4	CPBV	RUDDER	CHR	CNVT	CBVT	CTVT
-6.193	-5.894	-.27150	-.29100	-.27730	-.26850	-.28650	.05960	.00940	.31390	.23100	-.07920
-6.103	-3.865	-.26270	-.27980	-.26310	-.25710	-.27500	.09030	.01120	.18300	.13440	-.04190
-6.214	.135	-.24530	-.25800	-.24190	-.23550	-.25640	-.05840	-.00500	-.01540	-.01370	.00220
-5.908	4.136	-.25720	-.27040	-.25360	-.24740	-.26350	-.08900	-.01100	-.22050	-.16630	.05590
-5.930	6.364	-.27470	-.29110	-.27400	-.26420	-.28420	.03280	-.00130	-.35520	-.25880	.09480
	GRADIENT	.00069	.00117	.00119	.00121	.00144	-.02241	-.00277	-.05043	-.03758	.01222

IA156A, AEDC PWT 16T-470, O T S W/SILTS (R8NF43) (10 MAY 80)

REFERENCE DATA

SREF = 2690.0000 SQ.FT. XMRP = 976.0000 IN. XT
LREF = 1290.3000 INCHES YMRP = .0000 IN. YT
BREF = 1290.3000 INCHES ZMRP = 400.0000 IN. ZT
SCALE = .0200

PARAMETRIC DATA

IB-ELV = 10.000 OB-ELV = 5.000
BDFLAP = .000 SPDBRK = .000
RUDDER = .000 SILTS = 1.000
MACH = .800 RN/L = 3.500

RUN NO. 876/ 0 RN/L = 3.50 GRADIENT INTERVAL = -5.00/ 5.00

ALPHAO	BETAO	CP1	CP2	CP3	CP4	CPBV	RUDDER	CHR	CNVT	CBVT	CTVT
-4.122	-5.859	-.27280	-.28820	-.27590	-.27710	-.28070	.04190	.00850	.30340	.22300	-.07570
-4.174	-3.836	-.25730	-.27350	-.25670	-.25230	-.26720	.06350	.00970	.17870	.12990	-.03980
-4.296	.380	-.23530	-.24930	-.23190	-.23220	-.24650	-.06000	-.00550	-.02150	-.01720	.00220
-3.794	4.109	-.25250	-.26610	-.24740	-.25270	-.25530	-.06580	-.00990	-.21750	-.16300	.05510
-3.859	6.127	-.26310	-.27930	-.26050	-.25370	-.27090	.04730	-.00070	-.34090	-.24940	.09230
	GRADIENT	.00070	.00104	.00127	.00005	.00157	-.01656	-.00249	-.04982	-.03683	.01190

RUN NO. 877/ 0 RN/L = 3.50 GRADIENT INTERVAL = -5.00/ 5.00

ALPHAO	BETAO	CP1	CP2	CP3	CP4	CPBV	RUDDER	CHR	CNVT	CBVT	CTVT
-.405	-6.884	-.26320	-.27870	-.26480	-.25440	-.26660	-.04150	.00210	.35750	.25680	-.08710
-.384	-4.775	-.24740	-.26040	-.24850	-.24200	-.25140	.02990	.00840	.23400	.16990	-.05210
-.341	-.555	-.23230	-.24160	-.22380	-.22010	-.23160	-.05210	.00130	.01800	.00780	.00010
-.291	3.683	-.24100	-.25230	-.23040	-.23590	-.24120	-.16450	-.00860	-.17380	-.13070	.03650
-.283	5.775	-.24650	-.26310	-.24000	-.24110	-.24910	-.06030	.00050	-.29990	-.22150	.07580
	GRADIENT	.00075	.00096	.00214	.00072	.00120	-.02299	-.00201	-.04821	-.03554	.01047

RUN NO. 878/ 0 RN/L = 3.50 GRADIENT INTERVAL = -5.00/ 5.00

ALPHAO	BETAO	CP1	CP2	CP3	CP4	CPBV	RUDDER	CHR	CNVT	CBVT	CTVT
4.072	-5.795	-.24920	-.26610	-.24880	-.25440	-.25020	.09650	.00360	.27180	.19800	-.05830
4.020	-3.904	-.23590	-.24990	-.23280	-.22890	-.23810	.13400	.00750	.16540	.12110	-.02780
3.768	.170	-.23410	-.24470	-.21580	-.21980	-.23040	-.00280	-.00030	.00730	.00160	-.00010
3.638	3.968	-.23580	-.24830	-.22170	-.22120	-.23270	-.14560	-.00860	-.15040	-.11620	.02920
3.833	6.171	-.24770	-.26630	-.23850	-.23630	-.24710	-.02810	.00240	-.29040	-.21740	.07400
	GRADIENT	.00002	.00022	.00144	.00099	.00070	-.03549	-.00204	-.04010	-.03013	.00723

RUN NO. 879/ 0 RN/L = 3.50 GRADIENT INTERVAL = -5.00/ 5.00

ALPHAO	BETAO	CP1	CP2	CP3	CP4	CPBV	RUDDER	CHR	CNVT	CBVT	CTVT
6.131	-5.815	-.25330	-.26900	-.24850	-.24490	-.25460	.11550	.00600	.26010	.19370	-.05750
5.812	-3.671	-.23970	-.25280	-.23370	-.22720	-.24060	.17130	.01170	.14200	.10530	-.02080
5.708	.237	-.22960	-.23980	-.21120	-.21740	-.22650	-.00680	-.00060	.00130	-.00190	-.00010
5.831	4.132	-.23420	-.24700	-.21970	-.21690	-.22860	-.17510	-.01210	-.13920	-.11000	.02390
5.719	5.964	-.24450	-.25970	-.22990	-.23310	-.24200	-.06680	-.00170	-.26090	-.20030	.06640
	GRADIENT	.00071	.00074	.00180	.00132	.00154	-.04439	-.00305	-.03604	-.02759	.00573

IA156A, AEDC PWT 16T-470, O T S W/SILTS (R8NF44) (10 MAY 80)

REFERENCE DATA

SREF = 2690.0000 SQ.FT. XMRP = 976.0000 IN. XT
LREF = 1290.3000 INCHES YMRP = .0000 IN. YT
BREF = 1290.3000 INCHES ZMRP = 400.0000 IN. ZT
SCALE = .0200

PARAMETRIC DATA

IB-ELV = 10.000 OB-ELV = 5.000
BDFLAP = .000 SPDBRK = .000
RUDDER = .000 SILTS = 1.000
MACH = .900 RN/L = 3.500

RUN NO. 880/ 0 RN/L = 3.50 GRADIENT INTERVAL = -5.00/ 5.00

ALPHAO	BETAO	CP1	CP2	CP3	CP4	CPBV	RUDDER	CHR	CNVT	CBVT	CTVT
-8.312	-6.090	-.30670	-.31630	-.30290	-.30110	-.30830	.21360	.02060	.31920	.23210	-.08170
-8.309	-3.820	-.29590	-.31220	-.29820	-.29460	-.30750	.27870	.02490	.17160	.11950	-.02940
-8.093	.296	-.27220	-.28170	-.26370	-.26250	-.28150	-.04030	-.00330	-.02260	-.01870	.00480
-7.993	4.299	-.28830	-.29870	-.28830	-.29050	-.29500	-.24550	-.02230	-.22260	-.16590	.05240
-7.946	6.205	-.30690	-.31760	-.30290	-.29620	-.31710	-.17970	-.01770	-.33320	-.24520	.08920
	GRADIENT	.00096	.00169	.00125	.00054	.00156	-.06462	-.00582	-.04854	-.03514	.01007

RUN NO. 881/ 0 RN/L = 3.50 GRADIENT INTERVAL = -5.00/ 5.00

ALPHAO	BETAO	CP1	CP2	CP3	CP4	CPBV	RUDDER	CHR	CNVT	CBVT	CTVT
-6.117	-5.816	-.30620	-.32070	-.30790	-.30190	-.31340	.18640	.01890	.30760	.22780	-.08130
-6.284	-3.992	-.28710	-.30210	-.28870	-.29350	-.29810	.20680	.01970	.18100	.12830	-.03520
-6.101	.042	-.26310	-.27610	-.25890	-.25550	-.27760	-.02510	-.00190	-.01010	-.00850	.00000
-6.038	4.340	-.28000	-.29530	-.28230	-.27490	-.29520	-.20940	-.01990	-.21970	-.16230	.05030
-6.124	6.348	-.29780	-.31070	-.29290	-.28940	-.30320	-.14560	-.01550	-.33660	-.24700	.09020
	GRADIENT	.00080	.00076	.00070	.00097	.00030	-.04987	-.00475	-.04810	-.03489	.01028

RUN NO. 882/ 0 RN/L = 3.50 GRADIENT INTERVAL = -5.00/ 5.00

ALPHAO	BETAO	CP1	CP2	CP3	CP4	CPBV	RUDDER	CHR	CNVT	CBVT	CTVT
-4.268	-6.189	-.30420	-.31530	-.30270	-.29940	-.30890	.17380	.01850	.31820	.23190	-.08060
-4.162	-3.882	-.28230	-.30010	-.28540	-.27980	-.29380	.15510	.01640	.17070	.11930	-.03120
-4.197	.246	-.25570	-.26860	-.25260	-.24620	-.26730	-.01580	-.00130	-.01420	-.01270	.00160
-3.912	4.303	-.27800	-.29600	-.27910	-.26920	-.28680	-.17320	-.01790	-.21430	-.15800	.04860
-3.796	6.101	-.28940	-.30640	-.28680	-.27790	-.29810	-.13820	-.01560	-.32070	-.23630	.08490
	GRADIENT	.00054	.00052	.00079	.00131	.00087	-.04011	-.00419	-.04703	-.03387	.00974

RUN NO. 883/ 0 RN/L = 3.50 GRADIENT INTERVAL = -5.00/ 5.00

ALPHAO	BETAO	CP1	CP2	CP3	CP4	CPBV	RUDDER	CHR	CNVT	CBVT	CTVT
-.435	-6.931	-.28960	-.29910	-.28790	-.28310	-.29280	.06340	.01040	.34210	.24390	-.08320
-.406	-4.831	-.27130	-.28410	-.27060	-.26770	-.27750	.11510	.01460	.23160	.17330	-.05670
-.357	-.518	-.24110	-.25280	-.24360	-.24560	-.25270	-.06080	.00050	.02000	.01110	-.00390
-.306	3.667	-.25850	-.26930	-.25830	-.25090	-.26630	-.22560	-.01280	-.16170	-.12680	.03450
-.306	5.770	-.27200	-.28690	-.27110	-.26480	-.27690	-.22740	-.01300	-.27220	-.20370	.06550
	GRADIENT	.00153	.00177	.00147	.00199	.00134	-.04009	-.00322	-.04629	-.03532	.01074

IA156A, AEDC PWT 16T-470, O T S W/SILTS (R8NF44) (10 MAY 80)

REFERENCE DATA

SREF = 2690.0000 SQ.FT. XMRP = 976.0000 IN. XT
LREF = 1290.3000 INCHES YMRP = .0000 IN. YT
BREF = 1290.3000 INCHES ZMRP = 400.0000 IN. ZT
SCALE = .0200

PARAMETRIC DATA

IB-ELV = 10.000 OB-ELV = 5.000
BDFLAP = .000 SPDBRK = .000
RUDDER = .000 SILTS = 1.000
MACH = .900 RN/L = 3.500

RUN NO. 884/ 0 RN/L = 3.50 GRADIENT INTERVAL = -5.00/ 5.00

ALPHAO	BETAO	CP1	CP2	CP3	CP4	CPBV	RUDDER	CHR	CNVT	CBVT	CTVT
4.009	-5.714	-.27310	-.28480	-.26970	-.26740	-.27870	.34060	.02300	.23940	.17860	-.04640
3.883	-3.867	-.25680	-.26810	-.25510	-.25310	-.26880	.33850	.02340	.14340	.11150	-.02170
3.799	.163	-.24240	-.25450	-.24160	-.23330	-.25380	-.00200	-.00020	.01010	.00250	-.00070
3.718	3.965	-.25410	-.26930	-.25830	-.24490	-.26790	-.28240	-.01900	-.13580	-.11230	.02430
3.633	5.901	-.27570	-.29090	-.27460	-.27030	-.28720	-.23810	-.01470	-.25150	-.19490	.06000
	GRADIENT	.00038	-.00012	-.00037	.00109	.00015	-.07934	-.00542	-.03563	-.02856	.00587

IA156A, AEDC PWT 16T-470, O T S W/SILTS (R8NF45) (10 MAY 80)

REFERENCE DATA

SREF = 2690.0000 SQ.FT. XMRP = 976.0000 IN. XT
LREF = 1290.3000 INCHES YMRP = .0000 IN. YT
BREF = 1290.3000 INCHES ZMRP = 400.0000 IN. ZT
SCALE = .0200

PARAMETRIC DATA

IB-ELV = 10.000 OB-ELV = 5.000
BDFLAP = .000 SPDBRK = .000
RUDDER = .000 SILTS = 1.000
MACH = .950 RN/L = 3.500

RUN NO. 885/ 0 RN/L = 3.50 GRADIENT INTERVAL = -5.00/ 5.00

ALPHAO	BETAO	CP1	CP2	CP3	CP4	CPBV	RUDDER	CHR	CNVT	CBVT	CTVT
-8.385	-6.134	-.34530	-.35190	-.32640	-.33300	-.34450	.34900	.03050	.34360	.26260	-.10410
-8.374	-3.850	-.33500	-.34410	-.31900	-.32330	-.33630	.42610	.03560	.19050	.13970	-.04460
-8.059	.201	-.30860	-.31550	-.28820	-.29960	-.31490	-.19410	-.01510	-.00730	-.00610	-.00430
-7.981	4.275	-.33160	-.33630	-.31580	-.31870	-.33450	-.41420	-.03460	-.22900	-.18160	.06570
-7.931	6.166	-.34620	-.35110	-.33310	-.33670	-.34900	-.28420	-.02530	-.34770	-.27300	.11210
	GRADIENT	.00041	.00095	.00039	.00056	.00022	-.10338	-.00864	-.05164	-.03955	.01358

RUN NO. 886/ 0 RN/L = 3.50 GRADIENT INTERVAL = -5.00/ 5.00

ALPHAO	BETAO	CP1	CP2	CP3	CP4	CPBV	RUDDER	CHR	CNVT	CBVT	CTVT
-6.186	-5.886	-.33790	-.35260	-.34230	-.34190	-.34200	.31780	.02840	.31430	.23830	-.09080
-6.104	-3.866	-.31830	-.32820	-.30700	-.30620	-.32170	.39660	.03390	.18000	.12970	-.03860
-6.229	.088	-.29930	-.30850	-.27910	-.28850	-.30430	-.16460	-.01270	-.00280	.00070	-.00870
-5.890	4.177	-.31780	-.33160	-.30630	-.30600	-.32270	-.39750	-.03400	-.21890	-.16960	.05810
-5.963	6.370	-.34500	-.35180	-.32920	-.33220	-.34660	-.27260	-.02500	-.34980	-.26960	.10810
	GRADIENT	.00004	-.00045	.00005	.00000	-.00015	-.09850	-.00842	-.04962	-.03724	.01205

IA156A, AEDC PWT 16T-470, O T S W/SILTS (R8NF45) (10 MAY 80)

REFERENCE DATA

SREF = 2690.0000 SQ.FT. XMRP = 976.0000 IN. XT
LREF = 1290.3000 INCHES YMRP = .0000 IN. YT
BREF = 1290.3000 INCHES ZMRP = 400.0000 IN. ZT
SCALE = .0200

PARAMETRIC DATA

IB-ELV = 10.000 OB-ELV = 5.000
BDFLAP = .000 SPDBRK = .000
RUDDER = .000 SILTS = 1.000
MACH = .950 RN/L = 3.500

RUN NO. 887/ 0 RN/L = 3.50 GRADIENT INTERVAL = -5.00/ 5.00

ALPHAO	BETAO	CP1	CP2	CP3	CP4	CPBV	RUDDER	CHR	CNVT	CBVT	CTVT
-4.317	-6.270	-.32530	-.33450	-.31690	-.31280	-.32350	.33750	.03060	.32570	.24220	-.08940
-4.292	-4.005	-.30570	-.31890	-.30430	-.30410	-.31070	.36270	.03200	.18220	.12950	-.03700
-4.154	.396	-.29350	-.30210	-.27240	-.28130	-.29580	-.12280	-.00980	-.01400	-.00830	-.00480
-3.888	4.287	-.30880	-.32180	-.29440	-.30240	-.31000	-.37770	-.03320	-.22000	-.16790	.05590
-4.059	6.259	-.32980	-.34090	-.31460	-.31680	-.32940	-.27980	-.02610	-.33520	-.25610	.09980
	GRADIENT	-.00031	-.00026	.00133	.00031	.00016	-.08975	-.00790	-.04842	-.03577	.01112

RUN NO. 888/ 0 RN/L = 3.50 GRADIENT INTERVAL = -5.00/ 5.00

ALPHAO	BETAO	CP1	CP2	CP3	CP4	CPBV	RUDDER	CHR	CNVT	CBVT	CTVT
-.452	-6.978	-.32930	-.33560	-.32310	-.32120	-.32240	.21990	.02230	.34160	.25110	-.09030
-.422	-4.828	-.31040	-.31640	-.30330	-.30370	-.30350	.24940	.02460	.22100	.16520	-.05330
-.367	-.566	-.27250	-.27730	-.26270	-.26400	-.27200	-.06910	-.00020	.02430	.01590	-.00720
-.314	3.685	-.29130	-.30170	-.27860	-.28450	-.29030	-.38800	-.02500	-.15420	-.11560	.02600
-.313	5.791	-.31070	-.32060	-.29480	-.30050	-.30910	-.34030	-.02130	-.27600	-.21710	.07760
	GRADIENT	.00225	.00173	.00290	.00226	.00155	-.07487	-.00583	-.04407	-.03298	.00932

RUN NO. 889/ 0 RN/L = 3.50 GRADIENT INTERVAL = -5.00/ 5.00

ALPHAO	BETAO	CP1	CP2	CP3	CP4	CPBV	RUDDER	CHR	CNVT	CBVT	CTVT
4.030	-5.635	-.29510	-.29910	-.28710	-.28510	-.28970	.33360	.02170	.23140	.18110	-.05470
3.878	-3.794	-.27790	-.28350	-.27090	-.26820	-.27760	.25620	.01620	.13860	.10430	-.02160
3.700	.220	-.28840	-.29520	-.27300	-.27220	-.28490	.00530	.00040	.00590	.00120	-.00120
3.828	4.057	-.28570	-.29450	-.27160	-.27920	-.28610	-.25980	-.01660	-.13500	-.10950	.02480
3.780	6.076	-.30730	-.31510	-.28640	-.29510	-.30430	-.36080	-.02380	-.24700	-.20040	.06550
	GRADIENT	-.00101	-.00141	-.00009	-.00140	-.00109	-.06571	-.00418	-.03484	-.02722	.00590

IA156A, AEDC PWT 16T-470, O T S W/SILTS (R8NF46) (10 MAY 80)

REFERENCE DATA

SREF = 2690.0000 SQ.FT. XMRP = 976.0000 IN. XT
LREF = 1290.3000 INCHES YMRP = .0000 IN. YT
BREF = 1290.3000 INCHES ZMRP = 400.0000 IN. ZT
SCALE = .0200

PARAMETRIC DATA

IB-ELV = 10.000 OB-ELV = 5.000
BDFLAP = .000 SPDBRK = .000
RUDDER = .000 SILTS = 1.000
MACH = 1.050 RN/L = 3.500

RUN NO. 892/ 0 RN/L = 3.50 GRADIENT INTERVAL = -5.00/ 5.00

ALPHAO	BETAO	CP1	CP2	CP3	CP4	CPBV	RUDDER	CHR	CNVT	CBVT	CTVT
-8.394	-6.044	-.42750	-.43560	-.43730	-.41120	-.45780	-.19340	-.01120	.36080	.28800	-.13860
-8.401	-3.919	-.42570	-.43510	-.42050	-.41340	-.44250	-.09170	-.00450	.21820	.17500	-.07990
-8.206	.356	-.40060	-.41420	-.38430	-.39170	-.40770	-.01820	-.00140	-.03630	-.02990	.01360
-8.110	4.340	-.40730	-.41640	-.38550	-.39210	-.42060	.07210	.00300	-.26800	-.21720	.10270
-8.047	6.243	-.41190	-.41840	-.39020	-.39800	-.43280	.15020	.00800	-.38130	-.30140	.14630
	GRADIENT	.00227	.00230	.00429	.00261	.00272	.01980	.00091	-.05888	-.04749	.02211

RUN NO. 893/ 0 RN/L = 3.50 GRADIENT INTERVAL = -5.00/ 5.00

ALPHAO	BETAO	CP1	CP2	CP3	CP4	CPBV	RUDDER	CHR	CNVT	CBVT	CTVT
-6.309	-6.106	-.43810	-.43870	-.43640	-.41710	-.46070	-.19360	-.01070	.35660	.28390	-.13640
-6.249	-3.982	-.42670	-.43190	-.41820	-.40390	-.43900	-.07410	-.00260	.21260	.16970	-.07700
-6.076	.168	-.40350	-.41360	-.37950	-.39200	-.40190	-.02570	-.00190	-.02410	-.01960	.00860
-6.134	4.331	-.39750	-.41010	-.37350	-.38480	-.40750	.04350	.00040	-.26670	-.21330	.10000
-5.824	6.212	-.40100	-.41250	-.37960	-.38890	-.41840	.11750	.00510	-.37280	-.29380	.14160
	GRADIENT	.00351	.00262	.00538	.00230	.00379	.01415	.00036	-.05766	-.04607	.02129

RUN NO. 894/ 0 RN/L = 3.50 GRADIENT INTERVAL = -5.00/ 5.00

ALPHAO	BETAO	CP1	CP2	CP3	CP4	CPBV	RUDDER	CHR	CNVT	CBVT	CTVT
-4.192	-5.878	-.43260	-.43700	-.43040	-.41910	-.45710	-.15750	-.00740	.33140	.26470	-.12550
-4.435	-4.131	-.42470	-.43190	-.41060	-.40350	-.43680	-.08630	-.00280	.22040	.17540	-.07980
-4.347	.164	-.40990	-.41900	-.38580	-.39880	-.40450	-.03510	-.00250	-.01990	-.01720	.00710
-4.040	4.363	-.39760	-.41120	-.37590	-.38600	-.41090	-.01970	-.00510	-.25810	-.20760	.09610
-3.833	6.221	-.40400	-.41670	-.38500	-.39130	-.41780	.08710	.00220	-.36670	-.29060	.13990
	GRADIENT	.00319	.00244	.00409	.00206	.00307	.00786	-.00027	-.05633	-.04509	.02071

RUN NO. 895/ 0 RN/L = 3.50 GRADIENT INTERVAL = -5.00/ 5.00

ALPHAO	BETAO	CP1	CP2	CP3	CP4	CPBV	RUDDER	CHR	CNVT	CBVT	CTVT
-.497	-6.991	-.43820	-.44490	-.43450	-.42430	-.46040	-.11620	-.00370	.37570	.29420	-.13760
-.464	-4.863	-.42880	-.43810	-.41360	-.41300	-.43880	-.05220	.00100	.25190	.20100	-.09000
-.409	-.590	-.40230	-.41240	-.38160	-.38950	-.39830	-.03250	.00250	.02320	.01620	-.00550
-.352	3.655	-.39840	-.40810	-.37420	-.38750	-.40480	-.18750	-.00890	-.19200	-.15500	.06500
-.344	5.795	-.40300	-.41310	-.38170	-.39250	-.41510	-.13120	-.00480	-.30500	-.24650	.11190
	GRADIENT	.00357	.00352	.00463	.00300	.00400	-.01586	-.00116	-.05212	-.04180	.01820

IA156A, AEDC PWT 16T-470, O T S W/SILTS (R8NF46) (10 MAY 80)

REFERENCE DATA

SREF = 2690.0000 SQ.FT. XMRP = 976.0000 IN. XT
LREF = 1290.3000 INCHES YMRP = .0000 IN. YT
BREF = 1290.3000 INCHES ZMRP = 400.0000 IN. ZT
SCALE = .0200

PARAMETRIC DATA

IB-ELV = 10.000 OB-ELV = 5.000
BDFLAP = .000 SPDBRK = .000
RUDDER = .000 SILTS = 1.000
MACH = 1.050 RN/L = 3.500

RUN NO. 896/ 0 RN/L = 3.50 GRADIENT INTERVAL = -5.00/ 5.00

ALPHAO	BETAO	CP1	CP2	CP3	CP4	CPBV	RUDDER	CHR	CNVT	CBVT	CTVT
3.963	-5.872	-.41270	-.41710	-.40300	-.39990	-.42140	.19610	.01040	.27410	.22120	-.09360
4.045	-3.829	-.41170	-.42060	-.39640	-.39770	-.41530	.22820	.01340	.16870	.13600	-.05180
3.692	.160	-.39480	-.40590	-.37730	-.38370	-.39310	-.05470	-.00410	.00580	.00210	-.00120
3.637	3.941	-.38590	-.39830	-.36180	-.37430	-.39430	-.27480	-.01670	-.16810	-.13880	.05440
3.867	6.115	-.40310	-.41420	-.37570	-.39360	-.42120	-.22090	-.01220	-.28230	-.23010	.09970
	GRADIENT	.00333	.00288	.00446	.00302	.00273	-.06480	-.00388	-.04333	-.03535	.01366

IA156A, AEDC PWT 16T-470, O T S W/SILTS (R8NF47) (10 MAY 80)

REFERENCE DATA

SREF = 2690.0000 SQ.FT. XMRP = 976.0000 IN. XT
LREF = 1290.3000 INCHES YMRP = .0000 IN. YT
BREF = 1290.3000 INCHES ZMRP = 400.0000 IN. ZT
SCALE = .0200

PARAMETRIC DATA

IB-ELV = 10.000 OB-ELV = 5.000
BDFLAP = .000 SPDBRK = .000
RUDDER = .000 SILTS = 1.000
MACH = 1.100 RN/L = 3.500

RUN NO. 897/ 0 RN/L = 3.49 GRADIENT INTERVAL = -5.00/ 5.00

ALPHAO	BETAO	CP1	CP2	CP3	CP4	CPBV	RUDDER	CHR	CNVT	CBVT	CTVT
-8.358	-6.136	-.41030	-.41000	-.41130	-.39580	-.43110	-.29280	-.01810	.35820	.28580	-.14010
-8.433	-3.920	-.39400	-.40150	-.38520	-.37470	-.40610	-.14140	-.00800	.20820	.16430	-.07560
-8.252	.215	-.36880	-.37580	-.34970	-.35410	-.37090	-.01710	-.00120	-.03110	-.02740	.01250
-8.165	4.341	-.37790	-.38610	-.35700	-.36320	-.39440	.13450	.00740	-.26130	-.21290	.10170
-8.137	6.282	-.33480	-.39310	-.36880	-.37180	-.41030	.21660	.01260	-.37790	-.30120	.14920
	GRADIENT	.00195	.00187	.00342	.00139	.00142	.03340	.00186	-.05684	-.04566	.02146

RUN NO. 898/ 0 RN/L = 3.50 GRADIENT INTERVAL = -5.00/ 5.00

ALPHAO	BETAO	CP1	CP2	CP3	CP4	CPBV	RUDDER	CHR	CNVT	CBVT	CTVT
-6.235	-5.974	-.39120	-.39530	-.39110	-.36890	-.41330	-.24770	-.01430	.32690	.26250	-.12750
-6.460	-4.032	-.38530	-.38980	-.37320	-.36320	-.39370	-.12520	-.00620	.20430	.16200	-.07460
-6.213	.115	-.35940	-.36970	-.33830	-.34950	-.36080	-.03610	-.00250	-.02670	-.02260	.00950
-6.157	4.333	-.35540	-.37000	-.33720	-.34460	-.36880	.09470	.00400	-.25560	-.20670	.09810
-5.878	6.244	-.37460	-.38460	-.35310	-.36090	-.39580	.16370	.00830	-.36330	-.29030	.14260
	GRADIENT	.00357	.00236	.00429	.00222	.00296	.02630	.00122	-.05498	-.04408	.02065

IA156A, AEDC PWT 16T-470, O T S W/SILTS (R8NF47) (10 MAY 80)

REFERENCE DATA

SREF = 2690.0000 SQ.FT. XMRP = 976.0000 IN. XT
LREF = 1290.3000 INCHES YMRP = .0000 IN. YT
BREF = 1290.3000 INCHES ZMRP = 400.0000 IN. ZT
SCALE = .0200

PARAMETRIC DATA

IB-ELV = 10.000 OB-ELV = 5.000
BDFLAP = .000 SPDBRK = .000
RUDDER = .000 SILTS = 1.000
MACH = 1.100 RN/L = 3.500

RUN NO. 899/ 0 RN/L = 3.50 GRADIENT INTERVAL = -5.00/ 5.00

ALPHAO	BETAO	CP1	CP2	CP3	CP4	CPBV	RUDDER	CHR	CNVT	CBVT	CTVT
-4.135	-6.044	-.38540	-.39070	-.38270	-.36290	-.41110	-.18200	-.00900	.32080	.25700	-.12320
-4.267	-3.979	-.37300	-.38470	-.36060	-.35680	-.38440	-.08800	-.00280	.19430	.15350	-.06990
-4.129	.386	-.35030	-.36340	-.32690	-.33890	-.35090	-.03010	-.00240	-.03300	-.02770	.01180
-3.853	4.244	-.34610	-.35790	-.32260	-.33420	-.35590	.04020	-.00070	-.23960	-.19330	.09070
-4.015	6.208	-.36080	-.37640	-.34580	-.35070	-.37740	.11870	.00450	-.35000	-.28090	.13720
	GRADIENT	.00331	.00329	.00469	.00278	.00356	.01554	.00025	-.05275	-.04216	.01951

RUN NO. 900/ 0 RN/L = 3.50 GRADIENT INTERVAL = -5.00/ 5.00

ALPHAO	BETAO	CP1	CP2	CP3	CP4	CPBV	RUDDER	CHR	CNVT	CBVT	CTVT
-.383	-7.070	-.38880	-.39430	-.38180	-.36550	-.41180	-.14810	-.00590	.36330	.28660	-.13610
-.420	-4.981	-.37210	-.38040	-.35390	-.35390	-.38320	-.05920	.00050	.24530	.19610	-.08840
-.399	-.647	-.33650	-.34900	-.31600	-.32740	-.33430	-.02410	.00300	.02150	.01480	-.00480
-.384	3.467	-.33290	-.34760	-.31970	-.32840	-.34300	-.19090	-.00890	-.17580	-.14290	.06010
-.348	5.975	-.34220	-.35410	-.32270	-.33290	-.35450	-.10020	-.00240	-.30660	-.24890	.11450
	GRADIENT	.00467	.00391	.00409	.00305	.00482	-.01538	-.00110	-.04987	-.04015	.01759

RUN NO. 901/ 0 RN/L = 3.50 GRADIENT INTERVAL = -5.00/ 5.00

ALPHAO	BETAO	CP1	CP2	CP3	CP4	CPBV	RUDDER	CHR	CNVT	CBVT	CTVT
4.196	-5.913	-.34500	-.34960	-.33870	-.32870	-.35540	.19140	.00980	.26760	.21710	-.09310
3.868	-3.725	-.34390	-.35070	-.33230	-.32650	-.34590	.24700	.01430	.15720	.12610	-.04760
3.661	.204	-.34640	-.35800	-.32530	-.33380	-.34440	-.05220	-.00370	-.00080	-.00290	.00060
3.820	4.039	-.32800	-.34160	-.30980	-.31890	-.33650	-.29320	-.01770	-.16820	-.14060	.05560
3.780	6.063	-.33840	-.34860	-.31180	-.32400	-.35460	-.18890	-.00960	-.27850	-.22820	.10060
	GRADIENT	.00204	.00116	.00289	.00097	.00121	-.06961	-.00412	-.04191	-.03435	.01329

IA156A, AEDC PWT 16T-470, O T S W/SILTS (R8NF48) (10 MAY 80)

REFERENCE DATA

SREF = 2690.0000 SQ.FT. XMRP = 976.0000 IN. XT
LREF = 1290.3000 INCHES YMRP = .0000 IN. YT
BREF = 1290.3000 INCHES ZMRP = 400.0000 IN. ZT
SCALE = .0200

PARAMETRIC DATA

IB-ELV = 10.000 OB-ELV = 5.000
BDFLAP = .000 SPDBRK = .000
RUDDER = .000 SILTS = 1.000
MACH = 1.150 RN/L = 3.500

RUN NO. 902/ 0 RN/L = 3.50 GRADIENT INTERVAL = -5.00/ 5.00

ALPHAO	BETAO	CP1	CP2	CP3	CP4	CPBV	RUDDER	CHR	CNVT	CBVT	CTVT
-8.420	-6.010	-.37900	-.38300	-.38950	-.37300	-.40160	-.36830	-.02300	.35140	.28070	-.13960
-8.432	-3.894	-.37120	-.37810	-.36840	-.34980	-.38790	-.19210	-.01140	.21700	.17150	-.08030
-8.234	.369	-.33570	-.34780	-.32770	-.32700	-.34770	-.00580	-.00050	-.02930	-.02640	.01260
-8.194	4.324	-.35310	-.36440	-.33840	-.34150	-.37930	.23680	.01450	-.25580	-.20860	.10200
-8.136	6.243	-.35620	-.36770	-.34790	-.34590	-.39250	.37020	.02320	-.36800	-.29470	.14960
	GRADIENT	.00228	.00174	.00373	.00107	.00115	.05208	.00314	-.05754	-.04626	.02218

RUN NO. 903/ 0 RN/L = 3.49 GRADIENT INTERVAL = -5.00/ 5.00

ALPHAO	BETAO	CP1	CP2	CP3	CP4	CPBV	RUDDER	CHR	CNVT	CBVT	CTVT
-6.433	-6.108	-.37290	-.37730	-.37900	-.35300	-.39620	-.34800	-.02120	.34370	.27500	-.13640
-6.084	-3.837	-.35660	-.36450	-.35140	-.33740	-.36800	-.18100	-.01000	.19590	.15510	-.07270
-6.206	.121	-.33560	-.34660	-.32040	-.32550	-.34160	-.01860	-.00130	-.01630	-.01470	.00650
-6.150	4.334	-.33930	-.34850	-.31840	-.32450	-.35000	.19480	.01100	-.24450	-.19860	.09630
-5.938	6.320	-.35290	-.36250	-.33410	-.33710	-.37590	.33680	.02030	-.36210	-.29040	.14690
	GRADIENT	.00209	.00193	.00400	.00156	.00216	.04604	.00257	-.05390	-.04329	.02069

RUN NO. 904/ 0 RN/L = 3.50 GRADIENT INTERVAL = -5.00/ 5.00

ALPHAO	BETAO	CP1	CP2	CP3	CP4	CPBV	RUDDER	CHR	CNVT	CBVT	CTVT
-4.285	-6.227	-.37260	-.37450	-.37190	-.34680	-.39340	-.32520	-.01890	.33720	.26930	-.13290
-4.310	-3.932	-.35020	-.36040	-.34130	-.33290	-.36650	-.17880	-.00920	.19810	.15670	-.07350
-4.022	.234	-.33360	-.34410	-.31320	-.32270	-.33350	-.01820	-.00130	-.01670	-.01600	.00730
-3.778	4.160	-.32730	-.34080	-.30680	-.31630	-.33820	.17320	.00870	-.22960	-.18580	.08990
-3.957	6.115	-.34280	-.35810	-.32700	-.33040	-.36210	.28790	.01630	-.34310	-.27640	.13900
	GRADIENT	.00284	.00244	.00429	.00206	.00354	.04345	.00221	-.05284	-.04232	.02018

RUN NO. 905/ 0 RN/L = 3.50 GRADIENT INTERVAL = -5.00/ 5.00

ALPHAO	BETAO	CP1	CP2	CP3	CP4	CPBV	RUDDER	CHR	CNVT	CBVT	CTVT
-.374	-7.077	-.37140	-.37590	-.36730	-.34750	-.39670	-.31390	-.01750	.36880	.28950	-.14200
-.407	-4.717	-.35120	-.36260	-.34190	-.33580	-.36820	-.17700	-.00780	.23340	.18640	-.08640
-.387	-.679	-.32810	-.33990	-.30810	-.31830	-.33090	-.06540	.00010	.02600	.01790	-.00760
-.358	3.482	-.32420	-.33190	-.29950	-.31140	-.32720	-.00400	.00440	-.18180	-.14770	.06620
-.371	5.720	-.32970	-.34110	-.30880	-.31720	-.34170	.06250	.00910	-.29910	-.24400	.11640
	GRADIENT	.00328	.00374	.00516	.00297	.00498	.02107	.00149	-.05064	-.04074	.01861

IA156A, AEDC PWT 16T-470, O T S W/SILTS (R8NF48) (10 MAY 80)

REFERENCE DATA

SREF = 2690.0000 SQ.FT. XMRP = 976.0000 IN. XT
LREF = 1290.3000 INCHES YMRP = .0000 IN. YT
BREF = 1290.3000 INCHES ZMRP = 400.0000 IN. ZT
SCALE = .0200

PARAMETRIC DATA

IB-ELV = 10.000 OB-ELV = 5.000
BDFLAP = .000 SPDBRK = .000
RUDDER = .000 SILTS = 1.000
MACH = 1.150 RN/L = 3.500

RUN NO. 906/ 0 RN/L = 3.50 GRADIENT INTERVAL = -5.00/ 5.00

ALPHAO	BETAO	CP1	CP2	CP3	CP4	CPBV	RUDDER	CHR	CNVT	CBVT	CTVT
4.100	-5.735	-.33280	-.33700	-.32530	-.31330	-.34870	.02990	-.00170	.27010	.21810	-.09740
3.871	-3.574	-.33500	-.34240	-.32230	-.31850	-.34360	.08980	.00310	.16380	.12980	-.05220
3.762	.188	-.33200	-.33990	-.31340	-.31720	-.33200	.01230	.00090	.00510	.00050	.00100
3.918	4.194	-.31600	-.32640	-.29060	-.30420	-.32410	-.11220	-.00460	-.17440	-.14620	.06300
3.702	5.896	-.32740	-.33360	-.29740	-.30970	-.34330	-.03260	.00160	-.27410	-.22580	.10420
	GRADIENT	.00246	.00207	.00410	.00186	.00250	-.02606	-.00100	-.04355	-.03554	.01484

IA156A, AEDC PWT 16T-470, O T S W/SILTS (R8NF49) (10 MAY 80)

REFERENCE DATA

SREF = 2690.0000 SQ.FT. XMRP = 976.0000 IN. XT
LREF = 1290.3000 INCHES YMRP = .0000 IN. YT
BREF = 1290.3000 INCHES ZMRP = 400.0000 IN. ZT
SCALE = .0200

PARAMETRIC DATA

IB-ELV = 10.000 OB-ELV = 5.000
BDFLAP = .000 SPDBRK = .000
RUDDER = .000 SILTS = 1.000
MACH = 1.250 RN/L = 3.500

RUN NO. 907/ 0 RN/L = 3.50 GRADIENT INTERVAL = -5.00/ 5.00

ALPHAO	BETAO	CP1	CP2	CP3	CP4	CPBV	RUDDER	CHR	CNVT	CBVT	CTVT
-8.169	-5.854	-.34410	-.34080	-.36030	-.32100	-.35810	-.47820	-.02970	.33640	.26840	-.13560
-8.464	-3.941	-.32810	-.33510	-.34290	-.30900	-.34320	-.27780	-.01680	.21260	.16830	-.08030
-8.271	.353	-.30710	-.31630	-.30310	-.29520	-.32370	.05020	.00330	-.03690	-.03170	.01540
-8.168	4.376	-.31990	-.32980	-.31500	-.30860	-.35420	.39630	.02480	-.26980	-.21850	.10950
-8.104	6.294	-.33020	-.34110	-.33310	-.31880	-.35950	.59260	.03750	-.38420	-.30280	.15740
	GRADIENT	.00103	.00068	.00342	.00008	-.00126	.08100	.00500	-.05800	-.04651	.02282

RUN NO. 908/ 0 RN/L = 3.50 GRADIENT INTERVAL = -5.00/ 5.00

ALPHAO	BETAO	CP1	CP2	CP3	CP4	CPBV	RUDDER	CHR	CNVT	CBVT	CTVT
-6.224	-5.927	-.33100	-.33710	-.34390	-.31330	-.35170	-.45100	-.02730	.32530	.25990	-.13100
-6.462	-4.030	-.32290	-.32900	-.32300	-.30430	-.33590	-.26570	-.01540	.20470	.16250	-.07730
-6.215	.096	-.30550	-.31470	-.29830	-.29500	-.31510	.03010	.00210	-.02610	-.02220	.01070
-6.146	4.359	-.30840	-.32040	-.29780	-.29710	-.33450	.36280	.02200	-.26100	-.21010	.10460
-5.860	6.264	-.33190	-.33780	-.32460	-.31340	-.35600	.55700	.03450	-.37140	-.29380	.15230
	GRADIENT	.00172	.00101	.00299	.00085	.00014	.07493	.00446	-.05551	-.04441	.02168

IA156A, AEDC PWT 16T-470, O T S W/SILTS (R8NF49) (10 MAY 80)

REFERENCE DATA

SREF = 2690.0000 SQ.FT. XMRP = 976.0000 IN. XT
LREF = 1290.3000 INCHES YMRP = .0000 IN. YT
BREF = 1290.3000 INCHES ZMRP = 400.0000 IN. ZT
SCALE = .0200

PARAMETRIC DATA

IB-ELV = 10.000 OB-ELV = 5.000
BDFLAP = .000 SPDBRK = .000
RUDDER = .000 SILTS = 1.000
MACH = 1.250 RN/L = 3.500

RUN NO. 909/ 0 RN/L = 3.50 GRADIENT INTERVAL = -5.00/ 5.00

ALPHAO	BETAO	CP1	CP2	CP3	CP4	CPBV	RUDDER	CHR	CNVT	CBVT	CTVT
-4.383	-6.232	-.34340	-.34350	-.34780	-.32040	-.36060	-.46850	-.02800	.33200	.26450	-.13360
-4.[illegible]7	-4.024	-.32380	-.33140	-.32320	-.30620	-.33950	-.25340	-.01390	.19240	.15260	-.07250
-4.[illegible]	.380	-.30640	-.31670	-.29590	-.29520	-.31370	.03390	.00210	-.03520	-.02990	.01420
-3.910	4.253	-.30370	-.31400	-.28750	-.28970	-.31850	.32610	.01880	-.23950	-.19310	.09590
-4.018	6.273	-.31680	-.32780	-.31000	-.30400	-.34490	.51920	.03140	-.35850	-.28520	.14760
	GRADIENT	.00246	.00213	.00436	.00200	.00261	.06990	.00394	-.05217	-.04176	.02033

RUN NO. 910/ 0 RN/L = 3.50 GRADIENT INTERVAL = -5.00/ 5.00

ALPHAO	BETAO	CP1	CP2	CP3	CP4	CPBV	RUDDER	CHR	CNVT	CBVT	CTVT
-.412	-7.127	-.33830	-.33860	-.33860	-.31670	-.35760	-.49920	-.02940	.36490	.28860	-.14650
-.440	-4.817	-.31890	-.32590	-.31790	-.30330	-.33760	-.32070	-.01730	.23350	.18700	-.09000
-.401	-.646	-.30540	-.31360	-.29400	-.29320	-.31110	-.07210	-.00040	.01930	.01200	-.00430
-.373	3.822	-.29190	-.30030	-.27580	-.28040	-.29920	.18090	.01680	-.19830	-.16150	.07640
-.349	5.731	-.30680	-.31420	-.28580	-.28860	-.32120	.30360	.02510	-.29560	-.24160	.12000
	GRADIENT	.00312	.00296	.00486	.00265	.00442	.05805	.00395	-.04997	-.04032	.01925

RUN NO. 911/ 0 RN/L = 3.50 GRADIENT INTERVAL = -5.00/ 5.00

ALPHAO	BETAO	CP1	CP2	CP3	CP4	CPBV	RUDDER	CHR	CNVT	CBVT	CTVT
4.089	-5.764	-.31040	-.31370	-.30210	-.29020	-.32360	-.22070	-.01870	.27430	.22120	-.10450
3.996	-3.850	-.30890	-.31680	-.29640	-.29330	-.31540	-.12290	-.01160	.17610	.14110	-.06230
3.717	.138	-.30870	-.31700	-.29700	-.29360	-.31020	.01780	.00110	-.00060	-.00260	.00140
3.584	3.832	-.29570	-.30320	-.27240	-.28220	-.29830	.10880	.01050	-.17610	-.14390	.06480
3.804	6.128	-.29990	-.30810	-.27890	-.28580	-.30780	.27490	.02240	-.29400	-.23890	.11660
	GRADIENT	.00170	.00175	.00308	.00142	.00221	.03023	.00288	-.04583	-.03709	.01654

IA156A, AEDC PWT 16T-470, O T S W/SILTS (R8NF50) (10 MAY 80)

REFERENCE DATA

SREF = 2690.0000 SQ.FT. XMRP = 976.0000 IN. XT
LREF = 1290.3000 INCHES YMRP = .0000 IN. YT
BREF = 1290.3000 INCHES ZMRP = 400.0000 IN. ZT
SCALE = .0200

PARAMETRIC DATA

IB-ELV = 10.000 OB-ELV = 5.000
BDFLAP = .000 SPDBRK = .000
RUDDER = .000 SILTS = 1.000
MACH = 1.400 RN/L = 3.500

RUN NO. 912/ 0 RN/L = 3.50 GRADIENT INTERVAL = -5.00/ 5.00

ALPHAO	BETAO	CP1	CP2	CP3	CP4	CPBV	RUDDER	CHR	CNVT	CBVT	CTVT
-8.444	-6.059	-.31300	-.30940	-.34730	-.28180	-.31230	-.65260	-.04020	.35110	.27740	-.14410
-8.457	-3.924	-.29410	-.30000	-.32460	-.27560	-.28970	-.37470	-.02250	.21590	.17160	-.08440
-8.142	.277	-.28170	-.28990	-.28320	-.26650	-.27390	.07250	.00470	-.02910	-.02620	.01380
-8.038	4.339	-.29320	-.29620	-.29060	-.27590	-.30720	.51100	.03140	-.26070	-.21080	.10760
-8.005	6.234	-.29530	-.30380	-.30570	-.28190	-.31580	.73690	.04580	-.37600	-.29500	.15640
	GRADIENT	.00013	.00047	.00415	-.00002	-.00208	.10718	.00652	-.05768	-.04628	.02324

RUN NO. 913/ 0 RN/L = 3.51 GRADIENT INTERVAL = -5.00/ 5.00

ALPHAO	BETAO	CP1	CP2	CP3	CP4	CPBV	RUDDER	CHR	CNVT	CBVT	CTVT
-6.345	-5.891	-.29730	-.30060	-.32340	-.27740	-.30900	-.61960	-.03760	.33350	.26480	-.13710
-6.201	-3.919	-.29990	-.29860	-.30650	-.27650	-.29800	-.36610	-.02140	.20830	.16580	-.08110
-6.307	.231	-.27880	-.28650	-.27540	-.26460	-.28290	.03630	.00240	-.02760	-.02330	.01160
-6.043	4.311	-.27910	-.28670	-.27630	-.26900	-.30370	.49430	.02970	-.25920	-.20750	.10530
-5.918	6.486	-.29010	-.29210	-.29170	-.27310	-.30870	.76350	.04680	-.38800	-.30190	.16050
	GRADIENT	.00253	.00145	.00368	.00092	-.00068	.10452	.00621	-.05680	-.04536	.02265

RUN NO. 914/ 0 RN/L = 3.50 GRADIENT INTERVAL = -5.00/ 5.00

ALPHAO	BETAO	CP1	CP2	CP3	CP4	CPBV	RUDDER	CHR	CNVT	CBVT	CTVT
-4.205	-5.891	-.30010	-.29790	-.31000	-.27880	-.31110	-.60030	-.03580	.32040	.25530	-.13180
-4.190	-3.860	-.28460	-.29090	-.29180	-.26780	-.29200	-.34220	-.01930	.19630	.15640	-.07610
-4.215	.300	-.27610	-.28500	-.26960	-.26320	-.28770	.06110	.00400	-.02920	-.02560	.01360
-3.880	4.319	-.28520	-.29200	-.27740	-.27510	-.31130	.47560	.02810	-.25280	-.20150	.10220
-4.009	6.379	-.28550	-.29010	-.28500	-.27340	-.30890	.71590	.04350	-.36960	-.29010	.15410
	GRADIENT	-.00006	-.00013	.00178	-.00088	-.00234	.09996	.00579	-.05490	-.04376	.02180

RUN NO. 915/ 0 RN/L = 3.50 GRADIENT INTERVAL = -5.00/ 5.00

ALPHAO	BETAO	CP1	CP2	CP3	CP4	CPBV	RUDDER	CHR	CNVT	CBVT	CTVT
-.589	-7.127	-.30880	-.30890	-.31580	-.28910	-.32430	-.71410	-.04260	.36600	.28590	-.14880
-.493	-4.697	-.29090	-.29500	-.29540	-.27530	-.30680	-.43140	-.02400	.22510	.18040	-.08840
-.450	-.743	-.27940	-.28500	-.27320	-.26790	-.29110	-.08970	-.00150	.02450	.01680	-.00670
-.436	3.828	-.27410	-.27950	-.26170	-.26380	-.30030	.32700	.02580	-.19990	-.16150	.07880
-.462	5.735	-.28900	-.29370	-.28020	-.27650	-.31080	.54300	.04000	-.30530	-.24570	.12680
	GRADIENT	.00195	.00180	.00392	.00134	.00069	.08902	.00584	-.04983	-.04008	.01959

IA156A, AEDC PWT 16T-470, O T S W/SILTS (R8NF50) (10 MAY 80)

REFERENCE DATA

SREF = 2690.0000 SQ.FT. XMRP = 976.0000 IN. XT
LREF = 1290.3000 INCHES YMRP = .0000 IN. YT
BREF = 1290.3000 INCHES ZMRP = 400.0000 IN. ZT
SCALE = .0200

PARAMETRIC DATA

IB-ELV = 10.000 OB-ELV = 5.000
BDFLAP = .000 SPDBRK = .000
RUDDER = .000 SILTS = 1.000
MACH = 1.400 RN/L = 3.500

RUN NO. 916/ 0 RN/L = 3.50 GRADIENT INTERVAL = -5.00/ 5.00

ALPHAO	BETAO	CP1	CP2	CP3	CP4	CPBV	RUDDER	CHR	CNVT	CBVT	CTVT
4.086	-5.765	-.29070	-.29230	-.27960	-.27400	-.30150	-.42250	-.03140	.26330	.21050	-.10290
4.035	-3.799	-.27770	-.28450	-.26350	-.26530	-.28680	-.24620	-.01930	.16480	.13200	-.06030
3.700	.153	-.27880	-.28300	-.27140	-.26500	-.28270	.03030	.00190	-.00350	-.00570	.00380
3.628	3.941	-.27540	-.28050	-.26050	-.26390	-.28910	.28920	.02210	-.17980	-.14430	.06780
3.569	5.882	-.28520	-.28840	-.26720	-.27190	-.29940	.49020	.03580	-.28020	-.22340	.11190
	GRADIENT	.00029	.00052	.00037	.00018	-.00029	.06918	.00535	-.04451	-.03569	.01655

IA156A, AEDC PWT 16T-470, O T S W/SILTS (R8NF51) (10 MAY 80)

REFERENCE DATA

SREF = 2690.0000 SQ.FT. XMRP = 976.0000 IN. XT
LREF = 1290.3000 INCHES YMRP = .0000 IN. YT
BREF = 1290.3000 INCHES ZMRP = 400.0000 IN. ZT
SCALE = .0200

PARAMETRIC DATA

IB-ELV = 10.000 OB-ELV = 5.000
BDFLAP = .000 SPDBRK = .000
RUDDER = .000 SILTS = 1.000
MACH = 1.550 RN/L = 3.200

RUN NO. 917/ 0 RN/L = 3.19 GRADIENT INTERVAL = -5.00/ 5.00

ALPHAO	BETAO	CP1	CP2	CP3	CP4	CPBV	RUDDER	CHR	CNVT	CBVT	CTVT
-8.555	-6.025	-.27730	-.27590	-.30710	-.26090	-.26190	-.66080	-.04370	.33700	.26480	-.13910
-8.567	-3.877	-.26250	-.26530	-.29180	-.24190	-.24230	-.36610	-.02360	.21040	.16650	-.08290
-8.224	.412	-.25920	-.26550	-.26450	-.24310	-.23080	.05800	.00400	-.02900	-.02420	.01250
-8.053	4.487	-.25650	-.26400	-.26400	-.24120	-.25250	.49390	.03270	-.25370	-.20220	.10330
-8.050	6.312	-.26080	-.26660	-.27170	-.25100	-.26220	.72800	.04840	-.35510	-.27870	.14860
	GRADIENT	.00072	.00015	.00335	.00008	-.00119	.10279	.00673	-.05549	-.04409	.02226

RUN NO. 918/ 0 RN/L = 3.19 GRADIENT INTERVAL = -5.00/ 5.00

ALPHAO	BETAO	CP1	CP2	CP3	CP4	CPBV	RUDDER	CHR	CNVT	CBVT	CTVT
-6.265	-5.820	-.27690	-.28100	-.31060	-.25890	-.27510	-.63050	-.04130	.32460	.25490	-.13330
-6.427	-3.972	-.26610	-.26860	-.28560	-.24770	-.25310	-.37620	-.02370	.20970	.16710	-.08310
-6.209	.217	-.25120	-.25840	-.25170	-.23880	-.23150	.01750	.00130	-.02050	-.01660	.00790
-6.074	4.472	-.26300	-.26880	-.26790	-.25010	-.26960	.49910	.03250	-.25750	-.20330	.10430
-5.992	6.606	-.26970	-.26910	-.27180	-.24990	-.27380	.78260	.05160	-.37670	-.29150	.15610
	GRADIENT	.00036	-.00003	.00208	-.00029	-.00197	.10368	.00666	-.05533	-.04387	.02219

IA156A, AEDC PWT 16T-470, O T S W/SILTS (R8NF51) (10 MAY 80)

REFERENCE DATA

SREF = 2690.0000 SQ.FT. XMRP = 976.0000 IN. XT
LREF = 1290.3000 INCHES YMRP = .0000 IN. YT
BREF = 1290.3000 INCHES ZMRP = 400.0000 IN. ZT
SCALE = .0200

PARAMETRIC DATA

IB-ELV = 10.000 OB-ELV = 5.000
BDFLAP = .000 SPDBRK = .000
RUDDER = .000 SILTS = 1.000
MACH = 1.550 RN/L = 3.200

RUN NO. 919/ 0 RN/L = 3.20 GRADIENT INTERVAL = -5.00/ 5.00

ALPHAO	BETAO	CP1	CP2	CP3	CP4	CPBV	RUDDER	CHR	CNVT	CBVT	CTVT
-4.316	-5.917	-.27590	-.27310	-.30130	-.25170	-.27410	-.64240	-.04120	.32180	.25180	-.13150
-4.555	-4.132	-.26120	-.26530	-.27510	-.24550	-.25890	-.40030	-.02460	.21520	.17160	-.08600
-4.096	.321	-.25730	-.26320	-.25500	-.24300	-.24610	.01560	.00110	-.02390	-.01890	.00830
-3.809	4.600	-.26410	-.26970	-.26770	-.25430	-.27280	.52150	.03320	-.26310	-.20740	.10740
-3.787	6.253	-.26110	-.26630	-.26520	-.24950	-.27140	.73110	.04750	-.35500	-.27670	.14810
	GRADIENT	-.00032	-.00050	.00087	-.00100	-.00156	.10548	.00661	-.05477	-.04340	.02214

RUN NO. 920/ 0 RN/L = 3.19 GRADIENT INTERVAL = -5.00/ 5.00

ALPHAO	BETAO	CP1	CP2	CP3	CP4	CPBV	RUDDER	CHR	CNVT	CBVT	CTVT
-.649	-7.128	-.27910	-.27920	-.30180	-.26010	-.29370	-.78630	-.05090	.37300	.28810	-.15240
-.600	-4.736	-.26510	-.26980	-.27300	-.25180	-.27400	-.47340	-.02880	.23180	.18500	-.09290
-.528	-.692	-.25940	-.26460	-.25620	-.24590	-.26170	-.09940	-.00230	.02030	.01320	-.00470
-.520	3.438	-.25950	-.26340	-.25160	-.24960	-.27400	.32340	.02750	-.19170	-.15460	.07710
-.536	5.575	-.26500	-.26830	-.26120	-.25470	-.28080	.57020	.04490	-.30310	-.24220	.12760
	GRADIENT	.00068	.00078	.00261	.00026	-.00001	.09750	.00689	-.05181	-.04155	.02080

RUN NO. 921/ 0 RN/L = 3.19 GRADIENT INTERVAL = -5.00/ 5.00

ALPHAO	BETAO	CP1	CP2	CP3	CP4	CPBV	RUDDER	CHR	CNVT	CBVT	CTVT
4.017	-5.502	-.27920	-.27850	-.28430	-.26260	-.28390	-.45480	-.03610	.26900	.21170	-.10550
3.919	-3.549	-.26850	-.27150	-.26600	-.25480	-.26360	-.23630	-.02000	.15630	.12740	-.06070
3.577	.320	-.25930	-.26260	-.25440	-.24590	-.26800	-.00830	-.00060	-.00030	-.00320	.00220
3.671	4.060	-.26230	-.26700	-.25490	-.25410	-.27750	.29770	.02430	-.17440	-.14470	.07190
3.567	6.099	-.26640	-.26980	-.25980	-.25610	-.28560	.53880	.04200	-.29550	-.23380	.12040
	GRADIENT	.00082	.00060	.00147	.00010	-.00102	.07011	.00582	-.04344	-.03575	.01742

IA156A, AEDC PWT 16T-470, O T S W/SILTS (R8NF52) (10 MAY 80)

REFERENCE DATA

SREF = 2690.0000 SQ.FT. XMRP = 976.0000 IN. XT
LREF = 1290.3000 INCHES YMRP = .0000 IN. YT
BREF = 1290.3000 INCHES ZMRP = 400.0000 IN. ZT
SCALE = .0200

PARAMETRIC DATA

IB-ELV = 10.000 OB-ELV = 9.000
BDFLAP = .000 SPDBRK = .000
RUDDER = .000 SILTS = 1.000
MACH = .300 RN/L = 3.500

RUN NO. 928/ 0 RN/L = 2.68 GRADIENT INTERVAL = -5.00/ 5.00

ALPHAO	BETAO	CP1	CP2	CP3	CP4	CPBV	RUDDER	CHR	CNVT	CBVT	CTVT
-5.998	-10.067	-.25300	-.26900	-.24860	-.23570	-.24020	-.15290	-.02560	.53130	.38260	-.15050
-6.333	-6.052	-.25900	-.27860	-.26260	-.24230	-.25860	-.06850	-.00580	.31240	.23560	-.09450
-6.200	.352	-.21400	-.23340	-.21550	-.20070	-.22090	.01540	.00370	-.04190	-.03510	.01150
-5.745	6.151	-.23000	-.24930	-.22970	-.21680	-.22960	.09850	.01360	-.37650	-.28190	.11860
-5.855	10.085	-.26560	-.28460	-.25610	-.25180	-.26120	.21110	.04160	-.58550	-.40630	.17020
	GRADIENT	.00000	.00000	.00000	.00000	.00000	.00000	.00000	.00000	.00000	.00000

RUN NO. 929/ 0 RN/L = 2.68 GRADIENT INTERVAL = -5.00/ 5.00

ALPHAO	BETAO	CP1	CP2	CP3	CP4	CPBV	RUDDER	CHR	CNVT	CBVT	CTVT
-.334	-10.550	-.25190	-.27110	-.25060	-.23850	-.24530	-.18860	-.03300	.53580	.36870	-.13640
-.302	-6.475	-.22570	-.24360	-.22830	-.21330	-.22090	-.09560	-.00790	.31620	.23610	-.08790
-.250	-.524	-.21000	-.22380	-.20430	-.19810	-.21370	-.06050	.00160	.01350	.00650	-.00230
-.233	5.554	-.22800	-.24670	-.21790	-.21400	-.22380	-.02920	.00990	-.26990	-.20660	.07350
-.182	9.914	-.24350	-.26590	-.23290	-.23010	-.23360	.08410	.03990	-.49290	-.34620	.12840
	GRADIENT	.00000	.00000	.00000	.00000	.00000	.00000	.00000	.00000	.00000	.00000

RUN NO. 930/ 0 RN/L = 2.68 GRADIENT INTERVAL = -5.00/ 5.00

ALPHAO	BETAO	CP1	CP2	CP3	CP4	CPBV	RUDDER	CHR	CNVT	CBVT	CTVT
6.124	-9.965	-.23300	-.25250	-.22940	-.22020	-.22380	-.05940	-.03080	.42750	.29340	-.09020
5.948	-5.857	-.21660	-.23220	-.22230	-.20010	-.21070	.03470	-.00340	.21940	.16590	-.04440
5.799	.240	-.20410	-.21790	-.19120	-.19230	-.20610	.01060	.00300	.00310	-.00210	.00030
6.019	6.223	-.22250	-.24300	-.20500	-.20820	-.21570	-.00810	.01030	-.25800	-.20090	.06520
5.804	10.078	-.23750	-.25700	-.21930	-.22550	-.23050	.09550	.04050	-.47930	-.33840	.12180
	GRADIENT	.00000	.00000	.00000	.00000	.00000	.00000	.00000	.00000	.00000	.00000

IA156A, AEDC PWT 16T-470, O T S W/SILTS (R8NF53) (10 MAY 80)

REFERENCE DATA

SREF = 2690.0000 SQ.FT. XMRP = 976.0000 IN. XT
LREF = 1290.3000 INCHES YMRP = .0000 IN. YT
BREF = 1290.3000 INCHES ZMRP = 400.0000 IN. ZT
SCALE = .0200

PARAMETRIC DATA

IB-ELV = 10.000 OB-ELV = 9.000
BDFLAP = .000 SPDBRK = .000
RUDDER = .000 SILTS = 1.000
MACH = .300 RN/L = 3.500

RUN NO. 927/ 0 RN/L = 2.67 GRADIENT INTERVAL = -5.00/ 5.00

ALPHAO	BETAO	CP1	CP2	CP3	CP4	CPBV	RUDDER	CHR	CNVT	CBVT	CTVT
-10.105	-7.896	-.25120	-.26890	-.24880	-.23170	-.24550	-.09450	-.01430	.42300	.31820	-.12780
-10.102	-5.743	-.26640	-.28700	-.27300	-.24820	-.27040	-.05760	-.00650	.30630	.23480	-.09440
-9.855	.239	-.23020	-.24630	-.23510	-.21280	-.24160	.01520	.00400	-.03240	-.02950	.01100
-9.978	6.308	-.24200	-.26130	-.24620	-.22500	-.24060	.08830	.01460	-.36910	-.28180	.11660
-9.987	8.105	-.26190	-.28340	-.26130	-.24550	-.26300	.13240	.02490	-.46680	-.34360	.14300
	GRADIENT	.00000	.00000	.00000	.00000	.00000	.00000	.00000	.00000	.00000	.00000

RUN NO. 931/ 0 RN/L = 2.68 GRADIENT INTERVAL = -5.00/ 5.00

ALPHAO	BETAO	CP1	CP2	CP3	CP4	CPBV	RUDDER	CHR	CNVT	CBVT	CTVT
9.927	-7.951	-.22720	-.24990	-.23580	-.21310	-.22510	.01770	-.00640	.31380	.23460	-.07120
9.995	-5.628	-.21530	-.23520	-.21750	-.19660	-.20510	.03550	.00060	.21340	.16250	-.04750
9.865	.278	-.19200	-.20640	-.17960	-.17880	-.18970	.01100	.00310	.00390	-.00320	.00060
9.954	6.285	-.21000	-.23180	-.18830	-.19430	-.19950	-.00490	.00790	-.23160	-.18640	.06110
9.732	8.122	-.22420	-.25140	-.20560	-.21020	-.21610	.02500	.01770	-.32830	-.25340	.08800
	GRADIENT	.00000	.00000	.00000	.00000	.00000	.00000	.00000	.00000	.00000	.00000

IA156A, AEDC PWT 16T-470, O T S W/SILTS (R8NF54) (10 MAY 80)

REFERENCE DATA

SREF = 2690.0000 SQ.FT. XMRP = 976.0000 IN. XT
LREF = 1290.3000 INCHES YMRP = .0000 IN. YT
BREF = 1290.3000 INCHES ZMRP = 400.0000 IN. ZT
SCALE = .0200

PARAMETRIC DATA

IB-ELV = 10.000 OB-ELV = 9.000
BDFLAP = .000 SPDBRK = .000
RUDDER = .000 SILTS = 1.000
MACH = .600 RN/L = 3.500

RUN NO. 932/ 0 RN/L = 3.50 GRADIENT INTERVAL = -5.00/ 5.00

ALPHAO	BETAO	CP1	CP2	CP3	CP4	CPBV	RUDDER	CHR	CNVT	CBVT	CTVT
-8.138	-7.854	-.26950	-.28730	-.28160	-.25760	-.27240	-.16140	-.01240	.42230	.31170	-.11860
-8.087	-5.763	-.26590	-.28560	-.27930	-.25060	-.27230	-.07210	-.00350	.30330	.22920	-.08600
-7.967	-3.708	-.25400	-.27450	-.26690	-.24050	-.26380	-.03150	-.00020	.18140	.13700	-.05080
-7.963	.267	-.23860	-.25690	-.24980	-.22590	-.25230	-.01590	-.00180	-.02940	-.02680	.00990
-7.927	4.197	-.24770	-.27020	-.25360	-.23560	-.25220	.03230	.00020	-.23960	-.18600	.07040
-7.870	6.095	-.25700	-.27990	-.26530	-.24500	-.26080	.10910	.00750	-.35030	-.26380	.10240
-7.785	8.168	-.26830	-.28720	-.27230	-.25470	-.26650	.26170	.02330	-.45390	-.32160	.12400
	GRADIENT	.00080	.00055	.00169	.00063	.00147	.00806	.00005	-.05325	-.04086	.01533

IA156A, AEDC PWT 16T-470, O T S W/SILTS (R8NF54) (10 MAY 80)

REFERENCE DATA

SREF = 2690.0000 SQ.FT. XMRP = 976.0000 IN. XT
LREF = 1290.3000 INCHES YMRP = .0000 IN. YT
BREF = 1290.3000 INCHES ZMRP = 400.0000 IN. ZT
SCALE = .0200

PARAMETRIC DATA

IB-ELV = 10.000 OB-ELV = 9.000
BDFLAP = .000 SPDBRK = .000
RUDDER = .000 SILTS = 1.000
MACH = .600 RN/L = 3.500

RUN NO. 933/ 0 RN/L = 3.51 GRADIENT INTERVAL = -5.00/ 5.00

ALPHAO	BETAO	CP1	CP2	CP3	CP4	CPBV	RUDDER	CHR	CNVT	CBVT	CTVT
-6.013	-7.751	-.26800	-.28700	-.28110	-.25540	-.27230	-.15970	-.01160	.41510	.30670	-.11580
-6.160	-5.863	-.26140	-.27860	-.27290	-.24600	-.26230	-.08530	-.00410	.30400	.23070	-.08650
-6.084	-3.845	-.25020	-.27110	-.26410	-.23650	-.25880	-.04000	-.00020	.18140	.13840	-.05160
-6.187	.112	-.23340	-.24920	-.23780	-.22210	-.24200	-.01710	-.00170	-.02660	-.02270	.00770
-5.969	4.214	-.24340	-.26660	-.24600	-.23150	-.24810	.04050	.00030	-.24130	-.18430	.06950
-5.766	6.035	-.25150	-.27400	-.25490	-.24160	-.25530	.11630	.00750	-.34900	-.26000	.10060
-5.770	8.336	-.26020	-.28100	-.26410	-.24840	-.26040	.28600	.02530	-.46440	-.32580	.12610
	GRADIENT	.00082	.00053	.00222	.00060	.00131	.01001	.00006	-.05246	-.04004	.01503

RUN NO. 934/ 0 RN/L = 3.51 GRADIENT INTERVAL = -5.00/ 5.00

ALPHAO	BETAO	CP1	CP2	CP3	CP4	CPBV	RUDDER	CHR	CNVT	CBVT	CTVT
-4.123	-7.903	-.25950	-.28190	-.26840	-.25110	-.26260	-.17060	-.01210	.42010	.30870	-.11550
-4.091	-5.806	-.25990	-.27970	-.27060	-.24840	-.26410	-.09010	-.00370	.29450	.22270	-.08310
-4.143	-3.813	-.24260	-.26160	-.25050	-.22910	-.25170	-.04970	-.00020	.17960	.13650	-.05100
-3.887	.205	-.22980	-.24560	-.23040	-.21820	-.23560	-.01740	-.00190	-.02340	-.01990	.00590
-3.956	4.299	-.24190	-.25990	-.23380	-.22810	-.23940	.05150	.00040	-.24310	-.18450	.07010
-3.856	6.017	-.25230	-.27240	-.24980	-.23940	-.24920	.11900	.00690	-.34500	-.25600	.09970
-3.746	7.939	-.26090	-.28190	-.26380	-.24890	-.26060	.26290	.02210	-.44860	-.31770	.12440
	GRADIENT	.00008	.00020	.00205	.00012	.00151	.01249	.00008	-.05211	-.03957	.01493

RUN NO. 935/ 0 RN/L = 3.51 GRADIENT INTERVAL = -5.00/ 5.00

ALPHAO	BETAO	CP1	CP2	CP3	CP4	CPBV	RUDDER	CHR	CNVT	CBVT	CTVT
-.269	-8.793	-.25750	-.27640	-.26130	-.24700	-.25480	-.22580	-.01740	.45440	.32600	-.11890
-.324	-6.788	-.24820	-.26700	-.25660	-.23640	-.24260	-.12860	-.00680	.34500	.25590	-.09210
-.313	-4.471	-.24270	-.26160	-.24520	-.22930	-.24360	-.07780	-.00120	.21460	.16210	-.05700
-.289	-.224	-.21870	-.23270	-.21410	-.20980	-.22290	-.06970	-.00030	.00620	.00150	.00040
-.267	3.806	-.22580	-.24600	-.22310	-.21540	-.23010	-.07370	-.00080	-.18050	-.13940	.04610
-.217	5.654	-.23490	-.25690	-.22790	-.22150	-.23220	-.01970	.00510	-.28640	-.21540	.07620
-.279	7.785	-.25420	-.27360	-.24600	-.23940	-.24980	.12140	.02020	-.39750	-.28430	.10340
	GRADIENT	.00207	.00193	.00271	.00171	.00166	.00051	.00005	-.04774	-.03644	.01246

IA156A, AEDC PWT 16T-470, O T S W/SILTS (R8NF54) (10 MAY 80)

REFERENCE DATA

SREF = 2690.0000 SQ.FT. XMRP = 976.0000 IN. XT
LREF = 1290.3000 INCHES YMRP = .0000 IN. YT
BREF = 1290.3000 INCHES ZMRP = 400.0000 IN. ZT
SCALE = .0200

PARAMETRIC DATA

IB-ELV = 10.000 OB-ELV = 9.000
BDFLAP = .000 SPDBRK = .000
RUDDER = .000 SILTS = 1.000
MACH = .600 RN/L = 3.500

RUN NO. 936/ 0 RN/L = 3.51 GRADIENT INTERVAL = -5.00/ 5.00

ALPHAO	BETAO	CP1	CP2	CP3	CP4	CPBV	RUDDER	CHR	CNVT	CBVT	CTVT
4.047	-7.760	-.24380	-.25780	-.23430	-.22730	-.22930	-.03710	-.01040	.36110	.26260	-.08600
4.081	-5.679	-.23750	-.25400	-.23980	-.22440	-.23570	.03180	-.00250	.24890	.18690	-.05730
4.045	-3.728	-.22620	-.24090	-.22960	-.21210	-.22510	.06350	.00180	.15040	.11390	-.03060
3.862	.202	-.21990	-.23250	-.21130	-.20820	-.22220	-.00300	-.00030	.00320	-.00170	.00100
3.891	4.152	-.22090	-.23970	-.20610	-.20970	-.21950	-.06900	-.00240	-.15650	-.12430	.03670
3.833	6.086	-.23770	-.25620	-.21710	-.21850	-.23130	-.00130	.00580	-.28130	-.21110	.07200
3.739	7.925	-.24470	-.26690	-.23390	-.23050	-.23500	.12960	.02050	-.38470	-.27600	.09890
	GRADIENT	.00067	.00015	.00298	.00030	.00071	-.01681	-.00053	-.03695	-.03023	.00854

RUN NO. 937/ 0 RN/L = 3.51 GRADIENT INTERVAL = -5.00/ 5.00

ALPHAO	BETAO	CP1	CP2	CP3	CP4	CPBV	RUDDER	CHR	CNVT	CBVT	CTVT
6.185	-7.948	-.24410	-.26110	-.24310	-.22860	-.23170	-.04270	-.01040	.37080	.26800	-.08930
6.018	-5.777	-.23530	-.25250	-.23950	-.22030	-.23360	.03750	-.00100	.24800	.18460	-.05630
6.127	-3.840	-.23090	-.24610	-.23300	-.21660	-.22990	.06550	.00310	.15260	.11580	-.03180
5.925	.211	-.21630	-.23010	-.21140	-.20470	-.21900	-.00440	-.00050	-.00050	-.00440	.00180
5.722	4.043	-.22200	-.24380	-.20730	-.20790	-.22040	-.06780	-.00340	-.15100	-.11980	.03440
5.884	6.104	-.23680	-.25620	-.21550	-.21990	-.22950	-.00700	.00430	-.26960	-.20440	.06910
5.739	8.181	-.24590	-.26270	-.22170	-.22740	-.23270	.14500	.02150	-.38740	-.27850	.10020
	GRADIENT	.00115	.00033	.00328	.00112	.00122	-.01691	-.00083	-.03851	-.02989	.00840

RUN NO. 938/ 0 RN/L = 3.51 GRADIENT INTERVAL = -5.00/ 5.00

ALPHAO	BETAO	CP1	CP2	CP3	CP4	CPBV	RUDDER	CHR	CNVT	CBVT	CTVT
8.049	-8.030	-.24220	-.26470	-.24510	-.23160	-.23810	-.02390	-.00770	.36380	.26640	-.08890
7.954	-5.760	-.23390	-.25210	-.23800	-.21780	-.22730	.06140	.00230	.23400	.17680	-.05290
8.156	-3.936	-.22240	-.23950	-.21910	-.20740	-.22040	.07630	.00500	.14840	.11370	-.03100
7.840	.174	-.21470	-.23050	-.19640	-.20150	-.21440	.00080	.00010	.00490	-.00130	.00140
8.020	4.153	-.22150	-.24640	-.21040	-.20700	-.22270	-.07090	-.00450	-.13730	-.11260	.03180
7.706	6.068	-.24230	-.25830	-.21450	-.21940	-.22630	-.03620	.00040	-.24010	-.18730	.06090
7.985	8.203	-.23720	-.25920	-.22100	-.22560	-.23220	.08750	.01450	-.35520	-.26650	.09620
	GRADIENT	.00012	-.00084	.00110	.00006	-.00027	-.01820	-.00117	-.03532	-.02798	.00776

IA156A, AEDC PWT 16T-470, O T S W/SILTS (R8NF55) (10 MAY 80)

REFERENCE DATA

SREF = 2690.0000 SQ.FT. XMRP = 976.0000 IN. XT
LREF = 1290.3000 INCHES YMRP = .0000 IN. YT
BREF = 1290.3000 INCHES ZMRP = 400.0000 IN. ZT
SCALE = .0200

PARAMETRIC DATA

IB-ELV = 10.000 OB-ELV = 9.000
BDFLAP = .000 SPDBRK = .000
RUDDER = .000 SILTS = 1.000
MACH = .800 RN/L = 3.500

RUN NO. 939/ 0 RN/L = 3.51 GRADIENT INTERVAL = -5.00/ 5.00

ALPHAO	BETAO	CP1	CP2	CP3	CP4	CPBV	RUDDER	CHR	CNVT	CBVT	CTVT
-8.416	-6.010	-.26510	-.28890	-.27620	-.26330	-.27820	.08670	.01100	.31540	.23330	-.08080
-8.319	-3.889	-.28410	-.30250	-.28840	-.27600	-.29860	.11840	.01300	.19500	.14470	-.04620
-8.133	.366	-.24730	-.26100	-.24860	-.23790	-.26170	-.06480	-.00570	-.02770	-.02440	.00690
-8.078	4.282	-.26640	-.28480	-.27170	-.25780	-.27940	-.11410	-.01260	-.23250	-.17810	.06100
-7.997	6.197	-.27400	-.29410	-.28200	-.26590	-.28720	-.02940	-.00610	-.34040	-.25020	.08960
	GRADIENT	.00226	.00228	.00215	.00232	.00244	-.02866	-.00315	-.05232	-.03951	.01311

RUN NO. 940/ 0 RN/L = 3.50 GRADIENT INTERVAL = -5.00/ 5.00

ALPHAO	BETAO	CP1	CP2	CP3	CP4	CPBV	RUDDER	CHR	CNVT	CBVT	CTVT
-6.329	-6.039	-.27050	-.29010	-.27950	-.26520	-.28260	.05740	.00920	.31580	.23320	-.08050
-6.233	-3.960	-.26160	-.28180	-.26730	-.25510	-.27330	.08920	.01110	.18610	.13780	-.04330
-6.042	.147	-.24280	-.25580	-.24400	-.23440	-.25590	-.05650	-.00490	-.02050	-.01740	.00400
-6.109	4.309	-.25960	-.27730	-.25990	-.25400	-.26670	-.09060	-.01120	-.23300	-.17570	.05970
-5.813	6.218	-.26660	-.28540	-.27020	-.25800	-.27730	.00550	-.00370	-.34370	-.25070	.09030
	GRADIENT	.00023	.00053	.00088	.00012	.00079	-.02171	-.00269	-.05068	-.03791	.01246

RUN NO. 941/ 0 RN/L = 3.50 GRADIENT INTERVAL = -5.00/ 5.00

ALPHAO	BETAO	CP1	CP2	CP3	CP4	CPBV	RUDDER	CHR	CNVT	CBVT	CTVT
-4.318	-6.168	-.27150	-.28750	-.27710	-.26230	-.27920	.03620	.00800	.31650	.23320	-.08030
-4.283	-3.943	-.25370	-.27140	-.25640	-.24680	-.26430	.06460	.00980	.18210	.13370	-.04160
-4.010	.249	-.23650	-.25000	-.23510	-.22860	-.24620	-.05070	-.00450	-.01720	-.01460	.00230
-3.782	4.175	-.25590	-.26700	-.24710	-.24220	-.25940	-.06520	-.00990	-.22210	-.16660	.05660
-3.971	6.130	-.25990	-.28130	-.26180	-.25140	-.26830	.03150	-.00210	-.34000	-.24800	.09050
	GRADIENT	-.00022	.00059	.00119	.00061	.00065	-.01612	-.00244	-.04977	-.03698	.01208

RUN NO. 942/ 0 RN/L = 3.51 GRADIENT INTERVAL = -5.00/ 5.00

ALPHAO	BETAO	CP1	CP2	CP3	CP4	CPBV	RUDDER	CHR	CNVT	CBVT	CTVT
-.339	-6.739	-.25920	-.27420	-.26000	-.25140	-.26500	-.01520	.00440	.34160	.24860	-.08430
-.371	-4.804	-.24590	-.26050	-.24820	-.23800	-.25020	.02630	.00810	.23180	.16970	-.05310
-.324	-.381	-.23310	-.24500	-.22620	-.22340	-.23790	-.06610	.00000	.01110	.00490	-.00120
-.303	3.704	-.24000	-.25310	-.23320	-.22950	-.23950	-.17150	-.00920	-.17540	-.13160	.03610
-.314	5.560	-.25070	-.26830	-.24750	-.24210	-.25060	-.08490	-.00160	-.28450	-.21030	.06980
	GRADIENT	.00072	.00091	.00181	.00103	.00128	-.02322	-.00203	-.04789	-.03544	.01050

IA156A, AEDC PWT 16T-470, O T S W/SILTS (R8NF55) (10 MAY 80)

REFERENCE DATA

SREF = 2690.0000 SQ.FT. XMRP = 976.0000 IN. XT
LREF = 1290.3000 INCHES YMRP = .0000 IN. YT
BREF = 1290.3000 INCHES ZMRP = 400.0000 IN. ZT
SCALE = .0200

PARAMETRIC DATA

IB-ELV = 10.000 OB-ELV = 9.000
BDFLAP = .000 SPDBRK = .000
RUDDER = .000 SILTS = 1.000
MACH = .800 RN/L = 3.500

RUN NO. 943/ 0 RN/L = 3.50 GRADIENT INTERVAL = -5.00/ 5.00

ALPHAO	BETAO	CP1	CP2	CP3	CP4	CPBV	RUDDER	CHR	CNVT	CBVT	CTVT
3.938	-5.652	-.24980	-.26530	-.24660	-.23970	-.25200	.11070	.00480	.26230	.19220	-.05620
3.921	-3.662	-.23650	-.24990	-.23340	-.22630	-.23910	.14660	.00870	.15210	.11150	-.02410
3.945	.110	-.23400	-.24490	-.21600	-.21880	-.23270	.00290	.00010	.00660	.00150	-.00010
3.796	4.071	-.24010	-.25400	-.22760	-.22420	-.23870	-.14980	-.00890	-.15630	-.12060	.02980
3.721	6.067	-.25000	-.26630	-.23780	-.23540	-.24630	-.03490	.00180	-.28560	-.21300	.07090
	GRADIENT	-.00047	-.00054	.00072	.00026	.00004	-.03833	-.00228	-.03989	-.03002	.00697

RUN NO. 944/ 0 RN/L = 3.51 GRADIENT INTERVAL = -5.00/ 5.00

ALPHAO	BETAO	CP1	CP2	CP3	CP4	CPBV	RUDDER	CHR	CNVT	CBVT	CTVT
6.089	-5.845	-.24770	-.26530	-.24350	-.24000	-.25260	.12820	.00710	.25740	.19260	-.05720
6.139	-3.843	-.23980	-.25550	-.23460	-.22810	-.24500	.19050	.01340	.14800	.11110	-.02260
5.926	.176	-.23120	-.24290	-.21530	-.21720	-.22820	-.00200	-.00020	.00260	-.00090	-.00010
5.761	3.987	-.24160	-.25470	-.22500	-.22270	-.23930	-.18250	-.01270	-.13030	-.10320	.02040
5.893	6.117	-.25360	-.26820	-.24360	-.23580	-.24950	-.08030	-.00290	-.25610	-.19850	.06470
	GRADIENT	-.00021	.00013	.00126	.00071	.00076	-.04764	-.00333	-.03555	-.02737	.00549

IA156A, AEDC PWT 16T-470, O T S W/SILTS (R8NF56) (10 MAY 80)

REFERENCE DATA

SREF = 2690.0000 SQ.FT. XMRP = 976.0000 IN. XT
LREF = 1290.3000 INCHES YMRP = .0000 IN. YT
BREF = 1290.3000 INCHES ZMRP = 400.0000 IN. ZT
SCALE = .0200

PARAMETRIC DATA

IB-ELV = 10.000 OB-ELV = 9.000
BDFLAP = .000 SPDBRK = .000
RUDDER = .000 SILTS = 1.000
MACH = .900 RN/L = 3.500

RUN NO. 952/ 0 RN/L = 3.51 GRADIENT INTERVAL = -5.00/ 5.00

ALPHAO	BETAO	CP1	CP2	CP3	CP4	CPBV	RUDDER	CHR	CNVT	CBVT	CTVT
-8.266	-5.928	-.30470	-.31990	-.31220	-.29700	-.31160	.24560	.02300	.31540	.22760	-.07850
-8.058	-3.754	-.28950	-.31000	-.29900	-.28730	-.30540	.28710	.02550	.17000	.11500	-.02650
-8.186	.261	-.27020	-.28580	-.26830	-.26110	-.28690	-.04910	-.00400	-.01720	-.01750	.00400
-8.108	4.358	-.29370	-.30500	-.29250	-.28020	-.30330	-.26070	-.02350	-.21770	-.16360	.04990
-8.107	6.196	-.30780	-.31390	-.29980	-.30410	-.31200	-.23680	-.02230	-.32930	-.24530	.08780
	GRADIENT	-.00054	.00060	.00078	.00086	.00024	-.06748	-.00604	-.04780	-.03435	.00942

IA156A, AEDC PWT 16T-470, O T S W/SILTS (R8NF56) (10 MAY 80)

REFERENCE DATA

SREF = 2690.0000 SQ.FT. XMRP = 976.0000 IN. XT
LREF = 1290.3000 INCHES YMRP = .0000 IN. YT
BREF = 1290.3000 INCHES ZMRP = 400.0000 IN. ZT
SCALE = .0200

PARAMETRIC DATA

IB-ELV = 10.000 OB-ELV = 9.000
BDFLAP = .000 SPDBRK = .000
RUDDER = .000 SILTS = 1.000
MACH = .900 RN/L = 3.500

RUN NO. 953/ 0 RN/L = 3.50 GRADIENT INTERVAL = -5.00/ 5.00

ALPHAO	BETAO	CP1	CP2	CP3	CP4	CPBV	RUDDER	CHR	CNVT	CBVT	CTVT
-6.226	-6.035	-.30620	-.31420	-.29840	-.29410	-.30570	.20080	.02010	.31740	.23230	-.08190
-6.115	-4.004	-.28960	-.30400	-.28970	-.28430	-.29990	.19750	.01900	.18000	.12570	-.03340
-6.029	.147	-.26550	-.27780	-.26020	-.25710	-.27870	-.03650	-.00290	-.01110	-.01140	.00090
-6.036	4.212	-.28550	-.30060	-.28120	-.28170	-.29330	-.22980	-.02150	-.20590	-.15230	.04430
-5.855	6.186	-.31350	-.32230	-.30030	-.30740	-.31520	-.19300	-.01940	-.32650	-.24160	.08630
	GRADIENT	.00052	.00043	.00106	.00034	.00082	-.05203	-.00493	-.04697	-.03384	.00945

RUN NO. 954/ 0 RN/L = 3.50 GRADIENT INTERVAL = -5.00/ 5.00

ALPHAO	BETAO	CP1	CP2	CP3	CP4	CPBV	RUDDER	CHR	CNVT	CBVT	CTVT
-4.243	-6.218	-.29810	-.30510	-.29150	-.29550	-.29610	.18980	.01980	.31310	.22760	-.07820
-4.227	-3.977	-.28170	-.29740	-.28020	-.27580	-.29240	.11400	.01310	.18000	.13010	-.03970
-3.985	.235	-.26310	-.27060	-.25170	-.25720	-.26640	-.02900	-.00240	-.00880	-.01070	.00060
-4.062	4.405	-.28620	-.29830	-.27900	-.27940	-.28760	-.19080	-.01930	-.21630	-.16080	.04950
-3.876	6.295	-.30660	-.31960	-.29500	-.30350	-.30880	-.13950	-.01580	-.33010	-.24480	.08930
	GRADIENT	-.00053	-.00010	.00015	-.00042	.00058	-.03636	-.00387	-.04728	-.03470	.01064

RUN NO. 955/ 0 RN/L = 3.50 GRADIENT INTERVAL = -5.00/ 5.00

ALPHAO	BETAO	CP1	CP2	CP3	CP4	CPBV	RUDDER	CHR	CNVT	CBVT	CTVT
-.415	-6.981	-.28950	-.29600	-.28510	-.28650	-.28720	.07650	.01150	.34430	.24420	-.08260
-.388	-4.926	-.27390	-.28550	-.27090	-.27150	-.28010	.11490	.01460	.23240	.17300	-.05650
-.346	-.610	-.24990	-.25950	-.24750	-.24070	-.25990	-.06700	.00000	.02610	.01550	-.00630
-.308	3.482	-.26180	-.27400	-.26440	-.25830	-.27080	-.24730	-.01460	-.14420	-.11360	.02700
-.312	5.703	-.27720	-.28920	-.27070	-.26700	-.28250	-.24060	-.01410	-.27000	-.20510	.06680
	GRADIENT	.00148	.00141	.00082	.00162	.00114	-.04307	-.00347	-.04482	-.03411	.00995

RUN NO. 956/ 0 RN/L = 3.50 GRADIENT INTERVAL = -5.00/ 5.00

ALPHAO	BETAO	CP1	CP2	CP3	CP4	CPBV	RUDDER	CHR	CNVT	CBVT	CTVT
4.107	-5.931	-.27720	-.28870	-.27460	-.27160	-.27930	.31630	.02110	.25260	.18650	-.04980
4.174	-3.928	-.25540	-.26750	-.25460	-.25010	-.26670	.35090	.02450	.15030	.11470	-.02200
3.727	.181	-.25060	-.26110	-.24710	-.24410	-.25700	-.01030	-.00090	.00980	.00070	.00000
3.889	4.008	-.25830	-.27310	-.25890	-.25190	-.27230	-.31050	-.02130	-.13920	-.11730	.02660
3.707	6.109	-.27900	-.29340	-.27480	-.27060	-.28850	-.24080	-.01490	-.25900	-.20310	.06440
	GRADIENT	-.00035	-.00068	-.00051	-.00021	-.00067	-.08340	-.00578	-.03645	-.02922	.00611

IA156A, AEDC PWT 16T-470, O T S W/SILTS (R8NF57) (10 MAY 80)

REFERENCE DATA

SREF = 2690.0000 SQ.FT. XMRP = 976.0000 IN. XT
LREF = 1290.3000 INCHES YMRP = .0000 IN. YT
BREF = 1290.3000 INCHES ZMRP = 400.0000 IN. ZT
SCALE = .0200

PARAMETRIC DATA

IB-ELV = 10.000 OB-ELV = 9.000
BDFLAP = .000 SPDBRK = .000
RUDDER = .000 SILTS = 1.000
MACH = .950 RN/L = 3.500

RUN NO. 957/ 0 RN/L = 3.50 GRADIENT INTERVAL = -5.00/ 5.00

ALPHAO	BETAO	CP1	CP2	CP3	CP4	CPBV	RUDDER	CHR	CNVT	CBVT	CTVT
-8.168	-6.025	-.34560	-.35390	-.32850	-.33760	-.34540	.35040	.03050	.33670	.25480	-.09930
-8.236	-3.822	-.33110	-.33940	-.31050	-.31810	-.33130	.39820	.03340	.18880	.13530	-.04220
-8.036	.263	-.31080	-.31910	-.28810	-.30100	-.31560	-.23680	-.01850	-.00630	-.00610	-.00570
-7.924	4.230	-.33240	-.34000	-.31690	-.31650	-.33460	-.42420	-.03550	-.22150	-.17710	.06370
-7.872	6.126	-.34800	-.35450	-.33340	-.34050	-.34470	-.30720	-.02710	-.33840	-.26810	.10970
	GRADIENT	-.00014	-.00005	-.00076	.00022	-.00039	-.10239	-.00858	-.05094	-.03877	.01313

RUN NO. 959/ 0 RN/L = 3.49 GRADIENT INTERVAL = -5.00/ 5.00

ALPHAO	BETAO	CP1	CP2	CP3	CP4	CPBV	RUDDER	CHR	CNVT	CBVT	CTVT
-6.208	-5.992	-.33050	-.34290	-.33170	-.32410	-.33100	.35100	.03110	.31760	.23900	-.09000
-6.174	-4.054	-.31360	-.32720	-.31830	-.30400	-.32460	.36480	.03160	.19680	.14370	-.04650
-6.259	.135	-.29090	-.30490	-.28740	-.28180	-.30250	-.21480	-.01670	-.00270	.00090	-.01040
-6.062	4.282	-.32050	-.33250	-.30440	-.30950	-.32670	-.41170	-.03520	-.22250	-.17400	.06100
-5.827	6.394	-.33970	-.34820	-.32390	-.32360	-.33810	-.29470	-.02690	-.34730	-.26900	.10760
	GRADIENT	-.00082	-.00063	.00168	-.00065	-.00024	-.09322	-.00802	-.05029	-.03810	.01289

RUN NO. 958/ 0 RN/L = 3.49 GRADIENT INTERVAL = -5.00/ 5.00

ALPHAO	BETAO	CP1	CP2	CP3	CP4	CPBV	RUDDER	CHR	CNVT	CBVT	CTVT
-4.273	-6.188	-.33300	-.33900	-.32020	-.32720	-.32780	.34640	.03140	.31560	.23470	-.08510
-4.329	-4.008	-.30990	-.32150	-.30140	-.30090	-.31290	.32780	.02930	.17920	.12670	-.03620
-4.255	.375	-.29000	-.30320	-.26970	-.27830	-.29990	-.18080	-.01430	-.00990	-.00480	-.00780
-3.812	4.353	-.30780	-.32120	-.28960	-.29470	-.30980	-.38960	-.03420	-.22030	-.16920	.05700
-3.866	6.166	-.33780	-.35210	-.32610	-.32440	-.33800	-.30190	-.02810	-.33090	-.25390	.09860
	GRADIENT	.00032	.00011	.00151	.00082	.00041	-.08631	-.00763	-.04770	-.03530	.01107

RUN NO. 960/ 0 RN/L = 3.50 GRADIENT INTERVAL = -5.00/ 5.00

ALPHAO	BETAO	CP1	CP2	CP3	CP4	CPBV	RUDDER	CHR	CNVT	CBVT	CTVT
-.419	-6.876	-.32320	-.33260	-.32040	-.31220	-.32210	.23170	.02320	.33360	.24690	-.08880
-.396	-4.858	-.30330	-.31020	-.30210	-.29070	-.29500	.23900	.02380	.22080	.16500	-.05350
-.362	-.678	-.27220	-.28060	-.27150	-.26280	-.27630	-.09570	-.00230	.02960	.01990	-.00970
-.320	3.521	-.28720	-.29670	-.27490	-.27720	-.28700	-.40550	-.02640	-.14620	-.11030	.02370
-.323	5.725	-.31450	-.32350	-.30550	-.30340	-.31250	-.35090	-.02220	-.27030	-.21380	.07620
	GRADIENT	.00192	.00161	.00324	.00161	.00095	-.07691	-.00599	-.04379	-.03285	.00921

IA156A, AEDC PWT 16T-470, O T S W/SILTS (R8NF57) (10 MAY 80)

REFERENCE DATA

SREF = 2690.0000 SQ.FT. XMRP = 976.0000 IN. XT
LREF = 1290.3000 INCHES YMRP = .0000 IN. YT
BREF = 1290.3000 INCHES ZMRP = 400.0000 IN. ZT
SCALE = .0200

PARAMETRIC DATA

IB-ELV = 10.000 OB-ELV = 9.000
BDFLAP = .000 SPDBRK = .000
RUDDER = .000 SILTS = 1.000
MACH = .950 RN/L = 3.500

RUN NO. 961/ 0 RN/L = 3.49 GRADIENT INTERVAL = -5.00/ 5.00

ALPHAO	BETAO	CP1	CP2	CP3	CP4	CPBV	RUDDER	CHR	CNVT	CBVT	CTVT
3.921	-5.779	-.29870	-.30600	-.29100	-.29150	-.29610	.35410	.02340	.23890	.18640	-.05650
3.965	-3.741	-.27790	-.28520	-.27260	-.26890	-.27760	.27330	.01760	.13330	.09990	-.01890
3.688	.018	-.28390	-.29380	-.27360	-.27390	-.28730	.00120	-.00010	.01970	.01100	-.00470
3.816	3.930	-.28380	-.29570	-.26860	-.27430	-.28650	-.26960	-.01750	-.12220	-.10050	.02030
3.768	6.071	-.30640	-.31970	-.29480	-.29660	-.30700	-.40410	-.02720	-.23900	-.19590	.06290
	GRADIENT	-.00076	-.00136	.00053	-.00070	-.00115	-.07076	-.00457	-.03333	-.02614	.00512

IA156A, AEDC PWT 16T-470, O T S W/SILTS (R8NF58) (10 MAY 80)

REFERENCE DATA

SREF = 2690.0000 SQ.FT. XMRP = 976.0000 IN. XT
LREF = 1290.3000 INCHES YMRP = .0000 IN. YT
BREF = 1290.3000 INCHES ZMRP = 400.0000 IN. ZT
SCALE = .0200

PARAMETRIC DATA

IB-ELV = 10.000 OB-ELV = 9.000
BDFLAP = .000 SPDBRK = .000
RUDDER = .000 SILTS = 1.000
MACH = 1.050 RN/L = 3.500

RUN NO. 962/ 0 RN/L = 3.50 GRADIENT INTERVAL = -5.00/ 5.00

ALPHAO	BETAO	CP1	CP2	CP3	CP4	CPBV	RUDDER	CHR	CNVT	CBVT	CTVT
-8.133	-6.006	-.43240	-.43770	-.43050	-.41410	-.46070	-.20120	-.01170	.36800	.29180	-.14060
-8.303	-3.794	-.43300	-.44350	-.43490	-.41320	-.44820	-.11270	-.00610	.21860	.16960	-.07720
-8.187	.179	-.41190	-.42470	-.39570	-.40250	-.41950	-.04590	-.00340	-.01710	-.02020	.00930
-8.003	4.365	-.41490	-.43120	-.40620	-.40600	-.43490	.05020	.00130	-.26140	-.21730	.10270
-8.017	6.256	-.41710	-.43010	-.41060	-.40790	-.44360	.10070	.00440	-.37600	-.30500	.14840
	GRADIENT	.00219	.00148	.00346	.00087	.00158	.01999	.00091	-.05883	-.04742	.02205

RUN NO. 963/ 0 RN/L = 3.50 GRADIENT INTERVAL = -5.00/ 5.00

ALPHAO	BETAO	CP1	CP2	CP3	CP4	CPBV	RUDDER	CHR	CNVT	CBVT	CTVT
-6.221	-6.007	-.43420	-.44410	-.43820	-.41660	-.46500	-.15500	-.00780	.35160	.27980	-.13390
-6.148	-4.081	-.42790	-.43630	-.42170	-.40960	-.44670	-.08580	-.00340	.22270	.17410	-.07900
-6.259	.103	-.40800	-.42160	-.38340	-.39860	-.41020	-.05540	-.00400	-.01530	-.01680	.00700
-6.076	4.270	-.40060	-.41990	-.39010	-.39460	-.41560	-.00140	-.00290	-.24990	-.20570	.09560
-5.781	6.385	-.41230	-.42090	-.39030	-.39820	-.42900	.07020	.00150	-.37410	-.30200	.14600
	GRADIENT	.00327	.00197	.00379	.00180	.00373	.01011	.00006	-.05660	-.04549	.02091

IA156A, AEDC PWT 16T-470, O T S W/SILTS (R8NF58) (10 MAY 80)

REFERENCE DATA

SREF = 2690.0000 SQ.FT. XMRP = 976.0000 IN. XT
LREF = 1290.3000 INCHES YMRP = .0000 IN. YT
BREF = 1290.3000 INCHES ZMRP = 400.0000 IN. ZT
SCALE = .0200

PARAMETRIC DATA

IB-ELV = 10.000 OB-ELV = 9.000
BDFLAP = .000 SPDBRK = .000
RUDDER = .000 SILTS = 1.000
MACH = 1.050 RN/L = 3.500

RUN NO. 964/ 0 RN/L = 3.50 GRADIENT INTERVAL = -5.00/ 5.00

ALPHAO	BETAO	CP1	CP2	CP3	CP4	CPBV	RUDDER	CHR	CNVT	CBVT	CTVT
-4.138	-6.140	-.43610	-.44120	-.43410	-.42130	-.46360	-.10370	-.00340	.34830	.27580	-.13060
-4.347	-4.015	-.43140	-.44020	-.41670	-.41080	-.44350	-.06960	-.00150	.21460	.16670	-.07500
-4.270	.376	-.41750	-.42590	-.38460	-.40290	-.41480	-.05790	-.00450	-.02470	-.02440	.01020
-3.788	4.336	-.39700	-.41020	-.37420	-.38650	-.41110	-.07670	-.00930	-.24580	-.20140	.09250
-3.886	6.178	-.40650	-.41850	-.38390	-.39410	-.42110	.01830	-.00280	-.35360	-.28620	.13700
	GRADIENT	.00410	.00359	.00513	.00289	.00393	-.00079	-.00093	-.05512	-.04407	.02005

RUN NO. 965/ 0 RN/L = 3.50 GRADIENT INTERVAL = -5.00/ 5.00

ALPHAO	BETAO	CP1	CP2	CP3	CP4	CPBV	RUDDER	CHR	CNVT	CBVT	CTVT
-.465	-6.966	-.44320	-.44480	-.43490	-.42530	-.46330	-.06760	-.00010	.37200	.29170	-.13550
-.443	-4.845	-.43140	-.43970	-.41320	-.41000	-.43810	-.04790	.00140	.25050	.19690	-.08740
-.400	-.627	-.40510	-.41530	-.38240	-.39510	-.40050	-.05050	.00120	.02790	.01680	-.00590
-.359	3.660	-.40660	-.41510	-.38220	-.39570	-.40940	-.23260	-.01220	-.18670	-.15390	.06410
-.359	5.800	-.44100	-.41950	-.38590	-.39640	-.42000	-.15530	-.00650	-.29980	-.24570	.11150
	GRADIENT	.00291	.00288	.00364	.00168	.00336	-.02177	-.00160	-.05140	-.04124	.01781

RUN NO. 966/ 0 RN/L = 3.50 GRADIENT INTERVAL = -5.00/ 5.00

ALPHAO	BETAO	CP1	CP2	CP3	CP4	CPBV	RUDDER	CHR	CNVT	CBVT	CTVT
3.949	-5.818	-.41290	-.42000	-.40860	-.40580	-.42320	.21050	.01140	.27590	.22020	-.09270
3.940	-3.659	-.40780	-.41660	-.39570	-.40200	-.41380	.23970	.01420	.16270	.12810	-.04780
3.707	.163	-.40160	-.40980	-.38200	-.38970	-.39730	-.09640	-.00710	.01280	.00430	-.00250
3.800	4.035	-.39130	-.40260	-.36960	-.38100	-.39750	-.32990	-.02080	-.16120	-.13790	.05360
3.771	6.081	-.40460	-.41470	-.37590	-.39190	-.42080	-.23590	-.01330	-.27570	-.22830	.09920
	GRADIENT	.00215	.00182	.00339	.00273	.00211	-.07401	-.00455	-.04211	-.03458	.01318

IA156A, AEDC PWT 16T-470, O T S W/SILTS (R8NF59) (10 MAY 80)

REFERENCE DATA

SREF = 2690.0000 SQ.FT. XMRP = 976.0000 IN. XT
LREF = 1290.3000 INCHES YMRP = .0000 IN. YT
BREF = 1290.3000 INCHES ZMRP = 400.0000 IN. ZT
SCALE = .0200

PARAMETRIC DATA

IB-ELV = 10.000 OB-ELV = 9.000
BDFLAP = .000 SPDBRK = .000
RUDDER = .000 SILTS = 1.000
MACH = 1.100 RN/L = 3.500

RUN NO. 967/ 0 RN/L = 3.49 GRADIENT INTERVAL = -5.00/ 5.00

ALPHAO	BETAO	CP1	CP2	CP3	CP4	CPBV	RUDDER	CHR	CNVT	CBVT	CTVT
-8.158	-5.993	-.40820	-.40670	-.40540	-.39530	-.42600	-.29340	-.01810	.34850	.27670	-.13520
-8.263	-3.773	-.40190	-.40520	-.39040	-.38400	-.41180	-.13180	-.00730	.20080	.15450	-.07020
-8.181	.173	-.36750	-.37320	-.34770	-.35420	-.37090	-.04050	-.00290	-.02140	-.02300	.01070
-7.997	4.386	-.38020	-.39300	-.35840	-.36890	-.39990	.12560	.00670	-.25950	-.21490	.10320
-8.011	6.276	-.37450	-.38690	-.36120	-.36780	-.40630	.21930	.01280	-.36990	-.29970	.14900
	GRADIENT	.00260	.00143	.00385	.00179	.00136	.03164	.00172	-.05642	-.04528	.02126

RUN NO. 968/ 0 RN/L = 3.49 GRADIENT INTERVAL = -5.00/ 5.00

ALPHAO	BETAO	CP1	CP2	CP3	CP4	CPBV	RUDDER	CHR	CNVT	CBVT	CTVT
-6.214	-6.002	-.38760	-.39540	-.39260	-.37100	-.41220	-.23840	-.01360	.33020	.26320	-.12740
-6.172	-4.075	-.38060	-.39040	-.37630	-.36310	-.39500	-.13670	-.00700	.20870	.16270	-.07480
-6.275	.087	-.36150	-.36990	-.33530	-.34950	-.36090	-.04880	-.00340	-.01950	-.02000	.00860
-6.069	4.280	-.35610	-.36980	-.33370	-.34580	-.36790	.09690	.00420	-.24710	-.20240	.09630
-6.000	6.264	-.36820	-.37740	-.34720	-.35580	-.38780	.16140	.00810	-.35790	-.29000	.14280
	GRADIENT	.00293	.00246	.00509	.00207	.00324	.02797	.00134	-.05455	-.04370	.02048

RUN NO. 969/ 0 RN/L = 3.49 GRADIENT INTERVAL = -5.00/ 5.00

ALPHAO	BETAO	CP1	CP2	CP3	CP4	CPBV	RUDDER	CHR	CNVT	CBVT	CTVT
-4.131	-6.141	-.38620	-.38940	-.38180	-.36010	-.41010	-.18060	-.00880	.32800	.26080	-.12490
-4.345	-4.016	-.38090	-.38950	-.36690	-.36040	-.39220	-.11770	-.00500	.19770	.15320	-.06980
-4.254	.369	-.35020	-.36340	-.32700	-.33930	-.35340	-.06310	-.00470	-.02780	-.02640	.01110
-3.786	4.339	-.34500	-.36000	-.32120	-.33610	-.35690	.00370	-.00330	-.23800	-.19470	.09100
-3.878	6.168	-.35800	-.37390	-.33980	-.34790	-.37420	.10040	.00320	-.34220	-.27730	.13510
	GRADIENT	.00434	.00357	.00553	.00294	.00430	.01449	.00020	-.05213	-.04162	.01923

RUN NO. 970/ 0 RN/L = 3.49 GRADIENT INTERVAL = -5.00/ 5.00

ALPHAO	BETAO	CP1	CP2	CP3	CP4	CPBV	RUDDER	CHR	CNVT	CBVT	CTVT
-.471	-7.078	-.38860	-.39240	-.38270	-.37150	-.41220	-.16220	-.00690	.36590	.28790	-.13670
-.437	-4.868	-.37240	-.38110	-.35540	-.35610	-.38380	-.10100	-.00250	.24290	.19150	-.08630
-.394	-.533	-.34170	-.34910	-.31210	-.32680	-.33310	-.05950	-.00020	.02230	.01240	-.00410
-.356	3.599	-.33760	-.35030	-.31670	-.33110	-.34460	-.19580	-.00930	-.18180	-.15010	.06360
-.354	5.784	-.33990	-.35110	-.31810	-.33100	-.35170	-.12100	-.00390	-.29430	-.24190	.11110
	GRADIENT	.00411	.00367	.00462	.00298	.00469	-.01105	-.00079	-.05017	-.04036	.01772

IA156A, AEDC PWT 16T-470, O T S W/SILTS (R8NF59) (10 MAY 80)

REFERENCE DATA

SREF = 2690.0000 SQ.FT. XMRP = 976.0000 IN. XT
LREF = 1290.3000 INCHES YMRP = .0000 IN. YT
BREF = 1290.3000 INCHES ZMRP = 400.0000 IN. ZT
SCALE = .0200

PARAMETRIC DATA

IB-ELV = 10.000 OB-ELV = 9.000
BDFLAP = .000 SPDBRK = .000
RUDDER = .000 SILTS = 1.000
MACH = 1.100 RN/L = 3.500

RUN NO. 971/ 0 RN/L = 3.49 GRADIENT INTERVAL = -5.00/ 5.00

ALPHAO	BETAO	CP1	CP2	CP3	CP4	CPBV	RUDDER	CHR	CNVT	CBVT	CTVT
4.072	-5.756	-.34260	-.34850	-.33880	-.32790	-.35350	.16850	.00820	.26520	.21320	-.09120
3.948	-3.679	-.34140	-.35160	-.32950	-.32840	-.34880	.19430	.01060	.16240	.12790	-.04900
3.693	.116	-.34690	-.35720	-.32630	-.33280	-.34580	-.06410	-.00470	.00520	-.00030	-.00020
3.794	3.973	-.32600	-.33800	-.30280	-.31420	-.32930	-.28970	-.01750	-.16270	-.13820	.05490
3.767	6.056	-.34040	-.34720	-.31030	-.32440	-.35170	-.19210	-.00980	-.27650	-.22860	.10110
	GRADIENT	.00202	.00179	.00350	.00186	.00255	-.06324	-.00367	-.04249	-.03478	.01358

IA156A, AEDC PWT 16T-470, O T S W/SILTS (R8NF60) (10 MAY 80)

REFERENCE DATA

SREF = 2690.0000 SQ.FT. XMRP = 976.0000 IN. XT
LREF = 1290.3000 INCHES YMRP = .0000 IN. YT
BREF = 1290.3000 INCHES ZMRP = 400.0000 IN. ZT
SCALE = .0200

PARAMETRIC DATA

IB-ELV = 10.000 OB-ELV = 9.000
BDFLAP = .000 SPDBRK = .000
RUDDER = .000 SILTS = 1.000
MACH = 1.150 RN/L = 3.500

RUN NO. 972/ 0 RN/L = 3.49 GRADIENT INTERVAL = -5.00/ 5.00

ALPHAO	BETAO	CP1	CP2	CP3	CP4	CPBV	RUDDER	CHR	CNVT	CBVT	CTVT
-8.143	-6.001	-.37870	-.37910	-.38570	-.37470	-.39700	-.34720	-.02150	.35430	.28120	-.13930
-8.286	-3.781	-.37020	-.37820	-.36560	-.35130	-.38660	-.20360	-.01220	.20970	.16300	-.07600
-8.188	.192	-.33670	-.34840	-.32780	-.32640	-.34950	-.01750	-.00120	-.01520	-.01760	.00870
-8.012	4.392	-.34710	-.36060	-.33040	-.33670	-.37290	.22830	.01380	-.25460	-.21020	.10310
-8.015	6.263	-.36020	-.37310	-.34940	-.35010	-.39640	.36250	.02260	-.36920	-.29840	.15130
	GRADIENT	.00278	.00211	.00426	.00175	.00161	.05290	.00318	-.05681	-.04566	.02192

RUN NO. 973/ 0 RN/L = 3.49 GRADIENT INTERVAL = -5.00/ 5.00

ALPHAO	BETAO	CP1	CP2	CP3	CP4	CPBV	RUDDER	CHR	CNVT	CBVT	CTVT
-6.224	-6.019	-.36950	-.37470	-.38430	-.34970	-.39220	-.34660	-.02100	.33630	.26830	-.13250
-6.146	-4.078	-.35620	-.36560	-.35530	-.33880	-.36930	-.22670	-.01310	.21540	.16880	-.07940
-6.274	.108	-.33360	-.34470	-.32030	-.32300	-.34000	-.02500	-.00170	-.01290	-.01420	.00660
-6.063	4.279	-.33600	-.34960	-.31580	-.32510	-.35080	.18410	.01020	-.24120	-.19770	.09600
-6.001	6.267	-.34600	-.35650	-.32820	-.33310	-.36990	.32440	.01940	-.35760	-.28950	.14630
	GRADIENT	.00242	.00192	.00473	.00164	.00222	.04916	.00279	-.05464	-.04386	.02099

IA156A, AEDC PWT 16T-470, O T S W/SILTS (R8NF60) (10 MAY 80)

REFERENCE DATA

SREF = 2690.0000 SQ.FT. XMRP = 976.0000 IN. XT
LREF = 1290.3000 INCHES YMRP = .0000 IN. YT
BREF = 1290.3000 INCHES ZMRP = 400.0000 IN. ZT
SCALE = .0200

PARAMETRIC DATA

IB-ELV = 10.000 OB-ELV = 9.000
BDFLAP = .000 SPDBRK = .000
RUDDER = .000 SILTS = 1.000
MACH = 1.150 RN/L = 3.500

RUN NO. 974/ 0 RN/L = 3.49 GRADIENT INTERVAL = -5.00/ 5.00

ALPHAO	BETAO	CP1	CP2	CP3	CP4	CPBV	RUDDER	CHR	CNVT	CBVT	CTVT
-4.137	-6.136	-.36570	-.37320	-.37090	-.34680	-.39100	-.33860	-.01980	.33350	.26530	-.13050
-4.341	-4.027	-.35540	-.36620	-.34980	-.33730	-.37250	-.21210	-.01150	.20650	.16160	-.07590
-4.272	.369	-.33370	-.34580	-.31410	-.32280	-.33540	-.01960	-.00160	-.02220	-.02210	.01030
-3.786	4.337	-.32020	-.33410	-.29960	-.31060	-.32900	.15620	.00750	-.23510	-.19230	.09320
-3.901	6.185	-.34110	-.35660	-.32470	-.32860	-.36100	.26870	.01500	-.34170	-.27710	.13920
	GRADIENT	.00422	.00385	.00604	.00319	.00526	.04403	.00227	-.05278	-.04230	.02021

RUN NO. 975/ 0 RN/L = 3.49 GRADIENT INTERVAL = -5.00/ 5.00

ALPHAO	BETAO	CP1	CP2	CP3	CP4	CPBV	RUDDER	CHR	CNVT	CBVT	CTVT
-.456	-6.965	-.37270	-.37960	-.36890	-.35050	-.39960	-.31780	-.01770	.36110	.28550	-.13940
-.423	-4.871	-.35040	-.36000	-.34170	-.33400	-.36790	-.21350	-.01040	.24400	.19300	-.09000
-.374	-.625	-.33040	-.34250	-.30910	-.32090	-.33200	-.08500	-.00130	.02360	.01420	-.00580
-.336	3.586	-.32340	-.33530	-.30160	-.31510	-.33050	-.00340	.00440	-.18670	-.15330	.06910
-.337	5.781	-.32650	-.34050	-.30720	-.31610	-.34200	.05770	.00870	-.29960	-.24590	.11740
	GRADIENT	.00319	.00292	.00475	.00224	.00443	.02495	.00175	-.05093	-.04095	.01882

RUN NO. 976/ 0 RN/L = 3.49 GRADIENT INTERVAL = -5.00/ 5.00

ALPHAO	BETAO	CP1	CP2	CP3	CP4	CPBV	RUDDER	CHR	CNVT	CBVT	CTVT
3.932	-5.808	-.33290	-.33780	-.32850	-.32250	-.34730	.00340	-.00370	.28090	.22450	-.10070
3.960	-3.755	-.33390	-.33990	-.31980	-.31690	-.34210	.04860	.00010	.17590	.13840	-.05700
3.829	.185	-.32810	-.33850	-.31210	-.31420	-.32860	-.02380	-.00170	.01210	.00370	-.00050
3.790	3.941	-.31410	-.32880	-.29150	-.30660	-.32620	-.09540	-.00350	-.16400	-.13840	.05930
3.759	6.060	-.32110	-.33080	-.29360	-.30740	-.33860	-.02070	.00240	-.27800	-.23040	.10680
	GRADIENT	.00256	.00143	.00366	.00133	.00208	-.01871	-.00047	-.04415	-.03595	.01511

IA156A, AEDC PWT 16T-470, O T S W/SILTS (R8NF61) (10 MAY 80)

REFERENCE DATA

SREF = 2690.0000 SQ.FT. XMRP = 976.0000 IN. XT
LREF = 1290.3000 INCHES YMRP = .0000 IN. YT
BREF = 1290.3000 INCHES ZMRP = 400.0000 IN. ZT
SCALE = .0200

PARAMETRIC DATA

IB-ELV = 10.000 OB-ELV = 9.000
BDFLAP = .000 SPDBRK = .000
RUDDER = .000 SILTS = 1.000
MACH = 1.250 RN/L = 3.500

RUN NO. 977/ 0 RN/L = 3.51 GRADIENT INTERVAL = -5.00/ 5.00

ALPHAO	BETAO	CP1	CP2	CP3	CP4	CPBV	RUDDER	CHR	CNVT	CBVT	CTVT
-8.143	-5.996	-.33740	-.33520	-.34700	-.32900	-.35320	-.49700	-.03090	.34930	.27730	-.14030
-8.298	-3.785	-.32080	-.32820	-.33400	-.30540	-.33570	-.27940	-.01690	.20010	.15680	-.07440
-8.186	.202	-.30100	-.31140	-.29880	-.29070	-.31710	.02580	.00180	-.02670	-.02470	.01220
-8.011	4.371	-.30920	-.32160	-.30420	-.30010	-.34510	.37230	.02310	-.26280	-.21400	.10690
-8.027	6.290	-.32410	-.33520	-.33220	-.31280	-.35350	.55320	.03470	-.37690	-.29970	.15480
	GRADIENT	.00140	.00078	.00362	.00063	-.00120	.07994	.00491	-.05676	-.04547	.02223

RUN NO. 978/ 0 RN/L = 3.51 GRADIENT INTERVAL = -5.00/ 5.00

ALPHAO	BETAO	CP1	CP2	CP3	CP4	CPBV	RUDDER	CHR	CNVT	CBVT	CTVT
-6.231	-6.004	-.32600	-.33070	-.33780	-.30870	-.34730	-.45180	-.02740	.32940	.26270	-.13200
-6.173	-4.080	-.31990	-.32790	-.32110	-.30150	-.33580	-.29740	-.01750	.20690	.16380	-.07830
-6.272	.119	-.30260	-.31210	-.29350	-.29250	-.31270	.00840	.00060	-.02490	-.02210	.01040
-6.053	4.300	-.30730	-.31600	-.29140	-.29330	-.32980	.33480	.02010	-.25310	-.20420	.10110
-5.991	6.272	-.31510	-.32440	-.30970	-.30340	-.33950	.52360	.03230	-.36670	-.29160	.15030
	GRADIENT	.00151	.00142	.00355	.00098	.00072	.07544	.00449	-.05489	-.04391	.02141

RUN NO. 979/ 0 RN/L = 3.52 GRADIENT INTERVAL = -5.00/ 5.00

ALPHAO	BETAO	CP1	CP2	CP3	CP4	CPBV	RUDDER	CHR	CNVT	CBVT	CTVT
-4.151	-6.152	-.32850	-.33380	-.33480	-.31010	-.34820	-.45250	-.02680	.32480	.25890	-.13000
-4.348	-4.016	-.32230	-.33000	-.32080	-.30440	-.33490	-.27330	-.01530	.19520	.15400	-.07310
-4.255	.380	-.29570	-.30630	-.28620	-.28560	-.30330	.02610	.00160	-.03190	-.02820	.01350
-3.795	4.350	-.29680	-.30800	-.27800	-.28480	-.31320	.32900	.01880	-.24320	-.19680	.09790
-3.880	6.179	-.32110	-.33190	-.30970	-.30680	-.34920	.47930	.02870	-.34880	-.28000	.14410
	GRADIENT	.00310	.00268	.00516	.00238	.00268	.07192	.00407	-.05239	-.04192	.02043

RUN NO. 980/ 0 RN/L = 3.50 GRADIENT INTERVAL = -5.00/ 5.00

ALPHAO	BETAO	CP1	CP2	CP3	CP4	CPBV	RUDDER	CHR	CNVT	CBVT	CTVT
-.474	-6.978	-.33610	-.33670	-.33520	-.31490	-.35510	-.49310	-.02900	.35370	.28110	-.14160
-.444	-4.886	-.31980	-.32550	-.31780	-.30230	-.33750	-.34640	-.01900	.23860	.18990	-.09150
-.398	-.623	-.30250	-.31140	-.29010	-.29000	-.30800	-.07870	-.00080	.01880	.01060	-.00370
-.363	3.580	-.29290	-.30380	-.27650	-.28270	-.30220	.15990	.01540	-.18670	-.15250	.07150
-.379	5.795	-.30310	-.31260	-.28250	-.28860	-.31950	.29140	.02430	-.29910	-.24520	.12180
	GRADIENT	.00318	.00256	.00488	.00232	.00418	.05981	.00406	-.05024	-.04045	.01926

IA156A, AEDC PWT 16T-470, O T S W/SILTS (R8NF61) (10 MAY 80)

REFERENCE DATA

SREF = 2690.0000 SQ.FT. XMRP = 976.0000 IN. XT
LREF = 1290.3000 INCHES YMRP = .0000 IN. YT
BREF = 1290.3000 INCHES ZMRP = 400.0000 IN. ZT
SCALE = .0200

PARAMETRIC DATA

IB-ELV = 10.000 OB-ELV = 9.000
BDFLAP = .000 SPDBRK = .000
RUDDER = .000 SILTS = 1.000
MACH = 1.250 RN/L = 3.500

RUN NO. 981/ 0 RN/L = 3.50 GRADIENT INTERVAL = -5.00/ 5.00

ALPHAO	BETAO	CP1	CP2	CP3	CP4	CPBV	RUDDER	CHR	CNVT	CBVT	CTVT
3.947	-5.805	-.30870	-.31250	-.29780	-.28980	-.32120	-.24580	-.02050	.28190	.22580	-.10720
3.949	-3.734	-.30650	-.31170	-.29180	-.28750	-.31080	-.13740	-.01250	.17600	.13920	-.06120
3.821	.193	-.30770	-.31570	-.29460	-.29340	-.30970	.00960	.00060	.00050	-.00310	.00180
3.759	3.935	-.29200	-.30170	-.26930	-.27900	-.29630	.10020	.01000	-.17940	-.14780	.06680
3.746	6.066	-.30120	-.30430	-.27220	-.28190	-.30490	.26840	.02200	-.28970	-.23690	.11570
	GRADIENT	.00187	.00128	.00290	.00109	.00188	.03103	.00295	-.04633	-.03741	.01668

IA156A, AEDC PWT 16T-470, O T S W/SILTS (R8NF62) (10 MAY 80)

REFERENCE DATA

SREF = 2690.0000 SQ.FT. XMRP = 976.0000 IN. XT
LREF = 1290.3000 INCHES YMRP = .0000 IN. YT
BREF = 1290.3000 INCHES ZMRP = 400.0000 IN. ZT
SCALE = .0200

PARAMETRIC DATA

IB-ELV = 10.000 OB-ELV = 11.000
BDFLAP = .000 SPDBRK = .000
RUDDER = .000 SILTS = 1.000
MACH = .300 RN/L = 3.500

RUN NO. 985/ 0 RN/L = 2.62 GRADIENT INTERVAL = -5.00/ 5.00

ALPHAO	BETAO	CP1	CP2	CP3	CP4	CPBV	RUDDER	CHR	CNVT	CBVT	CTVT
-6.189	-9.919	-.25430	-.27410	-.25760	-.24010	-.24230	-.14920	-.02570	.51430	.37600	-.14750
-6.140	-5.798	-.24050	-.26070	-.24810	-.22320	-.24510	-.07440	-.00770	.28880	.22130	-.08860
-6.046	.188	-.22050	-.23800	-.22330	-.20660	-.22780	.00640	.00180	-.03510	-.02740	.00900
-5.767	6.289	-.23550	-.25590	-.23700	-.22240	-.23410	.09520	.01310	-.39450	-.29240	.12410
-5.906	10.172	-.26220	-.28150	-.25400	-.24930	-.25680	.20440	.04100	-.59800	-.41200	.17340
	GRADIENT	.00000	.00000	.00000	.00000	.00000	.00000	.00000	.00000	.00000	.00000

RUN NO. 986/ 0 RN/L = 2.62 GRADIENT INTERVAL = -5.00/ 5.00

ALPHAO	BETAO	CP1	CP2	CP3	CP4	CPBV	RUDDER	CHR	CNVT	CBVT	CTVT
-.274	-10.576	-.25970	-.28240	-.26170	-.24850	-.25520	-.19230	-.03500	.53320	.36930	-.13620
-.268	-6.531	-.23110	-.25140	-.23630	-.21600	-.22410	-.10110	-.00960	.31210	.23510	-.08680
-.244	-.362	-.21190	-.22520	-.21030	-.19860	-.21490	-.06720	-.00020	.00160	-.00040	.00080
-.219	5.616	-.21350	-.23130	-.20720	-.20150	-.20990	-.03370	.00890	-.28580	-.21560	.07760
-.209	9.775	-.24680	-.27220	-.24110	-.23370	-.23880	.07710	.03910	-.50560	-.34860	.12850
	GRADIENT	.00000	.00000	.00000	.00000	.00000	.00000	.00000	.00000	.00000	.00000

IA156A, AEDC PWT 16T-470, O T S W/SILTS (R8NF62) (10 MAY 80)

REFERENCE DATA

SREF = 2690.0000 SQ.FT. XMRP = 976.0000 IN. XT
LREF = 1290.3000 INCHES YMRP = .0000 IN. YT
BREF = 1290.3000 INCHES ZMRP = 400.0000 IN. ZT
SCALE = .0200

PARAMETRIC DATA

IB-ELV = 10.000 OB-ELV = 11.000
BDFLAP = .000 SPDBRK = .000
RUDDER = .000 SILTS = 1.000
MACH = .300 RN/L = 3.500

RUN NO. 987/ 0 RN/L = 2.62 GRADIENT INTERVAL = -5.00/ 5.00

ALPHAO	BETAO	CP1	CP2	CP3	CP4	CPBV	RUDDER	CHR	CNVT	CBVT	CTVT
6.163	-9.878	-.23740	-.25850	-.23730	-.22600	-.22900	-.05990	-.03190	.41700	.29060	-.08790
5.922	-5.672	-.22160	-.23690	-.23160	-.20490	-.21860	.03280	-.00390	.19550	.15430	-.03960
5.799	.132	-.20070	-.21350	-.18830	-.18640	-.20370	.00480	.00140	-.00740	-.00560	.00180
5.887	6.149	-.21630	-.23940	-.20400	-.20210	-.21050	-.01320	.00920	-.26790	-.20280	.06590
5.769	10.020	-.24130	-.26250	-.22360	-.22840	-.23770	.08630	.03910	-.49010	-.33920	.12160
	GRADIENT	.00000	.00000	.00000	.00000	.00000	.00000	.00000	.00000	.00000	.00000

IA156A, AEDC PWT 16T-470, O T S W/SILTS (R8NF63) (10 MAY 80)

REFERENCE DATA

SREF = 2690.0000 SQ.FT. XMRP = 976.0000 IN. XT
LREF = 1290.3000 INCHES YMRP = .0000 IN. YT
BREF = 1290.3000 INCHES ZMRP = 400.0000 IN. ZT
SCALE = .0200

PARAMETRIC DATA

IB-ELV = 10.000 OB-ELV = 11.000
BDFLAP = .000 SPDBRK = .000
RUDDER = .000 SILTS = 1.000
MACH = .300 RN/L = 3.500

RUN NO. 984/ 0 RN/L = 2.64 GRADIENT INTERVAL = -5.00/ 5.00

ALPHAO	BETAO	CP1	CP2	CP3	CP4	CPBV	RUDDER	CHR	CNVT	CBVT	CTVT
-10.338	-7.903	-.25780	-.27570	-.26300	-.24170	-.25480	-.10170	-.01670	.42340	.31850	-.12710
-10.010	-5.743	-.24670	-.26920	-.25310	-.22600	-.25170	-.06400	-.00830	.30190	.23150	-.09200
-9.964	.320	-.22320	-.24090	-.23100	-.20770	-.23660	.00740	.00180	-.03450	-.02920	.01210
-9.977	6.296	-.23920	-.26020	-.24180	-.22490	-.24310	.07930	.01240	-.37250	-.28170	.11700
-10.023	8.249	-.25010	-.27200	-.24890	-.23640	-.24840	.12560	.02320	-.47340	-.34590	.14500
	GRADIENT	.00000	.00000	.00000	.00000	.00000	.00000	.00000	.00000	.00000	.00000

RUN NO. 988/ 0 RN/L = 2.63 GRADIENT INTERVAL = -5.00/ 5.00

ALPHAO	BETAO	CP1	CP2	CP3	CP4	CPBV	RUDDER	CHR	CNVT	CBVT	CTVT
10.065	-7.798	-.22350	-.24490	-.23040	-.20940	-.21860	.01610	-.00680	.28720	.22150	-.06580
9.942	-5.729	-.21380	-.23550	-.21710	-.19600	-.20660	.03140	-.00070	.20090	.15920	-.04590
9.776	.230	-.19530	-.21010	-.18000	-.18240	-.19190	.00270	.00080	-.00990	-.00700	.00160
9.976	6.289	-.20920	-.23110	-.19210	-.19380	-.19600	-.01040	.00650	-.24270	-.18710	.06120
9.935	8.263	-.22400	-.24840	-.20430	-.21080	-.21530	.02420	.01790	-.35040	-.26220	.09140
	GRADIENT	.00000	.00000	.00000	.00000	.00000	.00000	.00000	.00000	.00000	.00000

IA156A, AEDC PWT 16T-470, O T S W/SILTS (R8NF64) (10 MAY 80)

REFERENCE DATA

SREF = 2690.0000 SQ.FT. XMRP = 976.0000 IN. XT
LREF = 1290.3000 INCHES YMRP = .0000 IN. YT
BREF = 1290.3000 INCHES ZMRP = 400.0000 IN. ZT
SCALE = .0200

PARAMETRIC DATA

IB-ELV = 10.000 OB-ELV = 11.000
BDFLAP = .000 SPDBRK = .000
RUDDER = .000 SILTS = 1.000
MACH = .600 RN/L = 3.500

RUN NO. 989/ 0 RN/L = 3.51 GRADIENT INTERVAL = -5.00/ 5.00

ALPHAO	BETAO	CP1	CP2	CP3	CP4	CPBV	RUDDER	CHR	CNVT	CBVT	CTVT
-8.116	-7.801	-.28540	-.30640	-.29880	-.26990	-.29080	-.16230	-.01260	.41520	.31000	-.11740
-8.131	-5.751	-.25970	-.27760	-.26810	-.24330	-.26620	-.07970	-.00430	.29740	.22870	-.08530
-8.158	-3.746	-.25470	-.27660	-.27010	-.24230	-.26820	-.03680	-.00080	.17330	.13500	-.04980
-8.038	.179	-.24770	-.26620	-.25340	-.23560	-.26390	-.02230	-.00240	-.03130	-.02490	.00980
-7.907	4.315	-.25280	-.27240	-.24940	-.23820	-.25480	.03160	.00010	-.25350	-.19500	.07490
-7.903	6.178	-.26450	-.28740	-.26910	-.25410	-.26770	.08660	.00500	-.36070	-.27100	.10490
-7.933	8.182	-.26950	-.28530	-.26970	-.25340	-.26700	.20490	.01720	-.46910	-.33870	.13220
	GRADIENT	.00022	.00050	.00255	.00050	.00167	.00853	.00012	-.05295	-.04094	.01547

RUN NO. 990/ 0 RN/L = 3.50 GRADIENT INTERVAL = -5.00/ 5.00

ALPHAO	BETAO	CP1	CP2	CP3	CP4	CPBV	RUDDER	CHR	CNVT	CBVT	CTVT
-6.151	-7.917	-.26700	-.28810	-.27380	-.25580	-.27290	-.16500	-.01220	.41730	.31020	-.11640
-6.133	-5.909	-.25650	-.27790	-.26290	-.24450	-.26050	-.08820	-.00440	.29870	.22910	-.08530
-6.052	-4.006	-.25230	-.27000	-.25130	-.23740	-.25890	-.04690	-.00090	.18270	.14240	-.05270
-6.115	.062	-.22770	-.24490	-.22900	-.21940	-.23830	-.02410	-.00240	-.03140	-.02320	.00820
-5.951	4.184	-.24590	-.26350	-.24170	-.23300	-.24780	.03700	.00000	-.24410	-.18400	.07000
-5.876	6.172	-.25580	-.27510	-.25340	-.24170	-.25680	.09080	.00470	-.35620	-.26510	.10270
-5.888	8.143	-.26640	-.28510	-.26440	-.25160	-.26860	.21530	.01770	-.46870	-.33510	.13090
	GRADIENT	.00077	.00078	.00116	.00053	.00135	.01025	.00011	-.05211	-.03985	.01498

RUN NO. 991/ 0 RN/L = 3.50 GRADIENT INTERVAL = -5.00/ 5.00

ALPHAO	BETAO	CP1	CP2	CP3	CP4	CPBV	RUDDER	CHR	CNVT	CBVT	CTVT
-4.002	-8.052	-.26990	-.28340	-.26680	-.25240	-.26910	-.17580	-.01270	.41870	.31000	-.11530
-4.241	-5.954	-.26410	-.28160	-.26480	-.25180	-.26300	-.09730	-.00460	.29930	.22840	-.08450
-4.156	-3.960	-.24710	-.26370	-.24500	-.23140	-.25060	-.05510	-.00070	.17960	.13920	-.05140
-4.127	.330	-.22800	-.24190	-.22010	-.21540	-.23280	-.02280	-.00270	-.03650	-.02690	.00880
-3.741	4.210	-.23880	-.25780	-.22880	-.22740	-.24110	.04880	.00000	-.24700	-.18520	.07120
-3.805	6.054	-.25060	-.26870	-.24590	-.23500	-.24820	.09640	.00450	-.35150	-.26000	.10100
-3.828	8.036	-.26490	-.28330	-.26330	-.25120	-.26310	.22260	.01780	-.46670	-.33120	.12960
	GRADIENT	.00108	.00080	.00205	.00055	.00122	.01263	.00008	-.05218	-.03969	.01499

IA156A, AEDC PWT 16T-470, O T S W/SILTS (R8NF64) (10 MAY 80)

REFERENCE DATA

SREF = 2690.0000 SQ.FT. XMRP = 976.0000 IN. XT
LREF = 1290.3000 INCHES YMRP = .0000 IN. YT
BREF = 1290.3000 INCHES ZMRP = 400.0000 IN. ZT
SCALE = .0200

PARAMETRIC DATA

IB-ELV = 10.000 OB-ELV = 11.000
BDFLAP = .000 SPDBRK = .000
RUDDER = .000 SILTS = 1.000
MACH = .600 RN/L = 3.500

RUN NO. 992/ 0 RN/L = 3.50 GRADIENT INTERVAL = -5.00/ 5.00

ALPHAO	BETAO	CP1	CP2	CP3	CP4	CPBV	RUDDER	CHR	CNVT	CBVT	CTVT
-.333	-8.763	-.26240	-.27790	-.26060	-.24560	-.25390	-.22590	-.01750	.44750	.32400	-.11800
-.323	-6.686	-.24960	-.26680	-.25540	-.23670	-.24740	-.13210	-.00720	.33520	.25200	-.09080
-.309	-4.451	-.24510	-.26170	-.24740	-.23060	-.24730	-.08060	-.00160	.20510	.15770	-.05510
-.284	-.386	-.22160	-.23000	-.21480	-.20860	-.22360	-.07360	-.00080	.00440	.00300	.00020
-.253	3.691	-.23520	-.24830	-.21880	-.21910	-.23140	-.07770	-.00120	-.18230	-.13790	.04580
-.253	5.787	-.24190	-.25940	-.22490	-.22550	-.23750	-.03480	.00340	-.29820	-.22200	.07790
-.243	7.871	-.25310	-.27210	-.23750	-.23710	-.24550	.08040	.01590	-.41340	-.29590	.10730
	GRADIENT	.00121	.00164	.00351	.00141	.00195	.00036	.00005	-.04758	-.03630	.01239

RUN NO. 993/ 0 RN/L = 3.50 GRADIENT INTERVAL = -5.00/ 5.00

ALPHAO	BETAO	CP1	CP2	CP3	CP4	CPBV	RUDDER	CHR	CNVT	CBVT	CTVT
4.168	-7.891	-.24790	-.26360	-.24130	-.23330	-.23240	-.05100	-.01200	.36670	.26910	-.08850
4.092	-5.788	-.23640	-.25420	-.23830	-.22410	-.23360	.02600	-.00320	.24360	.18600	-.05680
4.040	-3.806	-.22510	-.23950	-.22180	-.21180	-.22350	.05670	.00100	.14660	.11400	-.03030
3.837	.078	-.22520	-.23360	-.20740	-.20740	-.21780	-.00540	-.00080	.00060	-.00040	.00100
3.896	4.062	-.22520	-.23820	-.20610	-.20710	-.22070	-.07250	-.00280	-.16000	-.12380	.03660
3.844	6.167	-.23510	-.25200	-.21070	-.21720	-.22560	-.01380	.00450	-.29500	-.21770	.07320
3.838	8.161	-.25120	-.26580	-.22550	-.23320	-.23750	.13800	.02150	-.40580	-.28640	.10270
	GRADIENT	-.00001	.00016	.00199	.00060	.00035	-.01642	-.00048	-.03897	-.03023	.00850

RUN NO. 994/ 0 RN/L = 3.50 GRADIENT INTERVAL = -5.00/ 5.00

ALPHAO	BETAO	CP1	CP2	CP3	CP4	CPBV	RUDDER	CHR	CNVT	CBVT	CTVT
6.197	-7.962	-.24620	-.26390	-.24280	-.23350	-.23290	-.05120	-.01130	.36920	.27000	-.09000
6.167	-5.883	-.23940	-.25470	-.23520	-.22480	-.23700	.03610	-.00120	.24690	.18850	-.05770
6.157	-3.829	-.22840	-.24080	-.22250	-.21520	-.22500	.06030	.00260	.15030	.11700	-.03170
5.863	.183	-.21690	-.23130	-.20300	-.20340	-.21900	-.01080	-.00120	-.00320	-.00300	.00150
5.796	4.073	-.22600	-.24300	-.19860	-.20720	-.22210	-.07510	-.00420	-.15620	-.12080	.03460
5.774	5.985	-.23330	-.25430	-.20850	-.22350	-.22960	-.03540	.00120	-.25870	-.19370	.06250
5.805	8.225	-.24960	-.26710	-.22760	-.23260	-.23780	.14220	.02130	-.39580	-.28080	.10090
	GRADIENT	.00032	-.00026	.00303	.00102	.00037	-.01714	-.00086	-.03879	-.03069	.00839

IA156A, AEDC PWT 16T-470, O T S W/SILTS (R8NF64) (10 MAY 80)

REFERENCE DATA

SREF = 2690.0000 SQ.FT. XMRP = 976.0000 IN. XT
LREF = 1290.3000 INCHES YMRP = .0000 IN. YT
BREF = 1290.3000 INCHES ZMRP = 400.0000 IN. ZT
SCALE = .0200

PARAMETRIC DATA

IB-ELV = 10.000 OB-ELV = 11.000
BDFLAP = .000 SPDBRK = .000
RUDDER = .000 SILTS = 1.000
MACH = .600 RN/L = 3.500

RUN NO. 995/ 0 RN/L = 3.50 GRADIENT INTERVAL = -5.00/ 5.00

ALPHAO	BETAO	CP1	CP2	CP3	CP4	CPBV	RUDDER	CHR	CNVT	CBVT	CTVT
8.107	-7.821	-.24110	-.25770	-.23780	-.23550	-.23930	-.00490	-.00560	.33440	.25080	-.08230
7.996	-5.734	-.23760	-.25240	-.23040	-.21910	-.22670	.05900	.00210	.21980	.17060	-.05070
7.970	-3.774	-.22830	-.24400	-.21930	-.21420	-.22640	.06880	.00420	.13400	.10580	-.02810
7.886	.178	-.21820	-.23060	-.19910	-.21080	-.21540	-.01120	-.00120	-.00500	-.00480	.00180
7.824	4.107	-.23140	-.24490	-.20060	-.20710	-.22230	-.07800	-.00530	-.14470	-.11390	.03160
7.906	6.229	-.23260	-.25450	-.21210	-.21620	-.22380	-.04810	-.00090	-.24600	-.18770	.05890
7.889	8.228	-.24770	-.26240	-.22010	-.22830	-.23930	.09530	.01550	-.36970	-.27180	.09810
	GRADIENT	-.00039	-.00011	.00238	.00090	.00052	-.01863	-.00121	-.03536	-.02788	.00758

IA156A, AEDC PWT 16T-470, O T S W/SILTS (R8NF65) (10 MAY 80)

REFERENCE DATA

SREF = 2690.0000 SQ.FT. XMRP = 976.0000 IN. XT
LREF = 1290.3000 INCHES YMRP = .0000 IN. YT
BREF = 1290.3000 INCHES ZMRP = 400.0000 IN. ZT
SCALE = .0200

PARAMETRIC DATA

IB-ELV = 10.000 OB-ELV = 11.000
BDFLAP = .000 SPDBRK = .000
RUDDER = .000 SILTS = 1.000
MACH = .800 RN/L = 3.500

RUN NO. 996/ 0 RN/L = 3.50 GRADIENT INTERVAL = -5.00/ 5.00

ALPHAO	BETAO	CP1	CP2	CP3	CP4	CPBV	RUDDER	CHR	CNVT	CBVT	CTVT
-8.190	-5.988	-.28160	-.29820	-.28070	-.27410	-.29090	.07630	.01020	.31420	.23470	-.08140
-8.244	-3.759	-.26720	-.28870	-.26970	-.26190	-.28310	.10700	.01190	.17650	.13270	-.04120
-8.164	.181	-.25730	-.26640	-.24910	-.24300	-.26830	-.06430	-.00560	-.01960	-.01520	.00310
-8.008	4.427	-.26560	-.28250	-.26400	-.25660	-.27380	-.12120	-.01330	-.25140	-.19330	.06890
-7.969	6.241	-.27610	-.29520	-.27750	-.26780	-.29070	-.07250	-.00990	-.36060	-.26920	.09890
	GRADIENT	.00017	.00070	.00064	.00060	.00110	-.02769	-.00306	-.05230	-.03985	.01348

RUN NO. 997/ 0 RN/L = 3.50 GRADIENT INTERVAL = -5.00/ 5.00

ALPHAO	BETAO	CP1	CP2	CP3	CP4	CPBV	RUDDER	CHR	CNVT	CBVT	CTVT
-6.208	-5.978	-.26820	-.28830	-.27210	-.26410	-.28200	.05860	.00930	.30680	.22910	-.07910
-6.158	-4.068	-.26180	-.28060	-.26350	-.25550	-.27620	.07780	.01020	.19190	.14450	-.04640
-6.227	.117	-.24430	-.25700	-.23950	-.23330	-.25550	-.06800	-.00590	-.02080	-.01480	.00220
-6.061	4.258	-.25570	-.27490	-.25800	-.24990	-.26570	-.10140	-.01210	-.23670	-.17900	.06230
-5.755	6.394	-.27130	-.28890	-.27050	-.25800	-.28020	-.04170	-.00790	-.36110	-.26660	.09760
	GRADIENT	.00074	.00069	.00067	.00068	.00127	-.02155	-.00268	-.05148	-.03885	.01305

IA156A, AEDC PWT 16T-470, O T S W/SILTS (R8NF65) (10 MAY 80)

REFERENCE DATA

SREF = 2690.0000 SQ.FT. XMRP = 976.0000 IN. XT
LREF = 1290.3000 INCHES YMRP = .0000 IN. YT
BREF = 1290.3000 INCHES ZMRP = 400.0000 IN. ZT
SCALE = .0200

PARAMETRIC DATA

IB-ELV = 10.000 OB-ELV = 11.000
BDFLAP = .000 SPDBRK = .000
RUDDER = .000 SILTS = 1.000
MACH = .800 RN/L = 3.500

RUN NO. 998/ 0 RN/L = 3.50 GRADIENT INTERVAL = -5.00/ 5.00

ALPHAO	BETAO	CP1	CP2	CP3	CP4	CPBV	RUDDER	CHR	CNVT	CBVT	CTVT
-4.084	-6.130	-.26990	-.28700	-.27130	-.26010	-.27840	.03200	.00770	.31070	.23110	-.07930
-4.332	-3.976	-.25460	-.27090	-.25410	-.24620	-.26560	.05520	.00900	.17920	.13360	-.04170
-4.236	.375	-.23950	-.25020	-.23210	-.22840	-.24590	-.06460	-.00590	-.02620	-.01780	.00190
-3.804	4.333	-.25510	-.26490	-.24490	-.24150	-.25410	-.07640	-.01090	-.23970	-.17970	.06280
-3.864	6.155	-.26200	-.28050	-.25750	-.25000	-.26920	-.02680	-.00720	-.34800	-.25720	.09440
	GRADIENT	-.00000	.00079	.00117	.00062	.00144	-.01603	-.00241	-.05036	-.03766	.01253

RUN NO. 999/ 0 RN/L = 3.50 GRADIENT INTERVAL = -5.00/ 5.00

ALPHAO	BETAO	CP1	CP2	CP3	CP4	CPBV	RUDDER	CHR	CNVT	CBVT	CTVT
-.349	-6.910	-.26130	-.27470	-.26460	-.26200	-.26180	-.04270	.00200	.35300	.25760	-.08810
-.345	-4.778	-.24540	-.25650	-.24250	-.23500	-.24960	.02000	.00750	.22880	.16920	-.05260
-.318	-.519	-.22910	-.24060	-.21940	-.21790	-.23130	-.05930	.00060	.01150	.00670	-.00100
-.280	3.587	-.23650	-.25110	-.22560	-.22550	-.23880	-.18040	-.00990	-.17690	-.13120	.03640
-.281	5.732	-.24570	-.26430	-.23880	-.23760	-.24930	-.13010	-.00560	-.29980	-.22130	.07320
	GRADIENT	.00108	.00066	.00204	.00115	.00131	-.02392	-.00208	-.04851	-.03592	.01065

RUN NO. 1000/ 0 RN/L = 3.51 GRADIENT INTERVAL = -5.00/ 5.00

ALPHAO	BETAO	CP1	CP2	CP3	CP4	CPBV	RUDDER	CHR	CNVT	CBVT	CTVT
4.101	-5.781	-.25420	-.27130	-.25190	-.25170	-.25530	.10040	.00390	.26430	.19610	-.05780
3.955	-3.664	-.23800	-.24980	-.23100	-.22600	-.24060	.14630	.00860	.14300	.10730	-.02210
3.717	.123	-.23160	-.24270	-.21390	-.21750	-.22690	-.00580	-.00060	.00480	.00190	-.00040
3.820	4.012	-.23660	-.24890	-.21960	-.21850	-.23390	-.16290	-.01010	-.15190	-.11600	.02790
3.767	6.089	-.24790	-.26380	-.23320	-.23380	-.24590	-.08570	-.00260	-.28940	-.21440	.06940
	GRADIENT	.00018	.00011	.00147	.00097	.00086	-.04029	-.00244	-.03843	-.02910	.00652

RUN NO. 1001/ 0 RN/L = 3.51 GRADIENT INTERVAL = -5.00/ 5.00

ALPHAO	BETAO	CP1	CP2	CP3	CP4	CPBV	RUDDER	CHR	CNVT	CBVT	CTVT
6.081	-5.826	-.24880	-.26610	-.24190	-.23880	-.25290	.12550	.00680	.25390	.19250	-.05690
6.062	-3.782	-.23740	-.25140	-.22540	-.22640	-.24040	.18460	.01280	.13900	.10680	-.02100
5.749	.159	-.23330	-.24460	-.21710	-.21970	-.23100	-.00970	-.00090	-.00040	-.00090	-.00030
5.676	3.974	-.23830	-.25300	-.22080	-.22120	-.23730	-.19090	-.01340	-.13230	-.10280	.02030
5.803	6.143	-.24970	-.26530	-.23360	-.23360	-.24860	-.12280	-.00660	-.25520	-.19450	.06020
	GRADIENT	-.00011	-.00020	.00060	.00068	.00041	-.04842	-.00338	-.03498	-.02703	.00532

IA156A, AEDC PWT 16T-470, O T S W/SILTS (R8NF66) (10 MAY 80)

REFERENCE DATA

SREF = 2690.0000 SQ.FT. XMRP = 976.0000 IN. XT
LREF = 1290.3000 INCHES YMRP = .0000 IN. YT
BREF = 1290.3000 INCHES ZMRP = 400.0000 IN. ZT
SCALE = .0200

PARAMETRIC DATA

IB-ELV = 10.000 OB-ELV = 11.000
BDFLAP = .000 SPDBRK = .000
RUDDER = .000 SILTS = 1.000
MACH = .900 RN/L = 3.500

RUN NO. 1002/ 0 RN/L = 3.50 GRADIENT INTERVAL = -5.00/ 5.00

ALPHAO	BETAO	CP1	CP2	CP3	CP4	CPBV	RUDDER	CHR	CNVT	CBVT	CTVT
-8.139	-6.011	-.30540	-.31310	-.29610	-.29820	-.30620	.25460	.02380	.31040	.22690	-.07800
-8.266	-3.766	-.28920	-.30820	-.28960	-.28350	-.30170	.26680	.02390	.16650	.11720	-.02870
-8.171	.178	-.27410	-.28290	-.26270	-.25810	-.28550	-.04940	-.00400	-.01410	-.01050	.00030
-7.999	4.397	-.28000	-.29490	-.27780	-.27340	-.29370	-.24890	-.02260	-.22550	-.16670	.05090
-8.035	6.278	-.30430	-.31710	-.29980	-.29100	-.31460	-.19720	-.01900	-.33910	-.25170	.09140
	GRADIENT	.00110	.00158	.00139	.00118	.00095	-.06299	-.00568	-.04805	-.03480	.00978

RUN NO. 1003/ 0 RN/L = 3.50 GRADIENT INTERVAL = -5.00/ 5.00

ALPHAO	BETAO	CP1	CP2	CP3	CP4	CPBV	RUDDER	CHR	CNVT	CBVT	CTVT
-6.213	-5.983	-.30790	-.31650	-.29910	-.29660	-.31090	.19330	.01960	.30790	.23060	-.08230
-6.159	-4.072	-.28220	-.30560	-.29040	-.28390	-.30070	.18380	.01800	.18690	.13670	-.04030
-6.252	.103	-.26560	-.27570	-.25570	-.25170	-.27500	-.03240	-.00250	-.01620	-.01110	.00040
-6.049	4.272	-.28160	-.29920	-.27960	-.27900	-.29260	-.21270	-.02010	-.21540	-.15630	.04590
-5.983	6.249	-.30090	-.31480	-.29270	-.29950	-.30780	-.16750	-.01730	-.33210	-.24550	.08890
	GRADIENT	.00007	.00077	.00130	.00059	.00097	-.04752	-.00457	-.04822	-.03512	.01033

RUN NO. 1004/ 0 RN/L = 3.49 GRADIENT INTERVAL = -5.00/ 5.00

ALPHAO	BETAO	CP1	CP2	CP3	CP4	CPBV	RUDDER	CHR	CNVT	CBVT	CTVT
-4.066	-6.140	-.29310	-.30250	-.28830	-.28160	-.29320	.18760	.01970	.30370	.22540	-.07840
-4.344	-4.007	-.27920	-.29970	-.28380	-.28830	-.29440	.13660	.01490	.17470	.12860	-.03830
-4.242	.377	-.27130	-.27980	-.25840	-.25610	-.27510	-.02350	-.00210	-.02420	-.01710	.00210
-3.805	4.332	-.27310	-.29600	-.27520	-.26770	-.28540	-.14410	-.01570	-.21820	-.16080	.05110
-3.878	6.163	-.28650	-.30510	-.28240	-.28210	-.29650	-.13450	-.01540	-.32840	-.24210	.08770
	GRADIENT	.00075	.00052	.00112	.00256	.00114	-.03371	-.00367	-.04709	-.03468	.01069

RUN NO. 1005/ 0 RN/L = 3.49 GRADIENT INTERVAL = -5.00/ 5.00

ALPHAO	BETAO	CP1	CP2	CP3	CP4	CPBV	RUDDER	CHR	CNVT	CBVT	CTVT
-.384	-6.979	-.28970	-.29860	-.28450	-.28560	-.29020	.09760	.01320	.33520	.24270	-.08230
-.370	-4.834	-.27540	-.28500	-.27300	-.26600	-.27960	.11330	.01450	.22470	.17200	-.05710
-.335	-.531	-.24380	-.25710	-.24340	-.23730	-.25570	-.06340	.00030	.01680	.01350	-.00690
-.302	3.595	-.26130	-.27240	-.25840	-.26220	-.26850	-.21010	-.01160	-.16350	-.12740	.03600
-.304	5.740	-.27650	-.28910	-.26980	-.26540	-.27920	-.21710	-.01220	-.27930	-.21090	.06980
	GRADIENT	.00171	.00153	.00177	.00050	.00135	-.03839	-.00310	-.04607	-.03553	.01105

IA156A, AEDC PWT 16T-470, O T S W/SILTS (R8NF66) (10 MAY 80)

REFERENCE DATA

SREF = 2690.0000 SQ.FT. XMRP = 976.0000 IN. XT
LREF = 1290.3000 INCHES YMRP = .0000 IN. YT
BREF = 1290.3000 INCHES ZMRP = 400.0000 IN. ZT
SCALE = .0200

PARAMETRIC DATA

IB-ELV = 10.000 OB-ELV = 11.000
BDFLAP = .000 SPDBRK = .000
RUDDER = .000 SILTS = 1.000
MACH = .900 RN/L = 3.500

RUN NO. 1006/ 0 RN/L = 3.50 GRADIENT INTERVAL = -5.00/ 5.00

ALPHAO	BETAO	CP1	CP2	CP3	CP4	CPBV	RUDDER	CHR	CNVT	CBVT	CTVT
4.095	-5.773	-.27300	-.28620	-.27260	-.26900	-.27970	.34880	.02370	.23400	.17820	-.04640
3.945	-3.668	-.25260	-.26380	-.25100	-.24630	-.26540	.31670	.02180	.13220	.10540	-.02080
3.706	.126	-.24570	-.25610	-.24140	-.23480	-.25310	.00770	.00050	.00800	.00380	-.00160
3.810	3.998	-.25670	-.27100	-.25780	-.25720	-.26670	-.30190	-.02060	-.13740	-.11320	.02480
3.754	6.078	-.27890	-.29480	-.27730	-.26640	-.29090	-.26740	-.01710	-.26010	-.20170	.06250
	GRADIENT	-.00054	-.00095	-.00090	-.00144	-.00018	-.08069	-.00553	-.03518	-.02852	.00595

IA156A, AEDC PWT 16T-470, O T S W/SILTS (R8NF67) (10 MAY 80)

REFERENCE DATA

SREF = 2690.0000 SQ.FT. XMRP = 976.0000 IN. XT
LREF = 1290.3000 INCHES YMRP = .0000 IN. YT
BREF = 1290.3000 INCHES ZMRP = 400.0000 IN. ZT
SCALE = .0200

PARAMETRIC DATA

IB-ELV = 10.000 OB-ELV = 11.000
BDFLAP = .000 SPDBRK = .000
RUDDER = .000 SILTS = 1.000
MACH = .950 RN/L = 3.500

RUN NO. 1007/ 0 RN/L = 3.49 GRADIENT INTERVAL = -5.00/ 5.00

ALPHAO	BETAO	CP1	CP2	CP3	CP4	CPBV	RUDDER	CHR	CNVT	CBVT	CTVT
-8.174	-5.994	-.34560	-.35250	-.32560	-.33350	-.34490	.36080	.03130	.32760	.25110	-.09720
-8.273	-3.769	-.32350	-.33680	-.31010	-.31420	-.33040	.41420	.03470	.17820	.13110	-.04050
-8.177	.172	-.29890	-.31160	-.27930	-.28930	-.30930	-.24220	-.01880	-.00810	-.00360	-.00710
-7.999	4.395	-.33540	-.34340	-.31870	-.32200	-.34030	-.40570	-.03410	-.23740	-.18660	.06800
-8.015	6.270	-.34740	-.35440	-.33260	-.33710	-.35000	-.26740	-.02410	-.35680	-.27950	.11530
	GRADIENT	-.00154	-.00089	-.00115	-.00104	-.00129	-.09970	-.00837	-.05095	-.03897	.01334

RUN NO. 1008/ 0 RN/L = 3.50 GRADIENT INTERVAL = -5.00/ 5.00

ALPHAO	BETAO	CP1	CP2	CP3	CP4	CPBV	RUDDER	CHR	CNVT	CBVT	CTVT
-6.222	-6.000	-.33390	-.34640	-.32000	-.32580	-.33700	.34610	.03060	.31860	.24320	-.09250
-6.165	-4.074	-.31480	-.32830	-.30490	-.30530	-.32240	.37980	.03260	.19260	.14230	-.04490
-6.250	.100	-.29550	-.30610	-.27550	-.28320	-.30240	-.20140	-.01560	-.00730	-.00090	-.00900
-6.077	4.263	-.32510	-.33240	-.30480	-.31070	-.32690	-.40910	-.03480	-.22730	-.17510	.06110
-5.771	6.406	-.33250	-.34000	-.31610	-.32180	-.32950	-.25790	-.02390	-.35130	-.27030	.10840
	GRADIENT	-.00123	-.00049	.00001	-.00065	-.00054	-.09464	-.00809	-.05036	-.03807	.01271

IA156A, AEDC PWT 16T-470, O T S W/SILTS (R8NF67) (10 MAY 80)

REFERENCE DATA

SREF = 2690.0000 SQ.FT. XMRP = 976.0000 IN. XT
LREF = 1290.3000 INCHES YMRP = .0000 IN. YT
BREF = 1290.3000 INCHES ZMRP = 400.0000 IN. ZT
SCALE = .0200

PARAMETRIC DATA

IB-ELV = 10.000 OB-ELV = 11.000
BDFLAP = .000 SPDBRK = .000
RUDDER = .000 SILTS = 1.000
MACH = .950 RN/L = 3.500

RUN NO. 1009/ 0 RN/L = 3.50 GRADIENT INTERVAL = -5.00/ 5.00

ALPHAO	BETAO	CP1	CP2	CP3	CP4	CPBV	RUDDER	CHR	CNVT	CBVT	CTVT
-4.090	-6.152	-.33410	-.33930	-.31520	-.31610	-.32810	.34310	.03120	.31070	.23460	-.08620
-4.336	-4.001	-.30510	-.31820	-.29910	-.29530	-.31260	.34060	.03040	.17570	.12710	-.03690
-4.255	.372	-.28750	-.29710	-.26410	-.27560	-.29370	-.16970	-.01340	-.01530	-.00630	-.00720
-3.805	4.339	-.30120	-.31710	-.28710	-.29180	-.30530	-.35690	-.03150	-.22250	-.16750	.05550
-3.884	6.157	-.33630	-.34480	-.31270	-.31910	-.33220	-.26150	-.02470	-.33500	-.25660	.10060
	GRADIENT	.00053	.00021	.00155	.00049	.00093	-.08420	-.00747	-.04768	-.03524	.01101

RUN NO. 1010/ 0 RN/L = 3.50 GRADIENT INTERVAL = -5.00/ 5.00

ALPHAO	BETAO	CP1	CP2	CP3	CP4	CPBV	RUDDER	CHR	CNVT	CBVT	CTVT
-.403	-6.989	-.32940	-.33500	-.32300	-.32150	-.32000	.22410	.02260	.33830	.25460	-.09360
-.384	-4.820	-.30600	-.31020	-.29890	-.29790	-.29250	.23810	.02370	.21900	.16650	-.05490
-.355	-.578	-.27560	-.28050	-.26290	-.27060	-.27590	-.08130	-.00120	.02050	.01620	-.00860
-.317	3.642	-.29020	-.30160	-.27470	-.28220	-.29050	-.37040	-.02360	-.16260	-.12360	.03200
-.314	5.778	-.31560	-.32260	-.29660	-.30750	-.31130	-.32140	-.01980	-.27680	-.21720	.07800
	GRADIENT	.00187	.00102	.00286	.00186	.00024	-.07191	-.00559	-.04510	-.03428	.01027

RUN NO. 1011/ 0 RN/L = 3.49 GRADIENT INTERVAL = -5.00/ 5.00

ALPHAO	BETAO	CP1	CP2	CP3	CP4	CPBV	RUDDER	CHR	CNVT	CBVT	CTVT
4.100	-5.936	-.29960	-.30630	-.29370	-.29270	-.29500	.38650	.02580	.23570	.18780	-.05730
3.927	-3.611	-.28020	-.28560	-.26980	-.27180	-.27760	.27050	.01740	.12230	.09430	-.01730
3.704	.194	-.28930	-.29600	-.27260	-.27330	-.28910	-.00240	-.00020	.00710	.00480	-.00400
3.820	4.058	-.28610	-.29660	-.26770	-.27680	-.28620	-.26920	-.01730	-.12930	-.10530	.02330
3.768	6.090	-.30600	-.31570	-.28620	-.29430	-.30220	-.39190	-.02630	-.24460	-.19960	.06490
	GRADIENT	-.00077	-.00143	.00028	-.00065	-.00112	-.07037	-.00452	-.03281	-.02603	.00530

IA156A, AEDC PWT 16T-470, O T S W/SILTS (R8NF68) (10 MAY 80)

REFERENCE DATA

SREF = 2690.0000 SQ.FT. XMRP = 976.0000 IN. XT
LREF = 1290.3000 INCHES YMRP = .0000 IN. YT
BREF = 1290.3000 INCHES ZMRP = 400.0000 IN. ZT
SCALE = .0200

PARAMETRIC DATA

IB-ELV = 10.000 OB-ELV = 11.000
BDFLAP = .000 SPDBRK = .000
RUDDER = .000 SILTS = 1.000
MACH = 1.050 RN/L = 3.500

RUN NO. 1012/ 0 RN/L = 3.52 GRADIENT INTERVAL = -5.00/ 5.00

ALPHAO	BETAO	CP1	CP2	CP3	CP4	CPBV	RUDDER	CHR	CNVT	CBVT	CTVT
-8.150	-6.001	-.43400	-.43840	-.43200	-.42320	-.45820	-.19180	-.01100	.36180	.28970	-.14000
-8.302	-3.778	-.41970	-.42540	-.40980	-.40460	-.42690	-.08140	-.00370	.20630	.16170	-.07310
-8.183	.171	-.43790	-.44590	-.41210	-.42330	-.43960	-.04750	-.00350	-.01980	-.01940	.00820
-7.975	4.397	-.42230	-.43060	-.39640	-.40750	-.43310	.07270	.00300	-.26610	-.21870	.10300
-8.018	6.265	-.42310	-.43120	-.40430	-.41250	-.44410	.15490	.00840	-.38160	-.30810	.15020
	GRADIENT	-.00027	-.00059	.00166	-.00031	-.00073	.01896	.00083	-.05780	-.04654	.02155

RUN NO. 1013/ 0 RN/L = 3.50 GRADIENT INTERVAL = -5.00/ 5.00

ALPHAO	BETAO	CP1	CP2	CP3	CP4	CPBV	RUDDER	CHR	CNVT	CBVT	CTVT
-6.221	-6.006	-.43710	-.44460	-.43980	-.42130	-.46520	-.16420	-.00850	.34560	.27770	-.13310
-6.153	-4.085	-.43240	-.44090	-.42620	-.42070	-.44890	-.07870	-.00290	.21740	.17200	-.07810
-6.258	.108	-.41160	-.42300	-.38350	-.40150	-.41150	-.05620	-.00410	-.02120	-.01880	.00750
-6.060	4.277	-.40500	-.41900	-.38180	-.39350	-.41620	.01540	-.00170	-.25300	-.20540	.09500
-5.999	6.257	-.42130	-.42710	-.39640	-.40590	-.43400	.11090	.00460	-.37590	-.30190	.14580
	GRADIENT	.00328	.00262	.00531	.00325	.00392	.01125	.00014	-.05626	-.04514	.02070

RUN NO. 1014/ 0 RN/L = 3.50 GRADIENT INTERVAL = -5.00/ 5.00

ALPHAO	BETAO	CP1	CP2	CP3	CP4	CPBV	RUDDER	CHR	CNVT	CBVT	CTVT
-4.105	-6.160	-.43580	-.44160	-.43410	-.42330	-.46250	-.12800	-.00520	.34390	.27560	-.13110
-4.348	-4.027	-.42900	-.43630	-.41210	-.40510	-.44130	-.06380	-.00110	.21020	.16570	-.07470
-4.141	.192	-.41360	-.42310	-.38850	-.40420	-.40990	-.06100	-.00450	-.02010	-.01790	.00660
-4.009	4.261	-.39570	-.41020	-.37350	-.38570	-.40920	-.03570	-.00620	-.24560	-.19820	.09060
-3.867	6.166	-.40340	-.41550	-.38050	-.39260	-.41580	.07190	.00110	-.35840	-.28840	.13860
	GRADIENT	.00402	.00315	.00466	.00233	.00390	.00337	-.00062	-.05500	-.04391	.01994

RUN NO. 1015/ 0 RN/L = 3.50 GRADIENT INTERVAL = -5.00/ 5.00

ALPHAO	BETAO	CP1	CP2	CP3	CP4	CPBV	RUDDER	CHR	CNVT	CBVT	CTVT
-.437	-6.999	-.43450	-.44590	-.43160	-.41500	-.46280	-.06840	-.00020	.36810	.29210	-.13650
-.421	-4.839	-.42400	-.43630	-.40540	-.40560	-.43630	-.02770	.00280	.24580	.19570	-.08700
-.393	-.626	-.40220	-.41110	-.37400	-.38910	-.39730	-.04960	.00120	.02530	.01720	-.00650
-.359	3.574	-.40050	-.41040	-.37510	-.38970	-.40500	-.20470	-.01020	-.18610	-.15150	.06290
-.359	5.766	-.40860	-.41760	-.38330	-.40100	-.41730	-.11070	-.00330	-.30280	-.24730	.11280
	GRADIENT	.00279	.00308	.00360	.00189	.00372	-.02103	-.00154	-.05134	-.04127	.01782

IA156A, AEDC PWT 16T-470, O T S W/SILTS (R8NF68) (10 MAY 80)

REFERENCE DATA

SREF = 2690.0000 SQ.FT. XMRP = 976.0000 IN. XT
LREF = 1290.3000 INCHES YMRP = .0000 IN. YT
BREF = 1290.3000 INCHES ZMRP = 400.0000 IN. ZT
SCALE = .0200

PARAMETRIC DATA

IB-ELV = 10.000 OB-ELV = 11.000
BDFLAP = .000 SPDBRK = .000
RUDDER = .000 SILTS = 1.000
MACH = 1.050 RN/L = 3.500

RUN NO. 1016/ 0 RN/L = 3.50 GRADIENT INTERVAL = -5.00/ 5.00

ALPHAO	BETAO	CP1	CP2	CP3	CP4	CPBV	RUDDER	CHR	CNVT	CBVT	CTVT
4.071	-5.752	-.41100	-.41730	-.40240	-.39790	-.41970	.20630	.01120	.26550	.21520	-.09110
3.954	-3.693	-.40260	-.41150	-.38950	-.39420	-.40820	.24150	.01430	.15790	.12680	-.04760
3.685	.145	-.39650	-.40390	-.37750	-.38990	-.39570	-.08290	-.00620	.00850	.00350	-.00250
3.810	4.089	-.39370	-.40550	-.36710	-.37990	-.39830	-.32110	-.02020	-.16710	-.14060	.05430
3.747	6.071	-.40560	-.41370	-.37810	-.39350	-.42050	-.20950	-.01140	-.27950	-.23000	.10020
	GRADIENT	.00114	.00077	.00288	.00184	.00126	-.07224	-.00443	-.04178	-.03437	.01310

IA156A, AEDC PWT 16T-470, O T S W/SILTS (R8NF69) (10 MAY 80)

REFERENCE DATA

SREF = 2690.0000 SQ.FT. XMRP = 976.0000 IN. XT
LREF = 1290.3000 INCHES YMRP = .0000 IN. YT
BREF = 1290.3000 INCHES ZMRP = 400.0000 IN. ZT
SCALE = .0200

PARAMETRIC DATA

IB-ELV = 10.000 OB-ELV = 11.000
BDFLAP = .000 SPDBRK = .000
RUDDER = .000 SILTS = 1.000
MACH = 1.100 RN/L = 3.500

RUN NO. 1017/ 0 RN/L = 3.50 GRADIENT INTERVAL = -5.00/ 5.00

ALPHAO	BETAO	CP1	CP2	CP3	CP4	CPBV	RUDDER	CHR	CNVT	CBVT	CTVT
-8.097	-5.926	-.40260	-.40190	-.40250	-.39170	-.41680	-.26860	-.01630	.33500	.26850	-.13090
-8.280	-3.763	-.39710	-.40280	-.38700	-.38260	-.40650	-.12420	-.00680	.19600	.15340	-.07010
-8.190	.161	-.36360	-.37050	-.34650	-.35240	-.36650	-.03090	-.00220	-.02410	-.02200	.00950
-8.006	4.422	-.38230	-.39020	-.35810	-.36640	-.39810	.16040	.00920	-.26550	-.21660	.10350
-7.997	6.266	-.39530	-.39890	-.37180	-.37800	-.41530	.26860	.01640	-.37630	-.30350	.15080
	GRADIENT	.00172	.00145	.00344	.00190	.00091	.03492	.00197	-.05639	-.04521	.02122

RUN NO. 1018/ 0 RN/L = 3.50 GRADIENT INTERVAL = -5.00/ 5.00

ALPHAO	BETAO	CP1	CP2	CP3	CP4	CPBV	RUDDER	CHR	CNVT	CBVT	CTVT
-6.199	-5.999	-.38910	-.39470	-.38920	-.36850	-.41080	-.23250	-.01320	.32410	.26120	-.12680
-6.174	-4.095	-.38820	-.39410	-.37980	-.37280	-.39790	-.11810	-.00560	.20520	.16240	-.07470
-6.278	.121	-.35750	-.37080	-.33780	-.35290	-.36160	-.03930	-.00280	-.02720	-.02270	.00920
-6.064	4.278	-.35520	-.36710	-.33300	-.34690	-.36470	.13400	.00690	-.24820	-.20090	.09530
-5.886	6.403	-.38080	-.38750	-.35720	-.36540	-.39770	.23750	.01350	-.37120	-.29910	.14810
	GRADIENT	.00395	.00323	.00560	.00310	.00398	.03008	.00149	-.05415	-.04339	.02030

IA156A, AEDC PWT 16T-470, O T S W/SILTS (R8NF[illegible]) (10 MAY 80)

REFERENCE DATA

SREF = 2690.0000 SQ.FT. XMRP = 976.0000 IN. XT
LREF = 1290.3000 INCHES YMRP = .0000 IN. YT
BREF = 1290.3000 INCHES ZMRP = 400.0000 IN. ZT
SCALE = .0200

PARAMETRIC DATA

IB-ELV = 10.000 OB-ELV = 11.000
BDFLAP = .000 SPDBRK = .000
RUDDER = .000 SILTS = 1.000
MACH = 1.100 RN/L = 3.500

RUN NO. 1019/ 0 RN/L = 3.50 GRADIENT INTERVAL = -5.00/ 5.00

ALPHAO	BETAO	CP1	CP2	CP3	CP4	CPBV	RUDDER	CHR	CNVT	CBVT	CTVT
-4.238	-6.148	-.38650	-.38960	-.38380	-.37320	-.41080	-.18610	-.00930	.32540	.26130	-.12570
-4.335	-4.024	-.37780	-.38680	-.36810	-.36520	-.38960	-.09580	-.00340	.19420	.15250	-.06960
-4.254	.256	-.35390	-.36340	-.32480	-.34090	-.35220	-.02430	-.00180	-.02670	-.02290	.00940
-3.792	4.279	-.33840	-.35460	-.31690	-.33070	-.35080	.04870	-.00010	-.23780	-.19200	.08960
-3.868	6.150	-.36270	-.37560	-.33980	-.34930	-.37570	.16000	.00750	-.34620	-.28000	.13710
	GRADIENT	.00475	.00389	.00621	.00417	.00472	.01740	.00040	-.05202	-.04148	.01917

RUN NO. 1020/ 0 RN/L = 3.50 GRADIENT INTERVAL = -5.00/ 5.00

ALPHAO	BETAO	CP1	CP2	CP3	CP4	CPBV	RUDDER	CHR	CNVT	CBVT	CTVT
-.440	-7.008	-.38610	-.39070	-.38050	-.37050	-.40690	-.16770	-.00730	.35540	.28360	-.13520
-.423	-4.851	-.37050	-.37940	-.35620	-.35860	-.38120	-.07900	-.00090	.23500	.18720	-.08430
-.387	-.508	-.34340	-.35200	-.32020	-.33270	-.33850	-.07230	-.00040	.01650	.00980	-.00360
-.354	3.675	-.33930	-.34810	-.31940	-.33100	-.34370	-.16590	-.00710	-.18780	-.15300	.06500
-.360	5.796	-.34440	-.35340	-.32270	-.33310	-.35360	-.05640	.00070	-.29940	-.24520	.11360
	GRADIENT	.00368	.00369	.00434	.00325	.00443	-.01012	-.00072	-.04959	-.03991	.01752

RUN NO. 1021/ 0 RN/L = 3.50 GRADIENT INTERVAL = -5.00/ 5.00

ALPHAO	BETAO	CP1	CP2	CP3	CP4	CPBV	RUDDER	CHR	CNVT	CBVT	CTVT
4.046	-5.934	-.35590	-.36050	-.35030	-.34570	-.36590	.16240	.00770	.27340	.22170	-.09570
3.910	-3.607	-.33750	-.34460	-.32430	-.32730	-.34020	.21590	.01220	.15340	.12260	-.04660
3.691	.192	-.34540	-.35710	-.32360	-.33680	-.34630	-.06690	-.00480	.00020	-.00240	.00020
3.794	4.044	-.32980	-.34370	-.31180	-.32030	-.33810	-.27770	-.01660	-.16630	-.13930	.05510
3.760	6.059	-.33730	-.34540	-.31070	-.32390	-.35200	-.16660	-.00800	-.27750	-.22880	.10150
	GRADIENT	.00101	.00013	.00164	.00092	.00028	-.06449	-.00376	-.04178	-.03423	.01329

IA156A, AEDC PWT 16T-470, O T S W/SILTS (R8NF70) (10 MAY 80)

REFERENCE DATA

SREF = 2690.0000 SQ.FT. XMRP = 976.0000 IN. XT
LREF = 1290.3000 INCHES YMRP = .0000 IN. YT
BREF = 1290.3000 INCHES ZMRP = 400.0000 IN. ZT
SCALE = .0200

PARAMETRIC DATA

IB-ELV = 10.000 OB-ELV = 11.000
BDFLAP = .000 SPDBRK = .000
RUDDER = .000 SILTS = 1.000
MACH = 1.150 RN/L = 3.500

RUN NO. 1022/ 0 RN/L = 3.50 GRADIENT INTERVAL = -5.00/ 5.00

ALPHAO	BETAO	CP1	CP2	CP3	CP4	CPBV	RUDDER	CHR	CNVT	CBVT	CTVT
-8.134	-5.933	-.37990	-.37770	-.38110	-.36940	-.39670	-.36500	-.02280	.34320	.27540	-.13680
-8.287	-3.765	-.37790	-.38120	-.37100	-.35670	-.38970	-.16930	-.00980	.20350	.16020	-.07460
-8.184	.189	-.34300	-.34910	-.32880	-.32840	-.34840	-.01750	-.00120	-.01900	-.01830	.00850
-8.013	4.416	-.34750	-.36140	-.33210	-.33790	-.37020	.25400	.01560	-.25640	-.20930	.10210
-8.025	6.285	-.36040	-.36830	-.34430	-.34910	-.38900	.43250	.02740	-.37210	-.29970	.15250
	GRADIENT	.00366	.00236	.00469	.00225	.00230	.05189	.00311	-.05622	-.04517	.02161

RUN NO. 1023/ 0 RN/L = 3.50 GRADIENT INTERVAL = -5.00/ 5.00

ALPHAO	BETAO	CP1	CP2	CP3	CP4	CPBV	RUDDER	CHR	CNVT	CBVT	CTVT
-6.207	-5.999	-.37020	-.37690	-.38370	-.35120	-.39350	-.33120	-.01990	.33030	.26570	-.13140
-6.146	-4.081	-.36050	-.36880	-.36020	-.34110	-.37410	-.20860	-.01190	.21030	.16660	-.07840
-6.279	.113	-.33120	-.34330	-.31850	-.32140	-.33710	-.02710	-.00180	-.01700	-.01540	.00670
-6.064	4.278	-.33630	-.35060	-.31620	-.32780	-.35200	.20280	.01150	-.24410	-.19780	.09540
-5.879	6.410	-.34870	-.35830	-.32960	-.33430	-.37310	.39810	.02460	-.36900	-.29720	.15070
	GRADIENT	.00290	.00218	.00527	.00159	.00265	.04921	.00280	-.05436	-.04359	.02079

RUN NO. 1024/ 0 RN/L = 3.50 GRADIENT INTERVAL = -5.00/ 5.00

ALPHAO	BETAO	CP1	CP2	CP3	CP4	CPBV	RUDDER	CHR	CNVT	CBVT	CTVT
-4.244	-6.153	-.37360	-.37500	-.37280	-.34840	-.39420	-.33110	-.01920	.33050	.26490	-.13050
-4.342	-4.026	-.36010	-.37040	-.35480	-.34190	-.37470	-.18890	-.00990	.20300	.16060	-.07540
-4.269	.373	-.32920	-.34180	-.31110	-.31930	-.33290	-.02240	-.00180	-.02640	-.02350	.01050
-3.799	4.328	-.32010	-.33540	-.29880	-.31130	-.33030	.16980	.00840	-.23510	-.19010	.09150
-3.890	6.176	-.33860	-.35620	-.32210	-.32720	-.36010	.32530	.01900	-.34390	-.27830	.13990
	GRADIENT	.00483	.00423	.00676	.00369	.00539	.04284	.00218	-.05243	-.04198	.01997

RUN NO. 1025/ 0 RN/L = 3.50 GRADIENT INTERVAL = -5.00/ 5.00

ALPHAO	BETAO	CP1	CP2	CP3	CP4	CPBV	RUDDER	CHR	CNVT	CBVT	CTVT
-.430	-7.050	-.37150	-.37460	-.36730	-.34650	-.39390	-.32350	-.01810	.36160	.28850	-.14160
-.405	-4.893	-.35620	-.36250	-.34350	-.34320	-.37250	-.19740	-.00920	.24000	.19170	-.08940
-.369	-.554	-.32950	-.34090	-.30850	-.31930	-.33100	-.07510	-.00060	.01760	.01110	-.00480
-.336	3.601	-.32440	-.33550	-.29880	-.31560	-.32990	.01890	.00600	-.19110	-.15520	.06980
-.346	5.794	-.32550	-.33990	-.30760	-.31560	-.33890	.11170	.01250	-.30390	-.24840	.11900
	GRADIENT	.00376	.00319	.00528	.00327	.00505	.02549	.00179	-.05076	-.04085	.01875

IA156A, AEDC PWT 16T-470, O T S W/SILTS (R8NF70) (10 MAY 80)

REFERENCE DATA

SREF = 2690.0000 SQ.FT. XMRP = 976.0000 IN. XT
LREF = 1290.3000 INCHES YMRP = .0000 IN. YT
BREF = 1290.3000 INCHES ZMRP = 400.0000 IN. ZT
SCALE = .0200

PARAMETRIC DATA

IB-ELV = 10.000 OB-ELV = 11.000
BDFLAP = .000 SPDBRK = .000
RUDDER = .000 SILTS = 1.000
MACH = 1.150 RN/L = 3.500

RUN NO. 1026/ 0 RN/L = 3.50 GRADIENT INTERVAL = -5.00/ 5.00

ALPHAO	BETAO	CP1	CP2	CP3	CP4	CPBV	RUDDER	CHR	CNVT	CBVT	CTVT
4.075	-5.757	-.33570	-.34010	-.32890	-.32320	-.35090	.00680	-.00340	.27200	.22000	-.09890
3.928	-3.663	-.33730	-.34460	-.32240	-.31980	-.34480	.08270	.00250	.16600	.13220	-.05370
3.704	.117	-.33080	-.34040	-.31370	-.31630	-.33220	-.01400	-.00110	.01080	.00460	-.00120
3.806	3.989	-.31520	-.32990	-.29090	-.30630	-.32730	-.11880	-.00510	-.16460	-.13780	.05840
3.754	6.054	-.32910	-.33680	-.30010	-.31380	-.34560	-.00530	.00350	-.27920	-.23030	.10670
	GRADIENT	.00289	.00192	.00412	.00177	.00228	-.02634	-.00099	-.04321	-.03529	.01465

IA156A, AEDC PWT 16T-470, O T S W/SILTS (R8NF71) (10 MAY 80)

REFERENCE DATA

SREF = 2690.0000 SQ.FT. XMRP = 976.0000 IN. XT
LREF = 1290.3000 INCHES YMRP = .0000 IN. YT
BREF = 1290.3000 INCHES ZMRP = 400.0000 IN. ZT
SCALE = .0200

PARAMETRIC DATA

IB-ELV = 12.000 OB-ELV = 11.000
BDFLAP = .000 SPDBRK = .000
RUDDER = .000 SILTS = 1.000
MACH = .600 RN/L = 3.500

RUN NO. 1030/ 0 RN/L = 3.50 GRADIENT INTERVAL = -5.00/ 5.00

ALPHAO	BETAO	CP1	CP2	CP3	CP4	CPBV	RUDDER	CHR	CNVT	CBVT	CTVT
-8.234	-7.829	-.27180	-.28760	-.26240	-.26700	-.27190	-.15630	-.01190	.41310	.30690	-.11420
-8.114	-5.816	-.26090	-.28440	-.27180	-.24670	-.26780	-.07010	-.00330	.29590	.22690	-.08320
-8.139	-3.803	-.25480	-.27410	-.25410	-.23900	-.26350	-.03420	-.00050	.17540	.13580	-.04880
-8.046	.301	-.23560	-.25470	-.24170	-.22300	-.24920	-.02220	-.00250	-.04350	-.03520	.01430
-7.916	4.243	-.25420	-.27490	-.24520	-.23970	-.25790	.02760	-.00030	-.25130	-.19270	.07440
-7.776	6.289	-.26290	-.28140	-.26210	-.24710	-.26220	.11790	.00840	-.36780	-.27330	.10710
-7.792	8.315	-.26890	-.28900	-.27550	-.25540	-.26970	.26760	.02400	-.46320	-.32550	.12640
	GRADIENT	.00011	-.00007	.00112	-.00006	.00072	.00765	.00002	-.05304	-.04083	.01531

RUN NO. 1031/ 0 RN/L = 3.49 GRADIENT INTERVAL = -5.00/ 5.00

ALPHAO	BETAO	CP1	CP2	CP3	CP4	CPBV	RUDDER	CHR	CNVT	CBVT	CTVT
-6.166	-7.930	-.26380	-.28490	-.26930	-.25120	-.26560	-.16190	-.01190	.41510	.30720	-.11390
-6.123	-5.906	-.25810	-.27970	-.26590	-.24600	-.26550	-.08140	-.00370	.29820	.22780	-.08340
-6.053	-3.999	-.25170	-.27360	-.25590	-.23810	-.26070	-.04350	-.00050	.18520	.14350	-.05220
-6.113	.073	-.23230	-.25150	-.23590	-.22300	-.24530	-.02200	-.00220	-.03240	-.02500	.00980
-5.949	4.187	-.24200	-.26380	-.23770	-.23170	-.24670	.03670	-.00010	-.24630	-.18660	.07180
-5.886	6.167	-.25610	-.27960	-.25660	-.24420	-.25960	.11970	.00780	-.35970	-.26550	.10410
-5.690	8.315	-.27240	-.29070	-.26730	-.25760	-.26960	.28200	.02490	-.46810	-.32660	.12730
	GRADIENT	.00118	.00119	.00222	.00078	.00171	.00980	.00005	-.05271	-.04032	.01515

IA156A, AEDC PWT 16T-470, O T S W/SILTS (R8NF71) (10 MAY 80)

REFERENCE DATA

SREF = 2690.0000 SQ.FT. XMRP = 976.0000 IN. XT
LREF = 1290.3000 INCHES YMRP = .0000 IN. YT
BREF = 1290.3000 INCHES ZMRP = 400.0000 IN. ZT
SCALE = .0200

PARAMETRIC DATA

IB-ELV = 12.000 OB-ELV = 11.000
BDFLAP = .000 SPDBRK = .000
RUDDER = .000 SILTS = 1.000
MACH = .600 RN/L = 3.500

RUN NO. 1042/ 0 RN/L = 3.50 GRADIENT INTERVAL = -5.00/ 5.00

ALPHAO	BETAO	CP1	CP2	CP3	CP4	CPBV	RUDDER	CHR	CNVT	CBVT	CTVT
-4.139	-7.848	-.27320	-.28490	-.27020	-.26720	-.26990	-.23050	-.01870	.41490	.28890	-.10500
-4.203	-5.940	-.26100	-.27170	-.25450	-.25810	-.25810	-.09890	-.00470	.30850	.22530	-.08150
-4.233	-3.917	-.24840	-.26680	-.24170	-.23230	-.25440	-.05570	-.00090	.18630	.13610	-.04860
-4.127	.371	-.23010	-.24260	-.21790	-.21900	-.23570	-.02850	-.00340	-.02970	-.03000	.01100
-3.739	4.228	-.24020	-.26040	-.22590	-.22760	-.24290	.04430	-.00050	-.24080	-.18810	.07310
-3.804	6.065	-.25300	-.27420	-.23610	-.23870	-.25130	.11190	.00610	-.34970	-.26480	.10490
-3.932	8.043	-.26850	-.28330	-.25480	-.25320	-.26520	.20700	.01610	-.46080	-.33920	.13580
	GRADIENT	.00107	.00088	.00201	.00062	.00147	.01217	.00004	-.05240	-.03979	.01492

RUN NO. 1043/ 0 RN/L = 3.50 GRADIENT INTERVAL = -5.00/ 5.00

ALPHAO	BETAO	CP1	CP2	CP3	CP4	CPBV	RUDDER	CHR	CNVT	CBVT	CTVT
-.332	-8.766	-.26430	-.28000	-.25760	-.24970	-.25400	-.30530	-.02610	.45270	.30520	-.10910
-.318	-6.571	-.24970	-.26710	-.24810	-.24870	-.24650	-.13980	-.00800	.33840	.24240	-.08580
-.304	-4.542	-.24580	-.26150	-.24160	-.23260	-.24320	-.08180	-.00170	.22520	.16400	-.05560
-.278	-.389	-.21980	-.23300	-.21290	-.21060	-.22490	-.07590	-.00100	.01650	.00420	.00060
-.246	3.690	-.22710	-.25040	-.21380	-.21610	-.22860	-.08490	-.00200	-.16930	-.13630	.04610
-.248	5.784	-.24330	-.26520	-.22630	-.23220	-.23830	-.02600	.00440	-.28910	-.22220	.07980
-.244	7.880	-.26010	-.27860	-.24080	-.24170	-.25250	.08430	.01630	-.40640	-.30000	.11160
	GRADIENT	.00228	.00136	.00339	.00201	.00178	-.00037	-.00004	-.04793	-.03648	.01236

RUN NO. 1044/ 0 RN/L = 3.50 GRADIENT INTERVAL = -5.00/ 5.00

ALPHAO	BETAO	CP1	CP2	CP3	CP4	CPBV	RUDDER	CHR	CNVT	CBVT	CTVT
4.016	-8.006	-.25020	-.26920	-.24820	-.24560	-.23740	-.12930	-.02040	.37610	.25810	-.08420
4.084	-5.830	-.23850	-.25530	-.23160	-.22360	-.23230	.01320	-.00460	.26060	.18870	-.05750
4.047	-3.841	-.22900	-.24440	-.22180	-.21290	-.22550	.05460	.00080	.15460	.11180	-.02830
3.961	.182	-.22730	-.23710	-.20790	-.21150	-.22580	-.01630	-.00180	.00890	-.00230	.00220
3.891	4.129	-.22870	-.25000	-.21120	-.21350	-.22720	-.08080	-.00370	-.15460	-.12850	.03960
3.844	6.178	-.23450	-.25300	-.21560	-.21640	-.22890	-.01450	.00440	-.28350	-.21800	.07570
3.838	8.159	-.25080	-.27380	-.23350	-.23700	-.24240	.13890	.02150	-.39030	-.28220	.10210
	GRADIENT	.00004	-.00069	.00134	-.00007	-.00021	-.01699	-.00056	-.03878	-.03014	.00852

IA156A, AEDC PWT 16T-470, O T S W/SILTS (R8NF71) (10 MAY 80)

REFERENCE DATA

SREF = 2690.0000 SQ.FT. XMRP = 976.0000 IN. XT
LREF = 1290.3000 INCHES YMRP = .0000 IN. YT
BREF = 1290.3000 INCHES ZMRP = 400.0000 IN. ZT
SCALE = .0200

PARAMETRIC DATA

IB-ELV = 12.000 OB-ELV = 11.000
BDFLAP = .000 SPDBRK = .000
RUDDER = .000 SILTS = 1.000
MACH = .600 RN/L = 3.500

RUN NO. 1045/ 0 RN/L = 3.51 GRADIENT INTERVAL = -5.00/ 5.00

ALPHAO	BETAO	CP1	CP2	CP3	CP4	CPBV	RUDDER	CHR	CNVT	CBVT	CTVT
6.193	-7.946	-.24710	-.26290	-.23670	-.23040	-.23310	-.13510	-.02030	.37480	.25870	-.08650
6.176	-5.889	-.23910	-.25470	-.23530	-.22820	-.23540	.01570	-.00340	.26180	.19080	-.05920
6.146	-3.831	-.23330	-.25000	-.22690	-.21840	-.23200	.05230	.00170	.16080	.11660	-.03050
5.858	.189	-.21970	-.23380	-.20830	-.21530	-.22040	-.01480	-.00160	.00870	-.00260	.00270
5.792	4.072	-.23360	-.24950	-.20460	-.21320	-.22850	-.08040	-.00470	-.14840	-.12330	.03650
5.732	6.148	-.24000	-.25880	-.20980	-.21940	-.23040	-.02430	.00250	-.26590	-.20600	.07020
5.792	8.167	-.25050	-.26900	-.22220	-.23450	-.23800	.13800	.02070	-.37880	-.27550	.09960
	GRADIENT	-.00002	.00009	.00283	.00066	.00046	-.01679	-.00081	-.03912	-.03035	.00848

RUN NO. 1046/ 0 RN/L = 3.51 GRADIENT INTERVAL = -5.00/ 5.00

ALPHAO	BETAO	CP1	CP2	CP3	CP4	CPBV	RUDDER	CHR	CNVT	CBVT	CTVT
8.069	-7.802	[illegible]	-.26490	-.24340	-.24200	-.24500	-.08520	-.01420	.35120	.25200	-.08610
7.983	-5.735	-.23950	-.25930	-.23280	-.22210	-.23200	.03830	-.00020	.23750	.17510	-.05290
7.974	-3.764	-.22620	[illegible]	-.21460	-.20900	-.22240	.05890	.00310	.14370	.10540	-.02730
7.880	.174	-.22620	[illegible]	-.20360	-.20610	-.21750	-.01910	-.00210	.00600	-.00490	.00300
7.926	4.199	-.23520	-.25050	-.20920	-.21130	-.22720	-.08410	-.00590	-.13410	-.11460	.03330
7.886	6.200	-.24270	-.25930	-.21750	-.22160	-.22900	-.05400	-.00150	-.23450	-.18880	.06220
7.898	8.245	-.25120	-.26380	-.21880	-.23090	-.23900	.09990	.01590	-.36050	-.27220	.09960
	GRADIENT	-.00113	-.00107	.00067	-.00029	-.00061	-.01795	-.00113	-.03488	-.02762	.00761

IA156A, AEDC PWT 16T-470, O T S W/SILTS (R8NF72) (10 MAY 80)

REFERENCE DATA

SREF = 2690.0000 SQ.FT. XMRP = 976.0000 IN. XT
LREF = 1290.3000 INCHES YMRP = .0000 IN. YT
BREF = 1290.3000 INCHES ZMRP = 400.0000 IN. ZT
SCALE = .0200

PARAMETRIC DATA

IB-ELV = 12.000 OB-ELV = 11.000
BDFLAP = .000 SPDBRK = .000
RUDDER = .000 SILTS = 1.000
MACH = .800 RN/L = 3.500

RUN NO. 1047/ 0 RN/L = 3.50 GRADIENT INTERVAL = -5.00/ 5.00

ALPHAO	BETAO	CP1	CP2	CP3	CP4	CPBV	RUDDER	CHR	CNVT	CBVT	CTVT
-8.304	-5.868	-.28030	-.29230	-.27650	-.27760	-.28830	.09710	.01200	.31510	.22700	-.07640
-8.251	-3.829	-.26650	-.29[illegible]30	-.26830	-.26190	-.28360	.10230	.01160	.19160	.13860	-.04330
-8.163	.342	-.24850	-.25880	-.24050	-.23770	-.25960	-.07490	-.00660	-.02080	-.02180	.00570
-8.002	4.333	-.26560	-.28270	-.26380	-.25800	-.27470	-.11680	-.01290	-.22930	-.17850	.06100
-7.991	6.251	-.27740	-.29480	-.27720	-.26430	-.28750	-.02220	-.00550	-.34270	-.25620	.09340
	GRADIENT	.00014	.00123	.00060	.00052	.00113	-.02696	-.00301	-.05156	-.03884	.01277

RUN NO. 1048/ 0 RN/L = 3.50 GRADIENT INTERVAL = -5.00/ 5.00

ALPHAO	BETAO	CP1	CP2	CP3	CP4	CPBV	RUDDER	CHR	CNVT	CBVT	CTVT
-6.203	-5.976	-.26860	-.29120	-.27020	-.26270	-.28110	.05220	.00870	.31570	.22550	-.07570
-6.142	-4.058	-.25980	-.28310	-.26720	-.25460	-.27330	.08040	.01040	.19870	.14290	-.04450
-6.236	.113	-.23990	-.25430	-.23960	-.23140	-.25270	-.06810	-.00580	-.01110	-.01400	.00290
-6.050	4.259	-.25540	-.27240	-.25030	-.24790	-.26250	-.10310	-.01230	-.22220	-.17110	.05760
-5.788	6.350	-.27190	-.28800	-.26520	-.26990	-.27810	.00190	-.00410	-.35020	-.26010	.09570
	GRADIENT	.00053	.00129	.00204	.00081	.00130	-.02208	-.00273	-.05061	-.03776	.01228

RUN NO. 1049/ 0 RN/L = 3.50 GRADIENT INTERVAL = -5.00/ 5.00

ALPHAO	BETAO	CP1	CP2	CP3	CP4	CPBV	RUDDER	CHR	CNVT	CBVT	CTVT
-4.135	-6.074	-.26940	-.28860	-.26920	-.25940	-.27660	.00740	.00560	.31640	.22490	-.07560
-4.334	-3.986	-.25320	-.27210	-.25320	-.24490	-.26260	.05910	.00930	.18950	.13480	-.04090
-4.238	.373	-.23500	-.24830	-.22990	-.22700	-.24260	-.07020	-.00630	-.01690	-.01690	.00190
-3.788	4.319	-.25170	-.26510	-.24070	-.23930	-.25220	-.07170	-.01050	-.22560	-.17230	.05890
-3.866	6.161	-.25820	-.27860	-.25460	-.24700	-.26200	.01060	-.00390	-.33570	-.25050	.09260
-3.826	6.368	-.26550	-.28900	-.26160	-.25790	-.26950	.02920	-.00240	-.34940	-.25890	.09630
	GRADIENT	.00025	.00092	.00157	.00073	.00131	-.01599	-.00240	-.04993	-.03694	.01198

RUN NO. 1050/ 0 RN/L = 3.50 GRADIENT INTERVAL = -5.00/ 5.00

ALPHAO	BETAO	CP1	CP2	CP3	CP4	CPBV	RUDDER	CHR	CNVT	CBVT	CTVT
-.351	-6.864	-.25240	-.27210	-.25690	-.24670	-.25900	-.11090	-.00390	.35590	.25000	-.08620
-.339	-4.760	-.24750	-.26140	-.24650	-.23800	-.24950	.02710	.00810	.23410	.16510	-.04940
-.315	-.547	-.22850	-.24210	-.22630	-.21910	-.23360	-.06190	.00040	.02460	.00950	-.00080
-.276	3.623	-.23980	-.25490	-.23410	-.22940	-.24150	-.18160	-.01000	-.16390	-.12670	.03460
-.273	5.732	-.24790	-.26770	-.24000	-.23680	-.24810	-.09390	-.00240	-.28690	-.21650	.07320
	GRADIENT	.00092	.00078	.00148	.00103	.00096	-.02489	-.00216	-.04748	-.03481	.01002

IA156A, AEDC PWT 16T-470, O T S W/SILTS (R8NF72) (10 MAY 80)

REFERENCE DATA

SREF = 2690.0000 SQ.FT. XMRP = 976.0000 IN. XT
LREF = 1290.3000 INCHES YMRP = .0000 IN. YT
BREF = 1290.3000 INCHES ZMRP = 400.0000 IN. ZT
SCALE = .0200

PARAMETRIC DATA

IB-ELV = 12.000 OB-ELV = 11.000
BDFLAP = .000 SPDBRK = .000
RUDDER = .000 SILTS = 1.000
MACH = .800 RN/L = 3.500

RUN NO. 1051/ 0 RN/L = 3.49 GRADIENT INTERVAL = -5.00/ 5.00

ALPHAO	BETAO	CP1	CP2	CP3	CP4	CPBV	RUDDER	CHR	CNVT	CBVT	CTVT
4.088	-5.750	-.24990	-.26660	-.24640	-.24600	-.25070	.05890	.00030	.27200	.19550	-.05900
3.968	-3.736	-.23440	-.24860	-.22970	-.22530	-.23900	.14280	.00830	.14930	.10590	-.02070
3.862	.188	-.23570	-.24510	-.21540	-.21860	-.23070	-.01340	-.00120	.01340	.00280	-.00070
3.796	3.973	-.23210	-.24770	-.21720	-.21760	-.23150	-.16870	-.01070	-.14020	-.11330	.02730
3.771	6.089	-.25090	-.26920	-.23560	-.23550	-.24910	-.05460	.00010	-.27780	-.21200	.07120
	GRADIENT	.00029	.00012	.00163	.00100	.00098	-.04041	-.00246	-.03754	-.02842	.00622

RUN NO. 1052/ 0 RN/L = 3.50 GRADIENT INTERVAL = -5.00/ 5.00

ALPHAO	BETAO	CP1	CP2	CP3	CP4	CPBV	RUDDER	CHR	CNVT	CBVT	CTVT
6.093	-5.815	-.24780	-.26700	-.24620	-.23940	-.25210	.09210	.00390	.25600	.18960	-.05730
6.050	-3.777	-.23420	-.25260	-.22920	-.22490	-.24130	.17630	.01210	.15090	.10880	-.02090
5.751	.160	-.22900	-.24170	-.21450	-.21680	-.22820	-.00840	-.00080	.01120	.00180	-.00030
5.680	4.069	-.23750	-.25230	-.21840	-.21990	-.23580	-.19040	-.01330	-.12550	-.10360	.02110
5.760	6.016	-.24700	-.26730	-.23720	-.23400	-.24880	-.10720	-.00520	-.24330	-.19380	.06300
	GRADIENT	-.00042	.00004	.00138	.00064	.00070	-.04674	-.00324	-.03523	-.02707	.00535

IA156A, AEDC PWT 16T-470, O T S W/SILTS (R8NF73) (10 MAY 80)

REFERENCE DATA

SREF = 2690.0000 SQ.FT. XMRP = 976.0000 IN. XT
LREF = 1290.3000 INCHES YMRP = .0000 IN. YT
BREF = 1290.3000 INCHES ZMRP = 400.0000 IN. ZT
SCALE = .0200

PARAMETRIC DATA

IB-ELV = 12.000 OB-ELV = 11.000
BDFLAP = .000 SPDBRK = .000
RUDDER = .000 SILTS = 1.000
MACH = .900 RN/L = 3.500

RUN NO. 1053/ 0 RN/L = 3.50 GRADIENT INTERVAL = -5.00/ 5.00

ALPHAO	BETAO	CP1	CP2	CP3	CP4	CPBV	RUDDER	CHR	CNVT	CBVT	CTVT
-8.265	-5.904	-.30730	-.32170	-.30230	-.29780	-.31490	.21160	.02030	.32220	.23970	-.08850
-8.238	-3.811	-.28580	-.30480	-.29210	-.28070	-.29820	.23860	.02170	.17710	.12110	-.03050
-8.189	.338	-.26470	-.28200	-.26530	-.25700	-.27990	-.03300	-.00280	-.02020	-.02220	.00720
-7.993	4.302	-.28310	-.30020	-.28490	-.27510	-.29640	-.26800	-.02410	-.21230	-.16080	.04830
	GRADIENT	.00037	.00061	.00093	.00073	.00033	-.06247	-.00565	-.04799	-.03475	.00971

IA156A, AEDC PWT 16T-470, O T S W/SILTS (R8NF73) (10 MAY 80)

REFERENCE DATA

SREF = 2690.0000 SQ.FT. XMRP = 976.0000 IN. XT
LREF = 1290.3000 INCHES YMRP = .0000 IN. YT
BREF = 1290.3000 INCHES ZMRP = 400.0000 IN. ZT
SCALE = .0200

PARAMETRIC DATA

IB-ELV = 12.000 OB-ELV = 11.000
BDFLAP = .000 SPDBRK = .000
RUDDER = .000 SILTS = 1.000
MACH = .900 RN/L = 3.500

RUN NO. 1054/ 0 RN/L = 3.50 GRADIENT INTERVAL = -5.00/ 5.00

ALPHAO	BETAO	CP1	CP2	CP3	CP4	CPBV	RUDDER	CHR	CNVT	CBVT	CTVT
-6.202	-5.973	-.30000	-.31610	-.30580	-.29050	-.30590	.18790	.01900	.31920	.23430	-.08400
-6.173	-4.070	-.28660	-.30540	-.29530	-.28010	-.29650	.15980	.01600	.19730	.14140	-.04330
-6.253	.118	-.26280	-.27860	-.26580	-.25480	-.27680	-.02100	-.00160	-.01200	-.01470	.00450
-6.057	4.276	-.27430	-.29460	-.27700	-.26660	-.28570	-.22970	-.02150	-.20910	-.15630	.04640
-5.843	6.363	-.29830	-.31720	-.29200	-.28800	-.30870	-.17800	-.01830	-.33240	-.24530	.08750
	GRADIENT	.00148	.00130	.00220	.00162	.00130	-.04667	-.00449	-.04870	-.03568	.01075

RUN NO. 1055/ 0 RN/L = 3.50 GRADIENT INTERVAL = -5.00/ 5.00

ALPHAO	BETAO	CP1	CP2	CP3	CP4	CPBV	RUDDER	CHR	CNVT	CBVT	CTVT
-4.160	-6.094	-.28990	-.30520	-.29110	-.28250	-.29510	.16070	.01750	.31300	.22780	-.08000
-4.335	-4.006	-.27170	-.29060	-.27350	-.26660	-.28470	.10150	.01210	.18630	.13450	-.04210
-4.250	.375	-.26140	-.27660	-.26110	-.25310	-.27150	-.03020	-.00270	-.01760	-.01860	.00450
-3.800	4.325	-.27000	-.29300	-.27260	-.26410	-.28100	-.18360	-.01880	-.21400	-.16070	.05000
-3.881	6.172	-.28660	-.30850	-.28150	-.27830	-.29650	-.14600	-.01630	-.31920	-.23530	.08360
	GRADIENT	.00024	-.00022	.00016	.00035	.00049	-.03415	-.00370	-.04802	-.03543	.01105

RUN NO. 1056/ 0 RN/L = 3.50 GRADIENT INTERVAL = -5.00/ 5.00

ALPHAO	BETAO	CP1	CP2	CP3	CP4	CPBV	RUDDER	CHR	CNVT	CBVT	CTVT
-.383	-7.001	-.27850	-.29380	-.27820	-.27230	-.28230	.03840	.00840	.34800	.24870	-.08690
-.364	-4.814	-.26330	-.27980	-.26460	-.25960	-.27290	.09520	.01300	.23720	.17830	-.06060
-.332	-.509	-.24740	-.26060	-.24490	-.23890	-.25910	-.07620	-.00080	.02290	.01290	-.00540
-.297	3.586	-.25650	-.27310	-.25920	-.25010	-.26880	-.21260	-.01180	-.15320	-.12490	.03570
-.300	5.750	-.27420	-.29280	-.26880	-.26520	-.27870	-.21770	-.01220	-.26800	-.20340	.06650
	GRADIENT	.00083	.00083	.00068	.00116	.00051	-.03667	-.00295	-.04650	-.03611	.01147

RUN NO. 1058/ 0 RN/L = 3.51 GRADIENT INTERVAL = -5.00/ 5.00

ALPHAO	BETAO	CP1	CP2	CP3	CP4	CPBV	RUDDER	CHR	CNVT	CBVT	CTVT
4.100	-5.777	-.27010	-.28530	-.27110	-.26570	-.27750	.31440	.02080	.24160	.18080	-.04880
3.958	-3.686	-.25250	-.26740	-.25580	-.24910	-.26720	.30530	.02070	.13810	.10650	-.02190
3.691	.102	-.24650	-.25940	-.24280	-.23840	-.25500	-.00220	-.00030	.01660	.00650	-.00230
3.806	3.991	-.25340	-.26910	-.25320	-.24280	-.26490	-.30290	-.02060	-.12950	-.11020	.02360
3.757	6.067	-.27530	-.29080	-.27250	-.26360	-.28590	-.23450	-.01440	-.25440	-.20030	.06340
	GRADIENT	-.00012	-.00023	.00033	.00081	.00029	-.07922	-.00538	-.03487	-.02824	.00593

IA156A, AEDC PWT 16T-470, O T S W/SILTS (R8NF74) (10 MAY 80)

REFERENCE DATA

SREF = 2690.0000 SQ.FT. XMRP = 976.0000 IN. XT
LREF = 1290.3000 INCHES YMRP = .0000 IN. YT
BREF = 1290.3000 INCHES ZMRP = 400.0000 IN. ZT
SCALE = .0200

PARAMETRIC DATA

IB-ELV = 12.000 OB-ELV = 11.000
BDFLAP = .000 SPDBRK = .000
RUDDER = .000 SILTS = 1.000
MACH = .950 RN/L = 3.500

RUN NO. 1059/ 0 RN/L = 3.50 GRADIENT INTERVAL = -5.00/ 5.00

ALPHAO	BETAO	CP1	CP2	CP3	CP4	CPBV	RUDDER	CHR	CNVT	CBVT	CTVT
-8.242	-5.880	-.34650	-.35400	-.32470	-.33030	-.34300	.36120	.03140	.32830	.24950	-.09710
-8.273	-3.814	-.31930	-.33540	-.30930	-.30970	-.32580	.40470	.03390	.18860	.13560	-.04210
-8.173	.400	-.30650	-.32040	-.28380	-.29430	-.31680	-.21200	-.01670	-.01740	-.01460	-.00120
-8.007	4.354	-.33130	-.34330	-.31530	-.31990	-.33720	-.39110	-.03290	-.23120	-.18490	.06830
-8.032	6.270	-.34580	-.35410	-.33070	-.33350	-.34830	-.27540	-.02460	-.35060	-.27550	.11320
	GRADIENT	-.00142	-.00092	-.00066	-.00120	-.00136	-.09796	-.00822	-.05137	-.03920	.01347

RUN NO. 1060/ 0 RN/L = 3.50 GRADIENT INTERVAL = -5.00/ 5.00

ALPHAO	BETAO	CP1	CP2	CP3	CP4	CPBV	RUDDER	CHR	CNVT	CBVT	CTVT
-6.220	-5.996	-.33300	-.34860	-.33220	-.32750	-.33750	.33570	.02990	.32440	.24430	-.09290
-6.170	-4.074	-.31370	-.32610	-.31460	-.30260	-.31960	.36830	.03170	.19860	.14330	-.04480
-6.247	.101	-.29270	-.30560	-.27260	-.28230	-.30290	-.13680	-.01060	-.00380	-.00170	-.00610
-6.069	4.265	-.32060	-.33540	-.30480	-.30930	-.32570	-.40480	-.03450	-.22170	-.17310	.06040
-5.780	6.369	-.34270	-.35760	-.32950	-.33240	-.34730	-.28140	-.02580	-.34820	-.26830	.10680
	GRADIENT	-.00082	-.00111	.00118	-.00080	-.00073	-.09272	-.00794	-.05040	-.03794	.01261

RUN NO. 1061/ 0 RN/L = 3.50 GRADIENT INTERVAL = -5.00/ 5.00

ALPHAO	BETAO	CP1	CP2	CP3	CP4	CPBV	RUDDER	CHR	CNVT	CBVT	CTVT
-4.121	-6.098	-.32070	-.33410	-.32010	-.31190	-.32320	.32330	.02960	.31440	.23360	-.08550
-4.336	-4.006	-.30320	-.31590	-.30510	-.29310	-.30840	.33970	.03020	.18360	.12940	-.03690
-4.251	.375	-.29080	-.30520	-.28150	-.27890	-.30190	-.13550	-.01080	-.01310	-.00870	-.00440
-3.806	4.342	-.30790	-.32480	-.29510	-.29860	-.31290	-.38200	-.03360	-.22420	-.17250	.05850
-3.876	6.160	-.32450	-.34020	-.31310	-.31490	-.32770	-.28220	-.02630	-.33110	-.25360	.09900
	GRADIENT	-.00050	-.00101	.00127	-.00059	-.00050	-.08684	-.00767	-.04879	-.03609	.01136

RUN NO. 1062/ 0 RN/L = 3.50 GRADIENT INTERVAL = -5.00/ 5.00

ALPHAO	BETAO	CP1	CP2	CP3	CP4	CPBV	RUDDER	CHR	CNVT	CBVT	CTVT
-.398	-6.992	-.32220	-.33250	-.31870	-.31050	-.31600	.19220	.02010	.34060	.25130	-.09160
-.379	-4.843	-.30000	-.31040	-.29640	-.28930	-.29240	.24960	.02460	.22650	.16870	-.05490
-.347	-.532	-.27640	-.28640	-.26790	-.26660	-.28150	-.07980	-.00100	.02330	.01460	-.00700
-.307	3.589	-.29330	-.30400	-.27980	-.28390	-.29260	-.37150	-.02380	-.14910	-.11260	.02500
-.306	5.751	-.31690	-.32810	-.30510	-.30730	-.31580	-.32940	-.02050	-.26610	-.20990	.07430
	GRADIENT	.00083	.00080	.00200	.00068	-.00000	-.07368	-.00574	-.04456	-.03338	.00949

IA156A, AEDC PWT 16T-470, O T S W/SILTS (R8NF74) (10 MAY 80)

REFERENCE DATA

SREF = 2690.0000 SQ.FT. XMRP = 976.0000 IN. XT
LREF = 1290.3000 INCHES YMRP = .0000 IN. YT
BREF = 1290.3000 INCHES ZMRP = 400.0000 IN. ZT
SCALE = .0200

PARAMETRIC DATA

IB-ELV = 12.000 OB-ELV = 11.000
BDFLAP = .000 SPDBRK = .000
RUDDER = .000 SILTS = 1.000
MACH = .950 RN/L = 3.500

RUN NO. 1063/ 0 RN/L = 3.50 GRADIENT INTERVAL = -5.00/ 5.00

ALPHAO	BETAO	CP1	CP2	CP3	CP4	CPBV	RUDDER	CHR	CNVT	CBVT	CTVT
3.973	-5.846	-.29210	-.29770	-.28160	-.28000	-.28780	.33760	.02200	.23840	.18570	-.05630
3.965	-3.756	-.27650	-.28500	-.27240	-.26760	-.27870	.27740	.01800	.13350	.10150	-.01960
3.868	.183	-.28700	-.29540	-.26970	-.27010	-.28360	-.00180	-.00020	.01050	.00280	-.00110
3.788	3.934	-.28460	-.29600	-.27070	-.27380	-.28570	-.26150	-.01680	-.11980	-.10020	.02130
3.762	6.067	-.30670	-.31310	-.28250	-.29000	-.29990	-.37790	-.02520	-.23890	-.19700	.06380
	GRADIENT	-.00107	-.00144	.00022	-.00080	-.00091	-.07009	-.00453	-.03292	-.02622	.00531

IA156A, AEDC PWT 16T-470, O T S W/SILTS (R8NF75) (10 MAY 80)

REFERENCE DATA

SREF = 2690.0000 SQ.FT. XMRP = 976.0000 IN. XT
LREF = 1290.3000 INCHES YMRP = .0000 IN. YT
BREF = 1290.3000 INCHES ZMRP = 400.0000 IN. ZT
SCALE = .0200

PARAMETRIC DATA

IB-ELV = 12.000 OB-ELV = 11.000
BDFLAP = .000 SPDBRK = .000
RUDDER = .000 SILTS = 1.000
MACH = 1.050 RN/L = 3.500

RUN NO. 1064/ 0 RN/L = 3.50 GRADIENT INTERVAL = -5.00/ 5.00

ALPHAO	BETAO	CP1	CP2	CP3	CP4	CPBV	RUDDER	CHR	CNVT	CBVT	CTVT
-8.235	-5.891	-.43700	-.44550	-.44500	-.42810	-.46510	-.10880	-.00500	.35860	.28450	-.13580
-8.265	-3.820	-.44530	-.45820	-.43690	-.43520	-.46170	-.04690	-.00120	.22040	.17120	-.07700
-8.181	.395	-.40530	-.42000	-.39150	-.39510	-.41130	-.05520	-.00420	-.03030	-.03030	.01360
-8.023	4.347	-.38160	-.39770	-.38010	-.37920	-.39460	.07370	.00310	-.26280	-.21810	.10370
-8.027	6.273	-.43290	-.43840	-.40900	-.42190	-.45120	.13060	.00660	-.38070	-.30900	.15080
	GRADIENT	.00782	.00743	.00700	.00689	.00826	.01458	.00051	-.05917	-.04767	.02212

RUN NO. 1065/ 0 RN/L = 3.51 GRADIENT INTERVAL = -5.00/ 5.00

ALPHAO	BETAO	CP1	CP2	CP3	CP4	CPBV	RUDDER	CHR	CNVT	CBVT	CTVT
-6.221	-6.014	-.44030	-.44490	-.43790	-.42580	-.46530	-.11010	-.00450	.35480	.28190	-.13440
-6.150	-4.070	-.43130	-.44350	-.42790	-.41120	-.45280	-.05130	-.00080	.22720	.17790	-.08040
-6.266	.103	-.41670	-.42590	-.39010	-.40920	-.41490	-.05560	-.00400	-.01680	-.01800	.00770
-6.040	4.270	-.40600	-.41940	-.38130	-.39260	-.41610	-.02930	-.00500	-.25060	-.20620	.09550
-6.018	6.270	-.42080	-.42660	-.39670	-.40820	-.43390	.08460	.00270	-.37240	-.30140	.14590
	GRADIENT	.00303	.00289	.00559	.00223	.00440	.00264	-.00050	-.05729	-.04605	.02109

IA156A, AEDC PWT 16T-470, O T S W/SILTS (R8NF75) (10 MAY 80)

REFERENCE DATA

SREF = 2690.0000 SQ.FT. XMRP = 976.0000 IN. XT
LREF = 1290.3000 INCHES YMRP = .0000 IN. YT
BREF = 1290.3000 INCHES ZMRP = 400.0000 IN. ZT
SCALE = .0200

PARAMETRIC DATA

IB-ELV = 12.000 OB-ELV = 11.000
BDFLAP = .000 SPDBRK = .000
RUDDER = .000 SILTS = 1.000
MACH = 1.050 RN/L = 3.500

RUN NO. 1066/ 0 RN/L = 3.50 GRADIENT INTERVAL = -5.00/ 5.00

ALPHAO	BETAO	CP1	CP2	CP3	CP4	CPBV	RUDDER	CHR	CNVT	CBVT	CTVT
-4.139	-6.114	-.43560	-.44090	-.43180	-.42270	-.46380	-.09480	-.00280	.34920	.27690	-.13100
-4.344	-4.021	-.43020	-.43880	-.41370	-.41360	-.44270	-.02210	.00200	.21430	.16680	-.07440
-4.271	.362	-.41690	-.42940	-.38490	-.40500	-.41660	-.06940	-.00530	-.02330	-.02350	.00960
-3.794	4.347	-.40030	-.41430	-.37110	-.38640	-.41180	-.06750	-.00870	-.25020	-.20570	.09480
-3.881	6.180	-.40450	-.41880	-.37880	-.39140	-.41790	.04920	-.00050	-.35760	-.28970	.13940
	GRADIENT	.00356	.00291	.00512	.00323	.00373	-.00551	-.00129	-.05549	-.04450	.02020

RUN NO. 1067/ 0 RN/L = 3.50 GRADIENT INTERVAL = -5.00/ 5.00

ALPHAO	BETAO	CP1	CP2	CP3	CP4	CPBV	RUDDER	CHR	CNVT	CBVT	CTVT
-.434	-7.039	-.43710	-.44570	-.43090	-.41990	-.45990	-.08160	-.00110	.38140	.29870	-.13910
-.416	-4.882	-.42620	-.43740	-.40800	-.41320	-.43650	-.00160	.00480	.25820	.20300	-.09010
-.390	-.537	-.41030	-.42030	-.38180	-.39640	-.40450	-.05190	.00110	.02620	.01540	-.00540
-.352	3.599	-.41130	-.42000	-.38230	-.40030	-.41330	-.21100	-.01070	-.18250	-.15160	.06350
-.352	5.767	-.41740	-.43040	-.39480	-.40840	-.42830	-.13610	-.00520	-.29630	-.24380	.11120
	GRADIENT	.00177	.00207	.00306	.00154	.00277	-.02458	-.00182	-.05197	-.04182	.01812

RUN NO. 1068/ 0 RN/L = 3.50 GRADIENT INTERVAL = -5.00/ 5.00

ALPHAO	BETAO	CP1	CP2	CP3	CP4	CPBV	RUDDER	CHR	CNVT	CBVT	CTVT
3.960	-5.839	-.41660	-.42400	-.40820	-.40470	-.42480	.22050	.01210	.27570	.21930	-.09210
3.945	-3.748	-.40510	-.41470	-.39040	-.39470	-.41000	.27850	.01700	.16470	.12930	-.04750
3.825	.184	-.40060	-.41220	-.38320	-.39310	-.39990	-.06630	-.00490	.01150	.00330	-.00170
3.799	3.943	-.40140	-.41420	-.37210	-.38920	-.40650	-.32180	-.02030	-.15440	-.13240	.05100
3.771	6.067	-.40820	-.41780	-.37990	-.39730	-.41900	-.22500	-.01250	-.27020	-.22460	.09780
	GRADIENT	.00049	.00007	.00238	.00071	.00047	-.07813	-.00486	-.04147	-.03401	.01280

IA156A, AEDC PWT 16T-470, O T S W/SILTS

(R8NF76) (10 MAY 80)

REFERENCE DATA

SREF = 2690.0000 SQ.FT. XMRP = 976.0000 IN. XT
LREF = 1290.3000 INCHES YMRP = .0000 IN. YT
BREF = 1290.3000 INCHES ZMRP = 400.0000 IN. ZT
SCALE = .0200

PARAMETRIC DATA

IB-ELV = 12.000 OB-ELV = 11.000
BDFLAP = .000 SPDBRK = .000
RUDDER = .000 SILTS = 1.000
MACH = 1.100 RN/L = 3.500

RUN NO. 1069/ 0 RN/L = 3.50 GRADIENT INTERVAL = -5.00/ 5.00

ALPHAO	BETAO	CP1	CP2	CP3	CP4	CPBV	RUDDER	CHR	CNVT	CBVT	CTVT
-8.222	-6.002	-.40310	-.40760	-.40560	-.39520	-.42270	-.23020	-.01360	.35000	.27820	-.13560
-8.271	-3.866	-.39700	-.40110	-.38860	-.38400	-.40200	-.11150	-.00580	.20540	.15890	-.07250
-8.193	.284	-.36940	-.37630	-.34500	-.35480	-.37230	-.03280	-.00240	-.02990	-.02950	.01360
-8.019	4.302	-.38550	-.39190	-.35920	-.37110	-.39800	.15410	.00880	-.25560	-.21180	.10190
-8.001	6.248	-.38850	-.39280	-.36480	-.37170	-.40970	.23130	.01370	-.36990	-.30070	.14930
	GRADIENT	.00144	.00115	.00364	.00161	.00053	.03244	.00178	-.05644	-.04538	.02135

RUN NO. 1070/ 0 RN/L = 3.50 GRADIENT INTERVAL = -5.00/ 5.00

ALPHAO	BETAO	CP1	CP2	CP3	CP4	CPBV	RUDDER	CHR	CNVT	CBVT	CTVT
-6.216	-6.014	-.39390	-.40110	-.39470	-.37320	-.41800	-.20400	-.01120	.33330	.26600	-.12880
-6.155	-4.091	-.37770	-.39030	-.38090	-.35880	-.39410	-.11130	-.00510	.21260	.16610	-.07630
-6.285	.117	-.35260	-.36600	-.32790	-.34190	-.35170	-.04460	-.00310	-.02370	-.02310	.00990
-6.066	4.273	-.35740	-.36960	-.32970	-.34500	-.36530	.07880	.00290	-.24500	-.20140	.09530
-5.855	6.375	-.37570	-.38250	-.33070	-.36050	-.39070	.17970	.00940	-.36490	-.29540	.14540
	GRADIENT	.00243	.00248	.00613	.00165	.00346	.02271	.00096	-.05471	-.04394	.02052

RUN NO. 1071/ 0 RN/L = 3.50 GRADIENT INTERVAL = -5.00/ 5.00

ALPHAO	BETAO	CP1	CP2	CP3	CP4	CPBV	RUDDER	CHR	CNVT	CBVT	CTVT
-4.144	-6.117	-.38910	-.39330	-.38730	-.36120	-.41390	-.14360	-.00620	.32850	.26140	-.12500
-4.345	-4.025	-.39080	-.38790	-.36820	-.36670	-.39060	-.07290	-.00170	.20070	.15590	-.07070
-4.263	.373	-.36110	-.37020	-.32840	-.34530	-.35810	-.05200	-.00390	-.02810	-.02670	.01130
-3.796	4.339	-.34840	-.36390	-.32110	-.33690	-.35790	.02130	-.00210	-.24050	-.19730	.09250
-3.871	6.167	-.35880	-.37290	-.33330	-.34510	-.36990	.12370	.00480	-.34500	-.27990	.13670
	GRADIENT	.00388	.00289	.00569	.00359	.00397	.01115	-.00006	-.05274	-.04222	.01950

RUN NO. 1072/ 0 RN/L = 3.50 GRADIENT INTERVAL = -5.00/ 5.00

ALPHAO	BETAO	CP1	CP2	CP3	CP4	CPBV	RUDDER	CHR	CNVT	CBVT	CTVT
-.432	-7.047	-.38300	-.38690	-.37620	-.36640	-.40370	-.13980	-.00530	.36380	.28660	-.13590
-.421	-4.889	-.37310	-.38290	-.35780	-.35950	-.38470	-.05610	.00070	.24880	.19620	-.08850
-.381	-.536	-.35120	-.36080	-.32120	-.33470	-.34620	-.06620	.00000	.02370	.01330	-.00470
-.352	3.597	-.34860	-.35740	-.32060	-.33920	-.35080	-.16770	-.00730	-.18020	-.14940	.06360
-.349	5.788	-.34840	-.35870	-.32290	-.33640	-.35750	-.08750	-.00150	-.29330	-.24180	.11170
	GRADIENT	.00291	.00302	.00442	.00242	.00404	-.01305	-.00094	-.05056	-.04073	.01793

IA156A, AEDC PWT 16T-470, O T S W/SILTS (R8NF76) (10 MAY 80)

REFERENCE DATA

SREF = 2630.0000 SQ.FT. XMRP = 976.0000 IN. XT
LREF = 1290.3000 INCHES YMRP = .0000 IN. YT
BREF = 1290.3000 INCHES ZMRP = 400.0000 IN. ZT
SCALE = .0200

PARAMETRIC DATA

IB-ELV = 12.000 OB-ELV = 11.000
BDFLAP = .000 SPDBRK = .000
RUDDER = .000 SILTS = 1.000
MACH = 1.100 RN/L = 3.500

RUN NO. 1073/ 0 RN/L = 3.51 GRADIENT INTERVAL = -5.00/ 5.00

ALPHAO	BETAO	CP1	CP2	CP3	CP4	CPBV	RUDDER	CHR	CNVT	CBVT	CTVT
4.082	-5.734	-.34530	-.35180	-.34000	-.33420	-.35460	.19900	.01030	.25980	.20920	-.08900
3.923	-3.736	-.34780	-.35490	-.33280	-.32870	-.35180	.25060	.01460	.15960	.12570	-.04720
3.823	.181	-.35140	-.36090	-.32710	-.34170	-.34550	-.03910	-.00280	.00470	-.00090	.00040
3.797	3.912	-.33360	-.34660	-.30920	-.32550	-.33770	-.28470	-.01710	-.15820	-.13460	.05310
3.759	6.042	-.34190	-.35680	-.31460	-.32950	-.35810	-.17890	-.00890	-.27240	-.22590	.09990
	GRADIENT	.00183	.00106	.00307	.00039	.00184	-.07002	-.00415	-.04153	-.03402	.01311

IA156A, AEDC PWT 16T-470, O T S W/SILTS (R8NF77) (10 MAY 80)

REFERENCE DATA

SREF = 2690.0000 SQ.FT. XMRP = 976.0000 IN. XT
LREF = 1290.3000 INCHES YMRP = .0000 IN. YT
BREF = 1290.3000 INCHES ZMRP = 400.0000 IN. ZT
SCALE = .0200

PARAMETRIC DATA

IB-ELV = 8.000 OB-ELV = 11.000
BDFLAP = .000 SPDBRK = .000
RUDDER = .000 SILTS = 1.000
MACH = .600 RN/L = 3.500

RUN NO. 1077/ 0 RN/L = 3.50 GRADIENT INTERVAL = -5.00/ 5.00

ALPHAO	BETAO	CP1	CP2	CP3	CP4	CPBV	RUDDER	CHR	CNVT	CBVT	CTVT
-8.237	-7.852	-.27400	-.29000	-.26610	-.25320	-.27130	-.21960	-.01890	.41430	.29380	-.10760
-8.105	-5.811	-.25750	-.27800	-.26050	-.24580	-.26180	-.07440	-.00370	.30050	.22640	-.08260
-8.136	-3.804	-.27660	-.30170	-.28090	-.26050	-.28840	-.03510	-.00060	.18270	.14020	-.05070
-8.043	.294	-.22040	-.23660	-.22160	-.20810	-.23200	-.02720	-.00300	-.03850	-.03190	.01270
-7.918	4.247	-.27580	-.29690	-.27280	-.27650	-.28160	.02430	-.00070	-.24850	-.19200	.07370
-7.903	6.174	-.25060	-.27010	-.24940	-.23640	-.25470	.11340	.00810	-.36100	-.26900	.10500
-7.921	8.177	-.26480	-.28430	-.26960	-.25290	-.26520	.26830	.02430	-.45580	-.32060	.12440
	GRADIENT	.00018	.00069	.00109	-.00190	.00092	.00735	-.00002	-.05356	-.04127	.01545

RUN NO. 1078/ 0 RN/L = 3.50 GRADIENT INTERVAL = -5.00/ 5.00

ALPHAO	BETAO	CP1	CP2	CP3	CP4	CPBV	RUDDER	CHR	CNVT	CBVT	CTVT
-6.160	-7.925	-.26150	-.28490	-.26490	-.25070	-.26550	-.22820	-.01900	.41220	.29180	-.10680
-6.125	-5.906	-.25140	-.27380	-.26070	-.24210	-.26140	-.08480	-.00400	.30370	.22860	-.08350
-6.049	-4.002	-.24700	-.26860	-.25120	-.23520	-.26040	-.04190	-.00030	.18870	.14570	-.05310
-6.113	.076	-.23280	-.24880	-.23590	-.22180	-.24280	-.02420	-.00250	-.03090	-.02430	.00920
-5.959	4.184	-.24110	-.25870	-.23690	-.22640	-.24300	.03500	-.00030	-.24460	-.18550	.07080
-5.881	6.166	-.25020	-.27110	-.24900	-.23790	-.25050	.11920	.00780	-.35510	-.26250	.10270
-5.686	8.298	-.26460	-.28030	-.25640	-.24650	-.26170	.28540	.02530	-.46490	-.32480	.12690
	GRADIENT	.00072	.00120	.00174	.00107	.00212	.00940	.00000	-.05293	-.04046	.01514

IA156A, AEDC PWT 16T-470, O T S W/SILTS (R8NF77) (10 MAY 80)

REFERENCE DATA

SREF = 2690.0000 SQ.FT. XMRP = 976.0000 IN. XT
LREF = 1290.3000 INCHES YMRP = .0000 IN. YT
BREF = 1290.3000 INCHES ZMRP = 400.0000 IN. ZT
SCALE = .0200

PARAMETRIC DATA

IB-ELV = 8.000 OB-ELV = 11.000
BDFLAP = .000 SPDBRK = .000
RUDDER = .000 SILTS = 1.000
MACH = .600 RN/L = 3.500

RUN NO. 1079/ 0 RN/L = 3.50 GRADIENT INTERVAL = -5.00/ 5.00

ALPHAO	BETAO	CP1	CP2	CP3	CP4	CPBV	RUDDER	CHR	CNVT	CBVT	CTVT
-4.011	-8.034	-.26930	-.28470	-.26870	-.25350	-.26810	-.24220	-.02000	.41230	.29130	-.10640
-4.229	-5.946	-.25250	-.27350	-.26180	-.24120	-.25740	-.09540	-.00440	.29940	.22490	-.08200
-4.237	-3.905	-.24100	-.25970	-.24390	-.22770	-.24530	-.05150	-.00040	.17830	.13670	-.04960
-4.049	.181	-.22510	-.23980	-.22390	-.21480	-.23240	-.02400	-.00260	-.02830	-.02210	.00790
-3.721	4.263	-.23960	-.25950	-.23390	-.22720	-.24050	.04950	.00000	-.25120	-.18910	.07280
-3.804	6.057	-.24870	-.26860	-.24550	-.23340	-.24690	.12550	.00770	-.35640	-.26250	.10340
-3.839	8.043	-.26230	-.27780	-.26070	-.24600	-.25900	.27850	.02400	-.45910	-.32160	.12660
	GRADIENT	.00017	.00003	.00122	.00006	.00059	.01236	.00005	-.05258	-.03989	.01499

RUN NO. 1080/ 0 RN/L = 3.50 GRADIENT INTERVAL = -5.00/ 5.00

ALPHAO	BETAO	CP1	CP2	CP3	CP4	CPBV	RUDDER	CHR	CNVT	CBVT	CTVT
-.342	-8.724	-.25810	-.27540	-.25400	-.24150	-.24850	-.30480	-.02610	.43910	.30260	-.10880
-.336	-6.507	-.24780	-.26470	-.25630	-.23340	-.24320	-.13770	-.00780	.32440	.24030	-.08620
-.322	-4.536	-.24680	-.26210	-.24800	-.23100	-.24480	-.07860	-.00130	.21530	.16370	-.05640
-.297	-.416	-.21530	-.22940	-.21520	-.20680	-.22250	-.07140	-.00050	.00800	.00470	-.00010
-.268	3.690	-.22530	-.23960	-.21300	-.21240	-.22370	-.07950	-.00140	-.17850	-.13580	.04510
-.262	5.784	-.23960	-.26350	-.22830	-.22630	-.23620	-.01720	.00530	-.29660	-.22000	.07820
-.256	7.880	-.25250	-.27070	-.24400	-.23660	-.24310	.13450	.02180	-.40670	-.28760	.10530
	GRADIENT	.00262	.00274	.00426	.00226	.00257	-.00012	-.00001	-.04787	-.03641	.01234

RUN NO. 1081/ 0 RN/L = 3.50 GRADIENT INTERVAL = -5.00/ 5.00

ALPHAO	BETAO	CP1	CP2	CP3	CP4	CPBV	RUDDER	CHR	CNVT	CBVT	CTVT
4.168	-7.890	-.24380	-.25830	-.23730	-.22700	-.22730	-.12690	-.02020	.36300	.25610	-.08420
4.094	-5.794	-.23370	-.25000	-.23410	-.22480	-.22950	.01850	-.00400	.24730	.18660	-.05780
4.034	-3.797	-.22650	-.23910	-.22370	-.21160	-.22410	.05770	.00120	.15030	.11560	-.03050
3.846	.081	-.21910	-.23280	-.20900	-.20400	-.22120	-.00330	-.00060	.00300	.00070	.00100
3.893	4.060	-.21560	-.23150	-.20070	-.20060	-.21340	-.07440	-.00300	-.15970	-.12450	.03720
3.845	6.167	-.23130	-.24750	-.21000	-.21330	-.22330	.00280	.00630	-.29510	-.21880	.07580
3.840	8.154	-.24830	-.26450	-.22690	-.22950	-.23510	.14690	.02240	-.39780	-.28080	.10120
	GRADIENT	.00139	.00096	.00292	.00140	.00136	-.01682	-.00053	-.03946	-.03056	.00862

IA156A, AEDC PWT 16T-470, O T S W/SILTS (R8NF77) (10 MAY 80)

REFERENCE DATA

SREF = 2690.0000 SQ.FT. XMRP = 976.0000 IN. XT
LREF = 1290.3000 INCHES YMRP = .0000 IN. YT
BREF = 1290.3000 INCHES ZMRP = 400.0000 IN. ZT
SCALE = .0200

PARAMETRIC DATA

IB-ELV = 8.000 OB-ELV = 11.000
BDFLAP = .000 SPDBRK = .000
RUDDER = .000 SILTS = 1.000
MACH = .600 RN/L = 3.500

RUN NO. 1082/ 0 RN/L = 3.50 GRADIENT INTERVAL = -5.00/ 5.00

ALPHAO	BETAO	CP1	CP2	CP3	CP4	CPBV	RUDDER	CHR	CNVT	CBVT	CTVT
6.183	-7.952	-.24060	-.25990	-.24400	-.22600	-.23140	-.13170	-.02000	.36890	.26030	-.08760
6.174	-5.891	-.23740	-.25460	-.24220	-.22320	-.23510	.01560	-.00340	.25850	.19470	-.06160
6.140	-3.820	-.22340	-.23690	-.22300	-.21870	-.22190	.06010	.00250	.15230	.11720	-.03150
5.860	.186	-.21730	-.22660	-.20360	-.19810	-.21270	-.00790	-.00090	.00060	-.00120	.00150
5.799	4.076	-.21970	-.23550	-.19670	-.20580	-.21490	-.07390	-.00400	-.15430	-.12020	.03480
5.757	5.988	-.23060	-.25160	-.20900	-.21190	-.22420	-.02450	.00240	-.26030	-.19610	.06560
5.835	8.249	-.24780	-.26490	-.21490	-.23200	-.23400	.14910	.02190	-.39220	-.27900	.10100
	GRADIENT	.00047	.00019	.00334	.00165	.00089	-.01697	-.00082	-.03882	-.03006	.00840

RUN NO. 1083/ 0 RN/L = 3.50 GRADIENT INTERVAL = -5.00/ 5.00

ALPHAO	BETAO	CP1	CP2	CP3	CP4	CPBV	RUDDER	CHR	CNVT	CBVT	CTVT
8.082	-7.801	-.24540	-.26300	-.24870	-.23140	-.24500	-.08050	-.01380	.34280	.25260	-.08690
7.988	-5.739	-.23370	-.25300	-.23600	-.21970	-.22670	.04700	.00080	.22840	.17550	-.05380
7.976	-3.763	-.22150	-.23760	-.22070	-.20520	-.21910	.06540	.00380	.13530	.10620	-.02820
7.879	.175	-.21700	-.22860	-.20460	-.20020	-.21730	-.00910	-.00100	-.00140	-.00270	.00170
7.933	4.200	-.22330	-.24070	-.20570	-.20560	-.21750	-.07930	-.00540	-.14210	-.11320	.03180
7.876	6.194	-.23140	-.25180	-.21220	-.21370	-.21850	-.04150	-.00010	-.24440	-.18900	.06230
7.899	8.234	-.23880	-.25680	-.21460	-.22530	-.23130	.10330	.01630	-.36730	-.27150	.09890
	GRADIENT	-.00023	-.00040	.00188	-.00005	.00020	-.01817	-.00116	-.03484	-.02755	.00753

IA156A, AEDC PWT 16T-470, O T S W/SILTS (R8NF78) (10 MAY 80)

REFERENCE DATA

SREF = 2690.0000 SQ.FT. XMRP = 976.0000 IN. XT
LREF = 1290.3000 INCHES YMRP = .0000 IN. YT
BREF = 1290.3000 INCHES ZMRP = 400.0000 IN. ZT
SCALE = .0200

PARAMETRIC DATA

IB-ELV = 8.000 OB-ELV = 11.000
BDFLAP = .000 SPDBRK = .000
RUDDER = .000 SILTS = 1.000
MACH = .800 RN/L = 3.500

RUN NO. 1084/ 0 RN/L = 3.50 GRADIENT INTERVAL = -5.00/ 5.00

ALPHAO	BETAO	CP1	CP2	CP3	CP4	CPBV	RUDDER	CHR	CNVT	CBVT	CTVT
-8.208	-5.827	-.27220	-.29550	-.27760	-.27320	-.29130	.07460	.01000	.30510	.22500	-.07660
-8.259	-3.794	-.26140	-.28250	-.27010	-.25960	-.27530	.12870	.01380	.17240	.12830	-.03720
-8.153	.187	-.25300	-.26390	-.24720	-.24220	-.26490	-.05200	-.00450	-.02090	-.01590	.00390
-7.985	4.362	-.26260	-.28200	-.26730	-.26930	-.27290	-.10470	-.01190	-.24530	-.18270	.06190
-7.993	6.251	-.27150	-.28950	-.27510	-.26190	-.28350	.01340	-.00240	-.35450	-.25320	.09110
	GRADIENT	-.00016	.00003	.00030	-.00123	.00028	-.02849	-.00314	-.05124	-.03815	.01216

RUN NO. 1085/ 0 RN/L = 3.50 GRADIENT INTERVAL = -5.00/ 5.00

ALPHAO	BETAO	CP1	CP2	CP3	CP4	CPBV	RUDDER	CHR	CNVT	CBVT	CTVT
-6.227	-5.994	-.26540	-.28940	-.27180	-.26290	-.28040	.04320	.00790	.30760	.22630	-.07730
-6.157	-4.053	-.25850	-.27310	-.25460	-.25090	-.26620	.10300	.01240	.18730	.13990	-.04220
-6.226	.106	-.23800	-.25160	-.23890	-.23890	-.25050	-.05840	-.00500	-.02170	-.01440	.00220
-6.034	4.269	-.25720	-.27480	-.25440	-.25080	-.26570	-.08750	-.01090	-.23770	-.17330	.05790
-5.982	6.249	-.26950	-.28430	-.26420	-.25860	-.27620	.03590	-.00100	-.35780	-.25370	.09170
	GRADIENT	.00016	-.00021	.00002	.00001	.00006	-.02289	-.00280	-.05107	-.03764	.01203

RUN NO. 1086/ 0 RN/L = 3.50 GRADIENT INTERVAL = -5.00/ 5.00

ALPHAO	BETAO	CP1	CP2	CP3	CP4	CPBV	RUDDER	CHR	CNVT	CBVT	CTVT
-4.202	-6.102	-.26660	-.28180	-.26740	-.27230	-.27220	.00700	.00550	.31050	.22720	-.07780
-4.327	-3.995	-.25100	-.27120	-.25170	-.25420	-.26380	.07650	.01080	.17670	.13170	-.03930
-4.235	.359	-.23560	-.24860	-.23210	-.23310	-.24700	-.05430	-.00490	-.02710	-.01730	.00200
-3.799	4.314	-.24720	-.26360	-.24240	-.23740	-.25260	-.05860	-.00940	-.24190	-.17680	.06030
-3.854	6.166	-.25940	-.28190	-.25890	-.25140	-.26670	.05350	-.00020	-.35260	-.25080	.09170
	GRADIENT	.00051	.00099	.00118	.00207	.00139	-.01649	-.00245	-.05032	-.03708	.01194

RUN NO. 1087/ 0 RN/L = 3.50 GRADIENT INTERVAL = -5.00/ 5.00

ALPHAO	BETAO	CP1	CP2	CP3	CP4	CPBV	RUDDER	CHR	CNVT	CBVT	CTVT
-.368	-6.886	-.25700	-.27030	-.25540	-.24580	-.25760	-.11100	-.00390	.34870	.24990	-.08640
-.357	-4.773	-.24460	-.25620	-.24020	-.23530	-.24560	.02550	.00800	.22880	.16920	-.05200
-.328	-.488	-.22580	-.23720	-.21660	-.21480	-.22920	-.06730	-.00010	.01040	.00820	-.00240
-.291	3.604	-.24200	-.25180	-.23090	-.22880	-.23980	-.17440	-.00940	-.17550	-.12750	.03460
-.293	5.707	-.24650	-.26760	-.24050	-.24480	-.24950	-.06850	-.00020	-.29680	-.21580	.07290
	GRADIENT	.00034	.00056	.00115	.00081	.00072	-.02385	-.00208	-.04829	-.03544	.01035

IA156A, AEDC PWT 16T-470, O T S W/SILTS (R8NF78) (10 MAY 80)

REFERENCE DATA

SREF = 2690.0000 SQ.FT. XMRP = 976.0000 IN. XT
LREF = 1290.3000 INCHES YMRP = .0000 IN. YT
BREF = 1290.3000 INCHES ZMRP = 400.0000 IN. ZT
SCALE = .0200

PARAMETRIC DATA

IB-ELV = 8.000 OB-ELV = 11.000
BDFLAP = .000 SPDBRK = .000
RUDDER = .000 SILTS = 1.000
MACH = .800 RN/L = 3.500

RUN NO. 1088/ 0 RN/L = 3.50 GRADIENT INTERVAL = -5.00/ 5.00

ALPHAO	BETAO	CP1	CP2	CP3	CP4	CPBV	RUDDER	CHR	CNVT	CBVT	CTVT
4.102	-5.778	-.24450	-.26050	-.24360	-.23790	-.24520	.06290	.00070	.26560	.19770	-.06100
3.956	-3.668	-.22850	-.24090	-.22430	-.22000	-.23120	.13370	.00760	.14500	.10850	-.02290
3.725	.127	-.22960	-.24230	-.21780	-.22020	-.23040	-.00530	-.00060	.00160	.00080	-.00030
3.815	4.006	-.23780	-.25150	-.22350	-.22150	-.23620	-.14950	-.00900	-.15920	-.11960	.03020
3.759	6.090	-.24970	-.26490	-.23500	-.23360	-.24640	-.03910	.00140	-.29250	-.21440	.07210
	GRADIENT	-.00122	-.00138	.00010	-.00020	-.00065	-.03690	-.00216	-.03965	-.02973	.00692

RUN NO. 1089/ 0 RN/L = 3.50 GRADIENT INTERVAL = -5.00/ 5.00

ALPHAO	BETAO	CP1	CP2	CP3	CP4	CPBV	RUDDER	CHR	CNVT	CBVT	CTVT
6.021	-5.724	-.24480	-.26280	-.24060	-.24530	-.24990	.09060	.00380	.25020	.19050	-.05880
6.060	-3.767	-.23230	-.24920	-.22810	-.23140	-.23830	.17410	.01200	.14040	.10800	-.02200
5.741	.168	-.22490	-.23450	-.21190	-.20930	-.22060	-.00450	-.00040	-.00180	-.00150	.00020
5.688	3.981	-.23710	-.24710	-.21460	-.21640	-.23320	-.17450	-.01200	-.13810	-.10520	.02190
5.728	6.167	-.24730	-.26570	-.23240	-.23640	-.24810	-.06690	-.00170	-.26830	-.20350	.06780
	GRADIENT	-.00061	.00029	.00175	.00196	.00068	-.04499	-.00310	-.03594	-.02752	.00567

IA156A, AEDC PWT 16T-470, O T S W/SILTS (R8NF79) (10 MAY 80)

REFERENCE DATA

SREF = 2690.0000 SQ.FT. XMRP = 976.0000 IN. XT
LREF = 1290.3000 INCHES YMRP = .0000 IN. YT
BREF = 1290.3000 INCHES ZMRP = 400.0000 IN. ZT
SCALE = .0200

PARAMETRIC DATA

IB-ELV = 8.000 OB-ELV = 11.000
BDFLAP = .000 SPDBRK = .000
RUDDER = .000 SILTS = 1.000
MACH = .900 RN/L = 3.500

RUN NO. 1090/ 0 RN/L = 3.50 GRADIENT INTERVAL = -5.00/ 5.00

ALPHAO	BETAO	CP1	CP2	CP3	CP4	CPBV	RUDDER	CHR	CNVT	CBVT	CTVT
-8.163	-5.980	-.30960	-.31720	-.30170	-.30660	-.30960	.19890	.01930	.31060	.23220	-.08370
-8.256	-3.765	-.28460	-.30530	-.28730	-.27890	-.29940	.27170	.02430	.16280	.11650	-.02860
-8.171	.183	-.26440	-.27660	-.25590	-.26020	-.27830	-.01360	-.00110	-.01930	-.01310	.00260
-8.000	4.389	-.28250	-.29760	-.28000	-.27570	-.29580	-.20300	-.01890	-.23250	-.17030	.05490
-8.015	6.269	-.30060	-.31430	-.29220	-.29770	-.31170	-.12960	-.01370	-.34460	-.25000	.09200
	GRADIENT	.00021	.00088	.00082	.00035	.00039	-.05808	-.00529	-.04851	-.03520	.01026

IA156A, AEDC PWT 16T-470, O T S W/SILTS (R8NF79) (10 MAY 80)

REFERENCE DATA

SREF = 2690.0000 SQ.FT. XMRP = 976.0000 IN. XT
LREF = 1290.3000 INCHES YMRP = .0000 IN. YT
BREF = 1290.3000 INCHES ZMRP = 400.0000 IN. ZT
SCALE = .0200

PARAMETRIC DATA

IB-ELV = 8.000 OB-ELV = 11.000
BDFLAP = .000 SPDBRK = .000
RUDDER = .000 SILTS = 1.000
MACH = .900 RN/L = 3.500

RUN NO. 1091/ 0 RN/L = 3.50 GRADIENT INTERVAL = -5.00/ 5.00

ALPHAO	BETAO	CP1	CP2	CP3	CP4	CPBV	RUDDER	CHR	CNVT	CBVT	CTVT
-6.207	-5.982	-.29820	-.31260	-.30080	-.29080	-.30620	.21300	.02100	.30680	.22860	-.08100
-6.160	-4.066	-.28360	-.30380	-.28940	-.28150	-.30020	.18690	.01820	.18080	.13180	-.03810
-6.246	.099	-.25950	-.27380	-.25950	-.25170	-.27210	.00550	.00050	-.01960	-.01350	.00340
-6.053	4.268	-.27570	-.29500	-.27350	-.27520	-.28920	-.17860	-.01740	-.22320	-.16100	.05020
-5.987	6.245	-.29110	-.30790	-.28370	-.28820	-.30280	-.09630	-.01180	-.33970	-.24480	.08950
	GRADIENT	.00095	.00105	.00191	.00075	.00132	-.04385	-.00427	-.04847	-.03513	.01059

RUN NO. 1092/ 0 RN/L = 3.50 GRADIENT INTERVAL = -5.00/ 5.00

ALPHAO	BETAO	CP1	CP2	CP3	CP4	CPBV	RUDDER	CHR	CNVT	CBVT	CTVT
-4.073	-6.116	-.29140	-.30330	-.28850	-.28280	-.29390	.16130	.01760	.30300	.22490	-.07920
-4.333	-3.999	-.27170	-.29130	-.27500	-.27060	-.28700	.10260	.01210	.17660	.13310	-.04370
-4.257	.376	-.26070	-.27520	-.25260	-.25220	-.27000	.00430	.00010	-.02910	-.02050	.00460
-3.789	4.327	-.27260	-.29410	-.27560	-.26550	-.28280	-.12100	-.01370	-.22530	-.16400	.05230
-3.880	6.173	-.29020	-.30940	-.28880	-.28150	-.30070	-.07460	-.01050	-.33220	-.24060	.08720
	GRADIENT	-.00006	-.00026	.00002	.00068	.00056	-.02678	-.00309	-.04825	-.03567	.01152

RUN NO. 1093/ 0 RN/L = 3.50 GRADIENT INTERVAL = -5.00/ 5.00

ALPHAO	BETAO	CP1	CP2	CP3	CP4	CPBV	RUDDER	CHR	CNVT	CBVT	CTVT
-.389	-6.982	-.28710	-.29880	-.28450	-.27700	-.28900	.01940	.00690	.33990	.24470	-.08530
-.373	-4.837	-.26820	-.28100	-.26810	-.26200	-.27550	.08810	.01240	.23010	.17900	-.06260
-.343	-.533	-.24190	-.25670	-.24520	-.23590	-.25610	-.05600	.00080	.01550	.01130	-.00510
-.307	3.577	-.25630	-.27130	-.25940	-.24690	-.26530	-.17670	-.00890	-.16790	-.12890	.03650
-.309	5.752	-.27440	-.29050	-.27020	-.26490	-.28120	-.15210	-.00690	-.28250	-.20980	.06980
	GRADIENT	.00145	.00119	.00107	.00183	.00124	-.03149	-.00253	-.04732	-.03661	.01179

RUN NO. 1094/ 0 RN/L = 3.50 GRADIENT INTERVAL = -5.00/ 5.00

ALPHAO	BETAO	CP1	CP2	CP3	CP4	CPBV	RUDDER	CHR	CNVT	CBVT	CTVT
4.085	-5.763	-.27510	-.28400	-.26830	-.27200	-.27700	.29550	.01940	.24080	.18270	-.05050
3.944	-3.664	-.25200	-.26440	-.24890	-.24730	-.26470	.32770	.02260	.13300	.10650	-.02180
3.705	.123	-.23820	-.25280	-.24140	-.23060	-.25070	.01350	.00100	.00730	.00400	-.00250
3.811	3.993	-.25370	-.27230	-.25890	-.24430	-.26850	-.27680	-.01850	-.13900	-.11360	.02460
3.760	6.091	-.27420	-.29110	-.27290	-.26440	-.28450	-.20110	-.01170	-.26290	-.20180	.06360
	GRADIENT	-.00024	-.00105	-.00132	.00038	-.00051	-.07894	-.00537	-.03553	-.02875	.00606

IA156A, AEDC PWT 16T-470, O T S W/SILTS (R8NF80) (10 MAY 80)

REFERENCE DATA

SREF = 2690.0000 SQ.FT. XMRP = 976.0000 IN. XT
LREF = 1290.3000 INCHES YMRP = .0000 IN. YT
BREF = 1290.3000 INCHES ZMRP = 400.0000 IN. ZT
SCALE = .0200

PARAMETRIC DATA

IB-ELV = 8.000 OB-ELV = 11.000
BDFLAP = .000 SPDBRK = .000
RUDDER = .000 SILTS = 1.000
MACH = .950 RN/L = 3.500

RUN NO. 1095/ 0 RN/L = 3.50 GRADIENT INTERVAL = -5.00/ 5.00

ALPHAO	BETAO	CP1	CP2	CP3	CP4	CPBV	RUDDER	CHR	CNVT	CBVT	CTVT
-8.294	-6.047	-.34460	-.35360	-.32300	-.33530	-.34160	.31940	.02810	.33170	.25780	-.10320
-8.203	-3.771	-.31590	-.33040	-.31530	-.30920	-.32230	.40890	.03410	.17580	.12770	-.03850
-8.185	.173	-.30030	-.31550	-.28820	-.29160	-.31280	-.09570	-.00740	-.01900	-.01590	.00310
-8.002	4.454	-.32490	-.33580	-.32000	-.31370	-.33450	-.32020	-.02740	-.25140	-.19740	.07470
-8.009	6.271	-.34330	-.35320	-.33400	-.33180	-.35040	-.22390	-.02060	-.36100	-.27780	.11330
	GRADIENT	-.00116	-.00071	-.00067	-.00061	-.00153	-.08813	-.00744	-.05197	-.03957	.01380

RUN NO. 1096/ 0 RN/L = 3.50 GRADIENT INTERVAL = -5.00/ 5.00

ALPHAO	BETAO	CP1	CP2	CP3	CP4	CPBV	RUDDER	CHR	CNVT	CBVT	CTVT
-6.221	-6.002	-.32840	-.34250	-.32580	-.32160	-.33180	.31630	.02840	.31900	.24630	-.09600
-6.164	-4.065	-.31770	-.33200	-.31640	-.30730	-.32560	.38510	.03300	.18840	.13710	-.04140
-6.250	.111	-.29030	-.30330	-.28120	-.28170	-.30050	-.11240	-.00870	-.01610	-.01020	-.00180
-6.035	4.265	-.31920	-.33270	-.31390	-.30980	-.32820	-.31060	-.02710	-.23610	-.18090	.06550
-6.006	6.274	-.33970	-.34630	-.32100	-.32970	-.34020	-.21380	-.02030	-.35350	-.26910	.10790
	GRADIENT	-.00017	-.00008	.00031	-.00029	-.00031	-.08354	-.00722	-.05095	-.03817	.01283

RUN NO. 1097/ 0 RN/L = 3.50 GRADIENT INTERVAL = -5.00/ 5.00

ALPHAO	BETAO	CP1	CP2	CP3	CP4	CPBV	RUDDER	CHR	CNVT	CBVT	CTVT
-4.066	-6.173	-.32270	-.33640	-.31600	-.31430	-.32470	.32320	.02970	.31280	.23680	-.08810
-4.331	-3.998	-.30700	-.32030	-.31120	-.29710	-.31280	.37280	.03280	.17130	.12120	-.03210
-4.261	.376	-.28710	-.29760	-.26850	-.27430	-.29760	-.06610	-.00540	-.02410	-.01560	.00010
-3.793	4.340	-.30340	-.31960	-.29200	-.29220	-.30890	-.32450	-.02910	-.23710	-.17970	.06280
-3.885	6.172	-.32640	-.34030	-.31680	-.31330	-.32930	-.22560	-.02190	-.34240	-.25870	.10170
	GRADIENT	.00050	.00017	.00243	.00067	.00052	-.08392	-.00745	-.04891	-.03600	.01131

RUN NO. 1098/ 0 RN/L = 3.51 GRADIENT INTERVAL = -5.00/ 5.00

ALPHAO	BETAO	CP1	CP2	CP3	CP4	CPBV	RUDDER	CHR	CNVT	CBVT	CTVT
-.411	-7.031	-.32640	-.33240	-.31720	-.31520	-.32110	.21080	.02150	.33220	.24640	-.08840
-.392	-4.836	-.29750	-.30690	-.29400	-.28810	-.29310	.26130	.02540	.21890	.16650	-.05430
-.358	-.565	-.26950	-.27650	-.25990	-.25950	-.27270	-.03310	.00260	.01450	.00780	-.00180
-.321	3.586	-.28850	-.29830	-.27740	-.27870	-.28800	-.32380	-.02000	-.16770	-.12780	.03540
-.326	5.762	-.31600	-.32330	-.29900	-.30890	-.31220	-.30640	-.01870	-.27870	-.21590	.07720
	GRADIENT	.00109	.00105	.00200	.00114	.00063	-.06947	-.00539	-.04591	-.03495	.01066

IA156A, AEDC PWT 16T-470, O T S W/SILTS (R8NF80) (10 MAY 80)

REFERENCE DATA

SREF = 2690.0000 SQ.FT. XMRP = 976.0000 IN. XT
LREF = 1290.3000 INCHES YMRP = .0000 IN. YT
BREF = 1290.3000 INCHES ZMRP = 400.0000 IN. ZT
SCALE = .0200

PARAMETRIC DATA

IB-ELV = 8.000 OB-ELV = 11.000
BDFLAP = .000 SPDBRK = .000
RUDDER = .000 SILTS = 1.000
MACH = .950 RN/L = 3.500

RUN NO. 1099/ 0 RN/L = 3.50 GRADIENT INTERVAL = -5.00/ 5.00

ALPHAO	BETAO	CP1	CP2	CP3	CP4	CPBV	RUDDER	CHR	CNVT	CBVT	CTVT
4.075	-5.728	-.29420	-.29900	-.28590	-.28700	-.28970	.35790	.02360	.22450	.17640	-.05120
3.951	-3.749	-.27720	-.28320	-.26550	-.27000	-.27820	.25940	.01650	.12460	.09520	-.01730
3.844	.183	-.27950	-.28580	-.26280	-.26480	-.27880	.03250	.00250	-.00020	-.00390	.00320
3.797	3.935	-.28500	-.29360	-.26810	-.27380	-.28260	-.21240	-.01290	-.13540	-.10900	.02620
3.766	6.057	-.31040	-.31950	-.28910	-.29620	-.30950	-.32470	-.02100	-.25280	-.20340	.06720
	GRADIENT	-.00101	-.00135	-.00033	-.00048	-.00057	-.06137	-.00382	-.03382	-.02656	.00566

IA156A, AEDC PWT 16T-470, O T S W/SILTS (R8NF81) (10 MAY 80)

REFERENCE DATA

SREF = 2690.0000 SQ.FT. XMRP = 976.0000 IN. XT
LREF = 1290.3000 INCHES YMRP = .0000 IN. YT
BREF = 1290.3000 INCHES ZMRP = 400.0000 IN. ZT
SCALE = .0200

PARAMETRIC DATA

IB-ELV = 8.000 OB-ELV = 11.000
BDFLAP = .000 SPDBRK = .000
RUDDER = .000 SILTS = 1.000
MACH = 1.050 RN/L = 3.500

RUN NO. 1102/ 0 RN/L = 3.50 GRADIENT INTERVAL = -5.00/ 5.00

ALPHAO	BETAO	CP1	CP2	CP3	CP4	CPBV	RUDDER	CHR	CNVT	CBVT	CTVT
-8.214	-5.985	-.43640	-.43850	-.43360	-.42440	-.45790	-.09890	-.00420	.35120	.28160	-.13390
-8.268	-3.873	-.42720	-.44000	-.42020	-.41560	-.44500	-.02320	.00060	.21150	.16740	-.07480
-8.188	.281	-.40730	-.41400	-.38500	-.39420	-.40990	.02690	.00190	-.03240	-.02810	.01300
-8.026	4.295	-.40770	-.42170	-.38960	-.39810	-.42920	.09070	.00430	-.26750	-.21840	.10270
-8.003	6.264	-.41870	-.42560	-.39960	-.40470	-.44260	.15410	.00830	-.38510	-.30880	.14960
	GRADIENT	.00240	.00226	.00377	.00216	.00197	.01393	.00045	-.05864	-.04723	.02173

RUN NO. 1103/ 0 RN/L = 3.50 GRADIENT INTERVAL = -5.00/ 5.00

ALPHAO	BETAO	CP1	CP2	CP3	CP4	CPBV	RUDDER	CHR	CNVT	CBVT	CTVT
-6.206	-5.996	-.43290	-.44250	-.43540	-.41620	-.46180	-.08710	-.00280	.34800	.27930	-.13270
-6.165	-4.087	-.43490	-.44070	-.42540	-.41850	-.44950	-.02920	.00080	.22080	.17470	-.07830
-6.271	.104	-.41330	-.42170	-.38670	-.40010	-.41300	.02800	.00210	-.02540	-.02210	.01030
-6.068	4.277	-.39720	-.40840	-.37460	-.38810	-.40920	.01020	-.00210	-.25770	-.20870	.09640
-5.861	6.383	-.41780	-.42590	-.39620	-.40710	-.43500	.13160	.00610	-.38570	-.30770	.14840
	GRADIENT	.00451	.00386	.00608	.00364	.00482	.00472	-.00035	-.05721	-.04584	.02089

IA156A, AEDC PWT 16T-470, O T S W/SILTS (R8NF81) (10 MAY 80)

REFERENCE DATA

SREF = 2690.0000 SQ.FT. XMRP = 976.0000 IN. XT
LREF = 1290.3000 INCHES YMRP = .0000 IN. YT
BREF = 1290.3000 INCHES ZMRP = 400.0000 IN. ZT
SCALE = .0200

PARAMETRIC DATA

IB-ELV = 8.000 OB-ELV = 11.000
BDFLAP = .000 SPDBRK = .000
RUDDER = .000 SILTS = 1.000
MACH = 1.050 RN/L = 3.500

RUN NO. 1104/ 0 RN/L = 3.50 GRADIENT INTERVAL = -5.00/ 5.00

ALPHAO	BETAO	CP1	CP2	CP3	CP4	CPBV	RUDDER	CHR	CNVT	CBVT	CTVT
-4.122	-6.131	-.43580	-.44060	-.43050	-.42210	-.45990	-.05930	-.00020	.33960	.27160	-.12770
-4.345	-4.018	-.42310	-.43500	-.41060	-.40560	-.43800	.00840	.00420	.20540	.16170	-.07120
-4.269	.372	-.41820	-.42660	-.38510	-.40740	-.41590	.02490	.00160	-.03300	-.02820	.01270
-3.793	4.343	-.40130	-.41150	-.37300	-.38580	-.41020	-.02670	-.00570	-.25800	-.20910	.09620
-3.868	6.162	-.39470	-.40450	-.37160	-.38290	-.40830	.07920	.00170	-.36440	-.29210	.14010
	GRADIENT	.00258	.00280	.00452	.00232	.00336	-.00406	-.00117	-.05541	-.04433	.02001

RUN NO. 1105/ 0 RN/L = 3.49 GRADIENT INTERVAL = -5.00/ 5.00

ALPHAO	BETAO	CP1	CP2	CP3	CP4	CPBV	RUDDER	CHR	CNVT	CBVT	CTVT
-.450	-7.051	-.43790	-.44340	-.43120	-.42240	-.45760	-.06040	.00040	.37340	.29380	-.13610
-.431	-4.894	-.42780	-.43720	-.40890	-.40770	-.44050	.03150	.00720	.24930	.19840	-.08680
-.401	-.555	-.39750	-.40440	-.37180	-.38740	-.39120	.03920	.00780	.01760	.01060	-.00140
-.371	3.591	-.40440	-.41180	-.37780	-.39500	-.40650	-.18670	-.00890	-.18870	-.15320	.06360
-.371	5.773	-.40790	-.41590	-.38150	-.39770	-.41320	-.11730	-.00380	-.30200	-.24600	.11180
	GRADIENT	.00279	.00303	.00370	.00152	.00406	-.02550	-.00188	-.05163	-.04145	.01774

RUN NO. 1106/ 0 RN/L = 3.49 GRADIENT INTERVAL = -5.00/ 5.00

ALPHAO	BETAO	CP1	CP2	CP3	CP4	CPBV	RUDDER	CHR	CNVT	CBVT	CTVT
4.083	-5.750	-.40350	-.40980	-.39600	-.39160	-.41140	.23390	.01320	.26450	.21220	-.08820
3.909	-3.651	-.40310	-.41270	-.39140	-.39620	-.40820	.29290	.01820	.15260	.12060	-.04230
3.738	.112	-.39770	-.40540	-.37300	-.38470	-.39350	.08580	.00620	.00380	-.00100	.00340
3.803	3.989	-.39180	-.40330	-.36990	-.37970	-.39800	-.26350	-.01600	-.16610	-.13910	.05450
3.764	6.060	-.39880	-.40800	-.37070	-.39030	-.41610	-.20620	-.01110	-.27810	-.22800	.09870
	GRADIENT	.00148	.00123	.00280	.00216	.00132	-.07292	-.00448	-.04173	-.03400	.01267

IA156A, AEDC PWT 16T-470, O T S W/SILTS (R8NF82) (10 MAY 80)

REFERENCE DATA

SREF = 2690.0000 SQ.FT. XMRP = 976.0000 IN. XT
LREF = 1290.3000 INCHES YMRP = .0000 IN. YT
BREF = 1290.3000 INCHES ZMRP = 400.0000 IN. ZT
SCALE = .0200

PARAMETRIC DATA

IB-ELV = 8.000 OB-ELV = 11.000
BDFLAP = .000 SPDBRK = .000
RUDDER = .000 SILTS = 1.000
MACH = 1.100 RN/L = 3.500

RUN NO. 1107/ 0 RN/L = 3.51 GRADIENT INTERVAL = -5.00/ 5.00

ALPHAO	BETAO	CP1	CP2	CP3	CP4	CPBV	RUDDER	CHR	CNVT	CBVT	CTVT
-8.232	-5.903	-.40050	-.40170	-.40030	-.38780	-.41990	-.18390	-.01020	.33210	.26590	-.12810
-8.255	-3.825	-.38950	-.39520	-.37790	-.36670	-.39970	-.06350	-.00240	.19810	.15450	-.06930
-8.187	.192	-.36330	-.36960	-.34440	-.35020	-.36750	.01880	.00130	-.03240	-.02920	.01340
-8.011	4.349	-.37230	-.38290	-.35110	-.36050	-.39450	.13540	.00740	-.26170	-.21400	.10170
-8.016	6.268	-.36810	-.37800	-.35560	-.35820	-.39820	.22350	.01300	-.37110	-.29990	.14790
	GRADIENT	.00208	.00148	.00325	.00074	.00059	.02435	.00120	-.05624	-.04508	.02092

RUN NO. 1108/ 0 RN/L = 3.50 GRADIENT INTERVAL = -5.00/ 5.00

ALPHAO	BETAO	CP1	CP2	CP3	CP4	CPBV	RUDDER	CHR	CNVT	CBVT	CTVT
-6.213	-6.003	-.38380	-.39230	-.38880	-.36620	-.41000	-.14480	-.00690	.32450	.26030	-.12460
-6.166	-4.086	-.37670	-.38790	-.37400	-.35940	-.39140	-.02810	.00090	.20550	.16160	-.07230
-6.283	.119	-.35320	-.36560	-.33950	-.34510	-.35750	.02310	.00170	-.02860	-.02510	.01150
-6.042	4.262	-.35530	-.36580	-.33510	-.34390	-.36630	.06760	.00210	-.25020	-.20320	.09520
-6.011	6.265	-.36520	-.37310	-.34550	-.35250	-.38590	.17600	.00920	-.36120	-.29240	.14340
	GRADIENT	.00257	.00265	.00467	.00186	.00302	.01147	.00014	-.05459	-.04370	.02006

RUN NO. 1109/ 0 RN/L = 3.51 GRADIENT INTERVAL = -5.00/ 5.00

ALPHAO	BETAO	CP1	CP2	CP3	CP4	CPBV	RUDDER	CHR	CNVT	CBVT	CTVT
-4.293	-6.047	-.38040	-.38970	-.38140	-.36020	-.40770	-.11990	-.00450	.32010	.25670	-.12220
-4.317	-4.024	-.36500	-.37790	-.35880	-.34740	-.38050	-.03190	.00120	.19230	.15050	-.06690
-4.257	.346	-.35080	-.36410	-.32990	-.34190	-.35340	.01840	.00110	-.03370	-.02960	.01340
-3.776	4.319	-.34160	-.35670	-.32260	-.33350	-.35330	.03370	-.00120	-.24630	-.19970	.09290
-3.893	6.173	-.35070	-.36600	-.34720	-.34320	-.37070	.13050	.00530	-.35020	-.28240	.13740
	GRADIENT	.00281	.00255	.00438	.00166	.00331	.00792	-.00028	-.05255	-.04196	.01914

RUN NO. 1110/ 0 RN/L = 3.50 GRADIENT INTERVAL = -5.00/ 5.00

ALPHAO	BETAO	CP1	CP2	CP3	CP4	CPBV	RUDDER	CHR	CNVT	CBVT	CTVT
-.453	-7.058	-.37510	-.38410	-.38650	-.35660	-.40470	-.09550	-.00210	.36210	.28630	-.13440
-.435	-4.893	-.36710	-.37920	-.35810	-.35310	-.38520	.00330	.00500	.24000	.19070	-.08420
-.401	-.488	-.33830	-.35160	-.32350	-.32940	-.33880	.00000	.00480	.01400	.00670	-.00040
-.365	3.607	-.32590	-.33960	-.31480	-.32010	-.33380	-.17620	-.00790	-.18440	-.15080	.06340
-.367	5.777	-.33850	-.34970	-.32370	-.32910	-.34830	-.10170	-.00250	-.29550	-.24180	.11070
	GRADIENT	.00487	.00468	.00513	.00390	.00610	-.02086	-.00150	-.04995	-.04020	.01739

IA156A, AEDC PWT 16T-470, O T S W/SILTS (R8NF82) (10 MAY 80)

REFERENCE DATA

SREF = 2690.0000 SQ.FT. XMRP = 976.0000 IN. XT
LREF = 1290.3000 INCHES YMRP = .0000 IN. YT
BREF = 1290.3000 INCHES ZMRP = 400.0000 IN. ZT
SCALE = .0200

PARAMETRIC DATA

IB-ELV = 8.000 OB-ELV = 11.000
BDFLAP = .000 SPDBRK = .000
RUDDER = .000 SILTS = 1.000
MACH = 1.100 RN/L = 3.500

RUN NO. 1111/ 0 RN/L = 3.50 GRADIENT INTERVAL = -5.00/ 5.00

ALPHAO	BETAO	CP1	CP2	CP3	CP4	CPBV	RUDDER	CHR	CNVT	CBVT	CTVT
4.078	-5.753	-.35050	-.35440	-.33890	-.33200	-.36270	.22210	.01200	.25750	.20750	-.08720
3.945	-3.680	-.33720	-.34810	-.32860	-.32350	-.34500	.28710	.01730	.15220	.12050	-.04320
3.680	.122	-.33920	-.35120	-.31960	-.32730	-.33780	.07520	.00530	-.00200	-.00510	.00460
3.789	3.976	-.32490	-.33740	-.30890	-.31540	-.33300	-.25490	-.01500	-.16480	-.13850	.05480
3.768	6.065	-.33320	-.34250	-.30980	-.31840	-.34830	-.17780	-.00880	-.27790	-.22860	.10060
	GRADIENT	.00161	.00140	.00257	.00106	.00157	-.07083	-.00422	-.04141	-.03383	.01280

IA156A, AEDC PWT 16T-470, O T S W/SILTS (R8NF83) (10 MAY 80)

REFERENCE DATA

SREF = 2690.0000 SQ.FT. XMRP = 976.0000 IN. XT
LREF = 1290.3000 INCHES YMRP = .0000 IN. YT
BREF = 1290.3000 INCHES ZMRP = 400.0000 IN. ZT
SCALE = .0200

PARAMETRIC DATA

IB-ELV = 8.000 OB-ELV = 9.000
BDFLAP = .000 SPDBRK = .000
RUDDER = .000 SILTS = 1.000
MACH = .600 RN/L = 3.500

RUN NO. 1114/ 0 RN/L = 3.51 GRADIENT INTERVAL = -5.00/ 5.00

ALPHAO	BETAO	CP1	CP2	CP3	CP4	CPBV	RUDDER	CHR	CNVT	CBVT	CTVT
-8.219	-7.832	-.27700	-.29140	-.26830	-.25970	-.27760	-.21680	-.01860	.41160	.29040	-.10620
-8.099	-5.891	-.26150	-.28240	-.27870	-.24350	-.26620	-.07830	-.00410	.30680	.22940	-.08290
-8.140	-3.791	-.25060	-.27090	-.26210	-.23550	-.26180	-.02920	.00010	.17110	.13100	-.04600
-8.051	.301	-.23590	-.25240	-.23970	-.22380	-.24880	-.01120	-.00130	-.04410	-.03580	.01490
-7.910	4.243	-.24480	-.26620	-.24440	-.23380	-.24960	.02950	-.00010	-.25520	-.19620	.07570
-7.897	6.183	-.25660	-.27890	-.26290	-.24610	-.26280	.11250	.00790	-.36590	-.27170	.10610
-7.934	8.177	-.26680	-.28450	-.26370	-.25190	-.26770	.26210	.02350	-.46660	-.32780	.12740
	GRADIENT	.00074	.00061	.00222	.00023	.00153	.00729	-.00003	-.05306	-.04073	.01515

RUN NO. 1115/ 0 RN/L = 3.51 GRADIENT INTERVAL = -5.00/ 5.00

ALPHAO	BETAO	CP1	CP2	CP3	CP4	CPBV	RUDDER	CHR	CNVT	CBVT	CTVT
-6.156	-7.922	-.26470	-.28220	-.27540	-.25050	-.26830	-.23350	-.01960	.40870	.28840	-.10520
-6.128	-5.909	-.25620	-.27370	-.25660	-.24350	-.25990	-.07780	-.00330	.29380	.22060	-.07930
-6.052	-4.007	-.24300	-.26520	-.24840	-.23130	-.25560	-.04000	-.00010	.17870	.13740	-.04870
-6.113	.075	-.22490	-.24180	-.22110	-.21440	-.23780	-.01210	-.00120	-.03660	-.02820	.01150
-5.946	4.190	-.24280	-.26650	-.23550	-.23180	-.24670	.03660	-.00010	-.25170	-.19020	.07310
-5.887	6.166	-.26860	-.29110	-.26810	-.25810	-.27290	.11630	.00750	-.36340	-.26780	.10460
-5.690	8.305	-.26290	-.28040	-.25530	-.24770	-.26100	.28080	.02450	-.47280	-.32920	.12840
	GRADIENT	.00002	-.00017	.00157	-.00007	.00108	.00935	.00000	-.05250	-.03996	.01486

IA156A, AEDC PWT 16T-470, O T S W/SILTS (R8NF83) (10 MAY 80)

REFERENCE DATA

SREF = 2690.0000 SQ.FT. XMRP = 976.0000 IN. XT
LREF = 1290.3000 INCHES YMRP = .0000 IN. YT
BREF = 1290.3000 INCHES ZMRP = 400.0000 IN. ZT
SCALE = .0200

PARAMETRIC DATA

IB-ELV = 8.000 OB-ELV = 9.000
BDFLAP = .000 SPDBRK = .000
RUDDER = .000 SILTS = 1.000
MACH = .600 RN/L = 3.500

RUN NO. 1117/ 0 RN/L = 3.49 GRADIENT INTERVAL = -5.00/ 5.00

ALPHAO	BETAO	CP1	CP2	CP3	CP4	CPBV	RUDDER	CHR	CNVT	CBVT	CTVT
-4.005	-7.950	-.26080	-.28200	-.26640	-.25150	-.26320	-.24210	-.02000	.40770	.28750	-.10480
-4.230	-5.941	-.25500	-.27300	-.26140	-.24050	-.25910	-.08470	-.00320	.28690	.21500	-.07720
-4.234	-3.892	-.24410	-.26130	-.24930	-.23220	-.25030	-.04640	.00010	.16690	.12810	-.04540
-4.049	.174	-.22020	-.23890	-.22030	-.21350	-.23240	-.00880	-.00090	-.03350	-.02580	.01010
-3.718	4.264	-.23540	-.25470	-.22890	-.22330	-.23440	.05130	.00020	-.25470	-.19080	.07370
-3.792	6.053	-.24690	-.26550	-.24370	-.23430	-.24570	.12420	.00750	-.36330	-.26600	.10450
-3.931	8.046	-.25830	-.27700	-.25620	-.24430	-.25590	.26450	.02240	-.46700	-.32680	.12850
	GRADIENT	.00106	.00080	.00250	.00109	.00195	.01198	.00001	-.05170	-.03910	.01460

RUN NO. 1118/ 0 RN/L = 3.50 GRADIENT INTERVAL = -5.00/ 5.00

ALPHAO	BETAO	CP1	CP2	CP3	CP4	CPBV	RUDDER	CHR	CNVT	CBVT	CTVT
-.345	-8.769	-.25410	-.27430	-.26240	-.24300	-.25110	-.31190	-.02680	.44310	.30510	-.11030
-.339	-6.697	-.24700	-.26550	-.25580	-.23430	-.24540	-.15070	-.00920	.33150	.24310	-.08640
-.327	-4.423	-.23460	-.25200	-.23780	-.22090	-.23660	-.07100	-.00050	.20120	.15240	-.05100
-.300	-.384	-.21380	-.22920	-.21390	-.20720	-.22220	-.05530	.00120	-.00020	-.00170	.00320
-.272	3.688	-.22620	-.24460	-.21650	-.21600	-.22950	-.06930	-.00030	-.18460	-.14020	.04740
-.267	5.772	-.24030	-.26020	-.22430	-.22490	-.23440	-.01580	.00550	-.29990	-.22180	.07900
-.260	7.866	-.24870	-.27030	-.23340	-.23410	-.24160	.12200	.02050	-.41090	-.29080	.10630
	GRADIENT	.00103	.00091	.00262	.00060	.00087	.00020	.00002	-.04756	-.03607	.01213

RUN NO. 1119/ 0 RN/L = 3.49 GRADIENT INTERVAL = -5.00/ 5.00

ALPHAO	BETAO	CP1	CP2	CP3	CP4	CPBV	RUDDER	CHR	CNVT	CBVT	CTVT
4.061	-8.068	-.23960	-.25840	-.23730	-.22450	-.22740	-.12560	-.02020	.36770	.25850	-.08510
4.074	-5.756	-.23910	-.24980	-.23360	-.22090	-.23110	.02410	-.00340	.24290	.18160	-.05440
4.049	-3.766	-.22340	-.23640	-.22380	-.20890	-.22000	.06410	.00190	.13620	.10440	-.02560
3.826	.145	-.21580	-.23120	-.21320	-.20200	-.21690	.01040	.00110	-.00590	-.00610	.00430
3.894	4.109	-.21250	-.23110	-.20310	-.20290	-.21440	-.06330	-.00180	-.16650	-.12910	.03930
3.848	6.179	-.23030	-.24800	-.21000	-.21220	-.22080	.00880	.00700	-.30050	-.22220	.07700
3.834	8.158	-.23970	-.26050	-.22140	-.22680	-.22960	.14300	.02210	-.40570	-.28680	.10360
	GRADIENT	.00138	.00067	.00263	.00076	.00071	-.01618	-.00047	-.03844	-.02965	.00824

IA156A, AEDC PWT 16T-470, O T S W/SILTS (R8NF83) (10 MAY 80)

REFERENCE DATA

SREF = 2690.0000 SQ.FT. XMRP = 976.0000 IN. XT
LREF = 1290.3000 INCHES YMRP = .0000 IN. YT
BREF = 1290.3000 INCHES ZMRP = 400.0000 IN. ZT
SCALE = .0200

PARAMETRIC DATA

IB-ELV = 8.000 OB-ELV = 9.000
BDFLAP = .000 SPDBRK = .000
RUDDER = .000 SILTS = 1.000
MACH = .600 RN/L = 3.500

RUN NO. 1120/ 0 RN/L = 3.49 GRADIENT INTERVAL = -5.00/ 5.00

ALPHAO	BETAO	CP1	CP2	CP3	CP4	CPBV	RUDDER	CHR	CNVT	CBVT	CTVT
6.199	-7.959	-.24000	-.25850	-.23720	-.23030	-.22790	-.12670	-.01960	.36500	.25770	-.08670
6.166	-5.903	-.23570	-.25080	-.23710	-.22050	-.23460	.02610	-.00230	.24840	.18650	-.05720
6.146	-3.877	-.22310	-.23660	-.22320	-.20630	-.21820	.05980	.00250	.14860	.11380	-.02940
5.896	.134	-.21630	-.22910	-.21070	-.19990	-.21760	.00830	.00080	-.00490	-.00560	.00400
5.802	4.075	-.21720	-.23370	-.19600	-.20330	-.21560	-.06540	-.00310	-.16030	-.12380	.03630
5.758	5.987	-.23140	-.25020	-.20580	-.21160	-.22330	-.01350	.00360	-.27030	-.20200	.06800
5.823	8.257	-.23830	-.26060	-.21500	-.22510	-.22940	.14840	.02200	-.40260	-.28550	.10320
	GRADIENT	.00074	.00037	.00342	.00038	.00033	-.01574	-.00070	-.03884	-.02988	.00826

RUN NO. 1121/ 0 RN/L = 3.50 GRADIENT INTERVAL = -5.00/ 5.00

ALPHAO	BETAO	CP1	CP2	CP3	CP4	CPBV	RUDDER	CHR	CNVT	CBVT	CTVT
8.087	-7.805	-.23930	-.25550	-.23030	-.22360	-.23690	-.08060	-.01390	.33750	.24860	-.08490
7.992	-5.743	-.23010	-.24720	-.23420	-.21380	-.22310	.05440	.00160	.21970	.16890	-.05030
7.975	-3.763	-.22240	-.23670	-.21680	-.20460	-.21780	.06400	.00370	.13050	.10130	-.02540
7.881	.167	-.21060	-.22690	-.19900	-.19990	-.21270	.00720	.00080	-.00650	-.00680	.00410
7.924	4.200	-.22400	-.23880	-.20000	-.20410	-.21750	-.07770	-.00520	-.14510	-.11510	.03270
7.893	6.205	-.22770	-.24640	-.20470	-.20820	-.21430	-.04260	-.00030	-.24870	-.19140	.06290
7.886	8.231	-.24020	-.25740	-.21350	-.22520	-.23220	.10470	.01650	-.37760	-.27770	.10100
	GRADIENT	-.00021	-.00028	.00210	.00006	.00003	-.01781	-.00112	-.03461	-.02718	.00730

IA156A, AEDC PWT 16T-470, O T S W/SILTS

(R8NF85) (10 MAY 80)

REFERENCE DATA

SREF = 2690.0000 SQ.FT. XMRP = 976.0000 IN. XT
LREF = 1290.3000 INCHES YMRP = .0000 IN. YT
BREF = 1290.3000 INCHES ZMRP = 400.0000 IN. ZT
SCALE = .0200

PARAMETRIC DATA

IB-ELV = 8.000 OB-ELV = 9.000
BDFLAP = .000 SPDBRK = .000
RUDDER = .000 SILTS = 1.000
MACH = .800 RN/L = 3.500

RUN NO. 1132/ 0 RN/L = 3.51 GRADIENT INTERVAL = -5.00/ 5.00

ALPHAO	BETAO	CP1	CP2	CP3	CP4	CPBV	RUDDER	CHR	CNVT	CBVT	CTVT
-8.228	-5.851	-.28850	-.30290	-.28640	-.28920	-.29990	.09910	.01210	.30910	.22670	-.07650
-8.232	-3.849	-.27700	-.28940	-.27240	-.27550	-.28550	.12080	.01320	.18100	.13470	-.04140
-8.166	.278	-.25540	-.26430	-.24830	-.25780	-.26780	-.05120	-.00450	-.02900	-.02330	.00670
-7.998	4.292	-.27140	-.28630	-.26760	-.27680	-.27640	-.11100	-.01230	-.24730	-.19100	.06860
-8.010	6.257	-.28180	-.29950	-.28310	-.28490	-.29170	-.01500	-.00480	-.35860	-.26170	.09550
	GRADIENT	.00071	.00041	.00061	-.00014	.00113	-.02853	-.00314	-.05260	-.04000	.01350

RUN NO. 1133/ 0 RN/L = 3.50 GRADIENT INTERVAL = -5.00/ 5.00

ALPHAO	BETAO	CP1	CP2	CP3	CP4	CPBV	RUDDER	CHR	CNVT	CBVT	CTVT
-6.217	-5.991	-.27880	-.29030	-.27400	-.27970	-.28810	.05220	.00870	.31080	.22520	-.07530
-6.150	-4.044	-.25850	-.27850	-.27340	-.25160	-.27230	.09000	.01120	.19270	.14320	-.04490
-6.231	.132	-.24640	-.25670	-.24090	-.24780	-.25720	-.05000	-.00430	-.02430	-.01900	.00490
-6.023	4.270	-.26280	-.27780	-.25520	-.26630	-.26730	-.09760	-.01180	-.24280	-.18440	.06520
-5.980	6.239	-.27020	-.28870	-.26850	-.27500	-.27850	.00980	-.00330	-.35820	-.26100	.09590
	GRADIENT	-.00051	.00009	.00220	-.00176	.00061	-.02258	-.00277	-.05238	-.03940	.01324

RUN NO. 1134/ 0 RN/L = 3.50 GRADIENT INTERVAL = -5.00/ 5.00

ALPHAO	BETAO	CP1	CP2	CP3	CP4	CPBV	RUDDER	CHR	CNVT	CBVT	CTVT
-4.121	-6.083	-.26790	-.28720	-.27310	-.26310	-.28280	.01160	.00590	.30800	.22220	-.07430
-4.332	-3.988	-.26040	-.27580	-.25500	-.24850	-.26810	.06350	.00970	.17980	.13200	-.03990
-4.233	.372	-.24370	-.25270	-.23720	-.24160	-.25210	-.04760	-.00440	-.02820	-.02120	.00430
-3.803	4.330	-.25480	-.26950	-.24660	-.25280	-.25710	-.06440	-.00990	-.24430	-.18390	.06510
-3.861	6.148	-.26730	-.28380	-.25820	-.26800	-.27320	.04000	-.00140	-.35540	-.25840	.09580
	GRADIENT	.00073	.00083	.00106	-.00048	.00136	-.01555	-.00237	-.05093	-.03793	.01258

RUN NO. 1135/ 0 RN/L = 3.50 GRADIENT INTERVAL = -5.00/ 5.00

ALPHAO	BETAO	CP1	CP2	CP3	CP4	CPBV	RUDDER	CHR	CNVT	CBVT	CTVT
-.375	-6.864	-.25880	-.27560	-.26660	-.26290	-.26590	-.10280	-.00320	.34790	.24800	-.08540
-.361	-4.564	-.24300	-.25900	-.23900	-.24820	-.24890	.02880	.00830	.21470	.15500	-.04550
-.335	-.469	-.23220	-.24170	-.22390	-.22490	-.23590	-.04360	.00200	.01040	.00410	.00130
-.300	3.591	-.23970	-.25190	-.22910	-.23290	-.24100	-.16080	-.00820	-.17850	-.13300	.03800
-.297	5.727	-.25140	-.26820	-.24320	-.24040	-.25080	-.06910	-.00030	-.30340	-.22310	.07630
	GRADIENT	.00041	.00088	.00122	.00188	.00097	-.02324	-.00202	-.04822	-.03532	.01024

IA156A, AEDC PWT 16T-470, O T S W/SILTS (R8NF85) (10 MAY 80)

REFERENCE DATA

SREF = 2690.0000 SQ.FT. XMRP = 976.0000 IN. XT
LREF = 1290.3000 INCHES YMRP = .0000 IN. YT
BREF = 1290.3000 INCHES ZMRP = 400.0000 IN. ZT
SCALE = .0200

PARAMETRIC DATA

IB-ELV = 8.000 OB-ELV = 9.000
BDFLAP = .000 SPDBRK = .000
RUDDER = .000 SILTS = 1.000
MACH = .800 RN/L = 3.500

RUN NO. 1136/ 0 RN/L = 3.50 GRADIENT INTERVAL = -5.00/ 5.00

ALPHAO	BETAO	CP1	CP2	CP3	CP4	CPBV	RUDDER	CHR	CNVT	CBVT	CTVT
3.989	-5.860	-.25450	-.26520	-.25360	-.24930	-.25050	.05580	.00000	.27240	.19870	-.06040
3.975	-3.748	-.23880	-.25110	-.23670	-.23930	-.24050	.14410	.00840	.14720	.10720	-.02050
3.871	.191	-.23550	-.24560	-.21960	-.22650	-.23310	.00860	.00070	.00020	-.00310	.00200
3.791	3.961	-.23310	-.24940	-.22080	-.22230	-.23400	-.15000	-.00900	-.15430	-.11860	.03010
3.774	6.089	-.25170	-.26910	-.23640	-.24450	-.24940	-.04220	.00110	-.29210	-.21800	.07400
	GRADIENT	.00074	.00023	.00208	.00221	.00085	-.03812	-.00225	-.03910	-.02928	.00656

RUN NO. 1137/ 0 RN/L = 3.50 GRADIENT INTERVAL = -5.00/ 5.00

ALPHAO	BETAO	CP1	CP2	CP3	CP4	CPBV	RUDDER	CHR	CNVT	CBVT	CTVT
6.082	-5.825	-.24760	-.26420	-.24290	-.24250	-.25070	.08240	.00310	.25490	.19090	-.05760
6.052	-3.780	-.23920	-.25430	-.23530	-.23370	-.24090	.17390	.01190	.13670	.10190	-.01780
5.757	.158	-.23480	-.24510	-.21570	-.22220	-.23320	.00450	.00030	-.00170	-.00410	.00200
5.687	4.070	-.23660	-.25430	-.21990	-.22110	-.23780	-.19130	-.01340	-.14140	-.11120	.02450
5.758	6.033	-.24770	-.26280	-.23340	-.23590	-.24470	-.09950	-.00460	-.25540	-.19740	.06460
	GRADIENT	.00033	.00000	.00196	.00161	.00040	-.04652	-.00322	-.03543	-.02715	.00539

IA156A, AEDC PWT 16T-470, O T S W/SILTS (R8NF86) (10 MAY 80)

REFERENCE DATA

SREF = 2690.0000 SQ.FT. XMRP = 976.0000 IN. XT
LREF = 1290.3000 INCHES YMRP = .0000 IN. YT
BREF = 1290.3000 INCHES ZMRP = 400.0000 IN. ZT
SCALE = .0200

PARAMETRIC DATA

IB-ELV = 8.000 OB-ELV = 9.000
BDFLAP = .000 SPDBRK = .000
RUDDER = .000 SILTS = 1.000
MACH = .900 RN/L = 3.500

RUN NO. 1139/ 0 RN/L = 3.50 GRADIENT INTERVAL = -5.00/ 5.00

ALPHAO	BETAO	CP1	CP2	CP3	CP4	CPBV	RUDDER	CHR	CNVT	CBVT	CTVT
-8.106	-5.989	-.30450	-.31800	-.29700	-.29690	-.31330	.22210	.02130	.30200	.22450	-.07850
-8.269	-3.772	-.28540	-.30920	-.29800	-.28600	-.30300	.27680	.02470	.15270	.10890	-.02470
-8.177	.180	-.27350	-.28350	-.26310	-.25900	-.28780	-.01220	-.00100	-.02470	-.01640	.00430
-7.996	4.388	-.29280	-.30550	-.29020	-.29570	-.30210	-.17620	-.01670	-.23940	-.17750	.05930
-8.012	6.268	-.30730	-.31590	-.29870	-.30590	-.31510	-.14380	-.01490	-.35270	-.26230	.09970
	GRADIENT	-.00095	.00039	.00088	-.00127	.00007	-.05534	-.00506	-.04809	-.03513	.01032

IA156A, AEDC PWT 16T-470, O T S W/SILTS (R8NF86) (10 MAY 80)

REFERENCE DATA

SREF = 2690.0000 SQ.FT. XMRP = 976.0000 IN. XT
LREF = 1290.3000 INCHES YMRP = .0000 IN. YT
BREF = 1290.3000 INCHES ZMRP = 400.0000 IN. ZT
SCALE = .0200

PARAMETRIC DATA

IB-ELV = 8.000 OB-ELV = 9.000
BDFLAP = .000 SPDBRK = .000
RUDDER = .000 SILTS = 1.000
MACH = .900 RN/L = 3.500

RUN NO. 1140/ 0 RN/L = 3.50 GRADIENT INTERVAL = -5.00/ 5.00

ALPHAO	BETAO	CP1	CP2	CP3	CP4	CPBV	RUDDER	CHR	CNVT	CBVT	CTVT
-6.214	-5.990	-.29850	-.31410	-.29540	-.30100	-.30650	.19750	.01980	.30370	.22970	-.08310
-6.164	-4.072	-.28320	-.30270	-.28340	-.28160	-.29920	.15580	.01570	.18170	.13740	-.04390
-6.253	.100	-.26460	-.27590	-.25890	-.26580	-.27800	-.00020	.00010	-.02550	-.01690	.00470
-6.063	4.260	-.28450	-.29840	-.28140	-.28460	-.29190	-.14630	-.01480	-.22570	-.16450	.05240
-5.777	6.360	-.29760	-.31200	-.28810	-.29670	-.30410	-.09370	-.01150	-.34880	-.25510	.09530
	GRADIENT	-.00015	.00052	.00024	-.00036	.00088	-.03626	-.00366	-.04890	-.03623	.01156

RUN NO. 1141/ 0 RN/L = 3.50 GRADIENT INTERVAL = -5.00/ 5.00

ALPHAO	BETAO	CP1	CP2	CP3	CP4	CPBV	RUDDER	CHR	CNVT	CBVT	CTVT
-4.123	-6.093	-.29870	-.30830	-.29340	-.29690	-.29950	.15560	.01710	.29790	.22200	-.07820
-4.340	-4.003	-.27770	-.29680	-.27720	-.28260	-.29340	.07620	.01000	.17440	.13450	-.04550
-4.253	.378	-.26060	-.27130	-.25090	-.25490	-.26840	.01850	.00130	-.03260	-.02270	.00640
-3.800	4.332	-.27920	-.29720	-.27390	-.28350	-.28780	-.10010	-.01200	-.22800	-.16510	.05270
-3.869	6.156	-.28630	-.31010	-.28820	-.28030	-.29930	-.07570	-.01060	-.33400	-.24250	.08840
	GRADIENT	-.00011	.00006	.00050	.00001	.00076	-.02101	-.00263	-.04826	-.03594	.01178

RUN NO. 1142/ 0 RN/L = 3.50 GRADIENT INTERVAL = -5.00/ 5.00

ALPHAO	BETAO	CP1	CP2	CP3	CP4	CPBV	RUDDER	CHR	CNVT	CBVT	CTVT
-.404	-6.963	-.29220	-.30030	-.28480	-.28660	-.29110	.03810	.00840	.33820	.24700	-.08700
-.385	-4.826	-.27280	-.28590	-.27050	-.27260	-.28050	.09100	.01270	.22610	.17650	-.06160
-.354	-.537	-.25080	-.25460	-.24770	-.24520	-.25770	-.02820	.00310	.01140	.01150	-.00600
-.319	3.586	-.25880	-.27220	-.25950	-.25670	-.26790	-.16140	-.00760	-.16830	-.12780	.03610
-.319	5.744	-.27570	-.29170	-.27230	-.26510	-.28210	-.16340	-.00780	-.28460	-.20980	.06960
	GRADIENT	.00169	.00167	.00133	.00192	.00152	-.02999	-.00241	-.04691	-.03619	.01162

RUN NO. 1143/ 0 RN/L = 3.50 GRADIENT INTERVAL = -5.00/ 5.00

ALPHAO	BETAO	CP1	CP2	CP3	CP4	CPBV	RUDDER	CHR	CNVT	CBVT	CTVT
4.083	-5.726	-.27170	-.28440	-.26890	-.27200	-.27950	.32450	.02170	.22960	.17680	-.04780
3.960	-3.778	-.25640	-.27010	-.25560	-.25810	-.26980	.36420	.02550	.12860	.10470	-.02030
3.857	.180	-.24740	-.25950	-.24730	-.24490	-.25770	.04590	.00370	.00110	.00230	-.00260
3.771	3.897	-.25290	-.27060	-.25420	-.25070	-.26650	-.25900	-.01710	-.14060	-.11250	.02460
3.758	6.064	-.28020	-.29670	-.28120	-.28020	-.28820	-.20300	-.01190	-.27130	-.20610	.06580
	GRADIENT	.00048	-.00004	.00020	.00099	.00046	-.08119	-.00555	-.03505	-.02827	.00584

IA156A, AEDC PWT 16T-470, O T S W/SILTS (R8NF87) (10 MAY 80)

REFERENCE DATA

SREF = 2690.0000 SQ.FT. XMRP = 976.0000 IN. XT
LREF = 1290.3000 INCHES YMRP = .0000 IN. YT
BREF = 1290.3000 INCHES ZMRP = 400.0000 IN. ZT
SCALE = .0200

PARAMETRIC DATA

IB-ELV = 8.000 OB-ELV = 9.000
BDFLAP = .000 SPDBRK = .000
RUDDER = .000 SILTS = 1.000
MACH = .950 RN/L = 3.500

RUN NO. 1144/ 0 RN/L = 3.50 GRADIENT INTERVAL = -5.00/ 5.00

ALPHAO	BETAO	CP1	CP2	CP3	CP4	CPBV	RUDDER	CHR	CNVT	CBVT	CTVT
-8.259	-5.902	-.35040	-.35860	-.32680	-.34160	-.34740	.35200	.03060	.31470	.24710	-.09750
-8.255	-3.821	-.31790	-.33000	-.30490	-.31490	-.32350	.44410	.03680	.17140	.12850	-.03830
-8.175	.389	-.30080	-.31860	-.28520	-.29990	-.31610	-.10330	-.00820	-.03410	-.02370	.00550
-8.017	4.353	-.32390	-.33750	-.31260	-.31250	-.33380	-.34740	-.02950	-.24160	-.18680	.06770
-8.001	6.248	-.34160	-.35530	-.33090	-.34510	-.35360	-.24820	-.02260	-.36080	-.27850	.11330
	GRADIENT	-.00068	-.00088	-.00088	.00033	-.00123	-.09717	-.00814	-.05051	-.03855	.01294

RUN NO. 1145/ 0 RN/L = 3.50 GRADIENT INTERVAL = -5.00/ 5.00

ALPHAO	BETAO	CP1	CP2	CP3	CP4	CPBV	RUDDER	CHR	CNVT	CBVT	CTVT
-6.216	-5.993	-.32800	-.34580	-.32270	-.32180	-.33700	.35170	.03120	.31070	.24180	-.09270
-6.163	-4.073	-.31210	-.32770	-.30340	-.30830	-.32310	.42650	.03630	.17780	.13240	-.03840
-6.250	.107	-.28470	-.29920	-.26700	-.27880	-.29960	-.08870	-.00680	-.02090	-.01090	-.00110
-6.075	4.266	-.31930	-.33420	-.30550	-.31100	-.33060	-.34050	-.02950	-.23290	-.17500	.06000
-5.773	6.363	-.33820	-.34640	-.31810	-.32840	-.33680	-.24000	-.02250	-.35580	-.27060	.10770
	GRADIENT	-.00086	-.00077	-.00024	-.00032	-.00089	-.09201	-.00789	-.04925	-.03686	.01180

RUN NO. 1146/ 0 RN/L = 3.49 GRADIENT INTERVAL = -5.00/ 5.00

ALPHAO	BETAO	CP1	CP2	CP3	CP4	CPBV	RUDDER	CHR	CNVT	CBVT	CTVT
-4.115	-6.097	-.32830	-.33510	-.31430	-.32140	-.32450	.35190	.03190	.30090	.23020	-.08420
-4.333	-4.005	-.29960	-.31460	-.29340	-.29110	-.31110	.39290	.03430	.16260	.11790	-.03040
-4.255	.374	-.29480	-.30760	-.27260	-.28290	-.30410	-.10760	-.00860	-.02460	-.01110	-.00450
-3.806	4.343	-.30020	-.31560	-.28440	-.29050	-.30720	-.31210	-.02820	-.23030	-.17160	.05770
-3.876	6.157	-.32320	-.33870	-.30800	-.31250	-.32840	-.22650	-.02200	-.34340	-.26000	.10230
	GRADIENT	-.00005	-.00009	.00114	.00010	.00049	-.08496	-.00753	-.04699	-.03459	.01047

RUN NO. 1147/ 0 RN/L = 3.49 GRADIENT INTERVAL = -5.00/ 5.00

ALPHAO	BETAO	CP1	CP2	CP3	CP4	CPBV	RUDDER	CHR	CNVT	CBVT	CTVT
-.416	-6.985	-.32840	-.33490	-.32360	-.32160	-.32380	.21640	.02200	.33180	.24890	-.09010
-.397	-4.840	-.30620	-.31120	-.29840	-.29820	-.29920	.25480	.02500	.21240	.16270	-.05230
-.367	-.542	-.27190	-.27650	-.25630	-.26320	-.27410	-.02660	.00310	.00700	.00650	-.00220
-.331	3.582	-.28690	-.29950	-.27220	-.27770	-.29080	-.31050	-.01910	-.16670	-.12340	.03190
-.331	5.762	-.31280	-.31920	-.29320	-.30230	-.31020	-.27900	-.01660	-.28510	-.21930	.07860
	GRADIENT	.00233	.00144	.00316	.00247	.00103	-.06711	-.00524	-.04503	-.03399	.01001

IA156A, AEDC PWT 16T-470, O T S W/SILTS (R8NF87) (10 MAY 80)

REFERENCE DATA

SREF = 2690.0000 SQ.FT. XMRP = 976.0000 IN. XT
LREF = 1290.3000 INCHES YMRP = .0000 IN. YT
BREF = 1290.3000 INCHES ZMRP = 400.0000 IN. ZT
SCALE = .0200

PARAMETRIC DATA

IB-ELV = 8.000 OB-ELV = 9.000
BDFLAP = .000 SPDBRK = .000
RUDDER = .000 SILTS = 1.000
MACH = .950 RN/L = 3.500

RUN NO. 1148/ 0 RN/L = 3.49 GRADIENT INTERVAL = -5.00/ 5.00

ALPHAO	BETAO	CP1	CP2	CP3	CP4	CPBV	RUDDER	CHR	CNVT	CBVT	CTVT
3.978	-5.855	-.30080	-.30590	-.29180	-.29190	-.29570	.34890	.02290	.22940	.18160	-.05420
3.964	-3.754	-.28320	-.28900	-.27400	-.27420	-.28180	.27220	.01750	.11930	.09250	-.01580
3.852	.184	-.27840	-.28550	-.26280	-.26880	-.27760	.04080	.00320	-.00650	-.00500	.00290
3.794	3.946	-.28090	-.29180	-.26760	-.27340	-.28300	-.19170	-.01130	-.13940	-.10920	.02600
3.767	6.073	-.29930	-.31410	-.28410	-.28900	-.30220	-.31610	-.02030	-.25610	-.20310	.06750
	GRADIENT	.00031	-.00035	.00085	.00011	-.00015	-.06023	-.00374	-.03358	-.02618	.00542

IA156A, AEDC PWT 16T-470, O T S W/SILTS (R8NF88) (10 MAY 80)

REFERENCE DATA

SREF = 2690.0000 SQ.FT. XMRP = 976.0000 IN. XT
LREF = 1290.3000 INCHES YMRP = .0000 IN. YT
BREF = 1290.3000 INCHES ZMRP = 400.0000 IN. ZT
SCALE = .0200

PARAMETRIC DATA

IB-ELV = 8.000 OB-ELV = 9.000
BDFLAP = .000 SPDBRK = .000
RUDDER = .000 SILTS = 1.000
MACH = 1.050 RN/L = 3.500

RUN NO. 1149/ 0 RN/L = 3.50 GRADIENT INTERVAL = -5.00/ 5.00

ALPHAO	BETAO	CP1	CP2	CP3	CP4	CPBV	RUDDER	CHR	CNVT	CBVT	CTVT
-8.264	-5.919	-.44320	-.44310	-.43700	-.43430	-.46430	-.09210	-.00380	.34600	.27940	-.13290
-8.287	-3.832	-.43850	-.44750	-.42650	-.42660	-.45390	-.00960	.00150	.20260	.16120	-.07140
-8.186	.397	-.40620	-.42130	-.38840	-.40040	-.42140	.01250	.00080	-.04250	-.03420	.01490
-8.011	4.342	-.41800	-.42830	-.38990	-.40750	-.43320	.07010	.00280	-.27210	-.21950	.10200
-8.017	6.263	-.41570	-.42650	-.39570	-.40810	-.44420	.11390	.00530	-.38670	-.30810	.14810
	GRADIENT	.00257	.00239	.00453	.00238	.00259	.00970	.00016	-.05807	-.04657	.02120

RUN NO. 1150/ 0 RN/L = 3.50 GRADIENT INTERVAL = -5.00/ 5.00

ALPHAO	BETAO	CP1	CP2	CP3	CP4	CPBV	RUDDER	CHR	CNVT	CBVT	CTVT
-6.217	-6.000	-.43190	-.44040	-.44030	-.41260	-.46240	-.07350	-.00180	.33840	.27360	-.12950
-6.143	-4.071	-.42940	-.43760	-.42040	-.40990	-.44530	.01810	.00430	.20650	.16520	-.07280
-6.263	.102	-.40440	-.41990	-.38710	-.39740	-.41370	.02290	.00180	-.02980	-.02280	.00970
-6.050	4.276	-.39940	-.41640	-.37510	-.39020	-.41590	.00460	-.00250	-.26360	-.21040	.09600
-6.010	6.261	-.41100	-.41910	-.38510	-.39640	-.42850	.07550	.00200	-.38180	-.30300	.14460
	GRADIENT	.00359	.00254	.00543	.00236	.00352	-.00162	-.00081	-.05632	-.04500	.02022

IA156A, AEDC PWT 16T-470, O T S W/SILTS (R8NF88) (10 MAY 80)

REFERENCE DATA

SREF = 2690.0000 SQ.FT. XMRP = 976.0000 IN. XT
LREF = 1290.3000 INCHES YMRP = .0000 IN. YT
BREF = 1290.3000 INCHES ZMRP = 400.0000 IN. ZT
SCALE = .0200

PARAMETRIC DATA

IB-ELV = 8.000 OB-ELV = 9.000
BDFLAP = .000 SPDBRK = .000
RUDDER = .000 SILTS = 1.000
MACH = 1.050 RN/L = 3.500

RUN NO. 1151/ 0 RN/L = 3.50 GRADIENT INTERVAL = -5.00/ 5.00

ALPHAO	BETAO	CP1	CP2	CP3	CP4	CPBV	RUDDER	CHR	CNVT	CBVT	CTVT
-4.122	-6.105	-.43380	-.43950	-.42900	-.40750	-.45780	-.03970	.00130	.33350	.26920	-.12640
-4.348	-4.023	-.42150	-.43680	-.42100	-.40800	-.44160	.01000	.00430	.19950	.15880	-.06970
-4.265	.371	-.40600	-.42170	-.37900	-.39770	-.41240	.00180	-.00010	-.03880	-.03020	.01250
-3.797	4.336	-.38360	-.40290	-.36120	-.37800	-.40330	-.04550	-.00700	-.25950	-.20710	.09400
-3.885	6.173	-.40190	-.41810	-.38390	-.39260	-.42240	.04830	-.00060	-.36920	-.29300	.13950
	GRADIENT	.00452	.00404	.00720	.00357	.00462	-.00655	-.00135	-.05490	-.04376	.01957

RUN NO. 1152/ 0 RN/L = 3.50 GRADIENT INTERVAL = -5.00/ 5.00

ALPHAO	BETAO	CP1	CP2	CP3	CP4	CPBV	RUDDER	CHR	CNVT	CBVT	CTVT
-.451	-7.057	-.43330	-.43980	-.42430	-.40910	-.45460	-.01940	.00340	.36890	.29250	-.13500
-.435	-4.891	-.42930	-.43840	-.40930	-.40840	-.44090	.02070	.00640	.24390	.19630	-.08620
-.409	-.539	-.39660	-.41200	-.37690	-.38810	-.39710	.00110	.00500	.01240	.00910	-.00220
-.376	3.592	-.39070	-.40400	-.36790	-.38490	-.39940	-.18600	-.00880	-.19280	-.15360	.06320
-.373	5.772	-.40350	-.41170	-.37640	-.39000	-.41250	-.13080	-.00480	-.30740	-.24760	.11200
	GRADIENT	.00458	.00407	.00490	.00279	.00494	-.02419	-.00178	-.05149	-.04126	.01763

RUN NO. 1153/ 0 RN/L = 3.50 GRADIENT INTERVAL = -5.00/ 5.00

ALPHAO	BETAO	CP1	CP2	CP3	CP4	CPBV	RUDDER	CHR	CNVT	CBVT	CTVT
4.063	-5.735	-.41380	-.42200	-.40440	-.39520	-.42760	.25960	.01510	.25290	.20720	-.08580
3.941	-3.723	-.40330	-.41070	-.38620	-.38430	-.40860	.28000	.01720	.14860	.12110	-.04330
3.717	.017	-.39000	-.39900	-.36580	-.38340	-.38830	.10520	.00750	-.00100	-.00180	.00370
3.796	3.944	-.38370	-.39850	-.36210	-.37440	-.39380	-.28530	-.01760	-.16820	-.13750	.05270
3.767	6.061	-.39850	-.40790	-.36890	-.38860	-.41330	-.21350	-.01170	-.28320	-.22890	.09830
	GRADIENT	.00255	.00158	.00312	.00130	.00190	-.07395	-.00455	-.04133	-.03374	.01252

IA156A, AEDC PWT 16T-470, O T S W/SILTS (R8NF89) (10 MAY 80)

REFERENCE DATA

SREF = 2690.0000 SQ.FT. XMRP = 976.0000 IN. XT
LREF = 1290.3000 INCHES YMRP = .0000 IN. YT
BREF = 1290.3000 INCHES ZMRP = 400.0000 IN. ZT
SCALE = .0200

PARAMETRIC DATA

IB-ELV = 8.000 OB-ELV = 9.000
BDFLAP = .000 SPDBRK = .000
RUDDER = .000 SILTS = 1.000
MACH = 1.100 RN/L = 3.500

RUN NO. 1154/ 0 RN/L = 3.50 GRADIENT INTERVAL = -5.00/ 5.00

ALPHAO	BETAO	CP1	CP2	CP3	CP4	CPBV	RUDDER	CHR	CNVT	CBVT	CTVT
-8.241	-5.914	-.38510	-.39400	-.39870	-.36770	-.40850	-.17880	-.00990	.32530	.26270	-.12630
-8.257	-3.818	-.38140	-.39390	-.38230	-.37350	-.39780	-.05180	-.00150	.18940	.14990	-.06690
-8.183	.180	-.36250	-.37040	-.34500	-.35110	-.36930	.02010	.00150	-.03610	-.02890	.01280
-8.011	4.357	-.36710	-.38100	-.34720	-.36000	-.39030	.14050	.00780	-.27040	-.21760	.10280
-8.012	6.257	-.37450	-.38740	-.35470	-.36750	-.40700	.21480	.01250	-.37850	-.30190	.14790
	GRADIENT	.00173	.00155	.00426	.00162	.00087	.02356	.00114	-.05624	-.04496	.02076

RUN NO. 1155/ 0 RN/L = 3.50 GRADIENT INTERVAL = -5.00/ 5.00

ALPHAO	BETAO	CP1	CP2	CP3	CP4	CPBV	RUDDER	CHR	CNVT	CBVT	CTVT
-6.202	-5.994	-.38360	-.39260	-.38700	-.36750	-.41160	-.14710	-.00710	.32260	.26110	-.12490
-6.179	-4.081	-.37650	-.38860	-.38170	-.36230	-.39280	-.03460	.00040	.19680	.15710	-.07030
-6.274	.100	-.34930	-.36390	-.33250	-.34100	-.35840	.01530	.00120	-.03560	-.02730	.01180
-6.064	4.280	-.34970	-.36590	-.32760	-.34410	-.36960	.09620	.00410	-.25960	-.20690	.09670
-6.003	6.253	-.36630	-.37200	-.34090	-.35220	-.38790	.18270	.00960	-.37130	-.29560	.14440
	GRADIENT	.00321	.00272	.00647	.00218	.00277	.01564	.00044	-.05459	-.04353	.01997

RUN NO. 1156/ 0 RN/L = 3.50 GRADIENT INTERVAL = -5.00/ 5.00

ALPHAO	BETAO	CP1	CP2	CP3	CP4	CPBV	RUDDER	CHR	CNVT	CBVT	CTVT
-4.123	-6.105	-.38440	-.38690	-.37930	-.36050	-.40630	-.11280	-.00400	.31410	.25400	-.12050
-4.346	-4.020	-.36800	-.38130	-.35970	-.35310	-.38140	-.03650	.00090	.18250	.14510	-.06450
-4.258	.363	-.34390	-.36100	-.32850	-.33720	-.35190	-.00270	-.00040	-.04210	-.03250	.01350
-3.785	4.336	-.33550	-.35310	-.31260	-.33040	-.34960	.05270	.00020	-.25240	-.20140	.09370
-3.882	6.170	-.35110	-.36740	-.32820	-.34200	-.36950	.13920	.00590	-.35870	-.28600	.13920
	GRADIENT	.00392	.00340	.00566	.00273	.00386	.01062	-.00009	-.05204	-.04145	.01891

RUN NO. 1157/ 0 RN/L = 3.50 GRADIENT INTERVAL = -5.00/ 5.00

ALPHAO	BETAO	CP1	CP2	CP3	CP4	CPBV	RUDDER	CHR	CNVT	CBVT	CTVT
-.456	-7.037	-.38360	-.38760	-.37620	-.35740	-.40420	-.09710	-.00220	.35630	.28420	-.13380
-.437	-4.905	-.37050	-.37820	-.35320	-.35040	-.37730	-.03380	.00230	.23220	.18720	-.08320
-.402	-.515	-.33660	-.35010	-.31610	-.32740	-.33540	-.01540	.00370	.00950	.00630	-.00090
-.373	3.594	-.32480	-.33550	-.30210	-.31720	-.33120	-.17400	-.00770	-.19090	-.15210	.06340
-.369	5.774	-.33900	-.34650	-.31380	-.32740	-.35040	-.08590	-.00140	-.30310	-.24470	.11210
	GRADIENT	.00540	.00504	.00604	.00392	.00547	-.01626	-.00116	-.04979	-.03994	.01727

IA156A, AEDC PWT 16T-470, O T S W/SILTS (R8NF89) (10 MAY 80)

REFERENCE DATA

SREF = 2690.0000 SQ.FT. XMRP = 976.0000 IN. XT
LREF = 1290.3000 INCHES YMRP = .0000 IN. YT
BREF = 1290.3000 INCHES ZMRP = 400.0000 IN. ZT
SCALE = .0200

PARAMETRIC DATA

IB-ELV = 8.000 OB-ELV = 9.000
BDFLAP = .000 SPDBRK = .000
RUDDER = .000 SILTS = 1.000
MACH = 1.100 RN/L = 3.500

RUN NO. 1158/ 0 RN/L = 3.50 GRADIENT INTERVAL = -5.00/ 5.00

ALPHAO	BETAO	CP1	CP2	CP3	CP4	CPBV	RUDDER	CHR	CNVT	CBVT	CTVT
3.961	-5.845	-.34700	-.35210	-.33860	-.32670	-.35750	.23380	.01280	.25590	.20890	-.08760
3.944	-3.745	-.33360	-.34570	-.32400	-.32020	-.34190	.25600	.01500	.15180	.12350	-.04540
3.822	.184	-.34140	-.35060	-.31390	-.32870	-.34010	.05090	.00370	-.01020	-.00890	.00550
3.780	3.932	-.31710	-.33110	-.30160	-.30890	-.32500	-.25660	-.01510	-.17310	-.14070	.05520
3.771	6.068	-.32780	-.33860	-.30210	-.31630	-.34360	-.18480	-.00930	-.28220	-.22800	.09930
	GRADIENT	.00212	.00188	.00291	.00144	.00219	-.06665	-.00391	-.04231	-.03441	.01310

IA156A, AEDC PWT 16T-470, O T S W/SILTS (R8NF90) (10 MAY 80)

REFERENCE DATA

SREF = 2690.0000 SQ.FT. XMRP = 976.0000 IN. XT
LREF = 1290.3000 INCHES YMRP = .0000 IN. YT
BREF = 1290.3000 INCHES ZMRP = 400.0000 IN. ZT
SCALE = .0200

PARAMETRIC DATA

IB-ELV = 8.000 OB-ELV = 9.000
BDFLAP = .000 SPDBRK = .000
RUDDER = .000 SILTS = 1.000
MACH = 1.150 RN/L = 3.500

RUN NO. 1159/ 0 RN/L = 3.49 GRADIENT INTERVAL = -5.00/ 5.00

ALPHAO	BETAO	CP1	CP2	CP3	CP4	CPBV	RUDDER	CHR	CNVT	CBVT	CTVT
-8.245	-5.924	-.37320	-.37280	-.37480	-.35650	-.39320	-.28500	-.01720	.34000	.27420	-.13540
-8.273	-3.821	-.36360	-.37460	-.35960	-.35020	-.38210	-.14070	-.00770	.20080	.16010	-.07380
-8.197	.395	-.33330	-.34190	-.32190	-.31990	-.34470	.03350	.00220	-.04300	-.03410	.01590
-8.012	4.342	-.34030	-.35600	-.32730	-.33260	-.37140	.22580	.01360	-.26450	-.21260	.10270
-8.013	6.266	-.34610	-.35530	-.33140	-.33670	-.38240	.36060	.02250	-.37400	-.29850	.15000
	GRADIENT	.00290	.00234	.00401	.00221	.00140	.04486	.00261	-.05701	-.04566	.02162

RUN NO. 1160/ 0 RN/L = 3.50 GRADIENT INTERVAL = -5.00/ 5.00

ALPHAO	BETAO	CP1	CP2	CP3	CP4	CPBV	RUDDER	CHR	CNVT	CBVT	CTVT
-6.211	-6.001	-.36410	-.36970	-.38190	-.34500	-.38830	-.25710	-.01470	.32840	.26570	-.13040
-6.157	-4.080	-.35120	-.36130	-.36600	-.33540	-.36500	-.12590	-.00600	.20220	.16270	-.07500
-6.277	.102	-.32390	-.33630	-.31530	-.31520	-.33440	.02010	.00150	-.02870	-.02180	.01000
-6.058	4.283	-.32810	-.34520	-.31010	-.32180	-.34990	.19610	.01110	-.25580	-.20370	.09780
-6.000	6.253	-.34080	-.35150	-.31970	-.32940	-.36700	.34090	.02060	-.36890	-.29400	.14760
	GRADIENT	.00276	.00193	.00668	.00163	.00181	.03850	.00204	-.05476	-.04381	.02066

IA156A, AEDC PWT 16T-470, O T S W/SILTS (R8NF90) (10 MAY 80)

REFERENCE DATA

SREF = 2690.0000 SQ.FT. XMRP = 976.0000 IN. XT
LREF = 1290.3000 INCHES YMRP = .0000 IN. YT
BREF = 1290.3000 INCHES ZMRP = 400.0000 IN. ZT
SCALE = .0200

PARAMETRIC DATA

IB-ELV = 8.000 OB-ELV = 9.000
BDFLAP = .000 SPDBRK = .000
RUDDER = .000 SILTS = 1.000
MACH = 1.150 RN/L = 3.500

RUN NO. 1161/ 0 RN/L = 3.50 GRADIENT INTERVAL = -5.00/ 5.00

ALPHAO	BETAO	CP1	CP2	CP3	CP4	CPBV	RUDDER	CHR	CNVT	CBVT	CTVT
-4.119	-6.114	-.35720	-.36520	-.36680	-.33820	-.38270	-.24410	-.01320	.32030	.25900	-.12620
-4.340	-4.024	-.34720	-.35790	-.35120	-.33040	-.36110	-.10520	-.00400	.19240	.15450	-.07080
-4.279	.374	-.32220	-.33570	-.30750	-.31270	-.32910	.02660	.00170	-.03710	-.02920	.01370
-3.795	4.332	-.31390	-.33040	-.29860	-.30690	-.32980	.17060	.00850	-.25000	-.19980	.09600
-3.894	6.179	-.32970	-.34500	-.31570	-.32070	-.35290	.28730	.01620	-.35290	-.28190	.14070
	GRADIENT	.00402	.00332	.00636	.00283	.00381	.03255	.00149	-.05293	-.04239	.01995

RUN NO. 1162/ 0 RN/L = 3.49 GRADIENT INTERVAL = -5.00/ 5.00

ALPHAO	BETAO	CP1	CP2	CP3	CP4	CPBV	RUDDER	CHR	CNVT	CBVT	CTVT
-.448	-7.070	-.36320	-.36630	-.35700	-.33840	-.38650	-.24870	-.01290	.35920	.28700	-.13910
-.413	-4.929	-.35050	-.35870	-.33900	-.33090	-.36750	-.13260	-.00470	.23550	.19130	-.08820
-.378	-.504	-.32420	-.33150	-.29740	-.31040	-.32040	-.03620	.00210	.00870	.00620	-.00160
-.348	3.596	-.30890	-.32100	-.29560	-.30250	-.31720	-.01200	.00380	-.19590	-.15570	.06880
-.358	5.780	-.32310	-.33440	-.30330	-.31160	-.33680	.05950	.00880	-.30700	-.24730	.11710
	GRADIENT	.00489	.00444	.00515	.00335	.00596	.01425	.00100	-.05061	-.04072	.01843

RUN NO. 1163/ 0 RN/L = 3.50 GRADIENT INTERVAL = -5.00/ 5.00

ALPHAO	BETAO	CP1	CP2	CP3	CP4	CPBV	RUDDER	CHR	CNVT	CBVT	CTVT
3.969	-5.846	-.33210	-.33480	-.32310	-.32060	-.34610	.08760	.00230	.26810	.21800	-.09610
3.937	-3.734	-.33090	-.34270	-.31920	-.32340	-.34640	.11510	.00480	.16260	.13140	-.05200
3.820	.186	-.32720	-.33350	-.30480	-.31170	-.32430	.05610	.00400	-.00160	-.00300	.00360
3.826	3.967	-.30590	-.31980	-.28470	-.29710	-.31810	-.09100	-.00320	-.17170	-.13960	.05890
3.727	6.007	-.31540	-.32520	-.28740	-.30390	-.33300	-.02680	.00200	-.28410	-.22970	.10500
	GRADIENT	.00323	.00297	.00448	.00341	.00369	-.02669	-.00103	-.04340	-.03519	.01440

IA156A, AEDC PWT 16T-470, O T S W/SILTS (R8NF91) (10 MAY 80)

REFERENCE DATA

SREF = 2690.0000 SQ.FT. XMRP = 976.0000 IN. XT
LREF = 1290.3000 INCHES YMRP = .0000 IN. YT
BREF = 1290.3000 INCHES ZMRP = 400.0000 IN. ZT
SCALE = .0200

PARAMETRIC DATA

IB-ELV = 8.000 OB-ELV = 9.000
BDFLAP = .000 SPDBRK = .000
RUDDER = .000 SILTS = 1.000
MACH = 1.250 RN/L = 3.500

RUN NO. 1164/ 0 RN/L = 3.50 GRADIENT INTERVAL = -5.00/ 5.00

ALPHAO	BETAO	CP1	CP2	CP3	CP4	CPBV	RUDDER	CHR	CNVT	CBVT	CTVT
-8.253	-5.912	-.32560	-.32880	-.33790	-.32480	-.34320	-.38110	-.02310	.32980	.26630	-.13360
-8.266	-3.806	-.31670	-.32360	-.32070	-.30280	-.32730	-.19490	-.01120	.18950	.15240	-.07090
-8.197	.403	-.30090	-.30960	-.29670	-.29390	-.31510	.06240	.00410	-.05120	-.04050	.02020
-8.008	4.363	-.30110	-.31440	-.29540	-.29690	-.33710	.40050	.02500	-.27580	-.21990	.10960
-8.020	6.274	-.31960	-.32850	-.31460	-.31740	-.35070	.56920	.03590	-.38800	-.30500	.15700
	GRADIENT	.00193	.00115	.00312	.00074	-.00116	.07276	.00442	-.05696	-.04557	.02209

RUN NO. 1165/ 0 RN/L = 3.50 GRADIENT INTERVAL = -5.00/ 5.00

ALPHAO	BETAO	CP1	CP2	CP3	CP4	CPBV	RUDDER	CHR	CNVT	CBVT	CTVT
-6.244	-6.014	-.31900	-.32520	-.32930	-.30180	-.33960	-.39430	-.02350	.32270	.26120	-.13100
-6.183	-4.077	-.31860	-.32150	-.31520	-.29770	-.32720	-.21550	-.01190	.19700	.15920	-.07500
-6.278	.117	-.29420	-.30420	-.28850	-.28550	-.30660	.04950	.00340	-.03680	-.02820	.01430
-6.050	4.293	-.29800	-.30940	-.28520	-.28840	-.32650	.35360	.02140	-.26540	-.20990	.10380
-6.001	6.271	-.31790	-.32440	-.31010	-.30340	-.34490	.53790	.03330	-.37940	-.29770	.15280
	GRADIENT	.00246	.00145	.00359	.00111	.00009	.06799	.00398	-.05524	-.04410	.02136

RUN NO. 1166/ 0 RN/L = 3.49 GRADIENT INTERVAL = -5.00/ 5.00

ALPHAO	BETAO	CP1	CP2	CP3	CP4	CPBV	RUDDER	CHR	CNVT	CBVT	CTVT
-4.135	-6.129	-.33330	-.33270	-.33500	-.31410	-.34860	-.39510	-.02300	.31810	.25710	-.12880
-4.339	-4.003	-.31290	-.32070	-.31300	-.30120	-.32670	-.20840	-.01090	.18430	.14870	-.06970
-4.265	.380	-.29910	-.30420	-.28360	-.28420	-.30340	.05700	.00370	-.04460	-.03470	.01710
-3.793	4.340	-.29270	-.30310	-.27400	-.28140	-.31130	.33610	.01940	-.25490	-.20220	.10020
-3.889	6.192	-.31160	-.32020	-.29860	-.29540	-.33750	.49370	.02980	-.35950	-.28470	.14610
	GRADIENT	.00243	.00214	.00471	.00240	.00191	.06519	.00363	-.05264	-.04206	.02036

RUN NO. 1167/ 0 RN/L = 3.50 GRADIENT INTERVAL = -5.00/ 5.00

ALPHAO	BETAO	CP1	CP2	CP3	CP4	CPBV	RUDDER	CHR	CNVT	CBVT	CTVT
-.478	-7.082	-.33360	-.33270	-.33070	-.32070	-.35150	-.41780	-.02390	.35660	.28600	-.14380
-.444	-4.897	-.31870	-.32020	-.31360	-.30300	-.33280	-.27520	-.01420	.23160	.18810	-.09020
-.399	-.550	-.29390	-.29810	-.27840	-.27920	-.29600	-.02140	.00310	.00740	.00470	.00020
-.376	3.595	-.29350	-.29910	-.26920	-.27910	-.30230	.16160	.01550	-.19490	-.15580	.07310
-.383	5.801	-.29320	-.30060	-.27050	-.27730	-.31080	.30010	.02490	-.30750	-.24810	.12290
	GRADIENT	.00299	.00251	.00525	.00284	.00363	.05149	.00350	-.05023	-.04051	.01924

IA156A, AEDC PWT 16T-470, O T S W/SILTS (R8NF91) (10 MAY 80)

REFERENCE DATA

SREF = 2690.0000 SQ.FT. XMRP = 976.0000 IN. XT
LREF = 1290.3000 INCHES YMRP = .0000 IN. YT
BREF = 1290.3000 INCHES ZMRP = 400.0000 IN. ZT
SCALE = .0200

PARAMETRIC DATA

IB-ELV = 8.000 OB-ELV = 9.000
BDFLAP = .000 SPDBRK = .000
RUDDER = .000 SILTS = 1.000
MACH = 1.250 RN/L = 3.500

RUN NO. 1168/ 0 RN/L = 3.49 GRADIENT INTERVAL = -5.00/ 5.00

ALPHAO	BETAO	CP1	CP2	CP3	CP4	CPBV	RUDDER	CHR	CNVT	CBVT	CTVT
4.077	-5.702	-.30230	-.30740	-.29650	-.29210	-.31750	-.15270	-.01410	.26510	.21650	-.10130
3.954	-3.767	-.30230	-.30830	-.29250	-.28800	-.30700	-.05980	-.00730	.16490	.13460	-.05800
3.808	.180	-.29930	-.30610	-.28630	-.28720	-.29780	.04760	.00320	-.00820	-.00640	.00390
3.745	3.875	-.28700	-.29390	-.26010	-.27160	-.28970	.10170	.01000	-.18180	-.14580	.06530
3.771	6.090	-.29230	-.29750	-.26560	-.27520	-.29930	.25250	.02090	-.29580	-.23770	.11510
	GRADIENT	.00199	.00187	.00421	.00212	.00226	.02120	.00227	-.04535	-.03668	.01613

IA156A, AEDC PWT 16T-470, O T S W/SILTS (R8NF92) (10 MAY 80)

REFERENCE DATA

SREF = 2690.0000 SQ.FT. XMRP = 976.0000 IN. XT
LREF = 1290.3000 INCHES YMRP = .0000 IN. YT
BREF = 1290.3000 INCHES ZMRP = 400.0000 IN. ZT
SCALE = .0200

PARAMETRIC DATA

IB-ELV = 8.000 OB-ELV = 5.000
BDFLAP = .000 SPDBRK = .000
RUDDER = .000 SILTS = 1.000
MACH = .600 RN/L = 3.500

RUN NO. 1173/ 0 RN/L = 3.50 GRADIENT INTERVAL = -5.00/ 5.00

ALPHAO	BETAO	CP1	CP2	CP3	CP4	CPBV	RUDDER	CHR	CNVT	CBVT	CTVT
-8.025	-7.908	-.27420	-.28850	-.26930	-.25530	-.27430	-.21600	-.01850	.41070	.28960	-.10550
-8.116	-5.784	-.27430	-.28430	-.26050	-.25640	-.26920	-.06130	-.00230	.29890	.22340	-.08040
-8.121	-3.803	-.25230	-.27150	-.25020	-.23960	-.26160	-.02830	.00020	.17250	.13100	-.04580
-8.048	.275	-.23460	-.24890	-.23330	-.22050	-.24600	-.01090	-.00130	-.04280	-.03610	.01510
-7.900	4.226	-.24340	-.26350	-.24570	-.23120	-.24780	.03210	.00020	-.25360	-.19660	.07640
-7.898	6.164	-.26220	-.28050	-.25320	-.24470	-.26190	.10410	.00690	-.36510	-.27300	.10690
-7.725	8.229	-.26770	-.28220	-.26160	-.25910	-.26630	.26690	.02400	-.46600	-.32810	.12730
	GRADIENT	.00113	.00102	.00058	.00107	.00173	.00751	-.00000	-.05307	-.04080	.01522

RUN NO. 1174/ 0 RN/L = 3.49 GRADIENT INTERVAL = -5.00/ 5.00

ALPHAO	BETAO	CP1	CP2	CP3	CP4	CPBV	RUDDER	CHR	CNVT	CBVT	CTVT
-6.148	-7.913	-.26560	-.28540	-.27170	-.25360	-.27070	-.22720	-.01910	.41270	.28960	-.10530
-6.110	-5.932	-.26900	-.28670	-.26530	-.25310	-.27160	-.07640	-.00310	.30050	.22480	-.08100
-6.066	-3.987	-.24700	-.26550	-.24650	-.23200	-.25490	-.03700	.00020	.18060	.13790	-.04870
-6.110	.107	-.22930	-.24410	-.23010	-.21860	-.23970	-.00790	-.00070	-.03350	-.02710	.01110
-5.962	4.196	-.24220	-.26410	-.23960	-.23070	-.24680	.03920	.00020	-.25230	-.19200	.07400
-5.737	6.239	-.25200	-.27320	-.25000	-.24010	-.25300	.12440	.00830	-.37020	-.27350	.10710
-5.875	8.145	-.26340	-.27970	-.25530	-.24720	-.26090	.26900	.02360	-.46320	-.32590	.12730
	GRADIENT	.00059	.00017	.00084	.00016	.00099	.00931	-.00000	-.05290	-.04031	.01499

IA156A, AEDC PWT 16T-470, O T S W/SILTS (R8NF92) (10 MAY 80)

REFERENCE DATA

SREF = 2690.0000 SQ.FT. XMRP = 976.0000 IN. XT
LREF = 1290.3000 INCHES YMRP = .0000 IN. YT
BREF = 1290.3000 INCHES ZMRP = 400.0000 IN. ZT
SCALE = .0200

PARAMETRIC DATA

IB-ELV = 8.000 OB-ELV = 5.000
BDFLAP = .000 SPDBRK = .000
RUDDER = .000 SILTS = 1.000
MACH = .600 RN/L = 3.500

RUN NO. 1175/ 0 RN/L = 3.49 GRADIENT INTERVAL = -5.00/ 5.00

ALPHAO	BETAO	CP1	CP2	CP3	CP4	CPBV	RUDDER	CHR	CNVT	CBVT	CTVT
-4.027	-8.037	-.27380	-.28760	-.27050	-.25650	-.27180	-.24080	-.01980	.41190	.28880	-.10480
-4.229	-5.935	-.25120	-.27260	-.26250	-.24070	-.25590	-.08450	-.00320	.29360	.21900	-.07850
-4.242	-3.901	-.25400	-.26880	-.24690	-.23670	-.25530	-.04270	.00050	.17050	.13000	-.04570
-4.043	.175	-.22430	-.24010	-.22020	-.21320	-.23160	-.00700	-.00070	-.03120	-.02490	.00980
-3.706	4.278	-.23980	-.25540	-.22930	-.22530	-.23830	.05970	.00110	-.25270	-.18990	.07380
-3.658	6.060	-.24570	-.26560	-.23860	-.23080	-.24560	.12520	.00750	-.35860	-.26380	.10350
-3.824	8.031	-.25700	-.27590	-.25140	-.26540	-.25590	.27150	.02320	-.46430	-.32620	.12850
	GRADIENT	.00173	.00163	.00215	.00139	.00207	.01252	.00007	-.05174	-.03911	.01461

RUN NO. 1176/ 0 RN/L = 3.49 GRADIENT INTERVAL = -5.00/ 5.00

ALPHAO	BETAO	CP1	CP2	CP3	CP4	CPBV	RUDDER	CHR	CNVT	CBVT	CTVT
-.373	-8.758	-.25890	-.27040	-.25120	-.24330	-.24680	-.31040	-.02670	.44660	.30620	-.11050
-.357	-6.585	-.24490	-.26290	-.25040	-.23050	-.24230	-.13380	-.00740	.32300	.23660	-.08360
-.346	-4.536	-.23570	-.24950	-.23170	-.22060	-.23370	-.07180	-.00060	.20730	.15610	-.05210
-.319	-.396	-.21670	-.23130	-.21360	-.21410	-.22510	-.05280	.00150	.00250	-.00070	.00300
-.289	3.682	-.22580	-.23990	-.21090	-.21260	-.22510	-.06410	.00030	-.18410	-.14100	.04840
-.286	5.791	-.23390	-.25530	-.22460	-.22090	-.23170	-.01410	.00570	-.30030	-.22310	.07940
-.275	7.868	-.25270	-.27080	-.24070	-.23700	-.24300	.12510	.02080	-.41330	-.29270	.10690
	GRADIENT	.00121	.00118	.00254	.00097	.00105	.00095	.00011	-.04763	-.03616	.01223

RUN NO. 1177/ 0 RN/L = 3.50 GRADIENT INTERVAL = -5.00/ 5.00

ALPHAO	BETAO	CP1	CP2	CP3	CP4	CPBV	RUDDER	CHR	CNVT	CBVT	CTVT
4.089	-8.005	-.24540	-.26110	-.24410	-.22760	-.22710	-.11830	-.01930	.35590	.25050	-.08180
4.083	-5.781	-.23890	-.25280	-.23790	-.22060	-.23110	.01420	-.00440	.24680	.18360	-.05520
4.051	-3.799	-.22770	-.23970	-.23090	-.21170	-.22520	.05650	.00100	.13950	.10600	-.02550
3.835	.083	-.21740	-.22920	-.21080	-.20470	-.21580	.01100	.00100	-.00320	-.00520	.00450
3.900	4.057	-.21850	-.23180	-.20360	-.20400	-.21360	-.06050	-.00160	-.16530	-.12950	.04020
3.844	6.165	-.23600	-.25570	-.21560	-.21710	-.22560	.00940	.00700	-.29950	-.22210	.07710
3.835	8.163	-.23960	-.25810	-.21530	-.22660	-.23130	.14160	.02180	-.40360	-.28580	.10290
	GRADIENT	.00117	.00100	.00347	.00098	.00147	-.01491	-.00033	-.03881	-.02998	.00837

IA156A, AEDC PWT 16T-470, O T S W/SILTS (R8NF92) (10 MAY 80)

REFERENCE DATA

SREF = 2690.0000 SQ.FT. XMRP = 976.0000 IN. XT
LREF = 1290.3000 INCHES YMRP = .0000 IN. YT
BREF = 1290.3000 INCHES ZMRP = 400.0000 IN. ZT
SCALE = .0200

PARAMETRIC DATA

IB-ELV = 8.000 OB-ELV = 5.000
BDFLAP = .000 SPDBRK = .000
RUDDER = .000 SILTS = 1.000
MACH = .600 RN/L = 3.500

RUN NO. 1178/ 0 RN/L = 3.51 GRADIENT INTERVAL = -5.00/ 5.00

ALPHAO	BETAO	CP1	CP2	CP3	CP4	CPBV	RUDDER	CHR	CNVT	CBVT	CTVT
6.194	-7.953	-.24210	-.25790	-.23850	-.22540	-.22450	-.13330	-.02020	.36310	.25590	-.08580
6.164	-5.881	-.23660	-.25310	-.23380	-.23040	-.22880	.02520	-.00230	.24600	.18400	-.05590
6.145	-3.824	-.22700	-.23970	-.22050	-.20940	-.22150	.05650	.00220	.14510	.11020	-.02730
5.867	.188	-.21640	-.22750	-.20130	-.20570	-.21400	.01050	.00110	-.00900	-.00910	.00600
5.796	4.071	-.20950	-.22760	-.19720	-.20820	-.21150	-.07650	-.00430	-.15980	-.12490	.03710
5.752	5.986	-.23000	-.25090	-.20970	-.21480	-.22370	-.01940	.00300	-.27310	-.20490	.05930
5.824	8.273	-.24240	-.26160	-.21580	-.22600	-.23070	.14870	.02190	-.40270	-.28680	.10400
	GRADIENT	.00222	.00154	.00296	.00016	.00127	-.01682	-.00082	-.03862	-.02978	.00816

RUN NO. 1179/ 0 RN/L = 3.50 GRADIENT INTERVAL = -5.00/ 5.00

ALPHAO	BETAO	CP1	CP2	CP3	CP4	CPBV	RUDDER	CHR	CNVT	CBVT	CTVT
8.083	-7.803	-.24220	-.25750	-.24060	-.22540	-.23550	-.07520	-.01320	.33680	.24700	-.08400
8.000	-5.751	-.23470	-.24980	-.23340	-.22120	-.22440	.05490	.00170	.22330	.16910	-.04950
7.965	-3.753	-.22350	-.23640	-.21460	-.20700	-.21890	.06470	.00380	.12740	.09750	-.02340
7.877	.175	-.21380	-.22550	-.19930	-.20160	-.21210	.00710	.00080	-.00950	-.01040	.00630
7.923	4.198	-.21830	-.23270	-.20170	-.20110	-.21200	-.08800	-.00630	-.14800	-.11860	.03380
7.890	6.206	-.22910	-.24780	-.20410	-.21420	-.21440	-.05940	-.00210	-.25230	-.19510	.06380
7.883	8.226	-.23130	-.25420	-.21070	-.22150	-.22660	.08350	.01410	-.37860	-.27880	.10050
	GRADIENT	.00065	.00046	.00161	.00074	.00086	-.01922	-.00127	-.03464	-.02718	.00719

IA156A, ADC PWT 16T-470, O T S W/SILTS (R8NF93) (10 MAY 80)

REFERENCE DATA

SREF = 2690.0000 SQ.FT. XMRP = 976.0000 IN. XT
LREF = 1290.3000 INCHES YMRP = .0000 IN. YT
BREF = 1290.3000 INCHES ZMRP = 400.0000 IN. ZT
SCALE = .0200

PARAMETRIC DATA

IB-ELV = 8.000 OB-ELV = 5.000
BDFLAP = .000 SPDBRK = .000
RUDDER = .000 SILTS = 1.000
MACH = .800 RN/L = 3.500

RUN NO. 1180/ 0 RN/L = 3.49 GRADIENT INTERVAL = -5.00/ 5.00

ALPHAO	BETAO	CP1	CP2	CP3	CP4	CPBV	RUDDER	CHR	CNVT	CBVT	CTVT
-8.230	-5.879	-.27590	-.29340	-.27780	-.26870	-.29340	.10500	.01270	.29560	.21880	-.07170
-8.259	-3.819	-.26360	-.28780	-.26500	-.26060	-.28470	.14250	.01510	.16780	.12670	-.03680
-8.164	.382	-.25100	-.26450	-.24690	-.23930	-.26760	-.02390	-.00220	-.04440	-.03220	.01010
-7.986	4.361	-.26450	-.28240	-.26530	-.25770	-.27750	-.07420	-.00920	-.26640	-.20350	.07470
-8.003	6.266	-.27320	-.29360	-.27400	-.26570	-.28780	.00780	-.00290	-.36940	-.26760	.09820
	GRADIENT	-.00008	.00071	.00000	.00040	.00091	-.02661	-.00298	-.05306	-.04034	.01361

RUN NO. 1181/ 0 RN/L = 3.50 GRADIENT INTERVAL = -5.00/ 5.00

ALPHAO	BETAO	CP1	CP2	CP3	CP4	CPBV	RUDDER	CHR	CNVT	CBVT	CTVT
-6.206	-5.984	-.26490	-.28770	-.27430	-.26240	-.28450	.07380	.01060	.29710	.21730	-.07030
-6.149	-4.060	-.26430	-.28620	-.26440	-.26080	-.28030	.12330	.01420	.17890	.13460	-.03970
-6.237	.107	-.24220	-.25660	-.24070	-.23370	-.25520	-.00550	-.00040	-.03430	-.02420	.00820
-6.056	4.261	-.25830	-.27560	-.25750	-.25240	-.26840	-.05800	-.00830	-.25780	-.19370	.07010
-5.762	6.342	-.26950	-.28850	-.26650	-.25760	-.27740	.04250	-.00050	-.37270	-.26860	.09960
	GRADIENT	.00072	.00128	.00083	.00101	.00143	-.02179	-.00270	-.05248	-.03946	.01320

RUN NO. 1182/ 0 RN/L = 3.50 GRADIENT INTERVAL = -5.00/ 5.00

ALPHAO	BETAO	CP1	CP2	CP3	CP4	CPBV	RUDDER	CHR	CNVT	CBVT	CTVT
-4.283	-6.020	-.26860	-.28650	-.27020	-.27340	-.27800	.04320	.00860	.29340	.21340	-.06860
-4.316	-3.984	-.25330	-.27430	-.25440	-.24820	-.26590	.09460	.01240	.16740	.12450	-.03520
-4.232	.381	-.23930	-.25200	-.23500	-.24030	-.25150	.00430	.00010	-.04030	-.02840	.00890
-3.800	4.338	-.25170	-.26770	-.24650	-.24320	-.25820	-.03330	-.00720	-.25790	-.19280	.07030
-3.862	6.153	-.26160	-.28200	-.26080	-.25170	-.27100	.05690	.00010	-.36570	-.26370	.09830
	GRADIENT	.00024	.00087	.00101	.00062	.00097	-.01546	-.00236	-.05104	-.03807	.01263

RUN NO. 1183/ 0 RN/L = 3.50 GRADIENT INTERVAL = -5.00/ 5.00

ALPHAO	BETAO	CP1	CP2	CP3	CP4	CPBV	RUDDER	CHR	CNVT	CBVT	CTVT
-.385	-6.929	-.25560	-.27170	-.25650	-.25540	-.26200	-.10630	-.00350	.34640	.24800	-.08500
-.382	-4.788	-.24260	-.25960	-.24700	-.24400	-.25180	.04900	.01010	.22150	.16060	-.04500
-.348	-.519	-.22850	-.24170	-.22410	-.21990	-.23430	.00060	.00590	.00010	-.00200	.00560
-.317	3.586	-.23820	-.25200	-.23050	-.22820	-.23990	-.10900	-.00370	-.18960	-.13990	.04300
-.315	5.721	-.25200	-.26970	-.24340	-.24130	-.25270	-.05730	.00080	-.31010	-.22870	.07910
	GRADIENT	.00054	.00093	.00199	.00191	.00144	-.01882	-.00164	-.04912	-.03590	.01052

IA156A, AEDC PWT 16T-470, O T S W/SILTS (R8NF93) (10 MAY 80)

REFERENCE DATA

SREF = 2690.0000 SQ.FT. XMRP = 976.0000 IN. XT
LREF = 1290.3000 INCHES YMRP = .0000 IN. YT
BREF = 1290.3000 INCHES ZMRP = 400.0000 IN. ZT
SCALE = .0200

PARAMETRIC DATA

IB-ELV = 8.000 OB-ELV = 5.000
BDFLAP = .000 SPDBRK = .000
RUDDER = .000 SILTS = 1.000
MACH = .800 RN/L = 3.500

RUN NO. 1184/ 0 RN/L = 3.50 GRADIENT INTERVAL = -5.00/ 5.00

ALPHAO	BETAO	CP1	CP2	CP3	CP4	CPBV	RUDDER	CHR	CNVT	CBVT	CTVT
4.095	-5.771	-.24930	-.26440	-.24470	-.24830	-.24940	.06850	.00120	.26260	.19190	-.05640
3.965	-3.678	-.22950	-.24530	-.22720	-.22140	-.23450	.16750	.01050	.13540	.09890	-.01570
3.727	.120	-.23000	-.24240	-.21520	-.21740	-.22970	.04020	.00340	-.00450	-.00600	.00520
3.811	4.005	-.23100	-.24790	-.21860	-.22250	-.23350	-.12350	-.00670	-.16790	-.12830	.03560
3.769	6.084	-.24680	-.26490	-.23910	-.23420	-.24630	-.05920	-.00030	-.29800	-.22240	.07490
	GRADIENT	-.00020	-.00034	.00111	-.00015	.00013	-.03789	-.00224	-.03949	-.02958	.00668

RUN NO. 1185/ 0 RN/L = 3.50 GRADIENT INTERVAL = -5.00/ 5.00

ALPHAO	BETAO	CP1	CP2	CP3	CP4	CPBV	RUDDER	CHR	CNVT	CBVT	CTVT
6.095	-5.818	-.24920	-.26670	-.24250	-.23970	-.25000	.10110	.00470	.24550	.18460	-.05380
6.044	-3.784	-.23590	-.25170	-.23040	-.22420	-.23820	.19560	.01390	.13400	.09990	-.01500
5.748	.159	-.22710	-.24220	-.21480	-.22370	-.22930	.03300	.00280	-.01070	-.01020	.00600
5.691	3.986	-.23380	-.24910	-.21580	-.21830	-.23400	-.17520	-.01210	-.14220	-.11130	.02590
5.834	6.160	-.24560	-.26470	-.23390	-.23220	-.24700	-.11990	-.00630	-.26650	-.20540	.06710
	GRADIENT	.00028	.00035	.00189	.00076	.00055	-.04769	-.00334	-.03555	-.02718	.00526

IA156A, AEDC PWT 16T-470, O T S W/SILTS (R8NF94) (10 MAY 80)

REFERENCE DATA

SREF = 2690.0000 SQ.FT. XMRP = 976.0000 IN. XT
LREF = 1290.3000 INCHES YMRP = .0000 IN. YT
BREF = 1290.3000 INCHES ZMRP = 400.0000 IN. ZT
SCALE = .0200

PARAMETRIC DATA

IB-ELV = 8.000 OB-ELV = 5.000
BDFLAP = .000 SPDBRK = .000
RUDDER = .000 SILTS = 1.000
MACH = .900 RN/L = 3.500

RUN NO. 1186/ 0 RN/L = 3.50 GRADIENT INTERVAL = -5.00/ 5.00

ALPHAO	BETAO	CP1	CP2	CP3	CP4	CPBV	RUDDER	CHR	CNVT	CBVT	CTVT
-8.190	-5.916	-.31270	-.32270	-.30040	-.29670	-.31590	.26740	.02480	.30200	.22660	-.07930
-8.261	-3.757	-.29150	-.31580	-.29590	-.29310	-.30980	.29600	.02620	.15540	.10910	-.02400
-8.166	.176	-.26620	-.28220	-.26600	-.26480	-.28880	.01850	.00150	-.02590	-.01810	.00540
-8.002	4.417	-.28750	-.30830	-.29510	-.28290	-.30520	-.12830	-.01290	-.24580	-.18610	.06540
-8.004	6.263	-.30390	-.31930	-.30120	-.29420	-.31850	-.04420	-.00690	-.35690	-.26860	.10500
	GRADIENT	.00042	.00083	.00001	.00118	.00051	-.05168	-.00477	-.04912	-.03616	.01098

IA156A, AEDC PWT 16T-470, O T S W/SILTS (R8NF94) (10 MAY 80)

REFERENCE DATA

SREF = 2690.0000 SQ.FT. XMRP = 976.0000 IN. XT
LREF = 1290.3000 INCHES YMRP = .0000 IN. YT
BREF = 1290.3000 INCHES ZMRP = 400.0000 IN. ZT
SCALE = .0200

PARAMETRIC DATA

IB-ELV = 8.000 OB-ELV = 5.000
BDFLAP = .000 SPDBRK = .000
RUDDER = .000 SILTS = 1.000
MACH = .900 RN/L = 3.500

RUN NO. 1187/ 0 RN/L = 3.50 GRADIENT INTERVAL = -5.00/ 5.00

ALPHAO	BETAO	CP1	CP2	CP3	CP4	CPBV	RUDDER	CHR	CNVT	CBVT	CTVT
-6.212	[illegible].982	-.30090	-.31700	-.30670	-.29510	-.31180	.23050	.02240	.29920	.22380	-.07760
-6.173	-4.073	-.28180	-.30680	-.28990	-.28170	-.30160	.17880	.01760	.17830	.13390	-.04040
-6.254	.091	-.25720	-.27560	-.25770	-.25090	-.27690	.02750	.00230	-.02570	-.01720	.00520
-6.039	4.266	-.27920	-.30230	-.28370	-.27900	-.29670	-.10650	-.01160	-.23330	-.17220	.05790
-5.991	6.248	-.29720	-.31640	-.29280	-.28800	-.31240	-.02030	-.00550	-.34710	-.25560	.09690
	GRADIENT	.00031	.00054	.00074	.00032	.00059	-.03421	-.00350	-.04936	-.03671	.01179

RUN NO. 1188/ 0 RN/L = 3.50 GRADIENT INTERVAL = -5.00/ 5.00

ALPHAO	BETAO	CP1	CP2	CP3	CP4	CPBV	RUDDER	CHR	CNVT	CBVT	CTVT
-4.069	-6.114	-.28800	-.30810	-.28810	-.28390	-.29900	.17950	.01900	.29340	.21710	-.07370
-4.336	-4.001	-.27250	-.29740	-.28240	-.27510	-.29120	.10220	.01210	.16940	.12970	-.04170
-4.247	.379	-.25590	-.27060	-.24900	-.24720	-.26850	.02600	.00190	-.03750	-.02660	.00850
-3.792	4.317	-.27440	-.29810	-.28380	-.27000	-.29210	-.06560	-.00930	-.23620	-.17240	.05800
-3.879	6.244	-.28760	-.31190	-.28700	-.28160	-.30210	-.04020	-.00770	-.34320	-.25210	.09470
	GRADIENT	-.00015	.00003	-.00002	.00072	-.00001	-.02012	-.00257	-.04873	-.03630	.01198

RUN NO. 1189/ 0 RN/L = 3.50 GRADIENT INTERVAL = -5.00/ 5.00

ALPHAO	BETAO	CP1	CP2	CP3	CP4	CPBV	RUDDER	CHR	CNVT	CBVT	CTVT
-.418	-6.997	-.29140	-.30000	-.28390	-.28070	-.29050	.02760	.00760	.34010	.24580	-.08480
-.400	-4.849	-.27090	-.28510	-.26710	-.26500	-.28120	.09720	.01320	.22180	.17030	-.05600
-.365	-.473	-.24130	-.25660	-.24470	-.23660	-.25780	-.03310	.00270	.00730	.00660	-.00220
-.335	3.592	-.25880	-.27500	-.26460	-.25240	-.27040	-.17640	-.00890	-.17000	-.13110	.03880
-.335	5.739	-.27970	-.29720	-.27290	-.28070	-.28640	-.17560	-.00880	-.28170	-.21060	.07110
	GRADIENT	.00150	.00126	.00036	.00156	.00133	-.03238	-.00262	-.04645	-.03573	.01124

RUN NO. 1190/ 0 RN/L = 3.50 GRADIENT INTERVAL = -5.00/ 5.00

ALPHAO	BETAO	CP1	CP2	CP3	CP4	CPBV	RUDDER	CHR	CNVT	CBVT	CTVT
4.050	-5.715	-.27520	-.28690	-.27040	-.27160	-.27940	.32900	.02210	.22500	.17170	-.04390
3.950	-3.708	-.25890	-.26940	-.25400	-.25920	-.26810	.36030	.02530	.12730	.10110	-.01690
3.708	.080	-.24560	-.25920	-.24610	-.24790	-.25740	.05930	.00460	.00420	.00330	-.00100
3.803	3.954	-.25290	-.27270	-.25800	-.24610	-.26920	-.29400	-.02000	-.14510	-.11830	.02740
3.762	6.072	-.27720	-.29740	-.27920	-.26840	-.29020	-.25200	-.01590	-.27210	-.20960	.06680
	GRADIENT	.00077	-.00044	-.00053	.00170	-.00015	-.08542	-.00591	-.03556	-.02864	.00579

IA156A, AEDC PWT 16T-470, O T S W/SILTS (R8NF95) (10 MAY 80)

REFERENCE DATA

SREF = 2690.0000 SQ.FT. XMRP = 976.0000 IN. XT
LREF = 1290.3000 INCHES YMRP = .0000 IN. YT
BREF = 1290.3000 INCHES ZMRP = 400.0000 IN. ZT
SCALE = .0200

PARAMETRIC DATA

IB-ELV = 8.000 OB-ELV = 5.000
BDFLAP = .000 SPDBRK = .000
RUDDER = .000 SILTS = 1.000
MACH = .950 RN/L = 3.500

RUN NO. 1191/ 0 RN/L = 3.50 GRADIENT INTERVAL = -5.00/ 5.00

ALPHAO	BETAO	CP1	CP2	CP3	CP4	CPBV	RUDDER	CHR	CNVT	CBVT	CTVT
-8.132	-5.921	-.34580	-.35240	-.32600	-.33000	-.34250	.34410	.03010	.32050	.24750	-.09630
-8.276	-3.763	-.32540	-.33970	-.30960	-.32100	-.33230	.42930	.03570	.16770	.12240	-.03480
-8.174	.169	-.31020	-.31730	-.28420	-.29600	-.31830	-.07710	-.00600	-.02530	-.01930	.00590
-8.010	4.434	-.32140	-.33410	-.31100	-.31140	-.33220	-.27730	-.02410	-.25200	-.19650	.07540
-7.997	6.260	-.34370	-.35360	-.33110	-.33590	-.35140	-.19160	-.01820	-.36330	-.28430	.11910
	GRADIENT	.00044	.00062	-.00026	.00110	-.00003	-.08565	-.00725	-.05123	-.03894	.01348

RUN NO. 1192/ 0 RN/L = 3.49 GRADIENT INTERVAL = -5.00/ 5.00

ALPHAO	BETAO	CP1	CP2	CP3	CP4	CPBV	RUDDER	CHR	CNVT	CBVT	CTVT
-6.239	-6.007	-.33580	-.34550	-.31930	-.33230	-.33880	.35610	.03160	.31150	.23890	-.08990
-6.152	-4.059	-.31500	-.32980	-.30680	-.31530	-.32120	.41930	.03580	.17570	.12950	-.03720
-6.251	.098	-.28820	-.30250	-.27080	-.28190	-.30050	-.11300	-.00870	-.02080	-.01210	-.00050
-6.044	4.274	-.31430	-.32900	-.30320	-.30650	-.32610	-.30040	-.02650	-.23730	-.18090	.06540
-6.001	6.257	-.34070	-.34810	-.32090	-.33270	-.34090	-.17640	-.01750	-.35650	-.27620	.11400
	GRADIENT	.00008	.00009	.00043	.00105	-.00059	-.08633	-.00747	-.04956	-.03725	.01232

RUN NO. 1193/ 0 RN/L = 3.49 GRADIENT INTERVAL = -5.00/ 5.00

ALPHAO	BETAO	CP1	CP2	CP3	CP4	CPBV	RUDDER	CHR	CNVT	CBVT	CTVT
-4.072	-6.110	-.32820	-.33480	-.31310	-.32100	-.32590	.36640	.03310	.29990	.22570	-.08000
-4.336	-4.005	-.31110	-.32000	-.29910	-.29670	-.31200	.40970	.03570	.16160	.11500	-.02760
-4.260	.372	-.29120	-.30270	-.26930	-.27980	-.30120	-.07950	-.00640	-.03070	-.01620	.00110
-3.798	4.338	-.30800	-.32100	-.28850	-.29520	-.31030	-.26690	-.02480	-.23450	-.17660	.06230
-3.881	6.155	-.32600	-.34070	-.30970	-.31590	-.33160	-.16820	-.01750	-.34390	-.26410	.10710
	GRADIENT	.00044	-.00005	.00137	.00024	.00024	-.08162	-.00729	-.04741	-.03487	.01070

RUN NO. 1194/ 0 RN/L = 3.48 GRADIENT INTERVAL = -5.00/ 5.00

ALPHAO	BETAO	CP1	CP2	CP3	CP4	CPBV	RUDDER	CHR	CNVT	CBVT	CTVT
-.431	-7.014	-.32920	-.33410	-.31860	-.32000	-.32330	.23320	.02350	.33280	.24930	-.08960
-.411	-4.850	-.29750	-.30330	-.28750	-.29330	-.28730	.28810	.02770	.20710	.15590	-.04640
-.380	-.542	-.27720	-.28550	-.26370	-.27370	-.28140	-.01310	.00420	.00350	.00170	.00190
-.343	3.578	-.29030	-.29900	-.26850	-.27620	-.28910	-.27710	-.01650	-.16800	-.12650	.03610
-.343	5.762	-.31600	-.32610	-.29770	-.31040	-.31560	-.21760	-.01180	-.28240	-.22040	.08190
	GRADIENT	.00088	.00054	.00228	.00205	-.00020	-.06708	-.00525	-.04453	-.03352	.00980

IA156A, AEDC PWT 16T-470, O T S W/SILTS (R8NF95) (10 MAY 80)

REFERENCE DATA

SREF = 2690.0000 SQ.FT. XMRP = 976.0000 IN. XT
LREF = 1290.3000 INCHES YMRP = .0000 IN. YT
BREF = 1290.3000 INCHES ZMRP = 400.0000 IN. ZT
SCALE = .0200

PARAMETRIC DATA

IB-ELV = 8.000 OB-ELV = 5.000
BDFLAP = .000 SPDBRK = .000
RUDDER = .000 SILTS = 1.000
MACH = .950 RN/L = 3.500

RUN NO. 1195/ 0 RN/L = 3.49 GRADIENT INTERVAL = -5.00/ 5.00

ALPHAO	BETAO	CP1	CP2	CP3	CP4	CPBV	RUDDER	CHR	CNVT	CBVT	CTVT
4.079	-5.762	-.29720	-.30640	-.29120	-.29390	-.29650	.37550	.02500	.22100	.17380	-.04840
3.933	-3.661	-.28270	-.29930	-.27250	-.27910	-.28010	.32260	.02150	.10980	.08270	-.00870
3.702	.123	-.28030	-.27960	-.26780	-.27160	-.27960	.05030	.00380	-.00630	-.00650	.00560
3.815	3.995	-.28440	-.29540	-.27410	-.27890	-.28750	-.23560	-.01480	-.13860	-.11220	.02770
3.764	6.074	-.30710	-.31670	-.28620	-.29580	-.30660	-.32910	-.02140	-.25580	-.20570	.06880
	GRADIENT	-.00023	-.00080	-.00021	.00002	-.00097	-.07291	-.00474	-.03245	-.02546	.00476

IA156A, AEDC PWT 16T-470, O T S W/SILTS (R8NF96) (10 MAY 80)

REFERENCE DATA

SREF = 2690.0000 SQ.FT. XMRP = 976.0000 IN. XT
LREF = 1290.3000 INCHES YMRP = .0000 IN. YT
BREF = 1290.3000 INCHES ZMRP = 400.0000 IN. ZT
SCALE = .0200

PARAMETRIC DATA

IB-ELV = 8.000 OB-ELV = 5.000
BDFLAP = .000 SPDBRK = .000
RUDDER = .000 SILTS = 1.000
MACH = 1.050 RN/L = 3.500

RUN NO. 1196/ 0 RN/L = 3.50 GRADIENT INTERVAL = -5.00/ 5.00

ALPHAO	BETAO	CP1	CP2	CP3	CP4	CPBV	RUDDER	CHR	CNVT	CBVT	CTVT
-8.154	-5.981	-.43700	-.44150	-.43330	-.42700	-.45910	-.06520	-.00170	.35420	.28370	-.13450
-8.291	-3.794	-.43710	-.44210	-.42100	-.42080	-.44670	.00410	.00250	.20040	.15700	-.06860
-8.203	.186	-.41010	-.41970	-.39000	-.40070	-.42030	.05410	.00400	-.03240	-.02840	.01390
-8.003	4.335	-.41650	-.42420	-.39080	-.40420	-.43520	.08240	.00370	-.26980	-.22010	.10360
-8.011	6.249	-.42160	-.42540	-.39930	-.40800	-.44580	.13580	.00700	-.38530	-.31190	.15150
	GRADIENT	.00251	.00218	.00369	.00202	.00138	.00961	.00015	-.05784	-.04639	.02119

RUN NO. 1197/ 0 RN/L = 3.50 GRADIENT INTERVAL = -5.00/ 5.00

ALPHAO	BETAO	CP1	CP2	CP3	CP4	CPBV	RUDDER	CHR	CNVT	CBVT	CTVT
-6.215	-5.998	-.43480	-.43840	-.42890	-.42360	-.45820	-.04070	.00060	.34210	.27450	-.12870
-6.157	-4.060	-.43040	-.43630	-.42040	-.41180	-.44290	.00760	.00350	.20950	.16560	-.07260
-6.263	.161	-.41290	-.42080	-.38990	-.40270	-.41560	.04340	.00320	-.03410	-.02840	.01350
-6.064	4.290	-.39880	-.41070	-.37590	-.38930	-.41550	.07140	.00240	-.26710	-.21530	.10070
-5.814	6.342	-.41690	-.41980	-.39010	-.40000	-.43390	.08610	.00270	-.38100	-.30700	.14780
	GRADIENT	.00379	.00307	.00534	.00269	.00329	.00764	-.00013	-.05708	-.04562	.02075

IA156A, AEDC PWT 16T-470, O T S W/SILTS (R8NF96) (10 MAY 80)

REFERENCE DATA

SREF = 2690.0000 SQ.FT. XMRP = 976.0000 IN. XT
LREF = 1290.3000 INCHES YMRP = .0000 IN. YT
BREF = 1290.3000 INCHES ZMRP = 400.0000 IN. ZT
SCALE = .0200

PARAMETRIC DATA

IB-ELV = 8.000 OB-ELV = 5.000
BDFLAP = .000 SPDBRK = .000
RUDDER = .000 SILTS = 1.000
MACH = 1.050 RN/L = 3.500

RUN NO. 1198/ 0 RN/L = 3.50 GRADIENT INTERVAL = -5.00/ 5.00

ALPHAO	BETAO	CP1	CP2	CP3	CP4	CPBV	RUDDER	CHR	CNVT	CBVT	CTVT
-4.123	-6.110	-.43150	-.43870	-.42640	-.41970	-.45560	-.01820	.00290	.33320	.26710	-.12420
-4.348	-4.024	-.42650	-.43470	-.41040	-.40610	-.43540	.01360	.00460	.19820	.15560	-.06740
-4.265	.359	-.41240	-.42090	-.38240	-.39690	-.41120	.03670	.00250	-.03890	-.03250	.01510
-3.787	4.330	-.38880	-.40270	-.36280	-.37710	-.40220	-.00350	-.00400	-.25920	-.20860	.09630
-3.875	6.159	-.40190	-.41490	-.37940	-.39130	-.41930	.06720	.00080	-.36070	-.29090	.13990
	GRADIENT	.00449	.00382	.00571	.00345	.00400	-.00192	-.00102	-.05474	-.04359	.01958

RUN NO. 1199/ 0 RN/L = 3.50 GRADIENT INTERVAL = -5.00/ 5.00

ALPHAO	BETAO	CP1	CP2	CP3	CP4	CPBV	RUDDER	CHR	CNVT	CBVT	CTVT
-.466	-7.077	-.43350	-.44060	-.42570	-.41620	-.45410	-.00650	.00440	.36830	.29080	-.13310
-.448	-4.893	-.42090	-.43180	-.40470	-.40770	-.43230	.04530	.00820	.24130	.19250	-.08310
-.424	-.539	-.39930	-.40860	-.37390	-.39000	-.39540	-.00690	.00440	.01260	.00720	-.00040
-.388	3.586	-.39260	-.40130	-.36860	-.38310	-.39860	-.16420	-.00720	-.19170	-.15470	.06520
-.386	5.766	-.39880	-.40720	-.37810	-.38670	-.40750	-.10550	-.00290	-.30370	-.24830	.11360
	GRADIENT	.00335	.00361	.00428	.00291	.00402	-.02459	-.00181	-.05108	-.04096	.01750

RUN NO. 1200/ 0 RN/L = 3.50 GRADIENT INTERVAL = -5.00/ 5.00

ALPHAO	BETAO	CP1	CP2	CP3	CP4	CPBV	RUDDER	CHR	CNVT	CBVT	CTVT
4.070	-5.753	-.41800	-.42630	-.41190	-.40720	-.43040	.28650	.01710	.25880	.20960	-.08580
3.940	-3.673	-.40340	-.41170	-.38670	-.38610	-.40810	.28780	.01780	.14690	.11720	-.04080
3.705	.113	-.39930	-.40750	-.37320	-.38290	-.39520	.01400	.00090	.00050	-.00300	.00340
3.803	3.989	-.38370	-.39550	-.35960	-.37080	-.38930	-.24480	-.01470	-.17000	-.14210	.05710
3.769	6.064	-.39160	-.40070	-.36500	-.37780	-.40460	-.21840	-.01200	-.27890	-.22870	.09920
	GRADIENT	.00258	.00212	.00354	.00200	.00245	-.06950	-.00424	-.04137	-.03385	.01278

IA156A, AEDC PWT 16T-470, O T S W/SILTS (R8NF97) (10 MAY 80)

REFERENCE DATA

SREF = 2690.0000 SQ.FT. XMRP = 976.0000 IN. XT
LREF = 1290.3000 INCHES YMRP = .0000 IN. YT
BREF = 1290.3000 INCHES ZMRP = 400.0000 IN. ZT
SCALE = .0200

PARAMETRIC DATA

IB-ELV = 8.000 OB-ELV = 5.000
BDFLAP = .000 SPDBRK = .000
RUDDER = .000 SILTS = 1.000
MACH = 1.100 RN/L = 3.500

RUN NO. 1201/ 0 RN/L = 3.50 GRADIENT INTERVAL = -5.00/ 5.00

ALPHAO	BETAO	CP1	CP2	CP3	CP4	CPBV	RUDDER	CHR	CNVT	CBVT	CTVT
-8.174	-5.983	-.40560	-.40360	-.40090	-.39330	-.42250	-.13770	-.00690	.33630	.26990	-.12910
-8.275	-3.797	-.39010	-.39480	-.37610	-.37320	-.39820	-.02040	.00070	.18610	.14560	-.06370
-8.184	.190	-.36040	-.36730	-.34400	-.34600	-.37020	.07140	.00510	-.03880	-.03310	.01660
-8.018	4.331	-.37100	-.38390	-.35070	-.35890	-.39980	.15690	.00900	-.26800	-.21830	.10460
-8.006	6.254	-.37360	-.38070	-.35380	-.36360	-.41000	.25810	.01560	-.37820	-.30610	.15180
	GRADIENT	.00232	.00131	.00309	.00173	-.00024	.02181	.00102	-.05587	-.04477	.02071

RUN NO. 1202/ 0 RN/L = 3.50 GRADIENT INTERVAL = -5.00/ 5.00

ALPHAO	BETAO	CP1	CP2	CP3	CP4	CPBV	RUDDER	CHR	CNVT	CBVT	CTVT
-6.211	-5.998	-.38280	-.38920	-.38460	-.36750	-.40660	-.08900	-.00290	.31480	.25360	-.11980
-6.170	-4.046	-.38070	-.38870	-.37080	-.36470	-.39010	-.01070	.00210	.19500	.15380	-.06770
-6.293	.153	-.35960	-.36990	-.33740	-.34910	-.36590	.06450	.00470	-.03870	-.03180	.01570
-6.065	4.291	-.34600	-.35930	-.32710	-.33850	-.36760	.16560	.00910	-.25870	-.20850	.09980
-5.794	6.334	-.36750	-.37080	-.34160	-.35060	-.39130	.22070	.01240	-.37090	-.30040	.14860
	GRADIENT	.00416	.00353	.00525	.00314	.00271	.02114	.00084	-.05442	-.04346	.02009

RUN NO. 1203/ 0 RN/L = 3.50 GRADIENT INTERVAL = -5.00/ 5.00

ALPHAO	BETAO	CP1	CP2	CP3	CP4	CPBV	RUDDER	CHR	CNVT	CBVT	CTVT
-4.111	-6.118	-.38140	-.38290	-.37360	-.36780	-.40270	-.04500	.00090	.31380	.25180	-.11760
-4.347	-4.024	-.37950	-.38550	-.36380	-.36100	-.38680	.00280	.00370	.18330	.14410	-.06270
-4.258	.366	-.34860	-.35960	-.32550	-.33740	-.35340	.05000	.00340	-.04150	-.03470	.01670
-3.786	4.326	-.33750	-.35060	-.31450	-.32840	-.34980	.07570	.00180	-.24900	-.20130	.09510
-3.880	6.168	-.34980	-.36500	-.33270	-.34030	-.37690	.15720	.00790	-.35330	-.28610	.14070
	GRADIENT	.00507	.00421	.00596	.00393	.00449	.00877	-.00022	-.05176	-.04135	.01888

RUN NO. 1204/ 0 RN/L = 3.50 GRADIENT INTERVAL = -5.00/ 5.00

ALPHAO	BETAO	CP1	CP2	CP3	CP4	CPBV	RUDDER	CHR	CNVT	CBVT	CTVT
-.471	-7.063	-.38290	-.38650	-.37440	-.36510	-.40370	-.05170	.00100	.35400	.28070	-.13030
-.441	-4.903	-.36850	-.37820	-.35140	-.34990	-.38070	.00920	.00540	.22910	.18290	-.07950
-.415	-.535	-.33740	-.34640	-.30940	-.32500	-.33390	-.00470	.00440	.01010	.00500	.00070
-.383	3.594	-.32760	-.33770	-.30490	-.31880	-.33490	-.14290	-.00550	-.18920	-.15320	.06570
-.382	5.794	-.33400	-.34460	-.31300	-.32390	-.34660	-.08470	-.00130	-.29990	-.24560	.11340
	GRADIENT	.00484	.00479	.00551	.00368	.00544	-.01776	-.00127	-.04924	-.03957	.01710

IA156A, AEDC PWT 16T-470, O T S W/SILTS (R8NF97) (10 MAY 80)

REFERENCE DATA

SREF = 2690.0000 SQ.FT. XMRP = 976.0000 IN. XT
LREF = 1290.3000 INCHES YMRP = .0000 IN. YT
BREF = 1290.3000 INCHES ZMRP = 400.0000 IN. ZT
SCALE = .0200

PARAMETRIC DATA

IB-ELV = 8.000 OB-ELV = 5.000
BDFLAP = .000 SPDBRK = .000
RUDDER = .000 SILTS = 1.000
MACH = 1.100 RN/L = 3.500

RUN NO. 1205/ 0 RN/L = 3.50 GRADIENT INTERVAL = -5.00/ 5.00

ALPHAO	BETAO	CP1	CP2	CP3	CP4	CPBV	RUDDER	CHR	CNVT	CBVT	CTVT
4.085	-5.767	-.34080	-.34610	-.33640	-.33060	-.35390	.26650	.01530	.25250	.20500	-.08470
3.929	-3.665	-.33710	-.34310	-.32340	-.32470	-.34130	.25910	.01530	.14710	.11760	-.04210
3.699	.120	-.34430	-.35400	-.31650	-.33200	-.34260	-.00260	-.00030	-.00400	-.00630	.00450
3.792	3.985	-.32140	-.33500	-.30080	-.31280	-.33180	-.21420	-.01210	-.17040	-.14160	.05800
3.770	6.066	-.32910	-.33720	-.30430	-.31630	-.34480	-.17470	-.00860	-.28100	-.23110	.10250
	GRADIENT	.00207	.00107	.00296	.00157	.00125	-.06184	-.00358	-.04151	-.03389	.01309

IA156A, AEDC PWT 16T-470, O T S W/SILTS (R8NF98) (28 MAY 80)

REFERENCE DATA

SREF = 2690.0000 SQ.FT. XMRP = 976.0000 IN. XT
LREF = 1290.3000 INCHES YMRP = .0000 IN. YT
BREF = 1290.3000 INCHES ZMRP = 400.0000 IN. ZT
SCALE = .0200

PARAMETRIC DATA

IB-ELV = 8.000 OB-ELV = 5.000
BDFLAP = .000 SPDBRK = .000
RUDDER = .000 SILTS = 1.000
MACH = 1.150 RN/L = 3.500

RUN NO. 1206/ 0 RN/L = 3.50 GRADIENT INTERVAL = -5.00/ 5.00

ALPHAO	BETAO	CP1	CP2	CP3	CP4	CPBV	RUDDER	CHR	CNVT	CBVT	CTVT
-8.116	-5.938	-.37580	-.37720	-.37650	-.36930	-.39290	-.24440	-.01430	.33760	.27090	-.13200
-8.284	-3.757	-.37170	-.37460	-.36100	-.35610	-.38170	-.08850	-.00410	.19380	.15250	-.06850
-8.189	.179	-.33880	-.34310	-.32450	-.32540	-.34560	.05030	.00350	-.03160	-.02750	.01450
-7.997	4.409	-.34440	-.35570	-.32800	-.33430	-.37650	.25290	.01550	-.26560	-.21620	.10610
-8.024	6.284	-.34880	-.35850	-.33600	-.33920	-.39180	.39640	.02500	-.37520	-.30370	.15410
	GRADIENT	.00329	.00225	.00398	.00261	.00054	.04189	.00241	-.05625	-.04515	.02139

RUN NO. 1207/ 0 RN/L = 3.50 GRADIENT INTERVAL = -5.00/ 5.00

ALPHAO	BETAO	CP1	CP2	CP3	CP4	CPBV	RUDDER	CHR	CNVT	CBVT	CTVT
-6.217	-6.006	-.37260	-.37240	-.37070	-.36180	-.38690	-.21600	-.01180	.32640	.26230	-.12700
-6.140	-4.065	-.34660	-.35610	-.34440	-.33040	-.36200	-.09520	-.00390	.19830	.15780	-.07150
-6.279	.087	-.32920	-.33980	-.31820	-.31970	-.34030	.04440	.00320	-.02700	-.02270	.01190
-6.037	4.273	-.32920	-.33970	-.30830	-.31790	-.34930	.24520	.01450	-.25170	-.20280	.09920
-6.014	6.269	-.34290	-.35080	-.32210	-.32880	-.37530	.36010	.02190	-.36690	-.29660	.15000
	GRADIENT	.00208	.00196	.00433	.00150	.00152	.04084	.00221	-.05397	-.04325	.02047

IA156A, AEDC PWT 16T-470, O T S W/SILTS (R8NF98) (28 MAY 80)

REFERENCE DATA

SREF = 2690.0000 SQ.FT. XMRP = 976.0000 IN. XT
LREF = 1290.3000 INCHES YMRP = .0000 IN. YT
BREF = 1290.3000 INCHES ZMRP = 400.0000 IN. ZT
SCALE = .0200

PARAMETRIC DATA

IB-ELV = 8.000 OB-ELV = 5.000
BDFLAP = .000 SPDBRK = .000
RUDDER = .000 SILTS = 1.000
MACH = 1.150 RN/L = 3.500

RUN NO. 1208/ 0 RN/L = 3.50 GRADIENT INTERVAL = -5.00/ 5.00

ALPHAO	BETAO	CP1	CP2	CP3	CP4	CPBV	RUDDER	CHR	CNVT	CBVT	CTVT
-4.099	-6.128	-.36430	-.36210	-.36010	-.34410	-.38080	-.17970	-.00860	.32000	.25700	-.12350
-4.341	-4.015	-.35680	-.36100	-.34510	-.33850	-.36550	-.07600	-.00190	.18960	.15030	-.06750
-4.281	.366	-.32990	-.34280	-.31200	-.31910	-.33760	.05380	.00360	-.03320	-.02850	.01490
-3.789	4.344	-.32200	-.33230	-.29710	-.30870	-.33630	.18100	.00920	-.24830	-.20080	.09750
-3.884	6.169	-.33140	-.34660	-.31260	-.32200	-.36130	.30660	.01760	-.34730	-.28090	.14120
	GRADIENT	.00420	.00345	.00577	.00358	.00354	.03073	.00133	-.05236	-.04198	.01972

RUN NO. 1210/ 0 RN/L = 3.51 GRADIENT INTERVAL = -5.00/ 5.00

ALPHAO	BETAO	CP1	CP2	CP3	CP4	CPBV	RUDDER	CHR	CNVT	CBVT	CTVT
-.458	-7.033	-.35810	-.36550	-.35740	-.33650	-.38680	-.17750	-.00780	.35470	.28180	-.13460
-.434	-4.804	-.35670	-.36170	-.34280	-.34330	-.36800	-.05870	.00050	.22960	.18450	-.08270
-.396	-.513	-.31870	-.32590	-.29260	-.30950	-.31890	-.00080	.00460	.01050	.00630	-.00030
-.363	3.669	-.31410	-.32270	-.29140	-.30370	-.32130	.02790	.00660	-.19800	-.15910	.07220
-.367	5.788	-.32280	-.33150	-.29900	-.31120	-.33510	.08850	.01090	-.30470	-.24810	.11870
	GRADIENT	.00504	.00462	.00609	.00469	.00554	.01023	.00072	-.05047	-.04055	.01828

RUN NO. 1211/ 0 RN/L = 3.50 GRADIENT INTERVAL = -5.00/ 5.00

ALPHAO	BETAO	CP1	CP2	CP3	CP4	CPBV	RUDDER	CHR	CNVT	CBVT	CTVT
4.062	-5.756	-.33250	-.33730	-.32530	-.32250	-.34890	.11600	.00430	.26410	.21410	-.09320
3.949	-3.648	-.32860	-.33640	-.31690	-.32210	-.33680	.14640	.00700	.15660	.12540	-.04830
3.698	.165	-.33010	-.33850	-.30570	-.31760	-.32970	.05660	.00400	-.00030	-.00320	.00450
3.790	4.004	-.31180	-.32190	-.28560	-.30010	-.31970	-.05760	-.00080	-.17240	-.14250	.06230
3.765	6.064	-.31780	-.32470	-.28890	-.30570	-.33240	.00610	.00430	-.28530	-.23380	.10870
	GRADIENT	.00220	.00190	.00409	.00288	.00224	-.02666	-.00102	-.04300	-.03501	.01445

IA156A, AEDC PWT 16T-470, O T S W/SILTS (R8NFA0) (10 MAY 80)

REFERENCE DATA

SREF = 2690.0000 SQ.FT. XMRP = 976.0000 IN. XT
LREF = 1290.3000 INCHES YMRP = .0000 IN. YT
BREF = 1290.3000 INCHES ZMRP = 400.0000 IN. ZT
SCALE = .0200

PARAMETRIC DATA

IB-ELV = 8.000 OB-ELV = 5.000
BDFLAP = .000 SPDBRK = .000
RUDDER = .000 SILTS = 1.000
MACH = 1.250 RN/L = 3.500

RUN NO. 1224/ 0 RN/L = 3.50 GRADIENT INTERVAL = -5.00/ 5.00

ALPHAO	BETAO	CP1	CP2	CP3	CP4	CPBV	RUDDER	CHR	CNVT	CBVT	CTVT
-8.261	-5.906	-.33220	-.33400	-.35080	-.31350	-.35220	-.43910	-.02710	.34790	.27090	-.13600
-8.253	-3.859	-.32040	-.32290	-.32100	-.29700	-.33050	-.23730	-.01400	.20930	.15970	-.07530
-8.194	.281	-.30650	-.30950	-.29540	-.28830	-.31640	.04960	.00330	-.02700	-.03030	.01550
-7.998	4.303	-.31200	-.32100	-.30370	-.30500	-.34410	.41080	.02580	-.25510	-.21320	.10730
-8.035	6.278	-.32780	-.33460	-.32010	-.31050	-.35210	.63040	.04000	-.37110	-.30280	.15760
	GRADIENT	.00104	.00025	.00214	-.00097	-.00164	.07935	.00487	-.05690	-.04569	.02237

RUN NO. 1225/ 0 RN/L = 3.50 GRADIENT INTERVAL = -5.00/ 5.00

ALPHAO	BETAO	CP1	CP2	CP3	CP4	CPBV	RUDDER	CHR	CNVT	CBVT	CTVT
-6.248	-6.015	-.32630	-.32720	-.32830	-.32210	-.34330	-.39310	-.02340	.34090	.26560	-.13350
-6.179	-4.080	-.32160	-.32410	-.31600	-.31060	-.33130	-.24080	-.01360	.21290	.16250	-.07690
-6.268	.127	-.30130	-.30620	-.29050	-.29020	-.30730	.03540	.00250	-.02040	-.02450	.01230
-6.056	4.287	-.30670	-.31350	-.29050	-.29510	-.32790	.36830	.02240	-.24670	-.20480	.10250
-5.806	6.385	-.32100	-.32800	-.31210	-.31330	-.34500	.60910	.03800	-.36970	-.30030	.15610
	GRADIENT	.00179	.00127	.00305	.00186	.00042	.07279	.00430	-.05493	-.04390	.02144

RUN NO. 1226/ 0 RN/L = 3.50 GRADIENT INTERVAL = -5.00/ 5.00

ALPHAO	BETAO	CP1	CP2	CP3	CP4	CPBV	RUDDER	CHR	CNVT	CBVT	CTVT
-4.129	-6.126	-.33480	-.33380	-.33280	-.32630	-.35010	-.39310	-.02290	.33470	.26030	-.13050
-4.347	-4.012	-.32310	-.32460	-.31630	-.31190	-.33020	-.21960	-.01160	.20300	.15370	-.07220
-4.264	.386	-.30950	-.31640	-.29530	-.29940	-.31300	.03900	.00250	-.02810	-.03120	.01550
-3.782	4.332	-.30120	-.30780	-.28090	-.28580	-.31030	.34710	.02020	-.23820	-.19900	.09970
-3.884	6.187	-.31810	-.32220	-.30010	-.30300	-.33820	.52770	.03200	-.34300	-.28170	.14580
	GRADIENT	.00263	.00201	.00425	.00312	.00241	.06774	.00380	-.05287	-.04226	.02059

RUN NO. 1227/ 0 RN/L = 3.50 GRADIENT INTERVAL = -5.00/ 5.00

ALPHAO	BETAO	CP1	CP2	CP3	CP4	CPBV	RUDDER	CHR	CNVT	CBVT	CTVT
-.484	-7.074	-.33180	-.33470	-.33190	-.32520	-.35310	-.44270	-.02560	.36910	.28580	-.14320
-.454	-4.892	-.31960	-.32350	-.31550	-.31040	-.33570	-.30100	-.01600	.24710	.19020	-.09100
-.407	-.556	-.30070	-.30820	-.28850	-.29130	-.30340	-.05310	.00090	.02590	.00960	-.00210
-.379	3.595	-.28230	-.29130	-.26800	-.27640	-.28680	.25850	.02210	-.17870	-.15220	.07150
-.392	5.798	-.30080	-.30820	-.28160	-.28750	-.31310	.35060	.02830	-.29020	-.24430	.12180
	GRADIENT	.00439	.00379	.00560	.00401	.00577	.06586	.00448	-.05017	-.04035	.01916

IA156A, AEDC PWT 16T-470, O T S W/SILTS (R8NFA0) (10 MAY 80)

REFERENCE DATA

SREF = 2690.0000 SQ.FT. XMRP = 976.0000 IN. XT
LREF = 1290.3000 INCHES YMRP = .0000 IN. YT
BREF = 1290.3000 INCHES ZMRP = 400.0000 IN. ZT
SCALE = .0200

PARAMETRIC DATA

IB-ELV = 8.000 OB-ELV = 5.000
BDFLAP = .000 SPDBRK = .000
RUDDER = .000 SILTS = 1.000
MACH = 1.250 RN/L = 3.500

RUN NO. 1228/ 0 RN/L = 3.50 GRADIENT INTERVAL = -5.00/ 5.00

ALPHAO	BETAO	CP1	CP2	CP3	CP4	CPBV	RUDDER	CHR	CNVT	CBVT	CTVT
3.893	-5.679	-.30460	-.30980	-.30070	-.29720	-.31990	-.21250	-.01820	.28080	.21830	-.10190
3.928	-3.875	-.30500	-.31160	-.29600	-.29720	-.31050	-.10270	-.01030	.18620	.14090	-.06090
3.820	.192	-.30260	-.30980	-.29050	-.29270	-.30170	.01770	.00120	.00660	-.00460	.00290
3.756	3.872	-.29300	-.29930	-.26920	-.27940	-.29420	.14520	.01300	-.16680	-.14370	.06500
3.766	6.079	-.30430	-.31300	-.28670	-.29080	-.31510	.27990	.02280	-.27970	-.23560	.11510
	GRADIENT	.00153	.00157	.00342	.00228	.00211	.03196	.00300	-.04554	-.03672	.01624

IA156A, AEDC PWT 16T-470, O T S W/SILTS (R8NFA1) (10 MAY 80)

REFERENCE DATA

SREF = 2690.0000 SQ.FT. XMRP = 976.0000 IN. XT
LREF = 1290.3000 INCHES YMRP = .0000 IN. YT
BREF = 1290.3000 INCHES ZMRP = 400.0000 IN. ZT
SCALE = .0200

PARAMETRIC DATA

IB-ELV = 8.000 OB-ELV = 5.000
BDFLAP = .000 SPDBRK = .000
RUDDER = .000 SILTS = 1.000
MACH = 1.400 RN/L = 3.500

RUN NO. 1229/ 0 RN/L = 3.50 GRADIENT INTERVAL = -5.00/ 5.00

ALPHAO	BETAO	CP1	CP2	CP3	CP4	CPBV	RUDDER	CHR	CNVT	CBVT	CTVT
-8.267	-5.901	-.30480	-.30160	-.31620	-.30600	-.30740	-.49230	-.02960	.34760	.26800	-.13780
-8.304	-3.776	-.29870	-.29430	-.30170	-.28650	-.28610	-.28690	-.01680	.21280	.16070	-.07760
-8.202	.428	-.28080	-.28220	-.27340	-.27110	-.26980	.05310	.00340	-.02630	-.03120	.01630
-8.002	4.404	-.28630	-.28680	-.27750	-.27870	-.29990	.48160	.02940	-.25670	-.21570	.11100
-8.009	6.323	-.29000	-.29440	-.28810	-.28740	-.30600	.68710	.04250	-.36960	-.30040	.15950
	GRADIENT	.00154	.00094	.00299	.00098	-.00163	.09383	.00564	-.05739	-.04601	.02305

RUN NO. 1230/ 0 RN/L = 3.50 GRADIENT INTERVAL = -5.00/ 5.00

ALPHAO	BETAO	CP1	CP2	CP3	CP4	CPBV	RUDDER	CHR	CNVT	CBVT	CTVT
-6.282	-5.994	-.29120	-.29640	-.33350	-.27450	-.30830	-.53830	-.03210	.34320	.26490	-.13630
-6.224	-4.051	-.28800	-.28950	-.29200	-.27830	-.29140	-.27270	-.01520	.22410	.17070	-.08300
-6.285	.156	-.27920	-.28290	-.26950	-.26650	-.28050	.04960	.00330	-.01590	-.02240	.01220
-6.038	4.332	-.28340	-.28290	-.27380	-.27130	-.30150	.45330	.02720	-.25100	-.20900	.10720
-5.969	6.303	-.28450	-.28640	-.27960	-.27970	-.30400	.66930	.04070	-.36740	-.29720	.15790
	GRADIENT	.00055	.00079	.00217	.00084	-.00120	.08659	.00506	-.05667	-.04529	.02269

IA156A, AEDC PWT 16T-470, O T S W/SILTS (R8NFA1) (10 MAY 80)

REFERENCE DATA

SREF = 2690.0000 SQ.FT. XMRP = 976.0000 IN. XT
LREF = 1290.3000 INCHES YMRP = .0000 IN. YT
BREF = 1290.3000 INCHES ZMRP = 400.0000 IN. ZT
SCALE = .0200

PARAMETRIC DATA

IB-ELV = 8.000 OB-ELV = 5.000
BDFLAP = .000 SPDBRK = .000
RUDDER = .000 SILTS = 1.000
MACH = 1.400 RN/L = 3.500

RUN NO. 1231/ 0 RN/L = 3.50 GRADIENT INTERVAL = -5.00/ 5.00

ALPHAO	BETAO	CP1	CP2	CP3	CP4	CPBV	RUDDER	CHR	CNVT	CBVT	CTVT
-4.143	-6.119	-.29770	-.29560	-.30550	-.27430	-.31020	-.52060	-.03030	.33970	.26200	-.13470
-4.385	-4.000	-.27740	-.28370	-.30120	-.26490	-.28630	-.29750	-.01630	.21430	.16290	-.07890
-4.262	.422	-.27390	-.28290	-.26740	-.26100	-.28770	.06370	.00400	-.02720	-.03190	.01720
-3.759	4.378	-.27730	-.28130	-.26520	-.26280	-.29950	.44620	.02590	-.24660	-.20440	.10470
-3.859	6.215	-.28290	-.28500	-.27600	-.27290	-.30400	.64460	.03860	-.35140	-.28630	.15230
	GRADIENT	.00003	.00028	.00436	.00026	-.00155	.08864	.00503	-.05501	-.04385	.02191

RUN NO. 1232/ 0 RN/L = 3.50 GRADIENT INTERVAL = -5.00/ 5.00

ALPHAO	BETAO	CP1	CP2	CP3	CP4	CPBV	RUDDER	CHR	CNVT	CBVT	CTVT
-.552	-7.095	-.30320	-.30170	-.29810	-.28600	-.31760	-.58790	-.03420	.37490	.28580	-.14750
-.508	-4.921	-.28890	-.29000	-.28660	-.27860	-.30280	-.36830	-.01980	.24860	.19150	-.09410
-.464	-.562	-.27800	-.28000	-.26860	-.26510	-.28710	-.08150	-.00100	.02510	.00910	-.00210
-.444	3.595	-.27200	-.27660	-.25800	-.25720	-.29420	.25140	.02080	-.17720	-.15120	.07340
-.461	5.805	-.27810	-.28310	-.26790	-.26740	-.29920	.46040	.03440	-.29730	-.24760	.12810
	GRADIENT	.00199	.00158	.00336	.00252	.00103	.07271	.00476	-.05001	-.04025	.01968

RUN NO. 1233/ 0 RN/L = 3.50 GRADIENT INTERVAL = -5.00/ 5.00

ALPHAO	BETAO	CP1	CP2	CP3	CP4	CPBV	RUDDER	CHR	CNVT	CBVT	CTVT
3.935	-5.661	-.28300	-.28460	-.27400	-.27420	-.29230	-.34710	-.02630	.27140	.20800	-.10020
3.910	-3.641	-.27580	-.28310	-.26370	-.26860	-.28180	-.17350	-.01450	.16510	.12420	-.05540
3.655	.229	-.27100	-.27680	-.26620	-.26300	-.27500	.03190	.00210	-.00070	-.01130	.00720
3.736	4.056	-.27200	-.27430	-.25490	-.25650	-.28080	.25140	.01950	-.17830	-.15150	.07240
3.692	6.093	-.27390	-.27770	-.26410	-.26710	-.28200	.43210	.03180	-.28200	-.23360	.11840
	GRADIENT	.00050	.00114	.00114	.00157	.00013	.05520	.00442	-.04461	-.03582	.01660

IA156A, AEDC PWT 16T-470, O T S W/SILTS (R8NFA2) (10 MAY 80)

REFERENCE DATA

SREF = 2690.0000 SQ.FT. XMRP = 976.0000 IN. XT
LREF = 1290.3000 INCHES YMRP = .0000 IN. YT
BREF = 1290.3000 INCHES ZMRP = 400.0000 IN. ZT
SCALE = .0200

PARAMETRIC DATA

IB-ELV = 8.000 OB-ELV = 5.000
BDFLAP = .000 SPDBRK = .000
RUDDER = .000 SILTS = 1.000
MACH = 1.550 RN/L = 3.200

RUN NO. 1212/ 0 RN/L = 3.20 GRADIENT INTERVAL = -5.00/ 5.00

ALPHAO	BETAO	CP1	CP2	CP3	CP4	CPBV	RUDDER	CHR	CNVT	CBVT	CTVT
-8.321	-5.932	-.27110	-.26920	-.28370	-.25930	-.26950	-.63730	-.04200	.33490	.26360	-.13790
-8.412	-3.712	-.26510	-.26340	-.28600	-.26550	-.24710	-.34730	-.02230	.19970	.15850	-.07800
-8.276	.314	-.24300	-.25300	-.25900	-.23080	-.22560	.03410	.00240	-.02050	-.01760	.00960
-8.033	4.496	-.24900	-.25600	-.25710	-.24300	-.24810	.47260	.03110	-.24690	-.19830	.10120
-8.010	6.424	-.25960	-.25680	-.25710	-.24890	-.25900	.71560	.04730	-.35580	-.28140	.15000
	GRADIENT	.00194	.00089	.00350	.00270	-.00016	.09992	.00651	-.05441	-.04347	.02183

RUN NO. 1213/ 0 RN/L = 3.20 GRADIENT INTERVAL = -5.00/ 5.00

ALPHAO	BETAO	CP1	CP2	CP3	CP4	CPBV	RUDDER	CHR	CNVT	CBVT	CTVT
-6.376	-5.979	-.26740	-.26600	-.29750	-.24310	-.26850	-.61180	-.03960	.32640	.25640	-.13340
-6.309	-4.025	-.25730	-.25920	-.27490	-.24380	-.25650	-.36320	-.02280	.21010	.16750	-.08270
-6.326	.241	-.24680	-.25420	-.24880	-.24010	-.23610	.03080	.00220	-.01750	-.01440	.00740
-6.040	4.435	-.25090	-.25590	-.25390	-.24600	-.25620	.46610	.03020	-.24780	-.19710	.10090
-5.961	6.413	-.25530	-.25350	-.25470	-.25160	-.25830	.71420	.04680	-.35790	-.28090	.14960
	GRADIENT	.00076	.00039	.00249	-.00026	.00005	.09801	.00626	-.05412	-.04309	.02170

RUN NO. 1214/ 0 RN/L = 3.21 GRADIENT INTERVAL = -5.00/ 5.00

ALPHAO	BETAO	CP1	CP2	CP3	CP4	CPBV	RUDDER	CHR	CNVT	CBVT	CTVT
-4.254	-6.145	-.27620	-.27310	-.28740	-.26420	-.28250	-.62090	-.03980	.32970	.25770	-.13410
-4.488	-3.997	-.25540	-.25820	-.26780	-.24010	-.25980	-.35810	-.02180	.20260	.16150	-.07980
-4.353	.498	-.24980	-.25360	-.24360	-.23720	-.24560	.04910	.00320	-.02480	-.02080	.01030
-3.760	4.479	-.25600	-.25670	-.25230	-.24590	-.25720	.47330	.02980	-.24830	-.19730	.10190
-3.825	6.317	-.24270	-.24710	-.24720	-.24350	-.25430	.68940	.04440	-.34930	-.27440	.14670
	GRADIENT	-.00004	.00020	.00191	-.00066	.00037	.09793	.00608	-.05314	-.04230	.02141

RUN NO. 1215/ 0 RN/L = 3.20 GRADIENT INTERVAL = -5.00/ 5.00

ALPHAO	BETAO	CP1	CP2	CP3	CP4	CPBV	RUDDER	CHR	CNVT	CBVT	CTVT
-.590	-7.139	-.27210	-.27380	-.29570	-.25360	-.29080	-.67550	-.04290	.36380	.28060	-.14660
-.561	-5.002	-.26360	-.26420	-.26440	-.25070	-.27340	-.44110	-.02650	.24140	.19190	-.09560
-.520	-.606	-.25010	-.25190	-.24610	-.23530	-.25500	-.09000	-.00170	.01700	.01060	-.00320
-.510	3.511	-.25450	-.25510	-.24460	-.23950	-.27230	.30380	.02610	-.19460	-.15770	.07880
-.517	5.704	-.26000	-.26170	-.25260	-.24830	-.27440	.53380	.04210	-.30830	-.24680	.12960
	GRADIENT	-.00107	-.00078	.00036	-.00102	-.00420	.09566	.00675	-.05140	-.04088	.01992

IA156A, AEDC PWT 16T-470, O T S W/SILTS (R8NFA2) (10 MAY 80)

REFERENCE DATA

SREF = 2690.0000 SQ.FT. XMRP = 976.0000 IN. XT
LREF = 1290.3000 INCHES YMRP = .0000 IN. YT
BREF = 1290.3000 INCHES ZMRP = 400.0000 IN. ZT
SCALE = .0200

PARAMETRIC DATA

IB-ELV = 8.000 OB-ELV = 5.000
BDFLAP = .000 SPDBRK = .000
RUDDER = .000 SILTS = 1.000
MACH = 1.550 RN/L = 3.200

RUN NO. 1216/ 0 RN/L = 3.20 GRADIENT INTERVAL = -5.00/ 5.00

ALPHAO	BETAO	CP1	CP2	CP3	CP4	CPBV	RUDDER	CHR	CNVT	CBVT	CTVT
4.128	-5.607	-.27440	-.27460	-.27560	-.26190	-.28420	-.42440	-.03360	.27310	.21570	-.10770
3.967	-3.526	-.26400	-.26410	-.25580	-.25070	-.26120	-.21310	-.01820	.16050	.13040	-.06130
3.605	.251	-.25330	-.25430	-.24870	-.23850	-.25920	-.00700	-.00060	.00880	.00340	-.00050
3.637	4.006	-.24760	-.25070	-.23780	-.23310	-.26220	.26590	.02200	-.16220	-.13600	.06750
3.619	6.083	-.26040	-.26330	-.25150	-.24610	-.27660	.49670	.03880	-.28510	-.22760	.11700
	GRADIENT	.00218	.00178	.00239	.00234	-.00013	.06358	.00534	-.04284	-.03537	.01710

IA156A, AEDC PWT 16T-470, O T S W/SILTS (R8NFA3) (10 MAY 80)

REFERENCE DATA

SREF = 2690.0000 SQ.FT. XMRP = 976.0000 IN. XT
LREF = 1290.3000 INCHES YMRP = .0000 IN. YT
BREF = 1290.3000 INCHES ZMRP = 400.0000 IN. ZT
SCALE = .0200

PARAMETRIC DATA

IB-ELV = 12.000 OB-ELV = 5.000
BDFLAP = .000 SPDBRK = .000
RUDDER = .000 SILTS = 1.000
MACH = .600 RN/L = 3.500

RUN NO. 1240/ 0 RN/L = 3.50 GRADIENT INTERVAL = -5.00/ 5.00

ALPHAO	BETAO	CP1	CP2	CP3	CP4	CPBV	RUDDER	CHR	CNVT	CBVT	CTVT
-8.152	-7.797	-.28210	-.29330	-.27170	-.27800	-.27620	-.20380	-.01710	.41210	.29010	-.10520
-8.060	-5.766	-.27700	-.30220	-.27720	-.26400	-.28880	-.05510	-.00160	.29760	.22330	-.08080
-8.078	-3.773	-.25470	-.27630	-.25360	-.23750	-.26650	-.01820	.00130	.17950	.13660	-.04860
-7.979	.297	-.23530	-.25490	-.23310	-.22560	-.25180	-.00740	-.00090	-.04010	-.03450	.01420
-7.850	4.216	-.25350	-.27110	-.24550	-.24650	-.25550	.04240	.00130	-.24950	-.19480	.07650
-7.838	6.120	-.25860	-.27970	-.25450	-.24540	-.26210	.11490	.00820	-.35490	-.27020	.10730
-7.891	8.133	-.27190	-.29220	-.26460	-.25770	-.27480	.24480	.02170	-.45970	-.32790	.12750
	GRADIENT	.00018	.00068	.00104	-.00110	.00139	.00755	-.00000	-.05370	-.04149	.01566

RUN NO. 1241/ 0 RN/L = 3.50 GRADIENT INTERVAL = -5.00/ 5.00

ALPHAO	BETAO	CP1	CP2	CP3	CP4	CPBV	RUDDER	CHR	CNVT	CBVT	CTVT
-6.112	-7.857	-.27190	-.29100	-.26600	-.25540	-.27310	-.22560	-.01880	.41280	.28920	-.10490
-6.081	-5.857	-.26000	-.28440	-.26380	-.24930	-.26870	-.08210	-.00370	.30470	.22790	-.08290
-5.997	-3.963	-.25280	-.27380	-.25080	-.24040	-.26180	-.03590	.00030	.18670	.14240	-.05120
-6.039	.085	-.22930	-.25100	-.23060	-.22140	-.24540	-.01710	-.00170	-.03190	-.02640	.01040
-5.909	4.157	-.24190	-.26620	-.23640	-.23100	-.24640	.04430	.00080	-.24490	-.18810	.07360
-5.832	6.110	-.25790	-.27910	-.24530	-.25260	-.26010	.12090	.00800	-.35730	-.26880	.10660
-5.639	8.191	-.27210	-.28600	-.25630	-.27010	-.26830	.26420	.02290	-.46300	-.32720	.12780
	GRADIENT	.00134	.00093	.00177	.00115	.00189	.00988	.00006	-.05315	-.04070	.01537

IA156A, AEDC PWT 16T-470, O T S W/SILTS (R8NFA3) (10 MAY 80)

REFERENCE DATA

SREF = 2690.0000 SQ.FT. XMRP = 976.0000 IN. XT
LREF = 1290.3000 INCHES YMRP = .0000 IN. YT
BREF = 1290.3000 INCHES ZMRP = 400.0000 IN. ZT
SCALE = .0200

PARAMETRIC DATA

IB-ELV = 12.000 OB-ELV = 5.000
BDFLAP = .000 SPDBRK = .000
RUDDER = .000 SILTS = 1.000
MACH = .600 RN/L = 3.500

RUN NO. 1242/ 0 RN/L = 3.49 GRADIENT INTERVAL = -5.00/ 5.00

ALPHAO	BETAO	CP1	CP2	CP3	CP4	CPBV	RUDDER	CHR	CNVT	CBVT	CTVT
-3.979	-7.922	-.26510	-.28730	-.26800	-.25380	-.26900	-.23690	-.01930	.41150	.28760	-.10400
-4.201	-5.904	-.25800	-.27710	-.26160	-.25740	-.25960	-.08810	-.00350	.29950	.22410	-.08150
-4.186	-3.853	-.24930	-.26960	-.24350	-.23220	-.25510	-.04460	.00030	.17760	.13550	-.04870
-3.980	.176	-.22870	-.24470	-.22140	-.21680	-.23470	-.01730	-.00180	-.02890	-.02360	.00870
-3.668	4.205	-.24380	-.26170	-.22820	-.22880	-.24050	.05790	.00100	-.25160	-.19100	.07490
-3.774	6.004	-.25070	-.27000	-.23860	-.23770	-.24790	.12320	.00740	-.35430	-.26550	.10590
-3.900	7.983	-.26420	-.28250	-.24710	-.24830	-.26040	.25060	.02090	-.45640	-.32420	.12770
	GRADIENT	.00068	.00098	.00190	.00042	.00181	.01272	.00009	-.05326	-.04052	.01534

RUN NO. 1243/ 0 RN/L = 3.50 GRADIENT INTERVAL = -5.00/ 5.00

ALPHAO	BETAO	CP1	CP2	CP3	CP4	CPBV	RUDDER	CHR	CNVT	CBVT	CTVT
-.354	-8.693	-.26260	-.27450	-.24770	-.24460	-.25190	-.30180	-.02570	.44440	.30440	-.10910
-.344	-6.614	-.25290	-.26710	-.24670	-.25460	-.24710	-.14770	-.00890	.34250	.24980	-.08940
-.330	-4.366	-.24290	-.25900	-.23720	-.23750	-.24210	-.07340	-.00080	.21170	.15980	-.05440
-.303	-.313	-.22370	-.23460	-.20940	-.20980	-.22590	-.06700	.00000	.00640	.00230	.00120
-.271	3.752	-.22820	-.24690	-.21770	-.21550	-.22910	-.07450	-.00090	-.17280	-.13340	.04570
-.267	5.854	-.24180	-.26580	-.22410	-.23600	-.23930	-.01660	.00540	-.29420	-.22220	.08030
-.258	7.945	-.25610	-.27730	-.24200	-.23900	-.24840	.10930	.01900	-.40760	-.29190	.10670
	GRADIENT	.00181	.00149	.00240	.00271	.00160	-.00014	-.00001	-.04736	-.03612	.01233

RUN NO. 1244/ 0 RN/L = 3.50 GRADIENT INTERVAL = -5.00/ 5.00

ALPHAO	BETAO	CP1	CP2	CP3	CP4	CPBV	RUDDER	CHR	CNVT	CBVT	CTVT
4.282	-8.106	-.24870	-.26320	-.23960	-.24100	-.23200	-.12280	-.01970	.36750	.25740	-.08430
4.109	-5.880	-.23890	-.25710	-.23600	-.22830	-.23470	.01940	-.00390	.25320	.18950	-.05820
4.094	-3.892	-.23150	-.24640	-.22700	-.21720	-.22880	.06170	.00160	.15110	.11560	-.03000
3.910	-.003	-.22800	-.24320	-.21820	-.22360	-.22710	.00060	-.00030	.00010	-.00190	.00230
3.942	4.078	-.22700	-.24020	-.20740	-.21020	-.22150	-.06660	-.00220	-.15980	-.12560	.03880
3.885	6.223	-.23160	-.25600	-.21120	-.21470	-.23040	-.00570	.00540	-.29050	-.21860	.07570
3.875	8.228	-.24900	-.27140	-.22870	-.23360	-.23510	.13780	.02140	-.39730	-.28190	.10150
	GRADIENT	.00056	.00078	.00246	.00090	.00092	-.01610	-.00048	-.03901	-.03026	.00863

IA156A, AEDC PWT 16T-470, O T S W/SILTS (R8NFA3) (10 MAY 80)

REFERENCE DATA

SREF = 2690.0000 SQ.FT. XMRP = 976.0000 IN. XT
LREF = 1290.3000 INCHES YMRP = .0000 IN. YT
BREF = 1290.3000 INCHES ZMRP = 400.0000 IN. ZT
SCALE = .0200

PARAMETRIC DATA

IB-ELV = 12.000 OB-ELV = 5.000
BDFLAP = .000 SPDBRK = .000
RUDDER = .000 SILTS = 1.000
MACH = .600 RN/L = 3.500

RUN NO. 1245/ 0 RN/L = 3.50 GRADIENT INTERVAL = -5.00/ 5.00

ALPHAO	BETAO	CP1	CP2	CP3	CP4	CPBV	RUDDER	CHR	CNVT	CBVT	CTVT
6.245	-8.012	-.24510	-.25980	-.23450	-.23030	-.22900	-.12920	-.01980	.36650	.25760	-.08580
6.219	-5.943	-.23460	-.25440	-.23440	-.22170	-.23540	.02510	-.00240	.25140	.18970	-.05920
6.204	-3.868	-.22920	-.24390	-.21920	-.21300	-.22540	.06400	.00300	.14930	.11460	-.03010
5.928	.168	-.22790	-.24200	-.21470	-.21250	-.22710	-.00360	-.00040	-.00240	-.00380	.00250
5.855	4.103	-.22740	-.23890	-.20010	-.20560	-.22060	-.06720	-.00330	-.16060	-.12590	.03770
5.781	6.202	-.23990	-.25990	-.21570	-.22240	-.23320	-.01580	.00340	-.27130	-.20540	.06990
5.768	8.130	-.24540	-.26600	-.22050	-.23010	-.23590	.12830	.01970	-.38560	-.27570	.09910
	GRADIENT	.00023	.00063	.00239	.00093	.00060	-.01646	-.00079	-.03888	-.03017	.00850

RUN NO. 1246/ 0 RN/L = 3.50 GRADIENT INTERVAL = -5.00/ 5.00

ALPHAO	BETAO	CP1	CP2	CP3	CP4	CPBV	RUDDER	CHR	CNVT	CBVT	CTVT
8.135	-7.857	-.24820	-.26480	-.23880	-.23800	-.24490	-.08630	-.01450	.34300	.25140	-.08610
8.050	-5.782	-.23500	-.25170	-.22730	-.21900	-.22620	.05050	.00120	.22810	.17520	-.05370
8.036	-3.796	-.22760	-.24130	-.21550	-.20920	-.22290	.07250	.00460	.13180	.10380	-.02710
7.950	.173	-.22350	-.23150	-.20370	-.21060	-.21890	-.00480	-.00050	-.00500	-.00570	.00290
7.992	4.235	-.22690	-.24150	-.20380	-.20840	-.22240	-.07270	-.00460	-.14630	-.11660	.03400
7.938	6.240	-.23460	-.25420	-.20960	-.21500	-.22240	-.05240	-.00130	-.23830	-.18490	.05960
7.946	8.284	-.24750	-.26930	-.22810	-.23330	-.24110	.09380	.01530	-.36890	-.27150	.09820
	GRADIENT	.00008	-.00003	.00145	.00010	.00006	-.01807	-.00115	-.03463	-.02744	.00761

IA156A, AEDC PWT 16T-470, O T S W/SILTS (R8NFA4) (10 MAY 80)

REFERENCE DATA

SREF = 2690.0000 SQ.FT. XMRP = 976.0000 IN. XT
LREF = 1290.3000 INCHES YMRP = .0000 IN. YT
BREF = 1290.3000 INCHES ZMRP = 400.0000 IN. ZT
SCALE = .0200

PARAMETRIC DATA

IB-ELV = 12.000 OB-ELV = 5.000
BDFLAP = .000 SPDBRK = .000
RUDDER = .000 SILTS = 1.000
MACH = .800 RN/L = 3.500

RUN NO. 1247/ 0 RN/L = 3.50 GRADIENT INTERVAL = -5.00/ 5.00

ALPHAO	BETAO	CP1	CP2	CP3	CP4	CPBV	RUDDER	CHR	CNVT	CBVT	CTVT
-8.178	-5.803	-.28000	-.29870	-.27830	-.27870	-.29480	.11550	.01360	.30600	.22650	-.07670
-8.184	-3.772	-.27290	-.29110	-.26930	-.27800	-.28410	.12200	.01320	.17970	.13600	-.04270
-8.099	.387	-.25240	-.26280	-.24460	-.25340	-.26440	-.06800	-.00600	-.03150	-.02330	.00480
-7.928	4.305	-.26780	-.28480	-.26300	-.26460	-.27730	-.09170	-.01070	-.24410	-.18670	.06580
-7.942	6.214	-.27610	-.29400	-.27190	-.27990	-.28900	.00000	-.00350	-.35050	-.25700	.09330
	GRADIENT	.00068	.00084	.00083	.00170	.00088	-.02665	-.00298	-.05245	-.03993	.01341

RUN NO. 1248/ 0 RN/L = 3.50 GRADIENT INTERVAL = -5.00/ 5.00

ALPHAO	BETAO	CP1	CP2	CP3	CP4	CPBV	RUDDER	CHR	CNVT	CBVT	CTVT
-6.143	-5.924	-.27510	-.29040	-.27040	-.26510	-.28290	.06320	.00970	.30530	.22410	-.07540
-6.094	-4.028	-.26350	-.28240	-.25790	-.25940	-.27740	.09710	.01190	.18960	.14340	-.04550
-6.164	.072	-.24440	-.25510	-.23500	-.23440	-.25360	-.05450	-.00460	-.01890	-.01330	.00180
-5.981	4.219	-.25980	-.27340	-.25240	-.25640	-.26510	-.06410	-.00890	-.23860	-.17900	.06210
-5.887	6.213	-.27400	-.29170	-.26740	-.27700	-.28060	.01950	-.00250	-.35090	-.25620	.09350
	GRADIENT	.00044	.00108	.00066	.00035	.00148	-.01951	-.00252	-.05193	-.03910	.01305

RUN NO. 1249/ 0 RN/L = 3.50 GRADIENT INTERVAL = -5.00/ 5.00

ALPHAO	BETAO	CP1	CP2	CP3	CP4	CPBV	RUDDER	CHR	CNVT	CBVT	CTVT
-4.088	-6.032	-.27090	-.28470	-.26750	-.25800	-.27510	.02620	.00720	.30630	.22310	-.07480
-4.286	-3.931	-.25760	-.27290	-.25330	-.25430	-.26320	.07250	.01050	.17860	.13340	-.04080
-4.157	.407	-.24000	-.24990	-.23200	-.23610	-.24790	-.05790	-.00530	-.02820	-.01870	.00190
-3.746	4.285	-.25890	-.27190	-.24910	-.25360	-.25850	-.04300	-.00810	-.24300	-.18070	.06330
-3.826	6.107	-.26000	-.27800	-.25520	-.26260	-.26800	.04180	-.00120	-.34780	-.25390	.09360
	GRADIENT	-.00008	.00022	.00060	.00017	.00063	-.01437	-.00229	-.05125	-.03817	.01262

RUN NO. 1250/ 0 RN/L = 3.50 GRADIENT INTERVAL = -5.00/ 5.00

ALPHAO	BETAO	CP1	CP2	CP3	CP4	CPBV	RUDDER	CHR	CNVT	CBVT	CTVT
-.370	-6.859	-.26210	-.27300	-.26040	-.25900	-.26360	-.12200	-.00490	.35260	.25260	-.08800
-.364	-4.706	-.24640	-.25980	-.24090	-.24500	-.24810	.03010	.00840	.22550	.16570	-.05040
-.337	-.421	-.23140	-.24270	-.22140	-.21840	-.23420	-.06480	.00020	.01160	.00720	-.00140
-.300	3.655	-.23710	-.25040	-.22540	-.22690	-.23890	-.15000	-.00730	-.17440	-.12790	.03550
-.299	5.785	-.24870	-.26740	-.24070	-.23840	-.25010	-.06950	-.00030	-.29700	-.21890	.07400
	GRADIENT	.00113	.00115	.00188	.00220	.00112	-.02155	-.00188	-.04785	-.03513	.01028

IA156A, AEDC PWT 16T-470, O T S W/SILTS (R8NFA4) (10 MAY 80)

REFERENCE DATA

SREF = 2690.0000 SQ.FT. XMRP = 976.0000 IN. XT
LREF = 1290.3000 INCHES YMRP = .0000 IN. YT
BREF = 1290.3000 INCHES ZMRP = 400.0000 IN. ZT
SCALE = .0200

PARAMETRIC DATA

IB-ELV = 12.000 OB-ELV = 5.000
BDFLAP = .000 SPDBRK = .000
RUDDER = .000 SILTS = 1.000
MACH = .800 RN/L = 3.500

RUN NO. 1251/ 0 RN/L = 3.50 GRADIENT INTERVAL = -5.00/ 5.00

ALPHAO	BETAO	CP1	CP2	CP3	CP4	CPBV	RUDDER	CHR	CNVT	CBVT	CTVT
4.142	-5.836	-.25230	-.26900	-.24850	-.25130	-.25080	.06290	.00070	.26570	.19690	-.06000
4.011	-3.728	-.23680	-.24940	-.23080	-.23850	-.23930	.13970	.00810	.14120	.10600	-.02140
3.780	.115	-.23820	-.25030	-.21960	-.22580	-.23540	-.00220	-.00030	.00340	.00160	-.00020
3.872	4.058	-.23340	-.24950	-.22100	-.22370	-.23270	-.12730	-.00700	-.15660	-.11870	.03020
3.808	6.146	-.25070	-.26830	-.23630	-.23850	-.24870	-.05940	-.00030	-.28780	-.21390	.07060
	GRADIENT	.00044	-.00001	.00125	.00189	.00085	-.03428	-.00194	-.03826	-.02887	.00663

RUN NO. 1252/ 0 RN/L = 3.50 GRADIENT INTERVAL = -5.00/ 5.00

ALPHAO	BETAO	CP1	CP2	CP3	CP4	CPBV	RUDDER	CHR	CNVT	CBVT	CTVT
6.143	-5.864	-.24810	-.26840	-.24510	-.24610	-.25240	.09350	.00400	.24950	.19070	-.05840
6.116	-3.819	-.23630	-.25180	-.22920	-.22970	-.24060	.17410	.01200	.13910	.10660	-.02080
5.812	.154	-.23440	-.24530	-.21740	-.22270	-.23050	.00120	.00010	.00100	.00010	.00030
5.749	4.024	-.24010	-.25420	-.22450	-.22400	-.23820	-.16740	-.01140	-.13870	-.10700	.02320
5.881	6.222	-.25140	-.26620	-.23480	-.24230	-.24770	-.10530	-.00510	-.25970	-.19910	.06370
	GRADIENT	-.00048	-.00030	.00061	.00073	.00032	-.04354	-.00298	-.03542	-.02723	.00561

IA156A, AEDC PWT 16T-470, O T S W/SILTS (R8NFA5) (10 MAY 80)

REFERENCE DATA

SREF = 2690.0000 SQ.FT. XMRP = 976.0000 IN. XT
LREF = 1290.3000 INCHES YMRP = .0000 IN. YT
BREF = 1290.3000 INCHES ZMRP = 400.0000 IN. ZT
SCALE = .0200

PARAMETRIC DATA

IB-ELV = 12.000 OB-ELV = 5.000
BDFLAP = .000 SPDBRK = .000
RUDDER = .000 SILTS = 1.000
MACH = .900 RN/L = 3.500

RUN NO. 1253/ 0 RN/L = 3.50 GRADIENT INTERVAL = -5.00/ 5.00

ALPHAO	BETAO	CP1	CP2	CP3	CP4	CPBV	RUDDER	CHR	CNVT	CBVT	CTVT
-8.381	-5.946	-.32290	-.33160	-.31130	-.31610	-.31970	.25180	.02360	.30890	.22830	-.07940
-8.127	-3.743	-.29610	-.31560	-.28830	-.29700	-.30470	.28810	.02570	.16070	.11330	-.02670
-8.097	.172	-.27290	-.28190	-.26290	-.27390	-.28440	-.02200	-.00180	-.02150	-.01610	.00440
-7.929	4.414	-.29420	-.30910	-.29020	-.29240	-.30700	-.25950	-.02350	-.24060	-.18030	.05900
-7.965	6.237	-.30710	-.31940	-.29800	-.30960	-.31730	-.16820	-.01680	-.34880	-.26400	.10090
	GRADIENT	.00016	.00070	-.00032	.00050	-.00035	-.06698	-.00602	-.04923	-.03603	.01054

IA156A, AEDC PWT 16T-470, O T S W/SILTS (R8NFA5) (10 MAY 80)

REFERENCE DATA

SREF = 2690.0000 SQ.FT. XMRP = 976.0000 IN. XT
LREF = 1290.3000 INCHES YMRP = .0000 IN. YT
BREF = 1290.3000 INCHES ZMRP = 400.0000 IN. ZT
SCALE = .0200

PARAMETRIC DATA

IB-ELV = 12.000 OB-ELV = 5.000
BDFLAP = .000 SPDBRK = .000
RUDDER = .000 SILTS = 1.000
MACH = .900 RN/L = 3.500

RUN NO. 1254/ 0 RN/L = 3.50 GRADIENT INTERVAL = -5.00/ 5.00

ALPHAO	BETAO	CP1	CP2	CP3	CP4	CPBV	RUDDER	CHR	CNVT	CBVT	CTVT
-6.157	-5.933	-.30330	-.31600	-.29610	-.29310	-.30750	.20360	.02030	.30120	.22370	-.07820
-6.107	-3.992	-.29360	-.31180	-.28870	-.29390	-.30510	.19770	.01910	.17740	.12970	-.03670
-6.098	.260	-.26680	-.27680	-.25550	-.26250	-.27370	-.01910	-.00160	-.02890	-.01950	.00410
-5.995	4.228	-.28750	-.30670	-.28380	-.29430	-.29690	-.20820	-.01990	-.22550	-.16380	.05080
-5.941	6.201	-.30590	-.31910	-.29140	-.29760	-.31100	-.12100	-.01360	-.34160	-.25260	.09410
	GRADIENT	.00081	.00071	.00068	.00004	.00107	-.04940	-.00475	-.04901	-.03570	.01063

RUN NO. 1255/ 0 RN/L = 3.50 GRADIENT INTERVAL = -5.00/ 5.00

ALPHAO	BETAO	CP1	CP2	CP3	CP4	CPBV	RUDDER	CHR	CNVT	CBVT	CTVT
-4.049	-5.942	-.29580	-.30530	-.28880	-.28880	-.29740	.14020	.01590	.29820	.22150	-.07790
-4.275	-3.950	-.28410	-.29790	-.27920	-.27430	-.29080	.09960	.01190	.17130	.12920	-.04110
-4.181	.363	-.26140	-.27230	-.24960	-.25640	-.26690	-.01120	-.00110	-.03010	-.01950	.00340
-3.755	4.252	-.28150	-.30000	-.27610	-.28120	-.28850	-.13350	-.01480	-.22410	-.16140	.05070
-3.839	6.105	-.29440	-.31440	-.28510	-.29510	-.30040	-.07420	-.01050	-.33180	-.24230	.08900
	GRADIENT	.00041	-.00014	.00049	-.00075	.00038	-.02837	-.00325	-.04818	-.03541	.01118

RUN NO. 1256/ 0 RN/L = 3.50 GRADIENT INTERVAL = -5.00/ 5.00

ALPHAO	BETAO	CP1	CP2	CP3	CP4	CPBV	RUDDER	CHR	CNVT	CBVT	CTVT
-.406	-6.906	-.28970	-.29940	-.28330	-.28250	-.28850	-.00710	.00480	.33280	.24150	-.08420
-.386	-4.764	-.27320	-.28360	-.26750	-.27000	-.27700	.05950	.01020	.22390	.17400	-.05970
-.355	-.424	-.24760	-.25750	-.24470	-.24890	-.25680	-.10530	-.00310	.01010	.00880	-.00430
-.321	3.663	-.26010	-.27610	-.26020	-.25960	-.26830	-.22360	-.01270	-.16520	-.12150	.03040
-.321	5.811	-.27960	-.29470	-.27220	-.26680	-.28600	-.19710	-.01060	-.28140	-.20810	.06870
	GRADIENT	.00160	.00094	.00091	.00127	.00107	-.03364	-.00272	-.04620	-.03510	.01071

RUN NO. 1257/ 0 RN/L = 3.50 GRADIENT INTERVAL = -5.00/ 5.00

ALPHAO	BETAO	CP1	CP2	CP3	CP4	CPBV	RUDDER	CHR	CNVT	CBVT	CTVT
4.138	-5.831	-.27570	-.28850	-.27180	-.27460	-.28110	.21930	.01330	.24100	.18440	-.05310
4.005	-3.746	-.25630	-.26760	-.25390	-.25800	-.26470	.05060	.01640	.13420	.10770	-.02280
3.772	.075	-.24470	-.25790	-.24420	-.24170	-.25460	-.02200	-.00190	.00620	.00530	-.00260
3.863	4.007	-.25670	-.27120	-.25370	-.25390	-.26680	-.27560	-.01840	-.14240	-.11320	.02530
3.797	6.125	-.27530	-.29230	-.27390	-.27110	-.28100	-.25520	-.01610	-.25730	-.19590	.05940
	GRADIENT	-.00007	-.00048	.00001	.00051	-.00028	-.06785	-.00449	-.03568	-.02850	.00621

IA156A, AEDC PWT 16T-470, O T S W/SILTS (R8NFA6) (10 MAY 80)

REFERENCE DATA

SREF = 2690.0000 SQ.FT. XMRP = 976.0000 IN. XT
LREF = 1290.3000 INCHES YMRP = .0000 IN. YT
BREF = 1290.3000 INCHES ZMRP = 400.0000 IN. ZT
SCALE = .0200

PARAMETRIC DATA

IB-ELV = 12.000 OB-ELV = 5.000
BDFLAP = .000 SPDBRK = .000
RUDDER = .000 SILTS = 1.000
MACH = .950 RN/L = 3.500

RUN NO. 1258/ 0 RN/L = 3.50 GRADIENT INTERVAL = -5.00/ 5.00

ALPHAO	BETAO	CP1	CP2	CP3	CP4	CPBV	RUDDER	CHR	CNVT	CBVT	CTVT
-8.122	-5.896	-.34320	-.35150	-.32210	-.33450	-.34360	.29740	.02650	.32040	.24960	-.09880
-8.204	-3.800	-.32470	-.33590	-.30800	-.32050	-.32710	.36890	.03120	.17840	.13520	-.04370
-8.120	.348	-.30540	-.31540	-.28240	-.29640	-.31210	-.22260	-.01740	-.02970	-.01920	.00130
-7.943	4.317	-.33110	-.33790	-.30910	-.31970	-.33450	-.37580	-.03180	-.24410	-.18880	.06990
-7.957	6.224	-.35040	-.35640	-.33010	-.34010	-.35040	-.25980	-.02340	-.35630	-.27500	.11240
	GRADIENT	-.00075	-.00021	-.00009	.00014	-.00088	-.09213	-.00779	-.05204	-.03990	.01397

RUN NO. 1259/ 0 RN/L = 3.50 GRADIENT INTERVAL = -5.00/ 5.00

ALPHAO	BETAO	CP1	CP2	CP3	CP4	CPBV	RUDDER	CHR	CNVT	CBVT	CTVT
-6.172	-5.943	-.33240	-.34260	-.31500	-.31820	-.33430	.27880	.02550	.31210	.24130	-.09320
-6.107	-4.037	-.31810	-.32890	-.30480	-.31150	-.32260	.32570	.02850	.18850	.14260	-.04640
-6.186	.092	-.29490	-.30270	-.27340	-.28630	-.30010	-.15470	-.01200	-.01860	-.00820	-.00310
-6.011	4.226	-.31940	-.32890	-.29890	-.31000	-.32180	-.40270	-.03440	-.23390	-.17500	.06040
-5.740	6.301	-.34170	-.35100	-.31970	-.33420	-.34110	-.23480	-.02210	-.35420	-.26910	.10800
	GRADIENT	-.00016	-.00000	.00071	.00018	.00010	-.08814	-.00761	-.05112	-.03844	.01293

RUN NO. 1260/ 0 RN/L = 3.50 GRADIENT INTERVAL = -5.00/ 5.00

ALPHAO	BETAO	CP1	CP2	CP3	CP4	CPBV	RUDDER	CHR	CNVT	CBVT	CTVT
-4.061	-6.053	-.32920	-.33710	-.31810	-.31770	-.32680	.27000	.02550	.30310	.23100	-.08570
-4.287	-3.951	-.30770	-.31620	-.29540	-.29150	-.30940	.30430	.02750	.16690	.12420	-.03680
-4.181	.370	-.29350	-.30150	-.26530	-.28090	-.30020	-.18930	-.01500	-.02520	-.01100	-.00480
-3.754	4.279	-.30610	-.31860	-.28780	-.29270	-.30740	-.33400	-.02990	-.23040	-.17070	.05780
-3.839	6.095	-.32290	-.33940	-.30530	-.31570	-.32440	-.22340	-.02180	-.34010	-.25610	.10090
	GRADIENT	.00025	-.00023	.00103	-.00010	.00028	-.07820	-.00702	-.04821	-.03575	.01142

RUN NO. 1261/ 0 RN/L = 3.50 GRADIENT INTERVAL = -5.00/ 5.00

ALPHAO	BETAO	CP1	CP2	CP3	CP4	CPBV	RUDDER	CHR	CNVT	CBVT	CTVT
-.422	-6.933	-.32340	-.33170	-.31870	-.31760	-.31630	.11970	.01450	.33240	.25060	-.09310
-.402	-4.791	-.30230	-.31050	-.28960	-.29000	-.29450	.20090	.02080	.21170	.16120	-.05150
-.366	-.454	-.27200	-.27880	-.26100	-.26730	-.27430	-.10900	-.00330	.01020	.01000	-.00540
-.334	3.660	-.29180	-.30310	-.27240	-.28330	-.29170	-.37260	-.02380	-.17010	-.12450	.03230
-.336	5.826	-.31290	-.32110	-.29180	-.29850	-.30810	-.29290	-.01770	-.27990	-.21110	.07300
	GRADIENT	.00129	.00093	.00208	.00083	.00037	-.06790	-.00528	-.04519	-.03382	.00992

IA156A, AEDC PWT 16T-470, O T S W/SILTS (R8NFA6) (10 MAY 80)

REFERENCE DATA

SREF = 2690.0000 SQ.FT. XMRP = 976.0000 IN. XT
LREF = 1290.3000 INCHES YMRP = .0000 IN. YT
BREF = 1290.3000 INCHES ZMRP = 400.0000 IN. ZT
SCALE = .0200

PARAMETRIC DATA

IB-ELV = 12.000 OB-ELV = 5.000
BDFLAP = .000 SPDBRK = .000
RUDDER = .000 SILTS = 1.000
MACH = .950 RN/L = 3.500

RUN NO. 1262/ 0 RN/L = 3.50 GRADIENT INTERVAL = -5.00/ 5.00

ALPHAO	BETAO	CP1	CP2	CP3	CP4	CPBV	RUDDER	CHR	CNVT	CBVT	CTVT
4.114	-5.814	-.29350	-.30360	-.28700	-.28670	-.29050	.24350	.01470	.22860	.18080	-.05580
3.989	-3.714	-.28010	-.28680	-.27230	-.27580	-.27720	.16790	.00940	.12800	.09800	-.02040
3.766	.120	-.28500	-.29020	-.26850	-.26820	-.28430	-.00090	-.00020	.00520	.00520	-.00220
3.867	4.044	-.28560	-.29490	-.26970	-.27860	-.28310	-.16510	-.00920	-.14190	-.10860	.02680
3.800	6.128	-.30400	-.31590	-.28960	-.29990	-.30150	-.26950	-.01670	-.24930	-.19640	.06520
	GRADIENT	-.00071	-.00104	.00033	-.00037	-.00076	-.04292	-.00240	-.03480	-.02664	.00609

IA156A, AEDC PWT 16T-470, O T S W/SILTS (R8NFA7) (10 MAY 80)

REFERENCE DATA

SREF = 2690.0000 SQ.FT. XMRP = 976.0000 IN. XT
LREF = 1290.3000 INCHES YMRP = .0000 IN. YT
BREF = 1290.3000 INCHES ZMRP = 400.0000 IN. ZT
SCALE = .0200

PARAMETRIC DATA

IB-ELV = 12.000 OB-ELV = 5.000
BDFLAP = .000 SPDBRK = .000
RUDDER = .000 SILTS = 1.000
MACH = 1.050 RN/L = 3.500

RUN NO. 1263/ 0 RN/L = 3.50 GRADIENT INTERVAL = -5.00/ 5.00

ALPHAO	BETAO	CP1	CP2	CP3	CP4	CPBV	RUDDER	CHR	CNVT	CBVT	CTVT
-8.095	-5.938	-.43980	-.44290	-.43290	-.42830	-.46060	-.20820	-.01220	.35150	.28390	-.13660
-8.223	-3.739	-.43250	-.43940	-.41620	-.41740	-.44310	-.09620	-.00480	.20220	.16210	-.07340
-8.113	.176	-.40670	-.41410	-.38100	-.39410	-.40530	-.03620	-.00270	-.02860	-.02300	.01030
-7.953	4.360	-.41360	-.42480	-.38530	-.39760	-.42470	.06940	.00270	-.27450	-.22100	.10380
-7.956	6.216	-.41160	-.42530	-.39070	-.40420	-.43640	.15900	.00860	-.38740	-.30930	.14980
	GRADIENT	.00229	.00175	.00376	.00241	.00219	.02050	.00093	-.05886	-.04730	.02188

RUN NO. 1264/ 0 RN/L = 3.50 GRADIENT INTERVAL = -5.00/ 5.00

ALPHAO	BETAO	CP1	CP2	CP3	CP4	CPBV	RUDDER	CHR	CNVT	CBVT	CTVT
-6.075	-5.927	-.44110	-.44410	-.43510	-.43050	-.46310	-.14940	-.00740	.34240	.27670	-.13210
-6.087	-4.033	-.43200	-.44050	-.42130	-.41930	-.44650	-.08200	-.00310	.21200	.16950	-.07670
-6.194	.104	-.40540	-.42190	-.37770	-.40000	-.41110	-.04350	-.00310	-.03090	-.02350	.00980
-6.001	4.237	-.39860	-.41660	-.37240	-.39240	-.41090	.04510	.00050	.26700	-.21220	.09870
-5.962	6.210	-.40200	-.41870	-.39380	-.39550	-.42360	.11940	.00520	-.38390	-.30510	.14690
	GRADIENT	.00404	.00289	.00591	.00325	.00431	.01537	.00044	-.05792	-.04615	.02121

IA156A, AEDC PWT 16T-470, O T S W/SILTS (R8NFA7) (10 MAY 80)

REFERENCE DATA

SREF = 2690.0000 SQ.FT. XMRP = 976.0000 IN. XT
LREF = 1290.3000 INCHES YMRP = .0000 IN. YT
BREF = 1290.3000 INCHES ZMRP = 400.0000 IN. ZT
SCALE = .0200

PARAMETRIC DATA

IB-ELV = 12.000 OB-ELV = 5.000
BDFLAP = .000 SPDBRK = .000
RUDDER = .000 SILTS = 1.000
MACH = 1.050 RN/L = 3.500

RUN NO. 1265/ 0 RN/L = 3.50 GRADIENT INTERVAL = -5.00/ 5.00

ALPHAO	BETAO	CP1	CP2	CP3	CP4	CPBV	RUDDER	CHR	CNVT	CBVT	CTVT
-4.169	-6.040	-.42900	-.43410	-.42190	-.41600	-.45500	-.11160	-.00400	.33940	.27350	-.12950
-4.298	-3.967	-.42810	-.43680	-.40600	-.41300	-.43830	-.08310	-.00250	.20280	.16160	-.07250
-4.203	.358	-.41890	-.42890	-.38430	-.40300	-.41550	-.06200	-.00470	-.03740	-.02920	.01200
-3.755	4.280	-.39770	-.41310	-.36880	-.38450	-.41230	-.07460	-.00920	-.25980	-.20740	.09500
-3.842	6.113	-.40150	-.41980	-.37780	-.39120	-.41880	.01850	-.00280	-.36580	-.29180	.13920
	GRADIENT	.00366	.00286	.00452	.00344	.00319	.00110	-.00081	-.05609	-.04474	.02030

RUN NO. 1266/ 0 RN/L = 3.50 GRADIENT INTERVAL = -5.00/ 5.00

ALPHAO	BETAO	CP1	CP2	CP3	CP4	CPBV	RUDDER	CHR	CNVT	CBVT	CTVT
-.451	-6.988	-.43740	-.44170	-.42620	-.41710	-.45500	-.07820	-.00090	.37300	.29550	-.13730
-.430	-4.840	-.42520	-.43440	-.40560	-.41320	-.43630	-.01930	.00340	.24940	.20060	-.08910
-.407	-.438	-.40510	-.41700	-.37270	-.39230	-.40160	-.06720	-.00010	.01780	.01300	-.00440
-.375	3.677	-.40120	-.41350	-.37180	-.39190	-.40840	-.21450	-.01090	-.19300	-.15420	.06450
-.367	5.843	-.41780	-.42730	-.38740	-.40100	-.42790	-.16540	-.00730	-.30360	-.24530	.11130
	GRADIENT	.00284	.00247	.00401	.00253	.00333	-.02278	-.00167	-.05195	-.04167	.01805

RUN NO. 1267/ 0 RN/L = 3.50 GRADIENT INTERVAL = -5.00/ 5.00

ALPHAO	BETAO	CP1	CP2	CP3	CP4	CPBV	RUDDER	CHR	CNVT	CBVT	CTVT
4.116	-5.817	-.41750	-.42610	-.40900	-.40700	-.43150	.18410	.00950	.26610	.21760	-.09270
3.972	-3.711	-.40920	-.42030	-.39160	-.39790	-.41530	.23230	.01360	.15440	.12560	-.04700
3.787	.113	-.40210	-.41250	-.38210	-.38820	-.40240	-.03400	-.00260	.00670	.00400	-.00140
3.854	4.043	-.38920	-.40480	-.36490	-.38430	-.39820	-.35680	-.02280	-.16620	-.13690	.05220
3.804	6.119	-.40840	-.41600	-.38160	-.39250	-.41950	-.25540	-.01470	-.27680	-.22490	.09660
	GRADIENT	.00258	.00200	.00345	.00175	.00220	-.07601	-.00470	-.04136	-.03386	.01280

IA156A, AEDC PWT 16T-470, O T S W/SILTS (R8NFA8) (10 MAY 80)

REFERENCE DATA

SREF = 2690.0000 SQ.FT. XMRP = 976.0000 IN. XT
LREF = 1290.3000 INCHES YMRP = .0000 IN. YT
BREF = 1290.3000 INCHES ZMRP = 400.0000 IN. ZT
SCALE = .0200

PARAMETRIC DATA

IB-ELV = 12.000 OB-ELV = 5.000
BDFLAP = .000 SPDBRK = .000
RUDDER = .000 SILTS = 1.000
MACH = 1.100 RN/L = 3.500

RUN NO. 1268/ 0 RN/L = 3.50 GRADIENT INTERVAL = -5.00/ 5.00

ALPHAO	BETAO	CP1	CP2	CP3	CP4	CPBV	RUDDER	CHR	CNVT	CBVT	CTVT
-8.103	-5.932	-.39960	-.39780	-.39410	-.38900	-.41130	-.23670	-.01400	.33400	.26950	-.13100
-8.214	-3.749	-.40110	-.40560	-.38650	-.38490	-.40940	-.11820	-.00630	.19150	.15150	-.06880
-8.118	.177	-.37100	-.37650	-.34340	-.35470	-.37130	-.04930	-.00350	-.03680	-.03030	.01330
-7.959	4.361	-.38020	-.39080	-.35400	-.36590	-.39450	.12350	.00660	-.27220	-.21960	.10450
-7.951	6.217	-.37600	-.38670	-.35400	-.36450	-.40300	.24890	.01490	-.38010	-.30570	.15140
	GRADIENT	.00252	.00177	.00394	.00229	.00176	.02993	.00160	-.05717	-.04576	.02138

RUN NO. 1269/ 0 RN/L = 3.50 GRADIENT INTERVAL = -5.00/ 5.00

ALPHAO	BETAO	CP1	CP2	CP3	CP4	CPBV	RUDDER	CHR	CNVT	CBVT	CTVT
-6.168	-5.957	-.39280	-.39640	-.38980	-.37840	-.41090	-.20600	-.01130	.32410	.26230	-.12660
-6.117	-4.044	-.37950	-.39080	-.37120	-.37060	-.39310	-.11020	-.00500	.19910	.15880	-.07230
-6.213	.099	-.36220	-.37380	-.33780	-.35020	-.36070	-.05500	-.00390	-.03700	-.02880	.01220
-5.981	4.228	-.35560	-.36980	-.33110	-.34400	-.36210	.11040	.00520	-.25990	-.20740	.09840
-5.980	6.223	-.37660	-.38230	-.34920	-.35970	-.39060	.20970	.01160	-.37420	-.30010	.14820
	GRADIENT	.00289	.00254	.00485	.00322	.00375	.02666	.00123	-.05549	-.04427	.02064

RUN NO. 1270/ 0 RN/L = 3.50 GRADIENT INTERVAL = -5.00/ 5.00

ALPHAO	BETAO	CP1	CP2	CP3	CP4	CPBV	RUDDER	CHR	CNVT	CBVT	CTVT
-4.029	-6.054	-.38840	-.39230	-.38420	-.37570	-.41210	-.17070	-.00810	.32050	.25890	-.12400
-4.294	-3.964	-.37680	-.38740	-.35930	-.35860	-.38850	-.10190	-.00380	.18930	.15010	-.06770
-4.189	.363	-.35870	-.36820	-.33140	-.34320	-.35290	-.06340	-.00470	-.03970	-.03140	.01320
-3.727	4.275	-.34480	-.35930	-.31850	-.33000	-.35440	.03570	-.00100	-.25070	-.20080	.09500
-3.851	6.108	-.35440	-.37000	-.32950	-.34400	-.36960	.15460	.00710	-.35830	-.28780	.14140
	GRADIENT	.00389	.00343	.00498	.00347	.00421	.01656	.00033	-.05340	-.04258	.01973

RUN NO. 1271/ 0 RN/L = 3.50 GRADIENT INTERVAL = -5.00/ 5.00

ALPHAO	BETAO	CP1	CP2	CP3	CP4	CPBV	RUDDER	CHR	CNVT	CBVT	CTVT
-.458	-6.986	-.38760	-.39170	-.37970	-.37320	-.41040	-.14640	-.00580	.35980	.28680	-.13590
-.434	-4.836	-.37170	-.37960	-.34730	-.35570	-.38140	-.07190	-.00040	.23950	.19320	-.08730
-.400	-.468	-.34750	-.35450	-.31760	-.32920	-.33950	-.06950	-.00020	.01560	.01110	-.00390
-.367	3.667	-.34050	-.34840	-.31400	-.32900	-.34300	-.18090	-.00820	-.18660	-.15000	.06400
-.366	5.838	-.34000	-.35120	-.31380	-.33070	-.35330	-.09580	-.00210	-.29830	-.24230	.11190
	GRADIENT	.00369	.00369	.00394	.00317	.00456	-.01269	-.00091	-.05012	-.04037	.01781

IA156A, AEDC PWT 16T-470, O T S W/SILTS (R8NFA8) (10 MAY 80)

REFERENCE DATA

SREF = 2690.0000 SQ.FT. XMRP = 976.0000 IN. XT
LREF = 1290.3000 INCHES YMRP = .0000 IN. YT
BREF = 1290.3000 INCHES ZMRP = 400.0000 IN. ZT
SCALE = .0200

PARAMETRIC DATA

IB-ELV = 12.000 OB-ELV = 5.000
BDFLAP = .000 SPDBRK = .000
RUDDER = .000 SILTS = 1.000
MACH = 1.100 RN/L = 3.500

RUN NO. 1272/ 0 RN/L = 3.50 GRADIENT INTERVAL = -5.00/ 5.00

ALPHAO	BETAO	CP1	CP2	CP3	CP4	CPBV	RUDDER	CHR	CNVT	CBVT	CTVT
4.134	-5.837	-.35930	-.36410	-.34970	-.34680	-.36930	.14280	.00630	.25970	.21310	-.09200
3.984	-3.725	-.34100	-.34950	-.32740	-.32950	-.34250	.19500	.01060	.15130	.12320	-.04710
3.776	.118	-.35150	-.35960	-.32800	-.34310	-.34920	-.06390	-.00470	.00000	-.00080	.00020
3.840	4.028	-.32690	-.33690	-.30180	-.31520	-.32970	-.29400	-.01780	-.16710	-.13770	.05470
3.794	6.117	-.34280	-.35030	-.31110	-.33090	-.35510	-.18990	-.00970	-.27690	-.22550	.09910
	GRADIENT	.00183	.00164	.00331	.00186	.00166	-.06306	-.00366	-.04107	-.03366	.01313

IA156A, AEDC PWT 16T-470, O T S W/SILTS (R8NFA9) (10 MAY 80)

REFERENCE DATA

SREF = 2690.0000 SQ.FT. XMRP = 976.0000 IN. XT
LREF = 1290.3000 INCHES YMRP = .0000 IN. YT
BREF = 1290.3000 INCHES ZMRP = 400.0000 IN. ZT
SCALE = .0200

PARAMETRIC DATA

IB-ELV = 12.000 OB-ELV = 5.000
BDFLAP = .000 SPDBRK = .000
RUDDER = .000 SILTS = 1.000
MACH = 1.150 RN/L = 3.500

RUN NO. 1273/ 0 RN/L = 3.50 GRADIENT INTERVAL = -5.00/ 5.00

ALPHAO	BETAO	CP1	CP2	CP3	CP4	CPBV	RUDDER	CHR	CNVT	CBVT	CTVT
-8.106	-5.939	-.38240	-.37890	-.37670	-.37490	-.39730	-.34680	-.02160	.34710	.27920	-.13850
-8.213	-3.740	-.36690	-.37250	-.36140	-.35630	-.37830	-.17900	-.01040	.19800	.15690	-.07250
-8.116	.191	-.35850	-.36390	-.33830	-.34650	-.36260	-.03140	-.00220	-.03060	-.02560	.01210
-7.934	4.331	-.34460	-.35640	-.32190	-.33260	-.36480	.21880	.01320	-.26140	-.21110	.10300
-7.974	6.231	-.36060	-.37130	-.34300	-.35210	-.39250	.42610	.02700	-.37910	-.30520	.15540
	GRADIENT	.00277	.00199	.00489	.00294	.00165	.04939	.00293	-.05691	-.04559	.02175

RUN NO. 1274/ 0 RN/L = 3.51 GRADIENT INTERVAL = -5.00/ 5.00

ALPHAO	BETAO	CP1	CP2	CP3	CP4	CPBV	RUDDER	CHR	CNVT	CBVT	CTVT
-6.162	-5.951	-.37820	-.37860	-.37620	-.36820	-.39570	-.32820	-.01970	.33380	.26980	-.13330
-6.104	-4.035	-.36260	-.36940	-.35460	-.35230	-.37420	-.19330	-.01070	.20630	.16490	-.07680
-6.198	.094	-.33800	-.34860	-.31910	-.32630	-.34170	-.03750	-.00250	-.02330	-.01900	.00880
-5.994	4.239	-.34260	-.35270	-.31670	-.32790	-.35230	.22310	.01290	-.25410	-.20350	.09940
-5.969	6.213	-.35000	-.36190	-.32750	-.33750	-.37120	.39400	.02420	-.36710	-.29530	.14990
	GRADIENT	.00241	.00202	.00458	.00295	.00264	.05033	.00285	-.05564	-.04453	.02130

IA156A, AEDC PWT 16T-470, O T S W/SILTS (R8NFA9) (10 MAY 80)

REFERENCE DATA

SREF = 2690.0000 SQ.FT. XMRP = 976.0000 IN. XT
LREF = 1290.3000 INCHES YMRP = .0000 IN. YT
BREF = 1290.3000 INCHES ZMRP = 400.0000 IN. ZT
SCALE = .0200

PARAMETRIC DATA

IB-ELV = 12.000 OB-ELV = 5.000
BDFLAP = .000 SPDBRK = .000
RUDDER = .000 SILTS = 1.000
MACH = 1.150 RN/L = 3.500

RUN NO. 1275/ 0 RN/L = 3.51 GRADIENT INTERVAL = -5.00/ 5.00

ALPHAO	BETAO	CP1	CP2	CP3	CP4	CPBV	RUDDER	CHR	CNVT	CBVT	CTVT
-4.038	-6.052	-.37260	-.37230	-.36730	-.35730	-.39080	-.27980	-.01560	.32610	.26270	-.12880
-4.300	-3.967	-.35620	-.36110	-.34250	-.34110	-.36540	-.17260	-.00870	.19710	.15790	-.07350
-4.202	.367	-.33930	-.34700	-.31300	-.32450	-.33370	-.03260	-.00250	-.02950	-.02430	.01120
-3.747	4.274	-.33000	-.34220	-.30240	-.31660	-.33580	.20210	.01060	-.24410	-.19570	.09580
-3.861	6.129	-.34410	-.35770	-.32150	-.33320	-.36060	.36080	.02130	-.35470	-.28520	.14440
	GRADIENT	.00319	.00231	.00490	.00299	.00366	.04523	.00233	-.05352	-.04290	.02053

RUN NO. 1276/ 0 RN/L = 3.50 GRADIENT INTERVAL = -5.00/ 5.00

ALPHAO	BETAO	CP1	CP2	CP3	CP4	CPBV	RUDDER	CHR	CNVT	CBVT	CTVT
-.443	-7.017	-.36770	-.37410	-.36620	-.35400	-.39360	-.32400	-.01810	.36620	.29270	-.14390
-.417	-4.818	-.35270	-.35970	-.33920	-.33810	-.36700	-.22270	-.01100	.23940	.19380	-.09120
-.384	-.496	-.33190	-.33960	-.30200	-.31600	-.32900	-.09880	-.00230	.01510	.01090	-.00420
-.349	3.667	-.32910	-.33550	-.29990	-.31510	-.33120	.00130	.00480	-.19050	-.15290	.06920
-.350	5.859	-.33290	-.34310	-.30640	-.31730	-.34160	.09680	.01150	-.30160	-.24500	.11730
	GRADIENT	.00279	.00286	.00466	.00273	.00425	.02642	.00186	-.05068	-.04087	.01891

RUN NO. 1277/ 0 RN/L = 3.50 GRADIENT INTERVAL = -5.00/ 5.00

ALPHAO	BETAO	CP1	CP2	CP3	CP4	CPBV	RUDDER	CHR	CNVT	CBVT	CTVT
4.119	-5.814	-.33210	-.34030	-.32810	-.32410	-.35150	-.00870	-.00450	.26670	.21790	-.09840
3.983	-3.718	-.33670	-.34670	-.32140	-.32470	-.34850	.04050	-.00040	.16320	.13160	-.05370
3.772	.121	-.33860	-.34750	-.31780	-.32980	-.33990	-.01590	-.00120	.00550	.00200	.00070
3.856	4.026	-.31520	-.32490	-.28750	-.30340	-.32200	-.10860	-.00440	-.16540	-.13570	.05780
3.798	6.127	-.32250	-.33010	-.29090	-.30520	-.33770	-.00020	.00390	-.28100	-.22980	.10640
	GRADIENT	.00279	.00282	.00439	.00276	.00343	-.01927	-.00052	-.04243	-.03452	.01440

IA156A, AEDC PWT 16T-470, O T S W/SILTS (R8NFB0) (10 MAY 80)

REFERENCE DATA

SREF = 2690.0000 SQ.FT. XMRP = 976.0000 IN. XT
LREF = 1290.3000 INCHES YMRP = .0000 IN. YT
BREF = 1290.3000 INCHES ZMRP = 400.0000 IN. ZT
SCALE = .0200

PARAMETRIC DATA

IB-ELV = 12.000 OB-ELV = 5.000
BDFLAP = .000 SPDBRK = .000
RUDDER = .000 SILTS = 1.000
MACH = 1.250 RN/L = 3.500

RUN NO. 1278/ 0 RN/L = 3.50 GRADIENT INTERVAL = -5.00/ 5.00

ALPHAO	BETAO	CP1	CP2	CP3	CP4	CPBV	RUDDER	CHR	CNVT	CBVT	CTVT
-8.117	-5.934	-.34400	-.34080	-.34690	-.33630	-.35750	-.50770	-.03170	.34210	.27480	-.13970
-8.222	-3.728	-.33060	-.33700	-.33210	-.32150	-.34150	-.28250	-.01710	.19390	.15510	-.07360
-8.114	.192	-.31660	-.32200	-.30520	-.30040	-.32630	.03810	.00260	-.03180	-.02640	.01360
-7.937	4.364	-.33030	-.33430	-.31190	-.31430	-.35860	.39260	.02450	-.26970	-.21700	.10860
-7.972	6.250	-.33340	-.34030	-.32510	-.32690	-.35880	.64050	.04060	-.38720	-.30720	.15970
	GRADIENT	.00000	.00030	.00245	.00084	-.00217	.08344	.00514	-.05728	-.04598	.02252

RUN NO. 1279/ 0 RN/L = 3.50 GRADIENT INTERVAL = -5.00/ 5.00

ALPHAO	BETAO	CP1	CP2	CP3	CP4	CPBV	RUDDER	CHR	CNVT	CBVT	CTVT
-6.202	-5.973	-.33420	-.33480	-.33870	-.32370	-.35020	-.43820	-.02640	.32810	.26480	-.13390
-6.133	-4.024	-.32990	-.33300	-.32370	-.31810	-.34020	-.26590	-.01530	.20010	.16100	-.07620
-6.196	.131	-.31210	-.31840	-.29890	-.29760	-.31920	.02880	.00200	-.03070	-.02430	.01210
-5.998	4.246	-.31660	-.32440	-.29700	-.30070	-.33700	.34030	.02050	-.25490	-.20330	.10060
-5.797	6.327	-.32910	-.33480	-.31650	-.31690	-.34910	.58780	.03650	-.37640	-.29920	.15480
	GRADIENT	.00161	.00104	.00323	.00211	.00039	.07330	.00433	-.05502	-.04405	.02138

RUN NO. 1280/ 0 RN/L = 3.50 GRADIENT INTERVAL = -5.00/ 5.00

ALPHAO	BETAO	CP1	CP2	CP3	CP4	CPBV	RUDDER	CHR	CNVT	CBVT	CTVT
-4.179	-6.048	-.34240	-.34160	-.33860	-.32990	-.35670	-.43660	-.02570	.32030	.25820	-.12990
-4.309	-3.970	-.33150	-.33300	-.32220	-.31400	-.33960	-.24080	-.01300	.18970	.15230	-.07190
-4.187	.370	-.31600	-.32300	-.29750	-.30100	-.31910	.01180	.00060	-.03520	-.02820	.01350
-3.744	4.281	-.30720	-.31520	-.28330	-.29080	-.31980	.31690	.01810	-.24570	-.19520	.09640
-3.855	6.144	-.32430	-.33190	-.30600	-.30880	-.34830	.51140	.03090	-.35710	-.28440	.14590
	GRADIENT	.00296	.00216	.00473	.00282	.00244	.06742	.00376	-.05275	-.04211	.02039

RUN NO. 1281/ 0 RN/L = 3.51 GRADIENT INTERVAL = -5.00/ 5.00

ALPHAO	BETAO	CP1	CP2	CP3	CP4	CPBV	RUDDER	CHR	CNVT	CBVT	CTVT
-.472	-7.033	-.33260	-.33630	-.33100	-.32200	-.35350	-.45880	-.02650	.35680	.28640	-.14490
-.444	-4.826	-.32760	-.33170	-.32160	-.31570	-.34370	-.33070	-.01790	.23770	.19190	-.09240
-.401	-.499	-.30950	-.31440	-.29160	-.29300	-.31200	-.08770	-.00140	.01630	.01150	-.00430
-.365	3.669	-.29720	-.30110	-.27270	-.28070	-.30040	.15300	.01490	-.18790	-.14970	.06960
-.377	5.868	-.31000	-.31480	-.28630	.29500	-.32200	.32160	.02620	-.29910	-.24190	.11950
	GRADIENT	.00358	.00360	.00576	.00413	.00511	.05694	.00386	-.05011	-.04022	.01908

IA156A, AEDC PWT 16T-470, O T S W/SILTS (R8NFB0) (10 MAY 80)

REFERENCE DATA

SREF = 2690.0000 SQ.FT. XMRP = 976.0000 IN. XT
LREF = 1290.3000 INCHES YMRP = .0000 IN. YT
BREF = 1290.3000 INCHES ZMRP = 400.0000 IN. ZT
SCALE = .0200

PARAMETRIC DATA

IB-ELV = 12.000 OB-ELV = 5.000
BDFLAP = .000 SPDBRK = .000
RUDDER = .000 SILTS = 1.000
MACH = 1.250 RN/L = 3.500

RUN NO. 1282/ 0 RN/L = 3.51 GRADIENT INTERVAL = -5.00/ 5.00

ALPHAO	BETAO	CP1	CP2	CP3	CP4	CPBV	RUDDER	CHR	CNVT	CBVT	CTVT
4.122	-5.803	-.31540	-.31960	-.30470	-.30130	-.32680	-.24680	-.02050	.27240	.22160	-.10540
3.999	-3.707	-.31190	-.31950	-.29760	-.30120	-.31390	-.15590	-.01370	.16570	.13360	-.05870
3.758	.132	-.30900	-.31440	-.29540	-.29640	-.30680	-.01690	-.00120	-.00120	-.00140	.00040
3.825	4.039	-.30560	-.31290	-.27410	-.28900	-.30850	.10560	.01030	-.18380	-.14750	.06630
3.778	6.113	-.30780	-.31410	-.28110	-.28940	-.31090	.24530	.02040	-.29000	-.23410	.11330
	GRADIENT	.00081	.00085	.00304	.00158	.00069	.03375	.00310	-.04513	-.03629	.01614

IA156A, AEDC PWT 16T-470, O T S W/SILTS (R8NFB1) (10 MAY 80)

REFERENCE DATA

SREF = 2690.0000 SQ.FT. XMRP = 976.0000 IN. XT
LREF = 1290.3000 INCHES YMRP = .0000 IN. YT
BREF = 1290.3000 INCHES ZMRP = 400.0000 IN. ZT
SCALE = .0200

PARAMETRIC DATA

IB-ELV = 12.000 OB-ELV = 5.000
BDFLAP = .000 SPDBRK = .000
RUDDER = .000 SILTS = 1.000
MACH = 1.400 RN/L = 3.500

RUN NO. 1283/ 0 RN/L = 3.49 GRADIENT INTERVAL = -5.00/ 5.00

ALPHAO	BETAO	CP1	CP2	CP3	CP4	CPBV	RUDDER	CHR	CNVT	CBVT	CTVT
-8.172	-5.916	-.31330	-.31140	-.33400	-.30520	-.31140	-.65060	-.03990	.34400	.27410	-.14230
-8.232	-3.703	-.30560	-.30750	-.32150	-.28710	-.29230	-.38510	-.02330	.20480	.16400	-.08050
-8.132	.227	-.29030	-.29420	-.28240	-.27580	-.26750	.01820	.00120	-.02730	-.02250	.01120
-7.934	4.409	-.30140	-.30650	-.28990	-.28870	-.30990	.51080	.03140	-.27220	-.21810	.11100
-7.993	6.316	-.30330	-.30550	-.30350	-.29820	-.31780	.75390	.04680	-.38570	-.30310	.15990
	GRADIENT	.00048	.00084	.00383	-.00023	-.00225	.11052	.00675	-.05880	-.04710	.02361

RUN NO. 1284/ 0 RN/L = 3.50 GRADIENT INTERVAL = -5.00/ 5.00

ALPHAO	BETAO	CP1	CP2	CP3	CP4	CPBV	RUDDER	CHR	CNVT	CBVT	CTVT
-6.235	-5.949	-.30820	-.30730	-.32720	-.28250	-.31440	-.63790	-.03850	.33740	.27000	-.14030
-6.174	-4.010	-.29880	-.30080	-.30570	-.28530	-.29590	-.40970	-.02430	.21500	.17360	-.08550
-6.227	.157	-.29730	-.30190	-.28690	-.27730	-.29270	.00210	.00020	-.02780	-.02160	.01050
-5.972	4.288	-.29290	-.29540	-.28220	-.27780	-.30970	.49420	.02980	-.26500	-.20980	.10630
-5.941	6.258	-.30410	-.30200	-.29310	-.29130	-.31850	.74300	.04560	-.38590	-.30140	.15910
	GRADIENT	.00071	.00065	.00283	.00091	-.00166	.10892	.00652	-.05785	-.04621	.02311

IA156A, AEDC PWT 16T-470, O T S W/SILTS (R8NFB1) (10 MAY 80)

REFERENCE DATA

SREF = 2690.0000 SQ.FT. XMRP = 976.0000 IN. XT
LREF = 1290.3000 INCHES YMRP = .0000 IN. YT
BREF = 1290.3000 INCHES ZMRP = 400.0000 IN. ZT
SCALE = .0200

PARAMETRIC DATA

IB-ELV = 12.000 OB-ELV = 5.000
BDFLAP = .000 SPDBRK = .000
RUDDER = .000 SILTS = 1.000
MACH = 1.400 RN/L = 3.500

RUN NO. 1285/ 0 RN/L = 3.50 GRADIENT INTERVAL = -5.00/ 5.00

ALPHAO	BETAO	CP1	CP2	CP3	CP4	CPBV	RUDDER	CHR	CNVT	CBVT	CTVT
-4.308	-5.994	-.30740	-.30370	-.30860	-.29370	-.31560	-.63520	-.03790	.32980	.26430	-.13720
-4.303	-3.954	-.30170	-.30210	-.30000	-.28050	-.30240	-.39550	-.02280	.20740	.16740	-.08250
-4.210	.427	-.28850	-.29280	-.27560	-.26810	-.29190	.03090	.00180	-.03640	-.02930	.01480
-3.718	4.312	-.29260	-.29570	-.27800	-.27310	-.31340	.47500	.02780	-.25820	-.20360	.10280
-3.823	6.165	-.29980	-.29690	-.28700	-.28250	-.31640	.71530	.04320	-.36790	-.28910	.15290
	GRADIENT	.00114	.00080	.00272	.00094	-.00125	.10513	.00611	-.05631	-.04488	.02241

RUN NO. 1286/ 0 RN/L = 3.50 GRADIENT INTERVAL = -5.00/ 5.00

ALPHAO	BETAO	CP1	CP2	CP3	CP4	CPBV	RUDDER	CHR	CNVT	CBVT	CTVT
-.534	-7.071	-.31060	-.31220	-.31160	-.29460	-.32910	-.73500	-.04380	.36560	.28820	-.15030
-.500	-4.898	-.29980	-.29890	-.29620	-.28530	-.30980	-.48480	-.02740	.24050	.19500	-.09710
-.449	-.441	-.28910	-.29160	-.28120	-.27300	-.29750	-.12730	-.00400	.01200	.00840	-.00290
-.429	3.664	-.28250	-.28900	-.26810	-.27080	-.30910	.27020	.02210	-.19060	-.15160	.07250
-.442	5.877	-.29300	-.29650	-.28110	-.27810	-.31220	.52880	.03910	-.31140	-.24870	.12790
	GRADIENT	.00203	.00116	.00328	.00171	.00012	.08807	.00577	-.05036	-.04050	.01983

RUN NO. 1287/ 0 RN/L = 3.49 GRADIENT INTERVAL = -5.00/ 5.00

ALPHAO	BETAO	CP1	CP2	CP3	CP4	CPBV	RUDDER	CHR	CNVT	CBVT	CTVT
4.136	-5.764	-.29460	-.29680	-.28460	-.28250	-.30530	-.44900	-.03310	.26360	.21170	-.10360
4.015	-3.670	-.29620	-.29270	-.26810	-.27080	-.29300	-.27440	-.02110	.15540	.12610	-.05780
3.731	.162	-.28720	-.28910	-.27530	-.27590	-.29050	-.00090	-.00020	-.00650	-.00620	.00370
3.793	4.054	-.27540	-.28220	-.26140	-.26350	-.29070	.26940	.02070	-.18560	-.14680	.06860
3.718	6.096	-.28690	-.29140	-.26790	-.27260	-.30370	.48570	.03550	-.29090	-.23060	.11580
	GRADIENT	.00140	.00136	.00087	.00095	.00030	.07040	.00541	-.04415	-.03533	.01636

IA156A, AEDC PWT 16T-470, O T S W/SILTS (R8NFB2) (10 MAY 80)

REFERENCE DATA

SREF = 2690.0000 SQ.FT. XMRP = 976.0000 IN. XT
LREF = 1290.3000 INCHES YMRP = .0000 IN. YT
BREF = 1290.3000 INCHES ZMRP = 400.0000 IN. ZT
SCALE = .0200

PARAMETRIC DATA

IB-ELV = 12.000 OB-ELV = 5.000
BDFLAP = .000 SPDBRK = .000
RUDDER = .000 SILTS = 1.000
MACH = 1.550 RN/L = 3.200

RUN NO. 1288/ 0 RN/L = 3.00 GRADIENT INTERVAL = -5.00/ 5.00

ALPHAO	BETAO	CP1	CP2	CP3	CP4	CPBV	RUDDER	CHR	CNVT	CBVT	CTVT
-8.285	-5.892	-.27930	-.27600	-.29400	-.26270	-.26010	-.64520	-.04530	.33290	.26530	-.14040
-8.337	-3.675	-.27100	-.27380	-.29840	-.24750	-.24750	-.39040	-.02700	.19980	.16010	-.08000
-8.205	.319	-.26580	-.26740	-.26190	-.25210	-.22900	.01380	.00100	-.03070	-.02340	.01180
-7.984	4.502	-.26710	-.26830	-.26550	-.25860	-.25220	.47440	.03320	-.26470	-.20900	.10720
-7.934	6.371	-.27350	-.27250	-.27040	-.26780	-.26680	.69170	.04880	-.36820	-.28760	.15330
	GRADIENT	.00047	.00067	.00399	-.00136	-.00061	.10580	.00737	-.05680	-.04514	.02290

RUN NO. 1289/ 0 RN/L = 3.00 GRADIENT INTERVAL = -5.00/ 5.00

ALPHAO	BETAO	CP1	CP2	CP3	CP4	CPBV	RUDDER	CHR	CNVT	CBVT	CTVT
-6.328	-5.943	-.27120	-.27740	-.31580	-.25860	-.26760	-.65340	-.04540	.33150	.26310	-.13910
-6.270	-3.986	-.26640	-.27240	-.29350	-.24890	-.25360	-.40280	-.02720	.21220	.17140	-.08590
-6.272	.238	-.25860	-.26720	-.26530	-.24430	-.23310	.00960	.00080	-.02850	-.02060	.01010
-5.982	4.385	-.26250	-.26940	-.27370	-.24890	-.26260	.45870	.03150	-.26110	-.20420	.10470
-5.925	6.371	-.27130	-.26720	-.26350	-.25200	-.26890	.70810	.04950	-.37630	-.29110	.15540
	GRADIENT	.00047	.00036	.00238	.00000	-.00106	.10290	.00701	-.05654	-.04487	.02277

RUN NO. 1290/ 0 RN/L = 3.00 GRADIENT INTERVAL = -5.00/ 5.00

ALPHAO	BETAO	CP1	CP2	CP3	CP4	CPBV	RUDDER	CHR	CNVT	CBVT	CTVT
-4.204	-6.069	-.27810	-.27970	-.30850	-.25670	-.28080	-.65830	-.04510	.33110	.26150	-.13800
-4.444	-3.944	-.26420	-.26930	-.28730	-.24810	-.25940	-.39430	-.02590	.20380	.16460	-.08240
-4.280	.501	-.25930	-.26590	-.25290	-.24320	-.24700	.01850	.00120	-.03770	-.02760	.01260
-3.717	4.430	-.26410	-.26950	-.26940	-.25120	-.26570	.46250	.03090	-.26090	-.20360	.10510
-3.798	6.262	-.26180	-.26800	-.26500	-.24940	-.27130	.69290	.04770	-.36900	-.28530	.15270
	GRADIENT	.00004	-.00001	.00226	-.00034	-.00068	.10210	.00677	-.05546	-.04395	.02237

RUN NO. 1291/ 0 RN/L = 3.00 GRADIENT INTERVAL = -5.00/ 5.00

ALPHAO	BETAO	CP1	CP2	CP3	CP4	CPBV	RUDDER	CHR	CNVT	CBVT	CTVT
-.583	-7.072	-.28230	-.28290	-.30580	-.27030	-.29590	-.75070	-.05130	.37140	.28950	-.15380
-.548	-4.907	-.26840	-.27190	-.27990	-.25690	-.27440	-.49840	-.03240	.24420	.19680	-.09990
-.520	-.554	-.26450	-.26790	-.25380	-.24620	-.26210	-.10810	-.00310	.01400	.01010	-.00300
-.504	3.581	-.26210	-.26650	-.25400	-.25040	-.27700	.27240	.02540	-.19890	-.15790	.07840
-.509	5.749	-.26770	-.27150	-.26200	-.25620	-.28200	.51640	.04360	-.31410	-.24840	.13070
	GRADIENT	.00074	.00064	.00308	.00078	-.00028	.09080	.00681	-.05221	-.04180	.02102

IA156A, AEDC PWT 16T-470, O T S W/SILTS (R8NFB2) (10 MAY 80)

REFERENCE DATA

SREF = 2690.0000 SQ.FT. XMRP = 976.0000 IN. XT
LREF = 1290.3000 INCHES YMRP = .0000 IN. YT
BREF = 1290.3000 INCHES ZMRP = 400.0000 IN. ZT
SCALE = .0200

PARAMETRIC DATA

IB-ELV = 12.000 OB-ELV = 5.000
BDFLAP = .000 SPDBRK = .000
RUDDER = .000 SILTS = 1.000
MACH = 1.550 RN/L = 3.200

RUN NO. 1292/ 0 RN/L = 3.00 GRADIENT INTERVAL = -5.00/ 5.00

ALPHAO	BETAO	CP1	CP2	CP3	CP4	CPBV	RUDDER	CHR	CNVT	CBVT	CTVT
4.186	-5.682	-.28160	-.27850	-.28030	-.26670	-.28480	-.47190	-.03950	.26750	.21330	-.10720
3.986	-3.541	-.27070	-.27320	-.25990	-.25840	-.26650	-.25720	-.02280	.15350	.12690	-.06030
3.703	.248	-.26820	-.26840	-.26120	-.25110	-.27140	-.02460	-.00200	-.00050	-.00090	.00100
3.683	4.063	-.26150	-.26680	-.25350	-.25160	-.27540	.23970	.02150	-.17270	-.14070	.06920
3.648	6.133	-.26890	-.27170	-.25950	-.25410	-.28650	.47900	.04010	-.29600	-.23230	.11930
	GRADIENT	.00121	.00084	.00084	.00089	-.00117	.06535	.00583	-.04290	-.03520	.01703

IA156A, AEDC PWT 16T-470, O T S W/SILTS (R8NFB3) (10 MAY 80)

REFERENCE DATA

SREF = 2690.0000 SQ.FT. XMRP = 976.0000 IN. XT
LREF = 1290.3000 INCHES YMRP = .0000 IN. YT
BREF = 1290.3000 INCHES ZMRP = 400.0000 IN. ZT
SCALE = .0200

PARAMETRIC DATA

IB-ELV = 12.000 OB-ELV = 9.000
BDFLAP = .000 SPDBRK = .000
RUDDER = .000 SILTS = 1.000
MACH = .600 RN/L = 3.500

RUN NO. 1295/ [illegible] RN/L = 3.50 GRADIENT INTERVAL = -5.00/ 5.00

ALPHAO	BETAO	CP1	CP2	CP3	CP4	CPBV	RUDDER	CHR	CNVT	CBVT	CTVT
-8.119	-7.790	-.27590	-.28690	-.25490	-.26490	-.27020	-.21340	-.01830	.40630	.28860	-.10560
-8.082	-5.753	-.27500	-.28940	-.25260	-.25850	-.27250	-.06480	-.00270	.29450	.22350	-.08150
-8.072	-3.742	-.25320	-.27510	-.25670	-.23920	-.26240	-.03000	.00000	.17680	.13730	-.04970
-7.981	.359	-.23940	-.25330	-.22970	-.22360	-.24850	-.01970	-.00230	-.04440	-.03520	.01370
-7.836	4.240	-.25420	-.27330	-.23970	-.24010	-.25760	.03280	.00020	-.25180	-.19460	.07560
-7.859	6.141	-.26880	-.28630	-.25530	-.25070	-.26530	.11350	.00800	-.35900	-.27120	.10690
-7.879	8.123	-.27310	-.28840	-.25450	-.25610	-.26950	.23510	.02070	-.45440	-.32330	.12510
	GRADIENT	-.00009	.00027	.00217	-.00008	.00063	.00782	.00002	-.05370	-.04158	.01570

RUN NO. 1296/ 0 RN/L = 3.49 GRADIENT INTERVAL = -5.00/ 5.00

ALPHAO	BETAO	CP1	CP2	CP3	CP4	CPBV	RUDDER	CHR	CNVT	CBVT	CTVT
-6.119	-7.865	-.27120	-.29220	-.26910	-.25840	-.27330	-.21710	-.01790	.41130	.28990	-.10570
-6.070	-5.846	-.26710	-.28610	-.26760	-.26470	-.26670	-.07960	-.00350	.30240	.22810	-.08340
-5.997	-3.956	-.25080	-.27250	-.24450	-.23720	-.25920	-.03900	.00000	.18630	.14400	-.05240
-6.035	.089	-.23340	-.24940	-.23010	-.21880	-.24190	-.01890	-.00190	-.03370	-.02620	.00970
-5.902	4.151	-.25250	-.27240	-.23680	-.23730	-.25520	.03920	.00020	-.24580	-.18730	.07240
-5.812	6.114	-.25980	-.28020	-.24910	-.26240	-.26050	.11530	.00740	-.35860	-.26860	.10560
-5.845	8.081	-.27450	-.29510	-.26080	-.27550	-.27470	.24860	.02140	-.45970	-.32530	.12630
	GRADIENT	-.00021	.00001	.00095	-.00002	.00049	.00965	.00002	-.05330	-.04087	.01539

IA156A, AEDC PWT 16T-470, O T S W/SILTS (R8NFB3) (10 MAY 80)

REFERENCE DATA

SREF = 2690.0000 SQ.FT. XMRP = 976.0000 IN. XT
LREF = 1290.3000 INCHES YMRP = .0000 IN. YT
BREF = 1290.3000 INCHES ZMRP = 400.0000 IN. ZT
SCALE = .0200

PARAMETRIC DATA

IB-ELV = 12.000 OB-ELV = 9.000
BDFLAP = .000 SPDBRK = .000
RUDDER = .000 SILTS = 1.000
MACH = .600 RN/L = 3.500

RUN NO. 1297/ 0 RN/L = 3.49 GRADIENT INTERVAL = -5.00/ 5.00

ALPHAO	BETAO	CP1	CP2	CP3	CP4	CPBV	RUDDER	CHR	CNVT	CBVT	CTVT
-4.186	-7.885	-.27020	-.28570	-.26260	-.25720	-.26840	-.24430	-.02030	.40900	.28840	-.10510
-4.176	-5.895	-.26240	-.28140	-.26260	-.26460	-.26070	-.09330	-.00410	.29670	.22350	-.08170
-4.190	-3.851	-.25070	-.26980	-.24620	-.23490	-.25870	-.05290	-.00060	.17640	.13620	-.04970
-3.978	.173	-.23050	-.24780	-.22130	-.22020	-.23800	-.02580	-.00280	-.03150	-.02400	.00830
-3.670	4.213	-.24050	-.26340	-.23170	-.22860	-.24130	.05260	.00040	-.25270	-.19010	.07380
-3.770	6.000	-.25280	-.27410	-.24070	-.23750	-.25150	.11650	.00670	-.35240	-.26270	.10400
-3.798	7.974	-.26910	-.28660	-.26140	-.26610	-.26320	.24750	.02060	-.45750	-.32240	.12580
	GRADIENT	.00126	.00079	.00180	.00078	.00216	.01309	.00012	-.05321	-.04047	.01532

RUN NO. 1298/ 0 RN/L = 3.49 GRADIENT INTERVAL = -5.00/ 5.00

ALPHAO	BETAO	CP1	CP2	CP3	CP4	CPBV	RUDDER	CHR	CNVT	CBVT	CTVT
-.340	-8.690	-.26410	-.28080	-.25930	-.25320	-.25640	-.29790	-.02550	.44630	.30720	-.11060
-.331	-6.609	-.25100	-.26800	-.24900	-.23700	-.24710	-.15030	-.00920	.33470	.24630	-.08840
-.315	-4.354	-.24440	-.25890	-.23480	-.22650	-.23920	-.07490	-.00090	.20540	.15690	-.05380
-.289	-.306	-.22300	-.23670	-.21360	-.21160	-.22960	-.07340	-.00080	.00420	.00250	.00070
-.260	3.764	-.22910	-.24760	-.21570	-.21550	-.23100	-.07810	-.00130	-.18040	-.13730	.04640
-.254	5.857	-.24700	-.26870	-.22800	-.23060	-.24230	-.02180	.00490	-.29720	-.22290	.08000
-.245	7.949	-.26110	-.28030	-.25050	-.24160	-.25240	.10220	.01830	-.40570	-.28930	.10510
	GRADIENT	.00188	.00139	.00235	.00135	.00101	-.00039	-.00005	-.04753	-.03624	.01234

RUN NO. 1299/ 0 RN/L = 3.49 GRADIENT INTERVAL = -5.00/ 5.00

ALPHAO	BETAO	CP1	CP2	CP3	CP4	CPBV	RUDDER	CHR	CNVT	CBVT	CTVT
4.199	-7.951	-.24380	-.25950	-.23160	-.24540	-.22880	-.10910	-.01830	.35620	.25210	-.08260
4.108	-5.827	-.24020	-.25780	-.23620	-.23830	-.23530	.01720	-.00410	.24800	.18730	-.05780
4.094	-3.848	-.23570	-.24900	-.22870	-.21870	-.22920	.05640	.00100	.14550	.11290	-.02970
3.907	.076	-.22590	-.23900	-.21230	-.21320	-.22650	-.00560	-.00080	-.00240	-.00280	.00230
3.939	4.101	-.22430	-.24190	-.20790	-.21800	-.22340	-.07200	-.00280	-.16340	-.12680	.03850
3.887	6.231	-.23610	-.25870	-.21370	-.21960	-.23070	-.01130	.00480	-.29120	-.21790	.07480
3.874	8.224	-.24940	-.26770	-.22870	-.23060	-.23530	.12780	.02030	-.39610	-.28040	.10030
	GRADIENT	.00143	.00089	.00261	.00008	.00073	-.01615	-.00048	-.03886	-.03015	.00858

IA156A, AEDC PWT 16T-470, O T S W/SILTS (R8NFB3) (10 MAY 80)

REFERENCE DATA

SREF = 2690.0000 SQ.FT. XMRP = 976.0000 IN. XT
LREF = 1290.3000 INCHES YMRP = .0000 IN. YT
BREF = 1290.3000 INCHES ZMRP = 400.0000 IN. ZT
SCALE = .0200

PARAMETRIC DATA

IB-ELV = 12.000 OB-ELV = 9.000
BDFLAP = .000 SPDBRK = .000
RUDDER = .000 SILTS = 1.000
MACH = .600 RN/L = 3.500

RUN NO. 1300/ 0 RN/L = 3.50 GRADIENT INTERVAL = -5.00/ 5.00

ALPHAO	BETAO	CP1	CP2	CP3	CP4	CPBV	RUDDER	CHR	CNVT	CBVT	CTVT
6.239	-8.007	-.24480	-.26030	-.23330	-.24180	-.23170	-.12760	-.01950	.36520	.25780	-.08620
6.221	-5.934	-.24090	-.25600	-.24080	-.23710	-.23590	.01600	-.00330	.24970	.18980	-.05980
6.207	-3.861	-.23550	-.24950	-.23110	-.23100	-.23000	.05550	.00200	.14850	.11540	-.03100
5.933	.197	-.22890	-.24120	-.21230	-.21010	-.23010	-.00900	-.00100	-.00520	-.00440	.00230
5.852	4.115	-.22650	-.23810	-.19720	-.20790	-.22150	-.07220	-.00380	-.15800	-.12240	.03570
5.824	6.058	-.23720	-.25810	-.21210	-.22570	-.22820	-.03140	.00170	-.25960	-.19640	.06520
5.838	8.110	-.24530	-.26580	-.22230	-.23540	-.23640	.10940	.01760	-.38010	-.27200	.09710
	GRADIENT	.00113	.00143	.00425	.00291	.00106	-.01601	-.00073	-.03842	-.02981	.00836

RUN NO. 1301/ 0 RN/L = 3.50 GRADIENT INTERVAL = -5.00/ 5.00

ALPHAO	BETAO	CP1	CP2	CP3	CP4	CPBV	RUDDER	CHR	CNVT	CBVT	CTVT
8.134	-7.858	-.25100	-.27090	-.25200	-.25030	-.25120	-.08530	-.01440	.33930	.25090	-.08650
8.039	-5.780	-.23930	-.25650	-.23520	-.22240	-.22970	.04430	.00050	.22680	.17500	-.05370
8.044	-3.799	-.22340	-.23740	-.21590	-.20470	-.21790	.06100	.00340	.13360	.10600	-.02840
7.947	.182	-.22510	-.23930	-.21280	-.20900	-.22190	-.01000	-.00110	-.00490	-.00440	.00190
7.983	4.222	-.22200	-.23880	-.20180	-.20250	-.21480	-.07420	-.00480	-.14510	-.11460	.03290
7.948	6.247	-.24570	-.26780	-.22190	-.22510	-.23290	-.05300	-.00140	-.24110	-.18610	.05960
7.938	8.284	-.25400	-.27430	-.23010	-.23760	-.24540	.09320	.01530	-.37110	-.27180	.09770
	GRADIENT	.00018	-.00017	.00176	.00028	.00039	-.01685	-.00102	-.03474	-.02750	.00764

IA156A, AEDC PWT 16T-470, O T S W/SILTS (R8NFB4) (10 MAY 80)

REFERENCE DATA

SREF = 2690.0000 SQ.FT. XMRP = 976.0000 IN. XT
LREF = 1290.3000 INCHES YMRP = .0000 IN. YT
BREF = 1290.3000 INCHES ZMRP = 400.0000 IN. ZT
SCALE = .0200

PARAMETRIC DATA

IB-ELV = 12.000 OB-ELV = 9.000
BDFLAP = .000 SPDBRK = .000
RUDDER = .000 SILTS = 1.000
MACH = .800 RN/L = 3.500

RUN NO. 1302/ 0 RN/L = 3.50 GRADIENT INTERVAL = -5.00/ 5.00

ALPHAO	BETAO	CP1	CP2	CP3	CP4	CPBV	RUDDER	CHR	CNVT	CBVT	CTVT
-8.194	-5.835	-.26710	-.28250	-.26540	-.26020	-.27740	.09100	.01140	.30250	.22430	-.07630
-8.031	-3.872	-.27320	-.28890	-.26880	-.27410	-.28000	.11950	.01310	.17960	.13540	-.04140
-8.097	.378	-.25470	-.26360	-.24730	-.25210	-.26480	-.06750	-.00600	-.03560	-.02550	.00590
-7.933	4.308	-.26540	-.27890	-.26170	-.26970	-.27240	-.09120	-.01060	-.24730	-.18850	.06700
-7.931	6.209	-.28150	-.29820	-.27640	-.28050	-.28860	-.00250	-.00370	-.34920	-.25220	.08970
	GRADIENT	.00100	.00129	.00092	.00060	.00096	-.02600	-.00292	-.05216	-.03957	.01322

RUN NO. 1303/ 0 RN/L = 3.50 GRADIENT INTERVAL = -5.00/ 5.00

ALPHAO	BETAO	CP1	CP2	CP3	CP4	CPBV	RUDDER	CHR	CNVT	CBVT	CTVT
-6.147	-5.926	-.26930	-.29160	-.27290	-.27120	-.28320	.04630	.00820	.30660	.22630	-.07710
-6.097	-4.006	-.25940	-.27890	-.25920	-.25560	-.27330	.09110	.01140	.18340	.13850	-.04250
-6.162	.123	-.23740	-.24910	-.23140	-.22730	-.24690	-.06270	-.00540	-.02540	-.01700	.00330
-5.993	4.229	-.26580	-.27970	-.25910	-.26600	-.26910	-.07760	-.01010	-.24240	-.18050	.06300
-5.783	6.303	-.26960	-.27910	-.26040	-.26810	-.27190	.02110	-.00240	-.35390	-.25500	.09200
	GRADIENT	-.00077	-.00009	.00002	-.00125	.00052	-.02050	-.00261	-.05171	-.03874	.01281

RUN NO. 1304/ 0 RN/L = 3.50 GRADIENT INTERVAL = -5.00/ 5.00

ALPHAO	BETAO	CP1	CP2	CP3	CP4	CPBV	RUDDER	CHR	CNVT	CBVT	CTVT
-4.140	-6.025	-.26870	-.28660	-.27040	-.26950	-.27510	.01960	.00660	.30430	.22380	-.07610
-4.277	-3.930	-.25780	-.27490	-.25730	-.26220	-.26620	.06330	.00970	.17360	.13060	-.03950
-4.169	.373	-.23890	-.24690	-.22720	-.23420	-.24270	-.05930	-.00540	-.03100	-.01960	.00250
-3.749	4.270	-.24910	-.26650	-.24120	-.24610	-.25340	-.04130	-.00790	-.24280	-.17960	.06290
-3.821	6.099	-.26430	-.28670	-.25830	-.25670	-.26940	.04330	-.00110	-.34610	-.25030	.09170
	GRADIENT	.00112	.00112	.00205	.00204	.00163	-.01303	-.00217	-.05073	-.03778	.01244

RUN NO. 1306/ 0 RN/L = 3.50 GRADIENT INTERVAL = -5.00/ 5.00

ALPHAO	BETAO	CP1	CP2	CP3	CP4	CPBV	RUDDER	CHR	CNVT	CBVT	CTVT
-.363	-6.811	-.25640	-.27010	-.25500	-.25530	-.25710	-.10950	-.00380	.34490	.24790	-.08580
-.352	-4.652	-.24470	-.25780	-.24190	-.23810	-.24860	.01810	.00740	.21770	.16140	-.04910
-.324	-.486	-.23120	-.24390	-.21990	-.22000	-.23370	-.06770	-.00010	.00970	.00660	-.00100
-.289	3.686	-.23920	-.25180	-.22690	-.22550	-.23800	-.14670	-.00700	-.17740	-.12900	.03550
-.286	5.801	-.24950	.26880	-.23750	-.24700	-.25050	-.07020	-.00040	-.29740	-.21850	.07360
	GRADIENT	.00066	.00072	.00180	.00151	.00127	-.01976	-.00173	-.04738	-.03483	.01015

IA156A, AEDC PWT 16T-470, O T S W/SILTS (R8NFB4) (10 MAY 80)

REFERENCE DATA

SREF = 2690.0000 SQ.FT. XMRP = 976.0000 IN. XT
LREF = 1290.3000 INCHES YMRP = .0000 IN. YT
BREF = 1290.3000 INCHES ZMRP = 400.0000 IN. ZT
SCALE = .0200

PARAMETRIC DATA

IB-ELV = 12.000 OB-ELV = 9.000
BDFLAP = .000 SPDBRK = .000
RUDDER = .000 SILTS = 1.000
MACH = .800 RN/L = 3.500

RUN NO. 1314/ 0 RN/L = 3.49 GRADIENT INTERVAL = -5.00/ 5.00

ALPHAO	BETAO	CP1	CP2	CP3	CP4	CPBV	RUDDER	CHR	CNVT	CBVT	CTVT
6.135	-5.878	-.25220	-.27010	-.24600	-.24590	-.25440	.06460	.00150	.25970	.19510	-.06040
6.107	-3.811	-.22970	-.24940	-.22100	-.22430	-.23070	.16070	.01080	.13920	.10560	-.02090
5.823	.172	-.24570	-.25850	-.23030	-.23310	-.24160	-.01400	-.00130	.00170	-.00100	.00030
5.769	4.035	-.23840	-.25460	-.22260	-.22740	-.23790	-.18430	-.01290	-.12970	-.10180	.02090
5.762	6.056	-.24620	-.26230	-.22970	-.23690	-.24390	-.12600	-.00680	-.24580	-.18990	.05890
	GRADIENT	-.00112	-.00067	-.00022	-.00040	-.00093	-.04397	-.00302	-.03427	-.02644	.00533

IA156A, AEDC PWT 16T-470, O T S W/SILTS (R8NFB5) (10 MAY 80)

REFERENCE DATA

SREF = 2690.0000 SQ.FT. XMRP = 976.0000 IN. XT
LREF = 1290.3000 INCHES YMRP = .0000 IN. YT
BREF = 1290.3000 INCHES ZMRP = 400.0000 IN. ZT
SCALE = .0200

PARAMETRIC DATA

IB-ELV = 12.000 OB-ELV = 9.000
BDFLAP = .000 SPDBRK = .000
RUDDER = .000 SILTS = 1.000
MACH = .800 RN/L = 3.500

RUN NO. 1313/ 0 RN/L = 3.49 GRADIENT INTERVAL = -5.00/ 5.00

ALPHAO	BETAO	CP1	CP2	CP3	CP4	CPBV	RUDDER	CHR	CNVT	CBVT	CTVT
-.366	-6.780	-.26050	-.27330	-.25130	-.25350	-.26040	-.11260	-.00410	.35130	.25020	-.08680
-.353	-4.684	-.24790	-.25970	-.24470	-.24060	-.24950	.02100	.00770	.22620	.16410	-.04940
-.323	-.479	-.23310	-.24580	-.22080	-.22820	-.23740	-.06240	.00040	.01430	.00670	-.00010
-.288	3.692	-.24620	-.25840	-.22930	-.23060	-.24520	-.15410	-.00770	-.17440	-.12900	.03520
-.287	5.812	-.25630	-.27010	-.24280	-.25030	-.25560	-.08090	-.00130	-.29540	-.21900	.07370
	GRADIENT	.00021	.00016	.00184	.00120	.00052	-.02090	-.00184	-.04783	-.03499	.01010

IA156A, AEDC PWT 16T-470, O T S W/SILTS (R8NFB6) (10 MAY 80)

REFERENCE DATA

SREF = 2690.0000 SQ.FT. XMRP = 976.0000 IN. XT
LREF = 1290.3000 INCHES YMRP = .0000 IN. YT
BREF = 1290.3000 INCHES ZMRP = 400.0000 IN. ZT
SCALE = .0200

PARAMETRIC DATA

IB-ELV = 12.000 OB-ELV = 9.000
BDFLAP = .000 SPDBRK = .000
RUDDER = .000 SILTS = 1.000
MACH = .900 RN/L = 3.500

RUN NO. 1308/ 0 RN/L = 3.50 GRADIENT INTERVAL = -5.00/ 5.00

ALPHAO	BETAO	CP1	CP2	CP3	CP4	CPBV	RUDDER	CHR	CNVT	CBVT	CTVT
-8.117	-5.915	-.31700	-.32300	-.29930	-.30680	-.31240	.26270	.02440	.31290	.23230	-.08200
-8.125	-3.844	-.29780	-.31000	-.29100	-.28990	-.30580	.31620	.02780	.16750	.11760	-.02720
-8.105	.288	-.26830	-.28330	-.25920	-.26980	-.28480	-.03750	-.00310	-.02630	-.01990	.00450
-7.938	4.265	-.28470	-.30380	-.28250	-.27930	-.29960	-.22380	-.02050	-.22790	-.17080	.05480
-7.950	6.207	-.30700	-.32540	-.30170	-.29770	-.32310	-.19520	-.01900	-.34710	-.26260	.09870
	GRADIENT	.00165	.00080	.00109	.00133	.00079	-.06672	-.00597	-.04875	-.03555	.01010

RUN NO. 1309/ 0 RN/L = 3.50 GRADIENT INTERVAL = -5.00/ 5.00

ALPHAO	BETAO	CP1	CP2	CP3	CP4	CPBV	RUDDER	CHR	CNVT	CBVT	CTVT
-6.168	-5.940	-.30520	-.32470	-.30370	-.29630	-.31540	.20330	.02030	.31240	.23380	-.08420
-6.098	-4.024	-.27720	-.29980	-.28010	-.28640	-.29140	.16450	.01640	.18530	.13810	-.04330
-6.178	.118	-.26160	-.27890	-.25480	-.26390	-.27810	-.01660	-.00130	-.01820	-.01300	.00190
-6.009	4.234	-.28500	-.30610	-.27910	-.28980	-.29370	-.18350	-.01780	-.22020	-.16000	.04850
-5.808	6.308	-.29470	-.30790	-.28120	-.28190	-.29750	-.12220	-.01380	-.34310	-.25250	.09220
	GRADIENT	-.00094	-.00076	.00013	-.00041	-.00027	-.04214	-.00414	-.04910	-.03610	.01112

RUN NO. 1310/ 0 RN/L = 3.49 GRADIENT INTERVAL = -5.00/ 5.00

ALPHAO	BETAO	CP1	CP2	CP3	CP4	CPBV	RUDDER	CHR	CNVT	CBVT	CTVT
-4.101	-6.042	-.29940	-.30860	-.28930	-.28330	-.29750	.16640	.01800	.30370	.22430	-.07820
-4.291	-3.954	-.28340	-.29650	-.27950	-.27490	-.29190	.09700	.01170	.17810	.13440	-.04410
-4.185	.374	-.25770	-.27180	-.24780	-.24660	-.26610	-.01740	-.00160	-.02480	-.01770	.00270
-3.750	4.279	-.27350	-.29580	-.27060	-.27660	-.28540	-.13360	-.01470	-.22230	-.16240	.05120
-3.839	6.099	-.28870	-.31010	-.28260	-.29080	-.29910	-.08410	-.01130	-.32900	-.24140	.08780
	GRADIENT	.00129	.00019	.00119	-.00008	.00088	-.02798	-.00320	-.04860	-.03603	.01156

RUN NO. 1311/ 0 RN/L = 3.49 GRADIENT INTERVAL = -5.00/ 5.00

ALPHAO	BETAO	CP1	CP2	CP3	CP4	CPBV	RUDDER	CHR	CNVT	CBVT	CTVT
-.394	-6.907	-.28940	-.30040	-.28090	-.28270	-.28910	.03870	.00840	.33820	.24470	-.08540
-.379	-4.756	-.27080	-.28580	-.26760	-.26690	-.27930	.08740	.01240	.22600	.17570	-.06110
-.345	-.449	-.24630	-.25730	-.23970	-.23580	-.25450	-.06620	.00000	.01570	.01190	-.00560
-.313	3.662	-.26100	-.27580	-.25650	-.25250	-.27300	-.20600	-.01120	-.15780	-.11880	.02900
-.314	5.816	-.27740	-.29300	-.26810	-.26630	-.28100	-.18140	-.00930	-.27670	-.20620	.06710
	GRADIENT	.00120	.00123	.00136	.00175	.00079	-.03486	-.00280	-.04562	-.03501	.01072

IA156A, AEDC PWT 16T-470, O T S W/SILTS (R8NFB6) (10 MAY 80)

REFERENCE DATA

SREF = 2690.0000 SQ.FT. XMRP = 976.0000 IN. XT
LREF = 1290.3000 INCHES YMRP = .0000 IN. YT
BREF = 1290.3000 INCHES ZMRP = 400.0000 IN. ZT
SCALE = .0200

PARAMETRIC DATA

IB-ELV = 12.000 OB-ELV = 9.000
BDFLAP = .000 SPDBRK = .000
RUDDER = .000 SILTS = 1.000
MACH = .900 RN/L = 3.500

RUN NO. 1312/ 0 RN/L = 3.50 GRADIENT INTERVAL = -5.00/ 5.00

ALPHAO	BETAO	CP1	CP2	CP3	CP4	CPBV	RUDDER	CHR	CNVT	CBVT	CTVT
4.130	-5.824	-.27470	-.28870	-.26850	-.26980	-.27960	.29360	.01930	.23780	.18070	-.04970
4.011	-3.747	-.25790	-.26900	-.25340	-.25200	-.26730	.29620	.02010	.13410	.10880	-.02450
3.764	.085	-.24740	-.25820	-.24310	-.24470	-.25470	.00540	.00030	.01060	.00670	-.00280
3.854	4.013	-.25720	-.27090	-.25320	-.24650	-.26710	-.28200	-.01890	-.13400	-.10910	.02300
3.797	6.139	-.27740	-.29180	-.27380	-.27460	-.28690	-.25840	-.01630	-.25700	-.19810	.06030
	GRADIENT	.00008	-.00026	.00001	.00070	.00001	-.07451	-.00503	-.03456	-.02809	.00612

IA156A, AEDC PWT 16T-470, O T S (R8NFB7) (10 MAY 80)

REFERENCE DATA

SREF = 2690.0000 SQ.FT. XMRP = 976.0000 IN. XT
LREF = 1290.3000 INCHES YMRP = .0000 IN. YT
BREF = 1290.3000 INCHES ZMRP = 400.0000 IN. ZT
SCALE = .0200

PARAMETRIC DATA

IB-ELV = 12.000 OB-ELV = 9.000
BDFLAP = .000 SPDBRK = .000
RUDDER = .000 SILTS = .000
MACH = .800 RN/L = 3.500

RUN NO. 1324/ 0 RN/L = 3.50 GRADIENT INTERVAL = -5.00/ 5.00

ALPHAO	BETAO	CP1	CP2	CP3	CP4	CPBV	RUDDER	CHR	CNVT	CBVT	CTVT
4.191	-5.942	-.24880	-.26280	-.24560	-.24820	-.24520	.04210	-.00110	.27110	.19890	-.06220
3.993	-3.685	-.23730	-.24980	-.23010	-.23680	-.23860	.11850	.00620	.14940	.10980	-.02440
3.798	.170	-.22790	-.24020	-.21530	-.21730	-.22360	-.01220	-.00110	.00670	.00020	.00050
3.859	4.112	-.23730	-.25130	-.21910	-.22590	-.23780	-.12790	-.00700	-.15200	-.12180	.03350
3.814	6.168	-.24780	-.26740	-.23510	-.23770	-.24760	-.05410	.00010	-.27860	-.21400	.07320
	GRADIENT	-.00001	-.00020	.00140	.00138	.00009	-.03159	-.00169	-.03866	-.02971	.00743

IA156A, AEDC PWT 16T-470, O T S (R8NFB8) (10 MAY 80)

REFERENCE DATA

SREF = 2690.0000 SQ.FT. XMRP = 976.0000 IN. XT
LREF = 1290.3000 INCHES YMRP = .0000 IN. YT
BREF = 1290.3000 INCHES ZMRP = 400.0000 IN. ZT
SCALE = .0200

PARAMETRIC DATA

IB-ELV = 12.000 OB-ELV = 9.000
BDFLAP = .000 SPDBRK = .000
RUDDER = .000 SILTS = .000
MACH = .950 RN/L = 3.500

RUN NO. 1325/ 0 RN/L = 3.51 GRADIENT INTERVAL = -5.00/ 5.00

ALPHAO	BETAO	CP1	CP2	CP3	CP4	CPBV	RUDDER	CHR	CNVT	CBVT	CTVT
-8.097	-5.930	-.34110	-.35110	-.32750	-.33950	-.34100	.32070	.02810	.32620	.24740	-.09690
-8.217	-3.731	-.33530	-.34390	-.31540	-.32550	-.33600	.43440	.03610	.18190	.13240	-.04150
-8.102	.172	-.31090	-.31770	-.28650	-.30190	-.31410	-.18590	-.01440	-.00750	-.00510	-.00490
-7.953	4.376	-.33250	-.34070	-.31680	-.32850	-.33460	-.39350	-.03310	-.23800	-.18620	.06750
-7.952	6.218	-.35070	-.35870	-.33300	-.34470	-.35530	-.24000	-.02180	-.35060	-.27670	.11510
	GRADIENT	.00028	.00032	-.00026	-.00045	.00011	-.10144	-.00848	-.05183	-.03934	.01349

RUN NO. 1326/ 0 RN/L = 3.50 GRADIENT INTERVAL = -5.00/ 5.00

ALPHAO	BETAO	CP1	CP2	CP3	CP4	CPBV	RUDDER	CHR	CNVT	CBVT	CTVT
-6.175	-5.944	-.33530	-.34500	-.31960	-.32690	-.33510	.35700	.03150	.31730	.23850	-.08970
-6.101	-4.027	-.31310	-.32350	-.30160	-.31010	-.31690	.40600	.03470	.19200	.13850	-.04270
-6.189	.101	-.29580	-.30040	-.27050	-.28340	-.30060	-.19780	-.01530	-.00340	.00120	-.01030
-6.004	4.224	-.31990	-.32460	-.29780	-.30780	-.32000	-.38920	-.03330	-.22120	-.16770	.05560
-5.732	6.302	-.34640	-.35400	-.32540	-.33650	-.34450	-.24630	-.02290	-.35000	-.27340	.11220
	GRADIENT	-.00082	-.00013	.00046	.00028	-.00037	-.09639	-.00824	-.05008	-.03711	.01191

RUN NO. 1327/ 0 RN/L = 3.50 GRADIENT INTERVAL = -5.00/ 5.00

ALPHAO	BETAO	CP1	CP2	CP3	CP4	CPBV	RUDDER	CHR	CNVT	CBVT	CTVT
-4.091	-6.044	-.32910	-.33890	-.31830	-.32100	-.33000	.34280	.03110	.31180	.23070	-.08380
-4.285	-3.951	-.31100	-.31730	-.29940	-.29410	-.30900	.40100	.03490	.17620	.12260	-.03260
-4.192	.371	-.29310	-.30050	-.26790	-.27750	-.29630	-.17000	-.01350	-.01130	-.00360	-.00970
-3.741	4.269	-.30710	-.31970	-.28640	-.29860	-.30590	-.39430	-.03460	-.22050	-.16680	.05410
-3.844	6.109	-.32610	-.33810	-.30730	-.32130	-.32790	-.29790	-.02750	-.33100	-.25650	.10080
	GRADIENT	.00054	-.00022	.00168	-.00047	.00042	-.09739	-.00850	-.04817	-.03510	.01045

RUN NO. 1328/ 0 RN/L = 3.50 GRADIENT INTERVAL = -5.00/ 5.00

ALPHAO	BETAO	CP1	CP2	CP3	CP4	CPBV	RUDDER	CHR	CNVT	CBVT	CTVT
-.413	-6.913	-.32430	-.33060	-.31370	-.31420	-.31660	.21860	.02210	.34150	.25230	-.09300
-.384	-4.779	-.31000	-.31520	-.29850	-.30200	-.30080	.31420	.02970	.21790	.15800	-.04680
-.355	-.459	-.27440	-.27960	-.25850	-.26660	-.27190	-.08660	-.00160	.02230	.01480	-.00800
-.324	3.651	-.29180	-.30130	-.27310	-.28090	-.28880	-.44650	-.02960	-.15040	-.11230	.02390
-.324	5.830	-.30390	-.31690	-.28860	-.30170	-.30520	-.35550	-.02260	-.26770	-.21060	.07320
	GRADIENT	.00221	.00170	.00307	.00255	.00147	-.09026	-.00704	-.04370	-.03207	.00839

IA156A, AEDC PWT 16T-470, O T S (R8NFB8) (10 MAY 80)

REFERENCE DATA

SREF = 2690.0000 SQ.FT. XMRP = 976.0000 IN. XT
LREF = 1290.3000 INCHES YMRP = .0000 IN. YT
BREF = 1290.3000 INCHES ZMRP = 400.0000 IN. ZT
SCALE = .0200

PARAMETRIC DATA

IB-ELV = 12.000 OB-ELV = 9.000
BDFLAP = .000 SPDBRK = .000
RUDDER = .000 SILTS = .000
MACH = .950 RN/L = 3.500

RUN NO. 1329/ 0 RN/L = 3.50 GRADIENT INTERVAL = -5.00/ 5.00

ALPHAO	BETAO	CP1	CP2	CP3	CP4	CPBV	RUDDER	CHR	CNVT	CBVT	CTVT
3.924	-5.698	-.30190	-.30900	-.29060	-.29480	-.29740	.38490	.02560	.22210	.17060	-.04840
3.965	-3.935	-.28670	-.29230	-.26960	-.27830	-.28020	.33350	.02220	.13310	.09740	-.01540
3.923	.180	-.29100	-.29980	-.27360	-.27380	-.28920	.00620	.00050	.01260	.00570	-.00330
3.839	3.929	-.28320	-.29160	-.26410	-.26890	-.28250	-.31400	-.02090	-.11570	-.09320	.01600
3.802	6.118	-.30650	-.31550	-.28420	-.29160	-.30140	-.38080	-.02540	-.23400	-.19090	.06000
	GRADIENT	.00042	.00006	.00067	.00119	-.00032	-.08230	-.00548	-.03160	-.02421	.00398

IA156A, AEDC PWT 16T-470, O T S (R8NFB9) (10 MAY 80)

REFERENCE DATA

SREF = 2690.0000 SQ.FT. XMRP = 976.0000 IN. XT
LREF = 1290.3000 INCHES YMRP = .0000 IN. YT
BREF = 1290.3000 INCHES ZMRP = 400.0000 IN. ZT
SCALE = .0200

PARAMETRIC DATA

IB-ELV = 12.000 OB-ELV = 9.000
BDFLAP = .000 SPDBRK = .000
RUDDER = .000 SILTS = .000
MACH = 1.050 RN/L = 3.500

RUN NO. 1330/ 0 RN/L = 3.50 GRADIENT INTERVAL = -5.00/ 5.00

ALPHAO	BETAO	CP1	CP2	CP3	CP4	CPBV	RUDDER	CHR	CNVT	CBVT	CTVT
-8.212	-5.901	-.44090	-.44260	-.43710	-.42740	-.46040	-.12770	-.00640	.35420	.27970	-.13350
-8.202	-3.826	-.43720	-.44370	-.42190	-.42000	-.44500	-.04040	-.00070	.21580	.16550	-.07360
-8.119	.330	-.41970	-.43120	-.39790	-.41030	-.42430	-.02750	-.00210	-.02910	-.02960	.01340
-7.949	4.306	-.41280	-.43030	-.39180	-.40370	-.42810	.05310	.00160	-.25740	-.21320	.09990
-7.959	6.215	-.41340	-.42590	-.39650	-.40760	-.43770	.20640	.01220	-.37850	-.31060	.15310
	GRADIENT	.00301	.00166	.00372	.00201	.00210	.01143	.00028	-.05820	-.04657	.02133

RUN NO. 1331/ 0 RN/L = 3.51 GRADIENT INTERVAL = -5.00/ 5.00

ALPHAO	BETAO	CP1	CP2	CP3	CP4	CPBV	RUDDER	CHR	CNVT	CBVT	CTVT
-6.179	-5.965	-.43000	-.43990	-.44260	-.41280	-.46210	-.08720	-.00280	.35100	.27670	-.13130
-6.081	-4.041	-.42220	-.43600	-.42600	-.41660	-.44430	-.01590	.00180	.21920	.16930	-.07520
-6.191	.114	-.40710	-.42150	-.38000	-.39670	-.40830	-.03390	-.00240	-.01910	-.02070	.00940
-6.024	4.226	-.39720	-.41580	-.37270	-.38820	-.41060	.04650	.00060	-.25160	-.20610	.09630
-5.734	6.328	-.41070	-.41910	-.38560	-.39750	-.42170	.15330	.00760	-.37630	-.30680	.15010
	GRADIENT	.00303	.00245	.00646	.00344	.00408	.00753	-.00015	-.05695	-.04541	.02074

IA156A, AEDC PWT 16T-470, O T S (R8NFB9) (10 MAY 80)

REFERENCE DATA

SREF = 2690.0000 SQ.FT. XMRP = 976.0000 IN. XT
LREF = 1290.3000 INCHES YMRP = .0000 IN. YT
BREF = 1290.3000 INCHES ZMRP = 400.0000 IN. ZT
SCALE = .0200

PARAMETRIC DATA

IB-ELV = 12.000 OB-ELV = 9.000
BDFLAP = .000 SPDBRK = .000
RUDDER = .000 SILTS = .000
MACH = 1.050 RN/L = 3.500

RUN NO. 1332/ 0 RN/L = 3.50 GRADIENT INTERVAL = -5.00/ 5.00

ALPHAO	BETAO	CP1	CP2	CP3	CP4	CPBV	RUDDER	CHR	CNVT	CBVT	CTVT
-4.097	-6.071	-.43090	-.43920	-.43000	-.40530	-.46090	-.05030	.00050	.34540	.27190	-.12810
-4.289	-3.962	-.42310	-.43350	-.41130	-.39980	-.43780	.00310	.00380	.21140	.16230	-.07150
-4.196	.369	-.40880	-.42490	-.37950	-.39650	-.41070	-.04220	-.00330	-.02580	-.02570	.01100
-3.744	4.287	-.39340	-.40950	-.36650	-.38130	-.41340	-.04310	-.00680	-.24530	-.20120	.09280
-3.846	6.113	-.40060	-.41770	-.37760	-.38940	-.41920	.09550	.00290	-.35650	-.29130	.14160
	GRADIENT	.00360	.00289	.00546	.00222	.00302	-.00569	-.00129	-.05536	-.04406	.01990

RUN NO. 1333/ 0 RN/L = 3.50 GRADIENT INTERVAL = -5.00/ 5.00

ALPHAO	BETAO	CP1	CP2	CP3	CP4	CPBV	RUDDER	CHR	CNVT	CBVT	CTVT
-.444	-7.004	-.43010	-.43610	-.42350	-.41390	-.45140	-.05690	.00070	.38130	.29740	-.13950
-.419	-4.832	-.42520	-.43650	-.40780	-.40820	-.44070	.02730	.00690	.25190	.19700	-.08690
-.395	-.438	-.39910	-.41180	-.37190	-.38630	-.39650	-.02210	.00330	.02310	.01170	-.00330
-.361	3.665	-.39820	-.40950	-.37060	-.38750	-.40430	-.18840	-.00900	-.18200	-.15120	.06420
-.363	5.855	-.40540	-.41860	-.38470	-.39590	-.42030	-.10190	-.00260	-.29430	-.24390	.11220
	GRADIENT	.00321	.00321	.00442	.00247	.00435	-.02522	-.00186	-.05108	-.04099	.01780

RUN NO. 1334/ 0 RN/L = 3.50 GRADIENT INTERVAL = -5.00/ 5.00

ALPHAO	BETAO	CP1	CP2	CP3	CP4	CPBV	RUDDER	CHR	CNVT	CBVT	CTVT
3.901	-5.731	-.42320	-.43040	-.41210	-.39960	-.43490	.24170	.01370	.26610	.21080	-.08860
3.920	-3.899	-.39820	-.40530	-.37490	-.38370	-.41690	.24940	.01480	.17220	.13470	-.05140
3.916	.181	-.39780	-.40790	-.37270	-.38470	-.39940	.00420	.00030	.00970	.00140	.00040
3.837	3.924	-.38920	-.40220	-.36480	-.37680	-.39530	-.28710	-.01780	-.15020	-.12990	.05140
3.798	6.097	-.40430	-.41810	-.37780	-.39240	-.42010	-.22640	-.01260	-.26350	-.22090	.09640
	GRADIENT	.00113	.00038	.00128	.00087	.00278	-.06846	-.00416	-.04119	-.03381	.01314

IA156A, AEDC PWT 16T-470, O T S (R8NFCO) (10 MAY 80)

REFERENCE DATA

SREF = 2690.0000 SQ.FT. XMRP = 976.0000 IN. XT
LREF = 1290.3000 INCHES YMRP = .0000 IN. YT
BREF = 1290.3000 INCHES ZMRP = 400.0000 IN. ZT
SCALE = .0200

PARAMETRIC DATA

IB-ELV = 12.000 OB-ELV = 9.000
BDFLAP = .000 SPDBRK = .000
RUDDER = .000 SILTS = .000
MACH = 1.100 RN/L = 3.500

RUN NO. 1335/ 0 RN/L = 3.50 GRADIENT INTERVAL = -5.00/ 5.00

ALPHAO	BETAO	CP1	CP2	CP3	CP4	CPBV	RUDDER	CHR	CNVT	CBVT	CTVT
-8.085	-5.959	-.40450	-.40590	-.40270	-.39270	-.42120	-.20770	-.01190	.34520	.27160	-.13170
-8.216	-3.758	-.39180	-.40080	-.38220	-.36950	-.40520	-.08160	-.00370	.19990	.15160	-.06800
-8.117	.180	-.37310	-.37890	-.34790	-.35420	-.37340	-.00850	-.00060	-.02410	-.02590	.01230
-7.932	4.337	-.37110	-.38400	-.34930	-.35800	-.38860	.15910	.00910	-.25640	-.21220	.10150
-7.956	6.215	-.37760	-.39240	-.36060	-.37010	-.40620	.31110	.01040	-.36450	-.29970	.15000
	GRADIENT	.00254	.00204	.00402	.00140	.00200	.02093	.00159	-.05636	-.04494	.02094

RUN NO. 1336/ 0 RN/L = 3.50 GRADIENT INTERVAL = -5.00/ 5.00

ALPHAO	BETAO	CP1	CP2	CP3	CP4	CPBV	RUDDER	CHR	CNVT	CBVT	CTVT
-6.157	-5.944	-.38740	-.39640	-.39290	-.37640	-.41330	-.16550	-.00840	.32820	.25890	-.12430
-6.103	-4.030	-.37660	-.38910	-.37350	-.35790	-.39310	-.08250	-.00310	.20650	.15840	-.07160
-6.217	.094	-.35800	-.37290	-.33560	-.35020	-.36110	-.01460	-.00100	-.02140	-.02260	.01040
-5.993	4.241	-.35470	-.37130	-.33380	-.34540	-.36670	.15020	.00800	-.24710	-.20250	.09670
-5.966	6.211	-.37250	-.38290	-.34500	-.35600	-.38870	.26530	.01560	-.35930	-.29420	.14650
	GRADIENT	.00265	.00215	.00480	.00151	.00319	.02815	.00134	-.05484	-.04364	.02035

RUN NO. 1337/ 0 RN/L = 3.50 GRADIENT INTERVAL = -5.00/ 5.00

ALPHAO	BETAO	CP1	CP2	CP3	CP4	CPBV	RUDDER	CHR	CNVT	CBVT	CTVT
-4.082	-6.072	-.38600	-.39060	-.38490	-.36280	-.41120	-.11080	-.00390	.32710	.25750	-.12250
-4.299	-3.969	-.36950	-.38070	-.35860	-.35010	-.38520	-.06770	-.00140	.19820	.15150	-.06830
-4.187	.366	-.35200	-.36380	-.32850	-.33760	-.35250	-.03110	-.00240	-.02750	-.02740	.01210
-3.746	4.294	-.34310	-.35910	-.31750	-.33140	-.35670	.08170	.00230	-.23940	-.19660	.09330
-3.842	6.107	-.35630	-.37350	-.33510	-.34500	-.37180	.17600	.00860	-.34190	-.27990	.13780
	GRADIENT	.00321	.00264	.00501	.00227	.00352	.01792	.00044	-.05295	-.04211	.01954

RUN NO. 1338/ 0 RN/L = 3.50 GRADIENT INTERVAL = -5.00/ 5.00

ALPHAO	BETAO	CP1	CP2	CP3	CP4	CPBV	RUDDER	CHR	CNVT	CBVT	CTVT
-.450	-6.989	-.38320	-.38950	-.37800	-.36110	-.40820	-.13240	-.00480	.36780	.28810	-.13720
-.416	-4.820	-.36630	-.37760	-.35240	-.34840	-.37950	-.04060	.00180	.24590	.19230	-.08640
-.391	-.464	-.34080	-.35180	-.31370	-.32700	-.33680	-.03890	.00200	.02330	.01140	-.00330
-.356	3.674	-.33300	-.34370	-.30650	-.32250	-.33890	-.13550	-.00500	-.17840	-.14890	.06470
-.358	5.852	-.34130	-.35360	-.31840	-.33160	-.35570	-.05900	.00050	-.28910	-.24030	.11180
	GRADIENT	.00394	.00401	.00543	.00307	.00482	-.01107	-.00079	-.04996	-.04018	.01780

IA156A, AEDC PWT 16T-470, O T S (R8NFC0) (10 MAY 80)

REFERENCE DATA

SREF = 2690.0000 SQ.FT. XMRP = 976.0000 IN. XT
LREF = 1290.3000 INCHES YMRP = .0000 IN. YT
BREF = 1290.3000 INCHES ZMRP = 400.0000 IN. ZT
SCALE = .0200

PARAMETRIC DATA

IB-ELV = 12.000 OB-ELV = 9.000
BDFLAP = .000 SPDBRK = .000
RUDDER = .000 SILTS = .000
MACH = 1.100 RN/L = 3.500

RUN NO. 1339/ 0 RN/L = 3.48 GRADIENT INTERVAL = -5.00/ 5.00

ALPHAO	BETAO	CP1	CP2	CP3	CP4	CPBV	RUDDER	CHR	CNVT	CBVT	CTVT
3.930	-5.730	-.34720	-.35700	-.34160	-.33260	-.36340	.18000	.00900	.26330	.20950	-.09010
3.914	-3.895	-.35190	-.35890	-.33280	-.33110	-.35790	.21050	.01170	.16920	.13310	-.05210
3.893	.179	-.34470	-.35660	-.32160	-.32760	-.34390	.00860	.00060	.00500	-.00220	.00190
3.825	3.917	-.33020	-.33870	-.30230	-.31420	-.33060	-.24990	-.01470	-.15530	-.13370	.05430
3.808	6.099	-.33670	-.34930	-.31110	-.32350	-.35410	-.16350	-.00780	-.26850	-.22470	.10020
	GRADIENT	.00276	.00256	.00389	.00214	.00349	-.05880	-.00337	-.04152	-.03414	.01361

IA156A, AEDC PWT 16T-470, O T S (R8NFC1) (10 MAY 80)

REFERENCE DATA

SREF = 2690.0000 SQ.FT. XMRP = 976.0000 IN. XT
LREF = 1290.3000 INCHES YMRP = .0000 IN. YT
BREF = 1290.3000 INCHES ZMRP = 400.0000 IN. ZT
SCALE = .0200

PARAMETRIC DATA

IB-ELV = 12.000 OB-ELV = 9.000
BDFLAP = .000 SPDBRK = .000
RUDDER = .000 SILTS = .000
MACH = 1.150 RN/L = 3.500

RUN NO. 1341/ 0 RN/L = 3.50 GRADIENT INTERVAL = -5.00/ 5.00

ALPHAO	BETAO	CP1	CP2	CP3	CP4	CPBV	RUDDER	CHR	CNVT	CBVT	CTVT
-8.145	-5.961	-.37460	-.37840	-.38090	-.36550	-.39670	-.32420	-.01990	.35250	.27730	-.13740
-8.230	-3.764	-.35100	-.37110	-.35950	-.34530	-.37870	-.14660	-.00810	.20760	.15860	-.07290
-8.120	.169	-.34220	-.35170	-.32610	-.32690	-.35040	.01220	.00090	-.01510	-.01920	.01010
-7.920	4.347	-.34140	-.35490	-.32110	-.33540	-.36650	.27510	.01710	-.25160	-.20730	.10120
-7.956	6.224	-.35700	-.37050	-.34350	-.34670	-.39200	.45580	.02920	-.36380	-.29840	.15240
	GRADIENT	.00239	.00197	.00470	.00119	.00145	.05210	.00311	-.05661	-.04511	.02147

RUN NO. 1342/ 0 RN/L = 3.50 GRADIENT INTERVAL = -5.00/ 5.00

ALPHAO	BETAO	CP1	CP2	CP3	CP4	CPBV	RUDDER	CHR	CNVT	CBVT	CTVT
-6.162	-5.954	-.36760	-.37580	-.38030	-.34830	-.39250	-.31940	-.01910	.33800	.26710	-.13180
-6.104	-4.044	-.35270	-.36320	-.35440	-.33680	-.36850	-.18090	-.00990	.21220	.16400	-.07630
-6.201	.104	-.33500	-.34820	-.31930	-.32440	-.34050	.00360	.00030	-.01340	-.01620	.00810
-6.020	4.237	-.33400	-.34930	-.31230	-.32440	-.34680	.25230	.01500	-.23830	-.19580	.09580
-5.837	6.332	-.34820	-.36130	-.32640	-.33520	-.37050	.41420	.02580	-.36280	-.29680	.15120
	GRADIENT	.00226	.00168	.00509	.00150	.00262	.05230	.00301	-.05440	-.04345	.02078

IA156A, AEDC PWT 16T-470, O T S (R8NFC1) (10 MAY 80)

REFERENCE DATA

SREF = 2690.0000 SQ.FT. XMRP = 976.0000 IN. XT
LREF = 1290.3000 INCHES YMRP = .0000 IN. YT
BREF = 1290.3000 INCHES ZMRP = 400.0000 IN. ZT
SCALE = .0200

PARAMETRIC DATA

IB-ELV = 12.000 OB-ELV = 9.000
BDFLAP = .000 SPDBRK = .000
RUDDER = .000 SILTS = .000
MACH = 1.150 RN/L = 3.500

RUN NO. 1343/ 0 RN/L = 3.50 GRADIENT INTERVAL = -5.00/ 5.00

ALPHAO	BETAO	CP1	CP2	CP3	CP4	CPBV	RUDDER	CHR	CNVT	CBVT	CTVT
-4.112	-6.068	-.36590	-.37050	-.36940	-.34170	-.38720	-.28040	-.01570	.33100	.26100	-.12800
-4.306	-3.976	-.35360	-.36320	-.34600	-.33250	-.36680	-.14250	-.00660	.20520	.15850	-.07350
-4.195	.373	-.33380	-.34640	-.31400	-.32210	-.33330	.00470	.00010	-.02160	-.02310	.01130
-3.756	4.290	-.32390	-.33910	-.30160	-.31260	-.33260	.23320	.01280	-.23380	-.19220	.09440
-3.849	6.122	-.33870	-.35430	-.31680	-.32530	-.35680	.36070	.02150	-.34060	-.27860	.14100
	GRADIENT	.00361	.00293	.00541	.00241	.00420	.04523	.00233	-.05309	-.04241	.02030

RUN NO. 1344/ 0 RN/L = 3.50 GRADIENT INTERVAL = -5.00/ 5.00

ALPHAO	BETAO	CP1	CP2	CP3	CP4	CPBV	RUDDER	CHR	CNVT	CBVT	CTVT
-.438	-6.994	-.36420	-.37220	-.36470	-.34310	-.39170	-.30750	-.01700	.37020	.29090	-.14320
-.411	-4.805	-.34670	-.35650	-.33470	-.32930	-.36320	-.19530	-.00840	.24370	.19150	-.08960
-.370	-.493	-.33400	-.34020	-.30570	-.31940	-.33050	-.05510	.00080	.02450	.01260	-.00480
-.342	3.670	-.32290	-.33310	-.29680	-.31170	-.32960	.04440	.00780	-.18370	-.15280	.07040
-.341	5.850	-.32520	-.33790	-.30250	-.31210	-.33890	.13720	.01430	-.29360	-.24400	.11820
	GRADIENT	.00281	.00277	.00449	.00208	.00399	.02712	.00191	-.05043	-.04063	.01888

RUN NO. 1345/ 0 RN/L = 3.50 GRADIENT INTERVAL = -5.00/ 5.00

ALPHAO	BETAO	CP1	CP2	CP3	CP4	CPBV	RUDDER	CHR	CNVT	CBVT	CTVT
3.991	-5.883	-.33530	-.34180	-.32910	-.31520	-.35310	.02300	-.00230	.27950	.22190	-.10020
4.006	-3.805	-.33460	-.34540	-.32310	-.32070	-.34530	.06650	.00140	.17450	.13590	-.05630
3.899	.181	-.33190	-.34320	-.31170	-.31640	-.33300	.05190	.00370	.01250	.00290	.00080
3.830	3.979	-.31760	-.32850	-.28890	-.30500	-.32720	-.07450	-.00200	-.15880	-.13610	.05950
3.801	6.112	-.32220	-.33470	-.29420	-.30950	-.34420	.02020	.00530	-.27070	-.22660	.10600
	GRADIENT	.00217	.00216	.00438	.00201	.00233	-.01800	-.00043	-.04280	-.03493	.01487

IA156A, AEDC PWT 16T-470, O T S (R8NFC2) (10 MAY 80)

REFERENCE DATA

SREF = 2690.0000 SQ.FT. XMRP = 976.0000 IN. XT
LREF = 1290.3000 INCHES YMRP = .0000 IN. YT
BREF = 1290.3000 INCHES ZMRP = 400.0000 IN. ZT
SCALE = .0200

PARAMETRIC DATA

IB-ELV = 12.000 OB-ELV = 9.000
BDFLAP = .000 SPDBRK = .000
RUDDER = .000 SILTS = .000
MACH = 1.250 RN/L = 3.500

RUN NO. 1346/ 0 RN/L = 3.50 GRADIENT INTERVAL = -5.00/ 5.00

ALPHAO	BETAO	CP1	CP2	CP3	CP4	CPBV	RUDDER	CHR	CNVT	CBVT	CTVT
-8.243	-5.890	-.33430	-.33940	-.35480	-.32170	-.35880	-.43210	-.02660	.34310	.26950	-.13620
-8.205	-3.763	-.32860	-.33640	-.33520	-.30790	-.34260	-.23500	-.01390	.20230	.15560	-.07320
-8.116	.197	-.31340	-.32290	-.30720	-.29820	-.32620	.07080	.00480	-.02520	-.02580	.01360
-7.947	4.332	-.31390	-.32590	-.30600	-.30330	-.34830	.42200	.02650	-.26060	-.21360	.10700
-7.966	6.227	-.32140	-.33320	-.32170	-.31270	-.35150	.66010	.04200	-.37180	-.30070	.15700
	GRADIENT	.00180	.00128	.00358	.00055	-.00074	.08119	.00499	-.05718	-.04561	.02226

RUN NO. 1347/ 0 RN/L = 3.50 GRADIENT INTERVAL = -5.00/ 5.00

ALPHAO	BETAO	CP1	CP2	CP3	CP4	CPBV	RUDDER	CHR	CNVT	CBVT	CTVT
-6.182	-5.943	-.32920	-.33260	-.34230	-.31080	-.35010	-.43450	-.02620	.32900	.26000	-.13140
-6.118	-4.035	-.32190	-.33060	-.32380	-.30700	-.33760	-.25000	-.01430	.20540	.15960	-.07550
-6.198	.130	-.30870	-.31950	-.29990	-.29600	-.31710	.06080	.00420	-.02310	-.02260	.01140
-5.991	4.255	-.30600	-.31830	-.29070	-.29490	-.32950	.38440	.02350	-.24720	-.20130	.10040
-5.947	6.219	-.33010	-.33760	-.31970	-.31860	-.35160	.63650	.04010	-.36960	-.29840	.15570
	GRADIENT	.00192	.00149	.00400	.00146	.00098	.07653	.00456	-.05460	-.04354	.02122

RUN NO. 1348/ 0 RN/L = 3.49 GRADIENT INTERVAL = -5.00/ 5.00

ALPHAO	BETAO	CP1	CP2	CP3	CP4	CPBV	RUDDER	CHR	CNVT	CBVT	CTVT
-4.105	-6.078	-.33430	-.33760	-.33840	-.31380	-.35430	-.44910	-.02660	.32790	.25850	-.13060
-4.305	-3.963	-.32410	-.33040	-.32240	-.30380	-.33660	-.24440	-.01330	.19560	.15170	-.07180
-4.193	.376	-.30980	-.31750	-.29260	-.29360	-.31360	.03800	.00240	-.03160	-.02980	.01450
-3.737	4.277	-.30790	-.31660	-.28440	-.29170	-.32170	.36160	.02120	-.23840	-.19420	.09700
-3.849	6.126	-.31350	-.32520	-.30150	-.30050	-.33940	.55290	.03370	-.34270	-.27860	.14470
	GRADIENT	.00199	.00170	.00465	.00148	.00187	.07339	.00418	-.05266	-.04198	.02047

RUN NO. 1349/ 0 RN/L = 3.49 GRADIENT INTERVAL = -5.00/ 5.00

ALPHAO	BETAO	CP1	CP2	CP3	CP4	CPBV	RUDDER	CHR	CNVT	CBVT	CTVT
-.462	-7.000	-.33850	-.34000	-.33740	-.32690	-.36040	-.50590	-.02990	.36560	.28890	-.14740
-.433	-4.850	-.31910	-.32490	-.31670	-.30060	-.33740	-.32520	-.01760	.24140	.18980	-.09160
-.387	-.453	-.30590	-.31400	-.29090	-.29010	-.30900	-.05820	.00060	.01850	.00780	-.00210
-.360	3.674	-.29950	-.30780	-.27570	-.28520	-.30550	.19610	.01790	-.18370	-.15180	.07240
-.369	5.855	-.30040	-.31020	-.27920	-.28750	-.31730	.36190	.02910	-.29260	-.24190	.12120
	GRADIENT	.00231	.00201	.00482	.00181	.00377	.06115	.00416	-.04988	-.04009	.01925

IA156A, AEDC PWT 16T-470, O T S (R8NFC2) (10 MAY 80)

REFERENCE DATA

SREF = 2690.0000 SQ.FT. XMRP = 976.0000 IN. XT
LREF = 1290.3000 INCHES YMRP = .0000 IN. YT
BREF = 1290.3000 INCHES ZMRP = 400.0000 IN. ZT
SCALE = .0200

PARAMETRIC DATA

IB-ELV = 12.000 OB-ELV = 9.000
BDFLAP = .000 SPDBRK = .000
RUDDER = .000 SILTS = .000
MACH = 1.250 RN/L = 3.500

RUN NO. 1350/ 0 RN/L = 3.50 GRADIENT INTERVAL = -5.00/ 5.00

ALPHAO	BETAO	CP1	CP2	CP3	CP4	CPBV	RUDDER	CHR	CNVT	CBVT	CTVT
3.994	-5.868	-.31150	-.31520	-.30430	-.29600	-.32370	-.21230	-.01820	.27970	.22230	-.10570
4.025	-3.792	-.31500	-.32150	-.30140	-.30250	-.31740	-.11710	-.01120	.17450	.13660	-.06030
3.893	.194	-.30910	-.31600	-.29570	-.29970	-.30720	.01790	.00120	.00130	-.00420	.00230
3.799	3.967	-.29650	-.30730	-.26900	-.28550	-.30410	.15080	.01340	-.17360	-.14480	.06690
3.789	6.135	-.30070	-.30820	-.27430	-.28430	-.30860	.30320	.02430	-.28200	-.23310	.11500
	GRADIENT	.00238	.00183	.00415	.00218	.00172	.03452	.00317	-.04485	-.03625	.01639

IA156A, AEDC PWT 16T-470, O T S (R8NFC3) (10 MAY 80)

REFERENCE DATA

SREF = 2690.0000 SQ.FT. XMRP = 976.0000 IN. XT
LREF = 1290.3000 INCHES YMRP = .0000 IN. YT
BREF = 1290.3000 INCHES ZMRP = 400.0000 IN. ZT
SCALE = .0200

PARAMETRIC DATA

IB-ELV = 12.000 OB-ELV = -2.000
BDFLAP = .000 SPDBRK = .000
RUDDER = .000 SILTS = .000
MACH = 1.150 RN/L = 3.500

RUN NO. 1355/ 0 RN/L = 3.50 GRADIENT INTERVAL = -5.00/ 5.00

ALPHAO	BETAO	CP1	CP2	CP3	CP4	CPBV	RUDDER	CHR	CNVT	CBVT	CTVT
-8.032	-5.992	-.36590	-.37400	-.37610	-.36330	-.38920	-.35060	-.02180	.34120	.27450	-.13660
-8.220	-3.826	-.36070	-.36500	-.35090	-.34810	-.37000	-.19540	-.01150	.19950	.15910	-.07500
-8.140	.284	-.34140	-.34640	-.32040	-.32590	-.34220	.05830	.00400	-.03470	-.02710	.01230
-7.952	4.281	-.33940	-.34850	-.31740	-.32750	-.34850	.31900	.02020	-.25570	-.20480	.09970
-7.960	6.216	-.35200	-.36190	-.33570	-.34190	-.37560	.49230	.03160	-.37130	-.29690	.15040
	GRADIENT	.00264	.00205	.00415	.00255	.00267	.06344	.00391	-.05615	-.04489	.02155

RUN NO. 1356/ 0 RN/L = 3.50 GRADIENT INTERVAL = -5.00/ 5.00

ALPHAO	BETAO	CP1	CP2	CP3	CP4	CPBV	RUDDER	CHR	CNVT	CBVT	CTVT
-6.177	-5.962	-.36700	-.36870	-.36660	-.35730	-.37750	-.34540	-.02080	.32460	.26160	-.13000
-6.105	-4.037	-.35690	-.36240	-.35110	-.34570	-.36210	-.19960	-.01120	.20080	.16080	-.07610
-6.203	.110	-.33580	-.34450	-.31270	-.32470	-.33110	.03470	.00250	-.02390	-.01760	.00750
-6.024	4.235	-.33060	-.34220	-.30570	-.31790	-.33450	.28230	.01720	-.24760	-.19660	.09490
-5.753	6.323	-.34000	-.35080	-.32030	-.32800	-.35070	.43450	.02710	-.36690	-.29170	.14690
	GRADIENT	.00318	.00244	.00549	.00336	.00334	.05826	.00343	-.05421	-.04321	.02067

IA156A, AEDC PWT 16T-470, O T S (R8NFC3) (10 MAY 80)

REFERENCE DATA

SREF = 2690.0000 SQ.FT. XMRP = 976.0000 IN. XT
LREF = 1290.3000 INCHES YMRP = .0000 IN. YT
BREF = 1290.3000 INCHES ZMRP = 400.0000 IN. ZT
SCALE = .0200

PARAMETRIC DATA

IB-ELV = 12.000 OB-ELV = -2.000
BDFLAP = .000 SPDBRK = .000
RUDDER = .000 SILTS = .000
MACH = 1.150 RN/L = 3.500

RUN NO. 1357/ 0 RN/L = 3.50 GRADIENT INTERVAL = -5.00/ 5.00

ALPHAO	BETAO	CP1	CP2	CP3	CP4	CPBV	RUDDER	CHR	CNVT	CBVT	CTVT
-4.099	-6.078	-.36330	-.36420	-.36020	-.35170	-.36770	-.32130	-.01860	.32170	.25880	-.12800
-4.300	-3.975	-.34930	-.35440	-.33620	-.33390	-.35120	-.19000	-.00990	.19390	.15490	-.07340
-4.196	.375	-.33390	-.34350	-.31130	-.32470	-.32830	.02880	.00180	-.03130	-.02420	.01010
-3.743	4.281	-.32510	-.33660	-.29690	-.31120	-.32950	.25140	.01410	-.24310	-.19340	.09340
-3.848	6.110	-.33720	-.35040	-.31710	-.32680	-.34530	.37450	.02240	-.34840	-.27860	.13960
	GRADIENT	.00294	.00216	.00478	.00274	.00268	.05340	.00290	-.05291	-.04217	.02018

RUN NO. 1358/ 0 RN/L = 3.50 GRADIENT INTERVAL = -5.00/ 5.00

ALPHAO	BETAO	CP1	CP2	CP3	CP4	CPBV	RUDDER	CHR	CNVT	CBVT	CTVT
-.466	-7.023	-.36400	-.36970	-.36260	-.35340	-.38580	-.28630	-.01550	.35850	.28660	-.14120
-.439	-4.831	-.34260	-.34960	-.33280	-.33140	-.34770	-.20140	-.00950	.23920	.19260	-.09110
-.400	-.461	-.33260	-.33920	-.30780	-.32150	-.32550	-.04730	.00140	.01590	.01200	-.00590
-.373	3.668	-.31640	-.32510	-.29150	-.30440	-.31920	.05060	.00820	-.18930	-.15150	.06820
-.370	5.854	-.32110	-.33280	-.30040	-.31050	-.33470	.10530	.01200	-.29550	-.23880	.11310
	GRADIENT	.00308	.00288	.00487	.00317	.00337	.02971	.00209	-.05043	-.04050	.01875

RUN NO. 1359/ 0 RN/L = 3.50 GRADIENT INTERVAL = -5.00/ 5.00

ALPHAO	BETAO	CP1	CP2	CP3	CP4	CPBV	RUDDER	CHR	CNVT	CBVT	CTVT
4.002	-5.895	-.32760	-.33420	-.32510	-.31770	-.34090	.04770	-.00050	.27160	.21980	-.09970
3.980	-3.776	-.33070	-.33860	-.32050	-.32130	-.33210	.08740	.00280	.16290	.13170	-.05520
3.896	.180	-.33230	-.34340	-.31580	-.32880	-.32990	.02680	.00190	.00300	.00100	-.00080
3.840	3.994	-.31580	-.32440	-.28930	-.30260	-.31480	-.06920	-.00160	-.16660	-.13660	.05790
3.794	6.112	-.32080	-.33080	-.29540	-.31000	-.33200	-.00360	.00360	-.27600	-.22430	.10250
	GRADIENT	.00190	.00181	.00400	.00238	.00222	-.02012	-.00056	-.04239	-.03452	.01455

IA156A, AEDC PWT 16T-470, O T S (R8NFC4) (10 MAY 80)

REFERENCE DATA

SREF = 2690.0000 SQ.FT. XMRP = 976.0000 IN. XT
LREF = 1290.3000 INCHES YMRP = .0000 IN. YT
BREF = 1290.3000 INCHES ZMRP = 400.0000 IN. ZT
SCALE = .0200

PARAMETRIC DATA

IB-ELV = 12.000 OB-ELV = -2.000
BDFLAP = .000 SPDBRK = .000
RUDDER = .000 SILTS = .000
MACH = 1.250 RN/L = 3.500

RUN NO. 1360/ 0 RN/L = 3.50 GRADIENT INTERVAL = -5.00/ 5.00

ALPHAO	BETAO	CP1	CP2	CP3	CP4	CPBV	RUDDER	CHR	CNVT	CBVT	CTVT
-8.101	-5.952	-.33720	-.33650	-.34210	-.33100	-.35580	-.48260	-.03000	.33830	.27000	-.13740
-8.213	-3.740	-.32920	-.33170	-.32600	-.32190	-.34070	-.25360	-.01520	.19060	.15140	-.07280
-8.132	.191	-.31720	-.31900	-.30090	-.30100	-.31590	.07180	.00490	-.03060	-.02410	.01070
-7.941	4.368	-.31810	-.32650	-.30190	-.30650	-.33270	.44160	.02780	-.26750	-.21370	.10530
-7.973	6.231	-.32790	-.33750	-.32060	-.32260	-.34140	.66530	.04240	-.37720	-.30010	.15490
	GRADIENT	.00135	.00062	.00294	.00187	.00093	.08576	.00530	-.05650	-.04503	.02197

RUN NO. 1361/ 0 RN/L = 3.50 GRADIENT INTERVAL = -5.00/ 5.00

ALPHAO	BETAO	CP1	CP2	CP3	CP4	CPBV	RUDDER	CHR	CNVT	CBVT	CTVT
-6.206	-5.971	-.32700	-.33170	-.33600	-.31250	-.34670	-.44760	-.02710	.32130	.25790	-.13120
-6.109	-4.022	-.32100	-.32800	-.32080	-.30120	-.33410	-.27520	-.01600	.19520	.15610	-.07560
-6.202	.116	-.31550	-.32510	-.29940	-.30090	-.32020	.06710	.00470	-.02920	-.02210	.00930
-5.988	4.255	-.31110	-.31920	-.28860	-.29630	-.31600	.41150	.02530	-.25560	-.20290	.09960
-5.954	6.220	-.32000	-.32820	-.30700	-.31120	-.33330	.62850	.03940	-.37090	-.29440	.15180
	GRADIENT	.00120	.00106	.00389	.00059	.00219	.08296	.00499	-.05446	-.04337	.02117

RUN NO. 1362/ 0 RN/L = 3.50 GRADIENT INTERVAL = -5.00/ 5.00

ALPHAO	BETAO	CP1	CP2	CP3	CP4	CPBV	RUDDER	CHR	CNVT	CBVT	CTVT
-4.063	-6.095	-.33330	-.33780	-.34030	-.31740	-.35330	-.44490	-.02630	.31780	.25480	-.12960
-4.303	-3.959	-.32240	-.32930	-.31870	-.30230	-.33260	-.26850	-.01490	.18630	.14840	-.07220
-4.191	.373	-.30880	-.31950	-.28910	-.29600	-.30800	.07080	.00460	-.03660	-.02790	.01160
-3.759	4.309	-.29920	-.31220	-.27680	-.28600	-.30510	.39460	.02340	-.24600	-.19520	.09600
-3.832	6.102	-.31110	-.32430	-.30560	-.29980	-.32530	.56700	.03470	-.34640	-.27600	.14140
	GRADIENT	.00281	.00207	.00510	.00196	.00337	.08016	.00463	-.05227	-.04154	.02033

RUN NO. 1363/ 0 RN/L = 3.50 GRADIENT INTERVAL = -5.00/ 5.00

ALPHAO	BETAO	CP1	CP2	CP3	CP4	CPBV	RUDDER	CHR	CNVT	CBVT	CTVT
-.484	-7.045	-.33100	-.33700	-.33590	-.31550	-.35500	-.51330	-.03040	.35610	.28520	-.14610
-.455	-4.776	-.32060	-.32360	-.31470	-.30760	-.32680	-.33930	-.01860	.22980	.18460	-.08980
-.414	-.532	-.30210	-.31180	-.28870	-.28950	-.30320	-.06610	.00000	.01410	.00980	-.00480
-.383	3.724	-.29430	-.30390	-.27320	-.28290	-.29760	.21010	.01880	-.19300	-.15390	.07180
-.396	5.888	-.30160	-.31340	-.28140	-.28800	-.31380	.36310	.02920	-.30230	-.24380	.12040
	GRADIENT	.00309	.00232	.00488	.00291	.00343	.06463	.00440	-.04974	-.03982	.01901

IA156A, AEDC PWT 16T-470, O T S (R8NFC4) (10 MAY 80)

REFERENCE DATA

SREF = 2690.0000 SQ.FT. XMRP = 976.0000 IN. XT
LREF = 1290.3000 INCHES YMRP = .0000 IN. YT
BREF = 1290.3000 INCHES ZMRP = 400.0000 IN. ZT
SCALE = .0200

PARAMETRIC DATA

IB-ELV = 12.000 OB-ELV = -2.000
BDFLAP = .000 SPDBRK = .000
RUDDER = .000 SILTS = .000
MACH = 1.250 RN/L = 3.500

RUN NO. 1364/ 0 RN/L = 3.50 GRADIENT INTERVAL = -5.00/ 5.00

ALPHAO	BETAO	CP1	CP2	CP3	CP4	CPBV	RUDDER	CHR	CNVT	CBVT	CTVT
4.094	-5.769	-.30860	-.31470	-.29960	-.28890	-.31580	-.22990	-.01940	.26850	.21720	-.10370
3.990	-3.665	-.30600	-.31870	-.30330	-.29430	-.30480	-.12740	-.01180	.16020	.12900	-.05750
3.760	.191	-.30450	-.31490	-.29300	-.29120	-.30260	.00450	.00030	-.00270	-.00230	-.00050
3.825	4.099	-.29060	-.30210	-.27320	-.28040	-.29830	.13650	.01240	-.18340	-.14760	.06640
3.778	6.130	-.29840	-.30690	-.27290	-.28500	-.31290	.29550	.02380	-.28930	-.23280	.11270
	GRADIENT	.00199	.00214	.00388	.00179	.00084	.03399	.00312	-.04426	-.03563	.01596

IA156A, AEDC PWT 16T-470, O T S (R8NFC5) (10 MAY 80)

REFERENCE DATA

SREF = 2690.0000 SQ.FT. XMRP = 976.0000 IN. XT
LREF = 1290.3000 INCHES YMRP = .0000 IN. YT
BREF = 1290.3000 INCHES ZMRP = 400.0000 IN. ZT
SCALE = .0200

PARAMETRIC DATA

IB-ELV = 12.000 OB-ELV = -2.000
BDFLAP = .000 SPDBRK = .000
RUDDER = .000 SILTS = .000
MACH = 1.400 RN/L = 3.500

RUN NO. 1365/ 0 RN/L = 3.00 GRADIENT INTERVAL = -5.00/ 5.00

ALPHAO	BETAO	CP1	CP2	CP3	CP4	CPBV	RUDDER	CHR	CNVT	CBVT	CTVT
-8.079	-5.931	-.30320	-.30700	-.33760	-.28660	-.31460	-.54200	-.03830	.33900	.26930	-.14100
-8.212	-3.723	-.29190	-.29960	-.32420	-.27310	-.29750	-.30050	-.02070	.19960	.15800	-.07750
-8.138	.218	-.28690	-.29180	-.28210	-.26930	-.28740	.04770	.00370	-.02740	-.02300	.01150
-7.957	4.469	-.28360	-.29220	-.28510	-.27150	-.30110	.48090	.03440	-.27580	-.21990	.11180
-7.941	6.289	.29070	-.29820	-.29270	-.28020	-.31040	.69570	.05010	-.38580	-.30420	.16060
	GRADIENT	.00101	.00089	.00470	.00019	-.00048	.09548	.00673	-.05804	-.04614	.02312

RUN NO. 1366/ 0 RN/L = 3.00 GRADIENT INTERVAL = -5.00/ 5.00

ALPHAO	BETAO	CP1	CP2	CP3	CP4	CPBV	RUDDER	CHR	CNVT	CBVT	CTVT
-6.230	-5.938	-.30270	-.30520	-.33120	-.28740	-.32030	-.51900	-.03610	.33860	.27010	-.14180
-6.179	-4.021	-.29220	-.29660	-.30670	-.27330	-.30270	-.31600	-.02110	.21150	.16900	-.08340
-6.212	.150	-.28060	-.28860	-.27520	-.26710	-.29000	.04180	.00330	-.02840	-.02270	.01100
-5.966	4.280	-.28570	-.29240	-.27630	-.27270	-.30490	.45680	.03210	-.26430	-.20960	.10620
-5.944	6.270	-.29100	-.29580	-.28640	-.27970	-.31220	.68180	.04850	-.38300	-.30020	.15850
	GRADIENT	.00079	.00051	.00367	.00007	-.00026	.09309	.00641	-.05732	-.04561	.02284

IA156A, AEDC PWT 16T-470, O T S (R8NFC5) (10 MAY 80)

REFERENCE DATA

SREF = 2690.0000 SQ.FT. XMRP = 976.0000 IN. XT
LREF = 1290.3000 INCHES YMRP = .0000 IN. YT
BREF = 1290.3000 INCHES ZMRP = 400.0000 IN. ZT
SCALE = .0200

PARAMETRIC DATA

IB-ELV = 12.000 OB-ELV = -2.000
BDFLAP = .000 SPDBRK = .000
RUDDER = .000 SILTS = .000
MACH = 1.400 RN/L = 3.500

RUN NO. 1367/ 0 RN/L = 2.99 GRADIENT INTERVAL = -5.00/ 5.00

ALPHAO	BETAO	CP1	CP2	CP3	CP4	CPBV	RUDDER	CHR	CNVT	CBVT	CTVT
-4.094	-6.078	-.29370	-.29760	-.31670	-.27660	-.31480	-.51530	-.03520	.33030	.26360	-.13830
-4.349	-3.947	-.29170	-.29640	-.30800	-.27370	-.30400	-.30720	-.01980	.20190	.16070	-.07900
-4.202	.412	-.28220	-.28920	-.27100	-.26700	-.28980	.05830	.00430	-.03800	-.03100	.01530
-3.737	4.341	-.28070	-.28610	-.26710	-.26690	-.29960	.44700	.03040	-.26070	-.20600	.10450
-3.816	6.142	-.28650	-.29280	-.27970	-.27580	-.30860	.65130	.04560	-.36920	-.29060	.15400
	GRADIENT	.00134	.00125	.00500	.00083	.00058	.09087	.00605	-.05580	-.04424	.02213

RUN NO. 1368/ 0 RN/L = 3.00 GRADIENT INTERVAL = -5.00/ 5.00

ALPHAO	BETAO	CP1	CP2	CP3	CP4	CPBV	RUDDER	CHR	CNVT	CBVT	CTVT
-.508	-6.997	-.30230	-.30600	-.31160	-.28600	-.32350	-.60950	-.04150	.36120	.28430	-.14970
-.481	-4.824	-.29260	-.29270	-.29430	-.27570	-.30680	-.39830	-.02530	.23390	.18880	-.09450
-.432	-.491	-.28230	-.28770	-.27500	-.26850	-.29420	-.08910	-.00170	.01190	.00710	-.00260
-.414	3.632	-.27630	-.28240	-.26090	-.26480	-.29270	.23920	.02340	-.18970	-.15120	.07210
-.423	5.820	-.28220	-.28690	-.26840	-.26970	-.29980	.45970	.04020	-.30490	-.24420	.12540
	GRADIENT	.00193	.00122	.00395	.00129	.00168	.07535	.00576	-.05010	-.04022	.01971

RUN NO. 1369/ 0 RN/L = 3.00 GRADIENT INTERVAL = -5.00/ 5.00

ALPHAO	BETAO	CP1	CP2	CP3	CP4	CPBV	RUDDER	CHR	CNVT	CBVT	CTVT
4.039	-5.870	-.29490	-.29590	-.29060	-.28050	-.30830	-.36390	-.03210	.26450	.21200	-.10490
3.998	-3.653	-.27930	-.28440	-.26440	-.26720	-.28400	-.18410	-.01760	.14920	.12010	-.05480
3.743	.167	-.28980	-.29200	-.27800	-.27260	-.28770	.00470	.00020	-.01060	-.01060	.00500
3.786	4.056	-.27370	-.27900	-.25470	-.26130	-.28390	.23700	.02170	-.18600	-.14770	.06900
3.747	6.132	-.27920	-.28580	-.26170	-.26870	-.29290	.40380	.03520	-.29020	-.23080	.11560
	GRADIENT	.00074	.00071	.00127	.00077	.00002	.05464	.00510	-.04349	-.03474	.01606

IA156A, AEDC PWT 16T-470, O T S (R8NFC6) (10 MAY 80)

REFERENCE DATA

SREF = 2690.0000 SQ.FT. XMRP = 976.0000 IN. XT
LREF = 1290.3000 INCHES YMRP = .0000 IN. YT
BREF = 1290.3000 INCHES ZMRP = 400.0000 IN. ZT
SCALE = .0200

PARAMETRIC DATA

IB-ELV = 12.000 OB-ELV = -2.000
BDFLAP = .000 SPDBRK = .000
RUDDER = .000 SILTS = .000
MACH = 1.550 RN/L = 3.200

RUN NO. 1370/ 0 RN/L = 2.99 GRADIENT INTERVAL = -5.00/ 5.00

ALPHAO	BETAO	CP1	CP2	CP3	CP4	CPBV	RUDDER	CHR	CNVT	CBVT	CTVT
-8.164	-5.912	-.27490	-.27450	-.30280	-.27220	-.26420	-.57790	-.04040	.33300	.26230	-.13910
-8.309	-3.679	-.26590	-.26920	-.29570	-.24440	-.24090	-.32020	-.02180	.19710	.15510	-.07680
-8.198	.297	-.25460	-.25880	-.25480	-.24190	-.21240	.03710	.00280	-.02610	-.02130	.01060
-7.977	4.573	-.25830	-.26610	-.27330	-.24600	-.25120	.50680	.03570	-.26760	-.21200	.10870
-7.950	6.390	-.26060	-.26580	-.26860	-.25280	-.26020	.73340	.05200	-.36650	-.28690	.15310
	GRADIENT	.00090	.00035	.00263	-.00020	-.00135	.10034	.00698	-.05631	-.04449	.02248

RUN NO. 1371/ 0 RN/L = 3.00 GRADIENT INTERVAL = -5.00/ 5.00

ALPHAO	BETAO	CP1	CP2	CP3	CP4	CPBV	RUDDER	CHR	CNVT	CBVT	CTVT
-6.347	-5.953	-.26800	-.27170	-.30500	-.25210	-.26740	-.60040	-.04140	.33010	.25950	-.13730
-6.238	-3.981	-.26660	-.26820	-.29210	-.24550	-.25220	-.34420	-.02280	.20680	.16440	-.08190
-6.280	.235	-.25780	-.26430	-.25910	-.24400	-.22960	.03510	.00270	-.02690	-.02060	.01000
-5.976	4.383	-.25890	-.26220	-.25970	-.24610	-.25630	.47960	.03300	-.25610	-.20100	.10300
-5.921	6.372	-.26700	-.26810	-.26610	-.25550	-.27230	.73640	.05180	-.37010	-.28750	.15370
	GRADIENT	.00092	.00072	.00388	-.00007	-.00047	.09847	.00667	-.05534	-.04369	.02211

RUN NO. 1372/ 0 RN/L = 3.00 GRADIENT INTERVAL = -5.00/ 5.00

ALPHAO	BETAO	CP1	CP2	CP3	CP4	CPBV	RUDDER	CHR	CNVT	CBVT	CTVT
-4.201	-6.099	-.27410	-.27720	-.30560	-.26790	-.28110	-.60200	-.04090	.33210	.25990	-.13740
-4.444	-3.944	-.26890	-.26670	-.28270	-.24900	-.25860	-.34920	-.02250	.20110	.16020	-.08030
-4.272	.499	-.26310	-.26620	-.25680	-.24520	-.24670	.04570	.00320	-.03730	-.02840	.01300
-3.722	4.430	-.26310	-.26600	-.25970	-.24990	-.26300	.47900	.03220	-.25690	-.20130	.10390
-3.793	6.247	-.26160	-.26740	-.26860	-.24990	-.27410	.71300	.04920	-.36250	-.28170	.15090
	GRADIENT	.00071	.00008	.00281	-.00009	-.00046	.09869	.00652	-.05468	-.04316	.02198

RUN NO. 1373/ 0 RN/L = 3.00 GRADIENT INTERVAL = -5.00/ 5.00

ALPHAO	BETAO	CP1	CP2	CP3	CP4	CPBV	RUDDER	CHR	CNVT	CBVT	CTVT
-.593	-7.033	-.27760	-.27640	-.29300	-.26640	-.29040	-.67900	-.04590	.36460	.28290	-.15090
-.564	-4.900	-.27300	-.27390	-.28330	-.25860	-.28200	-.44630	-.02860	.24230	.19330	-.09840
-.529	-.542	-.26320	-.26290	-.25530	-.24350	-.25990	-.07840	-.00090	.01340	.00780	-.00160
-.513	3.574	-.26120	-.26260	-.24940	-.24450	-.26990	.28590	.02640	-.19840	-.15830	.07860
-.524	5.750	-.26790	-.27090	-.26300	-.25670	-.28350	.54400	.04580	-.31240	-.24860	.13120
	GRADIENT	.00140	.00135	.00402	.00168	.00146	.08639	.00649	-.05201	-.04150	.02090

IA156A, AEDC PWT 16T-470, O T S (R8NFC6) (10 MAY 80)

REFERENCE DATA

SREF = 2690.0000 SQ.FT. XMRP = 976.0000 IN. XT
LREF = 1290.3000 INCHES YMRP = .0000 IN. YT
BREF = 1290.3000 INCHES ZMRP = 400.0000 IN. ZT
SCALE = .0200

PARAMETRIC DATA

IB-ELV = 12.000 OB-ELV = -2.000
BDFLAP = .000 SPDBRK = .000
RUDDER = .000 SILTS = .000
MACH = 1.550 RN/L = 3.200

RUN NO. 1374/ 0 RN/L = 3.01 GRADIENT INTERVAL = -5.00/ 5.00

ALPHAO	BETAO	CP1	CP2	CP3	CP4	CPBV	RUDDER	CHR	CNVT	CBVT	CTVT
4.179	-5.685	-.27540	-.27650	-.28350	-.26740	-.28570	-.41550	-.03510	.27060	.21390	-.10840
4.009	-3.559	-.27060	-.27150	-.26440	-.25470	-.26800	-.21540	-.01960	.15350	.12560	-.06090
3.680	.254	-.26700	-.26780	-.26040	-.25120	-.26740	-.00870	-.00070	-.00180	-.00350	.00260
3.685	4.056	-.26220	-.26410	-.25240	-.24790	-.27250	.25210	.02240	-.17100	-.14070	.06930
3.639	6.130	-.27250	-.27310	-.26160	-.25500	-.28610	.50270	.04190	-.29460	-.23220	.12000
	GRADIENT	.00110	.00097	.00158	.00089	-.00059	.06140	.00552	-.04262	-.03498	.01710

IA156A, AEDC PWT 16T-470, O T S W/SILTS (R8NFC7) (10 MAY 80)

REFERENCE DATA

SREF = 2690.0000 SQ.FT. XMRP = 976.0000 IN. XT
LREF = 1290.3000 INCHES YMRP = .0000 IN. YT
BREF = 1290.3000 INCHES ZMRP = 400.0000 IN. ZT
SCALE = .0200

PARAMETRIC DATA

IB-ELV = 9.000 OB-ELV = -2.000
BDFLAP = .000 SPDBRK = .000
RUDDER = .000 SILTS = 1.000
MACH = 1.150 RN/L = 3.500
IB-AIL = 1.000

RUN NO. 1377/ 0 RN/L = 3.50 GRADIENT INTERVAL = -5.00/ 5.00

ALPHAO	BETAO	CP1	CP2	CP3	CP4	CPBV	RUDDER	CHR	CNVT	CBVT	CTVT
-8.173	-5.880	-.37360	-.37530	-.37430	-.36520	-.38990	-.34830	-.02170	.32910	.26830	-.13390
-8.191	-3.835	-.36160	-.36680	-.35270	-.34350	-.37360	-.20270	-.01210	.19720	.16080	-.07710
-8.131	.278	-.34200	-.34570	-.32130	-.32910	-.33880	.03100	.00210	-.03310	-.02560	.01120
-7.960	4.259	-.33990	-.35310	-.32050	-.33110	-.34720	.26040	.01600	-.25860	-.20780	.10050
-7.945	6.207	-.35320	-.36280	-.33540	-.34270	-.36590	.42350	.02700	-.37170	-.29620	.14850
	GRADIENT	.00269	.00171	.00400	.00154	.00329	.05721	.00347	-.05631	-.04554	.02194

RUN NO. 1378/ 0 RN/L = 3.50 GRADIENT INTERVAL = -5.00/ 5.00

ALPHAO	BETAO	CP1	CP2	CP3	CP4	CPBV	RUDDER	CHR	CNVT	CBVT	CTVT
-6.183	-5.970	-.36140	-.36400	-.36100	-.34380	-.37590	-.32560	-.01950	.32910	.26630	-.13230
-6.102	-4.029	-.34670	-.35870	-.34520	-.33650	-.36090	-.20270	-.01140	.20380	.16420	-.07810
-6.194	.113	-.32960	-.33820	-.31260	-.31940	-.32710	.01460	.00110	-.02470	-.01910	.00800
-6.013	4.232	-.33610	-.34840	-.31440	-.32690	-.34040	.23830	.01410	-.25300	-.20050	.09630
-5.788	6.345	-.34050	-.34970	-.31910	-.33050	-.34630	.37810	.02300	-.37090	-.29310	.14590
	GRADIENT	.00129	.00125	.00373	.00116	.00249	.05338	.00309	-.05530	-.04415	.02111

IA156A, AEDC PWT 16T-470, O T S W/SILTS (R8NFC7) (10 MAY 80)

REFERENCE DATA

SREF = 2690.0000 SQ.FT. XMRP = 976.0000 IN. XT
LREF = 1290.3000 INCHES YMRP = .0000 IN. YT
BREF = 1290.3000 INCHES ZMRP = 400.0000 IN. ZT
SCALE = .0200

PARAMETRIC DATA

IB-ELV = 9.000 OB-ELV = -2.000
BDFLAP = .000 SPDBRK = .000
RUDDER = .000 SILTS = 1.000
MACH = 1.150 RN/L = 3.500
IB-AIL = 1.000

RUN NO. 1379/ 0 RN/L = 3.50 GRADIENT INTERVAL = -5.00/ 5.00

ALPHAO	BETAO	CP1	CP2	CP3	CP4	CPBV	RUDDER	CHR	CNVT	CBVT	CTVT
-4.099	-6.089	-.36520	-.36640	-.36290	-.35370	-.37530	-.30270	-.01730	.32550	.26260	-.12970
-4.295	-3.970	-.34670	-.35470	-.33660	-.32970	-.35300	-.19870	-.01060	.19540	.15700	-.07460
-4.200	.373	-.32980	-.33700	-.30500	-.31650	-.32230	.02030	.00120	-.03030	-.02410	.01010
-3.743	4.276	-.32560	-.33430	-.29830	-.31120	-.33060	.22310	.01210	-.24220	-.19390	.09320
-3.851	6.111	-.33630	-.35100	-.31730	-.32650	-.34390	.33820	.01980	-.34680	-.27830	.13840
	GRADIENT	.00258	.00250	.00469	.00226	.00280	.05114	.00275	-.05305	-.04254	.02034

RUN NO. 1380/ 0 RN/L = 3.50 GRADIENT INTERVAL = -5.00/ 5.00

ALPHAO	BETAO	CP1	CP2	CP3	CP4	CPBV	RUDDER	CHR	CNVT	CBVT	CTVT
-.470	-7.021	-.35740	-.36670	-.35800	-.34860	-.38280	-.29910	-.01640	.36080	.28780	-.14120
-.444	-4.837	-.34990	-.35780	-.33900	-.33710	-.35660	-.21590	-.01050	.23860	.19210	-.09020
-.409	-.465	-.32600	-.33210	-.30020	-.31300	-.31570	-.07150	-.00040	.01610	.01140	-.00570
-.381	3.667	-.31370	-.32110	-.28970	-.30330	-.31500	.02660	.00650	-.19100	-.15320	.06810
-.383	5.857	-.32720	-.33790	-.30630	-.31700	-.34090	.09330	.01120	-.29980	-.24330	.11460
	GRADIENT	.00427	.00433	.00583	.00399	.00493	.02856	.00200	-.05052	-.04061	.01862

RUN NO. 1381/ 0 RN/L = 3.50 GRADIENT INTERVAL = -5.00/ 5.00

ALPHAO	BETAO	CP1	CP2	CP3	CP4	CPBV	RUDDER	CHR	CNVT	CBVT	CTVT
4.123	-5.832	-.33400	-.33850	-.32760	-.32040	-.34820	.02190	-.00230	.27050	.21910	-.09870
3.967	-3.698	-.33320	-.33910	-.32060	-.32080	-.33590	.04710	.00000	.16210	.12920	-.05290
3.794	.112	-.32800	-.33610	-.30610	-.31920	-.32010	.00360	.00020	.00770	.00340	-.00150
3.843	4.035	-.31390	-.32240	-.28720	-.30230	-.31340	-.07660	-.00210	-.16740	-.13740	.05730
3.806	6.132	-.32340	-.33240	-.29840	-.31230	-.33610	-.01220	.00300	-.28100	-.22940	.10420
	GRADIENT	.00250	.00217	.00432	.00240	.00290	-.01602	-.00027	-.04262	-.03448	.01425

IA156A, AEDC PWT 16T-470, O T S W/SILTS (R8NFC8) (10 MAY 80)

REFERENCE DATA

SREF = 2690.0000 SQ.FT. XMRP = 976.0000 IN. XT
LREF = 1290.3000 INCHES YMRP = .0000 IN. YT
BREF = 1290.3000 INCHES ZMRP = 400.0000 IN. ZT
SCALE = .0200

PARAMETRIC DATA

IB-ELV = 9.000 OB-ELV = -2.000
BDFLAP = .000 SPDBRK = .000
RUDDER = .000 SILTS = 1.000
MACH = 1.250 RN/L = 3.500
IB-AIL = 1.000

RUN NO. 1382/ 0 RN/L = 3.50 GRADIENT INTERVAL = -5.00/ 5.00

ALPHAO	BETAO	CP1	CP2	CP3	CP4	CPBV	RUDDER	CHR	CNVT	CBVT	CTVT
-8.176	-5.849	-.33720	-.33580	-.34300	-.33080	-.35680	-.43220	-.02660	.33340	.26690	-.13510
-8.215	-3.768	-.32490	-.32620	-.32230	-.31250	-.33600	-.26680	-.01600	.19460	.15440	-.07380
-8.127	.191	-.31670	-.31790	-.30270	-.30190	-.31870	.03510	.00240	-.03110	-.02620	.01200
-7.940	4.342	-.31930	-.32670	-.30560	-.30790	-.33880	.38110	.02380	-.26690	-.21550	.10600
-7.947	6.219	-.32200	-.33070	-.31660	-.31730	-.33670	.60790	.03840	-.37710	-.30130	.15450
	GRADIENT	.00068	-.00008	.00204	.00055	-.00038	.07992	.00491	-.05691	-.04561	.02218

RUN NO. 1383/ 0 RN/L = 3.50 GRADIENT INTERVAL = -5.00/ 5.00

ALPHAO	BETAO	CP1	CP2	CP3	CP4	CPBV	RUDDER	CHR	CNVT	CBVT	CTVT
-6.194	-5.956	-.33080	-.33090	-.33570	-.32020	-.34900	-.45180	-.02730	.32760	.26270	-.13280
-6.125	-4.037	-.32400	-.32610	-.32060	-.30970	-.33590	-.28220	-.01640	.20400	.16270	-.07790
-6.197	.120	-.30560	-.31090	-.29170	-.29350	-.30940	.02830	.00200	-.03060	-.02490	.01110
-5.982	4.247	-.30750	-.31430	-.28880	-.29510	-.31700	.36170	.02190	-.25250	-.20270	.09940
-5.952	6.225	-.32480	-.33220	-.31260	-.31400	-.33970	.57190	.03570	-.36920	-.29530	.15130
	GRADIENT	.00199	.00143	.00384	.00177	.00229	.07772	.00462	-.05511	-.04411	.02140

RUN NO. 1384/ 0 RN/L = 3.50 GRADIENT INTERVAL = -5.00/ 5.00

ALPHAO	BETAO	CP1	CP2	CP3	CP4	CPBV	RUDDER	CHR	CNVT	CBVT	CTVT
-4.069	-6.097	-.33770	-.33820	-.33900	-.32930	-.35480	-.45010	-.02670	.32290	.25870	-.13050
-4.303	-3.963	-.32560	-.32710	-.31880	-.31040	-.33220	-.27830	-.01560	.19090	.15130	-.07220
-4.181	.374	-.30890	-.31320	-.28990	-.29490	-.30[illegible]0	.03030	.00190	-.03640	-.03020	.01350
-3.748	4.293	-.30600	-.31450	-.28250	-.29130	-.30930	.34180	.01980	-.24770	-.19880	.09770
-3.839	6.122	-.31530	-.32360	-.29940	-.30330	-.32920	.51110	.03100	-.35190	-.28240	.14410
	GRADIENT	.00240	.00156	.00444	.00234	.00283	.07504	.00428	-.05311	-.04239	.02056

RUN NO. 1385/ 0 RN/L = 3.50 GRADIENT INTERVAL = -5.00/ 5.00

ALPHAO	BETAO	CP1	CP2	CP3	CP4	CPBV	RUDDER	CHR	CNVT	CBVT	CTVT
-.490	-6.970	-.33480	-.33860	-.33560	-.32400	-.35810	-.49640	-.02920	.35870	.28680	-.14550
-.462	-4.814	-.32160	-.32350	-.31610	-.30900	-.33080	-.34370	-.01880	.23430	.18770	-.09050
-.423	-.532	-.30320	-.30820	-.28780	-.28990	-.30150	-.07920	-.00090	.01500	.00920	-.00380
-.391	3.727	-.29240	-.29790	-.26900	-.27940	-.29320	.17870	.01660	-.19120	-.15420	.07160
-.403	5.885	-.30050	-.31020	-.27960	-.28880	-.31010	.33120	.02710	-.30240	-.24670	.12140
	GRADIENT	.00342	.00300	.00552	.00347	.00440	.06117	.00414	-.04982	-.04003	.01898

IA156A, AEDC PWT 16T-470, O T S W/SILTS (R8NFC8) (10 MAY 80)

REFERENCE DATA

SREF = 2690.0000 SQ.FT. XMRP = 976.0000 IN. XT
LREF = 1290.3000 INCHES YMRP = .0000 IN. YT
BREF = 1290.3000 INCHES ZMRP = 400.0000 IN. ZT
SCALE = .0200

PARAMETRIC DATA

IB-ELV = 9.000 OB-ELV = -2.000
BDFLAP = .000 SPDBRK = .000
RUDDER = .000 SILTS = 1.000
MACH = 1.250 RN/L = 3.500
IB-AIL = 1.000

RUN NO. 1386/ 0 RN/L = 3.50 GRADIENT INTERVAL = -5.00/ 5.00

ALPHAO	BETAO	CP1	CP2	CP3	CP4	CPBV	RUDDER	CHR	CNVT	CBVT	CTVT
4.166	-5.804	-.30970	-.31540	-.30500	-.29830	-.32080	-.23280	-.01950	.27390	.22080	-.10480
3.973	-3.652	-.30530	-.31530	-.29470	-.29310	-.30450	-.13330	-.01220	.16230	.12910	-.05620
3.766	.204	-.30650	-.31350	-.29100	-.29470	-.29830	-.00600	-.00040	-.00440	-.00540	.00160
3.832	4.085	-.29520	-.30320	-.26790	-.28100	-.29820	.12920	.01190	-.18420	-.14990	.06730
3.784	6.139	-.29950	-.30660	-.27560	-.28640	-.31040	.26660	.02190	-.29050	-.23650	.11410
	GRADIENT	.00131	.00157	.00347	.00157	.00081	.03393	.00311	-.04479	-.03606	.01596

IA156A, AEDC PWT 16T-470, O T S W/SILTS (R8NFC9) (10 MAY 80)

REFERENCE DATA

SREF = 2690.0000 SQ.FT. XMRP = 976.0000 IN. XT
LREF = 1290.3000 INCHES YMRP = .0000 IN. YT
BREF = 1290.3000 INCHES ZMRP = 400.0000 IN. ZT
SCALE = .0200

PARAMETRIC DATA

IB-ELV = 9.000 OB-ELV = -2.000
BDFLAP = .000 SPDBRK = .000
RUDDER = .000 SILTS = 1.000
MACH = 1.400 RN/L = 3.500
IB-AIL = 1.000

RUN NO. 1387/ 0 RN/L = 2.99 GRADIENT INTERVAL = -5.00/ 5.00

ALPHAO	BETAO	CP1	CP2	CP3	CP4	CPBV	RUDDER	CHR	CNVT	CBVT	CTVT
-8.086	-5.933	-.30290	-.30000	-.31720	-.30090	-.30690	-.55290	-.03910	.34470	.27290	-.14220
-8.203	-3.723	-.30250	-.30220	-.31850	-.29540	-.30030	-.31850	-.02220	.20820	.16400	-.08030
-8.137	.221	-.28260	-.28340	-.27570	-.26920	-.27420	.03250	.00250	-.02440	-.02300	.01180
-7.965	4.466	-.29130	-.29300	-.28390	-.28010	-.30540	.45870	.03280	-.27640	-.22360	.11380
-7.938	6.284	-.29330	-.29670	-.29250	-.28530	-.30720	.65860	.04750	-.38380	-.30510	.16050
	GRADIENT	.00132	.00108	.00415	.00181	-.00071	.09497	.00672	-.05917	-.04733	.02370

RUN NO. 1388/ 0 RN/L = 3.00 GRADIENT INTERVAL = -5.00/ 5.00

ALPHAO	BETAO	CP1	CP2	CP3	CP4	CPBV	RUDDER	CHR	CNVT	CBVT	CTVT
-6.256	-5.968	-.30660	-.30540	-.32850	-.29200	-.31780	-.55230	-.03840	.34080	.27070	-.14110
-6.152	-3.991	-.28850	-.29350	-.30380	-.27660	-.29980	-.34200	-.02300	.21270	.16900	-.08300
-6.217	.147	-.28630	-.28840	-.27850	-.27000	-.28680	.02620	.00210	-.02570	-.02310	.01180
-5.972	4.285	-.27330	-.27590	-.26400	-.26110	-.28950	.43350	.02990	-.25830	-.20760	.10520
-5.942	6.276	-.29250	-.29390	-.28560	-.28350	-.31040	.65020	.04650	-.38590	-.30490	.16050
	GRADIENT	.00184	.00213	.00481	.00187	.00124	.09370	.00639	-.05691	-.04550	.02274

IA156A, AEDC PWT 16T-470, O T S W/SILTS (R8NFC9) (10 MAY 80)

REFERENCE DATA

SREF = 2690.0000 SQ.FT. XMRP = 976.0000 IN. XT
LREF = 1290.3000 INCHES YMRP = .0000 IN. YT
BREF = 1290.3000 INCHES ZMRP = 400.0000 IN. ZT
SCALE = .0200

PARAMETRIC DATA

IB-ELV = 9.000 OB-ELV = -2.000
BDFLAP = .000 SPDBRK = .000
RUDDER = .000 SILTS = 1.000
MACH = 1.400 RN/L = 3.500
IB-AIL = 1.000

RUN NO. 1389/ 0 RN/L = 3.01 GRADIENT INTERVAL = -5.00/ 5.00

ALPHAO	BETAO	CP1	CP2	CP3	CP4	CPBV	RUDDER	CHR	CNVT	CBVT	CTVT
-4.254	-6.082	-.30220	-.29790	-.30600	-.28720	-.31360	-.55560	-.03790	.33420	.26530	-.13830
-4.339	-3.952	-.29450	-.29270	-.29440	-.27920	-.30030	-.33600	-.02180	.20530	.16230	-.07940
-4.212	.410	-.28450	-.28790	-.27420	-.26930	-.28870	.04490	.00320	-.03450	-.03110	.01600
-3.745	4.326	-.28320	-.28630	-.26930	-.26620	-.30280	.42030	.02850	-.25970	-.20790	.10530
-3.801	6.150	-.27730	-.28020	-.27160	-.26730	-.29650	.61980	.04290	-.36240	-.28800	.15210
	GRADIENT	.00138	.00078	.00306	.00158	-.00025	.09129	.00607	-.05615	-.04471	.02230

RUN NO. 1390/ 0 RN/L = 3.00 GRADIENT INTERVAL = -5.00/ 5.00

ALPHAO	BETAO	CP1	CP2	CP3	CP4	CPBV	RUDDER	CHR	CNVT	CBVT	CTVT
-.511	-6.961	-.30360	-.30730	-.30690	-.28950	-.32320	-.63170	-.04340	.36180	.28370	-.14790
-.481	-4.830	-.29370	-.29330	-.29270	-.28000	-.30530	-.41070	-.02640	.23820	.19090	-.09470
-.440	-.450	-.28100	-.28230	-.27040	-.26480	-.28800	-.11010	-.00330	.01370	.00620	-.00170
-.421	3.647	-.27370	-.27790	-.25660	-.26120	-.28910	.22910	.02250	-.18930	-.15350	.07320
-.428	5.812	-.28070	-.28380	-.26840	-.26710	-.29870	.44010	.03890	-.30540	-.24750	.12680
	GRADIENT	.00237	.00182	.00427	.00223	.00193	.07540	.00576	-.05044	-.04064	.01982

RUN NO. 1391/ 0 RN/L = 3.01 GRADIENT INTERVAL = -5.00/ 5.00

ALPHAO	BETAO	CP1	CP2	CP3	CP4	CPBV	RUDDER	CHR	CNVT	CBVT	CTVT
4.141	-5.774	-.28980	-.29050	-.28500	-.27640	-.30150	-.37550	-.03270	.26410	.20960	-.10210
4.008	-3.662	-.28570	-.29000	-.27250	-.27460	-.29060	-.20950	-.01950	.15320	.12110	-.05420
3.738	.170	-.28080	-.28290	-.26960	-.26730	-.28030	-.00490	-.00050	-.00810	-.01080	.00570
3.780	4.063	-.27050	-.27450	-.25130	-.25820	-.27990	.23460	.02130	-.18600	-.14980	.06960
3.742	6.124	-.28650	-.28960	-.26780	-.27200	-.29750	.39340	.03450	-.29060	-.23360	.11620
	GRADIENT	.00197	.00201	.00275	.00212	.00138	.05750	.00528	-.04391	-.03507	.01603

IA156A, AEDC PWT 16T-470, O T S W/SILTS (R8NFDO) (10 MAY 80)

REFERENCE DATA

SREF = 2690.0000 SQ.FT. XMRP = 976.0000 IN. XT
LREF = 1290.3000 INCHES YMRP = .0000 IN. YT
BREF = 1290.3000 INCHES ZMRP = 400.0000 IN. ZT
SCALE = .0200

PARAMETRIC DATA

IB-ELV = 9.000 OB-ELV = -2.000
BDFLAP = .000 SPDBRK = .000
RUDDER = .000 SILTS = 1.000
MACH = 1.550 RN/L = 3.200
IB-AIL = 1.000

RUN NO. 1392/ 0 RN/L = 3.00 GRADIENT INTERVAL = -5.00/ 5.00

ALPHAO	BETAO	CP1	CP2	CP3	CP4	CPBV	RUDDER	CHR	CNVT	CBVT	CTVT
-8.172	-5.914	-.27310	-.27090	-.29070	-.27220	-.26120	-.62200	-.04370	.33520	.26330	-.13870
-8.299	-3.678	-.26570	-.26470	-.28260	-.24820	-.23610	-.35230	-.02410	.20030	.15710	-.07760
-8.186	.311	-.26200	-.26240	-.25910	-.25070	-.21800	.02530	.00190	-.02510	-.02260	.01150
-7.997	4.570	-.25980	-.26090	-.26010	-.25410	-.24960	.48140	.03380	-.26370	-.21170	.10830
-7.945	6.384	-.26050	-.26220	-.26260	-.25280	-.25760	.70860	.04990	-.36470	-.28780	.15290
	GRADIENT	.00071	.00046	.00269	-.00072	-.00170	.10115	.00703	-.05626	-.04471	.02254

RUN NO. 1393/ 0 RN/L = 3.00 GRADIENT INTERVAL = -5.00/ 5.00

ALPHAO	BETAO	CP1	CP2	CP3	CP4	CPBV	RUDDER	CHR	CNVT	CBVT	CTVT
-6.325	-5.946	-.27130	-.27230	-.30160	-.25610	-.26790	-.61470	-.04260	.33370	.26130	-.13740
-6.247	-3.971	-.26460	-.26660	-.28710	-.24740	-.25200	-.37240	-.02500	.21160	.16740	-.08310
-6.268	.230	-.25570	-.25950	-.25590	-.24250	-.22830	.02060	.00160	-.02430	-.02070	.01030
-5.981	4.383	-.25710	-.25970	-.25840	-.24550	-.25790	.46020	.03170	-.25590	-.20330	.10380
-5.920	6.369	-.26530	-.26410	-.26030	-.25540	-.26830	.71410	.05020	-.37080	-.29000	.15430
	GRADIENT	.00090	.00083	.00344	.00023	-.00069	.09966	.00679	-.05596	-.04438	.02237

RUN NO. 1394/ 0 RN/L = 3.00 GRADIENT INTERVAL = -5.00/ 5.00

ALPHAO	BETAO	CP1	CP2	CP3	CP4	CPBV	RUDDER	CHR	CNVT	CBVT	CTVT
-4.203	-6.098	-.27640	-.27410	-.29410	-.26090	-.27750	-.62800	-.04280	.33540	.26130	-.13720
-4.445	-3.939	-.26720	-.26640	-.27830	-.24930	-.26040	-.37640	-.02460	.20470	.16180	-.08050
-4.279	.498	-.25890	-.26090	-.25260	-.24190	-.24420	.02890	.00200	-.03410	-.02820	.01310
-3.713	4.427	-.26080	-.26150	-.25590	-.24690	-.26270	.47230	.03170	-.25770	-.20440	.10530
-3.801	6.270	-.26060	-.26100	-.25960	-.25490	-.27000	.69640	.04810	-.36460	-.28550	.15230
	GRADIENT	.00079	.00060	.00274	.00032	-.00019	.10123	.00671	-.05524	-.04375	.02218

RUN NO. 1395/ 0 RN/L = 3.00 GRADIENT INTERVAL = -5.00/ 5.00

ALPHAO	BETAO	CP1	CP2	CP3	CP4	CPBV	RUDDER	CHR	CNVT	CBVT	CTVT
-.596	-7.027	-.27820	-.27640	-.29070	-.26930	-.29220	-.70600	-.04810	.37000	.28580	-.15100
-.568	-4.900	-.26940	-.26890	-.27480	-.25560	-.27860	-.47300	-.03060	.24700	.19560	-.09870
-.532	-.554	-.25720	-.25810	-.25290	-.24170	-.25830	-.10510	-.00290	.01680	.00880	-.00220
-.520	3.579	-.25600	-.25830	-.24560	-.24270	-.27100	.27720	.02580	-.19760	-.16010	.07920
-.527	5.752	-.26320	-.26430	-.25690	-.25150	-.27740	.52990	.04480	-.31090	-.24950	.13090
	GRADIENT	.00159	.00126	.00346	.00154	.00093	.08845	.00665	-.05244	-.04196	.02099

IA156A, AEDC PWT 16T-470, O T S W/SILTS (R8NFD0) (10 MAY 80)

REFERENCE DATA

SREF = 2690.0000 SQ.FT. XMRP = 976.0000 IN. XT
LREF = 1290.3000 INCHES YMRP = .0000 IN. YT
BREF = 1290.3000 INCHES ZMRP = 400.0000 IN. ZT
SCALE = .0200

PARAMETRIC DATA

IB-ELV = 9.000 OB-ELV = -2.000
BDFLAP = .000 SPDBRK = .000
RUDDER = .000 SILTS = 1.000
MACH = 1.550 RN/L = 3.200
IB-AIL = 1.000

RUN NO. 1396/ 0 RN/L = 3.00 GRADIENT INTERVAL = -5.00/ 5.00

ALPHAO	BETAO	CP1	CP2	CP3	CP4	CPBV	RUDDER	CHR	CNVT	CBVT	CTVT
4.170	-5.671	-.27690	-.27630	-.28240	-.26660	-.28550	-.44160	-.03740	.27220	.21340	-.10670
3.997	-3.548	-.27210	-.27130	-.26590	-.25650	-.26890	-.24340	-.02190	.15520	.12460	-.05930
3.686	.252	-.26030	-.26080	-.25400	-.24410	-.26450	-.01910	-.00150	.00290	-.00220	.00220
3.676	4.057	-.25510	-.25770	-.24550	-.24130	-.26810	.24100	.02150	-.16690	-.13950	.06810
3.653	6.138	-.26170	-.26240	-.25200	-.24760	-.27860	.48880	.04050	-.29210	-.23280	.11940
	GRADIENT	.00224	.00179	.00268	.00200	.00010	.06370	.00571	-.04236	-.03473	.01675

IA156A, AEDC PWT 16T-470, O T S W/SILTS (R8NFD1) (10 MAY 80)

REFERENCE DATA

SREF = 2690.0000 SQ.FT. XMRP = 976.0000 IN. XT
LREF = 1290.3000 INCHES YMRP = .0000 IN. YT
BREF = 1290.3000 INCHES ZMRP = 400.0000 IN. ZT
SCALE = .0200

PARAMETRIC DATA

IB-ELV = 8.000 OB-ELV = -2.000
BDFLAP = .000 SPDBRK = .000
RUDDER = .000 SILTS = 1.000
MACH = 1.150 RN/L = 3.500

RUN NO. 1399/ 0 RN/L = 3.50 GRADIENT INTERVAL = -5.00/ 5.00

ALPHAO	BETAO	CP1	CP2	CP3	CP4	CPBV	RUDDER	CHR	CNVT	CBVT	CTVT
-8.190	-5.889	-.36590	-.36730	-.36490	-.35920	-.38570	-.30070	-.01820	.33540	.27190	-.13500
-8.181	-3.823	-.34890	-.35520	-.34240	-.33260	-.36310	-.15770	-.00900	.20060	.16270	-.07730
-8.123	.267	-.32540	-.33320	-.31330	-.31420	-.33370	.02160	.00150	-.03090	-.02510	.01160
-7.970	4.264	-.32770	-.34060	-.31440	-.32060	-.35320	.24200	.01480	-.25160	-.20420	.09970
-7.952	6.212	-.34260	-.35130	-.33250	-.33410	-.37480	.39480	.02480	-.36450	-.29050	.14660
	GRADIENT	.00263	.00182	.00348	.00150	.00125	.04940	.00294	-.05592	-.04537	.02189

RUN NO. 1400/ 0 RN/L = 3.51 GRADIENT INTERVAL = -5.00/ 5.00

ALPHAO	BETAO	CP1	CP2	CP3	CP4	CPBV	RUDDER	CHR	CNVT	CBVT	CTVT
-6.165	-5.957	-.35220	-.36370	-.36030	-.34160	-.38170	-.27890	-.01620	.32560	.26540	-.13110
-6.115	-4.038	-.33760	-.34740	-.33460	-.32740	-.35240	-.16190	-.00850	.20770	.16880	-.07970
-6.201	.111	-.32820	-.33630	-.31080	-.31550	-.32740	.01350	.00100	-.02240	-.01640	.00690
-6.017	4.233	-.32020	-.33350	-.30310	-.31250	-.33660	.21340	.01230	-.25120	-.19720	.09440
-5.795	6.354	-.34040	-.34700	-.32140	-.32800	-.36110	.38120	.02330	-.37010	-.29130	.14570
	GRADIENT	.00210	.00168	.00381	.00180	.00191	.04537	.00251	-.05549	-.04425	.02105

IA156A, AEDC PWT 16T-470, O T S W/SILTS (R8NFD1) (10 MAY 80)

REFERENCE DATA

SREF = 2690.0000 SQ.FT. XMRP = 976.0000 IN. XT
LREF = 1290.3000 INCHES YMRP = .0000 IN. YT
BREF = 1290.3000 INCHES ZMRP = 400.0000 IN. ZT
SCALE = .0200

PARAMETRIC DATA

IB-ELV = 8.000 OB-ELV = -2.000
BDFLAP = .000 SPDBRK = .000
RUDDER = .000 SILTS = 1.000
MACH = 1.150 RN/L = 3.500

RUN NO. 1401/ 0 RN/L = 3.50 GRADIENT INTERVAL = -5.00/ 5.00

ALPHAO	BETAO	CP1	CP2	CP3	CP4	CPBV	RUDDER	CHR	CNVT	CBVT	CTVT
-4.100	-6.094	-.35910	-.36080	-.35620	-.33890	-.37680	-.28270	-.01590	.32230	.26190	-.12870
-4.292	-3.967	-.33860	-.34710	-.32940	-.32140	-.35070	-.15900	-.00780	.19650	.15920	-.07490
-4.195	.370	-.31860	-.33210	-.29890	-.31000	-.32010	.00930	.00040	-.03210	-.02530	.01120
-3.741	4.274	-.31490	-.33030	-.29630	-.30690	-.32290	.21820	.01180	-.24540	-.19580	.09460
-3.865	6.134	-.33060	-.34370	-.31310	-.32020	-.34780	.33930	.01990	-.35230	-.28110	.14010
	GRADIENT	.00291	.00206	.00407	.00178	.00344	.04564	.00237	-.05361	-.04307	.02056

RUN NO. 1402/ 0 RN/L = 3.51 GRADIENT INTERVAL = -5.00/ 5.00

ALPHAO	BETAO	CP1	CP2	CP3	CP4	CPBV	RUDDER	CHR	CNVT	CBVT	CTVT
-.474	-6.986	-.35680	-.36180	-.35350	-.33800	-.37730	-.29510	-.01610	.36330	.29000	-.14160
-.444	-4.835	-.34400	-.35550	-.33630	-.33040	-.36410	-.18210	-.00820	.24450	.19770	-.09270
-.409	-.483	-.31680	-.32570	-.29220	-.30610	-.31470	-.05960	.00050	.01630	.01180	-.00510
-.382	3.676	-.30710	-.31660	-.28670	-.29830	-.31210	.02300	.00630	-.19110	-.15390	.06900
-.383	5.859	-.31760	-.33200	-.30100	-.30820	-.33100	.10700	.01220	-.30090	-.24420	.11570
	GRADIENT	.00435	.00459	.00586	.00379	.00615	.02413	.00171	-.05119	-.04132	.01901

RUN NO. 1403/ 0 RN/L = 3.50 GRADIENT INTERVAL = -5.00/ 5.00

ALPHAO	BETAO	CP1	CP2	CP3	CP4	CPBV	RUDDER	CHR	CNVT	CBVT	CTVT
4.108	-5.814	-.32700	-.33230	-.32300	-.31240	-.34410	.01770	-.00260	.27220	.22060	-.09930
3.968	-3.697	-.32760	-.33710	-.31840	-.31300	-.33860	.05170	.00040	.16800	.13450	-.05560
3.794	.117	-.31750	-.32950	-.30040	-.30780	-.31880	.01780	.00120	.00720	.00340	-.00080
3.852	4.044	-.30550	-.31820	-.28210	-.29630	-.31330	-.06780	-.00150	-.17290	-.14270	.06080
3.804	6.132	-.31320	-.32320	-.28860	-.30300	-.33050	-.00270	.00370	-.28050	-.22970	.10530
	GRADIENT	.00286	.00244	.00469	.00216	.00326	-.01547	-.00025	-.04404	-.03581	.01504

IA156A, AEDC PWT 16T-470, O T S W/SILTS (R8NFD2) (10 MAY 80)

REFERENCE DATA

SREF = 2690.0000 SQ.FT. XMRP = 976.0000 IN. XT
LREF = 1290.3000 INCHES YMRP = .0000 IN. YT
BREF = 1290.3000 INCHES ZMRP = 400.0000 IN. ZT
SCALE = .0200

PARAMETRIC DATA

IB-ELV = 8.000 OB-ELV = -2.000
BDFLAP = .000 SPDBRK = .000
RUDDER = .000 SILTS = 1.000
MACH = 1.250 RN/L = 3.500

RUN NO. 1404/ 0 RN/L = 3.50 GRADIENT INTERVAL = -5.00/ 5.00

ALPHAO	BETAO	CP1	CP2	CP3	CP4	CPBV	RUDDER	CHR	CNVT	CBVT	CTVT
-8.058	-5.883	-.33540	-.33470	-.34100	-.32760	-.35170	-.44000	-.02710	.34150	.27310	-.13800
-8.212	-3.720	-.32080	-.32400	-.32170	-.31420	-.33200	-.23800	-.01410	.19570	.15530	-.07370
-8.130	.187	-.29410	-.30560	-.29260	-.29020	-.30980	.04830	.00330	-.02920	-.02540	.01250
-7.955	4.413	-.31270	-.31970	-.30410	-.30340	-.34150	.40960	.02560	-.27090	-.21890	.10890
-7.957	6.242	-.32820	-.33550	-.32480	-.31850	-.35130	.63150	.04030	-.38270	-.30620	.15820
	GRADIENT	.00092	.00048	.00210	.00127	-.00125	.07971	.00489	-.05737	-.04601	.02246

RUN NO. 1405/ 0 RN/L = 3.49 GRADIENT INTERVAL = -5.00/ 5.00

ALPHAO	BETAO	CP1	CP2	CP3	CP4	CPBV	RUDDER	CHR	CNVT	CBV1	CTVT
-6.183	-5.954	-.32020	-.32450	-.33130	-.30270	-.34090	-.39310	-.02340	.33080	.26540	-.13410
-6.129	-4.043	-.31500	-.31840	-.31330	-.29740	-.32870	-.23980	-.01360	.20580	.16450	-.07840
-6.212	.135	-.30300	-.31390	-.29570	-.29440	-.31440	.03540	.00250	-.02860	-.02390	.01130
-5.997	4.255	-.30560	-.31380	-.29130	-.29270	-.32880	.36670	.02250	-.25470	-.20480	.10130
-5.829	6.348	-.32450	-.33110	-.31670	-.31630	-.34470	.61070	.03820	-.37830	-.30200	.15600
	GRADIENT	.00114	.00056	.00265	.00057	-.00000	.07307	.00435	-.05549	-.04450	.02165

RUN NO. 1406/ 0 RN/L = 3.50 GRADIENT INTERVAL = -5.00/ 5.00

ALPHAO	BETAO	CP1	CP2	CP3	CP4	CPBV	RUDDER	CHR	CNVT	CBVT	CTVT
-4.212	-6.077	-.32720	-.32740	-.32800	-.31900	-.34330	-.39240	-.02270	.32280	.25860	-.13030
-4.313	-3.978	-.31390	-.32360	-.31330	-.29870	-.33070	-.21800	-.01150	.19310	.15360	-.07280
-4.191	.370	-.30040	-.31160	-.28960	-.29080	-.30850	.03820	.00240	-.03490	-.02980	.01390
-3.749	4.283	-.29380	-.30700	-.27700	-.28400	-.31050	.34620	.02020	-.24630	-.19800	.09800
-3.836	6.115	-.30600	-.31760	-.29880	-.29400	-.33360	.52930	.03210	-.35010	-.28120	.14430
	GRADIENT	.00245	.00202	.00441	.00178	.00249	.06812	.00383	-.05318	-.04255	.02066

RUN NO. 1407/ 0 RN/L = 3.51 GRADIENT INTERVAL = -5.00/ 5.00

ALPHAO	BETAO	CP1	CP2	CP3	CP4	CPBV	RUDDER	CHR	CNVT	CBVT	CTVT
-.491	-6.993	-.31930	-.32110	-.31970	-.30850	-.33920	-.44300	-.02550	.35510	.28400	-.14360
-.471	-4.853	-.32940	-.33350	-.32590	-.31890	-.34350	-.30270	-.01600	.24420	.19590	-.09460
-.424	-.443	-.29300	-.29960	-.28100	-.28010	-.29590	-.05400	.00080	.01440	.00770	-.00240
-.392	3.681	-.28450	-.29210	-.26570	-.27370	-.28950	.19270	.01760	-.19050	-.15410	.07220
-.405	5.873	-.29170	-.30280	-.27550	-.28120	-.30820	.35110	.02840	-.30020	-.24560	.12180
	GRADIENT	.00530	.00488	.00709	.00534	.00638	.05803	.00394	-.05095	-.04103	.01956

IA156A, AEDC PWT 16T-470, O T S W/SILTS (R8NFD2) (10 MAY 80)

REFERENCE DATA

SREF = 2690.0000 SQ.FT. XMRP = 976.0000 IN. XT
LREF = 1290.3000 INCHES YMRP = .0000 IN. YT
BREF = 1290.3000 INCHES ZMRP = 400.0000 IN. ZT
SCALE = .0200

PARAMETRIC DATA

IB-ELV = 8.000 OB-ELV = -2.000
BDFLAP = .000 SPDBRK = .000
RUDDER = .000 SILTS = 1.000
MACH = 1.250 RN/L = 3.500

RUN NO. 1408/ 0 RN/L = 3.50 GRADIENT INTERVAL = -5.00/ 5.00

ALPHAO	BETAO	CP1	CP2	CP3	CP4	CPBV	RUDDER	CHR	CNVT	CBVT	CTVT
4.160	-5.799	-.30660	-.31230	-.30290	-.29400	-.32360	-.21160	-.01810	.27670	.22330	-.10610
3.982	-3.661	-.30170	-.30980	-.29250	-.29140	-.30670	-.10310	-.01020	.16600	.13220	-.05760
3.771	.206	-.30300	-.31000	-.28820	-.29320	-.30110	.01700	.00120	-.00340	-.00550	.00270
3.835	4.085	-.28350	-.29290	-.25950	-.27330	-.28770	.14540	.01310	-.18240	-.14970	.06810
3.786	6.141	-.28790	-.29570	-.26390	-.27470	-.29630	.27810	.02260	-.28860	-.23590	.11450
	GRADIENT	.00235	.00218	.00426	.00234	.00245	.03208	.00301	-.04498	-.03639	.01623

IA156A, AEDC PWT 16T-470, O T S W/SILTS (R8NFD3) (10 MAY 80)

REFERENCE DATA

SREF = 2690.0000 SQ.FT. XMRP = 976.0000 IN. XT
LREF = 1290.3000 INCHES YMRP = .0000 IN. YT
BREF = 1290.3000 INCHES ZMRP = 400.0000 IN. ZT
SCALE = .0200

PARAMETRIC DATA

IB-ELV = 8.000 OB-ELV = -2.000
BDFLAP = .000 SPDBRK = .000
RUDDER = .000 SILTS = 1.000
MACH = 1.400 RN/L = 3.500

RUN NO. 1409/ 0 RN/L = 3.00 GRADIENT INTERVAL = -5.00/ 5.00

ALPHAO	BETAO	CP1	CP2	CP3	CP4	CPBV	RUDDER	CHR	CNVT	CBVT	CTVT
-8.086	-5.930	-.30680	-.30390	-.32170	-.29420	-.30950	-.53350	-.03780	.34890	.27670	-.14430
-8.220	-3.728	-.27940	-.28680	-.30650	-.27440	-.27910	-.28620	-.01960	.20580	.16280	-.07980
-8.142	.230	-.27570	-.28260	-.27750	-.26720	-.27120	.05160	.00390	-.02250	-.02170	.01150
-7.943	4.451	-.27880	-.28810	-.28330	-.26820	-.30230	.48170	.03480	-.27420	-.22210	.11390
-7.969	6.303	-.27480	-.28500	-.28690	-.26560	-.29960	.68670	.04910	-.38180	-.30330	.16050
	GRADIENT	.00006	-.00017	.00279	.00075	-.00289	.09398	.00666	-.05870	-.04707	.02369

RUN NO. 1410/ 0 RN/L = 2.99 GRADIENT INTERVAL = -5.00/ 5.00

ALPHAO	BETAO	CP1	CP2	CP3	CP4	CPBV	RUDDER	CHR	CNVT	CBVT	CTVT
-6.257	-5.962	-.29400	-.29780	-.32320	-.28390	-.30880	-.53660	-.03730	.34360	.27330	-.14260
-6.163	-4.003	-.28540	-.28860	-.29830	-.27430	-.29050	-.31200	-.02080	.21740	.17320	-.08510
-6.200	.152	-.27420	-.28180	-.27330	-.26130	-.28250	.04930	.00390	-.02400	-.02200	.01160
-5.976	4.285	-.27430	-.27940	-.27060	-.26220	-.29770	.45470	.03190	-.25840	-.20810	.10620
-5.941	6.262	-.28950	-.28930	-.28510	-.27080	-.30800	.67020	.04800	-.38510	-.30440	.16130
	GRADIENT	.00134	.00111	.00334	.00146	-.00087	.09250	.00636	-.05741	-.04601	.02308

IA156A, AEDC PWT 16T-470, O T S W/SILTS (R8NFD3) (10 MAY 80)

REFERENCE DATA

SREF = 2690.0000 SQ.FT. XMRP = 976.0000 IN. XT
LREF = 1290.3000 INCHES YMRP = .0000 IN. YT
BREF = 1290.3000 INCHES ZMRP = 400.0000 IN. ZT
SCALE = .0200

PARAMETRIC DATA

IB-ELV = 8.000 OB-ELV = -2.000
BDFLAP = .000 SPDBRK = .000
RUDDER = .000 SILTS = 1.000
MACH = 1.400 RN/L = 3.500

RUN NO. 1411/ 0 RN/L = 2.99 GRADIENT INTERVAL = -5.00/ 5.00

ALPHAO	BETAO	CP1	CP2	CP3	CP4	CPBV	RUDDER	CHR	CNVT	CBVT	CTVT
-4.076	-6.072	-.30150	-.30010	-.30730	-.28820	-.31530	-.52160	-.03570	.33650	.26790	-.13960
-4.353	-3.952	-.28590	-.28820	-.29210	-.27410	-.29290	-.29620	-.01900	.20620	.16350	-.07990
-4.200	.417	-.27380	-.27880	-.26720	-.26140	-.28430	.06350	.00470	-.03420	-.03080	.01610
-3.744	4.333	-.27010	-.27830	-.26390	-.26070	-.29780	.44620	.03030	-.25860	-.20720	.10570
-3.816	6.148	-.28420	-.28440	-.27880	-.27230	-.30220	.64470	.04510	-.36710	-.29190	.15500
	GRADIENT	.00192	.00121	.00345	.00164	-.00054	.08947	.00594	-.05608	-.04474	.02240

RUN NO. 1412/ 0 RN/L = 2.99 GRADIENT INTERVAL = -5.00/ 5.00

ALPHAO	BETAO	CP1	CP2	CP3	CP4	CPBV	RUDDER	CHR	CNVT	CBVT	CTVT
-.514	-7.000	-.30240	-.30230	-.30160	-.28650	-.31890	-.58690	-.04020	.36380	.28560	-.14880
-.487	-4.816	-.28640	-.28660	-.28940	-.27580	-.30000	-.36780	-.02310	.24010	.19300	-.09590
-.442	-.499	-.27390	-.27700	-.26660	-.25990	-.28440	-.08190	-.00120	.01680	.00880	-.00270
-.424	3.637	-.26940	-.27610	-.25770	-.25910	-.29440	.25210	.02440	-.18810	-.15290	.07350
-.432	5.812	-.27670	-.28340	-.26850	-.26730	-.30030	.46030	.04070	-.30610	-.24780	.12760
	GRADIENT	.00202	.00125	.00376	.00199	.00068	.07328	.00562	-.05066	-.04093	.02005

RUN NO. 1413/ 0 RN/L = 2.99 GRADIENT INTERVAL = -5.00/ 5.00

ALPHAO	BETAO	CP1	CP2	CP3	CP4	CPBV	RUDDER	CHR	CNVT	CBVT	CTVT
4.136	-5.765	-.28730	-.28760	-.28170	-.27200	-.30030	-.34600	-.03070	.26530	.21120	-.10300
3.993	-3.651	-.27210	-.27890	-.26040	-.26060	-.28190	-.17370	-.01690	.15690	.12480	-.05610
3.759	.176	-.27600	-.27810	-.26550	-.26050	-.27920	.03050	.00220	-.00500	-.00840	.00490
3.790	4.045	-.27010	-.27570	-.25540	-.25810	-.28230	.25160	.02280	-.18160	-.14720	.06880
3.737	6.120	-.27230	-.27590	-.25670	-.26010	-.28730	.43320	.03740	-.28580	-.23020	.11580
	GRADIENT	.00026	.00042	.00065	.00033	-.00005	.05526	.00516	-.04399	-.03534	.01623

IA156A, AEDC PWT 16T-470, O T S W/SILTS (R8NFD4) (10 MAY 80)

REFERENCE DATA

SREF = 2690.0000 SQ.FT. XMRP = 976.0000 IN. XT
LREF = 1290.3000 INCHES YMRP = .0000 IN. YT
BREF = 1290.3000 INCHES ZMRP = 400.0000 IN. ZT
SCALE = .0200

PARAMETRIC DATA

IB-ELV = 8.000 OB-ELV = -2.000
BDFLAP = .000 SPDBRK = .000
RUDDER = .000 SILTS = 1.000
MACH = 1.550 RN/L = 3.200

RUN NO. 1414/ 0 RN/L = 3.00 GRADIENT INTERVAL = -5.00/ 5.00

ALPHAO	BETAO	CP1	CP2	CP3	CP4	CPBV	RUDDER	CHR	CNVT	CBVT	CTVT
-8.173	-5.906	-.27120	-.26690	-.29070	-.26090	-.26070	-.60970	-.04280	.34060	.26750	-.14110
-8.310	-3.678	-.26700	-.26300	-.27900	-.24720	-.23860	-.32530	-.02220	.20200	.15850	-.07840
-8.207	.302	-.24920	-.25430	-.25310	-.24100	-.21600	.04390	.00330	-.02090	-.01960	.01020
-7.990	4.583	-.24960	-.25720	-.25820	-.24240	-.25200	.51830	.03630	-.26490	-.21320	.10970
-7.954	6.387	-.26680	-.26490	-.26550	-.25520	-.26600	.72910	.05190	-.36720	-.29050	.15490
	GRADIENT	.00208	.00068	.00247	.00057	-.00171	.10222	.00709	-.05652	-.04500	.02277

RUN NO. 1415/ 0 RN/L = 3.00 GRADIENT INTERVAL = -5.00/ 5.00

ALPHAO	BETAO	CP1	CP2	CP3	CP4	CPBV	RUDDER	CHR	CNVT	CBVT	CTVT
-6.355	-5.955	-.26440	-.26860	-.30360	-.25120	-.26610	-.60440	-.04180	.33640	.26370	-.13870
-6.251	-3.965	-.26450	-.26210	-.28170	-.25080	-.25000	-.35000	-.02330	.21380	.16920	-.08420
-6.276	.218	-.25210	-.25610	-.25190	-.24190	-.23100	.04140	.00320	-.02140	-.01890	.00950
-5.974	4.381	-.25290	-.25700	-.25430	-.24760	-.25950	.49120	.03400	-.25460	-.20280	.10410
-5.924	6.362	-.26060	-.25930	-.25720	-.25220	-.26610	.73830	.05190	-.37050	-.29030	.15510
	GRADIENT	.00139	.00061	.00329	.00038	-.00113	.10078	.00686	-.05612	-.04457	.02256

RUN NO. 1416/ 0 RN/L = 3.00 GRADIENT INTERVAL = -5.00/ 5.00

ALPHAO	BETAO	CP1	CP2	CP3	CP4	CPBV	RUDDER	CHR	CNVT	CBVT	CTVT
-4.193	-6.090	-.27100	-.26740	-.29330	-.25700	-.27280	-.61040	-.04140	.33500	.26100	-.13700
-4.448	-3.945	-.25820	-.26210	-.27710	-.24640	-.25990	-.35120	-.02270	.20660	.16340	-.08140
-4.285	.497	-.25600	-.25710	-.24980	-.23820	-.24700	.05190	.00370	-.03290	-.02760	.01280
-3.718	4.433	-.25470	-.25590	-.25310	-.24300	-.26320	.50020	.03370	-.25810	-.20530	.10640
-3.794	6.252	-.25660	-.26050	-.26030	-.24560	-.26860	.72200	.05020	-.36260	-.28480	.15270
	GRADIENT	.00042	.00075	.00293	.00044	-.00032	.10139	.00671	-.05543	-.04399	.02239

RUN NO. 1417/ 0 RN/L = 3.00 GRADIENT INTERVAL = -5.00/ 5.00

ALPHAO	BETAO	CP1	CP2	CP3	CP4	CPBV	RUDDER	CHR	CNVT	CBVT	CTVT
-.600	-7.077	-.27240	-.26920	-.28540	-.25200	-.28350	-.67240	-.04540	.37110	.28680	-.15170
-.575	-4.886	-.26830	-.26760	-.27380	-.25020	-.27560	-.45090	-.02910	.25070	.19840	-.10030
-.535	-.570	-.25420	-.25850	-.25090	-.24160	-.26120	-.07540	-.00070	.01890	.01040	-.00300
-.523	3.572	-.25150	-.25370	-.24400	-.23760	-.27030	.30520	.02790	-.19500	-.15850	.07880
-.529	5.754	-.26300	-.26350	-.25720	-.25130	-.27690	.54370	.04580	-.30970	-.24870	.13080
	GRADIENT	.00200	.00165	.00354	.00149	.00065	.08938	.00674	-.05270	-.04221	.02119

IA156A, AEDC PWT 16T-470, O T S W/SILTS (R8NFD4) (10 MAY 80)

REFERENCE DATA

SREF = 2690.0000 SQ.FT. XMRP = 976.0000 IN. XT
LREF = 1290.3000 INCHES YMRP = .0000 IN. YT
BREF = 1290.3000 INCHES ZMRP = 400.0000 IN. ZT
SCALE = .0200

PARAMETRIC DATA

IB-ELV = 8.000 OB-ELV = -2.000
BDFLAP = .000 SPDBRK = .000
RUDDER = .000 SILTS = 1.000
MACH = 1.550 RN/L = 3.200

RUN NO. 1418/ 0 RN/L = 3.00 GRADIENT INTERVAL = -5.00/ 5.00

ALPHAO	BETAO	CP1	CP2	CP3	CP4	CPBV	RUDDER	CHR	CNVT	CBVT	CTVT
4.174	-5.670	-.27630	-.27440	-.27960	-.26380	-.28320	-.42970	-.03650	.27430	.21510	-.10760
3.981	-3.537	-.26120	-.26420	-.25680	-.24960	-.25910	-.20600	-.01900	.15370	.12370	-.05860
3.707	.254	-.25270	-.25440	-.24810	-.23880	-.26160	-.00550	-.00050	.00440	-.00070	.00090
3.701	4.070	-.25570	-.25980	-.24840	-.24320	-.27110	.28310	.02480	-.17130	-.14350	.07110
3.631	6.106	-.26030	-.26220	-.25290	-.24860	-.27850	.50870	.04230	-.29030	-.23180	.11930
	GRADIENT	.00072	.00058	.00110	.00084	-.00158	.06431	.00576	-.04273	-.03513	.01705

IA156A, AEDC PWT 16T-470, O T S W/SILTS (R8NFD5) (10 MAY 80)

REFERENCE DATA

SREF = 2690.0000 SQ.FT. XMRP = 976.0000 IN. XT
LREF = 1290.3000 INCHES YMRP = .0000 IN. YT
BREF = 1290.3000 INCHES ZMRP = 400.0000 IN. ZT
SCALE = .0200

PARAMETRIC DATA

IB-ELV = 8.000 OB-ELV = -2.000
BDFLAP = .000 SPDBRK = .000
RUDDER = .000 SILTS = 1.000
MACH = 1.550 RN/L = 3.200

RUN NO. 1419/ 0 RN/L = 3.00 GRADIENT INTERVAL = -5.00/ 5.00

ALPHAO	BETAO	CP1	CP2	CP3	CP4	CPBV	RUDDER	CHR	CNVT	CBVT	CTVT
-8.336	-5.820	-.26610	-.26780	-.29820	-.25810	-.25740	-.58460	-.04080	.33220	.26170	-.13760
-8.337	-3.710	-.25950	-.26230	-.28660	-.24050	-.23650	-.32950	-.02240	.20380	.15990	-.07910
-8.188	.540	-.24840	-.25650	-.25650	-.24510	-.22140	.06620	.00490	-.03540	-.03070	.01540
-7.992	4.474	-.25100	-.25720	-.26030	-.24000	-.25160	.49930	.03510	-.25600	-.20600	.10560
-7.957	6.376	-.25750	-.26230	-.26780	-.24930	-.26150	.72860	.05160	-.36530	-.28890	.15410
	GRADIENT	.00106	.00063	.00327	.00005	-.00177	.10117	.00702	-.05619	-.04471	.02257

IA156A, AEDC PWT 16T-470, O T S W/SILTS (R8NFD6) (10 MAY 80)

REFERENCE DATA

SREF = 2690.0000 SQ.FT. XMRP = 976.0000 IN. XT
LREF = 1290.3000 INCHES YMRP = .0000 IN. YT
BREF = 1290.3000 INCHES ZMRP = 400.0000 IN. ZT
SCALE = .0200

PARAMETRIC DATA

IB-ELV = 10.000 OB-ELV = -2.000
BDFLAP = .000 SPDBRK = .000
RUDDER = .000 SILTS = 1.000
MACH = 1.150 RN/L = 3.500

RUN NO. 1432/ 0 RN/L = 3.50 GRADIENT INTERVAL = -5.00/ 5.00

ALPHAO	BETAO	CP1	CP2	CP3	CP4	CPBV	RUDDER	CHR	CNVT	CBVT	CTVT
-8.038	-5.907	-.37020	-.37350	-.37950	-.37140	-.39110	-.93740	-.06300	.35170	.27710	-.13690
-8.227	-3.794	-.36730	-.36840	-.35660	-.35270	-.37870	-.93740	-.06380	.21370	.16420	-.07660
-8.153	.354	-.33900	-.34390	-.32450	-.32520	-.34370	-.84040	-.05920	-.02540	-.02780	.01310
-7.957	4.313	-.33890	-.35140	-.32590	-.33240	-.36510	-.65490	-.04840	-.25030	-.20950	.10240
-7.971	6.241	-.34870	-.35830	-.33590	-.33750	-.38220	-.48250	-.03690	-.36250	-.29820	.15080
	GRADIENT	.00353	.00213	.00382	.00254	.00173	.03476	.00189	-.05724	-.04610	.02208

RUN NO. 1433/ 0 RN/L = 3.50 GRADIENT INTERVAL = -5.00/ 5.00

ALPHAO	BETAO	CP1	CP2	CP3	CP4	CPBV	RUDDER	CHR	CNVT	CBVT	CTVT
-6.187	-5.974	-.36640	-.36720	-.36950	-.35060	-.38540	-.93740	-.06250	.34110	.26910	-.13230
-6.100	-4.044	-.35280	-.35660	-.34680	-.33750	-.36100	-.93110	-.06270	.21580	.16620	-.07760
-6.207	.105	-.33300	-.34040	-.31550	-.32110	-.33440	-.85880	-.06030	-.01320	-.01740	.00790
-6.019	4.250	-.32830	-.34260	-.30940	-.31930	-.34130	-.63720	-.04750	-.24250	-.20040	.09750
-5.950	6.204	-.34790	-.35720	-.32680	-.33330	-.37160	-.53360	-.04090	-.35420	-.29140	.14670
	GRADIENT	.00295	.00169	.00451	.00219	.00238	.03543	.00183	-.05526	-.04420	.02111

RUN NO. 1434/ 0 RN/L = 3.50 GRADIENT INTERVAL = -5.00/ 5.00

ALPHAO	BETAO	CP1	CP2	CP3	CP4	CPBV	RUDDER	CHR	CNVT	CBVT	CTVT
-4.105	-6.088	-.36680	-.36680	-.36540	-.35270	-.38670	-.93740	-.06190	.33540	.26360	-.12870
-4.305	-3.979	-.34380	-.35430	-.33800	-.32940	-.35910	-.93710	-.06250	.20620	.15830	-.07350
-4.201	.370	-.32760	-.33800	-.30650	-.31540	-.32780	-.86160	-.06080	-.02010	-.02350	.01070
-3.751	4.297	-.32390	-.33650	-.29960	-.30960	-.32810	-.70850	-.05340	-.23460	-.19490	.09470
-3.849	6.117	-.33620	-.34700	-.31680	-.32080	-.35160	-.58120	-.04490	-.33860	-.27900	.14000
	GRADIENT	.00243	.00218	.00469	.00241	.00381	.02744	.00109	-.05324	-.04266	.02031

RUN NO. 1435/ 0 RN/L = 3.50 GRADIENT INTERVAL = -5.00/ 5.00

ALPHAO	BETAO	CP1	CP2	CP3	CP4	CPBV	RUDDER	CHR	CNVT	CBVT	CTVT
-.465	-7.059	-.36220	-.36450	-.35870	-.33930	-.38160	-.93740	-.06130	.37920	.29520	-.14380
-.441	-4.843	-.35030	-.35620	-.33660	-.32840	-.35960	-.93680	-.06130	.25050	.19540	-.09100
-.409	-.455	-.32720	-.33410	-.30060	-.31330	-.32260	-.90470	-.05890	.02590	.01240	-.00490
-.377	3.670	-.31960	-.32770	-.29370	-.30630	-.32460	-.86170	-.05590	-.18210	-.15340	.06930
-.377	5.843	-.32490	-.33330	-.30170	-.31070	-.33510	-.81310	-.05250	-.29110	-.24360	.11620
	GRADIENT	.00362	.00337	.00507	.00261	.00416	.00881	.00063	-.05082	-.04098	.01884

IA156A, AEDC PWT 16T-470, O T S W/SILTS (R8NFD6) (10 MAY 80)

REFERENCE DATA

SREF = 2690.0000 SQ.FT. XMRP = 976.0000 IN. XT
LREF = 1290.3000 INCHES YMRP = .0000 IN. YT
BREF = 1290.3000 INCHES ZMRP = 400.0000 IN. ZT
SCALE = .0200

PARAMETRIC DATA

IB-ELV = 10.000 OB-ELV = -2.000
BDFLAP = .000 SPDBRK = .000
RUDDER = .000 SILTS = 1.000
MACH = 1.150 RN/L = 3.500

RUN NO. 1436/ 0 RN/L = 3.50 GRADIENT INTERVAL = -5.00/ 5.00

ALPHAO	BETAO	CP1	CP2	CP3	CP4	CPBV	RUDDER	CHR	CNVT	CBVT	CTVT
3.986	-5.876	-.33510	-.33840	-.33040	-.32030	-.34980	-.85970	-.06440	.28470	.22460	-.10110
4.011	-3.800	-.33750	-.34360	-.32090	-.32350	-.34610	-.81170	-.06040	.17810	.13710	-.05640
3.888	.183	-.32940	-.33650	-.30920	-.31940	-.32650	-.83430	-.05870	.01070	.00030	.00150
3.833	3.991	-.31080	-.32140	-.28550	-.30090	-.31410	-.92030	-.06150	-.15790	-.13680	.05830
3.791	6.099	-.31700	-.32870	-.29020	-.30660	-.33900	-.88190	-.05810	-.27280	-.23050	.10660
	GRADIENT	.00342	.00284	.00453	.00289	.00411	-.01388	-.00014	-.04312	-.03515	.01472

IA156A, AEDC PWT 16T-470, O T S W/SILTS (R8NFD7) (10 MAY 80)

REFERENCE DATA

SREF = 2690.0000 SQ.FT. XMRP = 976.0000 IN. XT
LREF = 1290.3000 INCHES YMRP = .0000 IN. YT
BREF = 1290.3000 INCHES ZMRP = 400.0000 IN. ZT
SCALE = .0200

PARAMETRIC DATA

IB-ELV = 10.000 OB-ELV = -2.000
BDFLAP = .000 SPDBRK = .000
RUDDER = .000 SILTS = 1.000
MACH = 1.250 RN/L = 3.500

RUN NO. 1437/ 0 RN/L = 3.50 GRADIENT INTERVAL = -5.00/ 5.00

ALPHAO	BETAO	CP1	CP2	CP3	CP4	CPBV	RUDDER	CHR	CNVT	CBVT	CTVT
-8.206	-5.869	-.33510	-.32960	-.34190	-.32650	-.34490	-.93740	-.06080	.34480	.26970	-.13600
-8.220	-3.786	-.32420	-.32930	-.32960	-.30580	-.33680	-.93740	-.06150	.20980	.16050	-.07580
-8.123	.183	-.31030	-.31440	-.30190	-.29510	-.32010	-.83200	-.05650	-.02120	-.02490	.01280
-7.968	4.350	-.31860	-.32250	-.30690	-.30180	-.34430	-.53470	-.03850	-.25780	-.21470	.10720
-7.961	6.231	-.32430	-.32920	-.31950	-.31100	-.34780	-.30300	-.02340	-.37080	-.30290	.15700
	GRADIENT	.00067	.00081	.00276	.00047	-.00096	.04968	.00284	-.05747	-.04611	.02249

RUN NO. 1438/ 0 RN/L = 3.50 GRADIENT INTERVAL = -5.00/ 5.00

ALPHAO	BETAO	CP1	CP2	CP3	CP4	CPBV	RUDDER	CHR	CNVT	CBVT	CTVT
-6.190	-5.956	-.32660	-.33100	-.34150	-.31870	-.35000	-.93740	-.06030	.33760	.26510	-.13350
-6.130	-4.040	-.32370	-.32690	-.32200	-.30710	-.33610	-.93740	-.06100	.21220	.16350	-.07740
-6.210	.123	-.30340	-.31320	-.29650	-.29510	-.31480	-.82190	-.05560	-.02030	-.02340	.01170
-5.993	4.254	-.30750	-.31420	-.29070	-.29300	-.32920	-.55000	-.04000	-.24770	-.20470	.10160
-5.966	6.246	-.32020	-.32560	-.31080	-.31050	-.34240	-.31970	-.02500	-.36620	-.29830	.15440
	GRADIENT	.00196	.00153	.00378	.00170	.00084	.04668	.00253	-.05545	-.04439	.02158

IA156A, AEDC PWT 16T-470, O T S W/SILTS (R8NFD7) (10 MAY 80)

REFERENCE DATA

SREF = 2690.0000 SQ.FT. XMRP = 976.0000 IN. XT
LREF = 1290.3000 INCHES YMRP = .0000 IN. YT
BREF = 1290.3000 INCHES ZMRP = 400.0000 IN. ZT
SCALE = .0200

PARAMETRIC DATA

IB-ELV = 10.000 OB-ELV = -2.000
BDFLAP = .000 SPDBRK = .000
RUDDER = .000 SILTS = 1.000
MACH = 1.250 RN/L = 3.500

RUN NO. 1439/ 0 RN/L = 3.50 GRADIENT INTERVAL = -5.00/ 5.00

ALPHAO	BETAO	CP1	CP2	CP3	CP4	CPBV	RUDDER	CHR	CNVT	CBVT	CTVT
-4.099	-6.084	-.32920	-.33370	-.33750	-.31110	-.35190	-.93740	-.05970	.33250	.26060	-.13080
-4.302	-3.965	-.31990	-.32670	-.31800	-.30140	-.33420	-.93740	-.06020	.20080	.15400	-.07250
4.205	.380	-.30690	-.31230	-.28910	-.29010	-.30860	-.85590	-.05820	-.02730	-.02920	.01410
-3.753	4.301	-.30330	-.31110	-.27960	-.28740	-.31620	-.58400	-.04300	-.23910	-.19800	.09850
-3.869	6.159	-.30890	-.31990	-.29840	-.29860	-.33640	-.39770	-.03080	-.34500	-.28300	.14600
	GRADIENT	.00203	.00191	.00468	.00171	.00224	.04232	.00205	-.05321	-.04258	.02067

RUN NO. 1440/ 0 RN/L = 3.50 GRADIENT INTERVAL = -5.00/ 5.00

ALPHAO	BETAO	CP1	CP2	CP3	CP4	CPBV	RUDDER	CHR	CNVT	CBVT	CTVT
-.487	-7.095	-.33500	-.33340	-.33250	-.31960	-.35220	-.93740	-.05920	.37200	.29160	-.14710
-.460	-4.831	-.32310	-.32450	-.31770	-.30560	-.33380	-.93740	-.05910	.24530	.19120	-.09190
-.418	-.484	-.29980	-.30620	-.28630	-.28650	-.30410	-.89960	-.05650	.02280	.00900	-.00250
-.391	3.669	-.29440	-.30160	-.27090	-.27950	-.29920	-.73430	-.04530	-.18280	-.15350	.07260
-.399	5.848	-.30140	-.30910	-.27840	-.28530	-.31540	-.58770	-.03540	-.29240	-.24470	.12200
	GRADIENT	.00339	.00271	.00552	.00308	.00409	.02377	.00162	-.05037	-.04056	.01936

RUN NO. 1441/ 0 RN/L = 3.50 GRADIENT INTERVAL = -5.00/ 5.00

ALPHAO	BETAO	CP1	CP2	CP3	CP4	CPBV	RUDDER	CHR	CNVT	CBVT	CTVT
3.994	-5.859	-.31220	-.31530	-.30570	-.29660	-.32700	-.93740	-.06740	.28560	.22570	-.10700
4.009	-3.789	-.31080	-.31530	-.29550	-.29090	-.31280	-.93160	-.06640	.17930	.13780	-.06010
3.884	.192	-.30570	-.31040	-.28940	-.29180	-.30150	-.87700	-.05940	.00450	-.00420	.00250
3.812	3.991	-.29370	-.30560	-.26840	-.28030	-.29830	-.79650	-.05090	-.17360	-.14710	.06700
3.781	6.115	-.29510	-.30130	-.27020	-.28030	-.29920	-.70170	-.04390	-.27970	-.23390	.11410
	GRADIENT	.00219	.00125	.00347	.00135	.00187	.01733	.00199	-.04535	-.03661	.01633

IA156A, AEDC PWT 16T-470, O T S W/SILTS (R8NFD8) (10 MAY 80)

REFERENCE DATA

SREF = 2690.0000 SQ.FT. XMRP = 976.0000 IN. XT
LREF = 1290.3000 INCHES YMRP = .0000 IN. YT
BREF = 1290.3000 INCHES ZMRP = 400.0000 IN. ZT
SCALE = .0200

PARAMETRIC DATA

IB-ELV = 10.000 OB-ELV = -2.000
BDFLAP = .000 SPDBRK = .000
RUDDER = .000 SILTS = 1.000
MACH = 1.400 RN/L = 3.500

RUN NO. 1442/ 0 RN/L = 3.00 GRADIENT INTERVAL = -5.00/ 5.00

ALPHAO	BETAO	CP1	CP2	CP3	CP4	CPBV	RUDDER	CHR	CNVT	CBVT	CTVT
-8.250	-5.867	-.30830	-.30330	-.32560	-.29270	-.30600	-.93740	-.06850	.35200	.27360	-.14190
-8.255	-3.766	-.29170	-.29690	-.31650	-.28220	-.28710	-.93740	-.06940	.21890	.16790	-.08200
-8.143	.441	-.27860	-.28480	-.27810	-.26560	-.27020	-.87610	-.06730	-.02590	-.02990	.01590
-7.980	4.369	-.27620	-.28390	-.27870	-.26880	-.29860	-.51340	-.04170	-.25640	-.21390	.11000
-7.971	6.295	-.29120	-.29250	-.29540	-.27780	-.30710	-.29880	-.02600	-.37250	-.30220	.16050
	GRADIENT	.00192	.00161	.00470	.00167	-.00135	.05168	.00337	-.05842	-.04693	.02360

RUN NO. 1443/ 0 RN/L = 3.00 GRADIENT INTERVAL = -5.00/ 5.00

ALPHAO	BETAO	CP1	CP2	CP3	CP4	CPBV	RUDDER	CHR	CNVT	CBVT	CTVT
-6.241	-5.956	-.29860	-.29880	-.32460	-.27720	-.30780	-.93740	-.06780	.34830	.27150	-.14100
-6.180	-4.023	-.29350	-.29730	-.30790	-.28050	-.29710	-.93740	-.06880	.22570	.17420	-.08510
-6.214	.163	-.27880	-.28410	-.27480	-.26440	-.28170	-.90240	-.06880	-.01490	-.02050	.01150
-6.015	4.296	-.27790	-.28610	-.27580	-.26830	-.30500	-.51760	-.04260	-.25240	-.20910	.10740
-5.715	6.376	-.28670	-.28760	-.28590	-.27780	-.30590	-.29970	-.02670	-.37640	-.30300	.16120
	GRADIENT	.00188	.00135	.00387	.00147	-.00094	.05038	.00314	-.05748	-.04608	.02314

RUN NO. 1444/ 0 RN/L = 3.00 GRADIENT INTERVAL = -5.00/ 5.00

ALPHAO	BETAO	CP1	CP2	CP3	CP4	CPBV	RUDDER	CHR	CNVT	CBVT	CTVT
-4.136	-6.072	-.30240	-.29990	-.31440	-.28470	-.31520	-.93740	-.06740	.34340	.26790	-.13910
-4.348	-3.959	-.29820	-.29240	-.29770	-.27060	-.29400	-.93740	-.06810	.21560	.16580	-.08070
-4.211	.422	-.27740	-.28350	-.27030	-.26220	-.28600	-.88760	-.06810	-.02530	-.02900	.01570
-3.760	4.343	-.27660	-.28240	-.26840	-.26290	-.30060	-.54380	-.04540	-.25010	-.20600	.10560
-3.823	6.170	-.28220	-.28750	-.28200	-.27290	-.30740	-.33870	-.03020	-.35910	-.29120	.15540
	GRADIENT	.00142	.00122	.00358	.00095	-.00074	.04671	.00268	-.05607	-.04478	.02243

RUN NO. 1445/ 0 RN/L = 3.00 GRADIENT INTERVAL = -5.00/ 5.00

ALPHAO	BETAO	CP1	CP2	CP3	CP4	CPBV	RUDDER	CHR	CNVT	CBVT	CTVT
-.508	-6.973	-.30460	-.30370	-.30700	-.28530	-.31990	-.93740	-.06670	.37560	.28870	-.14990
-.475	-4.828	-.29190	-.29140	-.29320	-.27570	-.30380	-.93740	-.06670	.24700	.19260	-.09470
-.432	-.493	-.27600	-.28180	-.27050	-.26450	-.28860	-.93740	-.06660	.02440	.00940	-.00240
-.415	3.629	-.27110	-.27640	-.25800	-.25860	-.29580	-.74110	-.05180	-.18090	-.15230	.07370
-.423	5.806	-.28340	-.28740	-.27400	-.27100	-.30430	-.53020	-.03550	-.29740	-.24620	.12740
	GRADIENT	.00247	.00178	.00417	.00203	.00097	.02301	.00175	-.05061	-.04080	.01993

IA156A, AEDC PWT 16T-470, O T S W/SILTS (R8NFD8) (10 MAY 80)

REFERENCE DATA

SREF = 2690.0000 SQ.FT. XMRP = 976.0000 IN. XT
LREF = 1290.3000 INCHES YMRP = .0000 IN. YT
BREF = 1290.3000 INCHES ZMRP = 400.0000 IN. ZT
SCALE = .0200

PARAMETRIC DATA

IB-ELV = 10.000 OB-ELV = -2.000
BDFLAP = .000 SPDBRK = .000
RUDDER = .000 SILTS = 1.000
MACH = 1.400 RN/L = 3.500

RUN NO. 1446/ 0 RN/L = 3.00 GRADIENT INTERVAL = -5.00/ 5.00

ALPHAO	BETAO	CP1	CP2	CP3	CP4	CPBV	RUDDER	CHR	CNVT	CBVT	CTVT
4.022	-5.839	-.29070	-.28970	-.28500	-.27290	-.30300	-.93740	-.07580	.27510	.21450	-.10470
4.000	-3.722	-.27940	-.28500	-.26660	-.26610	-.28640	-.93740	-.07540	.16840	.12880	-.05760
3.874	.227	-.27710	-.27870	-.26720	-.26320	-.27940	-.91090	-.06960	.00170	-.00790	.00520
3.761	4.009	-.27670	-.28270	-.25860	-.26280	-.28930	-.73320	-.05260	-.17490	-.14690	.06940
3.736	6.121	-.27920	-.28310	-.26180	-.26570	-.29490	-.57130	-.03950	-.28130	-.23130	.11690
	GRADIENT	.00035	.00031	.00103	.00043	-.00036	.02627	.00294	-.04439	-.03566	.01642

IA156A, AEDC PWT 16T-470, O T S W/SILTS (R8NFD9) (10 MAY 80)

REFERENCE DATA

SREF = 2690.0000 SQ.FT. XMRP = 976.0000 IN. XT
LREF = 1290.3000 INCHES YMRP = .0000 IN. YT
BREF = 1290.3000 INCHES ZMRP = 400.0000 IN. ZT
SCALE = .0200

PARAMETRIC DATA

IB-ELV = 10.000 OB-ELV = -2.000
BDFLAP = .000 SPDBRK = .000
RUDDER = .000 SILTS = 1.000
MACH = 1.550 RN/L = 3.200

RUN NO. 1447/ 0 RN/L = 3.00 GRADIENT INTERVAL = -5.00/ 5.00

ALPHAO	BETAO	CP1	CP2	CP3	CP4	CPBV	RUDDER	CHR	CNVT	CBVT	CTVT
-8.341	-5.829	-.27660	-.27260	-.29740	-.27380	-.26160	-.93740	-.06720	.33800	.26190	-.13730
-8.341	-3.718	-.26620	-.26830	-.29250	-.24370	-.24360	-.93740	-.06800	.20980	.16080	-.07930
-8.201	.507	-.25340	-.26090	-.25910	-.24240	-.21990	-.87950	-.06610	-.02580	-.02750	.01420
-7.997	4.485	-.25480	-.25910	-.26340	-.23990	-.25050	-.50520	-.04020	-.24700	-.20370	.10490
-7.962	6.384	-.26260	-.26790	-.27460	-.25560	-.26550	-.27610	-.02380	-.35640	-.28670	.15340
	GRADIENT	.00141	.00113	.00359	.00046	-.00077	.05229	.00336	-.05569	-.04444	.02245

RUN NO. 1448/ 0 RN/L = 3.00 GRADIENT INTERVAL = -5.00/ 5.00

ALPHAO	BETAO	CP1	CP2	CP3	CP4	CPBV	RUDDER	CHR	CNVT	CBVT	CTVT
-6.352	-5.969	-.26980	-.27260	-.31000	-.25140	-.26990	-.93740	-.06660	.34480	.26610	-.13980
-6.254	-3.972	-.26080	-.26380	-.28610	-.24330	-.25000	-.93740	-.06720	.21940	.16940	-.08390
-6.281	.234	-.25230	-.25920	-.25560	-.24010	-.22890	-.90050	-.06750	-.01620	-.01890	.00980
-6.011	4.388	-.25360	-.25840	-.26000	-.24070	-.25840	-.50060	-.04040	-.24630	-.20090	.10370
-5.699	6.475	-.26740	-.26490	-.26610	-.25380	-.27170	-.25170	-.02260	-.36530	-.29060	.15600
	GRADIENT	.00086	.00065	.00313	.00031	-.00099	.05215	.00320	-.05570	-.04429	.02244

IA156A, AEDC PWT 16T-470, O T S W/SILTS (R8NFD9) (10 MAY 80)

REFERENCE DATA

SREF = 2690.0000 SQ.FT. XMRP = 976.0000 IN. XT
LREF = 1290.3000 INCHES YMRP = .0000 IN. YT
BREF = 1290.3000 INCHES ZMRP = 400.0000 IN. ZT
SCALE = .0200

PARAMETRIC DATA

IB-ELV = 10.000 OB-ELV = -2.000
BDFLAP = .000 SPDBRK = .000
RUDDER = .000 SILTS = 1.000
MACH = 1.550 RN/L = 3.200

RUN NO. 1449/ 0 RN/L = 3.00 GRADIENT INTERVAL = -5.00/ 5.00

ALPHAO	BETAO	CP1	CP2	CP3	CP4	CPBV	RUDDER	CHR	CNVT	CBVT	CTVT
-4.424	-6.026	-.27480	-.27560	-.30620	-.25550	-.27940	-.93740	-.06630	.34300	.26370	-.13810
-4.414	-3.939	-.26360	-.26690	-.28130	-.24740	-.26020	-.93740	-.06670	.21250	.16420	-.08150
-4.287	.512	-.25520	-.26040	-.25200	-.24040	-.24670	-.89810	-.06770	-.02650	-.02680	.01290
-3.740	4.453	-.25830	-.26240	-.25930	-.24750	-.26440	-.49550	-.04090	-.24880	-.20230	.10530
-3.791	6.260	-.25940	-.26440	-.26410	-.24770	-.27100	-.26920	-.02440	-.35490	-.28310	.15240
	GRADIENT	.00066	.00056	.00271	.00002	-.00042	.05172	.00300	-.05494	-.04366	.02224

RUN NO. 1450/ 0 RN/L = 3.00 GRADIENT INTERVAL = -5.00/ 5.00

ALPHAO	BETAO	CP1	CP2	CP3	CP4	CPBV	RUDDER	CHR	CNVT	CBVT	CTVT
-.592	-7.039	-.27780	-.27650	-.29740	-.26520	-.29380	-.93740	-.06540	.38210	.29050	-.15320
-.569	-4.878	-.26960	-.26860	-.27830	-.25540	-.27460	-.93740	-.06540	.25330	.19610	-.09860
-.531	-.603	-.25450	-.25890	-.25140	-.24110	-.25800	-.93740	-.06530	.02790	.01320	-.00400
-.520	3.619	-.25670	-.26080	-.24690	-.24590	-.27390	-.68990	-.04680	-.18990	-.15890	.07940
-.523	5.747	-.26440	-.26860	-.26110	-.25410	-.28080	-.44730	-.02860	-.30530	-.24930	.13180
	GRADIENT	.00152	.00092	.00370	.00112	.00009	.02907	.00218	-.05217	-.04178	.02095

RUN NO. 1451/ 0 RN/L = 3.00 GRADIENT INTERVAL = -5.00/ 5.00

ALPHAO	BETAO	CP1	CP2	CP3	CP4	CPBV	RUDDER	CHR	CNVT	CBVT	CTVT
4.053	-5.739	-.27530	-.27460	-.28510	-.26320	-.28470	-.93740	-.07460	.28440	.21910	-.10960
4.017	-3.533	-.26750	-.26970	-.26420	-.25460	-.26290	-.93740	-.07410	.16310	.12740	-.06020
3.669	.302	-.25630	-.26060	-.25220	-.24300	-.26780	-.91450	-.06880	.00740	-.00220	.00190
3.689	4.100	-.25830	-.26210	-.25120	-.24760	-.27120	-.72160	-.05070	-.16570	-.14230	.07090
3.621	6.097	-.26600	-.26940	-.25930	-.25520	-.28350	-.49330	-.03290	-.28640	-.23240	.12010
	GRADIENT	.00121	.00100	.00171	.00092	-.00109	.02824	.00306	-.04308	-.03534	.01718

IA156A, AEDC PWT 16T-470, O T S W/SILTS (R8NFE0) (10 MAY 80)

REFERENCE DATA

SREF = 2690.0000 SQ.FT. XMRP = 976.0000 IN. XT
LREF = 1290.3000 INCHES YMRP = .0000 IN. YT
BREF = 1290.3000 INCHES ZMRP = 400.0000 IN. ZT
SCALE = .0200

PARAMETRIC DATA

IB-ELV = 10.000 OB-ELV = -7.000
BDFLAP = .000 SPDBRK = .000
RUDDER = .000 SILTS = 1.000
MACH = 1.400 RN/L = 3.500

RUN NO. 1456/ 0 RN/L = 3.00 GRADIENT INTERVAL = -5.00/ 5.00

ALPHAO	BETAO	CP1	CP2	CP3	CP4	CPBV	RUDDER	CHR	CNVT	CBVT	CTVT
-8.242	-5.844	-.30120	-.30400	-.33460	-.29420	-.30790	-.52420	-.03700	.33910	.26980	-.14060
-8.256	-3.761	-.28840	-.29470	-.31230	-.27070	-.28610	-.28990	-.01980	.20700	.16380	-.08030
-8.139	.453	-.27610	-.28440	-.27830	-.26270	-.27270	.06630	.00490	-.03410	-.03070	.01550
-7.986	4.388	-.28030	-.28940	-.28420	-.27040	-.30380	.46050	.03280	-.26530	-.21530	.10980
-7.939	6.270	-.28090	-.28990	-.29010	-.26980	-.30560	.66820	.04800	-.37910	-.30170	.15920
	GRADIENT	.00102	.00067	.00350	.00006	-.00211	.09200	.00645	-.05795	-.04652	.02332

RUN NO. 1457/ 0 RN/L = 3.00 GRADIENT INTERVAL = -5.00/ 5.00

ALPHAO	BETAO	CP1	CP2	CP3	CP4	CPBV	RUDDER	CHR	CNVT	CBVT	CTVT
-6.246	-5.958	-.29900	-.30250	-.32760	-.27980	-.31370	-.51170	-.03550	.34480	.27430	-.14310
-6.159	-3.997	-.28900	-.29440	-.30630	-.27270	-.29520	-.30670	-.02040	.21720	.17330	-.08540
-6.233	.171	-.27470	-.28280	-.27300	-.26180	-.28220	.05280	.00410	-.02430	-.02220	.01140
-5.970	4.276	-.27640	-.28450	-.27320	-.26540	-.30350	.45510	.03190	-.25920	-.20880	.10620
-5.944	6.275	-.28430	-.29080	-.28830	-.27390	-.31000	.65590	.04650	-.38040	-.30140	.15920
	GRADIENT	.00153	.00120	.00401	.00089	-.00099	.09207	.00632	-.05759	-.04619	.02316

RUN NO. 1458/ 0 RN/L = 3.00 GRADIENT INTERVAL = -5.00/ 5.00

ALPHAO	BETAO	CP1	CP2	CP3	CP4	CPBV	RUDDER	CHR	CNVT	CBVT	CTVT
-4.124	-6.083	-.29520	-.29790	-.31250	-.28000	-.31420	-.49710	-.03360	.33730	.26840	-.13990
-4.343	-3.951	-.28680	-.29260	-.29560	-.27070	-.29630	-.28230	-.01790	.20760	.16530	-.08120
-4.224	.410	-.27370	-.28300	-.26830	-.26190	-.28630	.07610	.00560	-.03310	-.02950	.01520
-3.733	4.330	-.27430	-.28110	-.26680	-.26330	-.30060	.43600	.02950	-.25410	-.20380	.10370
-3.839	6.188	-.28010	-.28540	-.28010	-.27010	-.30490	.63930	.04460	-.36650	-.29110	.15420
	GRADIENT	.00154	.00140	.00353	.00091	-.00047	.08665	.00572	-.05574	-.04457	.02232

RUN NO. 1459/ 0 RN/L = 3.00 GRADIENT INTERVAL = -5.00/ 5.00

ALPHAO	BETAO	CP1	CP2	CP3	CP4	CPBV	RUDDER	CHR	CNVT	CBVT	CTVT
-.517	-6.972	-.30200	-.30490	-.30690	-.28380	-.32080	-.56750	-.03840	.36710	.28810	-.15050
-.485	-4.840	-.28720	-.28990	-.29340	-.27220	-.30270	-.35370	-.02200	.23960	.19280	-.09580
-.440	-.487	-.27470	-.28090	-.26990	-.26420	-.28850	-.06190	.00040	.01630	.00890	-.00300
-.422	3.622	-.27190	-.27770	-.25960	-.26030	-.29660	.24930	.02420	-.18770	-.15220	.07300
-.437	5.801	-.28180	-.28800	-.27210	-.27040	-.30310	.45990	.04020	-.30520	-.24690	.12710
	GRADIENT	.00182	.00145	.00401	.00141	.00075	.07121	.00546	-.05050	-.04078	.01996

IA156A, AEDC PWT 16T-470, O T S W/SILTS (R8NFE0) (10 MAY 80)

REFERENCE DATA

SREF = 2690.0000 SQ.FT. XMRP = 976.0000 IN. XT
LREF = 1290.3000 INCHES YMRP = .0000 IN. YT
BREF = 1290.3000 INCHES ZMRP = 400.0000 IN. ZT
SCALE = .0200

PARAMETRIC DATA

IB-ELV = 10.000 OB-ELV = -7.000
BDFLAP = .000 SPDBRK = .000
RUDDER = .000 SILTS = 1.000
MACH = 1.400 RN/L = 3.500

RUN NO. 1460/ 0 RN/L = 3.00 GRADIENT INTERVAL = -5.00/ 5.00

ALPHAO	BETAO	CP1	CP2	CP3	CP4	CPBV	RUDDER	CHR	CNVT	CBVT	CTVT
4.136	-5.767	-.28970	-.29010	-.28570	-.27390	-.30200	-.31670	-.02850	.26690	.21300	-.10420
4.003	-3.658	-.27830	-.28460	-.26470	-.26600	-.28550	-.15500	-.01540	.15590	.12430	-.05590
3.743	.171	-.28010	-.28180	-.27060	-.26460	-.28370	.04030	.00300	-.00710	-.00960	.00550
3.776	4.050	-.27280	-.27820	-.25670	-.26090	-.28740	.25650	.02310	-.18700	-.15080	.07050
3.733	6.110	-.28110	-.28410	-.26460	-.26850	-.29680	.43280	.03750	-.29050	-.23340	.11750
	GRADIENT	.00072	.00083	.00104	.00066	-.00025	.05339	.00500	-.04449	-.03569	.01640

IA156A, AEDC PWT 16T-470, O T S W/SILTS (R8NFE1) (10 MAY 80)

REFERENCE DATA

SREF = 2690.0000 SQ.FT. XMRP = 976.0000 IN. XT
LREF = 1290.3000 INCHES YMRP = .0000 IN. YT
BREF = 1290.3000 INCHES ZMRP = 400.0000 IN. ZT
SCALE = .0200

PARAMETRIC DATA

IB-ELV = 10.000 OB-ELV = -7.000
BDFLAP = .000 SPDBRK = .000
RUDDER = .000 SILTS = 1.000
MACH = 1.550 RN/L = 3.200

RUN NO. 1461/ 0 RN/L = 3.00 GRADIENT INTERVAL = -5.00/ 5.00

ALPHAO	BETAO	CP1	CP2	CP3	CP4	CPBV	RUDDER	CHR	CNVT	CBVT	CTVT
-8.270	-5.810	-.26980	-.26770	-.29350	-.26120	-.25550	-.52230	-.03600	.33160	.26100	-.13730
-8.315	-3.812	-.26590	-.26920	-.29560	-.24760	-.24470	-.30920	-.02090	.21210	.16690	-.08300
-8.210	.409	-.25990	-.26080	-.25950	-.23890	-.22190	.06360	.00470	-.02780	-.02450	.01250
-8.018	4.364	-.25780	-.26340	-.26690	-.24390	-.25500	.49390	.03450	-.24930	-.20060	.10250
-7.967	6.384	-.26130	-.26570	-.27320	-.24970	-.26360	.72950	.05170	-.36420	-.28800	.15340
	GRADIENT	.00100	.00072	.00357	.00047	-.00113	.09810	.00677	-.05643	-.04495	.02269

RUN NO. 1462/ 0 RN/L = 3.00 GRADIENT INTERVAL = -5.00/ 5.00

ALPHAO	BETAO	CP1	CP2	CP3	CP4	CPBV	RUDDER	CHR	CNVT	CBVT	CTVT
-6.355	-5.967	-.26760	-.27040	-.30490	-.25110	-.26750	-.57690	-.03990	.33570	.26370	-.13870
-6.251	-3.988	-.26350	-.26650	-.28960	-.24500	-.25240	-.32940	-.02180	.21470	.17030	-.08480
-6.282	.238	-.25370	-.26110	-.25630	-.23940	-.22940	.05890	.00450	-.02310	-.01980	.00970
-6.006	4.395	-.25530	-.25980	-.26190	-.24250	-.26020	.50410	.03480	-.25430	-.20280	.10400
-5.825	6.502	-.25940	-.26290	-.26660	-.24780	-.26970	.75670	.05310	-.37380	-.29300	.15680
	GRADIENT	.00098	.00090	.00332	.00030	-.00091	.09941	.00675	-.05595	-.04451	.02252

IA156A, AEDC PWT 16T-470, O T S W/SILTS (R8NFE1) (10 MAY 80)

REFERENCE DATA

SREF = 2690.0000 SQ.FT. XMRP = 976.0000 IN. XT
LREF = 1290.3000 INCHES YMRP = .0000 IN. YT
BREF = 1290.3000 INCHES ZMRP = 400.0000 IN. ZT
SCALE = .0200

PARAMETRIC DATA

IB-ELV = 10.000 OB-ELV = -7.000
BDFLAP = .000 SPDBRK = .000
RUDDER = .000 SILTS = 1.000
MACH = 1.550 RN/L = 3.200

RUN NO. 1463/ 0 RN/L = 3.00 GRADIENT INTERVAL = -5.00/ 5.00

ALPHAO	BETAO	CP1	CP2	CP3	CP4	CPBV	RUDDER	CHR	CNVT	CBVT	CTVT
-4.320	-6.108	-.26920	-.27200	-.30340	-.25340	-.27680	-.58550	-.03940	.33480	.26120	-.13710
-4.449	-3.954	-.26260	-.26720	-.28060	-.24800	-.26050	-.32620	-.02080	.20700	.16410	-.08180
-4.278	.503	-.25290	-.25840	-.24750	-.23800	-.24560	.07570	.00550	-.03450	-.02870	.01350
-3.731	4.446	-.25860	-.26250	-.25930	-.24680	-.26570	.50680	.03420	-.25900	-.20590	.10650
-3.795	6.261	-.25880	-.26260	-.26360	-.24710	-.27110	.73500	.05100	-.36200	-.28400	.15200
	GRADIENT	.00051	.00059	.00264	.00019	-.00053	.09898	.00653	-.05545	-.04403	.02240

RUN NO. 1464/ 0 RN/L = 3.00 GRADIENT INTERVAL = -5.00/ 5.00

ALPHAO	BETAO	CP1	CP2	CP3	CP4	CPBV	RUDDER	CHR	CNVT	CBVT	CTVT
-.608	-7.094	-.27630	-.27570	-.30140	-.25770	-.29220	-.66370	-.04490	.37460	.28950	-.15330
-.577	-4.908	-.26580	-.26900	-.27730	-.25180	-.27540	-.41810	-.02640	.25000	.19790	-.09990
-.543	-.585	-.25340	-.25790	-.25050	-.23910	-.25530	-.04660	.00150	.01890	.01060	-.00290
-.530	3.568	-.25580	-.25820	-.24560	-.24410	-.27340	.31620	.02870	-.19790	-.16020	.07950
-.535	5.744	-.26370	-.26740	-.26140	-.25420	-.27980	.55650	.04670	-.31230	-.25050	.13190
	GRADIENT	.00119	.00128	.00376	.00092	.00027	.08663	.00650	-.05285	-.04226	.02117

RUN NO. 1465/ 0 RN/L = 3.00 GRADIENT INTERVAL = -5.00/ 5.00

ALPHAO	BETAO	CP1	CP2	CP3	CP4	CPBV	RUDDER	CHR	CNVT	CBVT	CTVT
4.171	-5.664	-.27650	-.27590	-.28770	-.26040	-.28440	-.39860	-.03400	.27250	.21450	-.10740
3.998	-3.552	-.26640	-.26820	-.26290	-.25310	-.26410	-.19620	-.01820	.15540	.12570	-.05960
3.682	.256	-.25600	-.26090	-.25250	-.24360	-.26480	.00750	.00050	.00160	-.00210	.00150
3.668	4.052	-.25740	-.26120	-.24910	-.24600	-.27180	.28620	.02500	-.17650	-.14650	.07260
3.634	6.107	-.26620	-.26920	-.25900	-.25470	-.28460	.50630	.04220	-.29550	-.23540	.12100
	GRADIENT	.00118	.00092	.00182	.00093	-.00101	.06343	.00568	-.04365	-.03580	.01738

IA156A, AEDC PWT 16T-470, O T S W/SILTS (R8NFE2) (10 MAY 80)

REFERENCE DATA

SREF = 2690.0000 SQ.FT. XMRP = 976.0000 IN. XT
LREF = 1290.3000 INCHES YMRP = .0000 IN. YT
BREF = 1290.3000 INCHES ZMRP = 400.0000 IN. ZT
SCALE = .0200

PARAMETRIC DATA

IB-ELV = 12.000 OB-ELV = -7.000
BDFLAP = .000 SPDBRK = .000
RUDDER = .000 SILTS = 1.000
MACH = 1.400 RN/L = 3.500

RUN NO. 1469/ 0 RN/L = 3.01 GRADIENT INTERVAL = -5.00/ 5.00

ALPHAO	BETAO	CP1	CP2	CP3	CP4	CPBV	RUDDER	CHR	CNVT	CBVT	CTVT
-8.220	-5.866	-.30910	-.30570	-.33730	-.29390	-.30780	-.53440	-.03780	.34320	.27280	-.14220
-8.243	-3.806	-.29250	-.29980	-.31870	-.28380	-.28950	-.30200	-.02070	.21300	.16960	-.08370
-8.148	.314	-.28050	-.28970	-.28010	-.26670	-.27050	.06350	.00480	-.02680	-.02420	.01230
-7.969	4.331	-.28220	-.29010	-.28320	-.27160	-.30370	.47950	.03430	-.26650	-.21550	.10990
-7.958	6.275	-.28830	-.29640	-.29690	-.27600	-.31090	.68530	.04930	-.38210	-.30330	.16000
	GRADIENT	.00127	.00120	.00438	.00151	-.00172	.09602	.00676	-.05893	-.04733	.02379

RUN NO. 1470/ 0 RN/L = 3.00 GRADIENT INTERVAL = -5.00/ 5.00

ALPHAO	BETAO	CP1	CP2	CP3	CP4	CPBV	RUDDER	CHR	CNVT	CBVT	CTVT
-6.243	-5.961	-.30030	-.30390	-.32980	-.28110	-.31260	-.52450	-.03640	.34220	.27270	-.14240
-6.154	-4.001	-.29190	-.29870	-.30830	-.27450	-.29740	-.30980	-.02070	.21720	.17360	-.08570
-6.224	.176	-.28050	-.28830	-.27780	-.26580	-.28500	.06330	.00490	-.02620	-.02290	.01160
-6.003	4.295	-.28100	-.28870	-.27780	-.27010	-.30670	.50630	.03580	-.26090	-.20980	.10680
-5.780	6.389	-.28890	-.29490	-.29190	-.27920	-.31340	.68450	.04860	-.38490	-.30370	.16080
	GRADIENT	.00132	.00121	.00369	.00053	-.00111	.09836	.00681	-.05764	-.04622	.02321

RUN NO. 1471/ 0 RN/L = 3.00 GRADIENT INTERVAL = -5.00/ 5.00

ALPHAO	BETAO	CP1	CP2	CP3	CP4	CPBV	RUDDER	CHR	CNVT	CBVT	CTVT
-4.149	-6.089	-.30220	-.30520	-.31850	-.28400	-.31860	-.52000	-.03540	.33850	.26960	-.14050
-4.346	-3.957	-.29880	-.29530	-.29870	-.27180	-.29630	-.27970	-.01770	.20600	.16410	-.08040
-4.209	.412	-.27760	-.28650	-.26920	-.26370	-.28850	.08790	.00650	-.03270	-.02870	.01510
-3.744	4.347	-.27890	-.28590	-.26960	-.26630	-.30620	.45710	.03120	-.25970	-.20740	.10560
-3.839	6.181	-.28680	-.29150	-.28410	-.27470	-.31140	.65440	.04580	-.36820	-.29200	.15480
	GRADIENT	.00122	.00115	.00356	.00068	-.00114	.08864	.00588	-.05605	-.04473	.02239

RUN NO. 1472/ 0 RN/L = 2.99 GRADIENT INTERVAL = -5.00/ 5.00

ALPHAO	BETAO	CP1	CP2	CP3	CP4	CPBV	RUDDER	CHR	CNVT	CBVT	CTVT
-.513	-6.969	-.30580	-.30600	-.31210	-.28730	-.32200	-.59590	-.04040	.36360	.28620	-.14950
-.482	-4.838	-.29370	-.29680	-.29740	-.27770	-.30920	-.35330	-.02210	.23980	.19350	-.09620
-.437	-.502	-.27760	-.28410	-.27330	-.26580	-.29210	-.06210	.00030	.01570	.00900	-.00310
-.416	3.637	-.27770	-.28320	-.26510	-.26550	-.30350	.25620	.02490	-.18960	-.15310	.07340
-.427	5.798	-.28230	-.28690	-.27270	-.27070	-.30460	.47070	.04130	-.30550	-.24670	.12700
	GRADIENT	.00190	.00162	.00383	.00145	.00070	.07188	.00554	-.05068	-.04091	.02002

IA156A, AEDC PWT 16T-470, O T S W/SILTS (R8NFE2) (10 MAY 80)

REFERENCE DATA

SREF = 2690.0000 SQ.FT. XMRP = 976.0000 IN. XT
LREF = 1290.3000 INCHES YMRP = .0000 IN. YT
BREF = 1290.3000 INCHES ZMRP = 400.0000 IN. ZT
SCALE = .0200

PARAMETRIC DATA

IB-ELV = 12.000 OB-ELV = -7.000
BDFLAP = .000 SPDBRK = .000
RUDDER = .000 SILTS = 1.000
MACH = 1.400 RN/L = 3.500

RUN NO. 1473/ 0 RN/L = 3.00 GRADIENT INTERVAL = -5.00/ 5.00

ALPHAO	BETAO	CP1	CP2	CP3	CP4	CPBV	RUDDER	CHR	CNVT	CBVT	CTVT
4.135	-5.756	-.28720	-.28830	-.28430	-.27100	-.30070	-.33450	-.02990	.26260	.21010	-.10270
3.990	-3.653	-.28100	-.28770	-.26670	-.26800	-.28920	-.16870	-.01650	.15430	.12360	-.05570
3.741	.166	-.27750	-.28190	-.27160	-.26530	-.28430	.03630	.00270	-.00690	-.00880	.00510
3.769	4.047	-.27800	-.28290	-.26230	-.26520	-.29250	.25680	.02320	-.18850	-.15160	.07090
3.738	6.128	-.28500	-.28880	-.26720	-.27190	-.30240	.43420	.03750	-.29110	-.23340	.11720
	GRADIENT	.00039	.00062	.00058	.00036	-.00043	.05527	.00516	-.04453	-.03575	.01644

IA156A, AEDC PWT 16T-470, O T S W/SILTS (R8NFE3) (10 MAY 80)

REFERENCE DATA

SREF = 2690.0000 SQ.FT. XMRP = 976.0000 IN. XT
LREF = 1290.3000 INCHES YMRP = .0000 IN. YT
BREF = 1290.3000 INCHES ZMRP = 400.0000 IN. ZT
SCALE = .0200

PARAMETRIC DATA

IB-ELV = 12.000 OB-ELV = -7.000
BDFLAP = .000 SPDBRK = .000
RUDDER = .000 SILTS = 1.000
MACH = 1.550 RN/L = 3.200

RUN NO. 1474/ 0 RN/L = 3.01 GRADIENT INTERVAL = -5.00/ 5.00

ALPHAO	BETAO	CP1	CP2	CP3	CP4	CPBV	RUDDER	CHR	CNVT	CBVT	CTVT
-8.324	-5.833	-.26940	-.27260	-.29580	-.26080	-.25830	-.55440	-.03850	.33130	.26220	-.13800
-8.344	-3.712	-.26670	-.27080	-.29560	-.24770	-.24310	-.30670	-.02080	.20330	.16080	-.07950
-8.209	.318	-.25450	-.26190	-.26050	-.23870	-.21790	.06370	.00480	-.02420	-.02110	.01110
-8.003	4.487	-.26010	-.26670	-.26700	-.24830	-.25470	.50370	.03540	-.25800	-.20670	.10590
-7.961	6.383	-.26510	-.26940	-.27560	-.25490	-.26370	.73030	.05180	-.36610	-.28830	.15360
	GRADIENT	.00079	.00049	.00346	-.00009	-.00146	.09888	.00686	-.05626	-.04482	.02261

RUN NO. 1475/ 0 RN/L = 3.01 GRADIENT INTERVAL = -5.00/ 5.00

ALPHAO	BETAO	CP1	CP2	CP3	CP4	CPBV	RUDDER	CHR	CNVT	CBVT	CTVT
-6.358	-5.963	-.27050	-.27570	-.31160	-.25640	-.27060	-.56710	-.03890	.34070	.26780	-.14110
-6.256	-3.975	-.26770	-.27080	-.29080	-.25020	-.25320	-.33120	-.02180	.21480	.17120	-.08550
-6.273	.249	-.25640	-.26380	-.25940	-.24190	-.22770	.06110	.00460	-.02360	-.01930	.00960
-5.983	4.379	-.26100	-.26500	-.26540	-.24650	-.26260	.49650	.03440	-.25620	-.20290	.10390
-5.702	6.519	-.26800	-.26840	-.26800	-.25620	-.27400	.74810	.05240	-.37690	-.29440	.15760
	GRADIENT	.00081	.00070	.00306	.00045	-.00110	.09906	.00673	-.05638	-.04478	.02267

IA156A, AEDC PWT 16T-470, O T S W/SILTS (R8NFE3) (10 MAY 80)

REFERENCE DATA

SREF = 2690.0000 SQ.FT. XMRP = 976.0000 IN. XT
LREF = 1290.3000 INCHES YMRP = .0000 IN. YT
BREF = 1290.3000 INCHES ZMRP = 400.0000 IN. ZT
SCALE = .0200

PARAMETRIC DATA

IB-ELV = 12.000 OB-ELV = -7.000
BDFLAP = .000 SPDBRK = .000
RUDDER = .000 SILTS = 1.000
MACH = 1.550 RN/L = 3.200

RUN NO. 1476/ 0 RN/L = 3.01 GRADIENT INTERVAL = -5.00/ 5.00

ALPHAO	BETAO	CP1	CP2	CP3	CP4	CPBV	RUDDER	CHR	CNVT	CBVT	CTVT
-4.196	-6.135	-.27350	-.27470	-.29880	-.26260	-.27910	-.58060	-.03910	.33870	.26470	-.13910
-4.451	-3.949	-.26420	-.26890	-.28440	-.24920	-.25940	-.32120	-.02050	.20670	.16450	-.08200
-4.265	.492	-.25850	-.26480	-.25410	-.24220	-.24630	.07350	.00530	-.03340	-.02710	.01290
-3.742	4.439	-.26190	-.26520	-.26290	-.24930	-.26380	.49840	.03360	-.25530	-.20200	.10440
-3.795	6.255	-.26120	-.26610	-.26480	-.25130	-.26960	.73390	.05070	-.36290	-.28370	.15200
	GRADIENT	.00030	.00045	.00265	.00002	-.00045	.09753	.00644	-.05506	-.04368	.02221

RUN NO. 1477/ 0 RN/L = 3.01 GRADIENT INTERVAL = -5.00/ 5.00

ALPHAO	BETAO	CP1	CP2	CP3	CP4	CPBV	RUDDER	CHR	CNVT	CBVT	CTVT
-.600	-7.044	-.27830	-.27790	-.29860	-.26540	-.29350	-.65100	-.04380	.37720	.29200	-.15470
-.576	-4.909	-.26730	-.26910	-.27900	-.25510	-.27580	-.42420	-.02680	.24880	.19740	-.09960
-.540	-.559	-.26050	-.26510	-.25690	-.24440	-.25750	-.04900	.00130	.01710	.00980	-.00260
-.528	3.565	-.26210	-.26490	-.25260	-.24960	-.27490	.30930	.02820	-.19810	-.15940	.07890
-.527	5.739	-.26400	-.26700	-.26280	-.25550	-.27780	.55310	.04640	-.31200	-.24930	.13130
	GRADIENT	.00062	.00050	.00313	.00067	.00014	.08656	.00649	-.05274	-.04212	.02108

RUN NO. 1478/ 0 RN/L = 3.01 GRADIENT INTERVAL = -5.00/ 5.00

ALPHAO	BETAO	CP1	CP2	CP3	CP4	CPBV	RUDDER	CHR	CNVT	CBVT	CTVT
4.178	-5.674	-.28190	-.27390	-.28740	-.26310	-.28890	-.42070	-.03570	.27530	.21700	-.10870
4.001	-3.551	-.27000	-.26820	-.26640	-.25700	-.26620	-.20810	-.01920	.15520	.12590	-.05970
3.684	.248	-.25840	-.26180	-.25620	-.24580	-.26670	.01140	.00070	.00290	-.00080	.00110
3.670	4.055	-.26600	-.26960	-.25890	-.25310	-.27720	.28140	.02460	-.17760	-.14650	.07250
3.642	6.120	-.26910	-.27240	-.26450	-.25730	-.28750	.51150	.04250	-.29470	-.23380	.12010
	GRADIENT	.00053	-.00018	.00099	.00051	-.00145	.06436	.00576	-.04375	-.03581	.01738

IA156A, AEDC PWT 16T-470, O T S W/SILTS (R8NFE4) (10 MAY 80)

REFERENCE DATA

SREF = 2690.0000 SQ.FT. XMRP = 976.0000 IN. XT
LREF = 1290.3000 INCHES YMRP = .0000 IN. YT
BREF = 1290.3000 INCHES ZMRP = 400.0000 IN. ZT
SCALE = .0200

PARAMETRIC DATA

IB-ELV = 8.000 OB-ELV = -7.000
BDFLAP = .000 SPDBRK = .000
RUDDER = .000 SILTS = 1.000
MACH = 1.400 RN/L = 3.500

RUN NO. 1482/ 0 RN/L = 3.00 GRADIENT INTERVAL = -5.00/ 5.00

ALPHAO	BETAO	CP1	CP2	CP3	CP4	CPBV	RUDDER	CHR	CNVT	CBVT	CTVT
-8.170	-5.743	-.29690	-.29940	-.33990	-.27650	-.30560	-.47120	-.03310	.33450	.26620	-.13840
-8.235	-3.742	-.28970	-.29480	-.32220	-.27450	-.28860	-.27470	-.01870	.21010	.16710	-.08220
-8.142	.226	-.27410	-.28330	-.27730	-.26140	-.27360	.08120	.00620	-.02520	-.02320	.01230
-7.983	4.478	-.27540	-.28390	-.28210	-.26550	-.30000	.49050	.03510	-.27610	-.22330	.11430
-7.936	6.285	-.28090	-.29030	-.29340	-.26770	-.30850	.69450	.05000	-.38720	-.30680	.16200
	GRADIENT	.00172	.00131	.00481	.00107	-.00144	.09313	.00655	-.05915	-.04749	.02391

RUN NO. 1483/ 0 RN/L = 3.00 GRADIENT INTERVAL = -5.00/ 5.00

ALPHAO	BETAO	CP1	CP2	CP3	CP4	CPBV	RUDDER	CHR	CNVT	CBVT	CTVT
-6.266	-5.970	-.29660	-.29870	-.32000	-.27890	-.31120	-.50090	-.03470	.34450	.27460	-.14350
-6.155	-4.011	-.28420	-.28900	-.30050	-.26900	-.29290	-.29640	-.01960	.21900	.17500	-.08620
-6.219	.148	-.27480	-.28270	-.27440	-.26200	-.28450	.06420	.00500	-.02400	-.02110	.01080
-6.003	4.286	-.27350	-.28080	-.27410	-.26440	-.30140	.46970	.03300	-.26070	-.20930	.10640
-5.730	6.412	-.27940	-.28650	-.28680	-.27020	-.30520	.69150	.04910	-.38780	-.30570	.16180
	GRADIENT	.00129	.00099	.00318	.00056	-.00102	.09232	.00634	-.05781	-.04631	.02321

RUN NO. 1484/ 0 RN/L = 3.00 GRADIENT INTERVAL = -5.00/ 5.00

ALPHAO	BETAO	CP1	CP2	CP3	CP4	CPBV	RUDDER	CHR	CNVT	CBVT	CTVT
-4.110	-6.113	-.29340	-.29690	-.31420	-.27980	- 31160	-.50150	-.03400	.33990	.27070	-.14140
-4.346	-3.947	-.28210	-.28750	-.29050	-.26700	-.29350	-.26480	-.01650	.20610	.16440	-.08050
-4.218	.418	-.27180	-.27940	-.26790	-.26030	-.28490	.09160	.00680	-.03410	-.02980	.01560
-3.760	4.353	-.26870	-.27510	-.26170	-.25920	-.29510	.45230	.03080	-.25690	-.20510	.10420
-3.822	6.157	-.27750	-.28340	-.27960	-.26720	-.30200	.65590	.04580	-.36660	-.29070	.15400
	GRADIENT	.00163	.00150	.00350	.00095	-.00015	.08632	.00569	-.05577	-.04452	.02225

RUN NO. 1485/ 0 RN/L = 3.00 GRADIENT INTERVAL = -5.00/ 5.00

ALPHAO	BETAO	CP1	CP2	CP3	CP4	CPBV	RUDDER	CHR	CNVT	CBVT	CTVT
-.521	-7.010	-.29650	-.29860	-.30350	-.28160	-.31510	-.57330	-.03890	.36640	.28770	-.15010
-.492	-4.839	-.28400	-.28680	-.28960	-.26900	-.30000	-.34060	-.02090	.23740	.19150	-.09490
-.439	-.498	-.27070	-.27740	-.26640	-.25890	-.28470	-.05630	.00080	.01510	.00830	-.00250
-.431	3.621	-.26540	-.27160	-.25400	-.25690	-.28870	.25410	.02460	-.18630	-.15060	.07230
-.444	5.803	-.27960	-.28460	-.26950	-.26770	-.30040	.46860	.04100	-.30730	-.24790	.12750
	GRADIENT	.00221	.00180	.00422	.00144	.00136	.07026	.00538	-.05010	-.04046	.01978

IA156A, AEDC PWT 16T-470, O T S W/SILTS (R8NFE4) (10 MAY 80)

REFERENCE DATA

SREF = 2690.0000 SQ.FT. XMRP = 976.0000 IN. XT
LREF = 1290.3000 INCHES YMRP = .0000 IN. YT
BREF = 1290.3000 INCHES ZMRP = 400.0000 IN. ZT
SCALE = .0200

PARAMETRIC DATA

IB-ELV = 8.000 OB-ELV = -7.000
BDFLAP = .000 SPDBRK = .000
RUDDER = .000 SILTS = 1.000
MACH = 1.400 RN/L = 3.500

RUN NO. 1486/ 0 RN/L = 3.00 GRADIENT INTERVAL = -5.00/ 5.00

ALPHAO	BETAO	CP1	CP2	CP3	CP4	CPBV	RUDDER	CHR	CNVT	CBVT	CTVT
4.148	-5.744	-.29370	-.29240	-.28750	-.27340	-.30010	-.30030	-.02730	.26300	.21060	-.10250
3.977	-3.686	-.27160	-.27840	-.25990	-.26060	-.28080	-.14870	-.01500	.15520	.12410	-.05560
3.759	.077	-.27260	-.27680	-.26530	-.25940	-.27690	.04050	.00290	-.00290	-.00550	.00380
3.771	4.006	-.27080	-.27580	-.25510	-.25850	-.28410	.26510	.02390	-.18500	-.14920	.06990
3.730	6.119	-.27640	-.28060	-.26050	-.26490	-.29240	.44190	.03820	-.29110	-.23300	.11690
	GRADIENT	.00011	.00034	.00064	.00027	-.00044	.05382	.00506	-.04425	-.03554	.01632

IA156A, AEDC PWT 16T-470, O T S W/SILTS (R8NFE5) (10 MAY 80)

REFERENCE DATA

SREF = 2690.0000 SQ.FT. XMRP = 976.0000 IN. XT
LREF = 1290.3000 INCHES YMRP = .0000 IN. YT
BREF = 1290.3000 INCHES ZMRP = 400.0000 IN. ZT
SCALE = .0200

PARAMETRIC DATA

IB-ELV = 8.000 OB-ELV = -7.000
BDFLAP = .000 SPDBRK = .000
RUDDER = .000 SILTS = 1.000
MACH = 1.550 RN/L = 3.200

RUN NO. 1487/ 0 RN/L = 3.00 GRADIENT INTERVAL = -5.00/ 5.00

ALPHAO	BETAO	CP1	CP2	CP3	CP4	CPBV	RUDDER	CHR	CNVT	CBVT	CTVT
-8.297	-5.822	-.26600	-.26750	-.29370	-.25810	-.25750	-.53520	-.03710	.33180	.26200	-.13760
-8.325	-3.708	-.25730	-.26130	-.28780	-.23770	-.23660	-.29470	-.01980	.20430	.16120	-.07970
-8.212	.298	-.24870	-.25560	-.25660	-.23480	-.21940	.07070	.00530	-.02350	-.02030	.01060
-7.973	4.570	-.25030	-.25710	-.26070	-.24080	-.25260	.51430	.03620	-.26080	-.20880	.10700
-7.986	6.416	-.25570	-.25970	-.26790	-.24660	-.25990	.74270	.05260	-.36870	-.28990	.15430
	GRADIENT	.00083	.00050	.00323	-.00039	-.00200	.09780	.00677	-.05618	-.04469	.02255

RUN NO. 1488/ 0 RN/L = 3.00 GRADIENT INTERVAL = -5.00/ 5.00

ALPHAO	BETAO	CP1	CP2	CP3	CP4	CPBV	RUDDER	CHR	CNVT	CBVT	CTVT
-6.347	-5.954	-.26660	-.27040	-.30610	-.24880	-.26840	-.58220	-.04000	.33380	.26280	-.13820
-6.262	-3.975	-.26050	-.26300	-.28320	-.24270	-.25240	-.33830	-.02240	.21340	.17010	-.08490
-6.268	.229	-.24620	-.25330	-.24950	-.23420	-.22550	.06210	.00480	-.02360	-.01920	.00940
-6.003	4.398	-.25270	-.25700	-.25810	-.24180	-.26150	.51240	.03570	-.25760	-.20380	.10420
-5.917	6.366	-.25520	-.25940	-.26170	-.24600	-.26720	.74640	.05250	-.36840	-.28790	.15360
	GRADIENT	.00094	.00072	.00300	.00011	-.00108	.10159	.00694	-.05625	-.04466	.02259

IA156A, AEDC PWT 16T-470, O T S W/SILTS (R8NFE5) (10 MAY 80)

REFERENCE DATA

SREF = 2690.0000 SQ.FT. XMRP = 976.0000 IN. XT
LREF = 1290.3000 INCHES YMRP = .0000 IN. YT
BREF = 1290.3000 INCHES ZMRP = 400.0000 IN. ZT
SCALE = .0200

PARAMETRIC DATA

IB-ELV = 8.000 OB-ELV = -7.000
BDFLAP = .000 SPDBRK = .000
RUDDER = .000 SILTS = 1.000
MACH = 1.550 RN/L = 3.200

RUN NO. 1489/ 0 RN/L = 3.01 GRADIENT INTERVAL = -5.00/ 5.00

ALPHAO	BETAO	CP1	CP2	CP3	CP4	CPBV	RUDDER	CHR	CNVT	CBVT	CTVT
-4.218	-6.128	-.26930	-.27150	-.30310	-.25040	-.27770	-.59030	-.03990	.33820	.26430	-.13850
-4.450	-3.947	-.25510	-.25960	-.27340	-.24180	-.25570	-.32430	-.02060	.20700	.16510	-.08240
-4.281	.503	-.24870	-.25410	-.24570	-.23500	-.24580	.08280	.00600	-.03520	-.02830	.01330
-3.731	4.440	-.25330	-.25800	-.25490	-.24320	-.26460	.51120	.03460	-.25990	-.20530	.10600
-3.802	6.257	-.25540	-.25790	-.25770	-.24290	-.26630	.73820	.05090	-.36050	-.28140	.15030
	GRADIENT	.00024	.00021	.00229	-.00013	-.00099	.09944	.00657	-.05564	-.04415	.02244

RUN NO. 1490/ 0 RN/L = 3.00 GRADIENT INTERVAL = -5.00/ 5.00

ALPHAO	BETAO	CP1	CP2	CP3	CP4	CPBV	RUDDER	CHR	CNVT	CBVT	CTVT
-.611	-7.039	-.27610	-.27610	-.30020	-.25900	-.29290	-.64980	-.04390	.37430	.29030	-.15360
-.585	-4.909	-.25970	-.26330	-.27290	-.24830	-.27060	-.41930	-.02650	.25000	.19810	-.09980
-.546	-.562	-.24960	-.25440	-.24750	-.23680	-.25270	-.04320	.00170	.01740	.01000	-.00270
-.537	3.564	-.25490	-.25790	-.24520	-.24400	-.27250	.31900	.02900	-.19890	-.16010	.07930
-.537	5.749	-.26020	-.26390	-.25790	-.25110	-.27660	.56140	.04680	-.31280	-.25020	.13150
	GRADIENT	.00058	.00065	.00329	.00053	-.00019	.08713	.00655	-.05299	-.04228	.02115

RUN NO. 1491/ 0 RN/L = 3.00 GRADIENT INTERVAL = -5.00/ 5.00

ALPHAO	BETAO	CP1	CP2	CP3	CP4	CPBV	RUDDER	CHR	CNVT	CBVT	CTVT
4.175	-5.666	-.26660	-.26790	-.27850	-.25520	-.27690	-.41780	-.03550	.27380	.21560	-.10780
3.989	-3.546	-.26210	-.26470	-.25660	-.24930	-.26040	-.19860	-.01830	.15330	.12540	-.05980
3.686	.255	-.25400	-.25700	-.24910	-.24130	-.26530	.01800	.00120	.00240	-.00130	.00130
3.680	4.059	-.25300	-.25720	-.24450	-.24290	-.26890	.28260	.02470	-.17570	-.14510	.07140
3.634	6.109	-.26070	-.26380	-.25470	-.25040	-.27900	.50570	.04210	-.29490	-.23400	.11990
	GRADIENT	.00120	.00099	.00159	.00084	-.00112	.06328	.00565	-.04326	-.03557	.01725

IA156A, AEDC PWT 16T-470, O T S W/SILTS (R8NFE6) (10 MAY 80)

REFERENCE DATA

SREF = 2690.0000 SQ.FT. XMRP = 976.0000 IN. XT
LREF = 1290.3000 INCHES YMRP = .0000 IN. YT
BREF = 1290.3000 INCHES ZMRP = 400.0000 IN. ZT
SCALE = .0200

PARAMETRIC DATA

IB-ELV = 10.000 OB-ELV = 2.000
BDFLAP = .000 SPDBRK = .000
RUDDER = .000 SILTS = 1.000
MACH = 1.050 RN/L = 3.500

RUN NO. 1494/ 0 RN/L = 3.50 GRADIENT INTERVAL = -5.00/ 5.00

ALPHAO	BETAO	CP1	CP2	CP3	CP4	CPBV	RUDDER	CHR	CNVT	CBVT	CTVT
-8.215	-5.881	-.43760	-.44700	-.43980	-.42920	-.46600	-.15230	-.00820	.35760	.28780	-.13880
-8.178	-3.769	-.42750	-.44230	-.42140	-.41170	-.44640	-.08310	-.00390	.21130	.16770	-.07640
-8.131	.175	-.40520	-.41950	-.38460	-.39520	-.41090	-.02170	-.00160	-.02170	-.01940	.00850
-7.965	4.333	-.41650	-.42970	-.39510	-.40300	-.43480	.08270	.00370	-.26660	-.21600	.10120
-7.960	6.223	-.41900	-.43420	-.40370	-.40890	-.44300	.12750	.00640	-.38540	-.31050	.14990
	GRADIENT	.00132	.00152	.00319	.00105	.00137	.02051	.00094	-.05899	-.04736	.02193

RUN NO. 1495/ 0 RN/L = 3.50 GRADIENT INTERVAL = -5.00/ 5.00

ALPHAO	BETAO	CP1	CP2	CP3	CP4	CPBV	RUDDER	CHR	CNVT	CBVT	CTVT
-6.164	-5.957	-.43100	-.44230	-.42990	-.41260	-.46200	-.11960	-.00520	.34780	.28030	-.13410
-6.120	-4.055	-.42260	-.43380	-.41980	-.40640	-.44410	-.07940	-.00290	.22130	.17670	-.08050
-6.203	.112	-.40350	-.41970	-.38050	-.39660	-.40670	-.02590	-.00180	-.02410	-.01990	.00820
-6.009	4.243	-.39410	-.41230	-.37350	-.38620	-.40960	.04760	.00070	-.25790	-.20700	.09600
-5.960	6.205	-.40400	-.41520	-.38550	-.39550	-.42510	.10090	.00390	-.37820	-.30360	.14600
	GRADIENT	.00344	.00259	.00558	.00243	.00416	.01530	.00043	-.05775	-.04624	.02127

RUN NO. 1496/ 0 RN/L = 3.50 GRADIENT INTERVAL = -5.00/ 5.00

ALPHAO	BETAO	CP1	CP2	CP3	CP4	CPBV	RUDDER	CHR	CNVT	CBVT	CTVT
-4.074	-6.119	-.42580	-.43450	-.43350	-.40570	-.45800	-.08810	-.00230	.34510	.27750	-.13180
-4.306	-3.974	-.41700	-.43160	-.40910	-.40060	-.43490	-.04100	.00060	.20750	.16500	-.07410
-4.199	.365	-.40610	-.42040	-.38400	-.39610	-.40940	-.03710	-.00290	-.03090	-.02510	.01000
-3.752	4.297	-.38730	-.40430	-.36580	-.37900	-.40550	-.04840	-.00730	-.25510	-.20420	.09340
-3.847	6.110	-.39830	-.41450	-.37940	-.38750	-.41230	.04020	-.00120	-.35960	-.28830	.13750
	GRADIENT	.00357	.00329	.00524	.00258	.00359	-.00086	-.00095	-.05591	-.04462	.02024

RUN NO. 1497/ 0 RN/L = 3.50 GRADIENT INTERVAL = -5.00/ 5.00

ALPHAO	BETAO	CP1	CP2	CP3	CP4	CPBV	RUDDER	CHR	CNVT	CBVT	CTVT
-.462	-7.007	-.42830	-.44040	-.42330	-.40970	-.45350	-.05070	.00110	.37530	.29730	-.13840
-.449	-4.843	-.41760	-.43000	-.40640	-.40000	-.43130	-.00670	.00440	.24980	.20060	-.08960
-.422	-.474	-.39600	-.41050	-.37730	-.38520	-.39360	-.00920	.00420	.01750	.01280	-.00410
-.387	3.651	-.39570	-.40990	-.37330	-.38750	-.40480	-.20530	-.01020	-.19120	-.15300	.06330
-.387	5.828	-.40130	-.41450	-.37880	-.39080	-.41560	-.16650	-.00740	-.30240	-.24440	.10980
	GRADIENT	.00260	.00239	.00392	.00149	.00317	-.02315	-.00170	-.05193	-.04164	.01801

IA156A, AEDC PWT 16T-470, O T S W/SILTS (R8NFE6) (10 MAY 80)

REFERENCE DATA

SREF = 2690.0000 SQ.FT. XMRP = 976.0000 IN. XT
LREF = 1290.3000 INCHES YMRP = .0000 IN. YT
BREF = 1290.3000 INCHES ZMRP = 400.0000 IN. ZT
SCALE = .0200

PARAMETRIC DATA

IB-ELV = 10.000 OB-ELV = 2.000
BDFLAP = .000 SPDBRK = .000
RUDDER = .000 SILTS = 1.000
MACH = 1.050 RN/L = 3.500

RUN NO. 1498/ 0 RN/L = 3.50 GRADIENT INTERVAL = -5.00/ 5.00

ALPHAO	BETAO	CP1	CP2	CP3	CP4	CPBV	RUDDER	CHR	CNVT	CBVT	CTVT
4.108	-5.804	-.41490	-.42610	-.40850	-.39840	-.43040	.18860	.00990	.26720	.21720	-.09230
3.975	-3.713	-.40320	-.41580	-.39020	-.38870	-.41220	.23190	.01360	.15520	.12580	-.04720
3.776	.114	-.39650	-.40890	-.37370	-.38190	-.39580	.00590	.00030	.00470	.00250	-.00040
3.851	4.045	-.39080	-.40490	-.36790	-.37910	-.39790	-.30780	-.01920	-.17100	-.14060	.05450
3.796	6.106	-.39700	-.40740	-.37160	-.38580	-.41370	-.26830	-.01570	-.27760	-.22540	.09590
	GRADIENT	.00160	.00140	.00287	.00124	.00183	-.06962	-.00423	-.04206	-.03435	.01311

IA156A, AEDC PWT 16T-470, O T S W/SILTS (R8NFE7) (10 MAY 80)

REFERENCE DATA

SREF = 2690.0000 SQ.FT. XMRP = 976.0000 IN. XT
LREF = 1290.3000 INCHES YMRP = .0000 IN. YT
BREF = 1290.3000 INCHES ZMRP = 400.0000 IN. ZT
SCALE = .0200

PARAMETRIC DATA

IB-ELV = 10.000 OB-ELV = 2.000
BDFLAP = .000 SPDBRK = .000
RUDDER = .000 SILTS = 1.000
MACH = 1.100 RN/L = 3.500

RUN NO. 1499/ 0 RN/L = 3.50 GRADIENT INTERVAL = -5.00/ 5.00

ALPHAO	BETAO	CP1	CP2	CP3	CP4	CPBV	RUDDER	CHR	CNVT	CBVT	CTVT
-8.219	-5.891	-.39610	-.40280	-.39810	-.38090	-.42520	-.23110	-.01360	.33530	.27000	-.13180
-8.204	-3.785	-.39360	-.39560	-.37710	-.36810	-.39910	-.11600	-.00610	.19770	.15600	-.07140
-8.112	.164	-.35640	-.36710	-.34850	-.34770	-.36450	-.01920	-.00140	-.02920	-.02510	.01100
-7.946	4.428	-.37090	-.38630	-.35270	-.36030	-.39350	.14020	.00770	-.27070	-.21900	.10410
-7.964	6.232	-.37300	-.38460	-.35810	-.36450	-.40090	.25760	.01560	-.37610	-.30350	.14980
	GRADIENT	.00148	.00106	.00292	.00090	.00058	.03128	.00169	-.05703	-.04566	.02138

RUN NO. 1500/ 0 RN/L = 3.50 GRADIENT INTERVAL = -5.00/ 5.00

ALPHAO	BETAO	CP1	CP2	CP3	CP4	CPBV	RUDDER	CHR	CNVT	CBVT	CTVT
-6.164	-5.953	-.38500	-.39260	-.39020	-.36730	-.41340	-.20390	-.01120	.32680	.26430	-.12820
-6.143	-4.058	-.37410	-.38590	-.36950	-.35950	-.39130	-.11990	-.00570	.20460	.16320	-.07530
-6.224	.087	-.35430	-.36900	-.33590	-.34670	-.35820	-.02550	-.00170	-.02760	-.02270	.00950
-5.999	4.241	-.34980	-.36710	-.32930	-.34340	-.36260	.13220	.00670	-.25480	-.20410	.09650
-5.962	6.205	-.36360	-.37830	-.34340	-.35420	-.38770	.21680	.01210	-.36630	-.29470	.14480
	GRADIENT	.00293	.00226	.00484	.00194	.00346	.03038	.00149	-.05536	-.04426	.02070

IA156A, AEDC PWT 16T-470, O T S W/SILTS (R8NFE7) (10 MAY 80)

REFERENCE DATA

SREF = 2690.0000 SQ.FT. XMRP = 976.0000 IN. XT
LREF = 1290.3000 INCHES YMRP = .0000 IN. YT
BREF = 1290.3000 INCHES ZMRP = 400.0000 IN. ZT
SCALE = .0200

PARAMETRIC DATA

IB-ELV = 10.000 OB-ELV = 2.000
BDFLAP = .000 SPDBRK = .000
RUDDER = .000 SILTS = 1.000
MACH = 1.100 RN/L = 3.500

RUN NO. 1501/ 0 RN/L = 3.51 GRADIENT INTERVAL = -5.00/ 5.00

ALPHAO	BETAO	CP1	CP2	CP3	CP4	CPBV	RUDDER	CHR	CNVT	CBVT	CTVT
-4.064	-6.124	-.37630	-.38600	-.37700	-.35550	-.40520	-.16060	-.00740	.32510	.26220	-.12620
-4.304	-3.972	-.36410	-.37760	-.35430	-.34840	-.37990	-.08920	-.00290	.19240	.15250	-.06970
-4.191	.371	-.34890	-.36270	-.32720	-.33890	-.34700	-.03660	-.00280	-.03390	-.02780	.01140
-3.737	4.274	-.33910	-.35540	-.31840	-.32960	-.35230	.05540	.00040	-.24420	-.19510	.09100
-3.857	6.128	-.35300	-.36940	-.33310	-.34430	-.36880	.14020	.00600	-.35190	-.28250	.13730
	GRADIENT	.00304	.00271	.00439	.00228	.00343	.01743	.00039	-.05293	-.04214	.01947

RUN NO. 1502/ 0 RN/L = 3.49 GRADIENT INTERVAL = -5.00/ 5.00

ALPHAO	BETAO	CP1	CP2	CP3	CP4	CPBV	RUDDER	CHR	CNVT	CBVT	CTVT
-.472	-6.996	-.37830	-.38800	-.37390	-.35720	-.40490	-.12650	-.00430	.36140	.28770	-.13620
-.442	-4.844	-.36480	-.37730	-.35120	-.34900	-.38120	-.06610	.00000	.24210	.19470	-.08810
-.413	-.478	-.33780	-.35030	-.31410	-.32540	-.33390	-.02550	.00300	.01630	.01150	-.00390
-.380	3.654	-.33670	-.34880	-.31810	-.32870	-.34310	-.17980	-.00820	-.18770	-.15050	.06330
-.376	5.836	-.33540	-.34950	-.31750	-.32630	-.34840	-.10090	-.00250	-.29920	-.24290	.11110
	GRADIENT	.00333	.00338	.00394	.00242	.00454	-.01317	-.00095	-.05059	-.04063	.01783

RUN NO. 1503/ 0 RN/L = 3.50 GRADIENT INTERVAL = -5.00/ 5.00

ALPHAO	BETAO	CP1	CP2	CP3	CP4	CPBV	RUDDER	CHR	CNVT	CBVT	CTVT
4.105	-5.818	-.34590	-.35510	-.34020	-.32810	-.36120	.15350	.00710	.26040	.21220	-.09140
3.961	-3.699	-.34100	-.35170	-.33210	-.32550	-.34990	.18810	.01010	.15410	.12470	-.04830
3.792	.122	-.34460	-.35460	-.32070	-.32970	-.34280	.01190	.00080	-.00200	-.00210	.00140
3.836	4.038	-.33070	-.34260	-.30800	-.31810	-.33560	-.27780	-.01660	-.16910	-.13920	.05480
3.791	6.090	-.32940	-.33970	-.30400	-.31720	-.34530	-.19660	-.01020	-.27920	-.22780	.09990
	GRADIENT	.00134	.00118	.00312	.00096	.00185	-.06028	-.00346	-.04178	-.03411	.01333

IA156A, AEDC PWT 16T-470, O T S W/SILTS (R8NFE8) (10 MAY 80)

REFERENCE DATA

SREF = 2690.0000 SQ.FT. XMRP = 976.0000 IN. XT
LREF = 1290.3000 INCHES YMRP = .0000 IN. YT
BREF = 1290.3000 INCHES ZMRP = 400.0000 IN. ZT
SCALE = .0200

PARAMETRIC DATA

IB-ELV = 10.000 OB-ELV = 2.000
BDFLAP = .000 SPDBRK = .000
RUDDER = .000 SILTS = 1.000
MACH = 1.150 RN/L = 3.500

RUN NO. 1504/ 0 RN/L = 3.50 GRADIENT INTERVAL = -5.00/ 5.00

ALPHAO	BETAO	CP1	CP2	CP3	CP4	CPBV	RUDDER	CHR	CNVT	CBVT	CTVT
-8.224	-5.884	-.36730	-.37440	-.38230	-.35130	-.39410	-.32760	-.02020	.34190	.27460	-.13630
-8.207	-3.764	-.36230	-.37290	-.36640	-.34510	-.38080	-.18410	-.01080	.20530	.16240	-.07600
-8.128	.156	-.33560	-.34840	-.32410	-.32520	-.34720	-.01700	-.00120	-.02030	-.01830	.00820
-8.010	4.213	-.34290	-.35760	-.32590	-.33370	-.36930	.22350	.01350	-.25150	-.20370	.09840
-7.965	6.247	-.35000	-.36430	-.33840	-.34070	-.38650	.42060	.02670	-.37490	-.30210	.15250
	GRADIENT	.00241	.00189	.00504	.00141	.00140	.05114	.00305	-.05726	-.04589	.02186

RUN NO. 1505/ 0 RN/L = 3.51 GRADIENT INTERVAL = -5.00/ 5.00

ALPHAO	BETAO	CP1	CP2	CP3	CP4	CPBV	RUDDER	CHR	CNVT	CBVT	CTVT
-6.163	-5.962	-.36370	-.37200	-.37300	-.34780	-.38910	-.31800	-.01890	.33420	.26940	-.13350
-6.108	-4.043	-.35330	-.36200	-.35880	-.33390	-.36620	-.20590	-.01160	.20950	.16720	-.07880
-6.197	.091	-.32870	-.34290	-.31250	-.31810	-.33450	-.01990	-.00130	-.01990	-.01670	.00710
-6.035	4.259	-.32580	-.34200	-.30640	-.31800	-.34160	.24330	.01440	-.24930	-.19980	.09660
-5.956	6.210	-.34070	-.35530	-.32400	-.33170	-.36660	.37470	.02290	-.36540	-.29410	.14770
	GRADIENT	.00331	.00241	.00631	.00191	.00296	.05412	.00313	-.05527	-.04421	.02113

RUN NO. 1506/ 0 RN/L = 3.50 GRADIENT INTERVAL = -5.00/ 5.00

ALPHAO	BETAO	CP1	CP2	CP3	CP4	CPBV	RUDDER	CHR	CNVT	CBVT	CTVT
-4.053	-6.089	-.36110	-.36760	-.37210	-.33890	-.38590	-.28860	-.01630	.33100	.26650	-.13130
-4.308	-3.975	-.34450	-.35570	-.33570	-.32660	-.36090	-.19010	-.01000	.19990	.15890	-.07480
-4.206	.359	-.32600	-.33990	-.30390	-.31550	-.32700	-.01980	-.00160	-.02500	-.02140	.00920
-3.756	4.297	-.32170	-.33720	-.29780	-.31080	-.33260	.19750	.01040	-.24420	-.19590	.09460
-3.861	6.129	-.33440	-.35220	-.31460	-.32360	-.35260	.31880	.01840	-.34820	-.28010	.14010
	GRADIENT	.00278	.00226	.00463	.00192	.00349	.04673	.00246	-.05366	-.04287	.02046

RUN NO. 1507/ 0 RN/L = 3.51 GRADIENT INTERVAL = -5.00/ 5.00

ALPHAO	BETAO	CP1	CP2	CP3	CP4	CPBV	RUDDER	CHR	CNVT	CBVT	CTVT
-.455	-7.001	-.36120	-.37050	-.35940	-.34320	-.38840	-.27460	-.01460	.36650	.29190	-.14270
-.432	-4.850	-.34610	-.36110	-.33520	-.32940	-.36530	-.18740	-.00850	.24470	.19670	-.09230
-.395	-.487	-.32300	-.33510	-.30000	-.31270	-.32440	-.07220	-.00040	.01550	.01060	-.00480
-.365	3.645	-.31560	-.32940	-.29420	-.30910	-.32500	-.00590	.00420	-.19040	-.15310	.06840
-.365	5.852	-.31860	-.33260	-.29720	-.30710	-.33310	.07040	.00960	-.30310	-.24580	.11650
	GRADIENT	.00361	.00375	.00486	.00240	.00479	.02141	.00150	-.05123	-.04119	.01893

IA156A, AEDC PWT 16T-470, O T S W/SILTS (R8NFE8) (10 MAY 80)

REFERENCE DATA

SREF = 2690.0000 SQ.FT. XMRP = 976.0000 IN. XT
LREF = 1290.3000 INCHES YMRP = .0000 IN. YT
BREF = 1290.3000 INCHES ZMRP = 400.0000 IN. ZT
SCALE = .0200

PARAMETRIC DATA

IB-ELV = 10.000 OB-ELV = 2.000
BDFLAP = .000 SPDBRK = .000
RUDDER = .000 SILTS = 1.000
MACH = 1.150 RN/L = 3.500

RUN NO. 1503/ 0 RN/L = 3.50 GRADIENT INTERVAL = -5.00/ 5.00

ALPHAO	BETAO	CP1	CP2	CP3	CP4	CPBV	RUDDER	CHR	CNVT	CBVT	CTVT
4.103	-5.794	-.32680	-.33460	-.32190	-.31140	-.34990	-.00130	-.00390	.26980	.21970	-.09910
3.996	-3.720	-.32860	-.33920	-.31700	-.31500	-.34150	.01310	-.00240	.16920	.13630	-.05730
3.757	.111	-.32920	-.34200	-.31150	-.31840	-.33090	.01730	.00110	.00570	.00220	.00040
3.841	4.038	-.31460	-.32760	-.28920	-.30340	-.32270	-.12380	-.00550	-.16970	-.13970	.05910
3.790	6.100	-.31620	-.32740	-.28950	-.30260	-.33530	-.02080	.00240	-.28320	-.23170	.10680
	GRADIENT	.00181	.00150	.00359	.00150	.00242	-.01772	-.00040	-.04369	-.03558	.01500

IA156A, AEDC PWT 16T-470, O T S W/SILTS (R8NFE9) (10 MAY 80)

REFERENCE DATA

SREF = 2690.0000 SQ.FT. XMRP = 976.0000 IN. XT
LREF = 1290.3000 INCHES YMRP = .0000 IN. YT
BREF = 1290.3000 INCHES ZMRP = 400.0000 IN. ZT
SCALE = .0200

PARAMETRIC DATA

IB-ELV = 10.000 OB-ELV = 2.000
BDFLAP = .000 SPDBRK = .000
RUDDER = .000 SILTS = 1.000
MACH = 1.150 RN/L = 3.500

RUN NO. 1509/ 0 RN/L = 3.51 GRADIENT INTERVAL = -5.00/ 5.00

ALPHAO	BETAO	CP1	CP2	CP3	CP4	CPBV	RUDDER	CHR	CNVT	CBVT	CTVT
-.455	-6.952	-.35900	-.36760	-.35780	-.34260	-.38510	-.30070	-.01660	.36330	.28990	-.14190
-.427	-4.786	-.34230	-.35280	-.33100	-.32580	-.36170	-.19920	-.00940	.23960	.19240	-.09000
-.393	-.538	-.32140	-.33430	-.29890	-.31300	-.32370	-.07880	-.00090	.01770	.01230	-.00540
-.362	3.716	-.32350	-.33640	-.29770	-.31430	-.33250	-.00720	.00410	-.19220	-.15420	.06890
-.361	5.867	-.32110	-.33330	-.29800	-.30920	-.33360	.08760	.01080	-.30500	-.24780	.11810
	GRADIENT	.00221	.00193	.00392	.00135	.00343	.02258	.00159	-.05079	-.04077	.01869

IA156A, AEDC PWT 16T-470, O T S (R8NM01) (10 MAY 80)

REFERENCE DATA

SREF = 2690.0000 SQ.FT. XMRP = 976.0000 IN. XT
LREF = 1290.3000 INCHES YMRP = .0000 IN. YT
BREF = 1290.3000 INCHES ZMRP = 400.0000 IN. ZT
SCALE = .0200

PARAMETRIC DATA

IB-ELV = 10.000 OB-ELV = 5.000
BDFLAP = .000 SPDBRK = .000
RUDDER = .000 SILTS = .000
MACH = .600 RN/L = 3.500

RUN NO. 801/ 0 RN/L = 3.51 GRADIENT INTERVAL = -5.00/ 5.00

ALPHAO	BETAO	ALFAOU	BETAOU	PT	P	Q	TT	AFA	BFA	DEINLR	DEONLR
-.312	-6.620	-.11530	-6.69730	2238.00000	1755.35690	441.53910	99.70000	.07710	.19630	10.02000	5.00000
-.295	-.356	-.09840	-.43270	2245.50000	1761.09399	443.13820	99.20000	.07700	.19630	10.02000	5.00000
-.308	5.848	-.11130	5.77110	2239.50000	1756.64670	441.74220	99.20000	.07720	.19630	10.02000	5.00000
	GRADIENT	.00000	.00000	.00000	.00000	.00000	.00000	.00000	.00000	.00000	.00000

IA156A, AEDC PWT 16T-470, O T S (R8NM02) (10 MAY 80)

REFERENCE DATA

SREF = 2690.0000 SQ.FT. XMRP = 976.0000 IN. XT
LREF = 1290.3000 INCHES YMRP = .0000 IN. YT
BREF = 1290.3000 INCHES ZMRP = 400.0000 IN ZT
SCALE = .0200

PARAMETRIC DATA

IB-ELV = 10.000 OB-ELV = 5.000
BDFLAP = .000 SPDBRK = .000
RUDDER = .000 SILTS = .000
MACH = .700 RN/L = 3.500

RUN NO. 803/ 0 RN/L = 3.50 GRADIENT INTERVAL = -5.00/ 5.00

ALPHAO	BETAO	ALFAOU	BETAOU	PT	P	Q	TT	AFA	BFA	DEINLR	DEONLR
-.307	-6.786	-.10280	-6.78040	2025.50000	1459.19679	501.64870	100.70000	-.00470	.20400	10.02000	5.00000
-.309	-.446	-.10470	-.44050	2023.89990	1458.92261	500.58960	99.80000	-.00430	.20400	10.02000	5.00000
-.343	5.803	-.13950	5.80780	2023.00000	1459.04080	499.78760	99.70000	-.00400	.20400	10.02000	5.00000
	GRADIENT	.00000	.00000	.00000	.00000	.00000	.00000	.00000	.00000	.00000	.00000

IA156A, AEDC PWT 16T-470, O T S (R8NM03) (10 MAY 80)

REFERENCE DATA

SREF = 2690.0000 SQ.FT. XMRP = 976.0000 IN. XT
LREF = 1290.3000 INCHES YMRP = .0000 IN. YT
BREF = 1290.3000 INCHES ZMRP = 400.0000 IN. ZT
SCALE = .0200

PARAMETRIC DATA

IB-ELV = 10.000 OB-ELV = 5.000
BDFLAP = .000 SPDBRK = .000
RUDDER = .000 SILTS = .000
MACH = .800 RN/L = 3.500

RUN NO. 804/ 0 RN/L = 3.50 GRADIENT INTERVAL = -5.00/ 5.00

ALPHAO	BETAO	ALFAOU	BETAOU	PT	P	Q	TT	AFA	BFA	DEINLR	DEONLR
-.315	-6.863	-.11140	-6.82430	1881.89990	1234.66161	553.02150	100.50000	-.03830	.20400	10.02000	5.00000
-.322	-.508	-.11840	-.46870	1876.89990	1231.71021	551.32840	100.30000	-.03820	.20410	10.02000	5.00000
-.361	5.804	-.15670	5.84310	1877.79980	1231.99879	551.79830	100.10000	-.03830	.20400	10.02000	5.00000
	GRADIENT	.00000	.00000	.00000	.00000	.00000	.00000	.00000	.00000	.00000	.00000

IA156A, AEDC PWT 16T-470, O T S (R8NM04) (10 MAY 80)

REFERENCE DATA

SREF = 2690.0000 SQ.FT. XMRP = 976.0000 IN. XT
LREF = 1290.3000 INCHES YMRP = .0000 IN. YT
BREF = 1290.3000 INCHES ZMRP = 400.0000 IN. ZT
SCALE = .0200

PARAMETRIC DATA

IB-ELV = 10.000 OB-ELV = 5.000
BDFLAP = .000 SPDBRK = .000
RUDDER = .000 SILTS = .000
MACH = .850 RN/L = 3.500

RUN NO. 805/ 0 RN/L = 3.50 GRADIENT INTERVAL = -5.00/ 5.00

ALPHAO	BETAO	ALFAOU	BETAOU	PT	P	Q	TT	AFA	BFA	DEINLR	DEONLR
-.323	-6.768	-.12110	-6.72050	1820.39990	1135.35600	573.84550	100.10000	-.04650	.20230	10.02000	5.00000
-.325	-.526	-.12240	-.47880	1824.79980	1137.81300	575.41600	100.10000	-.04650	.20230	10.02000	5.00000
-.372	5.679	-.16970	5.72610	1826.29980	1138.59770	575.98510	100.00000	-.04650	.20230	10.02000	5.00000
	GRADIENT	.00000	.00000	.00000	.00000	.00000	.00000	.00000	.00000	.00000	.00000

IA156A, AEDC PWT 16T-470, O T S (R8NM05) (10 MAY 80)

REFERENCE DATA

SREF = 2690.0000 SQ.FT. XMRP = 976.0000 IN. XT
LREF = 1290.3000 INCHES YMRP = .0000 IN. YT
BREF = 1290.3000 INCHES ZMRP = 400.0000 IN. ZT
SCALE = .0200

PARAMETRIC DATA

IB-ELV = 10.000 OB-ELV = 5.000
BDFLAP = .000 SPDBRK = .000
RUDDER = .000 SILTS = .000
MACH = .900 RN/L = 3.500

RUN NO. 806/ 0 RN/L = 3.50 GRADIENT INTERVAL = -5.00/ 5.00

ALPHAO	BETAO	ALFAOU	BETAOU	PT	P	Q	TT	AFA	BFA	DEINLR	DEONLR
-.339	-6.784	-.13950	-6.73130	1788.89990	1058.28830	599.37160	100.00000	-.05170	.20010	10.02000	5.00000
-.340	-.528	-.14030	-.47500	1782.09990	1053.94820	597.28200	100.10000	-.05180	.20010	10.02000	5.00000
-.387	5.707	-.18720	5.76010	1783.79980	1055.03320	597.80440	100.10000	-.05180	.20010	10.02000	5.00000
	GRADIENT	.00000	.00000	.00000	.00000	.00000	.00000	.00000	.00000	.00000	.00000

IA156A, AEDC PWT 16T-470, O T S (R8NM06) (10 MAY 80)

REFERENCE DATA

SREF = 2690.0000 SQ.FT. XMRP = 976.0000 IN. XT
LREF = 1290.3000 INCHES YMRP = .0000 IN. YT
BREF = 1290.3000 INCHES ZMRP = 400.0000 IN. ZT
SCALE = .0200

PARAMETRIC DATA

IB-ELV = 10.000 OB-ELV = 5.000
BDFLAP = .000 SPDBRK = .000
RUDDER = .000 SILTS = .000
MACH = .920 RN/L = 3.500

RUN NO. 807/ 0 RN/L = 3.50 GRADIENT INTERVAL = -5.00/ 5.00

ALPHAO	BETAO	ALFAOU	BETAOU	PT	P	Q	TT	AFA	BFA	DEINLR	DEONLR
-.348	-6.787	-.14940	-6.73320	1769.39990	1023.77370	606.30960	100.10000	-.05340	.19910	10.02000	5.00000
-.343	-.555	-.14370	-.50070	1770.09990	1023.46140	606.96310	100.00000	-.05340	.19910	10.02000	5.00000
-.389	5.691	-.19000	5.74480	1769.09990	1024.08031	605.92940	100.10000	-.05330	.19910	10.02000	5.00000
	GRADIENT	.00000	.00000	.00000	.00000	.00000	.00000	.00000	.00000	.00000	.00000

IA156A, AEDC PWT 16T-470, O T S (R8NM07) (10 MAY 80)

REFERENCE DATA

SREF = 2690.0000 SQ.FT. XMRP = 976.0000 IN. XT
LREF = 1290.3000 INCHES YMRP = .0000 IN. YT
BREF = 1290.3000 INCHES ZMRP = 400.0000 IN. ZT
SCALE = .0200

PARAMETRIC DATA

IB-ELV = 10.000 OB-ELV = 5.000
BDFLAP = .000 SPDBRK = .000
RUDDER = .000 SILTS = .000
MACH = .940 RN/L = 3.500

RUN NO. 808/ 0 RN/L = 3.50 GRADIENT INTERVAL = -5.00/ 5.00

ALPHAO	BETAO	ALFAOU	BETAOU	PT	P	Q	TT	AFA	BFA	DEINLR	DEONLR
-.350	-6.771	-.15200	-6.71570	1758.29980	995.30640	615.02420	100.30000	-.05470	.19820	10.02000	5.00000
-.343	-.582	-.14530	-.52680	1754.29980	993.24510	613.51150	100.20000	-.05470	.19820	10.02000	5.00000
-.393	5.795	-.19530	5.85060	1753.09990	992.55620	613.09720	100.20000	-.05480	.19820	10.02000	5.00000
	GRADIENT	.00000	.00000	.00000	.00000	.00000	.00000	.00000	.00000	.00000	.00000

IA156A, AEDC PWT 16T-470, O T S (R8NM08) (10 MAY 80)

REFERENCE DATA

SREF = 2690.0000 SQ.FT. XMRP = 976.0000 IN. XT
LREF = 1290.3000 INCHES YMRP = .0000 IN. YT
BREF = 1290.3000 INCHES ZMRP = 400.0000 IN. ZT
SCALE = .0200

PARAMETRIC DATA

IB-ELV = 10.000 OB-ELV = 5.000
BDFLAP = .000 SPDBRK = .000
RUDDER = .000 SILTS = .000
MACH = .950 RN/L = 3.500

RUN NO. 816/ 0 RN/L = 3.50 GRADIENT INTERVAL = -5.00/ 5.00

BETAO	ALPHAO	ALFAOU	BETAOU	PT	P	Q	TT	AFA	BFA	DEINLR	DEONLR
.566	-5.898	-5.85570	.36540	1746.89990	977.33030	617.41670	98.90000	-.05540	.19770	10.02000	5.00000
.266	-1.055	-1.01240	.06560	1747.00000	977.63110	617.31790	99.20000	-.05540	.19770	10.02000	5.00000
.197	.029	.07130	-.00430	1748.29980	978.41920	617.74390	98.90000	-.05540	.19770	10.02000	5.00000
-.170	5.745	5.78770	-.37120	1749.39990	978.70680	618.31250	100.00000	-.05540	.19770	10.02000	5.00000
	GRADIENT	1.00000	-.06450	1.19942	.72723	.39310	-.27683	-.00000	.00000	.00000	.00000

IA156A, AEDC PWT 16T-470, O T S (R8NM09) (10 MAY 80)

REFERENCE DATA

SREF = 2690.0000 SQ.FT. XMRP = 976.0000 IN. XT
LREF = 1290.3000 INCHES YMRP = .0000 IN. YT
BREF = 1290.3000 INCHES ZMRP = 400.0000 IN. ZT
SCALE = .0200

PARAMETRIC DATA

IB-ELV = 10.000 OB-ELV = 5.000
BDFLAP = .000 SPDBRK = .000
RUDDER = .000 SILTS = .000
MACH = .950 RN/L = 3.500

RUN NO. 820/ 0 RN/L = 3.50 GRADIENT INTERVAL = -5.00/ 5.00

ALPHAO	BETAO	ALFAOU	BETAOU	PT	P	Q	TT	AFA	BFA	DEINLR	DEONLR
-.433	-6.912	-.23490	-6.85680	1751.00000	979.79320	618.77320	100.40000	-.05540	.19770	10.02000	5.00000
-.362	-.195	-.16410	-.13940	1752.20000	979.87790	619.51900	100.40000	-.05550	.19770	10.02000	5.00000
-.330	5.845	-.13220	5.89970	1752.00000	980.48460	619.05400	100.40000	-.05540	.19770	10.02000	5.00000
	GRADIENT	.00000	.00000	.00000	.00000	.00000	.00000	.00000	.00000	.00000	.00000

IA156A, AEDC PWT 16T-470, O T S (R8NM10) (10 MAY 80)

REFERENCE DATA

SREF = 2690.0000 SQ.FT. XMRP = 976.0000 IN. XT
LREF = 1290.3000 INCHES YMRP = .0000 IN. YT
BREF = 1290.3000 INCHES ZMRP = 400.0000 IN. ZT
SCALE = .0200

PARAMETRIC DATA

IB-ELV = 10.000 OB-ELV = 5.000
BDFLAP = .000 SPDBRK = .000
RUDDER = .000 SILTS = .000
MACH = .960 RN/L = 3.500

RUN NO. 818/ 0 RN/L = 3.50 GRADIENT INTERVAL = -5.00/ 5.00

ALPHAO	BETAO	ALFAOU	BETAOU	PT	P	Q	TT	AFA	BFA	DEINLR	DEONLR
-.432	-6.901	-.23490	-6.84570	1742.29980	964.00070	621.64310	100.20000	-.05600	.19730	10.02000	5.00000
-.372	-.535	-.17480	-.47940	1743.50000	964.79030	622.00340	100.10000	-.05600	.19730	10.02000	5.00000
-.342	5.840	-.14520	5.89570	1743.79980	964.78640	622.20210	100.20000	-.05600	.19730	10.02000	5.00000
	GRADIENT	.00000	.00000	.00000	.00000	.00000	.00000	.00000	.00000	.00000	.00000

IA156A, AEDC PWT 16T-470, O T S (R8NM11) (10 MAY 80)

REFERENCE DATA

SREF = 2690.0000 SQ.FT. XMRP = 976.0000 IN. XT
LREF = 1290.3000 INCHES YMRP = .0000 IN. YT
BREF = 1290.3000 INCHES ZMRP = 400.0000 IN. ZT
SCALE = .0200

PARAMETRIC DATA

IB-ELV = 10.000 OB-ELV = 5.000
BDFLAP = .000 SPDBRK = .000
RUDDER = .000 SILTS = .000
MACH = .970 RN/L = 3.500

RUN NO. 821/ 0 RN/L = 3.50 GRADIENT INTERVAL = -5.00/ 5.00

ALPHAO	BETAO	ALFAOU	BETAOU	PT	P	Q	TT	AFA	BFA	DEINLR	DEONLR
-.443	-6.731	-.24640	-6.67510	1737.39990	950.47830	625.67460	100.40000	-.05660	.19680	10.02000	5.00000
-.377	-.325	-.18020	-.26840	1747.09990	956.18970	628.95340	100.40000	-.05660	.19690	10.02000	5.00000
-.342	5.959	-.14540	6.01590	1734.00000	948.20780	624.66770	100.40000	-.05660	.19680	10.02000	5.00000
	GRADIENT	.00000	.00000	.00000	.00000	.00000	.00000	.00000	.00000	.00000	.00000

IA156A, AEDC PWT 16T-470, O T S (R8NM12) (10 MAY 80)

REFERENCE DATA

SREF = 2690.0000 SQ.FT. XMRP = 976.0000 IN. XT
LREF = 1290.3000 INCHES YMRP = .0000 IN. YT
BREF = 1290.3000 INCHES ZMRP = 400.0000 IN. ZT
SCALE = .0200

PARAMETRIC DATA

IB-ELV = 10.000 OB-ELV = 5.000
BDFLAP = .000 SPDBRK = .000
RUDDER = .000 SILTS = .000
MACH = .980 RN/L = 3.500

RUN NO. 822/ 0 RN/L = 3.51 GRADIENT INTERVAL = -5.00/ 5.00

ALPHAO	BETAO	ALFAOU	BETAOU	PT	P	Q	TT	AFA	BFA	DEINLR	DEONLR
-.156	-6.192	.03820	-6.12700	1736.70000	938.41630	631.54910	99.40000	-.05730	.19640	10.02000	5.00000
-.374	.020	-.17020	.00030	1729.70000	935.38650	628.61230	99.50000	-.05720	.19640	10.02000	5.00000
-.004	5.943	.19520	5.98940	1734.70000	937.73730	630.61300	100.30000	-.05720	.19640	10.02000	5.00000
	GRADIENT	.00000	.00000	.00000	.00000	.00000	.00000	.00000	.00000	.00000	.00000

IA156A, AEDC PWT 16T-470, O T S (R8NM13) (10 MAY 80)

REFERENCE DATA

SREF = 2690.0000 SQ.FT. XMRP = 976.0000 IN. XT
LREF = 1290.3000 INCHES YMRP = .0000 IN. YT
BREF = 1290.3000 INCHES ZMRP = 400.0000 IN. ZT
SCALE = .0200

PARAMETRIC DATA

IB-ELV = 10.000 OB-ELV = 5.000
BDFLAP = .000 SPDBRK = .000
RUDDER = .000 SILTS = .000
MACH = .990 RN/L = 3.500

RUN NO. 823/ 0 RN/L = 3.50 GRADIENT INTERVAL = -5.00/ 5.00

ALPHAO	BETAO	ALFAOU	BETAOU	PT	P	Q	TT	AFA	BFA	DEINLR	DEONLR
-.071	-6.202	.12190	-6.13410	1728.29980	924.44380	633.35230	100.40000	-.05770	.19610	10.02000	5.00000
-.328	.120	-.12520	.09550	1729.50000	924.52980	634.07590	100.30000	-.05780	.19600	10.02000	5.00000
-.058	5.687	.14090	5.73570	1735.70000	927.46950	636.54000	100.40000	-.05780	.19600	10.02000	5.00000
	GRADIENT	.00000	.00000	.00000	.00000	.00000	.00000	.00000	.00000	.00000	.00000

IA156A, AEDC PWT 16T-470, O T S (R8NM14) (10 MAY 80)

REFERENCE DATA

SREF = 2690.0000 SQ.FT. XMRP = 976.0000 IN. XT
LREF = 1290.3000 INCHES YMRP = .0000 IN. YT
BREF = 1290.3000 INCHES ZMRP = 400.0000 IN. ZT
SCALE = .0200

PARAMETRIC DATA

IB-ELV = 10.000 OB-ELV = 5.000
BDFLAP = .000 SPDBRK = .000
RUDDER = .000 SILTS = .000
MACH = 1.010 RN/L = 3.500

RUN NO. 824/ 0 RN/L = 3.51 GRADIENT INTERVAL = -5.00/ 5.00

ALPHAO	BETAO	ALFAOU	BETAOU	PT	P	Q	TT	AFA	BFA	DEINLR	DEONLR
.039	-6.145	.23030	-6.07270	1727.79980	906.36210	642.11790	99.60000	-.05860	.19550	10.02000	5.00000
-.230	.302	-.03050	.26020	1725.00000	900.77050	643.10570	99.30000	-.05880	.19540	10.02000	5.00000
-.111	6.034	.08700	6.08470	1714.39990	895.47140	639.03810	99.40000	-.05880	.19540	10.02000	5.00000
	GRADIENT	.00000	.00000	.00000	.00000	.00000	.00000	.00000	.00000	.00000	.00000

IA156A, AEDC PWT 16T-470, O T S (R8NM15) (10 MAY 80)

REFERENCE DATA

SREF = 2690.0000 SQ.FT. XMRP = 976.0000 IN. XT
LREF = 1290.3000 INCHES YMRP = .0000 IN. YT
BREF = 1290.3000 INCHES ZMRP = 400.0000 IN. ZT
SCALE = .0200

PARAMETRIC DATA

IB-ELV = 10.000 OB-ELV = 5.000
BDFLAP = .000 SPDBRK = .000
RUDDER = .000 SILTS = .000
MACH = 1.020 RN/L = 3.500

RUN NO. 825/ 0 RN/L = 3.51 GRADIENT INTERVAL = -5.00/ 5.00

ALPHAO	BETAO	ALFAOU	BETAOU	PT	P	Q	TT	AFA	BFA	DEINLR	DEONLR
-.021	-6.211	.17000	-6.13970	1715.50000	885.31740	644.65230	99.30000	-.05940	.19510	10.02000	5.00000
-.340	.134	-.13790	.10620	1713.89990	884.83370	643.88700	99.30000	-.05930	.19510	10.02000	5.00000
-.052	6.077	.14590	6.12660	1714.39990	884.82810	644.20140	99.30000	-.05930	.19510	10.02000	5.00000
	GRADIENT	.00000	.00000	.00000	.00000	.00000	.00000	.00000	.00000	.00000	.00000

IA156A, AEDC PWT 16T-470, O T S (R8NM16) (10 MAY 80)

REFERENCE DATA

SREF = 2690.0000 SQ.FT. XMRP = 976.0000 IN. XT
LREF = 1290.3000 INCHES YMRP = .0000 IN. YT
BREF = 1290.3000 INCHES ZMRP = 400.0000 IN. ZT
SCALE = .0200

PARAMETRIC DATA

IB-ELV = 10.000 OB-ELV = 5.000
BDFLAP = .000 SPDBRK = .000
RUDDER = .000 SILTS = .000
MACH = 1.030 RN/L = 3.500

RUN NO. 826/ 0 RN/L = 3.51 GRADIENT INTERVAL = -5.00/ 5.00

ALPHAO	BETAO	ALFAOU	BETAOU	PT	P	Q	TT	AFA	BFA	DEINLR	DEONLR
-.007	-6.500	.18380	-6.42830	1713.59990	873.89790	648.89450	99.50000	-.05980	.19480	10.02000	5.00000
-.314	.180	-.11240	.14800	1709.70000	872.33620	647.21680	99.40000	-.05980	.19480	10.02000	5.00000
-.099	6.275	.09800	6.32700	1711.50000	872.91820	648.05640	99.50000	-.05980	.19480	10.02000	5.00000
	GRADIENT	.00000	.00000	.00000	.00000	.00000	.00000	.00000	.00000	.00000	.00000

IA156A, AEDC PWT 16T-470, O T S (R8NM17) (10 MAY 80)

REFERENCE DATA

SREF = 2690.0000 SQ.FT. XMRP = 976.0000 IN. XT
LREF = 1290.3000 INCHES YMRP = .0000 IN. YT
BREF = 1290.3000 INCHES ZMRP = 400.0000 IN. ZT
SCALE = .0200

PARAMETRIC DATA

IB-ELV = 10.000 OB-ELV = 5.000
BDFLAP = .000 SPDBRK = .000
RUDDER = .000 SILTS = .000
MACH = 1.040 RN/L = 3.500

RUN NO. 827/ 0 RN/L = 3.51 GRADIENT INTERVAL = -5.00/ 5.00

ALPHAO	BETAO	ALFAOU	BETAOU	PT	P	Q	TT	AFA	BFA	DEINLR	DEONLR
-.214	-6.395	-.02180	-6.32790	1708.89990	861.51150	651.75630	99.50000	-.06030	.19460	10.02000	5.00000
-.345	.160	-.14150	.15100	1709.70000	861.50270	652.25070	99.60000	-.06040	.19460	10.02000	5.00000
-.040	6.152	.15750	6.20230	1705.09990	858.74490	650.69780	99.50000	-.06040	.19460	10.02000	5.00000
	GRADIENT	.00000	.00000	.00000	.00000	.00000	.00000	.00000	.00000	.00000	.00000

IA156A, AEDC PWT 16T-470, O T S (R8NM18) (10 MAY 80)

REFERENCE DATA

SREF = 2690.0000 SQ.FT. XMRP = 976.0000 IN. XT
LREF = 1290.3000 INCHES YMRP = .0000 IN. YT
BREF = 1290.3000 INCHES ZMRP = 400.0000 IN. ZT
SCALE = .0200

PARAMETRIC DATA

IB-ELV = 10.000 OB-ELV = 5.000
BDFLAP = .000 SPDBRK = .000
RUDDER = .000 SILTS = .000
MACH = 1.050 RN/L = 3.500

RUN NO. 828/ 0 RN/L = 3.51 GRADIENT INTERVAL = -5.00/ 5.00

ALPHAO	BETAO	ALFAOU	BETAOU	PT	P	Q	TT	AFA	BFA	DEINLR	DEONLR
-.128	-6.378	.06330	-6.30810	1705.09990	848.11790	655.51560	98.90000	-.06090	.19440	10.02000	5.00000
-.291	.263	-.08830	.24030	1699.20000	845.87520	652.93700	99.10000	-.06090	.19440	10.02000	5.00000
-.145	6.216	.05160	6.26980	1704.09990	848.72970	654.63350	99.50000	-.06080	.19440	10.02000	5.00000
	GRADIENT	.00000	.00000	.00000	.00000	.00000	.00000	.00000	.00000	.00000	.00000

IA156A, AEDC PWT 16T-470, O T S (R8NM19) (10 MAY 80)

REFERENCE DATA

SREF = 2690.0000 SQ.FT. XMRP = 976.0000 IN. XT
LREF = 1290.3000 INCHES YMRP = .0000 IN. YT
BREF = 1290.3000 INCHES ZMRP = 400.0000 IN. ZT
SCALE = .0200

PARAMETRIC DATA

IB-ELV = 10.000 OB-ELV = 5.000
BDFLAP = .000 SPDBRK = .000
RUDDER = .000 SILTS = .000
MACH = 1.060 RN/L = 3.500

RUN NO. 829/ 0 RN/L = 3.50 GRADIENT INTERVAL = -5.00/ 5.00

ALPHAO	BETAO	ALFAOU	BETAOU	PT	P	Q	TT	AFA	BFA	DEINLR	DEONLR
-.024	-6.353	.16600	-6.28000	1700.89990	837.03880	657.88570	99.80000	-.06130	.19430	10.02000	5.00000
-.275	.284	-.07250	.26290	1700.79980	837.03980	657.82500	99.70000	-.06130	.19430	10.02000	5.00000
-.170	6.205	.02620	6.26060	1700.20000	835.64360	658.07540	99.70000	-.06130	.19430	10.02000	5.00000
	GRADIENT	.00000	.00000	.00000	.00000	.00000	.00000	.00000	.00000	.00000	.00000

IA156A, AEDC PWT 16T-470, O T S (R8NM20) (10 MAY 80)

REFERENCE DATA

SREF = 2690.0000 SQ.FT. XMRP = 976.0000 IN. XT
LREF = 1290.3000 INCHES YMRP = .0000 IN. YT
BREF = 1290.3000 INCHES ZMRP = 400.0000 IN. ZT
SCALE = .0200

PARAMETRIC DATA

IB-ELV = 10.000 OB-ELV = 5.000
BDFLAP = .000 SPDBRK = .000
RUDDER = .000 SILTS = .000
MACH = 1.080 RN/L = 3.500

RUN NO. 830/ 0 RN/L = 3.48 GRADIENT INTERVAL = -5.00/ 5.00

ALPHAO	BETAO	ALFAOU	BETAOU	PT	P	Q	TT	AFA	BFA	DEINLR	DEONLR
-.161	-6.471	.03020	-6.40150	1673.09990	803.67460	655.55810	99.60000	-.06230	.19430	10.02000	5.00000
-.313	.183	-.10990	.16000	1688.79980	810.62620	661.95580	99.80000	-.06230	.19430	10.02000	5.00000
-.214	6.199	-.01790	6.25660	1694.39990	814.57420	663.62500	99.80000	-.06220	.19430	10.02000	5.00000
	GRADIENT	.00000	.00000	.00000	.00000	.00000	.00000	.00000	.00000	.00000	.00000

IA156A, AEDC PWT 16T-470, O T S (R8NM21) (10 MAY 80)

REFERENCE DATA

SREF = 2690.0000 SQ.FT. XMRP = 976.0000 IN. XT
LREF = 1290.3000 INCHES YMRP = .0000 IN. YT
BREF = 1290.3000 INCHES ZMRP = 400.0000 IN. ZT
SCALE = .0200

PARAMETRIC DATA

IB-ELV = 10.000 OB-ELV = 5.000
BDFLAP = .000 SPDBRK = .000
RUDDER = .000 SILTS = .000
MACH = 1.100 RN/L = 3.500

RUN NO. 831/ 0 RN/L = 3.50 GRADIENT INTERVAL = -5.00/ 5.00

ALPHAO	BETAO	ALFAOU	BETAOU	PT	P	Q	TT	AFA	BFA	DEINLR	DEONLR
-.224	-6.217	-.03150	-6.14750	1687.89990	790.22970	669.70360	99.90000	-.06320	.19440	10.02000	5.00000
-.347	.132	-.14420	.10900	1689.20000	791.61720	669.91160	100.10000	-.06320	.19440	10.02000	5.00000
-.016	6.090	.18130	6.14200	1689.70000	791.31250	670.32300	100.00000	-.06320	.19440	10.02000	5.00000
	GRADIENT	.00000	.00000	.00000	.00000	.00000	.00000	.00000	.00000	.00000	.00000

IA156A, AEDC PWT 16T-470, O T S (R8NM22) (10 MAY 80)

REFERENCE DATA

SREF = 2690.0000 SQ.FT. XMRP = 976.0000 IN. XT
LREF = 1290.3000 INCHES YMRP = .0000 IN. YT
BREF = 1290.3000 INCHES ZMRP = 400.0000 IN. ZT
SCALE = .0200

PARAMETRIC DATA

IB-ELV = 10.000 OB-ELV = 5.000
BDFLAP = .000 SPDBRK = .000
RUDDER = .000 SILTS = .000
MACH = 1.150 RN/L = 3.500

RUN NO. 836/ 0 RN/L = 3.50 GRADIENT INTERVAL = -5.00/ 5.00

ALPHAO	BETAO	ALFAOU	BETAOU	PT	P	Q	TT	AFA	BFA	DEINLR	DEONLR
.183	-5.955	-.01160	-6.02580	1678.39990	738.49510	683.30030	99.40000	-.06550	.19610	10.02000	5.00000
-.344	.100	-.14480	.04360	1680.70000	739.77270	684.14670	99.20000	-.06550	.19610	10.02000	5.00000
-.189	5.963	.00840	6.02280	1674.39990	736.43330	681.77420	99.20000	-.06550	.19610	10.02000	5.00000
	GRADIENT	.00000	.00000	.00000	.00000	.00000	.00000	.00000	.00000	.00000	.00000

IA156A, AEDC PWT 16T-470, O T S (R8NM23) (10 MAY 80)

REFERENCE DATA

SREF = 2690.0000 SQ.FT. XMRP = 976.0000 IN. XT
LREF = 1290.3000 INCHES YMRP = .0000 IN. YT
BREF = 1290.3000 INCHES ZMRP = 400.0000 IN. ZT
SCALE = .0200

PARAMETRIC DATA

IB-ELV = 10.000 OB-ELV = 5.000
BDFLAP = .000 SPDBRK = .000
RUDDER = .000 SILTS = .000
MACH = 1.200 RN/L = 3.500

RUN NO. 837/ 0 RN/L = 3.51 GRADIENT INTERVAL = -5.00/ 5.00

ALPHAO	BETAO	ALFAOU	BETAOU	PT	P	Q	TT	AFA	BFA	DEINLR	DEONLR
.094	-5.933	-.10490	-6.00230	1667.50000	687.79320	693.09640	99.20000	-.06780	.19990	10.02000	5.00000
-.213	.260	-.01810	.17790	1682.79980	694.05180	699.47050	99.40000	-.06780	.19990	10.02000	5.00000
-.233	6.027	-.03170	6.09040	1681.20000	693.86400	698.67310	99.40000	-.06780	.19990	10.02000	5.00000
	GRADIENT	.00000	.00000	.00000	.00000	.00000	.00000	.00000	.00000	.00000	.00000

IA156A, AEDC PWT 16T-470, O T S (R8NM24) (10 MAY 80)

REFERENCE DATA

SREF = 2690.0000 SQ.FT. XMRP = 976.0000 IN. XT
LREF = 1290.3000 INCHES YMRP = .0000 IN. YT
BREF = 1290.3000 INCHES ZMRP = 400.0000 IN. ZT
SCALE = .0200

PARAMETRIC DATA

IB-ELV = 10.000 OB-ELV = 5.000
BDFLAP = .000 SPDBRK = .000
RUDDER = .000 SILTS = .000
MACH = 1.250 RN/L = 3.500

RUN NO. 838/ 0 RN/L = 3.50 GRADIENT INTERVAL = -5.00/ 5.00

ALPHAO	BETAO	ALFAOU	BETAOU	PT	P	Q	TT	AFA	BFA	DEINLR	DEONLR
-.160	-6.422	.04350	-6.34280	1672.79980	645.54860	706.39550	99.40000	-.07020	.20640	10.02000	5.00000
-.274	.269	-.05730	.24410	1671.59990	645.35720	705.82930	99.50000	-.07020	.20630	10.02000	5.00000
-.219	5.956	-.01110	6.02080	1677.59990	647.90090	708.31300	99.50000	-.07020	.20630	10.02000	5.00000
	GRADIENT	.00000	.00000	.00000	.00000	.00000	.00000	.00000	.00000	.00000	.00000

IA156A, AEDC PWT 16T-470, O T S

(R8NM25) (10 MAY 80)

REFERENCE DATA

SREF = 2690.0000 SQ.FT. XMRP = 976.0000 IN. XT
LREF = 1290.3000 INCHES YMRP = .0000 IN. YT
BREF = 1290.3000 INCHES ZMRP = 400.0000 IN. ZT
SCALE = .0200

PARAMETRIC DATA

IB-ELV = 10.000 OB-ELV = 5.000
BDFLAP = .000 SPDBRK = .000
RUDDER = .000 SILTS = .000
MACH = 1.300 RN/L = 3.500

RUN NO. 839/ 0 RN/L = 3.50 GRADIENT INTERVAL = -5.00/ 5.00

ALPHAO	BETAO	ALFAOU	BETAOU	PT	P	Q	TT	AFA	BFA	DEINLR	DEONLR
-.187	-6.415	.02540	-6.33370	1680.39990	607.65230	717.28250	99.50000	-.07320	.21540	10.02000	5.00000
-.333	.162	-.10520	.16250	1683.20000	607.43990	718.66870	99.70000	-.07330	.21580	10.02000	5.00000
-.214	6.171	.00400	6.23880	1679.09990	605.87720	716.93120	99.60000	-.07330	.21580	10.02000	5.00000
	GRADIENT	.00000	.00000	.00000	.00000	.00000	.00000	.00000	.00000	.00000	.00000

IA156A, AEDC PWT 16T-470, O T S

(R8NM26) (10 MAY 80)

REFERENCE DATA

SREF = 2690.0000 SQ.FT. XMRP = 976.0000 IN. XT
LREF = 1290.3000 INCHES YMRP = .0000 IN. YT
BREF = 1290.3000 INCHES ZMRP = 400.0000 IN. ZT
SCALE = .0200

PARAMETRIC DATA

IB-ELV = 10.000 OB-ELV = 5.000
BDFLAP = .000 SPDBRK = .000
RUDDER = .000 SILTS = .000
MACH = 1.400 RN/L = 3.500

RUN NO. 840/ 0 RN/L = 3.50 GRADIENT INTERVAL = -5.00/ 5.00

ALPHAO	BETAO	ALFAOU	BETAOU	PT	P	Q	TT	AFA	BFA	DEINLR	DEONLR
-.188	-6.466	.05360	-6.36930	1698.00000	532.64790	732.09080	100.20000	-.08550	.24590	10.02000	5.00000
-.345	.249	-.08680	.22560	1702.09990	535.19820	733.83400	100.20000	-.08520	.24530	10.02000	5.00000
-.211	6.167	.03780	6.24310	1704.50000	535.68210	734.87430	100.10000	-.08520	.24540	10.02000	5.00000
	GRADIENT	.00000	.00000	.00000	.00000	.00000	.00000	.00000	.00000	.00000	.00000

IA156A, AEDC PWT 16T-470, O T S (R8NM27) (10 MAY 80)

REFERENCE DATA

SREF = 2690.0000 SQ.FT. XMRP = 976.0000 IN. XT
LREF = 1290.3000 INCHES YMRP = .0000 IN. YT
BREF = 1290.3000 INCHES ZMRP = 400.0000 IN. ZT
SCALE = .0200

PARAMETRIC DATA

IB-ELV = 10.000 OB-ELV = 5.000
BDFLAP = .000 SPDBRK = .000
RUDDER = .000 SILTS = .000
MACH = 1.550 RN/L = 3.200

RUN NO. 841/ 0 RN/L = 3.19 GRADIENT INTERVAL = -5.00/ 5.00

ALPHAO	BETAO	ALFAOU	BETAOU	PT	P	Q	TT	AFA	BFA	DEINLR	DEONLR
-.168	-6.478	.14630	-6.31070	1594.20000	404.00440	679.05860	100.20000	-.14850	.32370	10.02000	5.00000
-.435	.244	-.07830	.24640	1605.89990	406.72750	683.99370	100.20000	-.14880	.32400	10.02000	5.00000
-.301	6.109	.02830	6.24550	1603.79980	406.34030	683.12840	100.10000	-.14860	.32380	10.02000	5.00000
	GRADIENT	.00000	.00000	.00000	.00000	.00000	.00000	.00000	.00000	.00000	.00000

IA156A, AEDC PWT 16T-470, O T S (R8NM28) (10 MAY 80)

REFERENCE DATA

SREF = 2690.0000 SQ.FT. XMRP = 976.0000 IN. XT
LREF = 1290.3000 INCHES YMRP = .0000 IN. YT
BREF = 1290.3000 INCHES ZMRP = 400.0000 IN. ZT
SCALE = .0200

PARAMETRIC DATA

IB-ELV = 10.000 OB-ELV = 5.000
BDFLAP = .000 SPDBRK = .000
RUDDER = .000 SILTS = .000
MACH = .600 RN/L = 3.500

RUN NO. 846/ 0 RN/L = 3.50 GRADIENT INTERVAL = -5.00/ 5.00

ALPHAO	BETAO	ALFAOU	BETAOU	PT	P	Q	TT	AFA	BFA	DEINLR	DEONLR
-.334	-6.579	-.13810	-6.65720	2241.09991	1759.05270	441.11300	99.60000	.07820	.19620	10.02000	5.00000
.127	-5.884	-.06950	-5.80780	2233.39990	1751.79491	440.59380	100.30000	.07710	.19630	10.02000	5.00000
.111	.087	-.08510	.16310	2248.59991	1762.95950	444.21390	100.30000	.07650	.19640	10.02000	5.00000
-.270	5.876	-.07390	5.79810	2233.79980	1752.59990	440.26980	100.40000	.07750	.19620	10.02000	5.00000
.110	6.556	-.08640	6.63330	2235.00000	1753.08250	440.88260	100.10000	.07710	.19630	10.02000	5.00000
	GRADIENT	.00000	.00000	.00000	.00000	.00000	.00000	.00000	.00000	.00000	.00000

IA156A, AEDC PWT 16T-470, O T S (R8NM29) (10 MAY 80)

REFERENCE DATA

SREF = 2690.0000 SQ.FT. XMRP = 976.0000 IN. XT
LREF = 1290.3000 INCHES YMRP = .0000 IN. YT
BREF = 1290.3000 INCHES ZMRP = 400.0000 IN. ZT
SCALE = .0200

PARAMETRIC DATA

IB-ELV = 10.000 OB-ELV = 5.000
BDFLAP = .000 SPDBRK = .000
RUDDER = .000 SILTS = .000
MACH = .900 RN/L = 3.500

RUN NO. 845/ 0 RN/L = 3.51 GRADIENT INTERVAL = -5.00/ 5.00

ALPHAO	BETAO	ALFAOU	BETAOU	PT	P	Q	TT	AFA	BFA	DEINLR	DEONLR
-.394	-6.843	-.19440	-6.79100	1785.00000	1055.11670	598.57930	99.40000	-.05180	.20010	10.02000	5.00000
.079	-5.835	-.12040	-5.88730	1789.00000	1058.28690	599.44120	99.30000	-.05170	.20010	10.02000	5.00000
-.355	-.269	-.15470	-.21840	1784.79980	1055.72490	598.07980	99.40000	-.05170	.20010	10.02000	5.00000
.065	.262	-.13450	.21030	1788.89990	1058.79250	599.07100	99.40000	-.05170	.20010	10.02000	5.00000
-.299	5.811	-.09860	5.86150	1781.00000	1052.85451	597.17700	99.30000	-.05180	.20010	10.02000	5.00000
.043	6.812	-.15670	6.76010	1787.20000	1057.00150	598.96920	99.40000	-.05180	.20010	10.02000	5.00000
	GRADIENT	.03803	.80704	7.71856	5.77483	1.86596	-.00000	-.00000	-.00000	-.00000	.00000

IA156A, AEDC PWT 16T-470, O T S (R8NM30) (10 MAY 80)

REFERENCE DATA

SREF = 2690.0000 SQ.FT. XMRP = 976.0000 IN. XT
LREF = 1290.3000 INCHES YMRP = .0000 IN. YT
BREF = 1290.3000 INCHES ZMRP = 400.0000 IN. ZT
SCALE = .0200

PARAMETRIC DATA

IB-ELV = 10.000 OB-ELV = 5.000
BDFLAP = .000 SPDBRK = .000
RUDDER = .000 SILTS = .000
MACH = 1.100 RN/L = 3.500

RUN NO. 844/ 0 RN/L = 3.50 GRADIENT INTERVAL = -5.00/ 5.00

ALPHAO	BETAO	ALFAOU	BETAOU	PT	P	Q	TT	AFA	BFA	DEINLR	DEONLR
-.513	-6.849	-.31750	-6.78730	1688.09990	791.22750	669.42580	99.60000	-.06320	.19440	10.02000	5.00000
.050	-5.864	-.14380	-5.92800	1686.00000	790.14750	668.63090	99.70000	-.06320	.19440	10.02000	5.00000
-.403	-.197	-.20900	-.13460	1686.79980	790.13990	669.09940	99.40000	-.06320	.19440	10.02000	5.00000
.034	.184	-.16040	.11950	1686.00000	789.14770	669.02560	99.50000	-.06320	.19440	10.02000	5.00000
-.331	5.850	-.13600	5.91240	1689.50000	791.11450	670.28490	99.70000	-.06320	.19440	10.02000	5.00000
-.018	6.825	-.21230	6.76100	1686.79980	791.13960	668.70360	99.50000	-.06320	.19440	10.02000	5.00000
	GRADIENT	.12749	.66658	-2.09816	-2.60283	-.19362	.26233	-.00000	.00000	-.00000	.00000

IA156A, AEDC PWT 16T-470, O T S (R8NM31) (10 MAY 80)

REFERENCE DATA

SREF = 2690.0000 SQ.FT. XMRP = 976.0000 IN. XT
LREF = 1290.3000 INCHES YMRP = .0000 IN. YT
BREF = 1290.3000 INCHES ZMRP = 400.0000 IN. ZT
SCALE = .0200

PARAMETRIC DATA

IB-ELV = 10.000 OB-ELV = 5.000
BDFLAP = .000 SPDBRK = .000
RUDDER = .000 SILTS = .000
MACH = 1.550 RN/L = 3.200

RUN NO. 842/ 0 RN/L = 3.20 GRADIENT INTERVAL = -5.00/ 5.00

ALPHAO	BETAO	ALFAOU	BETAOU	PT	P	Q	TT	AFA	BFA	DEINLR	DEONLR
-.615	-6.815	-.29000	-6.66640	1603.79980	405.34910	682.92800	100.10000	-.14990	.32490	10.02000	5.00000
.179	-6.059	-.14500	-6.20740	1604.29980	406.23900	683.29570	100.00000	-.14890	.32410	10.02000	5.00000
-.533	-.323	-.20710	-.17560	1606.09990	406.42920	684.00850	100.10000	-.14930	.32440	10.02000	5.00000
.170	.324	-.15380	.17420	1598.39990	404.58030	680.74950	99.80000	-.14920	.32420	10.02000	5.00000
-.475	5.830	-.15050	5.97620	1607.09990	407.21780	684.54220	99.90000	-.14860	.32370	10.02000	5.00000
-.489	6.059	-.16420	6.20600	1604.89990	406.33540	683.54000	100.00000	-.14900	.32410	10.02000	5.00000
.098	6.797	-.22590	6.64680	1607.00000	406.72240	684.40500	100.10000	-.14920	.32430	10.02000	5.00000
	GRADIENT	.08237	.54057	-11.89923	-2.85721	-5.03632	-.46361	.00015	-.00031	.00000	.00000

IA156A, AEDC PWT 16T-470, O T S (R8NM34) (10 MAY 80)

REFERENCE DATA

SREF = 2690.0000 SQ.FT. XMRP = 976.0000 IN. XT
LREF = 1290.3000 INCHES YMRP = .0000 IN. YT
BREF = 1290.3000 INCHES ZMRP = 400.0000 IN. ZT
SCALE = .0200

PARAMETRIC DATA

IB-ELV = 10.000 OB-ELV = 5.000
BDFLAP = .000 SPDBRK = .000
RUDDER = .000 SILTS = .000
MACH = 1.100 RN/L = 3.500
Z = 4.500

RUN NO. 835/ 0 RN/L = 3.51 GRADIENT INTERVAL = -5.00/ 5.00

ALPHAO	BETAO	ALFAOU	BETAOU	PT	P	Q	TT	AFA	BFA	DEINLR	DEONLR
.133	-5.950	-.06060	-6.01520	1684.70000	788.75980	668.42290	98.20000	-.06330	.19440	10.02000	5.00000
-.326	.162	-.12230	.14520	1686.09990	789.94650	668.76860	98.20000	-.06320	.19440	10.02000	5.00000
-.142	6.104	.05530	6.15950	1691.70000	791.99390	671.21730	99.90000	-.06320	.19440	10.02000	5.00000
	GRADIENT	.00000	.00000	.00000	.00000	.00000	.00000	.00000	.00000	.00000	.00000

IA156A, AEDC PWT 16T-470, O T S (R8NM35) (10 MAY 80)

REFERENCE DATA

SREF = 2690.0000 SQ.FT. XMRP = 976.0000 IN. XT
LREF = 1290.3000 INCHES YMRP = .0000 IN. YT
BREF = 1290.3000 INCHES ZMRP = 400.0000 IN. ZT
SCALE = .0200

PARAMETRIC DATA

IB-ELV = 10.000 OB-ELV = 5.000
BDFLAP = .000 SPDBRK = .000
RUDDER = .000 SILTS = .000
MACH = 1.100 RN/L = 3.500
Z = 5.500

RUN NO. 834/ 0 RN/L = 3.51 GRADIENT INTERVAL = -5.00/ 5.00

ALPHAO	BETAO	ALFAOU	BETAOU	PT	P	Q	TT	AFA	BFA	DEINLR	DEONLR
.202	-5.983	.00890	-6.05080	1684.59990	788.96070	668.28540	98.80000	-.06320	.19440	10.02000	5.00000
-.218	.317	-.02170	.25910	1684.29980	788.56350	668.26760	98.50000	-.06320	.19440	10.02000	5.00000
-.235	5.993	-.03870	6.05110	1688.79980	791.02100	669.91460	98.30000	-.06320	.19440	10.02000	5.00000
	GRADIENT	.00000	.00000	.00000	.00000	.00000	.00000	.00000	.00000	.00000	.00000

IA156A, AEDC PWT 16T-470, O T S (R8NM36) (10 MAY 80)

REFERENCE DATA

SREF = 2690.0000 SQ.FT. XMRP = 976.0000 IN. XT
LREF = 1290.3000 INCHES YMRP = .0000 IN. YT
BREF = 1290.3000 INCHES ZMRP = 400.0000 IN. ZT
SCALE = .0200

PARAMETRIC DATA

IB-ELV = 10.000 OB-ELV = 5.000
BDFLAP = .000 SPDBRK = .000
RUDDER = .000 SILTS = .000
MACH = 1.100 RN/L = 3.500
Z = 6.500

RUN NO. 832/ 0 RN/L = 3.50 GRADIENT INTERVAL = -5.00/ 5.00

ALPHAO	BETAO	ALFAOU	BETAOU	PT	P	Q	TT	AFA	BFA	DEINLR	DEONLR
-.157	-6.418	.03500	-6.34640	1689.20000	791.61720	669.91160	100.00000	-.06320	.19440	10.02000	5.00000
-.303	.234	-.10000	.21270	1689.20000	791.91700	669.79300	100.00000	-.06320	.19440	10.02000	5.00000
-.097	6.205	.09980	6.26040	1689.29980	791.01640	670.20730	99.90000	-.06320	.19440	10.02000	5.00000
	GRADIENT	.00000	.00000	.00000	.00000	.00000	.00000	.00000	.00000	.00000	.00000

IA156A, AEDC PWT 16T-470, O T S (R8NM37) (10 MAY 80)

REFERENCE DATA

SREF = 2690.0000 SQ.FT. XMRP = 976.0000 IN. XT
LREF = 1290.3000 INCHES YMRP = .0000 IN. YT
BREF = 1290.3000 INCHES ZMRP = 400.0000 IN. ZT
SCALE = .0200

PARAMETRIC DATA

IB-ELV = 10.000 OB-ELV = 5.000
BDFLAP = .000 SPDBRK = .000
RUDDER = .000 SILTS = .000
MACH = 1.550 RN/L = 3.200

RUN NO. 843/ 0 RN/L = 3.19 GRADIENT INTERVAL = -5.00/ 5.00

ALPHAO	BETAO	ALFAOU	BETAOU	PT	P	Q	TT	AFA	BFA	DEINLR	DEONLR
.171	.281	-.15320	.13120	1608.89990	407.11060	685.19560	100.00000	-.14930	.32440	10.02000	5.00000
-.533	-.269	-.20940	-.12150	1593.50000	404.10670	678.81640	99.80000	-.14820	.32340	10.02000	5.00000
-.536	-.291	-.21100	-.14240	1605.89990	406.33110	683.91380	100.00000	-.14930	.32440	10.02000	5.00000
.186	.269	-.13680	.11920	1601.09990	405.85690	682.01860	100.00000	-.14830	.32360	10.02000	5.00000
.164	.278	-.15900	.12800	1600.50000	405.36400	681.69460	100.10000	-.14880	.32400	10.02000	5.00000
-.514	-.290	-.18960	-.14260	1603.39990	406.44120	682.99850	100.10000	-.14830	.32360	10.02000	5.00000
	GRADIENT	.09535	.46829	4.32868	.80757	1.78596	.11189	-.00035	.00035	-.00000	.00000

IA156A, AEDC PWT 16T-470, O T S W/SILTS (R8NM40) (10 MAY 80)

REFERENCE DATA

SREF = 2690.0000 SQ.FT. XMRP = 976.0000 IN. XT
LREF = 1290.3000 INCHES YMRP = .0000 IN. YT
BREF = 1290.3000 INCHES ZMRP = 400.0000 IN. ZT
SCALE = .0200

PARAMETRIC DATA

IB-ELV = 10.000 OB-ELV = 5.000
BDFLAP = .000 SPDBRK = .000
RUDDER = .000 SILTS = 1.000
MACH = .300 RN/L = 3.500

RUN NO. 862/ 0 RN/L = 2.70 GRADIENT INTERVAL = -5.00/ 5.00

ALPHAO	BETAO	ALFAOU	BETAOU	PT	P	Q	TT	AFA	BFA	DEINLR	DEONLR
-5.920	-9.943	-5.78160	-10.10690	3054.00000	2870.59280	179.36860	91.60000	.07640	.20000	10.02000	5.00000
-6.155	-5.902	-6.06470	-6.09620	3045.39990	2865.02979	176.45460	92.40000	.07640	.20000	10.02000	5.00000
-6.275	.408	-6.35820	.21070	3046.29980	2863.73389	178.55460	93.00000	.07640	.20000	10.02000	5.00000
-5.806	6.205	-6.00330	6.12160	3047.70001	2863.98318	179.65580	94.20000	.07640	.20000	10.02000	5.00000
-5.909	10.174	-6.12020	10.14000	3051.39990	2868.09891	179.26360	95.00000	.07640	.20000	10.02000	5.00000
	GRADIENT	.00000	.00000	.00000	.00000	.00000	.00000	.00000	.00000	.00000	.00000

RUN NO. 863/ 0 RN/L = 2.68 GRADIENT INTERVAL = -5.00/ 5.00

ALPHAO	BETAO	ALFAOU	BETAOU	PT	P	Q	TT	AFA	BFA	DEINLR	DEONLR
-.323	-10.566	-.12360	-10.64360	3050.89990	2869.16751	177.76420	96.90000	.07640	.20000	10.02000	5.00000
-.295	-6.495	-.09570	-6.57200	3055.70001	2871.66461	179.97110	97.80000	.07640	.20000	10.02000	5.00000
-.254	-.400	-.05420	-.47710	3046.79980	2863.29269	179.45450	98.10000	.07640	.20000	10.02000	5.00000
-.216	5.676	-.01620	5.59890	3052.29980	2870.35739	177.96680	97.60000	.07640	.20000	10.02000	5.00000
-.202	9.729	-.00200	9.65240	3051.00000	2868.43091	178.56370	97.20000	.07640	.20000	10.02000	5.00000
	GRADIENT	.00000	.00000	.00000	.00000	.00000	.00000	.00000	.00000	.00000	.00000

IA156A, AEDC PWT 16T-470, O T S W/SILTS (R8NM40) (10 MAY 80)

REFERENCE DATA

SREF = 2690.0000 SQ.FT. XMRP = 976.0000 IN. XT
LREF = 1290.3000 INCHES YMRP = .0000 IN. YT
BREF = 1290.3000 INCHES ZMRP = 400.0000 IN. ZT
SCALE = .0200

PARAMETRIC DATA

IB-ELV = 10.000 OB-ELV = 5.000
BDFLAP = .000 SPDBRK = .000
RUDDER = .000 SILTS = 1.000
MACH = .300 RN/L = 3.500

RUN NO. 865/ 0 RN/L = 2.67 GRADIENT INTERVAL = -5.00/ 5.00

ALPHAO	BETAO	ALFAOU	BETAOU	PT	P	Q	TT	AFA	BFA	DEINLR	DEONLR
6.308	-9.980	6.09740	-10.01660	3049.39990	2864.00980	181.25630	101.50000	.07640	.20000	10.02000	5.00000
5.980	-5.655	5.78410	-5.74210	3048.09991	2863.02420	180.95430	102.10000	.07640	.20000	10.02000	5.00000
6.119	.063	6.03790	-.13570	3045.89990	2861.87079	179.95180	102.30000	.07640	.20000	10.02000	5.00000
5.672	6.053	5.76230	5.85900	3048.50000	2863.94650	180.45600	100.40000	.07640	.20000	10.02000	5.00000
5.788	10.128	5.92190	9.96080	3048.50000	2864.36450	180.05690	99.20000	.07640	.20000	10.02000	5.00000
	GRADIENT	.00000	.00000	.00000	.00000	.00000	.00000	.00000	.00000	.00000	.00000

IA156A, AEDC PWT 16T-470, O T S W/SILTS (R8NM41) (10 MAY 80)

REFERENCE DATA

SREF = 2690.0000 SQ.FT. XMRP = 976.0000 IN. XT
LREF = 1290.3000 INCHES YMRP = .0000 IN. YT
BREF = 1290.3000 INCHES ZMRP = 400.0000 IN. ZT
SCALE = .0200

PARAMETRIC DATA

IB-ELV = 10.000 OB-ELV = 5.000
BDFLAP = .000 SPDBRK = .000
RUDDER = .000 SILTS = 1.000
MACH = .300 RN/L = 3.500

RUN NO. 861/ 0 RN/L = 2.74 GRADIENT INTERVAL = -5.00/ 5.00

ALPHAO	BETAO	ALFAOU	BETAOU	PT	P	Q	TT	AFA	BFA	DEINLR	DEONLR
-10.091	-6.034	-10.04800	-6.24340	3050.39990	2866.89041	179.46150	87.80000	.07640	.20000	10.02000	5.00000
-10.067	.359	-10.14670	.16010	3042.39990	2859.94070	178.44730	88.70000	.07640	.20000	10.02000	5.00000
-9.910	6.266	-10.08120	6.13730	3056.09991	2872.79611	179.27270	89.90000	.07640	.20000	10.02000	5.00000
	GRADIENT	.00000	.00000	.00000	.00000	.00000	.00000	.00000	.00000	.00000	.00000

RUN NO. 866/ 0 RN/L = 2.66 GRADIENT INTERVAL = -5.00/ 5.00

ALPHAO	BETAO	ALFAOU	BETAOU	PT	P	Q	TT	AFA	BFA	DEINLR	DEONLR
10.042	-5.845	9.87230	-5.97530	3057.09991	2874.94559	178.17570	100.30000	.07640	.20000	10.02000	5.00000
9.871	.222	9.79530	.02220	3048.00000	2866.68729	177.35900	100.50000	.07640	.20000	10.02000	5.00000
10.015	6.282	10.05420	6.07180	3053.70001	2871.54761	178.16920	100.70000	.07640	.20000	10.02000	5.00000
	GRADIENT	.00000	.00000	.00000	.00000	.00000	.00000	.00000	.00000	.00000	.00000

IA156A, AEDC PWT 16T-470, O T S W/SILTS (R8NM42) (10 MAY 80)

REFERENCE DATA

SREF = 2690.0000 SQ.FT. XMRP = 976.0000 IN. XT
LREF = 1290.3000 INCHES YMRP = .0000 IN. YT
BREF = 1290.3000 INCHES ZMRP = 400.0000 IN. ZT
SCALE = .0200

PARAMETRIC DATA

IB-ELV = 10.000 OB-ELV = 5.000
BDFLAP = .000 SPDBRK = .000
RUDDER = .000 SILTS = 1.000
MACH = .600 RN/L = 3.500

RUN NO. 867/ 0 RN/L = 3.50 GRADIENT INTERVAL = -5.00/ 5.00

ALPHAO	BETAO	ALFAOU	BETAOU	PT	P	Q	TT	AFA	BFA	DEINLR	DEONLR
-8.043	-7.716	-7.95340	-7.90700	2224.50000	1743.34280	440.04470	99.20000	.07590	.19640	10.02000	5.00000
-8.204	-5.827	-8.14470	-6.02960	2231.09991	1749.91240	440.20450	99.30000	.07700	.19630	10.02000	5.00000
-8.073	-3.782	-8.04970	-3.99120	2241.89990	1756.18900	444.13430	99.20000	.07520	.19650	10.02000	5.00000
-8.198	.321	-8.27630	.12580	2228.50000	1745.49440	441.64160	99.00000	.07500	.19650	10.02000	5.00000
-7.861	4.154	-8.01830	4.01450	2233.00000	1748.95680	442.58450	99.10000	.07500	.19650	10.02000	5.00000
-7.808	6.039	-7.98700	5.92980	2235.09991	1749.92870	443.55180	98.90000	.07440	.19660	10.02000	5.00000
-8.047	8.247	-8.24100	8.16520	2228.89990	1745.58740	441.90140	99.00000	.07480	.19650	10.02000	5.00000
	GRADIENT	.00326	1.00873	-1.14666	-.93124	-.20013	-.01303	-.00003	-.00000	-.00000	.00000

RUN NO. 868/ 0 RN/L = 3.50 GRADIENT INTERVAL = -5.00/ 5.00

ALPHAO	BETAO	ALFAOU	BETAOU	PT	P	Q	TT	AFA	BFA	DEINLR	DEONLR
-6.177	-7.939	-6.06090	-8.11470	2236.70001	1753.45290	442.00750	100.60000	.07630	.19640	10.02000	5.00000
-6.117	-5.788	-6.02790	-5.97810	2237.39990	1753.03149	442.94170	100.50000	.07550	.19650	10.02000	5.00000
-5.974	-3.847	-5.92110	-4.05080	2237.89990	1753.63091	442.87040	100.50000	.07570	.19640	10.02000	5.00000
-6.102	.060	-6.17290	-.13860	2236.89990	1753.34720	442.26270	100.70000	.07610	.19640	10.02000	5.00000
-6.078	4.270	-6.25110	4.15120	2237.70001	1752.11011	443.94850	100.50000	.07450	.19660	10.02000	5.00000
-5.857	6.111	-6.05110	6.03010	2236.89990	1752.73711	442.76270	100.70000	.07560	.19640	10.02000	5.00000
-5.838	8.303	-6.04230	8.25240	2236.89990	1751.61890	443.67900	100.40000	.07460	.19660	10.02000	5.00000
	GRADIENT	-.04037	1.01053	-.02185	-.18873	.13627	-.00061	-.00015	.00002	-.00000	-.00000

RUN NO. 869/ 0 RN/L = 3.50 GRADIENT INTERVAL = -5.00/ 5.00

ALPHAO	BETAO	ALFAOU	BETAOU	PT	P	Q	TT	AFA	BFA	DEINLR	DEONLR
-4.175	-8.137	-4.02780	-8.28730	2237.09991	1752.83470	442.85080	100.70000	.07550	.19650	10.02000	5.00000
-4.259	-6.128	-4.13240	-6.29610	2236.89990	1753.24541	442.34590	100.70000	.07600	.19640	10.02000	5.00000
-4.224	-3.918	-4.13400	-4.10880	2237.29980	1753.44020	442.52250	100.70000	.07590	.19640	10.02000	5.00000
-3.977	.211	-4.05240	.01400	2236.59991	1752.03169	443.08860	100.70000	.07520	.19650	10.02000	5.00000
-3.796	4.128	-3.99110	4.04880	2236.20001	1752.44701	442.41240	100.80000	.07580	.19640	10.02000	5.00000
-3.913	6.094	-4.11890	6.05170	2237.20001	1753.74760	442.18680	100.70000	.07620	.19640	10.02000	5.00000
-3.786	8.019	-3.99640	8.00450	2239.79980	1755.92870	442.58330	100.80000	.07640	.19640	10.02000	5.00000
	GRADIENT	.01778	1.01366	-.13698	-.12539	-.01233	.01232	-.00001	.00000	-.00000	-.00000

IA156A, AEDC PWT 16T-470, O T S W/SILTS (R8NM42) (10 MAY 80)

REFERENCE DATA

SREF = 2690.0000 SQ.FT. XMRP = 976.0000 IN. XT
LREF = 1290.3000 INCHES YMRP = .0000 IN. YT
BREF = 1290.3000 INCHES ZMRP = 400.0000 IN. ZT
SCALE = .0200

PARAMETRIC DATA

IB-ELV = 10.000 OB-ELV = 5.000
BDFLAP = .000 SPDBRK = .000
RUDDER = .000 SILTS = 1.000
MACH = .600 RN/L = 3.500

RUN NO. 870/ 0 RN/L = 3.50 GRADIENT INTERVAL = -5.00/ 5.00

ALPHAO	BETAO	ALFAOU	BETAOU	PT	P	Q	TT	AFA	BFA	DEINLR	DEONLR
-.372	-8.780	-.17610	-8.85620	2239.79980	1754.91209	443.41650	100.00000	.07550	.19650	10.02000	5.00000
-.357	-6.657	-.16100	-6.73290	2236.50000	1752.33890	442.75290	100.00000	.07550	.19650	10.02000	5.00000
-.342	-4.603	-.14600	-4.67890	2237.09991	1752.63110	443.01760	100.00000	.07540	.19650	10.02000	5.00000
-.309	-.391	-.11270	-.46600	2238.50000	1753.00810	443.88480	99.90000	.07490	.19650	10.02000	5.00000
-.271	3.723	-.07510	3.64720	2235.70001	1751.94920	442.40010	99.90000	.07570	.19640	10.02000	5.00000
-.265	5.794	-.06860	5.71760	2233.89990	1750.86940	441.77320	99.80000	.07600	.19640	10.02000	5.00000
-.263	7.882	-.06660	7.80620	2236.29980	1751.53000	443.24800	99.80000	.07500	.19650	10.02000	5.00000
	GRADIENT	.00851	.99996	-.16614	-.08122	-.07305	-.01206	.00004	-.00001	.00000	.00000

RUN NO. 871/ 0 RN/L = 3.50 GRADIENT INTERVAL = -5.00/ 5.00

ALPHAO	BETAO	ALFAOU	BETAOU	PT	P	Q	TT	AFA	BFA	DEINLR	DEONLR
4.130	-7.788	3.92060	-7.80790	2234.09991	1750.96680	441.86130	99.80000	.07590	.19640	10.02000	5.00000
4.227	-5.976	4.02130	-6.02160	2238.89990	1753.60960	443.72780	100.00000	.07500	.19650	10.02000	5.00000
3.952	-3.829	3.75670	-3.90920	2235.20001	1752.97681	441.13770	99.90000	.07690	.19630	10.02000	5.00000
4.097	-.000	4.01050	-.19250	2238.09991	1754.94820	441.95850	99.90000	.07670	.19630	10.02000	5.00000
3.938	4.125	4.02110	3.93090	2239.20001	1756.85670	441.31760	99.90000	.07760	.19620	10.02000	5.00000
3.808	6.166	3.93090	5.99460	2235.79980	1753.37061	441.31910	99.90000	.07680	.19630	10.02000	5.00000
3.678	7.918	3.82150	7.76420	2236.50000	1751.83060	443.16940	99.90000	.07510	.19650	10.02000	5.00000
	GRADIENT	.03285	.98585	.49984	.48746	.02033	.00000	.00009	-.00001	-.00000	-.00000

RUN NO. 872/ 0 RN/L = 3.50 GRADIENT INTERVAL = -5.00/ 5.00

ALPHAO	BETAO	ALFAOU	BETAOU	PT	P	Q	TT	AFA	BFA	DEINLR	DEONLR
6.274	-8.006	6.07140	-8.06160	2234.70001	1751.05569	442.29250	100.10000	.07560	.19640	10.02000	5.00000
6.155	-5.963	5.96110	-6.04500	2237.50000	1754.04610	442.19380	100.00000	.07630	.19640	10.02000	5.00000
6.263	-3.868	6.09080	-3.98860	2234.50000	1752.17821	441.20410	100.00000	.07670	.19630	10.02000	5.00000
5.834	.202	5.75810	.00590	2238.50000	1753.92310	443.13500	100.00000	.07550	.19650	10.02000	5.00000
5.841	4.115	5.88750	3.91000	2239.00000	1755.23410	442.48050	100.00000	.07630	.19640	10.02000	5.00000
5.930	6.270	6.01790	6.07820	2238.00000	1754.23880	442.45610	99.90000	.07610	.19640	10.02000	5.00000
5.614	7.985	5.72860	7.80820	2235.79980	1753.47240	441.23560	99.90000	.07690	.19630	10.02000	5.00000
	GRADIENT	-.02584	.98936	.56649	.38310	.16199	.00000	-.00005	.00001	-.00000	-.00000

IA156A, AEDC PWT 16T-470, O T S W/SILTS (R8NM42) (10 MAY 80)

REFERENCE DATA

SREF = 2690.0000 SQ.FT. XMRP = 976.0000 IN. XT
LREF = 1290.3000 INCHES YMRP = .0000 IN. YT
BREF = 1290.3000 INCHES ZMRP = 400.0000 IN. ZT
SCALE = .0200

PARAMETRIC DATA

IB-ELV = 10.000 OB-ELV = 5.000
BDFLAP = .000 SPDBRK = .000
RUDDER = .000 SILTS = 1.000
MACH = .600 RN/L = 3.500

RUN NO. 873/ 0 RN/L = 3.50 GRADIENT INTERVAL = -5.00/ 5.00

ALPHAO	BETAO	ALFAOU	BETAOU	PT	P	Q	TT	AFA	BFA	DEINLR	DEONLR
8.126	-7.971	7.93140	-8.05140	2237.00000	1754.15820	441.68160	100.10000	.07670	.19630	10.02000	5.00000
8.003	-5.692	7.82430	-5.80240	2238.39990	1754.33180	442.71580	100.20000	.07590	.19640	10.02000	5.00000
7.988	-3.728	7.83030	-3.86840	2236.89990	1754.26221	441.51250	100.10000	.07690	.19630	10.02000	5.00000
8.046	.165	7.96800	-.03130	2237.79980	1755.97141	440.86670	100.10000	.07770	.19620	10.02000	5.00000
7.840	4.160	7.86320	3.95100	2237.29980	1752.62700	443.18900	100.10000	.07520	.19650	10.02000	5.00000
7.965	6.229	8.02390	6.02660	2237.59991	1754.65379	441.77950	100.10000	.07670	.19630	10.02000	5.00000
7.942	8.218	7.93210	8.02780	2235.50000	1750.42870	443.47830	100.00000	.07460	.19660	10.02000	5.00000
	GRADIENT	.00404	.99133	.04992	-.21008	.21416	.00000	-.00022	.00003	.00000	.00000

IA156A, AEDC PWT 16T-470, O T S W/SILTS (R8NM43) (10 MAY 80)

REFERENCE DATA

SREF = 2690.0000 SQ.FT. XMRP = 976.0000 IN. XT
LREF = 1290.3000 INCHES YMRP = .0000 IN. YT
BREF = 1290.3000 INCHES ZMRP = 400.0000 IN. ZT
SCALE = .0200

PARAMETRIC DATA

IB-ELV = 10.000 OB-ELV = 5.000
BDFLAP = .000 SPDBRK = .000
RUDDER = .000 SILTS = 1.000
MACH = .800 RN/L = 3.500

RUN NO. 874/ 0 RN/L = 3.50 GRADIENT INTERVAL = -5.00/ 5.00

ALPHAO	BETAO	ALFAOU	BETAOU	PT	P	Q	TT	AFA	BFA	DEINLR	DEONLR
-8.320	-6.125	-8.16180	-6.25930	1880.89990	1234.27390	552.54520	100.70000	-.03820	.20410	10.02000	5.00000
-8.413	-3.880	-8.28520	-4.04360	1878.39990	1232.69679	551.76730	100.30000	-.03820	.20410	10.02000	5.00000
-8.113	.246	-8.07590	.04190	1880.00000	1233.47951	552.41940	100.10000	-.03830	.20400	10.02000	5.00000
-8.023	4.302	-8.08520	4.10440	1880.59990	1233.87399	552.59500	100.10000	-.03830	.20400	10.02000	5.00000
-7.956	6.209	-8.05260	6.02520	1880.59990	1233.97530	552.52610	100.00000	-.03830	.20410	10.02000	5.00000
	GRADIENT	.02452	.99580	.26922	.14400	.10129	-.02451	-.00001	-.00001	.00000	.00000

RUN NO. 875/ 0 RN/L = 3.50 GRADIENT INTERVAL = -5.00/ 5.00

ALPHAO	BETAO	ALFAOU	BETAOU	PT	P	Q	TT	AFA	BFA	DEINLR	DEONLR
-6.193	-5.894	-6.01860	-6.00600	1878.59990	1232.38989	552.12430	99.80000	-.03830	.20400	10.02000	5.00000
-6.103	-3.865	-5.95300	-4.00880	1878.29980	1232.49631	551.83010	99.90000	-.03830	.20410	10.02000	5.00000
-6.214	.135	-6.17290	-.06840	1878.09990	1232.29710	551.81740	99.80000	-.03830	.20400	10.02000	5.00000
-5.908	4.136	-5.99340	3.94660	1878.00000	1231.99541	551.94850	100.00000	-.03830	.20400	10.02000	5.00000
-5.930	6.364	-6.05470	6.19830	1877.79980	1232.80811	551.24760	99.90000	-.03810	.20410	10.02000	5.00000
	GRADIENT	-.00505	.99430	-.03747	-.06260	.01480	.01250	.00000	-.00001	.00000	.00000

IA156A, AEDC PWT 16T-470, O T S W/SILTS

(R8NM43) (10 MAY 80)

REFERENCE DATA

SREF = 2690.0000 SQ.FT. XMRP = 976.0000 IN. XT
LREF = 1290.3000 INCHES YMRP = .0000 IN. YT
BREF = 1290.3000 INCHES ZMRP = 400.0000 IN. ZT
SCALE = .0200

PARAMETRIC DATA

IB-ELV = 10.000 OB-ELV = 5.000
BDFLAP = .000 SPDBRK = .000
RUDDER = .000 SILTS = 1.000
MACH = .800 RN/L = 3.500

RUN NO. 876/ 0 RN/L = 3.50 GRADIENT INTERVAL = -5.00/ 5.00

ALPHAO	BETAO	ALFAOU	BETAOU	PT	P	Q	TT	AFA	BFA	DEINLR	DEONLR
-4.122	-5.859	-3.92820	-5.93290	1878.59990	1232.38989	552.12430	100.00000	-.03830	.20400	10.02000	5.00000
-4.174	-3.835	-3.99950	-3.94800	1878.70000	1232.59081	552.06180	100.00000	-.03830	.20400	10.02000	5.00000
-4.296	.380	-4.26590	.17420	1878.29980	1232.19260	552.03640	99.80000	-.03830	.20400	10.02000	5.00000
-3.794	4.109	-3.91630	3.94120	1878.20000	1231.99190	552.09890	99.70000	-.03830	.20400	10.02000	5.00000
-3.859	6.127	-4.01150	5.98620	1878.29980	1232.49631	551.83010	99.80000	-.03830	.20410	10.02000	5.00000
	GRADIENT	.00888	.99273	-.06363	-.07580	.00444	-.03797	.00000	-.00000	-.00000	-.00000

RUN NO. 877/ 0 RN/L = 3.50 GRADIENT INTERVAL = -5.00/ 5.00

ALPHAO	BETAO	ALFAOU	BETAOU	PT	P	Q	TT	AFA	BFA	DEINLR	DEONLR
-.405	-6.884	-.20070	-6.84640	1879.29980	1233.18770	552.09990	99.80000	-.03820	.20410	10.02000	5.00000
-.384	-4.775	-.17960	-4.73780	1879.00000	1232.58569	552.28710	99.80000	-.03830	.20400	10.02000	5.00000
-.341	-.555	-.13690	-.51750	1879.20000	1232.88570	552.23100	99.70000	-.03830	.20400	10.02000	5.00000
-.291	3.683	-.08680	3.72050	1878.79980	1232.48779	552.20580	99.70000	-.03830	.20400	10.02000	5.00000
-.283	5.775	-.07860	5.81260	1878.29980	1233.10330	551.41700	99.80000	-.03820	.20410	10.02000	5.00000
	GRADIENT	.01097	1.00002	-.02372	-.01163	-.00961	-.01181	.00000	-.00000	-.00000	-.00000

RUN NO. 878/ 0 RN/L = 3.50 GRADIENT INTERVAL = -5.00/ 5.00

ALPHAO	BETAO	ALFAOU	BETAOU	PT	P	Q	TT	AFA	BFA	DEINLR	DEONLR
4.072	-5.795	3.92170	-5.93890	1878.79980	1232.69020	552.06810	99.80000	-.03830	.20400	10.02000	5.00000
4.020	-3.904	3.89820	-4.07210	1878.29980	1232.39500	551.89870	99.80000	-.03830	.20400	10.02000	5.00000
3.768	.170	3.80470	-.03450	1880.29980	1233.57570	552.57590	99.80000	-.03830	.20400	10.02000	5.00000
3.638	3.968	3.81110	3.85390	1880.00000	1233.17599	552.62570	99.80000	-.03830	.20400	10.02000	5.00000
3.833	6.171	4.02460	6.09220	1879.59990	1232.87920	552.53150	99.80000	-.03830	.20400	10.02000	5.00000
	GRADIENT	-.01121	1.00659	.21928	.10150	.09324	.00000	.00000	-.00000	.00000	-.00000

RUN NO. 879/ 0 RN/L = 3.50 GRADIENT INTERVAL = -5.00/ 5.00

ALPHAO	BETAO	ALFAOU	BETAOU	PT	P	Q	TT	AFA	BFA	DEINLR	DEONLR
6.131	-5.815	6.01220	-5.98520	1874.89990	1229.72020	551.20170	99.90000	-.03830	.20400	10.02000	5.00000
5.812	-3.671	5.72780	-3.86110	1878.29980	1231.99020	552.17410	99.80000	-.03830	.20400	10.02000	5.00000
5.708	.237	5.74730	.03350	1877.09990	1231.80811	551.40990	99.80000	-.03820	.20410	10.02000	5.00000
5.831	4.132	5.97770	3.98530	1874.70000	1229.92599	550.91380	99.80000	-.03830	.20400	10.02000	5.00000
5.719	5.964	5.89150	5.84870	1879.00000	1232.99049	552.01200	99.90000	-.03830	.20410	10.02000	5.00000
	GRADIENT	.03201	1.00550	-.46122	-.26440	-.16153	-.00000	.00000	.00000	-.00000	.00000

IA156A, AEDC PWT 16T-470, O T S W/SILTS (R8NM44) (10 MAY 80)

REFERENCE DATA

SREF = 2690.0000 SQ.FT. XMRP = 976.0000 IN. XT
LREF = 1290.3000 INCHES YMRP = .0000 IN. YT
BREF = 1290.3000 INCHES ZMRP = 400.0000 IN. ZT
SCALE = .0200

PARAMETRIC DATA

IB-ELV = 10.000 OB-ELV = 5.000
BDFLAP = .000 SPDBRK = .000
RUDDER = .000 SILTS = 1.000
MACH = .900 RN/L = 3.500

RUN NO. 880/ 0 RN/L = 3.50 GRADIENT INTERVAL = -5.00/ 5.00

ALPHAO	BETAO	ALFAOU	BETAOU	PT	P	Q	TT	AFA	BFA	DEINLR	DEONLR
-8.312	-6.090	-8.14540	-6.21260	1778.70000	1051.87920	596.17720	100.10000	-.05180	.20010	10.02000	5.00000
-8.309	-3.820	-8.17100	-3.97420	1781.00000	1053.45970	596.81690	100.40000	-.05180	.20010	10.02000	5.00000
-8.093	.296	-8.04400	.09570	1783.79980	1054.62959	598.04470	100.30000	-.05180	.20010	10.02000	5.00000
-7.993	4.299	-8.04320	4.09870	1786.09990	1056.81570	598.32370	100.30000	-.05170	.20010	10.02000	5.00000
-7.946	6.205	-8.03070	6.01680	1784.50000	1055.02290	598.29150	100.30000	-.05180	.20010	10.02000	5.00000
	GRADIENT	.01581	.99421	.62834	.41270	.18611	-.01237	.00001	.00000	.00000	.00000

RUN NO. 881/ 0 RN/L = 3.50 GRADIENT INTERVAL = -5.00/ 5.00

ALPHAO	BETAO	ALFAOU	BETAOU	PT	P	Q	TT	AFA	BFA	DEINLR	DEONLR
-6.117	-5.816	-5.93520	-5.91480	1782.39990	1053.84300	597.55080	100.10000	-.05180	.20010	10.02000	5.00000
-6.284	-3.992	-6.12540	-4.12440	1786.20000	1056.91499	598.33330	100.10000	-.05170	.20010	10.02000	5.00000
-6.101	.042	-6.04340	-.15660	1784.89990	1055.82420	598.08940	100.10000	-.05170	.20010	10.02000	5.00000
-6.038	4.340	-6.11290	4.14740	1785.50000	1055.91650	598.44680	100.10000	-.05180	.20010	10.02000	5.00000
-6.124	6.348	-6.23430	6.17360	1785.70000	1056.41800	598.28560	100.20000	-.05170	.20010	10.02000	5.00000
	GRADIENT	.00131	.99285	-.08158	-.11830	.01438	-.00000	-.00001	.00000	.00000	-.00000

RUN NO. 882/ 0 RN/L = 3.50 GRADIENT INTERVAL = -5.00/ 5.00

ALPHAO	BETAO	ALFAOU	BETAOU	PT	P	Q	TT	AFA	BFA	DEINLR	DEONLR
-4.268	-6.189	-4.06940	-6.24760	1784.29980	1055.42940	597.91210	100.00000	-.05170	.20010	10.02000	5.00000
-4.162	-3.882	-3.98030	-3.98000	1784.79980	1055.72490	598.07980	100.10000	-.05170	.20010	10.02000	5.00000
-4.197	.246	-4.14690	.04530	1786.79980	1056.90630	598.75100	100.10000	-.05180	.20010	10.02000	5.00000
-3.912	4.303	-4.02530	4.13040	1783.09990	1054.33720	597.73750	100.00000	-.05180	.20010	10.02000	5.00000
-3.796	6.101	-3.93910	5.95210	1784.59990	1055.52609	598.06080	100.00000	-.05170	.20010	10.02000	5.00000
	GRADIENT	-.00560	.99076	-.20567	-.16821	-.04123	-.01218	-.00001	-.00000	-.00000	-.00000

RUN NO. 883/ 0 RN/L = 3.50 GRADIENT INTERVAL = -5.00/ 5.00

ALPHAO	BETAO	ALFAOU	BETAOU	PT	P	Q	TT	AFA	BFA	DEINLR	DEONLR
-.435	-6.931	-.23500	-6.88050	1782.70000	1055.04930	597.03880	100.10000	-.05170	.20010	10.02000	5.00000
-.406	-4.831	-.20600	-4.78000	1784.39990	1055.52910	597.92160	100.00000	-.05170	.20010	10.02000	5.00000
-.357	-.518	-.15700	-.46710	1784.20000	1054.92650	598.14280	100.10000	-.05180	.20010	10.02000	5.00000
-.306	3.667	-.10520	3.71830	1785.39990	1055.81709	598.43730	100.10000	-.05180	.20010	10.02000	5.00000
-.306	5.770	-.10580	5.82080	1786.79980	1056.20020	599.17110	100.10000	-.05180	.20010	10.02000	5.00000
	GRADIENT	.01186	1.00000	.11683	.03301	.06063	.01182	-.00001	-.00000	.00000	-.00000

IA156A, AEDC PWT 16T-470, O T S W/SILTS (R8NM44) (10 MAY 80)

REFERENCE DATA

SREF = 2690.0000 SQ.FT. XMRP = 976.0000 IN. XT
LREF = 1290.3000 INCHES YMRP = .0000 IN. YT
BREF = 1290.3000 INCHES ZMRP = 400.0000 IN. ZT
SCALE = .0200

PARAMETRIC DATA

IB-ELV = 10.000 OB-ELV = 5.000
BDFLAP = .000 SPDBRK = .000
RUDDER = .000 SILTS = 1.000
MACH = .900 RN/L = 3.500

RUN NO. 884/ 0 RN/L = 3.50 GRADIENT INTERVAL = -5.00/ 5.00

ALPHAO	BETAO	ALFAOU	BETAOU	PT	P	Q	TT	AFA	BFA	DEINLR	DEONLR
4.009	-5.714	3.87030	-5.86670	1785.79980	1056.01289	598.59550	100.10000	-.05180	.20010	10.02000	5.00000
3.883	-3.867	3.77100	-4.04060	1781.00000	1053.96440	596.51640	99.90000	-.05170	.20010	10.02000	5.00000
3.799	.163	3.84880	-.03780	1781.59990	1053.65280	597.11430	100.00000	-.05170	.20010	10.02000	5.00000
3.718	3.965	3.89580	3.85990	1782.50000	1054.04320	597.50020	100.10000	-.05180	.20010	10.02000	5.00000
3.633	5.901	3.82860	5.83510	1784.00000	1054.52589	598.24370	100.20000	-.05180	.20010	10.02000	5.00000
	GRADIENT	.01597	1.00871	.19112	.00919	.12585	.02553	-.00001	-.00000	-.00000	-.00000

IA156A, AEDC PWT 16T-470, O T S W/SILTS (R8NM45) (10 MAY 80)

REFERENCE DATA

SREF = 2690.0000 SQ.FT. XMRP = 976.0000 IN. XT
LREF = 1290.3000 INCHES YMRP = .0000 IN. YT
BREF = 1290.3000 INCHES ZMRP = 400.0000 IN. ZT
SCALE = .0200

PARAMETRIC DATA

IB-ELV = 10.000 OB-ELV = 5.000
BDFLAP = .000 SPDBRK = .000
RUDDER = .000 SILTS = 1.000
MACH = .950 RN/L = 3.500

RUN NO. 885/ 0 RN/L = 3.50 GRADIENT INTERVAL = -5.00/ 5.00

ALPHAO	BETAO	ALFAOU	BETAOU	PT	P	Q	TT	AFA	BFA	DEINLR	DEONLR
-8.385	-6.134	-8.21670	-6.25140	1746.09990	977.13940	616.99320	100.40000	-.05540	.19770	10.02000	5.00000
-8.374	-3.850	-8.23310	-3.99940	1747.59990	978.02590	617.49730	100.40000	-.05540	.19770	10.02000	5.00000
-8.059	.201	-8.00350	.00270	1750.79980	979.69510	618.69480	100.40000	-.05540	.19770	10.02000	5.00000
-7.981	4.275	-8.02660	4.07470	1751.59990	979.98660	619.06320	100.30000	-.05540	.19770	10.02000	5.00000
-7.931	6.166	-8.01190	5.97730	1752.79980	980.47410	619.58840	100.40000	-.05540	.19770	10.02000	5.00000
	GRADIENT	.02539	.99379	.49204	.24116	.19263	-.01232	.00000	-.00000	-.00000	-.00000

RUN NO. 886/ 0 RN/L = 3.50 GRADIENT INTERVAL = -5.00/ 5.00

ALPHAO	BETAO	ALFAOU	BETAOU	PT	P	Q	TT	AFA	BFA	DEINLR	DEONLR
-6.186	-5.886	-6.00330	-5.97940	1755.39990	981.24490	620.88210	100.40000	-.05550	.19770	10.02000	5.00000
-6.104	-3.866	-5.94320	-3.99330	1750.39990	979.80100	618.37230	100.20000	-.05540	.19770	10.02000	5.00000
-6.229	.088	-6.17000	-.10880	1750.89990	979.49240	618.87210	100.20000	-.05550	.19770	10.02000	5.00000
-5.890	4.177	-5.96060	3.98350	1748.59990	978.51610	617.88890	100.30000	-.05540	.19770	10.02000	5.00000
-5.963	6.370	-6.07260	6.19620	1751.39990	979.28440	619.31640	100.30000	-.05550	.19770	10.02000	5.00000
	GRADIENT	-.00186	.99191	-.22575	-.16022	-.06113	.01250	.00000	-.00000	-.00000	.00000

IA156A, AEDC PWT 16T-470, O T S W/SILTS (R8NM45) (10 MAY 80)

REFERENCE DATA

SREF = 2690.0000 SQ.FT. XMRP = 976.0000 IN. XT
LREF = 1290.3000 INCHES YMRP = .0000 IN. YT
BREF = 1290.3000 INCHES ZMRP = 400.0000 IN. ZT
SCALE = .0200

PARAMETRIC DATA

IB-ELV = 10.000 OB-ELV = 5.000
BDFLAP = .000 SPDBRK = .000
RUDDER = .000 SILTS = 1.000
MACH = .950 RN/L = 3.500

RUN NO. 887/ 0 RN/L = 3.50 GRADIENT INTERVAL = -5.00/ 5.00

ALPHAO	BETAO	ALFAOU	BETAOU	PT	P	Q	TT	AFA	BFA	DEINLR	DEONLR
-4.317	-6.270	-4.11900	-6.32310	1753.70000	981.16700	619.80250	100.40000	-.05540	.19770	10.02000	5.00000
-4.292	-4.005	-4.10900	-4.09760	1750.00000	978.79960	618.65800	100.40000	-.05540	.19770	10.02000	5.00000
-4.154	.396	-4.10850	.19640	1752.50000	980.57860	619.33280	100.40000	-.05540	.19770	10.02000	5.00000
-3.880	4.287	-3.99810	4.11400	1751.09990	980.19460	618.61870	100.40000	-.05540	.19770	10.02000	5.00000
-4.059	6.259	-4.19670	6.10680	1749.50000	978.90670	618.26880	100.40000	-.05540	.19770	10.02000	5.00000
	GRADIENT	.01309	.98997	.14211	.17337	-.00130	-.00000	-.00000	-.00000	.00000	-.00000

RUN NO. 888/ 0 RN/L = 3.50 GRADIENT INTERVAL = -5.00/ 5.00

ALPHAO	BETAO	ALFAOU	BETAOU	PT	P	Q	TT	AFA	BFA	DEINLR	DEONLR
-.452	-6.978	-.25420	-6.92350	1749.00000	978.71220	618.04540	100.40000	-.05540	.19770	10.02000	5.00000
-.422	-4.828	-.22430	-4.77380	1749.89990	979.00220	618.48070	100.40000	-.05540	.19770	10.02000	5.00000
-.367	-.566	-.16860	-.51110	1752.50000	980.67940	619.27730	100.30000	-.05540	.19770	10.02000	5.00000
-.314	3.685	-.11600	3.73980	1750.70000	979.09230	618.95950	100.40000	-.05550	.19770	10.02000	5.00000
-.313	5.791	-.11550	5.84590	1751.00000	979.79320	618.77320	100.20000	-.05540	.19770	10.02000	5.00000
	GRADIENT	.01272	1.00002	.09422	.01076	.05630	-.00001	-.00001	.00000	.00000	.00000

RUN NO. 889/ 0 RN/L = 3.50 GRADIENT INTERVAL = -5.00/ 5.00

ALPHAO	BETAO	ALFAOU	BETAOU	PT	P	Q	TT	AFA	BFA	DEINLR	DEONLR
4.030	-5.635	3.89660	-5.79150	1751.79980	980.08450	619.14160	100.40000	-.05540	.19770	10.02000	5.00000
3.878	-3.794	3.77300	-3.96980	1751.39990	979.88840	618.98510	100.30000	-.05540	.19770	10.02000	5.00000
3.700	.220	3.75660	.02250	1750.70000	980.20000	618.35160	100.40000	-.05540	.19770	10.02000	5.00000
3.828	4.057	4.00650	3.95570	1749.89990	979.70700	618.09380	100.30000	-.05540	.19770	10.02000	5.00000
3.780	6.076	3.97560	6.01390	1749.79980	980.11110	617.80540	100.40000	-.05540	.19780	10.02000	5.00000
	GRADIENT	.02949	1.00949	-.19095	-.02234	-.11388	.00019	.00000	-.00000	-.00000	-.00000

IA156A, AEDC PWT 16T-470, O T S W/SILTS (R8NM46) (10 MAY 80)

REFERENCE DATA

SREF = 2690.0000 SQ.FT. XMRP = 976.0000 IN. XT
LREF = 1290.3000 INCHES YMRP = .0000 IN. YT
BREF = 1290.3000 INCHES ZMRP = 400.0000 IN. ZT
SCALE = .0200

PARAMETRIC DATA

IB-ELV = 10.000 OB-ELV = 5.000
BDFLAP = .000 SPDBRK = .000
RUDDER = .000 SILTS = 1.000
MACH = 1.050 RN/L = 3.500

RUN NO. 892/ 0 RN/L = 3.50 GRADIENT INTERVAL = -5.00/ 5.00

ALPHAO	BETAO	ALFAOU	BETAOU	PT	P	Q	TT	AFA	BFA	DEINLR	DEONLR
-8.394	-6.044	-8.22380	-6.15550	1703.29980	847.93650	654.50340	99.20000	-.06080	.19440	10.02000	5.00000
-8.401	-3.919	-8.25580	-4.06170	1701.39990	846.45310	654.01440	98.80000	-.06090	.19440	10.02000	5.00000
-8.206	.356	-8.14900	.16060	1696.29980	844.70310	651.70090	100.10000	-.06080	.19440	10.02000	5.00000
-8.110	4.340	-8.15140	4.14070	1704.00000	848.43020	654.70730	100.20000	-.06080	.19440	10.02000	5.00000
-8.047	6.243	-8.12300	6.05440	1705.00000	848.72020	655.18480	100.10000	-.06090	.19440	10.02000	5.00000
	GRADIENT	.01279	.99306	.29646	.23149	.07629	.17115	.00001	-.00000	-.00000	-.00000

RUN NO. 893/ 0 RN/L = 3.50 GRADIENT INTERVAL = -5.00/ 5.00

ALPHAO	BETAO	ALFAOU	BETAOU	PT	P	Q	TT	AFA	BFA	DEINLR	DEONLR
-6.309	-6.106	-6.12410	-6.19090	1702.70000	846.33910	654.85470	100.00000	-.06090	.19440	10.02000	5.00000
-6.249	-3.982	-6.08490	-4.10220	1703.29980	847.03440	654.90770	99.90000	-.06090	.19440	10.02000	5.00000
-6.076	.168	-6.01380	-.02590	1704.20000	847.92680	655.05440	100.10000	-.06090	.19440	10.02000	5.00000
-6.134	4.331	-6.19940	4.13830	1704.00000	847.82890	654.97710	100.10000	-.06090	.19440	10.02000	5.00000
-5.824	6.212	-5.92810	6.03670	1700.39990	847.06520	653.13210	100.10000	-.06080	.19440	10.02000	5.00000
	GRADIENT	-.01379	.99127	.08416	.09551	.00833	.02405	.00000	.00000	-.00000	-.00000

RUN NO. 894/ 0 RN/L = 3.50 GRADIENT INTERVAL = -5.00/ 5.00

ALPHAO	BETAO	ALFAOU	BETAOU	PT	P	Q	TT	AFA	BFA	DEINLR	DEONLR
-4.192	-5.878	-3.99380	-5.92600	1702.70000	844.63530	655.61520	99.90000	-.06100	.19440	10.02000	5.00000
-4.435	-4.131	-4.25000	-4.21660	1702.79980	843.53200	655.16700	99.90000	-.06100	.19440	10.02000	5.00000
-4.347	.164	-4.28480	-.03010	1701.50000	848.05590	653.35570	99.90000	-.06080	.19450	10.02000	5.00000
-4.040	4.363	-4.14380	4.18820	1701.20000	847.05660	653.62210	99.80000	-.06080	.19440	10.02000	5.00000
-3.833	6.221	-3.96980	6.06980	1707.39990	849.99780	656.06980	99.90000	-.06080	.19440	10.02000	5.00000
	GRADIENT	.01242	.98938	-.18877	.41735	-.30094	-.01173	.00002	.00000	.00000	.00000

RUN NO. 895/ 0 RN/L = 3.50 GRADIENT INTERVAL = -5.00/ 5.00

ALPHAO	BETAO	ALFAOU	BETAOU	PT	P	Q	TT	AFA	BFA	DEINLR	DEONLR
-.497	-6.991	-.30200	-6.93190	1705.89990	850.11400	655.10600	99.90000	-.06080	.19450	10.02000	5.00000
-.464	-4.863	-.26930	-4.80360	1700.59990	846.56180	653.47970	99.80000	-.06090	.19440	10.02000	5.00000
-.409	-.590	-.21460	-.53090	1702.00000	848.15090	653.61690	99.90000	-.06080	.19450	10.02000	5.00000
-.352	3.655	-.15690	3.71450	1699.50000	845.37080	653.34550	99.80000	-.06090	.19440	10.02000	5.00000
-.344	5.795	-.14910	5.85490	1704.29980	848.82790	654.71090	99.90000	-.06080	.19440	10.02000	5.00000
	GRADIENT	.01320	1.00002	-.12863	-.13927	-.01570	.00003	.00000	.00000	.00000	.00000

IA156A, AEDC PWT 16T-470, O T S W/SILTS (R8NM46) (10 MAY 80)

REFERENCE DATA

SREF = 2690.0000 SQ.FT. XMRP = 976.0000 IN. XT
LREF = 1290.3000 INCHES YMRP = .0000 IN. YT
BREF = 1290.3000 INCHES ZMRP = 400.0000 IN. ZT
SCALE = .0200

PARAMETRIC DATA

IB-ELV = 10.000 OB-ELV = 5.000
BDFLAP = .000 SPDBRK = .000
RUDDER = .000 SILTS = 1.000
MACH = 1.050 RN/L = 3.500

RUN NO. 896/ 0 RN/L = 3.50 GRADIENT INTERVAL = -5.00/ 5.00

ALPHAO	BETAO	ALFAOU	BETAOU	PT	P	Q	TT	AFA	BFA	DEINLR	DEONLR
3.963	-5.872	3.83200	-6.02830	1700.09990	846.16630	653.35330	99.80000	-.06080	.19440	10.02000	5.00000
4.045	-3.828	3.95040	-4.00800	1698.70000	846.38160	652.40580	99.80000	-.06080	.19440	10.02000	5.00000
3.692	.160	3.75180	-.03480	1702.20000	847.34670	654.09960	99.90000	-.06090	.19440	10.02000	5.00000
3.637	3.941	3.81800	3.84760	1707.70000	850.89670	655.84840	100.00000	-.06080	.19450	10.02000	5.00000
3.867	6.115	4.06220	6.05720	1703.09990	848.54000	654.11080	99.80000	-.06080	.19450	10.02000	5.00000
	GRADIENT	-.01734	1.01100	1.15588	.57808	.44295	.02574	-.00000	.00001	.00000	-.00000

IA156A, AEDC PWT 16T-470, O T S W/SILTS (R8NM47) (10 MAY 80)

REFERENCE DATA

SREF = 2690.0000 SQ.FT. XMRP = 976.0000 IN. XT
LREF = 1290.3000 INCHES YMRP = .0000 IN. YT
BREF = 1290.3000 INCHES ZMRP = 400.0000 IN. ZT
SCALE = .0200

PARAMETRIC DATA

IB-ELV = 10.000 OB-ELV = 5.000
BDFLAP = .000 SPDBRK = .000
RUDDER = .000 SILTS = 1.000
MACH = 1.100 RN/L = 3.500

RUN NO. 897/ 0 RN/L = 3.49 GRADIENT INTERVAL = -5.00/ 5.00

ALPHAO	BETAO	ALFAOU	BETAOU	PT	P	Q	TT	AFA	BFA	DEINLR	DEONLR
-8.358	-6.136	-8.18440	-6.24460	1681.79980	788.38700	666.88310	99.80000	-.06320	.19440	10.02000	5.00000
-8.433	-3.920	-8.28520	-4.06150	1680.50000	786.99930	666.67500	99.90000	-.06320	.19440	10.02000	5.00000
-8.252	.215	-8.18950	.01990	1682.59990	787.87960	667.54910	99.90000	-.06320	.19440	10.02000	5.00000
-8.165	4.341	-8.20330	4.14010	1683.59990	790.16970	667.22460	99.90000	-.06310	.19440	10.02000	5.00000
-8.137	6.282	-8.21100	6.09130	1685.00000	789.35690	668.36160	100.00000	-.06320	.19440	10.02000	5.00000
	GRADIENT	.00992	.99284	.37530	.38374	.06658	-.00000	.00001	.00000	-.00000	-.00000

RUN NO. 898/ 0 RN/L = 3.50 GRADIENT INTERVAL = -5.00/ 5.00

ALPHAO	BETAO	ALFAOU	BETAOU	PT	P	Q	TT	AFA	BFA	DEINLR	DEONLR
-6.235	-5.974	-6.04820	-6.05720	1689.59990	790.91360	670.42240	99.90000	-.06330	.19440	10.02000	5.00000
-6.460	-4.032	-6.29430	-4.15220	1688.20000	790.42680	669.80030	99.90000	-.06320	.19440	10.02000	5.00000
-6.219	.115	-6.15230	-.07810	1687.59990	790.93210	669.25150	100.00000	-.06320	.19440	10.02000	5.00000
-6.157	4.333	-6.21980	4.13880	1687.20000	789.83620	669.45190	99.90000	-.06320	.19440	10.02000	5.00000
-5.878	6.244	-5.98000	6.06680	1686.20000	790.34550	668.66890	100.00000	-.06320	.19440	10.02000	5.00000
	GRADIENT	.00884	.99118	-.11947	-.07114	-.04140	-.00007	.00000	.00000	.00000	.00000

IA156A, AEDC PWT 16T-470, O T S W/SILTS (R8NM47) (10 MAY 80)

REFERENCE DATA

SREF = 2690.0000 SQ.FT. XMRP = 976.0000 IN. XT
LREF = 1290.3000 INCHES YMRP = .0000 IN. YT
BREF = 1290.3000 INCHES ZMRP = 400.0000 IN. ZT
SCALE = .0200

PARAMETRIC DATA

IB-ELV = 10.000 OB-ELV = 5.000
BDFLAP = .000 SPDBRK = .000
RUDDER = .000 SILTS = 1.000
MACH = 1.100 RN/L = 3.500

RUN NO. 899/ 0 RN/L = 3.50 GRADIENT INTERVAL = -5.00/ 5.00

ALPHAO	BETAO	ALFAOU	BETAOU	PT	P	Q	TT	AFA	BFA	DEINLR	DEONLR
-4.135	-6.044	-3.93490	-6.08620	1689.89990	791.41060	670.40060	99.90000	-.06320	.19440	10.02000	5.00000
-4.267	-3.979	-4.08050	-4.06280	1689.89990	792.01050	670.16360	100.00000	-.06320	.19440	10.02000	5.00000
-4.129	.386	-4.07510	.18860	1690.29980	792.40670	670.23950	99.90000	-.06320	.19440	10.02000	5.00000
-3.853	4.244	-3.95700	4.06730	1690.89990	791.70140	670.86740	99.90000	-.06320	.19440	10.02000	5.00000
-4.015	6.208	-4.14720	6.05130	1689.20000	791.41720	669.99070	99.90000	-.06320	.19440	10.02000	5.00000
	GRADIENT	.01472	.98837	.12095	-.03479	.08410	-.01240	.00000	-.00000	-.00000	-.00000

RUN NO. 900/ 0 RN/L = 3.50 GRADIENT INTERVAL = -5.00/ 5.00

ALPHAO	BETAO	ALFAOU	BETAOU	PT	P	Q	TT	AFA	BFA	DEINLR	DEONLR
-.383	-7.070	-.18900	-7.00460	1686.79980	789.74000	669.25710	99.80000	-.06320	.19440	10.02000	5.00000
-.420	-4.981	-.22530	-4.91710	1684.59990	789.06080	668.24580	99.90000	-.06320	.19440	10.02000	5.00000
-.399	-.647	-.20460	-.58330	1687.89990	790.52950	669.58520	99.90000	-.06320	.19440	10.02000	5.00000
-.384	3.467	-.18960	3.53050	1691.39990	792.09640	671.00220	99.90000	-.06320	.19440	10.02000	5.00000
-.348	5.975	-.15370	6.03790	1690.70000	792.10300	670.59250	100.00000	-.06320	.19440	10.02000	5.00000
	GRADIENT	.00423	1.00004	.80460	.35917	.32615	-.00000	.00000	.00000	.00000	.00000

RUN NO. 901/ 0 RN/L = 3.50 GRADIENT INTERVAL = -5.00/ 5.00

ALPHAO	BETAO	ALFAOU	BETAOU	PT	P	Q	TT	AFA	BFA	DEINLR	DEONLR
4.196	-5.913	4.06950	-6.07340	1689.79980	791.31150	670.38160	100.00000	-.06320	.19440	10.02000	5.00000
3.868	-3.725	3.77180	-3.90540	1690.00000	791.20970	670.53810	99.90000	-.06320	.19440	10.02000	5.00000
3.661	.204	3.72490	.00920	1690.39990	791.70610	670.57470	100.10000	-.06320	.19440	10.02000	5.00000
3.820	4.039	4.00180	3.94510	1689.70000	791.31250	670.32300	100.00000	-.06320	.19440	10.02000	5.00000
3.780	6.063	3.97760	6.00890	1689.39990	791.01540	670.26590	100.00000	-.06320	.19440	10.02000	5.00000
	GRADIENT	.02946	1.01115	-.03807	.01370	-.02756	.01303	-.00000	.00000	.00000	.00000

IA156A, AEDC PWT 16T-470, O T S W/SILTS (R8NM48) (10 MAY 80)

REFERENCE DATA

SREF = 2690.0000 SQ.FT. XMRP = 976.0000 IN. XT
LREF = 1290.3000 INCHES YMRP = .0000 IN. YT
BREF = 1290.3000 INCHES ZMRP = 400.0000 IN. ZT
SCALE = .0200

PARAMETRIC DATA

IB-ELV = 10.000 OB-ELV = 5.000
BDFLAP = .000 SPDBRK = .000
RUDDER = .000 SILTS = 1.000
MACH = 1.150 RN/L = 3.500

RUN NO. 902/ 0 RN/L = 3.50 GRADIENT INTERVAL = -5.00/ 5.00

ALPHAO	BETAO	ALFAOU	BETAOU	PT	P	Q	TT	AFA	BFA	DEINLR	DEONLR
-8.420	-6.010	-8.24550	-6.12090	1679.59990	738.98390	683.80220	100.00000	-.06550	.19610	10.02000	5.00000
-8.432	-3.894	-8.28240	-4.03600	1682.29980	739.85960	685.00730	100.10000	-.06550	.19610	10.02000	5.00000
-8.234	.369	-8.17350	.17110	1679.70000	738.98320	683.85820	100.10000	-.06550	.19610	10.02000	5.00000
-8.194	4.324	-8.23080	4.12090	1677.09990	739.40310	682.26810	100.00000	-.06540	.19600	10.02000	5.00000
-8.136	6.243	-8.20920	6.04930	1678.50000	737.79640	683.59250	100.00000	-.06550	.19610	10.02000	5.00000
	GRADIENT	.00653	.99254	-.63248	-.05749	-.33251	-.01201	.00001	-.00001	-.00000	-.00000

RUN NO. 903/ 0 RN/L = 3.49 GRADIENT INTERVAL = -5.00/ 5.00

ALPHAO	BETAO	ALFAOU	BETAOU	PT	P	Q	TT	AFA	BFA	DEINLR	DEONLR
-6.433	-6.108	-6.24380	-6.19260	1672.89990	736.14650	681.03710	100.00000	-.06550	.19610	10.02000	5.00000
-6.084	-3.837	-5.91460	-3.95640	1675.00000	736.62790	682.04200	100.00000	-.06550	.19610	10.02000	5.00000
-6.206	.121	-6.13790	-.07410	1676.89990	736.61280	683.10330	100.00000	-.06560	.19620	10.02000	5.00000
-6.150	4.334	-6.21310	4.13700	1678.59990	739.39090	683.10740	100.00000	-.06550	.19610	10.02000	5.00000
-5.938	6.320	-6.04120	6.14060	1681.29980	739.66820	684.51590	100.00000	-.06550	.19610	10.02000	5.00000
	GRADIENT	-.03633	.99059	.44017	.34158	.12900	-.00000	.00000	-.00000	.00000	-.00000

RUN NO. 904/ 0 RN/L = 3.50 GRADIENT INTERVAL = -5.00/ 5.00

ALPHAO	BETAO	ALFAOU	BETAOU	PT	P	Q	TT	AFA	BFA	DEINLR	DEONLR
-4.285	-6.227	-4.08270	-6.26890	1679.89990	739.38040	683.83470	100.10000	-.06550	.19610	10.02000	5.00000
-4.310	-3.932	-4.12140	-4.01690	1684.39990	741.13890	685.74170	100.00000	-.06550	.19610	10.02000	5.00000
-4.022	.234	-3.95840	.03680	1682.70000	740.45460	685.02810	100.10000	-.06550	.19610	10.02000	5.00000
-3.778	4.160	-3.88120	3.98110	1680.39990	738.67850	684.35060	100.00000	-.06550	.19610	10.02000	5.00000
-3.957	6.115	-4.08890	5.95630	1678.70000	739.19070	683.23120	100.10000	-.06550	.19610	10.02000	5.00000
	GRADIENT	.02978	.98823	-.49344	-.30264	-.17190	.00024	.00000	.00000	.00000	.00000

RUN NO. 905/ 0 RN/L = 3.50 GRADIENT INTERVAL = -5.00/ 5.00

ALPHAO	BETAO	ALFAOU	BETAOU	PT	P	Q	TT	AFA	BFA	DEINLR	DEONLR
-.374	-7.077	-.17810	-7.01020	1678.29980	737.59860	683.54830	100.00000	-.06560	.19620	10.02000	5.00000
-.407	-4.717	-.21060	-4.65140	1679.20000	738.98730	683.57860	100.10000	-.06550	.19610	10.02000	5.00000
-.387	-.679	-.19050	-.61430	1678.79980	737.59450	683.82760	100.10000	-.06560	.19620	10.02000	5.00000
-.358	3.482	-.16190	3.54770	1680.09990	738.88010	684.11550	100.10000	-.06550	.19610	10.02000	5.00000
-.371	5.720	-.17540	5.78620	1680.20000	738.97900	684.13750	100.10000	-.06550	.19610	10.02000	5.00000
	GRADIENT	.00594	1.00003	.11078	-.01145	.06550	-.00000	.00000	-.00000	.00000	.00000

IA156A, AEDC PWT 16T-470, O T S W/SILTS (R8NM48) (10 MAY 80)

REFERENCE DATA

SREF = 2690.0000 SQ.FT. XMRP = 976.0000 IN. XT
LREF = 1290.3000 INCHES YMRP = .0000 IN. YT
BREF = 1290.3000 INCHES ZMRP = 400.0000 IN. ZT
SCALE = .0200

PARAMETRIC DATA

IB-ELV = 10.000 OB-ELV = 5.000
BDFLAP = .000 SPDBRK = .000
RUDDER = .000 SILTS = 1.000
MACH = 1.150 RN/L = 3.500

RUN NO. 906/ 0 RN/L = 3.50 GRADIENT INTERVAL = -5.00/ 5.00

ALPHAO	BETAO	ALFAOU	BETAOU	PT	P	Q	TT	AFA	BFA	DEINLR	DEONLR
4.100	-5.735	3.97380	-5.89880	1679.79980	739.58060	683.71090	100.20000	-.06550	.19610	10.02000	5.00000
3.871	-3.574	3.78020	-3.75990	1679.70000	739.38180	683.72290	100.10000	-.06550	.19610	10.02000	5.00000
3.762	.188	3.82820	-.00770	1679.70000	739.48170	683.68900	100.10000	-.06550	.19610	10.02000	5.00000
3.918	4.194	4.10340	4.10270	1679.50000	738.38650	683.94900	100.10000	-.06550	.19610	10.02000	5.00000
3.702	5.896	3.90170	5.84230	1679.79980	739.58060	683.71090	100.00000	-.06550	.19610	10.02000	5.00000
	GRADIENT	.04190	1.01228	-.02601	-.12968	.02949	.00000	.00000	-.00000	-.00000	.00000

IA156A, AEDC PWT 16T-470, O T S W/SILTS (R8NM49) (10 MAY 80)

REFERENCE DATA

SREF = 2690.0000 SQ.FT. XMRP = 976.0000 IN. XT
LREF = 1290.3000 INCHES YMRP = .0000 IN. YT
BREF = 1290.3000 INCHES ZMRP = 400.0000 IN. ZT
SCALE = .0200

PARAMETRIC DATA

IB-ELV = 10.000 OB-ELV = 5.000
BDFLAP = .000 SPDBRK = .000
RUDDER = .000 SILTS = 1.000
MACH = 1.250 RN/L = 3.500

RUN NO. 907/ 0 RN/L = 3.50 GRADIENT INTERVAL = -5.00/ 5.00

ALPHAO	BETAO	ALFAOU	BETAOU	PT	P	Q	TT	AFA	BFA	DEINLR	DEONLR
-8.169	-5.854	-7.98360	-5.96840	1675.29980	647.91460	707.14380	100.40000	-.07020	.20610	10.02000	5.00000
-8.464	-3.941	-8.30420	-4.08900	1677.59990	649.48830	707.96340	100.40000	-.07010	.20600	10.02000	5.00000
-8.271	.353	-8.20470	.14570	1677.29980	648.10110	708.11720	100.40000	-.07020	.20620	10.02000	5.00000
-8.168	4.376	-8.20710	4.16170	1678.50000	649.18510	708.48730	100.40000	-.07020	.20610	10.02000	5.00000
-8.104	6.294	-8.18080	6.09050	1678.39990	648.78910	708.52370	100.40000	-.07020	.20620	10.02000	5.00000
	GRADIENT	.01180	.99199	.10622	-.03968	.06269	.00000	-.00001	.00001	-.00000	-.00000

RUN NO. 908/ 0 RN/L = 3.50 GRADIENT INTERVAL = -5.00/ 5.00

ALPHAO	BETAO	ALFAOU	BETAOU	PT	P	Q	TT	AFA	BFA	DEINLR	DEONLR
-6.224	-5.927	-6.02380	-6.01320	1678.59990	647.89500	708.82100	100.40000	-.07020	.20640	10.02000	5.00000
-6.462	-4.030	-6.28410	-4.15560	1677.89990	648.59350	708.31320	100.40000	-.07020	.20620	10.02000	5.00000
-6.215	.096	-6.14000	-.10900	1678.20000	647.40140	708.72630	100.30000	-.07020	.20640	10.02000	5.00000
-6.146	4.359	-6.21150	4.15120	1678.59990	648.68850	708.64720	100.40000	-.07020	.20620	10.02000	5.00000
-5.860	6.264	-5.96690	6.07460	1678.50000	648.39160	708.66160	100.40000	-.07020	.20630	10.02000	5.00000
	GRADIENT	.00851	.99022	.08350	.01293	.03949	.00013	.00000	-.00000	.00000	-.00000

IA156A, AEDC PWT 16T-470, O T S W/SILTS (R8NM49) (10 MAY 80)

REFERENCE DATA

SREF = 2690.0000 SQ.FT. XMRP = 976.0000 IN. XT
LREF = 1290.3000 INCHES YMRP = .0000 IN. YT
BREF = 1290.3000 INCHES ZMRP = 400.0000 IN. ZT
SCALE = .0200

PARAMETRIC DATA

IB-ELV = 10.000 OB-ELV = 5.000
BDFLAP = .000 SPDBRK = .000
RUDDER = .000 SILTS = 1.000
MACH = 1.250 RN/L = 3.500

RUN NO. 909/ 0 RN/L = 3.50 GRADIENT INTERVAL = -5.00/ 5.00

ALPHAO	BETAO	ALFAOU	BETAOU	PT	P	Q	TT	AFA	BFA	DEINLR	DEONLR
-4.383	-6.232	-4.17000	-6.27670	1678.89990	648.19070	708.90840	100.40000	-.07020	.20630	10.02000	5.00000
-4.297	-4.024	-4.09630	-4.10850	1679.00000	648.09110	708.98100	100.30000	-.07020	.20630	10.02000	5.00000
-4.171	.380	-4.11010	.17040	1679.20000	648.78420	708.93040	100.30000	-.07020	.20620	10.02000	5.00000
-3.910	4.253	-4.01700	4.06350	1678.79980	648.98510	708.68330	100.30000	-.07020	.20620	10.02000	5.00000
-4.018	6.273	-4.15700	6.10520	1679.20000	647.69310	709.16920	100.40000	-.07030	.20640	10.02000	5.00000
	GRADIENT	.00929	.98695	-.02261	.10913	-.03541	-.00000	-.00000	-.00001	.00000	-.00000

RUN NO. 910/ 0 RN/L = 3.50 GRADIENT INTERVAL = -5.00/ 5.00

ALPHAO	BETAO	ALFAOU	BETAOU	PT	P	Q	TT	AFA	BFA	DEINLR	DEONLR
-.412	-7.127	-.20620	-7.05570	1679.20000	648.68510	708.95210	100.40000	-.07020	.20630	10.02000	5.00000
-.440	-4.817	-.23320	-4.74620	1679.50000	648.28640	709.19140	100.50000	-.07020	.20630	10.02000	5.00000
-.401	-.646	-.19510	-.57590	1679.39990	649.57670	708.85740	100.40000	-.07020	.20610	10.02000	5.00000
-.373	3.822	-.16710	3.89250	1680.39990	648.77710	709.54030	100.40000	-.07020	.20630	10.02000	5.00000
-.349	5.731	-.14220	5.80020	1680.79980	649.46920	709.59130	100.40000	-.07020	.20620	10.02000	5.00000
	GRADIENT	.00764	1.00001	.10560	.05400	.04173	-.01144	.00000	.00000	.00000	-.00000

RUN NO. 911/ 0 RN/L = 3.50 GRADIENT INTERVAL = -5.00/ 5.00

ALPHAO	BETAO	ALFAOU	BETAOU	PT	P	Q	TT	AFA	BFA	DEINLR	DEONLR
4.089	-5.764	3.95580	-5.93690	1681.00000	648.37670	709.93160	100.40000	-.07030	.20640	10.02000	5.00000
3.996	-3.850	3.89600	-4.04370	1679.89990	649.17700	709.19920	100.40000	-.07020	.20620	10.02000	5.00000
3.717	.138	3.78360	-.06910	1680.79980	648.67550	709.76510	100.40000	-.07020	.20640	10.02000	5.00000
3.584	3.832	3.77870	3.73450	1680.29980	649.07520	709.42430	100.40000	-.07020	.20630	10.02000	5.00000
3.804	6.128	4.01470	6.07280	1681.39990	649.96170	709.78740	100.40000	-.07020	.20620	10.02000	5.00000
	GRADIENT	-.01544	1.01235	.05437	-.01475	.03080	.00000	-.00000	.00001	-.00000	.00000

IA156A, AEDC PWT 16T-470, O T S W/SILTS (R8NM50) (10 MAY 80)

REFERENCE DATA

SREF = 2690.0000 SQ.FT. XMRP = 976.0000 IN. XT
LREF = 1290.3000 INCHES YMRP = .0000 IN. YT
BREF = 1290.3000 INCHES ZMRP = 400.0000 IN. ZT
SCALE = .0200

PARAMETRIC DATA

IB-ELV = 10.000 OB-ELV = 5.000
BDFLAP = .000 SPDBRK = .000
RUDDER = .000 SILTS = 1.000
MACH = 1.400 RN/L = 3.500

RUN NO. 912/ 0 RN/L = 3.50 GRADIENT INTERVAL = -5.00/ 5.00

ALPHAO	BETAO	ALFAOU	BETAOU	PT	P	Q	TT	AFA	BFA	DEINLR	DEONLR
-8.444	-6.059	-8.22160	-6.19320	1698.29980	533.53540	732.20510	99.90000	-.08530	.24550	10.02000	5.00000
-8.457	-3.924	-8.26380	-4.09940	1703.89990	534.49980	734.63480	99.80000	-.08550	.24590	10.02000	5.00000
-8.142	.277	-8.05740	.03110	1711.59990	536.54130	737.96120	99.70000	-.08560	.24610	10.02000	5.00000
-8.038	4.339	-8.08280	4.08240	1703.89990	534.79590	734.62920	99.50000	-.08540	.24580	10.02000	5.00000
-8.005	6.234	-8.09460	5.99010	1695.20000	533.05440	730.85860	99.50000	-.08520	.24530	10.02000	5.00000
	GRADIENT	.02206	.99011	.01058	.03843	.00390	-.03623	.00001	-.00001	-.00000	-.00000

RUN NO. 913/ 0 RN/L = 3.51 GRADIENT INTERVAL = -5.00/ 5.00

ALPHAO	BETAO	ALFAOU	BETAOU	PT	P	Q	TT	AFA	BFA	DEINLR	DEONLR
-6.345	-5.891	-6.10660	-5.99370	1697.50000	534.03220	731.84500	99.20000	-.08510	.24520	10.02000	5.00000
-6.201	-3.919	-5.98520	-4.06410	1701.20000	534.31320	733.45800	99.20000	-.08530	.24560	10.02000	5.00000
-6.307	.231	-6.22090	-.01400	1705.70000	536.66430	735.37920	99.30000	-.08510	.24510	10.02000	5.00000
-6.043	4.311	-6.11870	4.06240	1713.20000	539.00320	738.61300	99.50000	-.08510	.24520	10.02000	5.00000
-5.918	6.486	-6.04720	6.26060	1705.09990	536.17310	735.12670	99.40000	-.08510	.24530	10.02000	5.00000
	GRADIENT	-.01634	.98738	1.45699	.56985	.62589	.03642	.00002	-.00005	-.00000	-.00000

RUN NO. 914/ 0 RN/L = 3.50 GRADIENT INTERVAL = -5.00/ 5.00

ALPHAO	BETAO	ALFAOU	BETAOU	PT	P	Q	TT	AFA	BFA	DEINLR	DEONLR
-4.205	-5.891	-3.95030	-5.94160	1696.89990	533.93600	731.58420	99.20000	-.08510	.24510	10.02000	5.00000
-4.190	-3.860	-3.95000	-3.95900	1698.50000	534.12700	732.28080	99.30000	-.08520	.24530	10.02000	5.00000
-4.215	.300	-4.13320	.05470	1704.89990	537.16140	735.01760	99.40000	-.08490	.24480	10.02000	5.00000
-3.880	4.319	-4.00720	4.09240	1695.70000	532.26250	731.09300	99.30000	-.08540	.24580	10.02000	5.00000
-4.009	6.379	-4.17480	6.17900	1694.89990	532.46340	730.73950	99.20000	-.08530	.24560	10.02000	5.00000
	GRADIENT	-.00721	.98422	-.33127	-.22233	-.14050	.00014	-.00002	.00006	-.00000	-.00000

RUN NO. 915/ 0 RN/L = 3.50 GRADIENT INTERVAL = -5.00/ 5.00

ALPHAO	BETAO	ALFAOU	BETAOU	PT	P	Q	TT	AFA	BFA	DEINLR	DEONLR
-.589	-7.127	-.34310	-7.04330	1699.59990	533.72750	732.76980	99.40000	-.08530	.24570	10.02000	5.00000
-.493	-4.697	-.24740	-4.61210	1696.59990	532.85130	731.47510	99.20000	-.08530	.24560	10.02000	5.00000
-.450	-.743	-.20440	-.65780	1693.00000	531.28640	729.93140	99.20000	-.08540	.24580	10.02000	5.00000
-.436	3.828	-.19060	3.91350	1702.20000	534.60550	733.88960	99.30000	-.08540	.24560	10.02000	5.00000
-.462	5.735	-.21700	5.82070	1702.20000	534.90160	733.88380	99.30000	-.08520	.24550	10.02000	5.00000
	GRADIENT	.00657	1.00003	.69190	.21920	.29827	.01199	-.00001	-.00000	-.00000	.00000

IA156A, AEDC PWT 16T-470, O T S W/SILTS (R8NM50) (10 MAY 80)

REFERENCE DATA

SREF = 2690.0000 SQ.FT. XMRP = 976.0000 IN. XT
LREF = 1290.3000 INCHES YMRP = .0000 IN. YT
BREF = 1290.3000 INCHES ZMRP = 400.0000 IN. ZT
SCALE = .0200

PARAMETRIC DATA

IB-ELV = 10.000 OB-ELV = 5.000
BDFLAP = .000 SPDBRK = .000
RUDDER = .000 SILTS = 1.000
MACH = 1.400 RN/L = 3.500

RUN NO. 916/ 0 RN/L = 3.50 GRADIENT INTERVAL = -5.00/ 5.00

ALPHAO	BETAO	ALFAOU	BETAOU	PT	P	Q	TT	AFA	BFA	DEINLR	DEONLR
4.086	-5.765	3.92800	-5.97100	1698.50000	534.22580	732.27860	99.30000	-.08510	.24520	10.02000	5.00000
4.035	-3.799	3.91830	-4.03200	1700.79980	534.01880	733.28880	99.40000	-.08530	.24570	10.02000	5.00000
3.700	.153	3.77960	-.09460	1700.09990	533.82420	732.98660	99.40000	-.08540	.24570	10.02000	5.00000
3.628	3.941	3.86100	3.82680	1700.39990	534.81030	733.09810	99.20000	-.08510	.24520	10.02000	5.00000
3.569	5.882	3.82060	5.81870	1698.89990	534.32280	732.45170	99.20000	-.08510	.24520	10.02000	5.00000
	GRADIENT	-.00760	1.01516	-.05257	.10116	-.02501	-.02565	.00003	-.00006	.00000	-.00000

IA156A, AEDC PWT 16T-470, O T S W/SILTS (R8NM51) (10 MAY 80)

REFERENCE DATA

SREF = 2690.0000 SQ.FT. XMRP = 976.0000 IN. XT
LREF = 1290.3000 INCHES YMRP = .0000 IN. YT
BREF = 1290.3000 INCHES ZMRP = 400.0000 IN. ZT
SCALE = .0200

PARAMETRIC DATA

IB-ELV = 10.000 OB-ELV = 5.000
BDFLAP = .000 SPDBRK = .000
RUDDER = .000 SILTS = 1.000
MACH = 1.550 RN/L = 3.200

RUN NO. 917/ 0 RN/L = 3.19 GRADIENT INTERVAL = -5.00/ 5.00

ALPHAO	BETAO	ALFAOU	BETAOU	PT	P	Q	TT	AFA	BFA	DEINLR	DEONLR
-8.555	-6.025	-8.23560	-6.18080	1602.70000	406.54350	682.75630	100.40000	-.14800	.32320	10.02000	5.00000
-8.567	-3.877	-8.28310	-4.09200	1603.89990	406.33980	683.16580	100.30000	-.14860	.32380	10.02000	5.00000
-8.224	.412	-8.07940	.08640	1606.79980	407.02080	684.39010	100.40000	-.14870	.32390	10.02000	5.00000
-8.053	4.487	-8.08110	4.13140	1599.29980	405.17110	681.20580	100.20000	-.14870	.32380	10.02000	5.00000
-8.050	6.312	-8.13660	5.96740	1605.20000	407.12700	683.81130	100.30000	-.14810	.32330	10.02000	5.00000
	GRADIENT	.02436	.98313	-.53925	-.13712	-.22979	-.01165	-.00001	.00000	-.00000	.00000

RUN NO. 918/ 0 RN/L = 3.19 GRADIENT INTERVAL = -5.00/ 5.00

ALPHAO	BETAO	ALFAOU	BETAOU	PT	P	Q	TT	AFA	BFA	DEINLR	DEONLR
-6.265	-5.820	-5.92380	-5.92760	1593.50000	403.11550	678.61720	100.10000	-.14940	.32450	10.02000	5.00000
-6.427	-3.972	-6.11480	-4.14340	1605.09990	406.73100	683.69430	100.10000	-.14860	.32370	10.02000	5.00000
-6.209	.217	-6.05310	-.10350	1606.39990	406.62620	684.16090	100.20000	-.14910	.32420	10.02000	5.00000
-6.074	4.472	-6.14490	4.12270	1602.89990	406.24540	682.77170	100.20000	-.14850	.32360	10.02000	5.00000
-5.992	6.606	-6.13570	6.28020	1605.79980	406.82690	683.97630	100.20000	-.14860	.32380	10.02000	5.00000
	GRADIENT	-.00361	.97897	-.26197	-.05759	-.10982	.01181	.00001	-.00001	.00000	-.00000

IA156A, AEDC PWT 16T-470, O T S W/SILTS (R8NM51) (10 MAY 80)

REFERENCE DATA

SREF = 2690.0000 SQ.FT. XMRP = 976.0000 IN. XT
LREF = 1290.3000 INCHES YMRP = .0000 IN. YT
BREF = 1290.3000 INCHES ZMRP = 400.0000 IN. ZT
SCALE = .0200

PARAMETRIC DATA

IB-ELV = 10.000 OB-ELV = 5.000
BDFLAP = .000 SPDBRK = .000
RUDDER = .000 SILTS = 1.000
MACH = 1.550 RN/L = 3.200

RUN NO. 919/ 0 RN/L = 3.20 GRADIENT INTERVAL = -5.00/ 5.00

ALPHAO	BETAO	ALFAOU	BETAOU	PT	P	Q	TT	AFA	BFA	DEINLR	DEONLR
-4.316	-5.917	-3.96090	-5.95370	1608.39990	407.31100	685.04860	100.30000	-.14890	.32400	10.02000	5.00000
-4.555	-4.132	-4.21490	-4.23720	1613.29980	408.97410	687.22050	100.30000	-.14830	.32350	10.02000	5.00000
-4.096	.321	-3.94590	-.00140	1610.59990	408.39140	686.09060	100.30000	-.14820	.32340	10.02000	5.00000
-3.809	4.600	-3.96180	4.27750	1603.50000	405.94530	682.93650	100.20000	-.14910	.32420	10.02000	5.00000
-3.787	6.253	-3.98800	5.95860	1606.70000	407.02120	684.35280	100.30000	-.14870	.32390	10.02000	5.00000
	GRADIENT	.02920	.97491	-1.11871	-.34537	-.48897	-.01137	-.00009	.00008	.00000	.00000

RUN NO. 920/ 0 RN/L = 3.19 GRADIENT INTERVAL = -5.00/ 5.00

ALPHAO	BETAO	ALFAOU	BETAOU	PT	P	Q	TT	AFA	BFA	DEINLR	DEONLR
-.649	-7.128	-.32480	-6.98180	1598.20000	405.17600	680.79420	100.20000	-.14830	.32350	10.02000	5.00000
-.600	-4.736	-.27520	-4.58950	1599.89990	405.46580	681.49000	100.20000	-.14850	.32370	10.02000	5.00000
-.528	-.692	-.20470	-.54340	1602.29980	405.95070	682.48750	100.30000	-.14860	.32380	10.02000	5.00000
-.520	3.438	-.19630	3.58660	1601.20000	405.85640	682.05620	100.40000	-.14840	.32360	10.02000	5.00000
-.536	5.575	-.21260	5.72400	1602.00000	405.75370	682.33540	100.20000	-.14880	.32390	10.02000	5.00000
	GRADIENT	.00963	1.00032	.15754	.04754	.06865	.02447	.00001	-.00001	-.00000	-.00000

RUN NO. 921/ 0 RN/L = 3.19 GRADIENT INTERVAL = -5.00/ 5.00

ALPHAO	BETAO	ALFAOU	BETAOU	PT	P	Q	TT	AFA	BFA	DEINLR	DEONLR
4.017	-5.502	3.82920	-5.80480	1598.00000	404.87960	680.65970	100.20000	-.14860	.32380	10.02000	5.00000
3.919	-3.549	3.79200	-3.88210	1600.89990	405.56030	681.88400	100.30000	-.14870	.32380	10.02000	5.00000
3.577	.320	3.72560	-.00440	1609.39990	407.40580	685.44260	100.40000	-.14910	.32420	10.02000	5.00000
3.671	4.060	4.00520	3.93340	1599.89990	404.67290	681.33010	100.30000	-.14950	.32460	10.02000	5.00000
3.567	6.099	3.91900	6.04720	1599.29980	405.27030	681.22580	100.20000	-.14860	.32370	10.02000	5.00000
	GRADIENT	.02776	1.02690	-.11800	-.11320	-.06707	.00015	-.00011	.00011	.00000	-.00000

IA156A, AEDC PWT 16T-470, O T S W/SILTS (R8NM52) (10 MAY 80)

REFERENCE DATA

SREF = 2690.0000 SQ.FT. XMRP = 976.0000 IN. XT
LREF = 1290.3000 INCHES YMRP = .0000 IN. YT
BREF = 1290.3000 INCHES ZMRP = 400.0000 IN. ZT
SCALE = .0200

PARAMETRIC DATA

IB-ELV = 10.000 OB-ELV = 9.000
BDFLAP = .000 SPDBRK = .000
RUDDER = .000 SILTS = 1.000
MACH = .300 RN/L = 3.500

RUN NO. 928/ 0 RN/L = 2.68 GRADIENT INTERVAL = -5.00/ 5.00

ALPHAO	BETAO	ALFAOU	BETAOU	PT	P	Q	TT	AFA	BFA	DEINLR	DEONLR
-5.998	-10.067	-5.85960	-10.23070	3050.50000	2865.73630	180.65960	99.40000	.07640	.20000	10.02000	8.92000
-6.333	-6.052	-6.24310	-6.24670	3049.00000	2865.07321	179.85810	99.30000	.07640	.20000	10.02000	8.92000
-6.200	.352	-6.28160	.15420	3045.79980	2861.35281	180.35090	99.20000	.07640	.20000	10.02000	8.92000
-5.745	6.151	-5.94240	6.06810	3060.29980	2876.05270	180.17970	99.30000	.07640	.20000	10.02000	8.92000
-5.855	10.085	-6.06620	10.04990	3046.29980	2863.00201	179.25370	99.20000	.07640	.20000	10.02000	8.92000
	GRADIENT	.00000	.00000	.00000	.00000	.00000	.00000	.00000	.00000	.00000	.00000

RUN NO. 929/ 0 RN/L = 2.68 GRADIENT INTERVAL = -5.00/ 5.00

ALPHAO	BETAO	ALFAOU	BETAOU	PT	P	Q	TT	AFA	BFA	DEINLR	DEONLR
-.334	-10.550	-.13420	-10.62780	3045.89990	2862.07959	179.75220	99.20000	.07640	.20000	10.02000	8.92000
-.302	-6.475	-.10190	-6.55260	3055.00000	2870.23318	180.66870	99.60000	.07640	.20000	10.02000	8.92000
-.250	-.524	-.05000	-.60110	3055.70001	2871.76901	179.87130	99.50000	.07640	.20000	10.02000	8.92000
-.233	5.554	-.03250	5.47800	3043.39990	2858.95432	180.34610	99.30000	.07640	.20000	10.02000	8.92000
-.182	9.914	.01770	9.83660	3043.79980	2859.35379	180.34690	99.40000	.07640	.20000	10.02000	8.92000
	GRADIENT	.00000	.00000	.00000	.00000	.00000	.00000	.00000	.00000	.00000	.00000

RUN NO. 930/ 0 RN/L = 2.68 GRADIENT INTERVAL = -5.00/ 5.00

ALPHAO	BETAO	ALFAOU	BETAOU	PT	P	Q	TT	AFA	BFA	DEINLR	DEONLR
6.124	-9.965	5.91280	-9.99960	3045.29980	2860.64401	180.54950	99.40000	.07640	.20000	10.02000	8.92000
5.948	-5.857	5.75130	-5.94040	3045.59991	2860.00320	181.44810	99.30000	.07640	.20000	10.02000	8.92000
5.799	.240	5.72380	.03990	3045.39990	2860.74390	180.54980	99.20000	.07640	.20000	10.02000	8.92000
6.019	6.223	6.10650	6.02770	3045.29980	2862.21170	179.05200	99.50000	.07640	.20000	10.02000	8.92000
5.804	10.078	5.93790	9.91100	3045.89990	2861.76611	180.05170	99.50000	.07640	.20000	10.02000	8.92000
	GRADIENT	.00000	.00000	.00000	.00000	.00000	.00000	.00000	.00000	.00000	.00000

IA156A, AEDC PWT 16T-470, O T S W/SILTS (R8NM53) (10 MAY 80)

REFERENCE DATA

SREF = 2690.0000 SQ.FT. XMRP = 976.0000 IN. XT
LREF = 1290.3000 INCHES YMRP = .0000 IN. YT
BREF = 1290.3000 INCHES ZMRP = 400.0000 IN. ZT
SCALE = .0200

PARAMETRIC DATA

IB-ELV = 10.000 OB-ELV = 9.000
BDFLAP = .000 SPDBRK = .000
RUDDER = .000 SILTS = 1.000
MACH = .300 RN/L = 3.500

RUN NO. 927/ 0 RN/L = 2.67 GRADIENT INTERVAL = -5.00/ 5.00

ALPHAO	BETAO	ALFAOU	BETAOU	PT	P	Q	TT	AFA	BFA	DEINLR	DEONLR
-10.105	-7.896	-10.03610	-8.09850	3052.50000	2869.51199	178.96620	98.50000	.07640	.20000	10.02000	8.92000
-10.102	-5.743	-10.06360	-5.95410	3038.29980	2855.11160	179.13810	98.90000	.07640	.20000	10.02000	8.92000
-9.855	.239	-9.93190	.03910	3049.29980	2864.74609	180.45760	99.40000	.07640	.20000	10.02000	8.92000
-9.978	6.308	-10.14900	6.17860	3046.59991	2864.76541	177.85600	99.50000	.07640	.20000	10.02000	8.92000
-9.987	8.105	-10.17190	7.99780	3047.50000	2865.97849	177.55800	99.40000	.07640	.20000	10.02000	8.92000
	GRADIENT	.00000	.00000	.00000	.00000	.00000	.00000	.00000	.00000	.00000	.00000

RUN NO. 931/ 0 RN/L = 2.68 GRADIENT INTERVAL = -5.00/ 5.00

ALPHAO	BETAO	ALFAOU	BETAOU	PT	P	Q	TT	AFA	BFA	DEINLR	DEONLR
9.927	-7.951	9.73930	-8.05490	3045.70001	2861.87961	179.75180	99.50000	.07640	.20000	10.02000	8.92000
9.995	-5.628	9.82700	-5.76040	3046.00000	2862.28421	179.65250	99.40000	.07640	.20000	10.02000	8.92000
9.865	.278	9.79020	.07750	3047.39990	2863.68329	179.65550	99.30000	.07640	.20000	10.02000	8.92000
9.954	6.285	9.99470	6.07510	3047.70001	2863.87869	179.75580	99.30000	.07640	.20000	10.02000	8.92000
9.732	8.122	9.80090	7.91930	3048.09991	2863.33759	180.65480	99.20000	.07640	.20000	10.02000	8.92000
	GRADIENT	.00000	.00000	.00000	.00000	.00000	.00000	.00000	.00000	.00000	.00000

IA156A, AEDC PWT 16T-470, O T S W/SILTS (R8NM54) (10 MAY 80)

REFERENCE DATA

SREF = 2690.0000 SQ.FT. XMRP = 976.0000 IN. XT
LREF = 1290.3000 INCHES YMRP = .0000 IN. YT
BREF = 1290.3000 INCHES ZMRP = 400.0000 IN. ZT
SCALE = .0200

PARAMETRIC DATA

IB-ELV = 10.000 OB-ELV = 9.000
BDFLAP = .000 SPDBRK = .000
RUDDER = .000 SILTS = 1.000
MACH = .600 RN/L = 3.500

RUN NO. 932/ 0 RN/L = 3.50 GRADIENT INTERVAL = -5.00/ 5.00

ALPHAO	BETAO	ALFAOU	BETAOU	PT	P	Q	TT	AFA	BFA	DEINLR	DEONLR
-8.138	-7.854	-8.04760	-8.04390	2238.00000	1753.22189	443.28960	101.90000	.07530	.19650	10.02000	8.92000
-8.087	-5.763	-8.02650	-5.96480	2234.59991	1751.26120	442.04030	101.70000	.07590	.19640	10.02000	8.92000
-7.967	-3.708	-7.94300	-3.91680	2243.50000	1756.66330	445.08940	100.60000	.07450	.19660	10.02000	8.92000
-7.963	.267	-8.04170	.07150	2229.39990	1748.62669	439.82980	100.10000	.07710	.19630	10.02000	8.92000
-7.927	4.197	-8.08580	4.05880	2237.09991	1753.44460	442.35110	99.80000	.07610	.19640	10.02000	8.92000
-7.870	6.095	-8.05140	5.98790	2237.00000	1754.46339	441.43140	99.80000	.07700	.19630	10.02000	8.92000
-7.785	8.168	-7.98010	8.08940	2238.39990	1754.73849	442.38260	99.70000	.07630	.19640	10.02000	8.92000
	GRADIENT	-.01808	1.00886	-.81476	-.41021	-.34823	-.10124	.00020	-.00003	-.00000	-.00000

IA156A, AEDC PWT 16T-470, O T S W/SILTS (R8NM54) (10 MAY 80)

REFERENCE DATA

SREF = 2690.0000 SQ.FT. XMRP = 976.0000 IN. XT
LREF = 1290.3000 INCHES YMRP = .0000 IN. YT
BREF = 1290.3000 INCHES ZMRP = 400.0000 IN. ZT
SCALE = .0200

PARAMETRIC DATA

IB-ELV = 10.000 OB-ELV = 9.000
BDFLAP = .000 SPDBRK = .000
RUDDER = .000 SILTS = 1.000
MACH = .600 RN/L = 3.500

RUN NO. 933/ 0 RN/L = 3.51 GRADIENT INTERVAL = -5.00/ 5.00

ALPHAO	BETAO	ALFAOU	BETAOU	PT	P	Q	TT	AFA	BFA	DEINLR	DEONLR
-6.013	-7.751	-5.89640	-7.92700	2239.79980	1755.82710	442.66650	99.40000	.07630	.19640	10.02000	8.92000
-6.160	-5.863	-6.07080	-6.05370	2239.20001	1755.73830	442.23510	99.40000	.07660	.19630	10.02000	8.92000
-6.084	-3.845	-6.03310	-4.04910	2239.29980	1755.32930	442.65430	99.40000	.07620	.19640	10.02000	8.92000
-6.187	.112	-6.25880	-.08580	2239.70001	1754.60910	443.58080	99.50000	.07530	.19650	10.02000	8.92000
-5.969	4.214	-6.14330	4.09560	2238.70001	1754.73219	442.63990	99.50000	.07610	.19640	10.02000	8.92000
-5.766	6.035	-5.96120	5.95500	2238.70001	1755.34230	442.13960	99.60000	.07660	.19630	10.02000	8.92000
-5.770	8.336	-5.97500	8.28830	2238.29980	1754.94411	442.13010	99.60000	.07650	.19630	10.02000	8.92000
	GRADIENT	-.01342	1.01080	-.07547	-.07347	-.00318	.01233	-.00001	-.00000	-.00000	.00000

RUN NO. 934/ 0 RN/L = 3.51 GRADIENT INTERVAL = -5.00/ 5.00

ALPHAO	BETAO	ALFAOU	BETAOU	PT	P	Q	TT	AFA	BFA	DEINLR	DEONLR
-4.123	-7.903	-3.97700	-8.05430	2240.20001	1755.71680	443.09300	99.30000	.07590	.19640	10.02000	8.92000
-4.091	-5.806	-3.96470	-5.97520	2239.29980	1755.43120	442.57100	99.30000	.07630	.19640	10.02000	8.92000
-4.143	-3.813	-4.05380	-4.00350	2239.70001	1754.81250	443.41410	99.50000	.07550	.19650	10.02000	8.92000
-3.887	.205	-3.96200	.00860	2240.70001	1755.40109	443.77170	99.50000	.07530	.19650	10.02000	8.92000
-3.956	4.299	-4.15100	4.21950	2240.20001	1755.71680	443.09300	99.50000	.07590	.19640	10.02000	8.92000
-3.856	6.017	-4.06200	5.97410	2239.89990	1756.33330	442.33540	99.50000	.07660	.19630	10.02000	8.92000
-3.746	7.939	-3.95610	7.92380	2239.89990	1755.31670	443.16920	99.50000	.07580	.19640	10.02000	8.92000
	GRADIENT	-.01209	1.01376	.06106	.11137	-.03998	-.00000	.00005	-.00001	-.00000	-.00000

RUN NO. 935/ 0 RN/L = 3.51 GRADIENT INTERVAL = -5.00/ 5.00

ALPHAO	BETAO	ALFAOU	BETAOU	PT	P	Q	TT	AFA	BFA	DEINLR	DEONLR
-.269	-8.793	-.07250	-8.86760	2239.29980	1755.53270	442.48780	99.60000	.07640	.19640	10.02000	8.92000
-.324	-6.788	-.12770	-6.86460	2239.20001	1755.83980	442.15190	99.50000	.07670	.19630	10.02000	8.92000
-.313	-4.471	-.11630	-4.54620	2240.29980	1754.49460	444.17850	99.50000	.07480	.19650	10.02000	8.92000
-.289	-.224	-.09270	-.30000	2238.70001	1754.83369	442.55640	99.50000	.07620	.19640	10.02000	8.92000
-.267	3.806	-.07010	3.73050	2239.29980	1755.02420	442.90450	99.50000	.07590	.19640	10.02000	8.92000
-.217	5.654	-.02150	5.57690	2239.59991	1755.22121	442.99510	99.50000	.07590	.19640	10.02000	8.92000
-.279	7.785	-.08180	7.71200	2238.70001	1750.97050	445.72050	99.50000	.07290	.19670	10.02000	8.92000
	GRADIENT	.00558	.99989	-.12311	.06412	-.15596	.00000	.00013	-.00001	-.00000	.00000

IA156A FORCE DATA WITH FLOW ANGULARITY CORRECTION

IA156A, AEDC PWT 16T-470, O T S W/SILTS

(R8NM54) (10 MAY 80)

REFERENCE DATA

SREF = 2690.0000 SQ.FT. XMRP = 976.0000 IN. XT
LREF = 1290.3000 INCHES YMRP = .0000 IN. YT
BREF = 1290.3000 INCHES ZMRP = 400.0000 IN. ZT
SCALE = .0200

PARAMETRIC DATA

IB-ELV = 10.000 OB-ELV = 9.000
BDFLAP = .000 SPDBRK = .000
RUDDER = .000 SILTS = 1.000
MACH = .600 RN/L = 3.500

RUN NO. 936/ 0 RN/L = 3.51 GRADIENT INTERVAL = -5.00/ 5.00

ALPHAO	BETAO	ALFAOU	BETAOU	PT	P	Q	TT	AFA	BFA	DEINLR	DEONLR
4.047	-7.760	3.83760	-7.77900	2237.79980	1753.02290	443.28440	99.40000	.07520	.19650	10.02000	8.92000
4.081	-5.679	3.87570	-5.72590	2237.89990	1752.81740	443.53690	99.40000	.07500	.19650	10.02000	8.92000
4.045	-3.728	3.85260	-3.81270	2237.70001	1754.34669	442.11550	99.50000	.07640	.19640	10.02000	8.92000
3.862	.202	3.78440	.00580	2236.39990	1754.98441	440.49930	99.50000	.07780	.19620	10.02000	8.92000
3.891	4.152	3.97630	3.95970	2237.50000	1754.85941	441.52690	99.50000	.07700	.19630	10.02000	8.92000
3.833	6.086	3.95620	5.91510	2236.39990	1752.03610	442.91720	99.50000	.07530	.19650	10.02000	8.92000
3.739	7.925	3.88200	7.77080	2236.09991	1751.94090	442.74320	99.40000	.07540	.19650	10.02000	8.92000
	GRADIENT	.01573	.98633	-.02513	.06498	-.07441	-.00000	.00008	-.00001	.00000	-.00000

RUN NO. 937/ 0 RN/L = 3.51 GRADIENT INTERVAL = -5.00/ 5.00

ALPHAO	BETAO	ALFAOU	BETAOU	PT	P	Q	TT	AFA	BFA	DEINLR	DEONLR
6.185	-7.948	5.98240	-8.00470	2236.09991	1750.31419	444.07570	99.50000	.07410	.19660	10.02000	8.92000
6.018	-5.777	5.82470	-5.86110	2237.29980	1752.32201	443.43900	99.50000	.07500	.19650	10.02000	8.92000
6.127	-3.840	5.95450	-3.96020	2237.59991	1752.82401	443.27980	99.50000	.07520	.19650	10.02000	8.92000
5.925	.211	5.84980	.01450	2236.70001	1752.84300	442.50780	99.50000	.07580	.19640	10.02000	8.92000
5.722	4.043	5.76990	3.83830	2236.70001	1752.63960	442.67460	99.40000	.07560	.19640	10.02000	8.92000
5.884	6.104	5.97210	5.91350	2236.79980	1750.40089	444.59230	99.40000	.07370	.19670	10.02000	8.92000
5.739	8.181	5.85550	8.00620	2236.59991	1751.42191	443.58840	99.50000	.07470	.19650	10.02000	8.92000
	GRADIENT	-.02344	.98922	-.11518	-.02313	-.07785	-.01257	.00005	-.00001	-.00000	.00000

RUN NO. 938/ 0 RN/L = 3.51 GRADIENT INTERVAL = -5.00/ 5.00

ALPHAO	BETAO	ALFAOU	BETAOU	PT	P	Q	TT	AFA	BFA	DEINLR	DEONLR
8.049	-8.030	7.85540	-8.11060	2236.00000	1750.51981	443.82350	99.40000	.07430	.19660	10.02000	8.92000
7.954	-5.760	7.77590	-5.87050	2237.00000	1750.39670	444.76370	99.40000	.07360	.19670	10.02000	8.92000
8.156	-3.936	7.99870	-4.07590	2236.09991	1750.61909	443.82590	99.50000	.07430	.19660	10.02000	8.92000
7.840	.174	7.76460	-.02220	2236.89990	1752.12720	443.26270	99.50000	.07510	.19650	10.02000	8.92000
8.020	4.153	8.04030	3.94330	2235.79980	1752.35400	442.15260	99.50000	.07600	.19640	10.02000	8.92000
7.706	6.068	7.76770	5.86770	2236.39990	1750.71440	443.99980	99.50000	.07420	.19660	10.02000	8.92000
7.985	8.203	8.07430	8.01290	2236.20001	1750.10860	444.32790	99.50000	.07380	.19660	10.02000	8.92000
	GRADIENT	.00480	.99136	-.03583	.21532	-.20648	.00000	.00021	-.00002	-.00000	.00000

IA156A, AEDC PWT 16T-470, O T S W/SILTS (R8NM55) (10 MAY 80)

REFERENCE DATA

SREF = 2690.0000 SQ.FT. XMRP = 976.0000 IN. XT
LREF = 1290.3000 INCHES YMRP = .0000 IN. YT
BREF = 1290.3000 INCHES ZMRP = 400.0000 IN. ZT
SCALE = .0200

PARAMETRIC DATA

IB-ELV = 10.000 OB-ELV = 9.000
BDFLAP = .000 SPDBRK = .000
RUDDER = .000 SILTS = 1.000
MACH = .800 RN/L = 3.500

RUN NO. 939/ 0 RN/L = 3.51 GRADIENT INTERVAL = -5.00/ 5.00

ALPHAO	BETAO	ALFAOU	BETAOU	PT	P	Q	TT	AFA	BFA	DEINLR	DEONLR
-8.416	-6.010	-8.25870	-6.14580	1888.79980	1235.75999	557.37700	99.60000	-.03880	.20400	10.02000	8.92000
-8.319	-3.889	-8.19000	-4.05250	1874.09990	1228.72189	551.28830	99.40000	-.03840	.20400	10.02000	8.92000
-8.133	.366	-8.09810	.16120	1881.59990	1231.02440	555.26900	99.30000	-.03890	.20400	10.02000	8.92000
-8.078	4.282	-8.14030	4.08350	1878.70000	1232.69189	551.99290	99.20000	-.03830	.20400	10.02000	8.92000
-7.997	6.197	-8.09330	6.01330	1876.50000	1230.70531	551.71580	99.20000	-.03840	.20400	10.02000	8.92000
	GRADIENT	.00631	.99562	.58028	.48665	.09849	-.02446	.00001	-.00000	-.00000	-.00000

RUN NO. 940/ 0 RN/L = 3.50 GRADIENT INTERVAL = -5.00/ 5.00

ALPHAO	BETAO	ALFAOU	BETAOU	PT	P	Q	TT	AFA	BFA	DEINLR	DEONLR
-6.329	-6.039	-6.15460	-6.15100	1877.50000	1231.80150	551.71040	99.10000	-.03830	.20400	10.02000	8.92000
-6.233	-3.960	-6.08350	-4.10320	1877.09990	1231.70680	551.47880	99.20000	-.03830	.20410	10.02000	8.92000
-6.042	.147	-6.00090	-.05650	1877.09990	1231.20120	551.82250	99.10000	-.03830	.20400	10.02000	8.92000
-6.109	4.309	-6.19540	4.12050	1875.50000	1230.82320	550.89550	99.10000	-.03820	.20410	10.02000	8.92000
-5.813	6.218	-5.93700	6.05110	1875.59990	1230.21440	551.38350	99.10000	-.03830	.20400	10.02000	8.92000
	GRADIENT	-.01361	.99453	-.19391	-.10682	-.07088	-.01207	.00001	.00000	-.00000	-.00000

RUN NO. 941/ 0 RN/L = 3.50 GRADIENT INTERVAL = -5.00/ 5.00

ALPHAO	BETAO	ALFAOU	BETAOU	PT	P	Q	TT	AFA	BFA	DEINLR	DEONLR
-4.318	-6.168	-4.12460	-6.24280	1877.70000	1232.00050	551.72310	99.20000	-.03830	.20400	10.02000	8.92000
-4.283	-3.943	-4.10890	-4.05530	1877.70000	1232.00050	551.72310	99.20000	-.03830	.20400	10.02000	8.92000
-4.010	.249	-3.97370	.04430	1877.39990	1231.49950	551.84180	99.20000	-.03830	.20400	10.02000	8.92000
-3.782	4.175	-3.90630	4.00840	1876.79980	1231.50951	551.39090	99.20000	-.03830	.20410	10.02000	8.92000
-3.971	6.130	-4.12130	5.98690	1877.00000	1231.60741	551.47240	99.20000	-.03820	.20410	10.02000	8.92000
	GRADIENT	.02504	.99321	-.11046	-.06115	-.04015	-.00000	.00000	.00001	-.00000	-.00000

RUN NO. 942/ 0 RN/L = 3.51 GRADIENT INTERVAL = -5.00/ 5.00

ALPHAO	BETAO	ALFAOU	BETAOU	PT	P	Q	TT	AFA	BFA	DEINLR	DEONLR
-.339	-6.739	-.13520	-6.70020	1878.39990	1232.39330	551.97390	99.20000	-.03830	.20400	10.02000	8.92000
-.371	-4.804	-.16680	-4.76660	1877.59990	1231.29390	552.12960	99.20000	-.03840	.20400	10.02000	8.92000
-.324	-.381	-.12000	-.34380	1877.59990	1231.49609	551.99190	99.30000	-.03840	.20400	10.02000	8.92000
-.303	3.704	-.09890	3.74340	1877.59990	1231.09160	552.26710	99.30000	-.03840	.20400	10.02000	8.92000
-.314	5.560	-.11020	5.59890	1877.20000	1231.09810	551.96660	99.30000	-.03840	.20400	10.02000	8.92000
	GRADIENT	.00802	1.00019	.00000	-.02282	.01551	.01190	.00000	-.00000	-.00000	-.00000

IA156A, AEDC PWT 16T-470, O T S W/SILTS (R8NM55) (10 MAY 80)

REFERENCE DATA

SREF = 2690.0000 SQ.FT. XMRP = 976.0000 IN. XT
LREF = 1290.3000 INCHES YMRP = .0000 IN. YT
BREF = 1290.3000 INCHES ZMRP = 400.0000 IN. ZT
SCALE = .0200

PARAMETRIC DATA

IB-ELV = 10.000 OB-ELV = 9.000
BDFLAP = .000 SPDBRK = .000
RUDDER = .000 SILTS = 1.000
MACH = .800 RN/L = 3.500

RUN NO. 943/ 0 RN/L = 3.50 GRADIENT INTERVAL = -5.00/ 5.00

ALPHAO	BETAO	ALFAOU	BETAOU	PT	P	Q	TT	AFA	BFA	DEINLR	DEONLR
3.938	-5.652	3.78700	-5.79520	1877.89990	1231.49120	552.21730	99.30000	- 03840	.20400	10.02000	8.92000
3.921	-3.662	3.80170	-3.83170	1876.79980	1231.50951	551.39090	99.40000	-.03830	.20410	10.02000	8.92000
3.945	.110	3.97910	-.09490	1877.29980	1230.89430	552.17920	99.30000	-.03840	.20400	10.02000	8.92000
3.796	4.071	3.96900	3.95600	1876.70000	1230.60080	551.93480	99.20000	-.03840	.20400	10.02000	8.92000
3.721	6.067	3.91340	5.98980	1877.59990	1230.99020	552.33590	99.20000	-.03840	.20400	10.02000	8.92000
	GRADIENT	.02143	1.00720	-.01407	-.11715	.06923	-.02586	-.00001	-.00001	-.00000	-.00000

RUN NO. 944/ 0 RN/L = 3.51 GRADIENT INTERVAL = -5.00/ 5.00

ALPHAO	BETAO	ALFAOU	BETAOU	PT	P	Q	TT	AFA	BFA	DEINLR	DEONLR
6.089	-5.845	5.96940	-6.01500	1877.20000	1231.30051	551.82910	99.20000	-.03830	.20400	10.02000	8.92000
6.139	-3.843	6.05590	-4.03330	1877.59990	1231.79980	551.78560	99.30000	-.03830	.20400	10.02000	8.92000
5.926	.176	5.96380	-.02800	1878.00000	1231.38820	552.36130	99.20000	-.03840	.20400	10.02000	8.92000
5.761	3.987	5.90640	3.83900	1878.50000	1232.39160	552.04910	99.30000	-.03830	.20400	10.02000	8.92000
5.893	6.117	6.06560	6.00170	1878.59990	1231.88400	552.46800	99.20000	-.03840	.20400	10.02000	8.92000
	GRADIENT	-.01913	1.00527	.11481	.07396	.03465	-.00023	-.00000	.00000	.00000	.00000

IA156A, AEDC PWT 16T-470, O T S W/SILTS (R8NM56) (10 MAY 80)

REFERENCE DATA

SREF = 2690.0000 SQ.FT. XMRP = 976.0000 IN. XT
LREF = 1290.3000 INCHES YMRP = .0000 IN. YT
BREF = 1290.3000 INCHES ZMRP = 400.0000 IN. ZT
SCALE = .0200

PARAMETRIC DATA

IB-ELV = 10.000 OB-ELV = 9.000
BDFLAP = .000 SPDBRK = .000
RUDDER = .000 SILTS = 1.000
MACH = .900 RN/L = 3.500

RUN NO. 952/ 0 RN/L = 3.51 GRADIENT INTERVAL = -5.00/ 5.00

ALPHAO	BETAO	ALFAOU	BETAOU	PT	P	Q	TT	AFA	BFA	DEINLR	DEONLR
-8.266	-5.928	-8.10110	-6.05150	1784.29980	1055.32860	597.97220	99.80000	-.05180	.20010	10.02000	8.92000
-8.058	-3.754	-7.91920	-3.90650	1785.20000	1055.71899	598.35820	99.90000	-.05180	.20010	10.02000	8.92000
-8.186	.261	-8.13540	.06010	1786.00000	1056.61549	598.37450	99.90000	-.05170	.20010	10.02000	8.92000
-8.108	4.358	-8.15820	4.15760	1785.89990	1055.80980	598.78520	99.90000	-.05180	.20010	10.02000	8.92000
-8.107	6.196	-8.19030	6.00610	1786.39990	1055.90331	599.07300	99.90000	-.05180	.20010	10.02000	8.92000
	GRADIENT	-.02933	.99416	.08590	.01048	.05280	-.00000	-.00000	-.00000	-.00000	-.00000

IA156A, AEDC PWT 16T-470, O T S W/SILTS (R8IM56) (10 MAY 80)

REFERENCE DATA

SREF = 2690.0000 SQ.FT. XMRP = 976.0000 IN. XT
LREF = 1290.3000 INCHES YMRP = .0000 IN. YT
BREF = 1290.3000 INCHES ZMRP = 400.0000 IN. ZT
SCALE = .0200

PARAMETRIC DATA

IB-ELV = 10.000 OB-ELV = 9.000
BDFLAP = .000 SPDBRK = .000
RUDDER = .000 SILTS = 1.000
MACH = .900 RN/L = 3.500

RUN NO. 953/ 0 RN/L = 3.50 GRADIENT INTERVAL = -5.00/ 5.00

ALPHAO	BETAO	ALFAOU	BETAOU	PT	P	Q	TT	AFA	BFA	DEINLR	DEONLR
-6.226	-6.035	-6.04380	-6.13270	1782.50000	1054.44679	597.26000	100.00000	-.05180	.20010	10.02000	8.92000
-6.115	-4.004	-5.95390	-4.13360	1783.79980	1054.73050	597.98460	99.90000	-.05180	.20010	10.02000	8.92000
-6.029	.147	-5.97470	-.05260	1780.70000	1053.06050	596.84810	99.90000	-.05180	.20010	10.02000	8.92000
-6.036	4.212	-6.10810	4.01810	1786.09990	1056.00850	598.80420	99.90000	-.05180	.20010	10.02000	8.92000
-5.855	6.186	-5.96620	6.01180	1781.89990	1054.15280	597.02270	99.80000	-.05170	.20010	10.02000	8.92000
	GRADIENT	-.01872	.99220	.27635	.15359	.09845	-.00000	-.00000	-.00000	-.00000	-.00000

RUN NO. 954/ 0 RN/L = 3.50 GRADIENT INTERVAL = -5.00/ 5.00

ALPHAO	BETAO	ALFAOU	BETAOU	PT	P	Q	TT	AFA	BFA	DEINLR	DEONLR
-4.243	-6.218	-4.04430	-6.27550	1784.20000	1055.02730	598.08280	100.10000	-.05180	.20010	10.02000	8.92000
-4.227	-3.977	-4.04470	-4.07420	1780.70000	1053.06050	596.84810	99.90000	-.05180	.20010	10.02000	8.92000
-3.985	.235	-3.93510	.03450	1783.29980	1054.33420	597.87670	99.90000	-.05180	.20010	10.02000	8.92000
-4.062	4.405	-4.17400	4.23120	1784.50000	1055.42650	598.05130	99.80000	-.05180	.20010	10.02000	8.92000
-3.876	6.295	-4.02000	6.14660	1780.79980	1052.95830	596.97780	99.80000	-.05180	.20010	10.02000	8.92000
	GRADIENT	-.01536	.99085	.45363	.28231	.14372	-.01191	.00000	-.00000	-.00000	-.00000

RUN NO. 955/ 0 RN/L = 3.50 GRADIENT INTERVAL = -5.00/ 5.00

ALPHAO	BETAO	ALFAOU	BETAOU	PT	P	Q	TT	AFA	BFA	DEINLR	DEONLR
-.415	-6.981	-.21520	-6.92960	1783.50000	1054.73489	597.77590	100.00000	-.05180	.20010	10.02000	8.92000
-.388	-4.926	-.18760	-4.87450	1782.79980	1054.24071	597.58890	99.80000	-.05180	.20010	10.02000	8.92000
-.346	-.610	-.14610	-.55880	1782.00000	1053.94971	597.21240	99.80000	-.05180	.20010	10.02000	8.92000
-.308	3.482	-.10750	3.53320	1783.00000	1054.23779	597.72800	99.80000	-.05180	.20010	10.02000	8.92000
-.312	5.703	-.11170	5.75470	1782.29980	1053.54170	597.66110	99.70000	-.05180	.20010	10.02000	8.92000
	GRADIENT	.00953	1.00004	.02191	-.00096	.01560	-.00000	.00000	-.00000	-.00000	.00000

RUN NO. 956/ 0 RN/L = 3.50 GRADIENT INTERVAL = -5.00/ 5.00

ALPHAO	BETAO	ALFAOU	BETAOU	PT	P	Q	TT	AFA	BFA	DEINLR	DEONLR
4.107	-5.931	3.96660	-6.08290	1782.50000	1055.15311	596.83940	99.80000	-.05170	.20010	10.02000	8.92000
4.174	-3.928	4.06740	-4.10470	1782.70000	1054.24220	597.51930	99.80000	-.05180	.20010	10.02000	8.92000
3.727	.181	3.77750	-.01910	1782.79980	1054.34160	597.52880	99.80000	-.05180	.20010	10.02000	8.92000
3.889	4.008	4.06600	3.90070	1782.59990	1053.94090	597.62990	99.80000	-.05180	.20010	10.02000	8.92000
3.707	6.109	3.90330	6.04490	1784.89990	1055.72340	598.14940	99.80000	-.05180	.20010	10.02000	8.92000
	GRADIENT	-.00104	1.00864	-.01216	-.03721	.01379	-.00000	.00000	-.00000	.00000	-.00000

IA156A, AEDC PWT 16T-470, O T S W/SILTS (R8NM57) (10 MAY 80)

REFERENCE DATA

SREF = 2690.0000 SQ.FT. XMRP = 976.0000 IN. XT
LREF = 1290.3000 INCHES YMRP = .0000 IN. YT
BREF = 1290.3000 INCHES ZMRP = 400.0000 IN. ZT
SCALE = .0200

PARAMETRIC DATA

IB-ELV = 10.000 OB-ELV = 9.000
BDFLAP = .000 SPDBRK = .000
RUDDER = .000 SILTS = 1.000
MACH = .950 RN/L = 3.500

RUN NO. 957/ 0 RN/L = 3.50 GRADIENT INTERVAL = -5.00/ 5.00

ALPHAO	BETAO	ALFAOU	BETAOU	PT	P	Q	TT	AFA	BFA	DEINLR	DEONLR
-8.168	-6.025	-7.99980	-6.14260	1748.70000	978.21260	618.12160	100.30000	-.05540	.19770	10.02000	8.92000
-8.236	-3.822	-8.09470	-3.97130	1747.89990	978.22310	617.58720	100.20000	-.05540	.19770	10.02000	8.92000
-8.036	.263	-7.98260	.06440	1747.29980	978.63400	616.96510	100.20000	-.05540	.19780	10.02000	8.92000
-7.924	4.230	-7.96920	4.03030	1747.59990	977.42160	617.82890	100.10000	-.05550	.19770	10.02000	8.92000
-7.872	6.126	-7.95290	5.93750	1747.70000	978.22580	617.45360	100.10000	-.05540	.19770	10.02000	8.92000
	GRADIENT	.01564	.99363	-.03780	-.09855	.02912	-.01236	-.00001	.00000	-.00000	-.00000

RUN NO. 959/ 0 RN/L = 3.49 GRADIENT INTERVAL = -5.00/ 5.00

ALPHAO	BETAO	ALFAOU	BETAOU	PT	P	Q	TT	AFA	BFA	DEINLR	DEONLR
-6.208	-5.992	-6.02460	-6.08470	1748.09990	978.11990	617.77610	100.10000	-.05540	.19770	10.02000	8.92000
-6.174	-4.054	-6.01090	-4.17950	1745.09990	976.75000	616.54640	100.00000	-.05540	.19770	10.02000	8.92000
-6.259	.135	-6.20090	-.06180	1744.79980	975.94850	616.78810	99.90000	-.05540	.19770	10.02000	3.92000
-6.062	4.282	-6.13190	4.08890	1742.20000	974.57320	615.82570	100.10000	-.05540	.19770	10.02000	8.92000
-5.827	6.394	-5.93850	6.22160	1742.39990	975.07400	615.68290	100.00000	-.05540	.19770	10.02000	8.92000
	GRADIENT	-.01457	.99182	-.34738	-.26100	-.08620	.01193	-.00000	.00000	-.00000	.00000

RUN NO. 958/ 0 RN/L = 3.49 GRADIENT INTERVAL = -5.00/ 5.00

ALPHAO	BETAO	ALFAOU	BETAOU	PT	P	Q	TT	AFA	BFA	DEINLR	DEONLR
-4.273	-6.188	-4.07470	-6.24140	1748.09990	978.22050	617.72070	100.10000	-.05540	.19770	10.02000	8.92000
-4.329	-4.008	-4.14640	-4.10230	1748.50000	978.41650	617.87740	100.10000	-.05540	.19770	10.02000	8.92000
-4.255	.375	-4.20820	.17510	1748.89990	978.61280	618.03390	100.10000	-.05540	.19770	10.02000	8.92000
-3.812	4.353	-3.92470	4.18100	1749.00000	978.61130	618.10080	100.10000	-.05540	.19770	10.02000	8.92000
-3.866	6.166	-4.00520	6.01570	1735.70000	971.53810	613.19820	99.70000	-.05540	.19770	10.02000	8.92000
	GRADIENT	.02583	.99042	.06033	.02366	.02687	.00000	-.00000	-.00000	-.00000	.00000

RUN NO. 960/ 0 RN/L = 3.50 GRADIENT INTERVAL = -5.00/ 5.00

ALPHAO	BETAO	ALFAOU	BETAOU	PT	P	Q	TT	AFA	BFA	DEINLR	DEONLR
-.419	-6.876	-.22140	-6.82050	1748.00000	977.31570	618.15110	100.20000	-.05550	.19770	10.02000	8.92000
-.396	-4.858	-.19870	-4.80330	1747.70000	977.82300	617.67480	100.10000	-.05540	.19770	10.02000	8.92000
-.362	-.678	-.16440	-.62310	1748.09990	978.01900	617.83130	100.10000	-.05540	.19770	10.02000	8.92000
-.320	3.521	-.12230	3.57660	1750.29980	979.39970	618.52690	100.20000	-.05540	.19770	10.02000	8.92000
-.323	5.725	-.12580	5.78000	1750.79980	979.89650	618.58420	100.20000	-.05540	.19770	10.02000	8.92000
	GRADIENT	.00912	1.00002	.31041	.18827	.10174	.01194	.00000	-.00000	.00000	.00000

IA156A, AEDC PWT 16T-470, O T S W/SILTS (R8NM57) (10 MAY 80)

REFERENCE DATA

SREF = 2690.0000 SQ.FT. XMRP = 976.0000 IN. XT
LREF = 1290.3000 INCHES YMRP = .0000 IN. YT
BREF = 1290.3000 INCHES ZMRP = 400.0000 IN. ZT
SCALE = .0200

PARAMETRIC DATA

IB-ELV = 10.000 OB-ELV = 9.000
BDFLAP = .000 SPDBRK = .000
RUDDER = .000 SILTS = 1.000
MACH = .950 RN/L = 3.500

RUN NO. 961/ 0 RN/L = 3.49 GRADIENT INTERVAL = -5.00/ 5.00

ALPHAO	BETAO	ALFAOU	BETAOU	PT	P	Q	TT	AFA	BFA	DEINLR	DEONLR
3.921	-5.779	3.78340	-5.93200	1740.59990	974.39310	614.86770	100.10000	-.05540	.19770	10.02000	8.92000
3.965	-3.741	3.86240	-3.91920	1745.29980	976.44530	616.84570	100.20000	-.05540	.19770	10.02000	8.92000
3.688	.018	3.73350	-.18180	1745.50000	977.14750	616.59230	100.30000	-.05540	.19770	10.02000	8.92000
3.816	3.930	3.99360	3.82700	1743.79980	975.96170	616.12040	100.10000	-.05540	.19770	10.02000	8.92000
3.768	6.071	3.96360	6.00910	1746.39990	977.13550	617.19340	100.20000	-.05540	.19770	10.02000	8.92000
	GRADIENT	.01744	1.00985	-.19714	-.06466	-.09472	-.01329	.00000	.00000	-.00000	-.00000

IA156A, AEDC PWT 16T-470, O T S W/SILTS (R8NM58) (10 MAY 80)

REFERENCE DATA

SREF = 2690.0000 SQ.FT. XMRP = 976.0000 IN. XT
LREF = 1290.3000 INCHES YMRP = .0000 IN. YT
BREF = 1290.3000 INCHES ZMRP = 400.0000 IN. ZT
SCALE = .0200

PARAMETRIC DATA

IB-ELV = 10.000 OB-ELV = 9.000
BDFLAP = .000 SPDBRK = .000
RUDDER = .000 SILTS = 1.000
MACH = 1.050 RN/L = 3.500

RUN NO. 962/ 0 RN/L = 3.50 GRADIENT INTERVAL = -5.00/ 5.00

ALPHAO	BETAO	ALFAOU	BETAOU	PT	P	Q	TT	AFA	BFA	DEINLR	DEONLR
-8.133	-6.006	-7.96170	-6.11630	1703.00000	849.24270	653.73410	100.20000	-.06070	.19450	10.02000	8.92000
-8.303	-3.794	-8.15860	-3.93750	1701.70000	847.35210	653.79350	100.10000	-.06080	.19440	10.02000	8.92000
-8.187	.179	-8.12570	-.01570	1701.89990	846.94900	654.09570	100.20000	-.06080	.19440	10.02000	8.92000
-8.003	4.365	-8.04540	4.16550	1702.70000	846.94040	654.58540	100.10000	-.06090	.19440	10.02000	8.92000
-8.017	6.256	-8.09310	6.06690	1704.09990	849.43140	654.31810	100.10000	-.06080	.19450	10.02000	8.92000
	GRADIENT	.01392	.99326	.12319	-.05003	.09724	-.00021	-.00001	.00000	-.00000	.00000

RUN NO. 963/ 0 RN/L = 3.50 GRADIENT INTERVAL = -5.00/ 5.00

ALPHAO	BETAO	ALFAOU	BETAOU	PT	P	Q	TT	AFA	BFA	DEINLR	DEONLR
-6.221	-6.007	-6.03650	-6.09270	1701.70000	847.85330	653.56840	100.40000	-.06080	.19440	10.02000	8.92000
-6.148	-4.081	-5.98120	-4.19760	1701.59990	846.35080	654.18160	100.30000	-.06090	.19440	10.02000	8.92000
-6.259	.103	-6.19530	-.09020	1701.00000	847.76050	653.18430	100.20000	-.06080	.19450	10.02000	8.92000
-6.076	4.270	-6.14100	4.07630	1702.39990	847.24440	654.26710	100.10000	-.06080	.19440	10.02000	8.92000
-5.781	6.385	-5.88820	6.21190	1706.20000	849.81010	655.42480	100.40000	-.06080	.19440	10.02000	8.92000
	GRADIENT	-.01916	.99088	.09564	.10718	.01007	-.02395	.00001	.00000	.00000	-.00000

IA156A, AEDC PWT 16T-470, O T S W/SILTS (R8NM58) (10 MAY 80)

REFERENCE DATA

SREF = 2690.0000 SQ.FT. XMRP = 976.0000 IN. XT
LREF = 1290.3000 INCHES YMRP = .0000 IN. YT
BREF = 1290.3000 INCHES ZMRP = 400.0000 IN. ZT
SCALE = .0200

PARAMETRIC DATA

IB-ELV = 10.000 OB-ELV = 9.000
BDFLAP = .000 SPDBRK = .000
RUDDER = .000 SILTS = 1.000
MACH = 1.050 RN/L = 3.500

RUN NO. 964/ 0 RN/L = 3.50 GRADIENT INTERVAL = -5.00/ 5.00

ALPHAO	BETAO	ALFAOU	BETAOU	PT	P	Q	TT	AFA	BFA	DEINLR	DEONLR
-4.138	-6.140	-3.93900	-6.18330	1701.79980	847.55150	653.76460	100.40000	-.06080	.19440	10.02000	8.92000
-4.347	-4.015	-4.16200	-4.10090	1702.20000	847.04610	654.23460	100.40000	-.06090	.19440	10.02000	8.92000
-4.270	.376	-4.21780	.17880	1702.29980	847.34570	654.16090	100.40000	-.06080	.19440	10.02000	8.92000
-3.788	4.336	-3.89640	4.16370	1702.00000	847.54930	653.88720	100.40000	-.06080	.19440	10.02000	8.92000
-3.886	6.178	-4.02060	6.02540	1702.20000	847.44700	654.05470	100.40000	-.06090	.19440	10.02000	8.92000
	GRADIENT	.03100	.98941	-.02311	.06040	-.04115	.00000	.00001	-.00000	.00000	.00000

RUN NO. 965/ 0 RN/L = 3.50 GRADIENT INTERVAL = -5.00/ 5.00

ALPHAO	BETAO	ALFAOU	BETAOU	PT	P	Q	TT	AFA	BFA	DEINLR	DEONLR
-.465	-6.966	-.27000	-6.90590	1702.39990	848.04640	653.90720	100.40000	-.06080	.19440	10.02000	8.92000
-.443	-4.845	-.24810	-4.78520	1702.29980	848.34810	653.71070	100.40000	-.06080	.19450	10.02000	8.92000
-.400	-.627	-.20590	-.56650	1703.00000	848.03980	654.27470	100.30000	-.06080	.19440	10.02000	8.92000
-.359	3.660	-.16430	3.72010	1703.39990	848.83740	654.15970	100.30000	-.06080	.19450	10.02000	8.92000
-.359	5.800	-.16400	5.86050	1703.89990	846.92770	655.31960	100.40000	-.06090	.19440	10.02000	8.92000
	GRADIENT	.00985	1.00002	.12925	.05788	.05258	-.01173	-.00000	.00000	.00000	.00000

RUN NO. 966/ 0 RN/L = 3.50 GRADIENT INTERVAL = -5.00/ 5.00

ALPHAO	BETAO	ALFAOU	BETAOU	PT	P	Q	TT	AFA	BFA	DEINLR	DEONLR
3.949	-5.818	3.81780	-5.97470	1703.50000	848.43550	654.40090	100.40000	-.06080	.19440	10.02000	8.92000
3.940	-3.659	3.84670	-3.83970	1703.70000	847.43120	654.97290	100.40000	-.06090	.19440	10.02000	8.92000
3.707	.163	3.76630	-.03180	1703.89990	848.53150	654.60110	100.40000	-.06080	.19440	10.02000	8.92000
3.800	4.035	3.98010	3.93980	1703.59990	848.83540	654.28220	100.40000	-.06080	.19450	10.02000	8.92000
3.771	6.081	3.96750	6.02490	1703.70000	847.63160	654.88330	100.30000	-.06090	.19440	10.02000	8.92000
	GRADIENT	.01742	1.01120	-.01315	.18229	-.08976	-.00000	.00001	.00001	.00000	.00000

IA156A, AEDC PWT 16T-470, O T S W/SILTS (R8NM59) (10 MAY 80)

REFERENCE DATA

SREF = 2690.0000 SQ.FT. XMRP = 976.0000 IN. XT
LREF = 1290.3000 INCHES YMRP = .0000 IN. YT
BREF = 1290.3000 INCHES ZMRP = 400.0000 IN. ZT
SCALE = .0200

PARAMETRIC DATA

IB-ELV = 10.000 OB-ELV = 9.000
BDFLAP = .000 SPDBRK = .000
RUDDER = .000 SILTS = 1.000
MACH = 1.100 RN/L = 3.500

RUN NO. 967/ 0 RN/L = 3.49 GRADIENT INTERVAL = -5.00/ 5.00

ALPHAO	BETAO	ALFAOU	BETAOU	PT	P	Q	TT	AFA	BFA	DEINLR	DEONLR
8.158	-5.993	-7.98460	-6.10130	1690.70000	791.60330	670.78980	100.70000	-.06320	.19440	10.02000	8.92000
.263	-3.773	-8.11660	-3.91600	1688.79980	790.82100	669.99370	100.70000	-.06320	.19440	10.02000	8.92000
-8.181	.173	-8.11750	-.02120	1690.50000	792.60470	670.27760	100.70000	-.06320	.19440	10.02000	8.92000
-7.997	4.386	-8.03820	4.18530	1687.29980	791.33500	668.91750	100.70000	-.06320	.19440	10.02000	8.92000
-8.011	6.276	-8.08620	6.08550	1689.09990	791.31810	669.97170	100.70000	-.06320	.19440	10.02000	8.92000
	GRADIENT	.00971	.99299	-.19030	.05891	-.13404	-.00000	.00000	-.00000	-.00000	-.00000

RUN NO. 968/ 0 RN/L = 3.49 GRADIENT INTERVAL = -5.00/ 5.00

ALPHAO	BETAO	ALFAOU	BETAOU	PT	P	Q	TT	AFA	BFA	DEINLR	DEONLR
-6.214	-6.002	-6.02730	-6.08490	1688.50000	789.92410	670.17290	100.70000	-.06330	.19450	10.02000	8.92000
-6.172	-4.075	-6.00330	-4.19100	1686.20000	789.04590	669.18210	100.70000	-.06330	.19440	10.02000	8.92000
-6.275	.087	-6.20770	-.10610	1688.09990	790.32760	669.78130	100.70000	-.06320	.19440	10.02000	8.92000
-6.069	4.280	-6.13150	4.08530	1689.29980	790.91630	670.24680	100.70000	-.06320	.19440	10.02000	8.92000
-6.000	6.264	-6.10050	6.08630	1690.89990	792.00120	670.74900	100.70000	-.06320	.19440	10.02000	8.92000
	GRADIENT	-.01530	.99060	.37092	.22377	.12742	.00000	.00001	.00000	.00000	.00000

RUN NO. 969/ 0 RN/L = 3.49 GRADIENT INTERVAL = -5.00/ 5.00

ALPHAO	BETAO	ALFAOU	BETAOU	PT	P	Q	TT	AFA	BFA	DEINLR	DEONLR
-4.131	-6.141	-3.93060	-6.18160	1692.20000	791.88920	671.54930	100.70000	-.06330	.19440	10.02000	8.92000
-4.345	-4.016	-4.15830	-4.10060	1687.09990	790.23710	669.23540	100.70000	-.06320	.19440	10.02000	8.92000
-4.254	.369	-4.19930	.17170	1687.50000	790.43330	669.39060	100.60000	-.06320	.19440	10.02000	8.92000
-3.786	4.339	-3.89230	4.16480	1688.29980	791.02560	669.62180	100.70000	-.06320	.19440	10.02000	8.92000
-3.878	6.168	-4.01110	6.01270	1689.29980	792.41600	669.65360	100.60000	-.06320	.19440	10.02000	8.92000
	GRADIENT	.03112	.98895	.14270	.09351	.04606	-.00040	-.00000	.00000	.00000	.00000

RUN NO. 970/ 0 RN/L = 3.49 GRADIENT INTERVAL = -5.00/ 5.00

ALPHAO	BETAO	ALFAOU	BETAOU	PT	P	Q	TT	AFA	BFA	DEINLR	DEONLR
-.471	-7.078	-.27600	-7.01590	1687.39990	790.63430	669.25290	100.70000	-.06320	.19440	10.02000	8.92000
-.437	-4.868	-.24260	-4.80480	1685.39990	788.55350	668.91110	100.70000	-.06330	.19450	10.02000	8.92000
-.394	-.533	-.19970	-.47070	1687.20000	790.53610	669.17530	100.70000	-.06320	.19440	10.02000	8.92000
-.356	3.599	-.16100	3.66150	1686.39990	789.84380	669.98360	100.70000	-.06320	.19440	10.02000	8.92000
-.354	5.784	-.15920	5.84640	1694.70000	794.06520	672.14400	100.80000	-.06320	.19440	10.02000	8.92000
	GRADIENT	.00964	1.00001	.12054	.15489	.00899	-.00000	.00001	-.00001	.00000	.00000

IA156A, AEDC PWT 16T-470, O T S W/SILTS (R8NM59) (10 MAY 80)

REFERENCE DATA

SREF = 2690.0000 SQ.FT. XMRP = 976.0000 IN. XT
LREF = 1290.3000 INCHES YMRP = .0000 IN. YT
BREF = 1290.3000 INCHES ZMRP = 400.0000 IN. ZT
SCALE = .0200

PARAMETRIC DATA

IB-ELV = 10.000 OB-ELV = 9.000
BDFLAP = .000 SPDBRK = .000
RUDDER = .000 SILTS = 1.000
MACH = 1.100 RN/L = 3.500

RUN NO. 971/ 0 RN/L = 3.49 GRADIENT INTERVAL = -5.00/ 5.00

ALPHAO	BETAO	ALFAOU	BETAOU	PT	P	Q	TT	AFA	BFA	DEINLR	DEONLR
4.072	-5.756	3.94560	-5.91620	1685.79980	790.04930	668.55320	100.80000	-.06320	.19440	10.02000	8.92000
3.948	-3.679	3.85460	-3.86130	1688.00000	789.42900	670.07740	100.80000	-.06330	.19450	10.02000	8.92000
3.693	.116	3.75220	-.07960	1688.20000	790.12700	669.91870	100.70000	-.06320	.19440	10.02000	8.92000
3.794	3.973	3.97530	3.87840	1687.50000	791.03320	669.15330	100.70000	-.06320	.19440	10.02000	8.92000
3.767	6.056	3.96400	6.00150	1689.70000	791.91240	670.08590	100.70000	-.06320	.19440	10.02000	8.92000
	GRADIENT	.01589	1.01146	-.06565	.20970	-.12097	-.01303	.00001	-.00001	-.00000	-.00000

IA156A, AEDC PWT 16T-470, O T S W/SILTS (R8NM60) (10 MAY 80)

REFERENCE DATA

SREF = 2690.0000 SQ.FT. XMRP = 976.0000 IN. XT
LREF = 1290.3000 INCHES YMRP = .0000 IN. YT
BREF = 1290.3000 INCHES ZMRP = 400.0000 IN. ZT
SCALE = .0200

PARAMETRIC DATA

IB-ELV = 10.000 OB-ELV = 9.000
BDFLAP = .000 SPDBRK = .000
RUDDER = .000 SILTS = 1.000
MACH = 1.150 RN/L = 3.500

RUN NO. 972/ 0 RN/L = 3.49 GRADIENT INTERVAL = -5.00/ 5.00

ALPHAO	BETAO	ALFAOU	BETAOU	PT	P	Q	TT	AFA	BFA	DEINLR	DEONLR
-8.143	-6.001	-7.96640	-6.10950	1681.20000	738.87130	684.73000	101.20000	-.06550	.19620	10.02000	8.92000
-8.286	-3.781	-8.13630	-3.92450	1678.70000	738.79170	683.36670	101.10000	-.06550	.19610	10.02000	8.92000
-8.188	.192	-8.12270	-.00390	1680.79980	739.37300	684.33790	101.30000	-.06550	.19610	10.02000	8.92000
-8.012	4.392	-8.05190	4.18920	1683.79980	741.04390	685.44020	101.20000	-.06550	.19610	10.02000	8.92000
-8.015	6.263	-8.08950	6.07020	1678.29980	738.59550	683.21070	101.00000	-.06550	.19610	10.02000	8.92000
	GRADIENT	.01039	.99275	.62481	.27671	.25377	.01189	-.00000	.00000	-.00000	-.00000

RUN NO. 973/ 0 RN/L = 3.49 GRADIENT INTERVAL = -5.00/ 5.00

ALPHAO	BETAO	ALFAOU	BETAOU	PT	P	Q	TT	AFA	BFA	DEINLR	DEONLR
-6.224	-6.019	-6.03430	-6.10130	1681.39990	739.76710	684.53810	100.90000	-.06550	.19610	10.02000	8.92000
-6.146	-4.078	-5.97470	-4.19340	1681.29980	739.46880	684.58350	101.00000	-.06550	.19610	10.02000	8.92000
-6.274	.108	-6.20510	-.08700	1680.59990	740.17240	683.95510	101.00000	-.06550	.19610	10.02000	8.92000
-6.063	4.279	-6.12520	4.08170	1680.70000	739.17460	684.34940	101.00000	-.06550	.19610	10.02000	8.92000
-6.001	6.267	-6.10190	6.08610	1679.70000	739.18260	683.79050	101.00000	-.06550	.19610	10.02000	8.92000
	GRADIENT	-.01803	.99023	-.07183	-.03508	-.02809	-.00000	.00000	.00000	.00000	.00000

IA156A, AEDC PWT 16T-470, O T S W/SILTS (R8NM60) (10 MAY 80)

REFERENCE DATA

SREF = 2690.0000 SQ.FT. XMRP = 976.0000 IN. XT
LREF = 1290.3000 INCHES YMRP = .0000 IN. YT
BREF = 1290.3000 INCHES ZMRP = 400.0000 IN. ZT
SCALE = .0200

PARAMETRIC DATA

IB-ELV = 10.000 OB-ELV = 9.000
BDFLAP = .000 SPDBRK = .000
RUDDER = .000 SILTS = 1.000
MACH = 1.150 RN/L = 3.500

RUN NO. 974/ 0 RN/L = 3.49 GRADIENT INTERVAL = -5.00/ 5.00

ALPHAO	BETAO	ALFAOU	BETAOU	PT	P	Q	TT	AFA	BFA	DEINLR	DEONLR
-4.137	-6.136	-3.93450	-6.17580	1683.00000	740.35250	685.22950	101.00000	-.06550	.19610	10.02000	8.92000
-4.341	-4.027	-4.15230	-4.11030	1679.29980	738.58760	683.76980	100.90000	-.06550	.19610	10.02000	8.92000
-4.272	.369	-4.21520	.17030	1675.39990	736.82420	682.19800	100.90000	-.06550	.19610	10.02000	8.92000
-3.786	4.337	-3.89330	4.16030	1679.89990	738.38330	684.17240	100.90000	-.06550	.19610	10.02000	8.92000
-3.901	6.185	-4.03520	6.02770	1680.29980	739.57670	683.99070	101.00000	-.06550	.19610	10.02000	8.92000
	GRADIENT	.03016	.98858	.05460	-.03116	.04088	.00000	.00000	.00000	.00000	-.00000

RUN NO. 975/ 0 RN/L = 3.49 GRADIENT INTERVAL = -5.00/ 5.00

ALPHAO	BETAO	ALFAOU	BETAOU	PT	P	Q	TT	AFA	BFA	DEINLR	DEONLR
-.456	-6.965	-.25990	-6.90060	1677.29980	737.00830	683.19190	100.70000	-.06550	.19620	10.02000	8.92000
-.423	-4.871	-.22670	-4.80580	1678.29980	738.49580	683.24440	100.80000	-.06550	.19610	10.02000	8.92000
-.374	-.625	-.17730	-.55970	1678.50000	738.39450	683.39010	100.80000	-.06550	.19610	10.02000	8.92000
-.336	3.586	-.13930	3.65080	1678.89990	738.09230	683.71480	100.90000	-.06550	.19610	10.02000	8.92000
-.337	5.781	-.14050	5.84640	1679.29980	739.18580	683.56690	100.90000	-.06550	.19610	10.02000	8.92000
	GRADIENT	.01034	1.00002	.07093	-.04768	.05560	.01181	-.00000	.00000	.00000	.00000

RUN NO. 976/ 0 RN/L = 3.49 GRADIENT INTERVAL = -5.00/ 5.00

ALPHAO	BETAO	ALFAOU	BETAOU	PT	P	Q	TT	AFA	BFA	DEINLR	DEONLR
3.932	-5.808	3.80220	-5.96890	1678.89990	738.88990	683.44460	100.90000	-.06550	.19610	10.02000	8.92000
3.960	-3.755	3.85620	-3.93890	1681.79980	739.86350	684.72780	100.80000	-.06550	.19610	10.02000	8.92000
3.829	.185	3.89470	-.01140	1682.20000	740.05980	684.88380	100.90000	-.06550	.19610	10.02000	8.92000
3.790	3.941	3.97420	3.84660	1680.09990	738.98000	684.08180	100.80000	-.06550	.19610	10.02000	8.92000
3.759	6.060	3.95910	6.00780	1683.59990	740.04860	685.66630	100.90000	-.06550	.19610	10.02000	8.92000
	GRADIENT	.01398	1.01154	-.21827	-.11347	-.08294	.00021	.00000	-.00000	-.00000	-.00000

IA156A, AEDC PWT 16T-470, O T S W/SILTS (R8NM61) (10 MAY 80)

REFERENCE DATA

SREF = 2690.0000 SQ.FT. XMRP = 976.0000 IN. XT
LREF = 1290.3000 INCHES YMRP = .0000 IN. YT
BREF = 1290.3000 INCHES ZMRP = 400.0000 IN. ZT
SCALE = .0200

PARAMETRIC DATA

IB-ELV = 10.000 OB-ELV = 9.000
BDFLAP = .000 SPDBRK = .000
RUDDER = .000 SILTS = 1.000
MACH = 1.250 RN/L = 3.500

RUN NO. 977/ 0 RN/L = 3.51 GRADIENT INTERVAL = -5.00/ 5.00

ALPHAO	BETAO	ALFAOU	BETAOU	PT	P	Q	TT	AFA	BFA	DEINLR	DEONLR
-8.143	-5.996	-7.95630	-6.10790	1676.70000	647.41020	707.96440	99.30000	-.07020	.20630	10.02000	8.92000
-8.298	-3.785	-8.13900	-3.93410	1681.79980	649.76070	710.03420	99.20000	-.07020	.20620	10.02000	8.92000
-8.186	.202	-8.11530	-.00460	1678.39990	648.19360	708.65430	99.20000	-.07020	.20630	10.02000	8.92000
-8.011	4.371	-8.05090	4.15660	1680.29980	649.67040	709.29350	99.20000	-.07020	.20620	10.02000	8.92000
-8.027	6.290	-8.10380	6.08630	1681.29980	648.47410	710.06230	99.20000	-.07020	.20640	10.02000	8.92000
	GRADIENT	.01084	99214	-.17905	-.00828	-.08896	.00000	.00000	-.00000	.00000	-.00000

RUN NO. 978/ 0 RN/L = 3.51 GRADIENT INTERVAL = -5.00/ 5.00

ALPHAO	BETAO	ALFAOU	BETAOU	PT	P	Q	TT	AFA	BFA	DEINLR	DEONLR
-6.231	-6.004	-6.03080	-6.08970	1674.89990	646.03200	707.35350	99.20000	-.07030	.20640	10.02000	8.92000
-6.173	-4.080	-5.99130	-4.20010	1676.50000	648.30420	707.66670	99.10000	-.07020	.20610	10.02000	8.92000
-6.272	.119	-6.19780	-.08620	1679.59990	648.28590	709.24220	99.20000	-.07020	.20640	10.02000	8.92000
-6.053	4.300	-6.11780	4.09210	1678.59990	648.39090	708.71260	99.10000	-.07020	.20630	10.02000	8.92000
-5.991	6.272	-6.09640	6.08090	1677.89990	647.99830	708.44380	99.00000	-.07020	.20630	10.02000	8.92000
	GRADIENT	-.01512	.98950	.25092	.01034	.12498	.00002	-.00000	.00002	-.00000	-.00000

RUN NO. 979/ 0 RN/L = 3.52 GRADIENT INTERVAL = -5.00/ 5.00

ALPHAO	BETAO	ALFAOU	BETAOU	PT	P	Q	TT	AFA	BFA	DEINLR	DEONLR
-4.151	-6.152	-3.93730	-6.19250	1684.39990	650.53910	711.18160	99.20000	-.07020	.20630	10.02000	8.92000
-4.348	-4.016	-4.14770	-4.10290	1675.09990	646.52690	707.34690	98.90000	-.07020	.20640	10.02000	8.92000
-4.255	.380	-4.19360	.17070	1685.09990	650.53490	711.53710	99.80000	-.07020	.20630	10.02000	8.92000
-3.795	4.350	-3.90640	4.16260	1693.39990	654.35450	714.90700	99.80000	-.07020	.20620	10.02000	8.92000
-3.880	6.179	-4.01990	6.01200	1681.29980	649.76370	709.78000	99.80000	-.07020	.20620	10.02000	8.92000
	GRADIENT	.02814	.98765	2.18886	.93516	.90450	.10930	-.00000	-.00002	-.00000	.00000

RUN NO. 980/ 0 RN/L = 3.50 GRADIENT INTERVAL = -5.00/ 5.00

ALPHAO	BETAO	ALFAOU	BETAOU	PT	P	Q	TT	AFA	BFA	DEINLR	DEONLR
-.474	-6.978	-.26750	-6.90810	1678.89990	647.69480	709.01680	99.80000	-.07030	.20640	10.02000	8.92000
-.444	-4.886	-.23790	-4.81600	1677.50000	648.69510	708.08790	99.80000	-.07010	.20610	10.02000	8.92000
-.398	-.623	-.19190	-.55270	1676.59990	647.51000	707.89180	99.80000	-.07020	.20630	10.02000	8.92000
-.363	3.580	-.15620	3.65040	1676.00000	646.81910	707.73900	99.90000	-.07020	.20640	10.02000	8.92000
-.379	5.795	-.17280	5.86480	1680.70000	648.67600	709.71440	99.90000	-.07020	.20640	10.02000	8.92000
	GRADIENT	.00965	1.00002	-.17725	-.22172	-.04122	.01178	-.00001	.00004	.00000	-.00000

IA156A, AEDC PWT 16T-470, O T S W/SILTS (R8NM61) (10 MAY 80)

REFERENCE DATA

SREF = 2690.0000 SQ.FT. XMRP = 976.0000 IN. XT
LREF = 1290.3000 INCHES YMRP = .0000 IN. YT
BREF = 1290.3000 INCHES ZMRP = 400.0000 IN. ZT
SCALE = .0200

PARAMETRIC DATA

IB-ELV = 10.000 OB-ELV = 9.000
BDFLAP = .000 SPDBRK = .000
RUDDER = .000 SILTS = 1.000
MACH = 1.250 RN/L = 3.500

RUN NO. 981/ 0 RN/L = 3.50 GRADIENT INTERVAL = -5.00/ 5.00

ALPHAO	BETAO	ALFAOU	BETAOU	PT	P	Q	TT	AFA	BFA	DEINLR	DEONLR
3.947	-5.805	3.81060	-5.97550	1677.89990	647.89920	708.46560	99.90000	-.07020	.20630	10.02000	8.92000
3.949	-3.734	3.85120	-3.92900	1677.29980	647.70410	708.20410	100.00000	-.07020	.20630	10.02000	8.92000
3.821	.193	3.89010	-.01340	1677.39990	647.80300	708.23320	100.00000	-.07020	.20630	10.02000	8.92000
3.759	3.935	3.95300	3.83630	1675.59990	646.72240	707.55760	99.90000	-.07020	.20640	10.02000	8.92000
3.746	6.066	3.95720	6.01070	1673.59990	646.13890	706.67160	100.00000	-.07020	.20630	10.02000	8.92000
	GRADIENT	.01325	1.01236	-.21960	-.12673	-.08354	-.01293	-.00000	.00001	-.00000	.00000

IA156A, AEDC PWT 16T-470, O T S W/SILTS (R8NM62) (10 MAY 80)

REFERENCE DATA

SREF = 2690.0000 SQ.FT. XMRP = 976.0000 IN. XT
LREF = 1290.3000 INCHES YMRP = .0000 IN. YT
BREF = 1290.3000 INCHES ZMRP = 400.0000 IN. ZT
SCALE = .0200

PARAMETRIC DATA

IB-ELV = 10.000 OB-ELV = 11.000
BDFLAP = .000 SPDBRK = .000
RUDDER = .000 SILTS = 1.000
MACH = .300 RN/L = 3.500

RUN NO. 985/ 0 RN/L = 2.62 GRADIENT INTERVAL = -5.00/ 5.00

ALPHAO	BETAO	ALFAOU	BETAOU	PT	P	Q	TT	AFA	BFA	DEINLR	DEONLR
-6.189	-9.919	-6.05480	-10.08570	3027.70001	2849.32620	174.52250	99.40000	.07640	.20000	10.02000	11.25000
-6.140	-5.798	-6.05090	-5.99320	3024.70001	2846.53711	174.31690	99.70000	.07640	.20000	10.02000	11.25000
-6.046	.188	-6.12210	-.01260	3023.29980	2845.24240	174.21450	100.10000	.07640	.20000	10.02000	11.25000
-5.767	6.289	-5.96490	6.20780	3024.89990	2846.42331	174.61730	100.10000	.07640	.20000	10.02000	11.25000
-5.906	10.172	-6.11750	10.13770	3023.39990	2845.23779	174.31470	100.20000	.07640	.20000	10.02000	11.25000
	GRADIENT	.00000	.00000	.00000	.00000	.00000	.00000	.00000	.00000	.00000	.00000

RUN NO. 986/ 0 RN/L = 2.62 GRADIENT INTERVAL = -5.00/ 5.00

ALPHAO	BETAO	ALFAOU	BETAOU	PT	P	Q	TT	AFA	BFA	DEINLR	DEONLR
-.274	-10.576	-.07400	-10.65180	3017.29980	2839.03659	174.40320	100.40000	.07640	.20000	10.02000	11.25000
-.268	-6.531	-.06770	-6.60770	3026.29980	2847.50900	174.91980	100.60000	.07640	.20000	10.02000	11.25000
-.244	-.362	-.04360	-.43840	3014.70001	2836.64749	174.19850	100.40000	.07640	.20000	10.02000	11.25000
-.219	5.616	-.01900	5.53970	3026.00000	2845.64111	176.41810	100.50000	.07640	.20000	10.02000	11.25000
-.209	9.775	-.00920	9.69850	3022.89990	2843.48361	175.51300	100.70000	.07640	.20000	10.02000	11.25000
	GRADIENT	.00000	.00000	.00000	.00000	.00000	.00000	.00000	.00000	.00000	.00000

IA156A, AEDC PWT 16T-470, O T S W/SILTS (R8NM62) (10 MAY 80)

REFERENCE DATA

SREF = 2690.0000 SQ.FT. XMRP = 976.0000 IN. XT
LREF = 1290.3000 INCHES YMRP = .0000 IN. YT
BREF = 1290.3000 INCHES ZMRP = 400.0000 IN. ZT
SCALE = .0200

PARAMETRIC DATA

IB-ELV = 10.000 OB-ELV = 11.000
BDFLAP = .000 SPDBRK = .000
RUDDER = .000 SILTS = 1.000
MACH = .300 RN/L = 3.500

RUN NO. 987/ 0 RN/L = 2.62 GRADIENT INTERVAL = -5.00/ 5.00

ALPHAO	BETAO	ALFAOU	BETAOU	PT	P	Q	TT	AFA	BFA	DEINLR	DEONLR
6.163	-9.878	5.95170	-9.91430	3015.29980	2836.30621	175.09920	100.60000	.07640	.20000	10.02000	11.25000
5.922	-5.672	5.72620	-5.75770	3020.29980	2840.67599	175.70800	100.60000	.07640	.20000	10.02000	11.25000
5.799	.132	5.71990	-.06760	3017.59991	2838.70950	175.00340	100.50000	.07640	.20000	10.02000	11.25000
5.887	6.149	5.97540	5.95430	3021.00000	2841.48019	175.60930	100.60000	.07640	.20000	10.02000	11.25000
5.769	10.020	5.90240	9.85330	3020.79980	2841.59399	175.30920	100.50000	.07640	.20000	10.02000	11.25000
	GRADIENT	.00000	.00000	.00000	.00000	.00000	.00000	.00000	.00000	.00000	.00000

IA156A, AEDC PWT 16T-470, O T S W/SILTS (R8NM63) (10 MAY 80)

REFERENCE DATA

SREF = 2690.0000 SQ.FT. XMRP = 976.0000 IN. XT
LREF = 1290.3000 INCHES YMRP = .0000 IN. YT
BREF = 1290.3000 INCHES ZMRP = 400.0000 IN. ZT
SCALE = .0200

PARAMETRIC DATA

IB-ELV = 10.000 OB-ELV = 11.000
BDFLAP = .000 SPDBRK = .000
RUDDER = .000 SILTS = 1.000
MACH = .300 RN/L = 3.500

RUN NO. 984/ 0 RN/L = 2.64 GRADIENT INTERVAL = -5.00/ 5.00

ALPHAO	BETAO	ALFAOU	BETAOU	PT	P	Q	TT	AFA	BFA	DEINLR	DEONLR
-10.338	-7.903	-10.27110	-8.10680	3046.79980	2867.47461	175.45750	99.50000	.07640	.20000	10.02000	11.25000
-10.010	-5.743	-9.97090	-5.95380	3053.39990	2874.07101	175.46970	99.60000	.07640	.20000	10.02000	11.25000
-9.964	.320	-10.04290	.12090	3046.59991	2867.37921	175.35720	99.40000	.07640	.20000	10.02000	11.25000
-9.977	6.296	-10.14770	6.16710	3047.39990	2868.28339	175.25860	99.20000	.07640	.20000	10.02000	11.25000
-10.023	8.249	-10.20920	8.14320	3050.79980	2871.36789	175.56480	99.10000	.07640	.20000	10.02000	11.25000
	GRADIENT	.00000	.00000	.00000	.00000	.00000	.00000	.00000	.00000	.00000	.00000

RUN NO. 988/ 0 RN/L = 2.63 GRADIENT INTERVAL = -5.00/ 5.00

ALPHAO	BETAO	ALFAOU	BETAOU	PT	P	Q	TT	AFA	BFA	DEINLR	DEONLR
10.065	-7.798	9.87900	-7.90440	3020.79980	2840.86230	176.00860	100.50000	.07640	.20000	10.02000	11.25000
9.942	-5.729	9.77250	-5.85940	3019.29980	2840.19919	175.20660	100.50000	.07640	.20000	10.02000	11.25000
9.776	.230	9.69990	.02990	3017.50000	2838.60959	175.00330	100.40000	.07640	.20000	10.02000	11.25000
9.976	6.289	10.01620	6.07890	3025.70001	2846.07300	175.71820	100.40000	.07640	.20000	10.02000	11.25000
9.935	8.263	10.00340	8.06010	3026.20001	2846.78171	175.51920	100.40000	.07640	.20000	10.02000	11.25000
	GRADIENT	.00000	.00000	.00000	.00000	.00000	.00000	.00000	.00000	.00000	.00000

IA156A, AEDC PWT 16T-470, O T S W/SILTS (R8NM64) (10 MAY 80)

REFERENCE DATA

SREF = 2690.0000 SQ.FT. XMRP = 976.0000 IN. XT
LREF = 1290.3000 INCHES YMRP = .0000 IN. YT
BREF = 1290.3000 INCHES ZMRP = 400.0000 IN. ZT
SCALE = .0200

PARAMETRIC DATA

IB-ELV = 10.000 OB-ELV = 11.000
BDFLAP = .000 SPDBRK = .000
RUDDER = .000 SILTS = 1.000
MACH = .600 RN/L = 3.500

RUN NO. 989/ 0 RN/L = 3.51 GRADIENT INTERVAL = -5.00/ 5.00

ALPHAO	BETAO	ALFAOU	BETAOU	PT	P	Q	TT	AFA	BFA	DEINLR	DEONLR
-8.116	-7.801	-8.02560	-7.99130	2226.89990	1744.51170	441.10280	98.40000	.07530	.19650	10.02000	11.25000
-8.131	-5.751	-8.07150	-5.95290	2236.29980	1753.25830	441.83150	98.00000	.07640	.19640	10.02000	11.25000
-8.158	-3.746	-8.13550	-3.95510	2240.89990	1754.58369	444.60940	97.60000	.07450	.19660	10.02000	11.25000
-8.038	.179	-8.11470	-.01730	2228.09991	1747.63770	439.54830	99.00000	.07710	.19630	10.02000	11.25000
-7.907	4.315	-8.06810	4.17860	2234.00000	1751.88380	441.02540	99.20000	.07680	.19630	10.02000	11.25000
-7.903	6.178	-8.08390	6.07060	2234.70001	1751.15750	442.20920	99.20000	.07570	.19640	10.02000	11.25000
-7.933	8.182	-8.12790	8.10210	2234.39990	1752.38380	440.95170	99.20000	.07690	.19630	10.02000	11.25000
	GRADIENT	.00839	1.00907	-.83559	-.32278	-.43745	.19715	.00028	-.00004	.00000	-.00000

RUN NO. 990/ 0 RN/L = 3.50 GRADIENT INTERVAL = -5.00/ 5.00

ALPHAO	BETAO	ALFAOU	BETAOU	PT	P	Q	TT	AFA	BFA	DEINLR	DEONLR
-6.151	-7.917	-6.03480	-8.09250	2234.39990	1750.85860	442.20190	99.20000	.07570	.19640	10.02000	11.25000
-6.133	-5.908	-6.04250	-6.09890	2233.09991	1751.19141	440.83670	99.20000	.07680	.19630	10.02000	11.25000
-6.052	-4.006	-5.99700	-4.20970	2233.39990	1750.47310	441.67770	99.20000	.07600	.19640	10.02000	11.25000
-6.115	.062	-6.18590	-.13630	2234.59991	1751.36279	441.95680	99.20000	.07590	.19640	10.02000	11.25000
-5.951	4.184	-6.12510	4.06590	2233.50000	1751.38620	441.01320	99.20000	.07670	.19630	10.02000	11.25000
-5.876	6.172	-6.07080	6.09260	2233.50000	1751.48779	440.92970	99.20000	.07680	.19630	10.02000	11.25000
-5.888	8.143	-6.09220	8.09040	2233.89990	1751.17430	441.52320	99.20000	.07630	.19640	10.02000	11.25000
	GRADIENT	-.01557	1.01045	.01161	.11126	-.08146	.00000	.00009	-.00001	.00000	.00000

RUN NO. 991/ 0 RN/L = 3.50 GRADIENT INTERVAL = -5.00/ 5.00

ALPHAO	BETAO	ALFAOU	BETAOU	PT	P	Q	TT	AFA	BFA	DEINLR	DEONLR
-4.002	-8.052	-3.85410	-8.20210	2231.79980	1750.40581	440.38840	99.20000	.07700	.19630	10.02000	11.25000
-4.241	-5.954	-4.11570	-6.12390	2233.79980	1750.66820	441.85400	99.20000	.07590	.19640	10.02000	11.25000
-4.156	-3.960	-4.06450	-4.14960	2233.70001	1750.77200	441.68510	99.30000	.07600	.19640	10.02000	11.25000
-4.127	.330	-4.20890	.13580	2234.00000	1750.76559	441.94240	99.30000	.07580	.19640	10.02000	11.25000
-3.741	4.210	-3.93690	4.13380	2234.29980	1751.57249	441.53270	99.30000	.07630	.19640	10.02000	11.25000
-3.805	6.054	-4.01130	6.01350	2233.59991	1751.18069	441.26560	99.30000	.07650	.19640	10.02000	11.25000
-3.828	8.036	-4.03810	8.02000	2233.79980	1751.27811	441.35400	99.30000	.07640	.19640	10.02000	11.25000
	GRADIENT	.01475	1.01361	.07335	.09623	-.01727	-.00000	.00004	-.00000	-.00000	-.00000

IA156A, AEDC PWT 16T-470, O T S W/SILTS (R8NM64) (10 MAY 80)

REFERENCE DATA

SREF = 2690.0000 SQ.FT. XMRP = 976.0000 IN. XT
LREF = 1290.3000 INCHES YMRP = .0000 IN. YT
BREF = 1290.3000 INCHES ZMRP = 400.0000 IN. ZT
SCALE = .0200

PARAMETRIC DATA

IB-ELV = 10.000 OB-ELV = 11.000
BDFLAP = .000 SPDBRK = .000
RUDDER = .000 SILTS = 1.000
MACH = .600 RN/L = 3.500

RUN NO. 992/ 0 RN/L = 3.50 GRADIENT INTERVAL = -5.00/ 5.00

ALPHAO	BETAO	ALFAOU	BETAOU	PT	P	Q	TT	AFA	BFA	DEINLR	DEONLR
-.333	-8.763	-.13700	-8.83980	2234.39990	1751.77370	441.45190	99.30000	.07640	.19640	10.02000	11.25000
-.323	-6.686	-.12710	-6.76250	2233.79980	1751.88820	440.85350	99.30000	.07690	.19630	10.02000	11.25000
-.309	-4.451	-.11290	-4.52800	2234.20001	1752.28610	440.86330	99.30000	.07700	.19630	10.02000	11.25000
-.284	-.386	-.08760	-.46210	2235.00000	1751.96440	441.79980	99.30000	.07620	.19640	10.02000	11.25000
-.253	3.691	-.05650	3.61530	2233.89990	1750.46260	442.10640	99.40000	.07560	.19640	10.02000	11.25000
-.253	5.787	-.05640	5.71190	2233.70001	1749.34860	442.85130	99.40000	.07480	.19650	10.02000	11.25000
-.243	7.871	-.04700	7.79620	2233.70001	1749.65379	442.60160	99.40000	.07510	.19650	10.02000	11.25000
	GRADIENT	.00693	1.00016	-.03697	-.22403	.15264	.01229	-.00017	.00001	.00000	-.00000

RUN NO. 993/ 0 RN/L = 3.50 GRADIENT INTERVAL = -5.00/ 5.00

ALPHAO	BETAO	ALFAOU	BETAOU	PT	P	Q	TT	AFA	BFA	DEINLR	DEONLR
4.168	-7.891	3.95840	-7.91000	2232.50000	1750.18750	441.15590	99.20000	.07630	.19640	10.02000	11.25000
4.092	-5.788	3.88590	-5.83130	2231.50000	1750.20869	440.29760	99.20000	.07700	.19630	10.02000	11.25000
4.040	-3.806	3.84610	-3.88810	2232.89990	1750.78880	440.99880	99.40000	.07660	.19630	10.02000	11.25000
3.837	.078	3.75290	-.11550	2232.50000	1751.91600	439.73780	99.20000	.07780	.19620	10.02000	11.25000
3.896	4.062	3.97830	3.86820	2232.89990	1752.00900	439.99780	99.30000	.07760	.19620	10.02000	11.25000
3.844	6.167	3.96750	5.99680	2233.79980	1750.15990	442.27080	99.30000	.07550	.19650	10.02000	11.25000
3.838	8.161	3.98160	8.00730	2232.20001	1748.87230	441.98170	99.30000	.07540	.19650	10.02000	11.25000
	GRADIENT	.01697	.98586	.00043	.15452	-.12640	-.01255	.00013	-.00001	-.00000	-.00000

RUN NO. 994/ 0 RN/L = 3.50 GRADIENT INTERVAL = -5.00/ 5.00

ALPHAO	BETAO	ALFAOU	BETAOU	PT	P	Q	TT	AFA	BFA	DEINLR	DEONLR
6.197	-7.962	5.99410	-8.01700	2231.59991	1748.98660	441.38400	99.30000	.07590	.19640	10.02000	11.25000
6.167	-5.883	5.97380	-5.96730	2231.29980	1747.56960	442.29300	99.30000	.07490	.19650	10.02000	11.25000
6.157	-3.829	5.98290	-3.94810	2231.20001	1750.62180	439.70650	99.20000	.07760	.19620	10.02000	11.25000
5.863	.183	5.78590	-.01310	2232.59991	1750.99879	440.57450	99.30000	.07700	.19630	10.02000	11.25000
5.796	4.073	5.84310	3.86760	2231.70001	1749.08620	441.38620	99.30000	.07590	.19640	10.02000	11.25000
5.774	5.985	5.86060	5.79410	2232.29980	1748.36180	442.48390	99.30000	.07490	.19650	10.02000	11.25000
5.805	8.225	5.92120	8.04990	2231.79980	1747.66060	442.63840	99.40000	.07470	.19650	10.02000	11.25000
	GRADIENT	-.01786	.98911	.06477	-.19284	.21260	.01272	-.00021	.00003	-.00000	-.00000

IA156A, AEDC PWT 16T-470, O T S W/SILTS (R8NM64) (10 MAY 80)

REFERENCE DATA

SREF = 2690.0000 SQ.FT. XMRP = 976.0000 IN. XT
LREF = 1290.3000 INCHES YMRP = .0000 IN. YT
BREF = 1290.3000 INCHES ZMRP = 400.0000 IN. ZT
SCALE = .0200

PARAMETRIC DATA

IB-ELV = 10.000 OB-ELV = 11.000
BDFLAP = .000 SPDBRK = .000
RUDDER = .000 SILTS = 1.000
MACH = .600 RN/L = 3.500

RUN NO. 995/ 0 RN/L = 3.50 GRADIENT INTERVAL = -5.00/ 5.00

ALPHAO	BETAO	ALFAOU	BETAOU	PT	P	Q	TT	AFA	BFA	DEINLR	DEONLR
8.107	-7.821	7.91390	-7.90430	2237.50000	1753.23270	442.86060	99.30000	.07560	.19640	10.02000	11.25000
7.996	-5.734	7.81540	-5.84300	2234.50000	1752.98989	440.62040	99.20000	.07730	.19630	10.02000	11.25000
7.970	-3.774	7.81270	-3.91410	2234.29980	1751.47070	441.61620	99.40000	.07620	.19640	10.02000	11.25000
7.886	.178	7.80800	-.01800	2231.29980	1750.21291	440.12600	99.20000	.07720	.19630	10.02000	11.25000
7.824	4.107	7.84480	3.89700	2231.29980	1749.90800	440.37620	99.30000	.07690	.19630	10.02000	11.25000
7.906	6.229	7.96610	6.02680	2231.20001	1749.30029	440.79080	99.40000	.07650	.19640	10.02000	11.25000
7.889	8.228	7.97820	8.03740	2231.50000	1748.17551	441.96480	99.30000	.07530	.19650	10.02000	11.25000
	GRADIENT	.00407	.99113	-.38104	-.19841	-.15756	-.01273	.00009	-.00001	-.00000	-.00000

IA156A, AEDC PWT 16T-470, O T S W/SILTS (R8NM65) (10 MAY 80)

REFERENCE DATA

SREF = 2690.0000 SQ.FT. XMRP = 976.0000 IN. XT
LREF = 1290.3000 INCHES YMRP = .0000 IN. YT
BREF = 1290.3000 INCHES ZMRP = 400.0000 IN. ZT
SCALE = .0200

PARAMETRIC DATA

IB-ELV = 10.000 OB-ELV = 11.000
BDFLAP = .000 SPDBRK = .000
RUDDER = .000 SILTS = 1.000
MACH = .800 RN/L = 3.500

RUN NO. 996/ 0 RN/L = 3.50 GRADIENT INTERVAL = -5.00/ 5.00

ALPHAO	BETAO	ALFAOU	BETAOU	PT	P	Q	TT	AFA	BFA	DEINLR	DEONLR
-8.190	-5.988	-8.03240	-6.12240	1875.70000	1230.71880	551.11470	100.10000	-.03830	.20400	10.02000	11.25000
-8.244	-3.759	-8.11720	-3.92320	1879.59990	1232.98019	552.46290	99.90000	-.03830	.20400	10.02000	11.25000
-8.164	.181	-8.12530	-.02270	1873.59990	1228.93260	550.77510	99.80000	-.03830	.20400	10.02000	11.25000
-8.008	4.427	-8.07260	4.23000	1878.70000	1232.18600	552.33690	99.90000	-.03830	.20400	10.02000	11.25000
-7.969	6.241	-8.06640	6.05790	1870.79980	1227.66431	549.56570	99.80000	-.03820	.20410	10.02000	11.25000
	GRADIENT	.00554	.99605	-.09301	-.08588	-.01045	.00030	.00000	.00000	-.00000	-.00000

RUN NO. 997/ 0 RN/L = 3.50 GRADIENT INTERVAL = -5.00/ 5.00

ALPHAO	BETAO	ALFAOU	BETAOU	PT	P	Q	TT	AFA	BFA	DEINLR	DEONLR
-6.208	-5.978	-6.03310	-6.08940	1880.50000	1233.97681	552.45090	99.80000	-.03820	.20410	10.02000	11.25000
-6.158	-4.068	-6.00540	-4.20890	1874.59990	1229.92770	550.83860	99.80000	-.03830	.20400	10.02000	11.25000
-6.227	.117	-6.18570	-.08660	1873.50000	1229.74390	550.14970	99.80000	-.03820	.20410	10.02000	11.25000
-6.061	4.258	-6.14680	4.06900	1875.59990	1230.82150	550.97070	99.80000	-.03820	.20410	10.02000	11.25000
-5.755	6.394	-5.88130	6.22970	1879.09990	1232.88750	552.15580	99.80000	-.03830	.20400	10.02000	11.25000
	GRADIENT	-.01703	.99420	.11944	.10709	.01555	.00000	.00001	.00001	.00000	.00000

IA156A, AEDC PWT 16T-470, O T S W/SILTS (R8NM65) (10 MAY 80)

REFERENCE DATA

SREF = 2690.0000 SQ.FT. XMRP = 976.0000 IN. XT
LREF = 1290.3000 INCHES YMRP = .0000 IN. YT
BREF = 1290.3000 INCHES ZMRP = 400.0000 IN. ZT
SCALE = .0200

PARAMETRIC DATA

IB-ELV = 10.000 OB-ELV = 11.000
BDFLAP = .000 SPDBRK = .000
RUDDER = .000 SILTS = 1.000
MACH = .800 RN/L = 3.500

RUN NO. 998/ 0 RN/L = 3.50 GRADIENT INTERVAL = -5.00/ 5.00

ALPHAO	BETAO	ALFAOU	BETAOU	PT	P	Q	TT	AFA	BFA	DEINLR	DEONLR
-4.084	-6.130	-3.88880	-6.20020	1875.70000	1230.71880	551.11470	99.80000	-.03830	.20400	10.02000	11.25000
-4.332	-3.976	-4.15750	-4.08950	1875.39990	1230.52119	551.02690	99.80000	-.03830	.20410	10.02000	11.25000
-4.236	.375	-4.20550	.16950	1877.39990	1231.49950	551.84180	99.80000	-.03830	.20400	10.02000	11.25000
-3.804	4.333	-3.93000	4.16820	1878.29980	1231.99020	552.17410	99.80000	-.03830	.20400	10.02000	11.25000
-3.864	6.155	-4.01640	6.01400	1879.09990	1232.88750	552.15580	99.70000	-.03830	.20400	10.02000	11.25000
	GRADIENT	.02675	.99357	.35083	.17759	.13888	-.00000	-.00000	-.00001	.00000	.00000

RUN NO. 999/ 0 RN/L = 3.50 GRADIENT INTERVAL = -5.00/ 5.00

ALPHAO	BETAO	ALFAOU	BETAOU	PT	P	Q	TT	AFA	BFA	DEINLR	DEONLR
-.349	-6.910	-.14530	-6.87180	1879.20000	1233.59399	551.74930	99.80000	-.03820	.20410	10.02000	11.25000
-.345	-4.778	-.14110	-4.73990	1879.89990	1233.27879	552.48190	99.80000	-.03830	.20400	10.02000	11.25000
-.318	-.519	-.11370	-.48100	1880.20000	1233.57710	552.50100	99.80000	-.03830	.20400	10.02000	11.25000
-.280	3.587	-.07550	3.62550	1880.20000	1233.67850	552.43210	99.80000	-.03830	.20400	10.02000	11.25000
-.281	5.732	-.07690	5.77080	1880.79980	1233.76950	552.81420	99.80000	-.03830	.20400	10.02000	11.25000
	GRADIENT	.00783	1.00000	.03609	.04792	-.00589	.00000	.00000	-.00000	.00000	-.00000

RUN NO. 1000/ 0 RN/L = 3.51 GRADIENT INTERVAL = -5.00/ 5.00

ALPHAO	BETAO	ALFAOU	BETAOU	PT	P	Q	TT	AFA	BFA	DEINLR	DEONLR
4.101	-5.781	3.95120	-5.92450	1880.59990	1234.27879	552.31980	99.80000	-.03820	.20410	10.02000	11.25000
3.955	-3.664	3.83630	-3.83390	1880.59990	1234.27879	552.31980	99.70000	-.03820	.20410	10.02000	11.25000
3.717	.123	3.75110	-.08140	1880.50000	1233.87570	552.51980	99.70000	-.03830	.20410	10.02000	11.25000
3.820	4.012	3.99170	3.89460	1881.00000	1233.76610	552.96440	99.70000	-.03830	.20400	10.02000	11.25000
3.767	6.089	3.95980	6.01080	1880.29980	1233.27200	552.78250	99.70000	-.03830	.20400	10.02000	11.25000
	GRADIENT	.02043	1.00700	.05247	-.06663	.08412	-.00000	-.00001	-.00001	-.00000	-.00000

RUN NO. 1001/ 0 RN/L = 3.51 GRADIENT INTERVAL = -5.00/ 5.00

ALPHAO	BETAO	ALFAOU	BETAOU	PT	P	Q	TT	AFA	BFA	DEINLR	DEONLR
6.081	-5.826	5.96160	-5.99550	1880.39990	1233.67500	552.58230	99.60000	-.03830	.20400	10.02000	11.25000
6.062	-3.782	5.97850	-3.97210	1880.59990	1233.77290	552.66380	99.60000	-.03830	.20400	10.02000	11.25000
5.749	.159	5.78520	-.04570	1880.39990	1233.67500	552.58230	99.70000	-.03830	.20400	10.02000	11.25000
5.676	3.974	5.82240	3.82660	1880.59990	1233.87399	552.59500	99.70000	-.03830	.20400	10.02000	11.25000
5.803	6.143	5.97630	6.02970	1880.39990	1233.67500	552.58230	99.60000	-.03830	.20400	10.02000	11.25000
	GRADIENT	-.02028	1.00544	-.00028	.01283	-.00893	.01296	.00000	.00000	.00000	-.00000

IA156A, AEDC PWT 16T-470, O T S W/SILTS (R8NM66) (10 MAY 80)

REFERENCE DATA

SREF = 2690.0000 SQ.FT. XMRP = 976.0000 IN. XT
LREF = 1290.3000 INCHES YMRP = .0000 IN. YT
BREF = 1290.3000 INCHES ZMRP = 400.0000 IN. ZT
SCALE = .0200

PARAMETRIC DATA

IB-ELV = 10.000 OB-ELV = 11.000
BDFLAP = .000 SPDBRK = .000
RUDDER = .000 SILTS = 1.000
MACH = .900 RN/L = 3.500

RUN NO. 1002/ 0 RN/L = 3.50 GRADIENT INTERVAL = -5.00/ 5.00

ALPHAO	BETAO	ALFAOU	BETAOU	PT	P	Q	TT	AFA	BFA	DEINLR	DEONLR
-8.139	-6.011	-7.97150	-6.13240	1783.09990	1054.23630	597.79760	100.30000	-.05180	.20010	10.02000	11.25000
-8.266	-3.766	-8.12900	-3.92070	1784.00000	1054.72749	598.12350	100.20000	-.05180	.20010	10.02000	11.25000
-8.171	.178	-8.11840	-.02220	1777.39990	1050.68750	595.99320	100.10000	-.05180	.20010	10.02000	11.25000
-7.999	4.397	-8.05070	4.19650	1787.59990	1057.70190	598.82710	100.20000	-.05170	.20010	10.02000	11.25000
-8.035	6.278	-8.11980	6.08920	1793.89990	1060.53560	601.46970	100.20000	-.05180	.20010	10.02000	11.25000
	GRADIENT	.00967	.99445	.46392	.37943	.09298	.00027	.00001	.00000	-.00000	-.00000

RUN NO. 1003/ 0 RN/L = 3.50 GRADIENT INTERVAL = -5.00/ 5.00

ALPHAO	BETAO	ALFAOU	BETAOU	PT	P	Q	TT	AFA	BFA	DEINLR	DEONLR
-6.213	-5.983	-6.03100	-6.08120	1772.39990	1048.33890	593.95530	100.00000	-.05180	.20010	10.02000	11.25000
-6.159	-4.072	-5.99780	-4.20080	1777.79980	1051.69040	595.67110	100.00000	-.05170	.20010	10.02000	11.25000
-6.252	.103	-6.19710	-.09650	1784.39990	1054.82280	598.34180	100.10000	-.05180	.20010	10.02000	11.25000
-6.049	4.272	-6.12240	4.07870	1789.09990	1058.89059	599.15010	100.20000	-.05170	.20010	10.02000	11.25000
-5.983	6.249	-6.09380	6.07460	1791.59990	1059.35860	600.58980	100.10000	-.05180	.20010	10.02000	11.25000
	GRADIENT	-.01494	.99234	1.35442	.86296	.41702	.02397	-.00000	.00000	-.00000	.00000

RUN NO. 1004/ 0 RN/L = 3.49 GRADIENT INTERVAL = -5.00/ 5.00

ALPHAO	BETAO	ALFAOU	BETAOU	PT	P	Q	TT	AFA	BFA	DEINLR	DEONLR
-4.066	-6.140	-3.86630	-6.19520	1783.09990	1054.84160	597.43730	100.10000	-.05170	.20010	10.02000	11.25000
-4.344	-4.007	-4.16280	-4.10580	1781.59990	1053.65280	597.11430	100.00000	-.05170	.20010	10.02000	11.25000
-4.242	.377	-4.19890	.17520	1773.70000	1049.83330	593.95870	99.90000	-.05170	.20010	10.02000	11.25000
-3.805	4.332	-3.92090	4.16100	1771.79980	1047.64140	593.95800	100.00000	-.05180	.20010	10.02000	11.25000
-3.878	6.163	-4.02070	6.01290	1778.00000	1051.48579	595.93040	99.90000	-.05180	.20010	10.02000	11.25000
	GRADIENT	.02834	.99110	-1.18653	-.72360	-.38465	-.00041	-.00001	.00000	.00000	-.00000

RUN NO. 1005/ 0 RN/L = 3.49 GRADIENT INTERVAL = -5.00/ 5.00

ALPHAO	BETAO	ALFAOU	BETAOU	PT	P	Q	TT	AFA	BFA	DEINLR	DEONLR
-.384	-6.979	-.18380	-6.92680	1779.29980	1052.17310	596.41460	100.00000	-.05180	.20010	10.02000	11.25000
-.370	-4.834	-.17000	-4.78260	1779.50000	1052.27100	596.49370	100.10000	-.05180	.20010	10.02000	11.25000
-.335	-.531	-.13540	-.47870	1779.79980	1052.77100	596.40210	100.10000	-.05180	.20010	10.02000	11.25000
-.302	3.595	-.10180	3.64650	1780.79980	1052.95830	596.97780	100.10000	-.05180	.20010	10.02000	11.25000
-.304	5.740	-.10380	5.79240	1780.20000	1052.36180	596.92070	100.10000	-.05180	.20010	10.02000	11.25000
	GRADIENT	.00809	1.00001	.15360	.08179	.05687	-.00000	-.00000	.00000	.00000	.00000

IA156A, AEDC PWT 16T-470, O T S W/SILTS (R8NM66) (10 MAY 80)

REFERENCE DATA

SREF = 2690.0000 SQ.FT. XMRP = 976.0000 IN. XT
LREF = 1290.3000 INCHES YMRP = .0000 IN. YT
BREF = 1290.3000 INCHES ZMRP = 400.0000 IN. ZT
SCALE = .0200

PARAMETRIC DATA

IB-ELV = 10.000 OB-ELV = 11.000
BDFLAP = .000 SPDBRK = .000
RUDDER = .000 SILTS = 1.000
MACH = .900 RN/L = 3.500

RUN NO. 1006/ 0 RN/L = 3.50 GRADIENT INTERVAL = -5.00/ 5.00

ALPHAO	BETAO	ALFAOU	BETAOU	PT	P	Q	TT	AFA	BFA	DEINLR	DEONLR
4.095	-5.773	3.95700	-5.92650	1780.00000	1053.07080	596.36110	100.10000	-.05170	.20010	10.02000	11.25000
3.945	-3.668	3.83880	-3.84580	1781.09990	1053.45830	596.88650	100.10000	-.05170	.20010	10.02000	11.25000
3.706	.126	3.75460	-.07480	1782.00000	1053.64700	597.39260	100.10000	-.05180	.20010	10.02000	11.25000
3.810	3.998	3.98800	3.89240	1781.39990	1053.95850	596.79490	100.10000	-.05170	.20010	10.02000	11.25000
3.754	6.078	3.94990	6.01240	1781.20000	1052.95239	597.25610	100.10000	-.05180	.20010	10.02000	11.25000
	GRADIENT	.01960	1.00947	.03848	.06530	-.01243	.00000	.00000	-.00000	.00000	-.00000

IA156A, AEDC PWT 16T-470, O T S W/SILTS (R8NM67) (10 MAY 80)

REFERENCE DATA

SREF = 2690.0000 SQ.FT. XMRP = 976.0000 IN. XT
LREF = 1290.3000 INCHES YMRP = .0000 IN. YT
BREF = 1290.3000 INCHES ZMRP = 400.0000 IN. ZT
SCALE = .0200

PARAMETRIC DATA

IB-ELV = 10.000 OB-ELV = 11.000
BDFLAP = .000 SPDBRK = .000
RUDDER = .000 SILTS = 1.000
MACH = .950 RN/L = 3.500

RUN NO. 1007/ 0 RN/L = 3.49 GRADIENT INTERVAL = -5.00/ 5.00

ALPHAO	BETAO	ALFAOU	BETAOU	PT	P	Q	TT	AFA	BFA	DEINLR	DEONLR
-8.174	-5.994	-8.00610	-6.11200	1748.00000	977.71850	617.93040	100.60000	-.05540	.19770	10.02000	11.25000
-8.273	-3.769	-8.13330	-3.91870	1744.59990	976.15260	616.54420	100.60000	-.05540	.19770	10.02000	11.25000
-8.177	.172	-8.12060	-.02560	1751.00000	979.39040	618.99410	100.60000	-.05540	.19770	10.02000	11.25000
-7.999	4.395	-8.04720	4.19520	1746.50000	976.83200	617.42600	100.50000	-.05540	.19770	10.02000	11.25000
-8.015	6.270	-8.09680	6.08140	1742.79980	975.37080	615.78420	100.50000	-.05540	.19770	10.02000	11.25000
	GRADIENT	.01063	.99401	.21727	.07501	.10230	-.01239	.00000	-.00000	-.00000	-.00000

RUN NO. 1008/ 0 RN/L = 3.50 GRADIENT INTERVAL = -5.00/ 5.00

ALPHAO	BETAO	ALFAOU	BETAOU	PT	P	Q	TT	AFA	BFA	DEINLR	DEONLR
-6.222	-6.000	-6.03860	-6.09270	1753.79980	981.56840	619.64820	100.40000	-.05540	.19770	10.02000	11.25000
-6.165	-4.074	-6.00130	-4.19830	1753.29980	980.46750	619.92210	100.40000	-.05550	.19770	10.02000	11.25000
-6.250	.100	-6.19090	-.09660	1751.20000	979.89110	618.85130	100.40000	-.05540	.19770	10.02000	11.25000
-6.077	4.263	-6.14620	4.07010	1748.59990	978.51610	617.88890	100.50000	-.05540	.19770	10.02000	11.25000
-5.771	6.406	-5.88310	6.23360	1752.00000	980.28320	619.16460	100.60000	-.05540	.19770	10.02000	11.25000
	GRADIENT	-.01739	.99174	-.56370	-.23402	-.24388	.01199	.00001	-.00000	-.00000	.00000

IA156A, AEDC PWT 16T-470, O T S W/SILTS (R8NM67) (10 MAY 80)

REFERENCE DATA

SREF = 2690.0000 SQ.FT. XMRP = 976.0000 IN. XT
LREF = 1290.3000 INCHES YMRP = .0000 IN. YT
BREF = 1290.3000 INCHES ZMRP = 400.0000 IN. ZT
SCALE = .0200

PARAMETRIC DATA

IB-ELV = 10.000 OB-ELV = 11.000
BDFLAP = .000 SPDBRK = .000
RUDDER = .000 SILTS = 1.000
MACH = .950 RN/L = 3.500

RUN NO. 1009/ 0 RN/L = 3.50 GRADIENT INTERVAL = -5.00/ 5.00

ALPHAO	BETAO	ALFAOU	BETAOU	PT	P	Q	TT	AFA	BFA	DEINLR	DEONLR
-4.090	-6.152	-3.89070	-6.20180	1746.00000	976.93950	617.03690	100.40000	-.05540	.19770	10.02000	11.25000
-4.336	-4.001	-4.15320	-4.09520	1744.39990	975.55100	616.74190	100.30000	-.05550	.19770	10.02000	11.25000
-4.255	.372	-4.20740	.17220	1753.20000	980.97220	619.57910	100.40000	-.05540	.19770	10.02000	11.25000
-3.805	4.339	-3.91720	4.16670	1758.79980	983.81790	621.71610	100.40000	-.05540	.19770	10.02000	11.25000
-3.884	6.157	-4.02290	6.00630	1750.50000	979.59840	618.54980	100.40000	-.05540	.19770	10.02000	11.25000
	GRADIENT	.02761	.99042	1.73153	.99550	.59734	.01218	.00001	-.00000	-.00000	.00000

RUN NO. 1010/ 0 RN/L = 3.50 GRADIENT INTERVAL = -5.00/ 5.00

ALPHAO	BETAO	ALFAOU	BETAOU	PT	P	Q	TT	AFA	BFA	DEINLR	DEONLR
-.403	-6.989	-.20490	-6.93400	1751.00000	980.19580	618.55200	100.40000	-.05540	.19770	10.02000	11.25000
-.384	-4.820	-.18630	-4.76490	1753.70000	981.56980	619.58130	100.40000	-.05540	.19770	10.02000	11.25000
-.355	-.578	-.15720	-.52290	1753.09990	981.37620	619.29130	100.40000	-.05540	.19770	10.02000	11.25000
-.317	3.642	-.11900	3.69730	1754.29980	981.46120	620.03740	100.40000	-.05540	.19770	10.02000	11.25000
-.314	5.778	-.11590	5.83340	1752.20000	980.48190	619.18770	100.40000	-.05540	.19770	10.02000	11.25000
	GRADIENT	.00795	1.00002	.07070	-.01286	.05379	.00000	-.00000	.00000	.00000	.00000

RUN NO. 1011/ 0 RN/L = 3.49 GRADIENT INTERVAL = -5.00/ 5.00

ALPHAO	BETAO	ALFAOU	BETAOU	PT	P	Q	TT	AFA	BFA	DEINLR	DEONLR
4.100	-5.936	3.96450	-6.09010	1749.59990	978.50270	618.55660	100.40000	-.05550	.19770	10.02000	11.25000
3.927	-3.611	3.82640	-3.79040	1747.39990	977.52490	617.64010	100.40000	-.05540	.19770	10.02000	11.25000
3.704	.194	3.75990	-.00410	1748.39990	978.01510	618.03170	100.40000	-.05540	.19770	10.02000	11.25000
3.820	4.058	3.99960	3.95830	1746.59990	977.13280	617.32690	100.50000	-.05540	.19770	10.02000	11.25000
3.768	6.090	3.96400	6.02870	1746.70000	977.53440	617.17260	100.40000	-.05540	.19770	10.02000	11.25000
	GRADIENT	.02269	1.01035	-.10526	-.05159	-.04121	.01307	.00000	-.00000	-.00000	-.00000

IA156A, AEDC PWT 16T-470, O T S W/SILTS (R8NM68) (10 MAY 80)

REFERENCE DATA

SREF = 2690.0000 SQ.FT. XMRP = 976.0000 IN. XT
LREF = 1290.3000 INCHES YMRP = .0000 IN. YT
BREF = 1290.3000 INCHES ZMRP = 400.0000 IN. ZT
SCALE = .0200

PARAMETRIC DATA

IB-ELV = 10.000 OB-ELV = 11.000
BDFLAP = .000 SPDBRK = .000
RUDDER = .000 SILTS = 1.000
MACH = 1.050 RN/L = 3.500

RUN NO. 1012/ 0 RN/L = 3.52 GRADIENT INTERVAL = -5.00/ 5.00

ALPHAO	BETAO	ALFAOU	BETAOU	PT	P	Q	TT	AFA	BFA	DEINLR	DEONLR
-8.150	-6.001	-7.97830	-6.11080	1705.79980	848.61160	655.71950	100.00000	-.06080	.19440	10.02000	11.25000
-8.302	-3.779	-8.15810	-3.92210	1732.50000	866.46950	663.92260	100.10000	-.06070	.19450	10.02000	11.25000
-8.183	.171	-8.12120	-.02290	1715.50000	851.91630	660.12840	100.40000	-.06100	.19440	10.02000	11.25000
-7.975	4.397	-8.01880	4.19760	1698.89990	846.37940	652.52830	100.00000	-.06080	.19440	10.02000	11.25000
-8.018	6.265	-8.09460	6.07570	1702.79980	848.04200	654.15230	100.10000	-.06080	.19440	10.02000	11.25000
	GRADIENT	.01712	.99337	-4.10829	-2.44433	-1.39861	-.01319	-.00001	-.00001	-.00000	-.00000

RUN NO. 1013/ 0 RN/L = 3.50 GRADIENT INTERVAL = -5.00/ 5.00

ALPHAO	BETAO	ALFAOU	BETAOU	PT	P	Q	TT	AFA	BFA	DEINLR	DEONLR
-6.221	-6.006	-6.03580	-6.09110	1704.39990	849.52860	654.45700	99.80000	-.06080	.19450	10.02000	11.25000
-6.153	-4.085	-5.98620	-4.20160	1705.89990	849.11160	655.55590	100.00000	-.06090	.19440	10.02000	11.25000
-6.258	.108	-6.19380	-.08540	1705.00000	849.02100	655.04990	99.90000	-.06080	.19440	10.02000	11.25000
-6.060	4.277	-6.12510	4.08390	1701.59990	847.45340	653.68730	99.80000	-.06080	.19440	10.02000	11.25000
-5.999	6.257	-6.10130	6.08040	1701.89990	847.14940	654.00590	99.90000	-.06080	.19440	10.02000	11.25000
	GRADIENT	-.01664	.99090	-.51398	-.19815	-.22338	-.02392	.00001	-.00000	.00000	.00000

RUN NO. 1014/ 0 RN/L = 3.50 GRADIENT INTERVAL = -5.00/ 5.00

ALPHAO	BETAO	ALFAOU	BETAOU	PT	P	Q	TT	AFA	BFA	DEINLR	DEONLR
-4.105	-6.160	-3.90540	-6.20250	1703.20000	848.23830	654.30710	99.90000	-.06080	.19440	10.02000	11.25000
-4.348	-4.027	-4.16360	-4.11290	1705.20000	848.31710	655.48680	99.90000	-.06090	.19440	10.02000	11.25000
-4.141	.192	-4.07960	-.00250	1704.09990	848.42920	654.76860	99.80000	-.06090	.19440	10.02000	11.25000
-4.009	4.261	-4.11110	4.08420	1704.50000	848.72560	654.87840	99.80000	-.06080	.19440	10.02000	11.25000
-3.867	6.166	-4.00220	6.01380	1704.09990	849.03050	654.49850	99.90000	-.06080	.19440	10.02000	11.25000
	GRADIENT	.00642	.98905	-.08555	.04915	-.07401	-.01214	.00001	-.00000	-.00000	-.00000

RUN NO. 1015/ 0 RN/L = 3.50 GRADIENT INTERVAL = -5.00/ 5.00

ALPHAO	BETAO	ALFAOU	BETAOU	PT	P	Q	TT	AFA	BFA	DEINLR	DEONLR
-.437	-6.999	-.24270	-6.93790	1702.00000	847.44920	653.93210	100.00000	-.06080	.19440	10.02000	11.25000
-.421	-4.839	-.22680	-4.77830	1702.09990	847.54830	653.94850	99.90000	-.06080	.19440	10.02000	11.25000
-.393	-.626	-.19840	-.56470	1703.20000	848.03780	654.39720	100.00000	-.06080	.19440	10.02000	11.25000
-.359	3.574	-.16480	3.63520	1703.00000	848.24050	654.18480	100.00000	-.06080	.19440	10.02000	11.25000
-.359	5.766	-.16450	5.82660	1701.59990	847.55350	653.64210	99.90000	-.06080	.19440	10.02000	11.25000
	GRADIENT	.00737	1.00001	.10707	.08229	.02813	.01189	-.00000	-.00000	.00000	.00000

IA156A, AEDC PWT 16T-470, O T S W/SILTS (R8NM68) (10 MAY 80)

REFERENCE DATA

SREF = 2690.0000 SQ.FT. XMRP = 976.0000 IN. XT
LREF = 1290.3000 INCHES YMRP = .0000 IN. YT
BREF = 1290.3000 INCHES ZMRP = 400.0000 IN. ZT
SCALE = .0200

PARAMETRIC DATA

IB-ELV = 10.000 OB-ELV = 11.000
BDFLAP = .000 SPDBRK = .000
RUDDER = .000 SILTS = 1.000
MACH = 1.050 RN/L = 3.500

RUN NO. 1016/ 0 RN/L = 3.50 GRADIENT INTERVAL = -5.00/ 5.00

ALPHAO	BETAO	ALFAOU	BETAOU	PT	P	Q	TT	AFA	BFA	DEINLR	DEONLR
4.071	-5.752	3.94280	-5.91080	1703.20000	848.33840	654.26220	99.90000	-.06080	.19440	10.02000	11.25000
3.954	-3.693	3.85950	-3.87330	1702.70000	847.74240	654.22610	100.00000	-.06080	.19440	10.02000	11.25000
3.685	.145	3.74390	-.05040	1703.00000	848.54100	654.04960	100.00000	-.06080	.19450	10.02000	11.25000
3.810	4.089	3.99040	3.99530	1702.70000	847.44170	654.36080	99.90000	-.06090	.19440	10.02000	11.25000
3.747	6.071	3.94340	6.01570	1701.09990	846.75710	653.69580	99.80000	-.06080	.19440	10.02000	11.25000
	GRADIENT	.01703	1.01122	-.00035	-.03976	.01760	-.01291	-.00001	-.00000	-.00000	-.00000

IA156A, AEDC PWT 16T-470, O T S W/SILTS (R8NM69) (10 MAY 80)

REFERENCE DATA

SREF = 2690.0000 SQ.FT. XMRP = 976.0000 IN. XT
LREF = 1290.3000 INCHES YMRP = .0000 IN. YT
BREF = 1290.3000 INCHES ZMRP = 400.0000 IN. ZT
SCALE = .0200

PARAMETRIC DATA

IB-ELV = 10.000 OB-ELV = 11.000
BDFLAP = .000 SPDBRK = .000
RUDDER = .000 SILTS = 1.000
MACH = 1.100 RN/L = 3.500

RUN NO. 1017/ 0 RN/L = 3.50 GRADIENT INTERVAL = -5.00/ 5.00

ALPHAO	BETAO	ALFAOU	BETAOU	PT	P	Q	TT	AFA	BFA	DEINLR	DEONLR
-8.097	-5.926	-7.92350	-6.03480	1690.39990	791.90600	670.49580	100.10000	-.06320	.19440	10.02000	11.25000
-8.280	-3.763	-8.13420	-3.90560	1686.70000	789.84080	669.15920	100.10000	-.06320	.19440	10.02000	11.25000
-8.190	.161	-8.12570	-.03280	1694.39990	793.76810	672.08690	100.10000	-.06320	.19440	10.02000	11.25000
-8.006	4.422	-8.04790	4.22170	1684.59990	788.46090	668.48270	100.10000	-.06330	.19440	10.02000	11.25000
-7.997	6.266	-8.07140	6.07560	1681.50000	787.58980	667.02340	99.90000	-.06320	.19440	10.02000	11.25000
	GRADIENT	.01065	.99309	-.28575	-.18397	-.09355	-.00000	-.00001	.00000	-.00000	-.00000

RUN NO. 1018/ 0 RN/L = 3.50 GRADIENT INTERVAL = -5.00/ 5.00

ALPHAO	BETAO	ALFAOU	BETAOU	PT	P	Q	TT	AFA	BFA	DEINLR	DEONLR
-6.199	-5.999	-6.01230	-6.08160	1685.70000	789.55030	668.69240	99.80000	-.06320	.19440	10.02000	11.25000
-6.174	-4.095	-6.00490	-4.21070	1686.00000	789.84740	668.74950	99.90000	-.06320	.19440	10.02000	11.25000
-6.278	.121	-6.21160	-.07200	1690.39990	792.20580	670.37720	100.00000	-.06320	.19440	10.02000	11.25000
-6.064	4.278	-6.12730	4.08380	1687.59990	791.23220	669.13280	100.00000	-.06320	.19440	10.02000	11.25000
-5.886	6.403	-5.99030	6.22720	1688.00000	790.52860	669.64380	100.00000	-.06320	.19440	10.02000	11.25000
	GRADIENT	-.01470	.99054	.19311	.16632	.04659	.01197	.00000	-.00000	-.00000	.00000

IA156A, AEDC PWT 16T-470, O T S W/SILTS (R8NM69) (10 MAY 80)

REFERENCE DATA

SREF = 2690.0000 SQ.FT. XMRP = 976.0000 IN. XT
LREF = 1290.3000 INCHES YMRP = .0000 IN. YT
BREF = 1290.3000 INCHES ZMRP = 400.0000 IN. ZT
SCALE = .0200

PARAMETRIC DATA

IB-ELV = 10.000 OB-ELV = 11.000
BDFLAP = .000 SPDBRK = .000
RUDDER = .000 SILTS = 1.000
MACH = 1.100 RN/L = 3.500

RUN NO. 1019/ 0 RN/L = 3.50 GRADIENT INTERVAL = -5.00/ 5.00

ALPHAO	BETAO	ALFAOU	BETAOU	PT	P	Q	TT	AFA	BFA	DEINLR	DEONLR
-4.238	-6.148	-4.03780	-6.19100	1689.89990	792.51050	669.96560	100.10000	-.06310	.19440	10.02000	11.25000
-4.335	-4.024	-4.14880	-4.10820	1686.20000	790.14550	668.74800	100.00000	-.06320	.19440	10.02000	11.25000
-4.254	.256	-4.19270	.06040	1687.70000	790.73140	669.38920	100.10000	-.06320	.19440	10.02000	11.25000
-3.792	4.279	-3.89680	4.10400	1692.89990	793.48220	671.32710	100.10000	-.06320	.19440	10.02000	11.25000
-3.868	6.150	-4.00160	5.99490	1688.79980	790.32130	670.19090	100.10000	-.06330	.19440	10.02000	11.25000
	GRADIENT	.02992	.98886	.80205	.39904	.30890	.01216	.00000	.00000	.00000	-.00000

RUN NO. 1020/ 0 RN/L = 3.50 GRADIENT INTERVAL = -5.00/ 5.00

ALPHAO	BETAO	ALFAOU	BETAOU	PT	P	Q	TT	AFA	BFA	DEINLR	DEONLR
-.440	-7.008	-.24600	-6.94480	1686.79980	789.84010	669.21780	100.10000	-.06320	.19440	10.02000	11.25000
-.423	-4.851	-.22900	-4.78750	1689.50000	791.51440	670.12700	100.10000	-.06320	.19440	10.02000	11.25000
-.387	-.508	-.19250	-.44450	1685.09990	789.05590	668.53860	100.10000	-.06320	.19440	10.02000	11.25000
-.354	3.675	-.15920	3.73850	1690.20000	791.60790	670.49730	100.10000	-.06320	.19440	10.02000	11.25000
-.360	5.796	-.16590	5.85950	1692.39990	792.38720	671.46900	100.10000	-.06320	.19440	10.02000	11.25000
	GRADIENT	.00819	1.00001	.07513	.00729	.04083	.00000	.00000	-.00000	-.00000	.00000

RUN NO. 1021/ 0 RN/L = 3.50 GRADIENT INTERVAL = -5.00/ 5.00

ALPHAO	BETAO	ALFAOU	BETAOU	PT	P	Q	TT	AFA	BFA	DEINLR	DEONLR
4.046	-5.934	3.91620	-6.09270	1689.79980	791.31150	670.38160	100.10000	-.06320	.19440	10.02000	11.25000
3.910	-3.607	3.81760	-3.78980	1689.39990	791.81520	669.94970	100.10000	-.06320	.19440	10.02000	11.25000
3.691	.192	3.75440	-.00250	1687.59990	790.43240	669.44900	100.10000	-.06320	.19440	10.02000	11.25000
3.794	4.044	3.97660	3.95150	1692.00000	792.69070	671.11650	100.10000	-.06320	.19440	10.02000	11.25000
3.760	6.059	3.95710	6.00580	1690.29980	792.10670	670.35820	100.00000	-.06320	.19440	10.02000	11.25000
	GRADIENT	.02087	1.01174	.34167	.11551	.15314	.00000	-.00000	.00000	-.00000	.00000

IA156A, AEDC PWT 16T-470, O T S W/SILTS (R8NM70) (10 MAY 80)

REFERENCE DATA

SREF = 2690.0000 SQ.FT. XMRP = 976.0000 IN. XT
LREF = 1290.3000 INCHES YMRP = .0000 IN. YT
BREF = 1290.3000 INCHES ZMRP = 400.0000 IN. ZT
SCALE = .0200

PARAMETRIC DATA

IB-ELV = 10.000 OB-ELV = 11.000
BDFLAP = .000 SPDBRK = .000
RUDDER = .000 SILTS = 1.000
MACH = 1.150 RN/L = 3.500

RUN NO. 1022/ 0 RN/L = 3.50 GRADIENT INTERVAL = -5.00/ 5.00

ALPHAO	BETAO	ALFAOU	BETAOU	PT	P	Q	TT	AFA	BFA	DEINLR	DEONLR
-8.134	-5.933	-7.95840	-6.04230	1679.29980	738.68730	683.73580	100.20000	-.06550	.19610	10.02000	11.25000
-8.287	-3.765	-8.13760	-3.90780	1678.79980	739.09010	683.32100	100.10000	-.06550	.19610	10.02000	11.25000
-8.184	.189	-8.11900	-.00700	1678.89990	738.29150	683.64750	100.10000	-.06550	.19610	10.02000	11.25000
-8.013	4.416	-8.05410	4.21320	1681.50000	739.36740	684.72900	100.10000	-.06550	.19610	10.02000	11.25000
-8.025	6.285	-8.09980	6.09200	1685.09990	741.03340	686.16670	100.10000	-.06550	.19610	10.02000	11.25000
	GRADIENT	.01027	.99278	.33335	.03643	.17308	-.00000	-.00000	.00000	-.00000	-.00000

RUN NO. 1023/ 0 RN/L = 3.50 GRADIENT INTERVAL = -5.00/ 5.00

ALPHAO	BETAO	ALFAOU	BETAOU	PT	P	Q	TT	AFA	BFA	DEINLR	DEONLR
-6.207	-5.999	-6.01720	-6.08140	1681.89990	739.26460	684.98630	100.10000	-.06550	.19610	10.02000	11.25000
-6.146	-4.081	-5.97420	-4.19650	1680.09990	738.28200	684.31790	100.10000	-.06560	.19620	10.02000	11.25000
-6.279	.113	-6.21020	-.08220	1680.79980	739.37300	684.33790	100.10000	-.06550	.19610	10.02000	11.25000
-6.064	4.278	-6.12650	4.08120	1680.39990	738.08010	684.55270	100.10000	-.06550	.19620	10.02000	11.25000
-5.879	6.410	-5.98380	6.23210	1676.29980	738.11330	682.26150	100.10000	-.06550	.19610	10.02000	11.25000
	GRADIENT	-.01826	.99020	.03604	-.02383	.02806	.00000	.00001	-.00000	.00000	.00000

RUN NO. 1024/ 0 RN/L = 3.50 GRADIENT INTERVAL = -5.00/ 5.00

ALPHAO	BETAO	ALFAOU	BETAOU	PT	P	Q	TT	AFA	BFA	DEINLR	DEONLR
-4.244	-6.153	-4.04230	-6.19530	1686.59990	743.11520	686.29490	100.10000	-.06540	.19600	10.02000	11.25000
-4.342	-4.026	-4.15320	-4.11020	1680.89990	739.17290	684.46120	100.00000	-.06550	.19610	10.02000	11.25000
-4.269	.373	-4.21180	.17380	1674.59990	737.03000	681.68310	99.90000	-.06550	.19610	10.02000	11.25000
-3.799	4.328	-3.90530	4.15060	1687.50000	742.60940	686.96780	100.10000	-.06550	.19610	10.02000	11.25000
-3.890	6.176	-4.02360	6.01840	1678.70000	738.59230	683.43430	100.00000	-.06550	.19610	10.02000	11.25000
	GRADIENT	.02887	.98853	.74863	.39461	.28269	.01132	.00000	.00000	.00000	.00000

RUN NO. 1025/ 0 RN/L = 3.50 GRADIENT INTERVAL = -5.00/ 5.00

ALPHAO	BETAO	ALFAOU	BETAOU	PT	P	Q	TT	AFA	BFA	DEINLR	DEONLR
-.430	-7.050	-.23390	-6.98460	1681.89990	739.26460	684.98630	100.10000	-.06550	.19610	10.02000	11.25000
-.405	-4.893	-.20840	-4.82710	1680.50000	739.27590	684.20390	100.00000	-.06550	.19610	10.02000	11.25000
-.369	-.554	-.17280	-.48820	1679.09990	739.28710	683.42110	100.00000	-.06540	.19610	10.02000	11.25000
-.336	3.601	-.14020	3.66650	1678.00000	738.29880	683.14430	100.00000	-.06550	.19610	10.02000	11.25000
-.346	5.794	-.14950	5.85960	1677.79980	738.10110	683.10010	100.00000	-.06550	.19610	10.02000	11.25000
	GRADIENT	.00803	1.00001	-.29455	-.11417	-.12517	-.00000	.00000	-.00000	-.00000	-.00000

IA156A, AEDC PWT 16T-470, O T S W/SILTS (R8NM70) (10 MAY 80)

REFERENCE DATA

SREF = 2690.0000 SQ.FT. XMRP = 976.0000 IN. XT
LREF = 1290.3000 INCHES YMRP = .0000 IN. YT
BREF = 1290.3000 INCHES ZMRP = 400.0000 IN. ZT
SCALE = .0200

PARAMETRIC DATA

IB-ELV = 10.000 OB-ELV = 11.000
BDFLAP = .000 SPDBRK = .000
RUDDER = .000 SILTS = 1.000
MACH = 1.150 RN/L = 3.500

RUN NO. 1026/ 0 RN/L = 3.50 GRADIENT INTERVAL = -5.00/ 5.00

ALPHAO	BETAO	ALFAOU	BETAOU	PT	P	Q	TT	AFA	BFA	DEINLR	DEONLR
4.075	-5.757	3.94850	-5.92080	1678.70000	737.49560	683.80540	100.00000	-.06560	.19620	10.02000	11.25000
3.928	-3.663	3.83580	-3.84760	1679.09990	738.29000	683.75930	100.00000	-.06560	.19610	10.02000	11.25000
3.704	.117	3.76540	-.08030	1679.70000	739.58130	683.65500	100.10000	-.06550	.19610	10.02000	11.25000
3.806	3.989	3.99020	3.89600	1679.29980	738.58760	683.76980	100.00000	-.06550	.19610	10.02000	11.25000
3.754	6.054	3.95420	6.00140	1680.09990	739.17920	684.01420	100.10000	-.06550	.19610	10.02000	11.25000
	GRADIENT	.02033	1.01203	.02559	.03768	.00149	-.00011	.00001	-.00000	-.00000	.00000

IA156A, AEDC PWT 16T-470, O T S W/SILTS (R8NM71) (10 MAY 80)

REFERENCE DATA

SREF = 2690.0000 SQ.FT. XMRP = 976.0000 IN. XT
LREF = 1290.3000 INCHES YMRP = .0000 IN. YT
BREF = 1290.3000 INCHES ZMRP = 400.0000 IN. ZT
SCALE = .0200

PARAMETRIC DATA

IB-ELV = 12.000 OB-ELV = 11.000
BDFLAP = .000 SPDBRK = .000
RUDDER = .000 SILTS = 1.000
MACH = .600 RN/L = 3.500

RUN NO. 1030/ 0 RN/L = 3.50 GRADIENT INTERVAL = -5.00/ 5.00

ALPHAO	BETAO	ALFAOU	BETAOU	PT	P	Q	TT	AFA	BFA	DEINLR	DEONLR
-8.234	-7.829	-8.14620	-8.02080	2241.20001	1757.32230	442.61720	98.90000	.07660	.19630	12.12000	11.25000
-8.114	-5.816	-8.05420	-6.01880	2240.20001	1757.95360	441.25830	98.90000	.07730	.19620	12.12000	11.25000
-8.139	-3.803	-8.11850	-4.01300	2241.70001	1759.14160	441.54490	99.50000	.07780	.19620	12.12000	11.25000
-8.046	.301	-8.12630	.10560	2240.09991	1757.44730	441.58960	99.80000	.07740	.19620	12.12000	11.25000
-7.916	4.243	-8.07550	4.10520	2237.29980	1754.25369	441.85570	100.40000	.07660	.19630	12.12000	11.25000
-7.776	6.289	-7.96000	6.18530	2235.59991	1754.49319	440.22970	100.40000	.07790	.19620	12.12000	11.25000
-7.792	8.315	-7.98820	8.23850	2235.70001	1753.37280	441.23320	100.40000	.07690	.19630	12.12000	11.25000
	GRADIENT	.00529	1.00895	-.54582	-.60617	.03844	.11159	-.00015	.00001	-.00000	-.00000

RUN NO. 1031/ 0 RN/L = 3.49 GRADIENT INTERVAL = -5.00/ 5.00

ALPHAO	BETAO	ALFAOU	BETAOU	PT	P	Q	TT	AFA	BFA	DEINLR	DEONLR
-6.166	-7.930	-6.04970	-8.10650	2233.79980	1751.37990	441.27050	100.20000	.07650	.19640	12.12000	11.25000
-6.123	-5.906	-6.03350	-6.09710	2232.89990	1751.70390	440.24800	100.40000	.07740	.19630	12.12000	11.25000
-6.053	-3.999	-6.00030	-4.20340	2233.70001	1753.00880	439.85010	100.50000	.07800	.19620	12.12000	11.25000
-6.113	.073	-6.18540	-.12520	2234.59991	1752.17599	441.29000	100.40000	.07660	.19630	12.12000	11.25000
-5.949	4.187	-6.12290	4.06900	2235.20001	1751.85840	442.05470	100.40000	.07600	.19640	12.12000	11.25000
-5.886	6.167	-6.08110	6.08740	2233.70001	1752.09351	440.60110	100.40000	.07720	.19630	12.12000	11.25000
-5.690	8.315	-5.89500	8.26830	2234.89990	1752.16969	441.54740	100.40000	.07640	.19640	12.12000	11.25000
	GRADIENT	-.01492	1.01051	.18316	-.14042	.26915	-.01219	-.00024	.00002	-.00000	-.00000

IA156A, AEDC PWT 16T-470, O T S W/SILTS (R8NM71) (10 MAY 80)

REFERENCE DATA

SREF = 2690.0000 SQ.FT. XMRP = 976.0000 IN. XT
LREF = 1290.3000 INCHES YMRP = .0000 IN. YT
BREF = 1290.3000 INCHES ZMRP = 400.0000 IN. ZT
SCALE = .0200

PARAMETRIC DATA

IB-ELV = 12.000 OB-ELV = 11.000
BDFLAP = .000 SPDBRK = .000
RUDDER = .000 SILTS = 1.000
MACH = .600 RN/L = 3.500

RUN NO. 1042/ 0 RN/L = 3.50 GRADIENT INTERVAL = -5.00/ 5.00

ALPHAO	BETAO	ALFAOU	BETAOU	PT	P	Q	TT	AFA	BFA	DEINLR	DEONLR
-4.139	-7.848	-3.99400	-8.00170	2237.19971	1755.27251	440.93580	98.60000	.07750	.19620	12.12000	11.25000
-4.203	-5.940	-4.07910	-6.11200	2233.79980	1754.53169	438.68380	99.40000	.07920	.19610	12.12000	11.25000
-4.233	-3.917	-4.14350	-4.10690	2237.89990	1752.91920	443.45360	99.50000	.07510	.19650	12.12000	11.25000
-4.127	.371	-4.21100	.17790	2236.59961	1752.64180	442.58890	99.50000	.07570	.19640	12.12000	11.25000
-3.739	4.228	-3.93500	4.15140	2236.29980	1752.64819	442.33150	99.40000	.07590	.19640	12.12000	11.25000
-3.804	6.065	-4.01010	6.02340	2238.69971	1754.42700	442.88990	100.10000	.07580	.19640	12.12000	11.25000
-3.832	8.043	-4.04290	8.02790	2236.29980	1754.37669	440.91410	100.30000	.07740	.19630	12.12000	11.25000
	GRADIENT	.02483	1.01372	-.19845	-.03386	-.13896	-.01205	.00010	-.00001	-.00000	-.00000

RUN NO. 1043/ 0 RN/L = 3.50 GRADIENT INTERVAL = -5.00/ 5.00

ALPHAO	BETAO	ALFAOU	BETAOU	PT	P	Q	TT	AFA	BFA	DEINLR	DEONLR
-.332	-8.766	-.13570	-8.84270	2236.79980	1753.65430	441.92700	100.30000	.07640	.19640	12.12000	11.25000
-.318	-6.571	-.12180	-6.64830	2235.89990	1753.97850	440.90430	100.40000	.07730	.19630	12.12000	11.25000
-.304	-4.542	-.10790	-4.61870	2238.50000	1755.04150	442.21830	100.50000	.07650	.19640	12.12000	11.25000
-.278	-.389	-.08200	-.46500	2239.50000	1755.12180	442.99270	100.70000	.07590	.19640	12.12000	11.25000
-.246	3.690	-.04960	3.61330	2240.09961	1756.73560	442.17360	100.70000	.07680	.19630	12.12000	11.25000
-.248	5.784	-.05120	5.70860	2239.79980	1755.11520	443.25000	100.70000	.07570	.19640	12.12000	11.25000
-.244	7.880	-.04740	7.80520	2240.19971	1754.80180	443.84280	100.80000	.07510	.19650	12.12000	11.25000
	GRADIENT	.00708	.99996	.19445	.20522	-.00485	.02437	.00004	-.00001	.00000	.00000

RUN NO. 1044/ 0 RN/L = 3.50 GRADIENT INTERVAL = -5.00/ 5.00

ALPHAO	BETAO	ALFAOU	BETAOU	PT	P	Q	TT	AFA	BFA	DEINLR	DEONLR
4.016	-8.006	3.80640	-8.02280	2238.79980	1752.08670	444.89110	100.70000	.07380	.19660	12.12000	11.25000
4.084	-5.830	3.87850	-5.87440	2239.09961	1753.19850	444.23240	100.80000	.07450	.19660	12.12000	11.25000
4.047	-3.841	3.85400	-3.92400	2239.50000	1753.90160	443.99240	100.80000	.07480	.19650	12.12000	11.25000
3.961	.182	3.88430	-.01420	2240.19971	1755.61520	443.17630	100.90000	.07580	.19640	12.12000	11.25000
3.891	4.129	3.97700	3.93750	2236.89990	1752.63550	442.84620	100.40000	.07550	.19650	12.12000	11.25000
3.844	6.178	3.96880	6.00920	2237.19971	1751.30740	444.18580	100.20000	.07420	.19660	12.12000	11.25000
3.838	8.159	3.98250	8.00600	2236.09961	1751.12740	443.40970	100.20000	.07480	.19650	12.12000	11.25000
	GRADIENT	.01541	.98625	-.32461	-.15698	-.14399	-.04994	.00009	-.00000	.00000	-.00000

IA156A, AEDC PWT 16T-470, O T S W/SILTS

(R8NM71) (10 MAY 80)

REFERENCE DATA

SREF = 2690.0000 SQ.FT. XMRP = 976.0000 IN. XT
LREF = 1290.3000 INCHES YMRP = .0000 IN. YT
BREF = 1290.3000 INCHES ZMRP = 400.0000 IN. ZT
SCALE = .0200

PARAMETRIC DATA

IB-ELV = 12.000 OB-ELV = 11.000
BDFLAP = .000 SPDBRK = .000
RUDDER = .000 SILTS = 1.000
MACH = .600 RN/L = 3.500

RUN NO. 1045/ 0 RN/L = 3.51 GRADIENT INTERVAL = -5.00/ 5.00

ALPHAO	BETAO	ALFAOU	BETAOU	PT	P	Q	TT	AFA	BFA	DEINLR	DEONLR
6.193	-7.946	5.99160	-8.00390	2237.79980	1749.76981	445.94780	100.10000	.07250	.19680	12.12000	11.25000
6.176	-5.889	5.98400	-5.97400	2236.69971	1750.60640	444.34010	100.10000	.07390	.19660	12.12000	11.25000
6.146	-3.831	5.97370	-3.95150	2237.09961	1752.42799	443.18430	100.20000	.07520	.19650	12.12000	11.25000
5.858	.189	5.78200	-.00700	2237.29980	1752.62700	443.18900	100.30000	.07520	.19650	12.12000	11.25000
5.792	4.072	5.84070	3.86790	2236.19971	1750.51540	443.99490	100.20000	.07420	.19660	12.12000	11.25000
5.732	6.148	5.82320	5.95880	2236.29980	1750.71660	443.91410	100.30000	.07430	.19660	12.12000	11.25000
5.792	8.167	5.90820	7.99220	2236.89990	1750.29739	444.76100	100.20000	.07350	.19670	12.12000	11.25000
	GRADIENT	-.01701	.98939	-.11291	-.24030	.10197	.00015	-.00013	.00001	.00000	-.00000

RUN NO. 1046/ 0 RN/L = 3.51 GRADIENT INTERVAL = -5.00/ 5.00

ALPHAO	BETAO	ALFAOU	BETAOU	PT	P	Q	TT	AFA	BFA	DEINLR	DEONLR
8.069	-7.802	7.87750	-7.88740	2236.79980	1748.87621	445.83980	100.10000	.07240	.19680	12.12000	11.25000
7.983	-5.735	7.80470	-5.84630	2237.19971	1750.90089	444.51880	100.10000	.07380	.19660	12.12000	11.25000
7.974	-3.764	7.81790	-3.90510	2238.09961	1752.81320	443.70830	100.10000	.07490	.19650	12.12000	11.25000
7.880	.174	7.80350	-.02170	2240.00000	1755.31450	443.25490	100.30000	.07570	.19640	12.12000	11.25000
7.926	4.199	7.94940	3.99020	2240.69971	1755.40109	443.77170	100.40000	.07530	.19650	12.12000	11.25000
7.886	6.200	7.94780	5.99920	2238.89990	1753.81270	443.56130	100.10000	.07520	.19650	12.12000	11.25000
7.898	8.245	7.98870	8.05590	2236.29980	1749.59840	444.82960	100.20000	.07330	.19670	12.12000	11.25000
	GRADIENT	.01658	.99142	.32593	.32385	.00840	.03762	.00005	.00000	.00000	.00000

IA156A, AEDC PWT 16T-470, O T S W/SILTS (R8NM72) (10 MAY 80)

REFERENCE DATA

SREF = 2690.0000 SQ.FT. XMRP = 976.0000 IN. XT
LREF = 1290.3000 INCHES YMRP = .0000 IN. YT
BREF = 1290.3000 INCHES ZMRP = 400.0000 IN. ZT
SCALE = .0200

PARAMETRIC DATA

IB-ELV = 12.000 OB-ELV = 11.000
BDFLAP = .000 SPDBRK = .000
RUDDER = .000 SILTS = 1.000
MACH = .800 RN/L = 3.500

RUN NO. 1047/ 0 RN/L = 3.50 GRADIENT INTERVAL = -5.00/ 5.00

ALPHAO	BETAO	ALFAOU	BETAOU	PT	P	Q	TT	AFA	BFA	DEINLR	DEONLR
-8.304	-5.868	-8.14790	-6.00560	1876.50000	1231.21091	551.37180	99.60000	-.03830	.20400	12.12000	11.25000
-8.251	-3.829	-8.12320	-3.99280	1876.59990	1231.00710	551.58470	99.50000	-.03830	.20400	12.12000	11.25000
-8.163	.342	-8.12820	.13690	1879.00000	1232.88921	552.08080	100.40000	-.03830	.20400	12.12000	11.25000
-8.002	4.333	-8.06580	4.13550	1879.50000	1233.08330	552.31880	100.60000	-.03830	.20400	12.12000	11.25000
-7.991	6.251	-8.08790	6.06740	1879.59990	1233.38499	552.18750	100.70000	-.03820	.20410	12.12000	11.25000
	GRADIENT	.00697	.99576	.35694	.25583	.09015	.13537	.00000	.00000	-.00000	-.00000

RUN NO. 1048/ 0 RN/L = 3.50 GRADIENT INTERVAL = -5.00/ 5.00

ALPHAO	BETAO	ALFAOU	BETAOU	PT	P	Q	TT	AFA	BFA	DEINLR	DEONLR
-6.203	-5.976	-6.02770	-6.08700	1880.20000	1233.67850	552.43210	100.90000	-.03830	.20400	12.12000	11.25000
-6.142	-4.058	-5.98940	-4.19890	1879.89990	1233.58231	552.27540	100.90000	-.03820	.20410	12.12000	11.25000
-6.236	.113	-6.19400	-.08990	1879.39990	1233.28709	552.10620	100.90000	-.03820	.20410	12.12000	11.25000
-6.050	4.259	-6.13590	4.06970	1879.39990	1233.08470	552.24370	100.70000	-.03830	.20400	12.12000	11.25000
-5.788	6.350	-5.91360	6.18490	1879.29980	1233.08640	552.16870	100.70000	-.03830	.20410	12.12000	11.25000
	GRADIENT	-.01765	.99422	-.06018	-.05984	-.00385	-.02402	-.00001	-.00001	-.00000	-.00000

RUN NO. 1049/ 0 RN/L = 3.50 GRADIENT INTERVAL = -5.00/ 5.00

ALPHAO	BETAO	ALFAOU	BETAOU	PT	P	Q	TT	AFA	BFA	DEINLR	DEONLR
-4.135	-6.074	-3.93980	-6.14570	1880.29980	1233.17090	552.85110	100.90000	-.03840	.20400	12.12000	11.25000
-4.334	-3.986	-4.16000	-4.09920	1880.29980	1233.87920	552.36960	100.80000	-.03830	.20410	12.12000	11.25000
-4.238	.373	-4.20730	.16790	1879.79980	1233.48289	552.26900	100.80000	-.03830	.20410	12.12000	11.25000
-3.788	4.319	-3.91470	4.15470	1880.20000	1233.37500	552.63840	100.90000	-.03830	.20400	12.12000	11.25000
-3.866	6.161	-4.01830	6.02020	1880.09990	1233.78130	552.28810	100.80000	-.03820	.20410	12.12000	11.25000
-3.826	6.368	-3.98080	6.23020	1881.39990	1233.96190	553.12720	100.80000	-.03830	.20400	12.12000	11.25000
	GRADIENT	.02883	.99353	-.01380	-.06123	.03140	.01183	.00000	-.00001	-.00000	-.00000

RUN NO. 1050/ 0 RN/L = 3.50 GRADIENT INTERVAL = -5.00/ 5.00

ALPHAO	BETAO	ALFAOU	BETAOU	PT	P	Q	TT	AFA	BFA	DEINLR	DEONLR
-.351	-6.864	-.14730	-6.82570	1880.39990	1234.07980	552.30710	100.80000	-.03820	.20410	12.12000	11.25000
-.339	-4.760	-.13480	-4.72130	1881.09990	1233.96680	552.90190	100.90000	-.03830	.20400	12.12000	11.25000
-.315	-.547	-.11050	-.50900	1879.39990	1233.28709	552.10620	100.90000	-.03820	.20410	12.12000	11.25000
-.276	3.623	-.07200	3.66190	1878.70000	1232.38840	552.19920	100.90000	-.03830	.20400	12.12000	11.25000
-.273	5.732	-.06920	5.77060	1877.29980	1231.50121	551.76660	100.80000	-.03830	.20400	12.12000	11.25000
	GRADIENT	.00749	1.00000	-.28647	-.18824	-.08400	-.00000	.00000	.00000	-.00000	-.00000

IA156A, AEDC PWT 16T-470, O T S W/SILTS (R8NM72) (10 MAY 80)

REFERENCE DATA

SREF = 2690.0000 SQ.FT. XMRP = 976.0000 IN. XT
LREF = 1290.3000 INCHES YMRP = .0000 IN. YT
BREF = 1290.3000 INCHES ZMRP = 400.0000 IN. ZT
SCALE = .0200

PARAMETRIC DATA

IB-ELV = 12.000 OB-ELV = 11.000
BDFLAP = .000 SPDBRK = .000
RUDDER = .000 SILTS = 1.000
MACH = .800 RN/L = 3.500

RUN NO. 1051/ 0 RN/L = 3.49 GRADIENT INTERVAL = -5.00/ 5.00

ALPHAO	BETAO	ALFAOU	BETAOU	PT	P	Q	TT	AFA	BFA	DEINLR	DEONLR
4.088	-5.750	3.93820	-5.89390	1876.00000	1230.61230	551.40890	101.00000	-.03830	.20400	12.12000	11.25000
3.968	-3.736	3.84760	-3.90490	1875.59990	1230.72050	551.03960	101.00000	-.03830	.20410	12.12000	11.25000
3.862	.188	3.90010	-.01650	1875.39990	1230.42020	551.09570	100.90000	-.03830	.20400	12.12000	11.25000
3.796	3.973	3.96720	3.85530	1874.79980	1230.12669	550.85130	101.00000	-.03830	.20400	12.12000	11.25000
3.771	6.089	3.96360	6.01070	1874.00000	1229.53300	550.66310	100.90000	-.03830	.20400	12.12000	11.25000
	GRADIENT	.01550	1.00662	-.10347	-.07703	-.02419	-.00016	-.00000	-.00001	.00000	.00000

RUN NO. 1052/ 0 RN/L = 3.50 GRADIENT INTERVAL = -5.00/ 5.00

ALPHAO	BETAO	ALFAOU	BETAOU	PT	P	Q	TT	AFA	BFA	DEINLR	DEONLR
6.093	-5.815	5.97380	-5.98510	1889.09990	1239.19479	555.26680	101.00000	-.03830	.20400	12.12000	11.25000
6.050	-3.777	5.96660	-3.96670	1886.79980	1238.01930	554.36400	101.00000	-.03830	.20400	12.12000	11.25000
5.751	.160	5.78780	-.04450	1882.89990	1235.15060	553.42900	101.00000	-.03830	.20400	12.12000	11.25000
5.680	4.069	5.82770	3.92270	1876.89990	1231.40669	551.53490	101.00000	-.03830	.20400	12.12000	11.25000
5.760	6.016	5.93330	5.90150	1874.20000	1229.22610	551.01980	100.90000	-.03840	.20400	12.12000	11.25000
	GRADIENT	-.01774	1.00562	-1.26158	-.84275	-.36047	-.00000	.00000	-.00000	-.00000	.00000

IA156A, AEDC PWT 16T-470, O T S W/SILTS (R8NM73) (10 MAY 80)

REFERENCE DATA

SREF = 2690.0000 SQ.FT. XMRP = 976.0000 IN. XT
LREF = 1290.3000 INCHES YMRP = .0000 IN. YT
BREF = 1290.3000 INCHES ZMRP = 400.0000 IN. ZT
SCALE = .0200

PARAMETRIC DATA

IB-ELV = 12.000 OB-ELV = 11.000
BDFLAP = .000 SPDBRK = .000
RUDDER = .000 SILTS = 1.000
MACH = .900 RN/L = 3.500

RUN NO. 1053/ 0 RN/L = 3.50 GRADIENT INTERVAL = -5.00/ 5.00

ALPHAO	BETAO	ALFAOU	BETAOU	PT	P	Q	TT	AFA	BFA	DEINLR	DEONLR
-8.265	-5.904	-8.09970	-6.02840	1781.70000	1053.55051	597.24390	99.80000	-.05180	.20010	12.12000	11.25000
-8.238	-3.811	-8.09960	-3.96450	1778.70000	1052.08080	596.05710	100.30000	-.05180	.20010	12.12000	11.25000
-8.189	.338	-8.14090	.13700	1781.20000	1053.65871	596.83590	100.30000	-.05170	.20010	12.12000	11.25000
-7.993	4.302	-8.04320	4.10130	1781.70000	1053.75220	597.12380	100.40000	-.05170	.20010	12.12000	11.25000
	GRADIENT	.00682	.99416	.37160	.20738	.13192	.01223	.00001	.00000	.00000	.00000

IA156A, AEDC PWT 16T-470, O T S W/SILTS (R8NM73) (10 MAY 80)

REFERENCE DATA

SREF = 2690.0000 SQ.FT. XMRP = 976.0000 IN. XT
LREF = 1290.3000 INCHES YMRP = .0000 IN. YT
BREF = 1290.3000 INCHES ZMRP = 400.0000 IN. ZT
SCALE = .0200

PARAMETRIC DATA

IB-ELV = 12.000 OB-ELV = 11.000
BDFLAP = .000 SPDBRK = .000
RUDDER = .000 SILTS = 1.000
MACH = .900 RN/L = 3.500

RUN NO. 1054/ 0 RN/L = 3.50 GRADIENT INTERVAL = -5.00/ 5.00

ALPHAO	BETAO	ALFAOU	BETAOU	PT	P	Q	TT	AFA	BFA	DEINLR	DEONLR
-6.202	-5.973	-6.01990	-6.07090	1784.59990	1055.32420	598.18090	100.40000	-.05180	.20010	12.12000	11.25000
-6.173	-4.070	-6.01190	-4.19890	1785.59990	1056.31860	598.27610	100.40000	-.05170	.20010	12.12000	11.25000
-6.253	.118	-6.19840	-.08080	1786.79980	1056.30099	599.11110	100.50000	-.05180	.20010	12.12000	11.25000
-6.057	4.276	-6.13070	4.08240	1785.09990	1055.51860	598.40870	100.50000	-.05180	.20010	12.12000	11.25000
-5.843	6.363	-5.95730	6.19050	1778.00000	1051.78830	595.75020	100.40000	-.05170	.20010	12.12000	11.25000
	GRADIENT	-.01427	.99234	-.05949	-.09575	.01612	.01200	-.00001	-.00000	-.00000	-.00000

RUN NO. 1055/ 0 RN/L = 3.50 GRADIENT INTERVAL = -5.00/ 5.00

ALPHAO	BETAO	ALFAOU	BETAOU	PT	P	Q	TT	AFA	BFA	DEINLR	DEONLR
-4.160	-6.094	-3.96180	-6.15160	1783.89990	1054.72900	598.05420	100.40000	-.05180	.20010	12.12000	11.25000
-4.335	-4.006	-4.15330	-4.10540	1782.59990	1054.64720	597.20950	100.40000	-.05170	.20010	12.12000	11.25000
-4.250	.375	-4.20650	.17270	1782.70000	1054.34300	597.45920	100.50000	-.05180	.20010	12.12000	11.25000
-3.800	4.325	-3.91530	4.15360	1782.89990	1054.84450	597.29810	100.40000	-.05170	.20010	12.12000	11.25000
-3.881	6.172	-4.02350	6.02190	1783.89990	1055.13260	597.81400	100.40000	-.05170	.20010	12.12000	11.25000
	GRADIENT	.02783	.99109	.03577	.02200	.01148	.00041	-.00000	.00000	.00000	.00000

RUN NO. 1056/ 0 RN/L = 3.50 GRADIENT INTERVAL = -5.00/ 5.00

ALPHAO	BETAO	ALFAOU	BETAOU	PT	P	Q	TT	AFA	BFA	DEINLR	DEONLR
-.383	-7.001	-.18270	-6.94930	1784.20000	1055.02730	598.08280	100.40000	-.05180	.20010	12.12000	11.25000
-.364	-4.814	-.16390	-4.76270	1783.59990	1055.13699	597.60520	100.40000	-.05170	.20010	12.12000	11.25000
-.332	-.509	-.13210	-.45720	1783.39990	1055.03909	597.52590	100.40000	-.05170	.20010	12.12000	11.25000
-.297	3.586	-.09720	3.63840	1784.29980	1054.42070	598.51220	100.30000	-.05180	.20010	12.12000	11.25000
-.300	5.750	-.10030	5.80180	1783.59990	1054.73340	597.84550	100.40000	-.05180	.20010	12.12000	11.25000
	GRADIENT	.00793	1.00001	.08220	-.08473	.10688	-.01180	-.00001	-.00000	-.00000	.00000

RUN NO. 1058/ 0 RN/L = 3.51 GRADIENT INTERVAL = -5.00/ 5.00

ALPHAO	BETAO	ALFAOU	BETAOU	PT	P	Q	TT	AFA	BFA	DEINLR	DEONLR
4.100	-5.777	3.96150	-5.93050	1791.09990	1059.26489	600.30200	100.50000	-.05180	.20010	12.12000	11.25000
3.958	-3.686	3.85150	-3.86330	1789.89990	1058.37450	600.00730	100.50000	-.05180	.20010	12.12000	11.25000
3.691	.102	3.73780	-.09940	1788.79980	1057.58350	599.72220	100.50000	-.05180	.20010	12.12000	11.25000
3.806	3.991	3.98430	3.88560	1789.59990	1057.97530	600.03880	100.50000	-.05180	.20010	12.12000	11.25000
3.757	6.067	3.95300	6.00120	1788.20000	1060.31619	597.68040	100.50000	-.05150	.20020	12.12000	11.25000
	GRADIENT	.01750	1.00943	-.03799	-.05132	.00445	.00000	.00000	-.00000	.00000	.00000

IA156A, AEDC PWT 16T-470, O T S W/SILTS

(R8NM74) (10 MAY 80)

REFERENCE DATA

SREF = 2690.0000 SQ.FT. XMRP = 976.0000 IN. XT
LREF = 1290.3000 INCHES YMRP = .0000 IN. YT
BREF = 1290.3000 INCHES ZMRP = 400.0000 IN. ZT
SCALE = .0200

PARAMETRIC DATA

IB-ELV = 12.000 OB-ELV = 11.000
BDFLAP = .000 SPDBRK = .000
RUDDER = .000 SILTS = 1.000
MACH = .950 RN/L = 3.500

RUN NO. 1059/ 0 RN/L = 3.50 GRADIENT INTERVAL = -5.00/ 5.00

ALPHAO	BETAO	ALFAOU	BETAOU	PT	P	Q	TT	AFA	BFA	DEINLR	DEONLR
-8.242	-5.880	-8.07520	-5.99960	1744.79980	975.74710	616.89870	100.00000	-.05530	.19770	12.12000	11.25000
-8.273	-3.814	-8.13250	-3.96330	1748.29980	978.92290	617.46730	100.10000	-.05540	.19770	12.12000	11.25000
-8.173	.400	-8.12250	.20100	1747.50000	978.42990	617.20950	100.00000	-.05540	.19770	12.12000	11.25000
-8.007	4.354	-8.05410	4.15470	1750.59990	979.39580	618.72710	100.00000	-.05540	.19770	12.12000	11.25000
-8.032	6.270	-8.11330	6.08170	1749.59990	978.70410	618.44600	99.90000	-.05540	.19770	12.12000	11.25000
	GRADIENT	.00952	.99378	.27644	.05598	.15188	-.01237	.00000	-.00000	.00000	-.00000

RUN NO. 1060/ 0 RN/L = 3.50 GRADIENT INTERVAL = -5.00/ 5.00

ALPHAO	BETAO	ALFAOU	BETAOU	PT	P	Q	TT	AFA	BFA	DEINLR	DEONLR
-6.220	-5.996	-6.03660	-6.08870	1746.39990	977.03490	617.24880	99.80000	-.05540	.19770	12.12000	11.25000
-6.170	-4.074	-6.00720	-4.19840	1750.29980	978.99680	618.74780	99.80000	-.05540	.19770	12.12000	11.25000
-6.247	.101	-6.18860	-.09530	1748.09990	978.52270	617.55490	99.80000	-.05540	.19770	12.12000	11.25000
-6.069	4.265	-6.13860	4.07200	1750.59990	979.29490	618.78220	99.80000	-.05540	.19770	12.12000	11.25000
-5.780	6.369	-5.89180	6.19610	1745.79980	976.43870	617.17970	99.80000	-.05540	.19770	12.12000	11.25000
	GRADIENT	-.01577	.99177	.03573	.03568	.00399	.00000	.00000	-.00000	.00000	-.00000

RUN NO. 1061/ 0 RN/L = 3.50 GRADIENT INTERVAL = -5.00/ 5.00

ALPHAO	BETAO	ALFAOU	BETAOU	PT	P	Q	TT	AFA	BFA	DEINLR	DEONLR
-4.121	-6.098	-3.92210	-6.14950	1749.09990	978.40870	618.27810	99.80000	-.05540	.19770	12.12000	11.25000
-4.336	-4.006	-4.15360	-4.09990	1749.70000	979.10550	618.29170	99.80000	-.05540	.19770	12.12000	11.25000
-4.251	.375	-4.20380	.17520	1749.29980	978.80880	618.19040	99.80000	-.05540	.19770	12.12000	11.25000
-3.806	4.342	-3.91780	4.16970	1748.89990	978.71340	617.97880	99.80000	-.05540	.19770	12.12000	11.25000
-3.876	6.160	-4.01510	6.00900	1748.70000	978.41380	618.01100	99.80000	-.05540	.19770	12.12000	11.25000
	GRADIENT	.02756	.99043	-.09577	-.04733	-.03724	.00000	-.00000	.00000	.00000	.00000

RUN NO. 1062/ 0 RN/L = 3.50 GRADIENT INTERVAL = -5.00/ 5.00

ALPHAO	BETAO	ALFAOU	BETAOU	PT	P	Q	TT	AFA	BFA	DEINLR	DEONLR
-.398	-6.992	-.20020	-6.93660	1748.29980	978.31860	617.79910	99.80000	-.05540	.19770	12.12000	11.25000
-.379	-4.843	-.18100	-4.78760	1747.79980	977.92240	617.68630	99.80000	-.05540	.19770	12.12000	11.25000
-.347	-.532	-.14970	-.47690	1747.09990	977.32760	617.55030	99.80000	-.05540	.19770	12.12000	11.25000
-.307	3.589	-.10910	3.64450	1744.89990	976.55130	616.52340	99.80000	-.05540	.19770	12.12000	11.25000
-.306	5.751	-.10870	5.80600	1748.89990	979.61960	617.48070	99.80000	-.05540	.19780	12.12000	11.25000
	GRADIENT	.00852	1.00001	-.34253	-.16242	-.13710	-.00000	.00000	-.00000	-.00000	-.00000

IA156A, AEDC PWT 16T-470, O T S W/SILTS (R8NM74) (10 MAY 80)

REFERENCE DATA

SREF = 2690.0000 SQ.FT. XMRP = 976.0000 IN. XT
LREF = 1290.3000 INCHES YMRP = .0000 IN. YT
BREF = 1290.3000 INCHES ZMRP = 400.0000 IN. ZT
SCALE = .0200

PARAMETRIC DATA

IB-ELV = 12.000 OB-ELV = 11.000
BDFLAP = .000 SPDBRK = .000
RUDDER = .000 SILTS = 1.000
MACH = .950 RN/L = 3.500

RUN NO. 1063/ 0 RN/L = 3.50 GRADIENT INTERVAL = -5.00/ 5.00

ALPHAO	BETAO	ALFAOU	BETAOU	PT	P	Q	TT	AFA	BFA	DEINLR	DEONLR
3.973	-5.846	3.83570	-5.99900	1749.89990	981.62040	617.04100	99.90000	-.05530	.19780	12.12000	11.25000
3.965	-3.756	3.86200	-3.93380	1747.00000	980.95430	615.48880	99.80000	-.05520	.19790	12.12000	11.25000
3.868	.183	3.92290	-.01470	1749.09990	980.01980	617.39310	99.80000	-.05530	.19780	12.12000	11.25000
3.788	3.934	3.96600	3.83150	1749.89990	980.10990	617.87230	99.90000	-.05540	.19780	12.12000	11.25000
3.762	6.067	3.95800	6.00520	1749.00000	981.73320	616.38310	99.80000	-.05520	.19780	12.12000	11.25000
	GRADIENT	.01354	1.00968	.37841	-.11087	.31141	.01289	-.00003	-.00001	-.00000	-.00000

IA156A, AEDC PWT 16T-470, O T S W/SILTS (R8NM75) (10 MAY 80)

REFERENCE DATA

SREF = 2690.0000 SQ.FT. XMRP = 976.0000 IN. XT
LREF = 1290.3000 INCHES YMRP = .0000 IN. YT
BREF = 1290.3000 INCHES ZMRP = 400.0000 IN. ZT
SCALE = .0200

PARAMETRIC DATA

IB-ELV = 12.000 OB-ELV = 11.000
BDFLAP = .000 SPDBRK = .000
RUDDER = .000 SILTS = 1.000
MACH = 1.050 RN/L = 3.500

RUN NO. 1064/ 0 RN/L = 3.50 GRADIENT INTERVAL = -5.00/ 5.00

ALPHAO	BETAO	ALFAOU	BETAOU	PT	P	Q	TT	AFA	BFA	DEINLR	DEONLR
-8.235	-5.891	-8.06480	-6.00360	1700.29980	850.57500	651.48800	100.50000	-.06070	.19450	12.12000	11.25000
-8.265	-3.820	-8.12000	-3.96300	1700.29980	847.96850	652.66500	100.60000	-.06080	.19450	12.12000	11.25000
-8.181	.395	-8.12600	.19900	1706.20000	850.71220	655.01930	100.60000	-.06080	.19450	12.12000	11.25000
-8.023	4.347	-8.06550	4.14770	1706.00000	849.21070	655.57230	99.50000	-.06080	.19440	12.12000	11.25000
-8.027	6.273	-8.10320	6.08390	1703.79980	848.93330	654.35960	99.30000	-.06080	.19450	12.12000	11.25000
	GRADIENT	.00658	.99308	.70575	.15763	.35824	-.13320	.00000	-.00001	-.00000	-.00000

RUN NO. 1065/ 0 RN/L = 3.51 GRADIENT INTERVAL = -5.00/ 5.00

ALPHAO	BETAO	ALFAOU	BETAOU	PT	P	Q	TT	AFA	BFA	DEINLR	DEONLR
-6.221	-6.014	-6.03600	-6.09940	1703.50000	848.53560	654.35600	100.00000	-.06080	.19440	12.12000	11.25000
-6.150	-4.070	-5.98330	-4.18720	1705.79980	848.71170	655.67460	99.90000	-.06090	.19440	12.12000	11.25000
-6.266	.103	-6.20190	-.09030	1707.29980	850.19920	655.91870	99.80000	-.06090	.19440	12.12000	11.25000
-6.040	4.270	-6.10530	4.07720	1706.09990	849.61060	655.45360	99.70000	-.06090	.19440	12.12000	11.25000
-6.018	6.270	-6.12030	6.09340	1703.89990	847.82980	654.91580	99.50000	-.06080	.19440	12.12000	11.25000
	GRADIENT	-.01464	.99092	.03606	.10784	-.02648	-.02398	-.00000	.00000	.00000	.00000

IA156A, AEDC PWT 16T-470, O T S W/SILTS (R8NM75) (10 MAY 80)

REFERENCE DATA

SREF = 2690.0000 SQ.FT. XMRP = 976.0000 IN. XT
LREF = 1290.3000 INCHES YMRP = .0000 IN. YT
BREF = 1290.3000 INCHES ZMRP = 400.0000 IN. ZT
SCALE = .0200

PARAMETRIC DATA

IB-ELV = 12.000 OB-ELV = 11.000
BDFLAP = .000 SPDBRK = .000
RUDDER = .000 SILTS = 1.000
MACH = 1.050 RN/L = 3.500

RUN NO. 1066/ 0 RN/L = 3.50 GRADIENT INTERVAL = -5.00/ 5.00

ALPHAO	BETAO	ALFAOU	BETAOU	PT	P	Q	TT	AFA	BFA	DEINLR	DEONLR
-4.139	-6.114	-3.94000	-6.15860	1701.09990	846.75710	653.69580	100.00000	-.06080	.19440	12.12000	11.25000
-4.344	-4.021	-4.15900	-4.10750	1701.00000	846.55760	653.72460	100.00000	-.06080	.19440	12.12000	11.25000
-4.271	.362	-4.21780	.16510	1701.29980	847.15580	653.63840	100.00000	-.06090	.19440	12.12000	11.25000
-3.794	4.347	-3.90280	4.17420	1701.50000	846.65260	653.98560	100.10000	-.06080	.19440	12.12000	11.25000
-3.881	6.180	-4.01600	6.02720	1701.89990	847.24980	653.96090	100.00000	-.06080	.19440	12.12000	11.25000
	GRADIENT	.02989	.98946	.05990	.01343	.03035	.01175	-.00000	.00000	.00000	.00000

RUN NO. 1067/ 0 RN/L = 3.50 GRADIENT INTERVAL = -5.00/ 5.00

ALPHAO	BETAO	ALFAOU	BETAOU	PT	P	Q	TT	AFA	BFA	DEINLR	DEONLR
-.434	-7.039	-.23960	-6.97840	1702.20000	847.34670	654.09960	100.40000	-.06090	.19440	12.12000	11.25000
-.416	-4.882	-.22150	-4.82140	1701.20000	847.55790	653.39720	100.10000	-.06080	.19440	12.12000	11.25000
-.390	-.537	-.19530	-.47630	1701.00000	847.35960	653.36470	100.20000	-.06080	.19440	12.12000	11.25000
-.352	3.599	-.15790	3.66000	1701.09990	846.85720	653.65090	100.10000	-.06090	.19440	12.12000	11.25000
-.352	5.767	-.15730	5.82760	1700.70000	846.36040	653.63090	100.10000	-.06090	.19440	12.12000	11.25000
	GRADIENT	.00749	1.00001	-.01209	-.08231	.02960	.00019	-.00001	-.00000	.00000	-.00000

RUN NO. 1068/ 0 RN/L = 3.50 GRADIENT INTERVAL = -5.00/ 5.00

ALPHAO	BETAO	ALFAOU	BETAOU	PT	P	Q	TT	AFA	BFA	DEINLR	DEONLR
3.960	-5.839	3.82870	-5.99520	1702.79980	847.03980	654.60180	100.30000	-.06090	.19440	12.12000	11.25000
3.945	-3.748	3.84900	-3.92790	1702.39990	849.04860	653.45630	100.30000	-.06080	.19450	12.12000	11.25000
3.825	.184	3.88580	-.01040	1702.70000	847.14090	654.49560	100.20000	-.06090	.19440	12.12000	11.25000
3.799	3.943	3.97850	3.84600	1697.20000	844.09230	652.52150	100.10000	-.06090	.19440	12.12000	11.25000
3.771	6.067	3.96740	6.01120	1702.39990	847.84570	653.99730	100.20000	-.06080	.19440	12.12000	11.25000
	GRADIENT	.01678	1.01065	-.67032	-.64320	-.11858	-.02600	-.00001	-.00001	-.00000	.00000

IA156A, AEDC PWT 16T-470, O T S W/SILTS (R8NM76) (10 MAY 80)

REFERENCE DATA

SREF = 2690.0000 SQ.FT. XMRP = 976.0000 IN. XT
LREF = 1290.3000 INCHES YMRP = .0000 IN. YT
BREF = 1290.3000 INCHES ZMRP = 400.0000 IN. ZT
SCALE = .0200

PARAMETRIC DATA

IB-ELV = 12.000 OB-ELV = 11.000
BDFLAP = .000 SPDBRK = .000
RUDDER = .000 SILTS = 1.000
MACH = 1.100 RN/L = 3.500

RUN NO. 1069/ 0 RN/L = 3.50 GRADIENT INTERVAL = -5.00/ 5.00

ALPHAO	BETAO	ALFAOU	BETAOU	PT	P	Q	TT	AFA	BFA	DEINLR	DEONLR
-8.222	-6.002	-8.04950	-6.11130	1689.00000	790.61940	670.18950	100.20000	-.06320	.19440	12.12000	11.25000
-8.271	-3.866	-8.12330	-4.00740	1689.09990	791.41820	669.93210	100.20000	-.06320	.19440	12.12000	11.25000
-8.193	.284	-8.13230	.08890	1691.59990	792.29470	671.04030	100.30000	-.06320	.19440	12.12000	11.25000
-8.019	4.302	-8.05770	4.10150	1687.89990	791.62940	669.15010	100.20000	-.06320	.19440	12.12000	11.25000
-8.001	6.248	-8.07550	6.05720	1684.79980	789.55860	668.16530	100.10000	-.06320	.19440	12.12000	11.25000
	GRADIENT	.00798	.99271	-.14281	.02687	-.09375	.00013	-.00000	.00000	.00000	.00000

RUN NO. 1070/ 0 RN/L = 3.50 GRADIENT INTERVAL = -5.00/ 5.00

ALPHAO	BETAO	ALFAOU	BETAOU	PT	P	Q	TT	AFA	BFA	DEINLR	DEONLR
-6.216	-6.014	-6.02950	-6.09690	1689.39990	791.31540	670.14750	100.10000	-.06320	.19440	12.12000	11.25000
-6.155	-4.091	-5.98630	-4.20600	1690.09990	791.50880	670.47800	100.20000	-.06320	.19440	12.12000	11.25000
-6.285	.117	-6.21840	-.07600	1690.70000	791.00340	671.02640	100.10000	-.06320	.19450	12.12000	11.25000
-6.066	4.273	-6.12840	4.07880	1690.89990	791.50150	670.94630	100.10000	-.06320	.19440	12.12000	11.25000
-5.855	6.375	-5.95910	6.19950	1690.70000	792.50290	670.43430	100.10000	-.06320	.19440	12.12000	11.25000
	GRADIENT	-.01707	.99051	.09575	-.00112	.05614	-.01198	-.00000	.00000	-.00000	-.00000

RUN NO. 1071/ 0 RN/L = 3.50 GRADIENT INTERVAL = -5.00/ 5.00

ALPHAO	BETAO	ALFAOU	BETAOU	PT	P	Q	TT	AFA	BFA	DEINLR	DEONLR
-4.144	-6.117	-3.94380	-6.15850	1689.00000	792.11890	669.59670	100.10000	-.06320	.19440	12.12000	11.25000
-4.345	-4.025	-4.15910	-4.10890	1688.79980	790.82100	669.99370	100.10000	-.06320	.19440	12.12000	11.25000
-4.263	.373	-4.20790	.17620	1688.39990	790.52490	669.87790	100.10000	-.06320	.19440	12.12000	11.25000
-3.796	4.339	-3.90230	4.16430	1688.89990	790.82010	670.05200	100.10000	-.06320	.19440	12.12000	11.25000
-3.871	6.167	-4.00490	6.01200	1690.59990	792.20390	670.49440	100.00000	-.06320	.19440	12.12000	11.25000
	GRADIENT	.02995	.98892	.01011	-.00132	.00637	.00000	-.00001	-.00000	.00000	.00000

RUN NO. 1072/ 0 RN/L = 3.50 GRADIENT INTERVAL = -5.00/ 5.00

ALPHAO	BETAO	ALFAOU	BETAOU	PT	P	Q	TT	AFA	BFA	DEINLR	DEONLR
-.432	-7.047	-.23730	-6.98320	1692.00000	793.19070	670.91870	100.10000	-.06320	.19440	12.12000	11.25000
-.421	-4.889	-.22680	-4.82620	1693.79980	793.07400	672.01220	99.90000	-.06320	.19440	12.12000	11.25000
-.381	-.536	-.18700	-.47260	1691.20000	791.99850	670.92460	99.90000	-.06320	.19440	12.12000	11.25000
-.352	3.597	-.15740	3.66060	1688.70000	790.62210	670.01390	100.00000	-.06320	.19440	12.12000	11.25000
-.349	5.788	-.15490	5.85110	1684.09990	789.46530	667.79490	100.00000	-.06320	.19440	12.12000	11.25000
	GRADIENT	.00819	1.00002	-.60089	-.28854	-.23559	.01168	-.00000	-.00000	-.00000	.00000

IA156A, AEDC PWT 16T-470, O T S W/SILTS (R8NM76) (10 MAY 80)

REFERENCE DATA

SREF = 2690.0000 SQ.FT. XMRP = 976.0000 IN. XT
LREF = 1290.3000 INCHES YMRP = .0000 IN. YT
BREF = 1290.3000 INCHES ZMRP = 400.0000 IN. ZT
SCALE = .0200

PARAMETRIC DATA

IB-ELV = 12.000 OB-ELV = 11.000
BDFLAP = .000 SPDBRK = .000
RUDDER = .000 SILTS = 1.000
MACH = 1.100 RN/L = 3.500

RUN NO. 1073/ 0 RN/L = 3.51 GRADIENT INTERVAL = -5.00/ 5.00

ALPHAO	BETAO	ALFAOU	BETAOU	PT	P	Q	TT	AFA	BFA	DEINLR	DEONLR
4.082	-5.734	3.95550	-5.89440	1690.89990	791.80130	670.82790	100.00000	-.06320	.19440	12.12000	11.25000
3.923	-3.736	3.82780	-3.91730	1692.70000	793.88400	671.05180	100.10000	-.06320	.19440	12.12000	11.25000
3.823	.181	3.88570	-.01390	1693.20000	792.97950	671.70040	100.10000	-.06320	.19440	12.12000	11.25000
3.797	3.912	3.97790	3.81610	1691.09990	792.49930	670.66850	99.90000	-.06320	.19440	12.12000	11.25000
3.759	6.042	3.95640	5.98800	1690.29980	792.10670	670.35820	100.00000	-.06320	.19440	12.12000	11.25000
	GRADIENT	.01958	1.01097	-.20640	-.18145	-.04832	-.02593	.00000	.00000	-.00000	.00000

IA156A, AEDC PWT 16T-470, O T S W/SILTS (R8NM77) (10 MAY 80)

REFERENCE DATA

SREF = 2690.0000 SQ.FT. XMRP = 976.0000 IN. XT
LREF = 1290.3000 INCHES YMRP = .0000 IN. YT
BREF = 1290.3000 INCHES ZMRP = 400.0000 IN. ZT
SCALE = .0200

PARAMETRIC DATA

IB-ELV = 8.000 OB-ELV = 11.000
BDFLAP = .000 SPDBRK = .000
RUDDER = .000 SILTS = 1.000
MACH = .600 RN/L = 3.500

RUN NO. 1077/ 0 RN/L = 3.50 GRADIENT INTERVAL = -5.00/ 5.00

ALPHAO	BETAO	ALFAOU	BETAOU	PT	P	Q	TT	AFA	BFA	DEINLR	DEONLR
-8.237	-7.852	-8.14970	-8.04420	2238.50000	1757.37990	440.29930	98.90000	.07850	.19610	8.10000	11.25000
-8.105	-5.811	-8.04500	-6.01280	2242.19971	1758.92751	442.14090	98.60000	.07730	.19630	8.10000	11.25000
-8.136	-3.804	-8.11610	-4.01420	2219.89990	1743.84740	435.76220	98.00000	.07940	.19600	8.10000	11.25000
-8.043	.294	-8.12100	.09830	2238.79980	1754.62820	442.80910	98.10000	.07590	.19640	8.10000	11.25000
-7.918	4.247	-8.07550	4.10820	2232.09961	1747.14600	443.31180	99.00000	.07400	.19660	8.10000	11.25000
-7.903	6.174	-8.08620	6.06870	2223.09961	1745.50760	437.09160	99.20000	.07870	.19610	8.10000	11.25000
-7.921	8.177	-8.11720	8.09950	2236.00000	1756.11160	439.23750	99.20000	.07910	.19610	8.10000	11.25000
	GRADIENT	.00501	1.00889	1.53420	.42323	.94252	.12361	-.00067	.00007	.00000	-.00000

RUN NO. 1078/ 0 RN/L = 3.50 GRADIENT INTERVAL = -5.00/ 5.00

ALPHAO	BETAO	ALFAOU	BETAOU	PT	P	Q	TT	AFA	BFA	DEINLR	DEONLR
-6.160	-7.925	-6.04420	-8.10050	2238.59961	1754.83591	442.47070	99.80000	.07620	.19640	8.10000	11.25000
-6.125	-5.906	-6.03410	-6.09620	2234.79980	1751.96851	441.62820	99.30000	.07630	.19640	8.10000	11.25000
-6.049	-4.002	-5.99430	-4.20520	2231.50000	1750.10719	440.38110	99.30000	.07690	.19630	8.10000	11.25000
-6.113	.076	-6.18560	-.12190	2234.50000	1752.27980	441.12080	99.40000	.07680	.19630	8.10000	11.25000
-5.959	4.184	-6.13380	4.06630	2230.50000	1753.17360	441.22830	99.20000	.07690	.19630	8.10000	11.25000
-5.881	6.166	-6.07630	6.08580	2231.89990	1749.69189	441.05790	99.10000	.07630	.19640	8.10000	11.25000
-5.686	8.298	-5.89150	8.25160	2228.50000	1747.93430	439.64140	99.20000	.07710	.19630	8.10000	11.25000
	GRADIENT	-.01701	1.01053	.48837	.37442	.10341	-.01226	.00000	.00000	-.00000	.00000

IA156A, AEDC PWT 16T-470, O T S W/SILTS (R8NM77) (10 MAY 80)

REFERENCE DATA

SREF = 2690.0000 SQ.FT. XMRP = 976.0000 IN. XT
LREF = 1290.3000 INCHES YMRP = .0000 IN. YT
BREF = 1290.3000 INCHES ZMRP = 400.0000 IN. ZT
SCALE = .0200

PARAMETRIC DATA

IB-ELV = 8.000 OB-ELV = 11.000
BDFLAP = .000 SPDBRK = .000
RUDDER = .000 SILTS = 1.000
MACH = .600 RN/L = 3.500

RUN NO. 1079/ 0 RN/L = 3.50 GRADIENT INTERVAL = -5.00/ 5.00

ALPHAO	BETAO	ALFAOU	BETAOU	PT	P	Q	TT	AFA	BFA	DEINLR	DEONLR
-4.011	-8.034	-3.86340	-8.18500	2232.19971	1751.61720	439.73070	99.90000	.07780	.19620	8.10000	11.25000
-4.229	-5.946	-4.10470	-6.11610	2232.39990	1751.20630	440.23610	99.90000	.07730	.19630	8.10000	11.25000
-4.237	-3.905	-4.14840	-4.09550	2239.19971	1755.12820	442.73540	100.00000	.07610	.19640	8.10000	11.25000
-4.049	.181	-4.12550	-.01600	2240.69971	1757.73950	441.85450	100.00000	.07730	.19630	8.10000	11.25000
-3.721	4.263	-3.91940	4.19040	2236.69971	1755.18159	440.58980	100.00000	.07780	.19620	8.10000	11.25000
-3.804	6.057	-4.01120	6.01810	2235.79980	1754.69240	440.23460	100.00000	.07800	.19620	8.10000	11.25000
-3.939	8.043	-4.04950	8.02920	2235.89990	1755.19850	439.90310	100.10000	.07830	.19610	8.10000	11.25000
	GRADIENT	.02803	1.01443	-.30600	.00661	-.26268	.00000	.00021	-.00002	.00000	-.00000

RUN NO. 1080/ 0 RN/L = 3.50 GRADIENT INTERVAL = -5.00/ 5.00

ALPHAO	BETAO	ALFAOU	BETAOU	PT	P	Q	TT	AFA	BFA	DEINLR	DEONLR
-.342	-8.724	-.14560	-8.80130	2236.69971	1754.26640	441.34090	100.10000	.07700	.19630	8.10000	11.25000
-.336	-6.507	[illegible] 13940	-6.58490	2236.00000	1754.28130	440.74000	100.10000	.07750	.19620	8.10000	11.25000
-.322	-4.536	[illegible]	-4.61350	2236.19971	1754.58200	440.66140	100.10000	.07760	.19620	8.10000	11.25000
-.297	-.416	-.10090	-.49230	2237.19971	1754.45900	441.60300	100.10000	.07680	.19630	8.10000	11.25000
-.268	3.690	-.07210	[illegible]	2236.39990	1754.17110	441.16670	100.10000	.07710	.19630	8.10000	11.25000
-.262	5.784	-.06590	[illegible]	2237.69971	1752.82179	443.36550	100.10000	.07510	.19650	8.10000	11.25000
-.256	7.880	-.06020	[illegible]	2236.59961	1753.76030	441.67190	100.10000	.07660	.19630	8.10000	11.25000
	GRADIENT	.00652	1.00006	.02447	-.04994	.06153	-.00000	-.00006	.00001	.00000	.00000

RUN NO. 1081/ 0 RN/L = 3.50 GRADIENT INTERVAL = -5.00/ 5.00

ALPHAO	BETAO	ALFAOU	BETAOU	PT	P	Q	TT	AFA	BFA	DEINLR	DEONLR
4.168	-7.890	3.95850	-7.91070	2237.69971	1752.31351	443.78170	100.10000	.07470	.19650	8.10000	11.25000
4.094	-5.794	3.88880	-5.84060	2237.39990	1751.30321	444.35720	100.10000	.07410	.19660	8.10000	11.25000
4.034	-3.797	3.84060	-3.88040	2236.89990	1752.83890	442.67940	100.10000	.07570	.19640	8.10000	11.25000
3.846	.081	3.76410	-.11270	2236.59961	1753.55690	441.83860	100.10000	.07650	.19640	8.10000	11.25000
3.893	4.060	3.97670	3.86740	2237.79980	1753.73460	442.70140	100.10000	.07580	.19640	8.10000	11.25000
3.845	6.167	3.96860	5.99660	2236.29980	1752.13989	442.74830	100.10000	.07550	.19650	8.10000	11.25000
3.840	8.154	3.98330	8.00040	2237.39990	1752.52319	443.35820	100.10000	.07510	.19650	8.10000	11.25000
	GRADIENT	.01748	.98616	.11535	.11370	.00373	-.00000	.00001	.00000	-.00000	-.00000

IA156A, AEDC PWT 16T-470, O T S W/SILTS (R8NM77) (10 MAY 80)

REFERENCE DATA

SREF = 2690.0000 SQ.FT. XMRP = 976.0000 IN. XT
LREF = 1290.3000 INCHES YMRP = .0000 IN. YT
BREF = 1290.3000 INCHES ZMRP = 400.0000 IN. ZT
SCALE = .0200

PARAMETRIC DATA

IB-ELV = 8.000 OB-ELV = 11.000
BDFLAP = .000 SPDBRK = .000
RUDDER = .000 SILTS = 1.000
MACH = .600 RN/L = 3.500

RUN NO. 1082/ 0 RN/L = 3.50 GRADIENT INTERVAL = -5.00/ 5.00

ALPHAO	BETAO	ALFAOU	BETAOU	PT	P	Q	TT	AFA	BFA	DEINLR	DEONLR
6.183	-7.952	5.98050	-8.00700	2237.89990	1753.42751	443.03710	100.10000	.07550	.19650	8.10000	11.25000
6.174	-5.891	5.98090	-5.97510	2237.29980	1752.62700	443.18900	100.20000	.07520	.19650	8.10000	11.25000
6.140	-3.820	5.96730	-3.94140	2238.29980	1753.82570	443.04690	100.10000	.07560	.19640	8.10000	11.25000
5.860	.186	5.78350	-.00980	2238.19971	1754.43770	442.46090	100.20000	.07620	.19640	8.10000	11.25000
5.799	4.076	5.84640	3.87070	2235.79980	1751.84570	442.56930	100.20000	.07560	.19650	8.10000	11.25000
5.757	5.988	5.94450	5.79640	2237.19971	1752.22240	443.43650	100.20000	.07500	.19650	8.10000	11.25000
5.935	8.249	5.95120	8.07400	2237.00000	1750.90500	444.34740	100.10000	.07400	.19660	8.10000	11.25000
	GRADIENT	-.01547	.98932	-.31515	-.24873	-.06092	.01273	.00000	.00001	-.00000	.00000

RUN NO. 1083/ 0 RN/L = 3.50 GRADIENT INTERVAL = -5.00/ 5.00

ALPHAO	BETAO	ALFAOU	BETAOU	PT	P	Q	TT	AFA	BFA	DEINLR	DEONLR
8.082	-7.801	7.88970	-7.88540	2235.79980	1750.11720	443.98510	100.10000	.07410	.19660	8.10000	11.25000
7.988	-5.739	7.80940	-5.84980	2234.69971	1749.53050	443.54200	100.10000	.07430	.19660	8.10000	11.25000
7.976	-3.763	7.82060	-3.90460	2235.09961	1749.01390	444.30080	100.10000	.07360	.19670	8.10000	11.25000
7.879	.175	7.80340	-.02120	2235.89990	1751.13181	443.23830	100.20000	.07490	.19650	8.10000	11.25000
7.933	4.200	7.95640	3.99090	2235.39990	1750.73560	443.14260	100.20000	.07490	.19650	8.10000	11.25000
7.876	6.194	7.93820	5.99330	2236.39990	1749.79961	444.74880	100.30000	.07350	.19670	8.10000	11.25000
7.899	8.234	7.98900	8.04390	2236.29980	1750.61501	443.99730	100.20000	.07420	.19660	8.10000	11.25000
	GRADIENT	.01713	.99156	.03711	.21506	-.14500	.01251	.00016	-.00003	.00000	-.00000

IA156A, AEDC PWT 16T-470, O T S W/SILTS (R8NM78) (10 MAY 80)

REFERENCE DATA

SREF = 2690.0000 SQ.FT. XMRP = 976.0000 IN. XT
LREF = 1290.3000 INCHES YMRP = .0000 IN. YT
BREF = 1290.3000 INCHES ZMRP = 400.0000 IN. ZT
SCALE = .0200

PARAMETRIC DATA

IB-ELV = 8.000 OB-ELV = 11.000
BDFLAP = .000 SPDBRK = .000
RUDDER = .000 SILTS = 1.000
MACH = .800 RN/L = 3.500

RUN NO. 1084/ 0 RN/L = 3.50 GRADIENT INTERVAL = -5.00/ 5.00

ALPHAO	BETAO	ALFAOU	BETAOU	PT	P	Q	TT	AFA	BFA	DEINLR	DEONLR
-8.208	-5.827	-8.05190	-5.96350	1875.70000	1230.41499	551.32130	99.90000	-.03830	.20400	8.10000	11.25000
-8.259	-3.794	-8.13160	-3.95830	1877.39990	1231.70190	551.70410	99.70000	-.03830	.20400	8.10000	11.25000
-8.153	.187	-8.11460	-.01720	1878.39990	1232.69679	551.76760	99.50000	-.03820	.20410	8.10000	11.25000
-7.985	4.362	-8.04930	4.16410	1874.70000	1230.12840	550.77610	99.30000	-.03830	.20410	8.10000	11.25000
-7.993	6.251	-8.09040	6.06790	1876.59990	1230.70360	551.79100	99.30000	-.03840	.20400	8.10000	11.25000
	GRADIENT	.01014	.99594	-.33554	-.19635	-.11479	-.04904	-.00000	.00001	-.00000	-.00000

RUN NO. 1085/ 0 RN/L = 3.50 GRADIENT INTERVAL = -5.00/ 5.00

ALPHAO	BETAO	ALFAOU	BETAOU	PT	P	Q	TT	AFA	BFA	DEINLR	DEONLR
-6.227	-5.994	-6.05130	-6.10500	1879.70000	1232.97850	552.53780	100.20000	-.03830	.20400	8.10000	11.25000
-6.157	-4.053	-6.00500	-4.19370	1879.59990	1233.08150	552.39400	100.10000	-.03830	.20400	8.10000	11.25000
-6.226	.106	-6.18420	-.09750	1879.89990	1233.68359	552.20650	100.10000	-.03820	.20410	8.10000	11.25000
-6.034	4.269	-6.11960	4.08040	1880.39990	1233.47270	552.72000	100.10000	-.03830	.20400	8.10000	11.25000
-5.982	6.249	-6.10390	6.08090	1880.20000	1233.47610	552.56960	100.10000	-.03830	.20400	8.10000	11.25000
	GRADIENT	-.01376	.99426	.09614	.04699	.03919	.00000	-.00000	-.00000	-.00000	.00000

RUN NO. 1086/ 0 RN/L = 3.50 GRADIENT INTERVAL = -5.00/ 5.00

ALPHAO	BETAO	ALFAOU	BETAOU	PT	P	Q	TT	AFA	BFA	DEINLR	DEONLR
-4.202	-6.102	-4.00790	-6.17450	1879.39990	1232.78130	552.45020	100.20000	-.03830	.20400	8.10000	11.25000
-4.327	-3.995	-4.15230	-4.10750	1879.20000	1232.98711	552.16210	100.20000	-.03830	.20400	8.10000	11.25000
-4.235	.359	-4.20400	.15400	1879.00000	1233.09160	551.94310	100.20000	-.03820	.20410	8.10000	11.25000
-3.799	4.314	-3.92580	4.14960	1879.09990	1233.19090	551.94950	100.20000	-.03820	.20410	8.10000	11.25000
-3.854	6.166	-4.00620	6.02580	1879.09990	1232.88750	552.15580	100.10000	-.03830	.20400	8.10000	11.25000
	GRADIENT	.02660	.99348	-.01262	.02452	-.02600	.00000	.00001	.00001	-.00000	-.00000

RUN NO. 1087/ 0 RN/L = 3.50 GRADIENT INTERVAL = -5.00/ 5.00

ALPHAO	BETAO	ALFAOU	BETAOU	PT	P	Q	TT	AFA	BFA	DEINLR	DEONLR
-.368	-6.886	-.16360	-6.84800	1879.29980	1232.98540	552.23730	100.20000	-.03830	.20400	8.10000	11.25000
-.357	-4.773	-.15260	-4.73500	1879.59990	1233.38499	552.18750	100.20000	-.03820	.20410	8.10000	11.25000
-.328	-.488	-.12340	-.44920	1880.29980	1233.57570	552.57590	100.20000	-.03830	.20400	8.10000	11.25000
-.291	3.604	-.08710	3.64180	1879.70000	1233.18089	552.40040	100.20000	-.03830	.20400	8.10000	11.25000
-.293	5.707	-.08880	5.74570	1879.89990	1233.17770	552.55050	100.20000	-.03830	.20400	8.10000	11.25000
	GRADIENT	.00781	1.00001	.01315	-.02382	.02593	-.00000	-.00001	-.00001	-.00000	-.00000

IA156A, AEDC PWT 16T-470, O T S W/SILTS (R8NM78) (10 MAY 80)

REFERENCE DATA

SREF = 2690.0000 SQ.FT. XMRP = 976.0000 IN. XT
LREF = 1290.3000 INCHES YMRP = .0000 IN. YT
BREF = 1290.3000 INCHES ZMRP = 400.0000 IN. ZT
SCALE = .0200

PARAMETRIC DATA

IB-ELV = 8.000 OB-ELV = 11.000
BDFLAP = .000 SPDBRK = .000
RUDDER = .000 SILTS = 1.000
MACH = .800 RN/L = 3.500

RUN NO. 1088/ 0 RN/L = 3.50 GRADIENT INTERVAL = -5.00/ 5.00

ALPHAO	BETAO	ALFAOU	BETAOU	PT	P	Q	TT	AFA	BFA	DEINLR	DEONLR
4.102	-5.778	3.95300	-5.92230	1880.09990	1233.17430	552.70090	100.20000	-.03830	.20400	8.10000	11.25000
3.956	-3.668	3.83770	-3.83890	1879.50000	1233.08330	552.31880	100.20000	-.03830	.20400	8.10000	11.25000
3.725	.127	3.75950	-.07740	1880.00000	1233.58060	552.35060	100.20000	-.03830	.20410	8.10000	11.25000
3.815	4.006	3.98670	3.88880	1879.89990	1233.58231	552.27540	100.20000	-.03820	.20410	8.10000	11.25000
3.759	6.090	3.95140	6.01150	1880.29980	1233.37331	552.71360	100.20000	-.03830	.20400	8.10000	11.25000
	GRADIENT	.01956	1.00702	.05183	.06479	-.00571	-.00000	.00001	.00001	.00000	.00000

RUN NO. 1089/ 0 RN/L = 3.50 GRADIENT INTERVAL = -5.00/ 5.00

ALPHAO	BETAO	ALFAOU	BETAOU	PT	P	Q	TT	AFA	BFA	DEINLR	DEONLR
6.021	-5.724	5.90250	-5.89460	1879.89990	1232.87399	552.75710	100.20000	-.03840	.20400	8.10000	11.25000
6.060	-3.767	5.97740	-3.95750	1880.09990	1233.57890	552.42580	100.20000	-.03830	.20400	8.10000	11.25000
5.741	.168	5.77770	-.03640	1879.79980	1233.38161	552.33790	100.20000	-.03830	.20400	8.10000	11.25000
5.688	3.981	5.83430	3.83360	1879.59990	1233.68851	551.98100	100.20000	-.03820	.20410	8.10000	11.25000
5.728	6.167	5.90260	6.05410	1879.89990	1233.37990	552.41310	100.30000	-.03830	.20400	8.10000	11.25000
	GRADIENT	-.01864	1.00548	-.06459	.01390	-.05722	-.00000	.00001	.00001	-.00000	-.00000

IA156A, AEDC PWT 16T-470, O T S W/SILTS (R8NM79) (10 MAY 80)

REFERENCE DATA

SREF = 2690.0000 SQ.FT. XMRP = 976.0000 IN. XT
LREF = 1290.3000 INCHES YMRP = .0000 IN. YT
BREF = 1290.3000 INCHES ZMRP = 400.0000 IN. ZT
SCALE = .0200

PARAMETRIC DATA

IB-ELV = 8.000 OB-ELV = 11.000
BDFLAP = .000 SPDBRK = .000
RUDDER = .000 SILTS = 1.000
MACH = .900 RN/L = 3.500

RUN NO. 1090/ 0 RN/L = 3.50 GRADIENT INTERVAL = -5.00/ 5.00

ALPHAO	BETAO	ALFAOU	BETAOU	PT	P	Q	TT	AFA	BFA	DEINLR	DEONLR
-8.163	-5.980	-7.99600	-6.10190	1785.79980	1056.01289	598.59550	100.30000	-.05180	.20010	8.10000	11.25000
-8.256	-3.765	-8.11840	-3.91870	1779.39990	1051.96970	596.60420	100.30000	-.05180	.20010	8.10000	11.25000
-8.171	.183	-8.11880	-.01730	1782.59990	1054.24370	597.44970	100.20000	-.05180	.20010	8.10000	11.25000
-8.000	4.389	-8.05150	4.18900	1784.79980	1055.22050	598.38010	100.30000	-.05180	.20010	8.10000	11.25000
-8.015	6.269	-8.10030	6.08090	1785.79980	1055.81129	598.71560	100.30000	-.05180	.20010	8.10000	11.25000
	GRADIENT	.00829	.99443	.66075	.39688	.21784	.00026	-.00000	-.00000	.00000	-.00000

IA156A, AEDC PWT 16T-470, O T S W/SILTS (R8NM79) (10 MAY 80)

REFERENCE DATA

SREF = 2690.0000 SQ.FT. XMRP = 976.0000 IN. XT
LREF = 1290.3000 INCHES YMRP = .0000 IN. YT
BREF = 1290.3000 INCHES ZMRP = 400.0000 IN. ZT
SCALE = .0200

PARAMETRIC DATA

IB-ELV = 8.000 OB-ELV = 11.000
BDFLAP = .000 SPDBRK = .000
RUDDER = .000 SILTS = 1.000
MACH = .900 RN/L = 3.500

RUN NO. 1091/ 0 RN/L = 3.50 GRADIENT INTERVAL = -5.00/ 5.00

ALPHAO	BETAO	ALFAOU	BETAOU	PT	P	Q	TT	AFA	BFA	DEINLR	DEONLR
-6.207	-5.982	-6.02540	-6.07980	1784.00000	1054.82860	598.06370	100.20000	-.05180	.20010	8.10000	11.25000
-6.160	-4.066	-5.99860	-4.19540	1783.59990	1054.73340	597.84550	100.20000	-.05180	.20010	8.10000	11.25000
-6.246	.099	-6.19100	-.10000	1783.89990	1054.62820	598.11400	100.20000	-.05180	.20010	8.10000	11.25000
-6.053	4.268	-6.12640	4.07500	1783.39990	1055.03909	597.52590	100.20000	-.05170	.20010	8.10000	11.25000
-5.987	6.245	-6.09770	6.07020	1784.50000	1055.32570	598.11130	100.20000	-.05180	.20010	8.10000	11.25000
	GRADIENT	-.01533	.99232	-.02401	.03669	-.03836	-.00000	.00001	-.00000	-.00000	.00000

RUN NO. 1092/ 0 RN/L = 3.50 GRADIENT INTERVAL = -5.00/ 5.00

ALPHAO	BETAO	ALFAOU	BETAOU	PT	P	Q	TT	AFA	BFA	DEINLR	DEONLR
-4.073	-6.116	-3.87430	-6.17090	1783.79980	1054.83150	597.92430	100.20000	-.05180	.20010	8.10000	11.25000
-4.333	-3.999	-4.15180	-4.09830	1784.00000	1054.92940	598.00370	100.10000	-.05180	.20010	8.10000	11.25000
-4.257	.376	-4.21340	.17370	1783.39990	1054.53470	597.82620	100.20000	-.05180	.20010	8.10000	11.25000
-3.789	4.327	-3.90540	4.15560	1783.89990	1054.72900	598.05420	100.20000	-.05180	.20010	8.10000	11.25000
-3.880	6.173	-4.02290	6.02310	1783.59990	1055.13699	597.60520	100.10000	-.05170	.20010	8.10000	11.25000
	GRADIENT	.02882	.99110	-.01426	-.02525	.00523	.01220	-.00000	-.00000	-.00000	-.00000

RUN NO. 1093/ 0 RN/L = 3.50 GRADIENT INTERVAL = -5.00/ 5.00

ALPHAO	BETAO	ALFAOU	BETAOU	PT	P	Q	TT	AFA	BFA	DEINLR	DEONLR
-.389	-6.982	-.18850	-6.92990	1784.09990	1054.72630	598.19310	100.30000	-.05180	.20010	8.10000	11.25000
-.373	-4.837	-.17330	-4.78540	1783.89990	1054.83009	597.99410	100.10000	-.05180	.20010	8.10000	11.25000
-.343	-.533	-.14240	-.48150	1783.59990	1054.73340	597.84550	100.20000	-.05180	.20010	8.10000	11.25000
-.307	3.577	-.10690	3.62880	1784.00000	1055.13110	597.88350	100.20000	-.05170	.20010	8.10000	11.25000
-.309	5.752	-.10910	5.80350	1782.39990	1054.34740	597.25050	100.20000	-.05170	.20010	8.10000	11.25000
	GRADIENT	.00789	1.00001	.01126	.03532	-.01331	.01197	.00001	.00000	.00000	.00000

RUN NO. 1094/ 0 RN/L = 3.50 GRADIENT INTERVAL = -5.00/ 5.00

ALPHAO	BETAO	ALFAOU	BETAOU	PT	P	Q	TT	AFA	BFA	DEINLR	DEONLR
4.085	-5.763	3.94710	-5.91640	1783.70000	1055.94260	597.19380	100.30000	-.05170	.20010	8.10000	11.25000
3.944	-3.664	3.83870	-3.84170	1783.89990	1054.72900	598.05420	100.30000	-.05180	.20010	8.10000	11.25000
3.705	.123	3.75300	-.07820	1783.50000	1055.13840	597.53560	100.30000	-.05170	.20010	8.10000	11.25000
3.811	3.993	3.98860	3.88720	1783.29980	1054.13260	597.99680	100.20000	-.05180	.20010	8.10000	11.25000
3.760	6.091	3.95620	6.02530	1782.09990	1053.54469	597.52220	100.20000	-.05180	.20010	8.10000	11.25000
	GRADIENT	.01973	1.00949	-.07828	-.07856	-.00704	-.01311	-.00000	.00000	.00000	-.00000

IA156A, AEDC PWT 16T-470, O T S W/SILTS (R8NM80) (10 MAY 80)

REFERENCE DATA

SREF = 2690.0000 SQ.FT. XMRP = 976.0000 IN. XT
LREF = 1290.3000 INCHES YMRP = .0000 IN. YT
BREF = 1290.3000 INCHES ZMRP = 400.0000 IN. ZT
SCALE = .0200

PARAMETRIC DATA

IB-ELV = 8.000 OB-ELV = 11.000
BDFLAP = .000 SPDBRK = .000
RUDDER = .000 SILTS = 1.000
MACH = .950 RN/L = 3.500

RUN NO. 1095/ 0 RN/L = 3.50 GRADIENT INTERVAL = -5.00/ 5.00

ALPHAO	BETAO	ALFAOU	BETAOU	PT	P	Q	TT	AFA	BFA	DEINLR	DEONLR
-8.294	-6.047	-8.12560	-6.16500	1748.89990	978.31050	618.19970	100.80000	-.05540	.19770	8.10000	11.25000
-8.203	-3.771	-8.06250	-3.92090	1753.59990	981.26880	619.68040	100.80000	-.05540	.19770	8.10000	11.25000
-8.185	.173	-8.12890	-.02500	1753.89990	981.97000	619.49370	100.70000	-.05540	.19770	8.10000	11.25000
-8.002	4.454	-8.05120	4.25470	1751.09990	980.19460	618.61870	100.70000	-.05540	.19770	8.10000	11.25000
-8.009	6.271	-8.09080	6.08240	1747.70000	977.72240	617.73000	100.70000	-.05540	.19770	8.10000	11.25000
	GRADIENT	.00161	.99405	-.30893	-.13464	-.13015	-.01198	-.00000	.00000	-.00000	-.00000

RUN NO. 1096/ 0 RN/L = 3.50 GRADIENT INTERVAL = -5.00/ 5.00

ALPHAO	BETAO	ALFAOU	BETAOU	PT	P	Q	TT	AFA	BFA	DEINLR	DEONLR
-6.221	-6.002	-6.03740	-6.09510	1748.39990	978.11600	617.97630	100.60000	-.05540	.19770	8.10000	11.25000
-6.164	-4.065	-6.00060	-4.19010	1750.20000	979.40090	618.46000	100.60000	-.05540	.19770	8.10000	11.25000
-6.250	.111	-6.19170	-.08560	1753.20000	981.17360	619.46850	100.70000	-.05540	.19770	8.10000	11.25000
-6.035	4.265	-6.10510	4.07210	1755.20000	982.35520	620.14090	100.70000	-.05540	.19770	8.10000	11.25000
-6.006	6.274	-6.11310	6.09870	1756.39990	982.94360	620.61060	100.70000	-.05540	.19770	8.10000	11.25000
	GRADIENT	-.01257	.99178	.60030	.35470	.20181	.01201	.00000	.00000	-.00000	.00000

RUN NO. 1097/ 0 RN/L = 3.50 GRADIENT INTERVAL = -5.00/ 5.00

ALPHAO	BETAO	ALFAOU	BETAOU	PT	P	Q	TT	AFA	BFA	DEINLR	DEONLR
-4.066	-6.173	-3.86680	-6.22180	1747.39990	977.92770	617.41920	100.60000	-.05540	.19770	8.10000	11.25000
-4.331	-3.998	-4.14810	-4.09230	1747.50000	977.62430	617.65160	100.60000	-.05540	.19770	8.10000	11.25000
-4.261	.376	-4.21420	.17620	1749.20000	978.91090	618.06840	100.70000	-.05540	.19770	8.10000	11.25000
-3.793	4.340	-3.90560	4.16830	1751.39990	980.08980	618.87450	100.70000	-.05540	.19770	8.10000	11.25000
-3.885	6.172	-4.02430	6.02130	1752.79980	980.17190	619.75390	100.60000	-.05540	.19770	8.10000	11.25000
	GRADIENT	.02832	.99045	.46636	.29566	.14578	.01218	.00000	.00000	-.00000	-.00000

RUN NO. 1098/ 0 RN/L = 3.51 GRADIENT INTERVAL = -5.00/ 5.00

ALPHAO	BETAO	ALFAOU	BETAOU	PT	P	Q	TT	AFA	BFA	DEINLR	DEONLR
-.411	-7.031	-.21340	-6.97530	1755.70000	982.44920	620.41970	100.60000	-.05540	.19770	8.10000	11.25000
-.392	-4.836	-.19410	-4.78010	1756.29980	982.64280	620.70970	100.50000	-.05540	.19770	8.10000	11.25000
-.358	-.565	-.16050	-.51000	1755.70000	982.44920	620.41970	100.60000	-.05540	.19770	8.10000	11.25000
-.321	3.586	-.12350	3.64200	1756.20000	982.34200	620.80880	100.40000	-.05540	.19770	8.10000	11.25000
-.326	5.762	-.12790	5.81760	1751.29980	980.89670	618.36500	100.40000	-.05540	.19780	8.10000	11.25000
	GRADIENT	.00838	1.00001	-.01246	-.03576	.01139	-.01171	.00000	.00000	-.00000	-.00000

IA156A, AEDC PWT 16T-470, O T S W/SILTS (R8NM80) (10 MAY 80)

REFERENCE DATA

SREF = 2690.0000 SQ.FT. XMRP = 976.0000 IN. XT
LREF = 1290.3000 INCHES YMRP = .0000 IN. YT
BREF = 1290.3000 INCHES ZMRP = 400.0000 IN. ZT
SCALE = .0200

PARAMETRIC DATA

IB-ELV = 8.000 OB-ELV = 11.000
BDFLAP = .000 SPDBRK = .000
RUDDER = .000 SILTS = 1.000
MACH = .950 RN/L = 3.500

RUN NO. 1099/ 0 RN/L = 3.50 GRADIENT INTERVAL = -5.00/ 5.00

ALPHAO	BETAO	ALFAOU	BETAOU	PT	P	Q	TT	AFA	BFA	DEINLR	DEONLR
4.075	-5.728	3.94170	-5.88400	1745.79980	976.53930	617.12430	100.50000	-.05540	.19770	8.10000	11.25000
3.951	-3.749	3.84800	-3.92660	1747.20000	977.82980	617.34080	100.50000	-.05540	.19770	8.10000	11.25000
3.844	.183	3.89940	-.01520	1757.09990	983.13550	620.96750	100.60000	-.05540	.19770	8.10000	11.25000
3.797	3.935	3.97500	3.83270	1757.59990	983.43120	621.13570	100.60000	-.05540	.19770	8.10000	11.25000
3.766	6.057	3.96190	5.99550	1747.50000	978.12790	617.37520	100.60000	-.05540	.19770	8.10000	11.25000
	GRADIENT	.01650	1.00966	1.36266	.73387	.49726	.01311	-.00000	-.00000	.00000	.00000

IA156A, AEDC PWT 16T-470, O T S W/SILTS (R8NM81) (10 MAY 80)

REFERENCE DATA

SREF = 2690.0000 SQ.FT. XMRP = 976.0000 IN. XT
LREF = 1290.3000 INCHES YMRP = .0000 IN. YT
BREF = 1290.3000 INCHES ZMRP = 400.0000 IN. ZT
SCALE = .0200

PARAMETRIC DATA

IB-ELV = 8.000 OB-ELV = 11.000
BDFLAP = .000 SPDBRK = .000
RUDDER = .000 SILTS = 1.000
MACH = 1.050 RN/L = 3.500

RUN NO. 1102/ 0 RN/L = 3.50 GRADIENT INTERVAL = -5.00/ 5.00

ALPHAO	BETAO	ALFAOU	BETAOU	PT	P	Q	TT	AFA	BFA	DEINLR	DEONLR
-8.214	-5.985	-8.04330	-6.09640	1706.59990	847.30000	656.79150	100.50000	-.06100	.19440	8.10000	11.25000
-8.268	-3.873	-8.12210	-4.01570	1704.20000	845.52150	656.12960	100.40000	-.06100	.19440	8.10000	11.25000
-8.188	.281	-8.12990	.08620	1702.50000	848.84720	653.60790	100.40000	-.06080	.19450	8.10000	11.25000
-8.026	4.295	-8.06700	4.09580	1705.39990	849.41770	655.11470	100.40000	-.06080	.19440	8.10000	11.25000
-8.003	6.264	-8.07940	6.07520	1700.50000	846.66310	653.37330	100.40000	-.06080	.19440	8.10000	11.25000
	GRADIENT	.00669	.99296	.14364	.47886	-.12707	-.00000	.00002	.00000	-.00000	-.00000

RUN NO. 1103/ 0 RN/L = 3.50 GRADIENT INTERVAL = -5.00/ 5.00

ALPHAO	BETAO	ALFAOU	BETAOU	PT	P	Q	TT	AFA	BFA	DEINLR	DEONLR
-6.206	-5.996	-6.02050	-6.08110	1702.09990	848.25000	653.63330	100.20000	-.06080	.19450	8.10000	11.25000
-6.165	-4.087	-5.99800	-4.20410	1702.79980	847.54080	654.37720	100.30000	-.06090	.19440	8.10000	11.25000
-6.271	.104	-6.20650	-.08980	1706.39990	849.50730	655.68240	100.40000	-.06080	.19440	8.10000	11.25000
-6.068	4.277	-6.13360	4.08430	1704.50000	849.72780	654.42800	100.40000	-.06080	.19450	8.10000	11.25000
-5.861	6.383	-5.96710	6.20900	1694.09990	844.02490	650.66820	100.30000	-.06080	.19440	8.10000	11.25000
	GRADIENT	-.01623	.99093	.20371	.26161	.00628	.01196	.00001	.00001	.00000	-.00000

IA156A, AEDC PWT 16T-470, O T S W/SILTS (R8NM81) (10 MAY 80)

REFERENCE DATA

SREF = 2690.0000 SQ.FT. XMRP = 976.0000 IN. XT
LREF = 1290.3000 INCHES YMRP = .0000 IN. YT
BREF = 1290.3000 INCHES ZMRP = 400.0000 IN. ZT
SCALE = .0200

PARAMETRIC DATA

IB-ELV = 8.000 OB-ELV = 11.000
BDFLAP = .000 SPDBRK = .000
RUDDER = .000 SILTS = 1.000
MACH = 1.050 RN/L = 3.500

RUN NO. 1104/ 0 RN/L = 3.50 GRADIENT INTERVAL = -5.00/ 5.00

ALPHAO	BETAO	ALFAOU	BETAOU	PT	P	Q	TT	AFA	BFA	DEINLR	DEONLR
-4.122	-6.131	-3.92330	-6.17400	1707.50000	850.19700	656.04100	100.40000	-.06080	.19440	8.10000	11.25000
-4.345	-4.018	-4.16030	-4.10400	1710.29980	852.17210	656.85600	100.40000	-.06080	.19450	8.10000	11.25000
-4.269	.372	-4.21690	.17450	1703.79980	848.73290	654.44970	100.30000	-.06080	.19440	8.10000	11.25000
-3.793	4.343	-3.90160	4.17030	1692.89990	843.43630	650.20310	100.20000	-.06080	.19440	8.10000	11.25000
-3.868	6.162	-4.00340	6.00930	1697.20000	845.49560	651.89210	100.20000	-.06080	.19440	8.10000	11.25000
	GRADIENT	.03018	.98943	-2.07070	-1.04031	-.79142	-.02390	-.00000	-.00001	.00000	.00000

RUN NO. 1105/ 0 RN/L = 3.49 GRADIENT INTERVAL = -5.00/ 5.00

ALPHAO	BETAO	ALFAOU	BETAOU	PT	P	Q	TT	AFA	BFA	DEINLR	DEONLR
-.450	-7.051	-.25570	-6.99040	1704.70000	849.02420	654.86600	100.40000	-.06080	.19440	8.10000	11.25000
-.431	-4.894	-.23650	-4.83360	1699.59990	846.17160	653.04710	100.30000	-.06080	.19440	8.10000	11.25000
-.401	-.555	-.20690	-.49450	1699.79980	846.77100	652.89970	100.40000	-.06080	.19440	8.10000	11.25000
-.371	3.591	-.17640	3.65190	1700.39990	846.86470	653.22220	100.40000	-.06080	.19440	8.10000	11.25000
-.371	5.773	-.17610	5.83370	1699.20000	845.87520	652.93700	100.40000	-.06090	.19440	8.10000	11.25000
	GRADIENT	.00708	1.00001	.09391	.08212	.02021	.01187	.00000	.00000	.00000	.00000

RUN NO. 1106/ 0 RN/L = 3.49 GRADIENT INTERVAL = -5.00/ 5.00

ALPHAO	BETAO	ALFAOU	BETAOU	PT	P	Q	TT	AFA	BFA	DEINLR	DEONLR
4.083	-5.750	3.95610	-5.90910	1699.59990	846.47240	652.91210	100.40000	-.06080	.19440	8.10000	11.25000
3.909	-3.651	3.81530	-3.83150	1699.20000	846.47660	652.66700	100.40000	-.06080	.19440	8.10000	11.25000
3.738	.112	3.79520	-.08330	1700.29980	846.36470	653.38570	100.40000	-.06080	.19440	8.10000	11.25000
3.803	3.989	3.98270	3.89250	1699.00000	846.07760	652.72460	100.40000	-.06080	.19440	8.10000	11.25000
3.764	6.060	3.96040	6.00360	1698.00000	844.68510	652.74170	100.40000	-.06080	.19440	8.10000	11.25000
	GRADIENT	.02205	1.01115	-.02773	-.05234	.00664	-.00000	.00000	.00000	-.00000	-.00000

IA156A, AEDC PWT 16T-470, O T S W/SILTS (R8NM82) (10 MAY 80)

REFERENCE DATA

SREF = 2690.0000 SQ.FT. XMRP = 976.0000 IN. XT
LREF = 1290.3000 INCHES YMRP = .0000 IN. YT
BREF = 1290.3000 INCHES ZMRP = 400.0000 IN. ZT
SCALE = .0200

PARAMETRIC DATA

IB-ELV = 8.000 OB-ELV = 11.000
BDFLAP = .000 SPDBRK = .000
RUDDER = .000 SILTS = 1.000
MACH = 1.100 RN/L = 3.500

RUN NO. 1107/ 0 RN/L = 3.51 GRADIENT INTERVAL = -5.00/ 5.00

ALPHAO	BETAO	ALFAOU	BETAOU	PT	P	Q	TT	AFA	BFA	DEINLR	DEONLR
-8.232	-5.903	-8.06000	-6.01310	1694.59990	794.06620	672.08540	100.40000	-.06320	.19440	8.10000	11.25000
-8.255	-3.825	-8.10810	-3.96690	1691.50000	794.09520	670.26900	100.40000	-.06310	.19440	8.10000	11.25000
-8.187	.192	-8.12420	-.00280	1693.70000	794.57450	671.36040	100.40000	-.06320	.19440	8.10000	11.25000
-8.011	4.349	-8.05120	4.14900	1694.79980	794.06420	672.20260	100.50000	-.06320	.19440	8.10000	11.25000
-8.016	6.268	-8.09110	6.07830	1702.09990	796.79570	675.37010	100.40000	-.06330	.19440	8.10000	11.25000
	GRADIENT	.00702	.99286	.40285	-.00449	.23634	.01230	-.00001	-.00000	.00000	-.00000

RUN NO. 1108/ 0 RN/L = 3.50 GRADIENT INTERVAL = -5.00/ 5.00

ALPHAO	BETAO	ALFAOU	BETAOU	PT	P	Q	TT	AFA	BFA	DEINLR	DEONLR
-6.213	-6.003	-6.02650	-6.08640	1690.79980	790.60250	671.24240	100.50000	-.06330	.19450	8.10000	11.25000
-6.166	-4.086	-5.99740	-4.20170	1689.70000	792.81230	669.72950	100.40000	-.06320	.19440	8.10000	11.25000
-6.283	.119	-6.21720	-.07460	1693.00000	792.98140	671.58350	100.50000	-.06320	.19440	8.10000	11.25000
-6.042	4.262	-6.10500	4.06700	1690.89990	790.40190	671.37940	100.50000	-.06330	.19450	8.10000	11.25000
-6.011	6.265	-6.11170	6.08710	1690.50000	791.10520	670.87010	100.40000	-.06330	.19440	8.10000	11.25000
	GRADIENT	-.01299	.99049	.14535	-.28792	.19826	.01201	-.00001	.00001	.00000	.00000

RUN NO. 1109/ 0 RN/L = 3.51 GRADIENT INTERVAL = -5.00/ 5.00

ALPHAO	BETAO	ALFAOU	BETAOU	PT	P	Q	TT	AFA	BFA	DEINLR	DEONLR
-4.293	-6.047	-4.09400	-6.09290	1698.89990	796.42550	673.65450	100.50000	-.06320	.19440	8.10000	11.25000
-4.317	-4.024	-4.12980	-4.10750	1703.20000	798.78470	675.22360	100.50000	-.06310	.19440	8.10000	11.25000
-4.257	.346	-4.20080	.14940	1700.70000	796.60860	674.62960	100.40000	-.06320	.19440	8.10000	11.25000
-3.776	4.319	-3.88330	4.14510	1689.09990	791.91800	669.73440	100.40000	-.06320	.19440	8.10000	11.25000
-3.893	6.173	-4.02600	6.01840	1692.70000	793.08420	671.36820	100.40000	-.06320	.19440	8.10000	11.25000
	GRADIENT	.02878	.98883	-1.67137	-.81759	-.64923	-.01217	-.00001	-.00000	-.00000	-.00000

RUN NO. 1110/ 0 RN/L = 3.50 GRADIENT INTERVAL = -5.00/ 5.00

ALPHAO	BETAO	ALFAOU	BETAOU	PT	P	Q	TT	AFA	BFA	DEINLR	DEONLR
-.453	-7.058	-.25840	-6.99500	1687.79980	791.43020	669.17070	100.60000	-.06320	.19440	8.10000	11.25000
-.435	-4.893	-.24080	-4.83020	1694.29980	794.06910	671.90990	100.50000	-.06320	.19440	8.10000	11.25000
-.401	-.488	-.20640	-.42440	1688.79980	790.72120	670.03300	100.60000	-.06320	.19440	8.10000	11.25000
-.365	3.607	-.17090	3.67000	1689.29980	790.51660	670.40450	100.50000	-.06320	.19440	8.10000	11.25000
-.367	5.777	-.17250	5.84000	1693.09990	793.08030	671.60250	100.50000	-.06320	.19440	8.10000	11.25000
	GRADIENT	.00822	1.00000	-.59657	-.42225	-.18025	.00029	.00000	-.00000	.00000	.00000

IA156A, AEDC PWT 16T-470, O T S W/SILTS (R8NM82) (10 MAY 80)

REFERENCE DATA

SREF = 2690.0000 SQ.FT. XMRP = 976.0000 IN. XT
LREF = 1290.3000 INCHES YMRP = .0000 IN. YT
BREF = 1290.3000 INCHES ZMRP = 400.0000 IN. ZT
SCALE = .0200

PARAMETRIC DATA

IB-ELV = 8.000 OB-ELV = 11.000
BDFLAP = .000 SPDBRK = .000
RUDDER = .000 SILTS = 1.000
MACH = 1.100 RN/L = 3.500

RUN NO. 1111/ 0 RN/L = 3.50 GRADIENT INTERVAL = -5.00/ 5.00

ALPHAO	BETAO	ALFAOU	BETAOU	PT	P	Q	TT	AFA	BFA	DEINLR	DEONLR
4.078	-5.753	3.95110	-5.91320	1690.79980	791.40230	670.92720	100.60000	-.06320	.19440	8.10000	11.25000
3.945	-3.680	3.85250	-3.86190	1689.59990	792.11330	669.94820	100.50000	-.06320	.19440	8.10000	11.25000
3.680	.122	3.73940	-.07380	1688.09990	789.92800	669.93900	100.40000	-.06320	.19440	8.10000	11.25000
3.789	3.976	3.97000	3.88190	1687.29980	790.83500	669.11520	100.40000	-.06320	.19440	8.10000	11.25000
3.768	6.065	3.96500	6.01130	1690.00000	791.60960	670.38010	100.50000	-.06320	.19440	8.10000	11.25000
	GRADIENT	.01545	1.01149	-.30021	-.16603	-.10905	-.01303	-.00000	.00000	.00000	-.00000

IA156A, AEDC PWT 16T-470, O T S W/SILTS (R8NM83) (10 MAY 80)

REFERENCE DATA

SREF = 2690.0000 SQ.FT. XMRP = 976.0000 IN. XT
LREF = 1290.3000 INCHES YMRP = .0000 IN. YT
BREF = 1290.3000 INCHES ZMRP = 400.0000 IN. ZT
SCALE = .0200

PARAMETRIC DATA

IB-ELV = 8.000 OB-ELV = 9.000
BDFLAP = .000 SPDBRK = .000
RUDDER = .000 SILTS = 1.000
MACH = .600 RN/L = 3.500

RUN NO. 1114/ 0 RN/L = 3.51 GRADIENT INTERVAL = -5.00/ 5.00

ALPHAO	BETAO	ALFAOU	BETAOU	PT	P	Q	TT	AFA	BFA	DEINLR	DEONLR
-8.219	-7.832	-8.13050	-8.02290	2231.09991	1749.40379	440.62160	98.70000	.07660	.19630	8.10000	8.92000
-8.099	-5.891	-8.03620	-6.09150	2233.79980	1750.87160	441.68730	98.60000	.07610	.19640	8.10000	8.92000
-8.140	-3.791	-8.11710	-3.99980	2234.70001	1750.75050	442.54250	98.70000	.07540	.19650	8.10000	8.92000
-8.051	.301	-8.12810	.10530	2235.39990	1750.93900	442.97610	98.60000	.07510	.19650	8.10000	8.92000
-7.910	4.243	-8.07010	4.10520	2235.09991	1752.36890	441.55220	98.70000	.07650	.19640	8.10000	8.92000
-7.897	6.183	-8.07830	6.07580	2235.89990	1752.14841	442.40500	98.60000	.07580	.19640	8.10000	8.92000
-7.934	8.177	-8.12900	8.09680	2235.70001	1753.16940	441.39990	98.80000	.07670	.19630	8.10000	8.92000
	GRADIENT	.00580	1.00889	.05054	.20048	-.12183	-.00015	.00014	-.00001	-.00000	-.00000

RUN NO. 1115/ 0 RN/L = 3.51 GRADIENT INTERVAL = -5.00/ 5.00

ALPHAO	BETAO	ALFAOU	BETAOU	PT	P	Q	TT	AFA	BFA	DEINLR	DEONLR
-6.156	-7.922	-6.03920	-8.09740	2243.59991	1758.79590	443.42580	99.50000	.07630	.19640	8.10000	8.92000
-6.128	-5.909	-6.03660	-6.09850	2243.70001	1758.59061	443.67820	99.30000	.07600	.19640	8.10000	8.92000
-6.052	-4.007	-5.99660	-4.21040	2240.39990	1755.91600	443.09790	99.20000	.07600	.19640	8.10000	8.92000
-6.113	.075	-6.18420	-.12320	2233.70001	1750.56860	441.85160	99.20000	.07590	.19640	8.10000	8.92000
-5.946	4.190	-6.11820	4.07060	2223.70001	1740.00459	442.10690	99.00000	.07360	.19670	8.10000	8.92000
-5.887	6.166	-6.08050	6.08410	2233.79980	1748.43159	443.68630	98.90000	.07400	.19660	8.10000	8.92000
-5.690	8.305	-5.89510	8.25680	2247.50000	1760.54300	445.27050	99.10000	.07520	.19650	8.10000	8.92000
	GRADIENT	-.01479	1.01022	-2.03778	-1.94190	-.12064	-.02443	-.00029	.00004	.00000	.00000

IA156A, AEDC PWT 16T-470, O T S W/SILTS (R8NM83) (10 MAY 80)

REFERENCE DATA

SREF = 2690.0000 SQ.FT. XMRP = 976.0000 IN. XT
LREF = 1290.3000 INCHES YMRP = .0000 IN. YT
BREF = 1290.3000 INCHES ZMRP = 400.0000 IN. ZT
SCALE = .0200

PARAMETRIC DATA

IB-ELV = 8.000 OB-ELV = 9.000
BDFLAP = .000 SPDBRK = .000
RUDDER = .000 SILTS = 1.000
MACH = .600 RN/L = 3.500

RUN NO. 1117/ 0 RN/L = 3.49 GRADIENT INTERVAL = -5.00/ 5.00

ALPHAO	BETAO	ALFAOU	BETAOU	PT	P	Q	TT	AFA	BFA	DEINLR	DEONLR
-4.005	-7.950	-3.85760	-8.10110	2224.89990	1745.87601	438.30320	99.60000	.07780	.19620	8.10000	8.92000
-4.230	-5.941	-4.10510	-6.11040	2227.89990	1746.32030	440.46070	99.60000	.07610	.19640	8.10000	8.92000
-4.234	-3.892	-4.14480	-4.08250	2229.50000	1747.40480	440.91630	99.60000	.07600	.19640	8.10000	8.92000
-4.049	.174	-4.12390	-.02240	2231.50000	1748.78540	441.46480	99.60000	.07580	.19640	8.10000	8.92000
-3.718	4.264	-3.91630	4.19100	2232.79980	1751.70610	440.16240	99.60000	.07740	.19620	8.10000	8.92000
-3.792	6.053	-3.99870	6.01350	2234.50000	1752.48320	440.95410	99.70000	.07700	.19630	8.10000	8.92000
-3.831	8.046	-4.04170	8.03220	2235.79980	1754.18381	440.65160	99.60000	.07750	.19620	8.10000	8.92000
	GRADIENT	.02804	1.01447	.40452	.52758	-.09266	.00000	.00017	-.00002	-.00000	-.00000

RUN NO. 1118/ 0 RN/L = 3.50 GRADIENT INTERVAL = -5.00/ 5.00

ALPHAO	BETAO	ALFAOU	BETAOU	PT	P	Q	TT	AFA	BFA	DEINLR	DEONLR
-.345	-8.769	-.14840	-8.84490	2236.70001	1753.24980	442.17460	99.70000	.07610	.19640	8.10000	8.92000
-.339	-6.697	-.14290	-6.77330	2234.70001	1751.76730	441.70920	99.50000	.07620	.19640	8.10000	8.92000
-.327	-4.423	-.13100	-4.49930	2234.79980	1751.96851	441.62820	99.70000	.07630	.19640	8.10000	8.92000
-.300	-.384	-.10340	-.45960	2235.50000	1751.54691	442.56200	99.50000	.07550	.19650	8.10000	8.92000
-.272	3.688	-.07580	3.61280	2235.20001	1751.45171	442.38820	99.50000	.07560	.19640	8.10000	8.92000
-.267	5.772	-.07010	5.69690	2233.59991	1749.75729	442.43240	99.60000	.07520	.19650	8.10000	8.92000
-.260	7.866	-.06400	7.79050	2233.20001	1749.46091	442.33940	99.50000	.07530	.19650	8.10000	8.92000
	GRADIENT	.00681	1.00009	.04917	-.06365	.09351	-.02462	-.00009	-.00000	.00000	-.00000

RUN NO. 1119/ 0 RN/L = 3.49 GRADIENT INTERVAL = -5.00/ 5.00

ALPHAO	BETAO	ALFAOU	BETAOU	PT	P	Q	TT	AFA	BFA	DEINLR	DEONLR
4.061	-8.068	3.85050	-8.08310	2231.59991	1748.78320	441.55050	99.40000	.07580	.19640	8.10000	8.92000
4.074	-5.756	3.86780	-5.79950	2231.29980	1750.51810	439.87570	99.50000	.07740	.19620	8.10000	8.92000
4.049	-3.766	3.85550	-3.85020	2232.39990	1750.49460	440.81980	99.50000	.07670	.19630	8.10000	8.92000
3.826	.145	3.74540	-.05070	2232.00000	1751.62160	439.55880	99.50000	.07790	.19620	8.10000	8.92000
3.894	4.109	3.97690	3.91510	2232.00000	1752.43480	438.89110	99.60000	.07860	.19610	8.10000	8.92000
3.848	6.179	3.96980	6.00740	2231.39990	1750.51590	439.96170	99.50000	.07740	.19630	8.10000	8.92000
3.834	8.158	3.97670	8.00330	2231.20001	1749.70680	440.45730	99.50000	.07680	.19630	8.10000	8.92000
	GRADIENT	.01551	.98604	-.05066	.24626	-.24472	.01273	.00024	-.00003	-.00000	-.00000

IA156A, AEDC PWT 16T-470, O T S W/SILTS (R8NM83) (10 MAY 80)

REFERENCE DATA

SREF = 2690.0000 SQ.FT. XMRP = 976.0000 IN. XT
LREF = 1290.3000 INCHES YMRP = .0000 IN. YT
BREF = 1290.3000 INCHES ZMRP = 400.0000 IN. ZT
SCALE = .0200

PARAMETRIC DATA

IB-ELV = 8.000 OB-ELV = 9.000
BDFLAP = .000 SPDBRK = .000
RUDDER = .000 SILTS = 1.000
MACH = .600 RN/L = 3.500

RUN NO. 1120/ 0 RN/L = 3.49 GRADIENT INTERVAL = -5.00/ 5.00

ALPHAO	BETAO	ALFAOU	BETAOU	PT	P	Q	TT	AFA	BFA	DEINLR	DEONLR
6.199	-7.959	5.99600	-8.01370	2233.09991	1750.47971	441.42040	99.50000	.07620	.19640	8.10000	8.92000
6.166	-5.903	5.97280	-5.98650	2232.79980	1750.28270	441.32960	99.50000	.07620	.19640	8.10000	8.92000
6.146	-3.877	5.97150	-3.99570	2232.29980	1751.92020	439.56620	99.50000	.07800	.19620	8.10000	8.92000
5.896	.134	5.81550	-.06130	2231.79980	1752.33760	438.80270	99.50000	.07870	.19610	8.10000	8.92000
5.802	4.075	5.84760	3.86960	2233.39990	1751.18510	441.09420	99.50000	.07660	.19630	8.10000	8.92000
5.758	5.987	5.84280	5.79400	2231.09991	1750.11549	440.03780	99.50000	.07720	.19630	8.10000	8.92000
5.823	8.257	5.93800	8.08050	2231.29980	1749.80640	440.45970	99.50000	.07680	.19630	8.10000	8.92000
	GRADIENT	-.01565	.98902	.13756	-.09186	.19101	-.00000	-.00018	.00001	-.00000	-.00000

RUN NO. 1121/ 0 RN/L = 3.50 GRADIENT INTERVAL = -5.00/ 5.00

ALPHAO	BETAO	ALFAOU	BETAOU	PT	P	Q	TT	AFA	BFA	DEINLR	DEONLR
8.087	-7.805	7.89390	-7.88830	2232.70001	1749.98000	441.49390	99.50000	.07600	.19640	8.10000	8.92000
7.992	-5.743	7.81230	-5.85290	2232.89990	1749.46730	442.08230	99.50000	.07550	.19650	8.10000	8.92000
7.975	-3.763	7.81850	-3.90350	2234.00000	1749.85060	442.69210	99.50000	.07510	.19650	8.10000	8.92000
7.881	.167	7.80490	-.02910	2232.70001	1749.67480	441.74390	99.20000	.07580	.19640	8.10000	8.92000
7.924	4.200	7.94520	3.99030	2232.70001	1751.30150	440.41020	99.20000	.07720	.19630	8.10000	8.92000
7.893	6.205	7.95260	6.00250	2232.39990	1750.79961	440.56960	99.10000	.07690	.19630	8.10000	8.92000
7.886	8.231	7.97550	8.04030	2232.89990	1748.95900	442.49850	99.10000	.07500	.19650	8.10000	8.92000
	GRADIENT	.01599	.99137	-.16255	.18318	-.28677	-.03751	.00026	-.00003	.00000	-.00000

IA156A, AEDC PWT 16T-470, O T S W/SILTS (R8NM85) (10 MAY 80)

REFERENCE DATA

SREF = 2690.0000 SQ.FT. XMRP = 976.0000 IN. XT
LREF = 1290.3000 INCHES YMRP = .0000 IN. YT
BREF = 1290.3000 INCHES ZMRP = 400.0000 IN. ZT
SCALE = .0200

PARAMETRIC DATA

IB-ELV = 8.000 OB-ELV = 9.000
BDFLAP = .000 SPDBRK = .000
RUDDER = .000 SILTS = 1.000
MACH = .800 RN/L = 3.500

RUN NO. 1132/ 0 RN/L = 3.51 GRADIENT INTERVAL = -5.00/ 5.00

ALPHAO	BETAO	ALFAOU	BETAOU	PT	P	Q	TT	AFA	BFA	DEINLR	DEONLR
-8.228	-5.851	-8.07170	-5.98710	1877.79980	1230.37990	552.89840	99.30000	-.03860	.20400	8.10000	8.92000
-8.232	-3.849	-8.10380	-4.01160	1882.09990	1234.86079	553.03420	100.30000	-.03830	.20400	8.10000	8.92000
-8.166	.278	-8.13000	.07350	1875.59990	1230.61909	551.10840	100.30000	-.03830	.20400	8.10000	8.92000
-7.998	4.292	-8.06100	4.09440	1881.20000	1233.76289	553.11470	99.50000	-.03830	.20400	8.10000	8.92000
-8.010	6.257	-8.10660	6.07360	1882.09990	1235.06300	552.89650	99.40000	-.03820	.20410	8.10000	8.92000
	GRADIENT	.00520	.99567	-.11736	-.13902	.00767	-.09781	.00000	.00000	-.00000	-.00000

RUN NO. 1133/ 0 RN/L = 3.50 GRADIENT INTERVAL = -5.00/ 5.00

ALPHAO	BETAO	ALFAOU	BETAOU	PT	P	Q	TT	AFA	BFA	DEINLR	DEONLR
-6.217	-5.991	-6.04130	-6.10250	1881.50000	1234.66850	552.72090	100.10000	-.03820	.20410	8.10000	8.92000
-6.150	-4.044	-5.99830	-4.18500	1881.09990	1234.06810	552.83300	100.10000	-.03830	.20400	8.10000	8.92000
-6.231	.132	-6.19040	-.07190	1882.89990	1235.45430	553.22240	100.10000	-.03830	.20400	8.10000	8.92000
-6.023	4.270	-6.10930	4.08110	1882.00000	1234.55881	553.16530	100.30000	-.03830	.20400	8.10000	8.92000
-5.980	6.239	-6.10220	6.07150	1879.70000	1233.48441	552.19380	100.10000	-.03830	.20410	8.10000	8.92000
	GRADIENT	-.01340	.99426	.10875	.05943	.04005	.02402	.00000	.00000	.00000	.00000

RUN NO. 1134/ 0 RN/L = 3.50 GRADIENT INTERVAL = -5.00/ 5.00

ALPHAO	BETAO	ALFAOU	BETAOU	PT	P	Q	TT	AFA	BFA	DEINLR	DEONLR
-4.121	-6.083	-3.92590	-6.15450	1881.09990	1234.16920	552.76440	100.00000	-.03830	.20400	8.10000	8.92000
-4.332	-3.988	-4.15810	-4.10070	1880.50000	1233.67329	552.65750	100.10000	-.03830	.20400	8.10000	8.92000
-4.233	.372	-4.20290	.16610	1879.89990	1233.37990	552.41310	100.10000	-.03830	.20400	8.10000	8.92000
-3.803	4.330	-3.93020	4.16590	1881.09990	1234.16920	552.76440	100.10000	-.03830	.20400	8.10000	8.92000
-3.861	6.148	-4.01300	6.00710	1881.20000	1234.57230	552.56420	100.30000	-.03820	.20410	8.10000	8.92000
	GRADIENT	.02676	.99353	.06859	.05748	.01169	.00000	.00000	-.00000	-.00000	.00000

RUN NO. 1135/ 0 RN/L = 3.50 GRADIENT INTERVAL = -5.00/ 5.00

ALPHAO	BETAO	ALFAOU	BETAOU	PT	P	Q	TT	AFA	BFA	DEINLR	DEONLR
-.375	-6.864	-.17090	-6.82590	1879.20000	1232.37990	552.57500	100.30000	-.03840	.20400	8.10000	8.92000
-.361	-4.564	-.15700	-4.52550	1879.00000	1232.88921	552.08080	100.30000	-.03830	.20400	8.10000	8.92000
-.335	-.469	-.13080	-.43060	1878.50000	1232.59399	551.91140	100.20000	-.03830	.20410	8.10000	8.92000
-.300	3.591	-.09590	3.62960	1878.59990	1233.09840	551.64230	100.20000	-.03820	.20410	8.10000	8.92000
-.297	5.727	-.09250	5.76560	1878.09990	1232.39841	551.74850	100.20000	-.03830	.20410	8.10000	8.92000
	GRADIENT	.00749	1.00000	-.04917	.02551	-.05375	-.01228	.00001	.00001	.00000	-.00000

IA156A, AEDC PWT 16T-470, O T S W/SILTS (R8NM85) (10 MAY 80)

REFERENCE DATA

SREF = 2690.0000 SQ.FT. XMRP = 976.0000 IN. XT
LREF = 1290.3000 INCHES YMRP = .0000 IN. YT
BREF = 1290.3000 INCHES ZMRP = 400.0000 IN. ZT
SCALE = .0200

PARAMETRIC DATA

IB-ELV = 8.000 OB-ELV = 9.000
BDFLAP = .000 SPDBRK = .000
RUDDER = .000 SILTS = 1.000
MACH = .800 RN/L = 3.500

RUN NO. 1136/ 0 RN/L = 3.50 GRADIENT INTERVAL = -5.00/ 5.00

ALPHAO	BETAO	ALFAOU	BETAOU	PT	P	Q	TT	AFA	BFA	DEINLR	DEONLR
3.989	-5.860	3.83690	-6.00140	1879.59990	1232.67680	552.66920	100.20000	-.03840	.20400	8.10000	8.92000
3.975	-3.748	3.85480	-3.91740	1882.29980	1234.35159	553.52830	100.20000	-.03840	.20400	8.10000	8.92000
3.871	.191	3.90860	-.01280	1879.20000	1233.18950	552.02470	100.10000	-.03820	.20410	8.10000	8.92000
3.791	3.961	3.96220	3.84310	1883.29980	1235.44780	553.52290	100.10000	-.03830	.20400	8.10000	8.92000
3.774	6.089	3.96620	6.01040	1880.59990	1233.77290	552.66380	100.10000	-.03830	.20400	8.10000	8.92000
	GRADIENT	.01393	1.00658	.12286	.13893	-.00355	-.01306	.00001	.00000	-.00000	-.00000

RUN NO. 1137/ 0 RN/L = 3.50 GRADIENT INTERVAL = -5.00/ 5.00

ALPHAO	BETAO	ALFAOU	BETAOU	PT	P	Q	TT	AFA	BFA	DEINLR	DEONLR
6.082	-5.825	5.96270	-5.99520	1880.29980	1233.57570	552.57590	100.10000	-.03830	.20400	8.10000	8.92000
6.052	-3.780	5.96900	-3.97010	1878.39990	1233.20290	551.42310	100.10000	-.03810	.20410	8.10000	8.92000
5.757	.158	5.79340	-.04690	1878.09990	1232.49950	551.67970	100.20000	-.03820	.20410	8.10000	8.92000
5.687	4.070	5.83430	3.92420	1879.39990	1233.28709	552.10620	100.10000	-.03820	.20410	8.10000	8.92000
5.758	6.033	5.93130	5.91760	1880.20000	1233.47610	552.56960	100.10000	-.03830	.20400	8.10000	8.92000
	GRADIENT	-.01719	1.00561	.12717	.01053	.08699	.00003	-.00001	-.00000	-.00000	-.00000

IA156A, AEDC PWT 16T-470, O T S W/SILTS (R8NM86) (10 MAY 80)

REFERENCE DATA

SREF = 2690.0000 SQ.FT. XMRP = 976.0000 IN. XT
LREF = 1290.3000 INCHES YMRP = .0000 IN. YT
BREF = 1290.3000 INCHES ZMRP = 400.0000 IN. ZT
SCALE = .0200

PARAMETRIC DATA

IB-ELV = 8.000 OB-ELV = 9.000
BDFLAP = .000 SPDBRK = .000
RUDDER = .000 SILTS = 1.000
MACH = .900 RN/L = 3.500

RUN NO. 1139/ 0 RN/L = 3.50 GRADIENT INTERVAL = -5.00/ 5.00

ALPHAO	BETAO	ALFAOU	BETAOU	PT	P	Q	TT	AFA	BFA	DEINLR	DEONLR
-8.106	-5.989	-7.93900	-6.11050	1778.39990	1051.68159	596.08860	100.10000	-.05180	.20010	8.10000	8.92000
-8.269	-3.772	-8.13110	-3.92580	1782.20000	1054.04761	597.29150	99.90000	-.05170	.20010	8.10000	8.92000
-8.177	.180	-8.12470	-.02030	1784.39990	1054.72169	598.40190	100.10000	-.05180	.20010	8.10000	8.92000
-7.996	4.388	-8.04750	4.18780	1784.20000	1054.92650	598.14280	99.90000	-.05180	.20010	8.10000	8.92000
-8.012	6.268	-8.09680	6.07930	1784.09990	1054.72630	598.19310	99.90000	-.05180	.20010	8.10000	8.92000
	GRADIENT	.01033	.99444	.24195	.10708	.10254	-.00051	-.00001	-.00000	-.00000	-.00000

IA156A, AEDC PWT 16T-470, O T S W/SILTS (R8NM86) (10 MAY 80)

REFERENCE DATA

SREF = 2690.0000 SQ.FT. XMRP = 976.0000 IN. XT
LREF = 1290.3000 INCHES YMRP = .0000 IN. YT
BREF = 1290.3000 INCHES ZMRP = 400.0000 IN. ZT
SCALE = .0200

PARAMETRIC DATA

IB-ELV = 8.000 OB-ELV = 9.000
BDFLAP = .000 SPDBRK = .000
RUDDER = .000 SILTS = 1.000
MACH = .900 RN/L = 3.500

RUN NO. 1140/ 0 RN/L = 3.50 GRADIENT INTERVAL = -5.00/ 5.00

ALPHAO	BETAO	ALFAOU	BETAOU	PT	P	Q	TT	AFA	BFA	DEINLR	DEONLR
-6.214	-5.990	-6.03230	-6.08750	1784.89990	1055.42070	598.32960	100.20000	-.05180	.20010	8.10000	8.92000
-6.164	-4.072	-6.00220	-4.20140	1784.50000	1055.52730	597.99120	100.20000	-.05180	.20010	8.10000	8.92000
-6.253	.100	-6.19750	-.09890	1784.70000	1055.72630	598.01030	100.40000	-.05170	.20010	8.10000	8.92000
-6.063	4.260	-6.13600	4.06650	1785.20000	1055.51730	598.47830	100.20000	-.05180	.20010	8.10000	8.92000
-5.777	6.360	-5.89190	6.18820	1784.89990	1055.42070	598.32960	100.20000	-.05180	.20010	8.10000	8.92000
	GRADIENT	-.01607	.99229	.08399	-.00118	.05843	.00002	.00000	-.00000	-.00000	-.00000

RUN NO. 1141/ 0 RN/L = 3.50 GRADIENT INTERVAL = -5.00/ 5.00

ALPHAO	BETAO	ALFAOU	BETAOU	PT	P	Q	TT	AFA	BFA	DEINLR	DEONLR
-4.123	-6.093	-3.92390	-6.14930	1785.09990	1055.31689	598.52880	100.30000	-.05180	.20010	8.10000	8.92000
-4.340	-4.003	-4.15830	-4.10210	1784.09990	1055.33150	597.83300	100.30000	-.05170	.20010	8.10000	8.92000
-4.253	.378	-4.20940	.17570	1784.50000	1055.42650	598.05130	100.20000	-.05180	.20010	8.10000	8.92000
-3.800	4.332	-3.91600	4.16150	1784.50000	1055.42650	598.05130	100.20000	-.05180	.20010	8.10000	8.92000
-3.869	6.156	-4.01170	6.00670	1784.09990	1055.33150	597.83300	100.30000	-.05170	.20010	8.10000	8.92000
	GRADIENT	.02834	.99112	.04878	.01158	.02661	-.01219	-.00001	.00000	-.00000	-.00000

RUN NO. 1142/ 0 RN/L = 3.50 GRADIENT INTERVAL = -5.00/ 5.00

ALPHAO	BETAO	ALFAOU	BETAOU	PT	P	Q	TT	AFA	BFA	DEINLR	DEONLR
-.404	-6.963	-.20370	-6.91130	1782.79980	1054.64430	597.34860	100.20000	-.05170	.20010	8.10000	8.92000
-.385	-4.826	-.18520	-4.77440	1782.00000	1054.15160	597.09230	100.40000	-.05170	.20010	8.10000	8.92000
-.354	-.537	-.15450	-.48500	1788.00000	1057.09061	599.46580	100.50000	-.05180	.20010	8.10000	8.92000
-.319	3.586	-.11860	3.63770	1784.50000	1055.02290	598.29150	100.50000	-.05180	.20010	8.10000	8.92000
-.319	5.744	-.11890	5.79560	1784.09990	1054.92799	598.07320	100.50000	-.05180	.20010	8.10000	8.92000
	GRADIENT	.00791	1.00002	.30462	.10750	.14533	.01196	-.00001	-.00000	-.00000	-.00000

RUN NO. 1143/ 0 RN/L = 3.50 GRADIENT INTERVAL = -5.00/ 5.00

ALPHAO	BETAO	ALFAOU	BETAOU	PT	P	Q	TT	AFA	BFA	DEINLR	DEONLR
4.083	-5.726	3.94470	-5.88040	1784.20000	1055.12840	598.02270	100.50000	-.05180	.20010	8.10000	8.92000
3.960	-3.778	3.85240	-3.95370	1785.00000	1055.52029	598.33910	100.50000	-.05170	.20010	8.10000	8.92000
3.857	.180	3.90820	-.02020	1785.59990	1055.71310	598.63650	100.70000	-.05180	.20010	8.10000	8.92000
3.771	3.897	3.94790	3.79030	1785.39990	1056.11960	598.25710	100.60000	-.05170	.20010	8.10000	8.92000
3.758	6.064	3.95360	5.99860	1784.29980	1055.42940	597.91210	100.60000	-.05170	.20010	8.10000	8.92000
	GRADIENT	.01246	1.00885	.05318	.07777	-.00976	.01343	-.00000	.00000	.00000	.00000

IA156A, AEDC PWT 16T-470, O T S W/SILTS (R8NM87) (10 MAY 80)

REFERENCE DATA

SREF = 2690.0000 SQ.FT. XMRP = 976.0000 IN. XT
LREF = 1290.3000 INCHES YMRP = .0000 IN. YT
BREF = 1290.3000 INCHES ZMRP = 400.0000 IN. ZT
SCALE = .0200

PARAMETRIC DATA

IB-ELV = 8.000 OB-ELV = 9.000
BDFLAP = .000 SPDBRK = .000
RUDDER = .000 SILTS = 1.000
MACH = .950 RN/L = 3.500

RUN NO. 1144/ 0 RN/L = 3.50 GRADIENT INTERVAL = -5.00/ 5.00

ALPHAO	BETAO	ALFAOU	BETAOU	PT	P	Q	TT	AFA	BFA	DEINLR	DEONLR
-8.259	-5.902	-8.09210	-6.02140	1750.79980	979.79590	618.63960	99.70000	-.05540	.19770	8.10000	8.92000
-8.255	-3.821	-8.11450	-3.97000	1756.50000	982.64010	620.84330	101.00000	-.05540	.19770	8.10000	8.92000
-8.175	.389	-8.12480	.19040	1742.39990	974.97340	615.73800	101.10000	-.05540	.19770	8.10000	8.92000
-8.017	4.353	-8.06400	4.15350	1747.50000	977.82570	617.54130	100.10000	-.05540	.19770	8.10000	8.92000
-8.001	6.248	-8.08210	6.05990	1743.59990	975.66240	616.15260	99.70000	-.05540	.19770	8.10000	8.92000
	GRADIENT	.00609	.99376	-1.12430	-.60173	-.41233	-.10872	.00000	-.00000	-.00000	-.00000

RUN NO. 1145/ 0 RN/L = 3.50 GRADIENT INTERVAL = -5.00/ 5.00

ALPHAO	BETAO	ALFAOU	BETAOU	PT	P	Q	TT	AFA	BFA	DEINLR	DEONLR
-6.216	-5.993	-6.03260	-6.08570	1744.29980	975.85420	616.50950	99.80000	-.05540	.19770	8.10000	8.92000
-6.163	-4.073	-5.99940	-4.19740	1747.70000	978.02440	617.56420	99.90000	-.05540	.19770	8.10000	8.92000
-6.250	.107	-6.19180	-.08990	1746.39990	977.03490	617.24850	100.00000	-.05540	.19770	8.10000	8.92000
-6.075	4.266	-6.14460	4.07250	1747.79980	977.82180	617.74150	100.90000	-.05540	.19770	8.10000	8.92000
-5.773	6.363	-5.88490	6.19010	1747.70000	977.82300	617.67480	99.50000	-.05540	.19770	8.10000	8.92000
	GRADIENT	-.01744	.99177	.01170	-.02447	.02118	.11985	-.00000	-.00000	-.00000	.00000

RUN NO. 1146/ 0 RN/L = 3.49 GRADIENT INTERVAL = -5.00/ 5.00

ALPHAO	BETAO	ALFAOU	BETAOU	PT	P	Q	TT	AFA	BFA	DEINLR	DEONLR
-4.115	-6.097	-3.91590	-6.14780	1744.59990	975.85030	616.71000	100.90000	-.05540	.19770	8.10000	8.92000
-4.333	-4.005	-4.15070	-4.09900	1751.00000	979.69240	618.82840	101.10000	-.05540	.19770	8.10000	8.92000
-4.255	.374	-4.20830	.17370	1747.79980	978.02320	617.63110	100.20000	-.05540	.19770	8.10000	8.92000
-3.806	4.343	-3.91820	4.17170	1745.59990	977.24680	616.60380	101.00000	-.05540	.19770	8.10000	8.92000
-3.876	6.157	-4.01510	6.00570	1746.79980	977.83500	617.07370	101.20000	-.05540	.19770	8.10000	8.92000
	GRADIENT	.02715	.99045	-.64829	-.29445	-.26659	-.01529	-.00000	-.00000	.00000	.00000

RUN NO. 1147/ 0 RN/L = 3.49 GRADIENT INTERVAL = -5.00/ 5.00

ALPHAO	BETAO	ALFAOU	BETAOU	PT	P	Q	TT	AFA	BFA	DEINLR	DEONLR
-.416	-6.985	-.21880	-6.92990	1746.59990	977.43480	617.16110	99.80000	-.05540	.19770	8.10000	8.92000
-.397	-4.840	-.19960	-4.78440	1747.50000	977.52370	617.70700	99.70000	-.05540	.19770	8.10000	8.92000
-.367	-.542	-.16910	-.48690	1748.79980	978.61400	617.96730	100.40000	-.05540	.19770	8.10000	8.92000
-.331	3.582	-.13330	3.63720	1746.00000	977.04000	616.98170	100.40000	-.05540	.19770	8.10000	8.92000
-.331	5.762	-.13350	5.81750	1741.00000	973.88430	615.41110	100.50000	-.05540	.19770	8.10000	8.92000
	GRADIENT	.00787	.99999	-.17474	-.05525	-.08510	.08368	.00000	.00000	.00000	.00000

IA156A, AEDC PWT 16T-470, O T S W/SILTS (R8NM87) (10 MAY 80)

REFERENCE DATA

SREF = 2690.0000 SQ.FT. XMRP = 976.0000 IN. XT
LREF = 1290.3000 INCHES YMRP = .0000 IN. YT
BREF = 1290.3000 INCHES ZMRP = 400.0000 IN. ZT
SCALE = .0200

PARAMETRIC DATA

IB-ELV = 8.000 OB-ELV = 9.000
BDFLAP = .000 SPDBRK = .000
RUDDER = .000 SILTS = 1.000
MACH = .950 RN/L = 3.500

RUN NO. 1148/ 0 RN/L = 3.49 GRADIENT INTERVAL = -5.00/ 5.00

ALPHAO	BETAO	ALFAOU	BETAOU	PT	P	Q	TT	AFA	BFA	DEINLR	DEONLR
3.978	-5.855	3.84130	-6.00780	1743.79980	975.65970	616.28610	100.50000	-.05540	.19770	8.10000	8.92000
3.964	-3.754	3.86180	-3.93200	1747.79980	977.72090	617.79690	100.40000	-.05540	.19770	8.10000	8.92000
3.852	.184	3.90730	-.01390	1741.39990	974.48320	615.34670	100.40000	-.05540	.19770	8.10000	8.92000
3.794	3.946	3.97150	3.84390	1753.29980	981.17210	619.53540	100.40000	-.05540	.19770	8.10000	8.92000
3.767	6.073	3.96250	6.01100	1748.50000	978.31590	617.93260	100.40000	-.05540	.19770	8.10000	8.92000
	GRADIENT	.01423	1.00969	.69610	.43833	.21919	.00000	.00000	-.00000	-.00000	.00000

IA156A, AEDC PWT 16T-470, O T S W/SILTS (R8NM88) (10 MAY 80)

REFERENCE DATA

SREF = 2690.0000 SQ.FT. XMRP = 976.0000 IN. XT
LREF = 1290.3000 INCHES YMRP = .0000 IN. YT
BREF = 1290.3000 INCHES ZMRP = 400.0000 IN. ZT
SCALE = .0200

PARAMETRIC DATA

IB-ELV = 8.000 OB-ELV = 9.000
BDFLAP = .000 SPDBRK = .000
RUDDER = .000 SILTS = 1.000
MACH = 1.050 RN/L = 3.500

RUN NO. 1149/ 0 RN/L = 3.50 GRADIENT INTERVAL = -5.00/ 5.00

ALPHAO	BETAO	ALFAOU	BETAOU	PT	P	Q	TT	AFA	BFA	DEINLR	DEONLR
-8.264	-5.919	-8.09360	-6.03180	1703.00000	847.33840	654.58940	100.10000	-.06090	.19440	8.10000	8.92000
-8.287	-3.832	-8.14230	-3.97470	1704.20000	848.62840	654.73970	100.10000	-.06080	.19440	8.10000	8.92000
-8.186	.397	-8.13020	.20090	1701.50000	846.25170	654.16530	100.10000	-.06090	.19440	8.10000	8.92000
-8.011	4.342	-8.05360	4.14300	1702.09990	846.44580	654.44290	100.20000	-.06090	.19440	8.10000	8.92000
-8.017	6.263	-8.09380	6.07440	1704.09990	849.43140	654.31810	100.30000	-.06080	.19450	8.10000	8.92000
	GRADIENT	.01076	.99306	-.26149	-.27055	-.03750	.01209	-.00001	.00000	-.00000	-.00000

RUN NO. 1150/ 0 RN/L = 3.50 GRADIENT INTERVAL = -5.00/ 5.00

ALPHAO	BETAO	ALFAOU	BETAOU	PT	P	Q	TT	AFA	BFA	DEINLR	DEONLR
-6.217	-6.000	-6.03200	-6.08520	1703.00000	847.73900	654.40970	100.20000	-.06090	.19440	8.10000	8.92000
-6.143	-4.071	-5.97650	-4.18810	1704.29980	848.82790	654.71090	100.10000	-.06080	.19440	8.10000	8.92000
-6.263	.102	-6.19920	-.09180	1703.50000	848.23510	654.49100	100.10000	-.06080	.19440	8.10000	8.92000
-6.050	4.276	-6.11520	4.08290	1703.50000	847.63350	654.76070	100.10000	-.06090	.19440	8.10000	8.92000
-6.010	6.261	-6.11180	6.08440	1701.00000	846.65770	653.67970	100.30000	-.06080	.19440	8.10000	8.92000
	GRADIENT	-.01661	.99092	-.09582	-.14310	.00597	-.00000	-.00001	-.00000	.00000	-.00000

IA156A, AEDC PWT 16T-470, O T S W/SILTS (R8NM88) (10 MAY 80)

REFERENCE DATA

SREF = 2690.0000 SQ.FT. XMRP = 976.0000 IN. XT
LREF = 1290.3000 INCHES YMRP = .0000 IN. YT
BREF = 1290.3000 INCHES ZMRP = 400.0000 IN. ZT
SCALE = .0200

PARAMETRIC DATA

IB-ELV = 8.000 OB-ELV = 9.000
BDFLAP = .000 SPDBRK = .000
RUDDER = .000 SILTS = 1.000
MACH = 1.050 RN/L = 3.500

RUN NO. 1151/ 0 RN/L = 3.50 GRADIENT INTERVAL = -5.00/ 5.00

ALPHAO	BETAO	ALFAOU	BETAOU	PT	P	Q	TT	AFA	BFA	DEINLR	DEONLR
-4.122	-6.105	-3.92290	-6.14840	1702.00000	847.64970	653.84230	100.10000	-.06080	.19440	8.10000	8.92000
-4.348	-4.023	-4.16280	-4.10910	1704.89990	848.82150	655.07860	100.10000	-.06080	.19440	8.10000	8.92000
-4.265	.371	-4.21270	.17450	1707.59990	850.19600	656.10230	100.20000	-.06080	.19440	8.10000	8.92000
-3.797	4.336	-3.90530	4.16350	1702.79980	848.14230	654.10720	100.20000	-.06080	.19440	8.10000	8.92000
-3.885	6.173	-4.01980	6.02040	1703.00000	847.83940	654.36470	100.10000	-.06080	.19440	8.10000	8.92000
	GRADIENT	.03005	.98941	-.23564	-.07416	-.10992	.01216	.00000	.00000	.00000	-.00000

RUN NO. 1152/ 0 RN/L = 3.50 GRADIENT INTERVAL = -5.00/ 5.00

ALPHAO	BETAO	ALFAOU	BETAOU	PT	P	Q	TT	AFA	BFA	DEINLR	DEONLR
-.451	-7.057	-.25660	-6.99620	1702.70000	848.34380	653.95580	100.10000	-.06080	.19440	8.10000	8.92000
-.435	-4.891	-.24080	-4.83020	1702.70000	847.34130	654.40580	100.10000	-.06080	.19440	8.10000	8.92000
-.409	-.539	-.21480	-.47830	1701.79980	847.75200	653.67460	100.10000	-.06080	.19440	8.10000	8.92000
-.376	3.592	-.18120	3.65300	1703.29980	848.23710	654.36840	100.10000	-.06080	.19440	8.10000	8.92000
-.373	5.772	-.17810	5.83300	1704.20000	849.33010	654.42460	100.10000	-.06080	.19450	8.10000	8.92000
	GRADIENT	.00702	1.00000	.06824	.10550	-.00586	-.00000	.00000	-.00000	-.00000	-.00000

RUN NO. 1153/ 0 RN/L = 3.50 GRADIENT INTERVAL = -5.00/ 5.00

ALPHAO	BETAO	ALFAOU	BETAOU	PT	P	Q	TT	AFA	BFA	DEINLR	DEONLR
4.063	-5.735	3.93570	-5.89450	1705.29980	849.21830	655.14360	100.10000	-.06080	.19440	8.10000	8.92000
3.941	-3.723	3.84620	-3.90300	1702.09990	847.64840	653.90360	100.10000	-.06080	.19440	8.10000	8.92000
3.717	.017	3.76880	-.17990	1705.70000	850.11600	654.98340	100.20000	-.06080	.19450	8.10000	8.92000
3.796	3.944	3.97500	3.84720	1702.09990	847.84890	653.81350	100.10000	-.06080	.19440	8.10000	8.92000
3.767	6.061	3.96280	6.00510	1702.70000	846.94040	654.58540	100.20000	-.06090	.19440	8.10000	8.92000
	GRADIENT	.01710	1.01096	-.00765	.02111	-.01414	-.00021	.00000	-.00000	-.00000	-.00000

IA156A, AEDC PWT 16T-470, O T S W/SILTS (R8NM89) (10 MAY 80)

REFERENCE DATA

SREF = 2690.0000 SQ.FT. XMRP = 976.0000 IN. XT
LREF = 1290.3000 INCHES YMRP = .0000 IN. YT
BREF = 1290.3000 INCHES ZMRP = 400.0000 IN. ZT
SCALE = .0200

PARAMETRIC DATA

IB-ELV = 8.000 OB-ELV = 9.000
BDFLAP = .000 SPDBRK = .000
RUDDER = .000 SILTS = 1.000
MACH = 1.100 RN/L = 3.500

RUN NO. 1154/ 0 RN/L = 3.50 GRADIENT INTERVAL = -5.00/ 5.00

ALPHAO	BETAO	ALFAOU	BETAOU	PT	P	Q	TT	AFA	BFA	DEINLR	DEONLR
-8.241	-5.914	-8.06940	-6.02470	1693.09990	795.08010	670.81010	100.50000	-.06310	.19440	8.10000	8.92000
-8.257	-3.818	-8.10970	-3.95970	1689.29980	792.01610	669.81200	100.40000	-.06320	.19440	8.10000	8.92000
-8.183	.180	-8.11910	-.01460	1690.50000	791.40500	670.75170	100.40000	-.06320	.19440	8.10000	8.92000
-8.011	4.357	-8.05150	4.15660	1690.00000	791.40990	670.45900	100.40000	-.06320	.19440	8.10000	8.92000
-8.012	6.257	-8.08620	6.06670	1689.70000	791.31250	670.32300	100.30000	-.06320	.19440	8.10000	8.92000
	GRADIENT	.00719	.99289	.08412	-.07359	.07803	.00000	.00000	.00000	.00000	.00000

RUN NO. 1155/ 0 RN/L = 3.50 GRADIENT INTERVAL = -5.00/ 5.00

ALPHAO	BETAO	ALFAOU	BETAOU	PT	P	Q	TT	AFA	BFA	DEINLR	DEONLR
-6.202	-5.994	-6.01470	-6.07690	1690.70000	792.20310	670.55300	100.40000	-.06320	.19440	8.10000	8.92000
-6.179	-4.081	-6.01040	-4.19670	1692.50000	792.58620	671.44870	100.20000	-.06320	.19440	8.10000	8.92000
-6.274	.100	-6.20740	-.09330	1692.00000	791.99100	671.39280	100.30000	-.06320	.19440	8.10000	8.92000
-6.064	4.280	-6.12730	4.08560	1690.20000	792.20780	670.26000	100.30000	-.06320	.19440	8.10000	8.92000
-6.003	6.253	-6.10400	6.07470	1693.39990	792.77780	671.89650	100.30000	-.06330	.19440	8.10000	8.92000
	GRADIENT	-.01398	.99058	-.27508	-.04526	-.14217	.01196	-.00000	.00000	.00000	.00000

RUN NO. 1156/ 0 RN/L = 3.50 GRADIENT INTERVAL = -5.00/ 5.00

ALPHAO	BETAO	ALFAOU	BETAOU	PT	P	Q	TT	AFA	BFA	DEINLR	DEONLR
-4.123	-6.105	-3.92260	-6.14620	1689.39990	792.21510	669.79150	100.30000	-.06320	.19440	8.10000	8.92000
-4.346	-4.020	-4.16010	-4.10350	1691.79980	792.39280	671.11790	100.40000	-.06320	.19440	8.10000	8.92000
-4.258	.363	-4.20250	.16660	1689.39990	791.31540	670.14750	100.40000	-.06320	.19440	8.10000	8.92000
-3.785	4.336	-3.89210	4.16150	1692.09990	792.09010	671.41190	100.40000	-.06330	.19440	8.10000	8.92000
-3.882	6.170	-4.01590	6.01500	1692.50000	793.18600	671.21170	100.40000	-.06320	.19440	8.10000	8.92000
	GRADIENT	.03136	.98892	.02589	-.03983	.03078	.00000	-.00001	-.00000	-.00000	-.00000

RUN NO. 1157/ 0 RN/L = 3.50 GRADIENT INTERVAL = -5.00/ 5.00

ALPHAO	BETAO	ALFAOU	BETAOU	PT	P	Q	TT	AFA	BFA	DEINLR	DEONLR
-.456	-7.037	-.26160	-6.97420	1687.59990	791.03220	669.21190	100.30000	-.06320	.19440	8.10000	8.92000
-.437	-4.905	-.24300	-4.84210	1692.59990	792.38530	671.58620	100.40000	-.06320	.19440	8.10000	8.92000
-.402	-.515	-.20720	-.45140	1689.00000	790.21950	670.34720	100.30000	-.06330	.19450	8.10000	8.92000
-.373	3.594	-.17890	3.65720	1690.50000	791.70510	670.63330	100.10000	-.06320	.19440	8.10000	8.92000
-.369	5.774	-.17460	5.83740	1687.50000	790.83330	669.23240	100.30000	-.06320	.19440	8.10000	8.92000
	GRADIENT	.00755	1.00001	-.25361	-.08475	-.11406	-.03515	-.00000	.00000	.00000	.00000

IA156A, AEDC PWT 16T-470, O T S W/SILTS (R8NM89) (10 MAY 80)

REFERENCE DATA

SREF = 2690.0000 SQ.FT. XMRP = 976.0000 IN. XT
LREF = 1290.3000 INCHES YMRP = .0000 IN. YT
BREF = 1290.3000 INCHES ZMRP = 400.0000 IN. ZT
SCALE = .0200

PARAMETRIC DATA

IB-ELV = 8.000 OB-ELV = 9.000
BDFLAP = .000 SPDBRK = .000
RUDDER = .000 SILTS = 1.000
MACH = 1.100 RN/L = 3.500

RUN NO. 1158/ 0 RN/L = 3.50 GRADIENT INTERVAL = -5.00/ 5.00

ALPHAO	BETAO	ALFAOU	BETAOU	PT	P	Q	TT	AFA	BFA	DEINLR	DEONLR
3.961	-5.845	3.83110	-6.00300	1689.59990	790.01390	670.77690	100.20000	-.06330	.19450	8.10000	8.92000
3.944	-3.745	3.84950	-3.92650	1690.20000	792.60770	670.10180	100.30000	-.06320	.19440	8.10000	8.92000
3.822	.184	3.88470	-.01010	1688.29980	791.52560	669.42410	100.20000	-.06320	.19440	8.10000	8.92000
3.780	3.932	3.96110	3.83680	1692.70000	792.28440	671.68410	100.30000	-.06330	.19440	8.10000	8.92000
3.771	6.068	3.96850	6.01400	1687.50000	790.83330	669.23240	100.10000	-.06320	.19440	8.10000	8.92000
	GRADIENT	.01449	1.01107	.31909	-.04400	.20304	-.00021	-.00001	-.00000	-.00000	.00000

IA156A, AEDC PWT 16T-470, O T S W/SILTS (R8NM90) (10 MAY 80)

REFERENCE DATA

SREF = 2690.0000 SQ.FT. XMRP = 976.0000 IN. XT
LREF = 1290.3000 INCHES YMRP = .0000 IN. YT
BREF = 1290.3000 INCHES ZMRP = 400.0000 IN. ZT
SCALE = .0200

PARAMETRIC DATA

IB-ELV = 8.000 OB-ELV = 9.000
BDFLAP = .000 SPDBRK = .000
RUDDER = .000 SILTS = 1.000
MACH = 1.150 RN/L = 3.500

RUN NO. 1159/ 0 RN/L = 3.49 GRADIENT INTERVAL = -5.00/ 5.00

ALPHAO	BETAO	ALFAOU	BETAOU	PT	P	Q	TT	AFA	BFA	DEINLR	DEONLR
-8.245	-5.924	-8.07040	-6.03460	1680.70000	739.27420	684.31570	100.60000	-.06550	.19610	8.10000	8.92000
-8.273	-3.821	-8.12340	-3.96340	1679.89990	738.38330	684.17240	100.60000	-.06550	.19610	8.10000	8.92000
-8.197	.395	-8.13710	.19740	1682.70000	741.95020	684.51950	100.70000	-.06550	.19600	8.10000	8.92000
-8.012	4.342	-8.05190	4.13920	1678.79980	738.39210	683.55790	100.60000	-.06550	.19610	8.10000	8.92000
-8.013	6.266	-8.08720	6.07270	1679.29980	738.88670	683.65820	100.50000	-.06550	.19610	8.10000	8.92000
	GRADIENT	.00862	.99251	-.12570	.01066	-.07349	.00027	.00000	-.00000	.00000	-.00000

RUN NO. 1160/ 0 RN/L = 3.50 GRADIENT INTERVAL = -5.00/ 5.00

ALPHAO	BETAO	ALFAOU	BETAOU	PT	P	Q	TT	AFA	BFA	DEINLR	DEONLR
-6.211	-6.001	-6.02090	-6.08320	1680.89990	738.97340	684.52880	100.30000	-.06550	.19610	8.10000	8.92000
-6.157	-4.080	-5.98550	-4.19520	1679.39990	738.58670	683.82540	100.20000	-.06550	.19610	8.10000	8.92000
-6.277	.102	-6.20820	-.09330	1681.59990	739.66580	684.68360	100.50000	-.06550	.19610	8.10000	8.92000
-6.058	4.283	-6.12090	4.08630	1679.29980	737.59060	684.10670	100.50000	-.06560	.19620	8.10000	8.92000
-6.000	6.253	-6.10050	6.07260	1682.09990	740.95800	684.52320	100.60000	-.06550	.19610	8.10000	8.92000
	GRADIENT	-.01619	.99023	-.01197	-.11911	.03363	.03587	-.00001	.00001	.00000	.00000

IA156A, AEDC PWT 16T-470, O T S W/SILTS (R8NM90) (10 MAY 80)

REFERENCE DATA

SREF = 2690.0000 SQ.FT. XMRP = 976.0000 IN. XT
LREF = 1290.3000 INCHES YMRP = .0000 IN. YT
BREF = 1290.3000 INCHES ZMRP = 400.0000 IN. ZT
SCALE = .0200

PARAMETRIC DATA

IB-ELV = 8.000 OB-ELV = 9.000
BDFLAP = .000 SPDBRK = .000
RUDDER = .000 SILTS = 1.000
MACH = 1.150 RN/L = 3.500

RUN NO. 1161/ 0 RN/L = 3.50 GRADIENT INTERVAL = -5.00/ 5.00

ALPHAO	BETAO	ALFAOU	BETAOU	PT	P	Q	TT	AFA	BFA	DEINLR	DEONLR
-4.119	-6.114	-3.91650	-6.15440	1678.89990	738.19190	683.68120	100.30000	-.06550	.19610	8.10000	8.92000
-4.340	-4.024	-4.15140	-4.10800	1680.00000	739.18020	683.95830	100.40000	-.06550	.19610	8.10000	8.92000
-4.279	.374	-4.22220	.17480	1681.00000	739.27170	684.48340	100.50000	-.06550	.19610	8.10000	8.92000
-3.795	4.332	-3.90170	4.15510	1679.29980	738.38820	683.83720	100.40000	-.06550	.19610	8.10000	8.92000
-3.894	6.179	-4.02770	6.02190	1681.09990	739.37060	684.50540	100.60000	-.06550	.19610	8.10000	8.92000
	GRADIENT	.02903	.98855	-.07805	-.09265	-.01202	.00042	-.00000	.00000	.00000	.00000

RUN NO. 1162/ 0 RN/L = 3.49 GRADIENT INTERVAL = -5.00/ 5.00

ALPHAO	BETAO	ALFAOU	BETAOU	PT	P	Q	TT	AFA	BFA	DEINLR	DEONLR
-.448	-7.070	-.25200	-7.00470	1679.29980	739.48490	683.46530	100.40000	-.06550	.19610	8.10000	8.92000
-.413	-4.929	-.21660	-4.86390	1676.50000	737.81250	682.47490	100.50000	-.06550	.19610	8.10000	8.92000
-.378	-.504	-.18150	-.43850	1675.00000	736.72780	682.00830	100.50000	-.06550	.19610	8.10000	8.92000
-.348	3.596	-.15200	3.66150	1678.70000	740.08810	682.92580	100.70000	-.06540	.19600	8.10000	8.92000
-.358	5.780	-.16170	5.84560	1678.70000	737.09690	683.93990	100.60000	-.06560	.19620	8.10000	8.92000
	GRADIENT	.00758	.99999	.25017	.26016	.05080	.02315	.00001	-.00001	-.00000	.00000

RUN NO. 1163/ 0 RN/L = 3.50 GRADIENT INTERVAL = -5.00/ 5.00

ALPHAO	BETAO	ALFAOU	BETAOU	PT	P	Q	TT	AFA	BFA	DEINLR	DEONLR
3.969	-5.846	3.83970	-6.00730	1681.89990	739.96240	684.75000	100.40000	-.06550	.19610	8.10000	8.92000
3.937	-3.734	3.84370	-3.91790	1679.39990	738.78610	683.75810	100.50000	-.06550	.19610	8.10000	8.92000
3.820	.186	3.88580	-.00980	1680.00000	739.87820	683.72120	100.10000	-.06550	.19610	8.10000	8.92000
3.826	3.967	4.00960	3.87210	1683.09990	740.65090	685.18410	100.20000	-.06550	.19610	8.10000	8.92000
3.727	6.007	3.92700	5.95440	1680.00000	738.48220	684.19460	100.20000	-.06550	.19610	8.10000	8.92000
	GRADIENT	.02148	1.01156	.47849	.24240	.18399	-.03935	-.00000	-.00000	-.00000	.00000

IA156A, AEDC PWT 16T-470, O T S W/SILTS (R8NM91) (10 MAY 80)

REFERENCE DATA

SREF = 2690.0000 SQ.FT. XMRP = 976.0000 IN. XT
LREF = 1290.3000 INCHES YMRP = .0000 IN. YT
BREF = 1290.3000 INCHES ZMRP = 400.0000 IN. ZT
SCALE = .0200

PARAMETRIC DATA

IB-ELV = 8.000 OB-ELV = 9.000
BDFLAP = .000 SPDBRK = .000
RUDDER = .000 SILTS = 1.000
MACH = 1.250 RN/L = 3.500

RUN NO. 1164/ 0 RN/L = 3.50 GRADIENT INTERVAL = -5.00/ 5.00

ALPHAO	BETAO	ALFAOU	BETAOU	PT	P	Q	TT	AFA	BFA	DEINLR	DEONLR
-8.253	-5.912	-8.06720	-6.02720	1676.20000	646.42110	707.92700	100.10000	-.07030	.20650	8.10000	8.92000
-8.266	-3.806	-8.10730	-3.95540	1678.09990	647.69950	708.61060	100.30000	-.07030	.20640	8.10000	8.92000
-8.197	.403	-8.13280	.19550	1678.20000	648.19480	708.55270	100.30000	-.07020	.20630	8.10000	8.92000
-8.008	4.363	-8.04870	4.14890	1677.39990	647.80300	708.23320	100.30000	-.07020	.20630	8.10000	8.92000
-8.020	6.274	-8.09750	6.07060	1677.09990	647.70530	708.10250	100.20000	-.07020	.20630	8.10000	8.92000
	GRADIENT	.00703	.99196	-.08453	.01377	-.04585	.00000	.00001	-.00001	-.00000	-.00000

RUN NO. 1165/ 0 RN/L = 3.50 GRADIENT INTERVAL = -5.00/ 5.00

ALPHAO	BETAO	ALFAOU	BETAOU	PT	P	Q	TT	AFA	BFA	DEINLR	DEONLR
-6.244	-6.014	-6.04320	-6.09950	1678.20000	647.99660	708.59620	100.30000	-.07020	.20630	8.10000	8.92000
-6.183	-4.077	-6.00160	-4.19750	1677.29980	647.20830	708.31250	100.30000	-.07020	.20640	8.10000	8.92000
-6.278	.117	-6.20420	-.08810	1676.79980	646.61600	708.18850	100.30000	-.07030	.20650	8.10000	8.92000
-6.050	4.293	-6.11530	4.08510	1678.20000	647.30200	708.74780	100.30000	-.07030	.20640	8.10000	8.92000
-6.001	6.271	-6.10550	6.07990	1676.59990	647.51000	707.89180	100.20000	-.07020	.20630	8.10000	8.92000
	GRADIENT	-.01361	.98952	.10738	.01108	.05195	-.00000	-.00001	.00000	-.00000	-.00000

RUN NO. 1166/ 0 RN/L = 3.49 GRADIENT INTERVAL = -5.00/ 5.00

ALPHAO	BETAO	ALFAOU	BETAOU	PT	P	Q	TT	AFA	BFA	DEINLR	DEONLR
-4.135	-6.129	-3.92030	-6.16940	1672.09990	645.75100	705.99660	100.30000	-.07020	.20630	8.10000	8.92000
-4.339	-4.003	-4.13890	-4.08900	1674.50000	646.13350	707.12890	100.40000	-.07030	.20640	8.10000	8.92000
-4.265	.380	-4.20330	.17120	1679.29980	648.18850	709.11160	100.40000	-.07020	.20640	8.10000	8.92000
-3.793	4.340	-3.90440	4.15210	1680.00000	648.18430	709.46700	100.40000	-.07020	.20640	8.10000	8.92000
-3.889	6.192	-4.02920	6.02590	1672.29980	645.55130	706.14160	100.30000	-.07020	.20630	8.10000	8.92000
	GRADIENT	.02735	.98759	.66703	.24979	.28333	.00000	.00001	-.00000	.00000	-.00000

RUN NO. 1167/ 0 RN/L = 3.50 GRADIENT INTERVAL = -5.00/ 5.00

ALPHAO	BETAO	ALFAOU	BETAOU	PT	P	Q	TT	AFA	BFA	DEINLR	DEONLR
-.478	-7.082	-.27210	-7.01180	1678.39990	648.59060	708.56740	100.40000	-.07020	.20620	8.10000	8.92000
-.444	-4.897	-.23720	-4.82700	1674.89990	646.52810	707.24540	100.40000	-.07020	.20630	8.10000	8.92000
-.399	-.550	-.19270	-.48000	1677.20000	647.10960	708.28340	100.40000	-.07030	.20640	8.10000	8.92000
-.376	3.595	-.17000	3.66540	1681.09990	648.87210	709.87400	100.40000	-.07020	.20640	8.10000	8.92000
-.383	5.801	-.17670	5.87130	1674.29980	646.63090	706.91870	100.40000	-.07020	.20630	8.10000	8.92000
	GRADIENT	.00793	1.00004	.72846	.27487	.30896	-.00000	-.00000	.00001	.00000	-.00000

IA156A, AEDC PWT 16T-470, O T S W/SILTS (R8NM91) (10 MAY 80)

REFERENCE DATA

SREF = 2690.0000 SQ.FT. XMRP = 976.0000 IN. XT
LREF = 1290.3000 INCHES YMRP = .0000 IN. YT
BREF = 1290.3000 INCHES ZMRP = 400.0000 IN. ZT
SCALE = .0200

PARAMETRIC DATA

IB-ELV = 8.000 OB-ELV = 9.000
BDFLAP = .000 SPDBRK = .000
RUDDER = .000 SILTS = 1.000
MACH = 1.250 RN/L = 3.500

RUN NO. 1168/ 0 RN/L = 3.49 GRADIENT INTERVAL = -5.00/ 5.00

ALPHAO	BETAO	ALFAOU	BETAOU	PT	P	Q	TT	AFA	BFA	DEINLR	DEONLR
4.077	-5.702	3.94530	-5.87550	1675.00000	646.42820	707.31790	100.40000	-.07020	.20640	8.10000	8.92000
3.954	-3.767	3.85470	-3.96120	1674.29980	646.43240	706.96220	100.40000	-.07020	.20630	8.10000	8.92000
3.808	.180	3.87620	-.02690	1674.79980	646.62790	707.17290	100.40000	-.07020	.20630	8.10000	8.92000
3.745	3.875	3.93810	3.77510	1675.70000	647.81300	707.36910	100.30000	-.07020	.20620	8.10000	8.92000
3.771	6.090	3.98220	6.03480	1676.09990	647.11620	707.72460	100.40000	-.07020	.20630	8.10000	8.92000
	GRADIENT	.01085	1.01215	.18258	.17917	.05325	-.01294	-.00000	-.00001	.00000	-.00000

IA156A, AEDC PWT 16T-470, O T S W/SILTS (R8NM92) (10 MAY 80)

REFERENCE DATA

SREF = 2690.0000 SQ.FT. XMRP = 976.0000 IN. XT
LREF = 1290.3000 INCHES YMRP = .0000 IN. YT
BREF = 1290.3000 INCHES ZMRP = 400.0000 IN. ZT
SCALE = .0200

PARAMETRIC DATA

IB-ELV = 8.000 OB-ELV = 5.000
BDFLAP = .000 SPDBRK = .000
RUDDER = .000 SILTS = 1.000
MACH = .600 RN/L = 3.500

RUN NO. 1173/ 0 RN/L = 3.50 GRADIENT INTERVAL = -5.00/ 5.00

ALPHAO	BETAO	ALFAOU	BETAOU	PT	P	Q	TT	AFA	BFA	DEINLR	DEONLR
-8.025	-7.908	-7.93570	-8.09900	2235.00000	1755.62450	438.79610	100.60000	.07930	.19600	8.10000	5.00000
-8.116	-5.784	-8.05730	-5.98630	2234.09991	1753.61011	439.69290	99.50000	.07820	.19620	8.10000	5.00000
-8.121	-3.803	-8.10010	-4.01320	2243.00000	1760.33400	441.65970	99.00000	.07800	.19620	8.10000	5.00000
-8.048	.275	-8.12800	.07970	2241.59991	1759.34720	441.25220	99.70000	.07810	.19620	8.10000	5.00000
-7.900	4.226	-8.06030	4.08890	2241.09991	1758.03590	441.94750	99.50000	.07730	.19630	8.10000	5.00000
-7.898	6.164	-8.08020	6.05730	2242.00000	1758.93190	441.96920	99.70000	.07740	.19620	8.10000	5.00000
-7.725	8.229	-7.92230	8.15390	2235.20001	1754.40010	439.96970	100.50000	.07810	.19620	8.10000	5.00000
	GRADIENT	.00489	1.00905	-.23722	-.28598	.03517	.06286	-.00009	.00001	.00000	.00000

RUN NO. 1174/ 0 RN/L = 3.49 GRADIENT INTERVAL = -5.00/ 5.00

ALPHAO	BETAO	ALFAOU	BETAOU	PT	P	Q	TT	AFA	BFA	DEINLR	DEONLR
-6.148	-7.913	-6.03380	-8.09080	2236.59991	1756.81030	439.16850	100.50000	.07930	.19600	8.10000	5.00000
-6.110	-5.932	-6.02130	-6.12380	2239.70001	1759.38770	439.66020	99.80000	.07940	.19600	8.10000	5.00000
-6.066	-3.987	-6.01400	-4.19200	2236.09991	1756.00760	439.40700	100.30000	.07890	.19610	8.10000	5.00000
-6.110	.107	-6.18480	-.09050	2238.29980	1756.16409	441.12920	100.30000	.07760	.19620	8.10000	5.00000
-5.962	4.196	-6.13800	4.07930	2237.50000	1756.18120	440.44240	100.10000	.07810	.19620	8.10000	5.00000
-5.737	6.239	-5.93470	6.16440	2239.20001	1757.77150	440.56670	100.10000	.07830	.19620	8.10000	5.00000
-5.875	8.145	-6.08060	8.09530	2237.89990	1756.68089	440.36840	100.50000	.07830	.19620	8.10000	5.00000
	GRADIENT	-.01516	1.01078	.17117	.02122	.12659	-.02444	-.00010	.00001	-.00000	-.00000

IA156A, AEDC PWT 16T-470, O T S W/SILTS (R8NM92) (10 MAY 80)

REFERENCE DATA

SREF = 2690.0000 SQ.FT. XMRP = 976.0000 IN. XT
LREF = 1290.3000 INCHES YMRP = .0000 IN. YT
BREF = 1290.3000 INCHES ZMRP = 400.0000 IN. ZT
SCALE = .0200

PARAMETRIC DATA

IB-ELV = 8.000 OB-ELV = -5.000
BDFLAP = .000 SPDBRK = .000
RUDDER = .000 SILTS = 1.000
MACH = .600 RN/L = 3.500

RUN NO. 1175/ 0 RN/L = 3.49 GRADIENT INTERVAL = -5.00/ 5.00

ALPHAO	BETAO	ALFAOU	BETAOU	PT	P	Q	TT	AFA	BFA	DEINLR	DEONLR
-4.027	-8.037	-3.87900	-8.18770	2234.00000	1753.61230	439.60690	100.50000	.07830	.19620	8.10000	5.00000
-4.229	-5.935	-4.10450	-6.10470	2230.50000	1749.51830	440.02320	100.40000	.07710	.19630	8.10000	5.00000
-4.242	-3.901	-4.15310	-4.09240	2241.89990	1757.61230	442.96750	100.50000	.07640	.19640	8.10000	5.00000
-4.043	.175	-4.11880	-.02170	2237.89990	1754.95239	441.78690	100.40000	.07680	.19630	8.10000	5.00000
-3.706	4.278	-3.90350	4.20520	2236.89990	1754.05881	441.67920	100.50000	.07670	.19630	8.10000	5.00000
-3.658	6.060	-3.86550	6.02420	2235.20001	1753.38350	440.80400	100.60000	.07730	.19630	8.10000	5.00000
-3.824	8.031	-4.03490	8.01710	2235.00000	1753.48930	440.54910	100.60000	.07750	.19620	8.10000	5.00000
	GRADIENT	.03054	1.01448	-.61091	-.43422	-.15737	.00003	.00004	-.00001	-.00000	-.00000

RUN NO. 1176/ 0 RN/L = 3.49 GRADIENT INTERVAL = -5.00/ 5.00

ALPHAO	BETAO	ALFAOU	BETAOU	PT	P	Q	TT	AFA	BFA	DEINLR	DEONLR
-.373	-8.758	-.17680	-8.83550	2234.79980	1752.98540	440.79440	100.70000	.07720	.19630	8.10000	5.00000
-.357	-6.585	-.16050	-6.66150	2234.70001	1752.58060	441.04220	100.70000	.07690	.19630	8.10000	5.00000
-.346	-4.536	-.14910	-4.61140	2235.59991	1752.05321	442.23120	100.70000	.07590	.19640	8.10000	5.00000
-.319	-.396	-.12300	-.47350	2233.89990	1752.08940	440.77270	100.70000	.07700	.19630	8.10000	5.00000
-.289	3.682	-.09210	3.60650	2235.39990	1751.85400	442.22630	100.70000	.07580	.19640	8.10000	5.00000
-.286	5.791	-.08990	5.71590	2234.29980	1750.65750	442.28300	100.70000	.07550	.19650	8.10000	5.00000
-.275	7.868	-.07850	7.79200	2233.29980	1750.98390	441.17500	100.70000	.07650	.19640	8.10000	5.00000
	GRADIENT	.00693	1.00001	-.02529	-.02416	-.00147	.00000	-.00001	-.00000	-.00000	.00000

RUN NO. 1177/ 0 RN/L = 3.50 GRADIENT INTERVAL = -5.00/ 5.00

ALPHAO	BETAO	ALFAOU	BETAOU	PT	P	Q	TT	AFA	BFA	DEINLR	DEONLR
4.089	-8.005	3.87860	-8.02200	2235.29980	1752.26270	441.80710	100.80000	.07620	.19640	8.10000	5.00000
4.083	-5.781	3.87680	-5.82440	2237.89990	1755.86740	441.03610	100.70000	.07760	.19620	8.10000	5.00000
4.051	-3.799	3.85580	-3.88060	2237.70001	1757.19360	439.77930	100.70000	.07880	.19610	8.10000	5.00000
3.835	.083	3.75250	-.11070	2240.29980	1757.64550	441.59450	100.90000	.07750	.19620	8.10000	5.00000
3.900	4.057	3.98250	3.86270	2238.09991	1755.96480	441.12450	100.10000	.07750	.19620	8.10000	5.00000
3.844	6.165	3.96650	5.99420	2237.89990	1754.03740	442.53710	99.90000	.07600	.19640	8.10000	5.00000
3.835	8.163	3.97830	8.00840	2238.70001	1754.02049	443.22310	99.80000	.07550	.19650	8.10000	5.00000
	GRADIENT	.01629	.98575	.04852	-.15748	.17010	-.07687	-.00016	.00001	-.00000	-.00000

IA156A, AEDC PWT 16T-470, O T S W/SILTS (R8NM92) (10 MAY 80)

REFERENCE DATA

SREF = 2690.0000 SQ.FT. XMRP = 976.0000 IN. XT
LREF = 1290.3000 INCHES YMRP = .0000 IN. YT
BREF = 1290.3000 INCHES ZMRP = 400.0000 IN. ZT
SCALE = .0200

PARAMETRIC DATA

IB-ELV = 8.000 OB-ELV = 5.000
BOFLAP = .000 SPDBRK = .000
RUDDER = .000 SILTS = 1.000
MACH = .600 RN/L = 3.500

RUN NO. 1178/ 0 RN/L = 3.51 GRADIENT INTERVAL = -5.00/ 5.00

ALPHAO	BETAO	ALFAOU	BETAOU	PT	P	Q	TT	AFA	BFA	DEINLR	DEONLR
6.194	-7.953	5.99130	-8.00900	2239.79980	1753.99710	444.16630	100.60000	.07470	.19650	8.10000	5.00000
6.164	-5.881	5.97190	-5.96540	2243.20001	1756.87280	444.66580	100.30000	.07490	.19650	8.10000	5.00000
6.145	-3.824	5.97280	-3.94540	2240.89990	1756.21021	443.27690	99.50000	.07590	.19640	8.10000	5.00000
5.867	.188	5.79040	-.00870	2239.29980	1755.53270	442.48780	99.50000	.07640	.19640	8.10000	5.00000
5.796	4.071	5.84440	3.86610	2237.50000	1751.40280	444.35960	99.60000	.07410	.19660	8.10000	5.00000
5.752	5.986	5.83820	5.79470	2241.59991	1756.09380	443.96040	99.70000	.07530	.19650	8.10000	5.00000
5.824	8.273	5.94040	8.09750	2238.59991	1753.10770	443.88720	99.70000	.07480	.19650	8.10000	5.00000
	GRADIENT	-.01643	.98940	-.43048	-.60650	.13530	.01260	-.00023	.00003	-.00000	.00000

RUN NO. 1179/ 0 RN/L = 3.50 GRADIENT INTERVAL = -5.00/ 5.00

ALPHAO	BETAO	ALFAOU	BETAOU	PT	P	Q	TT	AFA	BFA	DEINLR	DEONLR
8.083	-7.803	7.89030	-7.88730	2236.50000	1751.01730	443.83570	100.70000	.07440	.19660	8.10000	5.00000
8.000	-5.751	7.82030	-5.86080	2235.89990	1752.04691	442.48850	100.90000	.07570	.19640	8.10000	5.00000
7.965	-3.753	7.80920	-3.89380	2236.00000	1751.43460	443.07400	100.90000	.07510	.19650	8.10000	5.00000
7.877	.175	7.80140	-.02160	2235.09991	1750.74190	442.88550	100.80000	.07510	.19650	8.10000	5.00000
7.923	4.198	7.94670	3.98950	2237.20001	1751.71410	443.85300	100.20000	.07450	.19660	8.10000	5.00000
7.890	6.206	7.95100	6.00460	2237.70001	1752.82179	443.36350	100.10000	.07510	.19650	8.10000	5.00000
7.883	8.226	7.97250	8.03590	2236.70001	1751.62300	443.50760	99.80000	.07480	.19650	8.10000	5.00000
	GRADIENT	.01737	.99149	.15244	.03600	.09856	-.08829	-.00008	.00001	-.00000	-.00000

IA156A, AEDC PWT 16T-470, O T S W/SILTS (R8NM93) (10 MAY 80)

REFERENCE DATA

SREF = 2690.0000 SQ.FT. XMRP = 976.0000 IN. XT
LREF = 1290.3000 INCHES YMRP = .0000 IN. YT
BREF = 1290.3000 INCHES ZMRP = 400.0000 IN. ZT
SCALE = .0200

PARAMETRIC DATA

IB-ELV = 8.000 OB-ELV = 5.000
BDFLAP = .000 SPDBRK = .000
RUDDER = .000 SILTS = 1.000
MACH = .800 RN/L = 3.500

RUN NO. 1180/ 0 RN/L = 3.49 GRADIENT INTERVAL = -5.00/ 5.00

ALPHAO	BETAO	ALFAOU	BETAOU	PT	P	Q	TT	AFA	BFA	DEINLR	DEONLR
-8.230	-5.879	-8.07310	-6.01560	1876.20000	1231.01370	551.28420	100.40000	-.03830	.20400	8.10000	5.00000
-8.259	-3.819	-8.13090	-3.98220	1873.70000	1229.63921	550.36870	100.00000	-.03820	.20410	8.10000	5.00000
-8.164	.382	-8.13090	.17690	1872.00000	1228.45360	549.91700	100.00000	-.03820	.20410	8.10000	5.00000
-7.986	4.361	-8.05080	4.16380	1873.59990	1229.43851	550.43120	100.10000	-.03830	.20410	8.10000	5.00000
-8.003	6.266	-8.09990	6.08270	1876.70000	1231.20779	551.52220	99.80000	-.03830	.20400	8.10000	5.00000
	GRADIENT	.00970	.99583	-.01586	-.02692	.00658	.01211	-.00001	.00000	.00000	.00000

RUN NO. 1181/ 0 RN/L = 3.50 GRADIENT INTERVAL = -5.00/ 5.00

ALPHAO	BETAO	ALFAOU	BETAOU	PT	P	Q	TT	AFA	BFA	DEINLR	DEONLR
-6.206	-5.984	-6.03010	-6.09430	1876.89990	1231.30569	551.60350	99.90000	-.03830	.20400	8.10000	5.00000
-6.149	-4.060	-5.99600	-4.20060	1879.59990	1232.98019	552.46290	99.90000	-.03830	.20400	8.10000	5.00000
-6.237	.107	-6.19500	-.09650	1880.79980	1234.07300	552.60770	99.50000	-.03830	.20400	8.10000	5.00000
-6.056	4.261	-6.14210	4.07170	1880.70000	1234.37820	552.32590	99.50000	-.03820	.20410	8.10000	5.00000
-5.762	6.342	-5.88880	6.17770	1879.29980	1233.18770	552.09990	99.60000	-.03820	.20410	8.10000	5.00000
	GRADIENT	-.01757	.99419	.13230	.16807	-.01644	-.04810	.00001	.00001	.00000	.00000

RUN NO. 1182/ 0 RN/L = 3.50 GRADIENT INTERVAL = -5.00/ 5.00

ALPHAO	BETAO	ALFAOU	BETAOU	PT	P	Q	TT	AFA	BFA	DEINLR	DEONLR
-4.283	-6.020	-4.08980	-6.09520	1878.00000	1232.19780	551.81100	99.90000	-.03830	.20400	8.10000	5.00000
-4.316	-3.984	-4.14120	-4.09650	1880.20000	1233.88091	552.29440	100.00000	-.03820	.20410	8.10000	5.00000
-4.232	.381	-4.20200	.17530	1880.09990	1233.78130	552.28810	100.00000	-.03820	.20410	8.10000	5.00000
-3.800	4.338	-3.92760	4.17370	1875.39990	1230.21780	551.23340	100.00000	-.03830	.20400	8.10000	5.00000
-3.862	6.153	-4.01440	6.01260	1872.00000	1228.35229	549.98580	100.00000	-.03820	.20410	8.10000	5.00000
	GRADIENT	.02499	.99350	-.56730	-.43301	-.12533	.00000	-.00001	-.00001	.00000	.00000

RUN NO. 1183/ 0 RN/L = 3.50 GRADIENT INTERVAL = -5.00/ 5.00

ALPHAO	BETAO	ALFAOU	BETAOU	PT	P	Q	TT	AFA	BFA	DEINLR	DEONLR
-.385	-6.929	-.18140	-6.89080	1874.79980	1230.12669	550.85130	100.10000	-.03830	.20400	8.10000	5.00000
-.382	-4.788	-.17750	-4.74960	1877.79980	1232.09990	551.72950	100.10000	-.03830	.20400	8.10000	5.00000
-.348	-.519	-.14380	-.48040	1879.39990	1233.38840	552.03740	100.00000	-.03820	.20410	8.10000	5.00000
-.317	3.586	-.11250	3.62390	1880.89990	1233.76781	552.88920	100.00000	-.03830	.20400	8.10000	5.00000
-.315	5.721	-.11050	5.75960	1877.00000	1231.40500	551.61010	100.10000	-.03830	.20400	8.10000	5.00000
	GRADIENT	.00776	1.00002	.37027	.19988	.13805	-.01202	.00000	.00000	.00000	.00000

IA156A, AEDC PWT 16T-470, O T S W/SILTS (R8NM93) (10 MAY 80)

REFERENCE DATA

SREF = 2690.0000 SQ.FT. XMRP = 976.0000 IN. XT
LREF = 1290.3000 INCHES YMRP = .0000 IN. YT
BREF = 1290.3000 INCHES ZMRP = 400.0000 IN. ZT
SCALE = .0200

PARAMETRIC DATA

IB-ELV = 8.000 OB-ELV = 5.000
BDFLAP = .000 SPDBRK = .000
RUDDER = .000 SILTS = 1.000
MACH = .800 RN/L = 3.500

RUN NO. 1184/ 0 RN/L = 3.50 GRADIENT INTERVAL = -5.00/ 5.00

ALPHAO	BETAO	ALFAOU	BETAOU	PT	P	Q	TT	AFA	BFA	DEINLR	DEONLR
4.095	-5.771	3.94660	-5.91610	1873.09990	1228.94119	550.39970	100.00000	-.03830	.20400	8.10000	5.00000
3.965	-3.678	3.84710	-3.84950	1874.59990	1229.11819	551.38890	100.00000	-.03840	.20400	8.10000	5.00000
3.727	.120	3.76070	-.08470	1878.70000	1232.59081	552.06180	100.00000	-.03830	.20400	8.10000	5.00000
3.811	4.005	3.98180	3.88700	1881.39990	1234.06300	553.05860	100.20000	-.03830	.20400	8.10000	5.00000
3.769	6.084	3.96110	6.00470	1879.39990	1232.78130	552.45020	100.10000	-.03830	.20400	8.10000	5.00000
	GRADIENT	.01768	1.00700	.88433	.64259	.21747	.02613	.00001	-.00000	-.00000	-.00000

RUN NO. 1185/ 0 RN/L = 3.50 GRADIENT INTERVAL = -5.00/ 5.00

ALPHAO	BETAO	ALFAOU	BETAOU	PT	P	Q	TT	AFA	BFA	DEINLR	DEONLR
6.095	-5.818	5.97660	-5.98840	1876.29980	1231.01221	551.35910	100.00000	-.03830	.20400	8.10000	5.00000
6.044	-3.784	5.96130	-3.97450	1876.39990	1231.41499	551.15890	100.10000	-.03820	.20410	8.10000	5.00000
5.748	.159	5.78520	-.04480	1877.00000	1231.40500	551.61010	99.90000	-.03830	.20400	8.10000	5.00000
5.691	3.986	5.83710	3.83850	1877.59990	1231.79980	551.78560	100.00000	-.03830	.20400	8.10000	5.00000
5.834	6.160	6.00730	6.04580	1878.00000	1232.60229	551.53560	100.10000	-.03820	.20410	8.10000	5.00000
	GRADIENT	-.01613	1.00545	.15442	.04926	.08082	-.01306	-.00001	-.00001	.00000	.00000

IA156A, AEDC PWT 16T-470, O T S W/SILTS (R8NM94) (10 MAY 80)

REFERENCE DATA

SREF = 2690.0000 SQ.FT. XMRP = 976.0000 IN. XT
LREF = 1290.3000 INCHES YMRP = .0000 IN. YT
BREF = 1290.3000 INCHES ZMRP = 400.0000 IN. ZT
SCALE = .0200

PARAMETRIC DATA

IB-ELV = 8.000 OB-ELV = 5.000
BDFLAP = .000 SPDBRK = .000
RUDDER = .000 SILTS = 1.000
MACH = .900 RN/L = 3.500

RUN NO. 1186/ 0 RN/L = 3.50 GRADIENT INTERVAL = -5.00/ 5.00

ALPHAO	BETAO	ALFAOU	BETAOU	PT	P	Q	TT	AFA	BFA	DEINLR	DEONLR
-8.190	-5.916	-8.02410	-6.03900	1785.20000	1055.41631	598.53830	100.20000	-.05180	.20010	8.10000	5.00000
-8.261	-3.757	-8.12380	-3.91140	1783.59990	1054.32980	598.08540	100.10000	-.05180	.20010	8.10000	5.00000
-8.166	.176	-8.11360	-.02400	1784.20000	1054.92650	598.14280	100.00000	-.05180	.20010	8.10000	5.00000
-8.002	4.417	-8.05410	4.21680	1785.20000	1055.71899	598.35820	100.10000	-.05180	.20010	8.10000	5.00000
-8.004	6.263	-8.08900	6.07510	1779.39990	1052.47411	596.30400	100.10000	-.05170	.20010	8.10000	5.00000
	GRADIENT	.00860	.99448	.19628	.17018	.03360	.00031	.00000	.00000	.00000	-.00000

IA156A, AEDC PWT 16T-470, O T S W/SILTS (R8NM94) (10 MAY 80)

REFERENCE DATA

SREF = 2690.0000 SQ.FT. XMRP = 976.0000 IN. XT
LREF = 1290.3000 INCHES YMRP = .0000 IN. YT
BREF = 1290.3000 INCHES ZMRP = 400.0000 IN. ZT
SCALE = .0200

PARAMETRIC DATA

IB-ELV = 8.000 OB-ELV = 5.000
BDFLAP = .000 SPDBRK = .000
RUDDER = .000 SILTS = 1.000
MACH = .900 RN/L = 3.500

RUN NO. 1187/ 0 RN/L = 3.50 GRADIENT INTERVAL = -5.00/ 5.00

ALPHAO	BETAO	ALFAOU	BETAOU	PT	P	Q	TT	AFA	BFA	DEINLR	DEONLR
-6.212	-5.982	-6.02960	-6.07950	1787.09990	1056.59940	599.13990	100.10000	-.05180	.20010	8.10000	5.00000
-6.173	-4.073	-6.01160	-4.20190	1786.00000	1056.41360	598.49460	100.10000	-.05170	.20010	8.10000	5.00000
-6.254	.091	-6.19830	-.10790	1784.00000	1054.92940	598.00370	100.10000	-.05180	.20010	8.10000	5.00000
-6.039	4.266	-6.11280	4.07320	1782.59990	1053.84010	597.68990	100.10000	-.05180	.20010	8.10000	5.00000
-5.991	6.248	-6.10170	6.07380	1784.09990	1054.82710	598.13330	100.10000	-.05180	.20010	8.10000	5.00000
	GRADIENT	-.01212	.99232	-.40769	-.30858	-.09649	.00000	-.00001	-.00000	.00000	.00000

RUN NO. 1188/ 0 RN/L = 3.50 GRADIENT INTERVAL = -5.00/ 5.00

ALPHAO	BETAO	ALFAOU	BETAOU	PT	P	Q	TT	AFA	BFA	DEINLR	DEONLR
-4.069	-6.114	-3.86950	-6.16830	1787.00000	1056.70171	599.01030	100.00000	-.05180	.20010	8.10000	5.00000
-4.336	-4.001	-4.15450	-4.09990	1788.20000	1057.39040	599.42480	99.90000	-.05180	.20010	8.10000	5.00000
-4.247	.379	-4.20380	.17680	1786.59990	1056.40480	598.91210	100.20000	-.05180	.20010	8.10000	5.00000
-3.792	4.317	-3.90840	4.14660	1781.70000	1054.05490	596.94360	100.10000	-.05170	.20010	8.10000	5.00000
-3.879	6.244	-4.02290	6.09540	1785.89990	1056.31419	598.48510	100.10000	-.05180	.20010	8.10000	5.00000
	GRADIENT	.02882	.99107	-.77365	-.39770	-.29490	.02487	.00001	-.00000	.00000	-.00000

RUN NO. 1189/ 0 RN/L = 3.50 GRADIENT INTERVAL = -5.00/ 5.00

ALPHAO	BETAO	ALFAOU	BETAOU	PT	P	Q	TT	AFA	BFA	DEINLR	DEONLR
-.418	-6.997	-.21830	-6.94540	1780.79980	1053.05910	596.91770	99.90000	-.05180	.20010	8.10000	5.00000
-.400	-4.849	-.19990	-4.79730	1777.20000	1051.49730	595.37350	99.90000	-.05170	.20010	8.10000	5.00000
-.365	-.473	-.16550	-.42130	1779.89990	1052.16431	596.83200	100.00000	-.05180	.20010	8.10000	5.00000
-.335	3.592	-.13460	3.64390	1782.70000	1054.44380	597.39920	99.90000	-.05170	.20010	8.10000	5.00000
-.335	5.739	-.13520	5.79050	1786.09990	1055.70580	598.98440	99.90000	-.05180	.20010	8.10000	5.00000
	GRADIENT	.00774	1.00002	.65114	.34657	.24117	.00029	-.00000	.00000	.00000	-.00000

RUN NO. 1190/ 0 RN/L = 3.50 GRADIENT INTERVAL = -5.00/ 5.00

ALPHAO	BETAO	ALFAOU	BETAOU	PT	P	Q	TT	AFA	BFA	DEINLR	DEONLR
4.050	-5.715	3.91200	-5.86840	1777.59990	1051.18900	595.83200	99.80000	-.05180	.20010	8.10000	5.00000
3.950	-3.708	3.84380	-3.88540	1779.20000	1051.77100	596.58500	99.80000	-.05180	.20010	8.10000	5.00000
3.708	.080	3.75390	-.12190	1780.39990	1053.16580	596.57930	99.80000	-.05180	.20010	8.10000	5.00000
3.803	3.954	3.97980	3.84740	1781.20000	1053.35600	597.01610	99.90000	-.05180	.20010	8.10000	5.00000
3.762	6.072	3.95740	6.00610	1781.09990	1053.25661	597.00660	99.90000	-.05180	.20010	8.10000	5.00000
	GRADIENT	.01790	1.00927	.26081	.20626	.05648	.01310	.00000	-.00000	-.00000	-.00000

IA156A, AEDC PWT 16T-470, O T S W/SILTS (R8NM95) (10 MAY 80)

REFERENCE DATA

SREF = 2690.0000 SQ.FT. XMRP = 976.0000 IN. XT
LREF = 1290.3000 INCHES YMRP = .0000 IN. YT
BREF = 1290.3000 INCHES ZMRP = 400.0000 IN. ZT
SCALE = .0200

PARAMETRIC DATA

IB-ELV = 8.000 OB-ELV = 5.000
BDFLAP = .000 SPDBRK = .000
RUDDER = .000 SILTS = 1.000
MACH = .950 RN/L = 3.500

RUN NO. 1191/ 0 RN/L = 3.50 GRADIENT INTERVAL = -5.00/ 5.00

ALPHAO	BETAO	ALFAOU	BETAOU	PT	P	Q	TT	AFA	BFA	DEINLR	DEONLR
-8.132	-5.921	-7.96420	-6.03950	1746.39990	977.43770	617.02760	99.90000	-.05540	.19770	8.10000	5.00000
-8.276	-3.763	-8.13570	-3.91360	1751.50000	979.98780	618.99660	99.80000	-.05540	.19770	8.10000	5.00000
-8.174	.169	-8.11820	-.02860	1748.20000	978.52120	617.62180	100.00000	-.05540	.19770	8.10000	5.00000
-8.010	4.434	-8.05860	4.23460	1745.70000	976.84280	616.89180	99.80000	-.05540	.19770	8.10000	5.00000
-7.997	6.260	-8.07860	6.07180	1744.50000	975.85180	616.64310	99.90000	-.05540	.19770	8.10000	5.00000
	GRADIENT	.00947	.99409	-.70584	-.38380	-.25556	-.00066	-.00000	.00000	.00000	-.00000

RUN NO. 1192/ 0 RN/L = 3.49 GRADIENT INTERVAL = -5.00/ 5.00

ALPHAO	BETAO	ALFAOU	BETAOU	PT	P	Q	TT	AFA	BFA	DEINLR	DEONLR
-6.239	-6.007	-6.05550	-6.10010	1744.59990	975.85030	616.71000	100.00000	-.05540	.19770	8.10000	5.00000
-6.152	-4.059	-5.98850	-4.18360	1744.59990	976.25320	616.48880	99.90000	-.05540	.19770	8.10000	5.00000
-6.251	.098	-6.19240	-.09920	1742.79980	975.06880	615.95000	100.00000	-.05540	.19770	8.10000	5.00000
-6.044	4.274	-6.11470	4.08100	1741.89990	975.38280	615.18290	99.90000	-.05540	.19770	8.10000	5.00000
-6.001	6.257	-6.10830	6.08170	1748.89990	978.51200	618.08910	100.10000	-.05540	.19770	8.10000	5.00000
	GRADIENT	-.01512	.99180	-.32392	-.10431	-.15674	-.00002	-.00000	.00000	.00000	.00000

RUN NO. 1193/ 0 RN/L = 3.49 GRADIENT INTERVAL = -5.00/ 5.00

ALPHAO	BETAO	ALFAOU	BETAOU	PT	P	Q	TT	AFA	BFA	DEINLR	DEONLR
-4.072	-6.110	-3.87250	-6.15950	1742.20000	975.07670	615.54930	99.90000	-.05540	.19770	8.10000	5.00000
-4.336	-4.005	-4.15280	-4.09860	1747.70000	977.92380	617.61940	99.90000	-.05540	.19770	8.10000	5.00000
-4.260	.372	-4.21280	.17260	1742.59990	974.87010	615.92700	99.90000	-.05540	.19770	8.10000	5.00000
-3.798	4.338	-3.91090	4.16680	1740.50000	973.79030	615.13260	99.80000	-.05540	.19770	8.10000	5.00000
-3.881	6.155	-4.01990	6.00430	1744.59990	975.95120	616.65450	99.80000	-.05540	.19770	8.10000	5.00000
	GRADIENT	.02826	.99041	-.86817	-.49891	-.29959	-.01178	-.00000	-.00000	.00000	-.00000

RUN NO. 1194/ 0 RN/L = 3.48 GRADIENT INTERVAL = -5.00/ 5.00

ALPHAO	BETAO	ALFAOU	BETAOU	PT	P	Q	TT	AFA	BFA	DEINLR	DEONLR
-.431	-7.014	-.23360	-6.95860	1736.50000	971.62820	613.67720	99.80000	-.05540	.19770	8.10000	5.00000
-.411	-4.850	-.21320	-4.79470	1740.50000	973.79030	615.13260	99.90000	-.05540	.19770	8.10000	5.00000
-.380	-.542	-.18180	-.48600	1740.09990	973.29200	615.14180	99.80000	-.05540	.19770	8.10000	5.00000
-.343	3.578	-.14570	3.63370	1736.20000	972.33690	613.08980	100.00000	-.05540	.19780	8.10000	5.00000
-.343	5.762	-.14540	5.81780	1748.39990	978.61940	617.70000	99.90000	-.05540	.19770	8.10000	5.00000
	GRADIENT	.00800	1.00000	-.50700	-.17201	-.24050	.01160	.00000	.00001	.00000	.00000

IA156A, AEDC PWT 16T-470, O T S W/SILTS (R8NM95) (10 MAY 80)

REFERENCE DATA

SREF = 2690.0000 SQ.FT. XMRP = 976.0000 IN. XT
LREF = 1290.3000 INCHES YMRP = .0000 IN. YT
BREF = 1290.3000 INCHES ZMRP = 400.0000 IN. ZT
SCALE = .0200

PARAMETRIC DATA

IB-ELV = 8.000 OB-ELV = 5.000
BDFLAP = .000 SPDBRK = .000
RUDDER = .000 SILTS = 1.000
MACH = .950 RN/L = 3.500

RUN NO. 1195/ 0 RN/L = 3.49 GRADIENT INTERVAL = -5.00/ 5.00

ALPHAO	BETAO	ALFAOU	BETAOU	PT	P	Q	TT	AFA	BFA	DEINLR	DEONLR
4.079	-5.762	3.94520	-5.91770	1745.20000	976.54740	616.72360	100.00000	-.05540	.19770	8.10000	5.00000
3.933	-3.661	3.83300	-3.84010	1747.89990	977.31690	618.08450	100.00000	-.05550	.19770	8.10000	5.00000
3.702	.123	3.75350	-.07550	1748.39990	978.31740	617.86570	100.00000	-.05540	.19770	8.10000	5.00000
3.815	3.995	3.99330	3.89300	1744.39990	976.05440	616.46580	99.90000	-.05540	.19770	8.10000	5.00000
3.764	6.074	3.95940	6.01160	1744.20000	976.76200	615.94510	99.90000	-.05540	.19770	8.10000	5.00000
	GRADIENT	.02110	1.01011	-.45938	-.16652	-.21201	-.01311	.00001	.00000	-.00000	-.00000

IA156A, AEDC PWT 16T-470, O T S W/SILTS (R8NM96) (10 MAY 80)

REFERENCE DATA

SREF = 2690.0000 SQ.FT. XMRP = 976.0000 IN. XT
LREF = 1290.3000 INCHES YMRP = .0000 IN. YT
BREF = 1290.3000 INCHES ZMRP = 400.0000 IN. ZT
SCALE = .0200

PARAMETRIC DATA

IB-ELV = 8.000 OB-ELV = 5.000
BDFLAP = .000 SPDBRK = .000
RUDDER = .000 SILTS = 1.000
MACH = 1.050 RN/L = 3.500

RUN NO. 1196/ 0 RN/L = 3.50 GRADIENT INTERVAL = -5.00/ 5.00

ALPHAO	BETAO	ALFAOU	BETAOU	PT	P	Q	TT	AFA	BFA	DEINLR	DEONLR
-8.154	-5.981	-7.98310	-6.09160	1699.29980	845.47310	653.17800	100.20000	-.06090	.19440	8.10000	5.00000
-8.291	-3.794	-8.14700	-3.93760	1701.70000	846.95120	653.97340	100.20000	-.06090	.19440	8.10000	5.00000
-8.203	.186	-8.14190	-.00890	1699.09990	846.47780	652.60570	100.20000	-.06080	.19440	8.10000	5.00000
-8.003	4.335	-8.04530	4.13570	1702.79980	848.44290	653.97220	100.10000	-.06080	.19440	8.10000	5.00000
-8.011	6.249	-8.08750	6.06020	1703.20000	848.13790	654.35230	100.10000	-.06060	.19440	8.10000	5.00000
	GRADIENT	.01259	.99319	.14067	.18556	.00219	-.01239	.00001	-.00000	-.00000	-.00000

RUN NO. 1197/ 0 RN/L = 3.50 GRADIENT INTERVAL = -5.00/ 5.00

ALPHAO	BETAO	ALFAOU	BETAOU	PT	P	Q	TT	AFA	BFA	DEINLR	DEONLR
-6.215	-5.998	-6.02950	-6.08270	1705.20000	849.21920	655.08230	100.10000	-.06080	.19440	8.10000	5.00000
-6.157	-4.060	-5.99030	-4.17700	1703.70000	848.23290	654.61350	100.00000	-.06090	.19440	8.10000	5.00000
-6.263	.161	-6.20050	-.03310	1704.39990	848.72660	654.81740	100.10000	-.06080	.19440	8.10000	5.00000
-6.064	4.290	-6.13000	4.09720	1702.50000	847.64430	654.14840	100.10000	-.06090	.19440	8.10000	5.00000
-5.814	6.342	-5.92070	6.16840	1707.50000	850.39770	655.95120	100.10000	-.06080	.19440	8.10000	5.00000
	GRADIENT	-.01685	.99094	-.14257	-.06980	-.05532	.01202	.00000	.00000	-.00000	.00000

IA156A, AEDC PWT 16T-470, O T S W/SILTS (R8NM96) (10 MAY 80)

REFERENCE DATA

SREF = 2690.0000 SQ.FT. XMRP = 976.0000 IN. XT
LREF = 1290.3000 INCHES YMRP = .0000 IN. YT
BREF = 1290.3000 INCHES ZMRP = 400.0000 IN. ZT
SCALE = .0200

PARAMETRIC DATA

IB-ELV = 8.000 OB-ELV = 5.000
BDFLAP = .000 SPDBRK = .000
RUDDER = .000 SILTS = 1.000
MACH = 1.050 RN/L = 3.500

RUN NO. 1198/ 0 RN/L = 3.50 GRADIENT INTERVAL = -5.00/ 5.00

ALPHAO	BETAO	ALFAOU	BETAOU	PT	P	Q	TT	AFA	BFA	DEINLR	DEONLR
-4.123	-6.110	-3.92330	-6.15290	1705.50000	848.51440	655.58080	100.00000	-.06090	.19440	8.10000	5.00000
-4.348	-4.024	-4.16280	-4.10970	1702.00000	848.15090	653.61690	100.00000	-.06080	.19450	8.10000	5.00000
-4.265	.359	-4.21230	.16200	1705.29980	849.51900	655.00850	100.10000	-.06080	.19440	8.10000	5.00000
-3.78	4.330	-3.89610	4.15750	1695.09990	844.81620	650.92040	100.10000	-.06080	.19450	8.10000	5.00000
-3.87	6.159	-4.01000	6.00640	1703.89990	847.32860	655.14040	100.10000	-.06090	.19440	8.10000	5.00000
	GRADIENT	.03118	.98940	-.79877	-.38693	-.31175	.01216	.00000	-.00000	-.00000	.00000

RUN NO. 1199/ 0 RN/L = 3.50 GRADIENT INTERVAL = -5.00/ 5.00

ALPHAO	BETAO	ALFAOU	BETAOU	PT	P	Q	TT	AFA	BFA	DEINLR	DEONLR
-.466	-7.077	-.27180	-7.01650	1701.00000	846.85840	653.58960	100.10000	-.06080	.19440	8.10000	5.00000
-.448	-4.893	-.25390	-4.83240	1702.20000	848.14870	653.73950	100.10000	-.06080	.19450	8.10000	5.00000
-.424	-.539	-.22920	-.47760	1705.50000	848.91530	655.40090	100.10000	-.06080	.19440	8.10000	5.00000
-.388	3.586	-.19380	3.64730	1704.29980	848.22660	654.98100	100.10000	-.06090	.19440	8.10000	5.00000
-.386	5.766	-.19150	5.82680	1694.20000	844.02390	650.72950	100.00000	-.06080	.19440	8.10000	5.00000
	GRADIENT	.00707	1.00002	.25236	.01074	.14859	-.00000	-.00001	-.00001	.00000	-.00000

RUN NO. 1200/ 0 RN/L = 3.50 GRADIENT INTERVAL = -5.00/ 5.00

ALPHAO	BETAO	ALFAOU	BETAOU	PT	P	Q	TT	AFA	BFA	DEINLR	DEONLR
4.070	-5.753	3.94290	-5.91240	1702.50000	847.54390	654.19340	100.10000	-.06080	.19440	8.10000	5.00000
3.940	-3.673	3.84620	-3.85440	1703.70000	848.33330	654.56840	100.10000	-.06080	.19440	8.10000	5.00000
3.705	.113	3.76200	-.08240	1706.79980	850.90630	655.29690	100.10000	-.06080	.19450	8.10000	5.00000
3.803	3.989	3.98300	3.89230	1698.39990	845.88350	652.44700	100.00000	-.06080	.19440	8.10000	5.00000
3.769	6.064	3.96460	6.00810	1705.50000	849.21610	655.26610	100.10000	-.06080	.19440	8.10000	5.00000
	GRADIENT	.01801	1.01110	-.69752	-.32356	-.27867	-.01310	-.00000	-.00000	-.00000	-.00000

IA156A, AEDC PWT 16T-470, O T S W/SILTS (R8NM97) (10 MAY 80)

REFERENCE DATA

SREF = 2690.0000 SQ.FT. XMRP = 976.0000 IN. XT
LREF = 1290.3000 INCHES YMRP = .0000 IN. YT
BREF = 1290.3000 INCHES ZMRP = 400.0000 IN. ZT
SCALE = .0200

PARAMETRIC DATA

IB-ELV = 8.000 OB-ELV = 5.000
BDFLAP = .000 SPDBRK = .000
RUDDER = .000 SILTS = 1.000
MACH = 1.100 RN/L = 3.500

RUN NO. 1201/ 0 RN/L = 3.50 GRADIENT INTERVAL = -5.00/ 5.00

ALPHAO	BETAO	ALFAOU	BETAOU	PT	P	Q	TT	AFA	BFA	DEINLR	DEONLR
-8.174	-5.983	-8.00110	-6.09190	1689.09990	791.81810	669.77390	100.10000	-.06320	.19440	8.10000	5.00000
-8.275	-3.797	-8.12850	-3.93900	1682.39990	788.58130	667.15530	100.10000	-.06320	.19440	8.10000	5.00000
-8.184	.190	-8.12110	-.00480	1694.59990	795.26590	671.61040	100.20000	-.06310	.19440	8.10000	5.00000
-8.018	4.331	-8.05830	4.13040	1684.29980	789.96310	667.71410	100.10000	-.06320	.19440	8.10000	5.00000
-8.006	6.254	-8.08110	6.06380	1688.29980	791.12570	669.58230	100.30000	-.06320	.19440	8.10000	5.00000
	GRADIENT	.00868	.99288	.21613	.16062	.06221	-.00016	-.00000	.00000	-.00000	.00000

RUN NO. 1202/ 0 RN/L = 3.50 GRADIENT INTERVAL = -5.00/ 5.00

ALPHAO	BETAO	ALFAOU	BETAOU	PT	P	Q	TT	AFA	BFA	DEINLR	DEONLR
-6.211	-5.998	-6.02370	-6.08030	1693.59990	792.17600	672.25000	100.30000	-.06330	.19450	8.10000	5.00000
-6.170	-4.046	-6.00190	-4.16230	1680.29980	787.80100	666.24170	100.10000	-.06320	.19440	8.10000	5.00000
-6.293	.153	-6.22830	-.04060	1689.09990	791.01830	670.09030	100.10000	-.06320	.19440	8.10000	5.00000
-6.065	4.291	-6.12880	4.09670	1691.00000	792.50020	670.60990	100.20000	-.06320	.19440	8.10000	5.00000
-5.794	6.334	-5.89860	6.15870	1684.50000	789.76150	667.91040	100.20000	-.06320	.19440	8.10000	5.00000
	GRADIENT	-.01532	.99060	1.28544	.56414	.52491	.01196	-.00000	.00000	.00000	.00000

RUN NO. 1203/ 0 RN/L = 3.50 GRADIENT INTERVAL = -5.00/ 5.00

ALPHAO	BETAO	ALFAOU	BETAOU	PT	P	Q	TT	AFA	BFA	DEINLR	DEONLR
-4.111	-6.118	-3.91040	-6.15820	1687.79980	790.33060	669.60570	100.20000	-.06320	.19440	8.10000	5.00000
-4.347	-4.024	-4.16060	-4.10790	1692.09990	791.49020	671.64820	100.20000	-.06330	.19450	8.10000	5.00000
-4.258	.366	-4.20300	.16950	1685.79980	789.74930	668.67190	100.20000	-.06320	.19440	8.10000	5.00000
-3.786	4.326	-3.89350	4.15140	1688.59990	790.72290	669.91600	100.20000	-.06320	.19440	8.10000	5.00000
-3.880	6.168	-4.01340	6.01370	1693.00000	792.68140	671.70190	100.30000	-.06320	.19440	8.10000	5.00000
	GRADIENT	.03123	.98888	-.43756	-.09741	-.21597	.00000	.00001	-.00001	.00000	.00000

RUN NO. 1204/ 0 RN/L = 3.50 GRADIENT INTERVAL = -5.00/ 5.00

ALPHAO	BETAO	ALFAOU	BETAOU	PT	P	Q	TT	AFA	BFA	DEINLR	DEONLR
-.471	-7.063	-.27700	-6.99990	1684.29980	787.66380	668.62230	100.30000	-.06330	.19450	8.10000	5.00000
-.441	-4.903	-.24700	-4.83940	1688.39990	790.42480	669.91720	100.20000	-.06320	.19440	8.10000	5.00000
-.415	-.535	-.22060	-.47140	1693.00000	792.28150	671.85960	100.30000	-.06320	.19440	8.10000	5.00000
-.383	3.594	-.18890	3.65750	1691.79980	792.29270	671.15750	100.20000	-.06320	.19440	8.10000	5.00000
-.382	5.794	-.18780	5.85660	1688.29980	791.82540	669.30540	100.10000	-.06310	.19440	8.10000	5.00000
	GRADIENT	.00683	1.00000	.40643	.22181	.14885	.00022	-.00000	.00000	.00000	.00000

IA156A, AEDC PWT 16T-470, O T S W/SILTS (R8NM97) (10 MAY 80)

REFERENCE DATA

SREF = 2690.0000 SQ.FT. XMRP = 976.0000 IN. XT
LREF = 1290.3000 INCHES YMRP = .0000 IN. YT
BREF = 1290.3000 INCHES ZMRP = 400.0000 IN. ZT
SCALE = .0200

PARAMETRIC DATA

IB-ELV = 8.000 OB-ELV = 5.000
BDFLAP = .000 SPDBRK = .000
RUDDER = .000 SILTS = 1.000
MACH = 1.100 RN/L = 3.500

RUN NO. 1205/ 0 RN/L = 3.50 GRADIENT INTERVAL = -5.00/ 5.00

ALPHAO	BETAO	ALFAOU	BETAOU	PT	P	Q	TT	AFA	BFA	DEINLR	DEONLR
4.085	-5.767	3.95880	-5.92780	1684.59990	788.36080	668.52200	100.10000	-.06330	.19440	8.10000	5.00000
3.929	-3.665	3.83630	-3.84700	1691.00000	792.50020	670.60990	100.20000	-.06320	.19440	8.10000	5.00000
3.699	.120	3.75850	-.07590	1691.20000	791.59860	671.08250	100.30000	-.06330	.19440	8.10000	5.00000
3.792	3.985	3.97280	3.89070	1688.29980	790.02610	670.01660	100.10000	-.06330	.19440	8.10000	5.00000
3.770	6.066	3.96710	6.01160	1683.70000	789.16890	667.67920	100.20000	-.06320	.19440	8.10000	5.00000
	GRADIENT	.01798	1.01152	-.35438	-.32371	-.07826	-.01321	-.00001	-.00000	.00000	.00000

IA156A, AEDC PWT 16T-470, O T S W/SILTS (R8NM98) (28 MAY 80)

REFERENCE DATA

SREF = 2690.0000 SQ.FT. XMRP = 976.0000 IN. XT
LREF = 1290.3000 INCHES YMRP = .0000 IN. YT
BREF = 1290.3000 INCHES ZMRP = 400.0000 IN. ZT
SCALE = .0200

PARAMETRIC DATA

IB-ELV = 8.000 OB-ELV = 5.000
BDFLAP = .000 SPDBRK = .000
RUDDER = .000 SILTS = 1.000
MACH = 1.150 RN/L = 3.500

RUN NO. 1206/ 0 RN/L = 3.50 GRADIENT INTERVAL = -5.00/ 5.00

ALPHAO	BETAO	ALFAOU	BETAOU	PT	P	Q	TT	AFA	BFA	DEINLR	DEONLR
-8.116	-5.938	-7.94000	-6.04640	1679.70000	739.38180	683.72290	100.20000	-.06550	.19610	8.10000	5.00000
-8.284	-3.757	-8.13480	-3.90000	1679.09990	738.29000	683.75930	100.20000	-.06560	.19610	8.10000	5.00000
-8.189	.179	-8.12370	-.01690	1683.70000	740.74560	685.48560	100.20000	-.06550	.19610	8.10000	5.00000
-7.997	4.409	-8.03820	4.20590	1678.79980	738.49190	683.52390	100.10000	-.06550	.19610	8.10000	5.00000
-8.024	6.284	-8.09900	6.09120	1679.39990	738.38720	683.89310	100.10000	-.06550	.19610	8.10000	5.00000
	GRADIENT	.01193	.99280	-.05067	.01781	-.03423	-.01239	.00001	.00000	-.00000	.00000

RUN NO. 1207/ 0 RN/L = 3.50 GRADIENT INTERVAL = -5.00/ 5.00

ALPHAO	BETAO	ALFAOU	BETAOU	PT	P	Q	TT	AFA	BFA	DEINLR	DEONLR
-6.217	-6.006	-6.02720	-6.08800	1680.20000	739.57740	683.93480	100.20000	-.06550	.19610	8.10000	5.00000
-6.140	-4.065	-5.96820	-4.18020	1679.59990	739.38280	683.66700	100.20000	-.06550	.19610	8.10000	5.00000
-6.279	.087	-6.20950	-.10760	1676.59990	737.91140	682.49680	100.20000	-.06550	.19610	8.10000	5.00000
-6.037	4.273	-6.09970	4.07590	1684.79980	741.93330	685.69460	100.30000	-.06550	.19610	8.10000	5.00000
-6.014	6.269	-6.11480	6.08850	1683.29980	740.25020	685.43120	100.20000	-.06550	.19610	8.10000	5.00000
	GRADIENT	-.01572	.99023	.62545	.30678	.24388	.01201	-.00000	.00000	.00000	.00000

IA156A, AEDC PWT 1ST-470, O T S W/SILTS (R8NM98) (28 MAY 80)

REFERENCE DATA

SREF = 2690.0000 SQ.FT. XMRP = 976.0000 IN. XT
LREF = 1290.3000 INCHES YMRP = .0000 IN. YT
BREF = 1290.3000 INCHES ZMRP = 400.0000 IN. ZT
SCALE = .0200

PARAMETRIC DATA

IB-ELV = 8.000 OB-ELV = 5.000
BDFLAP = .000 SPDBRK = .000
RUDDER = .000 SILTS = 1.000
MACH = 1.150 RN/L = 3.500

RUN NO. 1208/ 0 RN/L = 3.50 GRADIENT INTERVAL = -5.00/ 5.00

ALPHAO	BETAO	ALFAOU	BETAOU	PT	P	Q	TT	AFA	BFA	DEINLR	DEONLR
-4.099	-6.128	-3.89590	-6.16670	1675.20000	736.62650	682.15380	100.10000	-.06550	.19610	8.10000	5.00000
-4.341	-4.015	-4.15150	-4.09830	1688.00000	742.60550	687.24730	100.30000	-.06550	.19610	8.10000	5.00000
-4.281	.366	-4.22370	.16740	1684.50000	741.93550	685.52690	100.20000	-.06550	.19610	8.10000	5.00000
-3.789	4.344	-3.89650	4.16790	1671.20000	736.25980	680.05220	100.10000	-.06550	.19610	8.10000	5.00000
-3.884	6.169	-4.01810	6.01220	1682.50000	739.85790	685.11910	100.10000	-.06550	.19610	8.10000	5.00000
	GRADIENT	.02971	.98861	-1.98937	-.74892	-.85286	-.02391	-.00000	.00000	.00000	.00000

RUN NO. 1210/ 0 RN/L = 3.51 GRADIENT INTERVAL = -5.00/ 5.00

ALPHAO	BETAO	ALFAOU	BETAOU	PT	P	Q	TT	AFA	BFA	DEINLR	DEONLR
-.458	-7.033	-.26150	-6.96720	1681.29980	738.87060	684.78590	98.50000	-.06560	.19620	8.10000	5.00000
-.434	-4.804	-.23770	-4.73840	1677.00000	737.80830	682.75440	99.50000	-.06550	.19610	8.10000	5.00000
-.396	-.513	-.19990	-.44770	1679.50000	738.88500	683.78000	99.20000	-.06550	.19610	8.10000	5.00000
-.363	3.669	-.16710	3.73500	1679.79980	739.38110	683.77880	99.30000	-.06550	.19610	8.10000	5.00000
-.367	5.788	-.17050	5.85350	1683.79980	741.04390	685.44020	99.20000	-.06550	.19610	8.10000	5.00000
	GRADIENT	.00833	.99999	.33150	.18590	.12140	-.02380	.00000	-.00000	-.00000	-.00000

RUN NO. 1211/ 0 RN/L = 3.50 GRADIENT INTERVAL = -5.00/ 5 00

ALPHAO	BETAO	ALFAOU	BETAOU	PT	P	Q	TT	AFA	BFA	DEINLR	DEONLR
4.062	-5.756	3.93600	-5.91990	1676.70000	736.81370	682.92430	99.40000	-.06560	.19620	8.10000	5.00000
3.949	-3.648	3.85780	-3.83330	1681.09990	738.87210	684.67410	99.40000	-.06560	.19620	8.10000	5.00000
3.698	.165	3.76230	-.03120	1678.09990	738.09860	683.26780	99.30000	-.06550	.19610	8.10000	5.00000
3.790	4.004	3.97440	3.91110	1680.39990	739.37620	684.11430	99.40000	-.06550	.19610	8.10000	5.00000
3.765	6.064	3.96450	6.01130	1680.39990	739.37620	684.11430	99.30000	-.06550	.19610	8.10000	5.00000
	GRADIENT	.01528	1.01211	-.09068	.06619	-.07282	.00003	.00001	-.00001	-.00000	-.00000

IA156A, AEDC PWT 16T-470, O T S W/SILTS (R8NMA0) (10 MAY 80)

REFERENCE DATA

SREF = 2690.0000 SQ.FT. XMRP = 976.0000 IN. XT
LREF = 1290.3000 INCHES YMRP = .0000 IN. YT
BREF = 1290.3000 INCHES ZMRP = 400.0000 IN. ZT
SCALE = .0200

PARAMETRIC DATA

IB-ELV = 8.000 OB-ELV = 5.000
BDFLAP = .000 SPDBRK = .000
RUDDER = .000 SILTS = 1.000
MACH = 1.250 RN/L = 3.500

RUN NO. 1224/ 0 RN/L = 3.50 GRADIENT INTERVAL = -5.00/ 5.00

ALPHAO	BETAO	ALFAOU	BETAOU	PT	P	Q	TT	AFA	BFA	DEINLR	DEONLR
-8.261	-5.906	-8.07630	-6.02080	1671.50000	645.75460	705.69170	99.80000	-.07020	.20620	8.10000	5.00000
-8.253	-3.859	-8.09310	-4.00710	1676.09990	646.12400	707.94120	99.80000	-.07030	.20650	8.10000	5.00000
-8.194	.281	-8.12570	.07340	1674.59990	644.74440	707.48120	99.80000	-.07030	.20660	8.10000	5.00000
-7.998	4.303	-8.03720	4.08820	1675.79980	645.43160	707.93950	99.80000	-.07030	.20660	8.10000	5.00000
-8.035	6.278	-8.11160	6.07340	1676.20000	645.33010	708.16380	99.70000	-.07030	.20670	8.10000	5.00000
	GRADIENT	.00678	.99177	-.03835	-.08604	-.00075	-.00000	.00000	.00001	-.00000	-.00000

RUN NO. 1225/ 0 RN/L = 3.50 GRADIENT INTERVAL = -5.00/ 5.00

ALPHAO	BETAO	ALFAOU	BETAOU	PT	P	Q	TT	AFA	BFA	DEINLR	DEONLR
-6.248	-6.015	-6.04750	-6.09990	1675.00000	646.52730	707.29610	99.70000	-.07030	.20640	8.10000	5.00000
-6.179	-4.080	-5.99690	-4.20020	1677.39990	646.71170	708.47140	99.70000	-.07030	.20650	8.10000	5.00000
-6.268	.127	-6.19440	-.07840	1677.70000	645.22220	708.94530	99.50000	-.07030	.20680	8.10000	5.00000
-6.056	4.287	-6.12070	4.07800	1678.79980	644.22390	709.71460	99.60000	-.07050	.20700	8.10000	5.00000
-5.806	6.385	-5.91590	6.19630	1676.89990	645.32590	708.51860	99.70000	-.07040	.20670	8.10000	5.00000
	GRADIENT	-.01486	.98938	.16713	-.29745	.14852	-.01202	-.00002	.00006	.00000	.00000

RUN NO. 1226/ 0 RN/L = 3.50 GRADIENT INTERVAL = -5.00/ 5.00

ALPHAO	BETAO	ALFAOU	BETAOU	PT	P	Q	TT	AFA	BFA	DEINLR	DEONLR
-4.129	-6.126	-3.91430	-6.16550	1674.20000	644.74660	707.27860	99.60000	-.07030	.20660	8.10000	5.00000
-4.347	-4.012	-4.14650	-4.09820	1679.59990	647.09550	709.50150	99.70000	-.07030	.20660	8.10000	5.00000
-4.264	.386	-4.20270	.17610	1675.20000	644.24490	707.89230	99.50000	-.07040	.20680	8.10000	5.00000
-3.782	4.332	-3.89420	4.14500	1672.59990	644.95430	706.42380	99.50000	-.07030	.20650	8.10000	5.00000
-3.884	6.187	-4.02530	6.02030	1680.50000	646.59420	710.06490	99.60000	-.07040	.20670	8.10000	5.00000
	GRADIENT	.02942	.98757	-.84195	-.26403	-.36878	-.02438	-.00000	-.00001	.00000	.00000

RUN NO. 1227/ 0 RN/L = 3.50 GRADIENT INTERVAL = -5.00/ 5.00

ALPHAO	BETAO	ALFAOU	BETAOU	PT	P	Q	TT	AFA	BFA	DEINLR	DEONLR
-.484	-7.074	-.27770	-7.00380	1675.39990	645.92990	707.62890	99.70000	-.07030	.20650	8.10000	5.00000
-.454	-4.892	-.24740	-4.82200	1675.50000	645.33420	707.80880	99.60000	-.07030	.20660	8.10000	5.00000
-.407	-.556	-.20040	-.48550	1677.89990	646.01440	708.87550	99.70000	-.07030	.20660	8.10000	5.00000
-.379	3.595	-.17320	3.66530	1673.79980	647.62570	706.44630	99.80000	-.07010	.20610	8.10000	5.00000
-.392	5.798	-.18580	5.86880	1678.50000	645.81250	709.22240	99.80000	-.07040	.20670	8.10000	5.00000
	GRADIENT	.00876	.99999	-.19472	.26915	-.15751	.02356	.00002	-.00006	.00000	.00000

IA156A, AEDC PWT 16T-470, O T S W/SILTS (R8NMA0) (10 MAY 80)

REFERENCE DATA

SREF = 2690.0000 SQ.FT. XMRP = 976.0000 IN. XT
LREF = 1290.3000 INCHES YMRP = .0000 IN. YT
BREF = 1290.3000 INCHES ZMRP = 400.0000 IN. ZT
SCALE = .0200

PARAMETRIC DATA

IB-ELV = 8.000 OB-ELV = 5.000
BDFLAP = .000 SPDBRK = .000
RUDDER = .000 SILTS = 1.000
MACH = 1.250 RN/L = 3.500

RUN NO. 1228/ 0 RN/L = 3.50 GRADIENT INTERVAL = -5.00/ 5.00

ALPHAO	BETAO	ALFAOU	BETAOU	PT	P	Q	TT	AFA	BFA	DEINLR	DEONLR
3.893	-5.679	3.75750	-5.84990	1677.50000	646.41360	708.58670	99.80000	-.07030	.20650	8.10000	5.00000
3.928	-3.875	3.82640	-4.06790	1676.79980	646.61600	708.18850	99.80000	-.07030	.20650	8.10000	5.00000
3.820	.192	3.88940	-.01460	1674.50000	647.32400	706.86790	99.80000	-.07020	.20620	8.10000	5.00000
3.756	3.872	3.94870	3.77120	1674.29980	647.62280	706.70070	99.90000	-.07010	.20610	8.10000	5.00000
3.766	6.079	3.97740	6.02370	1675.09990	644.44380	707.79910	99.90000	-.07040	.20670	8.10000	5.00000
	GRADIENT	.01578	1.01164	-.32695	.13073	-.19437	.01268	.00003	-.00005	-.00000	-.00000

IA156A, AEDC PWT 16T-470, O T S W/SILTS (R8NMA1) (10 MAY 80)

REFERENCE DATA

SREF = 2690.0000 SQ.FT. XMRP = 976.0000 IN. XT
LREF = 1290.3000 INCHES YMRP = .0000 IN. YT
BREF = 1290.3000 INCHES ZMRP = 400.0000 IN. ZT
SCALE = .0200

PARAMETRIC DATA

IB-ELV = 8.000 OB-ELV = 5.000
BDFLAP = .000 SPDBRK = .000
RUDDER = .000 SILTS = 1.000
MACH = 1.400 RN/L = 3.500

RUN NO. 1229/ 0 RN/L = 3.50 GRADIENT INTERVAL = -5.00/ 5.00

ALPHAO	BETAO	ALFAOU	BETAOU	PT	P	Q	TT	AFA	BFA	DEINLR	DEONLR
-8.267	-5.901	-8.04380	-6.03610	1700.39990	532.93430	733.13400	100.50000	-.08560	.24620	8.10000	5.00000
-8.304	-3.776	-8.11220	-3.95230	1706.29980	534.58860	735.68120	100.50000	-.08570	.24630	8.10000	5.00000
-8.202	.428	-8.12190	.17960	1703.70000	534.10550	734.55440	100.40000	-.08550	.24610	8.10000	5.00000
-8.002	4.404	-8.04920	4.14730	1706.00000	534.68850	735.54830	100.30000	-.08560	.24620	8.10000	5.00000
-8.009	6.323	-8.09980	6.07980	1698.09990	533.53610	732.11770	100.20000	-.08530	.24550	8.10000	5.00000
	GRADIENT	.00761	.99014	-.04220	.01100	-.01865	-.02444	.00001	-.00001	.00000	-.00000

RUN NO. 1230/ 0 RN/L = 3.50 GRADIENT INTERVAL = -5.00/ 5.00

ALPHAO	BETAO	ALFAOU	BETAOU	PT	P	Q	TT	AFA	BFA	DEINLR	DEONLR
-6.282	-5.994	-6.04140	-6.09350	1703.59990	534.40210	734.50540	100.20000	-.08550	.24590	8.10000	5.00000
-6.224	-4.051	-6.00550	-4.19280	1703.00000	533.71360	734.25560	100.10000	-.08560	.24620	8.10000	5.00000
-6.285	.156	-6.19470	-.08940	1705.50000	533.70310	735.34670	100.30000	-.08580	.24660	8.10000	5.00000
-6.038	4.332	-6.11440	4.08310	1704.09990	533.61040	734.73750	100.20000	-.08580	.24640	8.10000	5.00000
-5.969	6.303	-6.09410	6.07390	1705.29980	534.29640	735.24950	100.30000	-.08560	.24630	8.10000	5.00000
	GRADIENT	-.01303	.98714	.13174	-.01230	.05772	.01197	-.00002	.00002	-.00000	-.00000

IA156A, AEDC PWT 16T-470, O T S W/SILTS (R8NMA1) (10 MAY 80)

REFERENCE DATA

SREF = 2690.0000 SQ.FT. XMRP = 976.0000 IN. XT
LREF = 1290.3000 INCHES YMRP = .0000 IN. YT
BREF = 1290.3000 INCHES ZMRP = 400.0000 IN. ZT
SCALE = .0200

PARAMETRIC DATA

IB-ELV = 8.000 OB-ELV = 5.000
BDFLAP = .000 SPDBRK = .000
RUDDER = .000 SILTS = 1.000
MACH = 1.400 RN/L = 3.500

RUN NO. 1231/ 0 RN/L = 3.50 GRADIENT INTERVAL = -5.00/ 5.00

ALPHAO	BETAO	ALFAOU	BETAOU	PT	P	Q	TT	AFA	BFA	DEINLR	DEONLR
-4.143	-6.119	-3.88610	-6.16330	1705.00000	533.80400	735.12700	100.10000	-.08580	.24650	8.10000	5.00000
-4.385	-4.000	-4.14590	-4.09930	1704.50000	537.26170	734.84010	100.10000	-.08490	.24470	8.10000	5.00000
-4.262	.422	-4.18670	.17370	1702.79980	535.29420	734.13840	100.10000	-.08520	.24540	8.10000	5.00000
-3.759	4.378	-3.89100	4.15450	1705.20000	536.17290	735.17070	100.10000	-.08520	.24530	8.10000	5.00000
-3.859	6.215	-4.02580	6.01660	1702.59990	535.88720	734.03830	100.10000	-.08500	.24500	8.10000	5.00000
	GRADIENT	.02965	.98488	.07440	-.13613	.03559	.00000	-.00004	.00007	.00000	-.00000

RUN NO. 1232/ 0 RN/L = 3.50 GRADIENT INTERVAL = -5.00/ 5.00

ALPHAO	BETAO	ALFAOU	BETAOU	PT	P	Q	TT	AFA	BFA	DEINLR	DEONLR
-.552	-7.095	-.30650	-7.00990	1705.59990	536.56620	735.33740	100.20000	-.08510	.24520	8.10000	5.00000
-.508	-4.921	-.26310	-4.83600	1704.09990	535.68360	734.69920	100.20000	-.08520	.24540	8.10000	5.00000
-.464	-.562	-.21910	-.47690	1704.00000	536.47390	734.63870	100.60000	-.08500	.24500	8.10000	5.00000
-.444	3.595	-.19820	3.68040	1707.00000	535.57300	735.96950	100.50000	-.08550	.24590	8.10000	5.00000
-.461	5.805	-.21650	5.89040	1707.09990	537.84350	735.96660	100.60000	-.08490	.24480	8.10000	5.00000
	GRADIENT	.00764	1.00003	.33760	-.01141	.14784	.03569	-.00003	.00006	.00000	.00000

RUN NO. 1233/ 0 RN/L = 3.50 GRADIENT INTERVAL = -5.00/ 5.00

ALPHAO	BETAO	ALFAOU	BETAOU	PT	P	Q	TT	AFA	BFA	DEINLR	DEONLR
3.935	-5.661	3.77490	-5.86570	1706.20000	536.95850	735.59180	100.40000	-.08500	.24510	8.10000	5.00000
3.910	-3.641	3.79480	-3.87300	1698.89990	534.42160	732.44970	100.30000	-.08510	.24520	8.10000	5.00000
3.655	.229	3.73880	-.01760	1704.59990	534.79300	734.93510	100.30000	-.08550	.24590	8.10000	5.00000
3.736	4.056	3.96950	3.94180	1703.89990	535.38820	734.61770	100.20000	-.08530	.24550	8.10000	5.00000
3.692	6.093	3.94510	6.02870	1708.59990	535.07280	736.67680	100.30000	-.08570	.24640	8.10000	5.00000
	GRADIENT	.02263	1.01530	.65113	.12553	.28234	-.01297	-.00003	.00004	.00000	.00000

IA156A, AEDC PWT 16T-470, O T S W/SILTS (R8NMA2) (10 MAY 80)

REFERENCE DATA

SREF = 2690.0000 SQ.FT. XMRP = 976.0000 IN. XT
LREF = 1290.3000 INCHES YMRP = .0000 IN. YT
BREF = 1290.3000 INCHES ZMRP = 400.0000 IN. ZT
SCALE = .0200

PARAMETRIC DATA

IB-ELV = 8.000 OB-ELV = 5.000
BDFLAP = .000 SPDBRK = .000
RUDDER = .000 SILTS = 1.000
MACH = 1.550 RN/L = 3.200

RUN NO. 1212/ 0 RN/L = 3.20 GRADIENT INTERVAL = -5.00/ 5.00

ALPHAO	BETAO	ALFAOU	BETAOU	PT	P	Q	TT	AFA	BFA	DEINLR	DEONLR
-8.321	-5.932	-7.99810	-6.08640	1603.89990	405.64600	683.02590	100.10000	-.14960	.32460	8.10000	5.00000
-8.412	-3.712	-8.12850	-3.92920	1608.89990	407.20970	685.21560	100.00000	-.14920	.32430	8.10000	5.00000
-8.276	.314	-8.12790	-.00930	1609.20000	407.80300	685.44750	100.00000	-.14850	.32370	8.10000	5.00000
-8.033	4.496	-8.06150	4.14110	1604.09990	406.53740	683.28050	99.80000	-.14850	.32370	8.10000	5.00000
-8.010	6.424	-8.10030	6.07960	1610.39990	408.29320	685.99580	99.80000	-.14830	.32350	8.10000	5.00000
	GRADIENT	.00821	.98331	-.58889	-.08333	-.23758	-.02452	.00008	-.00007	.00000	-.00000

RUN NO. 1213/ 0 RN/L = 3.20 GRADIENT INTERVAL = -5.00/ 5.00

ALPHAO	BETAO	ALFAOU	BETAOU	PT	P	Q	TT	AFA	BFA	DEINLR	DEONLR
-6.376	-5.979	-6.03520	-6.08480	1607.59990	407.11620	684.70950	100.00000	-.14890	.32400	8.10000	5.00000
-6.309	-4.025	-5.99330	-4.19140	1604.70000	406.33640	683.46510	99.80000	-.14890	.32410	8.10000	5.00000
-6.326	.241	-6.17130	-.08080	1609.29980	407.20780	685.36520	100.00000	-.14930	.32440	8.10000	5.00000
-6.040	4.435	-6.11140	4.08700	1599.89990	405.86230	681.56930	99.80000	-.14800	.32320	8.10000	5.00000
-5.961	6.413	-6.10030	6.08420	1608.29980	407.31150	685.01120	99.80000	-.14880	.32400	8.10000	5.00000
	GRADIENT	-.01404	.97846	-.56265	-.05529	-.22216	.00013	.00011	-.00011	.00000	.00000

RUN NO. 1214/ 0 RN/L = 3.21 GRADIENT INTERVAL = -5.00/ 5.00

ALPHAO	BETAO	ALFAOU	BETAOU	PT	P	Q	TT	AFA	BFA	DEINLR	DEONLR
-4.254	-6.145	-3.89860	-6.17400	1602.09990	405.95140	682.41280	99.80000	-.14860	.32370	8.10000	5.00000
-4.488	-3.997	-4.14860	-4.10460	1607.20000	407.51460	684.63940	100.00000	-.14820	.32340	8.10000	5.00000
-4.353	.498	-4.21790	.16840	1614.70000	408.86870	687.72440	100.00000	-.14890	.32410	8.10000	5.00000
-3.760	4.479	-3.91020	4.15550	1607.09990	407.11870	684.52250	99.90000	-.14870	.32390	8.10000	5.00000
-3.825	6.317	-4.02600	6.02320	1610.29980	408.19460	685.93870	100.10000	-.14830	.32360	8.10000	5.00000
	GRADIENT	.02719	.97408	.02425	-.03924	.00123	-.01155	-.00006	.00006	.00000	.00000

RUN NO. 1215/ 0 RN/L = 3.20 GRADIENT INTERVAL = -5.00/ 5.00

ALPHAO	BETAO	ALFAOU	BETAOU	PT	P	Q	TT	AFA	BFA	DEINLR	DEONLR
-.590	-7.139	-.26780	-6.99260	1606.70000	408.40870	684.62920	100.00000	-.14690	.32230	8.10000	5.00000
-.561	-5.002	-.23700	-4.85320	1601.20000	405.85640	682.05620	99.90000	-.14840	.32360	8.10000	5.00000
-.520	-.606	-.19730	-.45790	1606.50000	407.61670	684.39700	100.00000	-.14790	.32310	8.10000	5.00000
-.510	3.511	-.18680	3.65960	1604.20000	406.53690	683.31790	99.90000	-.14850	.32370	8.10000	5.00000
-.517	5.704	-.19330	5.85250	1611.09990	408.29000	686.25780	100.00000	-.14850	.32370	8.10000	5.00000
	GRADIENT	.00255	1.00022	-.55870	-.26230	-.26214	-.02429	-.00015	.00015	.00000	.00000

IA156A, AEDC PWT 16T-470, O T S W/SILTS (R8NMA2) (10 MAY 80)

REFERENCE DATA

SREF = 2690.0000 SQ.FT. XMRP = 976.0000 IN. XT
LREF = 1290.3000 INCHES YMRP = .0000 IN. YT
BREF = 1290.3000 INCHES ZMRP = 400.0000 IN. ZT
SCALE = .0200

PARAMETRIC DATA

IB-ELV = 8.000 OB-ELV = 5.000
BDFLAP = .000 SPDBRK = .000
RUDDER = .000 SILTS = 1.000
MACH = 1.550 RN/L = 3.200

RUN NO. 1216/ 0 RN/L = 3.20 GRADIENT INTERVAL = -5.00/ 5.00

ALPHAO	BETAO	ALFAOU	BETAOU	PT	P	Q	TT	AFA	BFA	DEINLR	DEONLR
4.128	-5.607	3.94140	-5.91060	1610.70000	408.29170	686.10820	100.00000	-.14830	.32360	8.10000	5.00000
3.967	-3.526	3.84370	-3.85990	1610.79980	408.29150	686.14580	100.10000	-.14840	.32360	8.10000	5.00000
3.605	.251	3.74680	-.07520	1594.29980	404.30130	679.15580	99.80000	-.14810	.32340	8.10000	5.00000
3.637	4.006	3.96930	3.87860	1605.00000	406.53320	683.61720	100.10000	-.14870	.32390	8.10000	5.00000
3.619	6.083	3.97060	6.02330	1608.59990	407.60740	685.18310	100.00000	-.14860	.32370	8.10000	5.00000
	GRADIENT	.01663	1.02735	-.77349	-.23423	-.33717	-.00008	-.00004	.00004	.00000	.00000

IA156A, AEDC PWT 16T-470, O T S W/SILTS (R8NMA3) (10 MAY 80)

REFERENCE DATA

SREF = 2690.0000 SQ.FT. XMRP = 976.0000 IN. XT
LREF = 1290.3000 INCHES YMRP = .0000 IN. YT
BREF = 1290.3000 INCHES ZMRP = 400.0000 IN. ZT
SCALE = .0200

PARAMETRIC DATA

IB-ELV = 12.000 OB-ELV = 5.000
BDFLAP = .000 SPDBRK = .000
RUDDER = .000 SILTS = 1.000
MACH = .600 RN/L = 3.500

RUN NO. 1240/ 0 RN/L = 3.50 GRADIENT INTERVAL = -5.00/ 5.00

ALPHAO	BETAO	ALFAOU	BETAOU	PT	P	Q	TT	AFA	BFA	DEINLR	DEONLR
-8.152	-7.797	-8.06430	-7.98880	2239.09991	1756.75710	441.31540	98.70000	.07750	.19620	12.12000	5.00000
-8.060	-5.766	-7.99850	-5.96670	2228.39990	1745.80150	441.30620	99.20000	.07530	.19650	12.12000	5.00000
-8.078	-3.773	-8.05650	-3.98220	2233.89990	1752.08940	440.77270	99.10000	.07700	.19630	12.12000	5.00000
-7.979	.297	-8.05820	.10130	2231.89990	1750.70850	440.22390	98.80000	.07720	.19630	12.12000	5.00000
-7.850	4.216	-8.00840	4.07790	2231.89990	1748.37010	442.14110	98.70000	.07520	.19650	12.12000	5.00000
-7.838	6.120	-8.01960	6.01300	2232.09991	1750.60280	440.47900	98.50000	.07700	.19630	12.12000	5.00000
-7.891	8.133	-8.08690	8.05340	2233.00000	1752.31180	439.83350	98.60000	.07780	.19620	12.12000	5.00000
	GRADIENT	.00598	1.00892	-.25189	-.46477	.16935	-.05022	-.00022	.00002	-.00000	-.00000

RUN NO. 1241/ 0 RN/L = 3.50 GRADIENT INTERVAL = -5.00/ 5.00

ALPHAO	BETAO	ALFAOU	BETAOU	PT	P	Q	TT	AFA	BFA	DEINLR	DEONLR
-6.112	-7.857	-5.99560	-8.03200	2233.09991	1749.97141	441.83720	99.60000	.07580	.19640	12.12000	5.00000
-6.081	-5.857	-5.98970	-6.04620	2234.09991	1750.35670	442.36130	99.60000	.07540	.19650	12.12000	5.00000
-5.997	-3.963	-5.94150	-4.16620	2234.70001	1750.44560	442.79250	99.70000	.07510	.19650	12.12000	5.00000
-6.039	.085	-6.11020	-.11320	2234.70001	1750.44560	442.79250	99.50000	.07510	.19650	12.12000	5.00000
-5.909	4.157	-6.08350	4.03860	2234.50000	1751.46660	441.78780	99.40000	.07610	.19640	12.12000	5.00000
-5.832	6.110	-6.02660	6.02860	2232.89990	1749.46730	442.08230	98.50000	.07550	.19650	12.12000	5.00000
-5.639	8.191	-5.84400	8.14330	2232.89990	1749.77220	441.83230	98.50000	.07570	.19640	12.12000	5.00000
	GRADIENT	-.01746	1.01043	-.02466	.12586	-.12385	-.03693	.00012	-.00001	-.00000	-.00000

IA156A, AEDC PWT 16T-470, O T S W/SILTS (R8NMA3) (10 MAY 80)

REFERENCE DATA

SREF = 2690.0000 SQ.FT. XMRP = 976.0000 IN. XT
LREF = 1290.3000 INCHES YMRP = .0000 IN. YT
BREF = 1290.3000 INCHES ZMRP = 400.0000 IN. ZT
SCALE = .0200

PARAMETRIC DATA

IB-ELV = 12.000 OB-ELV = 5.000
BDFLAP = .000 SPDBRK = .000
RUDDER = .000 SILTS = 1.000
MACH = .600 RN/L = 3.500

RUN NO. 1242/ 0 RN/L = 3.49 GRADIENT INTERVAL = -5.00/ 5.00

ALPHAO	BETAO	ALFAOU	BETAOU	PT	P	Q	TT	AFA	BFA	DEINLR	DEONLR
-3.979	-7.922	-3.82990	-8.07160	2232.70001	1749.77640	441.66060	99.80000	.07590	.19640	12.12000	5.00000
-4.201	-5.904	-4.07640	-6.07300	2231.50000	1749.29370	441.04810	99.80000	.07630	.19640	12.12000	5.00000
-4.186	-3.853	-4.09600	-4.04340	2232.39990	1748.86790	442.15330	99.90000	.07530	.19650	12.12000	5.00000
-3.980	.176	-4.05470	-.02060	2230.70001	1748.59911	440.94530	100.10000	.07620	.19640	12.12000	5.00000
-3.668	4.205	-3.86540	4.13110	2230.50000	1748.70509	440.69040	99.90000	.07640	.19640	12.12000	5.00000
-3.774	6.004	-3.98110	5.96400	2230.29980	1749.21780	440.10180	99.90000	.07700	.19630	12.12000	5.00000
-3.800	7.983	-4.01070	7.96810	2232.29980	1750.49680	440.73390	100.00000	.07670	.19630	12.12000	5.00000
	GRADIENT	.02862	1.01442	-.23578	-.02020	-.18154	.00000	.00014	-.00001	-.00000	.00000

RUN NO. 1243/ 0 RN/L = 3.50 GRADIENT INTERVAL = -5.00/ 5.00

ALPHAO	BETAO	ALFAOU	BETAOU	PT	P	Q	TT	AFA	BFA	DEINLR	DEONLR
-.354	-8.693	-.15780	-8.76980	2236.50000	1753.86400	441.50270	100.30000	.07680	.19630	12.12000	5.00000
-.344	-6.614	-.14810	-6.69110	2236.09991	1753.97411	441.07620	100.30000	.07720	.19630	12.12000	5.00000
-.330	-4.366	-.13390	-4.44280	2236.70001	1753.85960	441.67430	100.00000	.07670	.19630	12.12000	5.00000
-.303	-.313	-.10660	-.38870	2236.09991	1752.75420	442.07670	99.80000	.07610	.19640	12.12000	5.00000
-.271	3.752	-.07500	3.67590	2237.50000	1753.33420	442.77730	99.80000	.07570	.19640	12.12000	5.00000
-.267	5.854	-.07050	5.77800	2236.89990	1752.94040	442.59620	99.80000	.07580	.19640	12.12000	5.00000
-.258	7.945	-.06140	7.86960	2237.20001	1752.62920	443.10330	99.90000	.07530	.19650	12.12000	5.00000
	GRADIENT	.00726	1.00014	.09866	-.06464	.13589	-.02463	-.00012	.00001	-.00000	-.00000

RUN NO. 1244/ 0 RN/L = 3.50 GRADIENT INTERVAL = -5.00/ 5.00

ALPHAO	BETAO	ALFAOU	BETAOU	PT	P	Q	TT	AFA	BFA	DEINLR	DEONLR
4.282	-8.106	4.07320	-8.12730	2236.59991	1750.30370	444.50420	99.80000	.07370	.19660	12.12000	5.00000
4.109	-5.880	3.90220	-5.92300	2235.20001	1752.67160	441.38790	99.80000	.07670	.19630	12.12000	5.00000
4.094	-3.892	3.89970	-3.97430	2236.79980	1753.65430	441.92700	99.80000	.07640	.19640	12.12000	5.00000
3.910	-.003	3.82250	-.19560	2235.70001	1753.77930	440.89970	99.80000	.07730	.19630	12.12000	5.00000
3.942	4.078	4.02450	3.88390	2236.20001	1754.37869	440.82810	99.90000	.07740	.19620	12.12000	5.00000
3.885	6.223	4.00910	6.05230	2237.39990	1752.42140	443.44140	100.10000	.07500	.19650	12.12000	5.00000
3.875	8.228	4.01880	8.07400	2235.39990	1751.54910	442.47630	100.10000	.07560	.19650	12.12000	5.00000
	GRADIENT	.01894	.98602	-.07362	.09135	-.13688	.01265	.00012	-.00003	-.00000	.00000

IA156A, AEDC PWT 16T-470, O T S W/SILTS (R8NMA3) (10 MAY 80)

REFERENCE DATA

SREF = 2690.0000 SQ.FT. XMRP = 976.0000 IN. XT
LREF = 1290.3000 INCHES YMRP = .0000 IN. YT
BREF = 1290.3000 INCHES ZMRP = 400.0000 IN. ZT
SCALE = .0200

PARAMETRIC DATA

IB-ELV = 12.000 OB-ELV = 5.000
BDFLAP = .000 SPDBRK = .000
RUDDER = .000 SILTS = 1.000
MACH = .600 RN/L = 3.500

RUN NO. 1245/ 0 RN/L = 3.50 GRADIENT INTERVAL = -5.00/ 5.00

ALPHAO	BETAO	ALFAOU	BETAOU	PT	P	Q	TT	AFA	BFA	DEINLR	DEONLR
6.245	-8.012	6.04200	-8.06760	2235.70001	1751.44090	442.81690	100.00000	.07530	.19650	12.12000	5.00000
6.219	-5.943	6.02570	-6.02690	2234.89990	1751.45799	442.13090	100.10000	.07580	.19640	12.12000	5.00000
6.204	-3.868	6.03060	-3.98810	2235.59991	1752.86650	441.56420	100.20000	.07650	.19630	12.12000	5.00000
5.928	.168	5.85030	-.02830	2235.39990	1753.48070	440.89230	100.20000	.07720	.19630	12.12000	5.00000
5.855	4.103	5.90020	3.89620	2233.70001	1753.00880	439.85010	100.30000	.07800	.19620	12.12000	5.00000
5.781	6.202	5.87180	6.01220	2235.89990	1751.03000	443.32150	100.20000	.07480	.19650	12.12000	5.00000
5.768	8.130	5.88350	7.95480	2235.79980	1750.82890	443.40230	100.10000	.07470	.19650	12.12000	5.00000
	GRADIENT	-.01648	.98918	-.23757	.01843	-.21485	.01249	.00019	-.00001	.00000	-.00000

RUN NO. 1246/ 0 RN/L = 3.50 GRADIENT INTERVAL = -5.00/ 5.00

ALPHAO	BETAO	ALFAOU	BETAOU	PT	P	Q	TT	AFA	BFA	DEINLR	DEONLR
8.135	-7.857	7.94150	-7.93960	2233.09991	1750.47971	441.42040	100.00000	.07620	.19640	12.12000	5.00000
8.050	-5.782	7.87020	-5.89150	2236.00000	1753.26460	441.57400	100.00000	.07660	.19630	12.12000	5.00000
8.036	-3.796	7.87840	-3.93600	2239.39990	1755.63210	442.49020	100.00000	.07640	.19640	12.12000	5.00000
7.950	.173	7.87160	-.02310	2242.00000	1759.64360	441.38530	100.10000	.07810	.19620	12.12000	5.00000
7.992	4.235	8.01380	4.02550	2244.50000	1759.89529	443.28080	100.10000	.07660	.19630	12.12000	5.00000
7.938	6.240	7.99860	6.03810	2247.39990	1761.56180	444.35160	100.00000	.07610	.19640	12.12000	5.00000
7.946	8.284	8.03420	8.09320	2240.29980	1756.12131	442.84550	99.90000	.07620	.19640	12.12000	5.00000
	GRADIENT	.01693	.99137	.63497	.52900	.09989	.01240	.00002	-.00001	-.00000	-.00000

IA156A, AEDC PWT 16T-470, O T S W/SILTS (R8NMA4) (10 MAY 80)

REFERENCE DATA

SREF = 2690.0000 SQ.FT. XMRP = 976.0000 IN. XT
LREF = 1290.3000 INCHES YMRP = .0000 IN. YT
BREF = 1290.3000 INCHES ZMRP = 400.0000 IN. ZT
SCALE = .0200

PARAMETRIC DATA

IB-ELV = 12.000 OB-ELV = 5.000
BDFLAP = .000 SPDBRK = .000
RUDDER = .000 SILTS = 1.000
MACH = .800 RN/L = 3.500

RUN NO. 1247/ 0 RN/L = 3.50 GRADIENT INTERVAL = -5.00/ 5.00

ALPHAO	BETAO	ALFAOU	BETAOU	PT	P	Q	TT	AFA	BFA	DEINLR	DEONLR
-8.178	-5.803	-8.02140	-5.93970	1878.29980	1231.68680	552.38040	100.60000	-.03840	.20400	12.12000	5.00000
-8.184	-3.772	-8.05650	-3.93600	1882.59990	1235.96530	552.65260	100.50000	-.03810	.20410	12.12000	5.00000
-8.099	.387	-8.06500	.18170	1883.00000	1235.65500	553.15990	100.60000	-.03820	.20410	12.12000	5.00000
-7.928	4.305	-7.99180	4.10750	1879.09990	1233.29221	551.88060	100.60000	-.03820	.20410	12.12000	5.00000
-7.942	6.214	-8.03870	6.03070	1883.89990	1236.34810	553.35450	100.50000	-.03820	.20410	12.12000	5.00000
	GRADIENT	.00791	.99576	-.42790	-.32832	-.09335	.01250	-.00001	-.00000	-.00000	-.00000

RUN NO. 1248/ 0 RN/L = 3.50 GRADIENT INTERVAL = -5.00/ 5.00

ALPHAO	BETAO	ALFAOU	BETAOU	PT	P	Q	TT	AFA	BFA	DEINLR	DEONLR
-6.143	-5.924	-5.96740	-6.03460	1882.59990	1236.16769	552.51490	100.40000	-.03810	.20410	12.12000	5.00000
-6.094	-4.028	-5.94200	-4.16920	1881.20000	1235.58400	551.87550	100.30000	-.03800	.20410	12.12000	5.00000
-6.164	.072	-6.12100	-.13130	1879.89990	1234.89771	551.38010	100.40000	-.03800	.20410	12.12000	5.00000
-5.981	4.219	-6.06700	4.02970	1883.39990	1237.36839	552.28980	100.40000	-.03800	.20410	12.12000	5.00000
-5.887	6.213	-6.01020	6.04580	1878.20000	1232.70020	551.61720	100.40000	-.03820	.20410	12.12000	5.00000
	GRADIENT	-.01510	.99421	.26786	.21710	.05056	.01210	.00000	-.00000	-.00000	-.00000

RUN NO. 1249/ 0 RN/L = 3.50 GRADIENT INTERVAL = -5.00/ 5.00

ALPHAO	BETAO	ALFAOU	BETAOU	PT	P	Q	TT	AFA	BFA	DEINLR	DEONLR
-4.088	-6.032	-3.89350	-6.10380	1880.00000	1235.19949	551.24850	100.40000	-.03800	.20410	12.12000	5.00000
-4.286	-3.931	-4.11150	-4.04370	1881.70000	1236.38499	551.70020	100.30000	-.03800	.20410	12.12000	5.00000
-4.157	.407	-4.12930	.20130	1882.79980	1237.47971	551.76950	100.70000	-.03790	.20410	12.12000	5.00000
-3.746	4.285	-3.87330	4.12090	1880.00000	1234.39011	551.79980	100.50000	-.03810	.20410	12.12000	5.00000
-3.826	6.107	-3.97920	5.96640	1879.50000	1234.49980	551.35500	100.50000	-.03810	.20410	12.12000	5.00000
	GRADIENT	.02834	.99349	-.19786	-.23307	.01220	.02568	-.00001	-.00000	-.00000	-.00000

RUN NO. 1250/ 0 RN/L = 3.50 GRADIENT INTERVAL = -5.00/ 5.00

ALPHAO	BETAO	ALFAOU	BETAOU	PT	P	Q	TT	AFA	BFA	DEINLR	DEONLR
-.370	-6.859	-.16610	-6.82070	1882.70000	1237.07640	551.97000	100.60000	-.03800	.20410	12.12000	5.00000
-.364	-4.706	-.16030	-4.66840	1882.79980	1236.87260	552.18310	100.50000	-.03800	.20410	12.12000	5.00000
-.337	-.421	-.13280	-.38270	1879.20000	1234.30220	551.26710	100.70000	-.03800	.20410	12.12000	5.00000
-.300	3.655	-.09620	3.69320	1883.39990	1236.05299	553.18530	100.70000	-.03820	.20410	12.12000	5.00000
-.299	5.785	-.09470	5.82360	1878.50000	1233.40359	551.36080	100.60000	-.03810	.20410	12.12000	5.00000
	GRADIENT	.00766	1.00005	.06395	-.10233	.11700	.02412	-.00002	-.00000	-.00000	-.00000

IA156A, AEDC PWT 16T-470, O T S W/SILTS (R8NMA4) (10 MAY 80)

REFERENCE DATA

SREF = 2690.0000 SQ.FT. XMRP = 976.0000 IN. XT
LREF = 1290.3000 INCHES YMRP = .0000 IN. YT
BREF = 1290.3000 INCHES ZMRP = 400.0000 IN. ZT
SCALE = .0200

PARAMETRIC DATA

IB-ELV = 12.000 OB-ELV = 5.000
BDFLAP = .000 SPDBRK = .000
RUDDER = .000 SILTS = 1.000
MACH = .800 RN/L = 3.500

RUN NO. 1251/ 0 RN/L = 3.50 GRADIENT INTERVAL = -5.00/ 5.00

ALPHAO	BETAO	ALFAOU	BETAOU	PT	P	Q	TT	AFA	BFA	DEINLR	DEONLR
4.142	-5.836	3.99250	-5.98000	1878.20000	1234.92630	550.10110	100.70000	-.03780	.20410	12.12000	5.00000
4.011	-3.729	3.89220	-3.89800	1881.00000	1235.99220	551.44950	100.70000	-.03800	.20410	12.12000	5.00000
3.780	.115	3.81450	-.09020	1880.00000	1232.36650	553.17580	100.60000	-.03850	.20400	12.12000	5.00000
3.872	4.058	4.04280	3.94060	1882.39990	1235.15919	553.05320	100.70000	-.03830	.20410	12.12000	5.00000
3.808	6.146	4.00020	6.06750	1878.29980	1233.10330	551.41700	100.60000	-.03820	.20410	12.12000	5.00000
	GRADIENT	.01951	1.00686	.18168	-.10342	.20494	.00011	-.00004	.00000	-.00000	-.00000

RUN NO. 1252/ 0 RN/L = 3.50 GRADIENT INTERVAL = -5.00/ 5.00

ALPHAO	BETAO	ALFAOU	BETAOU	PT	P	Q	TT	AFA	BFA	DEINLR	DEONLR
6.143	-5.864	6.02430	-6.03370	1880.00000	1232.77119	552.90090	100.60000	-.03840	.20400	12.12000	5.00000
6.116	-3.819	6.03260	-4.00910	1883.09990	1238.38530	551.37450	100.70000	-.03780	.20410	12.12000	5.00000
5.812	.154	5.84810	-.05010	1878.59990	1233.40190	551.43590	100.70000	-.03810	.20410	12.12000	5.00000
5.749	4.024	5.89440	3.87650	1879.89990	1234.08839	551.93120	100.70000	-.03820	.20410	12.12000	5.00000
5.881	6.222	6.05420	6.10770	1881.50000	1234.76950	552.65210	100.70000	-.03820	.20410	12.12000	5.00000
	GRADIENT	-.01775	1.00537	-.41122	-.55100	.07073	.00000	-.00005	.00000	.00000	-.00000

IA156A, AEDC PWT 16T-470, O T S W/SILTS (R8NMA5) (10 MAY 80)

REFERENCE DATA

SREF = 2690.0000 SQ.FT. XMRP = 976.0000 IN. XT
LREF = 1290.3000 INCHES YMRP = .0000 IN. YT
BREF = 1290.3000 INCHES ZMRP = 400.0000 IN. ZT
SCALE = .0200

PARAMETRIC DATA

IB-ELV = 12.000 OB-ELV = 5.000
BDFLAP = .000 SPDBRK = .000
RUDDER = .000 SILTS = 1.000
MACH = .900 RN/L = 3.500

RUN NO. 1253/ 0 RN/L = 3.50 GRADIENT INTERVAL = -5.00/ 5.00

ALPHAO	BETAO	ALFAOU	BETAOU	PT	P	Q	TT	AFA	BFA	DEINLR	DEONLR
-8.381	-5.946	-8.21620	-6.07130	1780.89990	1054.57100	596.08590	99.80000	-.05170	.20010	12.12000	5.00000
-8.127	-3.743	-7.98830	-3.89640	1781.29980	1053.15280	597.20580	99.80000	-.05180	.20010	12.12000	5.00000
-8.097	.172	-8.04410	-.02800	1785.09990	1055.82130	598.22850	100.00000	-.05170	.20010	12.12000	5.00000
-7.929	4.414	-7.98230	4.21400	1780.70000	1052.95970	596.90820	99.90000	-.05180	.20010	12.12000	5.00000
-7.965	6.237	-8.05050	6.04890	1782.39990	1053.23750	597.91060	100.00000	-.05180	.20010	12.12000	5.00000
	GRADIENT	.00093	.99442	-.08692	-.03271	-.04030	.01176	-.00000	-.00000	.00000	-.00000

IA156A, AEDC PWT 16T-470, O T S W/SILTS (R8NMA5) (10 MAY 80)

REFERENCE DATA

SREF = 2690.0000 SQ.FT. XMRP = 976.0000 IN. XT
LREF = 1290.3000 INCHES YMRP = .0000 IN. YT
BREF = 1290.3000 INCHES ZMRP = 400.0000 IN. ZT
SCALE = .0200

PARAMETRIC DATA

IB-ELV = 12.000 OB-ELV = 5.000
BDFLAP = .000 SPDBRK = .000
RUDDER = .000 SILTS = 1.000
MACH = .900 RN/L = 3.500

RUN NO. 1254/ 0 RN/L = 3.50 GRADIENT INTERVAL = -5.00/ 5.00

ALPHAO	BETAO	ALFAOU	BETAOU	PT	P	Q	TT	AFA	BFA	DEINLR	DEONLR
-6.157	-5.933	-5.97510	-6.03100	1780.39990	1052.76221	596.81960	99.80000	-.05180	.20010	12.12000	5.00000
-6.107	-3.992	-5.94580	-4.12140	1780.39990	1052.86330	596.75950	100.00000	-.05180	.20010	12.12000	5.00000
-6.098	.260	-6.04780	.05900	1780.50000	1053.06351	596.70900	99.90000	-.05170	.20010	12.12000	5.00000
-5.995	4.228	-6.06860	4.03470	1780.09990	1053.06931	596.43070	99.80000	-.05170	.20010	12.12000	5.00000
-5.941	6.201	-6.05170	6.02650	1782.70000	1053.43510	597.99950	100.00000	-.05180	.20010	12.12000	5.00000
	GRADIENT	-.01505	.99218	-.03579	.02532	-.03967	-.02432	.00001	-.00000	-.00000	-.00000

RUN NO. 1255/ 0 RN/L = 3.50 GRADIENT INTERVAL = -5.00/ 5.00

ALPHAO	BETAO	ALFAOU	BETAOU	PT	P	Q	TT	AFA	BFA	DEINLR	DEONLR
-4.049	-5.942	-3.85040	-5.99920	1780.59990	1053.36470	596.59840	100.00000	-.05170	.20010	12.12000	5.00000
-4.275	-3.950	-4.09390	-4.04860	1780.50000	1052.96260	596.76930	100.00000	-.05180	.20010	12.12000	5.00000
-4.181	.363	-4.13730	.16070	1781.00000	1052.95531	597.11690	99.90000	-.05180	.20010	12.12000	5.00000
-3.755	4.252	-3.87030	4.08110	1780.39990	1053.36771	596.45920	99.90000	-.05170	.20010	12.12000	5.00000
-3.839	6.105	-3.98130	5.95540	1780.79980	1053.26100	596.79790	100.00000	-.05180	.20010	12.12000	5.00000
	GRADIENT	.02659	.99086	-.00989	.04847	-.03567	-.01239	.00001	.00000	.00000	.00000

RUN NO. 1256/ 0 RN/L = 3.50 GRADIENT INTERVAL = -5.00/ 5.00

ALPHAO	BETAO	ALFAOU	BETAOU	PT	P	Q	TT	AFA	BFA	DEINLR	DEONLR
-.406	-6.906	-.20630	-6.85430	1779.89990	1052.76950	596.47170	99.90000	-.05180	.20010	12.12000	5.00000
-.386	-4.764	-.19620	-4.71250	1779.79980	1053.78000	595.80100	100.00000	-.05170	.20010	12.12000	5.00000
-.355	-.424	-.15510	-.37270	1780.20000	1052.26070	596.98070	99.90000	-.05180	.20010	12.12000	5.00000
-.321	3.663	-.12140	3.71480	1780.50000	1050.74319	598.08810	99.90000	-.05190	.20000	12.12000	5.00000
-.321	5.811	-.12150	5.86300	1780.09990	1052.16141	596.97090	99.90000	-.05180	.20010	12.12000	5.00000
	GRADIENT	.00768	1.00004	.08318	-.36026	.27140	-.01198	-.00002	-.00001	-.00000	-.00000

RUN NO. 1257/ 0 RN/L = 3.50 GRADIENT INTERVAL = -5.00/ 5.00

ALPHAO	BETAO	ALFAOU	BETAOU	PT	P	Q	TT	AFA	BFA	DEINLR	DEONLR
4.138	-5.831	3.99960	-5.98420	1780.39990	1054.27560	595.91820	99.80000	-.05170	.20010	12.12000	5.00000
4.005	-3.746	3.89840	-3.92370	1781.09990	1054.36650	596.34550	99.90000	-.05170	.20010	12.12000	5.00000
3.772	.075	3.81730	-.12640	1783.29980	1052.31670	599.07570	100.00000	-.05190	.20000	12.12000	5.00000
3.863	4.007	4.03970	3.90070	1784.00000	1053.01270	599.14280	100.00000	-.05190	.20000	12.12000	5.00000
3.797	6.125	3.99320	6.05880	1783.20000	1055.64720	597.02610	99.90000	-.05170	.20010	12.12000	5.00000
	GRADIENT	.01841	1.00923	.37310	-.17292	.35913	.01284	-.00003	-.00001	-.00000	.00000

IA156A, AEDC PWT 16T-470, O T S W/SILTS (R8NMA6) (10 MAY 80)

REFERENCE DATA

SREF = 2690.0000 SQ.FT. XMRP = 976.0000 IN. XT
LREF = 1290.3000 INCHES YMRP = .0000 IN. YT
BREF = 1290.3000 INCHES ZMRP = 400.0000 IN. ZT
SCALE = .0200

PARAMETRIC DATA

IB-ELV = 12.000 OB-ELV = 5.000
BDFLAP = .000 SPDBRK = .000
RUDDER = .000 SILTS = 1.000
MACH = .950 RN/L = 3.500

RUN NO. 1258/ 0 RN/L = 3.50 GRADIENT INTERVAL = -5.00/ 5.00

ALPHAO	BETAO	ALFAOU	BETAOU	PT	P	Q	TT	AFA	BFA	DEINLR	DEONLR
-8.122	-5.896	-7.95470	-6.01390	1746.39990	978.94820	616.19730	100.20000	-.05530	.19780	12.12000	5.00000
-8.204	-3.800	-8.06260	-3.94890	1746.59990	979.24760	616.16460	100.10000	-.05530	.19780	12.12000	5.00000
-8.120	.348	-8.06850	.14870	1749.70000	980.01200	617.79390	100.10000	-.05540	.19780	12.12000	5.00000
-7.943	4.317	-7.99030	4.11720	1749.59990	980.21460	617.61650	100.10000	-.05530	.19780	12.12000	5.00000
-7.957	6.224	-8.03850	6.03490	1749.59990	979.71120	617.89330	100.00000	-.05540	.19770	12.12000	5.00000
	GRADIENT	.00883	.99372	.37243	.11962	.18048	.00000	-.00000	-.00000	-.00000	-.00000

RUN NO. 1259/ 0 RN/L = 3.50 GRADIENT INTERVAL = -5.00/ 5.00

ALPHAO	BETAO	ALFAOU	BETAOU	PT	P	Q	TT	AFA	BFA	DEINLR	DEONLR
-6.172	-5.943	-5.98850	-6.03560	1749.70000	979.81050	617.90480	100.10000	-.05540	.19770	12.12000	5.00000
-6.107	-4.037	-5.94360	-4.16170	1749.00000	979.81980	617.43680	100.20000	-.05530	.19780	12.12000	5.00000
-6.186	.092	-6.12710	-.10490	1749.09990	979.71780	617.55910	100.20000	-.05540	.19780	12.12000	5.00000
-6.011	4.226	-6.08080	4.03270	1749.09990	979.81840	617.50370	100.20000	-.05540	.19780	12.12000	5.00000
-5.740	6.301	-5.85130	6.12880	1749.29980	979.91650	617.58200	100.10000	-.05530	.19780	12.12000	5.00000
	GRADIENT	-.01660	.99169	.01209	-.00016	.00809	.00000	-.00001	.00000	.00000	.00000

RUN NO. 1260/ 0 RN/L = 3.50 GRADIENT INTERVAL = -5.00/ 5.00

ALPHAO	BETAO	ALFAOU	BETAOU	PT	P	Q	TT	AFA	BFA	DEINLR	DEONLR
-4.061	-6.053	-3.86190	-6.10340	1748.79980	979.92310	617.24780	100.10000	-.05530	.19780	12.12000	5.00000
-4.287	-3.951	-4.10450	-4.04520	1749.29980	979.71510	617.69260	100.10000	-.05540	.19780	12.12000	5.00000
-4.181	.370	-4.13390	.16990	1749.29980	979.31230	617.91410	100.10000	-.05540	.19770	12.12000	5.00000
-3.754	4.279	-3.86690	4.10730	1749.09990	979.61690	617.61450	100.10000	-.05540	.19780	12.12000	5.00000
-3.839	6.095	-3.97800	5.94440	1749.00000	979.71900	617.49220	100.10000	-.05540	.19780	12.12000	5.00000
	GRADIENT	.02825	.99030	-.02387	-.01336	-.00843	-.00000	.00000	-.00000	-.00000	-.00000

RUN NO. 1261/ 0 RN/L = 3.50 GRADIENT INTERVAL = -5.00/ 5.00

ALPHAO	BETAO	ALFAOU	BETAOU	PT	P	Q	TT	AFA	BFA	DEINLR	DEONLR
-.422	-6.933	-.22430	-6.87770	1748.39990	979.92850	616.98050	100.10000	-.05530	.19780	12.12000	5.00000
-.402	-4.791	-.20440	-4.73550	1749.50000	980.01440	617.66040	100.10000	-.05540	.19780	12.12000	5.00000
-.366	-.454	-.16870	-.39870	1749.89990	979.50560	618.20430	100.10000	-.05540	.19770	12.12000	5.00000
-.334	3.660	-.13610	3.71500	1749.29980	976.99630	619.18410	100.10000	-.05550	.19760	12.12000	5.00000
-.336	5.826	-.13800	5.88120	1745.09990	976.34720	616.76760	100.10000	-.05540	.19770	12.12000	5.00000
	GRADIENT	.00808	1.00002	-.02265	-.35499	.17932	-.00000	-.00001	-.00002	-.00000	-.00000

IA156A, AEDC PWT 16T-470, O T S W/SILTS (R8NMA6) (10 MAY 80)

REFERENCE DATA

SREF = 2690.0000 SQ.FT. XMRP = 976.0000 IN. XT
LREF = 1290.3000 INCHES YMRP = .0000 IN. YT
BREF = 1290.3000 INCHES ZMRP = 400.0000 IN. ZT
SCALE = .0200

PARAMETRIC DATA

IB-ELV = 12.000 OB-ELV = 5.000
BDFLAP = .000 SPDBRK = .000
RUDDER = .000 SILTS = 1.000
MACH = .950 RN/L = 3.500

RUN NO. 1262/ 0 RN/L = 3.50 GRADIENT INTERVAL = -5.00/ 5.00

ALPHAO	BETAO	ALFAOU	BETAOU	PT	P	Q	TT	AFA	BFA	DEINLR	DEONLR
4.114	-5.814	3.97960	-5.97000	1751.09990	981.10080	618.12060	100.10000	-.05530	.19780	12.12000	5.00000
3.989	-3.714	3.88840	-3.89250	1753.39990	982.98360	618.60570	100.10000	-.05530	.19780	12.12000	5.00000
3.766	.120	3.81790	-.07860	1753.79980	984.18680	618.20750	100.10000	-.05520	.19780	12.12000	5.00000
3.867	4.044	4.04530	3.94170	1753.09990	982.28270	618.79300	100.10000	-.05540	.19780	12.12000	5.00000
3.800	6.128	3.99570	6.06610	1747.59990	976.51540	618.32570	100.10000	-.05550	.19770	12.12000	5.00000
	GRADIENT	.02037	1.00997	-.03922	-.09189	.02463	.00000	-.00001	.00000	.00000	-.00000

IA156A, AEDC PWT 16T-470, O T S W/SILTS (R8NMA7) (10 MAY 80)

REFERENCE DATA

SREF = 2690.0000 SQ.FT. XMRP = 976.0000 IN. XT
LREF = 1290.3000 INCHES YMRP = .0000 IN. YT
BREF = 1290.3000 INCHES ZMRP = 400.0000 IN. ZT
SCALE = .0200

PARAMETRIC DATA

IB-ELV = 12.000 OB-ELV = 5.000
BDFLAP = .000 SPDBRK = .000
RUDDER = .000 SILTS = 1.000
MACH = 1.050 RN/L = 3.500

RUN NO. 1263/ 0 RN/L = 3.50 GRADIENT INTERVAL = -5.00/ 5.00

ALPHAO	BETAO	ALFAOU	BETAOU	PT	P	Q	TT	AFA	BFA	DEINLR	DEONLR
-8.095	-5.938	-7.92340	-6.04820	1706.50000	849.00490	655.96830	100.40000	-.06090	.19440	12.12000	5.00000
-8.223	-3.739	-8.07910	-3.98270	1703.70000	845.52690	655.82420	100.40000	-.06100	.19440	12.12000	5.00000
-8.113	.176	-8.05160	-.01840	1701.79980	846.54910	654.21490	100.40000	-.06090	.19440	12.12000	5.00000
-7.953	4.360	-7.99600	4.16100	1707.20000	848.19580	656.75540	100.40000	-.06090	.19440	12.12000	5.00000
-7.956	6.216	-8.03260	6.02730	1707.09990	847.29470	657.09690	100.40000	-.06090	.19440	12.12000	5.00000
	GRADIENT	.01030	.99325	.44199	.33027	.12062	.00000	.00001	-.00000	.00000	.00000

RUN NO. 1264/ 0 RN/L = 3.50 GRADIENT INTERVAL = -5.00/ 5.00

ALPHAO	BETAO	ALFAOU	BETAOU	PT	P	Q	TT	AFA	BFA	DEINLR	DEONLR
-6.075	-5.927	-5.88880	-6.01130	1702.09990	847.74880	653.85840	100.40000	-.06080	.19440	12.12000	5.00000
-6.087	-4.033	-5.92070	-4.15040	1702.50000	847.04300	654.41820	100.30000	-.06090	.19440	12.12000	5.00000
-6.194	.104	-6.13010	-.08900	1705.20000	846.21240	656.42770	100.40000	-.06090	.19440	12.12000	5.00000
-6.001	4.237	-6.06610	4.04400	1705.39990	847.01220	656.19210	100.40000	-.06100	.19440	12.12000	5.00000
-5.962	6.210	-6.06430	6.03390	1705.29980	847.71480	655.81740	100.40000	-.06090	.19440	12.12000	5.00000
	GRADIENT	-.01759	.99080	.35069	-.00376	.21454	.01209	-.00001	-.00000	.00000	.00000

IA156A, AEDC PWT 16T-470, O T S W/SILTS (R8NMA7) (10 MAY 80)

REFERENCE DATA

SREF = 2690.0000 SQ.FT. XMRP = 976.0000 IN. XT
LREF = 1290.3000 INCHES YMRP = .0000 IN. YT
BREF = 1290.3000 INCHES ZMRP = 400.0000 IN. ZT
SCALE = .0200

PARAMETRIC DATA

IB-ELV = 12.000 OB-ELV = 5.000
BDFLAP = .000 SPDBRK = .000
RUDDER = .000 SILTS = 1.000
MACH = 1.050 RN/L = 3.500

RUN NO. 1265/ 0 RN/L = 3.50 GRADIENT INTERVAL = -5.00/ 5.00

ALPHAO	BETAO	ALFAOU	BETAOU	PT	P	Q	TT	AFA	BFA	DEINLR	DEONLR
-4.169	-6.040	-3.97020	-6.08540	1702.20000	848.34910	653.64940	100.40000	-.06080	.19450	12.12000	5.00000
-4.298	-3.967	-4.11350	-4.05250	1707.59990	850.09590	656.14720	100.40000	-.06080	.19440	12.12000	5.00000
-4.203	.358	-4.15010	.16130	1707.09990	848.19680	656.69410	100.40000	-.06090	.19440	12.12000	5.00000
-3.755	4.280	-3.86360	4.10740	1701.09990	846.65670	653.74070	100.40000	-.06090	.19440	12.12000	5.00000
-3.842	6.113	-3.97740	5.96060	1704.59990	848.42380	655.07470	100.40000	-.06090	.19440	12.12000	5.00000
	GRADIENT	.02964	.98925	-.77675	-.41743	-.28469	-.00000	-.00001	-.00000	-.00000	-.00000

RUN NO. 1266/ 0 RN/L = 3.50 GRADIENT INTERVAL = -5.00/ 5.00

ALPHAO	BETAO	ALFAOU	BETAOU	PT	P	Q	TT	AFA	BFA	DEINLR	DEONLR
-.451	-6.988	-.25640	-6.92730	1703.59990	847.63260	654.82200	100.30000	-.06080	.19440	12.12000	5.00000
-.430	-4.840	-.23590	-4.77860	1707.39990	848.89530	656.56400	100.40000	-.06090	.19440	12.12000	5.00000
-.407	-.438	-.21240	-.37650	1708.00000	848.08720	657.28930	100.40000	-.06100	.19440	12.12000	5.00000
-.375	3.677	-.18040	3.73770	1703.29980	950.14160	653.51150	100.30000	-.06070	.19450	12.12000	5.00000
-.367	5.843	-.17310	5.90380	1704.00000	844.92240	656.27540	100.30000	-.06100	.19440	12.12000	5.00000
	GRADIENT	.00650	.99998	-.47426	.14251	-.35235	-.01161	.00002	.00001	-.00000	-.00000

RUN NO. 1267/ 0 RN/L = 3.50 GRADIENT INTERVAL = -5.00/ 5.00

ALPHAO	BETAO	ALFAOU	BETAOU	PT	P	Q	TT	AFA	BFA	DEINLR	DEONLR
4.116	-5.817	3.98880	-5.97540	1702.00000	848.85250	653.30130	100.20000	-.06080	.19450	12.12000	5.00000
3.972	-3.711	3.87780	-3.89150	1705.59990	848.71390	655.55200	100.20000	-.06080	.19440	12.12000	5.00000
3.787	.113	3.84460	-.08240	1699.70000	844.56690	653.82670	100.10000	-.06090	.19440	12.12000	5.00000
3.854	4.043	4.03320	3.94690	1703.39990	847.73490	654.65450	100.20000	-.06080	.19440	12.12000	5.00000
3.804	6.119	4.00020	6.06270	1703.89990	849.33350	654.24070	100.20000	-.06080	.19450	12.12000	5.00000
	GRADIENT	.02017	1.01100	-.27808	-.12196	-.11425	.00012	.00000	-.00000	-.00000	-.00000

IA156A, AEDC PWT 16T-470, O T S W/SILTS (R8NMA8) (10 MAY 80)

REFERENCE DATA

SREF = 2690.0000 SQ.FT. XMRP = 976.0000 IN. XT
LREF = 1290.3000 INCHES YMRP = .0000 IN. YT
BREF = 1290.3000 INCHES ZMRP = 400.0000 IN. ZT
SCALE = .0200

PARAMETRIC DATA

IB-ELV = 12.000 OB-ELV = 5.000
BDFLAP = .000 SPDBRK = .000
RUDDER = .000 SILTS = 1.000
MACH = 1.100 RN/L = 3.500

RUN NO. 1268/ 0 RN/L = 3.50 GRADIENT INTERVAL = -5.00/ 5.00

ALPHAO	BETAO	ALFAOU	BETAOU	PT	P	Q	TT	AFA	BFA	DEINLR	DEONLR
-8.103	-5.932	-7.92940	-6.04020	1691.59990	790.79520	671.63130	100.20000	-.06330	.19450	12.12000	5.00000
-8.214	-3.748	-8.06770	-3.89080	1684.50000	788.76170	668.30570	100.30000	-.06330	.19440	12.12000	5.00000
-8.118	.177	-8.05430	-.01700	1692.70000	792.98410	671.40770	100.30000	-.06320	.19440	12.12000	5.00000
-7.959	4.361	-8.00020	4.16080	1684.89990	789.05790	668.42140	100.20000	-.06320	.19440	12.12000	5.00000
-7.951	6.217	-8.02610	6.02650	1687.50000	790.73320	669.27200	100.30000	-.06320	.19440	12.12000	5.00000
	GRADIENT	.00837	.99295	.02836	.02585	.00629	-.01246	.00001	.00000	.00000	.00000

RUN NO. 1269/ 0 RN/L = 3.50 GRADIENT INTERVAL = -5.00/ 5.00

ALPHAO	BETAO	ALFAOU	BETAOU	PT	P	Q	TT	AFA	BFA	DEINLR	DEONLR
-6.168	-5.957	-5.98100	-6.04030	1692.39990	791.68730	671.74510	100.30000	-.06330	.19450	12.12000	5.00000
-6.117	-4.044	-5.94780	-4.15920	1691.50000	789.89650	671.92650	100.20000	-.06330	.19450	12.12000	5.00000
-6.213	.099	-6.14580	-.09400	1690.39990	789.80660	671.32390	100.30000	-.06330	.19450	12.12000	5.00000
-5.981	4.228	-6.04420	4.03350	1687.79980	790.23070	669.64500	100.40000	-.06320	.19440	12.12000	5.00000
-5.980	6.223	-6.08020	6.04440	1688.59990	789.62330	670.34960	100.20000	-.06330	.19450	12.12000	5.00000
	GRADIENT	-.01167	.99043	-.44722	.04037	-.27574	.02418	.00001	-.00001	.00000	.00000

RUN NO. 1270/ 0 RN/L = 3.50 GRADIENT INTERVAL = -5.00/ 5.00

ALPHAO	BETAO	ALFAOU	BETAOU	PT	P	Q	TT	AFA	BFA	DEINLR	DEONLR
-4.029	-6.054	-3.82820	-6.09390	1692.50000	790.58690	672.23580	100.30000	-.06330	.19450	12.12000	5.00000
-4.294	-3.964	-4.10780	-4.04770	1688.79980	788.42190	670.93770	100.40000	-.06330	.19450	12.12000	5.00000
-4.189	.363	-4.13330	.16660	1686.50000	786.34400	670.41700	100.30000	-.06340	.19450	12.12000	5.00000
-3.727	4.275	-3.83430	4.10010	1686.89990	787.24000	670.29830	100.40000	-.06340	.19450	12.12000	5.00000
-3.851	6.108	-3.98440	5.95280	1690.59990	790.30440	671.24340	100.40000	-.06330	.19450	12.12000	5.00000
	GRADIENT	.03251	.98875	-.23594	-.14942	-.07837	-.00041	-.00001	-.00000	-.00000	-.00000

RUN NO. 1271/ 0 RN/L = 3.50 GRADIENT INTERVAL = -5.00/ 5.00

ALPHAO	BETAO	ALFAOU	BETAOU	PT	P	Q	TT	AFA	BFA	DEINLR	DEONLR
-.458	-6.986	-.26330	-6.92250	1689.59990	789.51420	670.97340	100.20000	-.06330	.19450	12.12000	5.00000
-.434	-4.836	-.23950	-4.77290	1689.20000	788.81810	671.01440	100.40000	-.06330	.19450	12.12000	5.00000
-.400	-.468	-.20530	-.40470	1689.20000	787.71850	671.44530	100.20000	-.06340	.19450	12.12000	5.00000
-.367	3.667	-.17300	3.73040	1686.89990	791.93870	668.44510	100.20000	-.06310	.19440	12.12000	5.00000
-.366	5.838	-.17180	5.90120	1691.70000	795.59300	669.78960	100.40000	-.06300	.19440	12.12000	5.00000
	GRADIENT	.00782	.99999	-.26796	.36119	-.29840	-.02373	.00002	-.00001	-.00000	.00000

IA156A, AEDC PWT 16T-470, O T S W/SILTS (R8NMA8) (10 MAY 80)

REFERENCE DATA

SREF = 2690.0000 SQ.FT. XMRP = 976.0000 IN. XT
LREF = 1290.3000 INCHES YMRP = .0000 IN. YT
BREF = 1290.3000 INCHES ZMRP = 400.0000 IN. ZT
SCALE = .0200

PARAMETRIC DATA

IB-ELV = 12.000 OB-ELV = 5.000
BDFLAP = .000 SPDBRK = .000
RUDDER = .000 SILTS = 1.000
MACH = 1.100 RN/L = 3.500

RUN NO. 1272/ 0 RN/L = 3.50 GRADIENT INTERVAL = -5.00/ 5.00

ALPHAO	BETAO	ALFAOU	BETAOU	PT	P	Q	TT	AFA	BFA	DEINLR	DEONLR
4.134	-5.837	4.00740	-5.99770	1682.89990	788.27660	667.56670	100.30000	-.06320	.19440	12.12000	5.00000
3.984	-3.725	3.89080	-3.90680	1691.29980	792.79740	670.66700	100.30000	-.06320	.19440	12.12000	5.00000
3.776	.118	3.83500	-.07730	1693.39990	789.97880	672.99660	100.30000	-.06340	.19450	12.12000	5.00000
3.840	4.028	4.02120	3.93390	1689.39990	792.01510	669.87060	100.20000	-.06320	.19440	12.12000	5.00000
3.794	6.117	3.99170	6.06340	1692.70000	793.28420	671.28910	100.20000	-.06320	.19440	12.12000	5.00000
	GRADIENT	.01691	1.01135	-.24731	-.09910	-.10474	-.01294	.00000	-.00000	-.00000	-.00000

IA156A, AEDC PWT 16T-470, O T S W/SILTS (R8NMA9) (10 MAY 80)

REFERENCE DATA

SREF = 2690.0000 SQ.FT. XMRP = 976.0000 IN. XT
LREF = 1290.3000 INCHES YMRP = .0000 IN. YT
BREF = 1290.3000 INCHES ZMRP = 400.0000 IN. ZT
SCALE = .0200

PARAMETRIC DATA

IB-ELV = 12.000 OB-ELV = 5.000
BDFLAP = .000 SPDBRK = .000
RUDDER = .000 SILTS = 1.000
MACH = 1.150 RN/L = 3.500

RUN NO. 1273/ 0 RN/L = 3.50 GRADIENT INTERVAL = -5.00/ 5.00

ALPHAO	BETAO	ALFAOU	BETAOU	PT	P	Q	TT	AFA	BFA	DEINLR	DEONLR
-8.106	-5.939	-7.92990	-6.04740	1671.50000	735.45970	680.49120	100.30000	-.06550	.19610	12.12000	5.00000
-8.213	-3.740	-8.05360	-3.88270	1692.20000	744.96440	688.76370	100.40000	-.06550	.19610	12.12000	5.00000
-8.116	.191	-8.05010	-.00480	1677.50000	735.91020	683.67330	100.30000	-.06570	.19620	12.12000	5.00000
-7.934	4.331	-7.97400	4.12830	1674.89990	737.02760	681.85080	100.40000	-.06550	.19610	12.12000	5.00000
-7.974	6.231	-8.04790	6.03830	1681.29980	738.67110	684.85330	100.40000	-.06560	.19620	12.12000	5.00000
	GRADIENT	.01117	.99265	-2.13017	-.97233	-.85532	.00021	.00000	-.00000	.00000	-.00000

RUN NO. 1274/ 0 RN/L = 3.51 GRADIENT INTERVAL = -5.00/ 5.00

ALPHAO	BETAO	ALFAOU	BETAOU	PT	P	Q	TT	AFA	BFA	DEINLR	DEONLR
-6.162	-5.951	-5.97220	-6.03290	1679.39990	738.08810	683.99410	100.30000	-.06560	.19620	12.12000	5.00000
-6.104	-4.035	-5.93280	-4.15040	1685.79980	740.82840	686.62550	100.40000	-.06550	.19620	12.12000	5.00000
-6.198	.094	-6.12870	-.10130	1682.00000	738.16700	685.41210	100.40000	-.06560	.19620	12.12000	5.00000
-5.994	4.239	-6.05680	4.04180	1686.20000	740.02760	687.11770	100.40000	-.06560	.19620	12.12000	5.00000
-5.969	6.213	-6.06990	6.03250	1687.50000	741.11400	687.47360	100.40000	-.06560	.19620	12.12000	5.00000
	GRADIENT	-.01497	.99012	.04902	-.09642	.05972	.00000	-.00001	.00000	-.00000	-.00000

IA156A, AEDC PWT 16T-470, O T S W/SILTS (R8NMA9) (10 MAY 80)

REFERENCE DATA

SREF = 2690.0000 SQ.FT. XMRP = 976.0000 IN. XT
LREF = 1290.3000 INCHES YMRP = .0000 IN. YT
BREF = 1290.3000 INCHES ZMRP = 400.0000 IN. ZT
SCALE = .0200

PARAMETRIC DATA

IB-ELV = 12.000 OB-ELV = 5.000
BDFLAP = .000 SPDBRK = .000
RUDDER = .000 SILTS = 1.000
MACH = 1.150 RN/L = 3.500

RUN NO. 1275/ 0 RN/L = 3.51 GRADIENT INTERVAL = -5.00/ 5.00

ALPHAO	BETAO	ALFAOU	BETAOU	PT	P	Q	TT	AFA	BFA	DEINLR	DEONLR
-4.038	-6.052	-3.83490	-6.09060	1680.29980	737.68210	684.63130	100.30000	-.06560	.19620	12.12000	5.00000
-4.300	-3.967	-4.11100	-4.05040	1683.20000	739.65280	685.57760	100.40000	-.06550	.19620	12.12000	5.00000
-4.202	.367	-4.14520	.16840	1688.29980	739.21340	688.55640	100.30000	-.06570	.19630	12.12000	5.00000
-3.747	4.274	-3.85370	4.09640	1690.89990	741.68480	689.16940	100.40000	-.06570	.19620	12.12000	5.00000
-3.861	6.129	-3.99460	5.97130	1690.20000	741.98950	688.67820	100.40000	-.06560	.19620	12.12000	5.00000
	GRADIENT	.03051	.98836	.93883	.24026	.44045	-.00042	-.00002	.00000	-.00000	.00000

RUN NO. 1276/ 0 RN/L = 3.50 GRADIENT INTERVAL = -5.00/ 5.00

ALPHAO	BETAO	ALFAOU	BETAOU	PT	P	Q	TT	AFA	BFA	DEINLR	DEONLR
-.443	-7.017	-.24670	-6.95110	1680.09990	738.08250	684.38530	100.30000	-.06550	.19620	12.12000	5.00000
-.417	-4.818	-.22100	-4.75230	1684.70000	739.44140	686.48220	100.20000	-.06560	.19620	12.12000	5.00000
-.384	-.496	-.18800	-.42990	1687.89990	739.71480	688.16650	100.20000	-.06570	.19630	12.12000	5.00000
-.349	3.667	-.15290	3.73210	1680.00000	738.78130	684.09330	100.20000	-.06550	.19610	12.12000	5.00000
-.350	5.859	-.15430	5.92460	1676.50000	736.91500	682.77880	100.10000	-.06550	.19610	12.12000	5.00000
	GRADIENT	.00802	.99999	-.54567	-.07690	-.27726	.00000	.00001	-.00001	.00000	.00000

RUN NO. 1277/ 0 RN/L = 3.50 GRADIENT INTERVAL = -5.00/ 5.00

ALPHAO	BETAO	ALFAOU	BETAOU	PT	P	Q	TT	AFA	BFA	DEINLR	DEONLR
4.119	-5.814	3.99310	-5.97720	1684.70000	741.73460	685.70650	100.30000	-.06550	.19610	12.12000	5.00000
3.983	-3.718	3.89090	-3.90350	1690.00000	743.48660	688.06100	100.30000	-.06550	.19610	12.12000	5.00000
3.772	.121	3.83400	-.07620	1674.29980	737.83010	681.24410	100.10000	-.06540	.19600	12.12000	5.00000
3.856	4.026	4.04000	3.93230	1675.89990	740.90840	681.08370	100.20000	-.06530	.19590	12.12000	5.00000
3.798	6.127	3.99830	6.07440	1686.09990	742.62060	686.18460	100.10000	-.06550	.19610	12.12000	5.00000
	GRADIENT	.01935	1.01184	-1.81431	-.32971	-.89849	-.01280	.00003	-.00003	.00000	-.00000

IA156A, AEDC PWT 16T-470, O T S W/SILTS

(R8NMB0) (10 MAY 80)

REFERENCE DATA

SREF = 2690.0000 SQ.FT. XMRP = 976.0000 IN. XT
LREF = 1290.3000 INCHES YMRP = .0000 IN. YT
BREF = 1290.3000 INCHES ZMRP = 400.0000 IN. ZT
SCALE = .0200

PARAMETRIC DATA

IB-ELV = 12.000 OB-ELV = 5.000
BDFLAP = .000 SPDBRK = .000
RUDDER = .000 SILTS = 1.000
MACH = 1.250 RN/L = 3.500

RUN NO. 1278/ 0 RN/L = 3.50 GRADIENT INTERVAL = -5.00/ 5.00

ALPHAO	BETAO	ALFAOU	BETAOU	PT	P	Q	TT	AFA	BFA	DEINLR	DEONLR
-8.117	-5.934	-7.93040	-6.04670	1676.59990	645.92290	708.23780	100.70000	-.07030	.20660	12.12000	5.00000
-8.222	-3.728	-8.06310	-3.87790	1678.39990	647.00340	708.91410	100.70000	-.07030	.20650	12.12000	5.00000
-8.114	.192	-8.04360	-.01430	1677.70000	646.31320	708.70970	100.70000	-.07030	.20660	12.12000	5.00000
-7.937	4.364	-7.97790	4.15040	1673.79980	645.84010	706.83840	100.60000	-.07020	.20640	12.12000	5.00000
-7.972	6.250	-8.04890	6.04560	1680.89990	647.48460	710.07470	100.60000	-.07030	.20660	12.12000	5.00000
	GRADIENT	.01058	.99212	-.57235	-.14342	-.25855	-.01248	.00001	-.00001	-.00000	-.00000

RUN NO. 1279/ 0 RN/L = 3.50 GRADIENT INTERVAL = -5.00/ 5.00

ALPHAO	BETAO	ALFAOU	BETAOU	PT	P	Q	TT	AFA	BFA	DEINLR	DEONLR
-6.202	-5.973	-6.00110	-6.05850	1680.50000	647.78440	709.80740	100.40000	-.07030	.20650	12.12000	5.00000
-6.133	-4.024	-5.95150	-4.14470	1678.59990	646.10940	709.20900	100.50000	-.07040	.20670	12.12000	5.00000
-6.196	.131	-6.12280	-.07440	1681.50000	646.88600	710.50760	100.40000	-.07040	.20670	12.12000	5.00000
-5.998	4.246	-6.06270	4.03810	1680.09990	647.48930	709.66890	100.50000	-.07030	.20650	12.12000	5.00000
-5.797	6.327	-5.90570	6.13860	1681.39990	648.37430	710.13450	100.50000	-.07030	.20650	12.12000	5.00000
	GRADIENT	-.01349	.98942	.18221	.16689	.05602	-.00004	.00001	-.00002	.00000	.00000

RUN NO. 1280/ 0 RN/L = 3.50 GRADIENT INTERVAL = -5.00/ 5.00

ALPHAO	BETAO	ALFAOU	BETAOU	PT	P	Q	TT	AFA	BFA	DEINLR	DEONLR
-4.179	-6.048	-3.96540	-6.09010	1682.20000	648.27050	710.56230	100.40000	-.07030	.20650	12.12000	5.00000
-4.309	-3.970	-4.10850	-4.05600	1677.29980	647.30740	708.29080	100.40000	-.07020	.20640	12.12000	5.00000
-4.187	.370	-4.12480	.16090	1674.20000	645.63940	707.08470	100.40000	-.07030	.20650	12.12000	5.00000
-3.744	4.281	-3.85490	4.09330	1684.59990	650.33940	711.32670	100.40000	-.07020	.20630	12.12000	5.00000
-3.855	6.144	-3.99550	5.97770	1677.39990	648.29880	708.12430	100.50000	-.07010	.20620	12.12000	5.00000
	GRADIENT	.03011	.98742	.85566	.35379	.35619	.00000	-.00000	-.00001	-.00000	.00000

RUN NO. 1281/ 0 RN/L = 3.51 GRADIENT INTERVAL = -5.00/ 5.00

ALPHAO	BETAO	ALFAOU	BETAOU	PT	P	Q	TT	AFA	BFA	DEINLR	DEONLR
-.472	-7.033	-.26500	-6.96230	1690.39990	652.09060	713.88230	100.70000	-.07030	.20640	12.12000	5.00000
-.444	-4.826	-.23720	-4.75540	1680.00000	648.28340	709.44560	100.50000	-.07030	.20640	12.12000	5.00000
-.401	-.499	-.19460	-.42850	1678.59990	646.90310	709.03710	100.40000	-.07030	.20650	12.12000	5.00000
-.365	3.669	-.15840	3.73910	1679.70000	647.88840	709.37960	100.50000	-.07030	.20640	12.12000	5.00000
-.377	5.868	-.17000	5.93860	1686.20000	646.85840	712.88650	100.60000	-.07050	.20710	12.12000	5.00000
	GRADIENT	.00928	1.00001	-.03716	-.04824	-.00832	-.00015	.00000	.00000	.00000	.00000

IA156A, AEDC PWT 16T-470, O T S W/SILTS (R8NMB0) (10 MAY 80)

REFERENCE DATA

SREF = 2690.0000 SQ.FT. XMRP = 976.0000 IN. XT
LREF = 1290.3000 INCHES YMRP = .0000 IN. YT
BREF = 1290.3000 INCHES ZMRP = 400.0000 IN. ZT
SCALE = .0200

PARAMETRIC DATA

IB-ELV = 12.000 OB-ELV = 5.000
BDFLAP = .000 SPDBRK = .000
RUDDER = .000 SILTS = 1.000
MACH = 1.250 RN/L = 3.500

RUN NO. 1282/ 0 RN/L = 3.51 GRADIENT INTERVAL = -5.00/ 5.00

ALPHAO	BETAO	ALFAOU	BETAOU	PT	P	Q	TT	AFA	BFA	DEINLR	DEONLR
4.122	-5.803	3.98910	-5.97640	1680.70000	647.98170	709.86570	100.60000	-.07030	.20650	12.12000	5.00000
3.999	-3.707	3.90250	-3.90280	1685.70000	649.53930	712.05790	100.50000	-.07030	.20660	12.12000	5.00000
3.758	.132	3.82410	-.07530	1688.29980	653.19430	712.57540	100.60000	-.07010	.20610	12.12000	5.00000
3.825	4.039	4.02050	3.94090	1680.70000	645.60130	710.37940	100.50000	-.07040	.20690	12.12000	5.00000
3.778	6.113	3.98940	6.05840	1680.50000	646.99100	709.97920	100.50000	-.07030	.20670	12.12000	5.00000
	GRADIENT	.01534	1.01267	-.64931	-.51260	-.21771	-.00008	-.00001	.00004	.00000	-.00000

IA156A, AEDC PWT 16T-470, O T S W/SILTS (R8NMB1) (10 MAY 80)

REFERENCE DATA

SREF = 2690.0000 SQ.FT. XMRP = 976.0000 IN. XT
LREF = 1290.3000 INCHES YMRP = .0000 IN. YT
BREF = 1290.3000 INCHES ZMRP = 400.0000 IN. ZT
SCALE = .0200

PARAMETRIC DATA

IB-ELV = 12.000 OB-ELV = 5.000
BDFLAP = .000 SPDBRK = .000
RUDDER = .000 SILTS = 1.000
MACH = 1.400 RN/L = 3.500

RUN NO. 1283/ 0 RN/L = 3.49 GRADIENT INTERVAL = -5.00/ 5.00

ALPHAO	BETAO	ALFAOU	BETAOU	PT	P	Q	TT	AFA	BFA	DEINLR	DEONLR
-8.172	-5.916	-7.94800	-6.04950	1705.39930	534.98710	735.28100	100.90000	-.08550	.24590	12.12000	5.00000
-8.232	-3.703	-8.04160	-3.88000	1701.09930	533.82010	733.42380	101.00000	-.08540	.24580	12.12000	5.00000
-8.132	.227	-8.04650	-.01740	1704.59990	536.57030	734.89940	100.90000	-.08500	.24500	12.12000	5.00000
-7.934	4.409	-7.98180	4.15430	1702.79980	536.57760	734.11060	100.80000	-.08490	.24470	12.12000	5.00000
-7.993	6.316	-8.08400	6.07350	1699.20000	535.60520	732.55490	100.80000	-.08490	.24470	12.12000	5.00000
	GRADIENT	.00746	.99050	.20274	.33633	.08176	-.02465	.00006	-.00013	-.00000	-.00000

RUN NO. 1284/ 0 RN/L = 3.50 GRADIENT INTERVAL = -5.00/ 5.00

ALPHAO	BETAO	ALFAOU	BETAOU	PT	P	Q	TT	AFA	BFA	DEINLR	DEONLR
-6.235	-5.949	-5.99460	-6.04830	1707.20000	536.36210	736.04170	100.90000	-.08530	.24550	12.12000	5.00000
-6.174	-4.010	-5.95600	-4.15190	1700.29980	533.82350	733.07400	100.80000	-.08540	.24570	12.12000	5.00000
-6.227	.157	-6.13680	-.08740	1697.50000	532.05760	731.88310	100.70000	-.08560	.24620	12.12000	5.00000
-5.972	4.288	-6.04800	4.03870	1707.39990	535.47270	736.14600	100.80000	-.08550	.24600	12.12000	5.00000
-5.941	6.258	-6.06470	6.03010	1702.29980	534.90110	733.92750	100.80000	-.08520	.24550	12.12000	5.00000
	GRADIENT	-.01114	.98705	.85338	.19782	.36924	-.00004	-.00001	.00004	.00000	-.00000

IA156A, AEDC PWT 16T-470, O T S W/SILTS (R8NMB1) (10 MAY 80)

REFERENCE DATA

SREF = 2690.0000 SQ.FT. XMRP = 976.0000 IN. XT
LREF = 1290.3000 INCHES YMRP = .0000 IN. YT
BREF = 1290.3000 INCHES ZMRP = 400.0000 IN. ZT
SCALE = .0200

PARAMETRIC DATA

IB-ELV = 12.000 OB-ELV = 5.000
BDFLAP = .000 SPDBRK = .000
RUDDER = .000 SILTS = 1.000
MACH = 1.400 RN/L = 3.500

RUN NO. 1285/ 0 RN/L = 3.50 GRADIENT INTERVAL = -5.00/ 5.00

ALPHAO	BETAO	ALFAOU	BETAOU	PT	P	Q	TT	AFA	BFA	DEINLR	DEONLR
-4.308	-5.994	-4.05270	-6.04520	1705.50000	534.19680	735.33860	100.80000	-.08570	.24640	12.12000	5.00000
-4.303	-3.954	-4.06160	-4.05390	1699.20000	532.44560	732.61870	100.60000	-.08560	.24620	12.12000	5.00000
-4.210	.427	-4.13450	.17770	1710.89990	535.75440	737.66920	100.70000	-.08570	.24640	12.12000	5.00000
-3.718	4.312	-3.85020	4.08730	1705.50000	534.09810	735.34030	100.60000	-.08570	.24640	12.12000	5.00000
-3.823	6.165	-3.99020	5.96490	1701.39990	533.62130	733.55860	100.70000	-.08550	.24600	12.12000	5.00000
	GRADIENT	.02468	.98442	.80260	.21169	.34671	.00048	-.00001	.00002	.00000	-.00000

RUN NO. 1286/ 0 RN/L = 3.50 GRADIENT INTERVAL = -5.00/ 5.00

ALPHAO	BETAO	ALFAOU	BETAOU	PT	P	Q	TT	AFA	BFA	DEINLR	DEONLR
-.534	-7.071	-.28830	-6.98530	1703.89990	534.30220	734.63820	100.80000	-.08550	.24600	12.12000	5.00000
-.500	-4.898	-.25430	-4.81210	1704.09990	534.20260	734.72730	100.80000	-.08560	.24610	12.12000	5.00000
-.449	-.441	-.20280	-.35510	1705.59990	533.99900	735.38550	100.80000	-.08580	.24650	12.12000	5.00000
-.429	3.664	-.18270	3.75050	1701.70000	532.33670	733.71090	100.70000	-.08590	.24670	12.12000	5.00000
-.442	5.877	-.19870	5.96150	1700.89990	537.96780	733.24270	100.90000	-.08440	.24380	12.12000	5.00000
	GRADIENT	.00841	1.00006	-.27151	-.21547	-.11492	-.01151	-.00004	.00007	.00000	.00000

RUN NO. 1287/ 0 RN/L = 3.49 GRADIENT INTERVAL = -5.00/ 5.00

ALPHAO	BETAO	ALFAOU	BETAOU	PT	P	Q	TT	AFA	BFA	DEINLR	DEONLR
4.136	-5.764	3.97940	-5.97070	1702.59990	535.39360	734.04880	100.70000	-.08510	.24530	12.12000	5.00000
4.015	-3.670	3.90110	-3.90380	1701.89990	535.29790	733.74440	100.70000	-.08510	.24520	12.12000	5.00000
3.731	.162	3.81100	-.08570	1701.00000	532.93190	733.39600	100.80000	-.08560	.24630	12.12000	5.00000
3.793	4.054	4.02540	3.93870	1701.70000	535.59470	733.65060	100.70000	-.08500	.24500	12.12000	5.00000
3.718	6.096	3.96850	6.03220	1702.29980	538.35690	733.84770	100.80000	-.08440	.24380	12.12000	5.00000
	GRADIENT	.01619	1.01532	-.02535	.04008	-.01195	-.00007	.00001	-.00003	.00000	-.00000

IA156A, AEDC PWT 16T-470, O T S W/SILTS (R8NMB2) (10 MAY 80)

REFERENCE DATA

SREF = 2690.0000 SQ.FT. XMRP = 976.0000 IN. XT
LREF = 1290.3000 INCHES YMRP = .0000 IN. YT
BREF = 1290.3000 INCHES ZMRP = 400.0000 IN. ZT
SCALE = .0200

PARAMETRIC DATA

IB-ELV = 12.000 OB-ELV = 5.000
BDFLAP = .000 SPDBRK = .000
RUDDER = .000 SILTS = 1.000
MACH = 1.550 RN/L = 3.200

RUN NO. 1288/ 0 RN/L = 3.00 GRADIENT INTERVAL = -5.00/ 5.00

ALPHAO	BETAO	ALFAOU	BETAOU	PT	P	Q	TT	AFA	BFA	DEINLR	DEONLR
-8.285	-5.892	-7.96260	-6.04650	1506.00000	380.60770	641.27830	100.10000	-.14990	.32500	12.12000	5.00000
-8.337	-3.675	-8.05340	-3.89270	1506.39990	380.70510	641.44780	100.10000	-.14990	.32500	12.12000	5.00000
-8.205	.319	-8.05470	-.00610	1506.29980	380.50710	641.37010	100.20000	-.15020	.32520	12.12000	5.00000
-7.984	4.502	-8.01230	4.14530	1506.39990	381.00270	641.50830	100.20000	-.14960	.32460	12.12000	5.00000
-7.934	6.371	-8.02410	6.02580	1506.50000	381.49830	641.64600	100.20000	-.14890	.32400	12.12000	5.00000
	GRADIENT	.00507	.98317	.00019	.03705	.00760	.01213	.00004	-.00005	.00000	.00000

RUN NO. 1289/ 0 RN/L = 3.00 GRADIENT INTERVAL = -5.00/ 5.00

ALPHAO	BETAO	ALFAOU	BETAOU	PT	P	Q	TT	AFA	BFA	DEINLR	DEONLR
-6.328	-5.943	-5.98740	-6.04970	1506.89990	381.49660	641.79540	100.20000	-.14900	.32420	12.12000	5.00000
-6.270	-3.986	-5.95460	-4.15330	1506.50000	381.20070	641.58590	100.10000	-.14930	.32440	12.12000	5.00000
-6.272	.238	-6.11670	-.08410	1506.89990	380.70260	641.63450	100.20000	-.15010	.32510	12.12000	5.00000
-5.982	4.385	-6.05130	4.03410	1506.70000	380.90210	641.60030	100.20000	-.14980	.32480	12.12000	5.00000
-5.925	6.371	-6.06240	6.04130	1506.09990	381.30180	641.45630	100.20000	-.14900	.32410	12.12000	5.00000
	GRADIENT	-.01164	.97800	.02411	-.03593	.00175	.01198	-.00006	.00005	-.00000	-.00000

RUN NO. 1290/ 0 RN/L = 3.00 GRADIENT INTERVAL = -5.00/ 5.00

ALPHAO	BETAO	ALFAOU	BETAOU	PT	P	Q	TT	AFA	BFA	DEINLR	DEONLR
-4.204	-6.069	-3.84730	-6.09770	1506.59990	380.90260	641.56300	100.20000	-.14970	.32480	12.12000	5.00000
-4.444	-3.944	-4.10330	-4.05280	1507.09990	380.90010	641.74980	100.20000	-.15000	.32490	12.12000	5.00000
-4.280	.501	-4.14170	.16940	1508.20000	380.29960	642.03810	100.20000	-.15110	.32600	12.12000	5.00000
-3.717	4.430	-3.86590	4.10410	1508.09990	380.89550	642.12300	100.20000	-.15030	.32530	12.12000	5.00000
-3.798	6.262	-3.99750	5.96700	1507.59990	381.79100	642.11720	100.30000	-.14890	.32400	12.12000	5.00000
	GRADIENT	.02754	.97348	.12220	-.00348	.04501	.00000	-.00004	.00005	.00000	-.00000

RUN NO. 1291/ 0 RN/L = 3.00 GRADIENT INTERVAL = -5.00/ 5.00

ALPHAO	BETAO	ALFAOU	BETAOU	PT	P	Q	TT	AFA	BFA	DEINLR	DEONLR
-.583	-7.072	-.25950	-6.92280	1507.89990	381.88870	642.24950	100.20000	-.14880	.32400	12.12000	5.00000
-.548	-4.907	-.22370	-4.75770	1507.89990	381.39260	642.14920	100.30000	-.14950	.32460	12.12000	5.00000
-.520	-.554	-.19430	-.40290	1508.00000	380.49900	642.00440	100.20000	-.15080	.32570	12.12000	5.00000
-.504	3.581	-.17810	3.73200	1509.39990	380.49240	642.52640	100.40000	-.15130	.32620	12.12000	5.00000
-.509	5.749	-.18600	5.89690	1509.29980	382.67580	642.93260	100.30000	-.14830	.32350	12.12000	5.00000
	GRADIENT	.00538	1.00021	.17537	-.10693	.04376	.01148	-.00021	.00019	.00000	.00000

IA156A, AEDC PWT 16T-470, O T S W/SILTS (R8NMB2) (10 MAY 80)

REFERENCE DATA

SREF = 2690.0000 SQ.FT. XMRP = 976.0000 IN. XT
LREF = 1290.3000 INCHES YMRP = .0000 IN. YT
BREF = 1290.3000 INCHES ZMRP = 400.0000 IN. ZT
SCALE = .0200

PARAMETRIC DATA

IB-ELV = 12.000 OB-ELV = 5.000
BDFLAP = .000 SPDBRK = .000
RUDDER = .000 SILTS = 1.000
MACH = 1.550 RN/L = 3.200

RUN NO. 1292/ 0 RN/L = 3.00 GRADIENT INTERVAL = -5.00/ 5.00

ALPHAO	BETAO	ALFAOU	BETAOU	PT	P	Q	TT	AFA	BFA	DEINLR	DEONLR
4.186	-5.682	3.99960	-5.98540	1508.09990	382.08620	642.36400	100.20000	-.14870	.32380	12.12000	5.00000
3.986	-3.541	3.86220	-3.87510	1507.50000	381.89060	642.09990	100.40000	-.14870	.32390	12.12000	5.00000
3.703	.248	3.84310	-.07760	1505.29980	382.59550	641.41430	100.30000	-.14700	.32230	12.12000	5.00000
3.683	4.063	4.01320	3.93530	1505.39990	382.69410	641.47120	100.40000	-.14690	.32220	12.12000	5.00000
3.648	6.133	4.00270	6.07900	1507.50000	380.50150	641.81790	100.30000	-.15060	.32560	12.12000	5.00000
	GRADIENT	.01989	1.02721	-.27585	.10558	-.08257	.00003	.00024	-.00022	-.00000	-.00000

IA156A, AEDC PWT 16T-470, O T S W/SILTS (R8NMB3) (10 MAY 80)

REFERENCE DATA

SREF = 2690.0000 SQ.FT. XMRP = 976.0000 IN. XT
LREF = 1290.3000 INCHES YMRP = .0000 IN. YT
BREF = 1290.3000 INCHES ZMRP = 400.0000 IN. ZT
SCALE = .0200

PARAMETRIC DATA

IB-ELV = 12.000 OB-ELV = 9.000
BDFLAP = .000 SPDBRK = .000
RUDDER = .000 SILTS = 1.000
MACH = .600 RN/L = 3.500

RUN NO. 1295/ 0 RN/L = 3.50 GRADIENT INTERVAL = -5.00/ 5.00

ALPHAO	BETAO	ALFAOU	BETAOU	PT	P	Q	TT	AFA	BFA	DEINLR	DEONLR
-8.119	-7.790	-8.03150	-7.98240	2229.00000	1749.44870	438.81910	97.30000	.07810	.19620	12.12000	8.92000
-8.082	-5.753	-8.02200	-5.95480	2228.79980	1747.92799	439.89870	96.30000	.07690	.19630	12.12000	8.92000
-8.072	-3.742	-8.04990	-3.95120	2230.50000	1748.60330	440.77370	95.90000	.07630	.19640	12.12000	8.92000
-7.981	.359	-8.06230	.16390	2234.79980	1753.59520	440.29390	98.20000	.07770	.19620	12.12000	8.92000
-7.836	4.240	-7.99750	4.10430	2224.50000	1745.88451	437.96000	99.20000	.07800	.19620	12.12000	8.92000
-7.859	6.141	-8.04130	6.03460	2228.20001	1748.65230	438.79980	99.60000	.07790	.19620	12.12000	8.92000
-7.879	8.123	-8.07510	8.04420	2225.39990	1746.67870	438.06490	99.80000	.07810	.19620	12.12000	8.92000
	GRADIENT	.00647	1.00913	-.73481	-.32601	-.35029	.41480	.00021	-.00003	-.00000	-.00000

RUN NO. 1296/ 0 RN/L = 3.49 GRADIENT INTERVAL = -5.00/ 5.00

ALPHAO	BETAO	ALFAOU	BETAOU	PT	P	Q	TT	AFA	BFA	DEINLR	DEONLR
-6.119	-7.865	-6.00340	-8.04160	2233.09991	1752.20799	440.00270	100.10000	.07770	.19620	12.12000	8.92000
-6.070	-5.846	-5.98160	-6.03810	2232.29980	1752.63181	438.98190	100.10000	.07860	.19610	12.12000	8.92000
-5.997	-3.956	-5.94410	-4.16090	2232.00000	1752.12990	439.14160	100.00000	.07830	.19610	12.12000	8.92000
-6.035	.089	-6.10830	-.10850	2230.09991	1749.42529	439.76340	99.90000	.07730	.19630	12.12000	8.92000
-5.902	4.151	-6.07820	4.03350	2230.29980	1750.43750	439.10080	100.10000	.07800	.19620	12.12000	8.92000
-5.812	6.114	-6.00810	6.03530	2234.00000	1753.51050	439.69040	100.30000	.07820	.19620	12.12000	8.92000
-5.845	8.081	-6.04980	8.03060	2231.29980	1751.12820	439.37520	100.20000	.07790	.19620	12.12000	8.92000
	GRADIENT	-.01653	1.01079	-.20956	-.20846	-.00513	.01236	-.00004	.00001	.00000	-.00000

IA156A, AEDC PWT 16T-470, O T S W/SILTS (R8NMB3) (10 MAY 80)

REFERENCE DATA

SREF = 2690.0000 SQ.FT. XMRP = 976.0000 IN. XT
LREF = 1290.3000 INCHES YMRP = .0000 IN. YT
BREF = 1290.3000 INCHES ZMRP = 400.0000 IN. ZT
SCALE = .0200

PARAMETRIC DATA

IB-ELV = 12.000 OB-ELV = 9.000
BDFLAP = .000 SPDBRK = .000
RUDDER = .000 SILTS = 1.000
MACH = .600 RN/L = 3.500

RUN NO. 1297/ 0 RN/L = 3.49 GRADIENT INTERVAL = -5.00/ 5.00

ALPHAO	BETAO	ALFAOU	BETAOU	PT	P	Q	TT	AFA	BFA	DEINLR	DEONLR
-4.186	-7.885	-4.04200	-8.03990	2233.79980	1753.31149	439.68580	100.20000	.07810	.19620	12.12000	8.92000
-4.176	-5.895	-4.05150	-6.06560	2233.89990	1753.20779	439.85500	100.20000	.07800	.19620	12.12000	8.92000
-4.190	-3.851	-4.10290	-4.04320	2233.59991	1752.90919	439.84770	100.20000	.07790	.19620	12.12000	8.92000
-3.978	.173	-4.05390	-.02350	2233.29980	1752.40720	440.00730	100.10000	.07770	.19620	12.12000	8.92000
-3.670	4.213	-3.86830	4.13940	2234.50000	1753.29660	440.28660	100.10000	.07770	.19620	12.12000	8.92000
-3.770	6.000	-3.97640	5.95910	2235.00000	1752.77760	441.13280	100.10000	.07690	.19630	12.12000	8.92000
-3.798	7.974	-4.00870	7.96020	2233.20001	1752.71440	439.67110	100.10000	.07800	.19620	12.12000	8.92000
	GRADIENT	.02910	1.01474	.11173	.04815	.05444	-.01239	-.00002	-.00000	-.00000	-.00000

RUN NO. 1298/ 0 RN/L = 3.49 GRADIENT INTERVAL = -5.00/ 5.00

ALPHAO	BETAO	ALFAOU	BETAOU	PT	P	Q	TT	AFA	BFA	DEINLR	DEONLR
-.340	-8.690	-.14420	-8.76840	2232.79980	1752.92630	439.16090	99.80000	.07850	.19610	12.12000	8.92000
-.331	-6.609	-.13480	-6.68530	2234.09991	1751.78000	441.19460	99.90000	.07660	.19630	12.12000	8.92000
-.315	-4.354	-.11850	-4.43080	2233.20001	1751.90089	440.33860	99.90000	.07730	.19630	12.12000	8.92000
-.289	-.306	-.09270	-.38380	2233.39990	1752.40500	440.09330	99.90000	.07760	.19620	12.12000	8.92000
-.260	3.764	-.06350	3.68640	2233.70001	1752.39870	440.35080	100.10000	.07740	.19620	12.12000	8.92000
-.254	5.857	-.05780	5.77990	2233.29980	1751.39059	440.84160	100.10000	.07680	.19630	12.12000	8.92000
-.245	7.949	-.04870	7.87360	2234.00000	1750.66380	442.02560	101.40000	.07570	.19640	12.12000	8.92000
	GRADIENT	.00678	1.00000	.06161	.06127	.00156	.02466	.00001	-.00001	-.00000	.00000

RUN NO. 1299/ 0 RN/L = 3.49 GRADIENT INTERVAL = -5.00/ 5.00

ALPHAO	BETAO	ALFAOU	BETAOU	PT	P	Q	TT	AFA	BFA	DEINLR	DEONLR
4.199	-7.951	3.98900	-7.97010	2233.09991	1749.56470	442.17040	100.10000	.07540	.19650	12.12000	8.92000
4.108	-5.827	3.90260	-5.87230	2233.59991	1749.85890	442.34910	100.00000	.07530	.19650	12.12000	8.92000
4.094	-3.848	3.89980	-3.93070	2233.00000	1751.49850	440.50070	100.10000	.07710	.19630	12.12000	8.92000
3.907	.076	3.82410	-.11810	2234.00000	1752.08720	440.85860	100.20000	.07700	.19630	12.12000	8.92000
3.939	4.101	4.02250	3.90770	2233.50000	1751.58960	440.84640	100.40000	.07690	.19630	12.12000	8.92000
3.887	6.231	4.01020	6.05960	2231.50000	1749.29370	441.04810	100.30000	.07630	.19640	12.12000	8.92000
3.874	8.224	4.01760	8.07010	2233.39990	1749.96510	442.09420	100.40000	.07560	.19650	12.12000	8.92000
	GRADIENT	.01558	.98605	.06209	.01088	.04328	.03779	-.00003	.00000	.00000	-.00000

IA156A, AEDC PWT 16T-470, O T S W/SILTS (R8NMB3) (10 MAY 80)

REFERENCE DATA

SREF = 2690.0000 SQ.FT. XMRP = 976.0000 IN. XT
LREF = 1290.3000 INCHES YMRP = .0000 IN. YT
BREF = 1290.3000 INCHES ZMRP = 400.0000 IN. ZT
SCALE = .0200

PARAMETRIC DATA

IB-ELV = 12.000 OB-ELV = 9.000
BOFLAP = .000 SPDBRK = .000
RUDDER = .000 SILTS = 1.000
MACH = .600 RN/L = 3.500

RUN NO. 1300/ 0 RN/L = 3.50 GRADIENT INTERVAL = -5.00/ 5.00

ALPHAO	BETAO	ALFAOU	BETAOU	PT	P	Q	TT	AFA	BFA	DEINLR	DEONLR
6.239	-8.007	6.03610	-8.06290	2243.89990	1757.56960	444.68290	100.50000	.07500	.19650	12.12000	8.92000
6.221	-5.934	6.02920	-6.01960	2234.70001	1748.51390	444.37430	100.40000	.07350	.19670	12.12000	8.92000
6.207	-3.861	6.03360	-3.98140	2232.89990	1750.78880	440.99880	100.40000	.07660	.19630	12.12000	8.92000
5.933	.197	5.85620	.00100	2231.59991	1750.20650	440.38350	100.40000	.07700	.19630	12.12000	8.92000
5.852	4.115	5.90010	3.91040	2232.70001	1748.45480	442.74370	100.40000	.07470	.19650	12.12000	8.92000
5.824	6.058	5.91110	5.86700	2233.00000	1748.95680	442.58450	100.30000	.07500	.19650	12.12000	8.92000
5.838	8.110	5.95240	7.93340	2232.59991	1747.94870	443.07420	100.30000	.07440	.19660	12.12000	8.92000
	GRADIENT	-.01690	.98936	-.02683	-.29173	.21655	-.00000	-.00024	.00002	-.00000	-.00000

RUN NO. 1301/ 0 RN/L = 3.50 GRADIENT INTERVAL = -5.00/ 5.00

ALPHAO	BETAO	ALFAOU	BETAOU	PT	P	Q	TT	AFA	BFA	DEINLR	DEONLR
8.134	-7.858	7.94080	-7.94100	2235.29980	1751.44971	442.47390	100.30000	.07560	.19650	12.12000	8.92000
8.039	-5.780	7.85910	-5.88940	2235.00000	1751.04930	442.54980	100.30000	.07540	.19650	12.12000	8.92000
8.044	-3.799	7.88790	-3.94030	2244.09991	1757.36211	445.02080	100.30000	.07470	.19650	12.12000	8.92000
7.947	.182	7.86880	-.01390	2232.20001	1751.00729	440.23120	100.20000	.07720	.19630	12.12000	8.92000
7.983	4.222	8.00570	4.01300	2245.70001	1760.07300	444.14360	100.40000	.07600	.19640	12.12000	8.92000
7.948	6.247	8.00800	6.04490	2236.00000	1753.46800	441.40720	100.20000	.07680	.19630	12.12000	8.92000
7.938	8.284	8.02650	8.09310	2231.39990	1749.39751	440.87890	100.30000	.07640	.19640	12.12000	8.92000
	GRADIENT	.01473	.99146	.20716	.34260	-.10671	.01256	.00016	-.00001	-.00000	-.00000

IA156A, AEDC PWT 16T-470, O T S W/SILTS (R8NMB4) (10 MAY 80)

REFERENCE DATA

SREF = 2690.0000 SQ.FT. XMRP = 976.0000 IN. XT
LREF = 1290.3000 INCHES YMRP = .0000 IN. YT
BREF = 1290.3000 INCHES ZMRP = 400.0000 IN. ZT
SCALE = .0200

PARAMETRIC DATA

IB-ELV = 12.000 OB-ELV = 9.000
BDFLAP = .000 SPDBRK = .000
RUDDER = .000 SILTS = 1.000
MACH = .800 RN/L = 3.500

RUN NO. 1302/ 0 RN/L = 3.50 GRADIENT INTERVAL = -5.00/ 5.00

ALPHAO	BETAO	ALFAOU	BETAOU	PT	P	Q	TT	AFA	BFA	DEINLR	DEONLR
-8.194	-5.835	-8.03800	-5.97210	1888.79980	1241.62820	553.38790	100.90000	-.03790	.20410	12.12000	8.92000
-8.031	-3.872	-7.90030	-4.03370	1883.29980	1236.15581	553.04130	100.70000	-.03820	.20410	12.12000	8.92000
-8.097	.378	-8.06390	.17270	1880.20000	1234.79150	551.67460	100.60000	-.03810	.20410	12.12000	8.92000
-7.933	4.308	-7.99680	4.11070	1885.00000	1237.03780	553.69950	100.70000	-.03820	.20410	12.12000	8.92000
-7.931	6.209	-8.02840	6.02500	1882.70000	1235.65990	552.93460	100.50000	-.03820	.20410	12.12000	8.92000
	GRADIENT	-.01216	.99551	.19517	.10202	.07503	-.00032	.00000	.00000	.00000	-.00000

RUN NO. 1303/ 0 RN/L = 3.50 GRADIENT INTERVAL = -5.00/ 5.00

ALPHAO	BETAO	ALFAOU	BETAOU	PT	P	Q	TT	AFA	BFA	DEINLR	DEONLR
-6.147	-5.926	-5.97210	-6.03760	1881.29980	1235.48120	552.01950	100.50000	-.03810	.20410	12.12000	8.92000
-6.097	-4.006	-5.94490	-4.14750	1881.29980	1235.68359	551.88180	100.40000	-.03800	.20410	12.12000	8.92000
-6.162	.123	-6.12120	-.08000	1884.79980	1237.34500	553.34250	100.50000	-.03820	.20410	12.12000	8.92000
-5.993	4.229	-6.07870	4.03970	1879.59990	1235.61110	550.67190	100.40000	-.03790	.20410	12.12000	8.92000
-5.783	6.303	-5.90820	6.13710	1884.09990	1236.64841	553.29830	100.50000	-.03820	.20410	12.12000	8.92000
	GRADIENT	-.01627	.99423	-.20539	-.00840	-.14643	.00002	.00001	.00000	.00000	-.00000

RUN NO. 1304/ 0 RN/L = 3.50 GRADIENT INTERVAL = -5.00/ 5.00

ALPHAO	BETAO	ALFAOU	BETAOU	PT	P	Q	TT	AFA	BFA	DEINLR	DEONLR
-4.140	-6.025	-3.94580	-6.09830	1882.20000	1236.17430	552.21410	100.40000	-.03810	.20410	12.12000	8.92000
-4.277	-3.930	-4.10310	-4.04280	1881.20000	1236.19119	551.46190	100.40000	-.03790	.20410	12.12000	8.92000
-4.169	.373	-4.13940	.16790	1882.50000	1235.66330	552.78420	100.40000	-.03820	.20410	12.12000	8.92000
-3.749	4.270	-3.87600	4.10520	1882.39990	1237.48630	551.46850	100.50000	-.03790	.20410	12.12000	8.92000
-3.821	6.099	-3.97380	5.95860	1877.89990	1234.02049	550.49580	100.40000	-.03800	.20410	12.12000	8.92000
	GRADIENT	.02707	.99347	.14904	.15308	.00612	.01198	-.00000	.00000	.00000	-.00000

RUN NO. 1306/ 0 RN/L = 3.50 GRADIENT INTERVAL = -5.00/ 5.00

ALPHAO	BETAO	ALFAOU	BETAOU	PT	P	Q	TT	AFA	BFA	DEINLR	DEONLR
-.363	-6.811	-.15890	-6.77310	1881.50000	1236.79320	551.27390	100.60000	-.03790	.20410	12.12000	8.92000
-.352	-4.652	-.14790	-4.61380	1881.50000	1236.79320	551.27390	100.60000	-.03790	.20410	12.12000	8.92000
-.324	-.486	-.11960	-.44750	1881.79980	1236.07980	551.98220	100.50000	-.03800	.20410	12.12000	8.92000
-.289	3.686	-.08500	3.72460	1881.89990	1235.06641	552.74610	100.60000	-.03820	.20410	12.12000	8.92000
-.286	5.801	-.08180	5.83900	1881.70000	1236.28391	551.76930	100.50000	-.03800	.20410	12.12000	8.92000
	GRADIENT	.00754	1.00004	.04796	-.20710	.17656	.00001	-.00004	.00000	.00000	.00000

IA156A, AEDC PWT 16T-470, O T S W/SILTS (R8NMB4) (10 MAY 80)

REFERENCE DATA

SREF = 2690.0000 SQ.FT. XMRP = 976.0000 IN. XT
LREF = 1290.3000 INCHES YMRP = .0000 IN. YT
BREF = 1290.3000 INCHES ZMRP = 400.0000 IN. ZT
SCALE = .0200

PARAMETRIC DATA

IB-ELV = 12.000 OB-ELV = 9.000
BDFLAP = .000 SPDBRK = .000
RUDDER = .000 SILTS = 1.000
MACH = .800 RN/L = 3.500

RUN NO. 1314/ 0 RN/L = 3.49 GRADIENT INTERVAL = -5.00/ 5.00

ALPHAO	BETAO	ALFAOU	BETAOU	PT	P	Q	TT	AFA	BFA	DEINLR	DEONLR
6.135	-5.878	6.01570	-6.04800	1881.70000	1234.46260	553.00880	100.70000	-.03830	.20400	12.12000	8.92000
6.107	-3.811	6.02340	-4.00070	1885.20000	1239.26050	552.33420	100.60000	-.03790	.20410	12.12000	8.92000
5.823	.172	5.85970	-.03180	1869.09990	1229.31180	547.18410	100.50000	-.03780	.20410	12.12000	8.92000
5.769	4.035	5.91510	3.88770	1873.09990	1227.82809	551.15600	100.60000	-.03850	.20400	12.12000	8.92000
5.762	6.056	5.93520	5.94170	1883.00000	1234.54201	553.91650	100.60000	-.03840	.20400	12.12000	8.92000
	GRADIENT	-.01395	1.00538	-1.55525	-1.46255	-.15611	-.00013	-.00008	-.00001	-.00000	-.00000

IA156A, AEDC PWT 16T-470, O T S W/SILTS (R8NMB5) (10 MAY 80)

REFERENCE DATA

SREF = 2690.0000 SQ.FT. XMRP = 976.0000 IN. XT
LREF = 1290.3000 INCHES YMRP = .0000 IN. YT
BREF = 1290.3000 INCHES ZMRP = 400.0000 IN. ZT
SCALE = .0200

PARAMETRIC DATA

IB-ELV = 12.000 OB-ELV = 9.000
BDFLAP = .000 SPDBRK = .000
RUDDER = .000 SILTS = 1.000
MACH = .800 RN/L = 3.500

RUN NO. 1313/ 0 RN/L = 3.49 GRADIENT INTERVAL = -5.00/ 5.00

ALPHAO	BETAO	ALFAOU	BETAOU	PT	P	Q	TT	AFA	BFA	DEINLR	DEONLR
-.366	-6.780	-.16230	-6.74220	1877.59990	1233.72220	550.47710	100.70000	-.03800	.20410	12.12000	8.92000
-.353	-4.684	-.14860	-4.64640	1876.29980	1233.84520	549.42990	100.70000	-.03780	.20410	12.12000	8.92000
-.323	-.479	-.11920	-.44090	1872.00000	1229.97141	548.88380	100.60000	-.03800	.20410	12.12000	8.92000
-.288	3.692	-.08400	3.73030	1875.50000	1231.02560	550.75780	100.70000	-.03820	.20410	12.12000	8.92000
-.287	5.812	-.08300	5.85050	1880.50000	1233.57230	552.72630	100.70000	-.03830	.20400	12.12000	8.92000
	GRADIENT	.00771	1.00005	-.09676	-.33742	.15813	-.00003	-.00005	-.00000	-.00000	-.00000

IA156A, AEDC PWT 16T-470, O T S W/SILTS (R8NMB6) (10 MAY 80)

REFERENCE DATA

SREF = 2690.0000 SQ.FT. XMRP = 976.0000 IN. XT
LREF = 1290.3000 INCHES YMRP = .0000 IN. YT
BREF = 1290.3000 INCHES ZMRP = 400.0000 IN. ZT
SCALE = .0200

PARAMETRIC DATA

IB-ELV = 12.000 OB-ELV = 9.000
BDFLAP = .000 SPDBRK = .000
RUDDER = .000 SILTS = 1.000
MACH = .900 RN/L = 3.500

RUN NO. 1308/ 0 RN/L = 3.50 GRADIENT INTERVAL = -5.00/ 5.00

ALPHAO	BETAO	ALFAOU	BETAOU	PT	P	Q	TT	AFA	BFA	DEINLR	DEONLR
-8.117	-5.915	-7.95040	-6.03770	1781.70000	1051.23019	598.62260	100.40000	-.05190	.20000	12.12000	8.92000
-8.125	-3.844	-7.98460	-3.99600	1780.79980	1048.01511	599.90940	100.30000	-.05220	.19990	12.12000	8.92000
-8.105	.288	-8.05570	.08770	1783.79980	1056.04201	597.20340	100.40000	-.05170	.20010	12.12000	8.92000
-7.938	4.265	-7.98760	4.06420	1786.00000	1056.91800	598.19410	100.60000	-.05170	.20010	12.12000	8.92000
-7.950	6.207	-8.03450	6.01830	1783.59990	1052.91750	598.92480	100.50000	-.05190	.20000	12.12000	8.92000
	GRADIENT	-.00048	.99393	.64183	1.10342	-.21443	.03691	.00006	.00002	-.00000	-.00000

RUN NO. 1309/ 0 RN/L = 3.50 GRADIENT INTERVAL = -5.00/ 5.00

ALPHAO	BETAO	ALFAOU	BETAOU	PT	P	Q	TT	AFA	BFA	DEINLR	DEONLR
-6.168	-5.940	-5.98590	-6.03710	1777.89990	1050.37740	596.52080	100.50000	-.05180	.20000	12.12000	8.92000
-6.098	-4.024	-5.93700	-4.15350	1789.29980	1058.78690	599.34960	100.60000	-.05170	.20010	12.12000	8.92000
-6.178	.118	-6.12290	-.08140	1778.09990	1051.58521	595.93970	100.50000	-.05180	.20010	12.12000	8.92000
-6.009	4.234	-6.08250	4.04070	1785.00000	1054.81400	598.75930	100.60000	-.05180	.20010	12.12000	8.92000
-5.808	6.308	-5.92170	6.13500	1784.70000	1056.53340	597.52950	100.60000	-.05170	.20010	12.12000	8.92000
	GRADIENT	-.01765	.99224	-.52299	-.48242	-.07228	-.00003	-.00001	.00000	.00000	.00000

RUN NO. 1310/ 0 RN/L = 3.49 GRADIENT INTERVAL = -5.00/ 5.00

ALPHAO	BETAO	ALFAOU	BETAOU	PT	P	Q	TT	AFA	BFA	DEINLR	DEONLR
-4.101	-6.042	-3.90190	-6.09850	1779.39990	1052.47411	596.30400	100.50000	-.05170	.20010	12.12000	8.92000
-4.291	-3.954	-4.10940	-4.05340	1781.70000	1053.85330	597.06370	100.70000	-.05170	.20010	12.12000	8.92000
-4.185	.374	-4.14120	.17230	1782.50000	1054.74950	597.07980	100.60000	-.05170	.20010	12.12000	8.92000
-3.750	4.279	-3.86580	4.10750	1783.59990	1055.33890	597.48490	100.60000	-.05170	.20010	12.12000	8.92000
-3.839	6.099	-3.98170	5.94930	1784.79980	1055.62399	598.13990	100.70000	-.05180	.20010	12.12000	8.92000
	GRADIENT	.02892	.99098	.22994	.18092	.05030	-.01234	.00000	-.00000	-.00000	-.00000

RUN NO. 1311/ 0 RN/L = 3.49 GRADIENT INTERVAL = -5.00/ 5.00

ALPHAO	BETAO	ALFAOU	BETAOU	PT	P	Q	TT	AFA	BFA	DEINLR	DEONLR
-.394	-6.907	-.19400	-6.85490	1785.50000	1056.92529	597.84590	100.60000	-.05170	.20010	12.12000	8.92000
-.379	-4.756	-.17870	-4.70450	1781.79980	1053.85181	597.13330	100.60000	-.05180	.20010	12.12000	8.92000
-.345	-.449	-.14500	-.39760	1784.59990	1053.71021	599.14060	100.60000	-.05190	.20000	12.12000	8.92000
-.313	3.662	-.11320	3.71410	1782.79980	1052.32401	598.72830	100.50000	-.05190	.20000	12.12000	8.92000
-.314	5.816	-.11360	5.86830	1772.89990	1046.51559	595.38230	100.50000	-.05190	.20000	12.12000	8.92000
	GRADIENT	.00778	1.00005	.12299	-.18031	.19166	-.01179	-.00001	-.00001	-.00000	.00000

IA156A, AEDC PWT 16T-470, O T S W/SILTS (R8NMB6) (10 MAY 80)

REFERENCE DATA

SREF = 2690.0000 SQ.FT. XMRP = 976.0000 IN. XT
LREF = 1290.3000 INCHES YMRP = .0000 IN. YT
BREF = 1290.3000 INCHES ZMRP = 400.0000 IN. ZT
SCALE = .0200

PARAMETRIC DATA

IB-ELV = 12.000 OB-ELV = 9.000
BDFLAP = .000 SPDBRK = .000
RUDDER = .000 SILTS = 1.000
MACH = .900 RN/L = 3.500

RUN NO. 1312/ 0 RN/L = 3.50 GRADIENT INTERVAL = -5.00/ 5.00

ALPHAO	BETAO	ALFAOU	BETAOU	PT	P	Q	TT	AFA	BFA	DEINLR	DEONLR
4.130	-5.824	3.99200	-5.97740	1779.50000	1052.77541	596.19340	100.50000	-.05170	.20010	12.12000	8.92000
4.011	-3.747	3.90440	-3.92400	1781.39990	1052.74780	597.51510	100.70000	-.05180	.20010	12.12000	8.92000
3.764	.085	3.81000	-.11650	1783.00000	1050.90871	599.70460	100.60000	-.05200	.19990	12.12000	8.92000
3.854	4.013	4.03200	3.90760	1785.29980	1051.58150	600.88260	100.60000	-.05210	.19990	12.12000	8.92000
3.797	6.139	3.99340	6.07380	1785.29980	1055.21310	598.72780	100.70000	-.05180	.20010	12.12000	8.92000
	GRADIENT	.01661	1.00930	.50292	-.14895	.43340	-.01283	-.00004	-.00003	-.00000	-.00000

IA156A, AEDC PWT 16T-470, O T S (R8NMB7) (10 MAY 80)

REFERENCE DATA

SREF = 2690.0000 SQ.FT. XMRP = 976.0000 IN. XT
LREF = 1290.3000 INCHES YMRP = .0000 IN. YT
BREF = 1290.3000 INCHES ZMRP = 400.0000 IN. ZT
SCALE = .0200

PARAMETRIC DATA

IB-ELV = 12.000 OB-ELV = 9.000
BDFLAP = .000 SPDBRK = .000
RUDDER = .000 SILTS = .000
MACH = .800 RN/L = 3.500

RUN NO. 1324/ 0 RN/L = 3.50 GRADIENT INTERVAL = -5.00/ 5.00

ALPHAO	BETAO	ALFAOU	BETAOU	PT	P	Q	TT	AFA	BFA	DEINLR	DEONLR
4.191	-5.942	4.04120	-6.08520	1878.70000	1233.70360	551.30440	100.10000	-.03810	.20410	12.12000	8.92000
3.993	-3.685	3.87500	-3.85520	1882.50000	1237.28220	551.68160	100.00000	-.03790	.20410	12.12000	8.92000
3.798	.170	3.83500	-.03410	1878.00000	1230.47749	552.97970	99.70000	-.03860	.20400	12.12000	8.92000
3.859	4.112	4.03080	3.99670	1879.59990	1233.08150	552.39400	99.60000	-.03830	.20400	12.12000	8.92000
3.814	6.168	4.00620	6.09000	1879.20000	1232.37990	552.57500	99.50000	-.03840	.20400	12.12000	8.92000
	GRADIENT	.02009	1.00707	-.36901	-.53422	.09046	-.05120	-.00005	-.00001	-.00000	-.00000

IA156A, AEDC PWT 16T-470, O T S (R8NMB8) (10 MAY 80)

REFERENCE DATA

SREF = 2690.0000 SQ.FT. XMRP = 976.0000 IN. XT
LREF = 1290.3000 INCHES YMRP = .0000 IN. YT
BREF = 1290.3000 INCHES ZMRP = 400.0000 IN. ZT
SCALE = .0200

PARAMETRIC DATA

IB-ELV = 12.000 OB-ELV = 9.000
BDFLAP = .000 SPDBRK = .000
RUDDER = .000 SILTS = .000
MACH = .950 RN/L = 3.500

RUN NO. 1325/ 0 RN/L = 3.51 GRADIENT INTERVAL = -5.00/ 5.00

ALPHAO	BETAO	ALFAOU	BETAOU	PT	P	Q	TT	AFA	BFA	DEINLR	DEONLR
-8.097	-5.930	-7.92840	-6.04760	1752.79980	979.76930	619.97490	100.00000	-.05550	.19770	12.12000	8.92000
-8.217	-3.731	-8.07640	-3.88160	1748.59990	976.30080	619.10280	99.90000	-.05550	.19760	12.12000	8.92000
-8.102	.172	-8.04590	-.02540	1751.29980	976.46630	620.79220	99.70000	-.05560	.19760	12.12000	8.92000
-7.953	4.376	-8.00160	4.17650	1749.29980	976.39210	619.51440	99.80000	-.05560	.19760	12.12000	8.92000
-7.952	6.218	-8.03280	6.02910	1751.39990	976.66630	620.74880	99.80000	-.05560	.19760	12.12000	8.92000
	GRADIENT	.00924	.99397	.07912	.01089	.04622	-.01187	-.00001	-.00000	-.00000	-.00000

RUN NO. 1326/ 0 RN/L = 3.50 GRADIENT INTERVAL = -5.00/ 5.00

ALPHAO	BETAO	ALFAOU	BETAOU	PT	P	Q	TT	AFA	BFA	DEINLR	DEONLR
-6.175	-5.944	-5.99200	-6.03720	1750.89990	978.98900	619.14820	99.90000	-.05550	.19770	12.12000	8.92000
-6.101	-4.027	-5.93750	-4.15170	1750.70000	979.39430	618.79390	99.80000	-.05540	.19770	12.12000	8.92000
-6.189	.101	-6.12970	-.09610	1748.09990	976.91160	618.43870	99.80000	-.05550	.19770	12.12000	8.92000
-6.004	4.224	-6.07300	4.03040	1750.20000	979.60230	618.34940	99.80000	-.05540	.19770	12.12000	8.92000
-5.732	6.302	-5.84350	6.12970	1748.29980	974.39160	619.94800	99.70000	-.05560	.19760	12.12000	8.92000
	GRADIENT	-.01643	.99167	-.06071	.02509	-.05388	.00000	-.00000	.00000	.00000	.00000

RUN NO. 1327/ 0 RN/L = 3.50 GRADIENT INTERVAL = -5.00/ 5.00

ALPHAO	BETAO	ALFAOU	BETAOU	PT	P	Q	TT	AFA	BFA	DEINLR	DEONLR
-4.091	-6.044	-3.89210	-6.09510	1748.59990	978.01250	618.16530	99.80000	-.05540	.19770	12.12000	8.92000
-4.285	-3.951	-4.10210	-4.04480	1751.59990	978.97950	619.61550	99.90000	-.05550	.19770	12.12000	8.92000
-4.192	.371	-4.14450	.17080	1748.59990	977.91190	618.22050	99.70000	-.05550	.19770	12.12000	8.92000
-3.741	4.269	-3.85360	4.09690	1749.89990	979.40500	618.25950	99.80000	-.05540	.19770	12.12000	8.92000
-3.844	6.109	-3.98330	5.95840	1750.59990	979.69780	618.56130	99.80000	-.05540	.19770	12.12000	8.92000
	GRADIENT	.02951	.99025	-.21562	.04638	-.16782	-.01278	.00001	-.00000	-.00000	.00000

RUN NO. 1328/ 0 RN/L = 3.50 GRADIENT INTERVAL = -5.00/ 5.00

ALPHAO	BETAO	ALFAOU	BETAOU	PT	P	Q	TT	AFA	BFA	DEINLR	DEONLR
-.413	-6.913	-.21560	-6.85790	1752.00000	980.28320	619.16460	99.80000	-.05540	.19770	12.12000	8.92000
-.384	-4.779	-.18620	-4.72320	1745.89990	975.83300	617.57760	99.60000	-.05550	.19770	12.12000	8.92000
-.355	-.459	-.15770	-.40320	1748.09990	977.91850	617.88650	99.90000	-.05540	.19770	12.12000	8.92000
-.324	3.651	-.12670	3.70700	1747.39990	974.80640	619.12870	99.90000	-.05560	.19760	12.12000	8.92000
-.324	5.830	-.12590	5.88540	1745.79980	978.75460	615.90670	99.90000	-.05530	.19780	12.12000	8.92000
	GRADIENT	.00705	1.00000	.18075	-.11664	.18304	.03587	-.00001	-.00001	-.00000	.00000

IA156A, AEDC PWT 16T-470, O T S (R8NMB8) (10 MAY 80)

REFERENCE DATA

SREF = 2690.0000 SQ.FT. XMRP = 976.0000 IN. XT
LREF = 1290.3000 INCHES YMRP = .0000 IN. YT
BREF = 1290.3000 INCHES ZMRP = 400.0000 IN. ZT
SCALE = .0200

PARAMETRIC DATA

IB-ELV = 12.000 OB-ELV = 9.000
BDFLAP = .000 SPDBRK = .000
RUDDER = .000 SILTS = .000
MACH = .950 RN/L = 3.500

RUN NO. 1329/ 0 RN/L = 3.50 GRADIENT INTERVAL = -5.00/ 5.00

ALPHAO	BETAO	ALFAOU	BETAOU	PT	P	Q	TT	AFA	BFA	DEINLR	DEONLR
3.924	-5.698	3.78820	-5.85140	1750.09990	978.89890	618.66940	99.90000	-.05540	.19770	12.12000	8.92000
3.965	-3.935	3.85820	-4.11010	1748.09990	978.01900	617.83130	99.90000	-.05540	.19770	12.12000	8.92000
3.923	.180	3.97830	-.01750	1752.20000	977.05860	621.06180	99.90000	-.05560	.19760	12.12000	8.92000
3.839	3.929	4.01640	3.82500	1749.00000	977.40310	618.76320	99.80000	-.05550	.19770	12.12000	8.92000
3.802	6.118	3.99830	6.05580	1749.70000	980.71680	617.40630	99.80000	-.05530	.19780	12.12000	8.92000
	GRADIENT	.02027	1.00891	.12880	-.08085	.12934	-.01251	-.00001	-.00000	.00000	.00000

IA156A, AEDC PWT 16T-470, O T S (R8NMB9) (10 MAY 80)

REFERENCE DATA

SREF = 2690.0000 SQ.FT. XMRP = 976.0000 IN. XT
LREF = 1290.3000 INCHES YMRP = .0000 IN. YT
BREF = 1290.3000 INCHES ZMRP = 400.0000 IN. ZT
SCALE = .0200

PARAMETRIC DATA

IB-ELV = 12.000 OB-ELV = 9.000
BDFLAP = .000 SPDBRK = .000
RUDDER = .000 SILTS = .000
MACH = 1.050 RN/L = 3.500

RUN NO. 1330/ 0 RN/L = 3.50 GRADIENT INTERVAL = -5.00/ 5.00

ALPHAO	BETAO	ALFAOU	BETAOU	PT	P	Q	TT	AFA	BFA	DEINLR	DEONLR
-8.212	-5.901	-8.04170	-6.01320	1705.20000	848.81840	655.26220	100.10000	-.06080	.19440	12.12000	8.92000
-8.202	-3.826	-8.05610	-3.96890	1703.59990	847.93330	654.68730	100.00000	-.06090	.19440	12.12000	8.92000
-8.119	.330	-8.06210	.13430	1701.39990	846.45310	654.01440	100.00000	-.06090	.19440	12.12000	8.92000
-7.949	4.306	-7.99120	4.10620	1704.79980	847.31910	655.69090	99.80000	-.06090	.19440	12.12000	8.92000
-7.959	6.215	-8.03510	6.02560	1700.50000	846.66310	653.37330	99.80000	-.06080	.19440	12.12000	8.92000
	GRADIENT	.00791	.99297	.14244	-.07765	.12126	-.02441	.00000	.00000	.00000	.00000

RUN NO. 1331/ 0 RN/L = 3.51 GRADIENT INTERVAL = -5.00/ 5.00

ALPHAO	BETAO	ALFAOU	BETAOU	PT	P	Q	TT	AFA	BFA	DEINLR	DEONLR
-6.179	-5.965	-5.99430	-6.04980	1703.79980	849.23410	654.22440	99.60000	-.06080	.19450	12.12000	8.92000
-6.081	-4.041	-5.91430	-4.15760	1702.50000	846.44140	654.68750	99.50000	-.06090	.19440	12.12000	8.92000
-6.191	.114	-6.12760	-.07900	1703.79980	847.12940	655.16870	99.50000	-.06090	.19440	12.12000	8.92000
-6.024	4.226	-6.08840	4.03300	1702.50000	846.44140	654.68750	99.80000	-.06090	.19440	12.12000	8.92000
-5.734	6.328	-5.84090	6.15420	1706.70000	848.50170	656.31520	99.80000	-.06090	.19440	12.12000	8.92000
	GRADIENT	-.02111	.99073	.00055	.00029	.00020	.03622	-.00000	.00000	.00000	.00000

IA156A, AEDC PWT 16T-470, O T S (R8NMB9) (10 MAY 80)

REFERENCE DATA

SREF = 2690.0000 SQ.FT. XMRP = 976.0000 IN. XT
LREF = 1290.3000 INCHES YMRP = .0000 IN. YT
BREF = 1290.3000 INCHES ZMRP = 400.0000 IN. ZT
SCALE = .0200

PARAMETRIC DATA

IB-ELV = 12.000 OB-ELV = 9.000
BDFLAP = .000 SPDBRK = .000
RUDDER = .000 SILTS = .000
MACH = 1.050 RN/L = 3.500

RUN NO. 1332/ 0 RN/L = 3.50 GRADIENT INTERVAL = -5.00/ 5.00

ALPHAO	BETAO	ALFAOU	BETAOU	PT	P	Q	TT	AFA	BFA	DEINLR	DEONLR
-4.097	-6.071	-3.89750	-6.11490	1704.09990	848.02810	654.94820	99.60000	-.06090	.19440	12.12000	8.92000
-4.289	-3.962	-4.10440	-4.04820	1704.79980	848.62210	655.10720	99.70000	-.06080	.19440	12.12000	8.92000
-4.196	.369	-4.14400	.17150	1701.00000	845.35470	654.26320	99.70000	-.06090	.19440	12.12000	8.92000
-3.744	4.287	-3.85230	4.11430	1704.79980	847.21900	655.73560	99.70000	-.06090	.19440	12.12000	8.92000
-3.846	6.113	-3.98060	5.95990	1702.59990	846.74120	654.61400	99.70000	-.06090	.19440	12.12000	8.92000
	GRADIENT	.02987	.98929	-.01534	-.18031	.07144	-.00000	-.00001	-.00000	.00000	.00000

RUN NO. 1333/ 0 RN/L = 3.50 GRADIENT INTERVAL = -5.00/ 5.00

ALPHAO	BETAO	ALFAOU	BETAOU	PT	P	Q	TT	AFA	BFA	DEINLR	DEONLR
-.444	-7.004	-.24970	-6.94360	1708.29980	849.58720	656.80050	99.80000	-.06090	.19440	12.12000	8.92000
-.419	-4.632	-.22440	-4.77090	1704.09990	847.22630	655.30760	99.70000	-.06090	.19440	12.12000	8.92000
-.395	-.438	-.[illegible]	-.37650	1702.79980	846.03740	655.05030	99.60000	-.06090	.19440	12.12000	8.92000
-.361	3.665	-.[illegible]	3.72600	1703.29980	846.43290	655.17680	99.80000	-.06090	.19440	12.12000	8.92000
-.363	5.855	-.16820	5.91570	1701.29980	849.26100	652.69120	100.10000	-.06070	.19450	12.12000	8.92000
	GRADIENT	.00679	1.[illegible]	-.09655	-.09547	-.01590	.01136	.00000	-.00000	-.00000	-.00000

RUN NO. 1334/ 0 RN/L = 3.50 GRADIENT INTERVAL = -5.00/ 5.00

ALPHAO	BETAO	ALFAOU	BETAOU	PT	P	Q	TT	AFA	BFA	DEINLR	DEONLR
3.901	-5.731	3.77080	-5.88800	1704.89990	848.42070	655.25830	99.90000	-.06090	.19440	12.12000	8.92000
3.920	-3.899	3.82010	-4.07640	1699.29980	844.07010	653.80590	99.80000	-.06090	.19440	12.12000	8.92000
3.916	.181	3.97650	-.01330	1701.29980	845.75270	654.26730	99.80000	-.06090	.19440	12.12000	8.92000
3.837	3.924	4.01530	3.82550	1703.00000	848.03980	654.27470	99.40000	-.06080	.19440	12.12000	8.92000
3.798	6.097	3.99430	6.04130	1705.79980	846.50680	656.66020	99.40000	-.06100	.19440	12.12000	8.92000
	GRADIENT	.02515	1.00996	.47329	.50606	.06073	-.05037	.00001	.00000	-.00000	-.00000

IA156A, AEDC PWT 16T-470, O T S (R8NMCO) (10 MAY 80)

REFERENCE DATA

SREF = 2690.0000 SQ.FT. XMRP = 976.0000 IN. XT
LREF = 1290.3000 INCHES YMRP = .0000 IN. YT
BREF = 1290.3000 INCHES ZMRP = 400.0000 IN. ZT
SCALE = .0200

PARAMETRIC DATA

IB-ELV = 12.000 OB-ELV = 9.000
BDFLAP = .000 SPDBRK = .000
RUDDER = .000 SILTS = .000
MACH = 1.100 RN/L = 3.500

RUN NO. 1335/ 0 RN/L = 3.50 GRADIENT INTERVAL = -5.00/ 5.00

ALPHAO	BETAO	ALFAOU	BETAOU	PT	P	Q	TT	AFA	BFA	DEINLR	DEONLR
-8.085	-5.959	-7.91190	-6.06750	1686.39990	790.84350	668.58810	99.70000	-.06320	.19440	12.12000	8.92000
-8.216	-3.758	-8.06930	-3.90060	1686.79980	791.33960	668.62450	99.70000	-.06320	.19440	12.12000	8.92000
-8.117	.180	-8.05360	-.01480	1687.59990	790.83230	669.29100	99.80000	-.06320	.19440	12.12000	8.92000
-7.932	4.337	-7.97300	4.13650	1692.59990	794.68480	670.67580	99.80000	-.06310	.19440	12.12000	8.92000
-7.956	6.215	-8.03040	6.02470	1686.00000	790.04740	668.67040	99.80000	-.06320	.19440	12.12000	8.92000
	GRADIENT	.01197	.99291	.72103	.41802	.25415	.01224	.00001	-.00000	-.00000	-.00000

RUN NO. 1336/ 0 RN/L = 3.50 GRADIENT INTERVAL = -5.00/ 5.00

ALPHAO	BETAO	ALFAOU	BETAOU	PT	P	Q	TT	AFA	BFA	DEINLR	DEONLR
-6.157	-5.944	-5.97020	-6.02660	1687.70000	791.43120	669.11210	99.90000	-.06320	.19440	12.12000	8.92000
-6.103	-4.030	-5.93430	-4.14600	1688.50000	791.32370	669.62040	100.00000	-.06320	.19440	12.12000	8.92000
-6.217	.094	-6.14970	-.09950	1687.59990	789.93260	669.64650	100.10000	-.06320	.19440	12.12000	8.92000
-5.993	4.241	-6.05580	4.04610	1689.00000	791.41920	669.87380	100.10000	-.06320	.19440	12.12000	8.92000
-5.966	6.211	-6.06610	6.03270	1690.20000	792.10770	670.29960	99.90000	-.06320	.19440	12.12000	8.92000
	GRADIENT	-.01466	.99049	.06071	.01187	.03066	.01208	.00000	-.00000	-.00000	-.00000

RUN NO. 1337/ 0 RN/L = 3.50 GRADIENT INTERVAL = -5.00/ 5.00

ALPHAO	BETAO	ALFAOU	BETAOU	PT	P	Q	TT	AFA	BFA	DEINLR	DEONLR
-4.082	-6.072	-3.88210	-6.11320	1689.89990	792.91040	669.80710	99.80000	-.06320	.19440	12.12000	8.92000
-4.299	-3.969	-4.11270	-4.05280	1688.09990	791.22750	669.42580	99.50000	-.06320	.19440	12.12000	8.92000
-4.187	.366	-4.13180	.16910	1690.00000	789.91020	671.05000	99.50000	-.06330	.19450	12.12000	8.92000
-3.746	4.294	-3.85230	4.11970	1691.20000	791.49850	671.12180	99.70000	-.06330	.19440	12.12000	8.92000
-3.842	6.107	-3.97500	5.95220	1688.29980	791.02560	669.62180	99.60000	-.06320	.19440	12.12000	8.92000
	GRADIENT	.03090	.98882	.37628	.02701	.20817	.02379	-.00001	.00000	.00000	.00000

RUN NO. 1338/ 0 RN/L = 3.50 GRADIENT INTERVAL = -5.00/ 5.00

ALPHAO	BETAO	ALFAOU	BETAOU	PT	P	Q	TT	AFA	BFA	DEINLR	DEONLR
-.450	-6.989	-.25510	-6.92560	1691.70000	792.29370	671.09890	99.80000	-.06320	.19440	12.12000	8.92000
-.416	-4.820	-.22180	-4.75670	1688.70000	790.62210	670.01390	99.80000	-.06320	.19440	12.12000	8.92000
-.391	-.464	-.19680	-.40050	1686.70000	788.74120	669.59280	99.80000	-.06320	.19450	12.12000	8.92000
-.356	3.674	-.16210	3.73730	1689.79980	790.11210	670.85450	99.80000	-.06330	.19450	12.12000	8.92000
-.358	5.852	-.16310	5.91560	1691.00000	793.99980	670.01540	99.80000	-.06310	.19440	12.12000	8.92000
	GRADIENT	.00702	1.00001	.12432	-.06331	.09725	.00000	-.00001	.00001	-.00000	.00000

IA156A, AEDC PWT 16T-470, O T S (R8NMC0) (10 MAY 80)

REFERENCE DATA

SREF = 2690.0000 SQ.FT. XMRP = 976.0000 IN. XT
LREF = 1290.3000 INCHES YMRP = .0000 IN. YT
BREF = 1290.3000 INCHES ZMRP = 400.0000 IN. ZT
SCALE = .0200

PARAMETRIC DATA

IB-ELV = 12.000 OB-ELV = 9.000
BDFLAP = .000 SPDBRK = .000
RUDDER = .000 SILTS = .000
MACH = 1.100 RN/L = 3.500

RUN NO. 1339/ 0 RN/L = 3.48 GRADIENT INTERVAL = -5.00/ 5.00

ALPHAO	BETAO	ALFAOU	BETAOU	PT	P	Q	TT	AFA	BFA	DEINLR	DEONLR
3.930	-5.730	3.80140	-5.88820	1687.89990	790.32960	669.66410	99.90000	-.06330	.19440	12.12000	8.92000
3.914	-3.895	3.81530	-4.07440	1680.89990	784.59640	667.85300	99.80000	-.06330	.19450	12.12000	8.92000
3.893	.179	3.95550	-.01570	1674.09990	781.16060	665.25370	99.80000	-.06330	.19450	12.12000	8.92000
3.825	3.917	4.00520	3.82010	1679.09990	784.31320	666.91920	99.80000	-.06330	.19450	12.12000	8.92000
3.808	6.099	4.00470	6.04480	1677.20000	783.63110	666.08400	99.80000	-.06330	.19450	12.12000	8.92000
	GRADIENT	.02446	1.01036	-.25196	-.04834	-.12730	.00000	-.00000	.00000	-.00000	-.00000

IA156A, AEDC PWT 16T-470, O T S (R8NMC1) (10 MAY 80)

REFERENCE DATA

SREF = 2690.0000 SQ.FT. XMRP = 976.0000 IN. XT
LREF = 1290.3000 INCHES YMRP = .0000 IN. YT
BREF = 1290.3000 INCHES ZMRP = 400.0000 IN. ZT
SCALE = .0200

PARAMETRIC DATA

IB-ELV = 12.000 OB-ELV = 9.000
BDFLAP = .000 SPDBRK = .000
RUDDER = .000 SILTS = .000
MACH = 1.150 RN/L = 3.500

RUN NO. 1341/ 0 RN/L = 3.50 GRADIENT INTERVAL = -5.00/ 5.00

ALPHAO	BETAO	ALFAOU	BETAOU	PT	P	Q	TT	AFA	BFA	DEINLR	DEONLR
-8.145	-5.961	-7.96940	-6.06980	1677.59990	735.80960	683.76270	99.90000	-.06560	.19620	12.12000	8.92000
-8.230	-3.764	-8.09040	-3.90710	1688.59990	745.39260	686.63230	99.90000	-.06540	.19600	12.12000	8.92000
-8.120	.169	-8.05410	-.02720	1687.59990	745.00170	686.20850	99.90000	-.06540	.19600	12.12000	8.92000
-7.920	4.347	-7.96000	4.14380	1680.79980	740.37010	683.99930	99.80000	-.06550	.19610	12.12000	8.92000
-7.956	6.224	-8.02980	6.03140	1676.50000	736.01780	683.08180	99.80000	-.06560	.19620	12.12000	8.92000
	GRADIENT	.01492	.99265	-.96858	-.62430	-.32674	-.01245	-.00001	.00001	-.00000	-.00000

RUN NO. 1342/ 0 RN/L = 3.50 GRADIENT INTERVAL = -5.00/ 5.00

ALPHAO	BETAO	ALFAOU	BETAOU	PT	P	Q	TT	AFA	BFA	DEINLR	DEONLR
-6.162	-5.954	-5.97270	-6.03630	1678.70000	737.59550	683.77170	99.90000	-.06550	.19620	12.12000	8.92000
-6.104	-4.044	-5.93290	-4.15970	1680.70000	739.77270	684.14670	99.80000	-.06550	.19610	12.12000	8.92000
-6.201	.104	-6.13190	-.09160	1682.50000	739.35940	685.28760	99.80000	-.06560	.19620	12.12000	8.92000
-6.020	4.237	-6.08210	4.03980	1680.20000	737.28420	684.71000	99.80000	-.06560	.19620	12.12000	8.92000
-5.837	6.332	-5.94090	6.15310	1675.39990	738.02080	681.79170	99.80000	-.06550	.19610	12.12000	8.92000
	GRADIENT	-.01803	.99009	-.06009	-.30037	.06814	.00000	-.00001	.00001	.00000	-.00000

IA156A, AEDC PWT 16T-470, O T S (R8NMC!) (10 MAY 80)

REFERENCE DATA

SREF = 2690.0000 SQ.FT. XMRP = 976.0000 IN. XT
LREF = 1290.3000 INCHES YMRP = .0000 IN. YT
BREF = 1290.3000 INCHES ZMRP = 400.0000 IN. ZT
SCALE = .0200

PARAMETRIC DATA

IB-ELV = 12.000 OB-ELV = 9.000
BDFLAP = .000 SPDBRK = .000
RUDDER = .000 SILTS = .000
MACH = 1.150 RN/L = 3.500

RUN NO. 1343/ 0 RN/L = 3.50 GRADIENT INTERVAL = -5.00/ 5.00

ALPHAO	BETAO	ALFAOU	BETAOU	PT	P	Q	TT	AFA	BFA	DEINLR	DEONLR
-4.112	-6.068	-3.90930	-6.10840	1681.39990	738.27150	685.04370	99.90000	-.06560	.19620	12.12000	8.92000
-4.306	-3.976	-4.11690	-4.06030	1680.00000	739.37960	683.89060	99.90000	-.06550	.19610	12.12000	8.92000
-4.195	.373	-4.13800	.17460	1675.70000	737.12080	682.26440	100.00000	-.06550	.19610	12.12000	8.92000
-3.756	4.290	-3.86260	4.11290	1684.50000	740.04130	686.16870	100.00000	-.06560	.19620	12.12000	8.92000
-3.849	6.122	-3.98320	5.96420	1676.20000	738.51270	682.06980	99.80000	-.06550	.19600	12.12000	8.92000
	GRADIENT	.03011	.98842	.51622	.06904	.26366	.01230	-.00001	.00001	-.00000	-.00000

RUN NO. 1344/ 0 RN/L = 3.50 GRADIENT INTERVAL = -5.00/ 5.00

ALPHAO	BETAO	ALFAOU	BETAOU	PT	P	Q	TT	AFA	BFA	DEINLR	DEONLR
-.438	-6.994	-.24140	-6.92880	1678.50000	736.10160	684.16410	100.00000	-.06560	.19620	12.12000	8.92000
-.411	-4.805	-.21480	-4.73920	1681.00000	737.47730	685.08910	100.00000	-.06560	.19620	12.12000	8.92000
-.370	-.483	-.17420	-.41730	1676.79980	737.51100	682.74390	100.10000	-.06550	.19610	12.12000	8.92000
-.342	3.670	-.14600	3.73610	1682.20000	737.76660	685.65800	100.10000	-.06560	.19620	12.12000	8.92000
-.341	5.850	-.14440	5.91550	1682.50000	737.36550	685.95900	100.10000	-.06570	.19630	12.12000	8.92000
	GRADIENT	.00813	1.00001	.13406	.03396	.06300	.01188	.00000	-.00000	-.00000	-.00000

RUN NO. 1345/ 0 RN/L = 3.50 GRADIENT INTERVAL = -5.00/ 5.00

ALPHAO	BETAO	ALFAOU	BETAOU	PT	P	Q	TT	AFA	BFA	DEINLR	DEONLR
3.991	-5.883	3.86110	-6.04410	1681.09990	739.86910	684.33640	100.20000	-.06550	.19610	12.12000	8.92000
4.006	-3.805	3.91220	-3.98880	1681.20000	739.76880	684.42630	100.20000	-.06550	.19610	12.12000	8.92000
3.899	.181	3.96410	-.01530	1680.20000	739.57740	683.93490	100.20000	-.06550	.19610	12.12000	8.92000
3.830	3.979	4.01350	3.88460	1679.00000	740.58420	682.92380	100.20000	-.06540	.19600	12.12000	8.92000
3.801	6.112	4.00140	6.05990	1680.59990	736.68290	685.13400	100.20000	-.06570	.19630	12.12000	8.92000
	GRADIENT	.01302	1.01146	-.28240	.10351	-.19247	-.00000	.00001	-.00001	-.00000	.00000

IA156A, AEDC PWT 16T-470, O T S (R8NMC2) (10 MAY 80)

REFERENCE DATA

SREF = 2690.0000 SQ.FT. XMRP = 976.0000 IN. XT
LREF = 1290.3000 INCHES YMRP = .0000 IN. YT
BREF = 1290.3000 INCHES ZMRP = 400.0000 IN. ZT
SCALE = .0200

PARAMETRIC DATA

IB-ELV = 12.000 OB-ELV = 9.000
BDFLAP = .000 SPDBRK = .000
RUDDER = .000 SILTS = .000
MACH = 1.250 RN/L = 3.500

RUN NO. 1346/ 0 RN/L = 3.50 GRADIENT INTERVAL = -5.00/ 5.00

ALPHAO	BETAO	ALFAOU	BETAOU	PT	P	Q	TT	AFA	BFA	DEINLR	DEONLR
-8.243	-5.890	-8.05840	-6.00440	1677.59990	649.28980	708.00730	100.70000	-.07010	.20600	12.12000	8.92000
-8.205	-3.763	-8.04620	-3.91220	1678.20000	646.90530	708.83420	100.70000	-.07030	.20650	12.12000	8.92000
-8.116	.197	-8.04530	-.00950	1675.20000	645.63350	707.59230	100.40000	-.07030	.20650	12.12000	8.92000
-7.947	4.332	-7.98770	4.11780	1679.29980	647.09720	709.34940	100.10000	-.07030	.20650	12.12000	8.92000
-7.966	6.227	-8.04310	6.02300	1680.29980	647.19040	709.83500	100.10000	-.07030	.20660	12.12000	8.92000
	GRADIENT	.00728	.99199	.14217	.02614	.06631	-.07411	.00000	-.00000	.00000	-.00000

RUN NO. 1347/ 0 RN/L = 3.50 GRADIENT INTERVAL = -5.00/ 5.00

ALPHAO	BETAO	ALFAOU	BETAOU	PT	P	Q	TT	AFA	BFA	DEINLR	DEONLR
-6.182	-5.943	-5.98130	-6.02870	1677.39990	646.61250	708.49290	100.50000	-.07030	.20650	12.12000	8.92000
-6.118	-4.035	-5.93640	-4.15540	1676.70000	645.12870	708.46000	100.40000	-.07030	.20670	12.12000	8.92000
-6.198	.130	-6.12490	-.07550	1678.70000	645.71220	709.34520	100.40000	-.07030	.20680	12.12000	8.92000
-5.991	4.255	-6.05550	4.04620	1678.09990	645.12060	709.16920	100.40000	-.07040	.20680	12.12000	8.92000
-5.947	6.219	-6.05180	6.02800	1671.89990	642.77640	706.54080	100.40000	-.07040	.20680	12.12000	8.92000
	GRADIENT	-.01442	.98936	.16938	-.00075	.08576	.00000	-.00001	.00001	.00000	.00000

RUN NO. 1348/ 0 RN/L = 3.49 GRADIENT INTERVAL = -5.00/ 5.00

ALPHAO	BETAO	ALFAOU	BETAOU	PT	P	Q	TT	AFA	BFA	DEINLR	DEONLR
-4.105	-6.078	-3.89110	-6.11810	1677.89990	646.51030	708.76810	100.40000	-.07030	.20660	12.12000	8.92000
-4.305	-3.963	-4.10500	-4.04980	1675.39990	645.13620	707.80100	100.50000	-.07040	.20660	12.12000	8.92000
-4.193	.376	-4.13150	.16700	1675.20000	644.44310	707.84960	100.40000	-.07040	.20670	12.12000	8.92000
-3.737	4.277	-3.84800	4.08890	1677.39990	645.22390	708.79350	100.70000	-.07040	.20680	12.12000	8.92000
-3.849	6.126	-3.98940	5.95930	1677.20000	645.91920	708.54200	100.80000	-.07030	.20660	12.12000	8.92000
	GRADIENT	.03049	.98742	.23732	.00746	.11841	.02339	-.00000	.00002	-.00000	-.00000

RUN NO. 1349/ 0 RN/L = 3.49 GRADIENT INTERVAL = -5.00/ 5.00

ALPHAO	BETAO	ALFAOU	BETAOU	PT	P	Q	TT	AFA	BFA	DEINLR	DEONLR
-.462	-7.000	-.25500	-6.93020	1676.09990	646.52100	707.85470	100.70000	-.07030	.20640	12.12000	8.92000
-.433	-4.850	-.22590	-4.77930	1675.20000	645.03830	707.72120	100.60000	-.07030	.20660	12.12000	8.92000
-.387	-.453	-.18070	-.38290	1676.00000	645.82710	707.95510	100.40000	-.07030	.20650	12.12000	8.92000
-.360	3.674	-.15310	3.74460	1674.79980	645.13990	707.49680	100.20000	-.07030	.20660	12.12000	8.92000
-.369	5.855	-.16160	5.92570	1677.00000	644.43260	708.76120	100.40000	-.07040	.20690	12.12000	8.92000
	GRADIENT	.00856	1.00000	-.04447	.01373	-.02546	-.04691	-.00000	-.00000	.00000	.00000

IA156A, AEDC PWT 16T-470, O T S (R8NMC2) (10 MAY 80)

REFERENCE DATA

SREF = 2690.0000 SQ.FT. XMRP = 976.0000 IN. XT
LREF = 1290.3000 INCHES YMRP = .0000 IN. YT
BREF = 1290.3000 INCHES ZMRP = 400.0000 IN. ZT
SCALE = .0200

PARAMETRIC DATA

IB-ELV = 12.000 OB-ELV = 9.000
BDFLAP = .000 SPDBRK = .000
RUDDER = .000 SILTS = .000
MACH = 1.250 RN/L = 3.500

RUN NO. 1350/ 0 RN/L = 3.50 GRADIENT INTERVAL = -5.00/ 5.00

ALPHAO	BETAO	ALFAOU	BETAOU	PT	P	Q	TT	AFA	BFA	DEINLR	DEONLR
3.994	-5.868	3.85810	-6.03810	1678.59990	649.08540	708.55980	100.40000	-.07020	.20610	12.12000	8.92000
4.025	-3.792	3.92690	-3.98710	1675.39990	646.82280	707.43430	100.40000	-.07020	.20630	12.12000	8.92000
3.893	.194	3.96180	-.01190	1677.29980	649.68850	707.76680	100.50000	-.07010	.20590	12.12000	8.92000
3.799	3.967	3.99310	3.86870	1676.89990	649.49220	707.60720	100.70000	-.07010	.20590	12.12000	8.92000
3.789	6.135	4.00060	6.08030	1679.59990	646.00440	709.73710	100.90000	-.07040	.20680	12.12000	8.92000
	GRADIENT	.00853	1.01223	.19597	.34754	.02286	.03853	.00001	-.00005	-.00000	-.00000

IA156A, AEDC PWT 16T-470, O T S (R8NMC3) (10 MAY 80)

REFERENCE DATA

SREF = 2690.0000 SQ.FT. XMRP = 976.0000 IN. XT
LREF = 1290.3000 INCHES YMRP = .0000 IN. YT
BREF = 1290.3000 INCHES ZMRP = 400.0000 IN. ZT
SCALE = .0200

PARAMETRIC DATA

IB-ELV = 12.000 OB-ELV = -2.000
BDFLAP = .000 SPDBRK = .000
RUDDER = .000 SILTS = .000
MACH = 1.150 RN/L = 3.500

RUN NO. 1355/ 0 RN/L = 3.50 GRADIENT INTERVAL = -5.00/ 5.00

ALPHAO	BETAO	ALFAOU	BETAOU	PT	P	Q	TT	AFA	BFA	DEINLR	DEONLR
-8.032	-5.992	-7.85430	-6.09880	1674.39990	734.04080	682.58110	100.40000	-.06560	.19630	12.12000	-2.29960
-8.220	-3.826	-8.06950	-3.96730	1684.39990	739.14480	686.41550	100.10000	-.06560	.19620	12.12000	-2.29960
-8.140	.284	-8.07710	.08650	1680.00000	736.48830	684.86650	99.80000	-.06560	.19630	12.12000	-2.29960
-7.952	4.281	-7.99100	4.07820	1681.70000	736.47460	685.81400	99.50000	-.06560	.19630	12.12000	-2.29960
-7.960	6.216	-8.03420	6.02300	1682.00000	735.77470	686.21440	99.30000	-.06570	.19640	12.12000	-2.29960
	GRADIENT	.00963	.99237	-.33645	-.33084	-.07560	-.07400	-.00000	.00001	-.00000	.00000

RUN NO. 1356/ 0 RN/L = 3.50 GRADIENT INTERVAL = -5.00/ 5.00

ALPHAO	BETAO	ALFAOU	BETAOU	PT	P	Q	TT	AFA	BFA	DEINLR	DEONLR
-6.177	-5.962	-5.98760	-6.04430	1682.00000	739.16410	685.07570	100.10000	-.06550	.19620	12.12000	-2.29960
-6.105	-4.037	-5.93290	-4.15190	1679.50000	738.28690	683.98270	100.10000	-.06560	.19610	12.12000	-2.29960
-6.203	.110	-6.13480	-.08480	1682.89990	739.75510	685.37620	100.10000	-.06550	.19610	12.12000	-2.29960
-6.024	4.235	-6.08660	4.03820	1679.29980	740.08330	683.26170	100.00000	-.06540	.19600	12.12000	-2.29960
-5.753	6.323	-5.85860	6.14530	1680.70000	737.87840	684.78740	100.00000	-.06560	.19620	12.12000	-2.29960
	GRADIENT	-.01861	.99010	-.02345	.21729	-.08678	-.01208	.00002	-.00001	.00000	.00000

IA156A, AEDC PWT 16T-470, O T S (R8NMC3) (10 MAY 80)

REFERENCE DATA

SREF = 2690.0000 SQ.FT. XMRP = 976.0000 IN. XT
LREF = 1290.3000 INCHES YMRP = .0000 IN. YT
BREF = 1290.3000 INCHES ZMRP = 400.0000 IN. ZT
SCALE = .0200

PARAMETRIC DATA

IB-ELV = 12.000 OB-ELV = -2.000
BDFLAP = .000 SPDBRK = .000
RUDDER = .000 SILTS = .000
MACH = 1.150 RN/L = 3.500

RUN NO. 1357/ 0 RN/L = 3.50 GRADIENT INTERVAL = -5.00/ 5.00

ALPHAO	BETAO	ALFAOU	BETAOU	PT	P	Q	TT	AFA	BFA	DEINLR	DEONLR
-4.099	-6.078	-3.89600	-6.11700	1680.29980	737.98120	684.53050	100.00000	-.06560	.19620	12.12000	-2.29960
-4.300	-3.975	-4.11060	-4.05840	1680.29980	736.78490	684.93330	99.90000	-.06560	.19630	12.12000	-2.29960
-4.196	.375	-4.13880	.17620	1680.09990	735.09180	685.38960	100.00000	-.06570	.19630	12.12000	-2.29960
-3.743	4.281	-3.85000	4.10400	1680.79980	737.57840	684.94410	99.90000	-.06560	.19620	12.12000	-2.29960
-3.848	6.110	-3.98240	5.95310	1678.79980	737.59450	683.82760	99.90000	-.06560	.19620	12.12000	-2.29960
	GRADIENT	.03084	.98835	.05855	.08693	.00327	.00043	-.00000	-.00001	.00000	.00000

RUN NO. 1358/ 0 RN/L = 3.50 GRADIENT INTERVAL = -5.00/ 5.00

ALPHAO	BETAO	ALFAOU	BETAOU	PT	P	Q	TT	AFA	BFA	DEINLR	DEONLR
-.466	-7.023	-.26980	-6.95780	1683.50000	740.04930	685.61040	100.00000	-.06560	.19610	12.12000	-2.29960
-.439	-4.831	-.24260	-4.76510	1681.89990	739.06520	685.05370	100.00000	-.06550	.19620	12.12000	-2.29960
-.400	-.461	-.20390	-.39570	1676.39990	737.31470	682.58790	99.90000	-.06550	.19610	12.12000	-2.29960
-.373	3.668	-.17680	3.73390	1686.89990	741.81670	686.90260	100.00000	-.06550	.19610	12.12000	-2.29960
-.370	5.854	-.17450	5.91960	1684.70000	741.53520	685.77420	100.00000	-.06550	.19610	12.12000	-2.29960
	GRADIENT	.00775	1.00002	.57047	.31675	.20999	-.00022	-.00000	-.00001	-.00000	.00000

RUN NO. 1359/ 0 RN/L = 3.50 GRADIENT INTERVAL = -5.00/ 5.00

ALPHAO	BETAO	ALFAOU	BETAOU	PT	P	Q	TT	AFA	BFA	DEINLR	DEONLR
4.002	-5.895	3.87220	-6.05590	1684.70000	740.23900	686.21310	99.80000	-.06560	.19620	12.12000	-2.29960
3.980	-3.776	3.88690	-3.96040	1680.29980	738.57960	684.32840	99.80000	-.06550	.19610	12.12000	-2.29960
3.896	.180	3.96170	-.01600	1680.59990	739.27490	684.25380	99.80000	-.06550	.19610	12.12000	-2.29960
3.840	3.994	4.02410	3.89980	1679.70000	739.48170	683.68900	99.80000	-.06550	.19610	12.12000	-2.29960
3.794	6.112	3.99350	6.05900	1683.79980	741.84160	685.16920	99.80000	-.06550	.19600	12.12000	-2.29960
	GRADIENT	.01766	1.01148	-.07625	.11647	-.08189	.00000	.00000	.00000	-.00000	.00000

IA156A, AEDC PWT 16T-470, O T S (RGNMC4) (10 MAY 80)

REFERENCE DATA

SREF = 2690.0000 SQ.FT. XMRP = 976.0000 IN. XT
LREF = 1290.3000 INCHES YMRP = .0000 IN. YT
BREF = 1290.3000 INCHES ZMRP = 400.0000 IN. ZT
SCALE = .0200

PARAMETRIC DATA

IB-ELV = 12.000 OB-ELV = -2.000
BDFLAP = .000 SPDBRK = .000
RUDDER = .000 SILTS = .000
MACH = 1.250 RN/L = 3.500

RUN NO. 1360/ 0 RN/L = 3.50 GRADIENT INTERVAL = -5.00/ 5.00

ALPHAO	BETAO	ALFAOU	BETAOU	PT	P	Q	TT	AFA	BFA	DEINLR	DEONLR
-8.101	-5.952	-7.91490	-6.06460	1677.00000	649.19410	707.72390	99.70000	-.07010	.20600	12.12000	-2.29960
-8.213	-3.740	-8.05450	-3.88940	1677.89990	649.38720	708.13820	99.90000	-.07010	.20600	12.12000	-2.29960
-8.132	.191	-8.06140	-.01560	1679.29980	647.99000	709.15500	99.90000	-.07020	.20640	12.12000	-2.29960
-7.941	4.368	-7.98210	4.15440	1677.39990	647.30690	708.34180	99.80000	-.07020	.20640	12.12000	-2.29960
-7.973	6.231	-8.05030	6.02700	1678.50000	648.39160	708.66160	99.90000	-.07020	.20630	12.12000	-2.29960
	GRADIENT	.00903	.99206	-.06577	-.25558	.02281	-.01245	-.00001	.00005	-.00000	.00000

RUN NO. 1361/ 0 RN/L = 3.50 GRADIENT INTERVAL = -5.00/ 5.00

ALPHAO	BETAO	ALFAOU	BETAOU	PT	P	Q	TT	AFA	BFA	DEINLR	DEONLR
-6.206	-5.971	-6.00490	-6.05620	1677.09990	648.00290	708.03710	99.80000	-.07020	.20620	12.12000	-2.29960
-6.109	-4.022	-5.92710	-4.14260	1671.50000	646.34990	705.56080	99.90000	-.07020	.20610	12.12000	-2.29960
-6.202	.116	-6.12800	-.08920	1670.00000	644.27540	705.25510	99.80000	-.07020	.20640	12.12000	-2.29960
-5.988	4.255	-6.05360	4.04710	1676.70000	647.80690	707.87740	99.90000	-.07020	.20620	12.12000	-2.29960
-5.954	6.220	-6.05930	6.02920	1678.79980	648.19140	708.85770	99.90000	-.07020	.20630	12.12000	-2.29960
	GRADIENT	-.01528	.98941	.62824	.17604	.27988	.00000	-.00000	.00001	-.00000	.00000

RUN NO. 1362/ 0 RN/L = 3.50 GRADIENT INTERVAL = -5.00/ 5.00

ALPHAO	BETAO	ALFAOU	BETAOU	PT	P	Q	TT	AFA	BFA	DEINLR	DEONLR
-4.063	-6.095	-3.84880	-6.13390	1678.29980	648.49190	708.53830	99.90000	-.07020	.20620	12.12000	-2.29960
-4.303	-3.959	-4.10310	-4.04530	1675.20000	646.12940	707.48440	100.20000	-.07030	.20640	12.12000	-2.29960
-4.191	.373	-4.12940	.16370	1676.00000	645.52950	708.01950	100.10000	-.07030	.20660	12.12000	-2.29960
-3.759	4.309	-3.87120	4.12240	1679.20000	647.59380	709.19070	100.10000	-.07030	.20650	12.12000	-2.29960
-3.832	6.102	-3.97290	5.93570	1678.00000	647.60080	708.58130	100.10000	-.07020	.20640	12.12000	-2.29960
	GRADIENT	.02748	.98751	.47876	.17183	.20497	-.01228	.00000	.00001	-.00000	.00000

RUN NO. 1363/ 0 RN/L = 3.50 GRADIENT INTERVAL = -5.00/ 5.00

ALPHAO	BETAO	ALFAOU	BETAOU	PT	P	Q	TT	AFA	BFA	DEINLR	DEONLR
-.484	-7.045	-.27790	-6.97510	1676.59990	647.31150	707.93530	100.00000	-.07020	.20630	12.12000	-2.29960
-.455	-4.776	-.24810	-4.70590	1675.00000	645.73390	707.46920	99.90000	-.07030	.20650	12.12000	-2.29960
-.414	-.532	-.20730	-.46130	1674.29980	646.43240	706.96220	100.00000	-.07020	.20630	12.12000	-2.29960
-.383	3.724	-.17700	3.79460	1678.59990	648.49020	708.69070	100.00000	-.07020	.20620	12.12000	-2.29960
-.396	5.888	-.18900	5.95820	1675.50000	643.54880	708.19310	99.80000	-.07040	.20690	12.12000	-2.29960
	GRADIENT	.00836	1.00000	.42375	.32432	.14381	.01176	.00001	-.00004	.00000	-.00000

IA156A, AEDC PWT 16T-470, O T S (R8NMC4) (10 MAY 80)

REFERENCE DATA

SREF = 2690.0000 SQ.FT. XMRP = 976.0000 IN. XT
LREF = 1290.3000 INCHES YMRP = .0000 IN. YT
BREF = 1290.3000 INCHES ZMRP = 400.0000 IN. ZT
SCALE = .0200

PARAMETRIC DATA

IB-ELV = 12.000 OB-ELV = -2.000
BDFLAP = .000 SPDBRK = .000
RUDDER = .000 SILTS = .000
MACH = 1.250 RN/L = 3.500

RUN NO. 1364/ 0 RN/L = 3.50 GRADIENT INTERVAL = -5.00/ 5.00

ALPHAO	BETAO	ALFAOU	BETAOU	PT	P	Q	TT	AFA	BFA	DEINLR	DEONLR
4.094	-5.739	3.96150	-5.94170	1673.59990	647.72610	706.32250	100.00000	-.07010	.20600	12.12000	-2.29960
3.990	-3.665	3.89550	-3.86070	1675.79980	649.49880	707.04690	100.00000	-.07000	.20590	12.12000	-2.29960
3.760	.191	3.82930	-.01590	1671.20000	644.26830	705.86430	100.10000	-.07030	.20650	12.12000	-2.29960
3.825	4.099	4.02090	4.00260	1679.09990	647.79270	709.09670	100.10000	-.07030	.20640	12.12000	-2.29960
3.778	6.130	3.98850	6.07510	1683.09990	650.74510	710.47710	100.00000	-.07020	.20620	12.12000	-2.29960
	GRADIENT	.01623	1.01282	.42867	-.21720	.26529	.01285	-.00004	.00006	.00000	.00000

IA156A, AEDC PWT 16T-470, O T S (R8NMC5) (10 MAY 80)

REFERENCE DATA

SREF = 2690.0000 SQ.FT. XMRP = 976.0000 IN. XT
LREF = 1290.3000 INCHES YMRP = .0000 IN. YT
BREF = 1290.3000 INCHES ZMRP = 400.0000 IN. ZT
SCALE = .0200

PARAMETRIC DATA

IB-ELV = 12.000 OB-ELV = -2.000
BDFLAP = .000 SPDBRK = .000
RUDDER = .000 SILTS = .000
MACH = 1.400 RN/L = 3.500

RUN NO. 1365/ 0 RN/L = 3.00 GRADIENT INTERVAL = -5.00/ 5.00

ALPHAO	BETAO	ALFAOU	BETAOU	PT	P	Q	TT	AFA	BFA	DEINLR	DEONLR
-8.079	-5.931	-7.85590	-6.06350	1459.20000	459.54880	629.09590	100.10000	-.08500	.24490	12.12000	-2.29960
-8.212	-3.723	-8.02260	-3.89950	1457.79980	459.25810	628.48900	100.20000	-.08490	.24480	12.12000	-2.29960
-8.138	.218	-8.05180	-.02720	1457.20000	457.67970	628.25950	100.40000	-.08530	.24560	12.12000	-2.29960
-7.957	4.469	-8.00550	4.21400	1457.39990	459.25980	628.31370	100.40000	-.08490	.24470	12.12000	-2.29960
-7.941	6.289	-8.03110	6.04580	1458.29980	458.95970	628.71460	100.40000	-.08500	.24510	12.12000	-2.29960
	GRADIENT	.00220	.99060	-.04757	.00506	-.02096	.02410	.00000	-.00001	-.00000	.00000

RUN NO. 1366/ 0 RN/L = 3.00 GRADIENT INTERVAL = -5.00/ 5.00

ALPHAO	BETAO	ALFAOU	BETAOU	PT	P	Q	TT	AFA	BFA	DEINLR	DEONLR
-6.230	-5.938	-5.99090	-6.03910	1454.29980	458.08670	626.98170	100.50000	-.08490	.24480	12.12000	-2.29960
-6.179	-4.021	-5.96220	-4.16370	1463.09990	459.82930	630.79740	100.40000	-.08520	.24540	12.12000	-2.29960
-6.212	.150	-6.12200	-.09380	1458.59990	458.06910	628.86400	100.40000	-.08530	.24560	12.12000	-2.29960
-5.966	4.280	-6.04090	4.03070	1455.29980	456.40280	627.45310	100.40000	-.08550	.24600	12.12000	-2.29960
-5.944	6.270	-6.06730	6.04100	1459.70000	458.36110	629.33940	100.40000	-.08540	.24570	12.12000	-2.29960
	GRADIENT	-.00953	.98718	-.93992	-.41281	-.40299	.00000	-.00004	.00007	.00000	-.00000

IA156A, AEDC PWT 16T-470, O T S (R8NMC5) (10 MAY 80)

REFERENCE DATA

SREF = 2690.0000 SQ.FT. XMRP = 976.0000 IN. XT
LREF = 1290.3000 INCHES YMRP = .0000 IN. YT
BREF = 1290.3000 INCHES ZMRP = 400.0000 IN. ZT
SCALE = .0200

PARAMETRIC DATA

IB-ELV = 12.000 OB-ELV = -2.000
BDFLAP = .000 SPDBRK = .000
RUDDER = .000 SILTS = .000
MACH = 1.400 RN/L = 3.500

RUN NO. 1367/ 0 RN/L = 2.99 GRADIENT INTERVAL = -5.00/ 5.00

ALPHAO	BETAO	ALFAOU	BETAOU	PT	P	Q	TT	AFA	BFA	DEINLR	DEONLR
-4.094	-6.078	-3.83930	-6.12310	1452.50000	457.89650	626.19700	100.50000	-.08480	.24460	12.12000	-2.29960
-4.349	-3.947	-4.11000	-4.04940	1461.09990	458.45430	629.94950	100.50000	-.08540	.24590	12.12000	-2.29960
-4.202	.412	-4.12700	.16280	1458.89990	458.26560	628.99150	100.70000	-.08530	.24560	12.12000	-2.29960
-3.737	4.341	-3.86780	4.11630	1457.50000	457.38210	628.39620	100.60000	-.08540	.24580	12.12000	-2.29960
-3.816	6.142	-3.98190	5.94120	1456.29980	456.39890	627.88990	100.60000	-.08560	.24620	12.12000	-2.29960
	GRADIENT	.02862	.98490	-.43563	-.12781	-.18800	.01268	.00000	-.00001	-.00000	-.00000

RUN NO. 1368/ 0 RN/L = 3.00 GRADIENT INTERVAL = -5.00/ 5.00

ALPHAO	BETAO	ALFAOU	BETAOU	PT	P	Q	TT	AFA	BFA	DEINLR	DEONLR
-.508	-6.997	-.26260	-6.91140	1461.29980	459.14500	630.02370	100.60000	-.08520	.24550	12.12000	-2.29960
-.481	-4.824	-.23450	-4.73820	1464.79980	458.93330	631.55690	100.70000	-.08570	.24630	12.12000	-2.29960
-.432	-.491	-.18620	-.40530	1463.59990	458.54300	631.03990	100.70000	-.08560	.24630	12.12000	-2.29960
-.414	3.632	-.16790	3.71820	1460.20000	457.96390	629.56520	100.70000	-.08550	.24600	12.12000	-2.29960
-.423	5.820	-.17750	5.90560	1461.00000	458.94870	629.89620	100.70000	-.08530	.24560	12.12000	-2.29960
	GRADIENT	.00790	1.00002	-.54170	-.11443	-.23455	-.00000	.00002	-.00004	-.00000	-.00000

RUN NO. 1369/ 0 RN/L = 3.00 GRADIENT INTERVAL = -5.00/ 5.00

ALPHAO	BETAO	ALFAOU	BETAOU	PT	P	Q	TT	AFA	BFA	DEINLR	DEONLR
4.039	-5.870	3.87780	-6.07510	1460.29980	457.96340	629.60890	100.70000	-.08550	.24600	12.12000	-2.29960
3.998	-3.653	3.89490	-3.88720	1460.39990	458.45700	629.64360	100.70000	-.08540	.24570	12.12000	-2.29960
3.743	.167	3.82350	-.08080	1458.29980	457.57640	628.74220	100.60000	-.08550	.24590	12.12000	-2.29960
3.786	4.056	4.01830	3.94080	1460.70000	459.24630	629.75900	100.70000	-.08520	.24530	12.12000	-2.29960
3.747	6.132	3.99840	6.06740	1457.29980	458.07450	628.29540	100.60000	-.08520	.24540	12.12000	-2.29960
	GRADIENT	.01740	1.01547	.04069	.10338	.01572	.00008	.00003	-.00005	.00000	.00000

IA156A, AEDC PWT 16T-470, O T S (R8NMC6) (10 MAY 80)

REFERENCE DATA

SREF = 2690.0000 SQ.FT. XMRP = 976.0000 IN. XT
LREF = 1290.3000 INCHES YMRP = .0000 IN. YT
BREF = 1290.3000 INCHES ZMRP = 400.0000 IN. ZT
SCALE = .0200

PARAMETRIC DATA

IB-ELV = 12.000 OB-ELV = -2.000
BDFLAP = .000 SPDBRK = .000
RUDDER = .000 SILTS = .000
MACH = 1.550 RN/L = 3.200

RUN NO. 1370/ 0 RN/L = 2.99 GRADIENT INTERVAL = -5.00/ 5.00

ALPHAO	BETAO	ALFAOU	BETAOU	PT	P	Q	TT	AFA	BFA	DEINLR	DEONLR
-8.164	-5.912	-7.84010	-6.06390	1501.70000	379.53640	639.45040	101.60000	-.14990	.32490	12.12000	-2.29960
-8.309	-3.679	-8.02540	-3.89680	1505.89990	380.80660	641.28130	101.50000	-.14960	.32470	12.12000	-2.29960
-8.198	.297	-8.04720	-.02730	1511.09990	381.97290	643.46560	101.40000	-.14980	.32490	12.12000	-2.29960
-7.977	4.573	-8.00790	4.21690	1504.50000	380.51560	640.69780	101.20000	-.14960	.32460	12.12000	-2.29960
-7.950	6.390	-8.03950	6.04430	1506.39990	380.90360	641.48830	101.20000	-.14970	.32470	12.12000	-2.29960
	GRADIENT	.00221	.98332	-.18684	-.03909	-.07793	-.03648	.00000	-.00001	-.00000	.00000

RUN NO. 1371/ 0 RN/L = 3.00 GRADIENT INTERVAL = -5.00/ 5.00

ALPHAO	BETAO	ALFAOU	BETAOU	PT	P	Q	TT	AFA	BFA	DEINLR	DEONLR
-6.347	-5.953	-6.00730	-6.05960	1507.89990	382.08720	642.28930	100.50000	-.14860	.32370	12.12000	-2.29960
-6.238	-3.981	-5.92230	-4.14750	1505.89990	380.90600	641.30130	100.40000	-.14950	.32460	12.12000	-2.29960
-6.280	.235	-6.12430	-.08730	1504.59990	380.21750	640.67480	100.50000	-.15000	.32500	12.12000	-2.29960
-5.976	4.383	-6.04470	4.03020	1510.00000	380.68800	642.79100	100.40000	-.15120	.32610	12.12000	-2.29960
-5.921	6.372	-6.05930	6.04130	1503.50000	379.52780	640.12230	101.10000	-.15060	.32550	12.12000	-2.29960
	GRADIENT	-.01472	.97766	.48802	-.02644	.17721	.00006	-.00020	.00018	.00000	-.00000

RUN NO. 1372/ 0 RN/L = 3.00 GRADIENT INTERVAL = -5.00/ 5.00

ALPHAO	BETAO	ALFAOU	BETAOU	PT	P	Q	TT	AFA	BFA	DEINLR	DEONLR
-4.201	-6.099	-3.84450	-6.12700	1504.39990	380.31760	640.62010	100.30000	-.14980	.32480	12.12000	-2.29960
-4.444	-3.944	-4.10190	-4.05160	1509.29980	381.18750	642.63160	100.30000	-.15030	.32530	12.12000	-2.29960
-4.272	.499	-4.13470	.16750	1504.29980	379.82180	640.48170	100.10000	-.15040	.32540	12.12000	-2.29960
-3.722	4.430	-3.87060	4.10530	1507.09990	381.49560	641.87040	100.10000	-.14910	.32420	12.12000	-2.29960
-3.793	6.247	-3.99280	5.95160	1507.70000	381.79050	642.15450	100.10000	-.14890	.32400	12.12000	-2.29960
	GRADIENT	.02687	.97364	-.28135	.02937	-.09939	-.02434	.00014	-.00013	.00000	.00000

RUN NO. 1373/ 0 RN/L = 3.00 GRADIENT INTERVAL = -5.00/ 5.00

ALPHAO	BETAO	ALFAOU	BETAOU	PT	P	Q	TT	AFA	BFA	DEINLR	DEONLR
-.593	-7.033	-.26900	-6.88410	1510.70000	382.37160	643.39650	100.20000	-.14920	.32430	12.12000	-2.29960
-.564	-4.900	-.23770	-4.74850	1504.59990	379.42360	640.51220	100.10000	-.15110	.32600	12.12000	-2.29960
-.529	-.542	-.20300	-.39000	1506.89990	379.60960	641.45140	100.10000	-.15140	.32620	12.12000	-2.29960
-.513	3.574	-.18940	3.72270	1507.89990	382.18650	642.30930	100.10000	-.14850	.32360	12.12000	-2.29960
-.524	5.750	-.19790	5.90040	1505.59990	380.01420	641.00730	100.10000	-.15070	.32560	12.12000	-2.29960
	GRADIENT	.00572	.99969	.39073	.32372	.21211	.00000	.00030	-.00028	-.00000	.00000

IA156A, AEDC PWT 16T-470, O T S (R8NMC6) (10 MAY 80)

REFERENCE DATA

SREF = 2690.0000 SQ.FT. XMRP = 976.0000 IN. XT
LREF = 1290.3000 INCHES YMRP = .0000 IN. YT
BREF = 1290.3000 INCHES ZMRP = 400.0000 IN. ZT
SCALE = .0200

PARAMETRIC DATA

IB-ELV = 12.000 OB-ELV = -2.000
BDFLAP = .000 SPDBRK = .000
RUDDER = .000 SILTS = .000
MACH = 1.550 RN/L = 3.200

RUN NO. 1374/ 0 RN/L = 3.01 GRADIENT INTERVAL = -5.00/ 5.00

ALPHAO	BETAO	ALFAOU	BETAOU	PT	P	Q	TT	AFA	BFA	DEINLR	DEONLR
4.179	-5.685	3.99310	-5.98600	1513.89990	385.03540	645.12870	100.10000	-.14660	.32200	12.12000	-2.29960
4.009	-3.558	3.88600	-3.89080	1510.70000	383.36380	643.59550	100.10000	-.14780	.32310	12.12000	-2.29960
3.680	.254	3.82220	-.07340	1509.59990	382.27760	642.96510	100.10000	-.14890	.32400	12.12000	-2.29960
3.685	4.056	4.01730	3.92810	1505.59990	381.70120	641.34910	100.00000	-.14830	.32350	12.12000	-2.29960
3.639	6.130	3.99340	6.07630	1506.29980	380.20950	641.30930	100.00000	-.15060	.32550	12.12000	-2.29960
	GRADIENT	.01723	1.02691	-.66970	-.21839	-.29499	-.01313	-.00007	.00005	-.00000	.00000

IA156A, AEDC PWT 16T-470, O T S W/SILTS (R8NMC7) (10 MAY 80)

REFERENCE DATA

SREF = 2690.0000 SQ.FT. XMRP = 976.0000 IN. XT
LREF = 1290.3000 INCHES YMRP = .0000 IN. YT
BREF = 1290.3000 INCHES ZMRP = 400.0000 IN. ZT
SCALE = .0200

PARAMETRIC DATA

IB-ELV = 9.000 OB-ELV = -2.000
BDFLAP = .000 SPDBRK = .000
RUDDER = .000 SILTS = 1.000
MACH = 1.150 RN/L = 3.500
IB-AIL = 1.000

RUN NO. 1377/ 0 RN/L = 3.50 GRADIENT INTERVAL = -5.00/ 5.00

ALPHAO	BETAO	ALFAOU	BETAOU	PT	P	Q	TT	AFA	BFA	DEINLR	DEONLR
-8.173	-5.880	-7.99730	-5.98970	1674.20000	735.83690	681.86470	98.90000	-.06550	.19620	8.10000	-2.29960
-8.191	-3.835	-8.03930	-3.97660	1678.20000	733.61180	684.83110	98.70000	-.06570	.19640	8.10000	-2.29960
-8.131	.278	-8.06770	.08140	1681.20000	738.47270	684.86470	98.40000	-.06560	.19620	8.10000	-2.29960
-7.960	4.259	-7.99800	4.05530	1681.29980	735.48100	685.92460	98.90000	-.06570	.19640	8.10000	-2.29960
-7.945	6.207	-8.01910	6.01440	1674.79980	735.23390	682.40190	100.30000	-.06560	.19620	8.10000	-2.29960
	GRADIENT	.00504	.99228	.38490	.23622	.13439	.02417	.00000	-.00000	.00000	.00000

RUN NO. 1378/ 0 RN/L = 3.50 GRADIENT INTERVAL = -5.00/ 5.00

ALPHAO	BETAO	ALFAOU	BETAOU	PT	P	Q	TT	AFA	BFA	DEINLR	DEONLR
-6.183	-5.970	-5.99270	-6.05210	1679.70000	738.48460	684.02690	100.90000	-.06550	.19610	8.10000	-2.29960
-6.102	-4.029	-5.92980	-4.14410	1681.70000	737.17260	685.58010	100.90000	-.06560	.19630	8.10000	-2.29960
-6.194	.113	-6.12510	-.08270	1680.79980	736.98020	685.14530	100.80000	-.06560	.19630	8.10000	-2.29960
-6.013	4.232	-6.07600	4.03510	1676.89990	736.51290	683.13700	100.60000	-.06560	.19620	8.10000	-2.29960
-5.788	6.345	-5.89340	6.16750	1688.50000	743.99730	687.05270	100.70000	-.06540	.19600	8.10000	-2.29960
	GRADIENT	-.01772	.99009	-.58073	-.07983	-.29557	-.03630	-.00000	-.00001	.00000	-.00000

IA156A, AEDC PWT 16T-470, O T S W/SILTS (R8NMC7) (10 MAY 80)

REFERENCE DATA

SREF = 2690.0000 SQ.FT. XMRP = 976.0000 IN. XT
LREF = 1290.3000 INCHES YMRP = .0000 IN. YT
BREF = 1290.3000 INCHES ZMRP = 400.0000 IN. ZT
SCALE = .0200

PARAMETRIC DATA

IB-ELV = 9.000 OB-ELV = -2.000
BDFLAP = .000 SPDBRK = .000
RUDDER = .000 SILTS = 1.000
MACH = 1.150 RN/L = 3.500
IB-AIL = 1.000

RUN NO. 1379/ 0 RN/L = 3.50 GRADIENT INTERVAL = -5.00/ 5.00

ALPHAO	BETAO	ALFAOU	BETAOU	PT	P	Q	TT	AFA	BFA	DEINLR	DEONLR
-4.099	-6.089	-3.89540	-6.12770	1677.29980	734.81490	683.93020	100.90000	-.06570	.19630	8.10000	-2.29960
-4.295	-3.970	-4.10520	-4.05260	1677.20000	735.81270	683.53960	101.00000	-.06560	.19620	8.10000	-2.29960
-4.200	.373	-4.14320	.17410	1686.29980	739.52830	687.34130	100.70000	-.06560	.19620	8.10000	-2.29960
-3.743	4.276	-3.85070	4.09900	1683.29980	739.95120	685.53220	100.40000	-.06550	.19610	8.10000	-2.29960
-3.851	6.111	-3.98530	5.95360	1678.20000	737.00120	683.69460	100.40000	-.06550	.19620	8.10000	-2.29960
	GRADIENT	.03012	.98836	.76519	.50855	.25354	-.07270	.00001	-.00001	-.00000	.00000

RUN NO. 1380/ 0 RN/L = 3.50 GRADIENT INTERVAL = -5.00/ 5.00

ALPHAO	BETAO	ALFAOU	BETAOU	PT	P	Q	TT	AFA	BFA	DEINLR	DEONLR
-.470	-7.021	-.27340	-6.95570	1676.39990	735.61990	683.16040	100.30000	-.06560	.19620	8.10000	-2.29960
-.444	-4.837	-.24760	-4.77190	1678.70000	739.88840	682.99390	100.40000	-.06540	.19600	8.10000	-2.29960
-.409	-.465	-.21330	-.39960	1681.70000	737.47170	685.47950	100.40000	-.06560	.19620	8.10000	-2.29960
-.381	3.667	-.18530	3.73310	1684.20000	739.64480	686.13600	100.50000	-.06560	.19620	8.10000	-2.29960
-.383	5.857	-.18690	5.92260	1678.59990	737.99490	683.58110	100.40000	-.06550	.19610	8.10000	-2.29960
	GRADIENT	.00733	1.00002	.64707	-.03370	.37137	.01164	-.00002	.00002	-.00000	.00000

RUN NO. 1381/ 0 RN/L = 3.50 GRADIENT INTERVAL = -5.00/ 5.00

ALPHAO	BETAO	ALFAOU	BETAOU	PT	P	Q	TT	AFA	BFA	DEINLR	DEONLR
4.123	-5.832	3.99750	-5.99610	1679.79980	740.77710	683.30370	100.40000	-.06540	.19600	8.10000	-2.29960
3.967	-3.698	3.87520	-3.88360	1681.20000	739.76880	684.42630	100.20000	-.06550	.19610	8.10000	-2.29960
3.794	.112	3.85610	-.08500	1682.29980	739.85960	685.00730	100.20000	-.06550	.19610	8.10000	-2.29960
3.843	4.035	4.02660	3.94060	1681.70000	741.16060	684.23140	100.30000	-.06540	.19600	8.10000	-2.29960
3.806	6.132	4.00620	6.07860	1676.70000	737.61130	682.65430	100.30000	-.06550	.19610	8.10000	-2.29960
	GRADIENT	.01970	1.01190	.06360	.18073	-.02605	.01299	.00001	-.00001	-.00000	.00000

IA156A, AEDC PWT 16T-470, O T S W/SILTS (R8NMC8) (10 MAY 80)

REFERENCE DATA

SREF = 2690.0000 SQ.FT. XMRP = 976.0000 IN. XT
LREF = 1290.3000 INCHES YMRP = .0000 IN. YT
BREF = 1290.3000 INCHES ZMRP = 400.0000 IN. ZT
SCALE = .0200

PARAMETRIC DATA

IB-ELV = 9.000 OB-ELV = -2.000
BDFLAP = .000 SPDBRK = .000
RUDDER = .000 SILTS = 1.000
MACH = 1.250 RN/L = 3.500
IB-AIL = 1.000

RUN NO. 1382/ 0 RN/L = 3.50 GRADIENT INTERVAL = -5.00/ 5.00

ALPHAO	BETAO	ALFAOU	BETAOU	PT	P	Q	TT	AFA	BFA	DEINLR	DEONLR
-8.176	-5.848	-7.98990	-5.96300	1673.00000	644.25780	706.77730	100.60000	-.07030	.20660	8.10000	-2.29960
-8.215	-3.768	-8.05590	-3.91650	1683.20000	649.25660	710.85380	100.60000	-.07030	.20640	8.10000	-2.29960
-8.127	.191	-8.05640	-.01550	1680.39990	648.77710	709.54030	100.70000	-.07020	.20630	8.10000	-2.29960
-7.940	4.342	-7.98130	4.12780	1671.09990	644.86400	705.68380	100.60000	-.07030	.20640	8.10000	-2.29960
-7.947	6.219	-8.02490	6.01500	1681.09990	648.67380	709.91750	100.70000	-.07030	.20640	8.10000	-2.29960
	GRADIENT	.00927	.99200	-1.49815	-.54491	-.63988	-.00020	-.00000	.00000	.00000	.00000

RUN NO. 1383/ 0 RN/L = 3.50 GRADIENT INTERVAL = -5.00/ 5.00

ALPHAO	BETAO	ALFAOU	BETAOU	PT	P	Q	TT	AFA	BFA	DEINLR	DEONLR
-6.194	-5.956	-5.99380	-6.04040	1680.89990	649.76610	709.57673	100.70000	-.07020	.20620	8.10000	-2.29960
-6.125	-4.037	-5.94280	-4.15720	1677.39990	647.90210	708.21140	100.70000	-.07020	.20630	8.10000	-2.29960
-6.197	.120	-6.12290	-.08510	1677.70000	646.90820	708.58060	100.70000	-.07030	.20650	8.10000	-2.29960
-5.982	4.247	-6.04780	4.03870	1683.09990	647.76930	711.12600	100.70000	-.07040	.20670	8.10000	-2.29960
-5.952	6.225	-6.05740	6.03460	1669.09990	643.28880	705.01420	100.70000	-.07030	.20650	8.10000	-2.29960
	GRADIENT	-.01271	.98933	.68730	-.01630	.35150	-.00000	-.00002	.00005	.00000	-.00000

RUN NO. 1384/ 0 RN/L = 3.50 GRADIENT INTERVAL = -5.00/ 5.00

ALPHAO	BETAO	ALFAOU	BETAOU	PT	P	Q	TT	AFA	BFA	DEINLR	DEONLR
-4.069	-6.097	-3.85490	-6.13510	1679.20000	649.18120	708.84330	100.70000	-.07020	.20620	8.10000	-2.29960
-4.303	-3.963	-4.10290	-4.04870	1678.29980	649.18630	708.38550	100.60000	-.07010	.20610	8.10000	-2.29960
-4.181	.374	-4.11940	.16480	1683.39990	649.85060	710.82540	100.70000	-.07020	.20630	8.10000	-2.29960
-3.748	4.293	-3.85960	4.10670	1680.00000	649.67240	709.14090	100.70000	-.07020	.20610	8.10000	-2.29960
-3.839	6.122	-3.97990	5.95570	1674.29980	647.22610	706.78810	100.60000	-.07020	.20620	8.10000	-2.29960
	GRADIENT	.02888	.98748	.22307	.06054	.09982	.01231	-.00001	.00000	-.00000	.00000

RUN NO. 1385/ 0 RN/L = 3.50 GRADIENT INTERVAL = -5.00/ 5.00

ALPHAO	BETAO	ALFAOU	BETAOU	PT	P	Q	TT	AFA	BFA	DEINLR	DEONLR
-.490	-6.970	-.28360	-6.89990	1679.70000	649.07890	709.11910	100.60000	-.07020	.20620	8.10000	-2.29960
-.462	-4.814	-.25630	-4.74350	1678.70000	648.58890	708.71970	100.50000	-.07020	.20620	8.10000	-2.29960
-.423	-.532	-.21640	-.46200	1681.29980	649.16850	709.91060	100.60000	-.07020	.20630	8.10000	-2.29960
-.391	3.727	-.18430	3.79750	1685.00000	648.65060	711.89620	100.50000	-.07040	.20670	8.10000	-2.29960
-.403	5.885	-.19640	5.95520	1671.70000	644.36450	706.09640	100.50000	-.07030	.20650	8.10000	-2.29960
	GRADIENT	.00843	1.00002	.73752	.00733	.37184	.00002	-.00002	.00006	-.00000	-.00000

IA156A, AEDC PWT 16T-470, O T S W/SILTS (R8NMC8) (10 MAY 80)

REFERENCE DATA

SREF = 2690.0000 SQ.FT. XMRP = 976.0000 IN. XT
LREF = 1290.3000 INCHES YMRP = .0000 IN. YT
BREF = 1290.3000 INCHES ZMRP = 400.0000 IN. ZT
SCALE = .0200

PARAMETRIC DATA

IB-ELV = 9.000 OB-ELV = -2.000
BDFLAP = .000 SPDBRK = .000
RUDDER = .000 SILTS = 1.000
MACH = 1.250 RN/L = 3.500
IB-AIL = 1.000

RUN NO. 1386/ 0 RN/L = 3.50 GRADIENT INTERVAL = -5.00/ 5.00

ALPHAO	BETAO	ALFAOU	BETAOU	PT	P	Q	TT	AFA	BFA	DEINLR	DEONLR
4.166	-5.804	4.03490	-5.97800	1682.50000	651.44310	710.01860	100.70000	-.07010	.20600	8.10000	-2.29960
3.973	-3.652	3.87780	-3.84830	1679.89990	648.48240	709.35130	100.60000	-.07020	.20630	8.10000	-2.29960
3.766	.204	3.83540	-.00170	1682.09990	652.23930	709.63840	100.80000	-.07000	.20580	8.10000	-2.29960
3.832	4.085	4.02700	3.98780	1683.59990	649.75020	710.94870	100.70000	-.07020	.20640	8.10000	-2.29960
3.784	6.139	3.99500	6.08390	1673.79980	643.85620	707.26860	100.60000	-.07040	.20680	8.10000	-2.29960
	GRADIENT	.01932	1.01282	.47812	.16301	.20660	.01288	-.00000	.00001	-.00000	-.00000

IA156A, AEDC PWT 16T-470, O T S W/SILTS (R8NMC9) (10 MAY 80)

REFERENCE DATA

SREF = 2690.0000 SQ.FT. XMRP = 976.0000 IN. XT
LREF = 1290.3000 INCHES YMRP = .0000 IN. YT
BREF = 1290.3000 INCHES ZMRP = 400.0000 IN. ZT
SCALE = .0200

PARAMETRIC DATA

IB-ELV = 9.000 OB-ELV = -2.000
BDFLAP = .000 SPDBRK = .000
RUDDER = .000 SILTS = 1.000
MACH = 1.400 RN/L = 3.500
IB-AIL = 1.000

RUN NO. 1387/ 0 RN/L = 2.99 GRADIENT INTERVAL = -5.00/ 5.00

ALPHAO	BETAO	ALFAOU	BETAOU	PT	P	Q	TT	AFA	BFA	DEINLR	DEONLR
-8.086	-5.933	-7.86310	-6.06530	1458.70000	458.76050	628.89380	100.10000	-.08520	.24530	8.10000	-2.29960
-8.203	-3.723	-8.01250	-3.90040	1446.00000	453.97070	623.43430	100.10000	-.08540	.24570	8.10000	-2.29960
-8.137	.221	-8.05080	-.02390	1453.39990	457.20120	626.60670	100.40000	-.08510	.24520	8.10000	-2.29960
-7.965	4.466	-8.01310	4.21140	1452.29980	456.81030	626.13330	100.30000	-.08510	.24520	8.10000	-2.29960
-7.938	6.284	-8.02770	6.04020	1452.50000	457.20480	626.21240	100.30000	-.08500	.24500	8.10000	-2.29960
	GRADIENT	.00004	.99058	.75617	.34115	.32395	.02381	.00004	-.00006	.00000	.00000

RUN NO. 1388/ 0 RN/L = 3.00 GRADIENT INTERVAL = -5.00/ 5.00

ALPHAO	BETAO	ALFAOU	BETAOU	PT	P	Q	TT	AFA	BFA	DEINLR	DEONLR
-6.256	-5.968	-6.01610	-6.06900	1465.89990	460.31200	632.01250	100.40000	-.08530	.24570	8.10000	-2.29960
-6.152	-3.991	-5.93470	-4.13470	1467.70000	460.40330	632.79740	100.50000	-.08550	.24590	8.10000	-2.29960
-6.217	.147	-6.12640	-.09800	1457.39990	456.78960	628.36330	100.50000	-.08560	.24620	8.10000	-2.29960
-5.972	4.285	-6.04680	4.03580	1474.50000	462.54930	635.72880	100.60000	-.08550	.24590	8.10000	-2.29960
-5.942	6.276	-6.06530	6.04740	1445.89990	454.16870	623.38670	100.40000	-.08530	.24560	8.10000	-2.29960
	GRADIENT	-.01354	.98722	.82172	.25933	.35423	.01208	.00000	-.00000	-.00000	.00000

IA156A, AEDC PWT 16T-470, O T S W/SILTS (R8NMC9) (10 MAY 80)

REFERENCE DATA

SREF = 2690.0000 SQ.FT. XMRP = 976.0000 IN. XT
LREF = 1290.3000 INCHES YMRP = .0000 IN. YT
BREF = 1290.3000 INCHES ZMRP = 400.0000 IN. ZT
SCALE = .0200

PARAMETRIC DATA

IB-ELV = 9.000 OB-ELV = -2.000
BDFLAP = .000 SPDBRK = .000
RUDDER = .000 SILTS = 1.000
MACH = 1.400 RN/L = 3.500
IB-AIL = 1.000

RUN NO. 1389/ 0 RN/L = 3.01 GRADIENT INTERVAL = -5.00/ 5.00

ALPHAO	BETAO	ALFAOU	BETAOU	PT	P	Q	TT	AFA	BFA	DEINLR	DEONLR
-4.254	-6.082	-3.99850	-6.13140	1470.50000	461.28130	634.00460	100.60000	-.08550	.24590	8.10000	-2.29960
-4.339	-3.952	-4.09950	-4.05420	1473.39990	461.86230	635.26070	100.40000	-.08560	.24610	8.10000	-2.29960
-4.212	.410	-4.13580	.15990	1467.79980	459.41500	632.85790	100.30000	-.08580	.24660	8.10000	-2.29960
-3.745	4.326	-3.87550	4.09990	1448.79980	453.46530	624.66600	100.40000	-.08580	.24660	8.10000	-2.29960
-3.801	6.150	-3.96750	5.94920	1467.79980	459.90890	632.84960	100.40000	-.08560	.24630	8.10000	-2.29960
	GRADIENT	.02639	.98469	-2.93989	-1.00582	-1.26610	-.00043	-.00002	.00006	.00000	.00000

RUN NO. 1390/ 0 RN/L = 3.00 GRADIENT INTERVAL = -5.00/ 5.00

ALPHAO	BETAO	ALFAOU	BETAOU	PT	P	Q	TT	AFA	BFA	DEINLR	DEONLR
-.511	-6.961	-.26470	-6.87480	1454.50000	455.51710	627.11910	100.40000	-.08570	.24640	8.10000	-2.29960
-.481	-4.830	-.23430	-4.74400	1458.00000	456.58960	628.62870	100.30000	-.08570	.24640	8.10000	-2.29960
-.440	-.450	-.19350	-.36410	1462.39990	457.85620	630.52760	100.40000	-.08580	.24650	8.10000	-2.29960
-.421	3.647	-.17570	3.73270	1463.79980	459.82640	631.10350	100.40000	-.08530	.24560	8.10000	-2.29960
-.428	5.812	-.18230	5.89750	1451.50000	456.02320	625.79930	100.40000	-.08530	.24550	8.10000	-2.29960
	GRADIENT	.00694	.99995	.68785	.38077	.29357	.01192	.00005	-.00009	.00000	.00000

RUN NO. 1391/ 0 RN/L = 3.01 GRADIENT INTERVAL = -5.00/ 5.00

ALPHAO	BETAO	ALFAOU	BETAOU	PT	P	Q	TT	AFA	BFA	DEINLR	DEONLR
4.141	-5.774	3.98490	-5.98010	1470.50000	463.75120	633.95290	100.60000	-.08480	.24450	8.10000	-2.29960
4.008	-3.662	3.89550	-3.89700	1463.70000	459.33300	631.06930	100.50000	-.08540	.24580	8.10000	-2.29960
3.738	.170	3.81850	-.07640	1457.70000	458.86330	628.45390	100.50000	-.08500	.24500	8.10000	-2.29960
3.780	4.063	4.01210	3.94760	1472.00000	463.34990	634.61940	100.50000	-.08500	.24500	8.10000	-2.29960
3.742	6.124	3.99290	6.05990	1450.29980	456.62080	625.26170	100.20000	-.08500	.24500	8.10000	-2.29960
	GRADIENT	.01518	1.01546	1.08113	.52160	.46246	-.00000	.00005	-.00010	.00000	-.00000

IA156A, AEDC PWT 16T-470, O T S W/SILTS (R8NMDO) (10 MAY 80)

REFERENCE DATA

SREF = 2690.0000 SQ.FT. XMRP = 976.0000 IN. XT
LREF = 1290.3000 INCHES YMRP = .0000 IN. YT
BREF = 1290.3000 INCHES ZMRP = 400.0000 IN. ZT
SCALE = .0200

PARAMETRIC DATA

IB-ELV = 9.000 OB-ELV = -2.000
BDFLAP = .000 SPDBRK = .000
RUDDER = .000 SILTS = 1.000
MACH = 1.550 RN/L = 3.200
IB-AIL = 1.000

RUN NO. 1392/ 0 RN/L = 3.00 GRADIENT INTERVAL = -5.00/ 5.00

ALPHAO	BETAO	ALFAOU	BETAOU	PT	P	Q	TT	AFA	BFA	DEINLR	DEONLR
-8.172	-5.914	-7.84970	-6.06550	1500.59990	380.33540	639.19950	99.50000	-.14840	.32360	8.10000	-2.29960
-8.299	-3.678	-8.01620	-3.89470	1507.39990	381.69260	642.02250	99.60000	-.14890	.32410	8.10000	-2.29960
-8.186	.311	-8.03610	-.01290	1506.39990	381.00270	641.50830	99.50000	-.14960	.32460	8.10000	-2.29960
-7.997	4.570	-8.02830	4.21470	1501.89990	380.32930	639.68580	99.40000	-.14890	.32400	8.10000	-2.29960
-7.945	6.384	-8.03600	6.04060	1510.09990	383.16820	643.33110	99.50000	-.14780	.32310	8.10000	-2.29960
	GRADIENT	-.00143	.98334	-.67123	-.16521	-.28494	-.02424	.00000	-.00001	-.00000	.00000

RUN NO. 1393/ 0 RN/L = 3.00 GRADIENT INTERVAL = -5.00/ 5.00

ALPHAO	BETAO	ALFAOU	BETAOU	PT	P	Q	TT	AFA	BFA	DEINLR	DEONLR
-6.325	-5.946	-5.98430	-6.05180	1502.39990	380.12870	639.83280	99.50000	-.14940	.32440	8.10000	-2.29960
-6.247	-3.971	-5.93110	-4.13760	1503.59990	380.42070	640.34160	99.50000	-.14940	.32440	8.10000	-2.29960
-6.268	.230	-6.11150	-.09250	1506.20000	380.50760	641.33280	99.50000	-.15020	.32510	8.10000	-2.29960
-5.981	4.383	-6.05030	4.03260	1504.59990	380.71360	640.77540	99.50000	-.14930	.32440	8.10000	-2.29960
-5.920	6.369	-6.05780	6.04010	1500.89990	379.83790	639.21190	99.40000	-.14920	.32430	8.10000	-2.29960
	GRADIENT	-.01432	.97799	.12065	.03503	.05228	-.00000	.00001	.00000	-.00000	.00000

RUN NO. 1394/ 0 RN/L = 3.00 GRADIENT INTERVAL = -5.00/ 5.00

ALPHAO	BETAO	ALFAOU	BETAOU	PT	P	Q	TT	AFA	BFA	DEINLR	DEONLR
-4.203	-6.098	-3.84700	-6.12600	1506.00000	381.10380	641.37890	99.60000	-.14930	.32440	8.10000	-2.29960
-4.445	-3.939	-4.10370	-4.04680	1507.70000	380.89750	641.97360	99.80000	-.15020	.32510	8.10000	-2.29960
-4.279	.498	-4.14190	.16660	1506.59990	380.20800	641.42110	99.50000	-.15070	.32560	8.10000	-2.29960
-3.713	4.427	-3.86260	4.10240	1505.39990	380.61060	641.05420	99.60000	-.14980	.32480	8.10000	-2.29960
-3.801	6.270	-4.00110	5.97370	1504.20000	380.41770	640.56570	99.50000	-.14960	.32460	8.10000	-2.29960
	GRADIENT	.02802	.97354	-.27435	-.03689	-.11021	-.02484	.00004	-.00003	.00000	.00000

RUN NO. 1395/ 0 RN/L = 3.00 GRADIENT INTERVAL = -5.00/ 5.00

ALPHAO	BETAO	ALFAOU	BETAOU	PT	P	Q	TT	AFA	BFA	DEINLR	DEONLR
-.596	-7.027	-.27140	-6.87770	1503.29980	380.12430	640.16890	99.50000	-.14970	.32470	8.10000	-2.29960
-.568	-4.900	-.24270	-4.74960	1502.70000	379.33330	639.78320	99.50000	-.15060	.32550	8.10000	-2.29960
-.532	-.554	-.20710	-.40460	1503.20000	380.12480	640.13160	99.60000	-.14960	.32470	8.10000	-2.29960
-.520	3.579	-.19530	3.72880	1502.89990	379.72920	639.93900	99.50000	-.15010	.32510	8.10000	-2.29960
-.527	5.752	-.20280	5.90150	1502.79980	380.42430	640.04250	99.50000	-.14910	.32420	8.10000	-2.29960
	GRADIENT	.00561	.99998	.02436	.04785	.01891	.00020	.00006	-.00005	.00000	-.00000

IA156A, AEDC PWT 16T-470, O T S W/SILTS (R8NMD0) (10 MAY 80)

REFERENCE DATA

SREF = 2690.0000 SQ.FT. XMRP = 976.0000 IN. XT
LREF = 1290.3000 INCHES YMRP = .0000 IN. YT
BREF = 1290.3000 INCHES ZMRP = 400.0000 IN. ZT
SCALE = .0200

PARAMETRIC DATA

IB-ELV = 9.000 OB-ELV = -2.000
BDFLAP = .000 SPDBRK = .000
RUDDER = .000 SILTS = 1.000
MACH = 1.550 RN/L = 3.200
IB-AIL = 1.000

RUN NO. 1396/ 0 RN/L = 3.00 GRADIENT INTERVAL = -5.00/ 5.00

ALPHAO	BETAO	ALFAOU	BETAOU	PT	P	Q	TT	AFA	BFA	DEINLR	DEONLR
4.170	-5.671	3.98390	-5.97540	1499.70000	379.84380	638.76320	99.50000	-.14880	.32390	8.10000	-2.29960
3.997	-3.548	3.87390	-3.88290	1499.20000	379.34990	638.47610	99.50000	-.14930	.32440	8.10000	-2.29960
3.686	.252	3.83000	-.07680	1502.20000	379.23630	639.57640	99.50000	-.15060	.32550	8.10000	-2.29960
3.676	4.057	4.00910	3.92900	1509.29980	381.98140	642.79300	99.70000	-.14920	.32430	8.10000	-2.29960
3.653	6.138	4.00740	6.08400	1518.50000	383.32710	646.51120	99.70000	-.15060	.32550	8.10000	-2.29960
	GRADIENT	.01779	1.02727	1.32825	.34614	.56774	.02631	.00001	-.00001	-.00000	.00000

IA156A, AEDC PWT 16T-470, O T S W/SILTS (R8NMD1) (10 MAY 80)

REFERENCE DATA

SREF = 2690.0000 SQ.FT. XMRP = 976.0000 IN. XT
LREF = 1290.3000 INCHES YMRP = .0000 IN. YT
BREF = 1290.3000 INCHES ZMRP = 400.0000 IN. ZT
SCALE = .0200

PARAMETRIC DATA

IB-ELV = 8.000 OB-ELV = -2.000
BDFLAP = .000 SPDBRK = .000
RUDDER = .000 SILTS = 1.000
MACH = 1.150 RN/L = 3.500

RUN NO. 1399/ 0 RN/L = 3.50 GRADIENT INTERVAL = -5.00/ 5.00

ALPHAO	BETAO	ALFAOU	BETAOU	PT	P	Q	TT	AFA	BFA	DEINLR	DEONLR
-8.190	-5.889	-8.01480	-5.99930	1681.70000	738.96700	684.97560	98.90000	-.06550	.19620	8.10000	-2.29960
-8.181	-3.823	-8.03000	-3.96460	1675.00000	741.11520	680.51000	99.80000	-.06530	.19590	8.10000	-2.29960
-8.123	.267	-8.05990	.06900	1676.70000	736.41500	683.05880	99.50000	-.06550	.19620	8.10000	-2.29960
-7.970	4.264	-8.00830	4.06080	1680.29980	739.47680	684.02440	99.40000	-.06550	.19610	8.10000	-2.29960
-7.952	6.212	-8.02620	6.01880	1683.79980	738.45170	686.31570	99.20000	-.06560	.19620	8.10000	-2.29960
	GRADIENT	.00264	.99231	.65439	-.20624	.43528	-.04955	-.00002	.00002	-.00000	.00000

RUN NO. 1400/ 0 RN/L = 3.51 GRADIENT INTERVAL = -5.00/ 5.00

ALPHAO	BETAO	ALFAOU	BETAOU	PT	P	Q	TT	AFA	BFA	DEINLR	DEONLR
-6.165	-5.957	-5.97520	-6.03940	1683.39990	738.55470	686.05910	99.70000	-.06560	.19620	8.10000	-2.29960
-6.115	-4.038	-5.94310	-4.15340	1683.29980	738.25630	686.10380	99.90000	-.06560	.19620	8.10000	-2.29960
-6.201	.111	-6.13270	-.08430	1677.59990	736.30810	683.59500	99.80000	-.06560	.19620	8.10000	-2.29960
-6.017	4.233	-6.08000	4.03530	1680.89990	737.97660	684.86550	99.50000	-.06550	.19620	8.10000	-2.29960
-5.795	6.354	-5.90070	6.17590	1679.00000	734.40280	685.01030	98.90000	-.06570	.19640	8.10000	-2.29960
	GRADIENT	-.01658	.99009	-.29138	-.03430	-.15023	-.04834	.00001	.00000	-.00000	-.00000

IA156A, AEDC PWT 16T-470, O T S W/SILTS (R8NMD1) (10 MAY 80)

REFERENCE DATA

SREF = 2690.0000 SQ.FT. XMRP = 976.0000 IN. XT
LREF = 1290.3000 INCHES YMRP = .0000 IN. YT
BREF = 1290.3000 INCHES ZMRP = 400.0000 IN. ZT
SCALE = .0200

PARAMETRIC DATA

IB-ELV = 8.000 OB-ELV = -2.000
BDFLAP = .000 SPDBRK = .000
RUDDER = .000 SILTS = 1.000
MACH = 1.150 RN/L = 3.500

RUN NO. 1401/ 0 RN/L = 3.50 GRADIENT INTERVAL = -5.00/ 5.00

ALPHAO	BETAO	ALFAOU	BETAOU	PT	P	Q	TT	AFA	BFA	DEINLR	DEONLR
-4.100	-6.094	-3.89640	-6.13320	1679.70000	738.38500	684.06080	99.70000	-.06550	.19610	8.10000	-2.29960
-4.292	-3.967	-4.10220	-4.04950	1676.09990	736.91820	682.55540	99.50000	-.06560	.19610	8.10000	-2.29960
-4.195	.370	-4.13810	.17140	1680.59990	736.68290	685.13400	99.60000	-.06570	.19630	8.10000	-2.29960
-3.741	4.274	-3.84820	4.09730	1684.59990	739.24290	686.49370	99.50000	-.06560	.19620	8.10000	-2.29960
-3.865	6.134	-3.99960	5.97690	1677.09990	735.41480	683.61790	99.50000	-.06560	.19620	8.10000	-2.29960
	GRADIENT	.03010	.98831	1.03157	.27590	.48005	.00043	-.00000	.00001	.00000	.00000

RUN NO. 1402/ 0 RN/L = 3.51 GRADIENT INTERVAL = -5.00/ 5.00

ALPHAO	BETAO	ALFAOU	BETAOU	PT	P	Q	TT	AFA	BFA	DEINLR	DEONLR
-.474	-6.986	-.27770	-6.92040	1682.70000	737.96220	685.86960	99.50000	-.06560	.19620	8.10000	-2.29960
-.444	-4.835	-.24830	-4.76920	1676.59990	736.81450	682.86840	99.30000	-.06550	.19620	8.10000	-2.29960
-.409	-.483	-.21230	-.41680	1680.59990	735.58620	685.50150	99.50000	-.06570	.19630	8.10000	-2.29960
-.382	3.676	-.18570	3.74140	1682.29980	737.76590	685.71360	99.50000	-.06560	.19620	8.10000	-2.29960
-.383	5.859	-.18730	5.92490	1683.20000	739.55320	685.61130	99.50000	-.06560	.19620	8.10000	-2.29960
	GRADIENT	.00736	1.00001	.67169	.10873	.33642	.02367	-.00001	.00000	-.00000	-.00000

RUN NO. 1403/ 0 RN/L = 3.50 GRADIENT INTERVAL = -5.00/ 5.00

ALPHAO	BETAO	ALFAOU	BETAOU	PT	P	Q	TT	AFA	BFA	DEINLR	DEONLR
4.108	-5.814	3.98220	-5.97790	1680.59990	738.67680	684.46240	99.50000	-.06550	.19610	8.10000	-2.29960
3.968	-3.697	3.87680	-3.88310	1679.89990	737.08720	684.60960	99.50000	-.06560	.19620	8.10000	-2.29960
3.794	.117	3.85650	-.08050	1679.50000	735.39580	684.95560	99.50000	-.06570	.19630	8.10000	-2.29960
3.852	4.044	4.03620	3.95020	1678.09990	737.79960	683.36910	99.50000	-.06560	.19610	8.10000	-2.29960
3.804	6.132	4.00350	6.07890	1682.70000	741.25220	684.75710	99.50000	-.06550	.19610	8.10000	-2.29960
	GRADIENT	.02071	1.01192	-.23312	.09458	-.16144	-.00000	.00001	-.00001	-.00000	.00000

IA156A, AEDC PWT 16T-470, O T S W/SILTS (R8NMD2) (10 MAY 80)

REFERENCE DATA

SREF = 2690.0000 SQ.FT. XMRP = 976.0000 IN. XT
LREF = 1290.3000 INCHES YMRP = .0000 IN. YT
BREF = 1290.3000 INCHES ZMRP = 400.0000 IN. ZT
SCALE = .0200

PARAMETRIC DATA

IB-ELV = 8.000 OB-ELV = -2.000
BDFLAP = .000 SPDBRK = .000
RUDDER = .000 SILTS = 1.000
MACH = 1.250 RN/L = 3.500

RUN NO. 1404/ 0 RN/L = 3.50 GRADIENT INTERVAL = -5.00/ 5.00

ALPHAO	BETAO	ALFAOU	BETAOU	PT	P	Q	TT	AFA	BFA	DEINLR	DEONLR
-8.058	-5.883	-7.87160	-5.99580	1675.29980	645.43460	707.68600	99.70000	-.07030	.20660	8.10000	-2.29960
-8.212	-3.720	-8.05320	-3.86970	1678.50000	645.31670	709.32930	99.80000	-.07040	.20680	8.10000	-2.29960
-8.130	.187	-8.05880	-.01920	1681.39990	647.18410	710.39260	99.70000	-.07030	.20670	8.10000	-2.29960
-7.955	4.413	-7.99760	4.19870	1680.20000	647.48880	709.71970	99.70000	-.07030	.20650	8.10000	-2.29960
-7.957	6.242	-8.03500	6.03780	1668.00000	643.39430	704.43430	99.70000	-.07030	.20640	8.10000	-2.29960
	GRADIENT	.00694	.99220	.20235	.26444	.04520	-.01213	.00001	-.00004	-.00000	.00000

RUN NO. 1405/ 0 RN/L = 3.49 GRADIENT INTERVAL = -5.00/ 5.00

ALPHAO	BETAO	ALFAOU	BETAOU	PT	P	Q	TT	AFA	BFA	DEINLR	DEONLR
-6.183	-5.954	-5.98210	-6.03850	1679.89990	650.06980	709.00240	99.80000	-.07010	.20610	8.10000	-2.29960
-6.129	-4.043	-5.94730	-4.16270	1674.39990	647.42380	706.79540	99.70000	-.07020	.20610	8.10000	-2.29960
-6.212	.135	-6.13880	-.07010	1676.50000	647.51050	707.84110	99.60000	-.07020	.20630	8.10000	-2.29960
-5.997	4.255	-6.06230	4.04700	1662.09990	639.36210	702.32320	99.60000	-.07040	.20680	8.10000	-2.29960
-5.829	6.348	-5.93820	6.15950	1673.00000	643.76170	706.88450	99.60000	-.07040	.20670	8.10000	-2.29960
	GRADIENT	-.01393	.98929	-1.47759	-.96916	-.53709	-.01208	-.00002	.00008	.00000	.00000

RUN NO. 1406/ 0 RN/L = 3.50 GRADIENT INTERVAL = -5.00/ 5.00

ALPHAO	BETAO	ALFAOU	BETAOU	PT	P	Q	TT	AFA	BFA	DEINLR	DEONLR
-4.212	-6.077	-3.99860	-6.11970	1683.89990	650.34350	710.97090	99.80000	-.07020	.20630	8.10000	-2.29960
-4.313	-3.978	-4.11260	-4.06350	1682.00000	649.56130	710.17940	99.60000	-.07020	.20630	8.10000	-2.29960
-4.191	.370	-4.12900	.16100	1671.29980	645.06130	705.74190	99.60000	-.07020	.20640	8.10000	-2.29960
-3.749	4.283	-3.86070	4.09570	1669.50000	644.87350	704.87110	99.70000	-.07020	.20630	8.10000	-2.29960
-3.836	6.115	-3.97720	5.94860	1677.70000	647.70190	708.40720	99.70000	-.07020	.20630	8.10000	-2.29960
	GRADIENT	.02986	.98738	-1.53063	-.57609	-.64955	.01188	.00000	.00000	-.00000	.00000

RUN NO. 1407/ 0 RN/L = 3.51 GRADIENT INTERVAL = -5.00/ 5.00

ALPHAO	BETAO	ALFAOU	BETAOU	PT	P	Q	TT	AFA	BFA	DEINLR	DEONLR
-.491	-6.993	-.28520	-6.92240	1683.20000	650.74460	710.52810	99.80000	-.07010	.20620	8.10000	-2.29960
-.471	-4.853	-.26510	-4.78310	1688.09990	652.50120	712.62670	99.70000	-.07020	.20620	8.10000	-2.29960
-.424	-.443	-.21770	-.37250	1675.29980	646.72410	707.40500	99.60000	-.07020	.20630	8.10000	-2.29960
-.392	3.681	-.18520	3.75100	1679.59990	646.30200	709.67310	99.70000	-.07040	.20670	8.10000	-2.29960
-.405	5.873	-.19940	5.94310	1676.70000	648.70000	707.68090	99.70000	-.07020	.20610	8.10000	-2.29960
	GRADIENT	.00938	1.00002	-1.01810	-.73318	-.35580	-.00026	-.00002	.00006	-.00000	.00000

IA156A, AEDC PWT 16T-470, O T S W/SILTS (R8NMD2) (10 MAY 80)

REFERENCE DATA

SREF = 2690.0000 SQ.FT. XMRP = 976.0000 IN. XT
LREF = 1290.3000 INCHES YMRP = .0000 IN. YT
BREF = 1290.3000 INCHES ZMRP = 400.0000 IN. ZT
SCALE = .0200

PARAMETRIC DATA

IB-ELV = 8.000 OB-ELV = -2.000
BDFLAP = .000 SPDBRK = .000
RUDDER = .000 SILTS = 1.000
MACH = 1.250 RN/L = 3.500

RUN NO. 1408/ 0 RN/L = 3.50 GRADIENT INTERVAL = -5.00/ 5.00

ALPHAO	BETAO	ALFAOU	BETAOU	PT	P	Q	TT	AFA	BFA	DEINLR	DEONLR
4.160	-5.799	4.02840	-5.97310	1675.09990	644.24540	707.84180	99.70000	-.07040	.20680	8.10000	-2.29960
3.982	-3.661	3.88750	-3.85760	1672.70000	646.04490	706.23630	99.60000	-.07020	.20630	8.10000	-2.29960
3.771	.206	3.84100	.00000	1679.59990	647.78980	709.35060	99.70000	-.07030	.20640	8.10000	-2.29960
3.835	4.085	4.02970	3.98770	1673.50000	650.30640	705.69650	99.60000	-.07000	.20560	8.10000	-2.29960
3.786	6.141	3.99710	6.08640	1678.20000	646.70700	708.87740	99.70000	-.07030	.20650	8.10000	-2.29960
	GRADIENT	.01837	1.01284	.10254	.55021	-.07008	-.00001	.00003	-.00009	-.00000	.00000

IA156A, AEDC PWT 16T-470, O T S W/SILTS (R8NMD3) (10 MAY 80)

REFERENCE DATA

SREF = 2690.0000 SQ.FT. XMRP = 976.0000 IN. XT
LREF = 1290.3000 INCHES YMRP = .0000 IN. YT
BREF = 1290.3000 INCHES ZMRP = 400.0000 IN. ZT
SCALE = .0200

PARAMETRIC DATA

IB-ELV = 8.000 OB-ELV = -2.000
BDFLAP = .000 SPDBRK = .000
RUDDER = .000 SILTS = 1.000
MACH = 1.400 RN/L = 3.500

RUN NO. 1409/ 0 RN/L = 3.00 GRADIENT INTERVAL = -5.00/ 5.00

ALPHAO	BETAO	ALFAOU	BETAOU	PT	P	Q	TT	AFA	BFA	DEINLR	DEONLR
-8.086	-5.930	-7.86150	-6.06370	1450.70000	453.85280	625.48830	99.30000	-.08580	.24670	8.10000	-2.29960
-8.220	-3.728	-8.03010	-3.90490	1456.79980	457.28610	628.09230	99.60000	-.08540	.24580	8.10000	-2.29960
-8.142	.230	-8.05530	-.01670	1463.70000	458.04860	631.09160	99.80000	-.08580	.24660	8.10000	-2.29960
-7.943	4.451	-7.99100	4.19500	1441.79980	452.50560	621.62620	99.70000	-.08540	.24580	8.10000	-2.29960
-7.969	6.303	-8.05890	6.05920	1467.20000	460.89940	632.56930	100.00000	-.08530	.24560	8.10000	-2.29960
	GRADIENT	.00490	.99048	-1.87131	-.59261	-.80674	.01183	.00000	-.00000	-.00000	.00000

RUN NO. 1410/ 0 RN/L = 2.99 GRADIENT INTERVAL = -5.00/ 5.00

ALPHAO	BETAO	ALFAOU	BETAOU	PT	P	Q	TT	AFA	BFA	DEINLR	DEONLR
-6.257	-5.962	-6.01810	-6.06270	1462.29980	460.22780	630.43900	100.10000	-.08500	.24510	8.10000	-2.29960
-6.163	-4.003	-5.94700	-4.14600	1457.79980	458.96170	628.49560	100.00000	-.08500	.24500	8.10000	-2.29960
-6.200	.152	-6.11030	-.09240	1451.20000	455.62920	625.67580	100.10000	-.08540	.24570	8.10000	-2.29960
-5.976	4.285	-6.05170	4.03500	1456.79980	455.70530	628.11940	100.00000	-.08590	.24670	8.10000	-2.29960
-5.941	6.262	-6.06390	6.03220	1447.09990	453.27440	623.92720	99.90000	-.08570	.24630	8.10000	-2.29960
	GRADIENT	-.01265	.98704	-.12190	-.39324	-.04593	.00002	-.00011	.00021	-.00000	-.00000

IA156A, AEDC PWT 16T-470, O T S W/SILTS (R8NMD3) (10 MAY 80)

REFERENCE DATA

SREF = 2690.0000 SQ.FT. XMRP = 976.0000 IN. XT
LREF = 1290.3000 INCHES YMRP = .0000 IN. YT
BREF = 1290.3000 INCHES ZMRP = 400.0000 IN. ZT
SCALE = .0200

PARAMETRIC DATA

IB-ELV = 8.000 OB-ELV = -2.000
BDFLAP = .000 SPDBRK = .000
RUDDER = .000 SILTS = 1.000
MACH = 1.400 RN/L = 3.500

RUN NO. 1411/ 0 RN/L = 2.99 GRADIENT INTERVAL = -5.00/ 5.00

ALPHAO	BETAO	ALFAOU	BETAOU	PT	P	Q	TT	AFA	BFA	DEINLR	DEONLR
-4.076	-6.072	-3.82110	-6.11620	1450.39990	456.81810	625.30100	100.10000	-.08490	.24490	8.10000	-2.29960
-4.353	-3.952	-4.11380	-4.05400	1458.29980	458.26810	628.72900	100.10000	-.08520	.24550	8.10000	-2.29960
-4.200	.417	-4.12460	.16730	1455.79980	456.49980	627.66970	100.10000	-.08550	.24610	8.10000	-2.29960
-3.744	4.333	-3.87500	4.10730	1460.50000	458.06150	629.69460	100.20000	-.08550	.24600	8.10000	-2.29960
-3.816	6.148	-3.98170	5.94850	1455.79980	457.68530	627.64700	100.00000	-.08520	.24540	8.10000	-2.29960
	GRADIENT	.02822	.98477	.24951	-.03222	.10967	.01194	-.00004	.00006	.00000	-.00000

RUN NO. 1412/ 0 RN/L = 2.99 GRADIENT INTERVAL = -5.00/ 5.00

ALPHAO	BETAO	ALFAOU	BETAOU	PT	P	Q	TT	AFA	BFA	DEINLR	DEONLR
-.514	-7.000	-.26910	-6.91530	1447.29980	455.15090	623.97950	100.10000	-.08520	.24530	8.10000	-2.29960
-.487	-4.816	-.24150	-4.73100	1456.09990	457.38770	627.78420	100.20000	-.08530	.24560	8.10000	-2.29960
-.442	-.499	-.19650	-.41350	1463.89990	459.52980	631.15310	100.30000	-.08540	.24580	8.10000	-2.29960
-.424	3.637	-.17730	3.72280	1458.50000	456.09350	628.85450	100.30000	-.08590	.24680	8.10000	-2.29960
-.432	5.812	-.18610	5.89670	1445.29980	454.07230	623.12620	100.20000	-.08530	.24550	8.10000	-2.29960
	GRADIENT	.00762	1.00009	.29507	-.14836	.13140	.01191	-.00007	.00014	-.00000	.00000

RUN NO. 1413/ 0 RN/L = 2.99 GRADIENT INTERVAL = -5.00/ 5.00

ALPHAO	BETAO	ALFAOU	BETAOU	PT	P	Q	TT	AFA	BFA	DEINLR	DEONLR
4.136	-5.765	3.97900	-5.97250	1455.79980	456.89500	627.66260	100.40000	-.08540	.24580	8.10000	-2.29960
3.993	-3.651	3.89010	-3.88540	1456.59990	457.68210	627.99710	100.30000	-.08530	.24550	8.10000	-2.29960
3.759	.176	3.83950	-.07080	1459.00000	459.35210	629.01270	100.40000	-.08500	.24500	8.10000	-2.29960
3.790	4.045	4.02310	3.92830	1458.79980	457.08030	628.96950	100.20000	-.08560	.24630	8.10000	-2.29960
3.737	6.120	3.98890	6.05520	1456.79980	457.58250	628.08640	100.40000	-.08530	.24560	8.10000	-2.29960
	GRADIENT	.01863	1.01529	.28522	-.07913	.12609	-.01306	-.00004	.00010	.00000	.00000

IA156A, AEDC PWT 16T-470, O T S W/SILTS (R8NMD4) (10 MAY 80)

REFERENCE DATA

SREF = 2690.0000 SQ.FT. XMRP = 976.0000 IN. XT
LREF = 1290.3000 INCHES YMRP = .0000 IN. YT
BREF = 1290.3000 INCHES ZMRP = 400.0000 IN. ZT
SCALE = .0200

PARAMETRIC DATA

IB-ELV = 8.000 OB-ELV = -2.000
BDFLAP = .000 SPDBRK = .000
RUDDER = .000 SILTS = 1.000
MACH = 1.550 RN/L = 3.200

RUN NO. 1414/ 0 RN/L = 3.00 GRADIENT INTERVAL = -5.00/ 5.00

ALPHAO	BETAO	ALFAOU	BETAOU	PT	P	Q	TT	AFA	BFA	DEINLR	DEONLR
-8.173	-5.906	-7.84860	-6.05760	1498.39990	378.46040	637.99580	100.20000	-.15030	.32520	8.10000	-2.29960
-8.310	-3.678	-8.02480	-3.89570	1502.09990	379.23680	639.53910	100.10000	-.15050	.32540	8.10000	-2.29960
-8.207	.302	-8.05600	-.02230	1509.59990	381.88060	642.88500	100.10000	-.14940	.32450	8.10000	-2.29960
-7.990	4.583	-8.02250	4.22850	1512.70000	383.55300	644.38380	100.00000	-.14830	.32340	8.10000	-2.29960
-7.954	6.387	-8.04460	6.04320	1498.29980	380.14790	638.29880	99.90000	-.14790	.32310	8.10000	-2.29960
	GRADIENT	.00037	.98352	1.27607	.52080	.58346	-.01225	.00027	-.00024	-.00000	.00000

RUN NO. 1415/ 0 RN/L = 3.00 GRADIENT INTERVAL = -5.00/ 5.00

ALPHAO	BETAO	ALFAOU	BETAOU	PT	P	Q	TT	AFA	BFA	DEINLR	DEONLR
-6.355	-5.955	-6.01500	-6.06170	1504.29980	380.91330	640.70340	99.80000	-.14890	.32410	8.10000	-2.29960
-6.251	-3.965	-5.93560	-4.13230	1505.29980	380.80960	641.05710	99.80000	-.14950	.32450	8.10000	-2.29960
-6.276	.218	-6.11990	-.10310	1504.79980	380.61350	640.83010	99.80000	-.14950	.32460	8.10000	-2.29960
-5.974	4.381	-6.04380	4.03030	1506.20000	380.80520	641.39330	99.80000	-.14970	.32480	8.10000	-2.29960
-5.924	6.362	-6.06240	6.03370	1503.50000	380.91720	640.40410	99.80000	-.14860	.32380	8.10000	-2.29960
	GRADIENT	-.01299	.97798	.10767	-.00057	.04020	.00000	-.00002	.00004	.00000	.00000

RUN NO. 1416/ 0 RN/L = 3.00 GRADIENT INTERVAL = -5.00/ 5.00

ALPHAO	BETAO	ALFAOU	BETAOU	PT	P	Q	TT	AFA	BFA	DEINLR	DEONLR
-4.193	-6.090	-3.83570	-6.11700	1510.79980	381.77590	643.31300	99.90000	-.15000	.32500	8.10000	-2.29960
-4.448	-3.945	-4.10520	-4.05300	1505.70000	379.81520	641.00390	99.90000	-.15100	.32580	8.10000	-2.29960
-4.285	.497	-4.14720	.16600	1502.70000	379.53170	639.82370	99.80000	-.15030	.32530	8.10000	-2.29960
-3.718	4.433	-3.86770	4.10600	1508.59990	380.49610	642.22830	99.80000	-.15100	.32590	8.10000	-2.29960
-3.794	6.252	-3.99440	5.95660	1499.79980	379.34690	638.70040	99.80000	-.14950	.32460	8.10000	-2.29960
	GRADIENT	.02754	.97332	.32432	.07817	.13735	-.01216	.00000	.00001	-.00000	-.00000

RUN NO. 1417/ 0 RN/L = 3.00 GRADIENT INTERVAL = -5.00/ 5.00

ALPHAO	BETAO	ALFAOU	BETAOU	PT	P	Q	TT	AFA	BFA	DEINLR	DEONLR
-.600	-7.077	-.27520	-6.92740	1509.39990	381.48490	642.72970	99.90000	-.14990	.32490	8.10000	-2.29960
-.575	-4.886	-.25030	-4.73670	1495.20000	378.47560	636.80050	99.80000	-.14920	.32420	8.10000	-2.29960
-.535	-.570	-.20980	-.41840	1501.29980	378.74440	639.13890	99.80000	-.15090	.32580	8.10000	-2.29960
-.523	3.572	-.19690	3.72310	1503.89990	379.42680	640.25120	99.80000	-.15080	.32580	8.10000	-2.29960
-.529	5.754	-.20540	5.90310	1505.20000	381.30620	641.11990	99.80000	-.14870	.32390	8.10000	-2.29960
	GRADIENT	.00634	1.00023	1.03131	.11211	.40892	.00000	-.00019	.00019	.00000	-.00000

IA156A, AEDC PWT 16T-470, O T S W/SILTS (R8NMD4) (10 MAY 80)

REFERENCE DATA

SREF = 2690.0000 SQ.FT. XMRP = 976.0000 IN. XT
LREF = 1290.3000 INCHES YMRP = .0000 IN. YT
BREF = 1290.3000 INCHES ZMRP = 400.0000 IN. ZT
SCALE = .0200

PARAMETRIC DATA

IB-ELV = 8.000 OB-ELV = -2.000
BDFLAP = .000 SPDBRK = .000
RUDDER = .000 SILTS = 1.000
MACH = 1.550 RN/L = 3.200

RUN NO. 1418/ 0 RN/L = 3.00 GRADIENT INTERVAL = -5.00/ 5.00

ALPHAO	BETAO	ALFAOU	BETAOU	PT	P	Q	TT	AFA	BFA	DEINLR	DEONLR
4.174	-5.670	3.98780	-5.97420	1501.29980	380.03470	639.40160	99.80000	-.14910	.32420	8.10000	-2.29960
3.981	-3.537	3.85800	-3.87170	1504.70000	380.81230	640.83280	100.00000	-.14920	.32430	8.10000	-2.29960
3.707	.254	3.84960	-.07390	1507.00000	381.09910	641.75270	99.90000	-.14960	.32470	8.10000	-2.29960
3.701	4.070	4.03330	3.94150	1502.89990	380.52320	640.09990	99.80000	-.14900	.32410	8.10000	-2.29960
3.631	6.106	3.98460	6.05150	1504.79980	380.51420	640.80980	99.80000	-.14970	.32470	8.10000	-2.29960
	GRADIENT	.02307	1.02718	-.23759	-.03813	-.09673	-.02629	.00003	-.00003	.00000	-.00000

IA156A, AEDC PWT 16T-470, O T S W/SILTS (R8NMD5) (10 MAY 80)

REFERENCE DATA

SREF = 2690.0000 SQ.FT. XMRP = 976.0000 IN. XT
LREF = 1290.3000 INCHES YMRP = .0000 IN. YT
BREF = 1290.3000 INCHES ZMRP = 400.0000 IN. ZT
SCALE = .0200

PARAMETRIC DATA

IB-ELV = 8.000 OB-ELV = -2.000
BDFLAP = .000 SPDBRK = .000
RUDDER = .000 SILTS = 1.000
MACH = 1.550 RN/L = 3.200

RUN NO. 1419/ 0 RN/L = 3.00 GRADIENT INTERVAL = -5.00/ 5.00

ALPHAO	BETAO	ALFAOU	BETAOU	PT	P	Q	TT	AFA	BFA	DEINLR	DEONLR
-8.336	-5.820	-8.01770	-5.97730	1505.39990	382.19820	641.37300	99.80000	-.14760	.32280	8.10000	-2.29960
-8.337	-3.710	-8.05230	-3.92640	1509.50000	381.78200	642.82740	99.80000	-.14960	.32460	8.10000	-2.29960
-8.188	.540	-8.04680	.21080	1498.89990	378.55740	638.20290	99.80000	-.15030	.32530	8.10000	-2.29960
-7.992	4.474	-8.01950	4.11810	1504.89990	381.10910	640.96750	99.80000	-.14890	.32400	8.10000	-2.29960
-7.957	6.376	-8.04720	6.03250	1504.59990	382.00340	641.03390	99.80000	-.14760	.32280	8.10000	-2.29960
	GRADIENT	.00397	.98289	-.58798	-.09128	-.23880	-.00000	.00008	-.00007	.00000	.00000

IA156A, AEDC PWT 16T-470, O T S W/SILTS (R8NMD6) (10 MAY 80)

REFERENCE DATA

SREF = 2690.0000 SQ.FT. XMRP = 976.0000 IN. XT
LREF = 1290.3000 INCHES YMRP = .0000 IN. YT
BREF = 1290.3000 INCHES ZMRP = 400.0000 IN. ZT
SCALE = .0200

PARAMETRIC DATA

IB-ELV = 10.000 OB-ELV = -2.000
BDFLAP = .000 SPDBRK = .000
RUDDER = .000 SILTS = 1.000
MACH = 1.150 RN/L = 3.500

RUN NO. 1432/ 0 RN/L = 3.50 GRADIENT INTERVAL = -5.00/ 5.00

ALPHAO	BETAO	ALFAOU	BETAOU	PT	P	Q	TT	AFA	BFA	DEINLR	DEONLR
-8.038	-5.907	-7.86200	-6.01480	1679.89990	738.38330	684.17240	99.90000	-.06550	.19610	10.02000	-2.29960
-8.227	-3.794	-8.07660	-3.93640	1681.09990	739.57010	684.43800	100.00000	-.06550	.19610	10.02000	-2.29960
-8.153	.354	-8.09150	.15630	1679.50000	738.08740	684.05000	100.00000	-.06560	.19620	10.02000	-2.29960
-7.957	4.313	-7.99690	4.10970	1679.89990	739.18090	683.90230	100.00000	-.06550	.19610	10.02000	-2.29960
-7.971	6.241	-8.04620	6.04780	1680.89990	738.87380	684.56250	99.90000	-.06550	.19610	10.02000	-2.29960
	GRADIENT	.00972	.99247	-.14991	-.05047	-.06630	-.00000	-.00000	.00000	-.00000	.00000

RUN NO. 1433/ 0 RN/L = 3.50 GRADIENT INTERVAL = -5.00/ 5.00

ALPHAO	BETAO	ALFAOU	BETAOU	PT	P	Q	TT	AFA	BFA	DEINLR	DEONLR
-6.187	-5.974	-5.99700	-6.05630	1681.20000	739.07080	684.66260	100.00000	-.06550	.19610	10.02000	-2.29960
-6.100	-4.044	-5.92860	-4.15880	1681.29980	740.86470	684.10940	99.80000	-.06540	.19600	10.02000	-2.29960
-6.207	.105	-6.13870	-.09000	1680.29980	738.28050	684.42940	99.80000	-.06550	.19620	10.02000	-2.29960
-6.019	4.250	-6.08230	4.05310	1680.89990	738.67430	684.62990	100.00000	-.06550	.19620	10.02000	-2.29960
-5.950	6.204	-6.05060	6.02340	1682.09990	740.06050	684.82790	99.90000	-.06550	.19610	10.02000	-2.29960
	GRADIENT	-.01854	.99011	-.04825	-.26415	.06276	.02411	-.00001	.00002	-.00000	-.00000

RUN NO. 1434/ 0 RN/L = 3.50 GRADIENT INTERVAL = -5.00/ 5.00

ALPHAO	BETAO	ALFAOU	BETAOU	PT	P	Q	TT	AFA	BFA	DEINLR	DEONLR
-4.105	-6.088	-3.90240	-6.12700	1681.09990	738.37350	684.84250	100.10000	-.06550	.19620	10.02000	-2.29960
-4.305	-3.979	-4.11600	-4.06160	1680.79980	739.67210	684.23630	100.10000	-.06550	.19610	10.02000	-2.29960
-4.201	.370	-4.14400	.17130	1680.39990	739.27660	684.14790	100.10000	-.06550	.19610	10.02000	-2.29960
-3.751	4.297	-3.85820	4.12040	1680.20000	738.28130	684.37380	100.10000	-.06550	.19620	10.02000	-2.29960
-3.849	6.117	-3.98350	5.95940	1679.89990	738.58280	684.10500	100.10000	-.06550	.19610	10.02000	-2.29960
	GRADIENT	.03048	.98842	-.07283	-.16669	.01596	-.00000	.00000	.00001	-.00000	.00000

RUN NO. 1435/ 0 RN/L = 3.50 GRADIENT INTERVAL = -5.00/ 5.00

ALPHAO	BETAO	ALFAOU	BETAOU	PT	P	Q	TT	AFA	BFA	DEINLR	DEONLR
-.465	-7.059	-.26920	-6.99320	1680.29980	739.87570	683.88890	100.00000	-.06550	.19610	10.02000	-2.29960
-.441	-4.843	-.24450	-4.77750	1680.29980	739.27730	684.09200	100.10000	-.06550	.19610	10.02000	-2.29960
-.409	-.455	-.21240	-.38950	1681.00000	738.97270	684.58450	100.10000	-.06560	.19610	10.02000	-2.29960
-.377	3.670	-.18070	3.73540	1681.20000	739.27000	684.59520	100.20000	-.06550	.19610	10.02000	-2.29960
-.377	5.843	-.18100	5.90900	1681.20000	738.27320	684.93210	100.10000	-.06560	.19620	10.02000	-2.29960
	GRADIENT	.00749	1.00001	.10632	-.00158	.05968	.01162	-.00000	.00000	.00000	-.00000

IA156A, AEDC PWT 16T-470, O T S W/SILTS (R8NMD6) (10 MAY 80)

REFERENCE DATA

SREF = 2690.0000 SQ.FT. XMRP = 976.0000 IN. XT
LREF = 1290.3000 INCHES YMRP = .0000 IN. YT
BREF = 1290.3000 INCHES ZMRP = 400.0000 IN. ZT
SCALE = .0200

PARAMETRIC DATA

IB-ELV = 10.000 OB-ELV = -2.000
BDFLAP = .000 SPDBRK = .000
RUDDER = .000 SILTS = 1.000
MACH = 1.150 RN/L = 3.500

RUN NO. 1436/ 0 RN/L = 3.50 GRADIENT INTERVAL = -5.00/ 5.00

ALPHAO	BETAO	ALFAOU	BETAOU	PT	P	Q	TT	AFA	BFA	DEINLR	DEONLR
3.986	-5.876	3.85660	-6.03730	1680.59990	738.87620	684.39480	100.20000	-.06550	.19610	10.02000	-2.29960
4.011	-3.800	3.91750	-3.98480	1680.50000	739.87400	684.00100	100.10000	-.06550	.19610	10.02000	-2.29960
3.888	.183	3.95350	-.01310	1681.00000	739.47120	684.41580	100.10000	-.06550	.19610	10.02000	-2.29960
3.833	3.991	4.01640	3.89600	1680.89990	739.37230	684.39380	100.20000	-.06550	.19610	10.02000	-2.29960
3.791	6.099	3.99090	6.04560	1681.09990	738.87210	684.67410	100.10000	-.06560	.19620	10.02000	-2.29960
	GRADIENT	.01267	1.01139	.05190	-.06468	.05083	.01274	-.00000	.00000	.00000	-.00000

IA156A, AEDC PWT 16T-470, O T S W/SILTS (R8NMD7) (10 MAY 80)

REFERENCE DATA

SREF = 2690.0000 SQ.FT. XMRP = 976.0000 IN. XT
LREF = 1290.3000 INCHES YMRP = .0000 IN. YT
BREF = 1290.3000 INCHES ZMRP = 400.0000 IN. ZT
SCALE = .0200

PARAMETRIC DATA

IB-ELV = 10.000 OB-ELV = -2.000
BDFLAP = .000 SPDBRK = .000
RUDDER = .000 SILTS = 1.000
MACH = 1.250 RN/L = 3.500

RUN NO. 1437/ 0 RN/L = 3.50 GRADIENT INTERVAL = -5.00/ 5.00

ALPHAO	BETAO	ALFAOU	BETAOU	PT	P	Q	TT	AFA	BFA	DEINLR	DEONLR
-8.206	-5.869	-8.02010	-5.98380	1681.20000	648.57400	709.98970	100.70000	-.07030	.20640	10.02000	-2.29960
-8.220	-3.786	-8.06060	-3.93480	1681.89990	649.85940	710.06320	100.70000	-.07020	.20620	10.02000	-2.29960
-8.123	.183	-8.05240	-.02310	1677.20000	647.40720	708.21850	100.60000	-.07020	.20630	10.02000	-2.29960
-7.968	4.350	-8.00900	4.13580	1679.89990	648.38330	709.37300	100.60000	-.07020	.20640	10.02000	-2.29960
-7.961	6.231	-8.03850	6.02710	1679.29980	648.68430	709.00290	100.60000	-.07020	.20630	10.02000	-2.29960
	GRADIENT	.00638	.99200	-.23841	-.17798	-.08183	-.01219	.00000	.00002	-.00000	-.00000

RUN NO. 1438/ 0 RN/L = 3.50 GRADIENT INTERVAL = -5.00/ 5.00

ALPHAO	BETAO	ALFAOU	BETAOU	PT	P	Q	TT	AFA	BFA	DEINLR	DEONLR
-6.190	-5.956	-5.98900	-6.04140	1679.89990	647.88720	709.48120	100.70000	-.07030	.20640	10.02000	-2.29960
-6.130	-4.040	-5.94820	-4.16050	1678.09990	648.09640	708.52370	100.70000	-.07020	.20630	10.02000	-2.29960
-6.210	.123	-6.13630	-.08220	1681.39990	648.57280	710.09130	100.40000	-.07020	.20640	10.02000	-2.29960
-5.993	4.254	-6.05860	4.04590	1678.20000	648.29420	708.53100	100.50000	-.07020	.20630	10.02000	-2.29960
-5.966	6.246	-6.07130	6.05510	1679.00000	649.08300	708.76340	100.60000	-.07020	.20620	10.02000	-2.29960
	GRADIENT	-.01335	.98939	.01310	.02397	.00138	-.02418	.00000	.00000	.00000	.00000

IA156A, AEDC PWT 16T-470, O T S W/SILTS (R8NMD7) (10 MAY 80)

REFERENCE DATA

SREF = 2690.0000 SQ.FT. XMRP = 976.0000 IN. XT
LREF = 1290.3000 INCHES YMRP = .0000 IN. YT
BREF = 1290.3000 INCHES ZMRP = 400.0000 IN. ZT
SCALE = .0200

PARAMETRIC DATA

IB-ELV = 10.000 OB-ELV = -2.000
BDFLAP = .000 SPDBRK = .000
RUDDER = .000 SILTS = 1.000
MACH = 1.250 RN/L = 3.500

RUN NO. 1439/ 0 RN/L = 3.50 GRADIENT INTERVAL = -5.00/ 5.00

ALPHAO	BETAO	ALFAOU	BETAOU	PT	P	Q	TT	AFA	BFA	DEINLR	DEONLR
-4.099	-6.084	-3.88500	-6.12360	1680.59990	649.76810	709.42410	100.60000	-.07020	.20620	10.02000	-2.29960
-4.302	-3.965	-4.10180	-4.05090	1681.50000	649.16750	710.01220	100.50000	-.07020	.20630	10.02000	-2.29960
-4.205	.380	-4.14390	.17150	1681.89990	650.45460	709.93240	100.50000	-.07020	.20610	10.02000	-2.29960
-3.753	4.301	-3.86480	4.11390	1681.89990	648.96660	710.25880	100.40000	-.07020	.20640	10.02000	-2.29960
-3.869	6.159	-4.01010	5.99220	1678.79980	647.69530	708.96610	100.30000	-.07030	.20640	10.02000	-2.29960
	GRADIENT	.02798	.98748	.04917	-.01854	.02897	-.01188	.00000	.00001	.00000	.00000

RUN NO. 1440/ 0 RN/L = 3.50 GRADIENT INTERVAL = -5.00/ 5.00

ALPHAO	BETAO	ALFAOU	BETAOU	PT	P	Q	TT	AFA	BFA	DEINLR	DEONLR
-.487	-7.095	-.28100	-7.02480	1678.79980	648.19140	708.85770	100.60000	-.07020	.20630	10.02000	-2.29960
-.460	-4.831	-.25370	-4.76110	1680.09990	648.97730	709.34420	100.60000	-.07020	.20630	10.02000	-2.29960
-.418	-.484	-.21110	-.41410	1680.50000	648.57810	709.63430	100.50000	-.07020	.20640	10.02000	-2.29960
-.391	3.669	-.18470	3.73940	1681.00000	649.17040	709.75830	100.60000	-.07020	.20630	10.02000	-2.29960
-.399	5.848	-.19260	5.91810	1680.09990	647.88620	709.58280	100.70000	-.07020	.20650	10.02000	-2.29960
	GRADIENT	.00813	1.00000	.10578	.02183	.04885	-.00018	-.00000	.00000	-.00000	-.00000

RUN NO. 1441/ 0 RN/L = 3.50 GRADIENT INTERVAL = -5.00/ 5.00

ALPHAO	BETAO	ALFAOU	BETAOU	PT	P	Q	TT	AFA	BFA	DEINLR	DEONLR
3.994	-5.859	3.85880	-6.03000	1679.09990	649.08250	708.81420	100.60000	-.07020	.20620	10.02000	-2.29960
4.009	-3.789	3.91170	-3.98380	1680.20000	648.67900	709.46020	100.60000	-.07020	.20630	10.02000	-2.29960
3.884	.192	3.95300	-.01440	1682.59990	648.86330	710.63570	100.70000	-.07020	.20650	10.02000	-2.29960
3.812	3.991	4.00660	3.89240	1680.00000	649.17630	709.25000	100.60000	-.07020	.20620	10.02000	-2.29960
3.781	6.115	3.99200	6.06030	1679.70000	648.78130	709.18460	100.60000	-.07020	.20630	10.02000	-2.29960
	GRADIENT	.01218	1.01219	-.02069	.06378	-.02444	.00020	.00000	-.00001	-.00000	-.00000

IA156A, AEDC PWT 16T-470, O T S W/SILTS (R8NMD8) (10 MAY 80)

REFERENCE DATA

SREF = 2690.0000 SQ.FT. XMRP = 976.0000 IN. XT
LREF = 1290.3000 INCHES YMRP = .0000 IN. YT
BREF = 1290.3000 INCHES ZMRP = 400.0000 IN. ZT
SCALE = .0200

PARAMETRIC DATA

IB-ELV = 10.000 OB-ELV = -2.000
BDFLAP = .000 SPDBRK = .000
RUDDER = .000 SILTS = 1.000
MACH = 1.400 RN/L = 3.500

RUN NO. 1442/ 0 RN/L = 3.00 GRADIENT INTERVAL = -5.00/ 5.00

ALPHAO	BETAO	ALFAOU	BETAOU	PT	P	Q	TT	AFA	BFA	DEINLR	DEONLR
-8.250	-5.867	-8.02920	-6.00260	1460.50000	459.83980	629.65890	100.40000	-.08500	.24500	10.02000	-2.29960
-8.255	-3.766	-8.06430	-3.94260	1458.70000	458.16750	628.90580	100.60000	-.08530	.24560	10.02000	-2.29960
-8.143	.441	-8.06350	.19210	1457.09990	456.29690	628.24070	100.50000	-.08570	.24640	10.02000	-2.29960
-7.980	4.369	-8.02500	4.11230	1461.39990	457.86040	630.09110	100.40000	-.08560	.24630	10.02000	-2.29960
-7.971	6.295	-8.06090	6.05090	1462.50000	458.84380	630.55400	100.40000	-.08550	.24590	10.02000	-2.29960
	GRADIENT	.00478	.99008	.32350	-.04254	.14213	-.02458	-.00004	.00009	.00000	-.00000

RUN NO. 1443/ 0 RN/L = 3.00 GRADIENT INTERVAL = -5.00/ 5.00

ALPHAO	BETAO	ALFAOU	BETAOU	PT	P	Q	TT	AFA	BFA	DEINLR	DEONLR
-6.241	-5.956	-6.00200	-6.05670	1463.29980	459.92720	630.88280	100.50000	-.08530	.24540	10.02000	-2.29960
-6.180	-4.023	-5.96230	-4.16590	1457.29980	457.28420	628.31080	100.50000	-.08540	.24590	10.02000	-2.29960
-6.214	.163	-6.12390	-.08250	1462.50000	457.85570	630.57190	100.40000	-.08580	.24650	10.02000	-2.29960
-6.015	4.296	-6.08940	4.04560	1457.29980	456.19730	628.32960	100.40000	-.08580	.24650	10.02000	-2.29960
-5.715	6.376	-5.84460	6.14970	1461.70000	458.25420	630.21510	100.50000	-.08560	.24610	10.02000	-2.29960
	GRADIENT	-.01533	.98712	.00262	-.13010	.00339	-.01205	-.00005	.00007	.00000	-.00000

RUN NO. 1444/ 0 RN/L = 3.00 GRADIENT INTERVAL = -5.00/ 5.00

ALPHAO	BETAO	ALFAOU	BETAOU	PT	P	Q	TT	AFA	BFA	DEINLR	DEONLR
-4.136	-6.072	-3.87970	-6.11830	1457.29980	457.58060	628.30520	100.40000	-.08530	.24570	10.02000	-2.29960
-4.348	-3.959	-4.10860	-4.06150	1458.00000	456.98490	628.62180	100.50000	-.08560	.24620	10.02000	-2.29960
-4.211	.422	-4.13520	.17210	1460.39990	456.97510	629.66920	100.50000	-.08580	.24660	10.02000	-2.29960
-3.760	4.343	-3.89050	4.11750	1461.09990	457.56490	629.96510	100.40000	-.08570	.24640	10.02000	-2.29960
-3.823	6.170	-3.98930	5.96950	1461.89990	458.84620	630.29170	100.50000	-.08540	.24580	10.02000	-2.29960
	GRADIENT	.02564	.98477	.37677	.06845	.16330	-.01181	-.00001	.00003	-.00000	.00000

RUN NO. 1445/ 0 RN/L = 3.00 GRADIENT INTERVAL = -5.00/ 5.00

ALPHAO	BETAO	ALFAOU	BETAOU	PT	P	Q	TT	AFA	BFA	DEINLR	DEONLR
-.508	-6.973	-.26230	-6.88700	1459.20000	457.47390	629.13720	100.50000	-.08560	.24610	10.02000	-2.29960
-.475	-4.828	-.22890	-4.74230	1459.29980	456.97950	629.18950	100.60000	-.08570	.24640	10.02000	-2.29960
-.432	-.493	-.18610	-.40710	1461.09990	457.66380	629.96340	100.50000	-.08570	.24630	10.02000	-2.29960
-.415	3.629	-.16940	3.71390	1455.79980	457.68530	627.64700	100.50000	-.08520	.24540	10.02000	-2.29960
-.423	5.806	-.17730	5.89070	1458.79980	458.76000	628.93770	100.40000	-.08520	.24530	10.02000	-2.29960
	GRADIENT	.00706	.99998	-.40673	.08411	-.17929	-.01192	.00006	-.00012	.00000	.00000

IA156A, AEDC PWT 16T-470, O T S W/SILTS (R8NMD8) (10 MAY 80)

REFERENCE DATA

SREF = 2690.0000 SQ.FT. XMRP = 976.0000 IN. XT
LREF = 1290.3000 INCHES YMRP = .0000 IN. YT
BREF = 1290.3000 INCHES ZMRP = 400.0000 IN. ZT
SCALE = .0200

PARAMETRIC DATA

IB-ELV = 10.000 OB-ELV = -2.000
BDFLAP = .000 SPDBRK = .000
RUDDER = .000 SILTS = 1.000
MACH = 1.400 RN/L = 3.500

RUN NO. 1446/ 0 RN/L = 3.00 GRADIENT INTERVAL = -5.00/ 5.00

ALPHAO	BETAO	ALFAOU	BETAOU	PT	P	Q	TT	AFA	BFA	DEINLR	DEONLR
4.022	-5.839	3.86150	-6.04300	1462.00000	459.73510	630.31790	100.60000	-.08510	.24530	10.02000	-2.29960
4.000	-3.722	3.88540	-3.95470	1459.00000	459.25320	629.01490	100.60000	-.08500	.24500	10.02000	-2.29960
3.874	.227	3.95830	-.01980	1462.70000	458.84300	630.64140	100.60000	-.08550	.24590	10.02000	-2.29960
3.761	4.009	3.99290	3.89200	1457.59990	457.97440	628.42870	100.60000	-.08530	.24550	10.02000	-2.29960
3.736	6.121	3.98830	6.05650	1460.70000	458.15940	629.78000	100.60000	-.08550	.24600	10.02000	-2.29960
	GRADIENT	.01394	1.01487	-.17290	-.16497	-.07225	-.00000	-.00004	.00007	-.00000	.00000

IA156A, AEDC PWT 16T-470, O T S W/SILTS (R8NMD9) (10 MAY 80)

REFERENCE DATA

SREF = 2690.0000 SQ.FT. XMRP = 976.0000 IN. XT
LREF = 1290.3000 INCHES YMRP = .0000 IN. YT
BREF = 1290.3000 INCHES ZMRP = 400.0000 IN. ZT
SCALE = .0200

PARAMETRIC DATA

IB-ELV = 10.000 OB-ELV = -2.000
BDFLAP = .000 SPDBRK = .000
RUDDER = .000 SILTS = 1.000
MACH = 1.550 RN/L = 3.200

RUN NO. 1447/ 0 RN/L = 3.00 GRADIENT INTERVAL = -5.00/ 5.00

ALPHAO	BETAO	ALFAOU	BETAOU	PT	P	Q	TT	AFA	BFA	DEINLR	DEONLR
-8.341	-5.829	-8.02270	-5.98670	1507.89990	382.68240	642.40820	100.40000	-.14780	.32300	10.02000	-2.29960
-8.341	-3.718	-8.05860	-3.93350	1507.29980	382.28830	642.10450	100.40000	-.14810	.32330	10.02000	-2.29960
-8.201	.507	-8.06010	.17950	1506.00000	381.60010	641.47880	100.40000	-.14860	.32370	10.02000	-2.29960
-7.997	4.485	-8.02550	4.13090	1510.39990	383.06760	643.42360	100.30000	-.14810	.32330	10.02000	-2.29960
-7.962	6.384	-8.05260	6.04050	1506.09990	382.49240	641.69460	100.10000	-.14740	.32270	10.02000	-2.29960
	GRADIENT	.00399	.98302	.37088	.09235	.15764	-.01207	-.00000	.00000	-.00000	.00000

RUN NO. 1448/ 0 RN/L = 3.00 GRADIENT INTERVAL = -5.00/ 5.00

ALPHAO	BETAO	ALFAOU	BETAOU	PT	P	Q	TT	AFA	BFA	DEINLR	DEONLR
-6.352	-5.969	-6.01280	-6.07520	1509.09990	382.67680	642.85770	100.10000	-.14820	.32340	10.02000	-2.29960
-6.254	-3.972	-5.93940	-4.13920	1510.79980	382.56960	643.47390	100.10000	-.14890	.32400	10.02000	-2.29960
-6.281	.234	-6.12500	-.08780	1507.00000	381.00000	641.73240	100.10000	-.14980	.32480	10.02000	-2.29960
-6.011	4.388	-6.07970	4.03840	1509.09990	382.08150	642.73800	100.10000	-.14900	.32410	10.02000	-2.29960
-5.699	6.475	-5.84630	6.15050	1504.20000	381.11230	640.70580	100.10000	-.14860	.32380	10.02000	-2.29960
	GRADIENT	-.01684	.97808	-.20479	-.05904	-.08870	-.00000	-.00001	.00001	-.00000	.00000

IA156A, AEDC PWT 16T-470, O T S W/SILTS (R8NMD9) (10 MAY 80)

REFERENCE DATA

SREF = 2690.0000 SQ.FT. XMRP = 976.0000 IN. XT
LREF = 1290.3000 INCHES YMRP = .0000 IN. YT
BREF = 1290.3000 INCHES ZMRP = 400.0000 IN. ZT
SCALE = .0200

PARAMETRIC DATA

IB-ELV = 10.000 OB-ELV = -2.000
BDFLAP = .000 SPDBRK = .000
RUDDER = .000 SILTS = 1.000
MACH = 1.550 RN/L = 3.200

RUN NO. 1449/ 0 RN/L = 3.00 GRADIENT INTERVAL = -5.00/ 5.00

ALPHAO	BETAO	ALFAOU	BETAOU	PT	P	Q	TT	AFA	BFA	DEINLR	DEONLR
-4.424	-6.026	-4.06890	-6.06450	1502.50000	380.42580	639.93020	100.00000	-.14900	.32410	10.02000	-2.29960
-4.414	-3.939	-4.07140	-4.04550	1506.09990	380.30960	641.25490	100.10000	-.15050	.32540	10.02000	-2.29960
-4.287	.512	-4.15050	.18080	1505.50000	380.11400	640.99050	100.00000	-.15050	.32540	10.02000	-2.29960
-3.740	4.453	-3.88880	4.12710	1508.20000	380.99410	642.18070	99.80000	-.15020	.32520	10.02000	-2.29960
-3.791	6.260	-3.99170	5.96430	1505.50000	380.90770	641.15190	99.80000	-.14940	.32440	10.02000	-2.29960
	GRADIENT	.02091	.97339	.24199	.07887	.10668	-.03547	.00003	-.00002	-.00000	-.00000

RUN NO. 1450/ 0 RN/L = 3.00 GRADIENT INTERVAL = -5.00/ 5.00

ALPHAO	BETAO	ALFAOU	BETAOU	PT	P	Q	TT	AFA	BFA	DEINLR	DEONLR
-.592	-7.039	-.26780	-6.88950	1507.20000	381.39600	641.88770	99.80000	-.14930	.32440	10.02000	-2.29960
-.569	-4.878	-.24370	-4.72700	1507.00000	380.30520	641.59080	100.00000	-.15070	.32560	10.02000	-2.29960
-.531	-.603	-.20620	-.45370	1506.89990	381.19870	641.73540	99.90000	-.14950	.32450	10.02000	-2.29960
-.520	3.619	-.19360	3.77010	1507.29980	380.00610	641.64140	100.00000	-.15130	.32610	10.02000	-2.29960
-.523	5.747	-.19830	5.89640	1505.59990	380.80810	641.16920	100.00000	-.14960	.32460	10.02000	-2.29960
	GRADIENT	.00590	1.00009	.03517	-.03470	.00601	-.00005	-.00007	.00006	.00000	.00000

RUN NO. 1451/ 0 RN/L = 3.00 GRADIENT INTERVAL = -5.00/ 5.00

ALPHAO	BETAO	ALFAOU	BETAOU	PT	P	Q	TT	AFA	BFA	DEINLR	DEONLR
4.053	-5.739	3.86050	-6.04160	1505.39990	379.91600	640.91240	100.00000	-.15070	.32560	10.02000	-2.29960
4.017	-3.533	3.89480	-3.86890	1501.00000	379.44070	639.16890	100.00000	-.14980	.32480	10.02000	-2.29960
3.669	.302	3.81610	-.02510	1503.00000	379.53030	639.93580	99.40000	-.15040	.32540	10.02000	-2.29960
3.689	4.100	4.02330	3.97280	1506.70000	380.80300	641.58010	99.50000	-.14990	.32490	10.02000	-2.29960
3.621	6.097	3.97460	6.04240	1504.20000	380.12010	640.50510	99.40000	-.15000	.32500	10.02000	-2.29960
	GRADIENT	.01678	1.02742	.74649	.17825	.31574	-.06566	-.00001	.00001	-.00000	-.00000

IA156A, AEDC PWT 16T-470, O T S W/SILTS (R8NMEO) (10 MAY 80)

REFERENCE DATA

SREF = 2690.0000 SQ.FT. XMRP = 976.0000 IN. XT
LREF = 1290.3000 INCHES YMRP = .0000 IN. YT
BREF = 1290.3000 INCHES ZMRP = 400.0000 IN. ZT
SCALE = .0200

PARAMETRIC DATA

IB-ELV = 10.000 OB-ELV = -7.000
BDFLAP = .000 SPDBRK = .000
RUDDER = .000 SILTS = 1.000
MACH = 1.400 RN/L = 3.500

RUN NO. 1456/ 0 RN/L = 3.00 GRADIENT INTERVAL = -5.00/ 5.00

ALPHAO	BETAO	ALFAOU	BETAOU	PT	P	Q	TT	AFA	BFA	DEINLR	DEONLR
-8.242	-5.844	-8.02180	-5.98020	1456.39990	458.67090	627.88870	101.20000	-.08500	.24490	10.02000	-6.87960
-8.256	-3.761	-8.06550	-3.93750	1460.70000	458.55470	629.77270	100.70000	-.08540	.24570	10.02000	-6.87960
-8.139	.453	-8.06000	.20510	1462.09990	458.45020	630.38650	100.60000	-.08560	.24610	10.02000	-6.87960
-7.986	4.388	-8.03130	4.13140	1458.59990	456.98240	628.88380	100.40000	-.08560	.24630	10.02000	-6.87960
-7.939	6.270	-8.02870	6.02590	1459.00000	458.46290	629.03130	100.30000	-.08520	.24550	10.02000	-6.87960
	GRADIENT	.00416	.99011	-.25074	-.19096	-.10607	-.03666	-.00002	.00007	-.00000	-.00000

RUN NO. 1457/ 0 RN/L = 3.00 GRADIENT INTERVAL = -5.00/ 5.00

ALPHAO	BETAO	ALFAOU	BETAOU	PT	P	Q	TT	AFA	BFA	DEINLR	DEONLR
-6.246	-5.958	-6.00740	-6.05890	1456.79980	458.47170	628.06810	100.40000	-.08500	.24510	10.02000	-6.87960
-6.159	-3.997	-5.94270	-4.14000	1461.09990	459.63990	629.92600	100.30000	-.08510	.24520	10.02000	-6.87960
-6.233	.171	-6.14440	-.07300	1459.59990	458.95430	629.28370	100.30000	-.08520	.24530	10.02000	-6.87960
-5.970	4.276	-6.04480	4.02700	1460.59990	459.34550	629.71340	100.50000	-.08520	.24530	10.02000	-6.87960
-5.944	6.275	-6.06650	6.04730	1460.79980	460.62920	629.77250	100.40000	-.08480	.24460	10.02000	-6.87960
	GRADIENT	-.01243	.98721	-.06121	-.03592	-.02603	.02411	-.00001	.00001	.00000	-.00000

RUN NO. 1458/ 0 RN/L = 3.00 GRADIENT INTERVAL = -5.00/ 5.00

ALPHAO	BETAO	ALFAOU	BETAOU	PT	P	Q	TT	AFA	BFA	DEINLR	DEONLR
-4.124	-6.083	-3.86910	-6.12880	1462.00000	460.13010	630.30960	100.40000	-.08510	.24510	10.02000	-6.87960
-4.343	-3.951	-4.10410	-4.05340	1458.00000	458.07150	628.60160	100.40000	-.08530	.24550	10.02000	-6.87960
-4.224	.410	-4.14840	.16150	1458.79980	458.06840	628.95140	100.30000	-.08530	.24570	10.02000	-6.87960
-3.733	4.330	-3.86440	4.10520	1459.00000	458.26510	629.03520	100.30000	-.08530	.24560	10.02000	-6.87960
-3.839	6.188	-4.00540	5.98810	1458.70000	458.46410	628.89990	100.10000	-.08520	.24540	10.02000	-6.87960
	GRADIENT	.02821	.98485	.12193	.02293	.05288	-.01228	-.00000	.00001	.00000	.00000

RUN NO. 1459/ 0 RN/L = 3.00 GRADIENT INTERVAL = -5.00/ 5.00

ALPHAO	BETAO	ALFAOU	BETAOU	PT	P	Q	TT	AFA	BFA	DEINLR	DEONLR
-.517	-6.972	-.27210	-6.88710	1458.20000	458.46610	628.68120	100.30000	-.08520	.24530	10.02000	-6.87960
-.485	-4.840	-.23870	-4.75480	1460.20000	458.06270	629.56350	100.20000	-.08550	.24590	10.02000	-6.87960
-.440	-.487	-.19360	-.40130	1461.00000	458.25710	629.90940	100.10000	-.08550	.24600	10.02000	-6.87960
-.422	3.622	-.17620	3.70790	1457.79980	457.38090	628.52730	100.00000	-.08550	.24590	10.02000	-6.87960
-.437	5.801	-.19180	5.88630	1461.79980	460.23000	630.22000	99.90000	-.08500	.24500	10.02000	-6.87960
	GRADIENT	.00741	1.00002	-.27901	-.07933	-.12045	-.02363	-.00000	.00000	.00000	.00000

IA156A, AEDC PWT 16T-470, O T S W/SILTS (R8NME0) (10 MAY 80)

REFERENCE DATA

SREF = 2690.0000 SQ.FT. XMRP = 976.0000 IN. XT
LREF = 1290.3000 INCHES YMRP = .0000 IN. YT
BREF = 1290.3000 INCHES ZMRP = 400.0000 IN. ZT
SCALE = .0200

PARAMETRIC DATA

IB-ELV = 10.000 OB-ELV = -7.000
BDFLAP = .000 SPDBRK = .000
RUDDER = .000 SILTS = 1.000
MACH = 1.400 RN/L = 3.500

RUN NO. 1460/ 0 RN/L = 3.00 GRADIENT INTERVAL = -5.00/ 5.00

ALPHAO	BETAO	ALFAOU	BETAOU	PT	P	Q	TT	AFA	BFA	DEINLR	DEONLR
4.136	-5.767	3.97920	-5.97390	1457.79980	458.66530	628.50200	99.90000	-.08510	.24510	10.02000	-6.87960
4.003	-3.658	3.89050	-3.89180	1459.70000	459.64550	629.31270	100.00000	-.08500	.24490	10.02000	-6.87960
3.743	.171	3.82390	-.07640	1459.29980	458.16530	629.16820	99.90000	-.08540	.24570	10.02000	-6.87960
3.776	4.050	4.00850	3.93390	1462.39990	460.22730	630.48270	100.00000	-.08510	.24510	10.02000	-6.87960
3.733	6.110	3.98500	6.04520	1453.29980	456.31230	626.58080	99.90000	-.08540	.24570	10.02000	-6.87960
	GRADIENT	.01538	1.01532	.35124	.07646	.15219	.00006	-.00001	.00003	.00000	.00000

IA156A, AEDC PWT 16T-470, O T S W/SILTS (R8NME1) (10 MAY 80)

REFERENCE DATA

SREF = 2690.0000 SQ.FT. XMRP = 976.0000 IN. XT
LREF = 1290.3000 INCHES YMRP = .0000 IN. YT
BREF = 1290.3000 INCHES ZMRP = 400.0000 IN. ZT
SCALE = .0200

PARAMETRIC DATA

IB-ELV = 10.000 OB-ELV = -7.000
BDFLAP = .000 SPDBRK = .000
RUDDER = .000 SILTS = 1.000
MACH = 1.550 RN/L = 3.200

RUN NO. 1461/ 0 RN/L = 3.00 GRADIENT INTERVAL = -5.00/ 5.00

ALPHAO	BETAO	ALFAOU	BETAOU	PT	P	Q	TT	AFA	BFA	DEINLR	DEONLR
-8.270	-5.810	-7.95080	-5.96620	1508.09990	382.68160	642.48320	100.70000	-.14780	.32310	10.02000	-6.87960
-8.315	-3.812	-8.03080	-4.02520	1505.09990	382.19950	641.26070	100.70000	-.14750	.32270	10.02000	-6.87960
-8.210	.409	-8.06510	.08390	1504.59990	381.40820	640.91530	100.30000	-.14830	.32360	10.02000	-6.87960
-8.018	4.364	-8.04210	4.00960	1514.09990	384.04250	645.00710	100.40000	-.14810	.32330	10.02000	-6.87960
-7.967	6.384	-8.05730	6.04050	1504.70000	382.10230	641.09110	100.30000	-.14740	.32270	10.02000	-6.87960
	GRADIENT	-.00146	.98252	1.08699	.22076	.45211	-.03734	-.00007	.00007	-.00000	.00000

RUN NO. 1462/ 0 RN/L = 3.00 GRADIENT INTERVAL = -5.00/ 5.00

ALPHAO	BETAO	ALFAOU	BETAOU	PT	P	Q	TT	AFA	BFA	DEINLR	DEONLR
-6.355	-5.967	-6.01410	-6.07310	1498.09990	379.35500	638.06490	100.10000	-.14890	.32400	10.02000	-6.87960
-6.251	-3.988	-5.93560	-4.15460	1504.09990	380.81520	640.60840	100.20000	-.14900	.32410	10.02000	-6.87960
-6.282	.238	-6.12680	-.08370	1509.70000	381.88040	642.92240	100.10000	-.14950	.32460	10.02000	-6.87960
-6.006	4.395	-6.07520	4.04460	1511.29980	382.56740	643.66060	100.40000	-.14910	.32420	10.02000	-6.87960
-5.825	6.502	-5.96930	6.17690	1505.29980	381.50420	641.19700	100.30000	-.14850	.32370	10.02000	-6.87960
	GRADIENT	-.01673	.97804	.86019	.20914	.36462	.02372	-.00001	.00001	-.00000	-.00000

IA156A, AEDC PWT 16T-470, O T S W/SILTS (R8NME1) (10 MAY 80)

REFERENCE DATA

SREF = 2690.0000 SQ.FT. XMRP = 976.0000 IN. XT
LREF = 1290.3000 INCHES YMRP = .0000 IN. YT
BREF = 1290.3000 INCHES ZMRP = 400.0000 IN. ZT
SCALE = .0200

PARAMETRIC DATA

IB-ELV = 10.000 OB-ELV = -7.000
BDFLAP = .000 SPDBRK = .000
RUDDER = .000 SILTS = 1.000
MACH = 1.550 RN/L = 3.200

RUN NO. 1463/ 0 RN/L = 3.00 GRADIENT INTERVAL = -5.00/ 5.00

ALPHAO	BETAO	ALFAOU	BETAOU	PT	P	Q	TT	AFA	BFA	DEINLR	DEONLR
-4.320	-6.108	-3.96470	-6.14010	1514.59990	383.24630	645.03470	100.40000	-.14930	.32440	10.02000	-6.87960
-4.449	-3.954	-4.10710	-4.06090	1506.29980	380.70560	641.41040	100.30000	-.14990	.32490	10.02000	-6.87960
-4.278	.503	-4.14090	.17140	1507.79980	380.69850	641.97050	100.10000	-.15050	.32540	10.02000	-6.87960
-3.731	4.446	-3.88090	4.11990	1508.29980	380.89450	642.19750	100.30000	-.15040	.32530	10.02000	-6.87960
-3.795	6.261	-3.99590	5.96480	1505.59990	380.51030	641.10860	100.10000	-.14990	.32500	10.02000	-6.87960
	GRADIENT	.02618	.97346	.24024	.02197	.09440	-.00097	-.00006	.00005	-.00000	.00000

RUN NO. 1464/ 0 RN/L = 3.00 GRADIENT INTERVAL = -5.00/ 5.00

ALPHAO	BETAO	ALFAOU	BETAOU	PT	P	Q	TT	AFA	BFA	DEINLR	DEONLR
-.608	-7.094	-.28250	-6.94400	1506.39990	380.50660	641.40750	100.10000	-.15030	.32520	10.02000	-6.87960
-.577	-4.908	-.25210	-4.75850	1507.79980	381.09550	642.05150	100.10000	-.14990	.32490	10.02000	-6.87960
-.543	-.585	-.21860	-.43460	1505.29980	380.51170	640.99660	100.10000	-.14980	.32490	10.02000	-6.87960
-.530	3.568	-.20570	3.71700	1505.70000	381.00610	641.24660	100.10000	-.14930	.32440	10.02000	-6.87960
-.535	5.744	-.21250	5.89200	1507.09990	382.48780	642.06910	100.10000	-.14780	.32300	10.02000	-6.87960
	GRADIENT	.00549	.99994	-.25001	-.01140	-.09599	-.00000	.00007	-.00006	-.00000	.00000

RUN NO. 1465/ 0 RN/L = 3.00 GRADIENT INTERVAL = -5.00/ 5.00

ALPHAO	BETAO	ALFAOU	BETAOU	PT	P	Q	TT	AFA	BFA	DEINLR	DEONLR
4.171	-5.664	3.98490	-5.96780	1508.89990	382.57860	642.76290	100.10000	-.14830	.32350	10.02000	-6.87960
3.998	-3.552	3.87440	-3.88620	1509.00000	382.37960	642.76070	100.00000	-.14860	.32370	10.02000	-6.87960
3.682	.256	3.82510	-.07240	1509.20000	381.28740	642.61450	100.00000	-.15010	.32510	10.02000	-6.87960
3.668	4.052	4.00040	3.92380	1503.20000	380.81930	640.27200	99.90000	-.14870	.32380	10.02000	-6.87960
3.634	6.107	3.98660	6.05130	1504.00000	380.81570	640.57100	99.80000	-.14900	.32410	10.02000	-6.87960
	GRADIENT	.01656	1.02706	-.76234	-.20523	-.32714	-.01314	-.00001	.00001	-.00000	.00000

IA156A, AEDC PWT 16T-470, 0 T S W/SILTS (R8NME2) (10 MAY 80)

REFERENCE DATA

SREF = 2690.0000 SQ.FT. XMRP = 976.0000 IN. XT
LREF = 1290.3000 INCHES YMRP = .0000 IN. YT
BREF = 1290.3000 INCHES ZMRP = 400.0000 IN. ZT
SCALE = .0200

PARAMETRIC DATA

IB-ELV = 12.000 OB-ELV = -7.000
BDFLAP = .000 SPDBRK = .000
RUDDER = .000 SILTS = 1.000
MACH = 1.400 RN/L = 3.500

RUN NO. 1469/ 0 RN/L = 3.01 GRADIENT INTERVAL = -5.00/ 5.00

ALPHAO	BETAO	ALFAOU	BETAOU	PT	P	Q	TT	AFA	BFA	DEINLR	DEONLR
-8.220	-5.866	-7.99910	-6.00170	1455.59990	458.67430	627.53810	99.40000	-.08490	.24470	12.12000	-6.87960
-8.243	-3.806	-8.05110	-3.98160	1461.20000	458.25630	629.99680	99.40000	-.08550	.24600	12.12000	-6.87960
-8.148	.314	-8.06470	.06740	1461.00000	458.35600	629.90770	99.30000	-.08550	.24590	12.12000	-6.87960
-7.969	4.331	-8.01290	4.07490	1459.79980	458.65720	629.37720	99.20000	-.08530	.24550	12.12000	-6.87960
-7.958	6.275	-8.04730	6.03050	1460.50000	457.66630	629.70140	99.80000	-.08560	.24620	12.12000	-6.87960
	GRADIENT	.00466	.99014	-.17156	.04916	-.07592	-.02458	.00002	-.00006	.00000	.00000

RUN NO. 1470/ 0 RN/L = 3.00 GRADIENT INTERVAL = -5.00/ 5.00

ALPHAO	BETAO	ALFAOU	BETAOU	PT	P	Q	TT	AFA	BFA	DEINLR	DEONLR
-6.243	-5.961	-6.00340	-6.06160	1461.29980	459.04610	630.02560	99.80000	-.08530	.24560	12.12000	-6.87960
-6.154	-4.001	-5.93630	-4.14370	1459.39990	457.47310	629.22460	99.90000	-.08560	.24610	12.12000	-6.87960
-6.224	.176	-6.13500	-.06930	1457.59990	456.88770	628.44900	99.80000	-.08560	.24620	12.12000	-6.87960
-6.003	4.295	-6.07820	4.04430	1459.39990	455.89230	629.24980	99.80000	-.08600	.24710	12.12000	-6.87960
-5.780	6.389	-5.90910	6.16230	1459.70000	456.68140	629.36870	99.80000	-.08590	.24670	12.12000	-6.87960
	GRADIENT	-.01718	.98703	-.00099	-.19045	.00260	-.01208	-.00005	.00012	-.00000	.00000

RUN NO. 1471/ 0 RN/L = 3.00 GRADIENT INTERVAL = -5.00/ 5.00

ALPHAO	BETAO	ALFAOU	BETAOU	PT	P	Q	TT	AFA	BFA	DEINLR	DEONLR
-4.149	-6.089	-3.89280	-6.13530	1459.29980	457.86870	629.17380	99.80000	-.08550	.24590	12.12000	-6.87960
-4.346	-3.957	-4.10670	-4.05910	1455.89990	456.30180	627.71680	99.80000	-.08560	.24620	12.12000	-6.87960
-4.209	.412	-4.13380	.16220	1455.79980	456.30200	627.67310	99.60000	-.08560	.24620	12.12000	-6.87960
-3.744	4.347	-3.87540	4.12180	1457.89990	456.59010	628.58500	99.80000	-.08570	.24640	12.12000	-6.87960
-3.839	6.181	-4.00490	5.98030	1459.79980	457.96560	629.39060	39.70000	-.08550	.24590	12.12000	-6.87960
	GRADIENT	.02723	.98482	.23603	.03408	.10246	-.00084	-.00001	.00002	.00000	-.00000

RUN NO. 1472/ 0 RN/L = 2.99 GRADIENT INTERVAL = -5.00/ 5.00

ALPHAO	BETAO	ALFAOU	BETAOU	PT	P	Q	TT	AFA	BFA	DEINLR	DEONLR
-.513	-6.969	-.26680	-6.88360	1464.29980	459.52810	631.32790	99.70000	-.08540	.24580	12.12000	-6.87960
-.482	-4.838	-.23680	-4.75260	1448.20000	455.04860	624.37550	99.70000	-.08520	.24550	12.12000	-6.87960
-.437	-.502	-.19150	-.41610	1451.29980	455.33230	625.72510	99.80000	-.08550	.24590	12.12000	-6.87960
-.416	3.637	-.17050	3.72220	1447.39990	454.26120	624.04080	99.80000	-.08540	.24580	12.12000	-6.87960
-.427	5.798	-.18180	5.88270	1451.79980	456.12080	625.92870	99.80000	-.08530	.24550	12.12000	-6.87960
	GRADIENT	.00784	1.00002	-.08796	-.09165	-.03670	.01189	-.00002	.00004	-.00000	-.00000

IA156A, AEDC PWT 16T-470, O T S W/SILTS (R8NME2) (10 MAY 80)

REFERENCE DATA

SREF = 2690.0000 SQ.FT. XMRP = 976.0000 IN. XT
LREF = 1290.3000 INCHES YMRP = .0000 IN. YT
BREF = 1290.3000 INCHES ZMRP = 400.0000 IN. ZT
SCALE = .0200

PARAMETRIC DATA

IB-ELV = 12.000 OB-ELV = -7.000
BDFLAP = .000 SPDBRK = .000
RUDDER = .000 SILTS = 1.000
MACH = 1.400 RN/L = 3.500

RUN NO. 1473/ 0 RN/L = 3.00 GRADIENT INTERVAL = -5.00/ 5.00

ALPHAO	BETAO	ALFAOU	BETAOU	PT	P	Q	TT	AFA	BFA	DEINLR	DEONLR
4.135	-5.756	3.97860	-5.96310	1453.29980	456.80640	626.57100	99.80000	-.08520	.24540	12.12000	-6.87960
3.990	-3.653	3 87650	-3.88640	1455.79980	457.58670	627.64890	99.80000	-.08520	.24540	12.12000	-6.87960
3.741	.166	3.82060	-.08050	1455.70000	458.08110	627.59500	99.80000	-.08510	.24510	12.12000	-6.87960
3.769	4.047	4.00030	3.93150	1458.70000	459.94600	628.86770	99.80000	-.08480	.24460	12.12000	-6.87960
3.738	6.128	3.98920	6.06410	1457.00000	458.17460	628.16210	99.80000	-.08510	.24530	12.12000	-6.87960
	GRADIENT	.01616	1.01545	.37775	.30690	.15876	-.00000	.00005	-.00010	-.00000	.00000

IA156A, AEDC PWT 16T-470, O T S W/SILTS (R8NME3) (10 MAY 80)

REFERENCE DATA

SREF = 2690.0000 SQ.FT. XMRP = 976.0000 IN. XT
LREF = 1290.3000 INCHES YMRP = .0000 IN. YT
BREF = 1290.3000 INCHES ZMRP = 400.0000 IN. ZT
SCALE = .0200

PARAMETRIC DATA

IB-ELV = 12.000 OB-ELV = -7.000
BDFLAP = .000 SPDBRK = .000
RUDDER = .000 SILTS = 1.000
MACH = 1.550 RN/L = 3.200

RUN NO. 1474/ 0 RN/L = 3.01 GRADIENT INTERVAL = -5.00/ 5.00

ALPHAO	BETAO	ALFAOU	BETAOU	PT	P	Q	TT	AFA	BFA	DEINLR	DEONLR
-8.324	-5.833	-8.00400	-5.99020	1508.09990	382.28470	642.40380	99.60000	-.14840	.32360	12.12000	-6.87950
-8.344	-3.712	-8.06050	-3.92820	1503.89990	380.91530	640.55370	99.50000	-.14880	.32390	12.12000	-6.87960
-8.209	.318	-8.05860	-.00660	1509.89990	381.48240	642.91630	99.50000	-.15010	.32510	12.12000	-6.87960
-8.003	4.487	-8.03210	4.13270	1504.70000	381.50680	640.97240	99.40000	-.14830	.32350	12.12000	-6.87960
-7.961	6.383	-8.05070	6.03850	1503.79980	381.21340	640.57590	99.30000	-.14830	.32350	12.12000	-6.87960
	GRADIENT	.00348	.98319	.08986	.07176	.04810	-.01226	.00006	-.00005	.00000	-.00000

RUN NO. 1475/ 0 RN/L = 3.01 GRADIENT INTERVAL = -5.00/ 5.00

ALPHAO	BETAO	ALFAOU	BETAOU	PT	P	Q	TT	AFA	BFA	DEINLR	DEONLR
-6.358	-5.963	-6.02060	-6.07010	1505.09990	382.69560	641.35860	99.30000	-.14680	.32210	12.12000	-6.87960
-6.256	-3.975	-5.94160	-4.14210	1511.79980	383.25950	643.98730	99.40000	-.14830	.32350	12.12000	-6.87960
-6.273	.249	-6.12140	-.07120	1507.00000	382.98440	642.13010	99.30000	-.14700	.32240	12.12000	-6.87960
-5.983	4.379	-6.05290	4.02810	1505.79980	380.90630	641.26390	99.30000	-.14950	.32450	12.12000	-6.87960
-5.702	6.519	-5.85050	6.19360	1508.39990	381.19190	642.29570	99.40000	-.15000	.32500	12.12000	-6.87960
	GRADIENT	-.01343	.97797	-.71983	-.28087	-.32644	-.01202	-.00014	.00012	-.00000	.00000

IA156A, AEDC PWT 16T-470, O T S W/SILTS (R8NME3) (10 MAY 80)

REFERENCE DATA

SREF = 2690.0000 SQ.FT. XMRP = 976.0000 IN. XT
LREF = 1290.3000 INCHES YMRP = .0000 IN. YT
BREF = 1290.3000 INCHES ZMRP = 400.0000 IN. ZT
SCALE = .0200

PARAMETRIC DATA

IB-ELV = 12.000 OB-ELV = -7.000
BDFLAP = .000 SPDBRK = .000
RUDDER = .000 SILTS = 1.000
MACH = 1.550 RN/L = 3.200

RUN NO. 1476/ 0 RN/L = 3.01 GRADIENT INTERVAL = -5.00/ 5.00

ALPHAO	BETAO	ALFAOU	BETAOU	PT	P	Q	TT	AFA	BFA	DEINLR	DEONLR
-4.196	-6.135	-3.84100	-6.16190	1511.20000	383.06400	643.72310	99.30000	-.14840	.32360	12.12000	-6.87960
4.451	-3.949	-4.11120	-4.05650	1499.50000	379.84450	638.68850	99.20000	-.14870	.32390	12.12000	-6.87960
-.265	.492	-4.12890	.16220	1499.50000	379.34840	638.58840	99.20000	-.14950	.32450	12.12000	-6.87960
-3.742	4.439	-3.89070	4.11470	1506.39990	381.20120	641.54860	99.40000	-.14920	.32440	12.12000	-6.87960
-3.795	6.255	-3.99540	5.96230	1509.89990	383.36770	643.29570	99.20000	-.14750	.32280	12.12000	-6.87960
	GRADIENT	.02566	.97367	.80552	.15607	.33343	.02335	-.00006	.00006	.00000	-.00000

RUN NO. 1477/ 0 RN/L = 3.01 GRADIENT INTERVAL = -5.00/ 5.00

ALPHAO	BETAO	ALFAOU	BETAOU	PT	P	Q	TT	AFA	BFA	DEINLR	DEONLR
-.600	-7.044	-.27600	-6.89470	1509.39990	382.08010	642.85030	99.10000	-.14910	.32420	12.12000	-6.87960
-.576	-4.909	-.25150	-4.75890	1508.50000	381.29050	642.35330	99.10000	-.14990	.32490	12.12000	-6.87960
-.540	-.559	-.21570	-.40970	1511.09990	382.36990	643.54590	99.00000	-.14930	.32440	12.12000	-6.87960
-.528	3.565	-.20300	3.71490	1504.09990	380.31910	640.50810	99.10000	-.14970	.32470	12.12000	-6.87960
-.527	5.739	-.20340	5.88740	1507.59990	382.48540	642.25630	99.10000	-.14790	.32320	12.12000	-6.87960
	GRADIENT	.00575	1.00001	-.50909	-.11133	.21328	-.00021	.00002	-.00002	.00000	-.00000

RUN NO. 1478/ 0 RN/L = 3.01 GRADIENT INTERVAL = -5.00/ 5.00

ALPHAO	BETAO	ALFAOU	BETAOU	PT	P	Q	TT	AFA	BFA	DEINLR	DEONLR
4.178	-5.674	3.99200	-5.97700	1505.20000	381.70290	641.19920	99.10000	-.14820	.32340	12.12000	-6.87960
4.001	-3.551	3.87820	-3.88460	1501.70000	381.02490	639.75020	99.10000	-.14790	.32310	12.12000	-6.87960
3.684	.248	3.82620	-.07990	1509.89990	381.68090	642.95680	99.20000	-.14980	.32490	12.12000	-6.87960
3.670	4.055	4.00330	3.92720	1503.09990	380.62130	640.19460	99.50000	-.14890	.32400	12.12000	-6.87960
3.642	6.120	3.99330	6.06430	1507.00000	382.19070	641.97240	99.60000	-.14810	.32330	12.12000	-6.87960
	GRADIENT	.01646	1.02703	.18338	-.05314	.05816	.05260	-.00013	.00012	-.00000	.00000

IA156A, AEDC PWT 16T-470, O T S W/SILTS (R8NME4) (10 MAY 80)

REFERENCE DATA

SREF = 2690.0000 SQ.FT. XMRP = 976.0000 IN. XT
LREF = 1290.3000 INCHES YMRP = .0000 IN. YT
BREF = 1290.3000 INCHES ZMRP = 400.0000 IN. ZT
SCALE = .0200

PARAMETRIC DATA

IB-ELV = 8.000 OB-ELV = -7.000
BDFLAP = .000 SPDBRK = .000
RUDDER = .000 SILTS = 1.000
MACH = 1.400 RN/L = 3.500

RUN NO. 1482/ 0 RN/L = 3.00 GRADIENT INTERVAL = -5.00/ 5.00

ALPHAO	BETAO	ALFAOU	BETAOU	PT	P	Q	TT	AFA	BFA	DEINLR	DEONLR
-8.170	5.743	-7.94950	-5.87980	1453.39990	456.41060	626.62260	99.10000	-.08530	.24570	8.10000	-6.87960
-8.235	-3.742	-8.04410	-3.91910	1455.70000	456.40140	627.62770	98.90000	-.08560	.24610	8.10000	-6.87960
-8.142	.226	-8.05570	-.01950	1455.70000	457.58690	627.60520	99.60000	-.08520	.24540	8.10000	-6.87960
-7.983	4.478	-8.03100	4.22320	1455.70000	458.97020	627.57500	99.80000	-.08480	.24460	8.10000	-6.87960
-7.936	6.285	-8.02610	6.04160	1459.29980	458.85670	629.15450	99.80000	-.08520	.24530	8.10000	-6.87960
	GRADIENT	.00164	.99069	.00000	.31268	-.00642	.10875	.00010	-.00018	-.00000	-.00000

RUN NO. 1483/ 0 RN/L = 3.00 GRADIENT INTERVAL = -5.00/ 5.00

ALPHAO	BETAO	ALFAOU	BETAOU	PT	P	Q	TT	AFA	BFA	DEINLR	DEONLR
-6.266	-5.970	-6.02580	-6.07080	1456.89990	457.18700	628.13770	99.60000	-.08540	.24580	8.10000	-6.87960
-6.155	-4.011	-5.93710	-4.15420	1459.59990	457.86740	629.30490	99.60000	-.08550	.24590	8.10000	-6.87960
-6.219	.148	-6.12910	-.09690	1456.09990	456.39970	627.80250	99.60000	-.08560	.24620	8.10000	-6.87960
-6.003	4.286	-6.07760	4.03720	1461.59990	458.55100	630.16630	99.60000	-.08540	.24590	8.10000	-6.87960
-5.730	6.412	-5.86060	6.18670	1458.89990	457.77150	629.00070	99.80000	-.08550	.24590	8.10000	-6.87960
	GRADIENT	-.01696	.98718	.24016	.08204	.10344	-.00000	.00001	.00000	.00000	-.00000

RUN NO. 1484/ 0 RN/L = 3.00 GRADIENT INTERVAL = -5.00/ 5.00

ALPHAO	BETAO	ALFAOU	BETAOU	PT	P	Q	TT	AFA	BFA	DEINLR	DEONLR
-4.110	-6.113	-3.85360	-6.15800	1458.00000	457.77510	628.60740	99.60000	-.08540	.24570	8.10000	-6.87960
-4.346	-3.947	-4.10600	-4.04900	1459.79980	457.66920	629.39580	99.60000	-.08560	.24610	8.10000	-6.87960
-4.218	.418	-4.14270	.16780	1456.79980	455.31010	628.12520	99.60000	-.08590	.24690	8.10000	-6.87960
-3.760	4.353	-3.89100	4.12750	1458.39990	457.27950	628.79130	99.60000	-.08550	.24610	8.10000	-6.87960
-3.822	6.157	-3.98890	5.95720	1462.09990	458.84550	630.37920	99.70000	-.08540	.24580	8.10000	-6.87960
	GRADIENT	.02528	.98484	-.17810	-.05592	-.07680	.00000	.00001	.00000	-.00000	-.00000

RUN NO. 1485/ 0 RN/L = 3.00 GRADIENT INTERVAL = -5.00/ 5.00

ALPHAO	BETAO	ALFAOU	BETAOU	PT	P	Q	TT	AFA	BFA	DEINLR	DEONLR
-.521	-7.010	-.27520	-6.92410	1455.50000	456.40210	627.54050	99.50000	-.08550	.24610	8.10000	-6.87960
-.492	-4.839	-.24620	-4.75330	1463.00000	458.24900	630.78270	99.70000	-.08570	.24640	8.10000	-6.87960
-.439	-.498	-.19550	-.41330	1453.59990	459.27510	626.64620	99.50000	-.08450	.24400	8.10000	-6.87960
-.431	3.621	-.18490	3.70620	1456.79980	457.18730	628.09400	99.60000	-.08540	.24580	8.10000	-6.87960
-.444	5.803	-.19950	5.88750	1456.09990	458.47460	627.76150	99.70000	-.08500	.24490	8.10000	-6.87960
	GRADIENT	.00729	.99999	-.74579	-.12225	-.32353	-.01213	.00004	-.00008	.00000	.00000

IA156A, AEDC PWT 16T-470, O T S W/SILTS (R8NME4) (10 MAY 80)

REFERENCE DATA

SREF = 2690.0000 SQ.FT. XMRP = 976.0000 IN. XT
LREF = 1290.3000 INCHES YMRP = .0000 IN. YT
BREF = 1290.3000 INCHES ZMRP = 400.0000 IN. ZT
SCALE = .0200

PARAMETRIC DATA

IB-ELV = 8.000 OB-ELV = -7.000
BDFLAP = .000 SPDBRK = .000
RUDDER = .000 SILTS = 1.000
MACH = 1.400 RN/L = 3.500

RUN NO. 1486/ 0 RN/L = 3.00 GRADIENT INTERVAL = -5.00/ 5.00

ALPHAO	BETAO	ALFAOU	BETAOU	PT	P	Q	TT	AFA	BFA	DEINLR	DEONLR
4.148	-5.744	3.99230	-5.95070	1454.59990	458.57960	627.10180	99.70000	-.08480	.24460	8.10000	-6.87960
3.977	-3.686	3.86310	-3.91830	1460.39990	460.33420	629.60400	99.70000	-.08480	.24470	8.10000	-6.87960
3.759	.077	3.83360	-.17280	1463.39990	458.04980	630.96070	99.70000	-.08580	.24650	8.10000	-6.87960
3.771	4.006	4.00380	3.88810	1456.39990	456.29980	627.93530	99.60000	-.08560	.24630	8.10000	-6.87960
3.730	6.119	3.98210	6.05440	1453.70000	455.81670	626.76460	99.70000	-.08560	.24610	8.10000	-6.87960
	GRADIENT	.01848	1.01508	-.52927	-.52395	-.22099	-.01309	-.00010	.00021	.00000	-.00000

IA156A, AEDC PWT 16T-470, O T S W/SILTS (R8NME5) (10 MAY 80)

REFERENCE DATA

SREF = 2690.0000 SQ.FT. XMRP = 976.0000 IN. XT
LREF = 1290.3000 INCHES YMRP = .0000 IN. YT
BREF = 1290.3000 INCHES ZMRP = 400.0000 IN. ZT
SCALE = .0200

PARAMETRIC DATA

IB-ELV = 8.000 OB-ELV = -7.000
BDFLAP = .000 SPDBRK = .000
RUDDER = .000 SILTS = 1.000
MACH = 1.550 RN/L = 3.200

RUN NO. 1487/ 0 RN/L = 3.00 GRADIENT INTERVAL = -5.00/ 5.00

ALPHAO	BETAO	ALFAOU	BETAOU	PT	P	Q	TT	AFA	BFA	DEINLR	DEONLR
-8.297	-5.822	-7.97840	-5.97810	1504.29980	381.80640	640.88210	99.70000	-.14770	.32300	8.10000	-6.87960
-8.325	-3.708	-8.04070	-3.92440	1506.29980	380.80470	641.43070	99.60000	-.14980	.32480	8.10000	-6.87960
-8.212	.298	-8.06180	-.02600	1503.79980	380.71730	640.47630	99.30000	-.14900	.32410	8.10000	-6.87960
-7.973	4.570	-8.00420	4.21360	1505.70000	380.60910	641.16630	99.30000	-.14990	.32490	8.10000	-6.87960
-7.986	6.416	-8.07680	6.07220	1508.50000	382.48120	642.59350	99.30000	-.14830	.32340	8.10000	-6.87960
	GRADIENT	.00451	.98321	-.06673	-.02365	-.02980	-.03584	-.00001	.00001	-.00000	.00000

RUN NO. 1488/ 0 RN/L = 3.00 GRADIENT INTERVAL = -5.00/ 5.00

ALPHAO	BETAO	ALFAOU	BETAOU	PT	P	Q	TT	AFA	BFA	DEINLR	DEONLR
-6.347	-5.954	-6.00800	-6.06070	1508.59990	382.77830	642.69020	99.20000	-.14790	.32310	8.10000	-6.87960
-6.262	-3.975	-5.94660	-4.14150	1506.70000	381.59670	641.74070	99.20000	-.14880	.32400	8.10000	-6.87960
-6.268	.229	-6.11260	-.09280	1502.89990	379.82860	639.95920	99.20000	-.15000	.32500	8.10000	-6.87960
-6.003	4.398	-6.07290	4.04670	1501.50000	379.33890	639.33540	99.20000	-.15010	.32510	8.10000	-6.87960
-5.917	6.366	-6.05580	6.03590	1504.39990	380.31760	640.62010	99.20000	-.14980	.32480	8.10000	-6.87960
	GRADIENT	-.01512	.97794	-.62147	-.26988	-.28747	-.00000	-.00016	.00013	-.00000	.00000

IA156A, AEDC PWT 16T-470, O T S W/SILTS (R8NME5) (10 MAY 80)

REFERENCE DATA

SREF = 2690.0000 SQ.FT. XMRP = 976.0000 IN. XT
LREF = 1290.3000 INCHES YMRP = .0000 IN. YT
BREF = 1290.3000 INCHES ZMRP = 400.0000 IN. ZT
SCALE = .0200

PARAMETRIC DATA

IB-ELV = 8.000 OB-ELV = -7.000
BDFLAP = .000 SPDBRK = .000
RUDDER = .000 SILTS = 1.000
MACH = 1.550 RN/L = 3.200

RUN NO. 1489/ 0 RN/L = 3.01 GRADIENT INTERVAL = -5.00/ 5.00

ALPHAO	BETAO	ALFAOU	BETAOU	PT	P	Q	TT	AFA	BFA	DEINLR	DEONLR
-4.218	-6.128	-3.86120	-6.15470	1511.20000	381.97240	643.50270	99.20000	-.14990	.32490	8.10000	-6.87960
-4.450	-3.947	-4.10830	-4.05370	1511.09990	381.87380	643.44530	99.30000	-.15000	.32500	8.10000	-6.87960
-4.281	.503	-4.14350	.17090	1507.59990	380.30250	641.81450	99.20000	-.15100	.32580	8.10000	-6.87960
-3.731	4.440	-3.88110	4.11510	1505.20000	380.31370	640.91890	99.10000	-.15010	.32510	8.10000	-6.87960
-3.802	6.257	-4.00260	5.96190	1513.20000	383.05440	644.47120	100.20000	-.14910	.32420	8.10000	-6.87960
	GRADIENT	.02634	.97346	-.70525	-.18961	-.30263	-.02382	-.00002	.00002	-.00000	-.00000

RUN NO. 1490/ 0 RN/L = 3.00 GRADIENT INTERVAL = -5.00/ 5.00

ALPHAO	BETAO	ALFAOU	BETAOU	PT	P	Q	TT	AFA	BFA	DEINLR	DEONLR
-.611	-7.039	-.28660	-6.89000	1503.09990	380.12520	640.09420	100.20000	-.14960	.32470	8.10000	-6.87960
-.585	-4.909	-.25970	-4.75860	1507.00000	380.60300	641.65160	100.40000	-.15030	.32530	8.10000	-6.87960
-.546	-.562	-.22090	-.41060	1511.50000	381.37570	643.49320	100.40000	-.15090	.32570	8.10000	-6.87960
-.537	3.554	-.21150	3.71460	1501.29980	379.14140	639.22020	100.40000	-.15030	.32530	8.10000	-6.87960
-.537	5.749	-.21490	5.89550	1515.79980	385.32400	645.90010	100.40000	-.14690	.32230	8.10000	-6.87960
	GRADIENT	.00572	1.00004	-.65748	-.16937	-.28060	-.00000	-.00000	.00000	-.00000	.00000

RUN NO. 1491/ 0 RN/L = 3.00 GRADIENT INTERVAL = -5.00/ 5.00

ALPHAO	BETAO	ALFAOU	BETAOU	PT	P	Q	TT	AFA	BFA	DEINLR	DEONLR
4.175	-5.666	3.98940	-5.97150	1504.29980	380.51660	640.62300	100.40000	-.14950	.32450	8.10000	-6.87960
3.989	-3.546	3.86570	-3.87960	1510.70000	383.16550	643.55570	100.50000	-.14810	.32330	8.10000	-6.87960
3.686	.255	3.83090	-.07400	1505.59990	379.41870	640.88500	100.40000	-.15150	.32630	8.10000	-6.87960
3.680	4.059	4.01090	3.93020	1503.50000	381.51250	640.52320	100.30000	-.14790	.32310	8.10000	-6.87960
3.634	6.109	3.98610	6.05360	1506.70000	381.49760	641.72070	100.40000	-.14900	.32410	8.10000	-6.87960
	GRADIENT	.01910	1.02697	-.94675	-.21729	-.39874	-.02630	.00003	-.00003	.00000	.00000

IA156A, AEDC PWT 16T-470, O T S W/SILTS (R8NME6) (10 MAY 80)

REFERENCE DATA

SREF = 2690.0000 SQ.FT. XMRP = 976.0000 IN. XT
LREF = 1290.3000 INCHES YMRP = .0000 IN. YT
BREF = 1290.3000 INCHES ZMRP = 400.0000 IN. ZT
SCALE = .0200

PARAMETRIC DATA

IB-ELV = 10.000 OB-ELV = 2.000
BDFLAP = .000 SPDBRK = .000
RUDDER = .000 SILTS = 1.000
MACH = 1.050 RN/L = 3.500

RUN NO. 1494/ 0 RN/L = 3.50 GRADIENT INTERVAL = -5 00/ 5.00

ALPHAO	BETAO	ALFAOU	BETAOU	PT	P	Q	TT	AFA	BFA	DEINLR	DEONLR
-8.215	-5.881	-8.04530	-5.99290	1703.00000	848.74150	653.95950	99.80000	-.06080	.19450	10.02000	1.88000
-8.178	-3.769	-8.03320	-3.91190	1702.39990	848.54740	653.68190	99.50000	-.06080	.19450	10.02000	1.88000
-8.131	.175	-8.06970	-.01970	1706.09990	850.71310	654.95800	99.30000	-.06080	.19450	10.02000	1.88000
-7.965	4.333	-8.00770	4.13340	1704.20000	849.33010	654.42460	99.50000	-.06080	.19450	10.02000	1.88000
-7.960	6.223	-8.03700	6.03430	1696.89990	843.89500	652.42770	100.00000	-.06090	.19440	10.02000	1.88000
	GRADIENT	.00325	.99314	.21605	.09273	.08968	.00044	.00000	-.00000	-.00000	-.00000

RUN NO. 1495/ 0 RN/L = 3.50 GRADIENT INTERVAL = -5.00/ 5.00

ALPHAO	BETAO	ALFAOU	BETAOU	PT	P	Q	TT	AFA	BFA	DEINLR	DEONLR
-6.164	-5.957	-5.97880	-6.04180	1701.00000	847.35960	653.36470	99.80000	-.06080	.19440	10.02000	1.88000
-6.120	-4.055	-5.95320	-4.17240	1704.50000	848.12400	655.14820	99.80000	-.06090	.19440	10.02000	1.88000
-6.203	.112	-6.13970	-.08180	1705.59990	847.81180	655.95610	99.80000	-.06090	.19440	10.02000	1.88000
-6.009	4.243	-6.07470	4.05000	1702.89990	845.23460	655.46950	99.90000	-.06100	.19440	10.02000	1.88000
-5.960	6.205	-6.06210	6.02880	1700.00000	844.96460	653.83080	99.90000	-.06090	.19440	10.02000	1.88000
	GRADIENT	-.01468	.99082	-.19216	-.34779	.03894	.01203	-.00001	-.00000	-.00000	.00000

RUN NO. 1496/ 0 RN/L = 3.50 GRADIENT INTERVAL = -5.00/ 5.00

ALPHAO	BETAO	ALFAOU	BETAOU	PT	P	Q	TT	AFA	BFA	DEINLR	DEONLR
-4.074	-6.119	-3.87480	-6.16080	1699.09990	846.57790	652.56080	99.60000	-.06080	.19450	10.02000	1.88000
-4.306	-3.974	-4.12120	-4.05970	1702.70000	847.44170	654.36080	99.80000	-.06090	.19440	10.02000	1.88000
-4.199	.365	-4.14690	.16840	1706.50000	849.30570	655.83350	99.90000	-.06090	.19440	10.02000	1.88000
-3.752	4.297	-3.86080	4.12520	1696.89990	842.79250	652.92070	99.80000	-.06090	.19440	10.02000	1.88000
-3.847	6.110	-3.98210	5.95760	1698.39990	845.88350	652.44700	99.80000	-.06080	.19440	10.02000	1.88000
	GRADIENT	.03084	.98931	-.67411	-.54503	-.16528	.00040	.00000	-.00000	-.00000	-.00000

RUN NO. 1497/ 0 RN/L = 3.50 GRADIENT INTERVAL = -5.00/ 5.00

ALPHAO	BETAO	ALFAOU	BETAOU	PT	P	Q	TT	AFA	BFA	DEINLR	DEONLR
-.462	-7.007	-.26720	-6.94670	1703.70000	849.43580	654.07300	99.90000	-.06080	.19450	10.02000	1.88000
-.449	-4.843	-.25440	-4.78240	1706.50000	849.80690	655.60860	99.80000	-.06080	.19440	10.02000	1.88000
-.422	-.474	-.22740	-.41300	1705.89990	849.01150	655.60080	99.80000	-.06080	.19440	10.02000	1.88000
-.387	3.651	-.19260	3.71220	1703.09990	850.34420	653.29830	99.80000	-.06070	.19450	10.02000	1.88000
-.387	5.828	-.19280	5.88890	1697.79980	846.29100	651.89920	99.80000	-.06080	.19450	10.02000	1.88000
	GRADIENT	.00726	.99999	-.39768	.06083	-.26931	-.00000	.00001	.00001	-.00000	-.00000

IA156A, AEDC PWT 16T-470, O T S W/SILTS (R8NME6) (10 MAY 80)

REFERENCE DATA

SREF = 2690.0000 SQ.FT. XMRP = 976.0000 IN. XT
LREF = 1290.3000 INCHES YMRP = .0000 IN. YT
BREF = 1290.3000 INCHES ZMRP = 400.0000 IN. ZT
SCALE = .0200

PARAMETRIC DATA

IB-ELV = 10.000 OB-ELV = 2.000
BDFLAP = .000 SPDBRK = .000
RUDDER = .000 SILTS = 1.000
MACH = 1.050 RN/L = 3.500

RUN NO. 1498/ 0 RN/L = 3.50 GRADIENT INTERVAL = -5.00/ 5.00

ALPHAO	BETAO	ALFAOU	BETAOU	PT	P	Q	TT	AFA	BFA	DEINLR	DEONLR
4.108	-5.804	3.98100	-5.96290	1701.79980	849.45610	652.90770	99.90000	-.06080	.19450	10.02000	1.88000
3.975	-3.713	3.88130	-3.89350	1707.39990	852.50370	654.94210	99.80000	-.06070	.19450	10.02000	1.88000
3.776	.114	3.83320	-.08170	1707.29980	849.19700	656.36820	99.90000	-.06090	.19440	10.02000	1.88000
3.851	4.045	4.03050	3.94880	1704.50000	848.12400	655.14820	99.80000	-.06090	.19440	10.02000	1.88000
3.796	6.106	3.99150	6.04960	1700.79980	848.16360	652.88130	99.80000	-.06080	.19450	10.02000	1.88000
	GRADIENT	.01937	1.01100	-.37536	-.56325	.02503	-.00012	-.00003	-.00001	.00000	.00000

IA156A, AEDC PWT 16T-470, O T S W/SILTS (R8NME7) (10 MAY 80)

REFERENCE DATA

SREF = 2690.0000 SQ.FT. XMRP = 976.0000 IN. XT
LREF = 1290.3000 INCHES YMRP = .0000 IN. YT
BREF = 1290.3000 INCHES ZMRP = 400.0000 IN. ZT
SCALE = .0200

PARAMETRIC DATA

IB-ELV = 10.000 OB-ELV = 2.000
BDFLAP = .000 SPDBRK = .000
RUDDER = .000 SILTS = 1.000
MACH = 1.100 RN/L = 3.500

RUN NO. 1499/ 0 RN/L = 3.50 GRADIENT INTERVAL = -5.00/ 5.00

ALPHAO	BETAO	ALFAOU	BETAOU	PT	P	Q	TT	AFA	BFA	DEINLR	DEONLR
-8.219	-5.891	-8.04730	-6.00110	1690.39990	788.90700	671.67600	99.90000	-.06340	.19450	10.02000	1.88000
-8.204	-3.785	-8.05690	-3.92650	1693.89990	791.47360	672.70070	99.90000	-.06330	.19450	10.02000	1.88000
-8.112	.164	-8.04820	-.03020	1689.70000	789.01340	671.22800	99.80000	-.06330	.19450	10.02000	1.88000
-7.946	4.428	-7.98830	4.22760	1685.50000	789.75220	668.49610	99.80000	-.06320	.19440	10.02000	1.88000
-7.964	6.232	-8.03890	6.04160	1685.70000	790.84990	668.17800	99.80000	-.06320	.19440	10.02000	1.88000
	GRADIENT	.00843	.99300	-1.02236	-.20453	-.51370	-.01202	.00001	-.00001	-.00000	.00000

RUN NO. 1500/ 0 RN/L = 3.50 GRADIENT INTERVAL = -5.00/ 5.00

ALPHAO	BETAO	ALFAOU	BETAOU	PT	P	Q	TT	AFA	BFA	DEINLR	DEONLR
-6.164	-5.953	-5.97680	-6.03570	1688.70000	793.22140	668.98410	99.90000	-.06310	.19440	10.02000	1.88000
-6.143	-4.058	-5.97450	-4.17300	1688.70000	791.92190	669.50000	99.90000	-.06320	.19440	10.02000	1.88000
-6.224	.087	-6.15700	-.10580	1687.50000	791.73290	668.87620	99.80000	-.06320	.19440	10.02000	1.88000
-5.999	4.241	-6.06290	4.04640	1687.09990	792.43650	668.36380	99.80000	-.06310	.19440	10.02000	1.88000
-5.962	6.205	-6.06310	6.02740	1686.59990	790.04170	669.02170	99.80000	-.06320	.19440	10.02000	1.88000
	GRADIENT	-.01064	.99051	-.19279	.06205	-.13692	-.01205	.00001	.00000	.00000	.00000

IA156A, AEDC PWT 16T-470, O T S W/SILTS (R8NME7) (10 MAY 80)

REFERENCE DATA

SREF = 2690.0000 SQ.FT. XMRP = 976.0000 IN. XT
LREF = 1290.3000 INCHES YMRP = .0000 IN. YT
BREF = 1290.3000 INCHES ZMRP = 400.0000 IN. ZT
SCALE = .0200

PARAMETRIC DATA

IB-ELV = 10.000 OB-ELV = 2.000
BDFLAP = .000 SPDBRK = .000
RUDDER = .000 SILTS = 1.000
MACH = 1.100 RN/L = 3.500

RUN NO. 1501/ 0 RN/L = 3.51 GRADIENT INTERVAL = -5.00/ 5.00

ALPHAO	BETAO	ALFAOU	BETAOU	PT	P	Q	TT	AFA	BFA	DEINLR	DEONLR
-4.064	-6.124	-3.86360	-6.16270	1690.09990	791.60890	670.43870	99.90000	-.06320	.19440	10.02000	1.88000
-4.304	-3.972	-4.11790	-4.05570	1690.09990	791.90870	670.32010	99.80000	-.06320	.19440	10.02000	1.88000
-4.191	.371	-4.13630	.17400	1691.29980	791.79760	671.06200	99.80000	-.06320	.19440	10.02000	1.88000
-3.737	4.274	-3.84410	4.10000	1691.50000	792.09570	671.06080	99.80000	-.06320	.19440	10.02000	1.88000
-3.857	6.128	-3.99110	5.97320	1691.39990	792.99630	670.64650	100.00000	-.06320	.19440	10.02000	1.88000
	GRADIENT	.03250	.98873	.17178	.02178	.09134	.00000	-.00000	-.00000	-.00000	.00000

RUN NO. 1502/ 0 RN/L = 3.49 GRADIENT INTERVAL = -5.00/ 5.00

ALPHAO	BETAO	ALFAOU	BETAOU	PT	P	Q	TT	AFA	BFA	DEINLR	DEONLR
-.472	-6.996	-.27730	-6.93280	1692.00000	792.79080	671.07690	100.00000	-.06320	.19440	10.02000	1.88000
-.442	-4.844	-.24730	-4.78070	1687.70000	791.43120	669.11210	99.90000	-.06320	.19440	10.02000	1.88000
-.413	-.478	-.21890	-.41500	1683.70000	789.26900	667.63960	99.90000	-.06320	.19440	10.02000	1.88000
-.380	3.654	-.18540	3.71720	1680.79980	788.29610	666.33670	99.80000	-.06320	.19440	10.02000	1.88000
-.376	5.836	-.18170	5.89910	1676.70000	786.33500	664.72660	99.80000	-.06320	.19440	10.02000	1.88000
	GRADIENT	.00728	.99999	-.81296	-.37011	-.32669	-.01166	-.00000	-.00000	.00000	.00000

RUN NO. 1503/ 0 RN/L = 3.50 GRADIENT INTERVAL = -5.00/ 5.00

ALPHAO	BETAO	ALFAOU	BETAOU	PT	P	Q	TT	AFA	BFA	DEINLR	DEONLR
4.105	-5.818	3.97880	-5.97830	1692.20000	793.98850	670.71900	99.90000	-.06320	.19440	10.02000	1.88000
3.961	-3.699	3.86890	-3.88140	1698.20000	793.83280	674.27080	100.00000	-.06330	.19450	10.02000	1.88000
3.792	.122	3.85190	-.07360	1693.79980	791.97440	672.44560	100.00000	-.06330	.19450	10.02000	1.88000
3.836	4.038	4.01730	3.94320	1687.20000	789.23660	669.68820	99.90000	-.06330	.19450	10.02000	1.88000
3.791	6.090	3.98770	6.03590	1681.29980	788.99150	666.35230	99.90000	-.06310	.19440	10.02000	1.88000
	GRADIENT	.01928	1.01145	-1.42292	-.59453	-.59279	-.01298	-.00000	.00000	.00000	.00000

IA156A, AEDC PWT 16T-470, O T S W/SILTS (R8NME8) (10 MAY 80)

REFERENCE DATA

SREF = 2690.0000 SQ.FT. XMRP = 976.0000 IN. XT
LREF = 1290.3000 INCHES YMRP = .0000 IN. YT
BREF = 1290.3000 INCHES ZMRP = 400.0000 IN. ZT
SCALE = .0200

PARAMETRIC DATA

IB-ELV = 10.000 OB-ELV = 2.000
BDFLAP = .000 SPDBRK = .000
RUDDER = .000 SILTS = 1.000
MACH = 1.150 RN/L = 3.500

RUN NO. 1504/ 0 RN/L = 3.50 GRADIENT INTERVAL = -5.00/ 5.00

ALPHAO	BETAO	ALFAOU	BETAOU	PT	P	Q	TT	AFA	BFA	DEINLR	DEONLR
-8.224	-5.884	-8.04870	-5.99420	1679.59990	738.78440	683.86990	99.80000	-.06560	.19610	10.02000	1.88000
-8.207	-3.764	-8.05750	-3.90680	1686.59990	741.91870	686.70120	99.80000	-.06550	.19610	10.02000	1.88000
-8.128	.156	-8.06220	-.04000	1687.00000	741.51660	687.05980	99.90000	-.06550	.19610	10.02000	1.88000
-8.010	4.213	-8.04620	4.00970	1679.50000	737.58890	684.21850	99.90000	-.06560	.19620	10.02000	1.88000
-7.965	6.247	-8.03950	6.05400	1677.59990	736.80660	683.42680	99.80000	-.06550	.19620	10.02000	1.88000
	GRADIENT	.00143	.99237	-.89557	-.54523	-.31348	.01246	-.00001	.00001	-.00000	-.00000

RUN NO. 1505/ 0 RN/L = 3.51 GRADIENT INTERVAL = -5.00/ 5.00

ALPHAO	BETAO	ALFAOU	BETAOU	PT	P	Q	TT	AFA	BFA	DEINLR	DEONLR
-6.163	-5.962	-5.97300	-6.04450	1684.29980	739.74370	686.15820	99.80000	-.06560	.19620	10.02000	1.88000
-6.108	-4.043	-5.93620	-4.15780	1689.79980	742.19210	688.38770	99.90000	-.06560	.19620	10.02000	1.88000
-6.197	.091	-6.12770	-.10420	1688.89990	741.40160	688.15430	99.90000	-.06560	.19620	10.02000	1.88000
-6.035	4.259	-6.09760	4.06190	1685.00000	740.23660	686.38060	99.90000	-.06560	.19620	10.02000	1.88000
-5.956	6.210	-6.05630	6.02900	1681.59990	738.76860	684.98710	100.10000	-.06550	.19620	10.02000	1.88000
	GRADIENT	-.01940	.99016	-.57869	-.23562	-.24204	.00000	.00000	.00000	.00000	.00000

RUN NO. 1506/ 0 RN/L = 3.50 GRADIENT INTERVAL = -5.00/ 5.00

ALPHAO	BETAO	ALFAOU	BETAOU	PT	P	Q	TT	AFA	BFA	DEINLR	DEONLR
-4.053	-6.089	-3.84960	-6.12720	1678.79980	737.19580	683.96220	99.80000	-.06560	.19620	10.02000	1.88000
-4.308	-3.975	-4.11870	-4.05860	1677.70000	735.90840	683.78490	99.90000	-.06560	.19620	10.02000	1.88000
-4.206	.359	-4.14840	.15970	1680.59990	737.28100	684.93310	99.80000	-.06560	.19620	10.02000	1.88000
-3.756	4.297	3.86300	4.11990	1681.39990	739.16890	684.74070	99.80000	-.06550	.19610	10.02000	1.88000
-3.861	6.129	-3.99480	5.97140	1683.00000	740.35250	685.22950	99.80000	-.06550	.19610	10.02000	1.88000
	GRADIENT	.03028	.98846	.45099	.39288	.11804	-.01227	.00001	-.00001	.00000	-.00000

RUN NO. 1507/ 0 RN/L = 3.51 GRADIENT INTERVAL = -5.00/ 5.00

ALPHAO	BETAO	ALFAOU	BETAOU	PT	P	Q	TT	AFA	BFA	DEINLR	DEONLR
-.455	-7.001	-.25940	-6.93540	1685.20000	741.13230	686.18900	99.70000	-.06550	.19610	10.02000	1.88000
-.432	-4.850	-.23560	-4.78440	1687.29980	742.11250	687.02490	99.80000	-.06550	.19610	10.02000	1.88000
-.395	-.487	-.19920	-.42100	1685.59990	740.03250	686.78300	99.70000	-.06560	.19620	10.02000	1.88000
-.365	3.645	-.16840	3.71070	1683.70000	742.04170	685.04520	99.80000	-.06540	.19600	10.02000	1.88000
-.365	5.852	-.16890	5.91730	1681.70000	739.66500	684.73950	99.70000	-.06550	.19610	10.02000	1.88000
	GRADIENT	.00791	1.00001	-.42344	-.01270	-.23139	-.00021	.00001	-.00001	-.00000	.00000

IA156A, AEDC PWT 16T-470, O T S W/SILTS (R8NME8) (10 MAY 80)

REFERENCE DATA

SREF = 2690.0000 SQ.FT. XMRP = 976.0000 IN. XT
LREF = 1290.3000 INCHES YMRP = .0000 IN. YT
BREF = 1290.3000 INCHES ZMRP = 400.0000 IN. ZT
SCALE = .0200

PARAMETRIC DATA

IB-ELV = 10.000 OB-ELV = 2.000
BDFLAP = .000 SPDBRK = .000
RUDDER = .000 SILTS = 1.000
MACH = 1.150 RN/L = 3.500

RUN NO. 1508/ 0 RN/L = 3.50 GRADIENT INTERVAL = -5.00/ 5.00

ALPHAO	BETAO	ALFAOU	BETAOU	PT	P	Q	TT	AFA	BFA	DEINLR	DEONLR
4.103	-5.794	3.97670	-5.95770	1682.29980	742.55180	684.09110	99.70000	-.06540	.19600	10.02000	1.88000
3.996	-3.720	3.90400	-3.90550	1685.70000	743.02270	685.82520	99.80000	-.06540	.19600	10.02000	1.88000
3.757	.111	3.81950	-.08640	1679.39990	736.29370	684.59890	99.70000	-.06560	.19630	10.02000	1.88000
3.841	4.038	4.02570	3.94460	1673.39990	737.33890	680.91020	99.60000	-.06540	.19600	10.02000	1.88000
3.790	6.100	3.98940	6.04720	1668.29980	736.08370	678.49660	99.70000	-.06540	.19600	10.02000	1.88000
	GRADIENT	.01584	1.01188	-1.58515	-.72843	-.63479	-.02578	.00000	-.00000	-.00000	-.00000

IA156A, AEDC PWT 16T-470, O T S W/SILTS (R8NME9) (10 MAY 80)

REFERENCE DATA

SREF = 2690.0000 SQ.FT. XMRP = 976.0000 IN. XT
LREF = 1290.3000 INCHES YMRP = .0000 IN. YT
BREF = 1290.3000 INCHES ZMRP = 400.0000 IN. ZT
SCALE = .0200

PARAMETRIC DATA

IB-ELV = 10.000 OB-ELV = 2.000
BDFLAP = .000 SPDBRK = .000
RUDDER = .000 SILTS = 1.000
MACH = 1.150 RN/L = 3.500

RUN NO. 1509/ 0 RN/L = 3.51 GRADIENT INTERVAL = -5.00/ 5.00

ALPHAO	BETAO	ALFAOU	BETAOU	PT	P	Q	TT	AFA	BFA	DEINLR	DEONLR
-.455	-6.952	-.25900	-6.88650	1673.39990	737.23930	680.94410	99.70000	-.06550	.19610	10.02000	1.88000
-.427	-4.786	-.23080	-4.71990	1678.59990	736.99800	683.91770	99.80000	-.06560	.19620	10.02000	1.88000
-.393	-.538	-.19670	-.47240	1682.89990	737.66140	686.08180	99.80000	-.06570	.19630	10.02000	1.88000
-.362	3.716	-.16600	3.78210	1686.89990	739.52370	687.67580	99.90000	-.06570	.19630	10.02000	1.88000
-.361	5.867	-.16440	5.93190	1690.09990	743.38600	688.15060	99.90000	-.06550	.19610	10.02000	1.88000
	GRADIENT	.00762	1.00000	.97623	.29711	.44201	.01177	-.00001	.00001	-.00000	-.00000

IA156A, AEDC PWT 16T-470, O T S (R8NT01) (10 MAY 80)

REFERENCE DATA

SREF = 2690.0000 SQ.FT. XMRP = 976.0000 IN. XT
LREF = 1290.3000 INCHES YMRP = .0000 IN. YT
BREF = 1290.3000 INCHES ZMRP = 400.0000 IN. ZT
SCALE = .0200

PARAMETRIC DATA

IB-ELV = 10.000 OB-ELV = 5.000
BDFLAP = .000 SPDBRK = .000
RUDDER = .000 SILTS = .000
MACH = .600 RN/L = 3.500

RUN NO. 801/ 0 RN/L = 3.51 GRADIENT INTERVAL = -5.00/ 5.00

ALPHAT	BETAT	CNFT	CAFT	CLMFT	CYFT	CYNFT	CBLFT	CABT	CP7	ALPHAO	BETAO
-.170	-6.584	-.13910	.04170	.06020	.09200	-.00350	.00010	.07720	-.34320	-.31160	-6.62020
-.186	-.302	-.12280	.04300	.04850	.00210	.00130	-.00010	.07470	-.33220	-.29470	-.35580
-.205	5.920	-.12660	.04280	.04940	-.07330	.00060	-.00040	.07570	-.33660	-.30770	5.84810
	GRADIENT	.00000	.00000	.00000	.00000	.00000	.00000	.00000	.00000	.00000	.00000

IA156A, AEDC PWT 16T-470, O T S (R8NT02) (10 MAY 80)

REFERENCE DATA

SREF = 2690.0000 SQ.FT. XMRP = 976.0000 IN. XT
LREF = 1290.3000 INCHES YMRP = .0000 IN. YT
BREF = 1290.3000 INCHES ZMRP = 400.0000 IN. ZT
SCALE = .0200

PARAMETRIC DATA

IB-ELV = 10.000 OB-ELV = 5.000
BDFLAP = .000 SPDBRK = .000
RUDDER = .000 SILTS = .000
MACH = .700 RN/L = 3.500

RUN NO. 803/ 0 RN/L = 3.50 GRADIENT INTERVAL = -5.00/ 5.00

ALPHAT	BETAT	CNFT	CAFT	CLMFT	CYFT	CYNFT	CBLFT	CABT	CP7	ALPHAO	BETAO
-.135	-6.750	-.14470	.04220	.06440	.10020	-.00570	.00020	.07810	-.34750	-.30680	-6.78580
-.178	-.391	-.12380	.04420	.04970	.00560	-.00060	-.00010	.07370	-.32780	-.30870	-.44570
-.221	5.873	-.13040	.04350	.05210	-.07710	.00240	-.00040	.07740	-.34410	-.34340	5.80290
	GRADIENT	.00000	.00000	.00000	.00000	.00000	.00000	.00000	.00000	.00000	.00000

IA156A, AEDC PWT 16T-470, O T S (R8NT03) (10 MAY 80)

REFERENCE DATA

SREF = 2690.0000 SQ.FT. XMRP = 976.0000 IN. XT
LREF = 1290.3000 INCHES YMRP = .0000 IN. YT
BREF = 1290.3000 INCHES ZMRP = 400.0000 IN. ZT
SCALE = .0200

PARAMETRIC DATA

IB-ELV = 10.000 OB-ELV = 5.000
BDFLAP = .000 SPDBRK = .000
RUDDER = .000 SILTS = .000
MACH = .800 RN/L = 3.500

RUN NO. 804/ 0 RN/L = 3.50 GRADIENT INTERVAL = -5.00/ 5.00

ALPHAT	BETAT	CNFT	CAFT	CLMFT	CYFT	CYNFT	CBLFT	CABT	CP7	ALPHAO	BETAO
-.130	-6.826	-.15150	.04440	.06600	.10870	-.00910	.00030	.07960	-.35380	-.31530	-6.86330
-.203	-.452	-.12290	.04690	.04560	.01020	-.00200	-.00010	.07350	-.32690	-.32230	-.50780
-.241	5.869	-.13150	.04730	.05050	-.08370	.00560	-.00040	.07680	-.34140	-.36060	5.80400
	GRADIENT	.00000	.00000	.00000	.00000	.00000	.00000	.00000	.00000	.00000	.00000

IA156A, AEDC PWT 16T-470, O T S (R8NT04) (10 MAY 80)

REFERENCE DATA

SREF = 2690.0000 SQ.FT. XMRP = 976.0000 IN. XT
LREF = 1290.3000 INCHES YMRP = .0000 IN. YT
BREF = 1290.3000 INCHES ZMRP = 400.0000 IN. ZT
SCALE = .0200

PARAMETRIC DATA

IB-ELV = 10.000 OB-ELV = 5.000
BDFLAP = .000 SPDBRK = .000
RUDDER = .000 SILTS = .000
MACH = .850 RN/L = 3.500

RUN NO. 805/ 0 RN/L = 3.50 GRADIENT INTERVAL = -5.00/ 5.00

ALPHAT	BETAT	CNFT	CAFT	CLMFT	CYFT	CYNFT	CBLFT	CABT	CP7	ALPHAO	BETAO
-.139	-6.729	-.15560	.04780	.06630	.11030	-.01030	.00040	.08200	-.36460	-.32330	-6.76770
-.226	-.469	-.11850	.04750	.04140	.00930	-.00180	-.00010	.07570	-.33680	-.32460	-.52610
-.265	5.743	-.13060	.04850	.04800	-.08490	.00690	-.00030	.07920	-.35210	-.37180	5.67870
	GRADIENT	.00000	.00000	.00000	.00000	.00000	.00000	.00000	.00000	.00000	.00000

IA156A, AEDC PWT 16T-470, O T S (R8NT05) (10 MAY 80)

REFERENCE DATA

SREF = 2690.0000 SQ.FT. XMRP = 976.0000 IN. XT
LREF = 1290.3000 INCHES YMRP = .0000 IN. YT
BREF = 1290.3000 INCHES ZMRP = 400.0000 IN. ZT
SCALE = .0200

PARAMETRIC DATA

IB-ELV = 10.000 OB-ELV = 5.000
BDFLAP = .000 SPDBRK = .000
RUDDER = .000 SILTS = .000
MACH = .900 RN/L = 3.500

RUN NO. 806/ 0 RN/L = 3.50 GRADIENT INTERVAL = -5.00/ 5.00

ALPHAT	BETAT	CNFT	CAFT	CLMFT	CYFT	CYNFT	CBLFT	CABT	CP7	ALPHAO	BETAO
-.158	-6.741	-.15590	.05020	.06540	.11330	-.01220	.00030	.08540	-.37980	-.33940	-6.78370
-.260	-.469	-.11450	.05150	.03740	.01020	-.00230	-.00010	.07790	-.34650	-.34020	-.52760
-.297	5.768	-.12890	.05140	.04560	-.08730	.00840	-.00030	.08310	-.36940	-.38700	5.70750
	GRADIENT	.00000	.00000	.00000	.00000	.00000	.00000	.00000	.00000	.00000	.00000

IA156A, AEDC PWT 16T-470, O T S (R8NT06) (10 MAY 80)

REFERENCE DATA

SREF = 2690.0000 SQ.FT. XMRP = 976.0000 IN. XT
LREF = 1290.3000 INCHES YMRP = .0000 IN. YT
BREF = 1290.3000 INCHES ZMRP = 400.0000 IN. ZT
SCALE = .0200

PARAMETRIC DATA

IB-ELV = 10.000 OB-ELV = 5.000
BDFLAP = .000 SPDBRK = .000
RUDDER = .000 SILTS = .000
MACH = .920 RN/L = 3.500

RUN NO. 807/ 0 RN/L = 3.50 GRADIENT INTERVAL = -5.00/ 5.00

ALPHAT	BETAT	CNFT	CAFT	CLMFT	CYFT	CYNFT	CBLFT	CABT	CP7	ALPHAO	BETAO
-.166	-6.744	-.15470	.05350	.06390	.11320	-.01280	.00040	.08790	-.39110	-.34840	-6.78730
-.255	-.495	-.11080	.05400	.03620	.01050	-.00250	-.00020	.08010	-.35640	-.34260	-.55490
-.292	5.752	-.12700	.05470	.04450	-.08810	.00910	-.00040	.08550	-.38020	-.38890	5.69070
	GRADIENT	.00000	.00000	.00000	.00000	.00000	.00000	.00000	.00000	.00000	.00000

IA156A, AEDC PWT 16T-470, O T S (R8NT07) (10 MAY 80)

REFERENCE DATA

SREF = 2690.0000 SQ.FT. XMRP = 976.0000 IN. XT
LREF = 1290.3000 INCHES YMRP = .0000 IN. YT
BREF = 1290.3000 INCHES ZMRP = 400.0000 IN. ZT
SCALE = .0200

PARAMETRIC DATA

IB-ELV = 10.000 OB-ELV = 5.000
BDFLAP = .000 SPDBRK = .000
RUDDER = .000 SILTS = .000
MACH = .940 RN/L = 3.500

RUN NO. 808/ 0 RN/L = 3.50 GRADIENT INTERVAL = -5.00/ 5.00

ALPHAT	BETAT	CNFT	CAFT	CLMFT	CYFT	CYNFT	CBLFT	CABT	CP7	ALPHAO	BETAO
-.159	-6.724	-.15010	.05710	.06180	.11150	-.01290	.00040	.09110	-.40510	-.35000	-6.77110
-.234	-.521	-.10710	.05760	.03600	.01030	-.00240	-.00020	.08490	-.37740	-.34330	-.58220
-.287	5.852	-.12150	.05830	.04220	-.08870	.00960	-.00040	.09020	-.40100	-.39330	5.79500
	GRADIENT	.00000	.00000	.00000	.00000	.00000	.00000	.00000	.00000	.00000	.00000

IA156A, AEDC PWT 16T-470, O T S (R8NT08) (10 MAY 80)

REFERENCE DATA

SREF = 2690.0000 SQ.FT. XMRP = 976.0000 IN. XT
LREF = 1290.3000 INCHES YMRP = .0000 IN. YT
BREF = 1290.3000 INCHES ZMRP = 400.0000 IN. ZT
SCALE = .0200

PARAMETRIC DATA

IB-ELV = 10.000 OB-ELV = 5.000
BDFLAP = .000 SPDBRK = .000
RUDDER = .000 SILTS = .000
MACH = .950 RN/L = 3.500

RUN NO. 816/ 0 RN/L = 3.50 GRADIENT INTERVAL = -5.00/ 5.00

BETAT	ALPHAT	CNFT	CAFT	CLMFT	CYFT	CYNFT	CBLFT	CABT	CP7	ALPHAO	BETAO
.567	-5.981	-.18460	.06430	.00820	-.01010	.00190	-.00020	.09590	-.42670	-5.89820	.56630
.267	-.968	-.10360	.06730	.02440	-.00560	-.00070	-.00010	.08710	-.38720	-1.05480	.26650
.197	.158	-.08890	.05950	.03010	-.00460	-.00040	.00000	.08930	-.39700	.02890	.19660
-.165	6.027	.00330	.05480	.04560	.00420	-.00190	.00000	.08380	-.37280	5.74530	-.17030
	GRADIENT	.01305	-.00692	.00506	.00089	.00027	.00009	.00195	-.00870	.96192	-.06205

IA156A, AEDC PWT 16T-470, O T S (R8NT09) (10 MAY 80)

REFERENCE DATA

SREF = 2690.0000 SQ.FT. XMRP = 976.0000 IN. XT
LREF = 1290.3000 INCHES YMRP = .0000 IN. YT
BREF = 1290.3000 INCHES ZMRP = 400.0000 IN. ZT
SCALE = .0200

PARAMETRIC DATA

IB-ELV = 10.000 OB-ELV = 5.000
BDFLAP = .000 SPDBRK = .000
RUDDER = .000 SILTS = .000
MACH = .950 RN/L = 3.500

RUN NO. 820/ 0 RN/L = 3.50 GRADIENT INTERVAL = -5.00/ 5.00

ALPHAT	BETAT	CNFT	CAFT	CLMFT	CYFT	CYNFT	CBLFT	CABT	CP7	ALPHAO	BETAO
-.252	-6.864	-.15300	.05770	.05790	.11120	-.01400	.00050	.09490	-.42220	-.43270	-6.31180
-.273	-.131	-.10230	.05940	.03030	.00010	-.00100	.00000	.08980	-.39940	-.36180	-.19460
-.198	5.895	-.11340	.05970	.04230	-.08960	.00930	-.00030	.09300	-.41350	-.33000	5.84450
	GRADIENT	.00000	.00000	.00000	.00000	.00000	.00000	.00000	.00000	.00000	.00000

IA156A, AEDC PWT 16T-470, O T S (R8NT10) (10 MAY 80)

REFERENCE DATA

SREF = 2690.0000 SQ.FT. XMRP = 976.0000 IN. XT
LREF = 1290.3000 INCHES YMRP = .0000 IN. YT
BREF = 1290.3000 INCHES ZMRP = 400.0000 IN. ZT
SCALE = .0200

PARAMETRIC DATA

IB-ELV = 10.000 OB-ELV = 5.000
BDFLAP = .000 SPDBRK = .000
RUDDER = .000 SILTS = .000
MACH = .960 RN/L = 3.500

RUN NO. 818/ 0 RN/L = 3.50 GRADIENT INTERVAL = -5.00/ 5.00

ALPHAT	BETAT	CNFT	CAFT	CLMFT	CYFT	CYNFT	CBLFT	CABT	CP7	ALPHAO	BETAO
-.253	-6.852	-.15050	.06100	.05600	.11210	-.01420	.00050	.09640	-.42890	-.43220	-6.90150
-.279	-.469	-.10300	.06230	.02970	.00600	-.00270	.00000	.09070	-.40320	-.37220	-.53530
-.211	5.890	-.10950	.06180	.03970	-.09000	.00880	-.00030	.09660	-.42980	-.34240	5.83970
	GRADIENT	.00000	.00000	.00000	.00000	.00000	.00000	.00000	.00000	.00000	.00000

IA156A, AEDC PWT 16T-470, O T S (R8NT11) (10 MAY 80)

REFERENCE DATA

SREF = 2690.0000 SQ.FT. XMRP = 976.0000 IN. XT
LREF = 1290.3000 INCHES YMRP = .0000 IN. YT
BREF = 1290.3000 INCHES ZMRP = 400.0000 IN. ZT
SCALE = .0200

PARAMETRIC DATA

IB-ELV = 10.000 OB-ELV = 5.000
BDFLAP = .000 SPDBRK = .000
RUDDER = .000 SILTS = .000
MACH = .970 RN/L = 3.500

RUN NO. 821/ 0 RN/L = 3.50 GRADIENT INTERVAL = -5.00/ 5.00

ALPHAT	BETAT	CNFT	CAFT	CLMFT	CYFT	CYNFT	CBLFT	CABT	CP7	ALPHAO	BETAO
-.277	-6.683	-.14790	.06370	.05350	.11200	-.01460	.00050	.09840	-.43760	-.44340	-6.73130
-.307	-.261	-.09770	.06600	.02580	.00280	-.00210	.00000	.08970	-.39900	-.37710	-.32480
-.216	6.009	-.10770	.06400	.03850	-.09220	.00920	-.00030	.09580	-.42620	-.34220	5.95940
	GRADIENT	.00000	.00000	.00000	.00000	.00000	.00000	.00000	.00000	.00000	.00000

IA156A, AEDC PWT 16T-470, O T S (R8NT12) (10 MAY 80)

REFERENCE DATA

SREF = 2690.0000 SQ.FT. XMRP = 976.0000 IN. XT
LREF = 1290.3000 INCHES YMRP = .0000 IN. YT
BREF = 1290.3000 INCHES ZMRP = 400.0000 IN. ZT
SCALE = .0200

PARAMETRIC DATA

IB-ELV = 10.000 OB-ELV = 5.000
BDFLAP = .000 SPDBRK = .000
RUDDER = .000 SILTS = .000
MACH = .980 RN/L = 3.500

RUN NO. 822/ 0 RN/L = 3.51 GRADIENT INTERVAL = -5.00/ 5.00

ALPHAT	BETAT	CNFT	CAFT	CLMFT	CYFT	CYNFT	CBLFT	CABT	CP7	ALPHAO	BETAO
.008	-6.136	-.13600	.06400	.05120	.10170	-.01390	.00030	.09890	-.43980	-.15570	-6.19220
-.318	.077	-.09350	.06720	.02200	-.00160	-.00150	-.00010	.09420	-.41900	-.37380	.02040
.120	5.988	-.09720	.06670	.03640	-.09410	.00980	-.00030	.09850	-.43790	-.00410	5.94300
	GRADIENT	.00000	.00000	.00000	.00000	.00000	.00000	.00000	.00000	.00000	.00000

IA156A, AEDC PWT 16T-470, O T S (R8NT13) (10 MAY 80)

REFERENCE DATA

SREF = 2690.0000 SQ.FT. XMRP = 976.0000 IN. XT
LREF = 1290.3000 INCHES YMRP = .0000 IN. YT
BREF = 1290.3000 INCHES ZMRP = 400.0000 IN. ZT
SCALE = .0200

PARAMETRIC DATA

IB-ELV = 10.000 OB-ELV = 5.000
BDFLAP = .000 SPDBRK = .000
RUDDER = .000 SILTS = .000
MACH = .990 RN/L = 3.500

RUN NO. 823/ 0 RN/L = 3.50 GRADIENT INTERVAL = -5.00/ 5.00

ALPHAT	BETAT	CNFT	CAFT	CLMFT	CYFT	CYNFT	CBLFT	CABT	CP7	ALPHAO	BETAO
.097	-6.148	-.13690	.06760	.05240	.10410	-.01390	.00030	.09900	-.44010	-.07080	-6.20220
-.282	.173	-.08940	.07050	.02030	-.00460	-.00060	-.00010	.09470	-.42100	-.32810	.12030
.064	5.733	-.09890	.06930	.03590	-.09000	.00920	-.00020	.09890	-.43990	-.05770	5.68740
	GRADIENT	.00000	.00000	.00000	.00000	.00000	.00000	.00000	.00000	.00000	.00000

IA156A, AEDC PWT 16T-470, O T S (R8NT14) (10 MAY 80)

REFERENCE DATA

SREF = 2690.0000 SQ.FT. XMRP = 976.0000 IN. XT
LREF = 1290.3000 INCHES YMRP = .0000 IN. YT
BREF = 1290.3000 INCHES ZMRP = 400.0000 IN. ZT
SCALE = .0200

PARAMETRIC DATA

IB-ELV = 10.000 OB-ELV = 5.000
BDFLAP = .000 SPDBRK = .000
RUDDER = .000 SILTS = .000
MACH = 1.010 RN/L = 3.500

RUN NO. 824/ 0 RN/L = 3.51 GRADIENT INTERVAL = -5.00/ 5.00

ALPHAT	BETAT	CNFT	CAFT	CLMFT	CYFT	CYNFT	CBLFT	CABT	CP7	ALPHAO	BETAO
.235	-6.085	-.13720	.07460	.05550	.10340	-.01390	.00020	.10110	-.44970	.03950	-6.14520
-.163	.352	-.08940	.07100	.02170	-.00570	-.00090	-.00010	.10500	-.46700	-.23020	.30160
.025	6.079	-.10120	.07580	.03700	-.09680	.00960	-.00030	.10470	-.46570	-.11050	6.03350
	GRADIENT	.00000	.00000	.00000	.00000	.00000	.00000	.00000	.00000	.00000	.00000

IA156A, AEDC PWT 16T-470, O T S (R8NT15) (10 MAY 80)

REFERENCE DATA

SREF = 2690.0000 SQ.FT. XMRP = 976.0000 IN. XT
LREF = 1290.3000 INCHES YMRP = .0000 IN. YT
BREF = 1290.3000 INCHES ZMRP = 400.0000 IN. ZT
SCALE = .0200

PARAMETRIC DATA

IB-ELV = 10.000 OB-ELV = 5.000
BDFLAP = .000 SPDBRK = .000
RUDDER = .000 SILTS = .000
MACH = 1.020 RN/L = 3.500

RUN NO. 825/ 0 RN/L = 3.51 GRADIENT INTERVAL = -5.00/ 5.00

ALPHAT	BETAT	CNFT	CAFT	CLMFT	CYFT	CYNFT	CBLFT	CABT	CP7	ALPHAO	BETAO
.179	-6.152	-.13810	.07800	.05570	.10360	-.01350	.00020	.10180	-.45280	-.02100	-6.21100
-.273	.189	-.09320	.07940	.02210	-.00340	-.00150	-.00010	.10500	-.46720	-.33990	.13400
.091	6.123	-.10080	.07940	.03780	-.09790	.00950	-.00030	.10560	-.46950	-.05180	6.07680
	GRADIENT	.00000	.00000	.00000	.00000	.00000	.00000	.00000	.00000	.00000	.00000

IA156A, AEDC PWT 16T-470, O T S (R8NT16) (10 MAY 80)

REFERENCE DATA

SREF = 2690.0000 SQ.FT. XMRP = 976.0000 IN. XT
LREF = 1290.3000 INCHES YMRP = .0000 IN. YT
BREF = 1290.3000 INCHES ZMRP = 400.0000 IN. ZT
SCALE = .0200

PARAMETRIC DATA

IB-ELV = 10.000 OB-ELV = 5.000
BDFLAP = .000 SPDBRK = .000
RUDDER = .000 SILTS = .000
MACH = 1.030 RN/L = 3.500

RUN NO. 826/ 0 RN/L = 3.51 GRADIENT INTERVAL = -5.00/ 5.00

ALPHAT	BETAT	CNFT	CAFT	CLMFT	CYFT	CYNFT	CBLFT	CABT	CP7	ALPHAO	BETAO
.203	-6.443	-.14020	.08080	.05730	.11010	-.01480	.00020	.10430	-.46380	-.00690	-6.50010
-.234	.233	-.09320	.08320	.02320	-.00310	-.00180	-.00010	.10580	-.47060	-.31380	.17980
.054	6.321	-.10340	.08110	.03920	-.10160	.01010	-.00030	.10940	-.48670	-.09910	6.27500
	GRADIENT	.00000	.00000	.00000	.00000	.00000	.00000	.00000	.00000	.00000	.00000

IA156A, AEDC PWT 16T-470, O T S (R8NT17) (10 MAY 80)

REFERENCE DATA

SREF = 2690.0000 SQ.FT. XMRP = 976.0000 IN. XT
LREF = 1290.3000 INCHES YMRP = .0000 IN. YT
BREF = 1290.3000 INCHES ZMRP = 400.0000 IN. ZT
SCALE = .0200

PARAMETRIC DATA

IB-ELV = 10.000 OB-ELV = 5.000
BDFLAP = .000 SPDBRK = .000
RUDDER = .000 SILTS = .000
MACH = 1.040 RN/L = 3.500

RUN NO. 827/ 0 RN/L = 3.51 GRADIENT INTERVAL = -5.00/ 5.00

ALPHAT	BETAT	CNFT	CAFT	CLMFT	CYFT	CYNFT	CBLFT	CABT	CP7	ALPHAO	BETAO
-.007	-6.331	-.14530	.08240	.05680	.10980	-.01540	.00030	.10700	-.47580	-.21420	-6.39490
-.264	.218	-.09340	.08430	.02340	-.00320	-.00220	-.00010	.10910	-.48540	-.34510	.15980
.121	6.196	-.10260	.08380	.04000	-.09790	.00940	-.00030	.11020	-.49030	-.03990	6.15180
	GRADIENT	.00000	.00000	.00000	.00000	.00000	.00000	.00000	.00000	.00000	.00000

IA156A, AEDC PWT 16T-470, O T S (R8NT18) (10 MAY 80)

REFERENCE DATA

SREF = 2690.0000 SQ.FT. XMRP = 976.0000 IN. XT
LREF = 1290.3000 INCHES YMRP = .0000 IN. YT
BREF = 1290.3000 INCHES ZMRP = 400.0000 IN. ZT
SCALE = .0200

PARAMETRIC DATA

IB-ELV = 10.000 OB-ELV = 5.000
BDFLAP = .000 SPDBRK = .000
RUDDER = .000 SILTS = .000
MACH = 1.050 RN/L = 3.500

RUN NO. 828/ 0 RN/L = 3.51 GRADIENT INTERVAL = -5.00/ 5.00

ALPHAT	BETAT	CNFT	CAFT	CLMFT	CYFT	CYNFT	CBLFT	CABT	CP7	ALPHAO	BETAO
.089	-6.310	-.13990	.08180	.05700	.10700	-.01520	.00010	.10730	-.47730	-.12810	-6.37780
-.206	.323	-.09010	.08780	.02270	-.00470	-.00220	-.00010	.10640	-.47320	-.29070	.26310
.010	6.263	-.10270	.08560	.03870	-.09860	.00900	-.00030	.10880	-.48390	-.14490	6.21590
	GRADIENT	.00000	.00000	.00000	.00000	.00000	.00000	.00000	.00000	.00000	.00000

IA156A, AEDC PWT 16T-470, O T S (R8NT19) (10 MAY 80)

REFERENCE DATA

SREF = 2690.0000 SQ.FT. XMRP = 976.0000 IN. XT
LREF = 1290.3000 INCHES YMRP = .0000 IN. YT
BREF = 1290.3000 INCHES ZMRP = 400.0000 IN. ZT
SCALE = .0200

PARAMETRIC DATA

IB-ELV = 10.000 OB-ELV = 5.000
BDFLAP = .000 SPDBRK = .000
RUDDER = .000 SILTS = .000
MACH = 1.060 RN/L = 3.500

RUN NO. 829/ 0 RN/L = 3.50 GRADIENT INTERVAL = -5.00/ 5.00

ALPHAT	BETAT	CNFT	CAFT	CLMFT	CYFT	CYNFT	CBLFT	CABT	CP7	ALPHAO	BETAO
.186	-6.280	-.13660	.08690	.05570	.10690	-.01540	.00010	.10280	-.45710	-.02420	-6.35310
-.205	.343	-.08740	.08940	.02080	-.00630	-.00130	-.00020	.10220	-.45460	-.27510	.28430
-.025	6.252	-.10110	.08730	.03740	-.09890	.00930	-.00040	.10390	-.46190	-.16990	6.20520
	GRADIENT	.00000	.00000	.00000	.00000	.00000	.00000	.00000	.00000	.00000	.00000

IA156A, AEDC PWT 16T-470, O T S (R8NT20) (10 MAY 80)

REFERENCE DATA

SREF = 2690.0000 SQ.FT. XMRP = 976.0000 IN. XT
LREF = 1290.3000 INCHES YMRP = .0000 IN. YT
BREF = 1290.3000 INCHES ZMRP = 400.0000 IN. ZT
SCALE = .0200

PARAMETRIC DATA

IB-ELV = 10.000 OB-ELV = 5.000
BDFLAP = .000 SPDBRK = .000
RUDDER = .000 SILTS = .000
MACH = 1.080 RN/L = 3.500

RUN NO. 830/ 0 RN/L = 3.48 GRADIENT INTERVAL = -5.00/ 5.00

ALPHAT	BETAT	CNFT	CAFT	CLMFT	CYFT	CYNFT	CBLFT	CABT	CP7	ALPHAO	BETAO
.042	-6.408	-.13990	.09160	.05540	.10640	-.01370	.00010	.09540	-.42420	-.16140	-6.47150
-.239	.241	-.09060	.08990	.02230	-.00410	-.00230	-.00010	.09770	-.43450	-.31270	.18260
-.067	6.249	-.10090	.09040	.03710	-.09900	.00910	-.00040	.09570	-.42580	-.21350	6.19860
	GRADIENT	.00000	.00000	.00000	.00000	.00000	.00000	.00000	.00000	.00000	.00000

IA156A, AEDC PWT 16T-470, O T S (R8NT21) (10 MAY 80)

REFERENCE DATA

SREF = 2690.0000 SQ.FT. XMRP = 976.0000 IN. XT
LREF = 1290.3000 INCHES YMRP = .0000 IN. YT
BREF = 1290.3000 INCHES ZMRP = 400.0000 IN. ZT
SCALE = .0200

PARAMETRIC DATA

IB-ELV = 10.000 OB-ELV = 5.000
BDFLAP = .000 SPDBRK = .000
RUDDER = .000 SILTS = .000
MACH = 1.100 RN/L = 3.500

RUN NO. 831/ 0 RN/L = 3.50 GRADIENT INTERVAL = -5.00/ 5.00

ALPHAT	BETAT	CNFT	CAFT	CLMFT	CYFT	CYNFT	CBLFT	CABT	CP7	ALPHAO	BETAO
-.007	-6.167	-.14260	.09240	.05640	.10170	-.01260	.00010	.09460	-.42060	-.22370	-6.21710
-.257	.192	-.09520	.09560	.02440	-.00480	-.00190	-.00020	.09240	-.41090	-.34740	.13220
.156	6.142	-.10270	.09360	.04020	-.09610	.00790	-.00040	.09410	-.41860	-.01640	6.08960
	GRADIENT	.00000	.00000	.00000	.00000	.00000	.00000	.00000	.00000	.00000	.00000

IA156A, AEDC PWT 16T-470, O T S (R8NT22) (10 MAY 80)

REFERENCE DATA

SREF = 2690.0000 SQ.FT. XMRP = 976.0000 IN. XT
LREF = 1290.3000 INCHES YMRP = .0000 IN. YT
BREF = 1290.3000 INCHES ZMRP = 400.0000 IN. ZT
SCALE = .0200

PARAMETRIC DATA

IB-ELV = 10.000 OB-ELV = 5.000
BDFLAP = .000 SPDBRK = .000
RUDDER = .000 SILTS = .000
MACH = 1.150 RN/L = 3.500

RUN NO. 836/ 0 RN/L = 3.50 GRADIENT INTERVAL = -5.00/ 5.00

ALPHAT	BETAT	CNFT	CAFT	CLMFT	CYFT	CYNFT	CBLFT	CABT	CP7	ALPHAO	BETAO
.441	-6.001	-.13260	.10090	.05740	.10250	-.01350	.00000	.08930	-.39720	.18260	-5.95500
-.233	.162	-.09500	.10390	.02510	-.00080	-.00440	-.00030	.08760	-.38940	-.34360	.10020
-.008	6.024	-.10430	.10240	.03980	-.09610	.00860	-.00040	.08960	-.39840	-.18940	5.96260
	GRADIENT	.00000	.00000	.00000	.00000	.00000	.00000	.00000	.00000	.00000	.00000

IA156A, AEDC PWT 16T-470, O T S (R8NT23) (10 MAY 80)

REFERENCE DATA

SREF = 2690.0000 SQ.FT. XMRP = 976.0000 IN. XT
LREF = 1290.3000 INCHES YMRP = .0000 IN. YT
BREF = 1290.3000 INCHES ZMRP = 400.0000 IN. ZT
SCALE = .0200

PARAMETRIC DATA

IB-ELV = 10.000 OB-ELV = 5.000
BDFLAP = .000 SPDBRK = .000
RUDDER = .000 SILTS = .000
MACH = 1.200 RN/L = 3.500

RUN NO. 837/ 0 RN/L = 3.51 GRADIENT INTERVAL = -5.00/ 5.00

ALPHAT	BETAT	CNFT	CAFT	CLMFT	CYFT	CYNFT	CBLFT	CABT	CP7	ALPHAO	BETAO
.372	-5.979	-.13520	.10740	.06020	.10270	-.01440	.00000	.08330	-.37050	.09430	-5.93260
-.049	.312	-.09950	.10780	.03150	-.00510	-.00260	-.00020	.08230	-.36590	-.21260	.25970
-.019	6.093	-.11060	.10570	.04400	-.09690	.00860	-.00050	.08540	-.37990	-.23300	6.02720
	GRADIENT	.00000	.00000	.00000	.00000	.00000	.00000	.00000	.00000	.00000	.00000

IA156A, AEDC PWT 16T-470, O T S (R8NT24) (10 MAY 80)

REFERENCE DATA

SREF = 2690.0000 SQ.FT. XMRP = 976.0000 IN. XT
LREF = 1290.3000 INCHES YMRP = .0000 IN. YT
BREF = 1290.3000 INCHES ZMRP = 400.0000 IN. ZT
SCALE = .0200

PARAMETRIC DATA

IB-ELV = 10.000 OB-ELV = 5.000
BDFLAP = .000 SPDBRK = .000
RUDDER = .000 SILTS = .000
MACH = 1.250 RN/L = 3.500

RUN NO. 838/ 0 RN/L = 3.50 GRADIENT INTERVAL = -5.00/ 5.00

ALPHAT	BETAT	CNFT	CAFT	CLMFT	CYFT	CYNFT	CBLFT	CABT	CP7	ALPHAO	BETAO
.149	-6.378	-.14760	.10720	.06580	.10290	-.01220	.00000	.08370	-.37220	-.15970	-6.42180
-.058	.329	-.10710	.11100	.03900	-.00530	-.00240	-.00020	.07810	-.34730	-.27380	.26860
.028	6.029	-.11240	.10800	.04740	-.09400	.00690	-.00040	.08290	-.36850	-.21920	5.95610
	GRADIENT	.00000	.00000	.00000	.00000	.00000	.00000	.00000	.00000	.00000	.00000

IA156A, AEDC PWT 16T-470, O T S (R8NT25) (10 MAY 80)

REFERENCE DATA

SREF = 2690.0000 SQ.FT. XMRP = 976.0000 IN. XT
LREF = 1290.3000 INCHES YMRP = .0000 IN. YT
BREF = 1290.3000 INCHES ZMRP = 400.0000 IN. ZT
SCALE = .0200

PARAMETRIC DATA

IB-ELV = 10.000 OB-ELV = 5.000
BDFLAP = .000 SPDBRK = .000
RUDDER = .000 SILTS = .000
MACH = 1.300 RN/L = 3.500

RUN NO. 839/ 0 RN/L = 3.50 GRADIENT INTERVAL = -5.00/ 5.00

ALPHAT	BETAT	CNFT	CAFT	CLMFT	CYFT	CYNFT	CBLFT	CABT	CP7	ALPHAO	BETAO
.136	-6.380	-.14380	.11050	.06520	.10110	-.01060	.00000	.07950	-.35370	-.18700	-6.41540
-.097	.226	-.10490	.11180	.04010	-.00320	-.00250	-.00030	.07560	-.33630	-.33300	.16240
.052	6.248	-.10750	.11090	.04790	-.09770	.00740	-.00050	.07930	-.35280	-.21360	6.17120
	GRADIENT	.00000	.00000	.00000	.00000	.00000	.00000	.00000	.00000	.00000	.00000

IA156A, AEDC PWT 16T-470, O T S (R8NT26) (10 MAY 80)

REFERENCE DATA

SREF = 2690.0000 SQ.FT. XMRP = 976.0000 IN. XT
LREF = 1290.3000 INCHES YMRP = .0000 IN. YT
BREF = 1290.3000 INCHES ZMRP = 400.0000 IN. ZT
SCALE = .0200

PARAMETRIC DATA

IB-ELV = 10.000 OB-ELV = 5.000
BDFLAP = .000 SPDBRK = .000
RUDDER = .000 SILTS = .000
MACH = 1.400 RN/L = 3.500

RUN NO. 840/ 0 RN/L = 3.50 GRADIENT INTERVAL = -5.00/ 5.00

ALPHAT	BETAT	CNFT	CAFT	CLMFT	CYFT	CYNFT	CBLFT	CABT	CP7	ALPHAO	BETAO
.147	-6.442	-.14510	.11480	.06600	.10030	-.00880	.00000	.07410	-.32970	-.18800	-6.46640
-.094	.308	-.11040	.11580	.04170	-.00570	-.00190	-.00030	.06920	-.30770	-.34540	.24910
.064	6.257	-.10930	.11430	.04800	-.09760	.00560	-.00050	.07400	-.32900	-.21070	6.16700
	GRADIENT	.00000	.00000	.00000	.00000	.00000	.00000	.00000	.00000	.00000	.00000

IA156A, AEDC PWT 16T-470, O T S (R8NT27) (10 MAY 80)

REFERENCE DATA

SREF = 2690.0000 SQ.FT. XMRP = 976.0000 IN. XT
LREF = 1290.3000 INCHES YMRP = .0000 IN. YT
BREF = 1290.3000 INCHES ZMRP = 400.0000 IN. ZT
SCALE = .0200

PARAMETRIC DATA

IB-ELV = 10.000 OB-ELV = 5.000
BDFLAP = .000 SPDBRK = .000
RUDDER = .000 SILTS = .000
MACH = 1.550 RN/L = 3.200

RUN NO. 841/ 0 RN/L = 3.19 GRADIENT INTERVAL = -5.00/ 5.00

ALPHAT	BETAT	CNFT	CAFT	CLMFT	CYFT	CYNFT	CBLFT	CABT	CP7	ALPHAO	BETAO
.140	-6.451	-.13930	.11090	.06600	.09620	-.00670	-.00020	.06710	-.29820	-.16790	-6.47840
-.197	.305	-.10890	.11360	.04260	-.00650	-.00040	-.00040	.05990	-.26640	-.43480	.24410
-.088	6.186	-.10400	.11550	.04260	-.09800	.00630	-.00050	.06490	-.28890	-.30060	6.10850
	GRADIENT	.00000	.00000	.00000	.00000	.00000	.00000	.00000	.00000	.00000	.00000

IA156A, AEDC PWT 16T-470, O T S (R8NT28) (10 MAY 80)

REFERENCE DATA

SREF = 2690.0000 SQ.FT. XMRP = 976.0000 IN. XT
LREF = 1290.3000 INCHES YMRP = .0000 IN. YT
BREF = 1290.3000 INCHES ZMRP = 400.0000 IN. ZT
SCALE = .0200

PARAMETRIC DATA

IB-ELV = 10.000 OB-ELV = 5.000
BDFLAP = .000 SPDBRK = .000
RUDDER = .000 SILTS = .000
MACH = .600 RN/L = 3.500

RUN NO. 846/ 0 RN/L = 3.50 GRADIENT INTERVAL = -5.00/ 5.00

ALPHAT	BETAT	CNFT	CAFT	CLMFT	CYFT	CYNFT	CBLFT	CABT	CP7	ALPHAO	BETAO
-.210	-6.549	-.13960	.03970	.05460	.08410	-.00210	-.00030	.08110	-.36090	-.33430	-6.57920
.260	-5.946	-.13120	.04350	.05610	.08310	-.00590	-.00050	.07620	-.33890	.12700	-5.88430
.218	.038	-.10680	.04560	.04430	.00390	-.00240	-.00070	.07440	-.33110	.11120	.08650
-.154	5.945	-.11780	.04250	.04950	-.07420	.00050	-.00080	.07960	-.35420	-.27020	5.87570
.238	6.517	-.10460	.04510	.05070	-.07540	-.00080	-.00090	.07760	-.34510	.10980	6.55600
	GRADIENT	.00000	.00000	.00000	.00000	.00000	.00000	.00000	.00000	.00000	.00000

IA156A, AEDC PWT 16T-470, O T S (R8NT29) (10 MAY 80)

REFERENCE DATA

SREF = 2690.0000 SQ.FT. XMRP = 976.0000 IN. XT
LREF = 1290.3000 INCHES YMRP = .0000 IN. YT
BREF = 1290.3000 INCHES ZMRP = 400.0000 IN. ZT
SCALE = .0200

PARAMETRIC DATA

IB-ELV = 10.000 OB-ELV = 5.000
BDFLAP = .000 SPDBRK = .000
RUDDER = .000 SILTS = .000
MACH = .900 RN/L = 3.500

RUN NO. 845/ 0 RN/L = 3.51 GRADIENT INTERVAL = -5.00/ 5.00

ALPHAT	BETAT	CNFT	CAFT	CLMFT	CYFT	CYNFT	CBLFT	CABT	CP7	ALPHAO	BETAO
-.232	-6.804	-.15860	.04960	.06150	.10980	-.01240	.00010	.08760	-.38970	-.39450	-6.84290
.236	-5.889	-.14660	.04660	.05900	.10390	-.01470	-.00020	.09050	-.40230	.07950	-5.83490
-.304	-.206	-.11090	.05130	.03210	.00180	-.00140	-.00030	.08000	-.35600	-.35500	-.26900
.126	.221	-.10300	.05270	.03300	.00460	-.00370	-.00050	.07770	-.34540	.06550	.26220
-.190	5.872	-.12150	.04980	.04570	-.09090	.00870	-.00060	.08650	-.38490	-.29890	5.81080
.173	6.767	-.11520	.05100	.04790	-.09760	.00780	-.00070	.08500	-.37790	.04330	6.81220
	GRADIENT	.01850	.00328	.00211	.00656	-.00539	-.00047	-.00539	.02482	.98478	1.24403

IA156A, AEDC PWT 16T-470, O T S (R8NT30) (10 MAY 80)

REFERENCE DATA

SREF = 2690.0000 SQ.FT. XMRP = 976.0000 IN. XT
LREF = 1290.3000 INCHES YMRP = .0000 IN. YT
BREF = 1290.3000 INCHES ZMRP = 400.0000 IN. ZT
SCALE = .0200

PARAMETRIC DATA

IB-ELV = 10.000 OB-ELV = 5.000
BDFLAP = .000 SPDBRK = .000
RUDDER = .000 SILTS = .000
MACH = 1.100 RN/L = 3.500

RUN NO. 844/ 0 RN/L = 3.50 GRADIENT INTERVAL = -5.00/ 5.00

ALPHAT	BETAT	CNFT	CAFT	CLMFT	CYFT	CYNFT	CBLFT	CABT	CP7	ALPHAO	BETAO
-.308	-6.807	-.15110	.09390	.05590	.11620	-.01490	.00000	.09510	-.42310	-.51250	-6.84870
.264	-5.904	-.13040	.09370	.05300	.10240	-.01420	-.00020	.09480	-.42180	.05040	-5.86420
-.324	-.129	-.09860	.09630	.02440	.00360	-.00380	-.00030	.09320	-.41460	-.40350	-.19740
.130	.145	-.08520	.09710	.02450	.00480	-.00470	-.00040	.09170	-.40780	.03370	.18380
-.175	5.906	-.10760	.09470	.03750	-.09230	.00750	-.00060	.09490	-.42200	-.33090	5.85050
.169	6.774	-.10260	.09440	.04260	-.10240	.00890	-.00080	.09640	-.42890	-.01820	6.82520
	GRADIENT	.04880	.00291	.00036	.00437	-.00328	-.00036	-.00546	.02476	1.59213	1.38820

IA156A, AEDC PWT 16T-470, O T S (R8NT31) (10 MAY 80)

REFERENCE DATA

SREF = 2690.0000 SQ.FT. XMRP = 976.0000 IN. XT
LREF = 1290.3000 INCHES YMRP = .0000 IN. YT
BREF = 1290.3000 INCHES ZMRP = 400.0000 IN. ZT
SCALE = .0200

PARAMETRIC DATA

IB-ELV = 10.000 OB-ELV = 5.000
BDFLAP = .000 SPDBRK = .000
RUDDER = .000 SILTS = .000
MACH = 1.550 RN/L = 3.200

RUN NO. 842/ 0 RN/L = 3.20 GRADIENT INTERVAL = -5.00/ 5.00

ALPHAT	BETAT	CNFT	CAFT	CLMFT	CYFT	CYNFT	CBLFT	CABT	CP7	ALPHAO	BETAO
-.327	-6.794	-.15070	.11080	.06510	.10410	-.00820	-.00010	.06820	-.30320	-.61540	-6.81520
.505	-6.123	-.13030	.11620	.06510	.09770	-.00840	-.00020	.06590	-.29310	.17870	-6.05770
-.311	-.263	-.11280	.11300	.04290	.00160	-.00110	-.00040	.06070	-.26990	-.53260	-.32260
.439	.291	-.09960	.11770	.04510	.00130	-.00500	-.00050	.06250	-.27810	.17000	.32450
-.268	5.908	-.10680	.11530	.04190	-.09220	.00540	-.00050	.06420	-.28540	-.47550	5.83020
-.284	6.139	-.10910	.11410	.04230	-.09750	.00600	-.00040	.06730	-.29940	-.48930	6.05930
.368	6.764	-.10150	.11580	.04920	-.09870	.00480	-.00060	.06720	-.29880	.09790	6.79730
	GRADIENT	.02381	.00848	.00397	-.00054	-.00704	-.00018	.00325	-.01479	1.26754	1.16742

IA156A, AEDC PWT 16T-470, O T S (R8NT34) (10 MAY 80)

REFERENCE DATA

SREF = 2690.0000 SQ.FT. XMRP = 976.0000 IN. XT
LREF = 1290.3000 INCHES YMRP = .0000 IN. YT
BREF = 1290.3000 INCHES ZMRP = 400.0000 IN. ZT
SCALE = .0200

PARAMETRIC DATA

IB-ELV = 10.000 OB-ELV = 5.000
BDFLAP = .000 SPDBRK = .000
RUDDER = .000 SILTS = .000
MACH = 1.100 RN/L = 3.500
Z = 4.500

RUN NO. 835/ 0 RN/L = 3.51 GRADIENT INTERVAL = -5.00/ 5.00

ALPHAT	BETAT	CNFT	CAFT	CLMFT	CYFT	CYNFT	CBLFT	CABT	CP7	ALPHAO	BETAO
.377	-5.985	-.12300	.09340	.05660	.10140	-.01380	-.00010	.09340	-.41560	.13320	-5.95010
-.239	.234	-.09190	.09570	.02330	-.00110	-.00190	-.00030	.09600	-.42690	-.32610	.16210
-.001	6.163	-.10590	.09310	.03590	-.09820	.00850	-.00050	.09510	-.42280	-.14160	6.10440
	GRADIENT	.00000	.00000	.00000	.00000	.00000	.00000	.00000	.00000	.00000	.00000

IA156A, AEDC PWT 16T-470, O T S (R8NT35) (10 MAY 80)

REFERENCE DATA

SREF = 2690.0000 SQ.FT. XMRP = 976.0000 IN. XT
LREF = 1290.3000 INCHES YMRP = .0000 IN. YT
BREF = 1290.3000 INCHES ZMRP = 400.0000 IN. ZT
SCALE = .0200

PARAMETRIC DATA

IB-ELV = 10.000 OB-ELV = 5.000
BDFLAP = .000 SPDBRK = .000
RUDDER = .000 SILTS = .000
MACH = 1.100 RN/L = 3.500
Z = 5.500

RUN NO. 834/ 0 RN/L = 3.51 GRADIENT INTERVAL = -5.00/ 5.00

ALPHAT	BETAT	CNFT	CAFT	CLMFT	CYFT	CYNFT	CBLFT	CABT	CP7	ALPHAO	BETAO
.432	-6.019	-.12510	.09270	.05470	.10230	-.01440	.00000	.09400	-.41790	.20170	-5.98270
-.136	.367	-.09210	.09700	.02280	-.00620	-.00160	-.00020	.09210	-.40970	-.21780	.31690
-.085	6.051	-.10590	.09420	.03670	-.09590	.00800	-.00050	.09380	-.41730	-.23470	5.99260
	GRADIENT	.00000	.00000	.00000	.00000	.00000	.00000	.00000	.00000	.00000	.00000

IA156A, AEDC PWT 16T-470, O T S (R8NT36) (10 MAY 80)

REFERENCE DATA

SREF = 2690.0000 SQ.FT. XMRP = 976.0000 IN. XT
LREF = 1290.3000 INCHES YMRP = .0000 IN. YT
BREF = 1290.3000 INCHES ZMRP = 400.0000 IN. ZT
SCALE = .0200

PARAMETRIC DATA

IB-ELV = 10.000 OB-ELV = 5.000
BDFLAP = .000 SPDBRK = .000
RUDDER = .000 SILTS = .000
MACH = 1.100 RN/L = 3.500
Z = 6.500

RUN NO. 832/ 0 RN/L = 3.50 GRADIENT INTERVAL = -5.00/ 5.00

ALPHAT	BETAT	CNFT	CAFT	CLMFT	CYFT	CYNFT	CBLFT	CABT	CP7	ALPHAO	BETAO
.068	-6.368	-.14330	.09230	.05790	.10590	-.01310	.00020	.09470	-.42110	-.15660	-6.41760
-.214	.293	-.09500	.09570	.02450	-.00680	-.00150	-.00020	.09260	-.41190	-.30330	.23440
.078	6.259	-.10390	.09390	.04090	-.09770	.00800	-.00040	.09470	-.42100	-.09710	6.20510
	GRADIENT	.00000	.00000	.00000	.00000	.00000	.00000	.00000	.00000	.00000	.00000

IA156A, AEDC PWT 16T-470, O T S (R8NT37) (10 MAY 80)

REFERENCE DATA

SREF = 2690.0000 SQ.FT. XMRP = 976.0000 IN. XT
LREF = 1290.3000 INCHES YMRP = .0000 IN. YT
BREF = 1290.3000 INCHES ZMRP = 400.0000 IN. ZT
SCALE = .0200

PARAMETRIC DATA

IB-ELV = 10.000 OB-ELV = 5.000
BDFLAP = .000 SPDBRK = .000
RUDDER = .000 SILTS = .000
MACH = 1.550 RN/L = 3.200

RUN NO. 843/ 0 RN/L = 3.19 GRADIENT INTERVAL = -5.00/ 5.00

ALPHAT	BETAT	CNFT	CAFT	CLMFT	CYFT	CYNFT	CBLFT	CABT	CP7	ALPHAO	BETAO
.444	.246	-.09870	.11690	.04510	.00290	-.00480	-.00050	.06240	-.27740	.17080	.28140
-.315	-.209	-.11380	.11440	.04280	.00050	-.00120	-.00040	.06060	-.26970	-.53310	-.26880
-.319	-.231	-.11370	.11450	.04260	.00100	-.00070	-.00060	.06120	-.27210	-.53580	-.29090
.471	.223	-.09670	.11730	.04670	.00140	-.00230	-.00060	.06130	-.27270	.18630	.26860
.430	.225	-.09950	.11770	.04480	.00080	-.00130	-.00060	.06110	-.27180	.16450	.27780
-.289	-.222	-.11080	.11520	.04270	.00500	-.00390	-.00050	.06130	-.27270	-.51360	-.29010
	GRADIENT	.03190	.00571	.00623	-.00098	-.00206	-.00014	.00129	-.00560	1.54879	1.23635

IA156A, AEDC PWT 16T-470, O T S W/SILTS (R8NT40) (10 MAY 80)

REFERENCE DATA

SREF = 2690.0000 SQ.FT. XMRP = 976.0000 IN. XT
LREF = 1290.3000 INCHES YMRP = .0000 IN. YT
BREF = 1290.3000 INCHES ZMRP = 400.0000 IN. ZT
SCALE = .0200

PARAMETRIC DATA

IB-ELV = 10.000 OB-ELV = 5.000
BDFLAP = .000 SPDBRK = .000
RUDDER = .000 SILTS = 1.000
MACH = .300 RN/L = 3.500

RUN NO. 862/ 0 RN/L = 2.70 GRADIENT INTERVAL = -5.00/ 5.00

ALPHAT	BETAT	CNFT	CAFT	CLMFT	CYFT	CYNFT	CBLFT	CABT	CP7	ALPHAO	BETAO
-5.897	-9.931	-.21270	.03360	.03900	.09330	.01260	-.00010	.09450	-.42050	-5.91970	-9.94330
-6.140	-5.884	-.20940	.04110	.02880	.04230	.01140	-.00030	.08430	-.37480	-6.15510	-5.90210
-6.256	.407	-.18950	.04120	.02040	-.01410	.00060	-.00050	.08170	-.36340	-6.27520	.40810
-5.791	6.183	-.18290	.04370	.02590	-.05110	-.01040	-.00090	.08250	-.36710	-5.80590	6.20450
-5.900	10.159	-.17930	.03840	.02480	-.08880	-.01430	-.00170	.09250	-.41130	-5.90890	10.17450
	GRADIENT	.00000	.00000	.00000	.00000	.00000	.00000	.00000	.00000	.00000	.00000

RUN NO. 863/ 0 RN/L = 2.68 GRADIENT INTERVAL = -5.00/ 5.00

ALPHAT	BETAT	CNFT	CAFT	CLMFT	CYFT	CYNFT	CBLFT	CABT	CP7	ALPHAO	BETAO
-.271	-10.530	-.14790	.03700	.06090	.13510	-.00240	-.00020	.08590	-.38210	-.32340	-10.56650
-.254	-6.453	-.13210	.04160	.04750	.06420	.00520	-.00020	.07810	-.34740	-.29550	-6.49500
-.217	-.346	-.12010	.04180	.04230	-.01000	.00420	-.00050	.07470	-.33240	-.25400	-.40020
-.171	5.736	-.11500	.04260	.04640	-.07430	.00130	-.00100	.07450	-.33140	-.21600	5.67580
-.160	9.797	-.10380	.03920	.04390	-.12650	.00280	-.00160	.08100	-.36020	-.20190	9.72920
	GRADIENT	.00000	.00000	.00000	.00000	.00000	.00000	.00000	.00000	.00000	.00000

IA156A, AEDC PWT 16T-470, O T S W/SILTS (R8NT40) (10 MAY 80)

REFERENCE DATA

SREF = 2690.0000 SQ.FT. XMRP = 976.0000 IN. XT
LREF = 1290.3000 INCHES YMRP = .0000 IN. YT
BREF = 1290.3000 INCHES ZMRP = 400.0000 IN. ZT
SCALE = .0200

PARAMETRIC DATA

IB-ELV = 10.000 OB-ELV = 5.000
BDFLAP = .000 SPDBRK = .000
RUDDER = .000 SILTS = 1.000
MACH = .300 RN/L = 3.500

RUN NO. 865/ 0 RN/L = 2.67 GRADIENT INTERVAL = -5.00/ 5.00

ALPHAT	BETAT	CNFT	CAFT	CLMFT	CYFT	CYNFT	CBLFT	CABT	CP7	ALPHAO	BETAO
6.419	-10.017	-.04610	.03270	.07880	.16130	-.01880	-.00090	.07490	-.33320	6.30830	-9.97950
6.097	-5.687	-.03820	.03440	.07180	.08120	-.00670	-.00080	.07280	-.32400	5.97970	-5.65500
6.243	.063	-.02930	.03870	.06830	-.00430	-.00020	-.00070	.06980	-.31060	6.11880	.06260
5.780	6.089	-.02930	.03400	.06520	-.08990	.00630	-.00120	.07520	-.33440	5.67210	6.05320
5.879	10.173	-.02110	.03560	.06180	-.15630	.01460	-.00160	.07540	-.33550	5.78760	10.12760
	GRADIENT	.00000	.00000	.00000	.00000	.00000	.00000	.00000	.00000	.00000	.00000

IA156A, AEDC PWT 16T-470, O T S W/SILTS (R8NT41) (10 MAY 80)

REFERENCE DATA

SREF = 2690.0000 SQ.FT. XMRP = 976.0000 IN. XT
LREF = 1290.3000 INCHES YMRP = .0000 IN. YT
BREF = 1290.3000 INCHES ZMRP = 400.0000 IN. ZT
SCALE = .0200

PARAMETRIC DATA

IB-ELV = 10.000 OB-ELV = 5.000
BDFLAP = .000 SPDBRK = .000
RUDDER = .000 SILTS = 1.000
MACH = .300 RN/L = 3.500

RUN NO. 861/ 0 RN/L = 2.74 GRADIENT INTERVAL = -5.00/ 5.00

ALPHAT	BETAT	CNFT	CAFT	CLMFT	CYFT	CYNFT	CBLFT	CABT	CP7	ALPHAO	BETAO
-10.099	-6.027	-.26270	.03950	.01710	.03280	.01780	-.00030	.08940	-.39760	-10.09100	-6.03360
-10.068	.357	-.25490	.02980	.00880	-.01270	.00180	-.00040	.09650	-.42900	-10.06710	.35890
-9.925	6.258	-.24270	.02110	.01080	-.03800	-.01820	-.00080	.10810	-.48100	-9.91030	6.26630
	GRADIENT	.00000	.00000	.00000	.00000	.00000	.00000	.00000	.00000	.00000	.00000

RUN NO. 866/ 0 RN/L = 2.66 GRADIENT INTERVAL = -5.00/ 5.00

ALPHAT	BETAT	CNFT	CAFT	CLMFT	CYFT	CYNFT	CBLFT	CABT	CP7	ALPHAO	BETAO
10.186	-5.865	.01920	.03480	.08540	.09700	-.01280	-.00070	.06680	-.29730	10.04220	-5.84510
10.023	.225	.01570	.03330	.08400	-.00380	-.00120	-.00090	.06900	-.30700	9.87120	.22230
10.153	6.305	.02950	.03120	.08110	-.09770	.01020	-.00130	.07180	-.31920	10.01450	6.28220
	GRADIENT	.00000	.00000	.00000	.00000	.00000	.00000	.00000	.00000	.00000	.00000

IA156A, AEDC PWT 16T-470, O T S W/SILTS (R8NT42) (10 MAY 80)

REFERENCE DATA

SREF = 2690.0000 SQ.FT. XMRP = 976.0000 IN. XT
LREF = 1290.3000 INCHES YMRP = .0000 IN. YT
BREF = 1290.3000 INCHES ZMRP = 400.0000 IN. ZT
SCALE = .0200

PARAMETRIC DATA

IB-ELV = 10.000 OB-ELV = 5.000
BDFLAP = .000 SPDBRK = .000
RUDDER = .000 SILTS = 1.000
MACH = .600 RN/L = 3.500

RUN NO. 867/ 0 RN/L = 3.50 GRADIENT INTERVAL = -5.00/ 5.00

ALPHAT	BETAT	CNFT	CAFT	CLMFT	CYFT	CYNFT	CBLFT	CABT	CP7	ALPHAO	BETAO
-8.061	-7.751	-.25620	.02910	.03220	.08010	.00910	.00000	.09980	-.44410	-8.04310	-7.71650
-8.233	-5.845	-.24850	.03810	.02640	.05680	.00750	-.00010	.08560	-.38080	-8.20430	-5.82740
-8.102	-3.786	-.24200	.03770	.02340	.03480	.00530	-.00010	.08590	-.38190	-8.07340	-3.78210
-8.229	.322	-.23360	.03850	.01600	-.00450	-.00060	-.00020	.08760	-.38960	-8.19840	.32110
-7.899	4.160	-.22680	.04140	.01990	-.03350	-.00820	-.00030	.08470	-.37680	-7.86070	4.15380
-7.848	6.055	-.22350	.03960	.02090	-.05200	-.01050	-.00040	.08680	-.38600	-7.80760	6.03920
-8.088	8.277	-.22280	.03620	.01950	-.07290	-.01370	-.00070	.09370	-.41660	-8.04730	8.24710
	GRADIENT	.00191	.00046	-.00046	-.00861	-.00170	-.00003	-.00014	.00061	.02610	.99874

RUN NO. 868/ 0 RN/L = 3.50 GRADIENT INTERVAL = -5.00/ 5.00

ALPHAT	BETAT	CNFT	CAFT	CLMFT	CYFT	CYNFT	CBLFT	CABT	CP7	ALPHAO	BETAO
-6.157	-7.964	-.22190	[illegible]	.03810	.09000	.00510	.00010	.08670	-.38550	-6.17720	-7.93900
-6.103	-5.796	-.21520	[illegible]	.03380	.06130	.00450	.00010	.08410	-.37400	-6.11740	-5.78760
-5.961	-3.843	-.21000	.04080	.03030	.03620	.00370	.00000	.08200	-.36470	-5.97440	-3.84720
-6.100	.064	-.19840	.04220	.02260	-.00330	-.00060	-.00020	.08240	-.36660	-6.10170	.05960
-6.075	4.270	-.19660	.04210	.02670	-.03840	-.00650	-.00030	.08270	-.36780	-6.07780	4.27020
-5.853	6.117	-.19330	.04110	.02820	-.05640	-.00800	-.00040	.08470	-.37670	-5.85690	6.11120
-5.834	8.319	-.18680	.03940	.02720	-.08100	-.00860	-.00070	.08820	-.39210	-5.83830	8.30300
	GRADIENT	.00164	.00016	-.00043	-.00918	-.00126	-.00004	.00009	-.00038	-.01251	1.00055

RUN NO. 869/ 0 RN/L = 3.50 GRADIENT INTERVAL = -5.00/ 5.00

ALPHAT	BETAT	CNFT	CAFT	CLMFT	CYFT	CYNFT	CBLFT	CABT	CP7	ALPHAO	BETAO
-4.115	-8.150	-.19240	.03950	.04470	.09570	.00280	.00020	.08380	-.37270	-4.17530	-8.13720
-4.206	-6.129	-.18940	.04150	.04050	.06750	.00320	.00010	.08090	-.35990	-4.25940	-6.12820
-4.174	-3.902	-.18350	.04210	.03650	.03890	.00210	.00000	.07950	-.35370	-4.22400	-3.91840
-3.929	.214	-.16210	.04290	.03010	-.00430	-.00140	-.00010	.07960	-.35400	-3.97710	.21050
-3.736	4.114	-.16130	.04360	.03710	-.04030	-.00460	-.00040	.08020	-.35650	-3.79610	4.12820
-3.859	6.087	-.16020	.04260	.03640	-.06250	-.00510	-.00060	.08170	-.36320	-3.91270	6.09440
-3.740	8.018	-.15480	.04240	.03510	-.08660	-.00430	-.00080	.08340	-.37080	-3.78630	8.01910
	GRADIENT	.00279	.00019	.00006	-.00989	-.00084	-.00005	.00009	-.00035	.05344	1.00382

IA156A, AEDC PWT 16T-470, O T S W/SILTS (R8NT42) (10 MAY 80)

REFERENCE DATA

SREF = 2690.0000 SQ.FT. XMRP = 976.0000 IN. XT
LREF = 1290.3000 INCHES YMRP = .0000 IN. YT
BREF = 1290.3000 INCHES ZMRP = 400.0000 IN. ZT
SCALE = .0200

PARAMETRIC DATA

IB-ELV = 10.000 OB-ELV = 5.000
BDFLAP = .000 SPDBRK = .000
RUDDER = .000 SILTS = 1.000
MACH = .600 RN/L = 3.500

RUN NO. 870/ 0 RN/L = 3.50 GRADIENT INTERVAL = -5.00/ 5.00

ALPHAT	BETAT	CNFT	CAFT	CLMFT	CYFT	CYNFT	CBLFT	CABT	CP7	ALPHAO	BETAO
-.235	-8.758	-.14920	.03930	.06170	.11860	-.00500	.00030	.08160	-.36280	-.37240	-8.78030
-.223	-6.629	-.14240	.04110	.05710	.08180	-.00110	.00010	.07870	-.35020	-.35730	-6.65700
-.214	-4.562	-.13850	.04350	.05420	.05310	-.00090	.00000	.07530	-.33490	-.34230	-4.60320
-.206	-.334	-.12380	.04390	.04620	-.00240	.00070	-.00010	.07570	-.33660	-.30920	-.39090
-.150	3.786	-.12060	.04430	.05100	-.04810	.00030	-.00020	.07560	-.33620	-.27140	3.72320
-.144	5.863	-.11750	.04260	.05090	-.07360	.00090	-.00030	.07700	-.34250	-.26480	5.79390
-.149	7.959	-.11130	.04130	.04900	-.10230	.00270	-.00060	.07960	-.35390	-.26300	7.88150
	GRADIENT	.00215	.00010	-.00039	-.01213	.00014	-.00002	.00004	-.00016	.00849	.99737

RUN NO. 871/ 0 RN/L = 3.50 GRADIENT INTERVAL = -5.00/ 5.00

ALPHAT	BETAT	CNFT	CAFT	CLMFT	CYFT	CYNFT	CBLFT	CABT	CP7	ALPHAO	BETAO
4.363	-7.827	-.07990	.03870	.07570	.12330	-.01240	.00010	.07450	-.33150	4.13030	-7.78830
4.464	-6.010	-.06940	.04050	.07210	.08810	-.00800	.00010	.07100	-.31590	4.22660	-5.97570
4.184	-3.858	-.06850	.03980	.06830	.05580	-.00520	.00000	.07230	-.32140	3.95170	-3.82910
4.319	.004	-.05250	.04230	.06110	-.00110	-.00160	-.00010	.07100	-.31580	4.09660	-.00010
4.160	4.162	-.05360	.04210	.06350	-.05880	.00270	-.00030	.07250	-.32260	3.93830	4.12500
4.020	6.209	-.04910	.04090	.06140	-.08710	.00450	-.00050	.07310	-.32520	3.80780	6.16570
3.876	7.967	-.04810	.04050	.05890	-.11340	.00680	-.00060	.07450	-.33150	3.67750	7.91760
	GRADIENT	.00183	.00028	-.00058	-.01428	.00099	-.00004	.00003	-.00017	-.00214	.99177

RUN NO. 872/ 0 RN/L = 3.50 GRADIENT INTERVAL = -5.00/ 5.00

ALPHAT	BETAT	CNFT	CAFT	CLMFT	CYFT	CYNFT	CBLFT	CABT	CP7	ALPHAO	BETAO
6.541	-8.029	-.04630	.03660	.08140	.13380	-.01640	.00010	.07250	-.32230	6.27430	-8.00560
6.427	-5.985	-.04190	.03810	.07830	.09620	-.01030	.00020	.07050	-.31370	6.15520	-5.96300
6.545	-3.885	-.03390	.03800	.07670	.05890	-.00570	.00010	.07000	-.31150	6.26340	-3.86770
6.093	.207	-.02520	.03970	.06650	-.00510	-.00030	.00000	.07180	-.31910	5.83360	.20230
6.100	4.141	-.02400	.03890	.06810	-.05880	.00420	-.00030	.07150	-.31810	5.84070	4.11540
6.179	6.300	-.01760	.03930	.06710	-.09100	.00670	-.00050	.07130	-.31730	5.92990	6.26950
5.845	8.021	-.01940	.03890	.06560	-.11730	.00950	-.00080	.07380	-.32830	5.61400	7.98510
	GRADIENT	.00124	.00011	-.00108	-.01467	.00123	-.00005	.00019	-.00083	-.05302	.99463

IA156A, AEDC PWT 16T-470, O T S W/SILTS (R8NT42) (10 MAY 80)

REFERENCE DATA

SREF = 2690.0000 SQ.FT. XMRP = 976.0000 IN. XT
LREF = 1290.3000 INCHES YMRP = .0000 IN. YT
BREF = 1290.3000 INCHES ZMRP = 400.0000 IN. ZT
SCALE = .0200

PARAMETRIC DATA

IB-ELV = 10.000 OB-ELV = 5.000
BDFLAP = .000 SPDBRK = .000
RUDDER = .000 SILTS = 1.000
MACH = .600 RN/L = 3.500

RUN NO. 873/ 0 RN/L = 3.50 GRADIENT INTERVAL = -5.00/ 5.00

ALPHAT	BETAT	CNFT	CAFT	CLMFT	CYFT	CYNFT	CBLFT	CABT	CP7	ALPHAO	BETAO
8.417	-7.987	-.01350	.03250	.08510	.13680	-.01730	.00020	.07370	-.32770	8.12610	-7.97070
8.304	-5.705	-.00900	.03680	.08210	.09450	-.01170	.00010	.06820	-.30340	8.00350	-5.69190
8.297	-3.741	-.00680	.03670	.08110	.05940	-.00690	.00010	.06820	-.30330	7.98750	-3.72790
8.357	.167	.00080	.03740	.07670	-.00030	-.00060	-.00010	.07030	-.31280	8.04650	.16460
8.137	4.179	.00530	.03920	.07510	-.05870	.00470	-.00040	.06950	-.30890	7.84010	4.16010
8.249	6.252	.00900	.03730	.07520	-.09050	.00820	-.00060	.07190	-.31980	7.96470	6.22890
8.106	8.242	.01050	.03540	.07340	-.12690	.01380	-.00090	.07490	-.33330	7.84210	8.21770
	GRADIENT	.00153	.00032	-.00076	-.01491	.00146	-.00006	.00016	-.00070	-.01876	.99595

IA156A, AEDC PWT 16T-470, O T S W/SILTS (R8NT43) (10 MAY 80)

REFERENCE DATA

SREF = 2690.0000 SQ.FT. XMRP = 976.0000 IN. XT
LREF = 1290.3000 INCHES YMRP = .0000 IN. YT
BREF = 1290.3000 INCHES ZMRP = 400.0000 IN. ZT
SCALE = .0200

PARAMETRIC DATA

IB-ELV = 10.000 OB-ELV = 5.000
BDFLAP = .000 SPDBRK = .000
RUDDER = .000 SILTS = 1.000
MACH = .800 RN/L = 3.500

RUN NO. 874/ 0 RN/L = 3.50 GRADIENT INTERVAL = -5.00/ 5.00

ALPHAT	BETAT	CNFT	CAFT	CLMFT	CYFT	CYNFT	CBLFT	CABT	CP7	ALPHAO	BETAO
-8.359	-6.143	-.27370	.04400	.03380	.07690	.00110	.00000	.09040	-.40210	-8.32040	-6.12530
-8.455	-3.880	-.26680	.04370	.02860	.04860	-.00110	-.00020	.08890	-.39550	-8.41290	-3.87990
-8.168	.250	-.24340	.04560	.01720	-.00120	-.00070	-.00030	.08760	-.38960	-8.11300	.24610
-8.096	4.310	-.24270	.04550	.02150	-.04790	-.00190	-.00030	.08810	-.39200	-8.02250	4.30230
-8.032	6.230	-.24130	.04520	.02190	-.07100	-.00300	-.00040	.08940	-.39770	-7.95570	6.20880
	GRADIENT	.00295	.00022	-.00087	-.01178	-.00010	-.00001	-.00010	.00043	.04774	.99910

RUN NO. 875/ 0 RN/L = 3.50 GRADIENT INTERVAL = -5.00/ 5.00

ALPHAT	BETAT	CNFT	CAFT	CLMFT	CYFT	CYNFT	CBLFT	CABT	CP7	ALPHAO	BETAO
-6.173	-5.898	-.23370	.04410	.03990	.07900	-.00260	.00010	.08780	-.39050	-6.19340	-5.89390
-6.081	-3.854	-.22470	.04590	.03600	.04800	-.00250	.00010	.08420	-.37460	-6.10280	-3.86510
-6.228	.140	-.20520	.04630	.02230	-.00230	-.00080	-.00020	.08440	-.37520	-6.21390	.13510
-5.914	4.133	-.20270	.04800	.02890	-.04440	-.00200	-.00020	.08380	-.37270	-5.90830	4.13590
-5.943	6.374	-.20500	.04560	.02960	-.07190	-.00220	-.00040	.08770	-.39010	-5.93030	6.36450
	GRADIENT	.00275	.00026	-.00089	-.01157	.00006	-.00004	-.00005	.00024	.02435	1.00169

IA156A, AEDC PWT 16T-470, O T S W/SILTS (R8NT43) (10 MAY 80)

REFERENCE DATA

SREF = 2690.0000 SQ.FT. XMRP = 976.0000 IN. XT
LREF = 1290.3000 INCHES YMRP = .0000 IN. YT
BREF = 1290.3000 INCHES ZMRP = 400.0000 IN. ZT
SCALE = .0200

PARAMETRIC DATA

IB-ELV = 10.000 OB-ELV = 5.000
BDFLAP = .000 SPDBRK = .000
RUDDER = .000 SILTS = 1.000
MACH = .800 RN/L = 3.500

RUN NO. 876/ 0 RN/L = 3.50 GRADIENT INTERVAL = -5.00/ 5.00

ALPHAT	BETAT	CNFT	CAFT	CLMFT	CYFT	CYNFT	CBLFT	CABT	CP7	ALPHAO	BETAO
-4.040	-5.851	-.20220	.04480	.04780	.07490	-.00280	.00020	.08400	-.37360	-4.12210	-5.85860
-4.098	-3.811	-.19210	.04630	.04200	.04610	-.00310	.00010	.08110	-.36060	-4.17400	-3.83560
-4.263	.381	-.16840	.04800	.02770	-.00730	-.00030	-.00010	.08040	-.35780	-4.29600	.37960
-3.734	4.092	-.16510	.04740	.03680	-.04660	-.00080	-.00020	.08180	-.36390	-3.79370	4.10880
-3.804	6.119	-.16750	.04780	.03790	-.07250	-.00020	-.00030	.08250	-.36720	-3.85920	6.12730
	GRADIENT	.00346	.00014	-.00072	-.01175	.00030	-.00004	.00008	-.00039	.04646	1.00517

RUN NO. 877/ 0 RN/L = 3.50 GRADIENT INTERVAL = -5.00/ 5.00

ALPHAT	BETAT	CNFT	CAFT	CLMFT	CYFT	CYNFT	CBLFT	CABT	CP7	ALPHAO	BETAO
-.234	-6.850	-.15660	.04410	.06370	.10110	-.00780	.00040	.08110	-.36070	-.40490	-6.88380
-.224	-4.725	-.14790	.04670	.05810	.06890	-.00770	.00030	.07700	-.34250	-.38380	-4.77530
-.226	-.493	-.12320	.04660	.04320	.00400	-.00170	.00010	.07510	-.33410	-.34110	-.55500
-.159	3.742	-.12090	.04730	.04910	-.05460	.00380	.00000	.07710	-.34270	-.29090	3.68280
-.140	5.839	-.12090	.04730	.05150	-.08530	.00590	-.00020	.07730	-.34400	-.28270	5.77510
	GRADIENT	.00319	.00007	-.00106	-.01459	.00136	-.00004	.00001	-.00002	.01097	.99894

RUN NO. 878/ 0 RN/L = 3.50 GRADIENT INTERVAL = -5.00/ 5.00

ALPHAT	BETAT	CNFT	CAFT	CLMFT	CYFT	CYNFT	CBLFT	CABT	CP7	ALPHAO	BETAO
4.356	-5.826	-.06840	.04200	.06840	.09800	-.01090	.00040	.07320	-.32550	4.07170	-5.79540
4.309	-3.927	-.06300	.04300	.06640	.06600	-.00840	.00030	.07240	-.32190	4.02020	-3.90410
4.014	.176	-.04330	.04560	.05250	.00000	-.00170	.00010	.07150	-.31810	3.76790	.16980
3.892	4.001	-.05050	.04470	.05770	-.05760	.00470	-.00010	.07270	-.32340	3.63790	3.96850
4.082	6.205	-.04510	.04290	.05760	-.09400	.00830	-.00030	.07480	-.33290	3.83250	6.17100
	GRADIENT	.00162	.00022	-.00113	-.01560	.00165	-.00005	.00003	-.00018	-.04838	.99306

RUN NO. 879/ 0 RN/L = 3.50 GRADIENT INTERVAL = -5.00/ 5.00

ALPHAT	BETAT	CNFT	CAFT	CLMFT	CYFT	CYNFT	CBLFT	CABT	CP7	ALPHAO	BETAO
6.448	-5.828	-.03380	.03980	.07310	.10060	-.01190	.00040	.07350	-.32680	6.13070	-5.81470
6.132	-3.681	-.02910	.04100	.06860	.06160	-.00780	.00030	.07120	-.31670	5.81200	-3.67140
5.991	.244	-.00850	.04440	.05540	-.00310	-.00070	.00010	.06910	-.30710	5.70790	.23730
6.128	4.152	-.01070	.04310	.06130	-.06300	.00700	-.00010	.07070	-.31460	5.83080	4.13200
6.000	5.985	-.00930	.04250	.06020	-.09420	.01010	-.00030	.07250	-.32260	5.71910	5.96440
	GRADIENT	.00235	.00027	-.00093	-.01591	.00189	-.00005	-.00006	.00027	.00238	.99616

IA156A, AEDC PWT 16T-470, O T S W/SILTS (R8NT44) (10 MAY 80)

REFERENCE DATA

SREF = 2690.0000 SQ.FT. XMRP = 976.0000 IN. XT
LREF = 1290.3000 INCHES YMRP = .0000 IN. YT
BREF = 1290.3000 INCHES ZMRP = 400.0000 IN. ZT
SCALE = .0200

PARAMETRIC DATA

IB-ELV = 10.000 OB-ELV = 5.000
BDFLAP = .000 SPDBRK = .000
RUDDER = .000 SILTS = 1.000
MACH = .900 RN/L = 3.500

RUN NO. 880/ 0 RN/L = 3.50 GRADIENT INTERVAL = -5.00/ 5.00

ALPHAT	BETAT	CNFT	CAFT	CLMFT	CYFT	CYNFT	CBLFT	CABT	CP7	ALPHAO	BETAO
-8.372	-6.093	-.28390	.05020	.03290	.08620	-.00520	.00020	.09700	-.43140	-8.31220	-6.09050
-8.375	-3.809	-.27620	.05000	.02800	.05240	-.00410	.00000	.09530	-.42370	-8.30920	-3.82050
-8.178	.302	-.24840	.05200	.01390	-.00390	.00000	-.00030	.09400	-.41790	-8.09330	.29640
-8.096	4.300	-.25000	.05240	.01910	-.05250	.00170	-.00030	.09350	-.41590	-7.99310	4.29920
-8.053	6.217	-.25070	.05100	.01960	-.07830	.00230	-.00040	.09710	-.43180	-7.94570	6.20520
	GRADIENT	.00325	.00030	-.00111	-.01294	.00072	-.00004	-.00022	.00096	.03904	1.00131

RUN NO. 881/ 0 RN/L = 3.50 GRADIENT INTERVAL = -5.00/ 5.00

ALPHAT	BETAT	CNFT	CAFT	CLMFT	CYFT	CYNFT	CBLFT	CABT	CP7	ALPHAO	BETAO
-6.113	-5.805	-.24170	.05010	.04000	.09090	-.01060	.00030	.09390	-.41750	-6.11670	-5.81610
-6.292	-3.970	-.23870	.05220	.03530	.06020	-.00850	.00010	.08940	-.39760	-6.28440	-3.99240
-6.136	.050	-.20810	.05230	.02060	-.00080	-.00060	-.00020	.09010	-.40050	-6.10100	.04190
-6.078	4.333	-.21130	.05390	.02630	-.05600	.00410	-.00040	.08860	-.39410	-6.03760	4.33980
-6.166	6.353	-.21530	.05250	.02670	-.08340	.00560	-.00040	.09150	-.40680	-6.12400	6.34840
	GRADIENT	.00326	.00021	-.00106	-.01398	.00151	-.00006	-.00010	.00043	.02956	1.00354

RUN NO. 882/ 0 RN/L = 3.50 GRADIENT INTERVAL = -5.00/ 5.00

ALPHAT	BETAT	CNFT	CAFT	CLMFT	CYFT	CYNFT	CBLFT	CABT	CP7	ALPHAO	BETAO
-4.201	-6.175	-.21070	.05010	.04740	.09390	-.01040	.00040	.09190	-.40860	-4.26760	-6.18920
-4.105	-3.849	-.19790	.05120	.04140	.05640	-.00840	.00020	.08710	-.38750	-4.16240	-3.88220
-4.195	.253	-.16670	.05350	.02430	-.00510	-.00030	-.00010	.08540	-.37990	-4.19680	.24580
-3.880	4.288	-.16970	.05270	.03380	-.05660	.00420	-.00020	.08510	-.37860	-3.91240	4.30350
-3.757	6.091	-.17040	.05220	.03570	-.08140	.00630	-.00040	.08700	-.38690	-3.79570	6.10100
	GRADIENT	.00348	.00019	-.00094	-.01389	.00155	-.00005	-.00025	.00110	.03061	1.00592

RUN NO. 883/ 0 RN/L = 3.50 GRADIENT INTERVAL = -5.00/ 5.00

ALPHAT	BETAT	CNFT	CAFT	CLMFT	CYFT	CYNFT	CBLFT	CABT	CP7	ALPHAO	BETAO
-.267	-6.894	-.16130	.05040	.06330	.10780	-.01110	.00040	.08670	-.38540	-.43530	-6.93130
-.255	-4.777	-.14880	.05170	.05680	.07320	-.00920	.00020	.08350	-.37150	-.40630	-4.83090
-.288	-.455	-.11400	.05170	.03520	.00420	-.00140	.00000	.07820	-.34790	-.35730	-.51800
-.206	3.723	-.11840	.05230	.04350	-.05830	.00630	-.00010	.08060	-.35850	-.30550	3.66740
-.193	5.829	-.12220	.05120	.04720	-.09070	.00940	-.00020	.08240	-.36670	-.30610	5.76970
	GRADIENT	.00360	.00007	-.00158	-.01547	.00182	-.00004	-.00035	.00155	.01186	.99980

IA156A, AEDC PWT 16T-470, O T S W/SILTS (R8NT44) (10 MAY 80)

REFERENCE DATA

SREF = 2690.0000 SQ.FT. XMRP = 976.0000 IN. XT
LREF = 1290.3000 INCHES YMRP = .0000 IN. YT
BREF = 1290.3000 INCHES ZMRP = 400.0000 IN. ZT
SCALE = .0200

PARAMETRIC DATA

IB-ELV = 10.000 OB-ELV = 5.000
BDFLAP = .000 SPDBRK = .000
RUDDER = .000 SILTS = 1.000
MACH = .900 RN/L = 3.500

RUN NO. 884/ 0 RN/L = 3.50 GRADIENT INTERVAL = -5.00/ 5.00

ALPHAT	BETAT	CNFT	CAFT	CLMF1	CYFT	CYNFT	CBLFT	CABT	CP7	ALPHAO	BETAO
4.299	-5.740	-.06990	.04760	.06650	.10270	-.01330	.00050	.07930	-.35290	4.00920	-5.71360
4.163	-3.885	-.06410	.04720	.06250	.07020	-.01140	.00030	.07920	-.35230	3.88260	-3.86660
4.012	.168	-.03940	.04880	.04550	.00100	-.00110	.00010	.07630	-.33950	3.79870	.16270
3.961	3.990	-.04940	.04880	.05410	-.06350	.00870	-.00010	.07750	-.34470	3.71750	3.96450
3.870	5.931	-.05080	.04790	.05450	-.09780	.01180	-.00020	.08030	-.35720	3.63270	5.90090
	GRADIENT	.00191	.00021	-.00110	-.01698	.00255	-.00005	-.00022	.00099	-.02096	.99449

IA156A, AEDC PWT 16T-470, O T S W/SILTS (R8NT45) (10 MAY 80)

REFERENCE DATA

SREF = 2690.0000 SQ.FT. XMRP = 976.0000 IN. XT
LREF = 1290.3000 INCHES YMRP = .0000 IN. YT
BREF = 1290.3000 INCHES ZMRP = 400.0000 IN. ZT
SCALE = .0200

PARAMETRIC DATA

IB-ELV = 10.000 OB-ELV = 5.000
BDFLAP = .000 SPDBRK = .000
RUDDER = .000 SILTS = 1.000
MACH = .950 RN/L = 3.500

RUN NO. 885/ 0 RN/L = 3.50 GRADIENT INTERVAL = -5.00/ 5.00

ALPHAT	BETAT	CNFT	CAFT	CLMFT	CYFT	CYNFT	CBLFT	CABT	CP7	ALPHAO	BETAO
-8.503	-6.134	-.28450	.06090	.02410	.10630	-.01260	.00040	.10400	-.46250	-8.38500	-6.13370
-8.506	-3.839	-.27880	.05900	.01950	.06550	-.00960	.00000	.10110	-.44970	-8.37370	-3.84980
-8.224	.205	-.24740	.05950	.00370	-.00320	-.00010	-.00030	.10040	-.44650	-8.05870	.20050
-8.143	4.273	-.24880	.05930	.00930	-.06460	.00680	-.00040	.10220	-.45470	-7.98060	4.27480
-8.091	6.170	-.25180	.05970	.01080	-.09360	.00880	-.00050	.10390	-.46220	-7.93120	6.16610
	GRADIENT	.00369	.00004	-.00125	-.01604	.00202	-.00005	.00014	-.00062	.04843	1.00163

RUN NO. 886/ 0 RN/L = 3.50 GRADIENT INTERVAL = -5.00/ 5.00

ALPHAT	BETAT	CNFT	CAFT	CLMFT	CYFT	CYNFT	CBLFT	CABT	CP7	ALPHAO	BETAO
-6.225	-5.872	-.23800	.05390	.03170	.10130	-.01590	.00040	.10230	-.45490	-6.18590	-5.88550
-6.161	-3.842	-.23130	.06010	.02640	.06670	-.01270	.00010	.09620	-.42770	-6.10420	-3.86580
-6.339	.093	-.20650	.05920	.00950	-.00130	-.00080	-.00020	.09690	-.43120	-6.22940	.08770
-5.972	4.164	-.20610	.05970	.01760	-.06190	.00800	-.00040	.09750	-.43390	-5.89040	4.17650
-6.039	6.368	-.21030	.05920	.01890	-.09330	.01030	-.00060	.10080	-.44850	-5.96340	6.37010
	GRADIENT	.00313	-.00005	-.00108	-.01606	.00258	-.00006	.00016	-.00077	.02703	1.00456

IA156A, AEDC PWT 16T-470, O T S W/SILTS (RSNT45) (10 MAY 80)

REFERENCE DATA

SREF = 2690.0000 SQ.FT. XMRP = 976.0000 IN. XT
LREF = 1290.3000 INCHES YMRP = .0000 IN. YT
BREF = 1290.3000 INCHES ZMRP = 400.0000 IN. ZT
SCALE = .0200

PARAMETRIC DATA

IB-ELV = 10.000 OB-ELV = 5.000
BDFLAP = .000 SPDBRK = .000
RUDDER = .000 SILTS = 1.000
MACH = .950 RN/L = 3.500

RUN NO. 887/ 0 RN/L = 3.50 GRADIENT INTERVAL = -5.00/ 5.00

ALPHAT	BETAT	CNFT	CAFT	CLMFT	CYFT	CYNFT	CBLFT	CABT	CP7	ALPHAO	BETAO
-4.278	-6.250	-.20800	.06010	.03980	.09970	-.01300	.00040	.09590	-.42650	-4.31730	-6.26980
-4.267	-3.971	-.19670	.06000	.03420	.05990	-.00910	.00020	.09380	-.41720	-4.29210	-4.00470
-4.176	.400	-.15860	.06050	.01610	-.00760	.00040	-.00010	.09380	-.41720	-4.15430	.39650
-3.876	4.267	-.16600	.06040	.02640	-.06000	.00580	-.00030	.09370	-.41690	-3.88820	4.28740
-4.049	6.247	-.17130	.05990	.02720	-.08970	.00880	-.00060	.09660	-.42990	-4.05930	6.25940
	GRADIENT	.00383	.00005	-.00102	-.01457	.00182	-.00006	-.00001	.00004	.04865	1.00659

RUN NO. 888/ 0 RN/L = 3.50 GRADIENT INTERVAL = -5.00/ 5.00

ALPHAT	BETAT	CNFT	CAFT	CLMFT	CYFT	CYNFT	CBLFT	CABT	CP7	ALPHAO	BETAO
-.271	-6.931	-.15330	.05800	.05860	.11010	-.01290	.00050	.09490	-.42200	-.45220	-6.97780
-.254	-4.765	-.14180	.05870	.05260	.07160	-.00980	.00030	.09180	-.40830	-.42230	-4.82820
-.269	-.500	-.10500	.06020	.03200	.00420	-.00130	-.00010	.08770	-.39010	-.36660	-.56560
-.187	3.729	-.10990	.05960	.04020	-.05720	.00740	-.00020	.09030	-.40150	-.31390	3.68520
-.181	5.841	-.11160	.05920	.04200	-.09070	.01040	-.00030	.09400	-.41790	-.31340	5.79120
	GRADIENT	.00376	.00011	-.00146	-.01516	.00202	-.00006	-.00018	.00081	.01276	1.00227

RUN NO. 889/ 0 RN/L = 3.50 GRADIENT INTERVAL = -5.00/ 5.00

ALPHAT	BETAT	CNFT	CAFT	CLMFT	CYFT	CYNFT	CBLFT	CABT	CP7	ALPHAO	BETAO
4.348	-5.655	-.06900	.05500	.06620	.10600	-.01370	.00040	.09060	-.40310	4.02980	-5.63520
4.165	-3.808	-.06040	.05580	.05890	.07440	-.01240	.00030	.08750	-.38940	3.87830	-3.79350
3.891	.222	-.03510	.05590	.03930	-.00180	.00040	.00000	.08550	-.38040	3.69980	.21990
4.086	4.078	-.04180	.05620	.05130	-.06980	.01020	-.00010	.08660	-.38540	3.82760	4.05660
4.049	6.102	-.04520	.05590	.05420	-.10460	.01220	-.00020	.09000	-.40030	3.77990	6.07610
	GRADIENT	.00239	.00005	-.00099	-.01829	.00287	-.00005	-.00012	.00052	-.00671	.99540

IA156A, AEDC PWT 16T-470, O T S W/SILTS (R8NT46) (10 MAY 80)

REFERENCE DATA

SREF = 2690.0000 SQ.FT. XMRP = 976.0000 IN. XT
LREF = 1290.3000 INCHES YMRP = .0000 IN. YT
BREF = 1290.3000 INCHES ZMRP = 400.0000 IN. ZT
SCALE = .0200

PARAMETRIC DATA

IB-ELV = 10.000 OB-ELV = 5.000
BDFLAP = .000 SPDBRK = .000
RUDDER = .000 SILTS = 1.000
MACH = 1.050 RN/L = 3.500

RUN NO. 892/ 0 RN/L = 3.50 GRADIENT INTERVAL = -5.00/ 5.00

ALPHAT	BETAT	CNFT	CAFT	CLMFT	CYFT	CYNFT	CBLFT	CABT	CP7	ALPHAO	BETAO
-8.534	-6.052	-.29170	.08510	.02120	.10990	-.01000	.00040	.11630	-.51720	-8.39400	-6.04350
-8.544	-3.911	-.28440	.08490	.01640	.06760	-.00660	.00000	.11500	-.51130	-8.40120	-3.91900
-8.409	.361	-.25210	.08670	-.00140	-.00650	-.00010	-.00020	.11410	-.50740	-8.20560	.35630
-8.290	4.348	-.25610	.08730	.00440	-.06510	.00250	-.00030	.11390	-.50660	-8.11020	4.34020
-8.217	6.260	-.25860	.08610	.00740	-.09690	.00490	-.00040	.11510	-.51170	-8.04710	6.24350
	GRADIENT	.00348	.00029	-.00149	-.01608	.00111	-.00004	-.00013	.00057	.03536	1.00005

RUN NO. 893/ 0 RN/L = 3.50 GRADIENT INTERVAL = -5.00/ 5.00

ALPHAT	BETAT	CNFT	CAFT	CLMFT	CYFT	CYNFT	CBLFT	CABT	CP7	ALPHAO	BETAO
-6.373	-6.101	-.24620	.08530	.02810	.11260	-.01510	.00030	.11390	-.50660	-6.30930	-6.10600
-6.319	-3.967	-.23760	.08580	.02350	.06860	-.00970	.00010	.11080	-.49270	-6.24930	-3.98190
-6.194	.176	-.20240	.08700	.00390	-.00400	-.00110	-.00020	.11170	-.49700	-6.07550	.16830
-6.232	4.327	-.21170	.08570	.01200	-.06860	.00660	-.00040	.11140	-.49550	-6.13410	4.33120
-5.900	6.210	-.20740	.08600	.01450	-.09270	.00730	-.00060	.11120	-.49440	-5.82370	6.21170
	GRADIENT	.00312	-.00001	-.00139	-.01654	.00197	-.00006	.00007	-.00034	.01388	1.00234

RUN NO. 894/ 0 RN/L = 3.50 GRADIENT INTERVAL = -5.00/ 5.00

ALPHAT	BETAT	CNFT	CAFT	CLMFT	CYFT	CYNFT	CBLFT	CABT	CP7	ALPHAO	BETAO
-4.159	-5.855	-.20600	.08590	.03650	.09990	-.01270	.00030	.10950	-.48690	-4.19180	-5.87790
-4.424	-4.095	-.20250	.08670	.03110	.06890	-.01040	.00000	.10740	-.47770	-4.43500	-4.13120
-4.396	.172	-.16370	.08690	.00930	-.00010	-.00360	-.00020	.11060	-.49170	-4.34720	.16390
-4.041	4.342	-.16830	.08610	.02080	-.06410	.00480	-.00030	.10970	-.48780	-4.03980	4.36330
-3.819	6.203	-.16580	.08660	.02240	-.09710	.00920	-.00050	.10850	-.48260	-3.83320	6.22110
	GRADIENT	.00407	-.00007	-.00124	-.01577	.00180	-.00004	.00027	-.00121	.04674	1.00684

RUN NO. 895/ 0 RN/L = 3.50 GRADIENT INTERVAL = -5.00/ 5.00

ALPHAT	BETAT	CNFT	CAFT	CLMFT	CYFT	CYNFT	CBLFT	CABT	CP7	ALPHAO	BETAO
-.290	-6.937	-.15140	.08480	.05700	.12110	-.01630	.00030	.10660	-.47400	-.49680	-6.99140
-.278	-4.792	-.13750	.08590	.05040	.07950	-.01160	.00010	.10420	-.46340	-.46410	-4.86320
-.323	-.516	-.09790	.08630	.02500	.00880	-.00470	-.00010	.10580	-.47060	-.40940	-.59050
-.223	3.700	-.10110	.08640	.03350	-.05670	.00490	-.00010	.10780	-.47960	-.35160	3.65470
-.201	5.843	-.10300	.08640	.03640	-.09210	.00850	-.00030	.10870	-.48340	-.34390	5.79510
	GRADIENT	.00430	.00006	-.00200	-.01604	.00194	-.00002	.00042	-.00191	.01325	1.00308

IA156A, AEDC PWT 16T-470, O T S W/SILTS (R8NT46) (10 MAY 80)

REFERENCE DATA

SREF = 2690.0000 SQ.FT. XMRP = 976.0000 IN. XT
LREF = 1290.3000 INCHES YMRP = .0000 IN. YT
BREF = 1290.3000 INCHES ZMRP = 400.0000 IN. ZT
SCALE = .0200

PARAMETRIC DATA

IB-ELV = 10.000 OB-ELV = 5.000
BDFLAP = .000 SPDBRK = .000
RUDDER = .000 SILTS = 1.000
MACH = 1.050 RN/L = 3.500

RUN NO. 896/ 0 RN/L = 3.50 GRADIENT INTERVAL = -5.00/ 5.00

ALPHAT	BETAT	CNFT	CAFT	CLMFT	CYFT	CYNFT	CBLFT	CABT	CP7	ALPHAO	BETAO
4.306	-5.881	-.07170	.08210	.06780	.10470	-.01120	.00020	.10440	-.46440	3.96290	-5.87210
4.358	-3.831	-.05540	.08150	.05980	.07240	-.01140	.00010	.10210	-.45430	4.04550	-3.82780
3.919	.168	-.02970	.08380	.03780	.00070	-.00090	-.00010	.09880	-.43950	3.69220	.16960
3.903	3.961	-.04100	.08420	.04890	-.06650	.00910	-.00010	.10040	-.44650	3.63710	3.94130
4.149	6.140	-.04080	.08180	.05330	-.10370	.01070	-.00020	.10480	-.46600	3.86680	6.11480
	GRADIENT	.00189	.00035	-.00144	-.01783	.00263	-.00003	-.00022	.00103	-.05274	.99714

IA156A, AEDC PWT 16T-470, O T S W/SILTS (R8NT47) (10 MAY 80)

REFERENCE DATA

SREF = 2690.0000 SQ.FT. XMRP = 976.0000 IN. XT
LREF = 1290.3000 INCHES YMRP = .0000 IN. YT
BREF = 1290.3000 INCHES ZMRP = 400.0000 IN. ZT
SCALE = .0200

PARAMETRIC DATA

IB-ELV = 10.000 OB-ELV = 5.000
BDFLAP = .000 SPDBRK = .000
RUDDER = .000 SILTS = 1.000
MACH = 1.100 RN/L = 3.500

RUN NO. 897/ 0 RN/L = 3.49 GRADIENT INTERVAL = -5.00/ 5.00

ALPHAT	BETAT	CNFT	CAFT	CLMFT	CYFT	CYNFT	CBLFT	CABT	CP7	ALPHAO	BETAO
-8.520	-6.140	-.28920	.09290	.01910	.11240	-.01050	.00040	.10910	-.48530	-8.35770	-6.13600
-8.599	-3.917	-.28060	.09200	.01420	.06680	-.00610	.00010	.10590	-.47080	-8.43270	-3.91990
-8.479	.223	-.24940	.09400	-.00310	-.00470	-.00070	-.00010	.10440	-.46450	-8.25220	.21450
-8.360	4.355	-.25480	.09450	.00310	-.06450	.00130	-.00030	.10540	-.46860	-8.16470	4.34080
-8.322	6.298	-.25790	.09220	.00590	-.09650	.00410	-.00050	.10780	-.47930	-8.13740	6.28210
	GRADIENT	.00312	.00030	-.00134	-.01587	.00089	-.00005	-.00006	.00027	.03240	.99857

RUN NO. 898/ 0 RN/L = 3.50 GRADIENT INTERVAL = -5.00/ 5.00

ALPHAT	BETAT	CNFT	CAFT	CLMFT	CYFT	CYNFT	CBLFT	CABT	CP7	ALPHAO	BETAO
-6.321	-5.970	-.24310	.09240	.02560	.10170	-.01170	.00030	.10230	-.45520	-6.23480	-5.97350
-6.565	-4.019	-.24000	.09340	.02070	.06640	-.00830	.00010	.10020	-.44550	-6.45950	-4.03170
-6.368	.128	-.20430	.09380	.00270	-.00370	-.00200	-.00020	.10130	-.45050	-6.21850	.11540
-6.268	4.342	-.20840	.09330	.01120	-.06020	.00080	-.00040	.10050	-.44700	-6.15690	4.33330
-5.968	6.252	-.20700	.09140	.01330	-.09340	.00590	-.00060	.10320	-.45910	-5.87760	6.24380
	GRADIENT	.00377	-.00001	-.00113	-.01514	.00109	-.00006	.00004	-.00018	.03614	1.00053

IA156A, AEDC PWT 16T-470, O T S W/SILTS (R8NT47) (10 MAY 80)

REFERENCE DATA

SREF = 2690.0000 SQ.FT. XMRP = 976.0000 IN. XT
LREF = 1290.3000 INCHES YMRP = .0000 IN. YT
BREF = 1290.3000 INCHES ZMRP = 400.0000 IN. ZT
SCALE = .0200

PARAMETRIC DATA

IB-ELV = 10.000 OB-ELV = 5.000
BDFLAP = .000 SPDBRK = .000
RUDDER = .000 SILTS = 1.000
MACH = 1.100 RN/L = 3.500

RUN NO. 899/ 0 RN/L = 3.50 GRADIENT INTERVAL = -5.00/ 5.00

ALPHAT	BETAT	CNFT	CAFT	CLMFT	CYFT	CYNFT	CBLFT	CABT	CP7	ALPHAO	BETAO
-4.113	-6.032	-.20360	.09240	.03560	.09770	-.01110	.00020	.09850	-.43810	-4.13500	-6.04390
-4.271	-3.951	-.19620	.09340	.02940	.05960	-.00690	.00000	.09540	-.42430	-4.26720	-3.97950
-4.183	.396	-.15750	.09460	.00940	-.00520	-.00270	-.00020	.09620	-.42790	-4.12880	.38590
-3.855	4.235	-.16180	.09430	.02110	-.06130	.00310	-.00030	.09640	-.42900	-3.85340	4.24360
-4.012	6.203	-.16840	.09260	.02230	-.09550	.00790	-.00050	.09930	-.44160	-4.01540	6.20760
	GRADIENT	.00431	.00011	-.00109	-.01477	.00122	-.00004	.00012	-.00058	.05014	1.00457

RUN NO. 900/ 0 RN/L = 3.50 GRADIENT INTERVAL = -5.00/ 5.00

ALPHAT	BETAT	CNFT	CAFT	CLMFT	CYFT	CYNFT	CBLFT	CABT	CP7	ALPHAO	BETAO
-.169	-7.030	-.15060	.09210	.05770	.11830	-.01430	.00030	.09580	-.42590	-.38280	-7.06970
-.226	-4.924	-.13870	.09390	.05130	.07900	-.00983	.00010	.09170	-.40790	-.41960	-4.98060
-.306	-.574	-.10090	.09430	.02660	.00930	-.00460	-.00020	.09190	-.40870	-.39890	-.64700
-.249	3.519	-.10410	.09370	.03430	-.05440	.00410	-.00010	.09450	-.42050	-.38390	3.46670
-.197	6.033	-.10620	.09290	.03720	-.09610	.00820	-.00040	.09610	-.42760	-.34830	5.97540
	GRADIENT	.00415	-.00002	-.00205	-.01580	.00164	-.00002	.00033	-.00148	.00423	1.00049

RUN NO. 901/ 0 RN/L = 3.50 GRADIENT INTERVAL = -5.00/ 5.00

ALPHAT	BETAT	CNFT	CAFT	CLMFT	CYFT	CYNFT	CBLFT	CABT	CP7	ALPHAO	BETAO
4.573	-5.925	-.06660	.08930	.07110	.10410	-.01130	.00020	.09020	-.40140	4.19600	-5.91280
4.208	-3.730	-.05700	.08960	.06220	.06610	-.00940	.00010	.08800	-.39160	3.86770	-3.72480
3.922	.212	-.03310	.09150	.04190	-.00330	.00050	-.00010	.08630	-.38400	3.66100	.20350
4.127	4.062	-.04160	.09060	.05410	-.06880	.00880	-.00020	.08840	-.39330	3.82000	4.03870
4.090	6.095	-.04580	.09000	.05620	-.10370	.00960	-.00020	.09060	-.40310	3.78050	6.06330
	GRADIENT	.00199	.00013	-.00106	-.01731	.00234	-.00004	.00005	-.00021	-.00631	.99633

IA156A, AEDC PWT 16T-470, O T S W/SILTS (R8NT48) (10 MAY 80)

REFERENCE DATA

SREF = 2690.0000 SQ.FT. XMRP = 976.0000 IN. XT
LREF = 1290.3000 INCHES YMRP = .0000 IN. YT
BREF = 1290.3000 INCHES ZMRP = 400.0000 IN. ZT
SCALE = .0200

PARAMETRIC DATA

IB-ELV = 10.000 OB-ELV = 5.000
BDFLAP = .000 SPDBRK = .000
RUDDER = .000 SILTS = 1.000
MACH = 1.150 RN/L = 3.500

RUN NO. 902/ 0 RN/L = 3.50 GRADIENT INTERVAL = -5.00/ 5.00

ALPHAT	BETAT	CNFT	CAFT	CLMFT	CYFT	CYNFT	CBLFT	CABT	CP7	ALPHAO	BETAO
-8.577	-6.025	-.29230	.09840	.02210	.10970	-.01110	.00040	.10250	-.45580	-8.42000	-6.01010
-8.594	-3.894	-.28720	.09850	.01820	.06720	-.00670	.00000	.10000	-.44490	-8.43230	-3.89350
-8.451	.380	-.25850	.10050	.00160	-.00350	-.00240	-.00010	.09820	-.43680	-8.23420	.36880
-8.376	4.349	-.26420	.09960	.00730	-.05970	-.00090	-.00030	.10010	-.44540	-8.19360	4.32410
-8.308	6.270	-.26520	.09900	.00940	-.09300	.00360	-.00050	.10050	-.44720	-8.13640	6.24290
	GRADIENT	.00284	.00014	-.00136	-.01541	.00071	-.00004	.00001	-.00004	.02918	.99692

RUN NO. 903/ 0 RN/L = 3.49 GRADIENT INTERVAL = -5.00/ 5.00

ALPHAT	BETAT	CNFT	CAFT	CLMFT	CYFT	CYNFT	CBLFT	CABT	CP7	ALPHAO	BETAO
-6.509	-6.113	-.24950	.09810	.02800	.10730	-.01330	.00030	.09870	-.43900	-6.43260	-6.10820
-6.154	-3.823	-.23410	.10020	.02480	.06060	-.00770	.00000	.09390	-.41780	-6.08350	-3.83710
-6.327	.139	-.20800	.10000	.00670	.00210	-.00460	-.00020	.09630	-.42850	-6.20600	.12130
-6.248	4.351	-.21420	.10090	.01430	-.06250	.00180	-.00030	.09490	-.42190	-6.15040	4.33400
-6.019	6.339	-.21340	.09940	.01640	-.09620	.00630	-.00050	.09590	-.42640	-5.93850	6.32010
	GRADIENT	.00239	.00009	-.00125	-.01506	.00117	-.00004	.00012	-.00048	-.00796	.99963

RUN NO. 904/ 0 RN/L = 3.50 GRADIENT INTERVAL = -5.00/ 5.00

ALPHAT	BETAT	CNFT	CAFT	CLMFT	CYFT	CYNFT	CBLFT	CABT	CP7	ALPHAO	BETAO
-4.251	-6.216	-.20840	.09880	.03700	.10810	-.01530	.00030	.09470	-.42130	-4.28510	-6.22680
-4.296	-3.900	-.19650	.10110	.03070	.06320	-.00930	.00000	.09010	-.40070	-4.30990	-3.93190
-4.041	.251	-.15940	.10140	.01320	.00000	-.00490	-.00020	.09150	-.40710	-4.02200	.23350
-3.746	4.155	-.16400	.10070	.02450	-.06100	.00280	-.00030	.09230	-.41060	-3.77750	4.16010
-3.925	6.120	-.17000	.10010	.02520	-.09420	.00690	-.00050	.09330	-.41490	-3.95680	6.11530
	GRADIENT	.00409	-.00005	-.00081	-.01542	.00150	-.00004	.00027	-.00123	.06613	1.00458

RUN NO. 905/ 0 RN/L = 3.50 GRADIENT INTERVAL = -5.00/ 5.00

ALPHAT	BETAT	CNFT	CAFT	CLMFT	CYFT	CYNFT	CBLFT	CABT	CP7	ALPHAO	BETAO
-.138	-7.029	-.14820	.09910	.05850	.12140	-.01680	.00030	.09170	-.40790	-.37360	-7.07750
-.200	-4.656	-.13480	.10050	.05020	.07580	-.01090	.00010	.08790	-.39110	-.40670	-4.71710
-.275	-.604	-.10070	.10180	.02770	.00930	-.00460	-.00010	.08770	-.39020	-.38710	-.67890
-.206	3.536	-.10200	.10140	.03450	-.05480	.00460	-.00010	.08960	-.39860	-.35780	3.48180
-.200	5.781	-.10530	.10030	.03810	-.09200	.00830	-.00030	.09140	-.40660	-.37140	5.72010
	GRADIENT	.00399	.00011	-.00190	-.01594	.00189	-.00002	.00021	-.00092	.00597	1.00096

IA156A, AEDC PWT 16T-470, O T S W/SILTS (R8NT48) (10 MAY 80)

REFERENCE DATA

SREF = 2690.0000 SQ.FT. XMRP = 976.0000 IN. XT
LREF = 1290.3000 INCHES YMRP = .0000 IN. YT
BREF = 1290.3000 INCHES ZMRP = 400.0000 IN. ZT
SCALE = .0200

PARAMETRIC DATA

IB-ELV = 10.000 OB-ELV = 5.000
BDFLAP = .000 SPDBRK = .000
RUDDER = .000 SILTS = 1.000
MACH = 1.150 RN/L = 3.500

RUN NO. 906/ 0 RN/L = 3.50 GRADIENT INTERVAL = -5.00/ 5.00

ALPHAT	BETAT	CNFT	CAFT	CLMFT	CYFT	CYNFT	CBLFT	CABT	CP7	ALPHAO	BETAO
4.507	-5.741	-.07210	.09670	.07410	.10100	-.01160	.00020	.08620	-.38320	4.09950	-5.73470
4.247	-3.569	-.06120	.09720	.06560	.06590	-.01060	.00010	.08360	-.37190	3.87140	-3.57440
4.080	.209	-.04000	.09840	.04910	.00140	-.00290	.00000	.08180	-.36400	3.76250	.18820
4.247	4.221	-.04030	.09860	.05560	-.06680	.00630	-.00010	.08340	-.37070	3.91780	4.19400
4.029	5.933	-.04610	.09780	.05700	-.09790	.00870	-.00020	.08620	-.38360	3.70200	5.89620
	GRADIENT	.00265	.00018	-.00125	-.01703	.00217	-.00003	-.00002	.00014	.00629	.99724

IA156A, AEDC PWT 16T-470, O T S W/SILTS (R8NT49) (10 MAY 80)

REFERENCE DATA

SREF = 2690.0000 SQ.FT. XMRP = 976.0000 IN. XT
LREF = 1290.3000 INCHES YMRP = .0000 IN. YT
BREF = 1290.3000 INCHES ZMRP = 400.0000 IN. ZT
SCALE = .0200

PARAMETRIC DATA

IB-ELV = 10.000 OB-ELV = 5.000
BDFLAP = .000 SPDBRK = .000
RUDDER = .000 SILTS = 1.000
MACH = 1.250 RN/L = 3.500

RUN NO. 907/ 0 RN/L = 3.50 GRADIENT INTERVAL = -5.00/ 5.00

ALPHAT	BETAT	CNFT	CAFT	CLMFT	CYFT	CYNFT	CBLFT	CABT	CP7	ALPHAO	BETAO
-8.267	-5.880	-.29430	.10580	.03030	.09770	-.00750	.00030	.09360	-.41630	-8.16870	-5.85390
-8.574	-3.960	-.29340	.10650	.02610	.06110	-.00300	.00010	.09130	-.40590	-8.46370	-3.94090
-8.439	.361	-.26440	.10780	.00890	-.00440	-.00100	-.00010	.08990	-.39970	-8.27080	.35330
-8.321	4.406	-.26810	.10700	.01410	-.05870	-.00070	-.00030	.08980	-.39960	-8.16820	4.37590
-8.252	6.334	-.26920	.10650	.01550	-.09260	.00340	-.00050	.09090	-.40440	-8.10430	6.29450
	GRADIENT	.00307	.00006	-.00146	-.01433	.00028	-.00005	-.00018	.00076	.03542	.99406

RUN NO. 908/ 0 RN/L = 3.50 GRADIENT INTERVAL = -5.00/ 5.00

ALPHAT	BETAT	CNFT	CAFT	CLMFT	CYFT	CYNFT	CBLFT	CABT	CP7	ALPHAO	BETAO
-6.245	-5.945	-.25010	.10620	.03500	.09770	-.00940	.00020	.08980	-.39930	-6.22390	-5.92680
-6.494	-4.037	-.24760	.10680	.03040	.06070	-.00420	.00000	.08820	-.39240	-6.46220	-4.03020
-6.283	.105	-.21370	.10750	.01340	.00170	-.00300	-.00020	.08700	-.38720	-6.21450	.09590
-6.214	4.377	-.21830	.10780	.01910	-.06240	.00240	-.00040	.08700	-.38700	-6.14650	4.35910
-5.924	6.292	-.21310	.10580	.01930	-.09570	.00600	-.00050	.08940	-.39760	-5.85970	6.26420
	GRADIENT	.00346	.00012	-.00133	-.01463	.00079	-.00005	-.00014	.00064	.03741	.99699

IA156A, AEDC PWT 16T-470, O T S W/SILTS (R8NT49) (10 MAY 80)

REFERENCE DATA

SREF = 2690.0000 SQ.FT. XMRP = 976.0000 IN. XT
LREF = 1290.3000 INCHES YMRP = .0000 IN. YT
BREF = 1290.3000 INCHES ZMRP = 400.0000 IN. ZT
SCALE = .0200

PARAMETRIC DATA

IB-ELV = 10.000 OB-ELV = 5.000
BDFLAP = .000 SPDBRK = .000
RUDDER = .000 SILTS = 1.000
MACH = 1.250 RN/L = 3.500

RUN NO. 909/ 0 RN/L = 3.50 GRADIENT INTERVAL = -5.00/ 5.00

ALPHAT	BETAT	CNFT	CAFT	CLMFT	CYFT	CYNFT	CBLFT	CABT	CP7	ALPHAO	BETAO
-4.312	-6.237	-.21560	.10590	.04250	.10650	-.01330	.00020	.08900	-.39570	-4.38340	-6.23240
-4.223	-4.007	-.20350	.10750	.03800	.06500	-.00880	.00000	.08540	-.37980	-4.29710	-4.02370
-4.148	.388	-.16940	.10910	.02000	-.00640	-.00120	-.00020	.08380	-.37250	-4.17140	.37950
-3.859	4.253	-.17150	.10890	.02760	-.06230	.00390	-.00030	.08520	-.37900	-3.91040	4.25340
-3.976	6.286	-.17300	.10780	.02630	-.09640	.00740	-.00050	.08630	-.38390	-4.01780	6.27310
	GRADIENT	.00396	.00017	-.00132	-.01543	.00154	-.00004	-.00003	.00013	.04640	1.00203

RUN NO. 910/ 0 RN/L = 3.50 GRADIENT INTERVAL = -5.00/ 5.00

ALPHAT	BETAT	CNFT	CAFT	CLMFT	CYFT	CYNFT	CBLFT	CABT	CP7	ALPHAO	BETAO
-.111	-7.091	-.15560	.10790	.06600	.11820	-.01470	.00020	.08400	-.37340	-.41190	-7.12750
-.161	-4.764	-.14500	.10830	.05900	.07420	-.00970	.00000	.08080	-.35930	-.43960	-4.81650
-.192	-.574	-.11580	.10900	.04110	.00920	-.00470	-.00020	.07940	-.35300	-.40110	-.64630
-.126	3.884	-.11400	.10870	.04670	-.05820	.00360	-.00020	.08110	-.36060	-.37340	3.82210
-.103	5.807	-.11440	.10750	.04710	-.08960	.00600	-.00030	.08300	-.36910	-.34890	5.73110
	GRADIENT	.00355	.00005	-.00139	-.01531	.00154	-.00002	.00004	-.00017	.00764	.99889

RUN NO. 911/ 0 RN/L = 3.50 GRADIENT INTERVAL = -5.00/ 5.00

ALPHAT	BETAT	CNFT	CAFT	CLMFT	CYFT	CYNFT	CBLFT	CABT	CP7	ALPHAO	BETAO
4.552	-5.777	-.07640	.10320	.08000	.09910	-.01070	.00020	.07950	-.35350	4.08860	-5.76390
4.428	-3.856	-.06470	.10310	.07220	.06530	-.00860	.00000	.07820	-.34770	3.99590	-3.85010
4.113	.150	-.04900	.10420	.05840	-.00240	.00000	.00000	.07590	-.33740	3.71720	.13850
3.992	3.853	-.05720	.10490	.06610	-.06150	.00630	-.00010	.07790	-.34630	3.58360	3.83160
4.212	6.160	-.05590	.10320	.06830	-.10180	.00930	-.00010	.08040	-.35760	3.80400	6.12790
	GRADIENT	.00101	.00023	-.00083	-.01646	.00194	-.00001	-.00005	.00021	-.05370	.99649

IA156A, AEDC PWT 16T-470, O T S W/SILTS (R8NT50) (10 MAY 80)

REFERENCE DATA

SREF = 2690.0000 SQ.FT. XMRP = 976.0000 IN. XT
LREF = 1290.3000 INCHES YMRP = .0000 IN. YT
BREF = 1290.3000 INCHES ZMRP = 400.0000 IN. ZT
SCALE = .0200

PARAMETRIC DATA

IB-ELV = 10.000 OB-ELV = 5.000
BDFLAP = .000 SPDBRK = .000
RUDDER = .000 SILTS = 1.000
MACH = 1.400 RN/L = 3.500

RUN NO. 912/ 0 RN/L = 3.50 GRADIENT INTERVAL = -5.00/ 5.00

ALPHAT	BETAT	CNFT	CAFT	CLMFT	CYFT	CYNFT	CBLFT	CABT	CP7	ALPHAO	BETAO
-8.476	-6.114	-.30900	.10980	.03830	.10150	-.00580	.00020	.08470	-.37660	-8.44420	-6.05910
-8.507	-3.971	-.29720	.11010	.03200	.06050	-.00210	.00000	.08250	-.36690	-8.45670	-3.92450
-8.251	.288	-.26390	.11240	.01530	-.00510	-.00070	-.00010	.07990	-.35530	-8.14210	.27750
-8.115	4.404	-.26840	.11280	.02130	-.06230	-.00100	-.00030	.08100	-.36040	-8.03800	4.33870
-8.076	6.309	-.26990	.11240	.02180	-.09240	-.00020	-.00040	.08240	-.36630	-8.00530	6.23390
	GRADIENT	.00346	.00032	-.00129	-.01467	.00013	-.00004	-.00018	.00079	.05013	.98661

RUN NO. 913/ 0 RN/L = 3.51 GRADIENT INTERVAL = -5.00/ 5.00

ALPHAT	BETAT	CNFT	CAFT	CLMFT	CYFT	CYNFT	CBLFT	CABT	CP7	ALPHAO	BETAO
-6.338	-5.949	-.25540	.11180	.03890	.10010	-.00820	.00020	.08120	-.36110	-6.34490	-5.89090
-6.206	-3.959	-.24360	.11150	.03330	.06040	-.00350	-.00010	.08000	-.35580	-6.20130	-3.91950
-6.356	.238	-.22070	.11500	.01800	-.00470	-.00090	-.00020	.07670	-.34120	-6.30710	.23070
-6.079	4.367	-.21590	.11370	.02260	-.06310	.00000	-.00040	.07810	-.34740	-6.04300	4.31060
-5.947	6.558	-.21440	.11260	.02220	-.10100	.00340	-.00060	.07960	-.35400	-5.91840	6.48600
	GRADIENT	.00333	.00027	-.00129	-.01484	.00042	-.00004	-.00023	.00102	.01889	.98857

RUN NO. 914/ 0 RN/L = 3.50 GRADIENT INTERVAL = -5.00/ 5.00

ALPHAT	BETAT	CNFT	CAFT	CLMFT	CYFT	CYNFT	CBLFT	CABT	CP7	ALPHAO	BETAO
-4.112	-5.926	-.21020	.11320	.04390	.09830	-.00910	.00010	.07860	-.34970	-4.20490	-5.89130
-4.107	-3.873	-.19850	.11460	.03860	.05770	-.00430	.00000	.07560	-.33600	-4.19010	-3.86020
-4.171	.310	-.17490	.11700	.02400	-.00680	-.00100	-.00020	.07350	-.32710	-4.21540	.30040
-3.793	4.353	-.17060	.11430	.03130	-.06050	-.00060	-.00030	.07760	-.34520	-3.87970	4.31930
-3.943	6.427	-.17090	.11400	.02820	-.09580	.00280	-.00050	.07760	-.34490	-4.00910	6.37920
	GRADIENT	.00340	-.00003	-.00090	-.01438	.00045	-.00004	.00024	-.00110	.03748	.99439

RUN NO. 915/ 0 RN/L = 3.50 GRADIENT INTERVAL = -5.00/ 5.00

ALPHAT	BETAT	CNFT	CAFT	CLMFT	CYFT	CYNFT	CBLFT	CABT	CP7	ALPHAO	BETAO
-.273	-7.114	-.15720	.11340	.06660	.11520	-.01100	.00020	.07600	-.33820	-.58940	-7.12680
-.204	-4.666	-.13910	.11340	.05730	.06780	-.00550	.00000	.07210	-.32080	-.49300	-4.69740
-.212	-.678	-.11650	.11450	.04340	.00890	-.00330	-.00020	.06960	-.30930	-.45020	-.74330
-.159	3.908	-.11460	.11370	.04800	-.05900	.00250	-.00010	.07170	-.31880	-.43610	3.82790
-.202	5.829	-.11410	.11340	.04670	-.09090	.00440	-.00020	.07470	-.33200	-.46240	5.73510
	GRADIENT	.00280	.00003	-.00103	-.01479	.00094	-.00001	-.00003	.00018	.00655	.99436

IA156A, AEDC PWT 16T-470, O T S W/SILTS (R8NT50) (10 MAY 80)

REFERENCE DATA

SREF = 2690.0000 SQ.FT. XMRP = 976.0000 IN. XT
LREF = 1290.3000 INCHES YMRP = .0000 IN. YT
BREF = 1290.3000 INCHES ZMRP = 400.0000 IN. ZT
SCALE = .0200

PARAMETRIC DATA

IB-ELV = 10.000 OB-ELV = 5.000
BDFLAP = .000 SPDBRK = .000
RUDDER = .000 SILTS = 1.000
MACH = 1.400 RN/L = 3.500

RUN NO. 916/ 0 RN/L = 3.50 GRADIENT INTERVAL = -5.00/ 5.00

ALPHAT	BETAT	CNFT	CAFT	CLMFT	CYFT	CYNFT	CBLFT	CABT	CP7	ALPHAO	BETAO
4.634	-5.776	-.07770	.10900	.08740	.09600	-.00840	.00010	.07150	-.31800	4.08600	-5.76510
4.535	-3.799	-.06390	.11020	.07690	.06260	-.00770	-.00010	.06950	-.30910	4.03500	-3.79950
4.166	.177	-.05350	.11140	.06500	.00030	-.00360	-.00010	.06760	-.30080	3.70020	.15310
4.083	3.975	-.05500	.10990	.06840	-.05890	.00270	-.00020	.07030	-.31270	3.62780	3.94090
4.024	5.920	-.05850	.11010	.07050	-.09530	.00710	-.00020	.07150	-.31810	3.56900	5.88250
	GRADIENT	.00116	-.00004	-.00111	-.01563	.00134	-.00001	.00010	-.00044	-.05263	.99561

IA156A, AEDC PWT 16T-470, O T S W/SILTS (R8NT51) (10 MAY 80)

REFERENCE DATA

SREF = 2690.0000 SQ.FT. XMRP = 976.0000 IN. XT
LREF = 1290.3000 INCHES YMRP = .0000 IN. YT
BREF = 1290.3000 INCHES ZMRP = 400.0000 IN. ZT
SCALE = .0200

PARAMETRIC DATA

IB-ELV = 10.000 OB-ELV = 5.000
BDFLAP = .000 SPDBRK = .000
RUDDER = .000 SILTS = 1.000
MACH = 1.550 RN/L = 3.200

RUN NO. 917/ 0 RN/L = 3.19 GRADIENT INTERVAL = -5.00/ 5.00

ALPHAT	BETAT	CNFT	CAFT	CLMFT	CYFT	CYNFT	CBLFT	CABT	CP7	ALPHAO	BETAO
-8.518	-6.062	-.30540	.10840	.04480	.09390	-.00410	-.00010	.07470	-.33240	-8.55510	-6.02480
-8.552	-3.906	-.29610	.10910	.03930	.06070	-.00400	-.00030	.07200	-.32020	-8.56740	-3.87720
-8.240	.429	-.27040	.11100	.02670	-.00450	-.00150	-.00020	.07210	-.32050	-8.22430	.41200
-8.055	4.539	-.27060	.11340	.02990	-.05970	-.00200	-.00020	.07080	-.31480	-8.05310	4.48660
-8.060	6.373	-.27100	.11310	.02940	-.08610	-.00250	-.00030	.07120	-.31670	-8.04970	6.31220
	GRADIENT	.00305	.00051	-.00113	-.01426	.00024	.00001	-.00014	.00053	.06107	.99042

RUN NO. 918/ 0 RN/L = 3.19 GRADIENT INTERVAL = -5.00/ 5.00

ALPHAT	BETAT	CNFT	CAFT	CLMFT	CYFT	CYNFT	CBLFT	CABT	CP7	ALPHAO	BETAO
-6.215	-5.852	-.25050	.10930	.04410	.09760	-.01010	-.00010	.07300	-.32450	-6.26450	-5.82000
-6.388	-3.994	-.24410	.11020	.03870	.06080	-.00490	-.00020	.07070	-.31440	-6.42730	-3.97240
-6.184	.231	-.22200	.11240	.02910	-.00620	-.00020	-.00020	.06880	-.30610	-6.20890	.21750
-6.048	4.515	-.21940	.11340	.03010	-.06580	.00170	-.00030	.07080	-.31510	-6.07360	4.47160
-5.964	6.657	-.21990	.11330	.02970	-.10200	.00490	-.00040	.07190	-.31960	-5.99240	6.60640
	GRADIENT	.00290	.00038	-.00101	-.01488	.00077	-.00001	.00001	-.00009	.04155	.99239

DATE 05 AUG 80

IA156A FORCE DATA WITH FLOW ANGULARITY CORRECTION

IA156A, AEDC PWT 16T-470, O T S W/SILTS

(R8NT51) (10 MAY 80)

REFERENCE DATA

SREF = 2690.0000 SQ.FT. XMRP = 976.0000 IN. XT
LREF = 1290.3000 INCHES YMRP = .0000 IN. YT
BREF = 1290.3000 INCHES ZMRP = 400.0000 IN. ZT
SCALE = .0200

PARAMETRIC DATA

IB-ELV = 10.000 OB-ELV = 5.000
BDFLAP = .000 SPDBRK = .000
RUDDER = .000 SILTS = 1.000
MACH = 1.550 RN/L = 3.200

RUN NO. 919/ 0 RN/L = 3.20 GRADIENT INTERVAL = -5.00/ 5.00

ALPHAT	BETAT	CNFT	CAFT	CLMFT	CYFT	CYNFT	CBLFT	CABT	CP7	ALPHAO	BETAO
-4.217	-5.932	-.20800	.11080	.04680	.09440	-.00870	.00000	.06930	-.30810	-4.31560	-5.91680
-4.475	-4.137	-.20270	.11080	.04080	.06020	-.00360	-.00010	.06800	-.30220	-4.55500	-4.13240
-4.016	.334	-.17410	.11290	.03070	-.00900	.00000	-.00030	.06700	-.29790	-4.09570	.32140
-3.711	4.621	-.17020	.11480	.03450	-.06460	.00020	-.00030	.06880	-.30610	-3.80930	4.60000
-3.687	6.280	-.17140	.11470	.03460	-.09410	.00470	-.00030	.06940	-.30880	-3.78720	6.25300
	GRADIENT	.00373	.00046	-.00073	-.01426	.00044	-.00002	.00009	-.00044	.08526	.99699

RUN NO. 920/ 0 RN/L = 3.19 GRADIENT INTERVAL = -5.00/ 5.00

ALPHAT	BETAT	CNFT	CAFT	CLMFT	CYFT	CYNFT	CBLFT	CABT	CP7	ALPHAO	BETAO
-.364	-7.104	-.15230	.11050	.06580	.10970	-.00880	.00010	.06760	-.30060	-.64950	-7.12760
-.331	-4.702	-.13470	.11000	.05670	.06550	-.00420	.00000	.06440	-.28660	-.60000	-4.73560
-.298	-.634	-.11430	.11210	.04470	.00580	-.00090	-.00030	.06210	-.27600	-.52840	-.69220
-.297	3.510	-.10980	.11400	.04330	-.05300	.00200	-.00020	.06370	-.28350	-.51980	3.43790
-.330	5.655	-.10930	.11410	.04270	-.08840	.00510	-.00030	.06570	-.29210	-.53630	5.57460
	GRADIENT	.00303	.00049	-.00163	-.01443	.00075	-.00002	-.00008	.00037	.00974	.99529

RUN NO. 921/ 0 RN/L = 3.19 GRADIENT INTERVAL = -5.00/ 5.00

ALPHAT	BETAT	CNFT	CAFT	CLMFT	CYFT	CYNFT	CBLFT	CABT	CP7	ALPHAO	BETAO
4.520	-5.512	-.07220	.11110	.08490	.09040	-.00850	-.00010	.06430	-.28610	4.01740	-5.50240
4.373	-3.554	-.05950	.11220	.07310	.05740	-.00670	-.00020	.06220	-.27680	3.91950	-3.54940
4.004	.342	-.05070	.11110	.06150	-.00490	-.00210	-.00020	.06090	-.27090	3.57730	.32010
4.082	4.102	-.05050	.10970	.06620	-.05960	.00150	-.00020	.06360	-.28270	3.67120	4.06030
3.967	6.145	-.05080	.11040	.06620	-.09560	.00440	-.00020	.06280	-.27940	3.56660	6.09940
	GRADIENT	.00118	-.00033	-.00091	-.01529	.00107	-.00000	.00018	-.00076	-.03277	.99401

IA156A, AEDC PWT 16T-470, O T S W/SILTS (R8NT52) (10 MAY 80)

REFERENCE DATA

SREF = 2690.0000 SQ.FT. XMRP = 976.0000 IN. XT
LREF = 1290.3000 INCHES YMRP = .0000 IN. YT
BREF = 1290.3000 INCHES ZMRP = 400.0000 IN. ZT
SCALE = .0200

PARAMETRIC DATA

IB-ELV = 10.000 OB-ELV = 9.000
BDFLAP = .000 SPDBRK = .000
RUDDER = .000 SILTS = 1.000
MACH = .300 RN/L = 3.500

RUN NO. 928/ 0 RN/L = 2.68 GRADIENT INTERVAL = -5.00/ 5.00

ALPHAT	BETAT	CNFT	CAFT	CLMFT	CYFT	CYNFT	CBLFT	CABT	CP7	ALPHAO	BETAO
-5.977	-10.055	-.20550	.03770	.03560	.09990	.00940	-.00100	.08870	-.39450	-5.99750	-10.06700
-6.318	-6.035	-.20500	.03790	.02640	.04810	.00880	-.00130	.08570	-.38100	-6.33300	-6.05240
-6.180	.353	-.18370	.04520	.01850	-.01010	-.00210	-.00160	.07780	-.34590	-6.20040	.35230
-5.727	6.132	-.17370	.04580	.02310	-.04910	-.01290	-.00220	.07960	-.35410	-5.74500	6.15090
-5.843	10.069	-.16240	.03810	.01950	-.08800	-.01660	-.00280	.09070	-.40340	-5.85490	10.08460
	GRADIENT	.00000	.00000	.00000	.00000	.00000	.00000	.00000	.00000	.00000	.00000

RUN NO. 929/ 0 RN/L = 2.68 GRADIENT INTERVAL = -5.00/ 5.00

ALPHAT	BETAT	CNFT	CAFT	CLMFT	CYFT	CYNFT	CBLFT	CABT	CP7	ALPHAO	BETAO
-.285	-10.514	-.14050	.03890	.05610	.13060	-.00270	-.00120	.08280	-.36840	-.33390	-10.55040
-.258	-6.432	-.12930	.04510	.04530	.06270	.00430	-.00100	.07400	-.32910	-.30150	-6.47540
-.210	-.468	-.11720	.04630	.04060	-.00670	.00170	-.00140	.07320	-.32560	-.24970	-.52380
-.185	5.615	-.10900	.04270	.04490	-.06920	-.00100	-.00180	.07590	-.33760	-.23260	5.55400
-.137	9.980	-.09860	.04150	.04380	-.12670	.00180	-.00240	.07980	-.35480	-.18210	9.91360
	GRADIENT	.00000	.00000	.00000	.00000	.00000	.00000	.00000	.00000	.00000	.00000

RUN NO. 930/ 0 RN/L = 2.68 GRADIENT INTERVAL = -5.00/ 5.00

ALPHAT	BETAT	CNFT	CAFT	CLMFT	CYFT	CYNFT	CBLFT	CABT	CP7	ALPHAO	BETAO
6.232	-10.003	-.05030	.07340	.07620	.16720	-.02120	-.00160	.07320	-.32580	6.12420	-9.96520
6.064	-5.890	-.04220	.04070	.07050	.09010	-.00870	-.00150	.06810	-.30270	5.94850	-5.85710
5.920	.243	-.03260	.04010	.06660	-.00300	-.00100	-.00160	.06960	-.30970	5.79860	.24050
6.129	6.257	-.02520	.03980	.06800	-.09240	.00630	-.00210	.07220	-.32100	6.01890	6.22310
5.897	10.123	-.01990	.03830	.06320	-.15470	.01380	-.00260	.07410	-.32970	5.80410	10.07810
	GRADIENT	.00000	.00000	.00000	.00000	.00000	.00000	.00000	.00000	.00000	.00000

IA156A, AEDC PWT 16T-470, O T S W/SILTS (R8NT53) (10 MAY 80)

REFERENCE DATA

SREF = 2690.0000 SQ.FT. XMRP = 976.0000 IN. XT
LREF = 1290.3000 INCHES YMRP = .0000 IN. YT
BREF = 1290.3000 INCHES ZMRP = 400.0000 IN. ZT
SCALE = .0200

PARAMETRIC DATA

IB-ELV = 10.000 OB-ELV = 9.000
BDFLAP = .000 SPDBRK = .000
RUDDER = .000 SILTS = 1.000
MACH = .300 RN/L = 3.500

RUN NO. 927/ 0 RN/L = 2.67 GRADIENT INTERVAL = -5.00/ 5.00

ALPHAT	BETAT	CNFT	CAFT	CLMFT	CYFT	CYNFT	CBLFT	CABT	CP7	ALPHAO	BETAO
-10.110	-7.893	-.26790	.03740	.01990	.05250	.01920	-.00150	.09170	-.40790	-10.10520	-7.89590
-10.111	-5.737	-.26100	.03200	.01500	.03860	.01330	-.00150	.09440	-.41970	-10.10200	-5.74350
-9.855	.238	-.24870	.03660	.00810	-.00720	-.00040	-.00160	.08680	-.38630	-9.85470	.23880
-9.991	6.301	-.24210	.03950	.01010	-.03650	-.02020	-.00200	.09000	-.40030	-9.97810	6.30760
-10.000	8.102	-.23690	.03480	.00930	-.04780	-.02530	-.00230	.09780	-.43490	-9.98650	8.10500
	GRADIENT	.00000	.00000	.00000	.00000	.00000	.00000	.00000	.00000	.00000	.00000

RUN NO. 931/ 0 RN/L = 2.68 GRADIENT INTERVAL = -5.00/ 5.00

ALPHAT	BETAT	CNFT	CAFT	CLMFT	CYFT	CYNFT	CBLFT	CABT	CP7	ALPHAO	BETAO
10.066	-7.976	.01160	.03220	.08640	.13540	-.01840	-.00160	.07120	-.31650	9.92660	-7.95130
10.136	-5.647	.01880	.03470	.08140	.09470	-.01240	-.00170	.06760	-.30060	9.99500	-5.62770
10.019	.283	.01780	.03700	.08220	.00030	-.00290	-.00170	.06640	-.29550	9.86490	.27820
10.093	6.311	.03120	.03650	.07900	-.09470	.00820	-.00220	.06880	-.30590	9.95420	6.28540
9.861	8.152	.03240	.03330	.07540	-.12440	.01150	-.00230	.07210	-.32080	9.73250	8.12210
	GRADIENT	.00000	.00000	.00000	.00000	.00000	.00000	.00000	.00000	.00000	.00000

IA156A, AEDC PWT 16T-470, O T S W/SILTS (R8NT54) (10 MAY 80)

REFERENCE DATA

SREF = 2690.0000 SQ.FT. XMRP = 976.0000 IN. XT
LREF = 1290.3000 INCHES YMRP = .0000 IN. YT
BREF = 1290.3000 INCHES ZMRP = 400.0000 IN. ZT
SCALE = .0200

PARAMETRIC DATA

IB-ELV = 10.000 OB-ELV = 9.000
BDFLAP = .000 SPDBRK = .000
RUDDER = .000 SILTS = 1.000
MACH = .600 RN/L = 3.500

RUN NO. 932/ 0 RN/L = 3.50 GRADIENT INTERVAL = -5.00/ 5.00

ALPHAT	BETAT	CNFT	CAFT	CLMFT	CYFT	CYNFT	CBLFT	CABT	CP7	ALPHAO	BETAO
-8.151	-7.887	-.25150	.03790	.03150	.08170	.00730	-.00030	.08810	-.39190	-8.13810	-7.85400
-8.109	-5.781	-.24720	.03830	.02690	.05720	.00610	-.00040	.08720	-.38770	-8.08740	-5.76320
-7.988	-3.711	-.23890	.04020	.02340	.03600	.00360	-.00060	.08350	-.37140	-7.96680	-3.70800
-7.989	.271	-.23100	.04100	.01600	-.00140	-.00210	-.00070	.08600	-.38230	-7.96280	.26710
-7.963	4.204	-.22550	.04190	.01920	-.03440	-.00860	-.00070	.08450	-.37570	-7.92730	4.19750
-7.906	6.113	-.22440	.04040	.02060	-.05260	-.01110	-.00090	.08720	-.38770	-7.87010	6.09550
-7.816	8.197	-.21810	.03890	.02000	-.07290	-.01360	-.00110	.09080	-.40400	-7.78460	8.16800
	GRADIENT	.00169	.00021	-.00053	-.00890	-.00154	-.00001	.00013	-.00055	.00498	.99880

IA156A, AEDC PWT 16T-470, O T S W/SILTS (R8NT54) (10 MAY 80)

REFERENCE DATA

SREF = 2690.0000 SQ.FT. XMRP = 976.0000 IN. XT
LREF = 1290.3000 INCHES YMRP = .0000 IN. YT
BREF = 1290.3000 INCHES ZMRP = 400.0000 IN. ZT
SCALE = .0200

PARAMETRIC DATA

IB-ELV = 10.000 OB-ELV = 9.000
BDFLAP = .000 SPDBRK = .000
RUDDER = .000 SILTS = 1.000
MACH = .600 RN/L = 3.500

RUN NO. 933/ 0 RN/L = 3.51 GRADIENT INTERVAL = -5.00/ 5.00

ALPHAT	BETAT	CNFT	CAFT	CLMFT	CYFT	CYNFT	CBLFT	CABT	CP7	ALPHAO	BETAO
-5.985	-7.774	-.21720	.03960	.03760	.08800	.00380	-.00030	.08560	-.38070	-6.01280	-7.75140
-6.142	-5.871	-.21530	.04210	.03340	.06230	.00360	-.00030	.08270	-.36770	-6.15980	-5.86270
-6.068	-3.841	-.21130	.04210	.02970	.03670	.00290	-.00040	.08130	-.36150	-6.08390	-3.84460
-6.182	.117	-.19760	.04340	.02190	-.00400	-.00180	-.00060	.08170	-.36350	-6.18670	.11190
-5.958	4.214	-.19270	.04340	.02680	-.03840	-.00720	-.00070	.08210	-.36520	-5.96880	4.21350
-5.754	6.043	-.18980	.04270	.02830	-.05750	-.00850	-.00080	.08360	-.37200	-5.76640	6.03530
-5.760	8.353	-.18310	.04140	.02660	-.08370	-.00890	-.00120	.08720	-.38770	-5.76980	8.33600
	GRADIENT	.00230	.00016	-.00035	-.00932	-.00125	-.00004	.00010	-.00046	.01452	1.00033

RUN NO. 934/ 0 RN/L = 3.51 GRADIENT INTERVAL = -5.00/ 5.00

ALPHAT	BETAT	CNFT	CAFT	CLMFT	CYFT	CYNFT	CBLFT	CABT	CP7	ALPHAO	BETAO
-4.059	-7.913	-.19260	.04110	.04430	.09270	.00200	-.00010	.08240	-.36660	-4.12330	-7.90290
-4.030	-5.803	-.18570	.04160	.03980	.06280	.00180	-.00030	.08120	-.36120	-4.09060	-5.80640
-4.089	-3.796	-.18210	.04410	.03640	.03820	.00110	-.00030	.07780	-.34610	-4.14330	-3.81300
-3.835	.210	-.16200	.04460	.02980	-.00420	-.00260	-.00050	.07830	-.34830	-3.88670	.20510
-3.896	4.287	-.16370	.04480	.03620	-.04140	-.00610	-.00070	.07940	-.35330	-3.95600	4.29880
-3.796	6.010	-.15890	.04340	.03660	-.06180	-.00620	-.00080	.08140	-.36230	-3.85550	6.01670
-3.695	7.939	-.15500	.04170	.03510	-.08540	-.00550	-.00110	.08460	-.37640	-3.74610	7.93910
	GRADIENT	.00227	.00009	-.00002	-.00985	-.00089	-.00005	.00020	-.00089	.02306	1.00361

RUN NO. 935/ 0 RN/L = 3.51 GRADIENT INTERVAL = -5.00/ 5.00

ALPHAT	BETAT	CNFT	CAFT	CLMFT	CYFT	CYNFT	CBLFT	CABT	CP7	ALPHAO	BETAO
-.133	-8.770	-.14610	.04020	.06060	.11730	-.00570	-.00020	.08090	-.36000	-.26950	-8.79290
-.189	-6.758	-.14160	.04310	.05690	.08370	-.00220	-.00020	.07690	-.34200	-.32410	-6.78810
-.184	-4.427	-.13460	.04300	.05270	.05120	-.00190	-.00030	.07490	-.33310	-.31290	-4.47150
-.179	-.164	-.12010	.04560	.04550	-.00190	-.00110	-.00050	.07490	-.33300	-.28920	-.22410
-.139	3.871	-.11740	.04490	.05010	-.04820	-.00080	-.00050	.07480	-.33290	-.26660	3.80610
-.089	5.722	-.11360	.04460	.05060	-.07050	-.00040	-.00060	.07520	-.33430	-.21740	5.65400
-.163	7.863	-.10980	.04190	.04780	-.09960	.00100	-.00100	.07900	-.35130	-.27870	7.78460
	GRADIENT	.00209	.00023	-.00033	-.01198	.00013	-.00002	-.00001	.00002	.00558	.99749

IA156A, AEDC PWT 16T-470, O T S W/SILTS (R8NT54) (10 MAY 80)

REFERENCE DATA

SREF = 2690.0000 SQ.FT. XMRP = 976.0000 IN. XT
LREF = 1290.3000 INCHES YMRP = .0000 IN. YT
BREF = 1290.3000 INCHES ZMRP = 400.0000 IN. ZT
SCALE = .0200

PARAMETRIC DATA

IB-ELV = 10.000 OB-ELV = 9.000
BDFLAP = .000 SPDBRK = .000
RUDDER = .000 SILTS = 1.000
MACH = .600 RN/L = 3.500

RUN NO. 936/ 0 RN/L = 3.51 GRADIENT INTERVAL = -5.00/ 5.00

ALPHAT	BETAT	CNFT	CAFT	CLMFT	CYFT	CYNFT	CBLFT	CABT	CP7	ALPHAO	BETAO
4.277	-7.800	-.08180	.04060	.07500	.12360	-.01300	-.00020	.07250	-.32240	4.04720	-7.76040
4.314	-5.713	-.07090	.04130	.07120	.08570	-.00840	-.00020	.07050	-.31370	4.08080	-5.67900
4.279	-3.756	-.06640	.04240	.06830	.05480	-.00540	-.00030	.06940	-.30880	4.04550	-3.72780
4.078	.207	-.05830	.04200	.06060	-.00280	-.00140	-.00030	.07230	-.32180	3.86170	.20220
4.108	4.189	-.05750	.04220	.06360	-.05560	.00200	-.00060	.07230	-.32170	3.89080	4.15240
4.044	6.128	-.05400	.04150	.06230	-.08490	.00360	-.00080	.07240	-.32220	3.83350	6.08610
3.936	7.973	-.05140	.04090	.06090	-.11420	.00670	-.00100	.07470	-.33230	3.73890	7.92510
	GRADIENT	.00112	-.00003	-.00059	-.01389	.00093	-.00004	.00036	-.00162	-.01945	.99177

RUN NO. 937/ 0 RN/L = 3.51 GRADIENT INTERVAL = -5.00/ 5.00

ALPHAT	BETAT	CNFT	CAFT	CLMFT	CYFT	CYNFT	CBLFT	CABT	CP7	ALPHAO	BETAO
6.445	-7.973	-.04790	.03740	.07970	.13460	-.01780	-.00020	.07120	-.31650	6.18480	-7.94830
6.283	-5.801	-.04650	.03970	.07710	.09330	-.01120	-.00020	.06850	-.30480	6.01770	-5.77730
6.405	-3.859	-.04100	.03850	.07670	.05840	-.00670	-.00010	.06930	-.30800	6.12690	-3.83960
6.195	.214	-.03530	.04010	.07160	-.00490	-.00050	-.00030	.07130	-.31690	5.92510	.21110
5.979	4.071	-.03290	.04140	.07050	-.05820	.00260	-.00050	.07010	-.31180	5.72220	4.04330
6.133	6.136	-.02850	.04040	.07010	-.08950	.00550	-.00080	.07130	-.31720	5.88410	6.10420
5.972	8.217	-.02310	.03940	.06810	-.12340	.01020	-.00110	.07420	-.33010	5.73880	8.18120
	GRADIENT	.00103	.00037	-.00079	-.01471	.00118	-.00005	.00010	-.00050	-.05102	.99414

RUN NO. 938/ 0 RN/L = 3.51 GRADIENT INTERVAL = -5.00/ 5.00

ALPHAT	BETAT	CNFT	CAFT	CLMFT	CYFT	CYNFT	CBLFT	CABT	CP7	ALPHAO	BETAO
8.337	-8.047	-.01850	.03510	.08420	.14120	-.01990	.00000	.07090	-.31520	8.04940	-8.02960
8.255	-5.775	-.01330	.03750	.08200	.09610	-.01250	-.00010	.06770	-.30120	7.95440	-5.75980
8.470	-3.949	-.00880	.03760	.08240	.06250	-.00800	-.00010	.06690	-.29760	8.15550	-3.93600
8.151	.177	-.00620	.03770	.07780	-.00230	-.00050	-.00040	.07050	-.31380	7.84020	.17410
8.318	4.174	.00400	.03900	.07700	-.05960	.00440	-.00060	.06940	-.30850	8.01980	4.15290
7.989	6.092	.00150	.03760	.07530	-.08960	.00710	-.00080	.07180	-.31940	7.70580	6.06850
8.254	8.227	.01210	.03700	.07410	-.12560	.01290	-.00110	.07330	-.32620	7.98530	8.20320
	GRADIENT	.00157	.00017	-.00067	-.01504	.00153	-.00006	.00031	-.00136	-.01703	.99586

IA156A, AEDC PWT 16T-470, O T S W/SILTS (R8NT55) (10 MAY 80)

REFERENCE DATA

SREF = 2690.0000 SQ.FT. XMRP = 976.0000 IN. XT
LREF = 1290.3000 INCHES YMRP = .0000 IN. YT
BREF = 1290.3000 INCHES ZMRP = 400.0000 IN. ZT
SCALE = .0200

PARAMETRIC DATA

IB-ELV = 10.000 OB-ELV = 9.000
BDFLAP = .000 SPDBRK = .000
RUDDER = .000 SILTS = 1.000
MACH = .800 RN/L = 3.500

RUN NO. 939/ 0 RN/L = 3.51 GRADIENT INTERVAL = -5.00/ 5.00

ALPHAT	BETAT	CNFT	CAFT	CLMFT	CYFT	CYNFT	CBLFT	CABT	CP7	ALPHAO	BETAO
-8.449	-6.025	-.27180	.04570	.03320	.07450	-.00040	-.00010	.08790	-.39080	-8.41560	-6.00980
-8.354	-3.889	-.26780	.04290	.02970	.05210	-.00280	-.00020	.09160	-.40750	-8.31870	-3.88950
-8.184	.371	-.24260	.04710	.01710	-.00410	-.00110	-.00040	.08680	-.38620	-8.13280	.36600
-8.146	4.291	-.24610	.04650	.02170	-.04680	-.00240	-.00040	.08790	-.39090	-8.07840	4.28160
-8.062	6.220	-.24180	.04590	.02270	-.06900	-.00350	-.00060	.08930	-.39700	-7.99710	6.19730
	GRADIENT	.00270	.00045	-.00101	-.01211	.00005	-.00002	-.00046	.00207	.02958	.99891

RUN NO. 940/ 0 RN/L = 3.50 GRADIENT INTERVAL = -5.00/ 5.00

ALPHAT	BETAT	CNFT	CAFT	CLMFT	CYFT	CYNFT	CBLFT	CABT	CP7	ALPHAO	BETAO
-6.305	-6.043	-.23490	.04590	.04010	.08060	-.00380	.00000	.08700	-.38680	-6.32930	-6.03880
-6.210	-3.950	-.22860	.04690	.03610	.04960	-.00310	-.00010	.08430	-.37500	-6.23340	-3.95960
-6.047	.153	-.20220	.04790	.02290	-.00370	-.00110	-.00030	.08340	-.37070	-6.04170	.14710
-6.117	4.309	-.20740	.04800	.02880	-.04540	-.00330	-.00050	.08460	-.37620	-6.10950	4.30950
-5.816	6.224	-.20270	.04730	.03050	-.06870	-.00290	-.00060	.08580	-.38170	-5.81330	6.21780
	GRADIENT	.00256	.00013	-.00088	-.01150	-.00003	-.00005	.00004	-.00015	.01493	1.00122

RUN NO. 941/ 0 RN/L = 3.50 GRADIENT INTERVAL = -5.00/ 5.00

ALPHAT	BETAT	CNFT	CAFT	CLMFT	CYFT	CYNFT	CBLFT	CABT	CP7	ALPHAO	BETAO
-4.237	-6.163	-.20610	.04600	.04800	.08060	-.00410	.00000	.08390	-.37310	-4.31840	-6.16840
-4.205	-3.920	-.19540	.04790	.04240	.04740	-.00340	-.00010	.08030	-.35730	-4.28320	-3.94260
-3.964	.253	-.16410	.04830	.02890	-.00490	-.00120	-.00040	.08000	-.35600	-4.01010	.24870
-3.715	4.160	-.16590	.04820	.03750	-.04690	-.00150	-.00040	.08150	-.36260	-3.78230	4.17480
-3.911	6.123	-.16880	.04810	.03780	-.07210	-.00090	-.00060	.08250	-.36680	-3.97100	6.13010
	GRADIENT	.00369	.00004	-.00064	-.01168	.00024	-.00004	.00015	-.00065	.06204	1.00469

RUN NO. 942/ 0 RN/L = 3.51 GRADIENT INTERVAL = -5.00/ 5.00

ALPHAT	BETAT	CNFT	CAFT	CLMFT	CYFT	CYNFT	CBLFT	CABT	CP7	ALPHAO	BETAO
-.163	-6.703	-.15490	.04530	.06320	.09850	-.00870	.00010	.08080	-.35920	-.33910	-6.73920
-.206	-4.755	-.14780	.04690	.05810	.06900	-.00810	-.00010	.07810	-.34750	-.37100	-4.80420
-.207	-.321	-.12190	.04700	.04280	.00270	-.00210	-.00030	.07510	-.33410	-.32420	-.38150
-.167	3.764	-.12120	.04780	.04890	-.05370	.00310	-.00040	.07670	-.34130	-.30280	3.70420
-.172	5.622	-.12290	.04670	.05110	-.08120	.00510	-.00050	.07780	-.34590	-.31410	5.55960
	GRADIENT	.00316	.00010	-.00111	-.01441	.00132	-.00004	-.00017	.00076	.00804	.99875

IA156A, AEDC PWT 16T-470, O T S W/SILTS (R8NT55) (10 MAY 80)

REFERENCE DATA

SREF = 2690.0000 SQ.FT. XMRP = 976.0000 IN. XT
LREF = 1290.3000 INCHES YMRP = .0000 IN. YT
BREF = 1290.3000 INCHES ZMRP = 400.0000 IN. ZT
SCALE = .0200

PARAMETRIC DATA

IB-ELV = 10.000 OB-ELV = 9.000
BDFLAP = .000 SPDBRK = .000
RUDDER = .000 SILTS = 1.000
MACH = .800 RN/L = 3.500

RUN NO. 943/ 0 RN/L = 3.50 GRADIENT INTERVAL = -5.00/ 5.00

ALPHAT	BETAT	CNFT	CAFT	CLMFT	CYFT	CYNFT	CBLFT	CABT	CP7	ALPHAO	BETAO
4.218	-5.682	-.07140	.04320	.06760	.09490	-.01050	.00010	.07290	-.32430	3.93760	-5.65230
4.207	-3.684	-.06440	.04380	.06530	.06010	-.00780	.00000	.07240	-.32200	3.92090	-3.66170
4.196	.116	-.04110	.04570	.05240	.00100	-.00200	-.00030	.07110	-.31600	3.94530	.11000
4.055	4.101	-.04750	.04460	.05790	-.06050	.00520	-.00040	.07310	-.32490	3.79630	4.07130
3.966	6.101	-.04770	.04400	.05720	-.09380	.00800	-.00060	.07390	-.32890	3.72080	6.06740
	GRADIENT	.00214	.00010	-.00093	-.01549	.00167	-.00005	.00009	-.00039	-.01618	.99336

RUN NO. 944/ 0 RN/L = 3.51 GRADIENT INTERVAL = -5.00/ 5.00

ALPHAT	BETAT	CNFT	CAFT	CLMFT	CYFT	CYNFT	CBLFT	CABT	CP7	ALPHAO	BETAO
6.398	-5.860	-.03610	.04140	.07200	.10090	-.01250	.00000	.07170	-.31880	6.08910	-5.84540
6.456	-3.853	-.02710	.04220	.06940	.06650	-.00960	.00000	.06990	-.31080	6.13920	-3.84310
6.212	.186	-.01440	.04350	.05800	-.00030	-.00210	-.00010	.07030	-.31270	5.92630	.17620
6.048	4.009	-.01870	.04300	.06210	-.05940	.00490	-.00030	.07170	-.31880	5.76110	3.98730
6.170	6.140	-.01050	.04220	.06190	-.09460	.00900	-.00060	.07370	-.32770	5.89310	6.11720
	GRADIENT	.00109	.00010	-.00095	-.01602	.00184	-.00004	.00023	-.00101	-.04814	.99602

IA156A, AEDC PWT 16T-470, O T S W/SILTS (R8NT56) (10 MAY 80)

REFERENCE DATA

SREF = 2690.0000 SQ.FT. XMRP = 976.0000 IN. XT
LREF = 1290.3000 INCHES YMRP = .0000 IN. YT
BREF = 1290.3000 INCHES ZMRP = 400.0000 IN. ZT
SCALE = .0200

PARAMETRIC DATA

IB-ELV = 10.000 OB-ELV = 9.000
BDFLAP = .000 SPDBRK = .000
RUDDER = .000 SILTS = 1.000
MACH = .900 RN/L = 3.500

RUN NO. 952/ 0 RN/L = 3.51 GRADIENT INTERVAL = -5.00/ 5.00

ALPHAT	BETAT	CNFT	CAFT	CLMFT	CYFT	CYNFT	CBLFT	CABT	CP7	ALPHAO	BETAO
-8.323	-5.928	-.28490	.05010	.03400	.08770	-.00720	.00040	.09680	-.43060	-8.26650	-5.92760
-8.108	-3.741	-.27270	.05040	.03050	.05350	-.00540	.00010	.09340	-.41560	-8.05820	-3.75360
-8.263	.267	-.25270	.05140	.01610	-.00330	-.00010	-.00020	.09400	-.41820	-8.18550	.26060
-8.210	4.361	-.25360	.05100	.01900	-.05300	.00220	-.00020	.09410	-.41870	-8.10800	4.35800
-8.217	6.210	-.25220	.05110	.01890	-.07830	.00280	-.00030	.09560	-.42540	-8.10750	6.19550
	GRADIENT	.00235	.00007	-.00141	-.01314	.00094	-.00004	.00009	-.00038	-.00606	1.00115

IA156A, AEDC PWT 16T-470, O T S W/SILTS

(R8NT56) (10 MAY 80)

REFERENCE DATA

SREF = 2690.0000 SQ.FT. XMRP = 976.0000 IN. XT
LREF = 1290.3000 INCHES YMRP = .0000 IN. YT
BREF = 1290.3000 INCHES ZMRP = 400.0000 IN. ZT
SCALE = .0200

PARAMETRIC DATA

IB-ELV = 10.000 OB-ELV = 9.000
BDFLAP = .000 SPDBRK = .000
RUDDER = .000 SILTS = 1.000
MACH = .900 RN/L = 3.500

RUN NO. 953/ 0 RN/L = 3.50 GRADIENT INTERVAL = -5.00/ 5.00

ALPHAT	BETAT	CNFT	CAFT	CLMFT	CYFT	CYNFT	CBLFT	CABT	CP7	ALPHAO	BETAO
-6.224	-6.029	-.24700	.05100	.04090	.09300	-.01030	.00040	.09310	-.41390	-6.22620	-6.03550
-6.110	-3.982	-.23450	.05120	.03690	.05940	-.00840	.00020	.08990	-.39990	-6.11470	-4.00380
-6.060	.154	-.20720	.05150	.02140	-.00310	.00000	-.00010	.09040	-.40210	-6.02850	.14690
-6.069	4.205	-.21140	.05160	.02710	-.05520	.00480	-.00020	.08920	-.39670	-6.03570	4.21170
-5.886	6.189	-.21070	.04900	.02830	-.08300	.00640	-.00030	.09370	-.41690	-5.85460	6.18580
	GRADIENT	.00283	.00005	-.00121	-.01400	.00161	-.00005	-.00008	.00039	.00969	1.00348

RUN NO. 954/ 0 RN/L = 3.50 GRADIENT INTERVAL = -5.00/ 5.00

ALPHAT	BETAT	CNFT	CAFT	CLMFT	CYFT	CYNFT	CBLFT	CABT	CP7	ALPHAO	BETAO
-4.172	-6.206	-.21100	.05130	.04820	.09250	-.01000	.00040	.08970	-.39890	-4.24280	-6.21790
-4.168	-3.946	-.20100	.05120	.04200	.05580	-.00790	.00020	.08710	-.38740	-4.22710	-3.97700
-3.971	.240	-.16460	.05220	.02610	-.00480	-.00020	-.00010	.08570	-.38130	-3.98530	.23500
-4.030	4.392	-.17580	.05150	.03440	-.05830	.00480	-.00020	.08600	-.38250	-4.06210	4.40490
-3.838	6.285	-.17230	.04890	.03550	-.08580	.00740	-.00040	.09010	-.40080	-3.87600	6.29480
	GRADIENT	.00303	.00004	-.00092	-.01369	.00152	-.00005	-.00013	.00059	.01984	1.00530

RUN NO. 955/ 0 RN/L = 3.50 GRADIENT INTERVAL = -5.00/ 5.00

ALPHAT	BETAT	CNFT	CAFT	CLMFT	CYFT	CYNFT	CBLFT	CABT	CP7	ALPHAO	BETAO
-.244	-6.947	-.16480	.04950	.06430	.11100	-.01150	.00050	.08670	-.38550	-.41540	-6.98090
-.232	-4.875	-.15080	.05000	.05780	.07310	-.00860	.00030	.08480	-.37700	-.38780	-4.92580
-.267	-.548	-.11610	.04950	.03680	.00430	-.00090	.00000	.07940	-.35300	-.34630	-.61020
-.202	3.535	-.11870	.05050	.04390	-.05730	.00690	.00000	.08150	-.36240	-.30760	3.48160
-.188	5.760	-.12270	.04980	.04810	-.09120	.01000	-.00020	.08380	-.37290	-.31180	5.70300
	GRADIENT	.00386	.00006	-.00168	-.01551	.00184	-.00004	-.00040	.00177	.00954	.99970

RUN NO. 956/ 0 RN/L = 3.50 GRADIENT INTERVAL = -5.00/ 5.00

ALPHAT	BETAT	CNFT	CAFT	CLMFT	CYFT	CYNFT	CBLFT	CABT	CP7	ALPHAO	BETAO
4.407	-5.958	-.07120	.04670	.06840	.10630	-.01280	.00050	.08030	-.35740	4.10660	-5.93090
4.478	-3.946	-.05990	.04710	.06440	.07000	-.01030	.00040	.07850	-.34930	4.17420	-3.92780
3.951	.185	-.04040	.04870	.04610	-.00090	-.00010	.00000	.07610	-.33860	3.72650	.18110
4.149	4.030	-.04560	.04760	.05520	-.06540	.00970	-.00010	.07780	-.34590	3.88910	4.00760
3.950	6.138	-.04870	.04770	.05480	-.10270	.01260	-.00020	.08040	-.35780	3.70680	6.10880
	GRADIENT	.00183	.00007	-.00119	-.01698	.00251	-.00006	-.00009	.00045	-.03664	.99493

IA156A, AEDC PWT 16T-470, O T S W/SILTS (R8NT57) (10 MAY 80)

REFERENCE DATA

SREF = 2690.0000 SQ.FT. XMRP = 976.0000 IN. XT
LREF = 1290.3000 INCHES YMRP = .0000 IN. YT
BREF = 1290.3000 INCHES ZMRP = 400.0000 IN. ZT
SCALE = .0200

PARAMETRIC DATA

IB-ELV = 10.000 OB-ELV = 9.000
BDFLAP = .000 SPDBRK = .000
RUDDER = .000 SILTS = 1.000
MACH = .950 RN/L = 3.500

RUN NO. 957/ 0 RN/L = 3.50 GRADIENT INTERVAL = -5.00/ 5.00

ALPHAT	BETAT	CNFT	CAFT	CLMFT	CYFT	CYNFT	CBLFT	CABT	CP7	ALPHAO	BETAO
-8.287	-6.025	-.27910	.05790	.02370	.10530	-.01330	.00030	.10490	-.46650	-8.16840	-6.02550
-8.363	-3.814	-.27410	.05860	.01980	.06600	-.01000	.00010	.10030	-.44620	-8.23580	-3.82220
-8.192	.267	-.24750	.05880	.00550	-.00170	-.00110	-.00020	.10020	-.44570	-8.03620	.26260
-8.081	4.229	-.25050	.05900	.01110	-.06280	.00640	-.00020	.10160	-.45200	-7.92360	4.23050
-8.023	6.132	-.24950	.05800	.01230	-.09150	.00850	-.00030	.10470	-.46570	-7.87220	6.12630
	GRADIENT	.00295	.00005	-.00109	-.01602	.00204	-.00004	.00016	-.00072	.03887	1.00125

RUN NO. 959/ 0 RN/L = 3.49 GRADIENT INTERVAL = -5.00/ 5.00

ALPHAT	BETAT	CNFT	CAFT	CLMFT	CYFT	CYNFT	CBLFT	CABT	CP7	ALPHAO	BETAO
-6.254	-5.980	-.23910	.05940	.03020	.10510	-.01650	.00030	.09990	-.44420	-6.20780	-5.99200
-6.232	-4.032	-.23360	.06180	.02620	.07110	-.01330	.00010	.09590	-.42660	-6.17380	-4.05450
-6.358	.140	-.20620	.05940	.01040	-.00270	-.00030	-.00020	.09570	-.42560	-6.25860	.13530
-6.133	4.272	-.20810	.05850	.01860	-.06120	.00770	-.00030	.09790	-.43530	-6.06220	4.28200
-5.880	6.391	-.20560	.05880	.02120	-.09030	.00920	-.00050	.09960	-.44320	-5.82740	6.39430
	GRADIENT	.00308	-.00040	-.00092	-.01594	.00253	-.00005	.00024	-.00105	.01339	1.00394

RUN NO. 958/ 0 RN/L = 3.49 GRADIENT INTERVAL = -5.00/ 5.00

ALPHAT	BETAT	CNFT	CAFT	CLMFT	CYFT	CYNFT	CBLFT	CABT	CP7	ALPHAO	BETAO
-4.232	-6.166	-.20630	.05850	.03950	.10390	-.01600	.00040	.09760	-.43400	-4.27290	-6.18770
-4.304	-3.975	-.19770	.05890	.03410	.06420	-.01170	.00010	.09350	-.41570	-4.32910	-4.00850
-4.271	.378	-.16300	.05980	.01730	-.00600	-.00030	-.00020	.09420	-.41890	-4.25530	.37500
-3.786	4.332	-.16280	.05970	.02740	-.05990	.00550	-.00040	.09360	-.41620	-3.81220	4.35280
-3.840	6.152	-.16880	.05720	.02860	-.08790	.00840	-.00060	.09950	-.44250	-3.86570	6.16640
	GRADIENT	.00426	.00010	-.00086	-.01496	.00208	-.00006	.00001	-.00007	.06147	1.00656

RUN NO. 960/ 0 RN/L = 3.50 GRADIENT INTERVAL = -5.00/ 5.00

ALPHAT	BETAT	CNFT	CAFT	CLMFT	CYFT	CYNFT	CBLFT	CABT	CP7	ALPHAO	BETAO
-.237	-6.830	-.15330	.05730	.05850	.10830	-.01280	.00050	.09440	-.41990	-.41920	-6.87560
-.224	-4.797	-.14110	.05890	.05280	.07140	-.00950	.00020	.09150	-.40680	-.39650	-4.85840
-.256	-.613	-.10730	.05880	.03340	.00470	-.00120	-.00010	.08830	-.39280	-.36220	-.67830
-.187	3.565	-.11000	.05930	.04060	-.05660	.00780	-.00020	.09000	-.40040	-.32010	3.52130
-.184	5.772	-.11130	.05820	.04290	-.09180	.01150	-.00040	.09420	-.41910	-.32350	5.72460
	GRADIENT	.00372	.00005	-.00144	-.01531	.00207	-.00005	-.00018	.00077	.00914	1.00222

IA156A, AEDC PWT 16T-470, O T S W/SILTS (R8NT57) (10 MAY 80)

REFERENCE DATA

SREF = 2690.0000 SQ.FT. XMRP = 976.0000 IN. XT
LREF = 1290.3000 INCHES YMRP = .0000 IN. YT
BREF = 1290.3000 INCHES ZMRP = 400.0000 IN. ZT
SCALE = .0200

PARAMETRIC DATA

IB-ELV = 10.000 OB-ELV = 9.000
BDFLAP = .000 SPDBRK = .000
RUDDER = .000 SILTS = 1.000
MACH = .950 RN/L = 3.500

RUN NO. 961/ 0 RN/L = 3.49 GRADIENT INTERVAL = -5.00/ 5.00

ALPHAT	BETAT	CNFT	CAFT	CLMFT	CYFT	CYNFT	CBLFT	CABT	CP7	ALPHAO	BETAO
4.233	-5.802	-.07330	.05390	.06680	.11010	-.01460	.00030	.09140	-.40660	3.92050	-5.77910
4.253	-3.756	-.06030	.05490	.05940	.07400	-.01310	.00010	.08690	-.38670	3.96470	-3.74120
3.898	.018	-.03890	.05490	.04190	.00170	-.00030	-.00010	.08500	-.37790	3.68760	.01840
4.086	3.951	-.04310	.05570	.05280	-.06840	.01070	-.00020	.08640	-.38420	3.81610	3.93020
4.049	6.095	-.04650	.05480	.05560	-.10450	.01280	-.00030	.09060	-.40300	3.76780	6.07070
	GRADIENT	.00221	.00010	-.00083	-.01847	.00309	-.00004	-.00006	.00031	-.01892	.99539

IA156A, AEDC PWT 16T-470, O T S W/SILTS (R8NT58) (10 MAY 80)

REFERENCE DATA

SREF = 2690.0000 SQ.FT. XMRP = 976.0000 IN. XT
LREF = 1290.3000 INCHES YMRP = .0000 IN. YT
BREF = 1290.3000 INCHES ZMRP = 400.0000 IN. ZT
SCALE = .0200

PARAMETRIC DATA

IB-ELV = 10.000 OB-ELV = 9.000
BDFLAP = .000 SPDBRK = .000
RUDDER = .000 SILTS = 1.000
MACH = 1.050 RN/L = 3.500

RUN NO. 962/ 0 RN/L = 3.50 GRADIENT INTERVAL = -5.00/ 5.00

ALPHAT	BETAT	CNFT	CAFT	CLMFT	CYFT	CYNFT	CBLFT	CABT	CP7	ALPHAO	BETAO
-8.277	-6.016	-.28600	.08560	.02150	.11070	-.01050	.00020	.11630	-.51740	-8.13310	-6.00630
-8.447	-3.789	-.28300	.08550	.01680	.06600	-.00590	-.00010	.11550	-.51380	-8.30280	-3.79360
-8.390	.181	-.25470	.08590	-.00060	-.00180	-.00050	-.00030	.11590	-.51530	-8.18690	.17860
-8.191	4.371	-.25560	.08650	.00460	-.06730	.00330	-.00030	.11600	-.51600	-8.00280	4.36480
-8.197	6.273	-.26030	.08510	.00690	-.09860	.00560	-.00050	.11720	-.52140	-8.01670	6.25570
	GRADIENT	.00332	.00012	-.00147	-.01633	.00113	-.00002	.00006	-.00027	.03683	.99978

RUN NO. 963/ 0 RN/L = 3.50 GRADIENT INTERVAL = -5.00/ 5.00

ALPHAT	BETAT	CNFT	CAFT	CLMFT	CYFT	CYNFT	CBLFT	CABT	CP7	ALPHAO	BETAO
-6.289	-6.003	-.24450	.08490	.02780	.11200	-.01460	.00030	.11370	-.50570	-6.22150	-6.00750
-6.218	-4.067	-.23490	.08600	.02370	.07280	-.01020	.00010	.11050	-.49160	-6.14790	-4.08050
-6.387	.108	-.20670	.08650	.00370	-.00070	-.00150	-.00020	.11380	-.50620	-6.25930	.10320
-6.177	4.266	-.21160	.08480	.01260	-.06390	.00520	-.00040	.11330	-.50410	-6.07630	4.26950
-5.859	6.383	-.20730	.08540	.01520	-.09570	.00780	-.00060	.11290	-.50200	-5.78090	6.38520
	GRADIENT	.00280	-.00014	-.00133	-.01641	.00185	-.00006	.00034	-.00150	.00857	1.00206

IA156A, AEDC PWT 16T-470, O T S W/SILTS (R8NT58) (10 MAY 80)

REFERENCE DATA

SREF = 2690.0000 SQ.FT. XMRP = 976.0000 IN. XT
LREF = 1290.3000 INCHES YMRP = .0000 IN. YT
BREF = 1290.3000 INCHES ZMRP = 400.0000 IN. ZT
SCALE = .0200

PARAMETRIC DATA

IB-ELV = 10.000 OB-ELV = 9.000
BDFLAP = .000 SPDBRK = .000
RUDDER = .000 SILTS = 1.000
MACH = 1.050 RN/L = 3.500

RUN NO. 964/ 0 RN/L = 3.50 GRADIENT INTERVAL = -5.00/ 5.00

ALPHAT	BETAT	CNFT	CAFT	CLMFT	CYFT	CYNFT	CBLFT	CABT	CP7	ALPHAO	BETAO
-4.101	-6.125	-.20390	.08420	.03730	.10580	-.01300	.00030	.11100	-.49390	-4.13800	-6.13960
-4.334	-3.984	-.19850	.08500	.03060	.06570	-.00920	.00000	.10860	-.48320	-4.34660	-4.01470
-4.313	.380	-.16220	.08530	.01030	-.00560	-.00130	-.00020	.11160	-.49620	-4.26990	.37580
-3.778	4.313	-.16200	.08590	.02200	-.06290	.00480	-.00040	.10920	-.48570	-3.78780	4.33610
-3.876	6.162	-.16790	.08490	.02270	-.09540	.00930	-.00050	.11050	-.49130	-3.88560	6.17800
	GRADIENT	.00447	.00011	-.00110	-.01551	.00169	-.00005	.00008	-.00035	.06645	1.00647

RUN NO. 965/ 0 RN/L = 3.50 GRADIENT INTERVAL = -5.00/ 5.00

ALPHAT	BETAT	CNFT	CAFT	CLMFT	CYFT	CYNFT	CBLFT	CABT	CP7	ALPHAO	BETAO
-.254	-6.914	-.15110	.08270	.05750	.11710	-.01450	.00020	.10800	-.48050	-.46460	-6.96610
-.255	-4.776	-.13790	.08480	.05070	.07650	-.01010	.00010	.10460	-.46530	-.44270	-4.84540
-.311	-.553	-.09690	.08530	.02520	.00720	-.00340	-.00020	.10570	-.47030	-.40050	-.62680
-.228	3.703	-.10100	.08470	.03370	-.05980	.00640	-.00020	.10860	-.48320	-.35890	3.65970
-.215	5.847	-.10300	.08430	.03630	-.09510	.00990	-.00030	.11000	-.48920	-.35860	5.80000
	GRADIENT	.00434	-.00001	-.00200	-.01607	.00195	-.00004	.00047	-.00211	.00988	1.00310

RUN NO. 966/ 0 RN/L = 3.50 GRADIENT INTERVAL = -5.00/ 5.00

ALPHAT	BETAT	CNFT	CAFT	CLMFT	CYFT	CYNFT	CBLFT	CABT	CP7	ALPHAO	BETAO
4.289	-5.829	-.07250	.08120	.06820	.10120	-.00940	.00010	.10400	-.46260	3.94850	-5.81840
4.249	-3.664	-.05560	.08110	.05890	.06750	-.00960	.00010	.10060	-.44740	3.94040	-3.65880
3.945	.170	-.03040	.08280	.03930	-.00050	.00020	-.00010	.09830	-.43720	3.70670	.16300
4.073	4.051	-.03810	.08280	.05020	-.07040	.01080	-.00020	.10090	-.44870	3.79990	4.03480
4.057	6.107	-.04120	.08140	.05300	-.10570	.01150	-.00030	.10430	-.46380	3.77150	6.08080
	GRADIENT	.00226	.00022	-.00112	-.01787	.00264	-.00004	.00004	-.00017	-.01812	.99718

IA156A, AEDC PWT 16T-470, O T S W/SILTS (R8NT59) (10 MAY 80)

REFERENCE DATA

SREF = 2690.0000 SQ.FT. XMRP = 976.0000 IN. XT
LREF = 1290.3000 INCHES YMRP = .0000 IN. YT
BREF = 1290.3000 INCHES ZMRP = 400.0000 IN. ZT
SCALE = .0200

PARAMETRIC DATA

IB-ELV = 10.000 OB-ELV = 9.000
BDFLAP = .000 SPDBRK = .000
RUDDER = .000 SILTS = 1.000
MACH = 1.100 RN/L = 3.500

RUN NO. 967/ 0 RN/L = 3.49 GRADIENT INTERVAL = -5.00/ 5.00

ALPHAT	BETAT	CNFT	CAFT	CLMFT	CYFT	CYNFT	CBLFT	CABT	CP7	ALPHAO	BETAO
-8.314	-5.997	-.28540	.09040	.01960	.10580	-.00940	.00020	.10770	-.47910	-8.15790	-5.99280
-8.428	-3.772	-.27830	.09010	.01410	.06240	-.00530	.00000	.10600	-.47150	-8.26320	-3.77350
-8.408	.183	-.25100	.09260	-.00280	-.00280	-.00090	-.00020	.10390	-.46210	-8.18130	.17310
-8.192	4.399	-.25280	.09210	.00370	-.06490	.00180	-.00030	.10670	-.47460	-7.99700	4.38550
-8.191	6.294	-.25450	.09250	.00660	-.09570	.00420	-.00050	.10620	-.47250	-8.01140	6.27570
	GRADIENT	.00308	.00024	-.00124	-.01557	.00087	-.00004	.00009	-.00041	.03270	.99855

RUN NO. 968/ 0 RN/L = 3.49 GRADIENT INTERVAL = -5.00/ 5.00

ALPHAT	BETAT	CNFT	CAFT	CLMFT	CYFT	CYNFT	CBLFT	CABT	CP7	ALPHAO	BETAO
-6.298	-6.000	-.24150	.09130	.02560	.10400	-.01200	.00020	.10210	-.45400	-6.21420	-6.00180
-6.264	-4.064	-.23270	.09190	.02140	.06770	-.00820	.00000	.10000	-.44470	-6.17180	-4.07510
-6.423	.100	-.20560	.09310	.00270	-.00140	-.00210	-.00030	.10120	-.44990	-6.27480	.08700
-6.177	4.287	-.20690	.09220	.01160	-.05830	.00090	-.00040	.10080	-.44820	-6.06860	4.27980
-6.095	6.271	-.20830	.09210	.01310	-.09250	.00630	-.00070	.10190	-.45340	-5.99990	6.26430
	GRADIENT	.00309	.00004	-.00117	-.01509	.00109	-.00005	.00010	-.00042	.01239	1.00054

RUN NO. 969/ 0 RN/L = 3.49 GRADIENT INTERVAL = -5.00/ 5.00

ALPHAT	BETAT	CNFT	CAFT	CLMFT	CYFT	CYNFT	CBLFT	CABT	CP7	ALPHAO	BETAO
-4.108	-6.133	-.20250	.09200	.03540	.09990	-.01070	.00020	.09780	-.43500	-4.13090	-6.14060
-4.351	-3.992	-.19750	.09180	.02870	.05860	-.00600	.00000	.09660	-.42960	-4.34470	-4.01650
-4.305	.378	-.16050	.09290	.01010	-.00610	-.00160	-.00030	.09630	-.42850	-4.25440	.36860
-3.776	4.329	-.15920	.09280	.02160	-.06390	.00390	-.00040	.09660	-.42970	-3.78560	4.33910
-3.862	6.161	-.16420	.09190	.02270	-.09420	.00790	-.00060	.09890	-.43980	-3.87760	6.16750
	GRADIENT	.00467	.00012	-.00091	-.01472	.00119	-.00005	-.00000	-.00001	.06637	1.00420

RUN NO. 970/ 0 RN/L = 3.49 GRADIENT INTERVAL = -5.00/ 5.00

ALPHAT	BETAT	CNFT	CAFT	CLMFT	CYFT	CYNFT	CBLFT	CABT	CP7	ALPHAO	BETAO
-.255	-7.044	-.15230	.09220	.05760	.11660	-.01280	.00020	.09490	-.42230	-.47060	-7.07840
-.245	-4.813	-.13780	.09110	.05040	.07420	-.00820	.00000	.09270	-.41230	-.43720	-4.86750
-.298	-.464	-.10050	.09420	.02680	.00490	-.00270	-.00030	.09100	-.40470	-.39430	-.53340
-.211	3.649	-.10410	.09270	.03530	-.05820	.00530	-.00020	.09450	-.42020	-.35560	3.59870
-.197	5.838	-.10550	.09280	.03720	-.09390	.00880	-.00050	.09450	-.42020	-.35370	5.78350
	GRADIENT	.00403	.00019	-.00182	-.01565	.00159	-.00002	.00021	-.00091	.00964	1.00044

IA156A, AEDC PWT 16T-470, O T S W/SILTS (R8NT59) (10 MAY 80)

REFERENCE DATA

SREF = 2690.0000 SQ.FT. XMRP = 976.0000 IN. XT
LREF = 1290.3000 INCHES YMRP = .0000 IN. YT
BREF = 1290.3000 INCHES ZMRP = 400.0000 IN. ZT
SCALE = .0200

PARAMETRIC DATA

IB-ELV = 10.000 OB-ELV = 9.000
BDFLAP = .000 SPDBRK = .000
RUDDER = .000 SILTS = 1.000
MACH = 1.100 RN/L = 3.500

RUN NO. 971/ 0 RN/L = 3.49 GRADIENT INTERVAL = -5.00/ 5.00

ALPHAT	BETAT	CNFT	CAFT	CLMF1	CYFT	CYNFT	CBLFT	CAB1	CP7	ALPHAO	BETAO
4.439	-5.769	-.06800	.08940	.06980	.09900	-.00970	.00010	.08880	-.39490	4.07240	-5.75590
4.289	-3.685	-.05580	.08890	.06190	.06570	-.00890	.00000	.08720	-.38770	3.94770	-3.67920
3.967	.124	-.03480	.08960	.04340	-.00280	.00070	-.00010	.08640	-.38420	3.69320	.11620
4.104	3.996	-.04230	.09060	.05410	-.06900	.00960	-.00020	.08700	-.38700	3.79410	3.97310
4.076	6.090	-.04510	.08980	.05580	-.10410	.01010	-.00030	.08970	-.39910	3.76690	6.05560
	GRADIENT	.00175	.00022	-.00101	-.01754	.00241	-.00003	-.00003	.00009	-.01987	.99625

IA156A, AEDC PWT 16T-470, O T S W/SILTS (R8NT60) (10 MAY 80)

REFERENCE DATA

SREF = 2690.0000 SQ.FT. XMRP = 976.0000 IN. XT
LREF = 1290.3000 INCHES YMRP = .0000 IN. YT
BREF = 1290.3000 INCHES ZMRP = 400.0000 IN. ZT
SCALE = .0200

PARAMETRIC DATA

IB-ELV = 10.000 OB-ELV = 9.000
BDFLAP = .000 SPDBRK = .000
RUDDER = .000 SILTS = 1.000
MACH = 1.150 RN/L = 3.500

RUN NO. 972/ 0 RN/L = 3.49 GRADIENT INTERVAL = -5.00/ 5.00

ALPHAT	BETAT	CNFT	CAFT	CLMFT	CYFT	CYNFT	CBLFT	CABT	CP7	ALPHAO	BETAO
-8.293	-6.018	-.28660	.09680	.02240	.10840	-.01080	.00020	.10100	-.44940	-8.14270	-6.00140
-8.437	-3.784	-.29330	.09730	.01840	.06330	-.00590	-.00010	.10000	-.44470	-8.28560	-3.78140
-8.399	.203	-.25650	.09880	.00200	-.00050	-.00240	-.00020	.09800	-.43600	-8.18810	.19230
-8.186	4.412	-.25960	.09860	.00860	-.06170	.00080	-.00030	.09920	-.44100	-8.01160	4.39200
-8.179	6.290	-.26270	.09690	.01040	-.09420	.00420	-.00050	.10160	-.45210	-8.01530	6.26320
	GRADIENT	.00286	.00016	-.00117	-.01524	.00082	-.00002	-.00009	.00044	.03351	.99717

RUN NO. 973/ 0 RN/L = 3.49 GRADIENT INTERVAL = -5.00/ 5.00

ALPHAT	BETAT	CNFT	CAFT	CLMFT	CYFT	CYNFT	CBLFT	CABT	CP7	ALPHAO	BETAO
-6.286	-6.025	-.24280	.09830	.02850	.10480	-.01290	.00030	.09670	-.42990	-6.22390	-6.01880
-6.215	-4.069	-.23530	.09940	.02490	.06600	-.00800	.00000	.09380	-.41730	-6.14630	-4.07790
-6.395	.125	-.21060	.09930	.00710	.00280	-.00430	-.00020	.09590	-.42650	-6.27350	.10800
-6.152	4.295	-.21300	.09920	.01510	-.05740	.00020	-.00040	.09480	-.42150	-6.06270	4.27880
-6.084	6.285	-.21520	.10010	.01610	-.09560	.00640	-.00060	.09420	-.41880	-6.00110	6.26660
	GRADIENT	.00267	-.00002	-.00117	-.01475	.00098	-.00005	.00012	-.00050	.00996	.99919

IA156A, AEDC PWT 16T-470, O T S W/SILTS (R8NT60) (10 MAY 80)

REFERENCE DATA

SREF = 2690.0000 SQ.FT. XMRP = 976.0000 IN. XT
LREF = 1290.3000 INCHES YMRP = .0000 IN. YT
BREF = 1290.3000 INCHES ZMRP = 400.0000 IN. ZT
SCALE = .0200

PARAMETRIC DATA

IB-ELV = 10.000 OB-ELV = 9.000
BDFLAP = .000 SPDBRK = .000
RUDDER = .000 SILTS = 1.000
MACH = 1.150 RN/L = 3.500

RUN NO. 974/ 0 RN/L = 3.49 GRADIENT INTERVAL = -5.00/ 5.00

ALPHAT	BETAT	CNFT	CAFT	CLMFT	CYFT	CYNFT	CBLFT	CABT	CP7	ALPHAO	BETAO
-4.092	-6.127	-.20410	.09860	.03750	.10650	-.01460	.00010	.09360	-.41640	-4.13730	-6.13550
-4.324	-4.000	-.19800	.09900	.03130	.06340	-.00840	.00000	.09150	-.40690	-4.34130	-4.02660
-4.291	.384	-.16560	.09980	.01370	-.00270	-.00370	-.00030	.09170	-.40790	-4.27230	.36900
-3.747	4.331	-.16320	.10110	.02490	-.06400	.00370	-.00040	.08980	-.39960	-3.78640	4.33730
-3.863	6.188	-.16920	.09960	.02540	-.09450	.00760	-.00060	.09260	-.41180	-3.90130	6.18520
	GRADIENT	.00424	.00025	-.00083	-.01529	.00145	-.00005	-.00020	.00086	.06568	1.00400

RUN NO. 975/ 0 RN/L = 3.49 GRADIENT INTERVAL = -5.00/ 5.00

ALPHAT	BETAT	CNFT	CAFT	CLMFT	CYFT	CYNFT	CBLFT	CABT	CP7	ALPHAO	BETAO
-.222	-6.923	-.15040	.09870	.05810	.11660	-.01450	.00010	.09140	-.40650	-.45630	-6.96550
-.210	-4.814	-.13670	.10010	.05100	.07570	-.00960	.00000	.08670	-.38580	-.42300	-4.87070
-.252	-.553	-.10090	.10110	.02860	.00620	-.00390	-.00020	.08720	-.38770	-.37360	-.62460
-.175	3.639	-.10200	.10080	.03520	-.05890	.00560	-.00020	.08900	-.39590	-.33560	3.58570
-.158	5.842	-.10340	.10060	.03830	-.09540	.00940	-.00040	.08990	-.39970	-.33670	5.78130
	GRADIENT	.00412	.00008	-.00188	-.01593	.00180	-.00002	.00027	-.00119	.01034	1.00045

RUN NO. 976/ 0 RN/L = 3.49 GRADIENT INTERVAL = -5.00/ 5.00

ALPHAT	BETAT	CNFT	CAFT	CLMFT	CYFT	CYNFT	CBLFT	CABT	CP7	ALPHAO	BETAO
4.340	-5.818	-.07490	.09640	.07430	.10110	-.01060	.00010	.08570	-.38120	3.93220	-5.80810
4.339	-3.751	-.05930	.09680	.06600	.06770	-.01030	.00000	.08200	-.36470	3.96010	-3.75470
4.158	.204	-.03970	.09780	.05030	.00030	-.00190	-.00010	.08020	-.35670	3.82930	.18480
4.119	3.968	-.04160	.09760	.05490	-.06300	.00610	-.00020	.08320	-.37000	3.79020	3.94110
4.086	6.097	-.04520	.09720	.05690	-.10100	.00940	-.00030	.08510	-.37860	3.75910	6.06040
	GRADIENT	.00232	.00010	-.00146	-.01693	.00212	-.00003	.00015	-.00066	-.02210	.99700

IA156A, AEDC PWT 16T-470, O T S W/SILTS (R8NT61) (10 MAY 80)

REFERENCE DATA

SREF = 2690.0000 SQ.FT. XMRP = 976.0000 IN. XT
LREF = 1290.3000 INCHES YMRP = .0000 IN. YT
BREF = 1290.3000 INCHES ZMRP = 400.0000 IN. ZT
SCALE = .0200

PARAMETRIC DATA

IB-ELV = 10.000 OB-ELV = 9.000
BDFLAP = .000 SPDBRK = .000
RUDDER = .000 SILTS = 1.000
MACH = 1.250 RN/L = 3.500

RUN NO. 977/ 0 RN/L = 3.51 GRADIENT INTERVAL = -5.00/ 5.00

ALPHAT	BETAT	CNFT	CAFT	CLMFT	CYFT	CYNFT	CBLFT	CABT	CP7	ALPHAO	BETAO
-8.230	-6.026	-.29310	.10460	.03120	.09770	-.00610	.00020	.09230	-.41070	-8.14310	-5.99550
-8.394	-3.805	-.28550	.10510	.02550	.05530	-.00180	.00000	.08960	-.39870	-8.29760	-3.78460
-8.339	.207	-.25950	.10660	.00980	-.00240	-.00080	-.00020	.08860	-.39390	-8.18560	.20160
-8.148	4.399	-.26130	.10700	.01490	-.05850	.00010	-.00030	.08790	-.39120	-8.01070	4.37060
-8.167	6.329	-.26490	.10510	.01590	-.09320	.00400	-.00060	.08990	-.40000	-8.02660	6.29020
	GRADIENT	.00292	.00023	-.00127	-.01387	.00023	-.00004	-.00021	.00091	.03502	.99404

RUN NO. 978/ 0 RN/L = 3.51 GRADIENT INTERVAL = -5.00/ 5.00

ALPHAT	BETAT	CNFT	CAFT	CLMFT	CYFT	CYNFT	CBLFT	CABT	CP7	ALPHAO	BETAO
-6.240	-6.025	-.24950	.10600	.03610	.09680	-.00860	.00010	.08840	-.39330	-6.23140	-6.00420
-6.180	-4.089	-.24060	.10620	.03220	.05780	-.00290	-.00010	.08730	-.38820	-6.17280	-4.07990
-6.333	.126	-.21370	.10670	.01420	-.00290	-.00070	-.00020	.08560	-.38070	-6.27170	.11880
-6.109	4.318	-.21460	.10730	.01980	-.06180	.00290	-.00040	.08560	-.38080	-6.05290	4.30020
-6.058	6.296	-.21480	.10670	.01950	-.09570	.00710	-.00050	.08650	-.38460	-5.99130	6.27170
	GRADIENT	.00310	.00013	-.00148	-.01423	.00069	-.00004	-.00020	.00088	.01423	.99682

RUN NO. 979/ 0 RN/L = 3.52 GRADIENT INTERVAL = -5.00/ 5.00

ALPHAT	BETAT	CNFT	CAFT	CLMFT	CYFT	CYNFT	CBLFT	CABT	CP7	ALPHAO	BETAO
-4.057	-6.155	-.20790	.10640	.04350	.10270	-.01190	.00010	.08600	-.38250	-4.15150	-6.15210
-4.269	-4.003	-.20340	.10640	.03790	.06320	-.00770	.00000	.08500	-.37800	-4.34780	-4.01650
-4.227	.386	-.16980	.10870	.02040	-.00790	-.00010	-.00030	.08090	-.35980	-4.25540	.37970
-3.727	4.348	-.16580	.10900	.02820	-.06580	.00530	-.00040	.08260	-.36750	-3.79520	4.35000
-3.821	6.189	-.16950	.10670	.02740	-.09630	.00810	-.00050	.08720	-.38770	-3.87970	6.17870
	GRADIENT	.00456	.00032	-.00121	-.01546	.00156	-.00005	-.00030	.00131	.06537	1.00190

RUN NO. 980/ 0 RN/L = 3.50 GRADIENT INTERVAL = -5.00/ 5.00

ALPHAT	BETAT	CNFT	CAFT	CLMFT	CYFT	CYNFT	CBLFT	CABT	CP7	ALPHAO	BETAO
-.172	-6.947	-.15570	.10550	.06530	.11130	-.01220	.00010	.08410	-.37400	-.47400	-6.97810
-.161	-4.838	-.14400	.10690	.05920	.07270	-.00830	.00000	.08040	-.35770	-.44410	-4.88590
-.188	-.552	-.11500	.10800	.04070	.00610	-.00340	-.00020	.07810	-.34730	-.39820	-.62270
-.115	3.642	-.11270	.10770	.04590	-.05560	.00370	-.00020	.08010	-.35640	-.36260	3.58030
-.136	5.870	-.11340	.10750	.04620	-.09250	.00700	-.00040	.08100	-.36030	-.37920	5.79460
	GRADIENT	.00370	.00009	-.00158	-.01513	.00141	-.00002	-.00004	.00016	.00961	.99837

IA156A, AEDC PWT 16T-470, O T S W/SILTS (R8NT61) (10 MAY 80)

REFERENCE DATA

SREF = 2690.0000 SQ.FT. XMRP = 976.0000 IN. XT
LREF = 1290.3000 INCHES YMRP = .0000 IN. YT
BREF = 1290.3000 INCHES ZMRP = 400.0000 IN. ZT
SCALE = .0200

PARAMETRIC DATA

IB-ELV = 10.000 OB-ELV = 9.000
BDFLAP = .000 SPDBRK = .000
RUDDER = .000 SILTS = 1.000
MACH = 1.250 RN/L = 3.500

RUN NO. 981/ 0 RN/L = 3.50 GRADIENT INTERVAL = -5.00/ 5.00

ALPHAT	BETAT	CNFT	CAFT	CLMFT	CYFT	CYNFT	CBLFT	CABT	CP7	ALPHAO	BETAO
4.4[illegible]9	-5.822	-.07890	.10290	.08000	.09860	-.00950	.00010	.07900	-.35130	3.94680	-5.80540
4.3[illegible]	-3.743	-.06430	.10320	.07150	.06270	-.00720	.00000	.07610	-.33860	3.94950	-3.73450
4.21[illegible]	.206	-.04720	.10290	.05860	-.00370	.00010	-.00010	.07510	-.33400	3.82070	.19320
4.168	3.956	-.05340	.10360	.06610	-.06350	.00690	-.00020	.07690	-.34220	3.75870	3.93500
4.152	6.098	-.05820	.10390	.06870	-.10110	.00900	-.00030	.07820	-.34780	3.74630	6.06550
	GRADIENT	.00144	.00005	-.00072	-.01640	.00183	-.00003	.00010	-.00045	-.02485	.99618

IA156A, AEDC PWT 16T-470, O T S W/SILTS (R8NT62) (10 MAY 80)

REFERENCE DATA

SREF = 2690.0000 SQ.FT. XMRP = 976.0000 IN. XT
LREF = 1290.3000 INCHES YMRP = .0000 IN. YT
BREF = 1290.3000 INCHES ZMRP = 400.0000 IN. ZT
SCALE = .0200

PARAMETRIC DATA

IB-ELV = 10.000 OB-ELV = 11.000
BDFLAP = .000 SPDBRK = .000
RUDDER = .000 SILTS = 1.000
MACH = .300 RN/L = 3.500

RUN NO. 985/ 0 RN/L = 2.62 GRADIENT INTERVAL = -5.00/ 5.00

ALPHAT	BETAT	CNFT	CAFT	CLMFT	CYFT	CYNFT	CBLFT	CABT	CP7	ALPHAO	BETAO
-6.167	-9.908	-.21230	.03470	.03610	.09220	.01170	.00030	.08970	-.39910	-6.18940	-9.91920
-6.121	-5.780	-.20270	.03850	.02720	.04100	.00930	-.00010	.08080	-.35950	-6.13970	-5.79840
-6.022	.189	-.18320	.04070	.02050	-.00880	-.00120	-.00030	.07940	-.35310	-6.04620	.18760
-5.749	6.270	-.16960	.04010	.02180	-.05460	-.01170	-.00100	.08100	-.36010	-5.76670	6.28890
-5.894	10.158	-.16340	.04070	.01890	-.08850	-.01680	-.00140	.08630	-.38400	-5.90630	10.17240
	GRADIENT	.00000	.00000	.00000	.00000	.00000	.00000	.00000	.00000	.00000	.00000

RUN NO. 986/ 0 RN/L = 2.62 GRADIENT INTERVAL = -5.00/ 5.00

ALPHAT	BETAT	CNFT	CAFT	CLMFT	CYFT	CYNFT	CBLFT	CABT	CP7	ALPHAO	BETAO
-.225	-10.540	-.14260	.03300	.05760	.13260	-.00240	.00010	.08500	-.37820	-.27410	-10.57550
-.223	-6.488	-.12900	.04010	.04650	.06120	.00520	.00000	.07470	-.33210	-.26770	-6.53120
-.202	-.306	-.11870	.04140	.04150	-.01070	.00260	-.00030	.07360	-.32750	-.24360	-.36190
-.169	5.677	-.11140	.04420	.04610	-.07430	-.00020	-.00070	.07120	-.31670	-.21900	5.61610
-.163	9.843	-.09730	.03780	.04290	-.13030	.00280	-.00130	.08090	-.35970	-.20920	9.77500
	GRADIENT	.00000	.00000	.00000	.00000	.00000	.00000	.00000	.00000	.00000	.00000

DATE 05 AUG 80

IA156A FORCE DATA WITH FLOW ANGULARITY CORRECTION

IA156A, AEDC PWT 16T-470, O T S W/SILTS

(R8NT62) (10 MAY 80)

REFERENCE DATA

SREF = 2690.0000 SQ.FT. XMRP = 976.0000 IN. XT
LREF = 1290.3000 INCHES YMRP = .0000 IN. YT
BREF = 1290.3000 INCHES ZMRP = 400.0000 IN. ZT
SCALE = .0200

PARAMETRIC DATA

IB-ELV = 10.000 OB-ELV = 11.000
BDFLAP = .000 SPDBRK = .000
RUDDER = .000 SILTS = 1.000
MACH = .300 RN/L = 3.500

RUN NO. 987/ 0 RN/L = 2.62 GRADIENT INTERVAL = -5.00/ 5.00

ALPHAT	BETAT	CNFT	CAFT	CLMFT	CYFT	CYNFT	CBLFT	CABT	CP7	ALPHAO	BETAO
6.269	-9.917	-.04860	.03330	.07640	.16630	-.02110	-.00060	.07350	-.32670	6.16280	-9.87850
6.038	-5.705	-.03620	.03690	.07030	.08430	-.00830	-.00040	.06870	-.30570	5.32240	-5.67200
5.919	.132	-.03270	.03950	.06660	-.00580	-.00040	-.00040	.06820	-.30350	5.79870	.13150
5.996	6.183	-.02770	.03890	.06710	-.09470	.00680	-.00080	.06910	-.30720	5.88700	6.14930
5.862	10.064	-.02340	.03590	.06320	-.16110	.01600	-.00130	.07390	-.32860	5.76860	10.02040
	GRADIENT	.00000	.00000	.00000	.00000	.00000	.00000	.00000	.00000	.00000	.00000

IA156A, AEDC PWT 16T-470, O T S W/SILTS

(R8NT63) (10 MAY 80)

REFERENCE DATA

SREF = 2690.0000 SQ.FT. XMRP = 976.0000 IN. XT
LREF = 1290.3000 INCHES YMRP = .0000 IN. YT
BREF = 1290.3000 INCHES ZMRP = 400.0000 IN. ZT
SCALE = .0200

PARAMETRIC DATA

IB-ELV = 10.000 OB-ELV = 11.000
BDFLAP = .000 SPDBRK = .000
RUDDER = .000 SILTS = 1.000
MACH = .300 RN/L = 3.500

RUN NO. 984/ 0 RN/L = 2.64 GRADIENT INTERVAL = -5.00/ 5.00

ALPHAT	BETAT	CNFT	CAFT	CLMFT	CYFT	CYNFT	CBLFT	CABT	CP7	ALPHAO	BETAO
-10.341	-7.901	-.26980	.03260	.02030	.05190	.01900	.00010	.09480	-.42170	-10.33790	-7.90340
-10.015	-5.737	- 25960	.03730	.01640	.03460	.01420	.00000	.08610	-.38280	-10.01010	-5.74330
-9.962	.318	-.24790	.03620	.00850	-.00960	-.00070	-.00030	.08490	-.37750	-9.96400	.32000
-9.988	6.290	-.23970	.03610	.00970	-.03830	-.01980	-.00070	.08860	-.39400	-9.97700	6.29630
-10.035	8.246	-.23380	.03640	.00910	-.05060	-.02480	-.00090	.09290	-.41330	-10.02320	8.24910
	GRADIENT	.00000	.00000	.00000	.00000	.00000	.00000	.00000	.00000	.00000	.00000

RUN NO. 988/ 0 RN/L = 2.63 GRADIENT INTERVAL = -5.00/ 5.00

ALPHAT	BETAT	CNFT	CAFT	CLMFT	CYFT	CYNFT	CBLFT	CABT	CP7	ALPHAO	BETAO
10.202	-7.824	.01490	.02980	.08530	.12940	-.01690	-.00030	.07010	-.31190	10.06460	-7.79780
10.081	-5.750	.02250	.03220	.08070	.09120	-.01180	-.00040	.06620	-.29450	9.94190	-5.72850
9.927	.234	.01780	.03310	.08180	-.00410	-.00210	-.00050	.06690	-.29770	9.77560	.23010
10.114	6.313	.03530	.03390	.07860	-.09900	.00910	-.00100	.06780	-.30140	9.97590	6.28920
10.063	8.291	.03730	.03210	.07650	-.13560	.01390	-.00140	.07140	-.31760	9.93520	8.26300
	GRADIENT	.00000	.00000	.00000	.00000	.00000	.00000	.00000	.00000	.00000	.00000

IA156A, AEDC PWT 16T-470, O T S W/SILTS (R8NT64) (10 MAY 80)

REFERENCE DATA

SREF = 2690.0000 SQ.FT. XMRP = 976.0000 IN. XT
LREF = 1290.3000 INCHES YMRP = .0000 IN. YT
BREF = 1290.3000 INCHES ZMRP = 400.0000 IN. ZT
SCALE = .0200

PARAMETRIC DATA

IB-ELV = 10.000 OB-ELV = 11.000
BDFLAP = .000 SPDBRK = .000
RUDDER = .000 SILTS = 1.000
MACH = .600 RN/L = 3.500

RUN NO. 989/ 0 RN/L = 3.51 GRADIENT INTERVAL = -5.00/ 5.00

ALPHAT	BETAT	CNFT	CAFT	CLMFT	CYFT	CYNFT	CBLFT	CABT	CP7	ALPHAO	BETAO
-8.125	-7.835	-.25240	.03340	.03180	.08250	.00710	.00020	.09300	-.41350	-8.11570	-7.80120
-8.150	-5.769	-.24890	.04050	.02710	.05860	.00560	.00010	.08400	-.37360	-8.13110	-5.75080
-8.179	-3.752	-.24230	.03820	.02330	.03510	.00420	.00000	.08450	-.37570	-8.15810	-3.74610
-8.061	.182	-.23230	.03750	.01640	-.00180	-.00160	.00000	.08900	-.39580	-8.03810	.17920
-7.938	4.323	-.22680	.04050	.01980	-.03650	-.00900	-.00010	.08540	-.37990	-7.90720	4.31490
-7.937	6.197	-.22420	.03800	.02020	-.05370	-.01140	-.00030	.08840	-.39320	-7.90300	6.17830
-7.965	8.213	-.22020	.03840	.01920	-.07340	-.01380	-.00050	.09040	-.40200	-7.93280	8.18190
	GRADIENT	.00191	.00029	-.00042	-.00886	-.00164	-.00001	.00010	-.00048	.03108	.99838

RUN NO. 990/ 0 RN/L = 3.50 GRADIENT INTERVAL = -5.00/ 5.00

ALPHAT	BETAT	CNFT	CAFT	CLMFT	CYFT	CYNFT	CBLFT	CABT	CP7	ALPHAO	BETAO
-6.124	-7.942	-.21970	.03830	.03760	.09110	.00340	.00030	.08580	-.38160	-6.15140	-7.91720
-6.113	-5.917	-.21700	.04040	.03370	.06330	.00340	.00030	.08290	-.36890	-6.13260	-5.90820
-6.033	-4.002	-.20880	.04110	.02990	.03970	.00230	.00010	.08130	-.36140	-6.05200	-4.00640
-6.105	.066	-.19700	.04300	.02230	-.00370	-.00150	.00000	.08090	-.35980	-6.11480	.06200
-5.934	4.185	-.19230	.04240	.02730	-.03960	-.00680	-.00010	.08180	-.36400	-5.95050	4.18380
-5.862	6.180	-.19000	.04220	.02770	-.05870	-.00830	-.00030	.08290	-.36890	-5.87570	6.17240
-5.879	8.161	-.18550	.03950	.02560	-.08060	-.00920	-.00060	.08720	-.38790	-5.88810	8.14270
	GRADIENT	.00201	.00016	-.00031	-.00968	-.00111	-.00002	.00006	-.00032	.01245	1.00042

RUN NO. 991/ 0 RN/L = 3.50 GRADIENT INTERVAL = -5.00/ 5.00

ALPHAT	BETAT	CNFT	CAFT	CLMFT	CYFT	CYNFT	CBLFT	CABT	CP7	ALPHAO	BETAO
-3.930	-8.062	-.18770	.03960	.04500	.09450	.00140	.00040	.08260	-.36730	-4.00250	-8.05230
-4.181	-5.953	-.18900	.03970	.03990	.06490	.00200	.00030	.08120	-.36130	-4.24070	-5.95440
-4.098	-3.944	-.18110	.04280	.03660	.03860	.00130	.00020	.07760	-.34510	-4.15650	-3.96010
-4.075	.333	-.16260	.04450	.02930	-.00690	-.00210	.00000	.07760	-.34520	-4.12710	.32990
-3.671	4.196	-.15840	.04490	.03690	-.04210	-.00560	-.00020	.07790	-.34640	-3.74050	4.21000
-3.743	6.047	-.15800	.04290	.03600	-.06230	-.00600	-.00040	.08060	-.35840	-3.80460	6.05450
-3.776	8.036	-.15410	.04060	.03430	-.08690	-.00550	-.00060	.08460	-.37610	-3.82800	8.03560
	GRADIENT	.00282	.00026	.00001	-.00993	-.00085	-.00005	.00004	-.00016	.05032	1.00367

DATE 05 AUG 80

IA156A FORCE DATA WITH FLOW ANGULARITY CORRECTION

IA156A, AEDC PWT 16T-470, O T S W/SILTS

(R8NT64) (10 MAY 80)

REFERENCE DATA

SREF = 2690.0000 SQ.FT. XMRP = 976.0000 IN. XT
LREF = 1290.3000 INCHES YMRP = .0000 IN. YT
BREF = 1290.3000 INCHES ZMRP = 400.0000 IN. ZT
SCALE = .0200

PARAMETRIC DATA

IB-ELV = 10.000 OB-ELV = 11.000
BDFLAP = .000 SPDBRK = .000
RUDDER = .000 SILTS = 1.000
MACH = .600 RN/L = 3.500

RUN NO. 992/ 0 RN/L = 3.50 GRADIENT INTERVAL = -5.00/ 5.00

ALPHAT	BETAT	CNFT	CAFT	CLMFT	CYFT	CYNFT	CBLFT	CABT	CP7	ALPHAO	BETAO
-.193	-8.742	-.14750	.03880	.06120	.11700	-.00560	.00040	.08070	-.35870	-.33340	-8.76350
-.183	-6.655	-.14260	.04140	.05750	.08200	-.00200	.00030	.07710	-.34280	-.32340	-6.68550
-.175	-4.406	-.13550	.04290	.05340	.05000	-.00180	.00020	.07470	-.33200	-.30920	-4.45100
-.170	-.327	-.12020	.04490	.04560	-.00150	-.00070	.00000	.07390	-.32890	-.28400	-.38590
-.122	3.755	-.11710	.04420	.05010	-.04760	-.00050	.00000	.07410	-.32980	-.25300	3.69100
-.123	5.857	-.11520	.04340	.05050	-.07380	-.00050	-.00010	.07520	-.33460	-.25300	5.78660
-.119	7.948	-.10800	.04290	.04940	-.10330	.00220	-.00040	.07730	-.34400	-.24350	7.87130
	GRADIENT	.00225	.00016	-.00040	-.01196	.00016	-.00002	-.00007	.00027	.00689	.99762

RUN NO. 993/ 0 RN/L = 3.50 GRADIENT INTERVAL = -5.00/ 5.00

ALPHAT	BETAT	CNFT	CAFT	CLMFT	CYFT	CYNFT	CBLFT	CABT	CP7	ALPHAO	BETAO
4.403	-7.930	-.07910	.03870	.07550	.12750	-.01390	.00020	.07330	-.32600	4.16830	-7.89150
4.327	-5.823	-.07070	.04000	.07120	.08540	-.00830	.00020	.07040	-.31310	4.09220	-5.78790
4.275	-3.835	-.06610	.04070	.06770	.05520	-.00520	.00010	.06900	-.30690	4.04000	-3.80560
4.061	.081	-.05950	.04170	.06140	-.00110	-.00120	.00010	.07090	-.31550	3.83660	.07830
4.116	4.098	-.05600	.04230	.06340	-.05700	.00240	-.00020	.07090	-.31530	3.89550	4.06240
4.057	6.210	-.05360	.04190	.06220	-.08810	.00400	-.00030	.07090	-.31550	3.84400	6.16720
4.039	8.208	-.04920	.03980	.06150	-.12030	.00810	-.00060	.07470	-.33220	3.83810	8.16120
	GRADIENT	.00127	.00020	-.00054	-.01414	.00096	-.00004	.00024	-.00105	-.01807	.99176

RUN NO. 994/ 0 RN/L = 3.50 GRADIENT INTERVAL = -5.00/ 5.00

ALPHAT	BETAT	CNFT	CAFT	CLMFT	CYFT	CYNFT	CBLFT	CABT	CP7	ALPHAO	BETAO
6.460	-7.987	-.04810	.03670	.07980	.13740	-.01820	.00020	.07100	-.31580	6.19740	-7.96210
6.439	-5.907	-.04100	.03810	.07790	.09670	-.01210	.00020	.06850	-.30460	6.16660	-5.88320
6.438	-3.849	-.03800	.03900	.07660	.06120	-.00700	.00020	.06740	-.29970	6.15670	-3.82850
6.134	.185	-.03630	.03960	.07150	-.00360	-.00030	.00010	.07050	-.31370	5.86330	.18300
6.054	4.100	-.03250	.04060	.07050	-.05960	.00290	-.00010	.06960	-.30960	5.79620	4.07290
6.027	6.017	-.02830	.04010	.07050	-.08770	.00570	-.00040	.07030	-.31270	5.77350	5.98550
6.041	8.260	-.02210	.03780	.06840	-.12620	.01100	-.00060	.07430	-.33040	5.80500	8.22510
	GRADIENT	.00069	.00020	-.00077	-.01520	.00125	-.00004	.00028	-.00126	-.04549	.99410

IA156A, AEDC PWT 16T-470, O T S W/SILTS (R8NT64) (10 MAY 80)

REFERENCE DATA

SREF = 2690.0000 SQ.FT. XMRP = 976.0000 IN. XT
LREF = 1290.3000 INCHES YMRP = .0000 IN. YT
BREF = 1290.3000 INCHES ZMRP = 400.0000 IN. ZT
SCALE = .0200

PARAMETRIC DATA

IB-ELV = 10.000 OB-ELV = 11.000
BDFLAP = .000 SPDBRK = .000
RUDDER = .000 SILTS = 1.000
MACH = .600 RN/L = 3.500

RUN NO. 995/ 0 RN/L = 3.50 GRADIENT INTERVAL = -5.00/ 5.00

ALPHAT	BETAT	CNFT	CAFT	CLMFT	CYFT	CYNFT	CBLFT	CABT	CP7	ALPHAO	BETAO
8.398	-7.839	-.01380	.03510	.08300	.13450	-.01910	.00030	.06850	-.30450	8.10730	-7.82130
8.299	-5.751	-.01020	.03600	.08170	.09360	-.01210	.00030	.06750	-.30040	7.99630	-5.73440
8.285	-3.789	-.01070	.03530	.08160	.05940	-.00750	.00020	.06760	-.30070	7.97020	-3.77420
8.196	.181	-.00460	.03740	.07700	-.00370	-.00050	.00010	.07030	-.31260	7.88570	.17810
8.120	4.127	.00050	.03850	.07610	-.06000	.00420	-.00020	.06900	-.30670	7.82410	4.10680
8.191	6.252	.00850	.03730	.07490	-.09330	.00800	-.00050	.07070	-.31450	7.90570	6.22870
8.155	8.252	.01130	.03510	.07330	-.13010	.01390	-.00080	.07390	-.32870	7.88890	8.22790
	GRADIENT	.00141	.00040	-.00070	-.01508	.00148	-.00005	.00018	-.00076	-.01846	.99558

IA156A, AEDC PWT 16T-470, O T S W/SILTS (R8NT65) (10 MAY 80)

REFERENCE DATA

SREF = 2690.0000 SQ.FT. XMRP = 976.0000 IN. XT
LREF = 1290.3000 INCHES YMRP = .0000 IN. YT
BREF = 1290.3000 INCHES ZMRP = 400.0000 IN. ZT
SCALE = .0200

PARAMETRIC DATA

IB-ELV = 10.000 OB-ELV = 11.000
BDFLAP = .000 SPDBRK = .000
RUDDER = .000 SILTS = 1.000
MACH = .800 RN/L = 3.500

RUN NO. 996/ 0 RN/L = 3.50 GRADIENT INTERVAL = -5.00/ 5.00

ALPHAT	BETAT	CNFT	CAFT	CLMFT	CYFT	CYNFT	CBLFT	CABT	CP7	ALPHAO	BETAO
-8.214	-6.002	-.26890	.04240	.03420	.07870	-.00200	.00030	.09130	-.40590	-8.19040	-5.98770
-8.271	-3.758	-.26160	.04420	.02970	.05000	-.00310	.00010	.08720	-.38800	-8.24410	-3.75890
-8.208	.186	-.24310	.04510	.01760	.00040	-.00200	.00000	.08800	-.39160	-8.16430	.18130
-8.072	4.435	-.24060	.04590	.02200	-.04710	-.00320	.00000	.08670	-.38570	-8.00750	4.42720
-8.036	6.263	-.24100	.04430	.02230	-.06980	-.00380	-.00020	.08990	-.40000	-7.96940	6.24140
	GRADIENT	.00254	.00021	-.00091	-.01184	-.00002	-.00001	-.00006	.00029	.02898	.99920

RUN NO. 997/ 0 RN/L = 3.50 GRADIENT INTERVAL = -5.00/ 5.00

ALPHAT	BETAT	CNFT	CAFT	CLMFT	CYFT	CYNFT	CBLFT	CABT	CP7	ALPHAO	BETAO
-6.176	-5.982	-.23420	.04560	.04110	.07960	-.00370	.00030	.08570	-.38120	-6.20830	-5.97810
-6.128	-4.057	-.22690	.04540	.03680	.05240	-.00380	.00020	.08430	-.37500	-6.15770	-4.06780
-6.231	.122	-.20600	.04700	.02290	-.00220	-.00140	-.00010	.08340	-.37080	-6.22720	.11680
-6.063	4.258	-.20590	.04780	.02890	-.04460	-.00320	-.00010	.08390	-.37340	-6.06140	4.25830
-5.750	6.401	-.19970	.04740	.03100	-.07150	-.00290	-.00030	.08520	-.37900	-5.75460	6.39410
	GRADIENT	.00253	.00029	-.00095	-.01167	.00007	-.00004	-.00005	.00019	.01153	1.00133

IA156A, AEDC PWT 16T-470, O T S W/SILTS (R8NT65) (10 MAY 80)

REFERENCE DATA

SREF = 2690.0000 SQ.FT. XMRP = 976.0000 IN. XT
LREF = 1290.3000 INCHES YMRP = .0000 IN. YT
BREF = 1290.3000 INCHES ZMRP = 400.0000 IN. ZT
SCALE = .0200

PARAMETRIC DATA

IB-ELV = 10.000 OB-ELV = 11.000
BDFLAP = .000 SPDBRK = .000
RUDDER = .000 SILTS = 1.000
MACH = .800 RN/L = 3.500

RUN NO. 998/ 0 RN/L = 3.50 GRADIENT INTERVAL = -5.00/ 5.00

ALPHAT	BETAT	CNFT	CAFT	CLMFT	CYFT	CYNFT	CBLFT	CABT	CP7	ALPHAO	BETAO
-3.990	-6.123	-.20070	.04560	.04890	.08010	-.00430	.00030	.09290	-.36890	-4.08420	-6.13000
-4.248	-3.955	-.19690	.04700	.04300	.04760	-.00360	.00020	.08020	-.35680	-4.33160	-3.97630
-4.190	.377	-.16690	.04760	.02850	-.00640	-.00120	.00000	.08010	-.35640	-4.23560	.37490
-3.733	4.319	-.16570	.04860	.03740	-.04950	-.00170	-.00010	.08030	-.35700	-3.80360	4.33280
-3.797	6.149	-.16740	.04770	.03800	-.07200	-.00130	-.00020	.08150	-.36260	-3.86420	6.15520
	GRADIENT	.00382	.00019	-.00072	-.01175	.00023	-.00004	.00001	-.00002	.06313	1.00432

RUN NO. 999/ 0 RN/L = 3.50 GRADIENT INTERVAL = -5.00/ 5.00

ALPHAT	BETAT	CNFT	CAFT	CLMFT	CYFT	CYNFT	CBLFT	CABT	CP7	ALPHAO	BETAO
-.165	-6.877	-.15560	.04410	.06450	.10250	-.00860	.00040	.08060	-.35840	-.34930	-6.91010
-.173	-4.730	-.14750	.04640	.05850	.06950	-.00830	.00030	.07740	-.34430	-.34510	-4.77820
-.193	-.460	-.12410	.04700	.04410	.00360	-.00210	.00010	.07360	-.32760	-.31780	-.51930
-.136	3.646	-.12110	.04780	.04950	-.05330	.00320	.00000	.07560	-.33630	-.27960	3.58720
-.130	5.794	-.12210	.04640	.05170	-.08500	.00550	-.00020	.07710	-.34290	-.28090	5.73240
	GRADIENT	.00317	.00017	-.00109	-.01467	.00137	-.00004	-.00022	.00097	.00781	.99877

RUN NO. 1000/ 0 RN/L = 3.51 GRADIENT INTERVAL = -5.00/ 5.00

ALPHAT	BETAT	CNFT	CAFT	CLMFT	CYFT	CYNFT	CBLFT	CABT	CP7	ALPHAO	BETAO
4.389	-5.811	-.06800	.04190	.06810	.09750	-.01080	.00050	.07280	-.32390	4.10090	-5.78070
4.244	-3.687	-.06250	.04320	.06510	.05990	-.00770	.00040	.07160	-.31870	3.95510	-3.66370
3.967	.128	-.04590	.04620	.05220	.00060	-.00180	.00010	.07020	-.31210	3.71700	.12340
4.083	4.040	-.04630	.04480	.05790	-.05990	.00520	-.00010	.07160	-.31850	3.82020	4.01160
4.019	6.121	-.04670	.04360	.05800	-.09530	.00860	-.00030	.07330	-.32620	3.76740	6.08890
	GRADIENT	.00209	.00020	-.00092	-.01550	.00167	-.00006	.00000	.00002	-.01727	.99320

RUN NO. 1001/ 0 RN/L = 3.51 GRADIENT INTERVAL = -5.00/ 5.00

ALPHAT	BETAT	CNFT	CAFT	CLMFT	CYFT	CYNFT	CBLFT	CABT	CP7	ALPHAO	BETAO
6.395	-5.842	-.03550	.04090	.07250	.10260	-.01280	.00040	.07150	-.31800	6.08130	-5.82590
6.383	-3.794	-.02830	.04240	.06930	.06450	-.00920	.00030	.06850	-.30450	6.06180	-3.78190
6.032	.166	-.01650	.04320	.05710	-.00100	-.00190	.00020	.06990	-.31090	5.74860	.15860
5.967	3.995	-.02000	.04320	.06220	-.06060	.00520	.00000	.07110	-.31620	5.67630	3.97420
6.083	6.166	-.01270	.04210	.06190	-.09510	.00910	-.00020	.07300	-.32450	5.80260	6.14340
	GRADIENT	.00108	.00010	-.00092	-.01606	.00185	-.00004	.00033	-.00150	-.04966	.99571

IA156A, AEDC PWT 16T-470, O T S W/SILTS (R8NT66) (10 MAY 80)

REFERENCE DATA

SREF = 2690.0000 SQ.FT. XMRP = 976.0000 IN. XT
LREF = 1290.3000 INCHES YMRP = .0000 IN. YT
BREF = 1290.3000 INCHES ZMRP = 400.0000 IN. ZT
SCALE = .0200

PARAMETRIC DATA

IB-ELV = 10.000 OB-ELV = 11.000
BDFLAP = .000 SPDBRK = .000
RUDDER = .000 SILTS = 1.000
MACH = .900 RN/L = 3.500

RUN NO. 1002/ 0 RN/L = 3.50 GRADIENT INTERVAL = -5.00/ 5.00

ALPHAT	BETAT	CNFT	CAFT	CLMFT	CYFT	CYNFT	CBLFT	CABT	CP7	ALPHAO	BETAO
-8.189	-6.011	-.27910	.05160	.03420	.08980	-.00850	.00030	.09530	-.42390	-8.13860	-6.01070
-8.319	-3.755	-.27580	.05100	.02970	.05330	-.00570	.00010	.09360	-.41640	-8.26650	-3.76640
-8.243	.184	-.25180	.05190	.01610	-.00030	-.00140	-.00010	.09340	-.41540	-8.17060	.17770
-8.095	4.398	-.24820	.05280	.01970	-.05340	.00120	-.00010	.09180	-.40850	-7.99890	4.39660
-8.140	6.291	-.25090	.05030	.01970	-.07930	.00200	-.00020	.09640	-.42850	-8.03500	6.27760
	GRADIENT	.00336	.00022	-.00120	-.01308	.00084	-.00002	-.00022	.00098	.03291	1.00121

RUN NO. 1003/ 0 RN/L = 3.50 GRADIENT INTERVAL = -5.00/ 5.00

ALPHAT	BETAT	CNFT	CAFT	CLMFT	CYFT	CYNFT	CBLFT	CABT	CP7	ALPHAO	BETAO
-6.206	-5.977	-.24570	.05120	.04060	.09330	-.01120	.00040	.09320	-.41450	-6.21310	-5.98340
-6.155	-4.051	-.23880	.05210	.03680	.06320	-.00950	.00020	.09000	-.40030	-6.15910	-4.07160
-6.281	.110	-.21110	.05210	.02100	-.00180	-.00110	-.00010	.09040	-.40210	-6.25240	.10260
-6.079	4.265	-.21100	.05280	.02670	-.05480	.00370	-.00020	.08900	-.39590	-6.04890	4.27180
-6.013	6.254	-.21070	.05120	.02750	-.08190	.00530	-.00020	.09160	-.40750	-5.98320	6.24930
	GRADIENT	.00334	.00008	-.00122	-.01419	.00159	-.00005	-.00012	.00053	.01324	1.00323

RUN NO. 1004/ 0 RN/L = 3.49 GRADIENT INTERVAL = -5.00/ 5.00

ALPHAT	BETAT	CNFT	CAFT	CLMFT	CYFT	CYNFT	CBLFT	CABT	CP7	ALPHAO	BETAO
-3.986	-6.127	-.20640	.05260	.04800	.09080	-.01050	.00050	.08790	-.39100	-4.06560	-6.14030
-4.285	-3.977	-.20190	.05150	.04130	.05760	-.00900	.00030	.08710	-.38750	-4.34400	-4.00650
-4.231	.381	-.16880	.05140	.02490	-.00720	-.00050	.00000	.08820	-.39210	-4.24230	.37730
-3.759	4.316	-.16830	.05240	.03490	-.05600	.00340	-.00010	.08490	-.37770	-3.80540	4.33230
-3.835	6.153	-.17190	.05210	.03560	-.08210	.00580	-.00030	.08660	-.38520	-3.87830	6.16270
	GRADIENT	.00411	.00011	-.00082	-.01372	.00150	-.00005	-.00026	.00114	.06420	1.00548

RUN NO. 1005/ 0 RN/L = 3.49 GRADIENT INTERVAL = -5.00/ 5.00

ALPHAT	BETAT	CNFT	CAFT	CLMFT	CYFT	CYNFT	CBLFT	CABT	CP7	ALPHAO	BETAO
-.206	-6.944	-.16200	.05080	.06390	.11130	-.01220	.00050	.08550	-.38040	-.38380	-6.97860
-.210	-4.783	-.15040	.05070	.05750	.07310	-.00950	.00030	.08420	-.37440	-.37010	-4.83430
-.252	-.469	-.11500	.05200	.03630	.00370	-.00150	.00010	.07750	-.34450	-.33550	-.53050
-.189	3.649	-.11860	.05120	.04390	-.05800	.00590	.00000	.08060	-.35840	-.30180	3.59470
-.173	5.797	-.12100	.05030	.04760	-.09040	.00900	-.00010	.08340	-.37070	-.30390	5.74050
	GRADIENT	.00381	.00006	-.00164	-.01555	.00183	-.00004	-.00044	.00194	.00810	.99967

IA156A, AEDC PWT 16T-470, O T S W/SILTS (R8NT66) (10 MAY 80)

REFERENCE DATA

SREF = 2690.0000 SQ.FT. XMRP = 976.0000 IN. XT
LREF = 1290.3000 INCHES YMRP = .0000 IN. YT
BREF = 1290.3000 INCHES ZMRP = 400.0000 IN. ZT
SCALE = .0200

PARAMETRIC DATA

IB-ELV = 10.000 OB-ELV = 11.000
BDFLAP = .000 SPDBRK = .000
RUDDER = .000 SILTS = 1.000
MACH = .900 RN/L = 3.500

RUN NO. 1006/ 0 RN/L = 3.50 GRADIENT INTERVAL = -5.00/ 5.00

ALPHAT	BETAT	CNFT	CAFT	CLMFT	CYFT	CYNFT	CBLFT	CABT	CP7	ALPHAO	BETAO
4.397	-5.801	-.06940	.04780	.06700	.10250	-.01310	.00050	.07920	-.35240	4.09550	-5.77310
4.237	-3.688	-.06390	.04850	.06250	.06610	-.01080	.00040	.07750	-.34460	3.94480	-3.66840
3.932	.129	-.04260	.04820	.04560	.00040	-.00100	.00010	.07630	-.33930	3.70650	.12620
4.072	4.020	-.04650	.04880	.05450	-.06410	.00850	.00000	.07720	-.34340	3.81010	3.99760
4.000	6.106	-.04820	.04750	.05450	-.10000	.01120	-.00010	.08100	-.36010	3.75380	6.07760
	GRADIENT	.00225	.00004	-.00103	-.01689	.00250	-.00005	-.00004	.00015	-.01733	.99451

IA156A, AEDC PWT 16T-470, O T S W/SILTS (R8NT67) (10 MAY 80)

REFERENCE DATA

SREF = 2690.0000 SQ.FT. XMRP = 976.0000 IN. XT
LREF = 1290.3000 INCHES YMRP = .0000 IN. YT
BREF = 1290.3000 INCHES ZMRP = 400.0000 IN. ZT
SCALE = .0200

PARAMETRIC DATA

IB-ELV = 10.000 OB-ELV = 11.000
BDFLAP = .000 SPDBRK = .000
RUDDER = .000 SILTS = 1.000
MACH = .950 RN/L = 3.500

RUN NO. 1007/ 0 RN/L = 3.49 GRADIENT INTERVAL = -5.00/ 5.00

ALPHAT	BETAT	CNFT	CAFT	CLMFT	CYFT	CYNFT	CBLFT	CABT	CP7	ALPHAO	BETAO
-8.291	-5.994	-.28000	.05850	.02350	.10480	-.01390	.00040	.10400	-.46240	-8.17450	-5.99440
-8.398	-3.759	-.27380	.06000	.01900	.06400	-.01040	.00020	.09950	-.44260	-8.27340	-3.76850
-8.331	.178	-.24910	.06080	.00480	.00040	-.00220	-.00010	.09790	-.43540	-8.17660	.17190
-8.156	4.396	-.25070	.05810	.01040	-.06400	.00530	-.00010	.10300	-.45790	-7.99910	4.39480
-8.170	6.279	-.25230	.05900	.01100	-.09360	.00740	-.00030	.10430	-.46400	-8.01550	6.26990
	GRADIENT	.00279	-.00024	-.00103	-.01569	.00192	-.00004	.00044	-.00192	.03373	1.00096

RUN NO. 1008/ 0 RN/L = 3.50 GRADIENT INTERVAL = -5.00/ 5.00

ALPHAT	BETAT	CNFT	CAFT	CLMFT	CYFT	CYNFT	CBLFT	CABT	CP7	ALPHAO	BETAO
-6.270	-5.989	-.24150	.05870	.03000	.10730	-.01750	.00050	.10140	-.45090	-6.22180	-5.99990
-6.216	-4.052	-.23350	.06030	.02700	.07110	-.01370	.00030	.09590	-.42660	-6.16460	-4.07380
-6.348	.105	-.20650	.06080	.01020	-.00250	-.00120	.00000	.09520	-.42340	-6.24980	.10010
-6.154	4.256	-.20980	.05940	.01760	-.06210	.00700	-.00020	.09780	-.43500	-6.07690	4.26340
-5.822	6.404	-.20350	.06140	.02080	-.09040	.00860	-.00040	.09640	-.42860	-5.77100	6.40570
	GRADIENT	.00285	-.00011	-.00113	-.01603	.00249	-.00006	.00023	-.00101	.01055	1.00348

IA156A, AEDC PWT 16T-470, O T S W/SILTS (R8NT67) (10 MAY 80)

REFERENCE DATA

SREF = 2690.0000 SQ.FT. XMRP = 976.0000 IN. XT
LREF = 1290.3000 INCHES YMRP = .0000 IN. YT
BREF = 1290.3000 INCHES ZMRP = 400.0000 IN. ZT
SCALE = .0200

PARAMETRIC DATA

IB-ELV = 10.000 OB-ELV = 11.000
BDFLAP = .000 SPDBRK = .000
RUDDER = .000 SILTS = 1.000
MACH = .950 RN/L = 3.500

RUN NO. 1009/ 0 RN/L = 3.50 GRADIENT INTERVAL = -5.00/ 5.00

ALPHAT	BETAT	CNFT	CAFT	CLMFT	CYFT	CYNFT	CBLFT	CABT	CP7	ALPHAO	BETAO
-4.039	-6.129	-.20300	.05950	.04000	.10310	-.01610	.00050	.09720	-.43240	-4.08980	-6.15160
-4.313	-3.968	-.19770	.06060	.03350	.06530	-.01270	.00030	.09210	-.40970	-4.33560	-4.00100
-4.271	.375	-.16340	.06100	.01690	-.00660	-.00060	-.00010	.09280	-.41280	-4.25460	.37210
-3.775	4.319	-.16250	.06170	.02760	-.05920	.00470	-.00020	.09170	-.40800	-3.80500	4.33870
-3.859	6.145	-.16900	.05880	.02820	-.08800	.00780	-.00040	.09780	-.43490	-3.88380	6.15740
	GRADIENT	.00431	.00013	-.00076	-.01505	.00211	-.00006	-.00004	.00019	.06327	1.00645

RUN NO. 1010/ 0 RN/L = 3.50 GRADIENT INTERVAL = -5.00/ 5.00

ALPHAT	BETAT	CNFT	CAFT	CLMFT	CYFT	CYNFT	CBLFT	CABT	CP7	ALPHAO	BETAO
-.216	-6.945	-.15360	.06020	.05850	.11210	-.01350	.00060	.09220	-.40990	-.40260	-6.98950
-.208	-4.758	-.14200	.05970	.05290	.07290	-.01050	.00040	.09010	-.40090	-.38400	-4.82030
-.246	-.513	-.10740	.06020	.03320	.00440	-.00220	.00000	.08710	-.38730	-.35490	-.57830
-.177	3.685	-.11050	.06020	.04120	-.05750	.00650	-.00010	.08980	-.39930	-.31670	3.64170
-.167	5.826	-.11240	.05880	.04340	-.09150	.01010	-.00020	.09380	-.41710	-.31370	5.77800
	GRADIENT	.00374	.00006	-.00139	-.01545	.00201	-.00006	-.00004	.00020	.00797	1.00225

RUN NO. 1011/ 0 RN/L = 3.49 GRADIENT INTERVAL = -5.00/ 5.00

ALPHAT	BETAT	CNFT	CAFT	CLMFT	CYFT	CYNFT	CBLFT	CABT	CP7	ALPHAO	BETAO
4.421	-5.961	-.06930	.05510	.06580	.11150	-.01510	.00050	.09030	-.40170	4.10030	-5.93610
4.219	-3.628	-.05890	.05590	.05830	.07130	-.01300	.00040	.08600	-.38240	3.92670	-3.61120
3.916	.195	-.03870	.05450	.04070	-.00150	-.00020	.00010	.08550	-.38010	3.70440	.19360
4.085	4.081	-.04310	.05600	.05150	-.06960	.00970	.00000	.08610	-.38280	3.82030	4.05840
4.042	6.118	-.04570	.05580	.05410	-.10410	.01140	-.00020	.08950	-.39810	3.76800	6.08980
	GRADIENT	.00204	.00001	-.00087	-.01827	.00294	-.00005	.00001	-.00005	-.01368	.99484

IA156A, AEDC PWT 16T-470, O T S W/SILTS (R8NT68) (10 MAY 80)

REFERENCE DATA

SREF = 2390.0000 SQ.FT. XMRP = 976.0000 IN. XT
LREF = 1290.3000 INCHES YMRP = .0000 IN. YT
BREF = 1290.3000 INCHES ZMRP = 400.0000 IN. ZT
SCALE = .0200

PARAMETRIC DATA

IB-ELV = 10.000 OB-ELV = 11.000
BDFLAP = .000 SPDBRK = .000
RUDDER = .000 SILTS = 1.000
MACH = 1.050 RN/L = 3.500

RUN NO. 1012/ 0 RN/L = 3.52 GRADIENT INTERVAL = -5.00/ 5.00

ALPHAT	BETAT	CNFT	CAFT	CLMFT	CYFT	CYNFT	CBLFT	CABT	CP7	ALPHAO	BETAO
-8.293	-6.010	-.28600	.08720	.02110	.11140	-.01130	.00040	.11430	-.50860	-8.14960	-6.00060
-8.445	-3.773	-.27990	.08890	.01620	.06520	-.00680	.00010	.10970	-.48780	-8.30200	-3.77780
-8.388	.174	-.25760	.08330	-.00070	-.00230	-.00100	.00000	.12100	-.53800	-8.18260	.17130
-8.161	4.405	-.25460	.08640	.00430	-.06800	.00260	-.00010	.11630	-.51730	-7.97530	4.39660
-8.196	6.283	-.25840	.08510	.00660	-.09000	.00490	-.00020	.11710	-.52060	-8.01820	6.26460
	GRADIENT	.00307	-.00029	-.00142	-.01628	.00115	-.00002	.00078	-.00351	.04006	.99960

RUN NO. 1013/ 0 RN/L = 3.50 GRADIENT INTERVAL = -5.00/ 5.00

ALPHAT	BETAT	CNFT	CAFT	CLMFT	CYFT	CYNFT	CBLFT	CABT	CP7	ALPHAO	BETAO
-6.285	-6.002	-.24500	.08540	.02790	.11070	-.01490	.00040	.11370	-.50590	-6.22080	-6.00590
-6.221	-4.071	-.23530	.08600	.02390	.07300	-.01080	.00020	.11080	-.49260	-6.15290	-4.08450
-6.384	.113	-.20670	.08770	.00350	-.00010	-.00240	-.00010	.11240	-.49990	-6.25770	.10800
-6.161	4.274	-.21160	.08550	.01240	-.06240	.00400	-.00020	.11250	-.50030	-6.06000	4.27700
-6.094	6.257	-.21480	.08500	.01430	-.09460	.00690	-.00040	.11420	-.50780	-5.99900	6.25660
	GRADIENT	.00284	-.00006	-.00138	-.01623	.00177	-.00005	.00020	-.00092	.01110	1.00189

RUN NO. 1014/ 0 RN/L = 3.50 GRADIENT INTERVAL = -5.00/ 5.00

ALPHAT	BETAT	CNFT	CAFT	CLMFT	CYFT	CYNFT	CBLFT	CABT	CP7	ALPHAO	BETAO
-4.064	-6.146	-.20400	.08570	.03750	.10700	-.01390	.00040	.10970	-.48770	-4.10470	-6.15990
-4.334	-3.995	-.19740	.08650	.03050	.06620	-.01000	.00020	.10690	-.47540	-4.34820	-4.02660
-4.177	.198	-.15890	.08930	.01060	-.00230	-.00240	.00000	.10750	-.47810	-4.14110	.19180
-4.011	4.241	-.16640	.08710	.02080	-.06090	.00340	-.00020	.10840	-.48190	-4.00900	4.26050
-3.854	6.150	-.16650	.08650	.02240	-.09460	.00840	-.00040	.10900	-.48490	-3.86710	6.16630
	GRADIENT	.00380	.00008	-.00120	-.01544	.00163	-.00005	.00018	-.00079	.04124	1.00628

RUN NO. 1015/ 0 RN/L = 3.50 GRADIENT INTERVAL = -5.00/ 5.00

ALPHAT	BETAT	CNFT	CAFT	CLMFT	CYFT	CYNFT	CBLFT	CABT	CP7	ALPHAO	BETAO
-.224	-6.947	-.15020	.08460	.05740	.11880	-.01540	.00040	.10600	-.47150	-.43710	-6.99870
-.228	-4.771	-.13800	.08600	.05110	.07670	-.01050	.00020	.10330	-.45950	-.42120	-4.83910
-.299	-.552	-.09710	.08540	.02550	.00830	-.00450	.00000	.10540	-.46870	-.39280	-.62560
-.225	3.617	-.10080	.08790	.03380	-.05820	.00550	.00000	.10540	-.46880	-.35920	3.57430
-.211	5.812	-.10380	.08650	.03700	-.09380	.00900	-.00020	.10810	-.48070	-.35890	5.76580
	GRADIENT	.00445	.00023	-.00207	-.01608	.00191	-.00002	.00025	-.00111	.00739	1.00304

IA156A, AEDC PWT 16T-470, O T S W/SILTS (R8NT68) (10 MAY 80)

REFERENCE DATA

SREF = 2690.0000 SQ.FT. XMRP = 976.0000 IN. XT
LREF = 1290.3000 INCHES YMRP = .0000 IN. YT
BREF = 1290.3000 INCHES ZMRP = 400.0000 IN. ZT
SCALE = .0200

PARAMETRIC DATA

IB-ELV = 10.000 OB-ELV = 11.000
BDFLAP = .000 SPDBRK = .000
RUDDER = .000 SILTS = 1.000
MACH = 1.050 RN/L = 3.500

RUN NO. 1016/ 0 RN/L = 3.50 GRADIENT INTERVAL = -5.00/ 5.00

ALPHAT	BETAT	CNFT	CAFT	CLMFT	CYFT	CYNFT	CBLFT	CABT	CP7	ALPHAO	BETAO
4.413	-5.767	-.06990	.08330	.06770	.10190	-.01040	.00020	.10150	-.45140	4.07050	-5.75210
4.258	-3.701	-.05630	.08270	.05810	.06770	-.00990	.00010	.09920	-.44110	3.95380	-3.69270
3.924	.150	-.03120	.08510	.03920	.00100	-.00090	.00000	.09560	-.42540	3.68530	.14470
4.081	4.106	-.03800	.08190	.04970	-.06940	.00970	-.00010	.10170	-.45230	3.80950	4.08910
4.030	6.098	-.04200	.08250	.05290	-.10420	.01030	-.00010	.10320	-.45920	3.74740	6.07100
	GRADIENT	.00233	-.00011	-.00106	-.01756	.00251	-.00003	.00033	-.00146	-.01826	.99688

IA156A, AEDC PWT 16T-470, O T S W/SILTS (R8NT69) (10 MAY 80)

REFERENCE DATA

SREF = 2690.0000 SQ.FT. XMRP = 976.0000 IN. XT
LREF = 1290.3000 INCHES YMRP = .0000 IN. YT
BREF = 1290.3000 INCHES ZMRP = 400.0000 IN. ZT
SCALE = .0200

PARAMETRIC DATA

IB-ELV = 10.000 OB-ELV = 11.000
BDFLAP = .000 SPDBRK = .000
RUDDER = .000 SILTS = 1.000
MACH = 1.100 RN/L = 3.500

RUN NO. 1017/ 0 RN/L = 3.50 GRADIENT INTERVAL = -5.00/ 5.00

ALPHAT	BETAT	CNFT	CAFT	CLMFT	CYFT	CYNFT	CBLFT	CABT	CP7	ALPHAO	BETAO
-8.251	-5.931	-.28090	.09120	.01950	.10460	-.01000	.00040	.10630	-.47270	-8.09660	-5.92580
-8.448	-3.759	-.27850	.09160	.01400	.06440	-.00640	.00010	.10470	-.46550	-8.28040	-3.76260
-8.415	.170	-.25110	.09400	-.00270	-.00080	-.00180	.00000	.10200	-.45370	-8.18970	.16130
-8.204	4.436	-.25320	.09230	.00360	-.06330	.00060	-.00020	.10600	-.47160	-8.00620	4.42190
-8.176	6.286	-.25520	.09360	.00670	-.09350	.00290	-.00040	.10590	-.47100	-7.99660	6.26590
	GRADIENT	.00304	.00008	-.00123	-.01557	.00085	-.00004	.00017	-.00079	.03359	.99866

RUN NO. 1018/ 0 RN/L = 3.50 GRADIENT INTERVAL = -5.00/ 5.00

ALPHAT	BETAT	CNFT	CAFT	CLMFT	CYFT	CYNFT	CBLFT	CABT	CP7	ALPHAO	BETAO
-6.277	-5.998	-.24100	.09250	.02580	.10300	-.01220	.00040	.10110	-.44960	-6.19910	-5.99860
-6.265	-4.084	-.23450	.09310	.02160	.06670	-.00840	.00020	.09920	-.44140	-6.17370	-4.09520
-6.425	.133	-.20590	.09470	.00270	-.00250	-.00250	.00000	.09960	-.44280	-6.27780	.12140
-6.172	4.286	-.20680	.09450	.01150	-.05670	-.00020	-.00020	.09780	-.43480	-6.06440	4.27830
-5.978	6.407	-.20720	.09110	.01350	-.09420	.00590	-.00040	.10370	-.46110	-5.88600	6.40310
	GRADIENT	.00332	.00017	-.00122	-.01475	.00098	-.00005	-.00017	.00079	.01296	1.00040

IA156A, AEDC PWT 16T-470, O T S W/SILTS (R8NT69) (10 MAY 80)

REFERENCE DATA

SREF = 2690.0000 SQ.FT. XMRP = 976.0000 IN. XT
LREF = 1290.3000 INCHES YMRP = .0000 IN. YT
BREF = 1290.3000 INCHES ZMRP = 400.0000 IN. ZT
SCALE = .0200

PARAMETRIC DATA

IB-ELV = 10.000 OB-ELV = 11.000
BDFLAP = .000 SPDBRK = .000
RUDDER = .000 SILTS = 1.000
MACH = 1.100 RN/L = 3.500

RUN NO. 1019/ 0 RN/L = 3.50 GRADIENT INTERVAL = -5.00/ 5.00

ALPHAT	BETAT	CNFT	CAFT	CLMFT	CYFT	CYNFT	CBLFT	CABT	CP7	ALPHAO	BETAO
-4.219	-6.141	-.20690	.09190	.03540	.10070	-.01170	.00040	.09880	-.43920	-4.23760	-6.14760
-4.339	-4.000	-.19680	.09170	.02900	.05980	-.00700	.00010	.09640	-.42890	-4.33520	-4.02420
-4.307	.266	-.16040	.09450	.00950	-.00500	-.00230	-.00010	.09510	-.42280	-4.25370	.25560
-3.783	4.271	-.15960	.09640	.02140	-.06160	.00240	-.00030	.09310	-.41390	-3.79150	4.27920
-3.851	6.143	-.16540	.09220	.02290	-.09380	.00720	-.00040	.09870	-.43880	-3.86830	6.14990
	GRADIENT	.00454	.00057	-.00096	-.01468	.00114	-.00005	-.00040	.00181	.06523	1.00395

RUN NO. 1020/ 0 RN/L = 3.50 GRADIENT INTERVAL = -5.00/ 5.00

ALPHAT	BETAT	CNFT	CAFT	CLMFT	CYFT	CYNFT	CBLFT	CABT	CP7	ALPHAO	BETAO
-.223	-6.972	-.15160	.09160	.05760	.11570	-.01360	.00030	.09510	-.42300	-.44050	-7.00800
-.229	-4.796	-.13830	.09470	.05040	.07410	-.00913	.00020	.08920	-.39690	-.42340	-4.85070
-.287	-.439	-.10170	.09580	.02730	-.00480	-.00340	.00000	.08920	-.39670	-.38690	-.50780
-.205	3.725	-.10410	.09000	.03570	-.05870	.00460	-.00010	.09690	-.43090	-.35360	3.67520
-.203	5.851	-.10680	.09250	.03750	-.09400	.00810	-.00030	.09490	-.42210	-.36030	5.79620
	GRADIENT	.00405	-.00055	-.00175	-.01559	.00161	-.00004	.00090	-.00396	.00819	1.00053

RUN NO. 1021/ 0 RN/L = 3.50 GRADIENT INTERVAL = -5.00/ 5.00

ALPHAT	BETAT	CNFT	CAFT	CLMFT	CYFT	CYNFT	CBLFT	CABT	CP7	ALPHAO	BETAO
4.427	-5.955	-.07150	.08920	.07210	.10430	-.00980	.00020	.09140	-.40650	4.04570	-5.93450
4.247	-3.616	-.05680	.09120	.06140	.06400	-.00870	.00010	.08460	-.37640	3.90990	-3.60740
3.964	.199	-.03470	.09080	.04320	-.00360	.00030	.00000	.08530	-.37930	3.69130	.19200
4.102	4.068	-.04280	.08930	.05370	-.06800	.00850	-.00010	.08790	-.39110	3.79440	4.04430
4.067	6.093	-.04530	.09100	.05570	-.10310	.00930	-.00010	.08790	-.39110	3.75990	6.05950
	GRADIENT	.00181	-.00025	-.00099	-.01718	.00224	-.00003	.00043	-.00192	-.01494	.99578

IA156A, AEDC PWT 16T-470, O T S W/SILTS (R8NT70) (10 MAY 80)

REFERENCE DATA

SREF = 2690.0000 SQ.FT. XMRP = 976.0000 IN. XT
LREF = 1290.3000 INCHES YMRP = .0000 IN. YT
BREF = 1290.3000 INCHES ZMRP = 400.0000 IN. ZT
SCALE = .0200

PARAMETRIC DATA

IB-ELV = 10.000 OB-ELV = 11.000
BDFLAP = .000 SPDBRK = .000
RUDDER = .000 SILTS = 1.000
MACH = 1.150 RN/L = 3.500

RUN NO. 1022/ 0 RN/L = 3.50 GRADIENT INTERVAL = -5.00/ 5.00

ALPHAT	BETAT	CNFT	CAFT	CLMFT	CYFT	CYNFT	CBLFT	CABT	CP7	ALPHAO	BETAO
-8.282	-5.950	-.28630	.09900	.02300	.10700	-.01140	.00040	.09910	-.44060	-8.13410	-5.93320
-8.441	-3.767	-.28230	.09730	.01800	.06430	-.00690	.00010	.10000	-.44470	-8.28660	-3.76460
-8.396	.198	-.25690	.10110	.00180	.00120	-.00330	.00000	.09600	-.42690	-8.18440	.18910
-8.188	4.438	-.25790	.09860	.00810	-.06040	-.00030	-.00010	.09900	-.44010	-8.01330	4.41600
-8.195	6.312	-.26060	.09750	.00980	-.09180	.00310	-.00040	.10020	-.44560	-8.02540	6.28490
	GRADIENT	.00294	.00015	-.00118	-.01519	.00080	-.00002	-.00011	.00052	.03339	.99703

RUN NO. 1023/ 0 RN/L = 3.50 GRADIENT INTERVAL = -5.00/ 5.00

ALPHAT	BETAT	CNFT	CAFT	CLMFT	CYFT	CYNFT	CBLFT	CABT	CP7	ALPHAO	BETAO
-6.271	-6.005	-.24370	.09980	.02850	.10480	-.01340	.00040	.09490	-.42210	-6.20680	-5.99890
-6.214	-4.073	-.23580	.09900	.02510	.06660	-.00870	.00020	.09420	-.41900	-6.14580	-4.08110
-6.401	.128	-.21080	.10020	.00690	.00280	-.00500	-.00010	.09500	-.42260	-6.27860	.11290
-6.154	4.295	-.21310	.09970	.01490	-.05730	-.00060	-.00020	.09500	-.42240	-6.06410	4.27840
-5.954	6.427	-.21120	.09970	.01690	-.09610	.00570	-.00040	.09500	-.42240	-5.87930	6.41050
	GRADIENT	.00272	.00008	-.00122	-.01481	.00097	-.00005	.00010	-.00041	.00971	.99900

RUN NO. 1024/ 0 RN/L = 3.50 GRADIENT INTERVAL = -5.00/ 5.00

ALPHAT	BETAT	CNFT	CAFT	CLMFT	CYFT	CYNFT	CBLFT	CABT	CP7	ALPHAO	BETAO
-4.208	-6.145	-.20670	.09880	.03690	.10880	-.01600	.00030	.09370	-.41690	-4.24450	-6.15270
-4.325	-3.999	-.19940	.10070	.03140	.06440	-.00940	.00010	.09040	-.40220	-4.34220	-4.02640
-4.290	.385	-.16510	.10170	.01350	-.00290	-.00410	-.00010	.09020	-.40120	-4.26870	.37260
-3.762	4.322	-.16370	.10180	.02460	-.06280	.00260	-.00020	.08970	-.39900	-3.79890	4.32790
-3.850	6.179	-.16980	.10080	.02550	-.09440	.00660	-.00040	.09210	-.40990	-3.88960	6.17580
	GRADIENT	.00436	.00013	-.00088	-.01529	.00144	-.00004	-.00008	.00038	.06438	1.00398

RUN NO. 1025/ 0 RN/L = 3.50 GRADIENT INTERVAL = -5.00/ 5.00

ALPHAT	BETAT	CNFT	CAFT	CLMFT	CYFT	CYNFT	CBLFT	CABT	CP7	ALPHAO	BETAO
-.192	-7.009	-.14960	.09900	.05830	.11850	-.01540	.00030	.09060	-.40290	-.43010	-7.05010
-.189	-4.836	-.13670	.10070	.05110	.07730	-.01060	.00010	.08660	-.38520	-.40450	-4.89260
-.249	-.482	-.10190	.10190	.02850	.00540	-.00340	-.00010	.08670	-.38550	-.36890	-.55370
-.172	3.653	-.10200	.09820	.03560	-.05830	.00500	-.00010	.09170	-.40770	-.33630	3.60090
-.167	5.854	-.10520	.10240	.03880	-.09510	.00860	-.00030	.08810	-.39170	-.34560	5.79390
	GRADIENT	.00412	-.00029	-.00186	-.01598	.00184	-.00002	.00060	-.00263	.00804	1.00050

IA156A, AEDC PWT 16T-470, O T S W/SILTS (R8NT70) (10 MAY 80)

REFERENCE DATA

SREF = 2690.0000 SQ.FT. XMRP = 976.0000 IN. XT
LREF = 1290.3000 INCHES YMRP = .0000 IN. YT
BREF = 1290.3000 INCHES ZMRP = 400.0000 IN. ZT
SCALE = .0200

PARAMETRIC DATA

IB-ELV = 10.000 OB-ELV = 11.000
BDFLAP = .000 SPDBRK = .000
RUDDER = .000 SILTS = 1.000
MACH = 1.150 RN/L = 3.500

RUN NO. 1026/ 0 RN/L = 3.50 GRADIENT INTERVAL = -5.00/ 5.00

ALPHAT	BETAT	CNFT	CAFT	CLMFT	CYFT	CYNFT	CBLFT	CABT	CP7	ALPHAO	BETAO
4.488	-5.770	-.07350	.09610	.07480	.10080	-.01060	.00020	.08580	-.38150	4.07520	-5.75730
4.309	-3.660	-.06150	.09720	.06640	.06700	-.01040	.00010	.08230	-.36590	3.92820	-3.66260
4.031	.137	-.04260	.09760	.05020	.00240	-.00330	.00000	.08070	-.35910	3.70350	.11690
4.134	4.017	-.04270	.09830	.05510	-.06260	.00530	-.00010	.08240	-.36650	3.80580	3.98940
4.083	6.090	-.04640	.09750	.05740	-.09970	.00840	-.00010	.08530	-.37930	3.75420	6.05370
	GRADIENT	.00244	.00014	-.00146	-.01688	.00205	-.00003	.00001	-.00008	-.01579	.99672

IA156A, AEDC PWT 16T-470, O T S W/SILTS (R8NT71) (10 MAY 80)

REFERENCE DATA

SREF = 2690.0000 SQ.FT. XMRP = 976.0000 IN. XT
LREF = 1290.3000 INCHES YMRP = .0000 IN. YT
BREF = 1290.3000 INCHES ZMRP = 400.0000 IN. ZT
SCALE = .0200

PARAMETRIC DATA

IB-ELV = 12.000 OB-ELV = 11.000
BDFLAP = .000 SPDBRK = .000
RUDDER = .000 SILTS = 1.000
MACH = .600 RN/L = 3.500

RUN NO. 1030/ 0 RN/L = 3.50 GRADIENT INTERVAL = -5.00/ 5.00

ALPHAT	BETAT	CNFT	CAFT	CLMFT	CYFT	CYNFT	CBLFT	CABT	CP7	ALPHAO	BETAO
-8.243	-7.865	-.25540	.03630	.03160	.08210	.00800	.00020	.08880	-.39500	-8.23420	-7.82930
-8.129	-5.835	-.24680	.03820	.02710	.05860	.00610	.00010	.08520	-.37890	-8.11370	-5.81630
-8.157	-3.808	-.24240	.03950	.02320	.03540	.00470	.00000	.08270	-.36780	-8.13940	-3.80300
-8.065	.304	-.22870	.04050	.01610	-.00300	-.00170	-.00010	.08380	-.37270	-8.04640	.30090
-7.945	4.251	-.22520	.03950	.01920	-.03480	-.00870	-.00020	.08460	-.37630	-7.91600	4.24290
-7.803	6.306	-.22060	.04200	.02070	-.05450	-.01070	-.00030	.08350	-.37140	-7.77580	6.28850
-7.817	8.345	-.21600	.03770	.01930	-.07430	-.01290	-.00050	.08960	-.39830	-7.79180	8.31500
	GRADIENT	.00214	.00000	-.00050	-.00872	-.00166	-.00002	.00024	-.00106	.02769	.99840

RUN NO. 1031/ 0 RN/L = 3.49 GRADIENT INTERVAL = -5.00/ 5.00

ALPHAT	BETAT	CNFT	CAFT	CLMFT	CYFT	CYNFT	CBLFT	CABT	CP7	ALPHAO	BETAO
-6.136	-7.956	-.22010	.03950	.03730	.09090	.00400	.00030	.08390	-.37310	-6.16560	-7.93050
-6.100	-5.916	-.21520	.03990	.03330	.06400	.00350	.00020	.08250	-.36690	-6.12310	-5.90610
-6.032	-3.997	-.21010	.04010	.02950	.04020	.00280	.00010	.08060	-.35850	-6.05330	-3.99910
-6.099	.078	-.19660	.04110	.02240	-.00180	-.00170	.00000	.08140	-.36210	-6.11330	.07290
-5.929	4.188	-.19100	.04200	.02700	-.03790	-.00670	-.00020	.08080	-.35950	-5.94870	4.18740
-5.871	6.175	-.18960	.04010	.02720	-.05770	-.00800	-.00040	.08350	-.37150	-5.88590	6.16730
-5.672	8.332	-.17980	.04040	.02620	-.08290	-.00840	-.00070	.08490	-.37780	-5.68960	8.31530
	GRADIENT	.00233	.00023	-.00030	-.00954	-.00116	-.00004	.00002	-.00012	.01282	1.00021

IA156A, AEDC PWT 16T-470, O T S W/SILTS (R8NT71) (10 MAY 80)

REFERENCE DATA

SREF = 2690.0000 SQ.FT. XMRP = 976.0000 IN. XT
LREF = 1290.3000 INCHES YMRP = .0000 IN. YT
BREF = 1290.3000 INCHES ZMRP = 400.0000 IN. ZT
SCALE = .0200

PARAMETRIC DATA

IB-ELV = 12.000 OB-ELV = 11.000
BDFLAP = .000 SPDBRK = .000
RUDDER = .000 SILTS = 1.000
MACH = .600 RN/L = 3.500

RUN NO. 1042/ 0 RN/L = 3.50 GRADIENT INTERVAL = -5.00/ 5.00

ALPHAT	BETAT	CNFT	CAFT	CLMFT	CYFT	CYNFT	CBLFT	CABT	CP7	ALPHAO	BETAO
-4.066	-7.858	-.19700	.03880	.04580	.09210	.00240	.00020	.08310	-.36980	-4.13860	-7.84800
-4.138	-5.939	-.19130	.04050	.04080	.06330	.00320	.00000	.08010	-.35640	-4.20260	-5.94040
-4.173	-3.902	-.18270	.04080	.03640	.03650	.00270	.00000	.07780	-.34610	-4.23340	-3.91670
-4.072	.374	-.16480	.04330	.02960	-.00760	-.00130	-.00020	.07800	-.34700	-4.12750	.37110
-3.666	4.214	-.15890	.04400	.03700	-.04360	-.00470	-.00040	.07750	-.34450	-3.73870	4.22760
-3.739	6.059	-.15740	.04180	.03580	-.06280	-.00530	-.00060	.08020	-.35680	-3.80370	6.06490
-3.777	8.044	-.15460	.04020	.03400	-.08750	-.00450	-.00080	.08380	-.37260	-3.83240	8.04270
	GRADIENT	.00296	.00040	.00004	-.00988	-.00091	-.00005	-.00004	.00019	.06027	1.00346

RUN NO. 1043/ 0 RN/L = 3.50 GRADIENT INTERVAL = -5.00/ 5.00

ALPHAT	BETAT	CNFT	CAFT	CLMFT	CYFT	CYNFT	CBLFT	CABT	CP7	ALPHAO	BETAO
-.188	-8.745	-.14600	.03710	.06130	.11820	-.00500	.00020	.08090	-.35980	-.33200	-8.76610
-.176	-6.540	-.14110	.03980	.05700	.07920	-.00080	.00000	.07780	-.34600	-.31800	-6.57090
-.167	-4.499	-.13490	.04210	.05360	.05080	-.00040	.00000	.07410	-.32980	-.30420	-4.54210
-.162	-.329	-.11920	.04390	.04490	-.00170	.00030	-.00020	.07330	-.32600	-.27840	-.38900
-.111	3.754	-.11640	.04430	.05020	-.04760	.00060	-.00030	.07280	-.32390	-.24590	3.69020
-.115	5.855	-.11520	.04320	.05040	-.07320	.00020	-.00040	.07420	-.32980	-.24770	5.78430
-.116	7.958	-.10800	.04030	.04910	-.10270	.00260	-.00070	.07850	-.34900	-.24390	7.86030
	GRADIENT	.00225	.00027	-.00042	-.01193	.00012	-.00004	-.00016	.00072	.00706	.99751

RUN NO. 1044/ 0 RN/L = 3.50 GRADIENT INTERVAL = -5.00/ 5.00

ALPHAT	BETAT	CNFT	CAFT	CLMFT	CYFT	CYNFT	CBLFT	CABT	CP7	ALPHAO	BETAO
4.254	-8.047	-.08260	.03670	.07600	.12830	-.01310	.00000	.07410	-.32960	4.01580	-8.00640
4.323	-5.866	-.07270	.04010	.07160	.08680	-.00750	.00000	.06930	-.30830	4.08390	-5.82970
4.289	-3.872	-.06560	.04040	.06850	.05450	-.00450	-.00010	.06840	-.30420	4.04730	-3.84120
4.193	.185	-.05630	.03790	.06190	-.00300	-.00020	-.00020	.07330	-.32610	3.96070	.18200
4.115	4.165	-.05450	.04040	.06310	-.05740	.00340	-.00040	.07100	-.31580	3.89070	4.12950
4.061	6.220	-.05350	.04060	.06240	-.08740	.00500	-.00060	.07080	-.31500	3.84420	6.17840
4.045	8.206	-.04990	.03830	.06230	-.11880	.00870	-.00090	.07500	-.33350	3.83850	8.15930
	GRADIENT	.00138	-.00000	-.00067	-.01392	.00098	-.00004	.00033	-.00146	-.01949	.99174

IA156A, AEDC PWT 16T-470, O T S W/SILTS (R8NT71) (10 MAY 80)

REFERENCE DATA

SREF = 2690.0000 SQ.FT. XMRP = 976.0000 IN. XT
LREF = 1290.3000 INCHES YMRP = .0000 IN. YT
BREF = 1290.3000 INCHES ZMRP = 400.0000 IN. ZT
SCALE = .0200

PARAMETRIC DATA

IB-ELV = 12.000 OB-ELV = 11.000
BDFLAP = .000 SPDBRK = .000
RUDDER = .000 SILTS = 1.000
MACH = .600 RN/L = 3.500

RUN NO. 1045/ 0 RN/L = 3.51 GRADIENT INTERVAL = -5.00/ 5.00

ALPHAT	BETAT	CNFT	CAFT	CLMFT	CYFT	CYNFT	CBLFT	CABT	CP7	ALPHAO	BETAO
6.461	-7.971	-.04780	.03640	.08050	.13600	-.01730	.00000	.06990	-.31090	6.19320	-7.94620
6.455	-5.913	-.04100	.03870	.07870	.09610	-.01140	.00010	.06700	-.29810	6.17620	-5.88920
6.430	-3.851	-.03780	.03690	.07660	.06110	-.00620	-.00010	.06830	-.30360	6.14590	-3.83060
6.134	.190	-.03610	.03860	.07170	-.00310	.00040	-.00010	.07030	-.31250	5.85750	.18940
6.058	4.098	-.03170	.03910	.07060	-.05890	.00370	-.00040	.06960	-.30970	5.79210	4.07230
5.988	6.179	-.02880	.03930	.07010	-.08960	.00680	-.00060	.06990	-.31070	5.73230	6.14820
6.033	8.201	-.02280	.03690	.06850	-.12430	.01180	-.00090	.07390	-.32860	5.79160	8.16680
	GRADIENT	.00077	.00028	-.00076	-.01510	.00125	-.00004	.00017	-.00078	-.04466	.99413

RUN NO. 1046/ 0 RN/L = 3.51 GRADIENT INTERVAL = -5.00/ 5.00

ALPHAT	BETAT	CNFT	CAFT	CLMFT	CYFT	CYNFT	CBLFT	CABT	CP7	ALPHAO	BETAO
8.366	-7.820	-.01480	.03410	.08410	.13520	-.01850	.00010	.06930	-.30840	8.06920	-7.80220
8.289	-5.751	-.01070	.03470	.08160	.09580	-.01240	.00000	.06760	-.30080	7.98310	-5.73540
8.292	-3.780	-.00980	.03700	.08170	.05920	-.00700	.00000	.06510	-.28960	7.97420	-3.76440
8.194	.178	-.00440	.03760	.07680	-.00190	-.00040	-.00020	.06880	-.30590	7.87980	.17450
8.230	4.220	.00340	.03700	.07660	-.05980	.00510	-.00040	.06870	-.30550	7.92610	4.19940
8.179	6.224	.00770	.03660	.07580	-.09100	.00870	-.00060	.07040	-.31320	7.88640	6.20040
8.171	8.269	.01240	.03000	.07380	-.12920	.01450	-.00100	.07780	-.34620	7.89770	8.24510
	GRADIENT	.00165	-.00000	-.00064	-.01487	.00151	-.00005	.00045	-.00198	-.00595	.99560

IA156A, AEDC PWT 16T-470, O T S W/SILTS (R8NT72) (10 MAY 80)

REFERENCE DATA

SREF = 2690.0000 SQ.FT. XMRP = 976.0000 IN. XT
LREF = 1290.3000 INCHES YMRP = .0000 IN. YT
BREF = 1290.3000 INCHES ZMRP = 400.0000 IN. ZT
SCALE = .0200

PARAMETRIC DATA

IB-ELV = 12.000 OB-ELV = 11.000
BDFLAP = .000 SPDBRK = .000
RUDDER = .000 SILTS = 1.000
MACH = .800 RN/L = 3.500

RUN NO. 1047/ 0 RN/L = 3.50 GRADIENT INTERVAL = -5.00/ 5.00

ALPHAT	BETAT	CNFT	CAFT	CLMFT	CYFT	CYNFT	CBLFT	CABT	CP7	ALPHAO	BETAO
-8.325	-5.885	-.27170	.04270	.03440	.07280	.00030	-.00010	.09040	-.40200	-8.30370	-5.86840
-8.276	-3.830	-.26460	.04330	.02970	.04690	-.00070	-.00020	.08800	-.39130	-8.25130	-3.82940
-8.204	.344	-.24360	.04710	.01770	-.00400	-.00040	-.00040	.08610	-.38280	-8.16290	.34160
-8.061	4.341	-.24180	.04710	.02200	-.04820	-.00190	-.00040	.08610	-.38300	-8.00240	4.33320
-8.052	6.274	-.24120	.04600	.02230	-.07150	-.00260	-.00050	.08800	-.39160	-7.99090	6.25100
	GRADIENT	.00281	.00047	-.00096	-.01164	-.00015	-.00002	-.00023	.00102	.03039	.99894

RUN NO. 1048/ 0 RN/L = 3.50 GRADIENT INTERVAL = -5.00/ 5.00

ALPHAT	BETAT	CNFT	CAFT	CLMFT	CYFT	CYNFT	CBLFT	CABT	CP7	ALPHAO	BETAO
-6.167	-5.980	-.23380	.04500	.04130	.07860	-.00260	.00000	.08610	-.38290	-6.20290	-5.97560
-6.107	-4.048	-.22660	.04540	.03730	.05150	-.00250	-.00010	.08400	-.37370	-6.14160	-4.05770
-6.235	.119	-.20790	.04780	.02340	-.00350	-.00020	-.00040	.08270	-.36790	-6.23570	.11350
-6.050	4.259	-.20460	.04900	.02850	-.04780	-.00150	-.00040	.08230	-.36590	-6.05050	4.25890
-5.781	6.358	-.19940	.04710	.03020	-.07450	-.00120	-.00050	.08540	-.37970	-5.78800	6.35020
	GRADIENT	.00265	.00043	-.00106	-.01196	.00012	-.00004	-.00020	.00094	.01093	1.00120

RUN NO. 1049/ 0 RN/L = 3.50 GRADIENT INTERVAL = -5.00/ 5.00

ALPHAT	BETAT	CNFT	CAFT	CLMFT	CYFT	CYNFT	CBLFT	CABT	CP7	ALPHAO	BETAO
-4.038	-6.068	-.20170	.04510	.04880	.07840	-.00290	.00010	.08270	-.36780	-4.13450	-6.07370
-4.247	-3.965	-.19770	.04660	.04310	.04710	-.00240	-.00010	.08040	-.35750	-4.33410	-3.98620
-4.188	.375	-.16840	.04800	.02860	-.00830	.00030	-.00030	.07990	-.35520	-4.23760	.37320
-3.715	4.303	-.16630	.04720	.03810	-.05030	-.00040	-.00040	.08170	-.36340	-3.78820	4.31930
-3.797	6.152	-.16840	.04610	.03850	-.07360	.00010	-.00050	.08290	-.36860	-3.86600	6.16130
-3.752	6.360	-.16700	.04720	.03850	-.07630	.00050	-.00050	.08050	-.35820	-3.82590	6.36840
	GRADIENT	.00385	.00008	-.00065	-.01180	.00025	-.00004	.00015	-.00069	.06527	1.00458

RUN NO. 1050/ 0 RN/L = 3.50 GRADIENT INTERVAL = -5.00/ 5.00

ALPHAT	BETAT	CNFT	CAFT	CLMFT	CYFT	CYNFT	CBLFT	CABT	CP7	ALPHAO	BETAO
-.165	-6.832	-.15630	.03880	.06460	.09910	-.00670	.00010	.08500	-.37820	-.35140	-6.86390
-.163	-4.711	-.14740	.04450	.05880	.06710	-.00660	.00010	.07790	-.34630	-.33880	-4.75970
-.185	-.488	-.12370	.04440	.04420	.00410	-.00110	-.00010	.07550	-.33590	-.31450	-.54730
-.130	3.683	-.11930	.04620	.04890	-.05370	.00450	-.00030	.07630	-.33950	-.27600	3.62350
-.117	5.794	-.12030	.04570	.05170	-.08420	.00650	-.00030	.07690	-.34210	-.27330	5.73220
	GRADIENT	.00335	.00020	-.00118	-.01439	.00132	-.00005	-.00019	.00081	.00748	.99869

IA156A, AEDC PWT 16T-470, O T S W/SILTS (R8NT72) (10 MAY 80)

REFERENCE DATA

SREF = 2690.0000 SQ.FT. XMRP = 976.0000 IN. XT
LREF = 1290.3000 INCHES YMRP = .0000 IN. YT
BREF = 1290.3000 INCHES ZMRP = 400.0000 IN. ZT
SCALE = .0200

PARAMETRIC DATA

IB-ELV = 12.000 OB-ELV = 11.000
BDFLAP = .000 SPDBRK = .000
RUDDER = .000 SILTS = 1.000
MACH = .800 RN/L = 3.500

RUN NO. 1051/ 0 RN/L = 3.49 GRADIENT INTERVAL = -5.00/ 5.00

ALPHAT	BETAT	CNFT	CAFT	CLMFT	CYFT	CYNFT	CBLFT	CABT	CP7	ALPHAO	BETAO
4.383	-5.781	-.06740	.04170	.06860	.09490	-.00950	.00020	.07250	-.32230	4.08790	-5.75000
4.260	-3.761	-.06260	.04250	.06520	.05900	-.00660	.00010	.07130	-.31730	3.96790	-3.73570
4.121	.193	-.04200	.04550	.05250	-.00030	-.00060	-.00010	.07010	-.31170	3.86240	.18770
4.060	4.002	-.04710	.03130	.05780	-.05940	.00620	-.00030	.08460	-.37650	3.79600	3.97270
4.024	6.122	-.04650	.04280	.05770	-.09490	.00950	-.00050	.07350	-.32670	3.77130	6.08890
	GRADIENT	.00202	-.00143	-.00097	-.01525	.00165	-.00005	.00170	-.00757	-.02217	.99308

RUN NO. 1052/ 0 RN/L = 3.50 GRADIENT INTERVAL = -5.00/ 5.00

ALPHAT	BETAT	CNFT	CAFT	CLMFT	CYFT	CYNFT	CBLFT	CABT	CP7	ALPHAO	BETAO
6.416	-5.833	-.03510	.04040	.07250	.09810	-.01100	.00020	.07110	-.31620	6.09340	-5.81530
6.380	-3.791	-.02890	.04150	.06990	.06450	-.00730	.00010	.06870	-.30580	6.04990	-3.77660
6.044	.166	-.01620	.04280	.05760	-.00030	-.00040	.00000	.06920	-.30770	5.75100	.15990
5.972	4.089	-.01820	.04110	.06120	-.06220	.00670	-.00020	.07180	-.31940	5.67990	4.06860
6.044	6.039	-.01140	.04120	.06140	-.09390	.01040	-.00050	.07280	-.32380	5.76030	6.01640
	GRADIENT	.00136	-.00005	-.00111	-.01608	.00178	-.00004	.00039	-.00172	-.04699	.99553

IA156A, AEDC PWT 16T-470, O T S W/SILTS (R8NT73) (10 MAY 80)

REFERENCE DATA

SREF = 2690.0000 SQ.FT. XMRP = 976.0000 IN. XT
LREF = 1290.3000 INCHES YMRP = .0000 IN. YT
BREF = 1290.3000 INCHES ZMRP = 400.0000 IN. ZT
SCALE = .0200

PARAMETRIC DATA

IB-ELV = 12.000 OB-ELV = 11.000
BDFLAP = .000 SPDBRK = .000
RUDDER = .000 SILTS = 1.000
MACH = .900 RN/L = 3.500

RUN NO. 1053/ 0 RN/L = 3.50 GRADIENT INTERVAL = -5.00/ 5.00

ALPHAT	BETAT	CNFT	CAFT	CLMFT	CYFT	CYNFT	CBLFT	CABT	CP7	ALPHAO	BETAO
-8.316	-5.907	-.28500	.04650	.03390	.08780	-.00670	-.00010	.10070	-.44770	-8.26480	-5.90410
-8.285	-3.800	-.27500	.05170	.02970	.05430	-.00490	-.00020	.09290	-.41320	-8.23810	-3.81100
-8.263	.343	-.25030	.05270	.01480	-.00610	.00070	-.00050	.09350	-.41570	-8.18910	.33790
-8.087	4.304	-.24780	.05210	.01890	-.05570	.00300	-.00050	.09380	-.41710	-7.99330	4.30180
	GRADIENT	.00338	.00005	-.00135	-.01358	.00098	-.00004	.00011	-.00048	.03007	1.00114

IA156A, AEDC PWT 16T-470, O T S W/SILTS (R8NT73) (10 MAY 80)

REFERENCE DATA

SREF = 2690.0000 SQ.FT. XMRP = 976.0000 IN. XT
LREF = 1290.3000 INCHES YMRP = .0000 IN. YT
BREF = 1290.3000 INCHES ZMRP = 400.0000 IN. ZT
SCALE = .0200

PARAMETRIC DATA

IB-ELV = 12.000 OB-ELV = 11.000
BDFLAP = .000 SPDBRK = .000
RUDDER = .000 SILTS = 1.000
MACH = .900 RN/L = 3.500

RUN NO. 1054/ 0 RN/L = 3.50 GRADIENT INTERVAL = -5.00/ 5.00

ALPHAT	BETAT	CNFT	CAFT	CLMFT	CYFT	CYNFT	CBLFT	CABT	CP7	ALPHAO	BETAO
-6.193	-5.969	-.24480	.05020	.04000	.09230	-.00960	.00010	.09390	-.41760	-6.20200	-5.97310
-6.164	-4.050	-.23680	.04440	.03650	.06210	-.00810	-.00010	.09740	-.43320	-6.17300	-4.06950
-6.281	.126	-.21030	.05270	.02000	-.00240	.00010	-.00040	.09040	-.40200	-6.25310	.11850
-6.085	4.270	-.21070	.05330	.02620	-.05640	.00500	-.00050	.08780	-.39040	-6.05730	4.27560
-5.867	6.367	-.20810	.05130	.02770	-.08610	.00690	-.00060	.09230	-.41040	-5.84330	6.36280
	GRADIENT	.00314	.00107	-.00124	-.01424	.00158	-.00005	-.00115	.00515	.01386	1.00303

RUN NO. 1055/ 0 RN/L = 3.50 GRADIENT INTERVAL = -5.00/ 5.00

ALPHAT	BETAT	CNFT	CAFT	CLMFT	CYFT	CYNFT	CBLFT	CABT	CP7	ALPHAO	BETAO
-4.080	-6.081	-.20800	.05090	.04770	.08950	-.00900	.00020	.08990	-.39990	-4.16020	-6.09390
-4.272	-3.977	-.20090	.05240	.04120	.05630	-.00720	.00000	.08600	-.38250	-4.33460	-4.00610
-4.234	.379	-.16710	.05220	.02400	-.00740	.00050	-.00030	.08730	-.38820	-4.25010	.37480
-3.753	4.310	-.16830	.05260	.03420	-.05840	.00490	-.00040	.08480	-.37730	-3.79970	4.32490
-3.836	6.163	-.17030	.05150	.03470	-.08450	.00740	-.00060	.08790	-.39080	-3.88100	6.17160
	GRADIENT	.00400	.00002	-.00090	-.01386	.00147	-.00005	-.00014	.00059	.06374	1.00533

RUN NO. 1056/ 0 RN/L = 3.50 GRADIENT INTERVAL = -5.00/ 5.00

ALPHAT	BETAT	CNFT	CAFT	CLMFT	CYFT	CYNFT	CBLFT	CABT	CP7	ALPHAO	BETAO
-.201	-6.969	-.16130	.04590	.06360	.10960	-.01020	.00020	.09020	-.40130	-.38280	-7.00110
-.198	-4.765	-.14930	.04340	.05720	.07320	-.00800	.00010	.09050	-.40260	-.36400	-4.81450
-.241	-.447	-.11360	.04960	.03600	.00420	-.00070	-.00020	.07980	-.35510	-.33210	-.50900
-.176	3.640	-.11650	.05070	.04370	-.05680	.00680	-.00020	.08050	-.35810	-.29720	3.58650
-.163	5.807	-.11840	.04940	.04720	-.08990	.00990	-.00030	.08410	-.37390	-.30040	5.75000
	GRADIENT	.00394	.00087	-.00164	-.01547	.00176	-.00004	-.00120	.00535	.00794	.99942

RUN NO. 1058/ 0 RN/L = 3.51 GRADIENT INTERVAL = -5.00/ 5.00

ALPHAT	BETAT	CNFT	CAFT	CLMFT	CYFT	CYNFT	CBLFT	CABT	CP7	ALPHAO	BETAO
4.408	-5.805	-.06850	.04640	.06660	.10160	-.01160	.00030	.08000	-.35580	4.10010	-5.77710
4.254	-3.706	-.06200	.04660	.06180	.06490	-.00940	.00010	.07850	-.34900	3.95790	-3.68620
3.925	.104	-.04100	.04270	.04530	.00080	.00030	-.00020	.08180	-.36360	3.69110	.10190
4.070	4.013	-.04500	.04810	.05330	-.06360	.00970	-.00030	.07750	-.34460	3.80640	3.99080
4.008	6.095	-.04520	.04250	.05360	-.10040	.01270	-.00040	.08600	-.38240	3.75690	6.06680
	GRADIENT	.00219	.00020	-.00109	-.01665	.00247	-.00005	-.00013	.00059	-.01941	.99452

IA156A, AEDC PWT 16T-470, O T S W/SILTS (R8NT74) (10 MAY 80)

REFERENCE DATA

SREF = 2690.0000 SQ.FT. XMRP = 976.0000 IN. XT
LREF = 1290.3000 INCHES YMRP = .0000 IN. YT
BREF = 1290.3000 INCHES ZMRP = 400.0000 IN. ZT
SCALE = .0200

PARAMETRIC DATA

IB-ELV = 12.000 OB-ELV = 11.000
BDFLAP = .000 SPDBRK = .000
RUDDER = .000 SILTS = 1.000
MACH = .950 RN/L = 3.500

RUN NO. 1059/ 0 RN/L = 3.50 GRADIENT INTERVAL = -5.00/ 5.00

ALPHAT	BETAT	CNFT	CAFT	CLMFT	CYFT	CYNFT	CBLFT	CABT	CP7	ALPHAO	BETAO
-8.358	-5.882	-.28180	.05070	.02210	.10290	-.01230	.00000	.11190	-.49770	-8.24200	-5.87980
-8.393	-3.806	-.27570	.05980	.01880	.06540	-.00920	-.00020	.09890	-.44000	-8.27330	-3.81380
-8.326	.402	-.24900	.05990	.00360	-.00750	.00130	-.00040	.09980	-.44410	-8.17260	.40020
-8.153	4.355	-.24890	.05920	.00960	-.06580	.00750	-.00050	.10220	-.45450	-8.00680	4.35450
-8.181	6.280	-.25140	.05900	.01000	-.09480	.00900	-.00060	.10420	-.46360	-8.03220	6.27040
	GRADIENT	.00332	-.00007	-.00115	-.01609	.00205	-.00004	.00040	-.00177	.03256	1.00091

RUN NO. 1060/ 0 RN/L = 3.50 GRADIENT INTERVAL = -5.00/ 5.00

ALPHAT	BETAT	CNFT	CAFT	CLMFT	CYFT	CYNFT	CBLFT	CABT	CP7	ALPHAO	BETAO
-6.264	-5.987	-.24100	.05560	.02910	.10670	-.01590	.00010	.10410	-.46320	-6.21980	-5.99580
-6.213	-4.052	-.23310	.05980	.02670	.07180	-.01280	-.00010	.09620	-.42800	-6.17030	-4.07370
-6.336	.107	-.20730	.06000	.01030	-.00240	.00000	-.00040	.09570	-.42560	-6.24740	.10150
-6.142	4.258	-.20800	.05900	.01710	-.06380	.00870	-.00050	.09830	-.43710	-6.06930	4.26530
-5.830	6.368	-.20340	.05790	.01990	-.09350	.01050	-.00070	.10170	-.45230	-5.78050	6.36860
	GRADIENT	.00302	-.00010	-.00116	-.01632	.00259	-.00005	.00025	-.00109	.01215	1.00355

RUN NO. 1061/ 0 RN/L = 3.50 GRADIENT INTERVAL = -5.00/ 5.00

ALPHAT	BETAT	CNFT	CAFT	CLMFT	CYFT	CYNFT	CBLFT	CABT	CP7	ALPHAO	BETAO
-4.067	-6.078	-.20150	.05900	.03910	.10110	-.01460	.00020	.09690	-.43100	-4.12090	-6.09790
-4.306	-3.974	-.19710	.05940	.03320	.06460	-.01110	.00000	.09350	-.41580	-4.33610	-4.00570
-4.260	.378	-.16280	.05990	.01630	-.00850	.00110	-.00040	.09470	-.42110	-4.25100	.37510
-3.773	4.323	-.16200	.05930	.02640	-.06310	.00680	-.00050	.09480	-.42170	-3.80560	4.34160
-3.845	6.148	-.16560	.05960	.02710	-.09080	.00970	-.00070	.09680	-.43040	-3.87610	6.16010
	GRADIENT	.00429	-.00001	-.00087	-.01542	.00217	-.00006	.00016	-.00072	.06318	1.00607

RUN NO. 1062/ 0 RN/L = 3.50 GRADIENT INTERVAL = -5.00/ 5.00

ALPHAT	BETAT	CNFT	CAFT	CLMFT	CYFT	CYNFT	CBLFT	CABT	CP7	ALPHAO	BETAO
-.207	-6.949	-.15130	.05020	.05800	.10920	-.01160	.00030	.10180	-.45270	-.39790	-6.99200
-.196	-4.783	-.14020	.05860	.05270	.07150	-.00850	.00010	.09100	-.40470	-.37870	-4.84300
-.228	-.468	-.10420	.05690	.03230	.00260	-.00040	-.00020	.09050	-.40240	-.34740	-.53240
-.155	3.632	-.10800	.05800	.04080	-.05700	.00750	-.00020	.09180	-.40810	-.30680	3.58900
-.150	5.800	-.11030	.05570	.04310	-.08940	.01050	-.00040	.09530	-.42380	-.30650	5.75060
	GRADIENT	.00387	-.00007	-.00144	-.01528	.00190	-.00004	.00009	-.00040	.00853	1.00202

IA156A, AEDC PWT 16T-470, O T S W/SILTS (R8NT74) (10 MAY 80)

REFERENCE DATA

SREF = 2690.0000 SQ.FT. XMRP = 976.0000 IN. XT
LREF = 1290.3000 INCHES YMRP = .0000 IN. YT
BREF = 1290.3000 INCHES ZMRP = 400.0000 IN. ZT
SCALE = .0200

PARAMETRIC DATA

IB-ELV = 12.000 OB-ELV = 11.000
BDFLAP = .000 SPDBRK = .000
RUDDER = .000 SILTS = 1.000
MACH = .950 RN/L = 3.500

RUN NO. 1063/ 0 RN/L = 3.50 GRADIENT INTERVAL = -5.00/ 5.00

ALPHAT	BETAT	CNFT	CAFT	CLMFT	CYFT	CYNFT	CBLFT	CABT	CP7	ALPHAO	BETAO
4.300	-5.872	-.07090	.05450	.06620	.10860	-.01330	.00020	.08890	-.39540	3.97310	-5.84630
4.268	-3.774	-.05830	.05560	.05920	.07400	-.01200	.00010	.08590	-.38220	3.96530	-3.75620
4.092	.184	-.03470	.05300	.04100	-.00100	.00100	-.00020	.08550	-.38040	3.86810	.18320
4.053	3.956	-.04130	.05470	.05040	-.06770	.01070	-.00030	.08620	-.38350	3.78790	3.93370
4.036	6.094	-.04230	.05350	.05260	-.10460	.01320	-.00050	.09010	-.40060	3.76200	6.06660
	GRADIENT	.00223	-.00012	-.00117	-.01834	.00294	-.00005	.00004	-.00016	-.02296	.99483

IA156A, AEDC PWT 16T-470, O T S W/SILTS (R8NT75) (10 MAY 80)

REFERENCE DATA

SREF = 2690.0000 SQ.FT. XMRP = 976.0000 IN. XT
LREF = 1290.3000 INCHES YMRP = .0000 IN. YT
BREF = 1290.3000 INCHES ZMRP = 400.0000 IN. ZT
SCALE = .0200

PARAMETRIC DATA

IB-ELV = 12.000 OB-ELV = 11.000
BDFLAP = .000 SPDBRK = .000
RUDDER = .000 SILTS = 1.000
MACH = 1.050 RN/L = 3.500

RUN NO. 1064/ 0 RN/L = 3.50 GRADIENT INTERVAL = -5.00/ 5.00

ALPHAT	BETAT	CNFT	CAFT	CLMFT	CYFT	CYNFT	CBLFT	CABT	CP7	ALPHAO	BETAO
-8.378	-5.900	-.29060	.07450	.02040	.10770	-.00930	.00000	.12790	-.56910	-8.23450	-5.89090
-8.410	-3.816	-.28450	.08130	.01530	.06720	-.00550	-.00030	.11870	-.52820	-8.26490	-3.81970
-8.379	.395	-.25380	.08740	-.00170	-.00610	.00090	-.00040	.11320	-.50370	-8.18150	.39510
-8.193	4.345	-.25900	.09630	.00610	-.06620	.00430	-.00050	.10630	-.47280	-8.02340	4.34700
-8.207	6.289	-.26020	.08500	.00580	-.09900	.00610	-.00070	.11790	-.52450	-8.02670	6.27270
	GRADIENT	.00317	.00183	-.00116	-.01636	.00120	-.00002	-.00152	.00678	.02948	1.00069

RUN NO. 1065/ 0 RN/L = 3.51 GRADIENT INTERVAL = -5.00/ 5.00

ALPHAT	BETAT	CNFT	CAFT	CLMFT	CYFT	CYNFT	CBLFT	CABT	CP7	ALPHAO	BETAO
-6.284	-6.013	-.24420	.08490	.02690	.11280	-.01400	.00010	.11310	-.50290	-6.22110	-6.01420
-6.216	-4.059	-.23630	.08480	.02310	.07350	-.00970	-.00010	.11110	-.49400	-6.14990	-4.06990
-6.384	.106	-.20700	.08610	.00330	-.00190	-.00060	-.00040	.11360	-.50520	-6.26600	.10310
-6.134	4.265	-.20980	.08630	.01180	-.06380	.00590	-.00060	.11150	-.49600	-6.04020	4.27020
-6.109	6.269	-.21360	.08500	.01320	-.09640	.00890	-.00080	.11400	-.50690	-6.01820	6.26970
	GRADIENT	.00318	.00018	-.00136	-.01649	.00187	-.00006	.00005	-.00024	.01317	1.00192

IA156A, AEDC PWT 16T-470, O T S W/SILTS (R8NT75) (10 MAY 80)

REFERENCE DATA

SREF = 2690.0000 SQ.FT. XMRP = 976.0000 IN. XT
LREF = 1290.3000 INCHES YMRP = .0000 IN. YT
BREF = 1290.3000 INCHES ZMRP = 400.0000 IN. ZT
SCALE = .0200

PARAMETRIC DATA

IB-ELV = 12.000 OB-ELV = 11.000
BDFLAP = .000 SPDBRK = .000
RUDDER = .000 SILTS = 1.000
MACH = 1.050 RN/L = 3.500

RUN NO. 1066/ 0 RN/L = 3.50 GRADIENT INTERVAL = -5.00/ 5.00

ALPHAT	BETAT	CNFT	CAFT	CLMFT	CYFT	CYNFT	CBLFT	CABT	CP7	ALPHAO	BETAO
-4.095	-6.103	-.20350	.08470	.03680	.10590	-.01250	.00010	.10950	-.48680	-4.13890	-6.11450
-4.320	-3.992	-.19660	.08460	.03040	.06360	-.00780	-.00010	.10820	-.48100	-4.34350	-4.02110
-4.301	.365	-.15960	.08690	.00940	-.00680	.00050	-.00040	.10970	-.48800	-4.27050	.36190
-3.779	4.325	-.16100	.08640	.02080	-.06640	.00590	-.00050	.10830	-.48180	-3.79440	4.34670
-3.866	6.164	-.16610	.08600	.02130	-.09760	.01000	-.00070	.10880	-.48390	-3.68100	6.17990
	GRADIENT	.00435	.00022	-.00122	-.01564	.00165	-.00005	.00002	-.00012	.06520	1.00611

RUN NO. 1067/ 0 RN/L = 3.50 GRADIENT INTERVAL = -5.00/ 5.00

ALPHAT	BETAT	CNFT	CAFT	CLMFT	CYFT	CYNFT	CBLFT	CABT	CP7	ALPHAO	BETAO
-.215	-6.991	-.14920	.08330	.05710	.12090	-.01440	.00020	.10640	-.47310	-.43400	-7.03920
-.216	-4.816	-.13650	.08230	.05070	.07740	-.00930	.00000	.10590	-.47100	-.41590	-4.88220
-.291	-.466	-.09590	.08360	.02480	.00450	-.00200	-.00030	.10700	-.47570	-.38970	-.53720
-.212	3.642	-.09710	.08510	.03260	-.05990	.00700	-.00020	.10800	-.48020	-.35230	3.59910
-.196	5.813	-.10100	.08340	.03600	-.09420	.01010	-.00040	.11030	-.49050	-.35170	5.76670
	GRADIENT	.00470	.00033	-.00218	-.01624	.00192	-.00002	.00025	-.00109	.00750	1.00268

RUN NO. 1068/ 0 RN/L = 3.50 GRADIENT INTERVAL = -5.00/ 5.00

ALPHAT	BETAT	CNFT	CAFT	CLMFT	CYFT	CYNFT	CBLFT	CABT	CP7	ALPHAO	BETAO
4.315	-5.857	-.07280	.08020	.06890	.10110	-.00790	.00000	.10440	-.46440	3.95950	-5.83900
4.261	-3.758	-.05640	.08150	.05920	.06860	-.00870	-.00010	.09990	-.44450	3.94500	-3.74820
4.075	.190	-.02820	.07460	.03950	-.00060	.00060	-.00030	.10540	-.46860	3.82510	.18400
4.072	3.960	-.03680	.08150	.04870	-.06700	.01040	-.00030	.10160	-.45180	3.79920	3.94290
4.057	6.093	-.04090	.08120	.05210	-.10370	.01210	-.00040	.10330	-.45960	3.77150	6.06710
	GRADIENT	.00258	-.00001	-.00139	-.01757	.00247	-.00003	.00023	-.00099	-.01898	.99647

IA156A, AEDC PWT 16T-470, O T S W/SILTS (R8NT76) (10 MAY 80)

REFERENCE DATA

SREF = 2690.0000 SQ.FT. XMRP = 976.0000 IN. XT
LREF = 1290.3000 INCHES YMRP = .0000 IN. YT
BREF = 1290.3000 INCHES ZMRP = 400.0000 IN. ZT
SCALE = .0200

PARAMETRIC DATA

IB-ELV = 12.000 OB-ELV = 11.000
BDFLAP = .000 SPDBRK = .000
RUDDER = .000 SILTS = 1.000
MACH = 1.100 RN/L = 3.500

RUN NO. 1069/ 0 RN/L = 3.50 GRADIENT INTERVAL = -5.00/ 5.00

ALPHAT	BETAT	CNFT	CAFT	CLMFT	CYFT	CYNFT	CBLFT	CABT	CP7	ALPHAO	BETAO
-8.379	-6.012	-.28530	.09030	.01840	.10770	-.00900	.00000	.10740	-.47760	-8.22240	-6.00200
-8.435	-3.867	-.27820	.09100	.01320	.06450	-.00520	-.00020	.10420	-.46340	-8.27110	-3.86610
-8.414	.291	-.25050	.09280	-.00380	-.00600	.00040	-.00040	.10300	-.45820	-8.19330	.28400
-8.210	4.314	-.25220	.09080	.00260	-.06430	.00290	-.00050	.10720	-.47700	-8.01870	4.30210
-8.184	6.265	-.25330	.09190	.00460	-.09520	.00480	-.00080	.10710	-.47620	-8.00110	6.24760
	GRADIENT	.00320	-.00002	-.00131	-.01575	.00099	-.00004	.00036	-.00165	.03078	.99843

RUN NO. 1070/ 0 RN/L = 3.50 GRADIENT INTERVAL = -5.00/ 5.00

ALPHAT	BETAT	CNFT	CAFT	CLMFT	CYFT	CYNFT	CBLFT	CABT	CP7	ALPHAO	BETAO
-6.290	-6.017	-.24140	.09060	.02540	.10320	-.01090	.00010	.10210	-.45430	-6.21630	-6.01380
-6.239	-4.082	-.23280	.09110	.02100	.06620	-.00720	-.00010	.09980	-.44410	-6.15510	-4.09060
-6.429	.126	-.20700	.09570	.00220	-.00350	-.00080	-.00040	.09830	-.43720	-6.28480	.11740
-6.170	4.278	-.20720	.09300	.01100	-.05840	.00210	-.00060	.09940	-.44210	-6.06570	4.27340
-5.942	6.379	-.20480	.09210	.01280	-.09560	.00760	-.00080	.10190	-.45340	-5.85490	6.37540
	GRADIENT	.00307	.00023	-.00120	-.01491	.00111	-.00006	-.00005	.00024	.01060	1.00050

RUN NO. 1071/ 0 RN/L = 3.50 GRADIENT INTERVAL = -5.00/ 5.00

ALPHAT	BETAT	CNFT	CAFT	CLMFT	CYFT	CYNFT	CBLFT	CABT	CP7	ALPHAO	BETAO
-4.118	-6.111	-.20270	.09060	.03480	.10370	-.01210	.00010	.09850	-.43800	-4.14390	-6.11660
-4.342	-4.003	-.19620	.09140	.02860	.06150	-.00660	-.00010	.09560	-.42530	-4.34540	-4.02460
-4.310	.381	-.15870	.09320	.00870	-.00680	-.00070	-.00040	.09570	-.42570	-4.26300	.37310
-3.782	4.331	-.15890	.09380	.02080	-.06470	.00420	-.00050	.09550	-.42470	-3.79600	4.33900
-3.851	6.161	-.16290	.09270	.02170	-.09640	.00890	-.00070	.09750	-.43370	-3.87150	6.16690
	GRADIENT	.00455	.00029	-.00100	-.01515	.00130	-.00005	-.00001	.00007	.06506	1.00354

RUN NO. 1072/ 0 RN/L = 3.50 GRADIENT INTERVAL = -5.00/ 5.00

ALPHAT	BETAT	CNFT	CAFT	CLMFT	CYFT	CYNFT	CBLFT	CABT	CP7	ALPHAO	BETAO
-.210	-7.013	-.14870	.08910	.05660	.11580	-.01240	.00010	.09610	-.42740	-.43170	-7.04650
-.217	-4.837	-.13800	.09270	.05060	.07630	-.00820	.00000	.09070	-.40330	-.42130	-4.88940
-.271	-.468	-.09940	.09360	.02680	.00320	-.00140	-.00030	.09150	-.40680	-.38140	-.53580
-.198	3.648	-.10140	.08750	.03440	-.05890	.00590	-.00030	.09920	-.44120	-.35180	3.59720
-.183	5.845	-.10320	.09230	.03660	-.09450	.00930	-.00050	.09490	-.42230	-.34930	5.78800
	GRADIENT	.00436	-.00060	-.00195	-.01594	.00166	-.00004	.00099	-.00443	.00820	1.00012

IA156A, AEDC PWT 16T-470, O T S W/SILTS (R8NT76) (10 MAY 80)

REFERENCE DATA

SREF = 2690.0000 SQ.FT. XMRP = 976.0000 IN. XT
LREF = 1290.3000 INCHES YMRP = .0000 IN. YT
BREF = 1290.3000 INCHES ZMRP = 400.0000 IN. ZT
SCALE = .0200

PARAMETRIC DATA

IB-ELV = 12.000 OB-ELV = 11.000
BDFLAP = .000 SPDBRK = .000
RUDDER = .000 SILTS = 1.000
MACH = 1.100 RN/L = 3.500

RUN NO. 1073/ 0 RN/L = 3.51 GRADIENT INTERVAL = -5.00/ 5.00

ALPHAT	BETAT	CNFT	CAFT	CLMFT	CYFT	CYNFT	CBLFT	CABT	CP7	ALPHAO	BETAO
4.465	-5.752	-.06610	.08840	.07010	.09820	-.00880	.00000	.08880	-.39480	4.08220	-5.73390
4.274	-3.748	-.05520	.08690	.06180	.06460	-.00730	-.00010	.08850	-.39380	3.92320	-3.73650
4.110	.188	-.03240	.08890	.04380	-.00370	.00130	-.00020	.08610	-.38280	3.82330	.18080
4.108	3.935	-.04050	.08950	.05290	-.06680	.00940	-.00030	.08740	-.38890	3.79740	3.91210
4.071	6.074	-.04480	.08850	.05500	-.10260	.01040	-.00040	.08970	-.39880	3.75920	6.04200
	GRADIENT	.00195	.00034	-.00119	-.01710	.00217	-.00003	-.00015	.00066	-.01645	.99551

IA156A, AEDC PWT 16T-470, O T S W/SILTS (R8NT77) (10 MAY 80)

REFERENCE DATA

SREF = 2690.0000 SQ.FT. XMRP = 976.0000 IN. XT
LREF = 1290.3000 INCHES YMRP = .0000 IN. YT
BREF = 1290.3000 INCHES ZMRP = 400.0000 IN. ZT
SCALE = .0200

PARAMETRIC DATA

IB-ELV = 8.000 OB-ELV = 11.000
BDFLAP = .000 SPDBRK = .000
RUDDER = .000 SILTS = 1.000
MACH = .600 RN/L = 3.500

RUN NO. 1077/ 0 RN/L = 3.50 GRADIENT INTERVAL = -5.00/ 5.00

ALPHAT	BETAT	CNFT	CAFT	CLMFT	CYFT	CYNFT	CBLFT	CABT	CP7	ALPHAO	BETAO
-8.256	-7.887	-.25860	.03670	.03190	.08180	.00860	.00000	.09090	-.40430	-8.23670	-7.85170
-8.132	-5.827	-.24870	.03920	.02700	.05740	.00630	-.00010	.08640	-.38420	-8.10530	-5.81070
-8.165	-3.808	-.24840	.03290	.02370	.03520	.00490	-.00010	.09350	-.41590	-8.13560	-3.80360
-8.071	.296	-.22980	.04400	.01670	-.00420	-.00090	-.00020	.08130	-.36140	-8.04280	.29380
-7.958	4.256	-.22860	.03340	.01940	-.03630	-.00860	-.00030	.09370	-.41690	-7.91780	4.24700
-7.942	6.193	-.22650	.04210	.02030	-.05390	-.01120	-.00040	.08580	-.38150	-7.90310	6.17420
-7.958	8.209	-.22020	.03870	.01890	-.07300	-.01380	-.00060	.09010	-.40080	-7.92060	8.17740
	GRADIENT	.00247	.00008	-.00054	-.00887	-.00167	-.00002	.00001	-.00004	.02698	.99831

RUN NO. 1078/ 0 RN/L = 3.50 GRADIENT INTERVAL = -5.00/ 5.00

ALPHAT	BETAT	CNFT	CAFT	CLMFT	CYFT	CYNFT	CBLFT	CABT	CP7	ALPHAO	BETAO
-6.139	-7.950	-.22210	.03870	.03810	.08970	.00450	.00010	.08600	-.38250	-6.16050	-7.92480
-6.112	-5.915	-.21780	.04000	.03350	.06390	.00400	.00000	.08420	-.37440	-6.12470	-5.90600
-6.037	-3.998	-.21220	.04170	.03010	.04010	.00310	-.00010	.08170	-.36340	-6.04860	-4.00150
-6.111	.081	-.19960	.04210	.02250	-.00270	-.00160	-.00020	.08290	-.36890	-6.11320	.07600
-5.949	4.186	-.19410	.04340	.02710	-.03780	-.00700	-.00030	.08180	-.36370	-5.95890	4.18390
-5.874	6.175	-.19090	.04240	.02750	-.05770	-.00810	-.00050	.08290	-.36870	-5.88140	6.16600
-5.679	8.315	-.18220	.04120	.02630	-.08300	-.00860	-.00080	.08610	-.38280	-5.68570	8.29780
	GRADIENT	.00221	.00021	-.00037	-.00952	-.00123	-.00002	.00001	-.00004	.01099	1.00020

IA156A, AEDC PWT 16T-470, O T S W/SILTS (R8NT77) (10 MAY 80)

REFERENCE DATA

SREF = 2690.0000 SQ.FT. XMRP = 976.0000 IN. XT
LREF = 1290.3000 INCHES YMRP = .0000 IN. YT
BREF = 1290.3000 INCHES ZMRP = 400.0000 IN. ZT
SCALE = .0200

PARAMETRIC DATA

IB-ELV = 8.000 OB-ELV = 11.000
BDFLAP = .000 SPDBRK = .000
RUDDER = .000 SILTS = 1.000
MACH = .600 RN/L = 3.500

RUN NO. 1079/ 0 RN/L = 3.50 GRADIENT INTERVAL = -5.00/ 5.00

ALPHAT	BETAT	CNFT	CAFT	CLMFT	CYFT	CYNFT	CBLFT	CABT	CP7	ALPHAO	BETAO
-3.945	-8.044	-.19030	.03790	.04530	.09600	.00150	.00020	.08520	-.37900	-4.01120	-8.03440
-4.175	-5.943	-.18990	.04050	.04010	.06530	.00210	.00010	.08180	-.36400	-4.22910	-5.94580
-4.187	-3.888	-.18320	.04240	.03620	.03780	.00160	.00010	.07850	-.34930	-4.23740	-3.90470
-4.001	.186	-.16370	.04400	.02980	-.00450	-.00200	-.00010	.07860	-.34950	-4.04930	.18070
-3.657	4.251	-.15880	.04430	.03660	-.04330	-.00520	-.00040	.07960	-.35380	-3.72130	4.26330
-3.748	6.052	-.15740	.04360	.03530	-.06210	-.00610	-.00050	.08010	-.35630	-3.80380	6.05740
-3.794	8.045	-.15500	.04110	.03360	-.08680	-.00550	-.00070	.08440	-.37530	-3.83870	8.04280
	GRADIENT	.00300	.00023	.00005	-.00996	-.00084	-.00006	.00014	-.00055	.06340	1.00354

RUN NO. 1080/ 0 RN/L = 3.50 GRADIENT INTERVAL = -5.00/ 5.00

ALPHAT	BETAT	CNFT	CAFT	CLMFT	CYFT	CYNFT	CBLFT	CABT	CP7	ALPHAO	BETAO
-.206	-8.703	-.14830	.03970	.06120	.11700	-.00550	.00030	.08030	-.35700	-.34190	-8.72450
-.203	-6.476	-.14230	.04160	.05660	.07960	-.00150	.00020	.07750	-.34490	-.33570	-6.50740
-.194	-4.492	-.13650	.04230	.05340	.05230	-.00160	.00010	.07610	-.33840	-.32200	-4.53590
-.190	-.355	-.12220	.04450	.04570	-.00020	-.00080	-.00010	.07470	-.33220	-.29730	-.41550
-.144	3.755	-.11790	.04440	.05000	-.04700	-.00050	-.00010	.07470	-.33230	-.26840	3.69000
-.139	5.855	-.11410	.04330	.04960	-.07200	-.00070	-.00030	.07530	-.33490	-.26240	5.78390
-.139	7.957	-.10890	.04280	.04900	-.10110	.00180	-.00050	.07810	-.34730	-.25650	7.87980
	GRADIENT	.00226	.00025	-.00041	-.01204	.00013	-.00002	-.00017	.00074	.00650	.99740

RUN NO. 1081/ 0 RN/L = 3.50 GRADIENT INTERVAL = -5.00/ 5.00

ALPHAT	BETAT	CNFT	CAFT	CLMFT	CYFT	CYNFT	CBLFT	CABT	CP7	ALPHAO	BETAO
4.400	-7.928	-.08070	.03880	.07600	.12840	-.01390	.00010	.07360	-.32750	4.16780	-7.89040
4.326	-5.828	-.07180	.04010	.07130	.08690	-.00850	.00010	.07090	-.31520	4.09380	-5.79420
4.265	-3.826	-.06740	.03970	.06800	.05700	-.00560	.00000	.07130	-.31700	4.03380	-3.79660
4.067	.084	-.06020	.04190	.06170	-.00030	-.00110	.00000	.07130	-.31700	3.84610	.08140
4.109	4.097	-.05550	.04350	.06300	-.05490	.00220	-.00030	.07030	-.31260	3.89270	4.06040
4.053	6.210	-.05300	.04190	.06170	-.08690	.00400	-.00040	.07180	-.31950	3.84530	6.16710
4.038	8.202	-.04830	.03970	.06090	-.11660	.00750	-.00070	.07550	-.33580	3.83970	8.15410
	GRADIENT	.00150	.00048	-.00063	-.01412	.00098	-.00004	-.00013	.00056	-.01768	.99168

IA156A, AEDC PWT 16T-470, O T S W/SILTS (R8NT77) (10 MAY 80)

REFERENCE DATA

SREF = 2690.0000 SQ.FT. XMRP = 976.0000 IN. XT
LREF = 1290.3000 INCHES YMRP = .0000 IN. YT
BREF = 1290.3000 INCHES ZMRP = 400.0000 IN. ZT
SCALE = .0200

PARAMETRIC DATA

IB-ELV = 8.000 OB-ELV = 11.000
BDFLAP = .000 SPDBRK = .000
RUDDER = .000 SILTS = 1.000
MACH = .600 RN/L = 3.500

RUN NO. 1082/ 0 RN/L = 3.50 GRADIENT INTERVAL = -5.00/ 5.00

ALPHAT	BETAT	CNFT	CAFT	CLMFT	CYFT	CYNFT	CBLFT	CABT	CP7	ALPHAO	BETAO
6.444	-7.976	-.04800	.03670	.08020	.13930	-.01880	.00010	.07210	-.32050	6.18350	-7.95170
6.442	-5.913	-.04260	.03760	.07810	.09930	-.01300	.00020	.07010	-.31180	6.17370	-5.89090
6.416	-3.840	-.04000	.03900	.07670	.06280	-.00760	.00010	.06820	-.30320	6.13950	-3.82030
6.127	.190	-.03470	.04070	.07050	-.00120	-.00110	.00000	.06990	-.31070	5.85990	.18650
6.057	4.104	-.03100	.04110	.06970	-.05630	.00220	-.00020	.07020	-.31220	5.79910	4.07580
6.008	6.020	-.02550	.04070	.06840	-.08390	.00460	-.00050	.07020	-.31210	5.75720	5.98770
6.071	8.286	-.01720	.03700	.06630	-.12180	.00940	-.00070	.07530	-.33500	5.83470	8.24890
	GRADIENT	.00113	.00027	-.00088	-.01500	.00124	-.00004	.00025	-.00114	-.04298	.99405

RUN NO. 1083/ 0 RN/L = 3.50 GRADIENT INTERVAL = -5.00/ 5.00

ALPHAT	BETAT	CNFT	CAFT	CLMFT	CYFT	CYNFT	CBLFT	CABT	CP7	ALPHAO	BETAO
8.372	-7.817	-.01490	.03410	.08400	.13660	-.01990	.00020	.07190	-.31960	8.08220	-7.80110
8.288	-5.754	-.01260	.03560	.08190	.09670	-.01350	.00020	.06890	-.30650	7.98800	-5.73910
8.287	-3.777	-.01150	.03650	.08160	.05990	-.00800	.00010	.06730	-.29940	7.97560	-3.76300
8.182	.182	-.00340	.03850	.07560	-.00020	-.00200	.00000	.07070	-.31440	7.87870	.17510
8.227	4.223	.00310	.03870	.07610	-.05910	.00400	-.00030	.06970	-.31000	7.93290	4.19990
8.160	6.219	.00910	.03770	.07400	-.08830	.00690	-.00050	.07060	-.31410	7.87550	6.19360
8.166	8.259	.01360	.03630	.07320	-.12610	.01290	-.00090	.07370	-.32800	7.89890	8.23370
	GRADIENT	.00182	.00027	-.00068	-.01487	.00150	-.00005	.00030	-.00132	-.00527	.99543

IA156A, AEDC PWT 16T-470, O T S W/SILTS (R8NT78) (10 MAY 80)

REFERENCE DATA

SREF = 2690.0000 SQ.FT. XMRP = 976.0000 IN. XT
LREF = 1290.3000 INCHES YMRP = .0000 IN. YT
BREF = 1290.3000 INCHES ZMRP = 400.0000 IN. ZT
SCALE = .0200

PARAMETRIC DATA

IB-ELV = 8.000 OB-ELV = 11.000
BDFLAP = .000 SPDBRK = .000
RUDDER = .000 SILTS = 1.000
MACH = .800 RN/L = 3.500

RUN NO. 1084/ 0 RN/L = 3.50 GRADIENT INTERVAL = -5.00/ 5.00

ALPHAT	BETAT	CNFT	CAFT	CLMFT	CYFT	CYNFT	CBLFT	CABT	CP7	ALPHAO	BETAO
-8.240	-5.841	-.27150	.03750	.03390	.07530	-.00140	.00000	.09660	-.42950	-8.20810	-5.82670
-8.295	-3.795	-.26300	.04470	.02910	.04830	-.00210	-.00010	.08740	-.38870	-8.25910	-3.79440
-8.207	.193	-.24450	.04590	.01730	.00000	-.00170	-.00030	.08780	-.39030	-8.15320	.18670
-8.058	4.373	-.24180	.04790	.02110	-.04830	-.00290	-.00030	.08530	-.37960	-7.98500	4.36150
-8.067	6.277	-.24120	.04690	.02170	-.07020	-.00360	-.00040	.09720	-.38790	-7.99340	6.25140
	GRADIENT	.00258	.00039	-.00096	-.01183	-.00010	-.00002	-.00026	.00113	.03361	.99858

RUN NO. 1085/ 0 RN/L = 3.50 GRADIENT INTERVAL = -5.00/ 5.00

ALPHAT	BETAT	CNFT	CAFT	CLMFT	CYFT	CYNFT	CBLFT	CABT	CP7	ALPHAO	BETAO
-6.203	-5.999	-.23590	.04620	.04080	.07990	-.00360	.00020	.08600	-.38270	-6.22670	-5.99380
-6.133	-4.043	-.22870	.04740	.03690	.05270	-.00370	.00000	.08360	-.37200	-6.15720	-4.05250
-6.237	.113	-.20660	.04910	.02300	-.00220	-.00120	-.00020	.08190	-.36410	-6.22600	.10590
-6.042	4.271	-.20520	.04720	.02840	-.04640	-.00270	-.00020	.08440	-.37540	-6.03350	4.26940
-5.995	6.261	-.20470	.04760	.02860	-.07180	-.00250	-.00040	.08470	-.37680	-5.98200	6.24900
	GRADIENT	.00283	-.00002	-.00102	-.01192	.00012	-.00002	.00010	-.00041	.01488	1.00103

RUN NO. 1086/ 0 RN/L = 3.50 GRADIENT INTERVAL = -5.00/ 5.00

ALPHAT	BETAT	CNFT	CAFT	CLMFT	CYFT	CYNFT	CBLFT	CABT	CP7	ALPHAO	BETAO
-4.118	-6.095	-.20230	.04020	.04810	.08120	-.00460	.00020	.08910	-.39640	-4.20230	-6.10160
-4.251	-3.972	-.19640	.04280	.04240	.04880	-.00380	.00010	.08510	-.37850	-4.32680	-3.99500
-4.196	.363	-.16750	.04780	.02820	-.00680	-.00110	-.00010	.08060	-.35850	-4.23470	.35930
-3.736	4.301	-.16570	.04980	.03720	-.04990	-.00130	-.00030	.07950	-.35350	-3.79930	4.31420
-3.790	6.161	-.16670	.04790	.03740	-.07310	-.00080	-.00040	.08090	-.35970	-3.85350	6.16650
	GRADIENT	.00376	.00085	-.00067	-.01194	.00031	-.00005	-.00068	.01305	.06305	1.00433

RUN NO. 1087/ 0 RN/L = 3.50 GRADIENT INTERVAL = -5.00/ 5.00

ALPHAT	BETAT	CNFT	CAFT	CLMFT	CYFT	CYNFT	CBLFT	CABT	CP7	ALPHAO	BETAO
-.191	-6.852	-.15740	.03850	.06430	.10220	-.00830	.00040	.08660	-.38530	-.36760	-6.88640
-.191	-4.723	-.14760	.04160	.05850	.07010	-.00830	.00030	.08250	-.36680	-.35670	-4.77320
-.205	-.425	-.12440	.04740	.04400	.00500	-.00280	.00010	.07370	-.32800	-.32750	-.48750
-.155	3.664	-.12070	.04410	.04880	-.05070	.00250	-.00010	.07970	-.35460	-.29120	3.60350
-.148	5.771	-.12170	.04330	.05120	-.08090	.00460	-.00020	.08000	-.35570	-.29280	5.70730
	GRADIENT	.00323	.00031	-.00118	-.01441	.00129	-.00005	-.00035	.00152	.00780	.99871

IA156A, AEDC PWT 16T-470, O T S W/SILTS (R8NT78) (10 MAY 80)

REFERENCE DATA

SREF = 2690.0000 SQ.FT. XMRP = 976.0000 IN. XT
LREF = 1290.3000 INCHES YMRP = .0000 IN. YT
BREF = 1290.3000 INCHES ZMRP = 400.0000 IN. ZT
SCALE = .0200

PARAMETRIC DATA

IB-ELV = 8.000 OB-ELV = 11.000
BDFLAP = .000 SPDBRK = .000
RUDDER = .000 SILTS = 1.000
MACH = .800 RN/L = 3.500

RUN NO. 1088/ 0 RN/L = 3.50 GRADIENT INTERVAL = -5.00/ 5.00

ALPHAT	BETAT	CNFT	CAFT	CLMFT	CYFT	CYNFT	CBLFT	CABT	CP7	ALPHAO	BETAO
4.390	-5.806	-.06880	.04270	.06840	.09740	-.01110	.00040	.07290	-.32420	4.10230	-5.77800
4.244	-3.691	-.06410	.04310	.06530	.06030	-.00800	.00030	.07270	-.32350	3.95610	-3.66840
3.976	.135	-.04760	.04510	.05310	.00170	-.00230	.00010	.07170	-.31870	3.72500	.12740
4.077	4.038	-.04600	.04470	.05780	-.05720	.00440	-.00020	.07240	-.32220	3.81530	4.00590
4.003	6.124	-.04870	.04170	.05760	-.09140	.00770	-.00030	.07540	-.33560	3.75910	6.08960
	GRADIENT	.00234	.00021	-.00096	-.01520	.00160	-.00006	-.00004	.00016	-.01808	.99287

RUN NO. 1089/ 0 RN/L = 3.50 GRADIENT INTERVAL = -5.00/ 5.00

ALPHAT	BETAT	CNFT	CAFT	CLMFT	CYFT	CYNFT	CBLFT	CABT	CP7	ALPHAO	BETAO
6.332	-5.739	-.03690	.04020	.07210	.09980	-.01250	.00030	.07280	-.32380	6.02120	-5.72440
6.379	-3.777	-.02840	.04150	.06930	.06500	-.00930	.00030	.06970	-.31020	6.06020	-3.76710
6.025	.173	-.01710	.04380	.05810	-.00120	-.00130	.00010	.06960	-.30970	5.74060	.16790
5.974	4.003	-.01870	.04370	.06150	-.05800	.00450	-.00010	.07030	-.31260	5.68830	3.98120
5.999	6.190	-.01260	.03620	.06080	-.09510	.00920	-.00030	.07880	-.35050	5.72810	6.16660
	GRADIENT	.00126	.00028	-.00101	-.01581	.00178	-.00005	.00008	-.00031	-.04797	.99589

IA156A, AEDC PWT 16T-470, O T S W/SILTS (R8NT79) (10 MAY 80)

REFERENCE DATA

SREF = 2690.0000 SQ.FT. XMRP = 976.0000 IN. XT
LREF = 1290.3000 INCHES YMRP = .0000 IN. YT
BREF = 1290.3000 INCHES ZMRP = 400.0000 IN. ZT
SCALE = .0200

PARAMETRIC DATA

IB-ELV = 8.000 OB-ELV = 11.000
BDFLAP = .000 SPDBRK = .000
RUDDER = .000 SILTS = 1.000
MACH = .900 RN/L = 3.500

RUN NO. 1090/ 0 RN/L = 3.50 GRADIENT INTERVAL = -5.00/ 5.00

ALPHAT	BETAT	CNFT	CAFT	CLMFT	CYFT	CYNFT	CBLFT	CABT	CP7	ALPHAO	BETAO
-8.216	-5.981	-.28050	.04230	.03390	.08900	-.00740	.00010	.10490	-.46670	-8.16260	-5.97960
-8.314	-3.754	-.27650	.05070	.02880	.05250	-.00490	-.00010	.09460	-.42070	-8.25610	-3.76460
-8.248	.189	-.25050	.04850	.01530	-.00190	-.00080	-.00030	.09730	-.43270	-8.17080	.18270
-8.097	4.392	-.25010	.05250	.01930	-.05250	.00070	-.00030	.09290	-.41340	-7.99960	4.38900
-8.120	6.285	-.25110	.05010	.01930	-.07880	.00120	-.00040	.09720	-.43220	-8.01520	6.26920
	GRADIENT	.00321	.00023	-.00114	-.01288	.00068	-.00002	-.00022	.00094	.03159	1.00093

IA156A, AEDC PWT 16T-470, O T S W/SILTS (R8NT79) (10 MAY 80)

REFERENCE DATA

SREF = 2690.0000 SQ.FT. XMRP = 976.0000 IN. XT
LREF = 1290.3000 INCHES YMRP = .0000 IN. YT
BREF = 1290.3000 INCHES ZMRP = 400.0000 IN. ZT
SCALE = .0200

PARAMETRIC DATA

IB-ELV = 8.000 OB-ELV = 11.000
BDFLAP = .000 SPDBRK = .000
RUDDER = .000 SILTS = 1.000
MACH = .900 RN/L = 3.500

RUN NO. 1091/ 0 RN/L = 3.50 GRADIENT INTERVAL = -5.00/ 5.00

ALPHAT	BETAT	CNFT	CAFT	CLMFT	CYFT	CYNFT	CBLFT	CABT	CP7	ALPHAO	BETAO
-6.204	-5.974	-.24640	.04980	.04040	.09420	-.01110	.00020	.09510	-.42310	-6.20750	-5.98210
-6.159	-4.044	-.23740	.04580	.03610	.06260	-.00930	.00010	.09690	-.43110	-6.16000	-4.06630
-6.281	.109	-.21100	.05060	.02010	-.00130	-.00120	-.00030	.09270	-.41240	-6.24630	.09910
-6.085	4.264	-.21210	.05330	.02670	-.05480	.00320	-.00030	.08880	-.39520	-6.05280	4.26810
-6.022	6.250	-.21260	.04830	.02710	-.08260	.00500	-.00040	.09590	-.42660	-5.98690	6.24470
	GRADIENT	.00304	.00090	-.00113	-.01413	.00150	-.00005	-.00097	.00432	.01291	1.00318

RUN NO. 1092/ 0 RN/L = 3.50 GRADIENT INTERVAL = -5.00/ 5.00

ALPHAT	BETAT	CNFT	CAFT	CLMFT	CYFT	CYNFT	CBLFT	CABT	CP7	ALPHAO	BETAO
-3.993	-6.098	-.20660	.05280	.04820	.09200	-.01120	.00040	.08890	-.39550	-4.07340	-6.11570
-4.273	-3.967	-.20160	.05250	.04170	.05860	-.00950	.00010	.08680	-.38610	-4.33310	-3.99920
-4.249	.381	-.16860	.05050	.02470	-.00600	-.00090	-.00010	.08940	-.39750	-4.25680	.37580
-3.744	4.312	-.16840	.05180	.03520	-.05610	.00340	-.00020	.08610	-.38310	-3.78930	4.32660
-3.839	6.164	-.17240	.05150	.03560	-.08240	.00570	-.00040	.08850	-.39350	-3.88020	6.17250
	GRADIENT	.00407	-.00009	-.00084	-.01387	.00157	-.00004	-.00007	.00031	.06485	1.00579

RUN NO. 1093/ 0 RN/L = 3.50 GRADIENT INTERVAL = -5.00/ 5.00

ALPHAT	BETAT	CNFT	CAFT	CLMFT	CYFT	CYNFT	CBLFT	CABT	CP7	ALPHAO	BETAO
-.208	-6.946	-.16260	.04440	.06460	.11010	-.01170	.00040	.09220	-.40990	-.38860	-6.98180
-.207	-4.783	-.15070	.04660	.05830	.07340	-.00950	.00020	.08840	-.39310	-.37340	-4.83720
-.256	-.468	-.11480	.04760	.03680	.00540	-.00250	.00000	.08230	-.36590	-.34250	-.53330
-.191	3.631	-.11740	.04620	.04440	-.05580	.00530	-.00010	.08590	-.38220	-.30690	3.57690
-.179	5.809	-.12030	.04450	.04790	-.08890	.00850	-.00020	.08940	-.39750	-.30910	5.75180
	GRADIENT	.00400	-.00005	-.00168	-.01536	.00176	-.00004	-.00031	.00134	.00790	.99997

RUN NO. 1094/ 0 RN/L = 3.50 GRADIENT INTERVAL = -5.00/ 5.00

ALPHAT	BETAT	CNFT	CAFT	CLMFT	CYFT	CYNFT	CBLFT	CABT	CP7	ALPHAO	BETAO
4.383	-5.790	-.07060	.04290	.06730	.10390	-.01330	.00040	.08460	-.37610	4.08540	-5.76280
4.229	-3.683	-.06430	.04210	.06210	.06690	-.01130	.00030	.08390	-.37290	3.94440	-3.66410
3.921	.128	-.04400	.04450	.04580	.00190	-.00150	.00000	.08030	-.35740	3.70490	.12280
4.063	4.018	-.04680	.04840	.05410	-.06280	.00810	-.00020	.07750	-.34480	3.81080	3.99260
4.000	6.121	-.04850	.04180	.05410	-.09840	.01090	-.00030	.08640	-.38410	3.76010	6.09060
	GRADIENT	.00226	.00082	-.00103	-.01684	.00252	-.00006	-.00083	.00365	-.01719	.99426

IA156A, AEDC PWT 16T-470, O T S W/SILTS (R8NT80) (10 MAY 80)

REFERENCE DATA

SREF = 2690.0000 SQ.FT. XMRP = 976.0000 IN. XT
LREF = 1290.3000 INCHES YMRP = .0000 IN. YT
BREF = 1290.3000 INCHES ZMRP = 400.0000 IN. ZT
SCALE = .0200

PARAMETRIC DATA

IB-ELV = 8.000 OB-ELV = 11.000
BDFLAP = .000 SPDBRK = .000
RUDDER = .000 SILTS = 1.000
MACH = .950 RN/L = 3.500

RUN NO. 1095/ 0 RN/L = 3.50 GRADIENT INTERVAL = -5.00/ 5.00

ALPHAT	BETAT	CNFT	CAFT	CLMFT	CYFT	CYNFT	CBLFT	CABT	CP7	ALPHAO	BETAO
-8.418	-6.045	-.28570	.05840	.02330	.10620	-.01360	.00020	.10540	-.46870	-8.29370	-6.04710
-8.327	-3.760	-.27380	.06010	.02010	.06650	-.01100	.00000	.09900	-.44010	-8.20310	-3.77120
-8.345	.179	-.25210	.05890	.00520	-.00130	-.00090	-.00030	.10110	-.44960	-8.18470	.17260
-8.159	4.456	-.25130	.05900	.01040	-.06640	.00610	-.00030	.10240	-.45540	-8.00170	4.45400
-8.164	6.280	-.25340	.05760	.01120	-.09410	.00750	-.00040	.10550	-.46940	-8.00930	6.27090
	GRADIENT	.00270	-.00013	-.00115	-.01616	.00208	-.00004	.00041	-.00186	.02478	1.00119

RUN NO. 1096/ 0 RN/L = 3.50 GRADIENT INTERVAL = -5.00/ 5.00

ALPHAT	BETAT	CNFT	CAFT	CLMFT	CYFT	CYNFT	CBLFT	CABT	CP7	ALPHAO	BETAO
-6.267	-5.988	-.24150	.05950	.03060	.10850	-.01760	.00030	.10060	-.44740	-6.22060	-6.00230
-6.215	-4.041	-.23560	.05980	.02760	.07350	-.01440	.00010	.09660	-.42960	-6.16370	-4.06540
-6.353	.119	-.20850	.06040	.01070	-.00120	-.00140	-.00020	.09600	-.42680	-6.25010	.11120
-6.117	4.259	-.20790	.05670	.01740	-.06210	.00700	-.00040	.10120	-.45000	-6.03500	4.26520
-6.078	6.274	-.21040	.05160	.01870	-.09240	.00980	-.00050	.10770	-.47900	-6.00590	6.27390
	GRADIENT	.00334	-.00037	-.00123	-.01634	.00258	-.00006	.00055	-.00246	.01548	1.00369

RUN NO. 1097/ 0 RN/L = 3.50 GRADIENT INTERVAL = -5.00/ 5.00

ALPHAT	BETAT	CNFT	CAFT	CLMFT	CYFT	CYNFT	CBLFT	CABT	CP7	ALPHAO	BETAO
-4.018	-6.148	-.20290	.06050	.04010	.10460	-.01650	.00040	.09660	-.42960	-4.06610	-6.17260
-4.305	-3.962	-.19810	.05460	.03430	.06600	-.01280	.00010	.09830	-.43730	-4.33050	-3.99820
-4.281	.383	-.16510	.05640	.01760	-.00620	-.00070	-.00020	.09810	-.43640	-4.26100	.37610
-3.771	4.322	-.16360	.06080	.02750	-.06080	.00530	-.00040	.09290	-.41330	-3.79270	4.33990
-3.865	6.160	-.16790	.05660	.02800	-.08850	.00820	-.00060	.09960	-.44300	-3.88500	6.17220
	GRADIENT	.00422	.00074	-.00087	-.01533	.00220	-.00006	-.00064	.00285	.06408	1.00650

RUN NO. 1098/ 0 RN/L = 3.51 GRADIENT INTERVAL = -5.00/ 5.00

ALPHAT	BETAT	CNFT	CAFT	CLMFT	CYFT	CYNFT	CBLFT	CABT	CP7	ALPHAO	BETAO
-.227	-6.983	-.15320	.07710	.05860	.11070	-.01320	.00050	.07540	-.33510	-.41110	-7.03070
-.215	-4.771	-.14200	.05000	.05360	.07200	-.00960	.00030	.10030	-.44620	-.39180	-4.83550
-.253	-.495	-.10620	.05830	.03340	.00480	-.00250	-.00010	.08950	-.39800	-.35820	-.56550
-.184	3.633	-.10940	.05960	.04100	-.05630	.00610	-.00020	.09090	-.40430	-.32110	3.58650
-.184	5.812	-.11040	.05890	.04270	-.08900	.00930	-.00040	.09440	-.41990	-.32560	5.76220
	GRADIENT	.00391	.00115	-.00152	-.01527	.00187	-.00006	-.00113	.00502	.00841	1.00218

IA156A, AEDC PWT 16T-470, O T S W/SILTS (R8NT80) (10 MAY 80)

REFERENCE DATA

SREF = 2690.0000 SQ.FT. XMRP = 976.0000 IN. XT
LREF = 1290.3000 INCHES YMRP = .0000 IN. YT
BREF = 1290.3000 INCHES ZMRP = 400.0000 IN. ZT
SCALE = .0200

PARAMETRIC DATA

IB-ELV = 8.000 OB-ELV = 11.000
BDFLAP = .000 SPDBRK = .000
RUDDER = .000 SILTS = 1.000
MACH = .950 RN/L = 3.500

RUN NO. 1099/ 0 RN/L = 3.50 GRADIENT INTERVAL = -5.00/ 5.00

ALPHAT	BETAT	CNFT	CAFT	CLMFT	CYFT	CYNFT	CBLFT	CABT	CP7	ALPHAO	BETAO
4.397	-5.751	-.06840	.05510	.06650	.10750	-.01480	.00040	.09030	-.40160	4.07540	-5.72820
4.241	-3.766	-.05880	.05520	.05890	.07310	-.01310	.00020	.08710	-.38720	3.95080	-3.74890
4.053	.187	-.03490	.05670	.04110	.00000	-.00050	.00000	.08320	-.37000	3.84430	.18260
4.055	3.961	-.04420	.05680	.05120	-.06610	.00900	-.00020	.08590	-.38190	3.79720	3.93530
4.035	6.088	-.04530	.05440	.05390	-.10360	.01130	-.00030	.09150	-.40680	3.76610	6.05730
	GRADIENT	.00192	.00021	-.00102	-.01802	.00286	-.00005	-.00016	.00071	-.01993	.99445

IA156A, AEDC PWT 16T-470, O T S W/SILTS (R8NT81) (10 MAY 80)

REFERENCE DATA

SREF = 2690.0000 SQ.FT. XMRP = 976.0000 IN. XT
LREF = 1290.3000 INCHES YMRP = .0000 IN. YT
BREF = 1290.3000 INCHES ZMRP = 400.0000 IN. ZT
SCALE = .0200

PARAMETRIC DATA

IB-ELV = 8.000 OB-ELV = 11.000
BDFLAP = .000 SPDBRK = .000
RUDDER = .000 SILTS = 1.000
MACH = 1.050 RN/L = 3.500

RUN NO. 1102/ 0 RN/L = 3.50 GRADIENT INTERVAL = -5.00/ 5.00

ALPHAT	BETAT	CNFT	CAFT	CLMFT	CYFT	CYNFT	CBLFT	CABT	CP7	ALPHAO	BETAO
-8.357	-5.993	-.28880	.08390	.02200	.10940	-.01050	.00020	.11700	-.52030	-8.21420	-5.98550
-8.415	-3.866	-.28150	.07750	.01630	.06850	-.00720	-.00010	.12340	-.54880	-8.26790	-3.87340
-8.400	.284	-.25480	.08260	-.00100	-.00330	-.00090	-.00020	.11810	-.52510	-8.18830	.28140
-8.218	4.304	-.25870	.08690	.00500	-.06380	.00170	-.00030	.11520	-.51230	-8.02590	4.29530
-8.187	6.282	-.26160	.08610	.00750	-.09800	.00450	-.00050	.11640	-.51780	-8.00270	6.26400
	GRADIENT	.00281	.00115	-.00140	-.01620	.00109	-.00002	-.00101	.00447	.02956	.99986

RUN NO. 1103/ 0 RN/L = 3.50 GRADIENT INTERVAL = -5.00/ 5.00

ALPHAT	BETAT	CNFT	CAFT	CLMFT	CYFT	CYNFT	CBLFT	CABT	CP7	ALPHAO	BETAO
-6.275	-5.993	-.24520	.07720	.02800	.11400	-.01550	.00030	.12230	-.54390	-6.20560	-5.99610
-6.240	-4.072	-.23800	.08540	.02390	.07560	-.01140	.00010	.11230	-.49960	-6.16470	-4.08690
-6.401	.109	-.20890	.08390	.00410	-.00070	-.00220	-.00020	.11640	-.51760	-6.27050	.10360
-6.172	4.273	-.21180	.08750	.01260	-.06460	.00520	-.00040	.11030	-.49080	-6.06840	4.27730
-5.948	6.379	-.21080	.08550	.01500	-.09790	.00820	-.00060	.11430	-.50850	-5.86100	6.38300
	GRADIENT	.00314	.00025	-.00136	-.01680	.00199	-.00006	-.00024	.00105	.01151	1.00228

IA156A, AEDC PWT 16T-470, O T S W/SILTS (R8NT81) (10 MAY 80)

REFERENCE DATA

SREF = 2690.0000 SQ.FT. XMRP = 976.0000 IN. XT
LREF = 1290.3000 INCHES YMRP = .0000 IN. YT
BREF = 1290.3000 INCHES ZMRP = 400.0000 IN. ZT
SCALE = .0200

PARAMETRIC DATA

IB-ELV = 8.000 OB-ELV = 11.000
BDFLAP = .000 SPDBRK = .000
RUDDER = .000 SILTS = 1.000
MACH = 1.050 RN/L = 3.500

RUN NO. 1104/ 0 RN/L = 3.50 GRADIENT INTERVAL = -5.00/ 5.00

ALPHAT	BETAT	CNFT	CAFT	CLMFT	CYFT	CYNFT	CBLFT	CABT	CP7	ALPHAO	BETAO
-4.089	-6.115	-.20400	.08470	.03740	.10840	-.01480	.00030	.11090	-.49330	-4.12240	-6.13070
-4.336	-3.986	-.19870	.08600	.03060	.06660	-.01000	.00010	.10810	-.48060	-4.34490	-4.01790
-4.316	.375	-.16320	.08630	.01040	-.00280	-.00300	-.00020	.11200	-.49810	-4.26900	.37150
-3.789	4.320	-.16400	.08330	.02200	-.06330	.00370	-.00040	.11330	-.50390	-3.79280	4.34260
-3.866	6.144	-.16770	.08710	.02220	-.09630	.00900	-.00060	.10820	-.48130	-3.86820	6.16160
	GRADIENT	.00425	-.00032	-.00110	-.01564	.00165	-.00006	.00063	-.00283	.06561	1.00657

RUN NO. 1105/ 0 RN/L = 3.49 GRADIENT INTERVAL = -5.00/ 5.00

ALPHAT	BETAT	CNFT	CAFT	CLMFT	CYFT	CYNFT	CBLFT	CABT	CP7	ALPHAO	BETAO
-.241	-7.001	-.15130	.07640	.05770	.12200	-.01560	.00030	.11480	-.51060	-.45020	-7.05120
-.240	-4.826	-.13790	.07710	.05130	.07940	-.01090	.00010	.11280	-.50190	-.43090	-4.89440
-.31[illegible]	-.481	-.09720	.08630	.02550	.00690	-.00390	-.00020	.10510	-.46770	-.40130	-.55530
-.244	3.635	-.10040	.08470	.03340	-.05850	.00590	-.00020	.10940	-.48650	-.37080	3.59100
-.228	5.819	-.10300	.08080	.03670	-.09320	.00920	-.00030	.11410	-.50760	-.37060	5.77280
	GRADIENT	.00448	.00091	-.00215	-.01630	.00198	-.00004	-.00041	.00188	.00710	1.00282

RUN NO. 1106/ 0 RN/L = 3.49 GRADIENT INTERVAL = -5.00/ 5.00

ALPHAT	BETAT	CNFT	CAFT	CLMFT	CYFT	CYNFT	CBLFT	CABT	CP7	ALPHAO	BETAO
4.425	-5.762	-.07100	.08420	.06880	.10130	-.01030	.00010	.10140	-.45090	4.08330	-5.75000
4.214	-3.658	-.05820	.08150	.05880	.06720	-.00990	.00000	.10080	-.44840	3.90930	-3.65070
3.974	.122	-.03130	.08260	.03970	.00200	-.00140	-.00010	.09880	-.43940	3.73810	.11220
4.069	4.009	-.03800	.08300	.04950	-.06610	.00860	-.00010	.10120	-.45030	3.80310	3.98870
4.044	6.087	-.04240	.08230	.05320	-.10190	.00980	-.00020	.10370	-.46120	3.76450	6.05960
	GRADIENT	.00261	.00020	-.00120	-.01739	.00241	-.00001	.00005	-.00026	-.01371	.99642

IA156A, AEDC PWT 16T-470, O T S W/SILTS (R8NT82) (10 MAY 80)

REFERENCE DATA

SREF = 2690.0000 SQ.FT. XMRP = 976.0000 IN. XT
LREF = 1290.3000 INCHES YMRP = .0000 IN. YT
BREF = 1290.3000 INCHES ZMRP = 400.0000 IN. ZT
SCALE = .0200

PARAMETRIC DATA

IB-ELV = 8.000 OB-ELV = 11.000
BDFLAP = .000 SPDBRK = .000
RUDDER = .000 SILTS = 1.000
MACH = 1.100 RN/L = 3.500

RUN NO. 1107/ 0 RN/L = 3.51 GRADIENT INTERVAL = -5.00/ 5.00

ALPHAT	BETAT	CNFT	CAFT	CLMFT	CYFT	CYNFT	CBLFT	CABT	CP7	ALPHAO	BETAO
-8.402	-5.908	-.28740	.09110	.01930	.10470	-.00970	.00010	.10780	-.47930	-8.23200	-5.90260
-8.429	-3.822	-.27800	.09050	.01410	.06620	-.00670	-.00010	.10640	-.47320	-8.25520	-3.82510
-8.424	.200	-.25240	.09310	-.00280	-.00370	-.00090	-.00020	.10370	-.46120	-8.18750	.19160
-8.215	4.363	-.25250	.09060	.00400	-.06220	.00110	-.00040	.10770	-.47910	-8.01080	4.34940
-8.210	6.287	-.25520	.09350	.00630	-.09370	.00350	-.00050	.10460	-.46550	-8.01630	6.26850
	GRADIENT	.00310	.00001	-.00122	-.01568	.00095	-.00004	.00016	-.00074	.02993	.99868

RUN NO. 1108/ 0 RN/L = 3.50 GRADIENT INTERVAL = -5.00/ 5.00

ALPHAT	BETAT	CNFT	CAFT	CLMFT	CYFT	CYNFT	CBLFT	CABT	CP7	ALPHAO	BETAO
-6.303	-6.002	-.24240	.09220	.02570	.10620	-.01310	.00030	.10180	-.45280	-6.21340	-6.00340
-6.266	-4.075	-.23510	.09130	.02160	.06930	-.00920	.00010	.10170	-.45240	-6.16610	-4.08630
-6.440	.132	-.20680	.09230	.00290	-.00130	-.00290	-.00020	.10200	-.45370	-6.28320	.11890
-6.157	4.267	-.20760	.09250	.01170	-.05650	.00010	-.00040	.10030	-.44620	-6.04200	4.26160
-6.120	6.268	-.20980	.09330	.01290	-.09510	.00740	-.00060	.10130	-.45030	-6.01110	6.26510
	GRADIENT	.00331	.00014	-.00120	-.01509	.00112	-.00006	-.00017	.00074	.01475	1.00074

RUN NO. 1109/ 0 RN/L = 3.51 GRADIENT INTERVAL = -5.00/ 5.00

ALPHAT	BETAT	CNFT	CAFT	CLMFT	CYFT	CYNFT	CBLFT	CABT	CP7	ALPHAO	BETAO
-4.289	-6.040	-.20810	.09110	.03470	.10410	-.01350	.00030	.09960	-.44290	-4.29320	-6.04710
-4.328	-3.999	-.19730	.09330	.02910	.06060	-.00730	.00000	.09490	-.42210	-4.31650	-4.02430
-4.320	.356	-.16090	.09310	.00960	-.00500	-.00280	-.00020	.09740	-.43330	-4.25700	.34590
-3.774	4.310	-.16100	.09330	.02180	-.06330	.00290	-.00040	.09740	-.43310	-3.77650	4.31940
-3.886	6.167	-.16520	.09280	.02250	-.09490	.00760	-.00060	.09880	-.43930	-3.89250	6.17320
	GRADIENT	.00444	-.00000	-.00094	-.01491	.00122	-.00005	.00031	-.00134	.06413	1.00417

RUN NO. 1110/ 0 RN/L = 3.50 GRADIENT INTERVAL = -5.00/ 5.00

ALPHAT	BETAT	CNFT	CAFT	CLMFT	CYFT	CYNFT	CBLFT	CABT	CP7	ALPHAO	BETAO
-.242	-7.023	-.15160	.09350	.05740	.12020	-.01430	.00030	.09410	-.41860	-.45280	-7.05810
-.243	-4.840	-.13950	.08260	.05090	.07690	-.00930	.00010	.10160	-.45200	-.43530	-4.89340
-.307	-.418	-.10230	.09380	.02720	.00440	-.00300	-.00010	.09260	-.41190	-.40080	-.48770
-.223	3.659	-.10380	.09040	.03550	-.05790	.00470	-.00020	.09680	-.43050	-.36540	3.60680
-.212	5.833	-.10610	.08690	.03780	-.09280	.00780	-.00040	.10160	-.45180	-.36690	5.77670
	GRADIENT	.00426	.00094	-.00186	-.01587	.00164	-.00004	-.00059	.00262	.00822	1.00008

IA156A, AEDC PWT 16T-470, O T S W/SILTS (R8NT82) (10 MAY 80)

REFERENCE DATA

SREF = 2690.0000 SQ.FT. XMRP = 976.0000 IN. XT
LREF = 1290.3000 INCHES YMRP = .0000 IN. YT
BREF = 1290.3000 INCHES ZMRP = 400.0000 IN. ZT
SCALE = .0200

PARAMETRIC DATA

IB-ELV = 8.000 OB-ELV = 11.000
BDFLAP = .000 SPDBRK = .000
RUDDER = .000 SILTS = 1.000
MACH = 1.100 RN/L = 3.500

RUN NO. 1111/ 0 RN/L = 3.50 GRADIENT INTERVAL = -5.00/ 5.00

ALPHAT	BETAT	CNFT	CAFT	CLMFT	CYFT	CYNFT	CBLFT	CABT	CP7	ALPHAO	BETAO
4.443	-5.768	-.06820	.08730	.07000	.10120	-.01110	.00010	.09130	-.40590	4.07760	-5.75270
4.284	-3.687	-.05690	.08970	.06210	.06560	-.00950	.00000	.08660	-.38530	3.94550	-3.67980
3.946	.133	-.03550	.09040	.04330	-.00160	-.00070	-.00010	.08580	-.38150	3.68000	.12180
4.089	4.002	-.04270	.08900	.05360	-.06570	.00770	-.00020	.08920	-.39680	3.78870	3.97630
4.072	6.100	-.04610	.09040	.05620	-.10120	.00860	-.00030	.08930	-.39720	3.76770	6.06530
	GRADIENT	.00184	-.00009	-.00110	-.01707	.00224	-.00003	.00034	-.00150	-.02029	.99561

IA156A, AEDC PWT 16T-470, O T S W/SILTS (R8NT83) (10 MAY 80)

REFERENCE DATA

SREF = 2690.0000 SQ.FT. XMRP = 976.0000 IN. XT
LREF = 1290.3000 INCHES YMRP = .0000 IN. YT
BREF = 1290.3000 INCHES ZMRP = 400.0000 IN. ZT
SCALE = .0200

PARAMETRIC DATA

IB-ELV = 8.000 OB-ELV = 9.000
BDFLAP = .000 SPDBRK = .000
RUDDER = .000 SILTS = 1.000
MACH = .600 RN/L = 3.500

RUN NO. 1114/ 0 RN/L = 3.51 GRADIENT INTERVAL = -5.00/ 5.00

ALPHAT	BETAT	CNFT	CAFT	CLMFT	CYFT	CYNFT	CBLFT	CABT	CP7	ALPHAO	BETAO
-8.240	-7.868	-.25850	.03100	.03150	.08100	.00880	.00010	.09680	-.43050	-8.21890	-7.83160
-8.128	-5.909	-.24740	.03820	.02660	.05890	.00680	.00000	.08760	-.38960	-8.09890	-5.89050
-8.172	-3.796	-.24230	.03940	.02240	.03310	.00530	.00000	.08490	-.37760	-8.14020	-3.79060
-8.083	.305	-.23050	.04010	.01590	-.00450	-.00170	-.00010	.08640	-.38430	-8.05050	.30080
-7.952	4.252	-.22650	.04150	.01880	-.03660	-.00850	-.00010	.08510	-.37850	-7.91050	4.24270
-7.940	6.203	-.22350	.03930	.01950	-.05490	-.01100	-.00030	.08780	-.39050	-7.89720	6.18320
-7.974	8.208	-.22040	.03840	.01870	-.07450	-.01350	-.00060	.09140	-.40670	-7.93390	8.17670
	GRADIENT	.00197	.00026	-.00045	-.00866	-.00171	-.00001	.00003	-.00012	.02850	.99826

RUN NO. 1115/ 0 RN/L = 3.51 GRADIENT INTERVAL = -5.00/ 5.00

ALPHAT	BETAT	CNFT	CAFT	CLMFT	CYFT	CYNFT	CBLFT	CABT	CP7	ALPHAO	BETAO
-6.137	-7.947	-.22130	.03980	.03720	.09020	.00450	.00020	.08550	-.38030	-6.15560	-7.92180
-6.117	-5.919	-.21730	.04050	.03310	.06300	.00420	.00010	.08410	-.37390	-6.12760	-5.90860
-6.043	-4.004	-.21200	.04150	.02940	.03940	.00310	.00000	.08160	-.36300	-6.05190	-4.00720
-6.113	.081	-.19880	.04530	.02200	-.00270	-.00160	-.00010	.08000	-.35600	-6.11260	.07480
-5.938	4.193	-.19270	.04400	.02680	-.03790	-.00720	-.00020	.08160	-.36280	-5.94550	4.19010
-5.884	6.175	-.19160	.03700	.02680	-.05840	-.00840	-.00040	.08970	-.39910	-5.88710	6.16600
-5.685	8.322	-.18140	.04080	.02590	-.08280	-.00880	-.00070	.08660	-.38520	-5.69030	8.30470
	GRADIENT	.00235	.00030	-.00032	-.00943	-.00126	-.00002	.00000	.00002	.01301	1.00009

IA156A, AEDC PWT 16T-470, O T S W/SILTS (R8NT83) (10 MAY 80)

REFERENCE DATA

SREF = 2690.0000 SQ.FT. XMRP = 976.0000 IN. XT
LREF = 1290.3000 INCHES YMRP = .0000 IN. YT
BREF = 1290.3000 INCHES ZMRP = 400.0000 IN. ZT
SCALE = .0200

PARAMETRIC DATA

IB-ELV = 8.000 OB-ELV = 9.000
BDFLAP = .000 SPDBRK = .000
RUDDER = .000 SILTS = 1.000
MACH = .600 RN/L = 3.500

RUN NO. 1117/ 0 RN/L = 3.49 GRADIENT INTERVAL = -5.00/ 5.00

ALPHAT	BETAT	CNFT	CAFT	CLMFT	CYFT	CYNFT	CBLFT	CABT	CP7	ALPHAO	BETAO
-3.942	-7.960	-.18910	.04020	.04460	.09560	.00170	.00030	.08310	-.36970	-4.00500	-7.95000
-4.178	-5.939	-.18870	.04120	.03960	.06410	.00200	.00020	.08130	-.36150	-4.23030	-5.94100
-4.187	-3.875	-.18310	.04200	.03560	.03710	.00180	.00010	.07950	-.35350	-4.23380	-3.89160
-4.005	.181	-.16290	.04410	.02900	-.00420	-.00220	.00000	.07850	-.34920	-4.04950	.17450
-3.657	4.252	-.15700	.04510	.03590	-.04300	-.00550	-.00030	.07870	-.35000	-3.71840	4.26400
-3.738	6.049	-.15520	.04360	.03470	-.06180	-.00620	-.00040	.08030	-.35730	-3.79170	6.05340
-3.786	8.049	-.15270	.04230	.03310	-.08570	-.00590	-.00070	.08380	-.37280	-3.83110	8.04640
	GRADIENT	.00321	.00038	.00004	-.00986	-.00090	-.00005	-.00010	.00043	.06343	1.00352

RUN NO. 1118/ 0 RN/L = 3.50 GRADIENT INTERVAL = -5.00/ 5.00

ALPHAT	BETAT	CNFT	CAFT	CLMFT	CYFT	CYNFT	CBLFT	CABT	CP7	ALPHAO	BETAO
-.211	-8.747	-.14610	.03830	.06040	.11860	-.00550	.00030	.08200	-.36460	-.34480	-8.76890
-.208	-6.666	-.14080	.04110	.05640	.08290	-.00180	.00020	.07820	-.34800	-.33930	-6.69710
-.203	-4.378	-.13520	.04410	.05240	.05080	-.00170	.00020	.07460	-.33180	-.32740	-4.42300
-.195	-.323	-.12060	.04380	.04510	-.00030	-.00100	-.00010	.07600	-.33820	-.29980	-.38410
-.150	3.754	-.11680	.04450	.04930	-.04590	-.00080	-.00010	.07500	-.33350	-.27220	3.68840
-.145	5.843	-.11410	.03840	.04940	-.07030	-.00110	-.00030	.08100	-.36020	-.26660	5.77210
-.145	7.944	-.10720	.04160	.04820	-.09970	.00140	-.00040	.07960	-.35400	-.26040	7.86580
	GRADIENT	.00226	.00005	-.00038	-.01189	.00011	-.00004	.00005	-.00021	.00679	.99748

RUN NO. 1119/ 0 RN/L = 3.49 GRADIENT INTERVAL = -5.00/ 5.00

ALPHAT	BETAT	CNFT	CAFT	CLMFT	CYFT	CYNFT	CBLFT	CABT	CP7	ALPHAO	BETAO
4.288	-8.106	-.08310	.03960	.07600	.13060	-.01400	.00020	.07400	-.32910	4.06050	-8.06770
4.299	-5.790	-.07310	.04020	.07030	.08760	-.00850	.00010	.07170	-.31880	4.07410	-5.75550
4.277	-3.794	-.06600	.04120	.06750	.05330	-.00510	.00010	.07030	-.31290	4.04880	-3.76610
4.034	.150	-.05810	.04290	.05980	-.00160	-.00150	.00000	.07210	-.32070	3.82570	.14450
4.108	4.147	-.05470	.04270	.06290	-.05580	.00200	-.00020	.07200	-.32010	3.89400	4.10940
4.055	6.225	-.04960	.04280	.06060	-.08660	.00320	-.00040	.07200	-.32040	3.84760	6.17930
4.030	8.209	-.04590	.04100	.05980	-.11680	.00670	-.00060	.07520	-.33450	3.83410	8.15850
	GRADIENT	.00142	.00019	-.00058	-.01374	.00089	-.00004	.00021	-.00090	-.01941	.99173

IA156A, AEDC PWT 16T-470, O T S W/SILTS (R8NT83) (10 MAY 80)

REFERENCE DATA

SREF = 2690.0000 SQ.FT. XMRP = 976.0000 IN. XT
LREF = 1290.3000 INCHES YMRP = .0000 IN. YT
BREF = 1290.3000 INCHES ZMRP = 400.0000 IN. ZT
SCALE = .0200

PARAMETRIC DATA

IB-ELV = 8.000 OB-ELV = 9.000
BDFLAP = .000 SPDBRK = .000
RUDDER = .000 SILTS = 1.000
MACH = .600 RN/L = 3.500

RUN NO. 1120/ 0 RN/L = 3.49 GRADIENT INTERVAL = -5.00/ 5.00

ALPHAT	BETAT	CNFT	CAFT	CLMFT	CYFT	CYNFT	CBLFT	CABT	CP7	ALPHAO	BETAO
6.457	-7.983	-.04830	.03580	.08000	.13860	-.01870	.00020	.07300	-.32450	6.19930	-7.95870
6.431	-5.924	-.04210	.03860	.07770	.09880	-.01300	.00020	.06960	-.30980	6.16630	-5.90340
6.418	-3.895	-.03920	.03970	.07640	.06360	-.00760	.00020	.06830	-.30380	6.14610	-3.87710
6.159	.138	-.03470	.04080	.07040	-.00120	-.00130	.00010	.07080	-.31490	5.89610	.13400
6.055	4.104	-.02970	.04170	.06880	-.05670	.00210	-.00020	.07080	-.31500	5.80150	4.07530
6.004	6.021	-.02490	.04090	.06780	-.08470	.00450	-.00040	.07110	-.31600	5.75760	5.98690
6.055	8.296	-.01720	.03880	.06620	-.12270	.00920	-.00070	.07490	-.33300	5.82340	8.25740
	GRADIENT	.00119	.00025	-.00095	-.01504	.00121	-.00005	.00031	-.00140	-.04313	.99420

RUN NO. 1121/ 0 RN/L = 3.50 GRADIENT INTERVAL = -5.00/ 5.00

ALPHAT	BETAT	CNFT	CAFT	CLMFT	CYFT	CYNFT	CBLFT	CABT	CP7	ALPHAO	BETAO
8.372	-7.821	-.01600	.03350	.08340	.13660	-.01990	.00030	.07270	-.32320	8.08750	-7.80540
8.289	-5.757	-.01270	.03700	.08190	.09580	-.01330	.00020	.06840	-.30400	7.99170	-5.74280
8.283	-3.775	-.01200	.03700	.08140	.05940	-.00800	.00010	.06770	-.30120	7.97460	-3.76260
8.180	.174	-.00420	.03750	.07530	-.00080	-.00160	.00010	.07210	-.32070	7.88130	.16710
8.216	4.223	.00260	.03900	.07620	-.05970	.00410	-.00020	.07080	-.31480	7.92390	4.20010
8.173	6.231	.00830	.03910	.07480	-.08970	.00700	-.00050	.07070	-.31450	7.89300	6.20480
8.148	8.257	.01180	.03610	.07350	-.12910	.01310	-.00080	.07520	-.33450	7.88610	8.23070
	GRADIENT	.00183	.00025	-.00065	-.01489	.00151	-.00004	.00038	-.00169	-.00627	.99569

IA156A, AEDC PWT 16T-470, O T S W/SILTS

(R8NT85) (10 MAY 80)

REFERENCE DATA

SREF = 2690.0000 SQ.FT. XMRP = 976.0000 IN. XT
LREF = 1290.3000 INCHES YMRP = .0000 IN. YT
BREF = 1290.3000 INCHES ZMRP = 400.0000 IN. ZT
SCALE = .0200

PARAMETRIC DATA

IB-ELV = 8.000 OB-ELV = 9.000
BDFLAP = .000 SPDBRK = .000
RUDDER = .000 SILTS = 1.000
MACH = .800 RN/L = 3.500

RUN NO. 1132/ 0 RN/L = 3.51 GRADIENT INTERVAL = -5.00/ 5.00

ALPHAT	BETAT	CNFT	CAFT	CLMFT	CYFT	CYNFT	CBLFT	CABT	CP7	ALPHAO	BETAO
-8.262	-5.867	-.27400	.04260	.03430	.07150	.00030	.00030	.09210	-.40970	-8.22830	-5.85070
-8.269	-3.852	-.26550	.04010	.02970	.04240	.00060	.00010	.09280	-.41280	-8.23240	-3.84870
-8.221	.282	-.24540	.04740	.01720	-.00790	.00120	-.00010	.08660	-.38530	-8.16650	.27790
-8.070	4.302	-.24450	.04760	.02170	-.04910	-.00140	-.00020	.08550	-.38040	-7.99820	4.29230
-8.087	6.280	-.24410	.04630	.02220	-.07120	-.00270	-.00030	.08840	-.39300	-8.00950	6.25710
	GRADIENT	.00259	.00092	-.00099	-.01123	-.00024	-.00004	-.00090	.00399	.02866	.99836

RUN NO. 1133/ 0 RN/L = 3.50 GRADIENT INTERVAL = -5.00/ 5.00

ALPHAT	BETAT	CNFT	CAFT	CLMFT	CYFT	CYNFT	CBLFT	CABT	CP7	ALPHAO	BETAO
-6.194	-5.997	-.23520	.04710	.04090	.07570	-.00150	.00010	.08560	-.38080	-6.21660	-5.99140
-6.131	-4.036	-.22950	.04740	.03670	.04900	-.00150	.00010	.08360	-.37180	-6.15050	-4.04380
-6.245	.137	-.20800	.04960	.02240	-.00460	.00030	-.00020	.08170	-.36340	-6.23140	.13160
-6.033	4.269	-.20730	.04740	.02900	-.04540	-.00220	-.00030	.08460	-.37630	-6.02300	4.26990
-5.997	6.248	-.20920	.04900	.02990	-.06940	-.00240	-.00040	.08460	-.37630	-5.98030	6.23950
	GRADIENT	.00268	.00000	-.00093	-.01137	-.00008	-.00005	.00012	-.00054	.01529	1.00105

RUN NO. 1134/ 0 RN/L = 3.50 GRADIENT INTERVAL = -5.00/ 5.00

ALPHAT	BETAT	CNFT	CAFT	CLMFT	CYFT	CYNFT	CBLFT	CABT	CP7	ALPHAO	BETAO
-4.036	-6.077	-.20370	.04540	.04890	.07650	-.00220	.00020	.08440	-.37520	-4.12090	-6.08320
-4.260	-3.967	-.19820	.04130	.04260	.04600	-.00180	.00010	.08720	-.38780	-4.33250	-3.98800
-4.198	.372	-.17040	.04870	.02850	-.00730	-.00010	-.00020	.08030	-.35720	-4.23310	.37150
-3.753	4.310	-.17140	.04790	.03820	-.05220	.00050	-.00030	.08210	-.36520	-3.80330	4.33030
-3.816	6.136	-.17550	.04760	.03910	-.07680	.00180	-.00040	.08290	-.36870	-3.86050	6.14800
	GRADIENT	.00329	.00081	-.00058	-.01187	.00028	-.00005	-.00063	.00280	.06324	1.00500

RUN NO. 1135/ 0 RN/L = 3.50 GRADIENT INTERVAL = -5.00/ 5.00

ALPHAT	BETAT	CNFT	CAFT	CLMFT	CYFT	CYNFT	CBLFT	CABT	CP7	ALPHAO	BETAO
-.202	-6.830	-.15860	.04530	.06420	.10050	-.00830	.00030	.08060	-.35860	-.37490	-6.86430
-.205	-4.516	-.14860	.04650	.05730	.06550	-.00770	.00020	.07760	-.34510	-.36100	-4.56380
-.227	-.410	-.12560	.04580	.04330	.00290	-.00140	-.00010	.07620	-.33890	-.33480	-.46900
-.174	3.651	-.12370	.05000	.04890	-.05480	.00390	-.00020	.07490	-.33300	-.29990	3.59130
-.157	5.790	-.12450	.04650	.05200	-.08710	.00660	-.00030	.07830	-.34830	-.29660	5.72730
	GRADIENT	.00305	.00043	-.00103	-.01473	.00142	-.00005	-.00033	.00148	.00748	.99858

IA156A, AEDC PWT 16T-470, O T S W/SILTS (R8NT85) (10 MAY 80)

REFERENCE DATA

SREF = 2690.0000 SQ.FT. XMRP = 976.0000 IN. XT
LREF = 1290.3000 INCHES YMRP = .0000 IN. YT
BREF = 1290.3000 INCHES ZMRP = 400.0000 IN. ZT
SCALE = .0200

PARAMETRIC DATA

IB-ELV = 8.000 OB-ELV = 9.000
BDFLAP = .000 SPDBRK = .000
RUDDER = .000 SILTS = 1.000
MACH = .800 RN/L = 3.500

RUN NO. 1136/ 0 RN/L = 3.50 GRADIENT INTERVAL = -5.00/ 5.00

ALPHAT	BETAT	CNFT	CAFT	CLMFT	CYFT	CYNFT	CBLFT	CABT	CP7	ALPHAO	BETAO
4.274	-5.889	-.07230	.04400	.06920	.09580	-.01020	.00030	.07250	-.32270	3.98890	-5.86000
4.264	-3.768	-.06370	.04380	.06590	.05940	-.00740	.00020	.07280	-.32390	3.97450	-3.74780
4.116	.199	-.04250	.04590	.05230	-.00030	-.00160	.00000	.07200	-.32020	3.87070	.19130
4.053	3.992	-.04740	.04510	.05810	-.05950	.00550	-.00020	.07250	-.32240	3.79130	3.96110
4.025	6.123	-.04670	.04400	.05780	-.09380	.00840	-.00050	.07440	-.33070	3.77410	6.08900
	GRADIENT	.00213	.00017	-.00102	-.01532	.00166	-.00005	-.00004	.00020	-.02363	.99341

RUN NO. 1137/ 0 RN/L = 3.50 GRADIENT INTERVAL = -5.00/ 5.00

ALPHAT	BETAT	CNFT	CAFT	CLMFT	CYFT	CYNFT	CBLFT	CABT	CP7	ALPHAO	BETAO
6.396	-5.839	-.03600	.04070	.07320	.09950	-.01170	.00030	.07310	-.32490	6.08210	-5.82540
6.376	-3.792	-.02870	.04140	.07020	.06100	-.00730	.00020	.07110	-.31610	6.05230	-3.77990
6.041	.163	-.01300	.04420	.05640	-.00250	-.00050	.00010	.07030	-.31270	5.75690	.15750
5.983	4.092	-.01600	.04290	.06100	-.06250	.00670	-.00020	.07230	-.32150	5.68690	4.07030
6.043	6.056	-.00970	.04410	.06060	-.09330	.00990	-.00030	.07130	-.31710	5.75840	6.03250
	GRADIENT	.00161	.00019	-.00117	-.01567	.00178	-.00005	.00015	-.00068	-.04638	.99578

IA156A, AEDC PWT 16T-470, O T S W/SILTS (R8NT86) (10 MAY 80)

REFERENCE DATA

SREF = 2690.0000 SQ.FT. XMRP = 976.0000 IN. XT
LREF = 1290.3000 INCHES YMRP = .0000 IN. YT
BREF = 1290.3000 INCHES ZMRP = 400.0000 IN. ZT
SCALE = .0200

PARAMETRIC DATA

IB-ELV = 8.000 OB-ELV = 9.000
BDFLAP = .000 SPDBRK = .000
RUDDER = .000 SILTS = 1.000
MACH = .900 RN/L = 3.500

RUN NO. 1139/ 0 RN/L = 3.50 GRADIENT INTERVAL = -5.00/ 5.00

ALPHAT	BETAT	CNFT	CAFT	CLMFT	CYFT	CYNFT	CBLFT	CABT	CP7	ALPHAO	BETAO
-8.158	-5.988	-.27980	.05260	.03400	.08540	-.00610	.00000	.09480	-.42160	-8.10620	-5.98900
-8.329	-3.760	-.27470	.05210	.02850	.04890	-.00320	-.00010	.09330	-.41480	-8.26880	-3.77170
-8.260	.188	-.25030	.05340	.01470	-.00460	.00080	-.00040	.09270	-.41220	-8.17690	.17960
-8.099	4.391	-.25090	.05320	.01860	-.05530	.00230	-.00040	.09300	-.41360	-7.99550	4.38780
-8.123	6.283	-.25060	.05070	.01840	-.07950	.00230	-.00050	.09710	-.43190	-8.01170	6.26760
	GRADIENT	.00289	.00013	-.00119	-.01278	.00067	-.00004	-.00004	.00014	.03363	1.00102

IA156A, AEDC PWT 16T-470, O T S W/SILTS (R8NT86) (10 MAY 80)

REFERENCE DATA

SREF = 2690.0000 SQ.FT. XMRP = 976.0000 IN. XT
LREF = 1290.3000 INCHES YMRP = .0000 IN. YT
BREF = 1290.3000 INCHES ZMRP = 400.0000 IN. ZT
SCALE = .0200

PARAMETRIC DATA

IB-ELV = 8.000 OB-ELV = 9.000
BDFLAP = .000 SPDBRK = .000
RUDDER = .000 SILTS = 1.000
MACH = .900 RN/L = 3.500

RUN NO. 1140/ 0 RN/L = 3.50 GRADIENT INTERVAL = -5.00/ 5.00

ALPHAT	BETAT	CNFT	CAFT	CLMFT	CYFT	CYNFT	CBLFT	CABT	CP7	ALPHAO	BETAO
-6.212	-5.981	-.24580	.05350	.04030	.09010	-.00950	.00010	.09190	-.40890	-6.21440	-5.98980
-6.165	-4.049	-.23780	.05280	.03620	.05860	-.00740	-.00010	.09030	-.40160	-6.16360	-4.07230
-6.295	.110	-.21010	.05400	.01940	-.00450	.00080	-.00040	.08940	-.39760	-6.25280	.10020
-6.102	4.255	-.21190	.05580	.02620	-.05520	.00430	-.00040	.08710	-.38740	-6.06280	4.25980
-5.808	6.364	-.20570	.05260	.02740	-.08350	.00570	-.00060	.09130	-.40610	-5.77670	6.35990
	GRADIENT	.00312	.00036	-.00121	-.01370	.00141	-.00004	-.00039	.00171	.01212	1.00337

RUN NO. 1141/ 0 RN/L = 3.50 GRADIENT INTERVAL = -5.00/ 5.00

ALPHAT	BETAT	CNFT	CAFT	CLMFT	CYFT	CYNFT	CBLFT	CABT	CP7	ALPHAO	BETAO
-4.050	-6.076	-.20820	.05350	.04740	.09030	-.01000	.00020	.08860	-.39400	-4.12270	-6.09270
-4.285	-3.972	-.20270	.05380	.04110	.05620	-.00760	.00000	.08580	-.38160	-4.33960	-4.00300
-4.251	.383	-.16910	.05330	.02400	-.00750	.00080	-.00030	.08620	-.38330	-4.25260	.37780
-3.767	4.317	-.17060	.05270	.03450	-.05660	.00450	-.00040	.08540	-.37970	-3.79980	4.33240
-3.840	6.146	-.17450	.05390	.03550	-.08210	.00690	-.00060	.08570	-.38110	-3.86890	6.15610
	GRADIENT	.00394	-.00013	-.00085	-.01363	.00147	-.00005	-.00005	.00022	.06433	1.00571

RUN NO. 1142/ 0 RN/L = 3.50 GRADIENT INTERVAL = -5.00/ 5.00

ALPHAT	BETAT	CNFT	CAFT	CLMFT	CYFT	CYNFT	CBLFT	CABT	CP7	ALPHAO	BETAO
-.234	-6.927	-.16320	.05140	.06350	.11110	-.01190	.00020	.08610	-.38290	-.40380	-6.96300
-.230	-4.774	-.15100	.05240	.05690	.07590	-.01000	.00010	.08290	-.36860	-.38530	-4.82610
-.290	-.473	-.11730	.05140	.03540	.00450	-.00200	-.00020	.07810	-.34720	-.35450	-.53680
-.227	3.643	-.12070	.04810	.04320	-.05790	.00600	-.00020	.08570	-.38100	-.31860	3.58580
-.208	5.803	-.12400	.05210	.04750	-.09220	.00950	-.00040	.08270	-.36790	-.31890	5.74380
	GRADIENT	.00363	-.00051	-.00165	-.01590	.00190	-.00004	.00032	-.00142	.00792	.99946

RUN NO. 1143/ 0 RN/L = 3.50 GRADIENT INTERVAL = -5.00/ 5.00

ALPHAT	BETAT	CNFT	CAFT	CLMFT	CYFT	CYNFT	CBLFT	CABT	CP7	ALPHAO	BETAO
4.377	-5.749	-.06930	.04980	.06660	.10200	-.01360	.00030	.07800	-.34680	4.08260	-5.72650
4.245	-3.793	-.06310	.04900	.06200	.06780	-.01150	.00010	.07740	-.34450	3.96030	-3.77750
4.080	.187	-.03810	.05020	.04540	-.00010	-.00100	-.00020	.07570	-.33650	3.85690	.18000
4.026	3.924	-.04730	.04980	.05400	-.06280	.00840	-.00030	.07700	-.34270	3.77100	3.89730
4.003	6.096	-.04680	.04830	.05400	-.09980	.01160	-.00040	.08100	-.36010	3.75770	6.06440
	GRADIENT	.00209	.00011	-.00107	-.01693	.00258	-.00005	-.00006	.00025	-.02455	.99455

IA156A, AEDC PWT 16T-470, O T S W/SILTS (R8NT87) (10 MAY 80)

REFERENCE DATA

SREF = 2690.0000 SQ.FT. XMRP = 976.0000 IN. XT
LREF = 1290.3000 INCHES YMRP = .0000 IN. YT
BREF = 1290.3000 INCHES ZMRP = 400.0000 IN. ZT
SCALE = .0200

PARAMETRIC DATA

IB-ELV = 8.000 OB-ELV = 9.000
BDFLAP = .000 SPDBRK = .000
RUDDER = .000 SILTS = 1.000
MACH = .950 RN/L = 3.500

RUN NO. 1144/ 0 RN/L = 3.50 GRADIENT INTERVAL = -5.00/ 5.00

ALPHAT	BETAT	CNFT	CAFT	CLMFT	CYFT	CYNFT	CBLFT	CABT	CP7	ALPHAO	BETAO
-8.379	-5.898	-.28400	.05950	.02340	.09940	-.01170	.00010	.10450	-.46470	-8.25900	-5.90180
-8.378	-3.808	-.27480	.06210	.02030	.06310	-.00890	-.00020	.09700	-.43150	-8.25540	-3.82070
-8.341	.394	-.24860	.06080	.00340	-.00930	.00140	-.00040	.10090	-.44870	-8.17520	.38940
-8.178	4.353	-.24910	.06040	.00920	-.06750	.00710	-.00040	.10130	-.45060	-8.01690	4.35330
-8.159	6.255	-.25220	.06070	.01040	-.09630	.00900	-.00050	.10230	-.45490	-8.00090	6.24850
	GRADIENT	.00318	-.00021	-.00139	-.01601	.00197	-.00002	.00053	-.00236	.02912	1.00152

RUN NO. 1145/ 0 RN/L = 3.50 GRADIENT INTERVAL = -5.00/ 5.00

ALPHAT	BETAT	CNFT	CAFT	CLMFT	CYFT	CYNFT	CBLFT	CABT	CP7	ALPHAO	BETAO
-6.260	-5.979	-.24260	.06120	.03080	.10380	-.01550	.00010	.09940	-.44220	-6.21570	-5.99280
-6.213	-4.048	-.23450	.06210	.02760	.06790	-.01190	-.00010	.09520	-.42350	-6.16260	-4.07280
-6.350	.117	-.20600	.06300	.01000	-.00650	.00150	-.00040	.09440	-.42010	-6.25040	.10690
-6.160	4.258	-.20840	.05850	.01660	-.06490	.00880	-.00050	.09990	-.44410	-6.07520	4.26570
-5.834	6.359	-.20230	.05990	.01930	-.09310	.01000	-.00070	.09940	-.44210	-5.77330	6.36250
	GRADIENT	.00315	-.00043	-.00133	-.01599	.00249	-.00005	.00057	-.00248	.01049	1.00397

RUN NO. 1146/ 0 RN/L = 3.49 GRADIENT INTERVAL = -5.00/ 5.00

ALPHAT	BETAT	CNFT	CAFT	CLMFT	CYFT	CYNFT	CBLFT	CABT	CP7	ALPHAO	BETAO
-4.073	-6.072	-.20440	.06100	.03940	.09990	-.01440	.00020	.09620	-.42800	-4.11470	-6.09660
-4.310	-3.970	-.19810	.06070	.03370	.06200	-.01010	-.00010	.09320	-.41450	-4.33330	-4.00500
-4.276	.379	-.16490	.05990	.01690	-.00820	.00120	-.00040	.09500	-.42280	-4.25520	.37360
-3.786	4.322	-.16340	.06250	.02690	-.05940	.00600	-.00050	.09180	-.40830	-3.80550	4.34330
-3.860	6.142	-.16760	.05980	.02720	-.08710	.00840	-.00070	.09670	-.43020	-3.87580	6.15660
	GRADIENT	.00424	.00021	-.00087	-.01467	.00195	-.00005	-.00016	.00070	.06287	1.00679

RUN NO. 1147/ 0 RN/L = 3.49 GRADIENT INTERVAL = -5.00/ 5.00

ALPHAT	BETAT	CNFT	CAFT	CLMFT	CYFT	CYNFT	CBLFT	CABT	CP7	ALPHAO	BETAO
-.240	-6.938	-.15400	.05990	.05810	.11360	-.01390	.00030	.09350	-.41590	-.41650	-6.98530
-.230	-4.775	-.14280	.06020	.05270	.07480	-.01060	.00010	.09140	-.40630	-.39730	-4.83990
-.273	-.475	-.10710	.05980	.03230	.00590	-.00240	-.00020	.08830	-.39290	-.36680	-.54230
-.214	3.628	-.11180	.06030	.03980	-.05580	.00650	-.00030	.08980	-.39940	-.33100	3.58180
-.205	5.812	-.11400	.05850	.04220	-.09110	.01040	-.00050	.09520	-.42330	-.33120	5.76200
	GRADIENT	.00373	.00001	-.00156	-.01555	.00203	-.00005	-.00019	.00084	.00788	1.00218

IA156A, AEDC PWT 16T-470, O T S W/SILTS (R8NT87) (10 MAY 80)

REFERENCE DATA

SREF = 2690.0000 SQ.FT. XMRP = 976.0000 IN. XT
LREF = 1290.3000 INCHES YMRP = .0000 IN. YT
BREF = 1290.3000 INCHES ZMRP = 400.0000 IN. ZT
SCALE = .0200

PARAMETRIC DATA

IB-ELV = 8.000 OB-ELV = 9.000
BDFLAP = .000 SPDBRK = .000
RUDDER = .000 SILTS = 1.000
MACH = .950 RN/L = 3.500

RUN NO. 1148/ 0 RN/L = 3.49 GRADIENT INTERVAL = -5.00/ 5.00

ALPHAT	BETAT	CNFT	CAFT	CLMFT	CYFT	CYNFT	CBLFT	CABT	CP7	ALPHAO	BETAO
4.291	-5.874	-.07200	.05700	.06610	.11000	-.01500	.00030	.09040	-.40220	3.97800	-5.85460
4.250	-3.767	-.05930	.05620	.05830	.07390	-.01370	.00010	.08690	-.38660	3.96410	-3.75400
4.056	.189	-.03640	.05860	.04130	.00040	-.00080	-.00020	.08220	-.36580	3.85210	.18380
4.050	3.973	-.04290	.05760	.05090	-.06770	.00930	-.00030	.08480	-.37700	3.79350	3.94640
4.034	6.104	-.04480	.05830	.05360	-.10420	.01170	-.00040	.08790	-.39110	3.76660	6.07270
	GRADIENT	.00215	.00018	-.00098	-.01830	.00297	-.00005	-.00028	.00127	-.02209	.99490

IA156A, AEDC PWT 16T-470, O T S W/SILTS (R8NT88) (10 MAY 80)

REFERENCE DATA

SREF = 2690.0000 SQ.FT. XMRP = 976.0000 IN. XT
LREF = 1290.3000 INCHES YMRP = .0000 IN. YT
BREF = 1290.3000 INCHES ZMRP = 400.0000 IN. ZT
SCALE = .0200

PARAMETRIC DATA

IB-ELV = 8.000 OB-ELV = 9.000
BDFLAP = .000 SPDBRK = .000
RUDDER = .000 SILTS = 1.000
MACH = 1.050 RN/L = 3.500

RUN NO. 1149/ 0 RN/L = 3.50 GRADIENT INTERVAL = -5.00/ 5.00

ALPHAT	BETAT	CNFT	CAFT	CLMFT	CYFT	CYNFT	CBLFT	CABT	CP7	ALPHAO	BETAO
-8.419	-5.926	-.29100	.08620	.02040	.10590	-.00910	.00000	.11820	-.52570	-8.26360	-5.91950
-8.440	-3.826	-.29270	.08570	.01580	.06480	-.00580	-.00020	.11680	-.51970	-8.28730	-3.83160
-8.402	.400	-.25410	.08800	-.00190	-.00780	.00060	-.00040	.11530	-.51290	-8.18570	.39700
-8.212	4.350	-.25790	.08690	.00380	-.06580	.00230	-.00040	.11750	-.52240	-8.01130	4.34230
-8.211	6.283	-.26020	.08560	.00590	-.09780	.00460	-.00060	.11820	-.52560	-8.01720	6.26310
	GRADIENT	.00308	.00015	-.00150	-.01599	.00100	-.00002	.00008	-.00031	.03364	.99969

RUN NO. 1150/ 0 RN/L = 3.50 GRADIENT INTERVAL = -5.00/ 5.00

ALPHAT	BETAT	CNFT	CAFT	CLMFT	CYFT	CYNFT	CBLFT	CABT	CP7	ALPHAO	BETAO
-6.288	-5.995	-.24310	.08690	.02720	.10960	-.01380	.00020	.11340	-.50450	-6.21710	-6.00010
-6.215	-4.057	-.23420	.08760	.02360	.07090	-.00940	.00000	.11080	-.49280	-6.14310	-4.07090
-6.396	.108	-.20690	.08800	.00310	-.00420	-.00030	-.00030	.11380	-.50620	-6.26330	.10160
-6.156	4.274	-.20990	.08630	.01180	-.06600	.00550	-.00050	.11370	-.50570	-6.04990	4.27590
-6.112	6.262	-.21250	.08910	.01310	-.09740	.00810	-.00070	.11160	-.49640	-6.00950	6.26060
	GRADIENT	.00292	-.00016	-.00142	-.01643	.00179	-.00006	.00035	-.00155	.01119	1.00196

IA156A, AEDC PWT 16T-470, O T S W/SILTS (R8NT88) (10 MAY 80)

REFERENCE DATA

SREF = 2690.0000 SQ.FT. XMRP = 976.0000 IN. XT
LREF = 1290.3000 INCHES YMRP = .0000 IN. YT
BREF = 1290.3000 INCHES ZMRP = 400.0000 IN. ZT
SCALE = .0200

PARAMETRIC DATA

IB-ELV = 8.000 OB-ELV = 9.000
BDFLAP = .000 SPDBRK = .000
RUDDER = .000 SILTS = 1.000
MACH = 1.050 RN/L = 3.500

RUN NO. 1151/ 0 RN/L = 3.50 GRADIENT INTERVAL = -5.00/ 5.00

ALPHAT	BETAT	CNFT	CAFT	CLMFT	CYFT	CYNFT	CBLFT	CABT	CP7	ALPHAO	BETAO
-4.096	-6.088	-.20440	.08680	.03600	.10860	-.01440	.00020	.11000	-.48930	-4.12200	-6.10500
-4.343	-3.991	-.19810	.08710	.02970	.06540	-.00880	-.00010	.10800	-.48020	-4.34750	-4.02310
-4.313	.375	-.16110	.08610	.00950	-.00700	-.00020	-.00040	.11220	-.49900	-4.26490	.37140
-3.793	4.315	-.16280	.08880	.02110	-.06410	.00480	-.00050	.10760	-.47860	-3.79660	4.33580
-3.882	6.158	-.16740	.08880	.02150	-.09820	.00950	-.00070	.10880	-.48390	-3.88470	6.17290
	GRADIENT	.00433	.00020	-.00110	-.01561	.00164	-.00005	-.00003	.00011	.06548	1.00648

RUN NO. 1152/ 0 RN/L = 3.50 GRADIENT INTERVAL = -5.00/ 5.00

ALPHAT	BETAT	CNFT	CAFT	CLMFT	CYFT	CYNFT	CBLFT	CABT	CP7	ALPHAO	BETAO
-.247	-7.004	-.15100	.08670	.05700	.12330	-.01630	.00010	.10520	-.46780	-.45110	-7.05700
-.251	-4.821	-.13870	.08190	.05050	.08110	-.01150	.00000	.10860	-.48310	-.43520	-4.89110
-.329	-.462	-.09850	.08340	.02490	.00960	-.00540	-.00030	.10910	-.48510	-.40920	-.53920
-.254	3.637	-.10210	.08630	.03320	-.05690	.00520	-.00030	.10810	-.48070	-.37570	3.59210
-.232	5.819	-.10480	.08570	.03680	-.09290	.00900	-.00050	.11030	-.49040	-.37260	5.77220
	GRADIENT	.00438	.00052	-.00209	-.01632	.00197	-.00004	-.00006	.00028	.00702	1.00286

RUN NO. 1153/ 0 RN/L = 3.50 GRADIENT INTERVAL = -5.00/ 5.00

ALPHAT	BETAT	CNFT	CAFT	CLMFT	CYFT	CYNFT	CBLFT	CABT	CP7	ALPHAO	BETAO
4.386	-5.746	-.06840	.08100	.06520	.10290	-.01280	.00000	.10450	-.46470	4.06310	-5.73550
4.239	-3.728	-.05650	.08310	.05750	.07000	-.01200	-.00010	.10020	-.44550	3.94120	-3.72280
3.954	.031	-.03160	.08480	.03950	.00220	-.00210	-.00020	.09750	-.43370	3.71670	.01700
4.065	3.968	-.03880	.08270	.04930	-.06690	.00900	-.00030	.10260	-.45630	3.79590	3.94430
4.052	6.092	-.04130	.08410	.05280	-.10320	.01040	-.00040	.10300	-.45810	3.76690	6.06120
	GRADIENT	.00227	-.00006	-.00104	-.01779	.00273	-.00003	.00032	-.00144	-.01857	.99620

IA156A, AEDC PWT 16T-470, O T S W/SILTS (R8NT89) (10 MAY 80)

REFERENCE DATA

SREF = 2690.0000 SQ.FT. XMRP = 976.0000 IN. XT
LREF = 1290.3000 INCHES YMRP = .0000 IN. YT
BREF = 1290.3000 INCHES ZMRP = 400.0000 IN. ZT
SCALE = .0200

PARAMETRIC DATA

IB-ELV = 8.000 OB-ELV = 9.000
BDFLAP = .000 SPDBRK = .000
RUDDER = .000 SILTS = 1.000
MACH = 1.100 RN/L = 3.500

RUN NO. 1154/ 0 RN/L = 3.50 GRADIENT INTERVAL = -5.00/ 5.00

ALPHAT	BETAT	CNFT	CAFT	CLMFT	CYFT	CYNFT	CBLFT	CABT	CP7	ALPHAO	BETAO
-8.401	-5.911	-.28520	.09380	.01920	.10290	-.00960	.00000	.10590	-.47090	-8.24130	-5.91410
-8.428	-3.814	-.27670	.09350	.01340	.06290	-.00550	-.00010	.10380	-.46180	-8.25690	-3.81780
-8.421	.188	-.25080	.09360	-.00340	-.00530	.00000	-.00030	.10410	-.46320	-8.18270	.17980
-8.217	4.371	-.25340	.09500	.00330	-.06320	.00110	-.00050	.10440	-.46420	-8.01110	4.35700
-8.205	6.275	-.25610	.09390	.00580	-.09470	.00370	-.00060	.10590	-.47090	-8.01150	6.25700
	GRADIENT	.00282	.00018	-.00121	-.01539	.00080	-.00005	.00007	-.00029	.03011	.99874

RUN NO. 1155/ 0 RN/L = 3.50 GRADIENT INTERVAL = -5.00/ 5.00

ALPHAT	BETAT	CNFT	CAFT	CLMFT	CYFT	CYNFT	CBLFT	CABT	CP7	ALPHAO	BETAO
-6.294	-5.992	-.24380	.09420	.02500	.10590	-.01240	.00010	.10100	-.44920	-6.20160	-5.99410
-6.277	-4.070	-.23490	.09420	.02120	.06620	-.00760	-.00010	.09940	-.44190	-6.17910	-4.08100
-6.429	.113	-.20520	.09520	.00220	-.00360	-.00150	-.00040	.09920	-.44140	-6.27410	.10000
-6.178	4.288	-.20840	.09380	.01120	-.05920	.00140	-.00050	.10090	-.44890	-6.06410	4.28010
-6.109	6.262	-.20900	.08740	.01200	-.09420	.00610	-.00080	.10770	-.47920	-6.00350	6.25280
	GRADIENT	.00317	-.00005	-.00120	-.01500	.00108	-.00005	.00018	-.00084	.01375	1.00039

RUN NO. 1156/ 0 RN/L = 3.50 GRADIENT INTERVAL = -5.00/ 5.00

ALPHAT	BETAT	CNFT	CAFT	CLMFT	CYFT	CYNFT	CBLFT	CABT	CP7	ALPHAO	BETAO
-4.109	-6.094	-.20340	.09380	.03440	.10310	-.01260	.00010	.09760	-.43410	-4.12290	-6.10510
-4.361	-3.993	-.19770	.09430	.02790	.06010	-.00710	-.00010	.09510	-.42290	-4.34650	-4.01960
-4.317	.372	-.15990	.09710	.00920	-.00680	-.00110	-.00040	.09360	-.41620	-4.25780	.36350
-3.781	4.327	-.16000	.09630	.02090	-.06340	.00340	-.00050	.09440	-.41970	-3.78520	4.33580
-3.875	6.165	-.16510	.09610	.02160	-.09660	.00790	-.00070	.09630	-.42820	-3.88220	6.16970
	GRADIENT	.00460	.00025	-.00090	-.01485	.00126	-.00005	-.00009	.00040	.06665	1.00430

RUN NO. 1157/ 0 RN/L = 3.50 GRADIENT INTERVAL = -5.00/ 5.00

ALPHAT	BETAT	CNFT	CAFT	CLMFT	CYFT	CYNFT	CBLFT	CABT	CP7	ALPHAO	BETAO
-.250	-7.000	-.15210	.09060	.05660	.12030	-.01450	.00010	.09720	-.43220	-.45600	-7.03740
-.249	-4.850	-.13940	.09380	.05020	.07770	-.00970	-.00010	.09100	-.40470	-.43740	-4.90530
-.311	-.443	-.10240	.09160	.02680	.00730	-.00450	-.00030	.09510	-.42280	-.40160	-.51470
-.237	3.647	-.10500	.09690	.03480	-.05670	.00430	-.00030	.09120	-.40570	-.37330	3.59390
-.221	5.831	-.10620	.09440	.03690	-.09280	.00790	-.00050	.09490	-.42190	-.36910	5.77420
	GRADIENT	.00410	.00035	-.00186	-.01582	.00164	-.00002	.00004	-.00017	.00755	1.00017

IA156A, AEDC PWT 16T-470, O T S W/SILTS (R8NT89) (10 MAY 80)

REFERENCE DATA

SREF = 2690.0000 SQ.FT. XMRP = 976.0000 IN. XT
LREF = 1290.3000 INCHES YMRP = .0000 IN. YT
BREF = 1290.3000 INCHES ZMRP = 400.0000 IN. ZT
SCALE = .0200

PARAMETRIC DATA

IB-ELV = 8.000 OB-ELV = 9.000
BDFLAP = .000 SPDBRK = .000
RUDDER = .000 SILTS = 1.000
MACH = 1.100 RN/L = 3.500

RUN NO. 1158/ 0 RN/L = 3.50 GRADIENT INTERVAL = -5.00/ 5.00

ALPHAT	BETAT	CNFT	CAFT	CLMFT	CYFT	CYNFT	CBLFT	CABT	CP7	ALPHAO	BETAO
4.314	-5.859	-.07010	.09140	.06800	.10480	-.01280	.00000	.08810	-.39210	3.96080	-5.84490
4.274	-3.749	-.05790	.09140	.06100	.06960	-.01170	-.00010	.08590	-.38230	3.94390	-3.74520
4.090	.201	-.03240	.09180	.04310	-.00430	-.00050	-.00020	.08580	-.38180	3.82200	.18450
4.087	3.961	-.04140	.08860	.05310	-.06700	.00820	-.00040	.09060	-.40310	3.78020	3.93220
4.081	6.105	-.04450	.09280	.05550	-.10270	.00930	-.00040	.08850	-.39380	3.77140	6.06810
	GRADIENT	.00218	-.00036	-.00105	-.01773	.00258	-.00004	.00060	-.00267	-.02131	.99574

IA156A, AEDC PWT 16T-470, O T S W/SILTS (R8NT90) (10 MAY 80)

REFERENCE DATA

SREF = 2690.0000 SQ.FT. XMRP = 976.0000 IN. XT
LREF = 1290.3000 INCHES YMRP = .0000 IN. YT
BREF = 1290.3000 INCHES ZMRP = 400.0000 IN. ZT
SCALE = .0200

PARAMETRIC DATA

IB-ELV = 8.000 OB-ELV = 9.000
BDFLAP = .000 SPDBRK = .000
RUDDER = .000 SILTS = 1.000
MACH = 1.150 RN/L = 3.500

RUN NO. 1159/ 0 RN/L = 3.49 GRADIENT INTERVAL = -5.00/ 5.00

ALPHAT	BETAT	CNFT	CAFT	CLMFT	CYFT	CYNFT	CBLFT	CABT	CP7	ALPHAO	BETAO
-8.399	-5.939	-.28900	.09940	.02240	.10610	-.01050	.00000	.10040	-.44670	-8.24530	-5.92430
-8.431	-3.823	-.28150	.09890	.01760	.06400	-.00620	-.00010	.09900	-.44030	-8.27350	-3.82100
-8.421	.407	-.25610	.10190	.00090	-.00510	-.00170	-.00030	.09580	-.42620	-8.19710	.39510
-8.194	4.363	-.26000	.10120	.00810	-.05850	.00000	-.00050	.09790	-.43550	-8.01240	4.34220
-8.187	6.293	-.26200	.09960	.00990	-.09190	.00370	-.00070	.09900	-.44030	-8.01280	6.26560
	GRADIENT	.00267	.00029	-.00119	-.01498	.00076	-.00005	-.00014	.00062	.03174	.99720

RUN NO. 1160/ 0 RN/L = 3.50 GRADIENT INTERVAL = -5.00/ 5.00

ALPHAT	BETAT	CNFT	CAFT	CLMFT	CYFT	CYNFT	CBLFT	CABT	CP7	ALPHAO	BETAO
-6.284	-6.005	-.24360	.09850	.02760	.10850	-.01440	.00010	.09750	-.43380	-6.21050	-6.00070
-6.235	-4.070	-.23690	.10040	.02430	.06950	-.00960	-.00010	.09450	-.42020	-6.15710	-4.07980
-6.408	.117	-.21040	.10040	.00650	.00050	-.00350	-.00030	.09540	-.42430	-6.27700	.10170
-6.149	4.299	-.21170	.10170	.01460	-.06000	.00100	-.00050	.09380	-.41720	-6.05820	4.28340
-6.089	6.272	-.21220	.10120	.01510	-.09670	.00680	-.00070	.09490	-.42220	-6.00000	6.25330
	GRADIENT	.00301	.00016	-.00116	-.01547	.00127	-.00005	-.00008	.00036	.01181	.99928

IA156A, AEDC PWT 16T-470, O T S W/SILTS (R8NT90) (10 MAY 80)

REFERENCE DATA

SREF = 2690.0000 SQ.FT. XMRP = 976.0000 IN. XT
LREF = 1290.3000 INCHES YMRP = .0000 IN. YT
BREF = 1290.3000 INCHES ZMRP = 400.0000 IN. ZT
SCALE = .0200

PARAMETRIC DATA

IB-ELV = 8.000 OB-ELV = 9.000
BDFLAP = .000 SPDBRK = .000
RUDDER = .000 SILTS = 1.000
MACH = 1.150 RN/L = 3.500

RUN NO. 1161/ 0 RN/L = 3.50 GRADIENT INTERVAL = -5.00/ 5.00

ALPHAT	BETAT	CNFT	CAFT	CLMFT	CYFT	CYNFT	CBLFT	CABT	CP7	ALPHAO	BETAO
-4.080	-6.104	-.20400	.10070	.03680	.10760	-.01520	.00000	.09320	-.41470	-4.11930	-6.11450
-4.328	-3.995	-.19770	.10130	.03070	.06540	-.00950	-.00020	.09050	-.40230	-4.34050	-4.02430
-4.310	.387	-.16550	.10330	.01280	-.00190	-.00430	-.00040	.08910	-.39630	-4.27890	.37360
-3.763	4.327	-.16540	.10320	.02420	-.06340	.00300	-.00050	.08990	-.39990	-3.79480	4.33220
-3.861	6.183	-.16890	.10230	.02460	-.09510	.00710	-.00070	.09140	-.40640	-3.89350	6.17920
	GRADIENT	.00395	.00023	-.00084	-.01547	.00150	-.00004	-.00008	.00031	.06461	1.00411

RUN NO. 1162/ 0 RN/L = 3.49 GRADIENT INTERVAL = -5.00/ 5.00

ALPHAT	BETAT	CNFT	CAFT	CLMFT	CYFT	CYNFT	CBLFT	CABT	CP7	ALPHAO	BETAO
-.220	-7.028	-.14970	.09480	.05720	.12170	-.01610	.00010	.09590	-.42640	-.44810	-7.07010
-.205	-4.871	-.13620	.10190	.05070	.07890	-.01090	-.00010	.08620	-.38330	-.41270	-4.92940
-.266	-.430	-.10110	.10280	.02770	.00700	-.00440	-.00030	.08620	-.38340	-.37760	-.50410
-.194	3.652	-.10210	.10160	.03490	-.05700	.00490	-.00030	.08820	-.39210	-.34800	3.59610
-.189	5.844	-.10530	.10300	.03780	-.09400	.00860	-.00050	.08850	-.39370	-.35780	5.77990
	GRADIENT	.00406	-.00003	-.00190	-.01595	.00195	-.00002	.00023	-.00102	.00760	1.00026

RUN NO. 1163/ 0 RN/L = 3.50 GRADIENT INTERVAL = -5.00/ 5.00

ALPHAT	BETAT	CNFT	CAFT	CLMFT	CYFT	CYNFT	CBLFT	CABT	CP7	ALPHAO	BETAO
4.360	-5.855	-.07390	.09780	.07180	.10590	-.01390	.00000	.08500	-.37800	3.96910	-5.84610
4.308	-3.725	-.06120	.09650	.06490	.06880	-.01300	-.00010	.08430	-.37480	3.93720	-3.73350
4.141	.216	-.03950	.09590	.04940	.00010	-.00390	-.00020	.08420	-.37450	3.82030	.18620
4.152	4.000	-.04150	.10040	.05420	-.06140	.00510	-.00040	.08160	-.36290	3.82580	3.96680
4.057	6.047	-.04500	.09950	.05650	-.09770	.00820	-.00040	.08480	-.37700	3.72710	6.00710
	GRADIENT	.00257	.00050	-.00140	-.01686	.00234	-.00004	-.00035	.00153	-.01453	.99676

IA156A, AEDC PWT 16T-470, O T S W/SILTS (R8NT91) (10 MAY 80)

REFERENCE DATA

SREF = 2690.0000 SQ.FT. XMRP = 976.0000 IN. XT
LREF = 1290.3000 INCHES YMRP = .0000 IN. YT
BREF = 1290.3000 INCHES ZMRP = 400.0000 IN. ZT
SCALE = .0200

PARAMETRIC DATA

IB-ELV = 8.000 OB-ELV = 9.000
BDFLAP = .000 SPDBRK = .000
RUDDER = .000 SILTS = 1.000
MACH = 1.250 RN/L = 3.500

RUN NO. 1164/ 0 RN/L = 3.50 GRADIENT INTERVAL = -5.00/ 5.00

ALPHAT	BETAT	CNFT	CAFT	CLMFT	CYFT	CYNFT	CBLFT	CABT	CP7	ALPHAO	BETAO
-8.347	-5.939	-.29340	.10540	.03050	.09640	-.00650	.00000	.09130	-.40620	-8.25250	-5.91220
-8.367	-3.827	-.28400	.10550	.02520	.05550	-.00180	-.00010	.08970	-.39920	-8.26650	-3.80650
-8.365	.411	-.25880	.10800	.00820	-.00430	-.00100	-.00020	.08780	-.39030	-8.19750	.40350
-8.149	4.395	-.25940	.10810	.01390	-.05880	.00000	-.00040	.08690	-.38670	-8.00850	4.36300
-8.169	6.315	-.26350	.10620	.01490	-.09110	.00340	-.00060	.08980	-.39930	-8.02050	6.27440
	GRADIENT	.00302	.00032	-.00140	-.01390	.00022	-.00004	-.00034	.00153	.03122	.99367

RUN NO. 1165/ 0 RN/L = 3.50 GRADIENT INTERVAL = -5.00/ 5.00

ALPHAT	BETAT	CNFT	CAFT	CLMFT	CYFT	CYNFT	CBLFT	CABT	CP7	ALPHAO	BETAO
-6.267	-6.034	-.24900	.10820	.03470	.09920	-.00970	.00000	.08740	-.38860	-6.24370	-6.01410
-6.203	-4.083	-.23990	.10700	.03100	.06180	-.00490	-.00010	.08720	-.38790	-6.18330	-4.07700
-6.354	.126	-.21400	.10900	.01270	.00020	-.00240	-.00030	.08480	-.37700	-6.27810	.11710
-6.111	4.313	-.21290	.10750	.01870	-.06310	.00340	-.00050	.08610	-.38310	-6.05040	4.29330
-6.071	6.300	-.21330	.10650	.01820	-.09750	.00720	-.00060	.08800	-.39140	-6.00050	6.27080
	GRADIENT	.00322	.00006	-.00147	-.01488	.00099	-.00005	-.00013	.00057	.01580	.99690

RUN NO. 1166/ 0 RN/L = 3.49 GRADIENT INTERVAL = -5.00/ 5.00

ALPHAT	BETAT	CNFT	CAFT	CLMFT	CYFT	CYNFT	CBLFT	CABT	CP7	ALPHAO	BETAO
-4.049	-6.132	-.20910	.10690	.04310	.10380	-.01250	.00000	.08740	-.38870	-4.13450	-6.12930
-4.273	-3.990	-.20280	.10410	.03700	.06280	-.00760	-.00020	.08790	-.39120	-4.33910	-4.00270
-4.252	.386	-.17050	.10970	.01920	-.00600	-.00110	-.00030	.08190	-.36420	-4.26510	.38020
-3.734	4.340	-.16710	.11060	.02750	-.06460	.00470	-.00050	.08260	-.36720	-3.79310	4.33960
-3.840	6.205	-.16910	.10850	.02660	-.09580	.00790	-.00060	.08550	-.38010	-3.88870	6.19250
	GRADIENT	.00434	.00079	-.00119	-.01530	.00148	-.00004	-.00065	.00294	.06468	1.00148

RUN NO. 1167/ 0 RN/L = 3.50 GRADIENT INTERVAL = -5.00/ 5.00

ALPHAT	BETAT	CNFT	CAFT	CLMFT	CYFT	CYNFT	CBLFT	CABT	CP7	ALPHAO	BETAO
-.187	-7.050	-.15760	.10460	.06480	.11750	-.01410	.00010	.08640	-.38410	-.47840	-7.08190
-.169	-4.847	-.14360	.10490	.05850	.07430	-.00940	-.00010	.08380	-.37280	-.44350	-4.89710
-.201	-.479	-.11200	.10910	.03870	.00680	-.00420	-.00030	.07750	-.34480	-.39910	-.55040
-.145	3.659	-.11300	.10270	.04450	-.05630	.00410	-.00030	.08560	-.38080	-.37630	3.59500
-.147	5.879	-.11370	.10510	.04580	-.09200	.00690	-.00040	.08480	-.37710	-.38300	5.80120
	GRADIENT	.00363	-.00025	-.00167	-.01535	.00158	-.00002	.00020	-.00087	.00792	.99834

IA156A, AEDC PWT 16T-470, O T S W/SILTS (R8NT91) (10 MAY 80)

REFERENCE DATA

SREF = 2690.0000 SQ.FT. XMRP = 976.0000 IN. XT
LREF = 1290.3000 INCHES YMRP = .0000 IN. YT
BREF = 1290.3000 INCHES ZMRP = 400.0000 IN. ZT
SCALE = .0200

PARAMETRIC DATA

IB-ELV = 8.000 OB-ELV = 9.000
BDFLAP = .000 SPDBRK = .000
RUDDER = .000 SILTS = 1.000
MACH = 1.250 RN/L = 3.500

RUN NO. 1168/ 0 RN/L = 3.49 GRADIENT INTERVAL = -5.00/ 5.00

ALPHAT	BETAT	CNFT	CAFT	CLMF1	CYFT	CYNFT	CBLFT	CABT	CP7	ALPHAO	BETAO
4.521	-5.714	-.07310	.10500	.07710	.09800	-.01190	.00000	.07760	-.34500	4.07750	-5.70210
4.377	-3.769	-.06430	.10420	.07080	.06390	-.00980	-.00010	.07670	-.34090	3.95360	-3.76700
4.205	.201	-.04710	.10350	.05830	-.00340	-.00150	-.00020	.07530	-.33490	3.80750	.17990
4.148	3.900	-.05360	.10490	.06520	-.06070	.00590	-.00030	.07630	-.33940	3.74460	3.87510
4.175	6.124	-.05690	.10530	.06760	-.10000	.00900	-.00030	.07740	-.34430	3.77130	6.08990
	GRADIENT	.00143	.00009	-.00076	-.01626	.00205	-.00003	-.00006	.00021	-.02737	.99653

IA156A, AEDC PWT 16T-470, O T S W/SILTS (R8NT92) (10 MAY 80)

REFERENCE DATA

SREF = 2690.0000 SQ.FT. XMRP = 976.0000 IN. XT
LREF = 1290.3000 INCHES YMRP = .0000 IN. YT
BREF = 1290.3000 INCHES ZMRP = 400.0000 IN. ZT
SCALE = .0200

PARAMETRIC DATA

IB-ELV = 8.000 OB-ELV = 5.000
BDFLAP = .000 SPDBRK = .000
RUDDER = .000 SILTS = 1.000
MACH = .600 RN/L = 3.500

RUN NO. 1173/ 0 RN/L = 3.50 GRADIENT INTERVAL = -5.00/ 5.00

ALPHAT	BETAT	CNFT	CAFT	CLMFT	CYFT	CYNFT	CBLFT	CABT	CP7	ALPHAO	BETAO
-8.046	-7.941	-.25310	.03750	.03230	.08320	.00830	.00010	.09150	-.40710	-8.02540	-7.90750
-8.150	-5.802	-.25220	.03850	.02720	.05650	.00720	.00000	.08910	-.39610	-8.11640	-5.78360
-8.156	-3.808	-.24230	.04260	.02290	.03360	.00540	-.00010	.08290	-.36870	-8.12120	-3.80310
-8.083	.279	-.23230	.04230	.01670	-.00490	-.00090	-.00010	.08520	-.37880	-8.04810	.27510
-7.946	4.233	-.22610	.04400	.01960	-.03520	-.00810	-.00020	.08250	-.36710	-7.90010	4.22610
-7.945	6.181	-.22430	.04280	.02040	-.05270	-.01090	-.00040	.08490	-.37770	-7.89800	6.16370
-7.766	8.258	-.21710	.04200	.01990	-.07430	-.01310	-.00050	.08900	-.39580	-7.72510	8.22930
	GRADIENT	.00202	.00017	-.00042	-.00856	-.00168	-.00001	-.00005	.00018	.02744	.99853

RUN NO. 1174/ 0 RN/L = 3.49 GRADIENT INTERVAL = -5.00/ 5.00

ALPHAT	BETAT	CNFT	CAFT	CLMFT	CYFT	CYNFT	CBLFT	CABT	CP7	ALPHAO	BETAO
-6.133	-7.937	-.22270	.03980	.03810	.09050	.00480	.00020	.08730	-.38810	-6.14840	-7.91310
-6.104	-5.941	-.21860	.04020	.03350	.06340	.00430	.00010	.08640	-.38430	-6.11050	-5.93210
-6.062	-3.983	-.21280	.04380	.02990	.03910	.00320	.00000	.08150	-.36230	-6.06620	-3.98720
-6.116	.112	-.19910	.04510	.02250	-.00270	-.00130	-.00010	.08100	-.36020	-6.11040	.10700
-5.962	4.197	-.19420	.04540	.02730	-.03810	-.00700	-.00030	.08110	-.36050	-5.96190	4.19590
-5.735	6.246	-.18790	.04640	.02830	-.05990	-.00800	-.00040	.08090	-.35970	-5.73720	6.23940
-5.882	8.163	-.18810	.04320	.02580	-.08060	-.00910	-.00060	.08570	-.38100	-5.87530	8.14510
	GRADIENT	.00227	.00020	-.00032	-.00944	-.00125	-.00004	-.00005	.00022	.01274	1.00039

IA156A, AEDC PWT 16T-470, O T S W/SILTS (R8NT92) (10 MAY 80)

REFERENCE DATA

SREF = 2690.0000 SQ.FT. XMRP = 976.0000 IN. XT
LREF = 1290.3000 INCHES YMRP = .0000 IN. YT
BREF = 1290.3000 INCHES ZMRP = 400.0000 IN. ZT
SCALE = .0200

PARAMETRIC DATA

IB-ELV = 8.000 OB-ELV = 5.000
BDFLAP = .000 SPDBRK = .000
RUDDER = .000 SILTS = 1.000
MACH = .600 RN/L = 3.500

RUN NO. 1175/ 0 RN/L = 3.49 GRADIENT INTERVAL = -5.00/ 5.00

ALPHAT	BETAT	CNFT	CAFT	CLMFT	CYFT	CYNFT	CBLFT	CABT	CP7	ALPHAO	BETAO
-3.969	-8.046	-.19220	.04090	.04520	.09550	.00220	.00030	.08440	-.37540	-4.02670	-8.03670
-4.182	-5.932	-.19010	.04340	.04010	.06490	.00250	.00010	.08090	-.35980	-4.22920	-5.93460
-4.200	-3.884	-.18470	.04310	.03620	.03830	.00180	.00000	.08040	-.35770	-4.24210	-3.90150
-4.005	.181	-.16530	.04710	.02970	-.00380	-.00180	-.00010	.07740	-.34420	-4.04340	.17520
-3.652	4.264	-.15800	.04810	.03650	-.04210	-.00500	-.00030	.07680	-.34150	-3.70570	4.27780
-3.609	6.053	-.15670	.04650	.03630	-.06200	-.00550	-.00050	.07940	-.35310	-3.65760	6.06010
-3.787	8.032	-.15660	.04390	.03460	-.08660	-.00500	-.00070	.08400	-.37360	-3.82430	8.03100
	GRADIENT	.00328	.00061	.00004	-.00987	-.00083	-.00004	-.00044	.00199	.06584	1.00381

RUN NO. 1176/ 0 RN/L = 3.49 GRADIENT INTERVAL = -5.00/ 5.00

ALPHAT	BETAT	CNFT	CAFT	CLMFT	CYFT	CYNFT	CBLFT	CABT	CP7	ALPHAO	BETAO
-.238	-8.738	-.15240	.04170	.06250	.12040	-.00590	.00030	.08120	-.36110	-.37310	-8.75840
-.226	-6.555	-.14560	.04490	.05800	.08150	-.00210	.00020	.07700	-.34240	-.35690	-6.58460
-.224	-4.493	-.13980	.04520	.05400	.05280	-.00200	.00000	.07480	-.33290	-.34560	-4.53560
-.222	-.339	-.12610	.04710	.04680	-.00190	.00010	.00000	.07440	-.33110	-.31930	-.39650
-.177	3.746	-.12160	.04760	.05040	-.04780	-.00040	-.00010	.07330	-.32610	-.28860	3.68220
-.174	5.861	-.11940	.04510	.05060	-.07410	.00010	-.00030	.07590	-.33780	-.28630	5.79140
-.166	7.946	-.11130	.04450	.04940	-.10320	.00220	-.00050	.07830	-.34840	-.27480	7.86850
	GRADIENT	.00221	.00029	-.00044	-.01221	.00020	-.00001	-.00018	.00082	.00692	.99739

RUN NO. 1177/ 0 RN/L = 3.50 GRADIENT INTERVAL = -5.00/ 5.00

ALPHAT	BETAT	CNFT	CAFT	CLMFT	CYFT	CYNFT	CBLFT	CABT	CP7	ALPHAO	BETAO
4.316	-8.043	-.08540	.03980	.07660	.12350	-.01280	.00010	.07450	-.33140	4.08860	-8.00550
4.311	-5.813	-.07460	.04190	.07170	.08560	-.00850	.00000	.07160	-.31850	4.08320	-5.78060
4.279	-3.825	-.06760	.04200	.06880	.05250	-.00540	.00000	.07130	-.31710	4.05070	-3.79870
4.048	.090	-.05980	.04370	.06060	-.00200	-.00200	.00000	.07190	-.31980	3.83540	.08330
4.117	4.097	-.05460	.04210	.06300	-.05580	.00170	-.00030	.07430	-.33070	3.90040	4.05700
4.053	6.212	-.04950	.04480	.06060	-.08740	.00340	-.00060	.07120	-.31680	3.84380	6.16530
4.031	8.214	-.04350	.04360	.05840	-.11770	.00700	-.00070	.07340	-.32660	3.83510	8.16250
	GRADIENT	.00164	.00001	-.00073	-.01367	.00090	-.00004	.00038	-.00172	-.01884	.99168

IA156A, AEDC PWT 16T-470, O T S W/SILTS (R8NT92) (10 MAY 80)

REFERENCE DATA

SREF = 2690.0000 SQ.FT. XMRP = 976.0000 IN. XT
LREF = 1290.3000 INCHES YMRP = .0000 IN. YT
BREF = 1290.3000 INCHES ZMRP = 400.0000 IN. ZT
SCALE = .0200

PARAMETRIC DATA

IB-ELV = 8.000 OB-ELV = 5.000
BDFLAP = .000 SPDBRK = .000
RUDDER = .000 SILTS = 1.000
MACH = .600 RN/L = 3.500

RUN NO. 1178/ 0 RN/L = 3.51 GRADIENT INTERVAL = -5.00/ 5.00

ALPHAT	BETAT	CNFT	CAFT	CLMFT	CYFT	CYNFT	CBLFT	CABT	CP7	ALPHAO	BETAO
6.457	-7.975	-.05160	.03900	.08190	.13340	-.01620	.00000	.07240	-.32180	6.19390	-7.95260
6.431	-5.901	-.04300	.04140	.07840	.09360	-.01090	.00010	.06960	-.30930	6.16440	-5.88070
6.415	-3.840	-.03840	.04020	.07540	.06010	-.00870	.00010	.06980	-.31030	6.14500	-3.82420
6.122	.193	-.02940	.04410	.06700	-.00280	-.00120	-.00010	.07030	-.31280	5.86700	.18760
6.052	4.099	-.02850	.04300	.06830	-.05810	.00310	-.00030	.07050	-.31370	5.79620	4.07060
5.999	6.020	-.02410	.04330	.06740	-.08640	.00540	-.00050	.07020	-.31210	5.75150	5.98640
6.055	8.311	-.01780	.04220	.06620	-.12480	.01040	-.00080	.07260	-.32300	5.82430	8.27280
	GRADIENT	.00125	.00036	-.00090	-.01489	.00124	-.00005	.00009	-.00043	-.04407	.99446

RUN NO. 1179/ 0 RN/L = 3.50 GRADIENT INTERVAL = -5.00/ 5.00

ALPHAT	BETAT	CNFT	CAFT	CLMFT	CYFT	CYNFT	CBLFT	CABT	CP7	ALPHAO	BETAO
8.366	-7.818	-.01630	.03580	.08430	.13400	-.01860	.00010	.07280	-.32390	8.08280	-7.80300
8.291	-5.764	-.01230	.03830	.08150	.09530	-.01240	.00010	.06960	-.30980	7.99970	-5.75070
8.265	-3.765	-.00910	.03900	.08010	.05920	-.00770	.00000	.06800	-.30240	7.96530	-3.75270
8.179	.177	-.00340	.04030	.07600	-.00050	-.00090	-.00010	.06980	-.31050	7.87700	.17470
8.216	4.219	.00390	.04260	.07570	-.05840	.00420	-.00030	.06880	-.30590	7.92310	4.19840
8.168	6.231	.00770	.04170	.07450	-.08920	.00730	-.00060	.07000	-.31120	7.89000	6.20600
8.144	8.252	.00840	.03920	.07400	-.12850	.01320	-.00090	.07370	-.32790	7.88320	8.22630
	GRADIENT	.00163	.00045	-.00055	-.01473	.00149	-.00004	.00010	-.00043	-.00522	.99585

IA156A, AEDC PWT 16T-470, O T S W/SILTS (R8NT93) (10 MAY 80)

REFERENCE DATA

SREF = 2690.0000 SQ.FT. XMRP = 976.0000 IN. XT
LREF = 1290.3000 INCHES YMRP = .0000 IN. YT
BREF = 1290.3000 INCHES ZMRP = 400.0000 IN. ZT
SCALE = .0200

PARAMETRIC DATA

IB-ELV = 8.000 OB-ELV = 5.000
BDFLAP = .000 SPDBRK = .000
RUDDER = .000 SILTS = 1.000
MACH = .800 RN/L = 3.500

RUN NO. 1180/ 0 RN/L = 3.49 GRADIENT INTERVAL = -5.00/ 5.00

ALPHAT	BETAT	CNFT	CAFT	CLMFT	CYFT	CYNFT	CBLFT	CABT	CP7	ALPHAO	BETAO
-8.269	-5.894	-.27250	.04480	.03430	.07470	-.00130	.00000	.09110	-.40530	-8.22990	-5.87940
-8.301	-3.820	-.26530	.04710	.02970	.04660	-.00140	.00000	.08700	-.38710	-8.25880	-3.81860
-8.224	.385	-.24520	.04870	.01760	-.00630	-.00010	-.00020	.08610	-.38290	-8.16450	.38170
-8.062	4.372	-.24430	.04730	.02230	-.04860	-.00210	-.00030	.08730	-.38810	-7.98640	4.36110
-8.084	6.289	-.24330	.04820	.02270	-.07000	-.00340	-.00040	.08750	-.38900	-8.00260	6.26610
	GRADIENT	.00258	.00003	-.00092	-.01163	-.00008	-.00004	.00003	-.00011	.03315	.99851

RUN NO. 1181/ 0 RN/L = 3.50 GRADIENT INTERVAL = -5.00/ 5.00

ALPHAT	BETAT	CNFT	CAFT	CLMFT	CYFT	CYNFT	CBLFT	CABT	CP7	ALPHAO	BETAO
-6.190	-5.986	-.23690	.04710	.04100	.07840	-.00280	.00010	.08680	-.38610	-6.20570	-5.98350
-6.133	-4.050	-.22980	.04780	.03720	.05020	-.00240	.00000	.08400	-.37380	-6.14860	-4.05990
-6.256	.113	-.20890	.04660	.02300	-.00380	-.00040	-.00030	.08580	-.38150	-6.23680	.10680
-6.072	4.262	-.20790	.04880	.02940	-.04550	-.00290	-.00040	.08440	-.37560	-6.05620	4.26070
-5.775	6.351	-.20240	.05000	.03120	-.07070	-.00270	-.00050	.08430	-.37480	-5.76250	6.34240
	GRADIENT	.00264	.00012	-.00094	-.01151	-.00006	-.00005	.00005	-.00022	.01110	1.00101

RUN NO. 1182/ 0 RN/L = 3.50 GRADIENT INTERVAL = -5.00/ 5.00

ALPHAT	BETAT	CNFT	CAFT	CLMFT	CYFT	CYNFT	CBLFT	CABT	CP7	ALPHAO	BETAO
-4.210	-6.013	-.20780	.04620	.04830	.07730	-.00310	.00010	.08470	-.37680	-4.28330	-6.01990
-4.248	-3.961	-.19870	.04900	.04270	.04650	-.00260	.00000	.08020	-.35690	-4.31590	-3.98430
-4.203	.383	-.17060	.05050	.02890	-.00750	-.00040	-.00020	.07960	-.35410	-4.23160	.38080
-3.750	4.321	-.17080	.05050	.03890	-.05040	-.00080	-.00030	.08060	-.35860	-3.80040	4.33780
-3.816	6.145	-.17440	.04870	.03960	-.07540	.00060	-.00040	.08190	-.36420	-3.86170	6.15330
	GRADIENT	.00342	.00018	-.00051	-.01171	.00022	-.00004	.00005	-.00019	.06151	1.00476

RUN NO. 1183/ 0 RN/L = 3.50 GRADIENT INTERVAL = -5.00/ 5.00

ALPHAT	BETAT	CNFT	CAFT	CLMFT	CYFT	CYNFT	CBLFT	CABT	CP7	ALPHAO	BETAO
-.220	-6.894	-.15870	.04750	.06430	.10190	-.00870	.00030	.07930	-.35280	-.38550	-6.92930
-.227	-4.740	-.15080	.04750	.05860	.07060	-.00840	.00020	.07790	-.34670	-.38160	-4.78780
-.245	-.458	-.12630	.04880	.04380	.00390	-.00200	-.00010	.07400	-.32890	-.34790	-.51860
-.197	3.646	-.12530	.05030	.04920	-.05450	.00370	-.00010	.07550	-.33600	-.31650	3.58550
-.182	5.785	-.12650	.04880	.05240	-.08690	.00620	-.00030	.07730	-.34370	-.31450	5.72130
	GRADIENT	.00306	.00033	-.00114	-.01492	.00144	-.00004	-.00029	.00130	.00776	.99858

IA156A, AEDC PWT 16T-470, O T S W/SILTS (R8NT93) (10 MAY 80)

REFERENCE DATA

SREF = 2690.0000 SQ.FT. XMRP = 976.0000 IN. XT
LREF = 1290.3000 INCHES YMRP = .0000 IN. YT
BREF = 1290.3000 INCHES ZMRP = 400.0000 IN. ZT
SCALE = .0200

PARAMETRIC DATA

IB-ELV = 8.000 OB-ELV = 5.000
BDFLAP = .000 SPDBRK = .000
RUDDER = .000 SILTS = 1.000
MACH = .800 RN/L = 3.500

RUN NO. 1184/ 0 RN/L = 3.50 GRADIENT INTERVAL = -5.00/ 5.00

ALPHAT	BETAT	CNFT	CAFT	CLMFT	CYFT	CYNFT	CBLFT	CABT	CP7	ALPHAO	BETAO
4.374	-5.798	-.07030	.04460	.06900	.09720	-.01130	.00040	.07300	-.32480	4.09550	-5.77150
4.244	-3.699	-.06560	.04580	.06570	.05960	-.00810	.00020	.07180	-.31940	3.96480	-3.67850
3.961	.127	-.04780	.04730	.05220	.00110	-.00220	.00000	.07170	-.31890	3.72650	.12010
4.066	4.036	-.04860	.04770	.05860	-.05930	.00480	-.00020	.07120	-.31680	3.81080	4.00470
4.014	6.119	-.04720	.04440	.05790	-.09380	.00780	-.00040	.07500	-.33340	3.76910	6.08370
	GRADIENT	.00219	.00025	-.00091	-.01537	.00167	-.00005	-.00008	.00034	-.01976	.99338

RUN NO. 1185/ 0 RN/L = 3.50 GRADIENT INTERVAL = -5.00/ 5.00

ALPHAT	BETAT	CNFT	CAFT	CLMFT	CYFT	CYNFT	CBLFT	CABT	CP7	ALPHAO	BETAO
6.401	-5.830	-.03670	.04110	.07310	.09940	-.01250	.00030	.07340	-.32660	6.09550	-5.81820
6.358	-3.793	-.03050	.04350	.06990	.06470	-.00870	.00020	.07050	-.31340	6.04410	-3.78410
6.025	.165	-.01410	.04440	.05640	-.00200	-.00120	.00010	.07120	-.31670	5.74850	.15950
5.980	4.006	-.01710	.04580	.06120	-.06120	.00620	-.00020	.07020	-.31200	5.69130	3.98620
6.112	6.183	-.00990	.04430	.06150	-.09510	.00970	-.00040	.07240	-.32200	5.83410	6.16020
	GRADIENT	.00173	.00029	-.00113	-.01615	.00191	-.00005	-.00004	.00017	-.04539	.99629

IA156A, AEDC PWT 16T-470, O T S W/SILTS (R8NT94) (10 MAY 80)

REFERENCE DATA

SREF = 2690.0000 SQ.FT. XMRP = 976.0000 IN. XT
LREF = 1290.3000 INCHES YMRP = .0000 IN. YT
BREF = 1290.3000 INCHES ZMRP = 400.0000 IN. ZT
SCALE = .0200

PARAMETRIC DATA

IB-ELV = 8.000 OB-ELV = 5.000
BDFLAP = .000 SPDBRK = .000
RUDDER = .000 SILTS = 1.000
MACH = .900 RN/L = 3.500

RUN NO. 1186/ 0 RN/L = 3.50 GRADIENT INTERVAL = -5.00/ 5.00

ALPHAT	BETAT	CNFT	CAFT	CLMFT	CYFT	CYNFT	CBLFT	CABT	CP7	ALPHAO	BETAO
-8.251	-5.913	-.28250	.04740	.03430	.08490	-.00670	.00010	.10030	-.44610	-8.19000	-5.91570
-8.326	-3.746	-.27820	.05140	.02980	.05060	-.00420	-.00010	.09470	-.42100	-8.26130	-3.75720
-8.251	.183	-.25150	.05310	.01550	-.00420	.00040	-.00030	.09290	-.41300	-8.16580	.17600
-8.108	4.420	-.25140	.04190	.01970	-.05650	.00200	-.00040	.10460	-.46510	-8.00170	4.41670
-8.117	6.277	-.25120	.05370	.01970	-.08060	.00250	-.00050	.09500	-.42270	-8.00390	6.26340
	GRADIENT	.00324	-.00118	-.00121	-.01311	.00075	-.00004	.00123	-.00549	.03188	1.00102

IA156A, AEDC PWT 16T-470, O T S W/SILTS (R8NT94) (10 MAY 80)

REFERENCE DATA

SREF = 2690.0000 SQ.FT. XMRP = 976.0000 IN. XT
LREF = 1290.3000 INCHES YMRP = .0000 IN. YT
BREF = 1290.3000 INCHES ZMRP = 400.0000 IN. ZT
SCALE = .0200

PARAMETRIC DATA

IB-ELV = 8.000 OB-ELV = 5.000
BDFLAP = .000 SPDBRK = .000
RUDDER = .000 SILTS = 1.000
MACH = .900 RN/L = 3.500

RUN NO. 1187/ 0 RN/L = 3.50 GRADIENT INTERVAL = -5.00/ 5.00

ALPHAT	BETAT	CNFT	CAFT	CLMFT	CYFT	CYNFT	CBLFT	CABT	CP7	ALPHAO	BETAO
-6.215	-5.971	-.24790	.05320	.04080	.09160	-.01030	.00010	.09210	-.40980	-6.21180	-5.98200
-6.179	-4.049	-.23950	.05450	.03650	.06080	-.00850	.00000	.08860	-.39410	-6.17300	-4.07290
-6.296	.100	-.21170	.04950	.02050	-.00330	-.00020	-.00030	.09390	-.41750	-6.25390	.09120
-6.079	4.260	-.21240	.05570	.02700	-.05560	.00420	-.00040	.08720	-.38760	-6.03910	4.26630
-6.035	6.253	-.21320	.05250	.02720	-.08310	.00560	-.00050	.09160	-.40750	-5.99100	6.24830
	GRADIENT	.00326	.00014	-.00114	-.01401	.00153	-.00005	-.00017	.00078	.01613	1.00362

RUN NO. 1188/ 0 RN/L = 3.50 GRADIENT INTERVAL = -5.00/ 5.00

ALPHAT	BETAT	CNFT	CAFT	CLMFT	CYFT	CYNFT	CBLFT	CABT	CP7	ALPHAO	BETAO
-3.999	-6.095	-.20820	.04870	.04810	.09130	-.01070	.00020	.09360	-.41620	-4.06880	-6.11360
-4.285	-3.970	-.20290	.05390	.04150	.05660	-.00800	.00010	.08550	-.38030	-4.33600	-4.00100
-4.247	.383	-.16990	.05320	.02470	-.00860	.00100	-.00020	.08680	-.38610	-4.24710	.37890
-3.760	4.302	-.17180	.05490	.03520	-.05680	.00430	-.00030	.08350	-.37160	-3.79220	4.31750
-3.857	6.236	-.17540	.05360	.03520	-.08350	.00650	-.00050	.08570	-.38110	-3.87920	6.24390
	GRADIENT	.00383	.00012	-.00082	-.01373	.00150	-.00005	-.00023	.00101	.06491	1.00573

RUN NO. 1189/ 0 RN/L = 3.50 GRADIENT INTERVAL = -5.00/ 5.00

ALPHAT	BETAT	CNFT	CAFT	CLMFT	CYFT	CYNFT	CBLFT	CABT	CP7	ALPHAO	BETAO
-.254	-6.961	-.16420	.05160	.06390	.11230	-.01220	.00030	.08610	-.38290	-.41840	-6.99710
-.251	-4.797	-.15270	.05260	.05740	.07610	-.01020	.00010	.08290	-.36860	-.40000	-4.84900
-.308	-.409	-.11850	.05130	.03570	.00530	-.00250	-.00010	.07810	-.34720	-.36550	-.47320
-.253	3.650	-.12210	.04800	.04320	-.05770	.00590	-.00020	.08570	-.38100	-.33460	3.59200
-.235	5.800	-.12570	.05180	.04740	-.09110	.00950	-.00030	.08270	-.36790	-.33530	5.73870
	GRADIENT	.00368	-.00054	-.00172	-.01584	.00190	-.00004	.00031	-.00138	.00774	.99918

RUN NO. 1190/ 0 RN/L = 3.50 GRADIENT INTERVAL = -5.00/ 5.00

ALPHAT	BETAT	CNFT	CAFT	CLMFT	CYFT	CYNFT	CBLFT	CABT	CP7	ALPHAO	BETAO
4.337	-5.737	-.07140	.05070	.06710	.10020	-.01370	.00040	.07800	-.34680	4.05010	-5.71460
4.227	-3.723	-.06540	.04950	.06250	.06730	-.01150	.00020	.07750	-.34450	3.94970	-3.70800
3.912	.086	-.04520	.05040	.04570	.00200	-.00170	-.00010	.07570	-.33650	3.70820	.07970
4.051	3.979	-.04790	.04980	.05450	-.06300	.00820	-.00020	.07710	-.34270	3.80290	3.95420
4.000	6.102	-.04680	.04820	.05420	-.10020	.01140	-.00040	.08100	-.36010	3.76160	6.07220
	GRADIENT	.00226	.00004	-.00103	-.01692	.00256	-.00005	-.00005	.00023	-.01890	.99473

IA156A, AEDC PWT 16T-470, O T S W/SILTS (R8NT95) (10 MAY 80)

REFERENCE DATA

SREF = 2690.0000 SQ.FT. XMRP = 976.0000 IN. XT
LREF = 1290.3000 INCHES YMRP = .0000 IN. YT
BREF = 1290.3000 INCHES ZMRP = 400.0000 IN. ZT
SCALE = .0200

PARAMETRIC DATA

IB-ELV = 8.000 OB-ELV = 5.000
BDFLAP = .000 SPDBRK = .000
RUDDER = .000 SILTS = 1.000
MACH = .950 RN/L = 3.500

RUN NO. 1191/ 0 RN/L = 3.50 GRADIENT INTERVAL = -5.00/ 5.00

ALPHAT	BETAT	CNFT	CAFT	CLMFT	CYFT	CYNFT	CBLFT	CABT	CP7	ALPHAO	BETAO
-8.252	-5.917	-.28080	.05920	.02440	.10090	-.01270	.00020	.10450	-.46470	-8.13220	-5.92140
-8.405	-3.751	-.27670	.06220	.02040	.06200	-.00920	.00000	.09700	-.43150	-8.27570	-3.76340
-8.340	.175	-.25070	.05930	.00480	-.00340	-.00020	-.00030	.10090	-.44870	-8.17410	.16890
-8.179	4.433	-.25260	.06030	.01040	-.06660	.00630	-.00040	.10130	-.45060	-8.00960	4.43390
-8.161	6.267	-.25390	.06050	.01140	-.09490	.00820	-.00050	.10230	-.45490	-7.99710	6.26030
	GRADIENT	.00287	-.00023	-.00119	-.01570	.00189	-.00005	.00052	-.00231	.03260	1.00161

RUN NO. 1192/ 0 RN/L = 3.49 GRADIENT INTERVAL = -5.00/ 5.00

ALPHAT	BETAT	CNFT	CAFT	CLMFT	CYFT	CYNFT	CBLFT	CABT	CP7	ALPHAO	BETAO
-6.292	-5.993	-.24360	.06110	.03070	.10490	-.01610	.00020	.09940	-.44220	-6.23880	-6.00740
-6.207	-4.035	-.23380	.06160	.02760	.06810	-.01240	.00000	.09520	-.42350	-6.15180	-4.05910
-6.358	.105	-.20850	.06230	.01090	-.00400	.00030	-.00030	.09450	-.42010	-6.25120	.09750
-6.135	4.265	-.20870	.05800	.01730	-.06420	.00830	-.00050	.09980	-.44410	-6.04450	4.27390
-6.083	6.255	-.21070	.05990	.01860	-.09380	.01060	-.00060	.09940	-.44210	-6.00130	6.25690
	GRADIENT	.00302	-.00043	-.00124	-.01594	.00249	-.00006	.00055	-.00248	.01296	1.00404

RUN NO. 1193/ 0 RN/L = 3.49 GRADIENT INTERVAL = -5.00/ 5.00

ALPHAT	BETAT	CNFT	CAFT	CLMFT	CYFT	CYNFT	CBLFT	CABT	CP7	ALPHAO	BETAO
-4.032	-6.084	-.20440	.06100	.04000	.10040	-.01480	.00020	.09620	-.42800	-4.07170	-6.10960
-4.319	-3.970	-.19910	.06040	.03400	.06150	-.01010	.00000	.09320	-.41450	-4.33550	-4.00490
-4.286	.378	-.16570	.06000	.01720	-.00780	.00090	-.00030	.09510	-.42280	-4.25980	.37240
-3.782	4.317	-.16420	.06240	.02740	-.05990	.00610	-.00040	.09180	-.40830	-3.79800	4.33840
-3.868	6.141	-.16910	.05940	.02780	-.08680	.00810	-.00070	.09670	-.43020	-3.88060	6.15510
	GRADIENT	.00427	.00024	-.00085	-.01467	.00196	-.00005	-.00016	.00070	.06404	1.00679

RUN NO. 1194/ 0 RN/L = 3.48 GRADIENT INTERVAL = -5.00/ 5.00

ALPHAT	BETAT	CNFT	CAFT	CLMFT	CYFT	CYNFT	CBLFT	CABT	CP7	ALPHAO	BETAO
-.263	-6.967	-.15570	.06020	.05820	.11450	-.01430	.00030	.09350	-.41590	-.43130	-7.01400
-.251	-4.787	-.14360	.05890	.05270	.07550	-.01110	.00020	.09130	-.40630	-.41090	-4.85010
-.290	-.475	-.10970	.06100	.03300	.00590	-.00250	-.00020	.08830	-.39290	-.37950	-.54150
-.234	3.625	-.11310	.06040	.04000	-.05540	.00640	-.00020	.08980	-.39940	-.34340	3.57830
-.224	5.813	-.11560	.05750	.04270	-.08920	.00990	-.00040	.09520	-.42330	-.34310	5.76240
	GRADIENT	.00366	.00018	-.00154	-.01557	.00208	-.00005	-.00018	.00084	.00802	1.00195

IA156A, AEDC PWT 16T-470, O T S W/SILTS (R8NT95) (10 MAY 80)

REFERENCE DATA

SREF = 2690.0000 SQ.FT. XMRP = 976.0000 IN. XT
LREF = 1290.3000 INCHES YMRP = .0000 IN. YT
BREF = 1290.3000 INCHES ZMRP = 400.0000 IN. ZT
SCALE = .0200

PARAMETRIC DATA

IB-ELV = 8.000 OB-ELV = 5.000
BDFLAP = .000 SPDBRK = .000
RUDDER = .000 SILTS = 1.000
MACH = .950 RN/L = 3.500

RUN NO. 1195/ 0 RN/L = 3.49 GRADIENT INTERVAL = -5.00/ 5.00

ALPHAT	BETAT	CNFT	CAFT	CLMFT	CYFT	CYNFT	CBLFT	CABT	CP7	ALPHAO	BETAO
4.386	-5.779	-.07040	.05700	.06610	.10880	-.01530	.00030	.09040	-.40220	4.07880	-5.76170
4.210	-3.671	-.06210	.05650	.05860	.07210	-.01370	.00010	.08690	-.38660	3.93330	-3.66100
3.893	.128	-.03960	.05910	.04110	.00050	-.00100	-.00010	.08220	-.36580	3.70170	.12320
4.068	4.020	-.04450	.05900	.05180	-.06890	.00920	-.00030	.08480	-.37700	3.81520	3.99510
4.027	6.102	-.04690	.05970	.05440	-.10450	.01140	-.00030	.08790	-.39110	3.76370	6.07370
	GRADIENT	.00227	.00032	-.00087	-.01833	.00298	-.00005	-.00027	.00123	-.01517	.99543

IA156A, AEDC PWT 16T-470, O T S W/SILTS (R8NT96) (10 MAY 80)

REFERENCE DATA

SREF = 2690.0000 SQ.FT. XMRP = 976.0000 IN. XT
LREF = 1290.3000 INCHES YMRP = .0000 IN. YT
BREF = 1290.3000 INCHES ZMRP = 400.0000 IN. ZT
SCALE = .0200

PARAMETRIC DATA

IB-ELV = 8.000 OB-ELV = 5.000
BDFLAP = .000 SPDBRK = .000
RUDDER = .000 SILTS = 1.000
MACH = 1.050 RN/L = 3.500

RUN NO. 1196/ 0 RN/L = 3.50 GRADIENT INTERVAL = -5.00/ 5.00

ALPHAT	BETAT	CNFT	CAFT	CLMFT	CYFT	CYNFT	CBLFT	CABT	CP7	ALPHAO	BETAO
-8.310	-5.988	-.28800	.08560	.02130	.10890	-.01000	.00010	.11820	-.52570	-8.15430	-5.98130
-8.448	-3.788	-.29250	.08440	.01640	.06350	-.00570	-.00010	.11680	-.51970	-8.29150	-3.79400
-8.426	.189	-.25760	.08850	-.00150	-.00500	.00010	-.00030	.11530	-.51290	-8.20280	.18560
-8.206	4.342	-.25780	.08690	.00460	-.06500	.00200	-.00030	.11750	-.52240	-8.00290	4.33500
-8.212	6.267	-.26320	.08590	.00670	-.09740	.00430	-.00050	.11820	-.52560	-8.01090	6.24900
	GRADIENT	.00302	.00030	-.00143	-.01580	.00094	-.00002	.00009	-.00035	.03559	.99991

RUN NO. 1197/ 0 RN/L = 3.50 GRADIENT INTERVAL = -5.00/ 5.00

ALPHAT	BETAT	CNFT	CAFT	CLMFT	CYFT	CYNFT	CBLFT	CABT	CP7	ALPHAO	BETAO
-6.294	-5.992	-.24580	.08710	.02760	.11100	-.01420	.00020	.11340	-.50450	-6.21470	-5.99780
-6.238	-4.045	-.23710	.08780	.02380	.07230	-.00980	.00000	.11080	-.49280	-6.15680	-4.05960
-6.405	.167	-.20840	.08820	.00340	-.00360	-.00110	-.00030	.11380	-.50620	-6.26260	.16100
-6.179	4.288	-.21290	.08660	.01240	-.06580	.00520	-.00050	.11370	-.50570	-6.06430	4.29000
-5.914	6.341	-.20960	.08870	.01500	-.09670	.00740	-.00070	.11160	-.49640	-5.81410	6.34200
	GRADIENT	.00292	-.00014	-.00138	-.01658	.00180	-.00006	.00035	-.00155	.01097	1.00208

IA156A, AEDC PWT 16T-470, O T S W/SILTS (R8NT96) (10 MAY 80)

REFERENCE DATA

SREF = 2690.0000 SQ.FT. XMRP = 976.0000 IN. XT
LREF = 1290.3000 INCHES YMRP = .0000 IN. YT
BREF = 1290.3000 INCHES ZMRP = 400.0000 IN. ZT
SCALE = .0200

PARAMETRIC DATA

IB-ELV = 8.000 OB-ELV = 5.000
BDFLAP = .000 SPDBRK = .000
RUDDER = .000 SILTS = 1.000
MACH = 1.050 RN/L = 3.500

RUN NO. 1198/ 0 RN/L = 3.50 GRADIENT INTERVAL = -5.00/ 5.00

ALPHAT	BETAT	CNFT	CAFT	CLMFT	CYFT	CYNFT	CBLFT	CABT	CP7	ALPHAO	BETAO
-4.102	-6.092	-.20510	.08670	.03650	.10840	-.01460	.00020	.11000	-.48930	-4.12250	-6.10990
-4.349	-3.991	-.20010	.08750	.03030	.06460	-.00880	-.00010	.10800	-.48020	-4.34770	-4.02410
-4.320	.363	-.16210	.08670	.00960	-.00680	-.00040	-.00030	.11220	-.49900	-4.26500	.35880
-3.790	4.307	-.16420	.08960	.02150	-.06400	.00470	-.00050	.10760	-.47860	-3.78700	4.32950
-3.876	6.143	-.16700	.08780	.02190	-.09610	.00890	-.00070	.10880	-.48390	-3.87470	6.15870
	GRADIENT	.00440	.00025	-.00112	-.01551	.00163	-.00005	-.00003	.00012	.06673	1.00664

RUN NO. 1199/ 0 RN/L = 3.50 GRADIENT INTERVAL = -5.00/ 5.00

ALPHAT	BETAT	CNFT	CAFT	CLMFT	CYFT	CYNFT	CBLFT	CABT	CP7	ALPHAO	BETAO
-.271	-7.024	-.15160	.08750	.05670	.12350	-.01670	.00020	.10520	-.46780	-.46630	-7.07730
-.273	-4.824	-.13910	.08210	.05040	.08100	-.01180	.00000	.10860	-.48310	-.44830	-4.89320
-.352	-.462	-.09890	.08340	.02460	.00970	-.00550	-.00030	.10910	-.48510	-.42370	-.53850
-.270	3.631	-.10390	.08690	.03390	-.05620	.00490	-.00030	.10810	-.48070	-.38830	3.58630
-.253	5.813	-.10670	.08650	.03700	-.09210	.00860	-.00040	.11030	-.49040	-.38590	5.76600
	GRADIENT	.00422	.00056	-.00199	-.01623	.00197	-.00004	-.00006	.00028	.00706	1.00288

RUN NO. 1200/ 0 RN/L = 3.50 GRADIENT INTERVAL = -5.00/ 5.00

ALPHAT	BETAT	CNFT	CAFT	CLMFT	CYFT	CYNFT	CBLFT	CABT	CP7	ALPHAO	BETAO
4.393	-5.761	-.07120	.08260	.06630	.10450	-.01300	.00010	.10450	-.46470	4.07000	-5.75320
4.234	-3.676	-.05940	.08340	.05780	.06760	-.01170	-.00010	.10020	-.44550	3.93960	-3.67340
3.935	.127	-.03230	.08660	.03930	-.00080	-.00130	-.00020	.09750	-.43370	3.70490	.11310
4.074	4.011	-.03810	.08380	.05000	-.06830	.00920	-.00030	.10260	-.45630	3.80350	3.98870
4.054	6.094	-.04180	.08430	.05340	-.10350	.01020	-.00040	.10300	-.45810	3.76880	6.06440
	GRADIENT	.00276	.00005	-.00100	-.01768	.00272	-.00003	.00032	-.00142	-.01755	.99678

IA156A, AEDC PWT 16T-470, O T S W/SILTS (R8NT97) (10 MAY 80)

REFERENCE DATA

SREF = 2690.0000 SQ.FT. XMRP = 976.0000 IN. XT
LREF = 1290.3000 INCHES YMRP = .0000 IN. YT
BREF = 1290.3000 INCHES ZMRP = 400.0000 IN. ZT
SCALE = .0200

PARAMETRIC DATA

IB-ELV = 8.000 OB-ELV = 5.000
BDFLAP = .000 SPDBRK = .000
RUDDER = .000 SILTS = 1.000
MACH = 1.100 RN/L = 3.500

RUN NO. 1201/ 0 RN/L = 3.50 GRADIENT INTERVAL = -5.00/ 5.00

ALPHAT	BETAT	CNFT	CAFT	CLMFT	CYFT	CYNFT	CBLFT	CABT	CP7	ALPHAO	BETAO
-8.344	-5.985	-.28790	.09310	.01950	.10440	-.00890	.00010	.10710	-.47620	-8.17420	-5.98330
-8.453	-3.792	-.27990	.09350	.01410	.06170	-.00530	-.00010	.10430	-.46400	-8.27540	-3.79680
-8.426	.198	-.24930	.09440	-.00370	-.00600	.00000	-.00020	.10320	-.45910	-8.18440	.18950
-8.232	4.344	-.25560	.08720	.00380	-.06340	.00070	-.00040	.11350	-.50480	-8.01820	4.33080
-8.204	6.272	-.25540	.09280	.00610	-.09510	.00350	-.00060	.10680	-.47520	-8.00630	6.25400
	GRADIENT	.00296	-.00078	-.00125	-.01536	.00073	-.00004	.00114	-.00505	.03166	.99886

RUN NO. 1202/ 0 RN/L = 3.50 GRADIENT INTERVAL = -5.00/ 5.00

ALPHAT	BETAT	CNFT	CAFT	CLMFT	CYFT	CYNFT	CBLFT	CABT	CP7	ALPHAO	BETAO
-6.305	-5.992	-.24160	.09180	.02530	.10300	-.01210	.00020	.10230	-.45510	-6.21070	-5.99750
-6.273	-4.033	-.23570	.09150	.02170	.06540	-.00750	.00000	.10280	-.45720	-6.17010	-4.04610
-6.457	.166	-.20780	.09530	.00240	-.00360	-.00200	-.00030	.10090	-.44890	-6.29320	.15330
-6.186	4.297	-.20770	.09580	.01150	-.05940	.00120	-.00040	.09810	-.43640	-6.06530	4.29110
-5.895	6.338	-.20560	.08780	.01370	-.09650	.00680	-.00070	.10800	-.48020	-5.79370	6.33410
	GRADIENT	.00337	.00052	-.00123	-.01499	.00105	-.00005	-.00056	.00250	.01246	1.00081

RUN NO. 1203/ 0 RN/L = 3.50 GRADIENT INTERVAL = -5.00/ 5.00

ALPHAT	BETAT	CNFT	CAFT	CLMFT	CYFT	CYNFT	CBLFT	CABT	CP7	ALPHAO	BETAO
-4.102	-6.107	-.20450	.09080	.03500	.10380	-.01280	.00010	.10100	-.44900	-4.11080	-6.11790
-4.367	-3.997	-.19750	.09230	.02820	.06100	-.00740	-.00010	.09690	-.43120	-4.34720	-4.02440
-4.323	.375	-.16130	.09550	.00940	-.00820	-.00080	-.00030	.09590	-.42670	-4.25820	.36640
-3.790	4.317	-.16090	.09540	.02110	-.06390	.00330	-.00050	.09540	-.42440	-3.78640	4.32550
-3.876	6.163	-.16530	.09340	.02200	-.09590	.00770	-.00070	.09880	-.43920	-3.87950	6.16820
	GRADIENT	.00447	.00038	-.00092	-.01504	.00129	-.00005	-.00018	.00082	.06660	1.00431

RUN NO. 1204/ 0 RN/L = 3.50 GRADIENT INTERVAL = -5.00/ 5.00

ALPHAT	BETAT	CNFT	CAFT	CLMFT	CYFT	CYNFT	CBLFT	CABT	CP7	ALPHAO	BETAO
-.272	-7.025	-.15240	.09370	.05640	.11920	-.01460	.00020	.09450	-.42020	-.47140	-7.06310
-.260	-4.846	-.13880	.09130	.05030	.07770	-.01000	.00000	.09440	-.41980	-.44140	-4.90270
-.334	-.462	-.10240	.09380	.02650	.00780	-.00490	-.00030	.09260	-.41170	-.41500	-.53480
-.246	3.646	-.10660	.09560	.03600	-.05640	.00400	-.00030	.09310	-.41400	-.38330	3.59420
-.236	5.850	-.10780	.09410	.03760	-.09320	.00780	-.00050	.09550	-.42460	-.38220	5.79350
	GRADIENT	.00384	.00051	-.00173	-.01579	.00164	-.00004	-.00016	.00070	.00683	1.00052

IA156A, AEDC PWT 16T-470, O T S W/SILTS (R8NT97) (10 MAY 80)

REFERENCE DATA

SREF = 2690.0000 SQ.FT. XMRP = 976.0000 IN. XT
LREF = 1290.3000 INCHES YMRP = .0000 IN. YT
BREF = 1290.3000 INCHES ZMRP = 400.0000 IN. ZT
SCALE = .0200

PARAMETRIC DATA

IB-ELV = 8.000 OB-ELV = 5.000
BDFLAP = .000 SPDBRK = .000
RUDDER = .000 SILTS = 1.000
MACH = 1.100 RN/L = 3.500

RUN NO. 1205/ 0 RN/L = 3.50 GRADIENT INTERVAL = -5.00/ 5.00

ALPHAT	BETAT	CNFT	CAFT	CLMFT	CYFT	CYNFT	CBLFT	CABT	CP7	ALPHAO	BETAO
4.436	-5.776	-.06950	.09230	.06870	.10330	-.01340	.00000	.08740	-.38860	4.08500	-5.76690
4.257	-3.667	-.05890	.09050	.06120	.06650	-.01150	-.00010	.08650	-.38480	3.92880	-3.66470
3.963	.136	-.03580	.08220	.04330	-.00340	-.00090	-.00020	.09640	-.42880	3.69900	.11980
4.095	4.014	-.04320	.08640	.05380	-.06880	.00820	-.00030	.09350	-.41570	3.79150	3.98530
4.081	6.101	-.04620	.08710	.05660	-.10310	.00920	-.00040	.09510	-.42300	3.77000	6.06580
	GRADIENT	.00203	-.00053	-.00095	-.01761	.00256	-.00003	.00091	-.00400	-.01774	.99603

IA156A, AEDC PWT 16T-470, O T S W/SILTS (R8NT98) (28 MAY 80)

REFERENCE DATA

SREF = 2690.0000 SQ.FT. XMRP = 976.0000 IN. XT
LREF = 1290.3000 INCHES YMRP = .0000 IN. YT
BREF = 1290.3000 INCHES ZMRP = 400.0000 IN. ZT
SCALE = .0200

PARAMETRIC DATA

IB-ELV = 8.000 OB-ELV = 5.000
BDFLAP = .000 SPDBRK = .000
RUDDER = .000 SILTS = 1.000
MACH = 1.150 RN/L = 3.500

RUN NO. 1206/ 0 RN/L = 3.50 GRADIENT INTERVAL = -5.00/ 5.00

ALPHAT	BETAT	CNFT	CAFT	CLMFT	CYFT	CYNFT	CBLFT	CABT	CP7	ALPHAO	BETAO
-8.273	-5.952	-.28730	.09560	.02290	.10630	-.01050	.00010	.10430	-.46410	-8.11590	-5.93790
-8.451	-3.757	-.28420	.09370	.01780	.06200	-.00580	-.00010	.10420	-.46350	-8.28400	-3.75680
-8.417	.190	-.25800	.10190	.00180	-.00200	-.00240	-.00020	.09660	-.42960	-8.18950	.17910
-8.188	4.427	-.26020	.09920	.00820	-.06040	-.00020	-.00040	.10040	-.44660	-7.99710	4.40850
-8.209	6.310	-.26340	.09860	.00980	-.09340	.00360	-.00060	.10080	-.44820	-8.02420	6.28400
	GRADIENT	.00289	.00066	-.00114	-.01494	.00068	-.00004	-.00045	.00199	.03518	.99771

RUN NO. 1207/ 0 RN/L = 3.50 GRADIENT INTERVAL = -5.00/ 5.00

ALPHAT	BETAT	CNFT	CAFT	CLMFT	CYFT	CYNFT	CBLFT	CABT	CP7	ALPHAO	BETAO
-6.294	-6.008	-.24530	.09570	.02820	.10820	-.01440	.00010	.10190	-.45310	-6.21690	-6.00570
-6.220	-4.054	-.23590	.09470	.02490	.06700	-.00900	.00000	.09970	-.44350	-6.13980	-4.06490
-6.418	.104	-.21240	.10090	.00640	.00310	-.00490	-.00030	.09680	-.43060	-6.27860	.08730
-6.137	4.290	-.21200	.09980	.01470	-.05950	.00030	-.00050	.09580	-.42620	-6.03660	4.27280
-6.108	6.286	-.21430	.09920	.01570	-.09550	.00610	-.00060	.09690	-.43090	-6.01390	6.26900
	GRADIENT	.00286	.00061	-.00122	-.01516	.00111	-.00006	-.00047	.00207	.01242	.99929

IA156A, AEDC PWT 16T-470, O T S W/SILTS (R8NT98) (28 MAY 80)

REFERENCE DATA

SREF = 2690.0000 SQ.FT. XMRP = 976.0000 IN. XT
LREF = 1290.3000 INCHES YMRP = .0000 IN. YT
BREF = 1290.3000 INCHES ZMRP = 400.0000 IN. ZT
SCALE = .0200

PARAMETRIC DATA

IB-ELV = 8.000 OB-ELV = 5.000
BDFLAP = .000 SPDBRK = .000
RUDDER = .000 SILTS = 1.000
MACH = 1.150 RN/L = 3.500

RUN NO. 1208/ 0 RN/L = 3.50 GRADIENT INTERVAL = -5.00/ 5.00

ALPHAT	BETAT	CNFT	CAFT	CLMFT	CYFT	CYNFT	CBLFT	CABT	CP7	ALPHAO	BETAO
-4.064	-6.117	-.20440	.09460	.03710	.10860	-.01560	.00010	.09940	-.44230	-4.09900	-6.12780
-4.335	-3.986	-.19950	.10030	.03100	.06450	-.00940	-.00010	.09110	-.40500	-4.34070	-4.01490
-4.316	.379	-.16680	.09880	.01310	-.00160	-.00430	-.00030	.09490	-.42200	-4.28060	.36610
-3.761	4.339	-.16650	.10210	.02480	-.06440	.00320	-.00040	.09270	-.41240	-3.78900	4.34440
-3.856	6.171	-.16830	.09940	.02480	-.09380	.00670	-.00060	.09380	-.41730	-3.88370	6.16940
	GRADIENT	.00402	.00021	-.00080	-.01548	.00151	-.00004	.00020	-.00094	.06538	1.00413

RUN NO. 1210/ 0 RN/L = 3.51 GRADIENT INTERVAL = -5.00/ 5.00

ALPHAT	BETAT	CNFT	CAFT	CLMFT	CYFT	CYNFT	CBLFT	CABT	CP7	ALPHAO	BETAO
-.238	-6.990	-.15080	.09960	.05700	.11960	-.01590	.00010	.09150	-.40690	-.45770	-7.03280
-.235	-4.744	-.13850	.10060	.05030	.07720	-.01110	-.00010	.08870	-.39450	-.43380	-4.80400
-.289	-.439	-.10400	.10410	.02850	.00700	-.00450	-.00040	.08540	-.37980	-.39600	-.51320
-.210	3.724	-.10490	.09750	.03590	-.05880	.00500	-.00030	.09350	-.41570	-.36320	3.66950
-.197	5.850	-.10680	.09950	.03870	-.09450	.00860	-.00050	.09220	-.41030	-.36660	5.78800
	GRADIENT	.00399	-.00036	-.00172	-.01606	.00190	-.00002	.00056	-.00247	.00834	1.00064

RUN NO. 1211/ 0 RN/L = 3.50 GRADIENT INTERVAL = -5.00/ 5.00

ALPHAT	BETAT	CNFT	CAFT	CLMFT	CYFT	CYNFT	CBLFT	CABT	CP7	ALPHAO	BETAO
4.452	-5.760	-.07360	.09670	.07270	.10370	-.01430	.00000	.08650	-.38480	4.06240	-5.75620
4.318	-3.638	-.05150	.09770	.06520	.06740	-.01320	-.00010	.08250	-.36690	3.94880	-3.64750
4.013	.195	-.04250	.09300	.04940	.00060	-.00410	-.00020	.08870	-.39430	3.69770	.16520
4.117	4.036	-.04460	.09450	.05520	-.06360	.00560	-.00030	.08810	-.39190	3.78990	4.00440
4.097	6.103	-.04650	.10000	.05780	-.10170	.00910	-.00040	.08500	-.37790	3.76460	6.06420
	GRADIENT	.00220	-.00042	-.00130	-.01707	.00245	-.00003	.00073	-.00326	-.02069	.99712

IA156A, AEDC PWT 16T-470, O T S W/SILTS

(R8NTA0) (10 MAY 80)

REFERENCE DATA

SREF = 2690.0000 SQ.FT. XMRP = 976.0000 IN. XT
LREF = 1290.3000 INCHES YMRP = .0000 IN. YT
BREF = 1290.3000 INCHES ZMRP = 400.0000 IN. ZT
SCALE = .0200

PARAMETRIC DATA

IB-ELV = 8.000 OB-ELV = 5.000
BDFLAP = .000 SPDBRK = .000
RUDDER = .000 SILTS = 1.000
MACH = 1.250 RN/L = 3.500

RUN NO. 1224/ 0 RN/L = 3.50 GRADIENT INTERVAL = -5.00/ 5.00

ALPHAT	BETAT	CNFT	CAFT	CLMFT	CYFT	CYNFT	CBLFT	CABT	CP7	ALPHAO	BETAO
-8.362	-5.936	-.29660	.10470	.03110	.09460	-.00590	.00010	.09230	-.41040	-8.26140	-5.90590
-8.360	-3.882	-.28670	.10470	.02620	.05360	-.00110	-.00010	.08940	-.39750	-8.25350	-3.85930
-8.362	.285	-.26060	.10610	.00970	-.00520	-.00050	-.00020	.08890	-.39520	-8.19410	.28070
-8.142	4.333	-.26140	.10640	.01450	-.05960	.00010	-.00040	.08750	-.38900	-7.99810	4.30290
-8.186	6.313	-.26540	.10580	.01560	-.09250	.00340	-.00050	.08870	-.39460	-8.03450	6.27760
	GRADIENT	.00310	.00021	-.00144	-.01378	.00015	-.00004	-.00023	.00103	.03101	.99360

RUN NO. 1225/ 0 RN/L = 3.50 GRADIENT INTERVAL = -5.00/ 5.00

ALPHAT	BETAT	CNFT	CAFT	CLMFT	CYFT	CYNFT	CBLFT	CABT	CP7	ALPHAO	BETAO
-6.274	-6.038	-.25170	.10600	.03570	.09650	-.00860	.00000	.08920	-.39680	-6.24820	-6.01480
-6.200	-4.090	-.24050	.10530	.03170	.05940	-.00390	-.00020	.08790	-.39090	-6.17890	-4.08000
-6.343	.132	-.21590	.10720	.01420	-.00120	-.00190	-.00030	.08560	-.38070	-6.26810	.12720
-6.116	4.305	-.21450	.10720	.01980	-.06400	.00340	-.00040	.08520	-.37900	-6.05570	4.28690
-5.869	6.409	-.20980	.10650	.01930	-.09970	.00730	-.00060	.08630	-.38390	-5.80570	6.38490
	GRADIENT	.00310	.00023	-.00142	-.01470	.00087	-.00002	-.00032	.00142	.01461	.99669

RUN NO. 1226/ 0 RN/L = 3.50 GRADIENT INTERVAL = -5.00/ 5.00

ALPHAT	BETAT	CNFT	CAFT	CLMFT	CYFT	CYNFT	CBLFT	CABT	CP7	ALPHAO	BETAO
-4.041	-6.132	-.21110	.10660	.04450	.10220	-.01160	.00000	.08710	-.38720	-4.12890	-6.12580
-4.280	-4.002	-.20410	.10620	.03810	.06240	-.00720	-.00020	.08510	-.37840	-4.34690	-4.01210
-4.252	.389	-.17250	.10670	.02020	-.00710	-.00080	-.00040	.08400	-.37340	-4.26440	.38560
-3.725	4.330	-.16880	.10960	.02840	-.06520	.00460	-.00040	.08300	-.36930	-3.78240	4.33230
-3.838	6.196	-.16920	.10770	.02700	-.09550	.00770	-.00060	.08400	-.37370	-3.88440	6.18720
	GRADIENT	.00429	.00040	-.00122	-.01532	.00142	-.00002	-.00025	.00109	.06682	1.00144

RUN NO. 1227/ 0 RN/L = 3.50 GRADIENT INTERVAL = -5.00/ 5.00

ALPHAT	BETAT	CNFT	CAFT	CLMFT	CYFT	CYNFT	CBLFT	CABT	CP7	ALPHAO	BETAO
-.190	-7.041	-.15870	.10500	.06620	.11530	-.01400	.00000	.08540	-.37970	-.48420	-7.07400
-.176	-4.841	-.14600	.10720	.06000	.07300	-.00930	-.00020	.08080	-.35960	-.45400	-4.89230
-.204	-.483	-.11500	.10720	.04110	.00610	-.00420	-.00040	.07860	-.34950	-.40700	-.55600
-.135	3.657	-.11380	.10920	.04720	-.05690	.00380	-.00030	.07900	-.35140	-.37930	3.59510
-.148	5.875	-.11510	.10600	.04770	-.09230	.00630	-.00050	.08200	-.36490	-.39250	5.79840
	GRADIENT	.00382	.00023	-.00153	-.01529	.00154	-.00001	-.00021	.00098	.00881	.99877

IA156A, AEDC PWT 16T-470, O T S W/SILTS (R8NTA0) (10 MAY 80)

REFERENCE DATA

SREF = 2690.0000 SQ.FT. XMRP = 976.0000 IN. XT
LREF = 1290.3000 INCHES YMRP = .0000 IN. YT
BREF = 1290.3000 INCHES ZMRP = 400.0000 IN. ZT
SCALE = .0200

PARAMETRIC DATA

IB-ELV = 8.000 OB-ELV = 5.000
BDFLAP = .000 SPDBRK = .000
RUDDER = .000 SILTS = 1.000
MACH = 1.250 RN/L = 3.500

RUN NO. 1228/ 0 RN/L = 3.50 GRADIENT INTERVAL = -5.00/ 5.00

ALPHAT	BETAT	CNFT	CAFT	CLMFT	CYFT	CYNFT	CBLFT	CABT	CP7	ALPHAO	BETAO
4.336	-5.691	-.07930	.10310	.07830	.09690	-.01150	.00000	.07880	-.35050	3.89280	-5.67880
4.357	-3.875	-.06840	.10320	.07300	.06500	-.00990	-.00020	.07730	-.34370	3.92830	-3.87500
4.224	.216	-.04970	.10080	.06050	-.00630	-.00100	-.00020	.07780	-.34610	3.82040	.19190
4.162	3.894	-.05510	.10250	.06660	-.06280	.00670	-.00030	.07780	-.34600	3.75560	3.87190
4.178	6.111	-.05750	.10000	.06950	-.10150	.00930	-.00040	.08210	-.36510	3.76610	6.07910
	GRADIENT	.00177	-.00010	-.00087	-.01647	.00214	-.00001	.00007	-.00030	-.02231	.99710

IA156A, AEDC PWT 16T-470, O T S W/SILTS (R8NTA1) (10 MAY 80)

REFERENCE DATA

SREF = 2690.0000 SQ.FT. XMRP = 976.0000 IN. XT
LREF = 1290.3000 INCHES YMRP = .0000 IN. YT
BREF = 1290.3000 INCHES ZMRP = 400.0000 IN. ZT
SCALE = .0200

PARAMETRIC DATA

IB-ELV = 8.000 OB-ELV = 5.000
BDFLAP = .000 SPDBRK = .000
RUDDER = .000 SILTS = 1.000
MACH = 1.400 RN/L = 3.500

RUN NO. 1229/ 0 RN/L = 3.50 GRADIENT INTERVAL = -5.00/ 5.00

ALPHAT	BETAT	CNFT	CAFT	CLMFT	CYFT	CYNFT	CBLFT	CABT	CP7	ALPHAO	BETAO
-8.312	-5.965	-.30300	.10980	.03800	.09600	-.00430	-.00010	.08350	-.37140	-8.26700	-5.90140
-8.364	-3.830	-.29250	.10990	.03180	.05580	-.00030	-.00030	.08190	-.36430	-8.30430	-3.77600
-8.316	.431	-.26780	.11060	.01610	-.00830	.00070	-.00040	.08000	-.35580	-8.20160	.42770
-8.093	4.458	-.26690	.11130	.02090	-.06470	.00040	-.00040	.08000	-.35570	-8.00230	4.40370
-8.101	6.388	-.26830	.11230	.02080	-.09560	.00190	-.00050	.08020	-.35680	-8.00870	6.32320
	GRADIENT	.00312	.00017	-.00134	-.01454	.00009	-.00001	-.00023	.00105	.03632	.98694

RUN NO. 1230/ 0 RN/L = 3.50 GRADIENT INTERVAL = -5.00/ 5.00

ALPHAT	BETAT	CNFT	CAFT	CLMFT	CYFT	CYNFT	CBLFT	CABT	CP7	ALPHAO	BETAO
-6.280	-6.059	-.25490	.11090	.03920	.09930	-.00710	-.00020	.08100	-.36040	-6.28210	-5.99420
-6.235	-4.099	-.24340	.11080	.03410	.06090	-.00260	-.00030	.08010	-.35620	-6.22420	-4.05110
-6.337	.155	-.22110	.11360	.01880	-.00430	.00030	-.00040	.07720	-.34340	-6.28500	.15550
-6.086	4.378	-.21700	.11320	.02240	-.06460	.00150	-.00050	.07760	-.34520	-6.03770	4.33250
-6.018	6.363	-.21290	.11230	.02110	-.09930	.00510	-.00060	.07870	-.34990	-5.96930	6.30280
	GRADIENT	.00312	.00028	-.00138	-.01481	.00048	-.00002	-.00030	.00130	.02196	.98901

IA156A, AEDC PWT 16T-470, O T S W/SILTS (R8NTA1) (10 MAY 80)

REFERENCE DATA

SREF = 2690.0000 SQ.FT. XMRP = 976.0000 IN. XT
LREF = 1290.3000 INCHES YMRP = .0000 IN. YT
BREF = 1290.3000 INCHES ZMRP = 400.0000 IN. ZT
SCALE = .0200

PARAMETRIC DATA

IB-ELV = 8.000 OB-ELV = 5.000
BDFLAP = .000 SPDBRK = .000
RUDDER = .000 SILTS = 1.000
MACH = 1.400 RN/L = 3.50J

RUN NO. 1231/ 0 RN/L = 3.50 GRADIENT INTERVAL = -5.00/ 5.00

ALPHAT	BETAT	CNFT	CAFT	CLMFT	CYFT	CYNFT	CBLFT	CABT	CP7	ALPHAO	BETAO
-4.044	-6.161	-.21020	.11230	.04600	.10000	-.00840	-.00010	.07890	-.35080	-4.14330	-6.11940
-4.320	-4.024	-.20390	.11470	.03840	.05810	-.00300	-.00030	.07530	-.33510	-4.38490	-3.99950
-4.225	.423	-.17640	.11580	.02420	-.01010	.00060	-.00050	.07410	-.32940	-4.26180	.42230
-3.681	4.405	-.16720	.11390	.03050	-.06360	.00100	-.00050	.07590	-.33750	-3.75860	4.37790
-3.796	6.255	-.16820	.11290	.02860	-.09440	.00380	-.00070	.07830	-.34810	-3.85930	6.21540
	GRADIENT	.00439	-.00009	-.00098	-.01446	.00048	-.00002	.00006	-.00025	.07340	.99389

RUN NO. 1232/ 0 RN/L = 3.50 GRADIENT INTERVAL = -5.00/ 5.00

ALPHAT	BETAT	CNFT	CAFT	CLMFT	CYFT	CYNFT	CBLFT	CABT	CP7	ALPHAO	BETAO
-.238	-7.086	-.15790	.11290	.06710	.11280	-.01040	.00000	.07580	-.33690	-.55170	-7.09490
-.221	-4.895	-.14150	.11290	.05850	.06970	-.00500	-.00020	.07180	-.31930	-.50840	-4.92120
-.232	-.499	-.11600	.11450	.04310	.00410	-.00210	-.00040	.06920	-.30780	-.46400	-.56210
-.172	3.674	-.11390	.11190	.04800	-.05790	.00300	-.00040	.07270	-.32330	-.44410	3.59490
-.198	5.900	-.11290	.10830	.04730	-.09420	.00520	-.00050	.07890	-.35070	-.46130	5.80540
	GRADIENT	.00324	-.00011	-.00125	-.01489	.00093	-.00002	.00010	-.00044	.00753	.99385

RUN NO. 1233/ 0 RN/L = 3.50 GRADIENT INTERVAL = -5.00/ 5.00

ALPHAT	BETAT	CNFT	CAFT	CLMFT	CYFT	CYNFT	CBLFT	CABT	CP7	ALPHAO	BETAO
4.465	-5.680	-.08160	.11020	.08690	.09100	-.00660	-.00020	.07120	-.31680	3.93470	-5.66130
4.395	-3.645	-.06630	.11000	.07650	.05700	-.00620	-.00040	.06980	-.31020	3.91030	-3.64060
4.118	.248	-.05410	.10810	.06500	-.00370	-.00200	-.00030	.07080	-.31480	3.65490	.22890
4.195	4.090	-.05390	.10910	.06970	-.06240	.00360	-.00030	.07020	-.31210	3.73610	4.05620
4.155	6.129	-.05730	.11050	.07160	-.10130	.00870	-.00040	.06970	-.30980	3.69230	6.09280
	GRADIENT	.00161	-.00012	-.00088	-.01544	.00127	.00001	.00005	-.00025	-.02261	.99496

IA156A, AEDC PWT 16T-470, O T S W/SILTS (R8NTA2) (10 MAY 80)

REFERENCE DATA

SREF = 2690.0000 SQ.FT. XMRP = 976.0000 IN. XT
LREF = 1290.3000 INCHES YMRP = .0000 IN. YT
BREF = 1290.3000 INCHES ZMRP = 400.0000 IN. ZT
SCALE = .0200

PARAMETRIC DATA

IB-ELV = 8.000 OB-ELV = 5.000
BDFLAP = .000 SPDBRK = .000
RUDDER = .000 SILTS = 1.000
MACH = 1.550 RN/L = 3.200

RUN NO. 1212/ 0 RN/L = 3.20 GRADIENT INTERVAL = -5.00/ 5.00

ALPHAT	BETAT	CNFT	CAFT	CLMFT	CYFT	CYNFT	CBLFT	CABT	CP7	ALPHAO	BETAO
-8.298	-5.964	-.29740	.09960	.04350	.09390	-.00550	-.00030	.08290	-.36890	-8.32050	-5.93230
-8.401	-3.734	-.28980	.10770	.03820	.05700	-.00410	-.00040	.07230	-.32160	-8.41160	-3.71180
-8.297	.333	-.26870	.10990	.02650	-.00240	-.00190	-.00030	.07090	-.31540	-8.27650	.31440
-8.039	4.545	-.26810	.11240	.02940	-.06190	-.00020	-.00020	.07120	-.31680	-8.03250	4.49600
-8.021	6.480	-.26790	.11190	.02950	-.09120	.00010	-.00030	.07200	-.32010	-8.00950	6.42370
	GRADIENT	.00261	.00057	-.00105	-.01436	.00047	.00002	-.00013	.00057	.04586	.99147

RUN NO. 1213/ 0 RN/L = 3.20 GRADIENT INTERVAL = -5.00/ 5.00

ALPHAT	BETAT	CNFT	CAFT	CLMFT	CYFT	CYNFT	CBLFT	CABT	CP7	ALPHAO	BETAO
-6.337	-6.008	-.24890	.10690	.04290	.09870	-.01060	-.00020	.07330	-.32610	-6.37560	-5.97850
-6.276	-4.042	-.23750	.10920	.03790	.06090	-.00480	-.00030	.06990	-.31080	-6.30880	-4.02500
-6.311	.256	-.22350	.11150	.02840	-.00470	-.00040	-.00040	.06820	-.30330	-6.32550	.24120
-6.022	4.480	-.21800	.11310	.02970	-.06450	.00150	-.00030	.07000	-.31140	-6.04030	4.43530
-5.939	6.462	-.21680	.11220	.02940	-.09850	.00540	-.00040	.07120	-.31670	-5.96130	6.41250
	GRADIENT	.00229	.00046	-.00097	-.01472	.00074	-.00000	.00001	-.00007	.03140	.99274

RUN NO. 1214/ 0 RN/L = 3.21 GRADIENT INTERVAL = -5.00/ 5.00

ALPHAT	BETAT	CNFT	CAFT	CLMFT	CYFT	CYNFT	CBLFT	CABT	CP7	ALPHAO	BETAO
-4.156	-6.159	-.20590	.10600	.04750	.09880	-.00930	-.00010	.07340	-.32670	-4.25370	-6.14490
-4.417	-3.998	-.19510	.10590	.03890	.05660	-.00290	-.00020	.07050	-.31340	-4.48760	-3.99680
-4.295	.517	-.17590	.10970	.02880	-.00910	-.00080	-.00030	.06870	-.30530	-4.35310	.49840
-3.665	4.504	-.16840	.11600	.03450	-.06130	-.00100	-.00040	.06660	-.29620	-3.76000	4.47860
-3.737	6.347	-.16920	.11500	.03340	-.09340	.00410	-.00050	.06610	-.29420	-3.82510	6.31700
	GRADIENT	.00316	.00118	-.00056	-.01388	.00023	-.00002	-.00046	.00202	.08435	.99684

RUN NO. 1215/ 0 RN/L = 3.20 GRADIENT INTERVAL = -5.00/ 5.00

ALPHAT	BETAT	CNFT	CAFT	CLMFT	CYFT	CYNFT	CBLFT	CABT	CP7	ALPHAO	BETAO
-.312	-7.117	-.14740	.10490	.06460	.10880	-.00870	.00020	.07190	-.31990	-.59010	-7.13940
-.299	-4.969	-.13350	.10320	.05730	.07020	-.00530	-.00010	.06980	-.31040	-.56060	-5.00160
-.313	-.544	-.10890	.11140	.04200	.00480	-.00100	-.00030	.05960	-.26600	-.52040	-.60580
-.296	3.586	-.10680	.09350	.04290	-.05450	.00170	-.00030	.08150	-.36270	-.51040	3.51080
-.317	5.786	-.10550	.11220	.04200	-.08920	.00450	-.00040	.06460	-.28730	-.51700	5.70390
	GRADIENT	.00315	-.00110	-.00170	-.01458	.00082	-.00002	.00132	-.00592	.00591	.99504

IA156A, AEDC PWT 16T-470, O T S W/SILTS (R8NTA2) (10 MAY 80)

REFERENCE DATA

SREF = 2690.0000 SQ.FT. XMRP = 976.0000 IN. XT
LREF = 1290.3000 INCHES YMRP = .0000 IN. YT
BREF = 1290.3000 INCHES ZMRP = 400.0000 IN. ZT
SCALE = .0200

PARAMETRIC DATA

IB-ELV = 8.000 OB-ELV = 5.000
BDFLAP = .000 SPDBRK = .000
RUDDER = .000 SILTS = 1.000
MACH = 1.550 RN/L = 3.200

RUN NO. 1216/ 0 RN/L = 3.20 GRADIENT INTERVAL = -5.00/ 5.00

ALPHAT	BETAT	CNFT	CAFT	CLMFT	CYFT	CYNFT	CBLFT	CABT	CP7	ALPHAO	BETAO
4.631	-5.614	-.07360	.11130	.08570	.09110	-.00860	-.00010	.06210	-.27600	4.12760	-5.60730
4.424	-3.524	-.06140	.11050	.07410	.05720	-.00750	-.00030	.06240	-.27750	3.96730	-3.52600
4.028	.283	-.04990	.10630	.06160	-.00320	-.00320	-.00020	.06540	-.29080	3.60510	.25110
4.040	4.057	-.04860	.10900	.06470	-.05750	.00060	-.00030	.06030	-.26820	3.63650	4.00630
4.027	6.135	-.04940	.10780	.06640	-.09360	.00400	-.00030	.06300	-.28020	3.61860	6.08270
	GRADIENT	.00169	-.00020	-.00124	-.01513	.00107	.00000	-.00028	.00122	-.04371	.99357

IA156A, AEDC PWT 16T-470, O T S W/SILTS (R8NTA3) (10 MAY 80)

REFERENCE DATA

SREF = 2690.0000 SQ.FT. XMRP = 976.0000 IN. XT
LREF = 1290.3000 INCHES YMRP = .0000 IN. YT
BREF = 1290.3000 INCHES ZMRP = 400.0000 IN. ZT
SCALE = .0200

PARAMETRIC DATA

IB-ELV = 12.000 OB-ELV = 5.000
BDFLAP = .000 SPDBRK = .000
RUDDER = .000 SILTS = 1.000
MACH = .600 RN/L = 3.500

RUN NO. 1240/ 0 RN/L = 3.50 GRADIENT INTERVAL = -5.00/ 5.00

ALPHAT	BETAT	CNFT	CAFT	CLMFT	CYFT	CYNFT	CBLFT	CABT	CP7	ALPHAO	BETAO
-8.168	-7.833	-.25540	.03850	.03100	.08110	.00870	.00000	.08800	-.39160	-8.15230	-7.79710
-8.084	-5.784	-.24820	.03550	.02650	.05540	.00730	.00000	.08900	-.39580	-8.06030	-5.76560
-8.105	-3.778	-.24350	.04160	.02230	.03290	.00580	-.00010	.08180	-.36370	-8.07830	-3.77250
-8.004	.300	-.23080	.04110	.01570	-.00440	-.00100	-.00010	.08460	-.37620	-7.97860	.29660
-7.885	4.224	-.22500	.04080	.01920	-.03550	-.00820	-.00020	.08410	-.37420	-7.84980	4.21610
-7.875	6.138	-.22240	.04100	.02010	-.05240	-.01090	-.00040	.08510	-.37860	-7.83780	6.11990
-7.929	8.163	-.21910	.03830	.01840	-.07240	-.01370	-.00060	.09040	-.40220	-7.89120	8.13250
	GRADIENT	.00232	-.00010	-.00040	-.00855	-.00175	-.00001	.00029	-.00132	.02853	.99831

RUN NO. 1241/ 0 RN/L = 3.50 GRADIENT INTERVAL = -5.00/ 5.00

ALPHAT	BETAT	CNFT	CAFT	CLMFT	CYFT	CYNFT	CBLFT	CABT	CP7	ALPHAO	BETAO
-6.091	-7.882	-.22190	.03970	.03710	.09010	.00450	.00020	.08460	-.37620	-6.11220	-7.85680
-6.067	-5.866	-.21650	.04030	.03270	.06360	.00390	.00010	.08250	-.36690	-6.08090	-5.85650
-5.983	-3.960	-.21020	.04130	.02940	.04010	.00310	-.00010	.08010	-.35650	-5.99740	-3.96340
-6.034	.091	-.19720	.04290	.02190	-.00290	-.00150	-.00010	.08090	-.35980	-6.03930	.08490
-5.902	4.159	-.19210	.04360	.02620	-.03700	-.00720	-.00030	.08020	-.35680	-5.90920	4.15680
-5.828	6.119	-.18880	.04120	.02640	-.05690	-.00860	-.00050	.08320	-.36990	-5.83240	6.10960
-5.630	8.209	-.17300	.04060	.02610	-.08350	-.00830	-.00070	.08620	-.38330	-5.63910	8.19140
	GRADIENT	.00223	.00028	-.00039	-.00950	-.00127	-.00002	.00001	-.00004	.01088	1.00016

IA156A, AEDC PWT 16T-470, O T S W/SILTS (R8NTA3) (10 MAY 80)

REFERENCE DATA

SREF = 2690.0000 SQ.FT. XMRP = 976.0000 IN. XT
LREF = 1290.3000 INCHES YMRP = .0000 IN. YT
BREF = 1290.3000 INCHES ZMRP = 400.0000 IN. ZT
SCALE = .0200

PARAMETRIC DATA

IB-ELV = 12.000 OB-ELV = 5.000
BDFLAP = .000 SPDBRK = .000
RUDDER = .000 SILTS = 1.000
MACH = .600 RN/L = 3.500

RUN NO. 1242/ 0 RN/L = 3.49 GRADIENT INTERVAL = -5.00/ 5.00

ALPHAT	BETAT	CNFT	CAFT	CLMFT	CYFT	CYNFT	CBLFT	CABT	CP7	ALPHAO	BETAO
-3.912	-7.932	-.18960	.04020	.04440	.09400	.00220	.00020	.08200	-.36450	-3.97850	-7.92240
-4.148	-5.901	-.18920	.04220	.03920	.06480	.00250	.00010	.07900	-.35150	-4.20150	-5.90350
-4.135	-3.837	-.18140	.04230	.03530	.03780	.00190	.00010	.07780	-.34620	-4.18560	-3.85310
-3.932	.182	-.16330	.04480	.02910	-.00360	-.00230	-.00010	.07740	-.34440	-3.98000	.17640
-3.606	4.192	-.15850	.04440	.03640	-.04170	-.00540	-.00040	.07820	-.34790	-3.66820	4.20520
-3.721	5.998	-.15870	.04350	.03540	-.06150	-.00580	-.00050	.08010	-.35640	-3.77420	6.00430
-3.755	7.985	-.15580	.04170	.03400	-.08590	-.00510	-.00080	.08330	-.37060	-3.80040	7.98310
	GRADIENT	.00285	.00026	.00014	-.00990	-.00091	-.00006	.00005	-.00021	.06443	1.00362

RUN NO. 1243/ 0 RN/L = 3.50 GRADIENT INTERVAL = -5.00/ 5.00

ALPHAT	BETAT	CNFT	CAFT	CLMFT	CYFT	CYNFT	CBLFT	CABT	CP7	ALPHAO	BETAO
-.211	-8.673	-.15190	.04080	.06210	.12060	-.00650	.00030	.07920	-.35250	-.35410	-8.69300
-.206	-6.586	-.14650	.04230	.05780	.08550	-.00270	.00020	.07700	-.34260	-.34440	-6.61390
-.201	-4.324	-.13950	.04400	.05340	.05240	-.00220	.00000	.07400	-.32920	-.33020	-4.36610
-.197	-.255	-.12540	.04510	.04610	-.00100	-.00030	-.00010	.07380	-.32810	-.30300	-.31260
-.151	3.815	-.12000	.04450	.04970	-.04590	-.00050	-.00010	.07370	-.32800	-.27150	3.75150
-.146	5.924	-.11720	.04360	.04980	-.07410	.00010	-.00030	.07560	-.33630	-.26690	5.85380
-.141	8.023	-.11060	.04260	.04890	-.10290	.00200	-.00040	.07780	-.34610	-.25790	7.94490
	GRADIENT	.00240	.00006	-.00045	-.01208	.00021	-.00001	-.00004	.00015	.00721	.99730

RUN NO. 1244/ 0 RN/L = 3.50 GRADIENT INTERVAL = -5.00/ 5.00

ALPHAT	BETAT	CNFT	CAFT	CLMFT	CYFT	CYNFT	CBLFT	CABT	CP7	ALPHAO	BETAO
4.521	-8.143	-.08170	.03930	.07650	.12760	-.01390	.00010	.07270	-.32360	4.28210	-8.10600
4.344	-5.913	-.07390	.04140	.07140	.08690	-.00880	.00010	.07000	-.31120	4.10860	-5.87990
4.330	-3.919	-.06700	.04190	.06780	.05520	-.00590	.00000	.06850	-.30480	4.09370	-3.89220
4.128	.002	-.05660	.04270	.05950	-.00010	-.00260	-.00010	.07130	-.31700	3.90970	-.00350
4.164	4.118	-.05270	.04290	.06170	-.05580	.00190	-.00030	.07100	-.31590	3.94250	4.07830
4.101	6.270	-.04820	.04300	.06000	-.08710	.00340	-.00050	.07050	-.31380	3.88540	6.22250
4.079	8.280	-.04150	.04060	.05760	-.11730	.00690	-.00070	.07410	-.32940	3.87550	8.22810
	GRADIENT	.00177	.00012	-.00075	-.01381	.00097	-.00004	.00031	-.00137	-.01859	.99176

IA156A, AEDC PWT 16T-470, O T S W/SILTS (R8NTA3) (10 MAY 80)

REFERENCE DATA

SREF = 2690.0000 SQ.FT. XMRP = 976.0000 IN. XT
LREF = 1290.3000 INCHES YMRP = .0000 IN. YT
BREF = 1290.3000 INCHES ZMRP = 400.0000 IN. ZT
SCALE = .0200

PARAMETRIC DATA

IB-ELV = 12.000 OB-ELV = 5.000
BDFLAP = .000 SPDBRK = .000
RUDDER = .000 SILTS = 1.000
MACH = .600 RN/L = 3.500

RUN NO. 1245/ 0 RN/L = 3.50 GRADIENT INTERVAL = -5.00/ 5.00

ALPHAT	BETAT	CNFT	CAFT	CLMFT	CYFT	CYNFT	CBLFT	CABT	CP7	ALPHAO	BETAO
6.511	-8.034	-.04830	.03740	.08020	.13480	-.01700	.00010	.07150	-.31780	6.24490	-8.01190
6.490	-5.964	-.04180	.03970	.07730	.09380	-.01100	.00010	.06860	-.30530	6.21900	-5.94340
6.480	-3.884	-.03650	.04050	.07490	.06040	-.00680	.00000	.06710	-.29860	6.20370	-3.86780
6.192	.172	-.03000	.04130	.06730	-.00220	-.00110	.00000	.07000	-.31110	5.92850	.16760
6.114	4.131	-.02620	.04120	.06720	-.05870	.00300	-.00030	.06970	-.31010	5.85550	4.10250
6.031	6.236	-.02420	.04000	.06620	-.08720	.00530	-.00050	.07100	-.31580	5.78150	6.20210
6.005	8.170	-.01660	.03950	.06440	-.11950	.00920	-.00080	.07300	-.32470	5.76790	8.13050
	GRADIENT	.00129	.00009	-.00096	-.01486	.00122	-.00004	.00033	-.00144	-.04354	.99441

RUN NO. 1246/ 0 RN/L = 3.50 GRADIENT INTERVAL = -5.00/ 5.00

ALPHAT	BETAT	CNFT	CAFT	CLMFT	CYFT	CYNFT	CBLFT	CABT	CP7	ALPHAO	BETAO
8.423	-7.872	-.01510	.03460	.08330	.13450	-.01850	.00020	.07120	-.31690	8.13520	-7.85690
8.347	-5.795	-.01010	.03780	.08040	.09520	-.01260	.00010	.06730	-.29920	8.05040	-5.78230
8.342	-3.808	-.00730	.03810	.07930	.06020	-.00780	.00000	.06640	-.29540	8.03580	-3.79590
8.255	.176	-.00200	.04000	.07450	.00060	-.00160	-.00010	.06820	-.30340	7.95020	.17280
8.289	4.257	.00470	.03950	.07470	-.05800	.00370	-.00040	.06870	-.30540	7.99190	4.23510
8.222	6.265	.00730	.03830	.07390	-.08890	.00730	-.00060	.07040	-.31320	7.93820	6.23990
8.212	8.309	.01120	.03580	.07320	-.12870	.01330	-.00090	.07490	-.33310	7.94580	8.28440
	GRADIENT	.00149	.00017	-.00057	-.01466	.00143	-.00005	.00028	-.00124	-.00538	.99582

IA156A, AEDC PWT 16T-470, O T S W/SILTS (R8NTA4) (10 MAY 80)

REFERENCE DATA

SREF = 2690.0000 SQ.FT. XMRP = 976.0000 IN. XT
LREF = 1290.3000 INCHES YMRP = .0000 IN. YT
BREF = 1290.3000 INCHES ZMRP = 400.0000 IN. ZT
SCALE = .0200

PARAMETRIC DATA

IB-ELV = 12.000 OB-ELV = 5.000
BDFLAP = .000 SPDBRK = .000
RUDDER = .000 SILTS = 1.000
MACH = .800 RN/L = 3.500

RUN NO. 1247/ 0 RN/L = 3.50 GRADIENT INTERVAL = -5.00/ 5.00

ALPHAT	BETAT	CNFT	CAFT	CLMFT	CYFT	CYNFT	CBLFT	CABT	CP7	ALPHAO	BETAO
-8.205	-5.817	-.27080	.04450	.03320	.07440	-.00130	.00010	.08980	-.39950	-8.17770	-5.80300
-8.216	-3.773	-.26350	.04550	.02850	.04570	-.00110	-.00010	.08630	-.38370	-8.18420	-3.77230
-8.146	.391	-.24270	.04730	.01650	-.00600	-.00030	-.00020	.08610	-.38280	-8.09850	.38660
-7.993	4.316	-.24210	.04700	.02120	-.04690	-.00300	-.00020	.08630	-.38400	-7.92790	4.30500
-8.013	6.239	-.24180	.04620	.02150	-.06870	-.00420	-.00040	.08780	-.39040	-7.94150	6.21410
	GRADIENT	.00267	.00019	-.00092	-.01146	-.00023	-.00001	-.00000	-.00003	.03157	.99854

RUN NO. 1248/ 0 RN/L = 3.50 GRADIENT INTERVAL = -5.00/ 5.00

ALPHAT	BETAT	CNFT	CAFT	CLMFT	CYFT	CYNFT	CBLFT	CABT	CP7	ALPHAO	BETAO
-6.114	-5.928	-.23270	.04570	.03990	.07640	-.00240	.00010	.08580	-.38180	-6.14280	-5.92350
-6.067	-4.019	-.22690	.04720	.03600	.04980	-.00210	.00010	.08270	-.36790	-6.09440	-4.02820
-6.170	.079	-.20700	.04900	.02190	-.00220	-.00080	-.00020	.08210	-.36540	-6.16390	.07180
-5.987	4.220	-.20500	.04910	.02810	-.04430	-.00340	-.00030	.08250	-.36700	-5.98100	4.21860
-5.895	6.225	-.20390	.04740	.02940	-.06820	-.00360	-.00050	.08560	-.38060	-5.88740	6.21320
	GRADIENT	.00265	.00023	-.00095	-.01142	-.00016	-.00005	-.00002	.00011	.01382	1.00097

RUN NO. 1249/ 0 RN/L = 3.50 GRADIENT INTERVAL = -5.00/ 5.00

ALPHAT	BETAT	CNFT	CAFT	CLMFT	CYFT	CYNFT	CBLFT	CABT	CP7	ALPHAO	BETAO
-3.998	-6.026	-.20170	.04700	.04790	.07760	-.00310	.00020	.08120	-.36110	-4.08840	-6.03230
-4.208	-3.909	-.19750	.04810	.04180	.04720	-.00260	.00000	.07890	-.35100	-4.28570	-3.93070
-4.115	.409	-.16830	.04850	.02790	-.00690	-.00090	-.00020	.08020	-.35660	-4.15720	.40700
-3.684	4.271	-.16770	.04780	.03740	-.04900	-.00160	-.00030	.08180	-.36390	-3.74610	4.28490
-3.769	6.101	-.16940	.04710	.03780	-.07250	-.00070	-.00040	.08170	-.36320	-3.82650	6.10700
	GRADIENT	.00370	-.00003	-.00059	-.01178	.00013	-.00004	.00035	-.00157	.06526	1.00437

RUN NO. 1250/ 0 RN/L = 3.50 GRADIENT INTERVAL = -5.00/ 5.00

ALPHAT	BETAT	CNFT	CAFT	CLMFT	CYFT	CYNFT	CBLFT	CABT	CP7	ALPHAO	BETAO
-.192	-6.825	-.15760	.04510	.06390	.10270	-.00890	.00030	.07950	-.35360	-.37020	-6.85870
-.202	-4.658	-.14850	.04630	.05710	.06980	-.00860	.00020	.07660	-.34070	-.36440	-4.70630
-.223	-.360	-.12560	.04710	.04320	.00510	-.00260	-.00010	.07420	-.33010	-.33690	-.42070
-.169	3.716	-.12230	.04830	.04820	-.05320	.00300	-.00020	.07580	-.33700	-.30030	3.65490
-.157	5.851	-.12350	.04770	.05100	-.08530	.00560	-.00040	.07710	-.34270	-.29880	5.78550
	GRADIENT	.00315	.00024	-.00108	-.01469	.00139	-.00005	-.00010	.00046	.00764	.99841

IA156A, AEDC PWT 16T-470, O T S W/SILTS (R8NTA4) (10 MAY 80)

REFERENCE DATA

SREF = 2690.0000 SQ.FT. XMRP = 976.0000 IN. XT
LREF = 1290.3000 INCHES YMRP = .0000 IN. YT
BREF = 1290.3000 INCHES ZMRP = 400.0000 IN. ZT
SCALE = .0200

PARAMETRIC DATA

IB-ELV = 12.000 OB-ELV = 5.000
BDFLAP = .000 SPDBRK = .000
RUDDER = .000 SILTS = 1.000
MACH = .800 RN/L = 3.500

RUN NO. 1251/ 0 RN/L = 3.50 GRADIENT INTERVAL = -5.00/ 5.00

ALPHAT	BETAT	CNFT	CAFT	CLMFT	CYFT	CYNFT	CBLFT	CABT	CP7	ALPHAO	BETAO
4.431	-5.863	-.06830	.04250	.06810	.09730	-.01130	.00030	.07350	-.32680	4.14220	-5.83610
4.298	-3.748	-.06350	.04350	.06460	.06010	-.00820	.00020	.07220	-.32110	4.01090	-3.72770
4.025	.123	-.04550	.04610	.05110	.00270	-.00280	.00000	.07170	-.31890	3.78050	.11460
4.134	4.091	-.04590	.04580	.05720	-.05770	.00410	-.00020	.07150	-.31790	3.87160	4.05800
4.060	6.183	-.04510	.04380	.05680	-.09210	.00710	-.00050	.07400	-.32910	3.80810	6.14610
	GRADIENT	.00224	.00029	-.00093	-.01503	.00157	-.00005	-.00009	.00041	-.01760	.99324

RUN NO. 1252/ 0 RN/L = 3.50 GRADIENT INTERVAL = -5.00/ 5.00

ALPHAT	BETAT	CNFT	CAFT	CLMFT	CYFT	CYNFT	CBLFT	CABT	CP7	ALPHAO	BETAO
6.459	-5.876	-.03320	.04080	.07180	.10060	-.01280	.00030	.07240	-.32220	6.14350	-5.86370
6.437	-3.828	-.02810	.04270	.06840	.06440	-.00860	.00020	.06920	-.30760	6.11600	-3.81900
6.101	.161	-.01350	.04470	.05610	.00070	-.00170	.00000	.06920	-.30760	5.81150	.15430
6.046	4.046	-.01510	.04360	.06030	-.06040	.00570	-.00020	.07070	-.31440	5.74860	4.02420
6.167	6.246	-.00780	.04190	.06020	-.09510	.00940	-.00040	.07280	-.32390	5.88060	6.22160
	GRADIENT	.00166	.00012	-.00104	-.01585	.00182	-.00005	.00019	-.00086	-.04679	.99609

IA156A, AEDC PWT 16T-470, O T S W/SILTS (R8NTA5) (10 MAY 80)

REFERENCE DATA

SREF = 2690.0000 SQ.FT. XMRP = 976.0000 IN. XT
LREF = 1290.3000 INCHES YMRP = .0000 IN. YT
BREF = 1290.3000 INCHES ZMRP = 400.0000 IN. ZT
SCALE = .0200

PARAMETRIC DATA

IB-ELV = 12.000 OB-ELV = 5.000
BDFLAP = .000 SPDBRK = .000
RUDDER = .000 SILTS = 1.000
MACH = .900 RN/L = 3.500

RUN NO. 1253/ 0 RN/L = 3.50 GRADIENT INTERVAL = -5.00/ 5.00

ALPHAT	BETAT	CNFT	CAFT	CLMFT	CYFT	CYNFT	CBLFT	CABT	CP7	ALPHAO	BETAO
-8.441	-5.948	-.28420	.04830	.03170	.08760	-.00670	.00020	.09860	-.43840	-8.38090	-5.94630
-8.178	-3.731	-.27310	.05270	.02850	.05370	-.00560	.00000	.09230	-.41030	-8.12660	-3.74290
-8.173	.179	-.24800	.05380	.01410	-.00180	-.00070	-.00030	.09210	-.40980	-8.09650	.17200
-8.028	4.418	-.24880	.05270	.01800	-.05630	.00170	-.00030	.09320	-.41450	-7.92930	4.41370
-8.069	6.252	-.24860	.05240	.01820	-.08020	.00240	-.00050	.09460	-.42090	-7.96550	6.23720
	GRADIENT	.00294	-.00000	-.00126	-.01349	.00089	-.00004	.00011	-.00052	.02443	1.00102

IA156A, AEDC PWT 16T-470, O T S W/SILTS

(R8NTA5) (10 MAY 80)

REFERENCE DATA

SREF = 2690.0000 SQ.FT. XMRP = 976.0000 IN. XT
LREF = 1290.3000 INCHES YMRP = .0000 IN. YT
BREF = 1290.3000 INCHES ZMRP = 400.0000 IN. ZT
SCALE = .0200

PARAMETRIC DATA

IB-ELV = 12.000 OB-ELV = 5.000
BDFLAP = .000 SPDBRK = .000
RUDDER = .000 SILTS = 1.000
MACH = .900 RN/L = 3.500

RUN NO. 1254/ 0 RN/L = 3.50 GRADIENT INTERVAL = -5.00/ 5.00

ALPHAT	BETAT	CNFT	CAFT	CLMFT	CYFT	CYNFT	CBLFT	CABT	CP7	ALPHAO	BETAO
-6.150	-5.924	-.24380	.05270	.03940	.09220	-.01060	.00020	.09200	-.40940	-6.15740	-5.93350
-6.105	-3.969	-.23650	.05250	.03490	.06090	-.00860	.00000	.08980	-.39930	-6.10670	-3.99170
-6.136	.268	-.20520	.05460	.01800	-.00540	-.00010	-.00030	.08900	-.39560	-6.09780	.25950
-6.026	4.223	-.21150	.05300	.02530	-.05580	.00410	-.00030	.08890	-.39540	-5.99500	4.22780
-5.973	6.206	-.21000	.05260	.02610	-.08250	.00540	-.00050	.09070	-.40360	-5.94110	6.20110
	GRADIENT	.00310	.00007	-.00121	-.01426	.00156	-.00004	-.00011	.00048	.01350	1.00339

RUN NO. 1255/ 0 RN/L = 3.50 GRADIENT INTERVAL = -5.00/ 5.00

ALPHAT	BETAT	CNFT	CAFT	CLMFT	CYFT	CYNFT	CBLFT	CABT	CP7	ALPHAO	BETAO
-3.972	-5.925	-.20790	.05230	.04700	.09060	-.01040	.00020	.08910	-.39610	-4.04910	-5.94230
-4.216	-3.918	-.20080	.05290	.04020	.05660	-.00810	.00000	.08560	-.38090	-4.27550	-3.94990
-4.172	.368	-.16630	.05390	.02280	-.00680	.00020	-.00020	.08550	-.38020	-4.18130	.36260
-3.713	4.237	-.16890	.05400	.03400	-.05630	.00410	-.00030	.08430	-.37490	-3.75480	4.25250
-3.799	6.096	-.17250	.05240	.03470	-.08270	.00630	-.00050	.08700	-.38710	-3.83860	6.10480
	GRADIENT	.00399	.00014	-.00082	-.01386	.00150	-.00004	-.00016	.00073	.06310	1.00583

RUN NO. 1256/ 0 RN/L = 3.50 GRADIENT INTERVAL = -5.00/ 5.00

ALPHAT	BETAT	CNFT	CAFT	CLMFT	CYFT	CYNFT	CBLFT	CABT	CP7	ALPHAO	BETAO
-.229	-6.869	-.16250	.05100	.06290	.11100	-.01230	.00030	.08550	-.38030	-.40640	-6.90600
-.221	-4.710	-.15070	.05200	.05660	.07570	-.01020	.00020	.08260	-.36720	-.38640	-4.76420
-.277	-.359	-.11550	.05120	.03460	.00560	-.00290	-.00010	.07750	-.34470	-.35520	-.42450
-.218	3.721	-.11970	.05290	.04290	-.05770	.00540	-.00020	.08070	-.35900	-.32140	3.66280
-.202	5.873	-.12440	.05120	.04730	-.09110	.00870	-.00030	.08320	-.36990	-.32150	5.81120
	GRADIENT	.00373	.00010	-.00166	-.01583	.00185	-.00005	-.00024	.00102	.00770	.99953

RUN NO. 1257/ 0 RN/L = 3.50 GRADIENT INTERVAL = -5.00/ 5.00

ALPHAT	BETAT	CNFT	CAFT	CLMFT	CYFT	CYNFT	CBLFT	CABT	CP7	ALPHAO	BETAO
4.430	-5.855	-.07060	.04840	.06590	.10400	-.01380	.00040	.07810	-.34750	4.13780	-5.83050
4.287	-3.763	-.06330	.04870	.06110	.06780	-.01150	.00020	.07660	-.34050	4.00460	-3.74640
3.987	.082	-.04030	.04980	.04380	.00260	-.00210	-.00010	.07530	-.33470	3.77170	.07510
4.118	4.037	-.04570	.04950	.05300	-.06180	.00710	-.00020	.07670	-.34120	3.86250	4.00700
4.047	6.158	-.04630	.04900	.05330	-.09730	.01000	-.00030	.07910	-.35170	3.79730	6.12460
	GRADIENT	.00224	.00010	-.00102	-.01661	.00238	-.00005	.00001	-.00010	-.01802	.99405

IA156A, AEDC PWT 16T-470, O T S W/SILTS (R8NTA6) (10 MAY 80)

REFERENCE DATA

SREF = 2690.0000 SQ.FT. XMRP = 976.0000 IN. XT
LREF = 1290.3000 INCHES YMRP = .0000 IN. YT
BREF = 1290.3000 INCHES ZMRP = 400.0000 IN. ZT
SCALE = .0200

PARAMETRIC DATA

IB-ELV = 12.000 OB-ELV = 5.000
BDFLAP = .000 SPDBRK = .000
RUDDER = .000 SILTS = 1.000
MACH = .950 RN/L = 3.500

RUN NO. 1258/ 0 RN/L = 3.50 GRADIENT INTERVAL = -5.00/ 5.00

ALPHAT	BETAT	CNFT	CAFT	CLMFT	CYFT	CYNFT	CBLFT	CABT	CP7	ALPHAO	BETAO
-8.226	-5.894	-.27890	.05970	.02300	.10050	-.01280	.00020	.10240	-.45540	-8.12250	-5.89550
9.318	-3.788	-.27480	.06020	.01910	.06330	-.00970	.00000	.09800	-.43580	-8.20370	-3.79970
-8.274	.350	-.24640	.06100	.00260	-.00440	-.00080	-.00020	.09860	-.43860	-8.12000	.34760
-8.091	4.316	-.24780	.06030	.00900	-.06370	.00550	-.00020	.10020	-.44570	-7.94300	4.31700
-8.100	6.234	-.24930	.06000	.01010	-.09320	.00720	-.00040	.10190	-.45340	-7.95720	6.22350
	GRADIENT	.00336	.00001	-.00127	-.01568	.00188	-.00002	.00027	-.00122	.03208	1.00162

RUN NO. 1259/ 0 RN/L = 3.50 GRADIENT INTERVAL = -5.00/ 5.00

ALPHAT	BETAT	CNFT	CAFT	CLMFT	CYFT	CYNFT	CBLFT	CABT	CP7	ALPHAO	BETAO
-6.209	-5.931	-.24030	.06030	.02950	.10390	-.01580	.00030	.09860	-.43870	-6.17170	-5.94290
-6.146	-4.014	-.23320	.06050	.02680	.06990	-.01270	.00010	.09480	-.42150	-6.10690	-4.03720
-6.268	.099	-.20580	.06040	.01020	-.00350	-.00010	-.00020	.09570	-.42550	-6.18620	.09170
-6.076	4.217	-.20560	.06080	.01660	-.06370	.00780	-.00030	.09520	-.42320	-6.01120	4.22590
-5.784	6.299	-.20060	.05970	.01910	-.09230	.00940	-.00060	.09810	-.43640	-5.74000	6.30140
	GRADIENT	.00335	.00004	-.00124	-.01623	.00249	-.00005	.00005	-.00021	.01163	1.00392

RUN NO. 1260/ 0 RN/L = 3.50 GRADIENT INTERVAL = -5.00/ 5.00

ALPHAT	BETAT	CNFT	CAFT	CLMFT	CYFT	CYNFT	CBLFT	CABT	CP7	ALPHAO	BETAO
-4.007	-6.029	-.20310	.06000	.03890	.10060	-.01490	.00030	.09540	-.42450	-4.06090	-6.05280
-4.252	-3.916	-.19760	.06090	.03330	.06200	-.01040	.00010	.09140	-.40650	-4.28710	-3.95120
-4.186	.373	-.16180	.06120	.01590	-.00790	.00070	-.00030	.09230	-.41060	-4.18100	.36980
-3.715	4.255	-.16170	.06130	.02680	-.05610	.00410	-.00030	.09200	-.40920	-3.75430	4.27900
-3.804	6.080	-.16690	.06020	.02740	-.08400	.00620	-.00060	.09480	-.42170	-3.83860	6.09530
	GRADIENT	.00446	.00005	-.00085	-.01449	.00179	-.00005	.00008	-.00034	.06450	1.00724

RUN NO. 1261/ 0 RN/L = 3.50 GRADIENT INTERVAL = -5.00/ 5.00

ALPHAT	BETAT	CNFT	CAFT	CLMFT	CYFT	CYNFT	CBLFT	CABT	CP7	ALPHAO	BETAO
-.236	-6.886	-.15340	.05930	.05730	.11230	-.01380	.00030	.09260	-.41170	-.42210	-6.93300
-.222	-4.728	-.14200	.05970	.05200	.07360	-.01030	.00010	.08940	-.39750	-.40220	-4.79080
-.252	-.387	-.10670	.05960	.03180	.00620	-.00280	-.00020	.08690	-.38640	-.36640	-.45410
-.197	3.708	-.11050	.06050	.03940	-.05440	.00510	-.00020	.08930	-.39740	-.33370	3.65950
-.196	5.879	-.11360	.05900	.04230	-.08700	.00830	-.00040	.09270	-.41210	-.33570	5.82570
	GRADIENT	.00378	.00009	-.00153	-.01518	.00182	-.00004	-.00002	.00004	.00812	1.00164

IA156A, AEDC PWT 16T-470, O T S W/SILTS (R8NTA6) (10 MAY 80)

REFERENCE DATA

SREF = 2690.0000 SQ.FT. XMRP = 976.0000 IN. XT
LREF = 1290.3000 INCHES YMRP = .0000 IN. YT
BREF = 1290.3000 INCHES ZMRP = 400.0000 IN. ZT
SCALE = .0200

PARAMETRIC DATA

IB-ELV = 12.000 OB-ELV = 5.000
BDFLAP = .000 SPDBRK = .000
RUDDER = .000 SILTS = 1.000
MACH = .950 RN/L = 3.500

RUN NO. 1262/ 0 RN/L = 3.50 GRADIENT INTERVAL = -5.00/ 5.00

ALPHAT	BETAT	CNFT	CAFT	CLMFT	CYFT	CYNFT	CBLFT	CABT	CP7	ALPHAO	BETAO
4.427	-3.834	-.06890	.05590	.06470	.10690	-.01410	.00030	.08720	-.38790	4.11360	-5.81430
4.276	-3.726	-.05900	.05610	.05730	.07070	-.01250	.00010	.08500	-.37790	3.98940	-3.71370
3.971	.126	-.03820	.05770	.03970	.00160	-.00170	-.00010	.08290	-.36850	3.76640	.12020
4.130	4.072	-.04160	.05510	.05020	-.06600	.00750	-.00020	.08500	-.37820	3.86700	4.04360
4.072	6.161	-.04500	.05410	.05290	-.10110	.00980	-.00040	.08870	-.39440	3.79990	6.12760
	GRADIENT	.00222	-.00013	-.00090	-.01753	.00256	-.00004	.00000	-.00005	-.01553	.99473

IA156A, AEDC PWT 16T-470, O T S W/SILTS (R8NTA7) (10 MAY 80)

REFERENCE DATA

SREF = 2690.0000 SQ.FT. XMRP = 976.0000 IN. XT
LREF = 1290.3000 INCHES YMRP = .0000 IN. YT
BREF = 1290.3000 INCHES ZMRP = 400.0000 IN. ZT
SCALE = .0200

PARAMETRIC DATA

IB-ELV = 12.000 OB-ELV = 5.000
BDFLAP = .000 SPDBRK = .000
RUDDER = .000 SILTS = 1.000
MACH = 1.050 RN/L = 3.500

RUN NO. 1263/ 0 RN/L = 3.50 GRADIENT INTERVAL = -5.00/ 5.00

ALPHAT	BETAT	CNFT	CAFT	CLMFT	CYFT	CYNFT	CBLFT	CABT	CP7	ALPHAO	BETAO
-8.229	-5.948	-.28460	.08470	.02040	.10840	-.01050	.00020	.11440	-.50860	-8.09470	-5.93780
-8.363	-3.735	-.29010	.08650	.01480	.06480	-.00660	.00000	.11140	-.49540	-8.22330	-3.73880
-8.308	.179	-.25250	.08990	-.00180	-.00060	-.00150	-.00020	.11040	-.49100	-8.11280	.17590
-8.134	4.369	-.25300	.08750	.00330	-.06540	.00180	-.00030	.11300	-.50270	-7.95300	4.36010
-8.137	6.238	-.25730	.08750	.00520	-.09790	.00380	-.00050	.11390	-.50640	-7.95620	6.21620
	GRADIENT	.00330	.00012	-.00139	-.01606	.00103	-.00004	.00020	-.00092	.03341	.99940

RUN NO. 1264/ 0 RN/L = 3.50 GRADIENT INTERVAL = -5.00/ 5.00

ALPHAT	BETAT	CNFT	CAFT	CLMFT	CYFT	CYNFT	CBLFT	CABT	CP7	ALPHAO	BETAO
-6.132	-5.924	-.24130	.08620	.02670	.11080	-.01460	.00020	.11180	-.49710	-6.07450	-5.92740
-6.149	-4.020	-.23450	.08820	.02300	.07060	-.00990	.00000	.10830	-.48180	-6.08750	-4.03340
-6.310	.110	-.20690	.08840	.00310	-.00010	-.00220	-.00020	.11100	-.49370	-6.19430	.10430
-6.096	4.235	-.20840	.08790	.01100	-.06460	.00490	-.00030	.10950	-.48710	-6.00100	4.23710
-6.056	6.212	-.21190	.08700	.01250	-.09820	.00820	-.00060	.11140	-.49570	-5.96210	6.21010
	GRADIENT	.00316	-.00004	-.00145	-.01638	.00179	-.00004	.00015	-.00064	.01047	1.00190

IA156A, AEDC PWT 16T-470, O T S W/SILTS (R8NTA7) (10 MAY 80)

REFERENCE DATA

SREF = 2690.0000 SQ.FT. XMRP = 976.0000 IN. XT
LREF = 1290.3000 INCHES YMRP = .0000 IN. YT
BREF = 1290.3000 INCHES ZMRP = 400.0000 IN. ZT
SCALE = .0200

PARAMETRIC DATA

IB-ELV = 12.000 OB-ELV = 5.000
BDFLAP = .000 SPDBRK = .000
RUDDER = .000 SILTS = 1.000
MACH = 1.050 RN/L = 3.500

RUN NO. 1265/ 0 RN/L = 3.50 GRADIENT INTERVAL = -5.00/ 5.00

ALPHAT	BETAT	CNFT	CAFT	CLMFT	CYFT	CYNFT	CBLFT	CABT	CP7	ALPHAO	BETAO
-4.137	-6.026	-.20420	.08800	.03480	.11010	-.01510	.00020	.10690	-.47530	-4.16880	-6.03990
-4.282	-3.936	-.19760	.08760	.02930	.06550	-.00940	.00000	.10530	-.46840	-4.29820	-3.96650
-4.237	.362	-.16000	.08790	.00890	-.00550	-.00080	-.00030	.10910	-.48520	-4.20300	.35810
-3.741	4.261	-.16050	.08800	.02000	-.06220	.00370	-.00040	.10680	-.47500	-3.75530	4.27990
-3.830	6.101	-.16480	.08730	.02030	-.09530	.00800	-.00060	.10740	-.47770	-3.84230	6.11310
	GRADIENT	.00460	.00005	-.00120	-.01559	.00160	-.00005	.00019	-.00086	.06548	1.00599

RUN NO. 1266/ 0 RN/L = 3.50 GRADIENT INTERVAL = -5.00/ 5.00

ALPHAT	BETAT	CNFT	CAFT	CLMFT	CYFT	CYNFT	CBLFT	CABT	CP7	ALPHAO	BETAO
-.242	-6.935	-.15020	.08610	.05610	.12400	-.01710	.00010	.10430	-.46390	-.45090	-6.98810
-.241	-4.769	-.13680	.08700	.04950	.08200	-.01250	.00000	.10130	-.45070	-.43040	-4.83950
-.322	-.361	-.09680	.08700	.02350	.01040	-.00600	-.00030	.10350	-.46050	-.40670	-.43770
-.244	3.724	-.10160	.08730	.03250	-.05590	.00430	-.00030	.10590	-.47110	-.37490	3.67700
-.216	5.892	-.10450	.08260	.03640	-.09140	.00810	-.00040	.11010	-.48950	-.36750	5.84290
	GRADIENT	.00421	.00003	-.00205	-.01624	.00197	-.00004	.00054	-.00240	.00652	1.00282

RUN NO. 1267/ 0 RN/L = 3.50 GRADIENT INTERVAL = -5.00/ 5.00

ALPHAT	BETAT	CNFT	CAFT	CLMFT	CYFT	CYNFT	CBLFT	CABT	CP7	ALPHAO	BETAO
4.448	-5.824	-.06930	.08330	.06560	.10530	-.01380	.00010	.10110	-.44970	4.11620	-5.81650
4.279	-3.711	-.05820	.08210	.05760	.06850	-.01230	.00000	.09960	-.44300	3.97170	-3.71070
4.033	.129	-.03030	.08440	.03880	.00080	-.00210	-.00020	.09740	-.43310	3.78730	.11310
4.134	4.065	-.03750	.08380	.04920	-.06780	.00910	-.00020	.09980	-.44380	3.85350	4.04290
4.100	6.149	-.04110	.08160	.05270	-.10320	.01010	-.00030	.10410	-.46310	3.80430	6.11880
	GRADIENT	.00264	.00022	-.00106	-.01753	.00275	-.00003	.00003	-.00011	-.01507	.99709

IA156A, AEDC PWT 16T-470, O T S W/SILTS (R8NTA8) (10 MAY 80)

REFERENCE DATA

SREF = 2690.0000 SQ.FT. XMRP = 976.0000 IN. XT
LREF = 1290.3000 INCHES YMRP = .0000 IN. YT
BREF = 1290.3000 INCHES ZMRP = 400.0000 IN. ZT
SCALE = .0200

PARAMETRIC DATA

IB-ELV = 12.000 OB-ELV = 5.000
BDFLAP = .000 SPDBRK = .000
RUDDER = .000 SILTS = 1.000
MACH = 1.100 RN/L = 3.500

RUN NO. 1268/ 0 RN/L = 3.50 GRADIENT INTERVAL = -5.00/ 5.00

ALPHAT	BETAT	CNFT	CAFT	CLMFT	CYFT	CYNFT	CBLFT	CABT	CP7	ALPHAO	BETAO
-8.259	-5.940	-.28160	.09330	.01810	.10410	-.00920	.00010	.10380	-.46150	-8.10260	-5.93150
-8.377	-3.749	-.27800	.09270	.01330	.06320	-.00560	-.00010	.10360	-.46070	-8.21430	-3.74820
-8.340	.185	-.24740	.09370	-.00490	-.00340	-.00090	-.00020	.10290	-.45790	-8.11800	.17730
-8.157	4.375	-.25150	.09300	.00220	-.06540	.00090	-.00040	.10520	-.46790	-7.95920	4.36110
-8.141	6.239	-.25190	.09350	.00410	-.09540	.00270	-.00050	.10500	-.46700	-7.95150	6.21680
	GRADIENT	.00322	.00015	-.00133	-.01582	.00080	-.00004	.00020	-.00090	.03147	.99821

RUN NO. 1269/ 0 RN/L = 3.50 GRADIENT INTERVAL = -5.00/ 5.00

ALPHAT	BETAT	CNFT	CAFT	CLMFT	CYFT	CYNFT	CBLFT	CABT	CP7	ALPHAO	BETAO
-6.251	-5.960	-.24180	.09340	.02420	.10460	-.01230	.00020	.10010	-.44500	-6.16790	-5.95750
-6.206	-4.036	-.23400	.09340	.02090	.06680	-.00800	.00000	.09800	-.43600	-6.11670	-4.04380
-6.360	.111	-.20460	.09450	.00100	-.00210	-.00240	-.00020	.10000	-.44480	-6.21290	.09920
-6.086	4.237	-.20580	.09460	.01050	-.05900	.00100	-.00040	.09810	-.43640	-5.98110	4.22800
-6.080	6.232	-.20770	.09240	.01110	-.09390	.00560	-.00060	.10190	-.45330	-5.97980	6.22260
	GRADIENT	.00341	.00015	-.00126	-.01521	.00109	-.00005	.00001	-.00005	.01636	.99987

RUN NO. 1270/ 0 RN/L = 3.50 GRADIENT INTERVAL = -5.00/ 5.00

ALPHAT	BETAT	CNFT	CAFT	CLMFT	CYFT	CYNFT	CBLFT	CABT	CP7	ALPHAO	BETAO
-4.004	-6.049	-.20200	.09300	.03420	.10510	-.01360	.00020	.09690	-.43090	-4.02880	-6.05450
-4.297	-3.941	-.19730	.09360	.02770	.06140	-.00740	-.00010	.09450	-.42010	-4.29430	-3.96380
-4.233	.370	-.15940	.09490	.00830	-.00630	-.00120	-.00030	.09480	-.42190	-4.18880	.36350
-3.713	4.269	-.15770	.09540	.02010	-.06180	.00240	-.00040	.09360	-.41630	-3.72750	4.27450
-3.834	6.109	-.16320	.09410	.02050	-.09510	.00660	-.00060	.09590	-.42650	-3.85100	6.10780
	GRADIENT	.00489	.00022	-.00099	-.01502	.00120	-.00004	-.00011	.00045	.06825	1.00346

RUN NO. 1271/ 0 RN/L = 3.50 GRADIENT INTERVAL = -5.00/ 5.00

ALPHAT	BETAT	CNFT	CAFT	CLMFT	CYFT	CYNFT	CBLFT	CABT	CP7	ALPHAO	BETAO
-.245	-6.951	-.15140	.09270	.05590	.12030	-.01490	.00020	.09390	-.41760	-.45780	-6.98580
-.236	-4.780	-.13940	.09400	.05030	.07870	-.01040	.00000	.09000	-.40030	-.43400	-4.83620
-.293	-.395	-.10220	.09520	.02720	.00920	-.00540	-.00020	.09010	-.40090	-.39980	-.46820
-.211	3.721	-.10580	.09580	.03570	-.05580	.00370	-.00030	.09220	-.41000	-.36740	3.66720
-.210	5.895	-.10590	.09320	.03610	-.09130	.00750	-.00050	.09340	-.41530	-.36620	5.83810
	GRADIENT	.00400	.00021	-.00176	-.01582	.00165	-.00004	.00026	-.00113	.00783	1.00025

IA156A, AEDC PWT 16T-470, O T S W/SILTS (R8NTA8) (10 MAY 80)

REFERENCE DATA

SREF = 2690.0000 SQ.FT. XMRP = 976.0000 IN. XT
LREF = 1290.3000 INCHES YMRP = .0000 IN. YT
BREF = 1290.3000 INCHES ZMRP = 400.0000 IN. ZT
SCALE = .0200

PARAMETRIC DATA

IB-ELV = 12.000 OB-ELV = 5.000
BDFLAP = .000 SPDBRK = .000
RUDDER = .000 SILTS = 1.000
MACH = 1.100 RN/L = 3.500

RUN NO. 1272/ 0 RN/L = 3.50 GRADIENT INTERVAL = -5.00/ 5.00

ALPHAT	BETAT	CNFT	CAFT	CLMFT	CYFT	CYNFT	CBLFT	CABT	CP7	ALPHAO	BETAO
4.498	-5.845	-.06830	.08920	.06860	.10400	-.01390	.00010	.08880	-.39480	4.13390	-5.83710
4.323	-3.725	-.05740	.09060	.06060	.06720	-.01190	.00000	.08450	-.37580	3.98380	-3.72470
4.057	.134	-.03450	.09110	.04290	-.00300	-.00100	-.00020	.08570	-.38100	3.77560	.11840
4.161	4.054	-.04150	.09300	.05370	-.06790	.00860	-.00030	.08530	-.37950	3.83990	4.02830
4.116	6.154	-.04460	.09000	.05520	-.10070	.00810	-.00030	.08950	-.39790	3.79450	6.11720
	GRADIENT	.00203	.00031	-.00088	-.01737	.00263	-.00004	.00010	-.00047	-.01841	.99670

IA156A, AEDC PWT 16T-470, O T S W/SILTS (R8NTA9) (10 MAY 80)

REFERENCE DATA

SREF = 2690.0000 SQ.FT. XMRP = 976.0000 IN. XT
LREF = 1290.3000 INCHES YMRP = .0000 IN. YT
BREF = 1290.3000 INCHES ZMRP = 400.0000 IN. ZT
SCALE = .0200

PARAMETRIC DATA

IB-ELV = 12.000 OB-ELV = 5.000
BDFLAP = .000 SPDBRK = .000
RUDDER = .000 SILTS = 1.000
MACH = 1.150 RN/L = 3.500

RUN NO. 1273/ 0 RN/L = 3.50 GRADIENT INTERVAL = -5.00/ 5.00

ALPHAT	BETAT	CNFT	CAFT	CLMFT	CYFT	CYNFT	CBLFT	CABT	CP7	ALPHAO	BETAO
-8.251	-5.958	-.28730	.09990	.02170	.10650	-.01030	.00010	.09960	-.44310	-8.10590	-5.53900
-8.359	-3.743	-.27900	.09930	.01720	.06230	-.00590	-.00010	.09580	-.42630	-8.21290	-3.73960
-8.326	.203	-.25710	.09960	.00000	-.00060	-.00290	-.00020	.09970	-.44330	-8.11580	.19140
-8.110	4.353	-.25660	.10070	.00670	-.05980	-.00020	-.00040	.09680	-.43050	-7.93400	4.33110
-8.152	6.260	-.25990	.09860	.00790	-.09270	.00280	-.00050	.09930	-.44190	-7.97360	6.23140
	GRADIENT	.00274	.00017	-.00127	-.01507	.00070	-.00004	.00012	-.00049	.03453	.99688

RUN NO. 1274/ 0 RN/L = 3.51 GRADIENT INTERVAL = -5.00/ 5.00

ALPHAT	BETAT	CNFT	CAFT	CLMFT	CYFT	CYNFT	CBLFT	CABT	CP7	ALPHAO	BETAO
-6.229	-5.957	-.24340	.09920	.02670	.10860	-.01450	.00020	.09660	-.42940	-6.16200	-5.95070
-6.175	-4.026	-.23580	.10030	.02360	.06880	-.00940	-.00010	.09280	-.41270	-6.10440	-4.03500
-6.318	.110	-.20970	.10110	.00540	.00250	-.00440	-.00030	.09470	-.42120	-6.19790	.09370
-6.081	4.258	-.21080	.10040	.01350	-.05840	-.00010	-.00040	.09390	-.41770	-5.99420	4.23900
-6.052	6.236	-.21230	.10000	.01440	-.09500	.00570	-.00060	.09440	-.41970	-5.96940	6.21330
	GRADIENT	.00302	.00001	-.00122	-.01535	.00112	-.00004	.00013	-.00060	.01332	.99874

IA156A, AEDC PWT 16T-470, O T S W/SILTS (R8NTA9) (10 MAY 80)

REFERENCE DATA

SREF = 2690.0000 SQ.FT. XMRP = 976.0000 IN. XT
LREF = 1290.3000 INCHES YMRP = .0000 IN. YT
BREF = 1290.3000 INCHES ZMRP = 400.0000 IN. ZT
SCALE = .0200

PARAMETRIC DATA

IB-ELV = 12.000 OB-ELV = 5.000
BDFLAP = .000 SPDBRK = .000
RUDDER = .000 SILTS = 1.000
MACH = 1.150 RN/L = 3.500

RUN NO. 1275/ 0 RN/L = 3.51 GRADIENT INTERVAL = -5.00/ 5.00

ALPHAT	BETAT	CNFT	CAFT	CLMF1	CYFT	CYNFT	CBLFT	CABT	CP7	ALPHAO	BETAO
-3.993	-6.042	-.20160	.10000	.03590	.11100	-.01700	.00010	.09180	-.40830	-4.03810	-6.05170
-4.283	-3.940	-.19790	.10130	.02980	.06770	-.01070	-.00010	.08910	-.39640	-4.30000	-3.96660
-4.219	.381	-.16370	.10190	.01230	-.00210	-.00390	-.00030	.08890	-.39530	-4.20230	.36740
-3.705	4.273	-.16320	.10180	.02350	-.06180	.00230	-.00040	.08970	-.39900	-3.74700	4.27370
-3.822	6.138	-.16830	.10070	.02360	-.09490	.00630	-.00060	.09140	-.40650	-3.86050	6.12870
	GRADIENT	.00429	.00006	-.00083	-.01577	.00158	-.00004	.00007	-.00031	.06652	1.00332

RUN NO. 1276/ 0 RN/L = 3.50 GRADIENT INTERVAL = -5.00/ 5.00

ALPHAT	BETAT	CNFT	CAFT	CLMFT	CYFT	CYNFT	CBLFT	CABT	CP7	ALPHAO	BETAO
-.209	-6.974	-.14940	.09830	.05680	.12330	-.01690	.00010	.09140	-.40630	-.44280	-7.01660
-.204	-4.759	-.13620	.10070	.05000	.07920	-.01160	-.00010	.08640	-.38450	-.41720	-4.81790
-.264	-.421	-.10280	.10290	.02810	.00880	-.00510	-.00030	.08500	-.37800	-.38430	-.49570
-.183	3.722	-.10370	.10320	.03540	-.05650	.00430	-.00030	.08690	-.38670	-.34900	3.66660
-.170	5.924	-.10400	.10060	.03760	-.09320	.00790	-.00040	.08970	-.39910	-.35040	5.85900
	GRADIENT	.00386	.00030	-.00175	-.01600	.00187	-.00002	.00006	-.00025	.00804	1.00040

RUN NO. 1277/ 0 RN/L = 3.50 GRADIENT INTERVAL = -5.00/ 5.00

ALPHAT	BETAT	CNFT	CAFT	CLMFT	CYFT	CYNFT	CBLFT	CABT	CP7	ALPHAO	BETAO
4.521	-5.817	-.07200	.09730	.07220	.10390	-.01460	.00010	.08300	-.36930	4.11950	-5.81370
4.367	-3.707	-.06160	.09730	.06540	.06880	-.01340	-.00010	.08220	-.36580	3.98310	-3.71840
4.101	.152	-.04110	.09750	.04910	.00250	-.00500	-.00010	.08240	-.36650	3.77170	.12090
4.190	4.058	-.04030	.09950	.05380	-.06170	.00530	-.00030	.08090	-.35980	3.85590	4.02600
4.141	6.166	-.04540	.09980	.05710	-.09960	.00790	-.00030	.08360	-.37200	3.79840	6.12690
	GRADIENT	.00274	.00028	-.00149	-.01681	.00241	-.00003	-.00017	.00077	-.01631	.99745

IA156A, AEDC PWT 16T-470, O T S W/SILTS (R8NTBO) (10 MAY 80)

REFERENCE DATA

SREF = 2690.0000 SQ.FT. XMRP = 976.0000 IN. XT
LREF = 1290.3000 INCHES YMRP = .0000 IN. YT
BREF = 1290.3000 INCHES ZMRP = 400.0000 IN. ZT
SCALE = .0200

PARAMETRIC DATA

IB-ELV = 12.000 OB-ELV = 5.000
BDFLAP = .000 SPDBRK = .000
RUDDER = .000 SILTS = 1.000
MACH = 1.250 RN/L = 3.500

RUN NO. 1278/ 0 RN/L = 3.50 GRADIENT INTERVAL = -5.00/ 5.00

ALPHAT	BETAT	CNFT	CAFT	CLMFT	CYFT	CYNFT	CBLFT	CABT	CP7	ALPHAO	BETAO
-8.207	-5.964	-.29080	.10590	.02900	.09880	-.00700	.00010	.09150	-.40690	-8.11700	-5.93360
-8.317	-3.751	-.28580	.10620	.02430	.05450	-.00140	-.00010	.08990	-.39990	-8.22170	-3.72810
-8.266	.196	-.25900	.10760	.00800	-.00270	-.00040	-.00020	.08820	-.39210	-8.11430	.19220
-8.076	4.397	-.26150	.10670	.01290	-.05900	-.00060	-.00040	.08980	-.39950	-7.93670	4.36450
-8.119	6.290	-.26280	.10250	.01340	-.09370	.00380	-.00050	.09430	-.41960	-7.97160	6.24970
	GRADIENT	.00294	.00006	-.00137	-.01392	.00010	-.00004	-.00001	.00003	.03506	.99321

RUN NO. 1279/ 0 RN/L = 3.50 GRADIENT INTERVAL = -5.00/ 5.00

ALPHAT	BETAT	CNFT	CAFT	CLMFT	CYFT	CYNFT	CBLFT	CABT	CP7	ALPHAO	BETAO
-6.218	-5.994	-.24770	.10720	.03360	.10110	-.01010	.00010	.08840	-.39310	-6.20180	-5.97320
-6.144	-4.032	-.23940	.10730	.03020	.06200	-.00480	-.00010	.08710	-.38740	-6.13330	-4.02380
-6.260	.138	-.21350	.10850	.01250	.00030	-.00250	-.00030	.08460	-.37620	-6.19640	.13120
-6.052	4.267	-.21450	.10890	.01780	-.06070	.00210	-.00040	.08530	-.37950	-5.99780	4.24640
-5.856	6.356	-.20910	.10790	.01750	-.09870	.00690	-.00060	.08600	-.38250	-5.79650	6.32740
	GRADIENT	.00301	.00019	-.00150	-.01478	.00083	-.00004	-.00022	.00095	.01627	.99653

RUN NO. 1280/ 0 RN/L = 3.50 GRADIENT INTERVAL = -5.00/ 5.00

ALPHAT	BETAT	CNFT	CAFT	CLMFT	CYFT	CYNFT	CBLFT	CABT	CP7	ALPHAO	BETAO
-4.088	-6.052	-.20900	.10710	.04210	.10470	-.01280	.00010	.08650	-.38460	-4.17940	-6.04770
-4.233	-3.958	-.20330	.10780	.03620	.06380	-.00790	-.00010	.08460	-.37650	-4.30870	-3.96990
-4.162	.376	-.17070	.10910	.01890	-.00490	-.00160	-.00030	.08220	-.36570	-4.18700	.36990
-3.679	4.282	-.16540	.10920	.02650	-.06380	.00420	-.00040	.08290	-.36890	-3.74370	4.28080
-3.801	6.159	-.16770	.10890	.02510	-.09660	.00730	-.00050	.08520	-.37910	-3.85520	6.14420
	GRADIENT	.00465	.00017	-.00123	-.01549	.00147	-.00004	-.00021	.00095	.06783	1.00134

RUN NO. 1281/ 0 RN/L = 3.51 GRADIENT INTERVAL = -5.00/ 5.00

ALPHAT	BETAT	CNFT	CAFT	CLMFT	CYFT	CYNFT	CBLFT	CABT	CP7	ALPHAO	BETAO
-.170	-6.998	-.15450	.10660	.06390	.11740	-.01500	.00010	.08290	-.36860	-.47150	-7.03250
-.158	-4.772	-.14390	.10260	.05820	.07620	-.01060	-.00010	.08580	-.38180	-.44360	-4.82570
-.189	-.426	-.11470	.10910	.04000	.00720	-.00440	-.00030	.07750	-.34460	-.40110	-.49880
-.111	3.732	-.11160	.11040	.04550	-.05450	.00300	-.00020	.07770	-.34540	-.36480	3.66870
-.122	5.946	-.11250	.10680	.04610	-.09040	.00580	-.00040	.08160	-.36310	-.37710	5.86810
	GRADIENT	.00382	.00092	-.00151	-.01537	.00160	-.00001	-.00096	.00431	.00927	.99878

IA156A, AEDC PWT 16T-470, O T S W/SILTS (R8NTB0) (10 MAY 80)

REFERENCE DATA

SREF = 2690.0000 SQ.FT. XMRP = 976.0000 IN. XT
LREF = 1290.3000 INCHES YMRP = .0000 IN. YT
BREF = 1290.3000 INCHES ZMRP = 400.0000 IN. ZT
SCALE = .0200

PARAMETRIC DATA

IB-ELV = 12.000 OB-ELV = 5.000
BDFLAP = .000 SPDBRK = .000
RUDDER = .000 SILTS = 1.000
MACH = 1.250 RN/L = 3.500

RUN NO. 1282/ 0 RN/L = 3.51 GRADIENT INTERVAL = -5.00/ 5.00

ALPHAT	BETAT	CNFT	CAFT	CLMFT	CYFT	CYNFT	CBLFT	CABT	CP7	ALPHAO	BETAO
4.579	-5.814	-.07700	.10340	.07840	.09980	-.01240	.00010	.07790	-.34660	4.12170	-5.80320
4.435	-3.706	-.06570	.10390	.07120	.06200	-.00970	-.00010	.07650	-.34040	3.99890	-3.70700
4.173	.156	-.05070	.10460	.05910	-.00340	-.00180	-.00020	.07460	-.33170	3.75820	.13220
4.242	4.062	-.05330	.10330	.06540	-.06360	.00650	-.00020	.07760	-.34520	3.82510	4.03890
4.196	6.148	-.05620	.10370	.06740	-.09960	.00850	-.00030	.07840	-.34890	3.77810	6.11330
	GRADIENT	.00159	-.00008	-.00074	-.01617	.00209	-.00001	.00014	-.00062	-.02230	.99715

IA156A, AEDC PWT 16T-470, O T S W/SILTS (R8NTB1) (10 MAY 80)

REFERENCE DATA

SREF = 2690.0000 SQ.FT. XMRP = 976.0000 IN. XT
LREF = 1290.3000 INCHES YMRP = .0000 IN. YT
BREF = 1290.3000 INCHES ZMRP = 400.0000 IN. ZT
SCALE = .0200

PARAMETRIC DATA

IB-ELV = 12.000 OB-ELV = 5.000
BDFLAP = .000 SPDBRK = .000
RUDDER = .000 SILTS = 1.000
MACH = 1.400 RN/L = 3.500

RUN NO. 1283/ 0 RN/L = 3.49 GRADIENT INTERVAL = -5.00/ 5.00

ALPHAT	BETAT	CNFT	CAFT	CLMFT	CYFT	CYNFT	CBLFT	CABT	CP7	ALPHAO	BETAO
-8.213	-5.977	-.30060	.11090	.03550	.09910	-.00550	.00000	.08200	-.36460	-8.17180	-5.91650
-8.286	-3.750	-.29080	.11100	.02920	.05610	-.00100	-.00020	.08170	-.36320	-8.23250	-3.70310
-8.243	.241	-.26650	.11330	.01400	-.00440	-.00080	-.00030	.07810	-.34750	-8.13240	.22730
-8.017	4.477	-.26440	.11180	.01890	-.06370	-.00140	-.00030	.08140	-.36210	-7.93400	4.40890
-8.071	6.395	-.26570	.11280	.01900	-.09440	-.00050	-.00050	.08130	-.36160	-7.99330	6.31610
	GRADIENT	.00318	.00009	-.00123	-.01456	-.00005	-.00001	-.00003	.00010	.03639	.98603

RUN NO. 1284/ 0 RN/L = 3.50 GRADIENT INTERVAL = -5.00/ 5.00

ALPHAT	BETAT	CNFT	CAFT	CLMFT	CYFT	CYNFT	CBLFT	CABT	CP7	ALPHAO	BETAO
-6.228	-6.011	-.25230	.11230	.03690	.10120	-.00810	.00000	.07990	-.35530	-6.23480	-5.94900
-6.180	-4.052	-.24310	.11270	.03210	.06170	-.00330	-.00020	.07840	-.34880	-6.17410	-4.01020
-6.273	.166	-.22210	.10990	.01700	-.00330	-.00100	-.00030	.08260	-.36760	-6.22690	.15720
-6.007	4.345	-.21360	.11380	.02090	-.06310	-.00020	-.00040	.07730	-.34360	-5.97160	4.28770
-5.973	6.332	-.21350	.10980	.01970	-.09910	.00310	-.00060	.08230	-.36600	-5.94050	6.25840
	GRADIENT	.00352	.00013	-.00134	-.01486	.00037	-.00002	-.00013	.00061	.02406	.98812

IA156A, AEDC PWT 16T-470, O T S W/SILTS (R8NTB1) (10 MAY 80)

REFERENCE DATA

SREF = 2690.0000 SQ.FT. XMRP = 976.0000 IN. XT
LREF = 1290.3000 INCHES YMRP = .0000 IN. YT
BREF = 1290.3000 INCHES ZMRP = 400.0000 IN. ZT
SCALE = .0200

PARAMETRIC DATA

IB-ELV = 12.000 OB-ELV = 5.000
BDFLAP = .000 SPDBRK = .000
RUDDER = .000 SILTS = 1.000
MACH = 1.400 RN/L = 3.500

RUN NO. 1285/ 0 RN/L = 3.50 GRADIENT INTERVAL = -5.00/ 5.00

ALPHAT	BETAT	CNFT	CAFT	CLMFT	CYFT	CYNFT	CBLFT	CABT	CP7	ALPHAO	BETAO
-4.217	-6.035	-.21260	.11370	.04270	.10150	-.00930	.00000	.07760	-.34520	-4.30840	-5.99410
-4.229	-3.973	-.20100	.11420	.03670	.06100	-.00410	-.00020	.07640	-.33980	-4.30260	-3.95440
-4.165	.436	-.17540	.11570	.02260	-.00840	-.00060	-.00030	.07380	-.32810	-4.20950	.42750
-3.628	4.347	-.16770	.11570	.02970	-.06190	-.00040	-.00040	.07510	-.33400	-3.71800	4.31220
-3.750	6.212	-.16820	.11410	.02710	-.09460	.00290	-.00050	.07640	-.34000	-3.82320	6.16470
	GRADIENT	.00404	.00018	-.00089	-.01479	.00045	-.00002	-.00017	.00074	.06923	.99360

RUN NO. 1286/ 0 RN/L = 3.50 GRADIENT INTERVAL = -5.00/ 5.00

ALPHAT	BETAT	CNFT	CAFT	CLMFT	CYFT	CYNFT	CBLFT	CABT	CP7	ALPHAO	BETAO
-.208	-7.057	-.15620	.10070	.06620	.11580	-.01160	.00010	.08860	-.39390	-.53430	-7.07080
-.205	-4.867	-.14070	.11390	.05720	.07290	-.00620	-.00010	.07140	-.31750	-.50040	-4.89770
-.206	-.373	-.11350	.10940	.04150	.00540	-.00310	-.00020	.07360	-.32720	-.44920	-.44090
-.143	3.743	-.11380	.11530	.04750	-.05640	.00200	-.00020	.07000	-.31150	-.42930	3.66440
-.173	5.970	-.11160	.11440	.04590	-.09330	.00490	-.00040	.07280	-.32360	-.44250	5.87710
	GRADIENT	.00317	.00014	-.00116	-.01502	.00095	-.00001	-.00015	.00065	.00831	.99440

RUN NO. 1287/ 0 RN/L = 3.49 GRADIENT INTERVAL = -5.00/ 5.00

ALPHAT	BETAT	CNFT	CAFT	CLMFT	CYFT	CYNFT	CBLFT	CABT	CP7	ALPHAO	BETAO
4.688	-5.772	-.07810	.11060	.08740	.09500	-.00850	-.00010	.07050	-.31360	4.13630	-5.76390
4.516	-3.662	-.06450	.11080	.07630	.05820	-.00770	-.00020	.06960	-.30970	4.01450	-3.67040
4.212	.189	-.05390	.11150	.06490	-.00120	-.00350	-.00020	.06790	-.30190	3.73110	.16240
4.261	4.092	-.05210	.11190	.06820	-.06060	.00220	-.00020	.06770	-.30110	3.79320	4.05410
4.189	6.136	-.05520	.11170	.07040	-.09960	.00750	-.00030	.06950	-.30910	3.71850	6.09580
	GRADIENT	.00160	.00014	-.00104	-.01532	.00128	.00000	-.00024	.00111	-.02844	.99616

IA156A, AEDC PWT 16T-470, O T S W/SILTS (R8NTB2) (10 MAY 80)

REFERENCE DATA

SREF = 2690.0000 SQ.FT. XMRP = 976.0000 IN. XT
LREF = 1290.3000 INCHES YMRP = .0000 IN. YT
BREF = 1290.3000 INCHES ZMRP = 400.0000 IN. ZT
SCALE = .0200

PARAMETRIC DATA

IB-ELV = 12.000 OB-ELV = 5.000
BDFLAP = .000 SPDBRK = .000
RUDDER = .000 SILTS = 1.000
MACH = 1.550 RN/L = 3.200

RUN NO. 1288/ 0 RN/L = 3.00 GRADIENT INTERVAL = -5.00/ 5.00

ALPHAT	BETAT	CNFT	CAFT	CLMFT	CYFT	CYNFT	CBLFT	CABT	CP7	ALPHAO	BETAO
-8.250	-5.924	-.30120	.11090	.04310	.09150	-.00350	-.00020	.07220	-.32110	-8.28530	-5.89170
-8.318	-3.697	-.29150	.11130	.03750	.05550	-.00270	-.00050	.07070	-.31460	-8.33710	-3.67460
-8.219	.336	-.26840	.11270	.02480	-.00380	-.00180	-.00030	.07030	-.31270	-8.20540	.31890
-7.988	4.548	-.26570	.11540	.02760	-.06080	-.00210	-.00030	.06990	-.31100	-7.98400	4.50160
-7.945	6.426	-.26680	.11450	.02740	-.08860	-.00240	-.00030	.07120	-.31690	-7.93440	6.37100
	GRADIENT	.00311	.00050	-.00119	-.01410	.00007	.00002	-.00010	.00044	.04289	.99156

RUN NO. 1289/ 0 RN/L = 3.00 GRADIENT INTERVAL = -5.00/ 5.00

ALPHAT	BETAT	CNFT	CAFT	CLMFT	CYFT	CYNFT	CBLFT	CABT	CP7	ALPHAO	BETAO
-6.279	-5.973	-.25160	.11110	.04220	.09890	-.00950	-.00030	.07040	-.31310	-6.32790	-5.94310
-6.229	-4.005	-.24260	.11100	.03730	.06170	-.00480	-.00040	.06910	-.30720	-6.27020	-3.98610
-6.247	.255	-.22380	.11270	.02730	-.00500	-.00100	-.00040	.06870	-.30530	-6.27240	.23840
-5.957	4.424	-.21490	.11510	.02790	-.06430	.00120	-.00040	.06830	-.30370	-5.98240	4.38510
-5.898	6.417	-.21670	.11290	.02800	-.09870	.00410	-.00050	.07180	-.31930	-5.92470	6.37050
	GRADIENT	.00329	.00049	-.00112	-.01495	.00071	-.00000	-.00009	.00042	.03402	.99322

RUN NO. 1290/ 0 RN/L = 3.00 GRADIENT INTERVAL = -5.00/ 5.00

ALPHAT	BETAT	CNFT	CAFT	CLMFT	CYFT	CYNFT	CBLFT	CABT	CP7	ALPHAO	BETAO
-4.099	-6.080	-.20710	.11130	.04680	.09710	-.00880	-.00020	.06860	-.30510	-4.20370	-6.06870
-4.363	-3.945	-.19870	.11120	.03880	.05660	-.00300	-.00030	.06660	-.29610	-4.44440	-3.94440
-4.207	.517	-.17690	.11390	.02860	-.00970	-.00090	-.00040	.06540	-.29110	-4.27950	.50130
-3.614	4.445	-.16680	.11580	.03360	-.06120	-.00040	-.00040	.06630	-.29500	-3.71730	4.43020
-3.701	6.284	-.17090	.11560	.03310	-.09620	.00470	-.00050	.06740	-.29980	-3.79780	6.26240
	GRADIENT	.00383	.00055	-.00066	-.01406	.00031	-.00001	-.00004	.00015	.08555	.99817

RUN NO. 1291/ 0 RN/L = 3.00 GRADIENT INTERVAL = -5.00/ 5.00

ALPHAT	BETAT	CNFT	CAFT	CLMFT	CYFT	CYNFT	CBLFT	CABT	CP7	ALPHAO	BETAO
-.311	-7.047	-.15050	.11020	.06460	.11010	-.00860	.00000	.06660	-.29610	-.58350	-7.07150
-.291	-4.873	-.13430	.11070	.05640	.07150	-.00540	-.00030	.06290	-.27980	-.54820	-4.90730
-.299	-.494	-.11350	.11180	.04300	.00470	-.00110	-.00050	.06060	-.26950	-.52000	-.55390
-.285	3.653	-.10870	.11430	.04270	-.05530	.00180	-.00030	.06130	-.27270	-.50420	3.58060
-.306	5.827	-.10730	.11490	.04190	-.09010	.00460	-.00040	.06300	-.28010	-.50940	5.74860
	GRADIENT	.00302	.00042	-.00162	-.01488	.00085	-.00000	-.00019	.00085	.00517	.99562

IA156A, AEDC PWT 16T-470, O T S W/SILTS (R8NTB2) (10 MAY 80)

REFERENCE DATA

SREF = 2690.0000 SQ.FT. XMRP = 976.0000 IN. XT
LREF = 1290.3000 INCHES YMRP = .0000 IN. YT
BREF = 1290.3000 INCHES ZMRP = 400.0000 IN. ZT
SCALE = .0200

PARAMETRIC DATA

IB-ELV = 12.000 OB-ELV = 5.000
BDFLAP = .000 SPDBRK = .000
RUDDER = .000 SILTS = 1.000
MACH = 1.550 RN/L = 3.200

RUN NO. 1292/ 0 RN/L = 3.00 GRADIENT INTERVAL = -5.00/ 5.00

ALPHAT	BETAT	CNFT	CAFT	CLMFT	CYFT	CYNFT	CBLFT	CABT	CP7	ALPHAO	BETAO
4.664	-5.691	-.07250	.11190	.08460	.09190	-.00860	-.00020	.06250	-.27790	4.18610	-5.68180
4.417	-3.544	-.05940	.11310	.07200	.05650	-.00660	-.00040	.06080	-.27040	3.98630	-3.54110
4.121	.271	-.04900	.11080	.06080	-.00410	-.00270	-.00030	.06020	-.26780	3.70320	.24790
4.082	4.104	-.04950	.11050	.06390	-.05900	.00140	-.00030	.06000	-.26700	3.68270	4.06260
4.040	6.178	-.04910	.11050	.06490	-.09550	.00490	-.00040	.06040	-.26870	3.64810	6.13280
	GRADIENT	.00129	-.00034	-.00106	-.01510	.00105	.00001	-.00010	.00044	-.03967	.99416

IA156A, AEDC PWT 16T-470, O T S W/SILTS (R8NTB3) (10 MAY 80)

REFERENCE DATA

SREF = 2690.0000 SQ.FT. XMRP = 976.0000 IN. XT
LREF = 1290.3000 INCHES YMRP = .0000 IN. YT
BREF = 1290.3000 INCHES ZMRP = 400.0000 IN. ZT
SCALE = .0200

PARAMETRIC DATA

IB-ELV = 12.000 OB-ELV = 9.000
BDFLAP = .000 SPDBRK = .000
RUDDER = .000 SILTS = 1.000
MACH = .600 RN/L = 3.500

RUN NO. 1295/ 0 RN/L = 3.50 GRADIENT INTERVAL = -5.00/ 5.00

ALPHAT	BETAT	CNFT	CAFT	CLMFT	CYFT	CYNFT	CBLFT	CABT	CP7	ALPHAO	BETAO
-8.132	-7.827	-.25370	.04030	.03100	.07980	.00850	.00010	.08600	-.38230	-8.11930	-7.79040
-8.104	-5.771	-.24870	.03890	.02620	.05590	.00690	.00010	.08590	-.38190	-8.08190	-5.75260
-8.095	-3.747	-.24190	.04040	.02220	.03360	.00530	.00000	.08230	-.36600	-8.07160	-3.74170
-8.003	.362	-.23080	.04270	.01580	-.00410	-.00160	-.00010	.08300	-.36910	-7.98060	.35860
-7.868	4.248	-.22540	.04130	.01900	-.03670	-.00020	-.00010	.08410	-.37380	-7.83620	4.24050
-7.894	6.158	-.22370	.04030	.01990	-.05440	-.01060	-.00020	.08570	-.38130	-7.85890	6.14090
-7.914	8.153	-.21820	.03880	.01830	-.07290	-.01320	-.00050	.08930	-.39710	-7.87930	8.12320
	GRADIENT	.00207	.00012	-.00041	-.00880	-.00169	-.00001	.00022	-.00097	.02937	.99840

RUN NO. 1296/ 0 RN/L = 3.49 GRADIENT INTERVAL = -5.00/ 5.00

ALPHAT	BETAT	CNFT	CAFT	CLMFT	CYFT	CYNFT	CBLFT	CABT	CP7	ALPHAO	BETAO
-6.095	-7.891	-.22190	.03930	.03700	.08940	.00450	.00030	.08500	-.37790	-6.11860	-7.86480
-6.053	-5.857	-.21810	.04060	.03320	.06310	.00390	.00020	.08250	-.36690	-6.07030	-5.84640
-5.980	-3.954	-.21100	.04170	.02910	.03960	.00290	.00010	.07990	-.35520	-5.99690	-3.95640
-6.026	.094	-.19680	.04400	.02170	-.00250	-.00180	.00000	.07960	-.35400	-6.03510	.08930
-5.892	4.151	-.19270	.04210	.02600	-.03740	-.00720	-.00010	.08200	-.36450	-5.90250	4.15060
-5.802	6.122	-.18890	.04210	.02710	-.05840	-.00840	-.00030	.08290	-.36890	-5.81220	6.11400
-5.840	8.100	-.18600	.03960	.02490	-.08140	-.00900	-.00060	.08750	-.38920	-5.84490	8.08140
	GRADIENT	.00226	.00005	-.00038	-.00950	-.00125	-.00002	.00026	-.00115	.01165	1.00026

IA156A, AEDC PWT 16T-470, O T S W/SILTS (R8NTB3) (10 MAY 80)

REFERENCE DATA

SREF = 2690.0000 SQ.FT. XMRP = 976.0000 IN. XT
LREF = 1290.3000 INCHES YMRP = .0000 IN. YT
BREF = 1290.3000 INCHES ZMRP = 400.0000 IN. ZT
SCALE = .0200

PARAMETRIC DATA

IB-ELV = 12.000 OB-ELV = 9.000
BDFLAP = .000 SPDBRK = .000
RUDDER = .000 SILTS = 1.000
MACH = .600 RN/L = 3.500

RUN NO. 1297/ 0 RN/L = 3.49 GRADIENT INTERVAL = -5.00/ 5.00

ALPHAT	BETAT	CNFT	CAFT	CLMFT	CYFT	CYNFT	CBLFT	CABT	CP7	ALPHAO	BETAO
-4.123	-7.899	-.19530	.04110	.04360	.09240	.00260	.00040	.08110	-.36090	-4.18600	-7.88540
-4.118	-5.894	-.18910	.04190	.03940	.06390	.00270	.00030	.07910	-.35200	-4.17580	-5.89490
-4.136	-3.836	-.18380	.04300	.03560	.03710	.00180	.00020	.07760	-.34500	-4.19020	-3.85110
-3.926	.179	-.16360	.04440	.02890	-.00400	-.00240	.00000	.07780	-.34610	-3.97800	.17340
-3.605	4.199	-.15650	.04480	.03570	-.04280	-.00520	-.00030	.07760	-.34500	-3.67040	4.21270
-3.713	5.993	-.15630	.04280	.03460	-.06220	-.00580	-.00040	.08010	-.35650	-3.76960	5.99980
-3.750	7.976	-.15450	.04170	.03340	-.08760	-.00510	-.00060	.08330	-.37060	-3.79800	7.97430
	GRADIENT	.00340	.00022	.00001	-.00994	-.00087	-.00006	-.00000	.00000	.06470	1.00363

RUN NO. 1298/ 0 RN/L = 3.49 GRADIENT INTERVAL = -5.00/ 5.00

ALPHAT	BETAT	CNFT	CAFT	CLMFT	CYFT	CYNFT	CBLFT	CABT	CP7	ALPHAO	BETAO
-.197	-8.670	-.15130	.04040	.06180	.12080	-.00630	.00040	.07960	-.35420	-.34030	-8.69000
-.190	-6.581	-.14470	.04240	.05740	.08320	-.00230	.00030	.07630	-.33930	-.33110	-6.60860
-.181	-4.311	-.13770	.04460	.05350	.05100	-.00210	.00030	.07340	-.32660	-.31480	-4.35350
-.177	-.250	-.12430	.04500	.04630	-.00170	-.00030	.00000	.07360	-.32750	-.28890	-.30620
-.135	3.827	-.11950	.04500	.04980	-.04750	-.00050	.00000	.07350	-.32710	-.25980	3.76370
-.129	5.926	-.11710	.04340	.05020	-.07430	.00000	-.00010	.07560	-.33610	-.25410	5.85680
-.123	8.026	-.10970	.04190	.04930	-.10280	.00190	-.00030	.07800	-.34690	-.24510	7.94940
	GRADIENT	.00224	.00005	-.00045	-.01210	.00020	-.00004	.00001	-.00006	.00676	.99749

RUN NO. 1299/ 0 RN/L = 3.49 GRADIENT INTERVAL = -5.00/ 5.00

ALPHAT	BETAT	CNFT	CAFT	CLMFT	CYFT	CYNFT	CBLFT	CABT	CP7	ALPHAO	BETAO
4.437	-7.989	-.08140	.04080	.07600	.12330	-.01360	.00030	.07140	-.31770	4.19860	-7.95080
4.345	-5.862	-.07310	.04170	.07080	.08460	-.00860	.00020	.06920	-.30760	4.10820	-5.82750
4.332	-3.876	-.06700	.04250	.06780	.05300	-.00580	.00010	.06800	-.30260	4.09400	-3.84840
4.131	.081	-.05730	.04200	.05980	-.00260	-.00210	.00010	.07090	-.31550	3.90720	.07570
4.164	4.141	-.05270	.04280	.06190	-.05620	.00170	-.00010	.07070	-.31460	3.93920	4.10140
4.104	6.277	-.04790	.04300	.06000	-.08830	.00340	-.00040	.07050	-.31350	3.88710	6.23060
4.079	8.275	-.04150	.04100	.05750	-.11680	.00670	-.00050	.07320	-.32570	3.87410	8.22400
	GRADIENT	.00178	.00004	-.00073	-.01362	.00094	-.00003	.00034	-.00149	-.01910	.99162

IA156A, AEDC PWT 16T-470, O T S W/SILTS (R8NTB3) (10 MAY 80)

REFERENCE DATA

SREF = 2690.0000 SQ.FT. XMRP = 976.0000 IN. XT
LREF = 1290.3000 INCHES YMRP = .0000 IN. YT
BREF = 1290.3000 INCHES ZMRP = 400.0000 IN. ZT
SCALE = .0200

PARAMETRIC DATA

IB-ELV = 12.000 OB-ELV = 9.000
BDFLAP = .000 SPDBRK = .000
RUDDER = .000 SILTS = 1.000
MACH = .600 RN/L = 3.500

RUN NO. 1300/ 0 RN/L = 3.50 GRADIENT INTERVAL = -5.00/ 5.00

ALPHAT	BETAT	CNFT	CAFT	CLMFT	CYFT	CYNFT	CBLFT	CABT	CP7	ALPHAO	BETAO
6.506	-8.031	-.04820	.03890	.07980	.13460	-.01730	.00020	.06990	-.31110	6.23890	-8.00730
6.494	-5.956	-.04020	.03930	.07680	.09430	-.01150	.00020	.06800	-.30250	6.22110	-5.93440
6.484	-3.879	-.03690	.03980	.07480	.05950	-.00690	.00020	.06730	-.29920	6.20670	-3.86120
6.199	.201	-.02950	.04220	.06700	-.00300	-.00110	.00010	.06870	-.30550	5.93320	.19720
6.114	4.143	-.02590	.04190	.06710	-.05870	.00290	-.00010	.06870	-.30570	5.85200	4.11510
6.078	6.091	-.02210	.04140	.06650	-.08540	.00500	-.00030	.06930	-.30830	5.82370	6.05830
6.076	8.146	-.01850	.03970	.06580	-.11970	.00940	-.00070	.07220	-.32100	5.83760	8.10950
	GRADIENT	.00137	.00026	-.00097	-.01474	.00122	-.00004	.00018	-.00081	-.04435	.99432

RUN NO. 1301/ 0 RN/L = 3.50 GRADIENT INTERVAL = -5.00/ 5.00

ALPHAT	BETAT	CNFT	CAFT	CLMFT	CYFT	CYNFT	CBLFT	CABT	CP7	ALPHAO	BETAO
8.425	-7.875	-.01470	.03460	.08340	.13340	-.01840	.00030	.07150	-.31780	8.13430	-7.85820
8.336	-5.794	-.01080	.03740	.08010	.09520	-.01280	.00030	.06710	-.29830	8.03860	-5.77960
8.353	-3.813	-.00730	.03960	.07890	.05980	-.00790	.00020	.06390	-.28410	8.04400	-3.79950
8.257	.184	-.00300	.03950	.07550	-.00190	-.00110	.00000	.06850	-.30450	7.94650	.18220
8.281	4.244	.00350	.04150	.07500	-.05880	.00370	-.00020	.06570	-.29210	7.98330	4.22240
8.235	6.272	.00750	.03690	.07470	-.08960	.00670	-.00040	.07240	-.32190	7.94820	6.24700
8.205	8.309	.01130	.03550	.07330	-.12940	.01320	-.00080	.07490	-.33330	7.93800	8.28430
	GRADIENT	.00134	.00024	-.00048	-.01472	.00144	-.00005	.00022	-.00098	-.00749	.99562

IA156A, AEDC PWT 16T-470, O T S W/SILTS (R8NTB4) (10 MAY 80)

REFERENCE DATA

SREF = 2690.0000 SQ.FT. XMRP = 976.0000 IN. XT
LREF = 1290.3000 INCHES YMRP = .0000 IN. YT
BREF = 1290.3000 INCHES ZMRP = 400.0000 IN. ZT
SCALE = .0200

PARAMETRIC DATA

IB-ELV = 12.000 OB-ELV = 9.000
BDFLAP = .000 SPDBRK = .000
RUDDER = .000 SILTS = 1.000
MACH = .800 RN/L = 3.500

RUN NO. 1302/ 0 RN/L = 3.50 GRADIENT INTERVAL = -5.00/ 5.00

ALPHAT	BETAT	CNFT	CAFT	CLMFT	CYFT	CYNFT	CBLFT	CABT	CP7	ALPHAO	BETAO
-8.221	-5.852	-.27120	.04810	.03290	.07210	-.00070	.00020	.08520	-.37890	-8.19420	-5.83540
-8.054	-3.873	-.26020	.04610	.02950	.04860	-.00200	.00010	.08570	-.38120	-8.03090	-3.87230
-8.143	.381	-.24250	.04710	.01640	-.00600	-.00050	-.00010	.08660	-.38520	-8.09750	.37760
-7.998	4.319	-.24120	.04780	.02060	-.04750	-.00300	-.00010	.08500	-.37820	-7.93310	4.30820
-7.999	6.234	-.24090	.04590	.02150	-.07050	-.00380	-.00020	.08880	-.39480	-7.93130	6.20850
	GRADIENT	.00234	.00021	-.00111	-.01174	-.00012	-.00002	-.00008	.00035	.01157	.99852

RUN NO. 1303/ 0 RN/L = 3.50 GRADIENT INTERVAL = -5.00/ 5.00

ALPHAT	BETAT	CNFT	CAFT	CLMFT	CYFT	CYNFT	CBLFT	CABT	CP7	ALPHAO	BETAO
-6.118	-5.932	-.23420	.04620	.03990	.07710	-.00250	.00030	.08540	-.37970	-6.14740	-5.92640
-6.067	-3.998	-.22680	.04790	.03590	.04890	-.00230	.00010	.08170	-.36340	-6.09690	-4.00600
-6.167	.130	-.20430	.04980	.02160	-.00330	-.00090	-.00010	.08050	-.35800	-6.16240	.12350
-5.994	4.229	-.20630	.04880	.02850	-.04620	-.00300	-.00020	.08410	-.37400	-5.99260	4.22860
-5.783	6.312	-.19930	.04900	.02970	-.07150	-.00260	-.00030	.08380	-.37280	-5.78300	6.30270
	GRADIENT	.00250	.00011	-.00090	-.01156	-.00008	-.00004	.00029	-.00129	.01264	1.00090

RUN NO. 1304/ 0 RN/L = 3.50 GRADIENT INTERVAL = -5.00/ 5.00

ALPHAT	BETAT	CNFT	CAFT	CLMFT	CYFT	CYNFT	CBLFT	CABT	CP7	ALPHAO	BETAO
-4.051	-6.020	-.20300	.04720	.04760	.07740	-.00320	.00030	.08140	-.36200	-4.14020	-6.02540
-4.196	-3.908	-.19750	.04770	.04190	.04720	-.00320	.00020	.07970	-.35440	-4.27720	-3.92980
-4.124	.376	-.16780	.04910	.02770	-.00660	-.00130	.00000	.07910	-.35160	-4.16950	.37330
-3.682	4.253	-.167.0	.04940	.03760	-.04960	-.00140	-.00020	.08050	-.35800	-3.74920	4.26960
-3.761	6.090	-.1687u	.04880	.03800	-.07250	-.00090	-.00030	.08150	-.36270	-3.82120	6.09940
	GRADIENT	.00371	.00021	-.00058	-.01187	.00022	-.00005	.00009	-.00042	.06401	1.00469

RUN NO. 1306/ 0 RN/L = 3.50 GRADIENT INTERVAL = -5.00/ 5.00

ALPHAT	BETAT	CNFT	CAFT	CLMFT	CYFT	CYNFT	CBLFT	CABT	CP7	ALPHAO	BETAO
-.184	-6.779	-.15810	.04660	.06360	.10240	-.00920	.00050	.07820	-.34770	-.36300	-6.81100
-.185	-4.604	-.14860	.04780	.05750	.06770	-.00840	.00040	.07590	-.33760	-.35200	-4.65180
-.201	-.425	-.12610	.04770	.04380	.00420	-.00270	.00010	.07320	-.32550	-.32370	-.48550
-.152	3.746	-.12290	.04880	.04880	-.05410	.00290	.00000	.07570	-.33690	-.28910	3.68630
-.137	5.865	-.12450	.04730	.05170	-.08590	.00530	-.00020	.07720	-.34320	-.28590	5.80100
	GRADIENT	.00308	.00012	-.00104	-.01459	.00135	-.00005	-.00002	.00008	.00753	.99855

IA156A, AEDC PWT 16T-470, O T S W/SILTS (R8NTB4) (10 MAY 80)

REFERENCE DATA

SREF = 2690.0000 SQ.FT. XMRP = 976.0000 IN. XT
LREF = 1290.3000 INCHES YMRP = .0000 IN. YT
BREF = 1290.3000 INCHES ZMRP = 400.0000 IN. ZT
SCALE = .0200

PARAMETRIC DATA

IB-ELV = 12.000 OB-ELV = 9.000
BDFLAP = .000 SPDBRK = .000
RUDDER = .000 SILTS = 1.000
MACH = .800 RN/L = 3.500

RUN NO. 1314/ 0 RN/L = 3.49 GRADIENT INTERVAL = -5.00/ 5.00

ALPHAT	BETAT	CNFT	CAFT	CLMFT	CYFT	CYNFT	CBLFT	CABT	CP7	ALPHAO	BETAO
6.450	-5.893	-.03700	.04100	.07230	.10170	-.01290	.00030	.07210	-.32070	6.13530	-5.87830
6.428	-3.822	-.02850	.04450	.06850	.06250	-.00850	.00030	.06660	-.29620	6.10700	-3.81070
6.116	.178	-.01430	.04330	.05700	-.00100	-.00140	.00010	.07200	-.32040	5.82300	.17250
6.068	4.057	-.01710	.04310	.06100	-.05970	.00570	-.00010	.07090	-.31510	5.76890	4.03510
6.047	6.080	-.01390	.04400	.06060	-.09230	.00870	-.00030	.07120	-.31670	5.76200	6.05620
	GRADIENT	.00146	-.00018	-.00096	-.01551	.00180	-.00005	.00055	-.00242	-.04306	.99582

IA156A, AEDC PWT 16T-470, O T S W/SILTS (R8NTB5) (10 MAY 80)

REFERENCE DATA

SREF = 2690.0000 SQ.FT. XMRP = 976.0000 IN. XT
LREF = 1290.3000 INCHES YMRP = .0000 IN. YT
BREF = 1290.3000 INCHES ZMRP = 400.0000 IN. ZT
SCALE = .0200

PARAMETRIC DATA

IB-ELV = 12.000 OB-ELV = 9.000
BDFLAP = .000 SPDBRK = .000
RUDDER = .000 SILTS = 1.000
MACH = .800 RN/L = 3.500

RUN NO. 1313/ 0 RN/L = 3.49 GRADIENT INTERVAL = -5.00/ 5.00

ALPHAT	BETAT	CNFT	CAFT	CLMFT	CYFT	CYNFT	CBLFT	CABT	CP7	ALPHAO	BETAO
-.191	-6.747	-.15880	.04560	.06350	.10270	-.00930	.00040	.07920	-.35220	-.36640	-6.78010
-.189	-4.637	-.14950	.04730	.05770	.07020	-.00890	.00030	.07650	-.34030	-.35270	-4.68420
-.205	-.420	-.12650	.04720	.04400	.00400	-.00240	.00000	.07430	-.33060	-.32320	-.47890
-.152	3.752	-.12350	.04880	.04910	-.05520	.00340	-.00010	.07670	-.34130	-.28810	3.69210
-.142	5.876	-.12370	.04680	.05120	-.08650	.00560	-.00030	.07780	-.34600	-.28700	5.81210
	GRADIENT	.00310	.00018	-.00103	-.01495	.00147	-.00005	.00002	-.00011	.00770	.99853

IA156A, AEDC PWT 16T-470, O T S W/SILTS (R8NTB6) (10 MAY 80)

REFERENCE DATA

SREF = 2690.0000 SQ.FT. XMRP = 976.0000 IN. XT
LREF = 1290.3000 INCHES YMRP = .0000 IN. YT
BREF = 1290.3000 INCHES ZMRP = 400.0000 IN. ZT
SCALE = .0200

PARAMETRIC DATA

IB-ELV = 12.000 OB-ELV = 9.000
BDFLAP = .000 SPDBRK = .000
RUDDER = .000 SILTS = 1.000
MACH = .900 RN/L = 3.500

RUN NO. 1308/ 0 RN/L = 3.50 GRADIENT INTERVAL = -5.00/ 5.00

ALPHAT	BETAT	CNFT	CAFT	CLMFT	CYFT	CYNFT	CBLFT	CABT	CP7	ALPHAO	BETAO
-8.172	-5.916	-.28040	.05200	.03280	.09030	-.00860	.00030	.09610	-.42750	-8.11680	-5.91520
-8.177	-3.832	-.27450	.05180	.02900	.05540	-.00620	.00010	.09320	-.41460	-8.12480	-3.84430
-8.182	.295	-.25000	.05460	.01430	-.00490	-.00080	-.00010	.09210	-.40980	-8.10520	.28840
-8.035	4.268	-.24840	.05340	.01840	-.05500	.00170	-.00010	.09240	-.41110	-7.93780	4.26480
-8.055	6.223	-.24920	.05080	.01860	-.08160	.00260	-.00030	.09650	-.42920	-7.94990	6.20680
	GRADIENT	.00324	.00020	-.00132	-.01364	.00098	-.00002	-.00010	.00044	.02297	1.00108

RUN NO. 1309/ 0 RN/L = 3.50 GRADIENT INTERVAL = -5.00/ 5.00

ALPHAT	BETAT	CNFT	CAFT	CLMFT	CYFT	CYNFT	CBLFT	CABT	CP7	ALPHAO	BETAO
-6.164	-5.933	-.24720	.05090	.04000	.09290	-.01110	.00030	.09470	-.42130	-6.16800	-5.93960
-6.094	-4.004	-.23610	.05400	.03580	.06090	-.00880	.00010	.08720	-.38800	-6.09840	-4.02430
-6.210	.126	-.21110	.05430	.01940	-.00290	-.00070	-.00020	.09010	-.40060	-6.17770	.11790
-6.038	4.229	-.21200	.05280	.02610	-.05580	.00380	-.00020	.08920	-.39680	-6.00920	4.23390
-5.833	6.313	-.20610	.05530	.02710	-.08450	.00560	-.00030	.08840	-.39320	-5.80780	6.30750
	GRADIENT	.00293	-.00015	-.00118	-.01418	.00153	-.00004	.00024	-.00107	.01080	1.00311

RUN NO. 1310/ 0 RN/L = 3.49 GRADIENT INTERVAL = -5.00/ 5.00

ALPHAT	BETAT	CNFT	CAFT	CLMFT	CYFT	CYNFT	CBLFT	CABT	CP7	ALPHAO	BETAO
-4.026	-6.027	-.20910	.05290	.04720	.09080	-.01040	.00030	.08840	-.39320	-4.10060	-6.04160
-4.232	-3.924	-.20250	.05300	.04090	.05670	-.00830	.00010	.08560	-.38050	-4.29070	-3.95430
-4.174	.378	-.16830	.05470	.02340	-.00660	-.00030	-.00010	.08500	-.37790	-4.18460	.37440
-3.706	4.263	-.16910	.05400	.03440	-.05590	.00360	-.00010	.08380	-.37280	-3.74990	4.27860
-3.800	6.089	-.17310	.05300	.03510	-.08150	.00580	-.00030	.08640	-.38420	-3.83920	6.09890
	GRADIENT	.00415	.00013	-.00085	-.01377	.00146	-.00002	-.00022	.00093	.06532	1.00565

RUN NO. 1311/ 0 RN/L = 3.49 GRADIENT INTERVAL = -5.00/ 5.00

ALPHAT	BETAT	CNFT	CAFT	CLMFT	CYFT	CYNFT	CBLFT	CABT	CP7	ALPHAO	BETAO
-.220	-6.872	-.16350	.05130	.06320	.11120	-.01240	.00040	.08520	-.37900	-.39410	-6.90660
-.221	-4.704	-.15120	.05200	.05640	.07470	-.01050	.00020	.08230	-.36620	-.37880	-4.75620
-.270	-.387	-.11730	.05190	.03540	.00490	-.00280	.00000	.07640	-.34000	-.34500	-.44950
-.211	3.718	-.12090	.05240	.04320	-.05940	.00580	-.00010	.08180	-.36400	-.31320	3.66200
-.193	5.875	-.12520	.05110	.04760	-.09290	.00920	-.00020	.08370	-.37220	-.31360	5.81640
	GRADIENT	.00363	.00005	-.00160	-.01593	.00193	-.00004	-.00007	.00031	.00779	.99959

IA156A, AEDC PWT 16T-470, O T S W/SILTS (R8NTB6) (10 MAY 80)

REFERENCE DATA

SREF = 2690.0000 SQ.FT. XMRP = 976.0000 IN. XT
LREF = 1290.3000 INCHES YMRP = .0000 IN. YT
BREF = 1290.3000 INCHES ZMRP = 400.0000 IN. ZT
SCALE = .0200

PARAMETRIC DATA

IB-ELV = 12.000 OB-ELV = 9.000
BDFLAP = .000 SPDBRK = .000
RUDDER = .000 SILTS = 1.000
MACH = .900 RN/L = 3.500

RUN NO. 1312/ 0 RN/L = 3.50 GRADIENT INTERVAL = -5.00/ 5.00

ALPHAT	BETAT	CNFT	CAFT	CLMFT	CYFT	CYNFT	CBLFT	CABT	CP7	ALPHAO	BETAO
4.428	-5.848	-.07040	.04830	.06640	.10260	-.01390	.00040	.07910	-.35190	4.13030	-5.82390
4.299	-3.763	-.06430	.04900	.06180	.06630	-.01180	.00030	.07710	-.34290	4.01060	-3.74670
3.986	.090	-.04300	.05080	.04490	.00200	-.00200	.00000	.07530	-.33480	3.76390	.08490
4.118	4.039	-.04650	.04990	.05390	-.06280	.00780	-.00010	.07690	-.34220	3.85440	4.01320
4.052	6.170	-.04700	.04950	.05420	-.09930	.01090	-.00030	.07930	-.35280	3.79730	6.13910
	GRADIENT	.00227	.00011	-.00100	-.01655	.00251	-.00005	-.00002	.00008	-.01984	.99458

IA156A, AEDC PWT 16T-470, O T S (R8NTB7) (10 MAY 80)

REFERENCE DATA

SREF = 2690.0000 SQ.FT. XMRP = 976.0000 IN. XT
LREF = 1290.3000 INCHES YMRP = .0000 IN. YT
BREF = 1290.3000 INCHES ZMRP = 400.0000 IN. ZT
SCALE = .0200

PARAMETRIC DATA

IB-ELV = 12.000 OB-ELV = 9.000
BDFLAP = .000 SPDBRK = .000
RUDDER = .000 SILTS = .000
MACH = .800 RN/L = 3.500

RUN NO. 1324/ 0 RN/L = 3.50 GRADIENT INTERVAL = -5.00/ 5.00

ALPHAT	BETAT	CNFT	CAFT	CLMFT	CYFT	CYNFT	CBLFT	CABT	CP7	ALPHAO	BETAO
4.489	-5.969	-.06940	.04380	.06950	.09590	-.01040	.00030	.07230	-.32180	4.19140	-5.94190
4.288	-3.707	-.06490	.04340	.06530	.05800	-.00700	.00020	.07220	-.32110	3.99350	-3.68480
4.049	.176	-.04800	.04790	.05230	.00050	-.00160	.00000	.06970	-.30980	3.79800	.17020
4.123	4.143	-.04780	.04430	.05760	-.05900	.00540	-.00020	.07240	-.32220	3.85850	4.11240
4.066	6.203	-.04650	.04350	.05650	-.09320	.00850	-.00040	.07340	-.32640	3.81380	6.16810
	GRADIENT	.00217	.00011	-.00097	-.01491	.00158	-.00005	.00003	-.00015	-.01708	.99334

IA156A, AEDC PWT 16T-470, O T S (R8NT88) (10 MAY 80)

REFERENCE DATA

SREF = 2690.0000 SQ.FT. XMRP = 976.0000 IN. XT
LREF = 1290.3000 INCHES YMRP = .0000 IN. YT
BREF = 1290.3000 INCHES ZMRP = 400.0000 IN. ZT
SCALE = .0200

PARAMETRIC DATA

IB-ELV = 12.000 OB-ELV = 9.000
BDFLAP = .000 SPDBRK = .000
RUDDER = .000 SILTS = .000
MACH = .950 RN/L = 3.500

RUN NO. 1325/ 0 RN/L = 3.51 GRADIENT INTERVAL = -5.00/ 5.00

ALPHAT	BETAT	CNFT	CAFT	CLMFT	CYFT	CYNFT	CBLFT	CABT	CP7	ALPHAO	BETAO
-8.198	-5.931	-.27780	.05820	.02390	.10200	-.01290	.00030	.10290	-.45760	-8.09670	-5.93010
-8.338	-3.721	-.27530	.06020	.01830	.06460	-.01020	.00000	.09980	-.44390	-8.21650	-3.73150
-8.264	.172	-.24540	.06030	.00150	-.00210	-.00060	-.00020	.10040	-.44640	-8.10210	.17200
-8.111	4.375	-.25000	.06190	.00790	-.06790	.00640	-.00020	.10080	-.44860	-7.95340	4.37610
-8.102	6.225	-.25140	.06050	.00950	-.09570	.00830	-.00040	.10290	-.45780	-7.95170	6.21760
	GRADIENT	.00307	.00021	-.00125	-.01636	.00205	-.00002	.00012	-.00058	.03253	1.00139

RUN NO. 1326/ 0 RN/L = 3.50 GRADIENT INTERVAL = -5.00/ 5.00

ALPHAT	BETAT	CNFT	CAFT	CLMFT	CYFT	CYNFT	CBLFT	CABT	CP7	ALPHAO	BETAO
-6.216	-5.935	-.24190	.06040	.03010	.10580	-.01660	.00030	.09960	-.44320	-6.17510	-5.94440
-6.145	-4.006	-.23150	.06230	.02650	.06960	-.01280	.00010	.09360	-.41620	-6.10080	-4.02720
-6.282	.104	-.20650	.06130	.00900	-.00310	-.00010	-.00020	.09530	-.42410	-6.18860	.10060
-6.072	4.214	-.20760	.06190	.01680	-.06390	.00810	-.00030	.09520	-.42340	-6.00360	4.22360
-5.785	6.298	-.20240	.06130	.01840	-.09380	.00980	-.00050	.09980	-.44370	-5.73240	6.30230
	GRADIENT	.00291	-.00005	-.00118	-.01624	.00254	-.00005	.00019	-.00088	.01182	1.00377

RUN NO. 1327/ 0 RN/L = 3.50 GRADIENT INTERVAL = -5.00/ 5.00

ALPHAT	BETAT	CNFT	CAFT	CLMFT	CYFT	CYNFT	CBLFT	CABT	CP7	ALPHAO	BETAO
-4.043	-6.024	-.20320	.06010	.03890	.10100	-.01500	.00030	.09650	-.42900	-4.09090	-6.04360
-4.256	-3.919	-.19770	.06070	.03320	.06260	-.01090	.00010	.09200	-.40940	-4.28460	-3.95090
-4.200	.372	-.16340	.06180	.01620	-.00800	.00110	-.00030	.09260	-.41190	-4.19160	.37060
-3.708	4.247	-.16340	.06180	.02690	-.05950	.00550	-.00040	.09200	-.40900	-3.74110	4.26870
-3.813	6.095	-.16700	.06070	.02760	-.08710	.00800	-.00050	.09550	-.42460	-3.84410	6.10930
	GRADIENT	.00427	.00014	-.00083	-.01498	.00202	-.00006	.00000	.00004	.06576	1.00661

RUN NO. 1328/ 0 RN/L = 3.50 GRADIENT INTERVAL = -5.00/ 5.00

ALPHAT	BETAT	CNFT	CAFT	CLMFT	CYFT	CYNFT	CBLFT	CABT	CP7	ALPHAO	BETAO
-.230	-6.869	-.15420	.06050	.05770	.11350	-.01410	.00040	.09200	-.40910	-.41330	-6.91320
-.209	-4.716	-.14190	.05950	.05260	.07520	-.01090	.00010	.09090	-.40410	-.38390	-4.77880
-.247	-.395	-.10640	.05950	.03230	.00590	-.00250	-.00020	.08730	-.38830	-.35530	-.45880
-.190	3.696	-.11140	.06040	.04000	-.05550	.00630	-.00020	.09040	-.40210	-.32430	3.65140
-.184	5.880	-.11550	.05940	.04340	-.09020	.00980	-.00040	.09280	-.41270	-.32370	5.83010
	GRADIENT	.00367	.00011	-.00153	-.01554	.00204	-.00004	-.00007	.00027	.00708	1.00212

IA156A, AEDC PWT 16T-470, O T S (R8NTB8) (10 MAY 80)

REFERENCE DATA

SREF = 2690.0000 SQ.FT. XMRP = 976.0000 IN. XT
LREF = 1290.3000 INCHES YMRP = .0000 IN. YT
BREF = 1290.3000 INCHES ZMRP = 400.0000 IN. ZT
SCALE = .0200

PARAMETRIC DATA

IB-ELV = 12.000 OB-ELV = 9.000
BDFLAP = .000 SPDBRK = .000
RUDDER = .000 SILTS = .000
MACH = .950 RN/L = 3.500

RUN NO. 1329/ 0 RN/L = 3.50 GRADIENT INTERVAL = -5.00/ 5.00

ALPHAT	BETAT	CNFT	CAFT	CLMFT	CYFT	CYNFT	CBLFT	CABT	CP7	ALPHAO	BETAO
4.240	-5.717	-.07340	.05650	.06550	.10480	-.01470	.00030	.09030	-.40180	3.92430	-5.69760
4.260	-3.947	-.06190	.05810	.05940	.07670	-.01420	.00020	.08570	-.38100	3.96480	-3.93460
4.144	.183	-.03490	.05730	.04110	-.00050	-.00060	-.00010	.08470	-.37670	3.92330	.18020
4.113	3.951	-.04350	.05920	.05160	-.06710	.00930	-.00020	.08500	-.37800	3.83910	3.92860
4.083	6.146	-.04740	.05660	.05480	-.10350	.01170	-.00040	.08900	-.39590	3.80240	6.11750
	GRADIENT	.00240	.00013	-.00104	-.01822	.00298	-.00005	-.00009	.00039	-.01582	.99563

IA156A, AEDC PWT 16T-470, O T S (R8NTB9) (10 MAY 80)

REFERENCE DATA

SREF = 2690.0000 SQ.FT. XMRP = 976.0000 IN. XT
LREF = 1290.3000 INCHES YMRP = .0000 IN. YT
BREF = 1290.3000 INCHES ZMRP = 400.0000 IN. ZT
SCALE = .0200

PARAMETRIC DATA

IB-ELV = 12.000 OB-ELV = 9.000
BDFLAP = .000 SPDBRK = .000
RUDDER = .000 SILTS = .000
MACH = 1.050 RN/L = 3.500

RUN NO. 1330/ 0 RN/L = 3.50 GRADIENT INTERVAL = -5.00/ 5.00

ALPHAT	BETAT	CNFT	CAFT	CLMFT	CYFT	CYNFT	CBLFT	CABT	CP7	ALPHAO	BETAO
-8.358	-5.912	-.29050	.08790	.02080	.10840	-.00970	.00020	.11520	-.51250	-8.21180	-5.90120
-8.344	-3.823	-.28130	.08710	.01610	.06810	-.00640	.00000	.11410	-.50750	-8.20160	-3.82630
-8.324	.331	-.25380	.08750	-.00250	-.00400	-.00080	-.00020	.11540	-.51340	-8.11940	.32980
-8.134	4.312	-.25560	.08690	.00420	-.06510	.00210	-.00030	.11550	-.51390	-7.94920	4.30560
-8.142	6.234	-.25930	.08810	.00600	-.09940	.00450	-.00050	.11490	-.51110	-7.95880	6.21450
	GRADIENT	.00318	-.00002	-.00148	-.01638	.00105	-.00004	.00017	-.00079	.03095	.99969

RUN NO. 1331/ 0 RN/L = 3.51 GRADIENT INTERVAL = -5.00/ 5.00

ALPHAT	BETAT	CNFT	CAFT	CLMFT	CYFT	CYNFT	CBLFT	CABT	CP7	ALPHAO	BETAO
-6.242	-5.964	-.24610	.08700	.02780	.11240	-.01450	.00030	.11150	-.49610	-6.17930	-5.96460
-6.143	-4.031	-.23460	.08760	.02370	.07110	-.00960	.00010	.10920	-.48560	-6.08120	-4.04080
-6.312	.117	-.20660	.08890	.00310	-.00130	-.00140	-.00020	.11190	-.49750	-6.19140	.11440
-6.121	4.224	-.21100	.08860	.01190	-.06440	.00500	-.00030	.10980	-.48840	-6.02390	4.22630
-5.814	6.327	-.20560	.08700	.01430	-.09670	.00730	-.00060	.11160	-.49650	-5.73400	6.32760
	GRADIENT	.00287	.00012	-.00144	-.01642	.00177	-.00005	.00007	-.00034	.00689	1.00153

IA156A, AEDC PWT 16T-470, O T S (R8NTB9) (10 MAY 80)

REFERENCE DATA

SREF = 2690.0000 SQ.FT. XMRP = 976.0000 IN. XT
LREF = 1290.3000 INCHES YMRP = .0000 IN. YT
BREF = 1290.3000 INCHES ZMRP = 400.0000 IN. ZT
SCALE = .0200

PARAMETRIC DATA

IB-ELV = 12.000 OB-ELV = 9.000
BDFLAP = .000 SPDBRK = .000
RUDDER = .000 SILTS = .000
MACH = 1.050 RN/L = 3.500

RUN NO. 1332/ 0 RN/L = 3.50 GRADIENT INTERVAL = -5.00/ 5.00

ALPHAT	BETAT	CNFT	CAFT	CLMFT	CYFT	CYNFT	CBLFT	CABT	CP7	ALPHAO	BETAO
-4.060	-6.059	-.20420	.08570	.03630	.10950	-.01450	.00030	.10880	-.48390	-4.09660	-6.07140
-4.272	-3.933	-.19850	.08710	.03020	.06530	-.00900	.00000	.10640	-.47330	-4.28910	-3.96200
-4.228	.370	-.16180	.08870	.01020	-.00600	-.00020	-.00030	.10850	-.48250	-4.19620	.36850
-3.727	4.265	-.16120	.08820	.02120	-.06300	.00430	-.00040	.10680	-.47510	-3.74380	4.28670
-3.831	6.098	-.16600	.08710	.02120	-.09640	.00850	-.00050	.10870	-.48350	-3.84580	6.11260
	GRADIENT	.00462	.00014	-.00116	-.01567	.00163	-.00005	.00006	-.00025	.06573	1.00616

RUN NO. 1333/ 0 RN/L = 3.50 GRADIENT INTERVAL = -5.00/ 5.00

ALPHAT	BETAT	CNFT	CAFT	CLMFT	CYFT	CYNFT	CBLFT	CABT	CP7	ALPHAO	BETAO
-.231	-6.955	-.15090	.08660	.05710	.12320	-.01630	.00020	.10360	-.46070	-.44420	-7.00440
-.226	-4.762	-.13760	.08680	.05080	.08030	-.01160	.00000	.10300	-.45800	-.41880	-4.83180
-.310	-.364	-.09590	.08790	.02380	.00860	-.00460	-.00020	.10280	-.45710	-.39520	-.43760
-.226	3.709	-.10110	.08660	.03370	-.05600	.00460	-.00020	.10560	-.46960	-.36100	3.66510
-.209	5.903	-.10670	.08690	.03780	-.09250	.00830	-.00040	.10800	-.48020	-.36270	5.85500
	GRADIENT	.00438	-.00002	-.00207	-.01609	.00191	-.00002	.00030	-.00135	.00680	1.00302

RUN NO. 1334/ 0 RN/L = 3.50 GRADIENT INTERVAL = -5.00/ 5.00

ALPHAT	BETAT	CNFT	CAFT	CLMFT	CYFT	CYNFT	CBLFT	CABT	CP7	ALPHAO	BETAO
4.236	-5.746	-.07340	.08140	.06630	.10400	-.01280	.00010	.10360	-.46100	3.90110	-5.73140
4.222	-3.905	-.05960	.08610	.05820	.07300	-.01210	.00000	.09690	-.43110	3.91960	-3.89860
4.169	.195	-.02920	.08510	.04040	-.00090	-.00150	-.00020	.09620	-.42790	3.91580	.18120
4.121	3.944	-.03800	.08420	.05010	-.06650	.00930	-.00020	.09980	-.44400	3.83680	3.92370
4.097	6.126	-.04400	.08080	.05400	-.10220	.01020	-.00030	.10440	-.46420	3.79840	6.09730
	GRADIENT	.00282	-.00024	-.00108	-.01778	.00272	-.00003	.00036	-.00161	-.01040	.99655

IA156A, AEDC PWT 16T-470, O T S (R8NTCO) (10 MAY 80)

REFERENCE DATA

SREF = 2690.0000 SQ.FT. XMRP = 976.0000 IN. XT
LREF = 1290.3000 INCHES YMRP = .0000 IN. YT
BREF = 1290.3000 INCHES ZMRP = 400.0000 IN. ZT
SCALE = .0200

PARAMETRIC DATA

IB-ELV = 12.000 OB-ELV = 9.000
BDFLAP = .000 SPDBRK = .000
RUDDER = .000 SILTS = .000
MACH = 1.100 RN/L = 3.500

RUN NO. 1335/ 0 RN/L = 3.50 GRADIENT INTERVAL = -5.00/ 5.00

ALPHAT	BETAT	CNFT	CAFT	CLMFT	CYFT	CYNFT	CBLFT	CABT	CP7	ALPHAO	BETAO
-8.238	-5.966	-.28230	.09270	.01890	.10610	-.00940	.00010	.10600	-.47150	-8.08530	-5.95930
-8.378	-3.759	-.27690	.09280	.01320	.06310	-.00530	.00000	.10410	-.46310	-8.21600	-3.75810
-8.342	.185	-.24950	.09410	-.00430	-.00360	-.00060	-.00020	.10350	-.46050	-8.11730	.17950
-8.124	4.348	-.25040	.09440	.00340	-.06490	.00140	-.00040	.10400	-.46240	-7.93230	4.33680
-8.141	6.233	-.25340	.09230	.00550	-.09570	.00350	-.00050	.10710	-.47650	-7.95590	6.21510
	GRADIENT	.00324	.00020	-.00118	-.01578	.00082	-.00005	-.00001	.00008	.03508	.99843

RUN NO. 1336/ 0 RN/L = 3.50 GRADIENT INTERVAL = -5.00/ 5.00

ALPHAT	BETAT	CNFT	CAFT	CLMFT	CYFT	CYNFT	CBLFT	CABT	CP7	ALPHAO	BETAO
-6.236	-5.945	-.24110	.09310	.02520	.10440	-.01220	.00020	.10060	-.44750	-6.15690	-5.94360
-6.191	-4.021	-.23200	.09320	.02080	.06690	-.00800	.00000	.09870	-.43880	-6.10280	-4.03020
-6.363	.104	-.20580	.09480	.00180	-.00170	-.00210	-.00020	.10010	-.44520	-6.21680	.09370
-6.096	4.247	-.20520	.09400	.01100	-.06000	.00160	-.00040	.09920	-.44110	-5.99280	4.24060
-6.065	6.217	-.20820	.09290	.01170	-.09390	.00610	-.00060	.10180	-.45290	-5.96570	6.21080
	GRADIENT	.00324	.00010	-.00118	-.01535	.00116	-.00005	.00006	-.00028	.01333	1.00036

RUN NO. 1337/ 0 RN/L = 3.50 GRADIENT INTERVAL = -5.00/ 5.00

ALPHAT	BETAT	CNFT	CAFT	CLMFT	CYFT	CYNFT	CBLFT	CABT	CP7	ALPHAO	BETAO
-4.062	-6.066	-.20320	.09330	.03430	.10540	-.01310	.00010	.09690	-.43120	-4.08240	-6.07240
-4.303	-3.946	-.19730	.09390	.02820	.06180	-.00740	-.00010	.09460	-.42070	-4.29900	-3.96860
-4.230	.372	-.16020	.09450	.00950	-.00660	-.00100	-.00030	.09430	-.41960	-4.18700	.36610
-3.731	4.287	-.15900	.09560	.02090	-.06320	.00290	-.00040	.09400	-.41800	-3.74560	4.29410
-3.821	6.103	-.16280	.09380	.02140	-.09430	.00690	-.00060	.09750	-.43380	-3.84160	6.10720
	GRADIENT	.00472	.00021	-.00095	-.01519	.00126	-.00004	-.00007	.00033	.06651	1.00366

RUN NO. 1338/ 0 RN/L = 3.50 GRADIENT INTERVAL = -5.00/ 5.00

ALPHAT	BETAT	CNFT	CAFT	CLMFT	CYFT	CYNFT	CBLFT	CABT	CP7	ALPHAO	BETAO
-.233	-6.956	-.15190	.09390	.05680	.12000	-.01430	.00010	.09300	-.41370	-.44960	-6.98880
-.215	-4.764	-.13890	.09470	.05130	.07820	-.00990	.00000	.08980	-.39960	-.41620	-4.81990
-.287	-.395	-.10210	.09600	.02720	.00780	-.00440	-.00030	.09010	-.40060	-.39120	-.46390
-.196	3.725	-.10690	.09670	.03700	-.05640	.00400	-.00030	.09070	-.40330	-.35650	3.67400
-.195	5.906	-.10730	.09370	.03780	-.09180	.00790	-.00050	.09370	-.41680	-.35750	5.85240
	GRADIENT	.00382	.00024	-.00172	-.01586	.00163	-.00004	.00011	-.00043	.00702	1.00046

IA156A, AEDC PWT 16T-470, O T S (R8NTC0) (10 MAY 80)

REFERENCE DATA

SREF = 2690.0000 SQ.FT. XMRP = 976.0000 IN. XT
LREF = 1290.3000 INCHES YMRP = .0000 IN. YT
BREF = 1290.3000 INCHES ZMRP = 400.0000 IN. ZT
SCALE = .0200

PARAMETRIC DATA

IB-ELV = 12.000 OB-ELV = 9.000
BDFLAP = .000 SPDBRK = .000
RUDDER = .000 SILTS = .000
MACH = 1.100 RN/L = 3.500

RUN NO. 1339/ 0 RN/L = 3.48 GRADIENT INTERVAL = -5.00/ 5.00

ALPHAT	BETAT	CNFT	CAFT	CLMFT	CYFT	CYNFT	CBLFT	CABT	CP7	ALPHAO	BETAO
4.293	-5.746	-.07130	.09130	.06850	.10290	-.01290	.00010	.08800	-.39160	3.93040	-5.72960
4.255	-3.900	-.06090	.08950	.06250	.07150	-.01200	.00000	.08780	-.39050	3.91390	-3.89520
4.183	.192	-.03330	.09290	.04460	-.00480	-.00020	-.00010	.08450	-.37570	3.89310	.17910
4.147	3.941	-.04280	.09260	.05450	-.06740	.00900	-.00020	.08580	-.38170	3.82490	3.91670
4.131	6.133	-.04480	.09040	.05660	-.10300	.00970	-.00030	.08940	-.39780	3.80750	6.09890
	GRADIENT	.00238	.00040	-.00107	-.01773	.00268	-.00003	-.00026	.00116	-.01125	.99625

IA156A, AEDC PWT 16T-470, O T S (R8NTC1) (10 MAY 80)

REFERENCE DATA

SREF = 2690.0000 SQ.FT. XMRP = 976.0000 IN. XT
LREF = 1290.3000 INCHES YMRP = .0000 IN. YT
BREF = 1290.3000 INCHES ZMRP = 400.0000 IN. ZT
SCALE = .0200

PARAMETRIC DATA

IB-ELV = 12.000 OB-ELV = 9.000
BDFLAP = .000 SPDBRK = .000
RUDDER = .000 SILTS = .000
MACH = 1.150 RN/L = 3.500

RUN NO. 1341/ 0 RN/L = 3.50 GRADIENT INTERVAL = -5.00/ 5.00

ALPHAT	BETAT	CNFT	CAFT	CLMFT	CYFT	CYNFT	CBLFT	CABT	CP7	ALPHAO	BETAO
-8.291	-5.980	-.28620	.09940	.02200	.10710	-.01020	.00010	.09970	-.44350	-8.14550	-5.96110
-8.379	-3.771	-.28160	.10010	.01750	.06220	-.00530	-.00010	.09760	-.43400	-8.22980	-3.76440
-8.333	.176	-.25560	.10200	.00040	.00040	-.00250	-.00020	.09660	-.42970	-8.12000	.16860
-8.094	4.365	-.25850	.10310	.00800	-.06220	.00100	-.00030	.09660	-.42950	-7.91980	4.34660
-8.130	6.250	-.25950	.09870	.00900	-.09350	.00350	-.00050	.10060	-.44740	-7.95550	6.22440
	GRADIENT	.00280	.00037	-.00114	-.01529	.00077	-.00002	-.00012	.00055	.03820	.99686

RUN NO. 1342/ 0 RN/L = 3.50 GRADIENT INTERVAL = -5.00/ 5.00

ALPHAT	BETAT	CNFT	CAFT	CLMFT	CYFT	CYNFT	CBLFT	CABT	CP7	ALPHAO	BETAO
-6.226	-5.962	-.24430	.09930	.02800	.10820	-.01390	.00020	.09620	-.42780	-6.16240	-5.95380
-6.173	-4.037	-.23690	.10120	.02450	.06850	-.00900	.00000	.09310	-.41410	-6.10450	-4.04440
-6.324	.116	-.20880	.10110	.00560	.00320	-.00420	-.00020	.09480	-.42160	-6.20070	.10350
-6.105	4.251	-.21150	.10050	.01440	-.05720	.00010	-.00040	.09360	-.41640	-6.01980	4.23710
-5.910	5.348	-.20890	.09970	.01550	-.09760	.00640	-.00060	.09550	-.42490	-5.83700	6.33180
	GRADIENT	.00307	-.00008	-.00122	-.01517	.00110	-.00005	.00006	-.00028	.01019	.99914

IA156A, AEDC PWT 16T-470, O T S (R8NTC1) (10 MAY 80)

REFERENCE DATA

SREF = 2690.0000 SQ.FT. XMRP = 976.0000 IN. XT
LREF = 1290.3000 INCHES YMRP = .0000 IN. YT
BREF = 1290.3000 INCHES ZMRP = 400.0000 IN. ZT
SCALE = .0200

PARAMETRIC DATA

IB-ELV = 12.000 OB-ELV = 9.000
BDFLAP = .000 SPDBRK = .000
RUDDER = .000 SILTS = .000
MACH = 1.150 RN/L = 3.500

RUN NO. 1343/ 0 RN/L = 3.50 GRADIENT INTERVAL = -5.00/ 5.00

ALPHAT	BETAT	CNFT	CAFT	CLMFT	CYFT	CYNFT	CBLFT	CABT	CP7	ALPHAO	BETAO
-4.068	-6.061	-.20310	.09970	.03620	.10990	-.01610	.00010	.09210	-.40950	-4.11210	-6.06780
-4.288	-3.951	-.20010	.10110	.03080	.06700	-.00990	-.00010	.09050	-.40250	-4.30590	-3.97640
-4.211	.384	-.16520	.10230	.01300	-.00280	-.00350	-.00030	.08990	-.40010	-4.19470	.37340
-3.713	4.285	-.16300	.10180	.02410	-.06230	.00270	-.00040	.08990	-.39970	-3.75590	4.29020
-3.808	6.126	-.16710	.10170	.02430	-.09540	.00700	-.00050	.09170	-.40790	-3.84920	6.12160
	GRADIENT	.00457	.00009	-.00087	-.01571	.00153	-.00004	-.00007	.00034	.06602	1.00365

RUN NO. 1344/ 0 RN/L = 3.50 GRADIENT INTERVAL = -5.00/ 5.00

ALPHAT	BETAT	CNFT	CAFT	CLMFT	CYFT	CYNFT	CBLFT	CABT	CP7	ALPHAO	BETAO
-.200	-6.953	-.15030	.10040	.05780	.12280	-.01640	.00010	.08960	-.39830	-.43770	-6.99430
-.195	-4.748	-.13760	.10200	.05100	.07800	-.01080	-.00010	.08590	-.38210	-.41100	-4.80480
-.253	-.411	-.10010	.10280	.02740	.00720	-.00430	-.00020	.08570	-.38130	-.37030	-.48290
-.175	3.723	-.10290	.10300	.03570	-.05750	.00460	-.00020	.08650	-.38450	-.34220	3.67040
-.155	5.911	-.10540	.10180	.03880	-.09350	.00810	-.00040	.08880	-.39510	-.34060	5.84990
	GRADIENT	.00413	.00012	-.00184	-.01600	.00182	-.00001	.00007	-.00028	.00813	1.00043

RUN NO. 1345/ 0 RN/L = 3.50 GRADIENT INTERVAL = -5.00/ 5.00

ALPHAT	BETAT	CNFT	CAFT	CLMFT	CYFT	CYNFT	CBLFT	CABT	CP7	ALPHAO	BETAO
4.397	-5.892	-.07600	.09790	.07340	.10710	-.01460	.00010	.08420	-.37440	3.99090	-5.88320
4.395	-3.794	-.06390	.09840	.06700	.07010	-.01330	.00000	.08220	-.36550	4.00600	-3.80450
4.237	.210	-.03930	.09860	.05040	.00060	-.00430	-.00010	.08080	-.35920	3.89880	.18080
4.171	4.008	-.04170	.09950	.05530	-.06300	.00570	-.00020	.08200	-.36480	3.82960	3.97880
4.145	6.149	-.04500	.09840	.05770	-.09950	.00860	-.00030	.08480	-.37700	3.80120	6.11230
	GRADIENT	.00287	.00014	-.00152	-.01706	.00243	-.00003	-.00003	.00010	-.02265	.99756

IA156A, AEDC PWT 16T-470, O T S (R8NTC2) (10 MAY 80)

REFERENCE DATA

SREF = 2690.0000 SQ.FT. XMRP = 976.0000 IN. XT
LREF = 1290.3000 INCHES YMRP = .0000 IN. YT
BREF = 1290.3000 INCHES ZMRP = 400.0000 IN. ZT
SCALE = .0200

PARAMETRIC DATA

IB-ELV = 12.000 OB-ELV = 9.000
BDFLAP = .000 SPDBRK = .000
RUDDER = .000 SILTS = .000
MACH = 1.250 RN/L = 3.500

RUN NO. 1346/ 0 RN/L = 3.50 GRADIENT INTERVAL = -5.00/ 5.00

ALPHAT	BETAT	CNFT	CAFT	CLMFT	CYFT	CYNFT	CBLFT	CABT	CP7	ALPHAO	BETAO
-8.334	-5.920	-.29540	.10600	.02950	.09620	-.00610	.00010	.09130	-.40890	-8.24320	-5.88950
-8.298	-3.790	-.28530	.10600	.02520	.05110	.00090	.00000	.09050	-.40260	-8.20530	-3.76300
-8.269	.197	-.25980	.10820	.00850	-.00310	-.00020	-.00020	.08930	-.39720	-8.11600	.19690
-8.087	4.359	-.26200	.10830	.01410	-.05880	.00010	-.00040	.08820	-.39240	-7.94750	4.33220
-8.111	6.263	-.26330	.10790	.01440	-.09240	.00410	-.00060	.08920	-.39650	-7.96610	6.22720
	GRADIENT	.00283	.00028	-.00134	-.01349	-.00010	-.00005	-.00028	.00125	.03170	.99346

RUN NO. 1347/ 0 RN/L = 3.50 GRADIENT INTERVAL = -5.00/ 5.00

ALPHAT	BETAT	CNFT	CAFT	CLMFT	CYFT	CYNFT	CBLFT	CABT	CP7	ALPHAO	BETAO
-6.197	-5.966	-.24880	.10770	.03460	.09910	-.00940	.00000	.08850	-.39380	-6.18200	-5.94330
-6.128	-4.046	-.24020	.10800	.03110	.06250	-.00470	-.00010	.08680	-.38630	-6.11840	-4.03490
-6.265	.134	-.21390	.10900	.01280	.00250	-.00310	-.00030	.08520	-.37880	-6.19850	.13010
-6.044	4.269	-.21360	.10920	.01890	-.06170	.00290	-.00040	.08530	-.37930	-5.99060	4.25480
-6.014	6.245	-.21480	.10700	.01790	-.09820	.00720	-.00050	.08870	-.39450	-5.94650	6.21940
	GRADIENT	.00320	.00014	-.00147	-.01494	.00091	-.00004	-.00018	.00084	.01531	.99697

RUN NO. 1348/ 0 RN/L = 3.49 GRADIENT INTERVAL = -5.00/ 5.00

ALPHAT	BETAT	CNFT	CAFT	CLMFT	CYFT	CYNFT	CBLFT	CABT	CP7	ALPHAO	BETAO
-4.003	-6.086	-.20880	.10820	.04380	.10350	-.01160	.00010	.08580	-.38180	-4.10550	-6.07770
-4.222	-3.956	-.20260	.10850	.03760	.06390	-.00720	-.00010	.08450	-.37570	-4.30530	-3.96310
-4.167	.377	-.17200	.11050	.01980	-.00570	-.00080	-.00030	.08200	-.36490	-4.19350	.37640
-3.668	4.274	-.16690	.10980	.02750	-.06540	.00500	-.00040	.08380	-.37280	-3.73660	4.27680
-3.790	6.136	-.16890	.10890	.02650	-.09540	.00790	-.00050	.08460	-.37610	-3.84890	6.12630
	GRADIENT	.00439	.00016	-.00128	-.01572	.00148	-.00004	-.00009	.00039	.06830	1.00123

RUN NO. 1349/ 0 RN/L = 3.49 GRADIENT INTERVAL = -5.00/ 5.00

ALPHAT	BETAT	CNFT	CAFT	CLMFT	CYFT	CYNFT	CBLFT	CABT	CP7	ALPHAO	BETAO
-.152	-6.968	-.15750	.10850	.06620	.11760	-.01420	.00010	.08280	-.36830	-.46150	-7.00040
-.141	-4.800	-.14460	.10910	.05950	.07540	-.00970	-.00010	.07970	-.35450	-.43250	-4.84960
-.172	-.383	-.11340	.10950	.04030	.00640	-.00410	-.00020	.07730	-.34370	-.38720	-.45330
-.101	3.734	-.11320	.10970	.04660	-.05560	.00370	-.00020	.07910	-.35200	-.35970	3.67430
-.107	5.928	-.11340	.10900	.04770	-.09180	.00660	-.00040	.08040	-.35770	-.36850	5.85530
	GRADIENT	.00372	.00007	-.00155	-.01535	.00157	-.00001	-.00008	.00032	.00855	.99881

IA156A, AEDC PWT 16T-470, O T S (R8NTC2) (10 MAY 80)

REFERENCE DATA

SREF = 2690.0000 SQ.FT. XMRP = 976.0000 IN. XT
LREF = 1290.3000 INCHES YMRP = .0000 IN. YT
BREF = 1290.3000 INCHES ZMRP = 400.0000 IN. ZT
SCALE = .0200

PARAMETRIC DATA

IB-ELV = 12.000 OB-ELV = 9.000
BDFLAP = .000 SPDBRK = .000
RUDDER = .000 SILTS = .000
MACH = 1.250 RN/L = 3.500

RUN NO. 1350/ 0 RN/L = 3.50 GRADIENT INTERVAL = -5.00/ 5.00

ALPHAT	BETAT	CNFT	CAFT	CLMFT	CYFT	CYNFT	CBLFT	CABT	CP7	ALPHAO	BETAO
4.450	-5.884	-.07940	.10530	.07880	.10100	-.01200	.00010	.07740	-.34430	3.99400	-5.86790
4.468	-3.793	-.06720	.10480	.07310	.06350	-.00940	-.00010	.07720	-.34320	4.02490	-3.79250
4.312	.216	-.04880	.10570	.06020	-.00520	-.00120	-.00010	.07390	-.32860	3.89260	.19430
4.224	3.990	-.05340	.10520	.06650	-.06450	.00710	-.00020	.07650	-.34050	3.79910	3.96730
4.215	6.165	-.05700	.10510	.06910	-.10060	.00940	-.00030	.07750	-.34460	3.78910	6.13480
	GRADIENT	.00180	.00005	-.00087	-.01645	.00212	-.00001	-.00010	.00038	-.02905	.99703

IA156A, AEDC PWT 16T-470, O T S (R8NTC3) (10 MAY 80)

REFERENCE DATA

SREF = 2690.0000 SQ.FT. XMRP = 976.0000 IN. XT
LREF = 1290.3000 INCHES YMRP = .0000 IN. YT
BREF = 1290.3000 INCHES ZMRP = 400.0000 IN. ZT
SCALE = .0200

PARAMETRIC DATA

IB-ELV = 12.000 OB-ELV = -2.000
BDFLAP = .000 SPDBRK = .000
RUDDER = .000 SILTS = .000
MACH = 1.150 RN/L = 3.500

RUN NO. 1355/ 0 RN/L = 3.50 GRADIENT INTERVAL = -5.00/ 5.00

ALPHAT	BETAT	CNFT	CAFT	CLMFT	CYFT	CYNFT	CBLFT	CABT	CP7	ALPHAO	BETAO
-8.169	-6.009	-.28590	.09820	.02320	.10900	-.01110	.00020	.09920	-.44100	-8.03160	-5.99200
-8.371	-3.831	-.28000	.09850	.01760	.06520	-.00650	.00000	.09620	-.42770	-8.22030	-3.82560
-8.360	.291	-.25610	.10130	.00070	-.00170	-.00230	-.00010	.09510	-.42280	-8.14020	.28360
-8.133	4.300	-.25680	.10060	.00740	-.06000	.00030	-.00030	.09550	-.42500	-7.95220	4.28150
-8.135	6.244	-.25860	.09930	.00920	-.09230	.00320	-.00050	.09820	-.43670	-7.95980	6.21620
	GRADIENT	.00287	.00026	-.00127	-.01540	.00084	-.00004	-.00009	.00034	.03291	.99700

RUN NO. 1356/ 0 RN/L = 3.50 GRADIENT INTERVAL = -5.00/ 5.00

ALPHAT	BETAT	CNFT	CAFT	CLMFT	CYFT	CYNFT	CBLFT	CABT	CP7	ALPHAO	BETAO
-6.248	-5.968	-.24460	.10000	.02760	.10710	-.01430	.00030	.09480	-.42150	-6.17740	-5.96220
-6.180	-4.030	-.23610	.09980	.02410	.06960	-.01000	.00010	.09310	-.41400	-6.10470	-4.03670
-6.335	.122	-.20900	.10100	.00580	.00260	-.00430	-.00010	.09400	-.41800	-6.20330	.11030
-6.118	4.251	-.21160	.10270	.01420	-.05950	.00090	-.00030	.09190	-.40870	-6.02420	4.23520
-5.830	6.341	-.20470	.10010	.01530	-.09660	.00640	-.00050	.09310	-.41410	-5.75320	6.32330
	GRADIENT	.00296	.00035	-.00120	-.01559	.00132	-.00005	-.00014	.00064	.00969	.99894

IA156A, AEDC PWT 16T-470, O T S (R8NTC3) (10 MAY 80)

REFERENCE DATA

SREF = 2690.0000 SQ.FT. XMRP = 976.0000 IN. XT
LREF = 1290.3000 INCHES YMRP = .0000 IN. YT
BREF = 1290.3000 INCHES ZMRP = 400.0000 IN. ZT
SCALE = .0200

PARAMETRIC DATA

IB-ELV = 12.000 OB-ELV = -2.000
BDFLAP = .000 SPDBRK = .000
RUDDER = .000 SILTS = .000
MACH = 1.150 RN/L = 3.500

RUN NO. 1357/ 0 RN/L = 3.50 GRADIENT INTERVAL = -5.00/ 5.00

ALPHAT	BETAT	CNFT	CAFT	CLMFT	CYFT	CYNFT	CBLFT	CABT	CP7	ALPHAO	BETAO
-4.062	-6.070	-.20490	.10090	.03660	.11170	-.01710	.00030	.09130	-.40620	-4.09910	-6.07760
-4.287	-3.951	-.20010	.10150	.03100	.06820	-.01080	.00010	.08920	-.39680	-4.30010	-3.97530
-4.220	.387	-.16600	.10250	.01330	-.00400	-.00310	-.00010	.08920	-.39670	-4.19560	.37530
-3.709	4.281	-.16290	.10220	.02350	-.06320	.00270	-.00020	.08970	-.39920	-3.74270	4.28090
-3.820	6.119	-.16790	.10170	.02350	-.09520	.00660	-.00040	.09140	-.40650	-3.84800	6.11040
	GRADIENT	.00458	.00009	-.00097	-.01598	.00164	-.00004	.00006	-.00029	.06689	1.00300

RUN NO. 1358/ 0 RN/L = 3.50 GRADIENT INTERVAL = -5.00/ 5.00

ALPHAT	BETAT	CNFT	CAFT	CLMFT	CYFT	CYNFT	CBLFT	CABT	CP7	ALPHAO	BETAO
-.240	-6.981	-.15110	.09930	.05740	.12260	-.01720	.00030	.09050	-.40260	-.46590	-7.02330
-.234	-4.772	-.13790	.10270	.05080	.08080	-.01220	.00010	.08460	-.37610	-.43870	-4.83050
-.298	-.386	-.10290	.10280	.02770	.00880	-.00540	-.00020	.08670	-.38570	-.40000	-.46130
-.214	3.725	-.10610	.10420	.03650	-.05650	.00380	-.00020	.08590	-.38210	-.37300	3.66830
-.196	5.919	-.10670	.10100	.03880	-.09150	.00750	-.00040	.08860	-.39390	-.37050	5.85410
	GRADIENT	.00379	.00017	-.00172	-.01616	.00188	-.00004	.00016	-.00072	.00774	1.00008

RUN NO. 1359/ 0 RN/L = 3.50 GRADIENT INTERVAL = -5.00/ 5.00

ALPHAT	BETAT	CNFT	CAFT	CLMFT	CYFT	CYNFT	CBLFT	CABT	CP7	ALPHAO	BETAO
4.399	-5.903	-.07550	.09850	.07300	.10750	-.01510	.00020	.08400	-.37360	4.00150	-5.89450
4.357	-3.765	-.06270	.09840	.06630	.07010	-.01370	.00010	.08270	-.36790	3.98030	-3.77590
4.214	.208	-.03800	.09900	.04890	.00080	-.00440	.00000	.08220	-.36560	3.89640	.18020
4.175	4.024	-.04300	.10010	.05580	-.06270	.00540	-.00020	.08250	-.36690	3.84030	3.99440
4.128	6.152	-.04590	.09740	.05760	-.10010	.00830	-.00030	.08560	-.38050	3.79370	6.11190
	GRADIENT	.00255	.00022	-.00137	-.01705	.00245	-.00004	-.00003	.00013	-.01800	.99764

IA156A, AEDC PWT 16T-470, O T S (R8NTC4) (10 MAY 80)

REFERENCE DATA

SREF = 2690.0000 SQ.FT. XMRP = 976.0000 IN. XT
LREF = 1290.3000 INCHES YMRP = .0000 IN. YT
BREF = 1290.3000 INCHES ZMRP = 400.0000 IN. ZT
SCALE = .0200

PARAMETRIC DATA

IB-ELV = 12.000 OB-ELV = -2.000
BDFLAP = .000 SPDBRK = .000
RUDDER = .000 SILTS = .000
MACH = 1.250 RN/L = 3.500

RUN NO. 1360/ 0 RN/L = 3.50 GRADIENT INTERVAL = -5.00/ 5.00

ALPHAT	BETAT	CNFT	CAFT	CLMFT	CYFT	CYNFT	CBLFT	CABT	CP7	ALPHAO	BETAO
-8.194	-5.980	-.29380	.10730	.03000	.10020	-.00780	.00020	.09080	-.40390	-8.10140	-5.95250
-8.315	-3.761	-.28450	.10700	.02430	.05400	-.00150	.00010	.08940	-.39770	-8.21300	-3.74020
-8.296	.194	-.26100	.10830	.00790	-.00050	-.00160	.00000	.08820	-.39210	-8.13200	.19070
-8.089	4.397	-.26000	.10820	.01320	-.05880	-.00090	-.00020	.08840	-.39320	-7.94080	4.36850
-8.128	6.270	-.26440	.10740	.01380	-.09300	.00340	-.00030	.09000	-.40020	-7.97310	6.23070
	GRADIENT	.00297	.00015	-.00133	-.01383	.00007	-.00004	-.00012	.00054	.03349	.99398

RUN NO. 1361/ 0 RN/L = 3.50 GRADIENT INTERVAL = -5.00/ 5.00

ALPHAT	BETAT	CNFT	CAFT	CLMFT	CYFT	CYNFT	CBLFT	CABT	CP7	ALPHAO	BETAO
-6.229	-5.990	-.24870	.10760	.03420	.10180	-.01090	.00020	.08820	-.39240	-6.20550	-5.97110
-6.132	-4.028	-.23940	.10760	.03010	.06360	-.00590	.00000	.08660	-.38530	-6.10870	-4.02240
-6.280	.122	-.21510	.10790	.01230	.00300	-.00350	-.00020	.08800	-.39130	-6.20190	.11600
-6.053	4.272	-.21230	.10950	.01780	-.06100	.00190	-.00030	.08540	-.37990	-5.98840	4.25500
-6.030	6.247	-.21290	.10790	.01720	-.09700	.00640	-.00040	.08660	-.38530	-5.95410	6.22000
	GRADIENT	.00326	.00023	-.00148	-.01501	.00094	-.00004	-.00014	.00065	.01449	.99722

RUN NO. 1362/ 0 RN/L = 3.50 GRADIENT INTERVAL = -5.00/ 5.00

ALPHAT	BETAT	CNFT	CAFT	CLMFT	CYFT	CYNFT	CBLFT	CABT	CP7	ALPHAO	BETAO
-3.976	-6.100	-.20820	.10760	.04270	.10550	-.01320	.00020	.08640	-.38430	-4.06330	-6.09550
-4.234	-3.948	-.20390	.10860	.03730	.06460	-.00830	.00000	.08450	-.37570	-4.30350	-3.95920
-4.177	.377	-.17160	.10900	.01930	-.00450	-.00200	-.00010	.08320	-.37020	-4.19120	.37300
-3.704	4.311	-.16700	.11080	.02670	-.06380	.00370	-.00020	.08260	-.36750	-3.75920	4.30950
-3.784	6.115	-.16820	.10880	.02580	-.09450	.00690	-.00040	.08520	-.37910	-3.83220	6.10210
	GRADIENT	.00452	.00026	-.00133	-.01555	.00145	-.00002	-.00023	.00100	.06524	1.00119

RUN NO. 1363/ 0 RN/L = 3.50 GRADIENT INTERVAL = -5.00/ 5.00

ALPHAT	BETAT	CNFT	CAFT	CLMFT	CYFT	CYNFT	CBLFT	CABT	CP7	ALPHAO	BETAO
-.194	-7.011	-.15710	.10840	.06480	.11910	-.01550	.00030	.08330	-.37030	-.48420	-7.04530
-.184	-4.725	-.14500	.10860	.05820	.07550	-.01060	.00010	.08000	-.35590	-.45460	-4.77620
-.217	-.458	-.11550	.10970	.04000	.00890	-.00530	-.00020	.07770	-.34540	-.41360	-.53160
-.146	3.789	-.11420	.10950	.04560	-.05620	.00320	-.00010	.07940	-.35330	-.38330	3.72430
-.154	5.967	-.11510	.10840	.04650	-.09220	.00580	-.00040	.08170	-.36360	-.39600	5.88780
	GRADIENT	.00362	.00011	-.00148	-.01547	.00162	-.00002	-.00007	.00031	.00838	.99838

IA156A, AEDC PWT 16T-470, O T S

(R8NTC4) (10 MAY 80)

REFERENCE DATA

SREF = 2690.0000 SQ.FT. XMRP = 976.0000 IN. XT
LREF = 1290.3000 INCHES YMRP = .0000 IN. YT
BREF = 1290.3000 INCHES ZMRP = 400.0000 IN. ZT
SCALE = .0200

PARAMETRIC DATA

IB-ELV = 12.000 OB-ELV = -2.000
BDFLAP = .000 SPDBRK = .000
RUDDER = .000 SILTS = .000
MACH = 1.250 RN/L = 3.500

RUN NO. 1364/ 0 RN/L = 3.50 GRADIENT INTERVAL = -5.00/ 5.00

ALPHAT	BETAT	CNFT	CAFT	CLMFT	CYFT	CYNFT	CBLFT	CABT	CP7	ALPHAO	BETAO
4.542	-5.780	-.07680	.10430	.07840	.10070	-.01290	.00020	.07870	-.35010	4.09370	-5.76880
4.419	-3.661	-.06560	.10430	.07160	.06220	-.01020	.00000	.07810	-.34750	3.99040	-3.66500
4.163	.215	-.05040	.10540	.05960	-.00210	-.00260	.00000	.07500	-.33350	3.75960	.19080
4.242	4.122	-.05270	.10470	.06620	-.06480	.00630	-.00010	.07690	-.34210	3.82530	4.09900
4.192	6.163	-.05640	.10500	.06780	-.09950	.00800	-.00020	.07870	-.35010	3.77770	6.12970
	GRADIENT	.00165	.00005	-.00069	-.01632	.00212	-.00001	-.00015	.00069	-.02116	.99754

IA156A, AEDC PWT 16T-470, O T S

(R8NTC5) (10 MAY 80)

REFERENCE DATA

SREF = 2690.0000 SQ.FT. XMRP = 976.0000 IN. XT
LREF = 1290.3000 INCHES YMRP = .0000 IN. YT
BREF = 1290.3000 INCHES ZMRP = 400.0000 IN. ZT
SCALE = .0200

PARAMETRIC DATA

IB-ELV = 12.000 OB-ELV = -2.000
BDFLAP = .000 SPDBRK = .000
RUDDER = .000 SILTS = .000
MACH = 1.400 RN/L = 3.500

RUN NO. 1365/ 0 RN/L = 3.00 GRADIENT INTERVAL = -5.00/ 5.00

ALPHAT	BETAT	CNFT	CAFT	CLMFT	CYFT	CYNFT	CBLFT	CABT	CP7	ALPHAO	BETAO
-8.108	-5.967	-.29770	.11080	.03560	.09800	-.00600	.00000	.08220	-.36540	-8.07870	-5.93090
-8.259	-3.760	-.28940	.11230	.02860	.05650	-.00160	-.00010	.08030	-.35720	-8.21210	-3.72280
-8.236	.227	-.26560	.11380	.01370	-.00200	-.00170	-.00020	.07810	-.34750	-8.13810	.21810
-8.033	4.521	-.26490	.11450	.01860	-.06250	-.00200	-.00020	.07880	-.35040	-7.95750	4.46850
-8.015	6.347	-.26520	.11380	.01880	-.09460	.00010	-.00040	.08060	-.35830	-7.94130	6.28920
	GRADIENT	.00292	.00026	-.00118	-.01437	-.00005	-.00001	-.00018	.00080	.03089	.98925

RUN NO. 1366/ 0 RN/L = 3.00 GRADIENT INTERVAL = -5.00/ 5.00

ALPHAT	BETAT	CNFT	CAFT	CLMFT	CYFT	CYNFT	CBLFT	CABT	CP7	ALPHAO	BETAO
-6.228	-5.983	-.25570	.11270	.03780	.10200	-.00860	.00000	.08080	-.35950	-6.22960	-5.93820
-6.183	-4.053	-.24290	.11370	.03270	.06120	-.00330	-.00020	.07750	-.34470	-6.17910	-4.02060
-6.252	.156	-.21870	.11520	.01690	-.00350	-.00080	-.00020	.07580	-.33690	-6.21190	.15020
-5.999	4.322	-.21430	.11500	.02080	-.06160	-.00060	-.00030	.07760	-.34510	-5.96590	4.28010
-5.977	6.325	-.21240	.11430	.01990	-.09610	.00250	-.00050	.07860	-.34950	-5.94430	6.27020
	GRADIENT	.00342	.00016	-.00142	-.01466	.00032	-.00001	.00001	-.00004	.02540	.99110

IA156A, AEDC PWT 16T-470, O T S (R8NTC5) (10 MAY 80)

REFERENCE DATA

SREF = 2690.0000 SQ.FT. XMRP = 976.0000 IN. XT
LREF = 1290.3000 INCHES YMRP = .0000 IN. YT
BREF = 1290.3000 INCHES ZMRP = 400.0000 IN. ZT
SCALE = .0200

PARAMETRIC DATA

IB-ELV = 12.000 OB-ELV = -2.000
BDFLAP = .000 SPDBRK = .000
RUDDER = .000 SILTS = .000
MACH = 1.400 RN/L = 3.500

RUN NO. 1367/ 0 RN/L = 2.99 GRADIENT INTERVAL = -5.00/ 5.00

ALPHAT	BETAT	CNFT	CAFT	CLMFT	CYFT	CYNFT	CBLFT	CABT	CP7	ALPHAO	BETAO
-4.006	-6.104	-.21040	.11440	.04490	.10200	-.00960	.00000	.07740	-.34430	-4.09420	-6.07770
-4.293	-3.959	-.20380	.11410	.03690	.05870	-.00400	-.00020	.07620	-.33910	-4.34920	-3.94680
-4.164	.417	-.17520	.11690	.02310	-.00790	-.00080	-.00030	.07330	-.32610	-4.20250	.41160
-3.664	4.364	-.16770	.11640	.02990	-.06110	-.00050	-.00030	.07470	-.33210	-3.73680	4.34120
-3.759	6.177	-.16810	.11460	.02730	-.09430	.00280	-.00050	.07680	-.34140	-3.81590	6.14220
	GRADIENT	.00438	.00028	-.00088	-.01441	.00043	-.00001	-.00019	.00088	.07285	.99571

RUN NO. 1368/ 0 RN/L = 3.00 GRADIENT INTERVAL = -5.00/ 5.00

ALPHAT	BETAT	CNFT	CAFT	CLMFT	CYFT	CYNFT	CBLFT	CABT	CP7	ALPHAO	BETAO
-.240	-6.978	-.15890	.11450	.06650	.11600	-.01230	.00010	.07500	-.33360	-.50810	-6.99660
-.236	-4.791	-.14250	.11490	.05740	.07270	-.00660	-.00010	.07090	-.31530	-.48080	-4.82380
-.235	-.426	-.11590	.11530	.04200	.00550	-.00320	-.00020	.06830	-.30370	-.43240	-.49110
-.181	3.710	[illegible]	.11600	.04750	-.05650	.00210	-.00020	.07010	-.31190	-.41380	3.63240
-.201	5.909	[illegible]	.11570	.04590	-.09260	.00480	-.00030	.07170	-.31880	-.42310	5.82030
	GRADIENT	.00321	.00013	-.00119	-.01520	.00102	-.00001	-.00010	.00042	.00791	.99465

RUN NO. 1369/ 0 RN/L = 3.00 GRADIENT INTERVAL = -5.00/ 5.00

ALPHAT	BETAT	CNFT	CAFT	CLMFT	CYFT	CYNFT	CBLFT	CABT	CP7	ALPHAO	BETAO
4.506	-5.883	-.08490	.11080	.08810	.09770	-.00990	.00000	.07140	-.31760	4.03870	-5.87030
4.424	-3.652	-.06800	.11170	.07570	.05890	-.00900	-.00020	.06850	-.30470	3.99790	-3.65280
4.148	.192	-.05580	.11130	.06470	-.00070	-.00450	-.00010	.06850	-.30470	3.74330	.16680
4.186	4.093	-.05540	.11160	.06860	-.06130	.00280	-.00020	.06830	-.30400	3.78570	4.05640
4.147	6.172	-.05760	.11260	.07080	-.09970	.00720	-.00030	.06960	-.30940	3.74670	6.13160
	GRADIENT	.00162	-.00001	-.00091	-.01552	.00152	-.00000	-.00003	.00009	-.02731	.99546

IA156A, AEDC PWT 16T-470, O T S (R8NTC6) (10 MAY 80)

REFERENCE DATA

SREF = 2690.0000 SQ.FT. XMRP = 976.0000 IN. XT
LREF = 1290.3000 INCHES YMRP = .0000 IN. YT
BREF = 1290.3000 INCHES ZMRP = 400.0000 IN. ZT
SCALE = .0200

PARAMETRIC DATA

IB-ELV = 12.000 OB-ELV = -2.000
BDFLAP = .000 SPDBRK = .000
RUDDER = .000 SILTS = .000
MACH = 1.550 RN/L = 3.200

RUN NO. 1370/ 0 RN/L = 2.99 GRADIENT INTERVAL = -5.00/ 5.00

ALPHAT	BETAT	CNFT	CAFT	CLMFT	CYFT	CYNFT	CBLFT	CABT	CP7	ALPHAO	BETAO
-8.131	-5.945	-.29890	.11050	.04380	.09290	-.00440	-.00010	.07280	-.32390	-8.16410	-5.91200
-8.296	-3.705	-.29090	.11100	.03770	.05710	-.00370	-.00030	.07020	-.31240	-8.30930	-3.67940
-8.214	.313	-.26910	.11300	.02570	-.00200	-.00230	-.00020	.06870	-.30540	-8.19830	.29710
-7.983	4.622	-.26820	.11500	.02840	-.06150	-.00270	-.00010	.07040	-.31290	-7.97670	4.57290
-7.961	6.448	-.26920	.11510	.02840	-.08870	-.00310	-.00020	.07050	-.31350	-7.94950	6.39040
	GRADIENT	.00270	.00048	-.00110	-.01424	.00012	.00002	.00003	-.00008	.04008	.99105

RUN NO. 1371/ 0 RN/L = 3.00 GRADIENT INTERVAL = -5.00/ 5.00

ALPHAT	BETAT	CNFT	CAFT	CLMFT	CYFT	CYNFT	CBLFT	CABT	CP7	ALPHAO	BETAO
-6.304	-5.985	-.25360	.11160	.04320	.09990	-.01020	-.00010	.07030	-.31260	-6.34710	-5.95280
-6.201	-4.001	-.24130	.11130	.03830	.06020	-.00480	-.00030	.06880	-.30590	-6.23850	-3.98110
-6.259	.249	-.22520	.11360	.02800	-.00470	-.00110	-.00030	.06840	-.30410	-6.28000	.23500
-5.954	4.424	-.21470	.11570	.02880	-.06310	.00060	-.00020	.06720	-.29870	-5.97600	4.38310
-5.897	6.421	-.21790	.11590	.02890	-.09710	.00360	-.00040	.06960	-.30950	-5.92120	6.37230
	GRADIENT	.00316	.00052	-.00113	-.01464	.00064	.00001	-.00019	.00085	.03103	.99279

RUN NO. 1372/ 0 RN/L = 3.00 GRADIENT INTERVAL = -5.00/ 5.00

ALPHAT	BETAT	CNFT	CAFT	CLMFT	CYFT	CYNFT	CBLFT	CABT	CP7	ALPHAO	BETAO
-4.102	-6.112	-.20970	.11150	.04830	.09910	-.00960	-.00010	.06930	-.30810	-4.20110	-6.09920
-4.367	-3.945	-.19990	.11160	.03990	.05620	-.00340	-.00020	.06650	-.29580	-4.44360	-3.94360
-4.205	.513	-.17880	.11440	.02980	-.00990	-.00110	-.00030	.06600	-.29360	-4.27190	.49870
-3.627	4.446	-.16630	.11680	.03380	-.06100	-.00070	-.00030	.06600	-.29360	-3.72160	4.42960
-3.704	6.269	-.17240	.11590	.03390	-.09490	.00420	-.00040	.06800	-.30250	-3.79270	6.24680
	GRADIENT	.00402	.00062	-.00076	-.01399	.00033	-.00001	-.00006	.00027	.08499	.99780

RUN NO. 1373/ 0 RN/L = 3.00 GRADIENT INTERVAL = -5.00/ 5.00

ALPHAT	BETAT	CNFT	CAFT	CLMFT	CYFT	CYNFT	CBLFT	CABT	CP7	ALPHAO	BETAO
-.330	-7.007	-.15120	.11150	.06500	.11040	-.00990	.00010	.06580	-.29250	-.59330	-7.03320
-.318	-4.865	-.13720	.11030	.05750	.07240	-.00630	-.00010	.06440	-.28660	-.56360	-4.89960
-.322	-.480	-.11490	.11250	.04370	.00560	-.00200	-.00030	.06010	-.26730	-.52910	-.54170
-.304	3.649	-.11050	.11530	.04320	-.05400	.00090	-.00020	.06150	-.27340	-.51300	3.57430
-.329	5.830	-.10930	.11570	.04260	-.08950	.00380	-.00030	.06380	-.28380	-.52350	5.74960
	GRADIENT	.00316	.00059	-.00169	-.01485	.00085	-.00001	-.00035	.00158	.00596	.99529

IA156A, AEDC PWT 16T-470, O T S (R8NTC6) (10 MAY 80)

REFERENCE DATA

SREF = 2690.0000 SQ.FT. XMRP = 976.0000 IN. XT
LREF = 1290.3000 INCHES YMRP = .0000 IN. YT
BREF = 1290.3000 INCHES ZMRP = 400.0000 IN. ZT
SCALE = .0200

PARAMETRIC DATA

IB-ELV = 12.000 OB-ELV = -2.000
BDFLAP = .000 SPDBRK = .000
RUDDER = .000 SILTS = .000
MACH = 1.550 RN/L = 3.200

RUN NO. 1374/ 0 RN/L = 3.01 GRADIENT INTERVAL = -5.00/ 5.00

ALPHAT	BETAT	CNFT	CAFT	CLMFT	CYFT	CYNFT	CBLFT	CABT	CP7	ALPHAO	BETAO
4.652	-5.696	-.07500	.11260	.08630	.09360	-.00910	-.00010	.06360	-.28290	4.17910	-5.68500
4.434	-3.558	-.06160	.11380	.07370	.05750	-.00770	-.00030	.06170	-.27440	4.00940	-3.55770
4.089	.277	-.05150	.11210	.06210	-.00440	-.00300	-.00020	.06060	-.26940	3.68000	.25360
4.080	4.099	-.05090	.11180	.06540	-.05970	.00110	-.00020	.06050	-.26920	3.68530	4.05620
4.023	6.177	-.04980	.11170	.06540	-.09490	.00390	-.00020	.06180	-.27460	3.63880	6.13020
	GRADIENT	.00140	-.00026	-.00109	-.01531	.00115	.00001	-.00016	.00068	-.04235	.99441

IA156A, AEDC PWT 16T-470, O T S W/SILTS (R8NTC7) (10 MAY 80)

REFERENCE DATA

SREF = 2690.0000 SQ.FT. XMRP = 976.0000 IN. XT
LREF = 1290.3000 INCHES YMRP = .0000 IN. YT
BREF = 1290.3000 INCHES ZMRP = 400.0000 IN. ZT
SCALE = .0200

PARAMETRIC DATA

IB-ELV = 9.000 OB-ELV = -2.000
BDFLAP = .000 SPDBRK = .000
RUDDER = .000 SILTS = 1.000
MACH = 1.150 RN/L = 3.500
IB-AIL = 1.000

RUN NO. 1377/ 0 RN/L = 3.50 GRADIENT INTERVAL = -5.00/ 5.00

ALPHAT	BETAT	CNFT	CAFT	CLMFT	CYFT	CYNFT	CBLFT	CABT	CP7	ALPHAO	BETAO
-8.321	-5.895	-.28820	.09630	.02400	.10170	-.00900	.00010	.10060	-.44730	-8.17260	-5.88000
-8.343	-3.842	-.27810	.09620	.01900	.06290	-.00540	.00000	.09810	-.43650	-8.19060	-3.83520
-8.363	.286	-.25170	.09680	.00080	-.00210	-.00190	-.00010	.09660	-.42950	-8.13100	.27830
-8.150	4.275	-.25640	.09780	.00780	-.06010	.00070	-.00020	.09810	-.43610	-7.95990	4.25890
-8.132	6.232	-.25860	.09790	.00960	-.09110	.00340	-.00040	.09950	-.44250	-7.94460	6.20740
	GRADIENT	.00270	.00020	-.00140	-.01516	.00075	-.00002	-.00000	.00006	.02834	.99727

RUN NO. 1378/ 0 RN/L = 3.50 GRADIENT INTERVAL = -5.00/ 5.00

ALPHAT	BETAT	CNFT	CAFT	CLMFT	CYFT	CYNFT	CBLFT	CABT	CP7	ALPHAO	BETAO
-6.257	-5.977	-.24540	.09960	.02880	.10860	-.01460	.00040	.09600	-.42680	-6.18250	-5.97010
-6.180	-4.023	-.23500	.09920	.02500	.06830	-.00960	.00020	.09410	-.41870	-6.10170	-4.02880
-6.335	.121	-.20620	.09930	.00610	.00270	-.00390	.00000	.09390	-.41750	-6.19360	.11260
-6.118	4.246	-.21070	.09940	.01400	-.05770	.00050	-.00010	.09540	-.42420	-6.01330	4.23220
-5.876	6.361	-.20580	.09900	.01560	-.09470	.00600	-.00040	.09470	-.42100	-5.78800	6.34530
	GRADIENT	.00294	.00002	-.00133	-.01524	.00122	-.00004	.00016	-.00066	.01066	.99901

IA156A, AEDC PWT 16T-470, O T S W/SILTS (R8NTC7) (10 MAY 80)

REFERENCE DATA

SREF = 2690.0000 SQ.FT. XMRP = 976.0000 IN. XT
LREF = 1290.3000 INCHES YMRP = .0000 IN. YT
BREF = 1290.3000 INCHES ZMRP = 400.0000 IN. ZT
SCALE = .0200

PARAMETRIC DATA

IB-ELV = 9.000 OB-ELV = -2.000
BDFLAP = .000 SPDBRK = .000
RUDDER = .000 SILTS = 1.000
MACH = 1.150 RN/L = 3.500
IB-AIL = 1.000

RUN NO. 1379/ 0 RN/L = 3.50 GRADIENT INTERVAL = -5.00/ 5.00

ALPHAT	BETAT	CNFT	CAFT	CLMFT	CYFT	CYNFT	CBLFT	CABT	CP7	ALPHAO	BETAO
-4.067	-6.082	-.20390	.09990	.03710	.11150	-.01700	.00030	.09320	-.41470	-4.09860	-6.08850
-4.288	-3.944	-.19990	.10120	.03140	.06770	-.01090	.00020	.09030	-.40150	-4.29470	-3.96950
-4.236	.385	-.16360	.10100	.01290	-.00190	-.00410	-.00010	.08960	-.39860	-4.19970	.37320
-3.719	4.274	-.16280	.10170	.02390	-.06140	.00210	-.00020	.09130	-.40620	-3.74330	4.27570
-3.829	6.117	-.16730	.10080	.02400	-.09310	.00610	-.00030	.09290	-.41310	-3.85070	6.11080
	GRADIENT	.00459	.00006	-.00098	-.01572	.00158	-.00005	.00012	-.00055	.06625	1.00329

RUN NO. 1380/ 0 RN/L = 3.50 GRADIENT INTERVAL = -5.00/ 5.00

ALPHAT	BETAT	CNFT	CAFT	CLMFT	CYFT	CYNFT	CBLFT	CABT	CP7	ALPHAO	BETAO
-.253	-6.980	-.15060	.10040	.05730	.12200	-.01680	.00040	.09040	-.40210	-.46960	-7.02130
-.250	-4.780	-.13870	.10170	.05080	.08040	-.01220	.00010	.08700	-.38680	-.44360	-4.83740
-.317	-.389	-.10270	.10290	.02760	.00930	-.00560	-.00010	.08630	-.38360	-.40950	-.46530
-.234	3.725	-.10610	.10400	.03650	-.05570	.00360	-.00010	.08690	-.38670	-.38150	3.66740
-.222	5.924	-.10740	.10080	.03860	-.09190	.00740	-.00040	.09100	-.40490	-.38300	5.85710
	GRADIENT	.00388	.00027	-.00172	-.01600	.00185	-.00002	-.00001	.00002	.00731	.99991

RUN NO. 1381/ 0 RN/L = 3.50 GRADIENT INTERVAL = -5.00/ 5.00

ALPHAT	BETAT	CNFT	CAFT	CLMFT	CYFT	CYNFT	CBLFT	CABT	CP7	ALPHAO	BETAO
4.510	-5.838	-.07370	.09800	.07300	.10710	-.01530	.00020	.08580	-.38180	4.12350	-5.83230
4.329	-3.688	-.06310	.09730	.06520	.06950	-.01390	.00000	.08440	-.37550	3.96660	-3.69810
4.104	.142	-.04140	.09930	.04970	.00300	-.00510	.00000	.08240	-.36660	3.79410	.11230
4.165	4.067	-.04390	.09940	.05550	-.06210	.00480	-.00010	.08390	-.37310	3.84260	4.03460
4.131	6.175	-.04590	.09710	.05800	-.10000	.00780	-.00020	.08800	-.39140	3.80640	6.13170
	GRADIENT	.00246	.00027	-.00124	-.01697	.00241	-.00001	-.00006	.00030	-.01587	.99715

IA156A, AEDC PWT 16T-470, O T S W/SILTS (R8NTC8) (10 MAY 80)

REFERENCE DATA

SREF = 2690.0000 SQ.FT. XMRP = 976.0000 IN. XT
LREF = 1290.3000 INCHES YMRP = .0000 IN. YT
BREF = 1290.3000 INCHES ZMRP = 400.0000 IN. ZT
SCALE = .0200

PARAMETRIC DATA

IB-ELV = 9.000 OB-ELV = -2.000
BDFLAP = .000 SPDBRK = .000
RUDDER = .000 SILTS = 1.000
MACH = 1.250 RN/L = 3.500
IB-AIL = 1.000

RUN NO. 1382/ 0 RN/L = 3.50 GRADIENT INTERVAL = -5.00/ 5.00

ALPHAT	BETAT	CNFT	CAFT	CLMFT	CYFT	CYNFT	CBLFT	CABT	CP7	ALPHAO	BETAO
-8.276	-5.876	-.29490	.10570	.03060	.09690	-.09710	.00020	.09250	-.41160	-8.17550	-5.84810
-8.324	-3.788	-.28620	.10670	.02530	.05510	-.00210	.00010	.08950	-.39790	-8.21530	-3.76760
-8.297	.195	-.26110	.10740	.00900	-.00130	-.00120	.00000	.09030	-.40160	-8.12700	.19070
-8.097	4.373	-.26140	.10720	.01370	-.05650	-.00140	-.00010	.08990	-.39960	-7.94040	4.34200
-8.108	6.258	-.26170	.10750	.01430	-.09010	.00290	-.00030	.08900	-.39570	-7.94750	6.21890
	GRADIENT	.00301	.00006	-.00140	-.01367	.00008	-.00002	.00005	-.00020	.03378	.99379

RUN NO. 1383/ 0 RN/L = 3.50 GRADIENT INTERVAL = -5.00/ 5.00

ALPHAT	BETAT	CNFT	CAFT	CLMFT	CYFT	CYNFT	CBLFT	CABT	CP7	ALPHAO	BETAO
-6.230	-5.975	-.25000	.10670	.03440	.10190	-.01110	.00030	.08980	-.39960	-6.19440	-5.95560
-6.157	-4.043	-.24180	.10730	.03070	.06490	-.00610	.00010	.08790	-.39080	-6.12470	-4.03720
-6.283	.126	-.21440	.10920	.01300	.00260	-.00350	-.00010	.08610	-.38280	-6.19670	.12010
-6.054	4.267	-.21370	.10890	.01860	-.05920	.00140	-.00020	.08560	-.38090	-5.98220	4.24700
-6.036	6.254	-.21420	.10760	.01790	-.09550	.00590	-.00040	.08820	-.39230	-5.95180	6.22540
	GRADIENT	.00338	.00019	-.00146	-.01493	.00090	-.00004	-.00028	.00119	.01711	.99681

RUN NO. 1384/ 0 RN/L = 3.50 GRADIENT INTERVAL = -5.00/ 5.00

ALPHAT	BETAT	CNFT	CAFT	CLMFT	CYFT	CYNFT	CBLFT	CABT	CP7	ALPHAO	BETAO
-3.988	-6.103	-.20960	.10750	.04370	.10590	-.01340	.00020	.08800	-.39160	-4.06930	-6.09690
-4.246	-3.949	-.20460	.10790	.03710	.06560	-.00890	.00000	.08540	-.37980	-4.30300	-3.96300
-4.175	.380	-.17090	.10920	.01950	-.00470	-.00190	-.00010	.08350	-.37150	-4.18110	.37380
-3.702	4.297	-.16810	.10950	.02720	-.06430	.00370	-.00020	.08530	-.37950	-3.74760	4.29340
-3.803	6.137	-.16850	.10870	.02590	-.09580	.00690	-.00030	.08600	-.38230	-3.83900	6.12180
	GRADIENT	.00449	.00020	-.00125	-.01576	.00153	-.00002	-.00002	.00007	.06667	1.00131

RUN NO. 1385/ 0 RN/L = 3.50 GRADIENT INTERVAL = -5.00/ 5.00

ALPHAT	BETAT	CNFT	CAFT	CLMFT	CYFT	CYNFT	CBLFT	CABT	CP7	ALPHAO	BETAO
-.210	-6.937	-.15740	.10750	.06480	.11890	-.01550	.00030	.08460	-.37650	-.48980	-6.97010
-.199	-4.762	-.14530	.10850	.05860	.07710	-.01110	.00010	.08100	-.36030	-.46250	-4.81370
-.236	-.458	-.11520	.10920	.03990	.00960	-.00550	-.00010	.07890	-.35080	-.42270	-.53230
-.158	3.794	-.11420	.10950	.04620	-.05490	.00280	-.00010	.08000	-.35590	-.39100	3.72710
-.168	5.966	-.11580	.10920	.04740	-.09160	.00560	-.00030	.08240	-.36650	-.40290	5.88480
	GRADIENT	.00364	.00012	-.00146	-.01543	.00162	-.00002	-.00012	.00052	.00836	.99823

IA156A, AEDC PWT 16T-470, O T S W/SILTS (R8NTC8) (10 MAY 80)

REFERENCE DATA

SREF = 2690.0000 SQ.FT. XMRP = 976.0000 IN. XT
LREF = 1290.3000 INCHES YMRP = .0000 IN. YT
BREF = 1290.3000 INCHES ZMRP = 400.0000 IN. ZT
SCALE = .0200

PARAMETRIC DATA

IB-ELV = 9.000 OB-ELV = -2.000
BDFLAP = .000 SPDBRK = .000
RUDDER = .000 SILTS = 1.000
MACH = 1.250 RN/L = 3.500
IB-AIL = 1.000

RUN NO. 1386/ 0 RN/L = 3.50 GRADIENT INTERVAL = -5.00/ 5.00

ALPHAT	BETAT	CNFT	CAFT	CLMFT	CYFT	CYNFT	CBLFT	CABT	CP7	ALPHAO	BETAO
4.615	-5.813	-.07630	.10480	.07950	.10260	-.01360	.00020	.07940	-.35300	4.16600	-5.80440
4.396	-3.649	-.06780	.10520	.07240	.06320	-.01060	.00010	.07850	-.34900	3.97270	-3.65210
4.161	.228	-.05080	.10540	.05960	-.00360	-.00220	.00000	.07620	-.33900	3.76560	.20420
4.242	4.112	-.05350	.10520	.06680	-.06410	.00570	-.00010	.07810	-.34720	3.83180	4.08490
4.195	6.174	-.05690	.10450	.06910	-.10070	.00810	-.00020	.08060	-.35840	3.78360	6.13890
	GRADIENT	.00184	-.00000	-.00072	-.01640	.00210	-.00003	-.00005	.00023	-.01814	.99692

IA156A, AEDC PWT 16T-470, O T S W/SILTS (R8NTC9) (10 MAY 80)

REFERENCE DATA

SREF = 2690.0000 SQ.FT. XMRP = 976.0000 IN. XT
LREF = 1290.3000 INCHES YMRP = .0000 IN. YT
BREF = 1290.3000 INCHES ZMRP = 400.0000 IN. ZT
SCALE = .0200

PARAMETRIC DATA

IB-ELV = 9.000 OB-ELV = -2.000
BDFLAP = .000 SPDBRK = .000
RUDDER = .000 SILTS = 1.000
MACH = 1.400 RN/L = 3.500
IB-AIL = 1.000

RUN NO. 1387/ 0 RN/L = 2.99 GRADIENT INTERVAL = -5.00/ 5.00

ALPHAT	BETAT	CNFT	CAFT	CLMFT	CYFT	CYNFT	CBLFT	CABT	CP7	ALPHAO	BETAO
-8.119	-5.972	-.29870	.11120	.03710	.09770	-.00550	.00010	.08200	-.36460	-8.08630	-5.93260
-8.254	-3.761	-.29270	.11180	.03000	.05890	-.00180	-.00010	.08270	-.36790	-8.20290	-3.72320
-8.240	.230	-.26480	.11400	.01430	-.00070	-.00190	-.00020	.07820	-.34800	-8.13660	.22100
-8.048	4.519	-.26540	.11360	.01910	-.06310	-.00200	-.00010	.08090	-.36000	-7.96540	4.46650
-8.018	6.342	-.26470	.11320	.01960	-.09390	.00000	-.00040	.08140	-.36200	-7.93800	6.28350
	GRADIENT	.00325	.00021	-.00129	-.01473	-.00002	.00000	-.00021	.00091	.02882	.98906

RUN NO. 1388/ 0 RN/L = 3.00 GRADIENT INTERVAL = -5.00/ 5.00

ALPHAT	BETAT	CNFT	CAFT	CLMFT	CYFT	CYNFT	CBLFT	CABT	CP7	ALPHAO	BETAO
-6.262	-6.015	-.25570	.11220	.03810	.10180	-.00860	.00010	.08220	-.36580	-6.25580	-5.96810
-6.164	-4.024	-.24210	.11280	.03280	.06210	-.00380	-.00020	.07880	-.35030	-6.15200	-3.99130
-6.264	.151	-.22140	.11500	.01770	-.00220	-.00100	-.00020	.07800	-.34680	-6.21670	.14650
-6.012	4.328	-.21110	.11460	.02110	-.06010	-.00080	-.00020	.07580	-.33730	-5.97160	4.28500
-5.984	6.333	-.21510	.11420	.02050	-.09700	.00230	-.00040	.08050	-.35810	-5.94200	6.27630
	GRADIENT	.00371	.00022	-.00140	-.01463	.00036	.00000	-.00036	.00156	.02160	.99092

IA156A, AEDC PWT 16T-470, O T S W/SILTS (R8NTC9) (10 MAY 80)

REFERENCE DATA

SREF = 2690.0000 SQ.FT. XMRP = 976.0000 IN. XT
LREF = 1290.3000 INCHES YMRP = .0000 IN. YT
BREF = 1290.3000 INCHES ZMRP = 400.0000 IN. ZT
SCALE = .0200

PARAMETRIC DATA

IB-ELV = 9.000 OB-ELV = -2.000
BDFLAP = .000 SPDBRK = .000
RUDDER = .000 SILTS = 1.000
MACH = 1.400 RN/L = 3.500
IB-AIL = 1.000

RUN NO. 1389/ 0 RN/L = 3.01 GRADIENT INTERVAL = -5.00/ 5.00

ALPHAT	BETAT	CNFT	CAFT	CLMFT	CYFT	CYNFT	CBLFT	CABT	CP7	ALPHAO	BETAO
-4.180	-6.111	-.21310	.11350	.04460	.10300	-.01010	.00010	.07880	-.35040	-4.25400	-6.08160
-4.286	-3.966	-.20520	.11450	.03820	.05930	-.00400	-.00010	.07710	-.34280	-4.33930	-3.95220
-4.181	.416	-.17720	.11660	.02400	-.00770	-.00090	-.00020	.07550	-.33580	-4.21190	.40960
-3.684	4.350	-.17030	.11550	.03010	-.06160	-.00040	-.00030	.07720	-.34330	-3.74450	4.32570
-3.751	6.185	-.16700	.11440	.02760	-.09230	.00250	-.00050	.07600	-.33820	-3.80080	6.14970
	GRADIENT	.00424	.00013	-.00102	-.01455	.00044	-.00002	.00000	-.00003	.07072	.99541

RUN NO. 1390/ 0 RN/L = 3.00 GRADIENT INTERVAL = -5.00/ 5.00

ALPHAT	BETAT	CNFT	CAFT	CLMFT	CYFT	CYNFT	CBLFT	CABT	CP7	ALPHAO	BETAO
-.249	-6.942	-.15840	.11450	.06700	.11580	-.01240	.00020	.07680	-.34160	-.51110	-6.96050
-.241	-4.798	-.14290	.11420	.05820	.07370	-.00700	.00000	.07260	-.32310	-.48070	-4.82970
-.251	-.385	-.11620	.11510	.04230	.00540	-.00300	-.00030	.06940	-.30860	-.44000	-.44990
-.196	3.727	-.11610	.11590	.04800	-.05730	.00230	-.00010	.07140	-.31740	-.42130	3.64740
-.210	5.902	-.11410	.11620	.04730	-.09220	.00460	-.00030	.07330	-.32610	-.42780	5.81220
	GRADIENT	.00318	.00020	-.00123	-.01537	.00109	-.00001	-.00015	.00070	.00700	.99442

RUN NO. 1391/ 0 RN/L = 3.01 GRADIENT INTERVAL = -5.00/ 5.00

ALPHAT	BETAT	CNFT	CAFT	CLMFT	CYFT	CYNFT	CBLFT	CABT	CP7	ALPHAO	BETAO
4.608	-5.785	-.08150	.11090	.08840	.09690	-.01070	.00010	.07210	-.32050	4.14100	-5.77370
4.435	-3.659	-.06820	.11070	.07720	.05990	-.00960	-.00010	.07190	-.32000	4.00850	-3.66250
4.136	.197	-.05610	.11200	.06540	-.00100	-.00460	-.00010	.06870	-.30540	3.73850	.17030
4.176	4.101	-.05560	.11150	.06910	-.06230	.00290	-.00010	.06910	-.30720	3.77990	4.06300
4.137	6.165	-.05850	.11270	.07150	-.09960	.00730	-.00020	.07230	-.32160	3.74170	6.12430
	GRADIENT	.00162	.00010	-.00104	-.01575	.00161	.00000	-.00036	.00164	-.02937	.99548

IA156A, AEDC PWT 16T-470, O T S W/SILTS (R8NTDO) (10 MAY 80)

REFERENCE DATA

SREF = 2690.0000 SQ.FT. XMRP = 976.0000 IN. XT
LREF = 1290.3000 INCHES YMRP = .0000 IN. YT
BREF = 1290.3000 INCHES ZMRP = 400.0000 IN. ZT
SCALE = .0200

PARAMETRIC DATA

IB-ELV = 9.000 OB-ELV = -2.000
BDFLAP = .000 SPDBRK = .000
RUDDER = .000 SILTS = 1.000
MACH = 1.550 RN/L = 3.200
IB-AIL = 1.000

RUN NO. 1392/ 0 RN/L = 3.00 GRADIENT INTERVAL = -5.00/ 5.00

ALPHAT	BETAT	CNFT	CAFT	CLMFT	CYFT	CYNFT	CBLFT	CABT	CP7	ALPHAO	BETAO
-8.143	-5.947	-.29930	.11110	.04470	.09300	-.00450	-.00010	.07360	-.32740	-8.17180	-5.91370
-8.292	-3.704	-.29200	.11110	.03860	.05750	-.00400	-.00030	.07110	-.31640	-8.29930	-3.67780
-8.211	.328	-.27100	.11320	.02620	-.00290	-.00220	-.00010	.07150	-.31800	-8.18640	.31140
-8.011	4.619	-.26860	.11550	.02900	-.06120	-.00270	-.00010	.07110	-.31610	-7.99710	4.56990
-7.969	6.442	-.26830	.11520	.02850	-.08800	-.00310	-.00020	.07100	-.31590	-7.94540	6.38420
	GRADIENT	.00279	.00053	-.00113	-.01425	.00015	.00002	-.00000	.00004	.03639	.99098

RUN NO. 1393/ 0 RN/L = 3.00 GRADIENT INTERVAL = -5.00/ 5.00

ALPHAT	BETAT	CNFT	CAFT	CLMFT	CYFT	CYNFT	CBLFT	CABT	CP7	ALPHAO	BETAO
-6.287	-5.976	-.25270	.11130	.04380	.10040	-.01060	-.00010	.07180	-.31950	-6.32530	-5.94560
-6.217	-3.991	-.24370	.11160	.03900	.06080	-.00510	-.00020	.07010	-.31200	-6.24700	-3.97090
-6.255	.245	-.22590	.11320	.02870	-.00500	-.00110	-.00020	.06940	-.30880	-6.26780	.22970
-5.967	4.425	-.21740	.11570	.02950	-.06270	.00040	-.00020	.06910	-.30750	-5.98070	4.38290
-5.904	6.419	-.21700	.11620	.02920	-.09770	.00370	-.00030	.07050	-.31340	-5.91960	6.36930
	GRADIENT	.00313	.00049	-.00113	-.01468	.00065	.00000	-.00012	.00054	.03156	.99262

RUN NO. 1394/ 0 RN/L = 3.00 GRADIENT INTERVAL = -5.00/ 5.00

ALPHAT	BETAT	CNFT	CAFT	CLMFT	CYFT	CYNFT	CBLFT	CABT	CP7	ALPHAO	BETAO
-4.109	-6.111	-.20850	.11090	.04880	.10000	-.01010	.00000	.07050	-.31360	-4.20300	-6.09790
-4.377	-3.941	-.20090	.11130	.04050	.05720	-.00380	-.00020	.06820	-.30350	-4.44510	-3.93880
-4.220	.514	-.17870	.11420	.03040	-.00880	-.00150	-.00030	.06700	-.29780	-4.27920	.49810
-3.626	4.445	-.16760	.11660	.03470	-.06100	-.00090	-.00030	.06740	-.29960	-3.71320	4.42740
-3.720	6.294	-.17210	.11550	.03430	-.09600	.00440	-.00040	.06930	-.30840	-3.80050	6.26960
	GRADIENT	.00399	.00063	-.00073	-.01411	.00035	-.00001	-.00010	.00048	.08617	.99760

RUN NO. 1395/ 0 RN/L = 3.00 GRADIENT INTERVAL = -5.00/ 5.00

ALPHAT	BETAT	CNFT	CAFT	CLMFT	CYFT	CYNFT	CBLFT	CABT	CP7	ALPHAO	BETAO
-.335	-7.001	-.15230	.11120	.06640	.11100	-.01010	.00010	.06790	-.30180	-.59610	-7.02730
-.327	-4.866	-.13750	.11090	.05820	.07300	-.00660	-.00010	.06460	-.28720	-.56830	-4.90010
-.332	-.492	-.11560	.11300	.04440	.00630	-.00210	-.00030	.06130	-.27280	-.53170	-.55450
-.317	3.654	-.11160	.11490	.04430	-.05340	.00070	-.00020	.06280	-.27940	-.52030	3.57850
-.339	5.835	-.11040	.11600	.04350	-.08940	.00360	-.00030	.06390	-.28440	-.52690	5.75240
	GRADIENT	.00306	.00047	-.00165	-.01484	.00086	-.00001	-.00022	.00094	.00566	.99514

IA156A, AEDC PWT 16T-470, O T S W/SILTS (R8NTD0) (10 MAY 80)

REFERENCE DATA

SREF = 2690.0000 SQ.FT. XMRP = 976.0000 IN. XT
LREF = 1290.3000 INCHES YMRP = .0000 IN. YT
BREF = 1290.3000 INCHES ZMRP = 400.0000 IN. ZT
SCALE = .0200

PARAMETRIC DATA

IB-ELV = 9.000 OB-ELV = -2.000
BDFLAP = .000 SPDBRK = .000
RUDDER = .000 SILTS = 1.000
MACH = 1.550 RN/L = 3.200
IB-AIL = 1.000

RUN NO. 1396/ 0 RN/L = 3.00 GRADIENT INTERVAL = -5.00/ 5.00

ALPHAT	BETAT	CNFT	CAFT	CLMFT	CYFT	CYNFT	CBLFT	CABT	CP7	ALPHAO	BETAO
4.632	-5.681	-.07610	.11310	.08660	.09370	-.00930	-.00010	.06460	-.28740	4.17000	-5.67130
4.409	-3.548	-.06260	.11270	.07340	.05720	-.00790	-.00030	.06370	-.28330	3.99680	-3.54770
4.086	.277	-.05150	.11180	.06290	-.00320	-.00350	-.00010	.06160	-.27380	3.68620	.25170
4.062	4.100	-.05190	.11180	.06550	-.05900	.00110	-.00020	.06100	-.27120	3.67580	4.05690
4.032	6.184	-.04930	.11170	.06580	-.09520	.00410	-.00020	.06170	-.27420	3.6[illegible]290	6.13840
	GRADIENT	.00140	-.00012	-.00103	-.01519	.00118	.00001	-.00035	.00158	-.04198	.99435

IA156A, AEDC PWT 16T-470, O T S W/SILTS (R8NTD1) (10 MAY 80)

REFERENCE DATA

SREF = 2690.0000 SQ.FT. XMRP = 976.0000 IN. XT
LREF = 1290.3000 INCHES YMRP = .0000 IN. YT
BREF = 1290.3000 INCHES ZMRP = 400.0000 IN. ZT
SCALE = .0200

PARAMETRIC DATA

IB-ELV = 8.000 OB-ELV = -2.000
BDFLAP = .000 SPDBRK = .000
RUDDER = .000 SILTS = 1.000
MACH = 1.150 RN/L = 3.500

RUN NO. 1399/ 0 RN/L = 3.50 GRADIENT INTERVAL = -5.00/ 5.00

ALPHAT	BETAT	CNFT	CAFT	CLMFT	CYFT	CYNFT	CBLFT	CABT	CP7	ALPHAO	BETAO
-8.345	-5.906	-.28620	.09600	.02380	.10300	-.00940	.00010	.09860	-.43870	-8.19000	-5.88940
-8.338	-3.828	-.27850	.09860	.01880	.06110	-.00520	-.00020	.09600	-.42690	-8.18070	-3.82340
-8.360	.271	-.25140	.09860	.00090	-.00340	-.00120	-.00030	.09450	-.42020	-8.12350	.26660
-8.166	4.278	-.25480	.09930	.00750	-.05960	.00080	-.00020	.09460	-.42100	-7.97010	4.26400
-8.146	6.235	-.25380	.09680	.00890	-.09160	.00400	-.00040	.09770	-.43450	-7.95200	6.21200
	GRADIENT	.00294	.00009	-.00141	-.01489	.00074	-.00000	-.00017	.00073	.02594	.99779

RUN NO. 1400/ 0 RN/L = 3.51 GRADIENT INTERVAL = -5.00/ 5.00

ALPHAT	BETAT	CNFT	CAFT	CLMFT	CYFT	CYNFT	CBLFT	CABT	CP7	ALPHAO	BETAO
-6.237	-5.964	-.24360	.09730	.02970	.10690	-.01330	.00020	.09600	-.42710	-6.16520	-5.95740
-6.192	-4.033	-.23580	.09950	.02560	.06870	-.00900	.00010	.09220	-.41010	-6.11490	-4.03810
-6.347	.118	-.20710	.09860	.00620	.00150	-.00320	-.00010	.09450	-.42040	-6.20130	.11090
-6.127	4.243	-.20810	.09980	.01370	-.05730	.00110	-.00010	.09200	-.40900	-6.01740	4.23250
-5.890	6.367	-.20410	.09750	.01510	-.09590	.00690	-.00030	.09500	-.42240	-5.79540	6.35420
	GRADIENT	.00335	.00004	-.00144	-.01523	.00122	-.00002	-.00002	.00013	.01175	.99943

IA156A, AEDC PWT 16T-470, O T S W/SILTS (R8NTD1) (10 MAY 80)

REFERENCE DATA

SREF = 2690.0000 SQ.FT. XMRP = 976.0000 IN. XT
LREF = 1290.3000 INCHES YMRP = .0000 IN. YT
BREF = 1290.3000 INCHES ZMRP = 400.0000 IN. ZT
SCALE = .0200

PARAMETRIC DATA

IB-ELV = 8.000 OB-ELV = -2.000
BDFLAP = .000 SPDBRK = .000
RUDDER = .000 SILTS = 1.000
MACH = 1.150 RN/L = 3.500

RUN NO. 1401/ 0 RN/L = 3.50 GRADIENT INTERVAL = -5.00/ 5.00

ALPHAT	BETAT	CNFT	CAFT	CLMFT	CYFT	CYNFT	CBLFT	CABT	CP7	ALPHAO	BETAO
-4.063	-6.088	-.20630	.10010	.03870	.10940	-.01590	.00020	.09250	-.41120	-4.09950	-6.09420
-4.282	-3.943	-.20030	.10090	.03210	.06540	-.00980	.00000	.09000	-.40020	-4.29170	-3.96670
-4.234	.379	-.16470	.10130	.01350	-.00270	-.00370	-.00020	.08920	-.39670	-4.19500	.37040
-3.720	4.270	-.16270	.10070	.02420	-.06100	.00200	-.00040	.09020	-.40120	-3.74080	4.27410
-3.848	6.139	-.16790	.10060	.02420	-.09440	.00650	-.00050	.09230	-.41040	-3.86500	6.13400
	GRADIENT	.00465	-.00002	-.00102	-.01540	.00144	-.00005	.00002	-.00010	.06626	1.00347

RUN NO. 1402/ 0 RN/L = 3.51 GRADIENT INTERVAL = -5.00/ 5.00

ALPHAT	BETAT	CNFT	CAFT	CLMFT	CYFT	CYNFT	CBLFT	CABT	CP7	ALPHAO	BETAO
-.257	-6.947	-.15120	.10050	.05780	.12310	-.01690	.00030	.08920	-.39690	-.47390	-6.98600
-.248	-4.779	-.13900	.10110	.05120	.08090	-.01210	.00020	.08740	-.38870	-.44440	-4.83480
-.313	-.407	-.10280	.10250	.02810	.00870	-.00530	-.00010	.08580	-.38160	-.40860	-.48260
-.234	3.733	-.10620	.10320	.03670	-.05580	.00350	-.00010	.08720	-.38770	-.38200	3.67570
-.224	5.925	-.10740	.10090	.03870	-.09220	.00740	-.00030	.09010	-.40060	-.38350	5.85930
	GRADIENT	.00389	.00025	-.00174	-.01606	.00183	-.00004	-.00003	.00013	.00734	.99980

RUN NO. 1403/ 0 RN/L = 3.50 GRADIENT INTERVAL = -5.00/ 5.00

ALPHAT	BETAT	CNFT	CAFT	CLMFT	CYFT	CYNFT	CBLFT	CABT	CP7	ALPHAO	BETAO
4.493	-5.822	-.07300	.09750	.07270	.10540	-.01490	.00020	.08550	-.38030	4.10830	-5.81400
4.332	-3.689	-.06290	.09810	.06570	.06890	-.01330	.00010	.08410	-.37400	3.96820	-3.69740
4.106	.144	-.04180	.09990	.05020	.00210	-.00450	.00000	.08150	-.36250	3.79440	.11700
4.175	4.076	-.04310	.10050	.05600	-.06350	.00500	-.00010	.08290	-.36860	3.85200	4.04420
4.128	6.174	-.04620	.09880	.05780	-.09900	.00750	-.00020	.08560	-.38090	3.80380	6.13200
	GRADIENT	.00254	.00031	-.00124	-.01705	.00236	-.00003	-.00015	.00069	-.01484	.99702

IA156A, AEDC PWT 16T-470, O T S W/SILTS (R8NTD2) (10 MAY 80)

REFERENCE DATA

SREF = 2690.0000 SQ.FT. XMRP = 976.0000 IN. XT
LREF = 1290.3000 INCHES YMRP = .0000 IN. YT
BREF = 1290.3000 INCHES ZMRP = 400.0000 IN. ZT
SCALE = .0200

PARAMETRIC DATA

IB-ELV = 8.000 OB-ELV = -2.000
BDFLAP = .000 SPDBRK = .000
RUDDER = .000 SILTS = 1.000
MACH = 1.250 RN/L = 3.500

RUN NO. 1404/ 0 RN/L = 3.50 GRADIENT INTERVAL = -5.00/ 5.00

ALPHAT	BETAT	CNFT	CAFT	CLMFT	CYFT	CYNFT	CBLFT	CABT	CP7	ALPHAO	BETAO
-8.157	-5.914	-.29230	.10610	.03110	.09960	-.00750	.00030	.09230	-.41030	-8.05830	-5.88280
-8.322	-3.742	-.28570	.10630	.02530	.05420	-.00170	.00010	.08990	-.39990	-8.21210	-3.71970
-8.302	.190	-.26000	.10820	.00890	-.00050	-.00140	.00000	.08820	-.39230	-8.12960	.18730
-8.119	4.441	-.26150	.10770	.01350	-.05930	-.00080	-.00010	.08850	-.39350	-7.95530	4.41280
-8.123	6.279	-.26510	.10720	.01450	-.09280	.00330	-.00030	.09040	-.40190	-7.95730	6.24160
	GRADIENT	.00291	.00017	-.00141	-.01387	.00011	-.00002	-.00017	.00077	.03151	.99390

RUN NO. 1405/ 0 RN/L = 3.49 GRADIENT INTERVAL = -5.00/ 5.00

ALPHAT	BETAT	CNFT	CAFT	CLMFT	CYFT	CYNFT	CBLFT	CABT	CP7	ALPHAO	BETAO
-6.221	-5.975	-.25070	.10740	.03450	.10250	-.01100	.00030	.08890	-.39530	-6.18260	-5.95390
-6.166	-4.050	-.24100	.10780	.03040	.06430	-.00600	.00010	.08690	-.38640	-6.12920	-4.04300
-6.305	.141	-.21600	.10810	.01260	.00190	-.00360	-.00010	.08840	-.39300	-6.21220	.13500
-6.075	4.273	-.21450	.10870	.01840	-.06010	.00170	-.00020	.08620	-.38340	-5.99690	4.25540
-5.911	6.376	-.21080	.10780	.01800	-.09960	.00680	-.00030	.08820	-.39240	-5.82870	6.34840
	GRADIENT	.00319	.00011	-.00145	-.01495	.00092	-.00004	-.00008	.00036	.01581	.99703

RUN NO. 1406/ 0 RN/L = 3.50 GRADIENT INTERVAL = -5.00/ 5.00

ALPHAT	BETAT	CNFT	CAFT	CLMFT	CYFT	CYNFT	CBLFT	CABT	CP7	ALPHAO	BETAO
-4.142	-6.085	-.21030	.10820	.04250	.10440	-.01310	.00020	.08600	-.38240	-4.21240	-6.07750
-4.258	-3.967	-.20520	.10820	.03710	.06530	-.00870	.00000	.08570	-.38100	-4.31310	-3.97810
-4.190	.374	-.17210	.10890	.01940	-.00540	-.00150	-.00010	.08470	-.37680	-4.19110	.36990
-3.706	4.285	-.16650	.10970	.02700	-.06420	.00380	-.00020	.08420	-.37440	-3.74920	4.28290
-3.803	6.129	-.16850	.10910	.02580	-.09490	.00690	-.00030	.08460	-.37620	-3.83620	6.11480
	GRADIENT	.00474	.00018	-.00128	-.01571	.00152	-.00002	-.00018	.00080	.06761	1.00120

RUN NO. 1407/ 0 RN/L = 3.51 GRADIENT INTERVAL = -5.00/ 5.00

ALPHAT	BETAT	CNFT	CAFT	CLMFT	CYFT	CYNFT	CBLFT	CABT	CP7	ALPHAO	BETAO
-.215	-6.961	-.15530	.10960	.06400	.11690	-.01510	.00030	.08050	-.35810	-.49140	-6.99250
-.205	-4.805	-.14750	.10830	.05950	.07870	-.01100	.00020	.08400	-.37350	-.47120	-4.85330
-.245	-.370	-.11390	.10920	.03870	.00770	-.00500	-.00010	.07840	-.34850	-.42400	-.44290
-.162	3.746	-.11480	.11010	.04630	-.05600	.00310	-.00020	.07980	-.35490	-.39190	3.68060
-.177	5.953	-.11610	.10960	.04790	-.09210	.00580	-.00030	.08140	-.36200	-.40550	5.87290
	GRADIENT	.00387	.00021	-.00158	-.01576	.00165	-.00005	-.00050	.00222	.00929	.99799

IA156A, AEDC PWT 16T-470, O T S W/SILTS (R8NTD2) (10 MAY 80)

REFERENCE DATA

SREF = 2690.0000 SQ.FT. XMRP = 976.0000 IN. XT
LREF = 1290.3000 INCHES YMRP = .0000 IN. YT
BREF = 1290.3000 INCHES ZMRP = 400.0000 IN. ZT
SCALE = .0200

PARAMETRIC DATA

IB-ELV = 8.000 OB-ELV = -2.000
BDFLAP = .000 SPDBRK = .000
RUDDER = .000 SILTS = 1.000
MACH = 1.250 RN/L = 3.500

RUN NO. 1408/ 0 RN/L = 3.50 GRADIENT INTERVAL = -5.00/ 5.00

ALPHAT	BETAT	CNFT	CAFT	CLMFT	CYFT	CYNFT	CBLFT	CABT	CP7	ALPHAO	BETAO
4.605	-5.810	-.07720	.10480	.07950	.10240	-.01340	.00020	.07950	-.35380	4.15990	-5.79870
4.401	-3.661	-.06730	.10480	.07220	.06270	-.01030	.00010	.07780	-.34620	3.98230	-3.66140
4.162	.229	-.05040	.10440	.05920	-.00400	-.00210	.00000	.07700	-.34250	3.77080	.20640
4.246	4.110	-.05310	.10770	.06720	-.06500	.00610	-.00010	.07650	-.34030	3.83530	4.08450
4.193	6.176	-.05520	.10570	.06810	-.10050	.00820	-.00020	.07860	-.34970	3.78590	6.14130
	GRADIENT	.00183	.00037	-.00064	-.01643	.00211	-.00003	-.00017	.00076	-.01893	.99677

IA156A, AEDC PWT 16T-470, O T S W/SILTS (R8NTD3) (10 MAY 80)

REFERENCE DATA

SREF = 2690.0000 SQ.FT. XMRP = 976.0000 IN. XT
LREF = 1290.3000 INCHES YMRP = .0000 IN. YT
BREF = 1290.3000 INCHES ZMRP = 400.0000 IN. ZT
SCALE = .0200

PARAMETRIC DATA

IB-ELV = 8.000 OB-ELV = -2.000
BDFLAP = .000 SPDBRK = .000
RUDDER = .000 SILTS = 1.000
MACH = 1.400 RN/L = 3.500

RUN NO. 1409/ 0 RN/L = 3.00 GRADIENT INTERVAL = -5.00/ 5.00

ALPHAT	BETAT	CNFT	CAFT	CLMFT	CYFT	CYNFT	CBLFT	CABT	CP7	ALPHAO	BETAO
-8.121	-5.972	-.29930	.11100	.03710	.09880	-.00550	.00010	.08330	-.37070	-8.08600	-5.93030
-8.273	-3.767	-.28850	.11190	.02960	.05760	-.00160	-.00010	.07960	-.35420	-8.22050	-3.72760
-8.247	.236	-.26540	.11270	.01430	-.00270	-.00100	-.00020	.07900	-.35120	-8.14170	.22970
-8.025	4.501	-.26650	.11440	.01960	-.06310	-.00170	-.00010	.07980	-.35500	-7.94330	4.45080
-8.053	6.362	-.26560	.11390	.01930	-.09180	-.00090	-.00030	.07890	-.35100	-7.96910	6.30310
	GRADIENT	.00263	.00030	-.00118	-.01459	-.00001	.00000	.00003	-.00011	.03367	.98920

RUN NO. 1410/ 0 RN/L = 2.99 GRADIENT INTERVAL = -5.00/ 5.00

ALPHAT	BETAT	CNFT	CAFT	CLMFT	CYFT	CYNFT	CBLFT	CABT	CP7	ALPHAO	BETAO
-6.267	-6.009	-.25610	.11230	.03790	.10130	-.00850	.00000	.08130	-.36170	-6.25710	-5.96190
-6.179	-4.036	-.24240	.11380	.03280	.06150	-.00360	-.00010	.07830	-.34820	-6.16340	-4.00310
-6.251	.156	-.22000	.11530	.01720	-.00330	-.00080	-.00020	.07710	-.34300	-6.20030	.15160
-6.021	4.327	-.21540	.11500	.02150	-.06070	-.00070	-.00020	.07720	-.34350	-5.97640	4.28520
-5.987	6.317	-.21480	.11420	.02010	-.09710	.00270	-.00040	.07990	-.35530	-5.94050	6.26200
	GRADIENT	.00323	.00014	-.00135	-.01461	.00035	-.00001	-.00013	.00056	.02234	.99109

IA156A, AEDC PWT 16T-470, O T S W/SILTS (R8NTD3) (10 MAY 80)

REFERENCE DATA

SREF = 2690.0000 SQ.FT. XMRP = 976.0000 IN. XT
LREF = 1290.3000 INCHES YMRP = .0000 IN. YT
BREF = 1290.3000 INCHES ZMRP = 400.0000 IN. ZT
SCALE = .0200

PARAMETRIC DATA

IB-ELV = 8.000 OB-ELV = -2.000
BDFLAP = .000 SPDBRK = .000
RUDDER = .000 SILTS = 1.000
MACH = 1.400 RN/L = 3.500

RUN NO. 1411/ 0 RN/L = 2.99 GRADIENT INTERVAL = -5.00/ 5.00

ALPHAT	BETAT	CNFT	CAFT	CLMFT	CYFT	CYNFT	CBLFT	CABT	CP7	ALPHAO	BETAO
-3.998	-6.099	-.21100	.11380	.04530	.10170	-.00970	.00000	.07990	-.35560	-4.07640	-6.07150
-4.305	-3.966	-.20480	.11430	.03760	.05880	-.00390	-.00010	.07700	-.34240	-4.35270	-3.95190
-4.171	.422	-.17540	.11680	.02370	-.00810	-.00090	-.00020	.07390	-.32870	-4.20020	.41660
-3.682	4.356	-.16810	.11600	.03030	-.06120	-.00040	-.00040	.07570	-.33650	-3.74430	4.33260
-3.767	6.183	-.16900	.11520	.02810	-.09360	.00270	-.00040	.07790	-.34640	-3.81600	6.14840
	GRADIENT	.00445	.00021	-.00092	-.01444	.00043	-.00004	-.00017	.00076	.07237	.99548

RUN NO. 1412/ 0 RN/L = 2.99 GRADIENT INTERVAL = -5.00/ 5.00

ALPHAT	BETAT	CNFT	CAFT	CLMFT	CYFT	CYNFT	CBLFT	CABT	CP7	ALPHAO	BETAO
-.258	-6.985	-.15900	.11460	.06660	.11540	-.01220	.00020	.07680	-.34150	-.51440	-7.00040
-.254	-4.787	-.14370	.11490	.05770	.07300	-.00680	.00000	.07160	-.31870	-.48710	-4.81630
-.257	-.434	-.11660	.11560	.04200	.00550	-.00310	-.00020	.06870	-.30560	-.44220	-.49900
-.201	3.715	-.11700	.11640	.04830	-.05690	.00220	-.00010	.07160	-.31850	-.42410	3.63670
-.219	5.902	-.11570	.11680	.04730	-.09200	.00460	-.00030	.07280	-.32390	-.43160	5.81150
	GRADIENT	.00317	.00018	-.00113	-.01528	.00106	-.00001	-.00001	.00005	.00743	.99422

RUN NO. 1413/ 0 RN/L = 2.99 GRADIENT INTERVAL = -5.00/ 5.00

ALPHAT	BETAT	CNFT	CAFT	CLMFT	CYFT	CYNFT	CBLFT	CABT	CP7	ALPHAO	BETAO
4.595	-5.780	-.08260	.11180	.08830	.09620	-.01000	.00010	.07140	-.31770	4.13570	-5.76480
4.413	-3.653	-.06940	.11200	.07720	.05940	-.00920	-.00010	.07000	-.31120	3.99300	-3.65130
4.154	.201	-.05630	.11180	.06530	-.00160	-.00440	-.00010	.06870	-.30540	3.75920	.17580
4.185	4.082	-.05630	.11200	.06950	-.06250	.00310	-.00010	.07010	-.31180	3.78990	4.04500
4.128	6.160	-.05760	.11320	.07040	-.09880	.00750	-.00020	.06920	-.30790	3.73700	6.11960
	GRADIENT	.00169	.00000	-.00099	-.01576	.00159	-.00000	.00001	-.00008	-.02622	.99500

IA156A, AEDC PWT 16T-470, O T S W/SILTS (R8NTD4) (10 MAY 80)

REFERENCE DATA

SREF = 2690.0000 SQ.FT. XMRP = 976.0000 IN. XT
LREF = 1290.3000 INCHES YMRP = .0000 IN. YT
BREF = 1290.3000 INCHES ZMRP = 400.0000 IN. ZT
SCALE = .0200

PARAMETRIC DATA

IB-ELV = 8.000 OB-ELV = -2.000
BDFLAP = .000 SPDBRK = .000
RUDDER = .000 SILTS = 1.000
MACH = 1.550 RN/L = 3.200

RUN NO. 1414/ 0 RN/L = 3.00 GRADIENT INTERVAL = -5.00/ 5.00

ALPHAT	BETAT	CNFT	CAFT	CLMFT	CYFT	CYNFT	CBLFT	CABT	CP7	ALPHAO	BETAO
-8.145	-5.939	-.30320	.11140	.04530	.09300	-.00410	-.00020	.07380	-.32830	-8.17310	-5.90570
-8.305	-3.707	-.29420	.11160	.03890	.05600	-.00330	-.00030	.07150	-.31810	-8.31010	-3.67840
-8.236	.315	-.26970	.11300	.02580	-.00230	-.00210	-.00010	.07070	-.31470	-8.20650	.30170
-8.008	4.631	-.26960	.11600	.02910	-.06300	-.00230	-.00010	.07060	-.31420	-7.99040	4.58290
-7.981	6.443	-.27150	.11630	.02890	-.09050	-.00260	-.00020	.07180	-.31960	-7.95430	6.38690
	GRADIENT	.00291	.00053	-.00115	-.01427	.00012	.00002	-.00011	.00046	.03849	.99089

RUN NO. 1415/ 0 RN/L = 3.00 GRADIENT INTERVAL = -5.00/ 5.00

ALPHAT	BETAT	CNFT	CAFT	CLMFT	CYFT	CYNFT	CBLFT	CABT	CP7	ALPHAO	BETAO
-6.320	-5.988	-.25600	.11190	.04410	.09980	-.01000	-.00010	.07200	-.32050	-6.35540	-5.95530
-6.224	-3.987	-.24350	.11150	.03900	.06220	-.00540	-.00020	.07010	-.31160	-6.25130	-3.96520
-6.266	.231	-.22610	.11380	.02860	-.00480	-.00090	-.00030	.06950	-.30890	-6.27610	.21830
-5.961	4.420	-.21690	.11580	.02950	-.06360	.00120	-.00020	.06920	-.30800	-5.97430	4.38110
-5.913	6.409	-.21830	.11620	.02900	-.09950	.00460	-.00030	.07040	-.31290	-5.92440	6.36220
	GRADIENT	.00317	.00051	-.00113	-.01497	.00079	-.00000	-.00011	.00043	.03290	.99283

RUN NO. 1416/ 0 RN/L = 3.00 GRADIENT INTERVAL = -5.00/ 5.00

ALPHAT	BETAT	CNFT	CAFT	CLMFT	CYFT	CYNFT	CBLFT	CABT	CP7	ALPHAO	BETAO
-4.102	-6.104	-.20880	.11130	.04870	.09870	-.00960	-.00010	.06990	-.31080	-4.19260	-6.08980
-4.382	-3.950	-.20200	.11180	.04070	.05670	-.00350	-.00020	.06820	-.30330	-4.44790	-3.94550
-4.229	.511	-.17960	.11500	.03030	-.01010	-.00110	-.00030	.06720	-.29870	-4.28460	.49690
-3.635	4.451	-.16840	.11650	.03450	-.06230	-.00050	-.00030	.06680	-.29730	-3.71820	4.43270
-3.715	6.276	-.17390	.11650	.03440	-.09570	.00440	-.00040	.06950	-.30930	-3.79380	6.25240
	GRADIENT	.00402	.00056	-.00077	-.01418	.00036	-.00001	-.00017	.00072	.08576	.99736

RUN NO. 1417/ 0 RN/L = 3.00 GRADIENT INTERVAL = -5.00/ 5.00

ALPHAT	BETAT	CNFT	CAFT	CLMFT	CYFT	CYNFT	CBLFT	CABT	CP7	ALPHAO	BETAO
-.343	-7.054	-.15250	.11130	.06590	.11020	-.00950	.00010	.06690	-.29750	-.60010	-7.07720
-.339	-4.854	-.13900	.11110	.05800	.07290	-.00640	.00000	.06520	-.28990	-.57460	-4.88580
-.339	-.508	-.11550	.11280	.04400	.00560	-.00190	-.00030	.06200	-.27590	-.53550	-.56960
-.322	3.648	-.11120	.11580	.04410	-.05390	.00060	-.00010	.06230	-.27700	-.52260	3.57210
-.345	5.836	-.11070	.11490	.04320	-.08950	.00380	-.00030	.06570	-.29210	-.52920	5.75430
	GRADIENT	.00329	.00055	-.00165	-.01492	.00082	-.00001	-.00034	.00153	.00614	.99484

IA156A, AEDC PWT 16T-470, O T S W/SILTS (R8NTD4) (10 MAY 80)

REFERENCE DATA

SREF = 2690.0000 SQ.FT. XMRP = 976.0000 IN. XT
LREF = 1290.3000 INCHES YMRP = .0000 IN. YT
BREF = 1290.3000 INCHES ZMRP = 400.0000 IN. ZT
SCALE = .0200

PARAMETRIC DATA

IB-ELV = 8.000 OB-ELV = -2.000
BDFLAP = .000 SPDBRK = .000
RUDDER = .000 SILTS = 1.000
MACH = 1.550 RN/L = 3.200

RUN NO. 1418/ 0 RN/L = 3.00 GRADIENT INTERVAL = -5.00/ 5.00

ALPHAT	BETAT	CNFT	CAFT	CLMFT	CYFT	CYNFT	CBLFT	CABT	CP7	ALPHAO	BETAO
4.634	-5.682	-.07560	.11420	.08660	.09310	-.00890	.00000	.06380	-.28360	4.17390	-5.66970
4.392	-3.538	-.06320	.11410	.07310	.05650	-.00790	-.00030	.06220	-.27660	3.98110	-3.53660
4.100	.276	-.05130	.11220	.06200	-.00500	-.00290	-.00020	.06110	-.27200	3.70690	.25390
4.086	4.112	-.05100	.11170	.06600	-.06080	.00120	-.00020	.06250	-.27810	3.70060	4.07010
4.008	6.151	-.05020	.11270	.06560	-.09520	.00450	-.00020	.06160	-.27390	3.63130	6.10640
	GRADIENT	.00159	-.00031	-.00093	-.01533	.00119	.00001	.00004	-.00020	-.03663	.99435

IA156A, AEDC PWT 16T-470, O T S W/SILTS (R8NTD5) (10 MAY 80)

REFERENCE DATA

SREF = 2690.0000 SQ.FT. XMRP = 976.0000 IN. XT
LREF = 1290.3000 INCHES YMRP = .0000 IN. YT
BREF = 1290.3000 INCHES ZMRP = 400.0000 IN. ZT
SCALE = .0200

PARAMETRIC DATA

IB-ELV = 8.000 OB-ELV = -2.000
BDFLAP = .000 SPDBRK = .000
RUDDER = .000 SILTS = 1.000
MACH = 1.550 RN/L = 3.200

RUN NO. 1419/ 0 RN/L = 3.00 GRADIENT INTERVAL = -5.00/ 5.00

ALPHAT	BETAT	CNFT	CAFT	CLMFT	CYFT	CYNFT	CBLFT	CABT	CP7	ALPHAO	BETAO
-8.311	-5.853	-.30480	.11120	.04480	.09100	-.00420	-.00020	.07320	-.32550	-8.33590	-5.82000
-8.334	-3.738	-.29280	.11150	.03870	.05700	-.00350	-.00030	.07120	-.31670	-8.33660	-3.70990
-8.216	.556	-.27120	.11360	.02610	-.00680	-.00190	-.00020	.07120	-.31650	-8.18810	.54010
-8.008	4.520	-.26850	.11550	.02910	-.05980	-.00230	-.00020	.07040	-.31320	-7.99170	4.47360
-7.984	6.431	-.27000	.11560	.02850	-.08910	-.00260	-.00020	.07120	-.31660	-7.95710	6.37590
	GRADIENT	.00297	.00048	-.00119	-.01415	.00015	.00001	-.00010	.00042	.04167	.99097

IA156A, AEDC PWT 16T-470, O T S W/SILTS (R8NTD6) (10 MAY 80)

REFERENCE DATA

SREF = 2690.0000 SQ.FT. XMRP = 976.0000 IN. XT
LREF = 1290.3000 INCHES YMRP = .0000 IN. YT
BREF = 1290.3000 INCHES ZMRP = 400.0000 IN. ZT
SCALE = .0200

PARAMETRIC DATA

IB-ELV = 10.000 OB-ELV = -2.000
BDFLAP = .000 SPDBRK = .000
RUDDER = .000 SILTS = 1.000
MACH = 1.150 RN/L = 3.500

RUN NO. 1432/ 0 RN/L = 3.50 GRADIENT INTERVAL = -5.00/ 5.00

ALPHAT	BETAT	CNFT	CAFT	CLMFT	CYFT	CYNFT	CBLFT	CABT	CP7	ALPHAO	BETAO
-8.186	-5.924	-.28810	.09890	.02420	.10620	-.01050	.00020	.10000	-.44490	-8.03840	-5.90690
-8.382	-3.802	-.28230	.09750	.01900	.06230	-.00550	.00000	.09880	-.43940	-8.22670	-3.79420
-8.381	.363	-.25880	.10090	.00180	-.00460	-.00140	-.00010	.09650	-.42930	-8.15270	.35380
-8.145	4.329	-.26190	.09940	.00870	-.06120	.00080	-.00020	.09820	-.43690	-7.95740	4.31260
-8.158	6.266	-.26130	.09900	.00990	-.09290	.00400	-.00050	.09930	-.44150	-7.97150	6.24060
	GRADIENT	.00253	.00024	-.00129	-.01520	.00078	-.00002	-.00008	.00033	.03299	.99697

RUN NO. 1433/ 0 RN/L = 3.50 GRADIENT INTERVAL = -5.00/ 5.00

ALPHAT	BETAT	CNFT	CAFT	CLMFT	CYFT	CYNFT	CBLFT	CABT	CP7	ALPHAO	BETAO
-6.265	-5.980	-.24620	.09920	.02870	.10760	-.01370	.00020	.09650	-.42910	-6.18680	-5.97420
-6.179	-4.037	-.23800	.10080	.02550	.06800	-.00873	.00010	.09340	-.41550	-6.10040	-4.04380
-6.344	.117	-.21190	.10110	.00710	.00170	-.00350	-.00020	.09460	-.42090	-6.20750	.10510
-6.121	4.265	-.21420	.10110	.01510	-.06050	.00150	-.00030	.09350	-.41580	-6.01930	4.25010
-6.047	6.222	-.21360	.09870	.01570	-.09610	.00700	-.00050	.09660	-.42960	-5.94970	6.20390
	GRADIENT	.00287	.00004	-.00125	-.01548	.00123	-.00005	.00001	-.00004	.00976	.99901

RUN NO. 1434/ 0 RN/L = 3.50 GRADIENT INTERVAL = -5.00/ 5.00

ALPHAT	BETAT	CNFT	CAFT	CLMFT	CYFT	CYNFT	CBLFT	CABT	CP7	ALPHAO	BETAO
-4.072	-6.080	-.20530	.09970	.03760	.10920	-.01570	.00020	.09340	-.41530	-4.10550	-6.08760
-4.298	-3.954	-.20100	.10110	.03160	.06560	-.00930	.00000	.09050	-.40270	-4.30540	-3.97850
-4.231	.381	-.16810	.10220	.01430	-.00390	-.00260	-.00020	.08990	-.39970	-4.20070	.37010
-3.725	4.295	-.16500	.10240	.02450	-.06460	.00360	-.00030	.09050	-.40270	-3.75070	4.29710
-3.824	6.123	-.16790	.10100	.02460	-.09550	.00740	-.00050	.09220	-.41000	-3.84910	6.11650
	GRADIENT	.00442	.00016	-.00092	-.01579	.00156	-.00004	-.00000	.00001	.06647	1.00320

RUN NO. 1435/ 0 RN/L = 3.50 GRADIENT INTERVAL = -5.00/ 5.00

ALPHAT	BETAT	CNFT	CAFT	CLMFT	CYFT	CYNFT	CBLFT	CABT	CP7	ALPHAO	BETAO
-.242	-7.018	-.15270	.10080	.05870	.12340	-.01630	.00020	.09030	-.40170	-.46530	-7.05860
-.238	-4.785	-.14030	.10180	.05210	.07910	-.01100	.00000	.08690	-.38650	-.44060	-4.84300
-.310	-.380	-.10440	.10270	.02880	.00780	-.00450	-.00020	.08650	-.38480	-.40850	-.45510
-.225	3.726	-.10670	.10300	.03700	-.05810	.00490	-.00030	.08760	-.38960	-.37680	3.66980
-.210	5.909	-.10850	.10130	.03940	-.09390	.00850	-.00050	.08990	-.39990	-.37720	5.84340
	GRADIENT	.00400	.00014	-.00182	-.01612	.00186	-.00004	.00008	-.00036	.00749	1.00010

IA156A, AEDC PWT 16T-470, O T S W/SILTS (R8NTD6) (10 MAY 80)

REFERENCE DATA

SREF = 2690.0000 SQ.FT. XMRP = 976.0000 IN. XT
LREF = 1290.3000 INCHES YMRP = .0000 IN. YT
BREF = 1290.3000 INCHES ZMRP = 400.0000 IN. ZT
SCALE = .0200

PARAMETRIC DATA

IB-ELV = 10.000 OB-ELV = -2.000
BDFLAP = .000 SPDBRK = .000
RUDDER = .000 SILTS = 1.000
MACH = 1.150 RN/L = 3.500

RUN NO. 1436/ 0 RN/L = 3.50 GRADIENT INTERVAL = -5.00/ 5.00

ALPHAT	BETAT	CNFT	CAFT	CLMFT	CYFT	CYNFT	CBLFT	CABT	CP7	ALPHAO	BETAO
4.377	-5.885	-.07740	.09790	.07400	.10650	-.01410	.00010	.08540	-.38010	3.98590	-5.87590
4.386	-3.792	-.06370	.09780	.06780	.07010	-.01290	.00000	.08400	-.37380	4.01070	-3.80030
4.214	.210	-.04180	.09960	.05190	-.00080	-.00330	-.00010	.08150	-.36250	3.88830	.18310
4.165	4.021	-.04590	.10000	.05710	-.06380	.00600	-.00020	.08280	-.36850	3.83270	3.99090
4.126	6.139	-.04790	.09840	.05920	-.10130	.00850	-.00030	.08610	-.38280	3.79110	6.09880
	GRADIENT	.00231	.00028	-.00139	-.01714	.00242	-.00003	-.00016	.00070	-.02285	.99730

IA156A, AEDC PWT 16T-470, O T S W/SILTS (R8NTD7) (10 MAY 80)

REFERENCE DATA

SREF = 2690.0000 SQ.FT. XMRP = 976.0000 IN. XT
LREF = 1290.3000 INCHES YMRP = .0000 IN. YT
BREF = 1290.3000 INCHES ZMRP = 400.0000 IN. ZT
SCALE = .0200

PARAMETRIC DATA

IB-ELV = 10.000 OB-ELV = -2.000
BDFLAP = .000 SPDBRK = .000
RUDDER = .000 SILTS = 1.000
MACH = 1.250 RN/L = 3.500

RUN NO. 1437/ 0 RN/L = 3.50 GRADIENT INTERVAL = -5.00/ 5.00

ALPHAT	BETAT	CNFT	CAFT	CLMFT	CYFT	CYNFT	CBLFT	CABT	CP7	ALPHAO	BETAO
-8.305	-5.899	-.29380	.10610	.03040	.09590	-.00650	.00010	.09040	-.40230	-8.20550	-5.86890
-8.322	-3.812	-.28720	.10650	.02610	.05560	-.00150	.00000	.09000	-.40010	-8.21990	-3.78620
-8.289	.185	-.26170	.10830	.00960	-.00090	-.00080	-.00020	.08860	-.39430	-8.12320	.18310
-8.124	4.377	-.26250	.10770	.01420	-.05790	-.00030	-.00030	.08870	-.39470	-7.96830	4.34990
-8.121	6.268	-.26570	.10770	.01510	-.09320	.00420	-.00040	.08930	-.39720	-7.96120	6.23080
	GRADIENT	.00299	.00014	-.00143	-.01386	.00015	-.00004	-.00016	.00065	.03078	.99363

RUN NO. 1438/ 0 RN/L = 3.50 GRADIENT INTERVAL = -5.00/ 5.00

ALPHAT	BETAT	CNFT	CAFT	CLMFT	CYFT	CYNFT	CBLFT	CABT	CP7	ALPHAO	BETAO
-6.220	-5.978	-.25030	.10720	.03510	.10060	-.01000	.00010	.08900	-.39580	-6.18990	-5.95650
-6.156	-4.049	-.24180	.10780	.03120	.06270	-.00500	-.00010	.08740	-.38850	-6.13010	-4.04050
-6.292	.128	-.21600	.10820	.01370	.00120	-.00260	-.00030	.08620	-.38330	-6.21000	.12300
-6.063	4.272	-.21560	.10890	.01910	-.06180	.00260	-.00030	.08580	-.38160	-5.99340	4.25380
-6.049	6.271	-.21550	.10840	.01820	-.09810	.00740	-.00040	.08670	-.38580	-5.96590	6.24560
	GRADIENT	.00315	.00013	-.00146	-.01496	.00091	-.00002	-.00019	.00083	.01638	.99679

IA156A, AEDC PWT 16T-470, O T S W/SILTS (R8NTD7) (10 MAY 80)

REFERENCE DATA

SREF = 2690.0000 SQ.FT. XMRP = 976.0000 IN. XT
LREF = 1290.3000 INCHES YMRP = .0000 IN. YT
BREF = 1290.3000 INCHES ZMRP = 400.0000 IN. ZT
SCALE = .0200

PARAMETRIC DATA

IB-ELV = 10.000 OB-ELV = -2.000
BDFLAP = .000 SPDBRK = .000
RUDDER = .000 SILTS = 1.000
MACH = 1.250 RN/L = 3.500

RUN NO. 1439/ 0 RN/L = 3.50 GRADIENT INTERVAL = -5.00/ 5.00

ALPHAT	BETAT	CNFT	CAFT	CLMFT	CYFT	CYNFT	CBLFT	CABT	CP7	ALPHAO	BETAO
-4.013	-6.092	-.20970	.10800	.04410	.10360	-.01200	.00010	.08690	-.38660	-4.09920	-6.08420
-4.236	-3.954	-.20370	.10780	.03800	.06390	-.00750	-.00010	.08510	-.37830	-4.30210	-3.96500
-4.195	.384	-.17380	.10980	.02050	-.00710	-.00050	-.00020	.08280	-.36810	-4.20540	.38040
-3.702	4.302	-.16830	.10970	.02770	-.06490	.00470	-.00030	.08390	-.37300	-3.75280	4.30090
-3.830	6.173	-.17140	.10940	.02660	-.09660	.00790	-.00040	.08470	-.37680	-3.86910	6.15860
	GRADIENT	.00433	.00023	-.00130	-.01561	.00148	-.00002	-.00015	.00067	.06574	1.00116

RUN NO. 1440/ 0 RN/L = 3.50 GRADIENT INTERVAL = -5.00/ 5.00

ALPHAT	BETAT	CNFT	CAFT	CLMFT	CYFT	CYNFT	CBLFT	CABT	CP7	ALPHAO	BETAO
-.198	-7.063	-.15830	.10900	.06620	.11850	-.01450	.00020	.08330	-.37050	-.48730	-7.09500
-.191	-4.781	-.14600	.10950	.05940	.07530	-.00990	.00000	.07970	-.35440	-.46000	-4.83140
-.225	-.412	-.11570	.10920	.04050	.00720	-.00420	-.00020	.07820	-.34770	-.41750	-.48440
-.158	3.734	-.11560	.10950	.04650	-.05730	.00410	-.00030	.07990	-.35520	-.39090	3.66910
-.167	5.927	-.11600	.10830	.04690	-.09280	.00690	-.00050	.08160	-.36300	-.39910	5.84790
	GRADIENT	.00360	-.00000	-.00154	-.01557	.00164	-.00004	.00002	-.00008	.00813	.99829

RUN NO. 1441/ 0 RN/L = 3.50 GRADIENT INTERVAL = -5.00/ 5.00

ALPHAT	BETAT	CNFT	CAFT	CLMFT	CYFT	CYNFT	CBLFT	CABT	CP7	ALPHAO	BETAO
4.439	-5.873	-.08100	.10440	.08000	.10150	-.01220	.00010	.07940	-.35340	3.99420	-5.85950
4.441	-3.788	-.06780	.10450	.07380	.06400	-.00960	-.00010	.07780	-.34620	4.00940	-3.78900
4.289	.216	-.05020	.10550	.06100	-.00460	-.00160	-.00010	.07470	-.33230	3.88370	.19230
4.227	4.016	-.05380	.10550	.06720	-.06600	.00710	-.00030	.07740	-.34420	3.81250	3.99140
4.193	6.149	-.05740	.10510	.06870	-.10120	.00920	-.00030	.07880	-.35050	3.78120	6.11540
	GRADIENT	.00182	.00013	-.00087	-.01666	.00214	-.00003	-.00006	.00029	-.02529	.99696

IA156A, AEDC PWT 16T-470, O T S W/SILTS (R8NTD8) (10 MAY 80)

REFERENCE DATA

SREF = 2690.0000 SQ.FT. XMRP = 976.0000 IN. XT
LREF = 1290.3000 INCHES YMRP = .0000 IN. YT
BREF = 1290.3000 INCHES ZMRP = 400.0000 IN. ZT
SCALE = .0200

PARAMETRIC DATA

IB-ELV = 10.000 OB-ELV = -2.000
BDFLAP = .000 SPDBRK = .000
RUDDER = .000 SILTS = 1.000
MACH = 1.400 RN/L = 3.500

RUN NO. 1442/ 0 RN/L = 3.00 GRADIENT INTERVAL = -5.00/ 5.00

ALPHAT	BETAT	CNFT	CAFT	CLMFT	CYFT	CYNFT	CBLFT	CABT	CP7	ALPHAO	BETAO
-8.284	-5.907	-.30350	.11120	.03760	.09490	-.00460	-.00010	.08220	-.36560	-8.25000	-5.86650
-8.300	-3.808	-.29180	.11210	.03100	.05750	-.00070	-.00020	.08060	-.35870	-8.25500	-3.76580
-8.241	.448	-.26720	.11350	.01550	-.00580	-.00050	-.00030	.07800	-.34700	-8.14290	.44070
-8.059	4.415	-.26660	.11390	.02020	-.06200	-.00020	-.00030	.07770	-.34580	-7.98000	4.36910
-8.047	6.350	-.26650	.11280	.02020	-.09380	.00140	-.00050	.08020	-.35660	-7.97130	6.29530
	GRADIENT	.00310	.00022	-.00134	-.01454	.00006	-.00001	-.00036	.00158	.03336	.98936

RUN NO. 1443/ 0 RN/L = 3.00 GRADIENT INTERVAL = -5.00/ 5.00

ALPHAT	BETAT	CNFT	CAFT	CLMFT	CYFT	CYNFT	CBLFT	CABT	CP7	ALPHAO	BETAO
-6.238	-6.004	-.25370	.11230	.03910	.09980	-.00750	-.00010	.08000	-.35590	-6.24130	-5.95560
-6.185	-4.058	-.24430	.11340	.03410	.06100	-.00250	-.00030	.07900	-.35130	-6.17970	-4.02270
-6.255	.163	-.22090	.11470	.01880	-.00490	.00100	-.00040	.07610	-.33860	-6.21370	.16260
-6.054	4.334	-.21820	.11510	.02240	-.06290	.00120	-.00050	.07690	-.34220	-6.01470	4.29570
-5.745	6.425	-.20980	.11450	.02160	-.09980	.00480	-.00060	.07730	-.34380	-5.71490	6.37570
	GRADIENT	.00312	.00020	-.00140	-.01477	.00044	-.00002	-.00025	.00109	.01961	.99125

RUN NO. 1444/ 0 RN/L = 3.00 GRADIENT INTERVAL = -5.00/ 5.00

ALPHAT	BETAT	CNFT	CAFT	CLMFT	CYFT	CYNFT	CBLFT	CABT	CP7	ALPHAO	BETAO
-4.051	-6.101	-.21220	.11420	.04610	.09990	-.00820	-.00010	.07870	-.34990	-4.13560	-6.07160
-4.290	-3.974	-.20480	.11420	.03870	.05780	-.00270	-.00040	.07640	-.33960	-4.34830	-3.95910
-4.174	.426	-.17660	.11680	.02470	-.00960	.00050	-.00040	.07330	-.32610	-4.21080	.42210
-3.694	4.366	-.16990	.11630	.03050	-.06290	.00090	-.00050	.07440	-.33110	-3.75970	4.34330
-3.772	6.204	-.17050	.11460	.02830	-.09520	.00380	-.00060	.07670	-.34100	-3.82310	6.16970
	GRADIENT	.00423	.00026	-.00103	-.01449	.00044	-.00001	-.00025	.00106	.06982	.99553

RUN NO. 1445/ 0 RN/L = 3.00 GRADIENT INTERVAL = -5.00/ 5.00

ALPHAT	BETAT	CNFT	CAFT	CLMFT	CYFT	CYNFT	CBLFT	CABT	CP7	ALPHAO	BETAO
-.241	-6.955	-.15970	.11440	.06800	.11460	-.01110	.00000	.07580	-.33740	-.50840	-6.97250
-.232	-4.797	-.14310	.11420	.05870	.07100	-.00550	-.00020	.07200	-.32030	-.47530	-4.82790
-.239	-.429	-.11640	.11560	.04280	.00390	-.00190	-.00040	.06840	-.30420	-.43240	-.49290
-.186	3.705	-.11610	.11670	.04840	-.05860	.00330	-.00030	.07020	-.31210	-.41470	3.62850
-.202	5.895	-.11480	.11600	.04770	-.09370	.00580	-.00050	.07230	-.32170	-.42260	5.80570
	GRADIENT	.00320	.00029	-.00123	-.01524	.00103	-.00001	-.00022	.00099	.00715	.99458

IA156A, AEDC PWT 16T-470, O T S W/SILTS (R8NTD8) (10 MAY 80)

REFERENCE DATA

SREF = 2690.0000 SQ.FT. XMRP = 976.0000 IN. XT
LREF = 1290.3000 INCHES YMRP = .0000 IN. YT
BREF = 1290.3000 INCHES ZMRP = 400.0000 IN. ZT
SCALE = .0200

PARAMETRIC DATA

IB-ELV = 10.000 OB-ELV = -2.000
BDFLAP = .000 SPDBRK = .000
RUDDER = .000 SILTS = 1.000
MACH = 1.400 RN/L = 3.500

RUN NO. 1446/ 0 RN/L = 3.00 GRADIENT INTERVAL = -5.00/ 5.00

ALPHAT	BETAT	CNFT	CAFT	CLMFT	CYFT	CYNFT	CBLFT	CABT	CP7	ALPHAO	BETAO
4.484	-5.854	-.08430	.11160	.08820	.09570	-.00880	-.00010	.07090	-.31520	4.02200	-5.83880
4.428	-3.724	-.06900	.11160	.07830	.05940	-.00800	-.00030	.06990	-.31110	4.00030	-3.72210
4.281	.250	-.05560	.11280	.06680	-.00260	-.00320	-.00030	.06700	-.29820	3.87400	.22660
4.163	4.044	-.05710	.11200	.07030	-.06400	.00430	-.00030	.06950	-.30930	3.76070	4.00860
4.135	6.160	-.05840	.11300	.07120	-.10120	.00880	-.00040	.06930	-.30840	3.73600	6.12090
	GRADIENT	.00155	.00005	-.00104	-.01588	.00158	.00000	-.00006	.00026	-.03085	.99508

IA156A, AEDC PWT 16T-470, O T S W/SILTS (R8NTD9) (10 MAY 80)

REFERENCE DATA

SREF = 2690.0000 SQ.FT. XMRP = 976.0000 IN. XT
LREF = 1290.3000 INCHES YMRP = .0000 IN. YT
BREF = 1290.3000 INCHES ZMRP = 400.0000 IN. ZT
SCALE = .0200

PARAMETRIC DATA

IB-ELV = 10.000 OB-ELV = -2.000
BDFLAP = .000 SPDBRK = .000
RUDDER = .000 SILTS = 1.000
MACH = 1.550 RN/L = 3.200

RUN NO. 1447/ 0 RN/L = 3.00 GRADIENT INTERVAL = -5.00/ 5.00

ALPHAT	BETAT	CNFT	CAFT	CLMFT	CYFT	CYNFT	CBLFT	CABT	CP7	ALPHAO	BETAO
-8.314	-5.863	-.30330	.11020	.04500	.09050	-.00380	-.00030	.07290	-.32440	-8.34120	-5.82930
-8.332	-3.746	-.29390	.11060	.03950	.05510	-.00260	-.00040	.07140	-.31780	-8.34110	-3.71750
-8.221	.524	-.27130	.11330	.02670	-.00640	-.00110	-.00030	.07030	-.31250	-8.20090	.50670
-8.005	4.532	-.26960	.11530	.02980	-.06130	-.00120	-.00030	.06970	-.31010	-7.99700	4.48540
-7.980	6.440	-.27210	.11520	.02950	-.08860	-.00200	-.00030	.07140	-.31750	-7.96230	6.38360
	GRADIENT	.00296	.00057	-.00119	-.01406	.00017	.00001	-.00021	.00093	.04147	.99083

RUN NO. 1448/ 0 RN/L = 3.00 GRADIENT INTERVAL = -5.00/ 5.00

ALPHAT	BETAT	CNFT	CAFT	CLMFT	CYFT	CYNFT	CBLFT	CABT	CP7	ALPHAO	BETAO
-6.310	-6.000	-.25620	.11090	.04480	.09980	-.00940	-.00030	.07160	-.31850	-6.35220	-5.96870
-6.221	-3.995	-.24170	.11110	.03910	.05940	-.00390	-.00040	.06890	-.30650	-6.25450	-3.97220
-6.262	.248	-.22650	.11330	.02940	-.00660	.00020	-.00040	.06870	-.30550	-6.28070	.23420
-5.993	4.429	-.21810	.11680	.02990	-.06400	.00180	-.00040	.06700	-.29800	-6.01080	4.38840
-5.673	6.522	-.21300	.11620	.03020	-.10080	.00550	-.00050	.06930	-.30840	-5.69930	6.47500
	GRADIENT	.00280	.00068	-.00110	-.01465	.00068	.00000	-.00023	.00101	.02884	.99249

IA156A, AEDC PWT 16T-470, O T S W/SILTS

(R8NTD9) (10 MAY 80)

REFERENCE DATA

SREF = 2690.0000 SQ.FT. XMRP = 976.0000 IN. XT
LREF = 1290.3000 INCHES YMRP = .0000 IN. YT
BREF = 1290.3000 INCHES ZMRP = 400.0000 IN. ZT
SCALE = .0200

PARAMETRIC DATA

IB-ELV = 10.000 OB-ELV = -2.000
BDFLAP = .000 SPDBRK = .000
RUDDER = .000 SILTS = 1.000
MACH = 1.550 RN/L = 3.200

RUN NO. 1449/ 0 RN/L = 3.00 GRADIENT INTERVAL = -5.00/ 5.00

ALPHAT	BETAT	CNFT	CAFT	CLMFT	CYFT	CYNFT	CBLFT	CABT	CP7	ALPHAO	BETAO
-4.335	-6.044	-.21620	.11210	.04870	.09700	-.00840	-.00020	.06940	-.30880	-4.42350	-6.02580
-4.340	-3.943	-.20010	.11120	.04100	.05530	-.00230	-.00040	.06720	-.29910	-4.41360	-3.93870
-4.222	.528	-.17930	.11420	.03080	-.01010	-.00060	-.00050	.06600	-.29370	-4.28660	.51240
-3.648	4.470	-.16840	.11640	.03500	-.06210	.00000	-.00050	.06630	-.29510	-3.73970	4.45280
-3.703	6.283	-.17370	.11550	.03520	-.09580	.00490	-.00050	.06920	-.30780	-3.79120	6.25990
	GRADIENT	.00379	.00062	-.00075	-.01397	.00028	-.00001	-.00011	.00049	.07895	.99738

RUN NO. 1450/ 0 RN/L = 3.00 GRADIENT INTERVAL = -5.00/ 5.00

ALPHAT	BETAT	CNFT	CAFT	CLMFT	CYFT	CYNFT	CBLFT	CABT	CP7	ALPHAO	BETAO
-.329	-7.016	-.15300	.11080	.06660	.11070	-.00870	.00000	.06740	-.29990	-.59210	-7.03890
-.327	-4.846	-.13850	.10940	.05830	.06950	-.00470	-.00030	.06510	-.28940	-.56940	-4.87770
-.328	-.545	-.11610	.11280	.04470	.00430	-.00010	-.00050	.06080	-.27030	-.53060	-.60340
-.314	3.692	-.11220	.11580	.04460	-.05560	.00210	-.00040	.06150	-.27340	-.51960	3.61860
-.334	5.826	-.11050	.11690	.04330	-.09140	.00530	-.00050	.06300	-.28020	-.52290	5.74690
	GRADIENT	.00309	.00075	-.00161	-.01465	.00080	-.00001	-.00042	.00188	.00584	.99515

RUN NO. 1451/ 0 RN/L = 3.00 GRADIENT INTERVAL = -5.00/ 5.00

ALPHAT	BETAT	CNFT	CAFT	CLMFT	CYFT	CYNFT	CBLFT	CABT	CP7	ALPHAO	BETAO
4.515	-5.753	-.07820	.11340	.08670	.09210	-.00750	-.00020	.06350	-.28240	4.05310	-5.73890
4.436	-3.535	-.06240	.11380	.07460	.05550	-.00640	-.00050	.06240	-.27740	4.01680	-3.53260
4.068	.323	-.05260	.11290	.06270	-.00670	-.00170	-.00030	.06070	-.26980	3.66850	.30160
4.077	4.141	-.05230	.11230	.06610	-.06220	.00260	-.00040	.06040	-.26890	3.68860	4.09950
4.002	6.142	-.05110	.11240	.06630	-.09640	.00560	-.00040	.06100	-.27130	3.62080	6.09680
	GRADIENT	.00132	-.00020	-.00111	-.01534	.00117	.00001	-.00026	.00111	-.04284	.99433

IA156A, AEDC PWT 16T-470, O T S W/SILTS (R8NTEO) (10 MAY 80)

REFERENCE DATA

SREF = 2690.0000 SQ.FT. XMRP = 976.0000 IN. XT
LREF = 1290.3000 INCHES YMRP = .0000 IN. YT
BREF = 1290.3000 INCHES ZMRP = 400.0000 IN. ZT
SCALE = .0200

PARAMETRIC DATA

IB-ELV = 10.000 OB-ELV = -7.000
BDFLAP = .000 SPDBRK = .000
RUDDER = .000 SILTS = 1.000
MACH = 1.400 RN/L = 3.500

RUN NO. 1456/ 0 RN/L = 3.00 GRADIENT INTERVAL = -5.00/ 5.00

ALPHAT	BETAT	CNFT	CAFT	CLMFT	CYFT	CYNFT	CBLFT	CABT	CP7	ALPHAO	BETAO
-8.283	-5.885	-.30360	.11010	.03690	.09500	-.00510	.00000	.08300	-.36900	-8.24230	-5.84400
-8.309	-3.800	-.28970	.11140	.02950	.05790	-.00190	-.00010	.08050	-.35790	-8.25630	-3.76070
-8.242	.463	-.26510	.11270	.01450	-.00540	-.00150	-.00010	.07840	-.34890	-8.13870	.45350
-8.069	4.438	-.26700	.11380	.01970	-.06100	-.00170	-.00020	.07910	-.35180	-7.98570	4.38810
-8.021	6.327	-.26520	.11320	.01940	-.09170	-.00010	-.00040	.07940	-.35330	-7.93890	6.26980
	GRADIENT	.00279	.00029	-.00122	-.01444	.00003	-.00001	-.00017	.00076	.03278	.98918

RUN NO. 1457/ 0 RN/L = 3.00 GRADIENT INTERVAL = -5.00/ 5.00

ALPHAT	BETAT	CNFT	CAFT	CLMFT	CYFT	CYNFT	CBLFT	CABT	CP7	ALPHAO	BETAO
-6.251	-6.006	-.25580	.11220	.03830	.10230	-.00890	.00000	.08120	-.36120	-6.24640	-5.95810
-6.172	-4.030	-.24410	.11320	.03310	.06230	-.00380	-.00010	.07840	-.34850	-6.15930	-3.99700
-6.283	.176	-.21940	.11510	.01730	-.00340	-.00100	-.00020	.07610	-.33860	-6.23320	.17100
-6.011	4.318	-.21460	.11520	.02150	-.06030	-.00080	-.00020	.07710	-.34300	-5.96980	4.27560
-5.983	6.330	-.21170	.11320	.02040	-.09700	.00290	-.00040	.07950	-.35350	-5.94370	6.27510
	GRADIENT	.00354	.00024	-.00140	-.01469	.00036	-.00001	-.00016	.00066	.02260	.99100

RUN NO. 1458/ 0 RN/L = 3.00 GRADIENT INTERVAL = -5.00/ 5.00

ALPHAT	BETAT	CNFT	CAFT	CLMFT	CYFT	CYNFT	CBLFT	CABT	CP7	ALPHAO	BETAO
-4.047	-6.110	-.21120	.11350	.04520	.10220	-.00980	.00000	.07870	-.35020	-4.12450	-6.08300
-4.292	-3.965	-.20440	.11480	.03780	.05850	-.00360	-.00020	.07630	-.33950	-4.34310	-3.95140
-4.195	.416	-.17620	.11720	.02380	-.00680	-.00110	-.00030	.07330	-.32620	-4.22380	.41040
-3.671	4.352	-.16880	.11640	.03030	-.05980	-.00060	-.00040	.07490	-.33330	-3.73330	4.32970
-3.794	6.224	-.16950	.11530	.02750	-.09420	.00280	-.00050	.07670	-.34100	-3.83940	6.18790
	GRADIENT	.00432	.00020	-.00094	-.01424	.00036	-.00002	-.00018	.00079	.07246	.99570

RUN NO. 1459/ 0 RN/L = 3.00 GRADIENT INTERVAL = -5.00/ 5.00

ALPHAT	BETAT	CNFT	CAFT	CLMFT	CYFT	CYNFT	CBLFT	CABT	CP7	ALPHAO	BETAO
-.258	-6.955	-.15830	.11390	.06680	.11680	-.01250	.00020	.07660	-.34070	-.51750	-6.97220
-.251	-4.809	-.14220	.11440	.05770	.07280	-.00660	-.00010	.07220	-.32100	-.48470	-4.84020
-.254	-.422	-.11580	.11540	.04200	.00550	-.00300	-.00030	.06870	-.30570	-.43960	-.48700
-.200	3.701	-.11560	.11710	.04770	-.05660	.00220	-.00020	.07040	-.31310	-.42210	3.62230
-.224	5.892	-.11370	.11570	.04650	-.09250	.00490	-.00030	.07240	-.32210	-.43670	5.80130
	GRADIENT	.00316	.00032	-.00120	-.01521	.00103	-.00001	-.00022	.00096	.00739	.99438

IA156A, AEDC PWT 16T-470, O T S W/SILTS (R8NTE0) (10 MAY 80)

REFERENCE DATA

SREF = 2690.0000 SQ.FT. XMRP = 976.0000 IN. XT
LREF = 1290.3000 INCHES YMRP = .0000 IN. YT
BREF = 1290.3000 INCHES ZMRP = 400.0000 IN. ZT
SCALE = .0200

PARAMETRIC DATA

IB-ELV = 10.000 OB-ELV = -7.000
BDFLAP = .000 SPDBRK = .000
RUDDER = .000 SILTS = 1.000
MACH = 1.400 RN/L = 3.500

RUN NO. 1460/ 0 RN/L = 3.00 GRADIENT INTERVAL = -5.00/ 5.00

ALPHAT	BETAT	CNFT	CAFT	CLMFT	CYFT	CYNFT	CBLFT	CABT	CP7	ALPHAO	BETAO
4.592	-5.782	-.08150	.11210	.08810	.09680	-.01000	.00000	.07100	-.31600	4.13560	-5.76680
4.424	-3.659	-.06750	.11190	.07730	.05990	-.00900	-.00010	.06970	-.30990	4.00310	-3.65830
4.139	.195	-.05650	.11220	.06540	-.00150	-.00430	-.00010	.06830	-.30370	3.74350	.17100
4.169	4.088	-.05510	.11180	.06890	-.06300	.00300	-.00010	.06950	-.30900	3.77630	4.04960
4.126	6.151	-.05760	.11310	.07080	-.10000	.00780	-.00020	.07040	-.31330	3.73310	6.10970
	GRADIENT	.00160	-.00001	-.00108	-.01586	.00155	.00000	-.00003	.00011	-.02921	.99489

IA156A, AEDC PWT 16T-470, O T S W/SILTS (R8NTE1) (10 MAY 80)

REFERENCE DATA

SREF = 2690.0000 SQ.FT. XMRP = 976.0000 IN. XT
LREF = 1290.3000 INCHES YMRP = .0000 IN. YT
BREF = 1290.3000 INCHES ZMRP = 400.0000 IN. ZT
SCALE = .0200

PARAMETRIC DATA

IB-ELV = 10.000 OB-ELV = -7.000
BDFLAP = .000 SPDBRK = .000
RUDDER = .000 SILTS = 1.000
MACH = 1.550 RN/L = 3.200

RUN NO. 1461/ 0 RN/L = 3.00 GRADIENT INTERVAL = -5.00/ 5.00

ALPHAT	BETAT	CNFT	CAFT	CLMFT	CYFT	CYNFT	CBLFT	CABT	CP7	ALPHAO	BETAO
-8.243	-5.846	-.30230	.11210	.04460	.09060	-.00390	-.00010	.07260	-.32300	-8.26980	-5.80990
-8.308	-3.844	-.29730	.11210	.03990	.05920	-.00360	-.00030	.07200	-.32020	-8.31490	-3.81250
-8.233	.425	-.27110	.11480	.02640	-.00190	-.00280	-.00020	.07020	-.31230	-8.20960	.40920
-8.031	4.410	-.26930	.11570	.02900	-.05780	-.00220	-.00010	.07100	-.31560	-8.01810	4.36440
-7.992	6.440	-.27180	.11670	.02850	-.08700	-.00310	-.00020	.07130	-.31700	-7.96680	6.38360
	GRADIENT	.00343	.00044	-.00134	-.01418	.00017	.00002	-.00012	.00057	.03583	.99069

RUN NO. 1462/ 0 RN/L = 3.00 GRADIENT INTERVAL = -5.00/ 5.00

ALPHAT	BETAT	CNFT	CAFT	CLMFT	CYFT	CYNFT	CBLFT	CABT	CP7	ALPHAO	BETAO
-6.314	-5.998	-.25590	.11290	.04440	.09990	-.01010	-.00010	.07150	-.31810	-6.35460	-5.96690
-6.220	-4.011	-.24270	.11460	.03900	.06230	-.00540	-.00020	.07000	-.31140	-6.25120	-3.98830
-6.267	.252	-.22610	.11460	.02890	-.00460	-.00120	-.00030	.06880	-.30620	-6.28170	.23830
-5.993	4.436	-.21720	.11700	.02910	-.06290	.00070	-.00020	.06770	-.30100	-6.00560	4.39460
-5.807	6.551	-.21480	.11800	.02920	-.09970	.00430	-.00030	.06820	-.30310	-5.82480	6.50230
	GRADIENT	.00302	.00052	-.00118	-.01483	.00072	-.00000	-.00027	.00123	.02896	.99246

IA156A, AEDC PWT 16T-470, O T S W/SILTS (R8NTE1) (10 MAY 80)

REFERENCE DATA

SREF = 2690.0000 SQ.FT. XMRP = 976.0000 IN. XT
LREF = 1290.3000 INCHES YMRP = .0000 IN. YT
BREF = 1290.3000 INCHES ZMRP = 400.0000 IN. ZT
SCALE = .0200

PARAMETRIC DATA

IB-ELV = 10.000 OB-ELV = -7.000
BDFLAP = .000 SPDBRK = .000
RUDDER = .000 SILTS = 1.000
MACH = 1.550 RN/L = 3.200

RUN NO. 1463/ 0 RN/L = 3.00 GRADIENT INTERVAL = -5.00/ 5.00

ALPHAT	BETAT	CNFT	CAFT	CLMFT	CYFT	CYNFT	CBLFT	CABT	CP7	ALPHAO	BETAO
-4.229	-6.123	-.21200	.11170	.04850	.09850	-.00970	-.00010	.06930	-.30820	-4.32030	-6.10790
-4.377	-3.958	-.20300	.11280	.04110	.05650	-.00340	-.00020	.06800	-.30240	-4.44860	-3.95370
-4.215	.518	-.17930	.11530	.03060	-.00880	-.00150	-.00040	.06590	-.29310	-4.27760	.50290
-3.646	4.463	-.16950	.11670	.03450	-.06250	-.00020	-.00030	.06680	-.29730	-3.73120	4.44560
-3.715	6.283	-.17320	.11670	.03430	-.09540	.00460	-.00040	.06850	-.30480	-3.79500	6.26100
	GRADIENT	.00401	.00047	-.00082	-.01414	.00038	-.00001	-.00015	.00064	.08414	.99739

RUN NO. 1464/ 0 RN/L = 3.00 GRADIENT INTERVAL = -5.00/ 5.00

ALPHAT	BETAT	CNFT	CAFT	CLMFT	CYFT	CYNFT	CBLFT	CABT	CP7	ALPHAO	BETAO
-.351	-7.071	-.15390	.11160	.06640	.11170	-.01010	.00020	.06800	-.30250	-.60780	-7.09410
-.341	-4.876	-.13850	.11160	.05770	.07270	-.00630	-.00010	.06450	-.28670	-.57700	-4.90840
-.347	-.522	-.11670	.11380	.04380	.00560	-.00200	-.00030	.06060	-.26930	-.54340	-.58460
-.330	3.646	-.11390	.11600	.04450	-.05460	.00060	-.00020	.06280	-.27910	-.53010	3.56760
-.351	5.828	-.11230	.11590	.04330	-.09030	.00370	-.00030	.06520	-.28980	-.53550	5.74430
	GRADIENT	.00290	.00052	-.00156	-.01494	.00081	-.00001	-.00020	.00091	.00552	.99458

RUN NO. 1465/ 0 RN/L = 3.00 GRADIENT INTERVAL = -5.00/ 5.00

ALPHAT	BETAT	CNFT	CAFT	CLMFT	CYFT	CYNFT	CBLFT	CABT	CP7	ALPHAO	BETAO
4.630	-5.677	-.07600	.11420	.08670	.09320	-.00900	-.00010	.06330	-.28180	4.17070	-5.66440
4.410	-3.554	-.06300	.11450	.07420	.05750	-.00750	-.00020	.06230	-.27710	3.99760	-3.55200
4.076	.278	-.05090	.11310	.06220	-.00480	-.00300	-.00020	.06050	-.26900	3.68170	.25580
4.053	4.095	-.05180	.11340	.06600	-.06130	.00120	-.00020	.06110	-.27160	3.66790	4.05210
4.011	6.152	-.05030	.11280	.06580	-.09650	.00460	-.00020	.06220	-.27680	3.63430	6.10670
	GRADIENT	.00147	-.00014	-.00107	-.01553	.00114	.00000	-.00016	.00072	-.04313	.99413

IA156A, AEDC PWT 16T-470, O T S W/SILTS (R8NTE2) (10 MAY 80)

REFERENCE DATA

SREF = 2690.0000 SQ.FT. XMRP = 976.0000 IN. XT
LREF = 1290.3000 INCHES YMRP = .0000 IN. YT
BREF = 1290.3000 INCHES ZMRP = 400.0000 IN. ZT
SCALE = .0200

PARAMETRIC DATA

IB-ELV = 12.000 OB-ELV = -7.000
BDFLAP = .000 SPDBRK = .000
RUDDER = .000 SILTS = 1.000
MACH = 1.400 RN/L = 3.500

RUN NO. 1469/ 0 RN/L = 3.01 GRADIENT INTERVAL = -5.00/ 5.00

ALPHAT	BETAT	CNFT	CAFT	CLMFT	CYFT	CYNFT	CBLFT	CABT	CP7	ALPHAO	BETAO
-8.256	-5.906	-.30400	.11160	.03690	.09670	-.00580	.00010	.08190	-.36440	-8.21990	-5.86630
-8.288	-3.846	-.29060	.11140	.03030	.05960	-.00210	.00000	.08010	-.35620	-8.24300	-3.80550
-8.244	.322	-.26630	.11330	.01490	-.00230	-.00180	-.00010	.07770	-.34580	-8.14790	.31410
-8.046	4.379	-.26500	.11430	.01920	-.06050	-.00170	-.00010	.07830	-.34810	-7.96880	4.33100
-8.034	6.333	-.26640	.11410	.01940	-.09120	-.00050	-.00030	.07950	-.35370	-7.95770	6.27530
	GRADIENT	.00312	.00035	-.00136	-.01460	.00005	-.00001	-.00022	.00099	.03329	.98920

RUN NO. 1470/ 0 RN/L = 3.00 GRADIENT INTERVAL = -5.00/ 5.00

ALPHAT	BETAT	CNFT	CAFT	CLMFT	CYFT	CYNFT	CBLFT	CABT	CP7	ALPHAO	BETAO
-6.240	-6.008	-.25460	.11240	.03860	.10240	-.00900	.00010	.08040	-.35770	-6.24290	-5.96070
-6.160	-4.034	-.24430	.11310	.03360	.06300	-.00400	.00000	.07790	-.34660	-6.15400	-4.00050
-6.266	.181	-.22020	.11530	.01760	-.00230	-.00130	-.00020	.07600	-.33810	-6.22410	.17560
-6.042	4.336	-.21610	.11510	.02120	-.06030	-.00080	-.00030	.07630	-.33950	-6.00300	4.29490
-5.812	6.442	-.20940	.11440	.02030	-.09640	.00260	-.00040	.07800	-.34690	-5.78010	6.38940
	GRADIENT	.00337	.00024	-.00149	-.01473	.00038	-.00004	-.00019	.00085	.01796	.99107

RUN NO. 1471/ 0 RN/L = 3.00 GRADIENT INTERVAL = -5.00/ 5.00

ALPHAT	BETAT	CNFT	CAFT	CLMFT	CYFT	CYNFT	CBLFT	CABT	CP7	ALPHAO	BETAO
-4.066	-6.117	-.21190	.11420	.04530	.10370	-.01000	.00010	.07850	-.34910	-4.14890	-6.08670
-4.289	-3.969	-.20410	.11500	.03790	.05940	-.00400	-.00010	.07570	-.33690	-4.34650	-3.95690
-4.174	.417	-.17630	.11750	.02380	-.00600	-.00140	-.00020	.07270	-.32340	-4.20930	.41160
-3.679	4.370	-.16820	.11630	.02980	-.06130	-.00040	-.00030	.07450	-.33130	-3.74400	4.34720
-3.789	6.216	-.16880	.11500	.02720	-.09380	.00270	-.00040	.07630	-.33940	-3.83890	6.18080
	GRADIENT	.00434	.00016	-.00101	-.01448	.00043	-.00002	-.00015	.00072	.07151	.99582

RUN NO. 1472/ 0 RN/L = 2.99 GRADIENT INTERVAL = -5.00/ 5.00

ALPHAT	BETAT	CNFT	CAFT	CLMFT	CYFT	CYNFT	CBLFT	CABT	CP7	ALPHAO	BETAO
-.248	-6.949	-.15850	.11530	.06680	.11580	-.01240	.00030	.07520	-.33450	-.51270	-6.96890
-.244	-4.805	-.14350	.11500	.05810	.07370	-.00700	.00000	.07220	-.32100	-.48230	-4.83790
-.246	-.435	-.11600	.11560	.04220	.00640	-.00350	-.00020	.06820	-.30320	-.43740	-.50160
-.190	3.715	-.11520	.11650	.04780	-.05620	.00190	-.00010	.07050	-.31360	-.41630	3.63670
-.208	5.888	-.11340	.11780	.04670	-.09200	.00450	-.00020	.07060	-.31400	-.42730	5.79750
	GRADIENT	.00335	.00018	-.00123	-.01525	.00104	-.00001	-.00021	.00090	.00777	.99464

IA156A, AEDC PWT 16T-470, O T S W/SILTS (R8NTE2) (10 MAY 80)

REFERENCE DATA

SREF = 2690.0000 SQ.FT. XMRP = 976.0000 IN. XT
LREF = 1290.3000 INCHES YMRP = .0000 IN. YT
BREF = 1290.3000 INCHES ZMRP = 400.0000 IN. ZT
SCALE = .0200

PARAMETRIC DATA

IB-ELV = 12.000 OB-ELV = -7.000
BDFLAP = .000 SPDBRK = .000
RUDDER = .000 SILTS = 1.000
MACH = 1.400 RN/L = 3.500

RUN NO. 1473/ 0 RN/L = 3.00 GRADIENT INTERVAL = -5.00/ 5.00

ALPHAT	BETAT	CNFT	CAFT	CLMFT	CYFT	CYNFT	CBLFT	CABT	CP7	ALPHAO	BETAO
4.593	-5.770	-.08130	.11120	.08790	.09650	-.01020	.00010	.07030	-.31250	4.13510	-5.75580
4.414	-3.653	-.06850	.11170	.07710	.06030	-.00940	.00000	.06950	-.30900	3.98960	-3.65250
4.144	.190	-.05720	.11420	.06600	-.00010	-.00470	.00000	.06650	-.29570	3.74060	.16630
4.167	4.085	-.05520	.11260	.06910	-.06280	.00290	-.00010	.06850	-.30450	3.76850	4.04680
4.135	6.169	-.05770	.11290	.07050	-.09980	.00760	-.00020	.06980	-.31050	3.73770	6.12840
	GRADIENT	.00172	.00012	-.00103	-.01591	.00159	-.00001	-.00013	.00058	-.02850	.99513

IA156A, AEDC PWT 16T-470, O T S W/SILTS (R8NTE3) (10 MAY 80)

REFERENCE DATA

SREF = 2690.0000 SQ.FT. XMRP = 976.0000 IN. XT
LREF = 1290.3000 INCHES YMRP = .0000 IN. YT
BREF = 1290.3000 INCHES ZMRP = 400.0000 IN. ZT
SCALE = .0200

PARAMETRIC DATA

IB-ELV = 12.000 OB-ELV = -7.000
BDFLAP = .000 SPDBRK = .000
RUDDER = .000 SILTS = 1.000
MACH = 1.550 RN/L = 3.200

RUN NO. 1474/ 0 RN/L = 3.01 GRADIENT INTERVAL = -5.00/ 5.00

ALPHAT	BETAT	CNFT	CAFT	CLMFT	CYFT	CYNFT	CBLFT	CABT	CP7	ALPHAO	BETAO
-8.288	-5.868	-.30560	.11270	.04560	.09170	-.00440	-.00010	.07190	-.31970	-8.32350	-5.83340
-8.328	-3.741	-.29600	.11300	.03980	.05770	-.00360	-.00020	.07060	-.31400	-8.34380	-3.71180
-8.225	.334	-.27170	.11440	.02690	-.00180	-.00280	-.00010	.06950	-.30900	-8.20900	.31840
-8.009	4.535	-.27100	.11760	.02940	-.05860	-.00300	-.00010	.06990	-.31100	-8.00340	4.48740
-7.976	6.441	-.27280	.11730	.02920	-.08690	-.00350	-.00020	.07040	-.31320	-7.96050	6.38280
	GRADIENT	.00301	.00056	-.00125	-.01405	.00007	.00001	-.00008	.00036	.04117	.99071

RUN NO. 1475/ 0 RN/L = 3.01 GRADIENT INTERVAL = -5.00/ 5.00

ALPHAT	BETAT	CNFT	CAFT	CLMFT	CYFT	CYNFT	CBLFT	CABT	CP7	ALPHAO	BETAO
-6.311	-5.995	-.25790	.11290	.04490	.10260	-.01050	-.00010	.07130	-.31720	-6.35800	-5.96320
-6.220	-3.999	-.24280	.11300	.03880	.06220	-.00540	-.00010	.06910	-.30730	-6.25600	-3.97520
-6.253	.264	-.22590	.11490	.02880	-.00310	-.00170	-.00020	.06820	-.30350	-6.27300	.24900
-5.964	4.419	-.21890	.11780	.02970	-.06170	.00030	-.00010	.06770	-.30090	-5.98340	4.37860
-5.679	6.567	-.21480	.11800	.02940	-.09940	.00410	-.00030	.06840	-.30430	-5.70200	6.51930
	GRADIENT	.00284	.00057	-.00109	-.01472	.00068	-.00000	-.00017	.00076	.03223	.99243

IA156A FORCE DATA WITH FLOW ANGULARITY CORRECTION

IA156A, AEDC PWT 16T-470, O T S W/SILTS

(R8NTE3) (10 MAY 80)

REFERENCE DATA

SREF = 2690.0000 SQ.FT. XMRP = 976.0000 IN. XT
LREF = 1290.3000 INCHES YMRP = .0000 IN. YT
BREF = 1290.3000 INCHES ZMRP = 400.0000 IN. ZT
SCALE = .0200

PARAMETRIC DATA

IB-ELV = 12.000 OB-ELV = -7.000
BDFLAP = .000 SPDBRK = .000
RUDDER = .000 SILTS = 1.000
MACH = 1.550 RN/L = 3.200

RUN NO. 1476/ 0 RN/L = 3.01 GRADIENT INTERVAL = -5.00/ 5.00

ALPHAT	BETAT	CNFT	CAFT	CLMFT	CYFT	CYNFT	CBLFT	CABT	CP7	ALPHAO	BETAO
-4.092	-6.147	-.21060	.11250	.04960	.09970	-.00990	.00000	.06890	-.30660	-4.19600	-6.13480
-4.372	-3.952	-.20410	.11350	.04170	.05620	-.00340	-.00010	.06710	-.29860	-4.45080	-3.94860
-4.195	.507	-.17910	.11600	.03110	-.00820	-.00180	-.00030	.06550	-.29120	-4.26540	.49240
-3.651	4.455	-.16900	.11800	.03460	-.06100	-.00050	-.00020	.06560	-.29170	-3.74180	4.43920
-3.710	6.277	-.17270	.11780	.03410	-.09480	.00430	-.00030	.06670	-.29670	-3.79520	6.25540
	GRADIENT	.00421	.00054	-.00088	-.01395	.00035	-.00001	-.00018	.00084	.08342	.99770

RUN NO. 1477/ 0 RN/L = 3.01 GRADIENT INTERVAL = -5.00/ 5.00

ALPHAT	BETAT	CNFT	CAFT	CLMFT	CYFT	CYNFT	CBLFT	CABT	CP7	ALPHAO	BETAO
-.334	-7.020	-.15470	.11390	.06710	.11310	-.01050	.00030	.06570	-.29220	-.60020	-7.04380
-.332	-4.875	-.13910	.11170	.05820	.07280	-.00650	.00000	.06450	-.28680	-.57650	-4.90880
-.335	-.497	-.11690	.11340	.04430	.00520	-.00220	-.00020	.06090	-.27070	-.54000	-.55920
-.320	3.642	-.11250	.11610	.04430	-.05350	.00020	-.00010	.06260	-.27860	-.52760	3.56490
-.333	5.822	-.11070	.11720	.04330	-.08880	.00320	-.00020	.06280	-.27940	-.52660	5.73950
	GRADIENT	.00314	.00052	-.00165	-.01484	.00079	-.00001	-.00023	.00099	.00577	.99491

RUN NO. 1478/ 0 RN/L = 3.01 GRADIENT INTERVAL = -5.00/ 5.00

ALPHAT	BETAT	CNFT	CAFT	CLMFT	CYFT	CYNFT	CBLFT	CABT	CP7	ALPHAO	BETAO
4.643	-5.685	-.07580	.11460	.08720	.09520	-.00950	.00000	.06300	-.28020	4.17780	-5.67360
4.417	-3.553	-.06300	.11520	.07420	.05800	-.00770	-.00020	.06150	-.27350	4.00120	-3.55120
4.089	.271	-.05170	.11280	.06270	-.00340	-.00340	-.00010	.05990	-.26640	3.68360	.24810
4.063	4.098	-.05090	.11280	.06630	-.06070	.00080	-.00010	.06130	-.27290	3.67040	4.05510
4.025	6.166	-.05040	.11300	.06580	-.09550	.00410	-.00010	.06140	-.27320	3.64200	6.11980
	GRADIENT	.00158	-.00031	-.00103	-.01551	.00111	.00001	-.00003	.00008	-.04323	.99418

IA156A, AEDC PWT 16T-470, O T S W/SILTS (R8NTE4) (10 MAY 80)

REFERENCE DATA

SREF = 2690.0000 SQ.FT. XMRP = 976.0000 IN. XT
LREF = 1290.3000 INCHES YMRP = .0000 IN. YT
BREF = 1290.3000 INCHES ZMRP = 400.0000 IN. ZT
SCALE = .0200

PARAMETRIC DATA

IB-ELV = 8.000 OB-ELV = -7.000
BDFLAP = .000 SPDBRK = .000
RUDDER = .000 SILTS = 1.000
MACH = 1.400 RN/L = 3.500

RUN NO. 1482/ 0 RN/L = 3.00 GRADIENT INTERVAL = -5.00/ 5.00

ALPHAT	BETAT	CNFT	CAFT	CLMFT	CYFT	CYNFT	CBLFT	CABT	CP7	ALPHAO	BETAO
-8.217	-5.784	-.29980	.11050	.03600	.09370	-.00530	.00010	.08330	-.37040	-8.17040	-5.74250
-8.291	-3.783	-.29130	.11130	.02990	.05770	-.00170	.00000	.08190	-.36440	-8.23510	-3.74190
-8.253	.235	-.26640	.11340	.01440	-.00140	-.00220	-.00010	.07980	-.35490	-8.14160	.22560
-8.076	4.528	-.26540	.11480	.01860	-.06380	-.00150	-.00010	.07870	-.34990	-7.98310	4.47760
-8.023	6.345	-.26460	.11430	.01930	-.09470	.00000	-.00030	.08050	-.35820	-7.93630	6.28520
	GRADIENT	.00308	.00042	-.00133	-.01462	.00003	-.00001	-.00038	.00174	.03040	.98903

RUN NO. 1483/ 0 RN/L = 3.00 GRADIENT INTERVAL = -5.00/ 5.00

ALPHAT	BETAT	CNFT	CAFT	CLMFT	CYFT	CYNFT	CBLFT	CABT	CP7	ALPHAO	BETAO
-6.277	-6.019	-.25520	.11260	.03800	.10240	-.00890	.00010	.08170	-.36320	-6.26570	-5.96980
-6.171	-4.046	-.24180	.11340	.03300	.06280	-.00400	-.00010	.07880	-.35040	-6.15480	-4.01120
-6.272	.152	-.22140	.11540	.01790	-.00220	-.00110	-.00020	.07780	-.34620	-6.21930	.14760
-6.054	4.328	-.21600	.11480	.02120	-.06090	-.00070	-.00020	.07760	-.34500	-6.00270	4.28650
-5.773	6.466	-.20890	.11430	.02040	-.09850	.00300	-.00040	.07900	-.35150	-5.73040	6.41200
	GRADIENT	.00308	.00017	-.00141	-.01477	.00039	-.00001	-.00014	.00065	.01813	.99081

RUN NO. 1484/ 0 RN/L = 3.00 GRADIENT INTERVAL = -5.00/ 5.00

ALPHAT	BETAT	CNFT	CAFT	CLMFT	CYFT	CYNFT	CBLFT	CABT	CP7	ALPHAO	BETAO
-4.039	-6.144	-.21090	.11480	.04510	.10320	-.01000	.00010	.07860	-.34960	-4.10990	-6.11330
-4.300	-3.961	-.20460	.11470	.03790	.05820	-.00390	-.00010	.07700	-.34260	-4.34560	-3.94690
-4.193	.424	-.17680	.11720	.02400	-.00740	-.00110	-.00020	.07470	-.33220	-4.21830	.41800
-3.708	4.375	-.16860	.11660	.02950	-.06130	-.00020	-.00020	.07520	-.33430	-3.75970	4.35250
-3.784	6.193	-.16990	.11470	.02750	-.09360	.00270	-.00040	.07760	-.34530	-3.82250	6.15730
	GRADIENT	.00436	.00023	-.00105	-.01435	.00045	-.00001	-.00022	.00102	.06954	.99566

RUN NO. 1485/ 0 RN/L = 3.00 GRADIENT INTERVAL = -5.00/ 5.00

ALPHAT	BETAT	CNFT	CAFT	CLMFT	CYFT	CYNFT	CBLFT	CABT	CP7	ALPHAO	BETAO
-.271	-6.994	-.15780	.11500	.06640	.11610	-.01250	.00030	.07660	-.34070	-.52130	-7.00950
-.265	-4.810	-.14290	.11420	.05750	.07240	-.00690	.00000	.07300	-.32470	-.49250	-4.83890
-.259	-.433	-.11580	.11740	.04220	.00540	-.00310	-.00020	.06930	-.30810	-.43940	-.49800
-.217	3.701	-.11670	.11640	.04760	-.05690	.00220	-.00010	.07080	-.31510	-.43070	3.62070
-.241	5.895	-.11520	.11640	.04640	-.09260	.00460	-.00020	.07340	-.32630	-.44450	5.80250
	GRADIENT	.00311	.00026	-.00119	-.01519	.00107	-.00001	-.00026	.00115	.00731	.99404

IA156A, AEDC PWT 16T-470, O T S W/SILTS (R8NTE4) (10 MAY 80)

REFERENCE DATA

SREF = 2690.0000 SQ.FT. XMRP = 976.0000 IN. XT
LREF = 1290.3000 INCHES YMRP = .0000 IN. YT
BREF = 1290.3000 INCHES ZMRP = 400.0000 IN. ZT
SCALE = .0200

PARAMETRIC DATA

IB-ELV = 8.000 OB-ELV = -7.000
BDFLAP = .000 SPDBRK = .000
RUDDER = .000 SILTS = 1.000
MACH = 1.400 RN/L = 3.500

RUN NO. 1486/ 0 RN/L = 3.00 GRADIENT INTERVAL = -5.00/ 5.00

ALPHAT	BETAT	CNFT	CAFT	CLMFT	CYFT	CYNFT	CBLFT	CABT	CP7	ALPHAO	BETAO
4.599	-5.758	-.08040	.11140	.08810	.09570	-.01040	.00010	.07410	-.32950	4.14780	-5.74370
4.391	-3.688	-.06660	.11180	.07700	.06010	-.00910	-.00010	.07020	-.31220	3.97730	-3.68590
4.153	.099	-.05670	.11260	.06610	.00020	-.00450	-.00010	.06880	-.30610	3.75910	.07740
4.159	4.044	-.05480	.11240	.06900	-.06230	.00290	-.00010	.07060	-.31390	3.77100	4.00560
4.117	6.159	-.05730	.11330	.07050	-.10080	.00790	-.00020	.07060	-.31420	3.72980	6.11910
	GRADIENT	.00152	.00008	-.00102	-.01583	.00155	-.00000	.00005	-.00023	-.02648	.99472

IA156A, AEDC PWT 16T-470, O T S W/SILTS (R8NTE5) (10 MAY 80)

REFERENCE DATA

SREF = 2690.0000 SQ.FT. XMRP = 976.0000 IN. XT
LREF = 1290.3000 INCHES YMRP = .0000 IN. YT
BREF = 1290.3000 INCHES ZMRP = 400.0000 IN. ZT
SCALE = .0200

PARAMETRIC DATA

IB-ELV = 8.000 OB-ELV = -7.000
BDFLAP = .000 SPDBRK = .000
RUDDER = .000 SILTS = 1.000
MACH = 1.550 RN/L = 3.200

RUN NO. 1487/ 0 RN/L = 3.00 GRADIENT INTERVAL = -5.00/ 5.00

ALPHAT	BETAT	CNFT	CAFT	CLMFT	CYFT	CYNFT	CBLFT	CABT	CP7	ALPHAO	BETAO
-8.271	-5.858	-.30480	.11340	.04550	.09020	-.00410	.00000	.07260	-.32270	-8.29720	-5.82160
-8.322	-3.738	-.29370	.11270	.03930	.05730	-.00360	-.00020	.07140	-.31780	-8.32540	-3.70790
-8.242	.311	-.27310	.11480	.02680	-.00200	-.00260	-.00010	.07130	-.31710	-8.21190	.29760
-7.991	4.617	-.27060	.11750	.02960	-.06050	-.00280	-.00010	.06990	-.31100	-7.97270	4.56990
-8.015	6.475	-.27130	.11720	.02890	-.08900	-.00350	-.00010	.07070	-.31450	-7.98620	6.41630
	GRADIENT	.00274	.00058	-.00114	-.01409	.00009	.00001	-.00018	.00082	.04235	.99078

RUN NO. 1488/ 0 RN/L = 3.00 GRADIENT INTERVAL = -5.00/ 5.00

ALPHAT	BETAT	CNFT	CAFT	CLMFT	CYFT	CYNFT	CBLFT	CABT	CP7	ALPHAO	BETAO
-6.311	-5.988	-.25490	.11210	.04420	.09880	-.00990	-.00010	.07280	-.32360	-6.34710	-5.95440
-6.235	-3.999	-.24330	.11230	.03920	.06050	-.00510	-.00020	.07070	-.31440	-6.26170	-3.97470
-6.259	.243	-.22540	.11490	.02900	-.00400	-.00150	-.00020	.06900	-.30710	-6.26850	.22940
-5.996	4.437	-.21970	.11700	.02980	-.06240	.00040	-.00010	.06960	-.30960	-6.00320	4.39800
-5.910	6.415	-.22030	.11790	.02940	-.09680	.00350	-.00030	.06950	-.30910	-5.91710	6.36560
	GRADIENT	.00280	.00056	-.00112	-.01457	.00065	.00001	-.00013	.00057	.03058	.99249

IA156A, AEDC PWT 16T-470, O T S W/SILTS (R8NTE5) (10 MAY 80)

REFERENCE DATA

SREF = 2690.0000 SQ.FT. XMRP = 976.0000 IN. XT
LREF = 1290.3000 INCHES YMRP = .0000 IN. YT
BREF = 1290.3000 INCHES ZMRP = 400.0000 IN. ZT
SCALE = .0200

PARAMETRIC DATA

IB-ELV = 8.000 OB-ELV = -7.000
BDFLAP = .000 SPDBRK = .000
RUDDER = .000 SILTS = 1.000
MACH = 1.550 RN/L = 3.200

RUN NO. 1489/ 0 RN/L = 3.01 GRADIENT INTERVAL = -5.00/ 5.00

ALPHAT	BETAT	CNFT	CAFT	CLMFT	CYFT	CYNFT	CBLFT	CABT	CP7	ALPHAO	BETAO
-4.127	-6.144	-.21190	.11300	.04940	.09930	-.00990	.00000	.07050	-.31340	-4.21790	-6.12780
-4.385	-3.953	-.20430	.11350	.04130	.05570	-.00340	-.00010	.06790	-.30210	-4.44980	-3.94660
-4.222	.516	-.17960	.11650	.03110	-.01000	-.00120	-.00020	.06670	-.29680	-4.28110	.50260
-3.651	4.457	-.17040	.11790	.03490	-.06320	-.00010	-.00020	.06740	-.30000	-3.73150	4.44040
-3.726	6.279	-.17320	.11680	.03440	-.09440	.00440	-.00030	.06880	-.30590	-3.80190	6.25700
	GRADIENT	.00406	.00053	-.00079	-.01415	.00039	-.00001	-.00006	.00027	.08435	.99723

RUN NO. 1490/ 0 RN/L = 3.00 GRADIENT INTERVAL = -5.00/ 5.00

ALPHAT	BETAT	CNFT	CAFT	CLMFT	CYFT	CYNFT	CBLFT	CABT	CP7	ALPHAO	BETAO
-.356	-7.018	-.15450	.11320	.06680	.11140	-.01010	.00020	.06930	-.30820	-.61130	-7.03950
-.352	-4.877	-.13940	.11210	.05800	.07220	-.00640	.00000	.06480	-.28810	-.58500	-4.90890
-.350	-.499	-.11660	.11400	.04450	.00510	-.00220	-.00020	.06140	-.27300	-.54650	-.56160
-.341	3.641	-.11430	.11630	.04480	-.05510	.00070	-.00020	.06450	-.28670	-.53670	3.56400
-.354	5.833	-.11170	.11740	.04340	-.09090	.00370	-.00030	.06450	-.28700	-.53720	5.74860
	GRADIENT	.00297	.00049	-.00156	-.01495	.00083	-.00002	-.00004	.00020	.00570	.99458

RUN NO. 1491/ 0 RN/L = 3.00 GRADIENT INTERVAL = -5.00/ 5.00

ALPHAT	BETAT	CNFT	CAFT	CLMFT	CYFT	CYNFT	CBLFT	CABT	CP7	ALPHAO	BETAO
4.628	-5.679	-.07530	.11400	.08620	.09290	-.00890	.00000	.06380	-.28380	4.17510	-5.66620
4.397	-3.547	-.06300	.11420	.07400	.05710	-.00770	-.00020	.06330	-.28140	3.98880	-3.54590
4.080	.278	-.05160	.11350	.06330	-.00400	-.00330	-.00010	.06190	-.27510	3.68620	.25540
4.061	4.101	-.05180	.11370	.06640	-.06200	.00120	-.00010	.06170	-.27460	3.67960	4.05880
4.006	6.154	-.04980	.11360	.06570	-.09710	.00470	-.00020	.06210	-.27600	3.63380	6.10900
	GRADIENT	.00146	-.00007	-.00099	-.01557	.00116	.00001	-.00021	.00089	-.04043	.99434

IA156A FORCE DATA WITH FLOW ANGULARITY CORRECTION

IA156A, AEDC PWT 16T-470, O T S W/SILTS

(R8NTE6) (10 MAY 80)

REFERENCE DATA

SREF = 2690.0000 SQ.FT. XMRP = 976.0000 IN. XT
LREF = 1290.3000 INCHES YMRP = .0000 IN. YT
BREF = 1290.3000 INCHES ZMRP = 400.0000 IN. ZT
SCALE = .0200

PARAMETRIC DATA

IB-ELV = 10.000 OB-ELV = 2.000
BDFLAP = .000 SPDBRK = .000
RUDDER = .000 SILTS = 1.000
MACH = 1.050 RN/L = 3.500

RUN NO. 1494/ 0 RN/L = 3.50 GRADIENT INTERVAL = -5.00/ 5.00

ALPHAT	BETAT	CNFT	CAFT	CLMFT	CYFT	CYNFT	CBLFT	CABT	CP7	ALPHAO	BETAO
-8.367	-5.884	-.29000	.08660	.02040	.11010	-.01100	.00030	.11780	-.52410	-8.21530	-5.88050
-8.334	-3.764	-.28040	.08610	.01480	.06780	-.00730	.00010	.11560	-.51440	-8.17810	-3.76870
-8.348	.177	-.25340	.08790	-.00210	-.00020	-.00150	.00000	.11410	-.50770	-8.13070	.17470
-8.168	4.339	-.25690	.08720	.00330	-.06390	.00100	-.00010	.11620	-.51690	-7.96490	4.33260
-8.158	6.243	-.25940	.08650	.00520	-.09760	.00330	-.00030	.11680	-.51940	-7.96030	6.22310
	GRADIENT	.00287	.00013	-.00139	-.01624	.00102	-.00002	.00008	-.00033	.02644	.99976

RUN NO. 1495/ 0 RN/L = 3.50 GRADIENT INTERVAL = -5.00/ 5.00

ALPHAT	BETAT	CNFT	CAFT	CLMFT	CYFT	CYNFT	CBLFT	CABT	CP7	ALPHAO	BETAO
-6.238	-5.952	-.24290	.08660	.02660	.11190	-.01510	.00050	.11290	-.50220	-6.16400	-5.95700
-6.197	-4.043	-.23620	.08730	.02300	.07350	-.01050	.00030	.11080	-.49300	-6.12010	-4.05550
-6.338	.116	-.20640	.08840	.00300	.00070	-.00250	.00000	.11230	-.49960	-6.20350	.11170
-6.119	4.239	-.21000	.08770	.01130	-.06250	.00410	-.00030	.11050	-.49140	-6.00940	4.24300
-6.069	6.206	-.21270	.08740	.01260	-.09630	.00730	-.00040	.11220	-.49880	-5.95970	6.20500
	GRADIENT	.00317	.00005	-.00142	-.01642	.00176	-.00007	-.00004	.00019	.01332	1.00192

RUN NO. 1496/ 0 RN/L = 3.50 GRADIENT INTERVAL = -5.00/ 5.00

ALPHAT	BETAT	CNFT	CAFT	CLMFT	CYFT	CYNFT	CBLFT	CABT	CP7	ALPHAO	BETAO
-4.048	-6.103	-.20380	.08630	.03600	.11090	-.01520	.00050	.10980	-.48830	-4.07420	-6.11890
-4.305	-3.942	-.19710	.08660	.02870	.06670	-.00980	.00020	.10760	-.47870	-4.30600	-3.97390
-4.248	.370	-.16130	.08780	.00930	-.00540	-.00100	-.00010	.10940	-.48660	-4.19910	.36530
-3.750	4.277	-.16100	.08870	.02030	-.06270	.00370	-.00020	.10750	-.47790	-3.75170	4.29730
-3.844	6.097	-.16500	.08670	.02080	-.09390	.00750	-.00040	.10930	-.48620	-3.84680	6.10990
	GRADIENT	.00446	.00026	-.00108	-.01576	.00165	-.00005	-.00000	.00006	.06671	1.00632

RUN NO. 1497/ 0 RN/L = 3.50 GRADIENT INTERVAL = -5.00/ 5.00

ALPHAT	BETAT	CNFT	CAFT	CLMFT	CYFT	CYNFT	CBLFT	CABT	CP7	ALPHAO	BETAO
-.262	-6.954	-.15060	.08660	.05630	.12470	-.01730	.00040	.10540	-.46860	-.46160	-7.00750
-.270	-4.772	-.13830	.08670	.04980	.08230	-.01260	.00020	.10340	-.45990	-.44880	-4.84320
-.353	-.398	-.09740	.08790	.02360	.01090	-.00600	-.00010	.10430	-.46400	-.42180	-.47380
-.270	3.698	-.10170	.08680	.03250	-.05560	.00430	-.00010	.10720	-.47660	-.38710	3.65150
-.248	5.877	-.10690	.08710	.03700	-.09150	.00810	-.00040	.10820	-.48110	-.38720	5.82810
	GRADIENT	.00438	.00001	-.00209	-.01628	.00199	-.00004	.00045	-.00196	.00727	1.00283

IA156A, AEDC PWT 16T-470, O T S W/SILTS (R8NTE6) (10 MAY 80)

REFERENCE DATA

SREF = 2690.0000 SQ.FT. XMRP = 976.0000 IN. XT
LREF = 1290.3000 INCHES YMRP = .0000 IN. YT
BREF = 1290.3000 INCHES ZMRP = 400.0000 IN. ZT
SCALE = .0200

PARAMETRIC DATA

IB-ELV = 10.000 OB-ELV = 2.000
BDFLAP = .000 SPDBRK = .000
RUDDER = .000 SILTS = 1.000
MACH = 1.050 RN/L = 3.500

RUN NO. 1498/ 0 RN/L = 3.50 GRADIENT INTERVAL = -5.00/ 5.00

ALPHAT	BETAT	CNFT	CAFT	CLMFT	CYFT	CYNFT	CBLFT	CABT	CP7	ALPHAO	BETAO
4.436	-5.814	-.06950	.08340	.06590	.10740	-.01380	.00020	.10240	-.45560	4.10820	-5.80380
4.275	-3.714	-.05800	.08300	.05810	.07100	-.01250	.00010	.10060	-.44740	3.97500	-3.71260
4.011	.128	-.03070	.08470	.03920	.00140	-.00250	.00000	.09870	-.43900	3.77580	.11380
4.126	4.067	-.03730	.08430	.04960	-.06820	.00840	-.00010	.10150	-.45130	3.85090	4.04490
4.086	6.135	-.04180	.08360	.05340	-.10300	.00960	-.00020	.10350	-.46040	3.79570	6.10590
	GRADIENT	.00264	.00017	-.00108	-.01789	.00269	-.00003	.00012	-.00051	-.01580	.99691

IA156A, AEDC PWT 16T-470, O T S W/SILTS (R8NTE7) (10 MAY 80)

REFERENCE DATA

SREF = 2690.0000 SQ.FT. XMRP = 976.0000 IN. XT
LREF = 1290.3000 INCHES YMRP = .0000 IN. YT
BREF = 1290.3000 INCHES ZMRP = 400.0000 IN. ZT
SCALE = .0200

PARAMETRIC DATA

IB-ELV = 10.000 OB-ELV = 2.000
BDFLAP = .000 SPDBRK = .000
RUDDER = .000 SILTS = 1.000
MACH = 1.100 RN/L = 3.500

RUN NO. 1499/ 0 RN/L = 3.50 GRADIENT INTERVAL = -5.00/ 5.00

ALPHAT	BETAT	CNFT	CAFT	CLMFT	CYFT	CYNFT	CBLFT	CABT	CP7	ALPHAO	BETAO
-8.380	-5.886	-.28430	.09190	.01860	.10600	-.01090	.00040	.10680	-.47490	-8.21950	-5.89070
-8.380	-3.784	-.27590	.09310	.01330	.06540	-.00660	.00010	.10380	-.46170	-8.20420	-3.78460
-8.354	.172	-.24850	.09480	-.00450	-.00100	-.00180	.00000	.10250	-.45600	-8.11230	.16400
-8.151	4.437	-.25010	.09310	.00320	-.06500	.00090	-.00020	.10580	-.47080	-7.94580	4.42760
-8.161	6.248	-.25260	.09360	.00510	-.09520	.00300	-.00040	.10620	-.47220	-7.96410	6.23180
	GRADIENT	.00309	-.00001	-.00119	-.01585	.00091	-.00004	.00025	-.00114	.03153	.99901

RUN NO. 1500/ 0 RN/L = 3.50 GRADIENT INTERVAL = -5.00/ 5.00

ALPHAT	BETAT	CNFT	CAFT	CLMFT	CYFT	CYNFT	CBLFT	CABT	CP7	ALPHAO	BETAO
-6.256	-5.948	-.24100	.09320	.02450	.10720	-.01360	.00050	.10170	-.45240	-6.16360	-5.95290
-6.247	-4.045	-.23210	.09320	.01990	.06910	-.00920	.00030	.09980	-.44380	-6.14320	-4.05750
-6.383	.099	-.20460	.09490	.00150	-.00030	-.00300	.00000	.10020	-.44590	-6.22410	.08730
-6.117	4.246	-.20480	.09390	.01040	-.05900	.00130	-.00020	.10000	-.44470	-5.99950	4.24070
-6.074	6.210	-.20720	.09340	.01140	-.09290	.00570	-.00040	.10200	-.45360	-5.96240	6.20540
	GRADIENT	.00329	.00008	-.00115	-.01545	.00127	-.00006	.00002	-.00011	.01734	1.00087

IA156A, AEDC PWT 16T-470, O T S W/SILTS (R8NTE7) (10 MAY 80)

REFERENCE DATA

SREF = 2690.0000 SQ.FT. XMRP = 976.0000 IN. XT
LREF = 1290.3000 INCHES YMRP = .0000 IN. YT
BREF = 1290.3000 INCHES ZMRP = 400.0000 IN. ZT
SCALE = .0200

PARAMETRIC DATA

IB-ELV = 10.000 OB-ELV = 2.000
BDFLAP = .000 SPDBRK = .000
RUDDER = .000 SILTS = 1.000
MACH = 1.100 RN/L = 3.500

RUN NO. 1501/ 0 RN/L = 3.51 GRADIENT INTERVAL = -5.00/ 5.00

ALPHAT	BETAT	CNFT	CAFT	CLMFT	CYFT	CYNFT	CBLFT	CABT	CP7	ALPHAO	BETAO
-4.051	-6.114	-.20230	.09390	.03420	.10600	-.01360	.00050	.09720	-.43230	-4.06430	-6.12360
-4.321	-3.947	-.19650	.09390	.02730	.06280	-.00830	.00020	.09540	-.42430	-4.30440	-3.97200
-4.252	.379	-.15940	.09560	.00890	-.00630	-.00190	.00000	.09450	-.42010	-4.19120	.37090
-3.734	4.268	-.15680	.09580	.02030	-.06110	.00200	-.00020	.09450	-.42050	-3.73710	4.27430
-3.850	6.126	-.16250	.09470	.02090	-.09450	.00650	-.00040	.09730	-.43290	-3.85740	6.12780
	GRADIENT	.00490	.00023	-.00092	-.01510	.00126	-.00005	-.00011	.00047	.06825	1.00370

RUN NO. 1502/ 0 RN/L = 3.49 GRADIENT INTERVAL = -5.00/ 5.00

ALPHAT	BETAT	CNFT	CAFT	CLMFT	CYFT	CYNFT	CBLFT	CABT	CP7	ALPHAO	BETAO
-.266	-6.960	-.15210	.09440	.05630	.12100	-.01520	.00040	.09400	-.41800	-.47180	-6.99600
-.257	-4.787	-.13890	.09480	.05010	.08010	-.01090	.00020	.09110	-.40530	-.44170	-4.84400
-.330	-.406	-.10120	.09610	.02590	.00850	-.00500	-.00010	.09100	-.40470	-.41330	-.47830
-.241	3.708	-.10540	.09440	.03520	-.05570	.00350	-.00010	.09410	-.41840	-.37980	3.65400
-.224	5.893	-.10780	.09490	.03780	-.09070	.00690	-.00040	.09420	-.41880	-.37610	5.83590
	GRADIENT	.00399	-.00004	-.00179	-.01599	.00169	-.00004	.00035	-.00152	.00728	1.00026

RUN NO. 1503/ 0 RN/L = 3.50 GRADIENT INTERVAL = -5.00/ 5.00

ALPHAT	BETAT	CNFT	CAFT	CLMFT	CYFT	CYNFT	CBLFT	CABT	CP7	ALPHAO	BETAO
4.456	-5.829	-.06680	.08990	.06720	.10530	-.01420	.00020	.08830	-.39280	4.10540	-5.81780
4.294	-3.699	-.05790	.09080	.06100	.06850	-.01240	.00010	.08690	-.38660	3.96150	-3.69900
4.061	.138	-.03350	.09230	.04320	-.00230	-.00190	.00000	.08620	-.38330	3.79220	.12200
4.146	4.066	-.04220	.09170	.05370	-.06820	.00740	-.00010	.08840	-.39310	3.83590	4.03750
4.111	6.125	-.04590	.09410	.05700	-.10220	.00860	-.00020	.08820	-.39240	3.79070	6.09030
	GRADIENT	.00201	.00011	-.00093	-.01760	.00255	-.00003	.00019	-.00084	-.01607	.99633

IA156A, AEDC PWT 16T-470, 0 T S W/SILTS (R8NTE8) (10 MAY 80)

REFERENCE DATA

SREF = 2690.0000 SQ.FT. XMRP = 976.0000 IN. XT
LREF = 1290.3000 INCHES YMRP = .0000 IN. YT
BREF = 1290.3000 INCHES ZMRP = 400.0000 IN. ZT
SCALE = .0200

PARAMETRIC DATA

IB-ELV = 10.000 OB-ELV = 2.000
BDFLAP = .000 SPDBRK = .000
RUDDER = .000 SILTS = 1.000
MACH = 1.150 RN/L = 3.500

RUN NO. 1504/ 0 RN/L = 3.50 GRADIENT INTERVAL = -5.00/ 5.00

ALPHAT	BETAT	CNFT	CAFT	CLMFT	CYFT	CYNFT	CBLFT	CABT	CP7	ALPHAO	BETAO
-8.384	-5.902	-.28720	.09800	.02170	.10680	-.01130	.00040	.10010	-.44510	-8.22350	-5.88380
-8.370	-3.767	-.28050	.09830	.01660	.06610	-.00740	.00010	.09940	-.44200	-8.20730	-3.76430
-8.354	.166	-.25590	.10180	.00030	.00360	-.00380	.00000	.09670	-.43010	-8.12840	.15590
-8.199	4.231	-.25860	.10100	.00680	-.05720	-.00080	-.00020	.09830	-.43720	-8.00950	4.21330
-8.155	6.273	-.25990	.09980	.00820	-.09290	.00270	-.00050	.09970	-.44350	-7.96460	6.24680
	GRADIENT	.00272	.00033	-.00121	-.01541	.00082	-.00004	-.00013	.00059	.02476	.99750

RUN NO. 1505/ 0 RN/L = 3.51 GRADIENT INTERVAL = -5.00/ 5.00

ALPHAT	BETAT	CNFT	CAFT	CLMFT	CYFT	CYNFT	CBLFT	CABT	CP7	ALPHAO	BETAO
-6.238	-5.965	-.24060	.10040	.02700	.10980	-.01530	.00040	.09640	-.42870	-6.16280	-5.96230
-6.191	-4.032	-.23550	.10080	.02370	.07060	-.01040	.00020	.09410	-.41840	-6.10800	-4.04250
-6.331	.105	-.20820	.10190	.00590	.00400	-.00500	.00000	.09410	-.41840	-6.19700	.09070
-6.136	4.275	-.21230	.10220	.01370	-.05880	.00020	-.00020	.09290	-.41340	-6.03480	4.25900
-6.053	6.229	-.21160	.10040	.01410	-.09510	.00570	-.00040	.09530	-.42410	-5.95550	6.20960
	GRADIENT	.00279	.00017	-.00120	-.01558	.00128	-.00005	-.00014	.00060	.00885	.99930

RUN NO. 1506/ 0 RN/L = 3.50 GRADIENT INTERVAL = -5.00/ 5.00

ALPHAT	BETAT	CNFT	CAFT	CLMFT	CYFT	CYNFT	CBLFT	CABT	CP7	ALPHAO	BETAO
-4.014	-6.078	-.20310	.10090	.03670	.11070	-.01650	.00040	.09330	-.41480	-4.05280	-6.08870
-4.301	-3.947	-.19880	.10140	.03010	.06580	-.01000	.00010	.09040	-.40210	-4.30800	-3.97510
-4.234	.373	-.16480	.10310	.01280	-.00090	-.00430	-.00010	.08940	-.39750	-4.20550	.35860
-3.726	4.295	-.16280	.10180	.02340	-.06220	.00200	-.00020	.09080	-.40380	-3.75570	4.29670
-3.831	6.134	-.16680	.10180	.02400	-.09330	.00620	-.00030	.09180	-.40810	-3.86060	6.12870
	GRADIENT	.00443	.00005	-.00087	-.01553	.00145	-.00004	.00004	-.00018	.06628	1.00358

RUN NO. 1507/ 0 RN/L = 3.51 GRADIENT INTERVAL = -5.00/ 5.00

ALPHAT	BETAT	CNFT	CAFT	CLMFT	CYFT	CYNFT	CBLFT	CABT	CP7	ALPHAO	BETAO
-.230	-6.957	-.14950	.10100	.05680	.12400	-.01740	.00040	.09000	-.40040	-.45550	-7.00090
-.226	-4.791	-.13730	.10200	.05050	.08130	-.01200	.00020	.08670	-.38580	-.43170	-4.84980
-.294	-.412	-.10170	.10340	.02710	.00830	-.00490	-.00010	.08620	-.38330	-.39540	-.48660
-.209	3.701	-.10540	.10330	.03610	-.05600	.00380	-.00010	.08800	-.39160	-.36450	3.64520
-.193	5.916	-.10610	.10330	.03830	-.09290	.00760	-.00040	.08810	-.39200	-.36500	5.85170
	GRADIENT	.00380	.00015	-.00174	-.01617	.00186	-.00004	.00015	-.00067	.00792	1.00031

IA156A, AEDC PWT 16T-470, O T S W/SILTS (R8NTE8) (10 MAY 80)

REFERENCE DATA

SREF = 2690.0000 SQ.FT. XMRP = 976.0000 IN. XT
LREF = 1290.3000 INCHES YMRP = .0000 IN. YT
BREF = 1290.3000 INCHES ZMRP = 400.0000 IN. ZT
SCALE = .0200

PARAMETRIC DATA

IB-ELV = 10.000 OB-ELV = 2.000
BDFLAP = .000 SPDBRK = .000
RUDDER = .000 SILTS = 1.000
MACH = 1.150 RN/L = 3.500

RUN NO. 1508/ 0 RN/L = 3.50 GRADIENT INTERVAL = -5.00/ 5.00

ALPHAT	BETAT	CNFT	CAFT	CLMFT	CYFT	CYNFT	CBLFT	CABT	CP7	ALPHAO	BETAO
4.494	-5.800	-.07190	.09940	.07250	.10710	-.01560	.00030	.08320	-.37010	4.10280	-5.79410
4.380	-3.708	-.06310	.10010	.06740	.06980	-.01400	.00020	.08220	-.36560	3.99570	-3.72030
4.073	.142	-.04090	.09840	.04900	.00500	-.00640	.00000	.08240	-.36630	3.75730	.11090
4.173	4.069	-.04280	.10070	.05570	-.06300	.00450	-.00010	.08270	-.36790	3.84140	4.03810
4.126	6.140	-.04650	.10110	.05830	-.09890	.00710	-.00020	.08460	-.37620	3.78960	6.10000
	GRADIENT	.00260	.00008	-.00149	-.01708	.00238	-.00004	.00006	-.00030	-.01970	.99756

IA156A, AEDC PWT 16T-470, O T S W/SILTS (R8NTE9) (10 MAY 80)

REFERENCE DATA

SREF = 2690.0000 SQ.FT. XMRP = 976.0000 IN. XT
LREF = 1290.3000 INCHES YMRP = .0000 IN. YT
BREF = 1290.3000 INCHES ZMRP = 400.0000 IN. ZT
SCALE = .0200

PARAMETRIC DATA

IB-ELV = 10.000 OB-ELV = 2.000
BDFLAP = .000 SPDBRK = .000
RUDDER = .000 SILTS = 1.000
MACH = 1.150 RN/L = 3.500

RUN NO. 1509/ 0 RN/L = 3.51 GRADIENT INTERVAL = -5.00/ 5.00

ALPHAT	BETAT	CNFT	CAFT	CLMFT	CYFT	CYNFT	CBLFT	CABT	CP7	ALPHAO	BETAO
-.233	-6.909	-.15010	.10190	.05690	.12180	-.01660	.00040	.08970	-.39920	-.45510	-6.95200
-.226	-4.726	-.13600	.10210	.04980	.07900	-.01180	.00030	.08610	-.38290	-.42700	-4.78560
-.289	-.464	-.10130	.10290	.02740	.00930	-.00500	-.00010	.08590	-.38220	-.39290	-.53810
-.209	3.772	-.10220	.10070	.03480	-.05620	.00400	-.00010	.08900	-.39570	-.36230	3.71640
-.190	5.930	-.10550	.10330	.03800	-.09240	.00720	-.00030	.08850	-.39370	-.36060	5.86650
	GRADIENT	.00398	-.00016	-.00177	-.01591	.00186	-.00005	.00034	-.00150	.00761	1.00053